PB91-198739

LIBRARY

EVALUATING SCOUR AT BRIDGES

Property of
Flood Control District of MC Library
Please Return to
2801 W. Durango
Phoenix, AZ 85009

(U.S.) Department of Transportation
Washington, DC

Feb 91

U.S. DEPARTMENT OF COMMERCE
National Technical Information Service
NTIS®

PB91-198739

U.S. Department
of Transportation

**Federal Highway
Administration**

Publication No. FHWA-IP-90-017
February 1991

Hydraulic Engineering Circular No. 18

Evaluating Scour at Bridges

Office of Research and Development
Turner-Fairbank Highway Research Center
6300 Georgetown Pike
McLean, Virginia 22101-2296

REPRODUCED BY
U.S. DEPARTMENT OF COMMERCE
NATIONAL TECHNICAL
INFORMATION SERVICE
SPRINGFIELD, VA 22161

NOTICE

This document is disseminated under the sponsorship of the Department of Transportation in the interest of information exchange. The United States Government assumes no liability for the contents or the use thereof.

This report does not constitute a standard, specification, or regulation. The United States Government does not endorse products or manufacturers. Trade or manufacturers' names appear herein only because they are considered essential to the objective of this document.

Technical Report Documentation Page

1. Report No. FHWA-IP-90-017 HEC 18	2. Government Accession No.	3. Recipient's Catalog No.
4. Title and Subtitle EVALUATING SCOUR AT BRIDGES		5. Report Date February 1991
		6. Performing Organization Code
7. Author(s) Dr. E. V. Richardson, Lawrence J. Harrison & Stanley R. Davis		8. Performing Organization Report No.
9. Performing Organization Name and Address Civil Engineering Department Engineering Research Center Colorado State University Fort Collins, Colorado 80523 Hydraulics & Geotech Br. FHWA, HNG-31 Washington, D.C. 20590		10. Work Unit No. (TRAIS)
		11. Contract or Grant No.
12. Sponsoring Agency Name and Address National Highway Institute Federal Highway Administration 6200 Georgetown Pike McLean, Virginia 22101		13. Type of Report and Period Covered Final Report July 1989 - February 1991
		14. Sponsoring Agency Code

15. Supplementary Notes Project Manager: Lawrence J. Harrison
Technical Assistants: J. Sterling Jones, Jorge Pagan and Johnny L. Morris, FHWA; A. Mainard Wacker, Wyoming Highway Department; Calvin Boles, III and staff, Virginia DOT; and Michael E. Zeller, Simons, Li and Associates.

16. Abstract

This document contains the state-of-knowledge and practice for dealing with scour at highway bridges. The procedures for designing new, replacement and rehabilitated bridges to resist scour are presented. Procedures are presented for evaluating the scour vulnerability of existing bridges as well as inspecting bridges for scour. The use of countermeasures to protect bridges evaluated as failure prone due to scour is also presented. This document replaces the Federal Highway Administration (FHWA) publication "Interim Procedures for Evaluating Scour at Bridges," which was issued with FHWA Technical Advisory 5140.20, "Scour at Bridges," in September 1988.

17. Key Words Scour Design, Contraction Scour, Local Scour, Pier Scour, Abutment Scour, Scour Susceptible, Scour Critical, Clear-water Scour, Live-bed Scour, Superflood, Bridge Inspection, Countermeasures, Underwater Inspection	18. Distribution Statement This document is available to the public through the National Technical Information Service Springfield, Virginia 22161 (703) 487-4650		
19. Security Classif. (of this report) Unclassified	20. Security Classif. (of this page) Unclassified	21. No. of Pages 191	22. Price

Form DOT F 1700.7 (8-72) Reproduction of completed page authorized

SI* (MODERN METRIC) CONVERSION FACTORS

APPROXIMATE CONVERSIONS TO SI UNITS

Symbol	When You Know	Multiply By	To Find	Symbol
		LENGTH		
in	inches	25.4	millimetres	mm
ft	feet	0.305	metres	m
yd	yards	0.914	metres	m
mi	miles	1.61	kilometres	km
		AREA		
in^2	square inches	645.2	millimetres squared	mm^2
ft^2	square feet	0.093	metres squared	m^2
yd^2	square yards	0.836	metres squared	m^2
ac	acres	0.405	hectares	ha
mi^2	square miles	2.59	kilometres squared	km^2
		VOLUME		
fl oz	fluid ounces	29.57	millilitres	mL
gal	gallons	3.785	litres	L
ft^3	cubic feet	0.028	metres cubed	m^3
yd^3	cubic yards	0.765	metres cubed	m^3

NOTE: Volumes greater than 1000 L shall be shown in m^3.

		MASS		
oz	ounces	28.35	grams	g
lb	pounds	0.454	kilograms	kg
T	short tons (2000 lb)	0.907	megagrams	Mg
		TEMPERATURE (exact)		
°F	Fahrenheit temperature	5(F-32)/9	Celcius temperature	°C

APPROXIMATE CONVERSIONS FROM SI UNITS

Symbol	When You Know	Multiply By	To Find	Symbol
		LENGTH		
mm	millimetres	0.039	inches	in
m	metres	3.28	feet	ft
m	metres	1.09	yards	yd
km	kilometres	0.621	miles	mi
		AREA		
mm^2	millimetres squared	0.0016	square inches	in^2
m^2	metres squared	10.764	square feet	ft^2
ha	hectares	2.47	acres	ac
km^2	kilometres squared	0.386	square miles	mi^2
		VOLUME		
mL	millilitres	0.034	fluid ounces	fl oz
L	litres	0.264	gallons	gal
m^3	metres cubed	35.315	cubic feet	ft^3
m^3	metres cubed	1.308	cubic yards	yd^3
		MASS		
g	grams	0.035	ounces	oz
kg	kilograms	2.205	pounds	lb
Mg	megagrams	1.102	short tons (2000 lb)	T
		TEMPERATURE (exact)		
°C	Celcius temperature	1.8C + 32	Fahrenheit temperature	°F

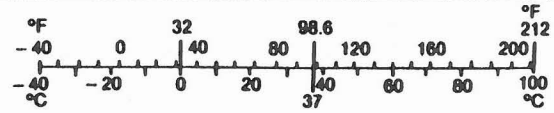

* SI is the symbol for the International System of Measurement

(Revised April 1989)

TABLE OF CONTENTS

CHAPTER 1 - INTRODUCTION 1
PURPOSE 1
ORGANIZATION OF THIS CIRCULAR 1
BACKGROUND 1
OBJECTIVES OF A BRIDGE SCOUR EVALUATION PROGRAM 2
IMPROVING THE STATE-OF-PRACTICE OF ESTIMATING SCOUR AT BRIDGES 2

CHAPTER 2 - BASIC CONCEPTS AND DEFINITIONS OF SCOUR 7
GENERAL 7
TOTAL SCOUR 7
AGGRADATION AND DEGRADATION 8
CONTRACTION SCOUR 9
LOCAL SCOUR 15
CLEAR-WATER AND LIVE-BED SCOUR 18
LATERAL SHIFTING OF A STREAM 20

CHAPTER 3 - DESIGNING BRIDGES TO RESIST SCOUR 23
DESIGN PHILOSOPHY AND CONCEPTS 23
DESIGN PROCEDURE 24
CHECKLIST OF DESIGN CONSIDERATIONS 28

CHAPTER 4 - ESTIMATING SCOUR AT BRIDGES 31
INTRODUCTION 31
DESIGN APPROACH 31
DETAILED PROCEDURES 31
DETERMINING SCOUR ANALYSIS VARIABLES 31
ANALYSIS OF LONG-TERM BED ELEVATION CHANGE . . . 33
EVALUATE THE SCOUR ANALYSIS METHOD 34
CONTRACTION SCOUR 35
LOCAL SCOUR AT ABUTMENTS 45
COMPUTE LOCAL SCOUR AT PIERS 48
PLOT TOTAL SCOUR DEPTHS AND EVALUATE DESIGN . . 57
SCOUR EXAMPLE PROBLEMS 60

CHAPTER 5 - EVALUATING THE VULNERABILITY OF EXISTING BRIDGES TO SCOUR 75
INTRODUCTION 75
THE EVALUATION PROCESS 76
CONDUCTING SCOUR EVALUATION STUDIES 79
DOCUMENTING BRIDGE SCOUR ASSESSMENTS 81

CHAPTER 6 - INSPECTION OF BRIDGES FOR SCOUR 83
INTRODUCTION 83
OFFICE REVIEW 84
BRIDGE INSPECTION 84
UNDERWATER INSPECTIONS 90
NOTIFICATION PROCEDURES 90

CHAPTER 7 - PLAN OF ACTION FOR INSTALLING SCOUR COUNTERMEASURES 93
INTRODUCTION 93
MONITORING, INSPECTING, AND POTENTIALLY CLOSING SCOUR-CRITICAL BRIDGES 94
TEMPORARY COUNTERMEASURES 95
SCHEDULING CONSTRUCTION OF SCOUR COUNTERMEASURES . . . 95
TYPES OF COUNTERMEASURES 95

LITERATURE CITED 101

APPENDICES 105

A. Alternate Scour Analysis Method
B. Equations for Abutment Scour
C. Computation of Spur Dike Length
D. North Carolina Scour Evaluation Procedures
E. FHWA 1988 Recording Guide for Structural Inventory
F. Scour Analysis for Great Pee Dee River
G. Scour Detection Equipment

LIST of FIGURES

Figure 2.1 Schematic Representation of Scour at a Cylindrical Pier 15
Figure 2.2 Scour Depth as a Function of Time 19
Figure 4.1 The Four Main Cases of Contraction Scour . . . 36
Figure 4.2 Fall Velocity of Sand Size Particles 44
Figure 4.3 Abutment Shape 46
Figure 4.4 Comparison of Scour Formulas 50
Figure 4.5 Comparison of Scour Formulas 50
Figure 4.6 Values of y_s/a vs y_1/a for CSU'S Equation . 51
Figure 4.7 Common Pier Shapes 53
Figure 4.8 Pile Groups 53
Figure 4.9 Conditions upstream of bridge 62
Figure 4.10 Location of piers and abutments 62
Figure 4.11 Plot of scour for example problem 73

LIST OF TABLES

TABLE 3.1 CHECKLIST OF DESIGN CONSIDERATIONS 28
TABLE 4.1 ABUTMENT SLOPE COEFFICIENTS 48
TABLE 4.2 CORRECTION FACTOR, K1 52
TABLE 4.3 CORRECTION FACTOR, K2 52
Table 6.1 ASSESSING THE SCOUR POTENTIAL AT BRIDGES 87

PREFACE

This Federal Highway Administration (FHWA) publication, Hydraulic Engineering Circular 18 (HEC 18), "Evaluating Scour at Bridges," provides procedures for the design, evaluation and inspection of bridges for scour. It is a revision of the publication, "Interim Procedures for Evaluating Scour at Bridges," which was issued in September 1988 as part of the FHWA Technical Advisory 5140.20, "Scour at Bridges."(5) It contains revisions as the result of the use of the Technical Advisory by the highway community.

The principal changes are 1) the inclusion of Niell's equation for beginning of motion for coarse bed material in Chapter 2; 2) a statement in Chapter 2 that while the document pertains to scour in the riverine context, judicious use of the document for tidal scour purposes is necessary due to the lack of technology for tidal scour; 3) only one analysis method is given in Step 3 of Chapter 4 with the second method presented in the Appendix A; 4) the removal of all but one abutment scour equation to Appendix B; 5) the recommendation to use guide banks (spur dikes) and/or rock riprap to protect abutments from scour, thereby minimizing the need to compute abutment scour; 6) the addition of procedures to calculate local pier scour when footings or pile caps are exposed, when multiple columns are at an angle to the flow and when pile groups are exposed; 7) the addition of a discussion of local pier scour when pressure flow occurs; i.e., the bridge deck is at least partially submerged; 8) the inclusion of an equation to calculate the width of the pier scour hole; 9) the elimination of the equation to calculate the worse case (deepest) local pier scour from Chapter 5; 10) a slight modification in the equation to determine rock riprap size for pier protection given in Chapter 7 to include recent research; 11) inclusion of recent unpublished research by FHWA for abutment rock riprap protection in Chapter 7; and 12) extensive editorial changes. Also, some changes were made in the appendices. This principally involves the inclusion of the North Carolina Department of Transportation's scour evaluation procedure in place of the Minnesota Department of Transportation's procedure.

EVALUATING SCOUR AT BRIDGES

CHAPTER 1

INTRODUCTION

A. PURPOSE

The purpose of this manual is to provide guidance in:

1) designing new and replacement bridges to resist scour,
2) evaluating existing bridges for vulnerability to scour,
3) inspecting bridges for scour,
4) providing scour countermeasures, and
5) improving the state-of-practice of estimating scour at bridges.

B. ORGANIZATION OF THIS CIRCULAR

The procedures presented in this document contain the state-of-knowledge and practice for dealing with scour at highway bridges. Chapter 1 gives the background of the problem and the general state-of-knowledge of scour. Basic concepts and definitions are presented in Chapter 2. Chapter 3 gives recommendations for designing bridges to resist scour. Chapter 4 gives equations for calculating scour depths at piers and abutments. Chapter 5 provides procedures for conducting scour evaluation and analysis at existing bridges. Chapter 6 presents guidelines for inspecting bridges for scour. Chapter 7 gives a plan of action for installing countermeasures to strengthen bridges that are considered vulnerable to scour.

In the appendices additional information on abutment scour and examples of what several states are doing to assess and evaluate their scour problems is given.

C. BACKGROUND

The most common cause of bridge failures stems from floods. The scouring of bridge foundations is the most common cause of flood damage to bridges. **The hydraulic design of bridge waterways has and is typically based on flood frequencies somewhat less than those recommended for scour analysis in this publication.** During the Spring floods of 1987, 17 bridges in New York and New England were damaged or destroyed by scour. In 1985, 73 bridges were destroyed by floods in Pennsylvania, Virginia, and West Virginia. A 1973 national study for the FHWA of 383 bridge failures caused by catastrophic floods showed that 25 percent involved pier damage and 72 percent involved abutment damage (1). A second more extensive

study done in 1978 (2) indicated local scour at bridge piers to be a problem about equal to abutment scour problems. A number of case histories on the causes and consequences of scour at major bridges are presented in Transportation Research Number 950 (3).

D. OBJECTIVES OF A BRIDGE SCOUR EVALUATION PROGRAM

The need to minimize future flood damage to the nation's bridges requires that additional attention be devoted to developing and implementing improved procedures for designing and inspecting bridges for scour. (See National Bridge Inspection Standards, 23 CFR 650 Subpart C.) Approximately 86 percent of the 577,000 bridges in the National Bridge Inventory are built over waterways. Statistically, we can expect thousands of these bridges to experience floods on the order of magnitude of a 100-year flood or greater each year. Because it is not economically feasible to construct all bridges to resist all conceivable floods or to install scour countermeasures at all existing bridges to ensure absolute invulnerability from scour damage, some risks of failure may have to be accepted from future floods. However, every bridge over a stream, whether existing or under design, should be assessed as to its vulnerability to floods in order to determine the prudent measures to be taken. The added cost of making a bridge less vulnerable to scour is small when compared to the total cost of a failure which can easily be two or three times the cost of the bridge itself. Moreover, the need to ensure public safety and to minimize the adverse effects resulting from bridge closures requires our best efforts to improve the state-of-practice for designing and maintaining bridge foundations to resist the effects of scour.

The procedures presented in this manual serve as guidance for implementing the recommendations contained in the FHWA Technical Advisory entitled "Scour at Bridges." The recommendations have been developed to summarize the essential elements which should be addressed in developing a comprehensive scour evaluation program. A key element of the program will be the identification of scour-critical bridges which will be entered into the National Bridge Inventory using the revised Recording and Coding Guide for the Structure inventory and Appraisal of the Nation's Bridges (4).

E. IMPROVING THE STATE-OF-PRACTICE OF ESTIMATING SCOUR AT BRIDGES

The problems associated with estimating scour and providing cost-effective and safe designs need to be addressed further in research and development programs of the FHWA and the States. In the following sections some of the most pressing research needs will be described.

1. **Field Measurements of Scour.** The current equations and methods for estimating scour at bridges are based mainly on laboratory research. Very little field data has been collected to verify the applicability and accuracy of the various design procedures for the range of soil conditions, stream flow conditions, and bridge designs encountered throughout the United States. In particular, States are encouraged to initiate studies for the purpose of obtaining field measurements of scour and related hydraulic conditions at bridges for evaluating, verifying and improving existing scour prediction methods. Several States have already initiated cooperative studies with the Water Resources Division of the U. S. Geological Survey to collect scour data at existing bridges. A model cooperative agreement with the U. S. Geological Survey for purposes of conducting a scour study was included in the FHWA report "Interim Procedures for Evaluating Scour at Bridges," which accompanied the September 1988 FHWA Technical Advisory (5).

2. **Scour Monitoring and Measurement Equipment.** There is a need for the development of instrumention and equipment to indicate when a bridge is in danger of collapsing due to scour. Many bridges in the United States were constructed prior to the development of scour estimation procedures. Some of these bridges have scour vulnerable foundations. It is not economically feasible to repair or replace these bridges at once. Therefore, these bridges need to be monitored during floods and closed before they fail. At this time there are a few devices to monitor bridge scour, but such devices cannot be used on all bridge geometries. Furthermore, the reliability of these devices has not been fully determined.

   There is also the need to develop instrumentation to measure scour depths during and after a flood event. As well, instrumentation is needed to determine unknown bridge foundations.

   The FHWA in cooperation with State highway agencies and the Transportation Research Board has initiated several research projects to develop scour monitoring and measuring instruments.

3. **Scour Analysis Software.** There is a continued need for the development and maintenance of computer software for the analysis of all aspects of scour at bridges. The FHWA has developed computer software for the analysis of flow through bridges and of scour. There currently is a contract for the development of software to determine total scour at a bridge

crossing. This effort should continue. In addition, the maintenance, support and improvement of existing and future software should be provided on a continual basis.

4. **Laboratory Studies of Scour.** There is a need for laboratory studies to determine specific scour processes and to develop scour countermeasures. Only through controlled experiments can the effect of the variables and parameters associated with scour be determined. Scour prediction equations can then be improved and design methods for additional countermeasures can be developed.

Some examples of needed laboratory research are:

a. improved prediction of the effect of flow angle of attack against a pier or abutment on scour depth,

b. improved knowledge of the effect of flow depth and velocity on scour depths,

c. determine the effect of the pile cap or footing on depth of scour,

d. determine the magnitude of decrease in scour depth likely to occur if there are large sediment particles in the bed material (armoring of the scour hole),

e. determine coefficients for the abutment scour equations to replace the simplistic use of abutment length,

f. determine the width of scour hole as a function of scour depth and bed material size,

g. determine how to estimate contraction scour when abutments are set back from the channel and there is overbank flow,

h. fundamental research on the mechanics of scour,

i. determine the mechanics of tidal scour,

j. determine the size and placement of riprap (elevation, width and location) in the scour hole needed to protect piers and abutments,

k. determine methods to predict scour depths associated with pressure flow,

l. determine methods to predict scour depths when there is ice or debris buildup at a pier or abutment, and

m. determine a rational scour failure mechanism that combines the various scour components (pier, abutment, contraction, lateral migration, degradation) into an estimate of the scoured cross section under the bridge.

(blank)

CHAPTER 2

BASIC CONCEPTS AND DEFINITIONS OF SCOUR

A. GENERAL

Scour is the result of the erosive action of flowing water, excavating and carrying away material from the bed and banks of streams. Different materials scour at different rates. Loose granular soils are rapidly eroded by flowing water, while cohesive or cemented soils are more scour resistant. However, ultimate scour in cohesive or cemented soils can be as deep as scour in sandbed streams. Scour will reach its maximum depth in sand and gravel bed materials in hours; cohesive bed materials in days; glacial tills, sand stones and shales in months; limestones in years and dense granites in centuries. Massive rock formations with few discontinuities are highly resistant to scour during the lifetime of a typical bridge.

Designers and inspectors need to carefully study site specific subsurface information in evaluating scour potential at bridges, giving particular attention to foundations on rock.

This entire document relates to scour in the riverine context. That is, scour resulting from flow in one direction, downstream. In coastal areas of the Nation, highway associated transverse and/or longitudinal stream encroachments are subject to tidal flow. The determination of scour in tidal situations has not been studied sufficiently to permit its inclusion in this document. The best guidance for determination of tidal scour until research and operational experience give direction is judicious use of the material developed for the riverine situation in this publication.

B. TOTAL SCOUR

Total scour at a highway crossing is comprised of three components:

1. **Aggradation and Degradation**. These are long-term stream bed elevation changes due to natural or man induced causes within the reach of the river on which the bridge is located. Aggradation involves the deposition of material eroded from other sections of a stream reach, whereas degradation involves the lowering or scouring of the bed of a stream.

2. **Contraction Scour**. Contraction scour in a natural channel involves the removal of material from the bed and banks across all or most of the channel width. This component of

Preceding page blank

scour can result from a contraction of the flow, change in downstream control of the water surface elevation or flow around a bend. The scour is caused by increased velocities and a resulting increase in bed shear stresses.

Contraction of the flow by bridge approach embankments encroaching onto the floodplain and/or into the main channel is the most common cause of contraction scour.

3. **Local Scour.** Local scour involves removal of material from around piers, abutments, spurs, and embankments. It is caused by an acceleration of flow and resulting vortices induced by the flow obstructions.

In addition to the types of scour mentioned above, naturally occurring **lateral migration of a stream** may erode abutments, the approach roadway or change the total scour by changing the flow angle of attack. Factors that affect lateral movement also affect the stability of a bridge. These factors are the geomorphology of the stream, location of the crossing on the stream, flood characteristics, and the characteristics of the bed and bank materials (see HEC-20 (6) and HIRE (7)).

The following paragraphs contain additional information on the types of scour discussed above.

C. AGGRADATION AND DEGRADATION, LONG-TERM STREAM BED ELEVATION CHANGES

Long-term bed elevation changes may be the natural trend of the stream or may be the result of some modification to the stream or watershed condition. The stream bed may be aggrading, degrading or in relative equilibrium in the bridge crossing reach. In this section long-term trends are considered. This does not include the cutting and filling of the bed of the stream that might occur during a runoff event. A stream may cut and fill during a runoff event and also have a long-term trend of an increase or decrease in bed elevation. The problem for the engineer is to determine what the long-term bed elevation changes will be during the life of the structure. What is the current rate of change in the stream bed elevation? Is the stream bed elevation in relative equilibrium? Is the stream bed degrading? Is it aggrading? What is the future trend in the stream bed elevation?

During the life of the bridge the present trend may change. These long-term changes are the result of modifications to the stream or watershed. Such changes may be the result of natural processes or man's activities. The engineer must assess the present state of the stream and watershed and then evaluate potential future changes

in the river system. From this assessment the engineer must estimate the long-term stream bed changes.

Factors that affect long-term bed elevation changes are: dams and reservoirs (upstream or downstream of the bridge), changes in watershed land use (urbanization, deforestation, etc.), channelization, cutoffs of meander bends (natural or man made), changes in the downstream channel base level (control), gravel mining from the stream bed, diversion of water into or out of the stream, natural lowering of the total system, movement of a bend, bridge location with respect to stream planform, and stream movement in relation to the crossing.

An assessment of long-term stream bed elevation changes should be made using the principles of river mechanics. Such an assessment requires the consideration of all influences upon the bridge crossing; i.e., runoff from the watershed to a stream (hydrology), the sediment delivery to the channel (erosion), the sediment transport capacity of a stream (hydraulics) and the response of a stream to these factors (geomorphology and river mechanics). Many of the largest impacts are from man's activities. This assessment requires a study of the history of the river and man's activities on it as well as a study of present water and land use and stream control activities. All agencies involved with the river should be contacted to determine possible future changes in the river.

To organize such an assessment, this three-level fluvial system approach can be used: 1) a qualitative determination based on general geomorphic and river mechanics relationships; 2) an engineering geomorphic analysis using established qualitative and quantitative relationships to estimate the probable behavior of the stream system to various scenarios of future conditions; and 3) physical process computer modeling using mathematical models such as BRI-STARS and the U. S. Corps of Engineers' HEC 6 to make predictions of quantitative changes in stream bed elevation due to changes in the stream and watershed. Methods to be used in stages 1 and 2 are presented in Hydraulic Engineering Circular No. 20, "Stream Stability at Highway Structures," (6) and "Highways in the River Environment" (7). Additional discussion of this subject is presented in Chapter 4 of this document.

In coastal areas highway crossings (bridge) and/or longitudinal stream encroachments are subject to tidal influences. The impact of the ebb and flow of tides on long-term stream bed elevation changes is relatively indeterminant at this time.

D. CONTRACTION SCOUR

Contraction scour occurs when the flow area of a stream at flood

stage is decreased from the normal, either by a natural contraction or by a bridge. With a decrease in flow area, there is an increase in average velocity and bed shear stress through the contraction. Hence, there is an increase in erosive forces in the contraction and more bed material is removed from the contracted reach than is transported into the reach. This increase in transport of bed material from the reach lowers the natural bed elevation. As the bed elevation is lowered, the flow area increases and the velocity and shear stress decrease until relative equilibrium is reached; i.e., the quantity of bed material that is transported into the reach is equal to that removed from the reach.

Contraction scour can also be caused by short-term (daily, weekly, yearly or seasonally) changes in the downstream water surface elevation that controls the backwater and hence the velocity through the bridge opening. Because this scour is reversible, it is included in contraction scour rather than in long-term scour. Contraction scour can also result from a bridge located in a channel bend. If a bridge is located on or close to a bend, the concentration of the flow in the outer part of the channel can erode the bed.

Contraction scour is typically cyclic. That is, the bed scours during the rising stage of a runoff event, and fills on the falling stage. The contraction of flow due to a bridge can be caused by a decrease in flow area of the stream channel either naturally or by the abutments projecting into the channel and/or the piers taking up a large portion of the flow area. Also, the contraction can be caused by the approaches to a bridge cutting off the flood plain flow. This causes clear-water scour at the bridge section because the flood plain flow normally does not transport significant concentrations of bed material sediments. This clear water picks up additional sediment from the bed upon reaching the bridge opening. In addition, local scour at abutments may well be greater due to the clear-water floodplain flow entering the main channel at that point. A guide bank at an abutment decreases the risk from scour at the abutment by its realignment of the stream lines of the flood plain flow to parallel the main channel flow. However, clear-water scour will occur at the upstream end of the guide bank. Another method to decrease abutment scour is to install relief bridges. They decrease the scour problem at the bridge cross section by decreasing the quantity of clear-water returning to the main channel.

Other factors that can cause contraction scour are: 1) a natural stream constriction, 2) long highway approaches over the flood plain to the bridge, 3) ice formation or jams, 4) a natural berm forming along the banks due to sediment deposits, 5) island or bar formations upstream or downstream of the bridge opening, 6) debris, and 7) the growth of vegetation in the channel or flood plain.

In a natural channel, the depth of flow is always greater on the

outside of a bend. In fact there may well be deposition on the inner portion of the bend. If a bridge is located on or close to a bend, the contraction scour will be concentrated on the outer part of the bend. Also, in bends the thalweg (the part of the stream where the flow is deepest and, typically, the velocity is the greatest) may shift toward the center of the stream as the flow increases. This can increase scour and the nonuniform distribution of the scour in the bridge opening.

1. **Contraction Scour Equations.** Contraction scour equations are based on a single principle of conservation of sediment transport. It simply means that the fully developed scour in the bridge cross-section reaches equilibrium when sediment transported into the contracted section equals sediment transported out in the case of live-bed scour or the shear stress in the contracted section has been decreased by scour increasing the area so that it is equal to the critical shear stress of the sediment at the bottom of the contracted cross section.

   There are two forms of contraction scour depending upon the competence of the uncontracted approach flow to transport bed material into the contraction. Live-bed scour occurs when there is sediment being transported into the scour hole. Clear-water scour is the case when the sediment transport in the uncontracted approach flow is zero. In this case the scour hole reaches equilibrium when the average bed shear stress is the critical required for incipient motion of the bed material. Clear-water and live-bed scour are discussed further in another section in this chapter.

   Laursen (8) derived the following live-bed contraction scour equation based on his simplified transport function and several other simplifying assumptions:

$$\frac{y_2}{y_1} = \left(\frac{Q_{mc2}}{Q_{mc1}}\right)^{\frac{6}{7}} \left(\frac{W_{c1}}{W_{c2}}\right)^{K_1} \left(\frac{n_2}{n_1}\right)^{K_2} \qquad (1)$$

$y_s = y_2 - y_1$ (Average scour depth)

Where:

y_1 = average depth in the main channel
y_2 = average depth in the contracted section
W_{c1} = bottom width of the main channel
W_{c2} = bottom width of the contracted section
Q_{mc1} = flow in the approach channel transporting sediment

Q_{mc2} = flow in the contracted channel. Often this is Q_{total} but not always.
n_2 = Manning's n for contracted section
n_1 = Manning's n for main channel
K_1 & K_2 = exponents determined below

V_{*c}/w	e	K_1	K_2	Mode of Bed Material Transport
<0.50	0.25	0.59	0.066	mostly contact bed material discharge
0.50 to 2.0	1.0	0.64	0.21	some suspended bed material discharge
>2.0	2.25	0.69	0.37	mostly suspended bed material discharge

e = transport factor

V_{*c} = $(gy_1S_1)^{0.5}$, shear velocity

w = bed material, D_{50}, fall velocity (see Figure 4.2)

g = gravity constant

S_1 = slope of energy grade line of main channel

$$K_1 = \frac{6(2+e)}{7(3+e)}$$

$$K_2 = \frac{6e}{7(3+e)}$$

Laursen's (9) clear-water contraction scour equation has a much simpler derivation because it does not involve any transport function. It simply recognizes that:

$$\tau_2 = \tau_c$$

Where:

τ_2= *average bed shear stress, contracted section.*

τ_c= *critical bed shear stress, incipient motion.*

At equilibrium for noncohesive bed materials and for fully developed clear-water scour, Laursen used the following equation:

$$\tau_c = 4\ D_{50}$$

Also:

$$\tau_2 = \gamma y_2 S_f = \frac{\gamma V_2^2 n^2}{1.49^2\ \ y_2^{\frac{1}{3}}}$$

Using Strickler's approximation for Manning's n:

$$n = 0.034\ D_{50}^{\frac{1}{6}}$$

Then at incipient motion:

$$\frac{\tau_2}{\tau_c} = 1.0$$

Therefore:

$$y_2 = \left[\frac{V_2^2}{120\ D_{50}^{\frac{2}{3}}}\right]^3$$

or:

$$y_2 = \left[\frac{Q_2^2}{120\ D_{50}^{\frac{2}{3}}\ W_2^2}\right]^{\frac{3}{7}} \qquad (2a)$$

A dimensionless form of equation 2a can be written if flow continuity can be assumed for the approach and contracted segments of the flood plain being analyzed. That is:

$$Q_2 = Q_1 = V_1\ W_1\ y_1$$

then:

$$\frac{y_2}{y_1} = \left(\frac{W_1}{W_2}\right)^{\frac{6}{7}} \left[\frac{V_1^2}{120\ y_1^{\frac{1}{3}}\ D_{50}^{\frac{2}{3}}}\right]^{\frac{3}{7}} \qquad (2b)$$

The above contraction scour equations were developed for hand computations and are based on rather limiting assumptions. For example they are based on homogeneous bed materials and would not apply for stratified layers of different bed materials. However, with clear-water scour in stratified materials, using the finest D_{50} would give the worse case scour depths. Also, the equations could, in the clear-water case, be used sequentially for stratified bed materials. These equations are the best that are available and should be regarded as a first level of analysis. If a more precise analysis is warranted, a sediment transport model like BRI-STARS could be used.

Calculation of contraction scour is presented in Chapter 4.

E. LOCAL SCOUR

The basic mechanism causing local scour at a pier or abutment is the formation of vortices at their base. The formation of these vortices results from the pileup of water on the upstream surface and subsequent acceleration of the flow around the nose of the pier or embankment. The action of the vortex removes bed materials from the base region. With the transport rate of sediment away from the base region greater than the transport rate into the region, a scour hole develops. As the depth of scour increases, the strength of the vortices is reduced, thereby reducing the transport rate from the base region, and eventually equilibrium is reestablished and scouring ceases.

In addition to a horseshoe vortex around the base of a pier, there is a vertical vortex downstream of the pier called the wake vortex, Figure 2.1. Both vortices remove material from the pier base region. However, the intensity of these wake vortices diminishes rapidly as the distance downstream of the pier increases. Therefore, immediately downstream of a long pier there is often deposition of material.

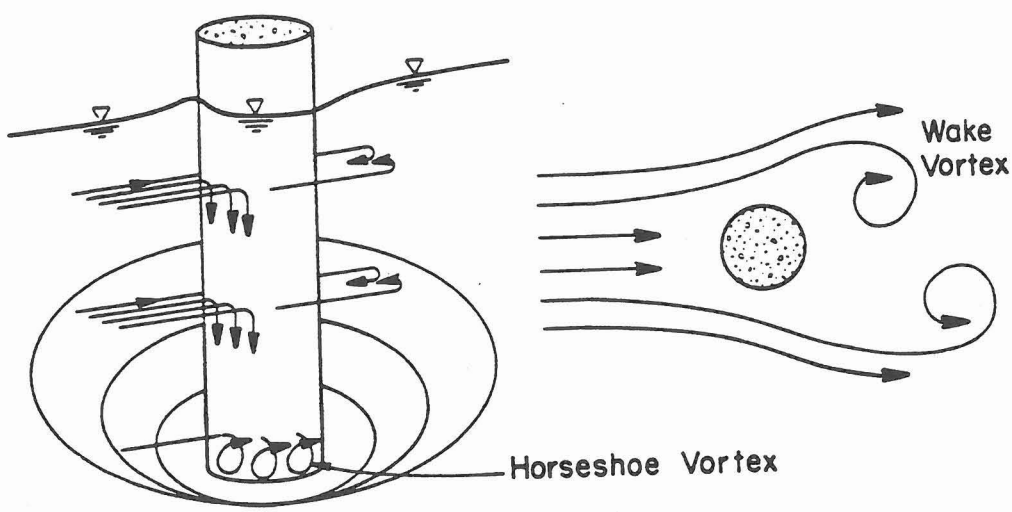

Figure 2.1 Schematic Representation of Scour at a Cylindrical Pier.

Factors affecting local scour are: 1) width of the pier, 2) projected length of an abutment into the flow, 3) length of the pier if skewed to flow, 4) depth of flow, 5) velocity of the

approach flow, 6) size and gradation of bed material, 7) angle of attack of the approach flow to a pier or abutment, 8) shape of a pier or abutment, 9) bed configuration, 10) ice formation or jams, and 11) debris.

1. Pier width has a direct influence on depth of local scour. As pier width increases, there is an increase in scour depth.

2. Projected length of an abutment into the stream affects the depth of local scour. An increase in the projected length of an abutment into the flow increases scour. However, there is a limit on the increase in scour depth with an increase in length. This limit is reached when the ratio of projected length into the flow to the depth of the approach flow is 25.

3. Pier length has no appreciable affect on local scour depth as long as the pier is aligned with the flow. When the pier is skewed to the flow, the length has a significant affect; i.e., with the same angle of attack, doubling the length of the pier increases scour depth by 33 percent.

4. Flow depth has an affect on the depth of local scour. An increase in flow depth can increase scour depth by a factor of 2 or greater for piers. With abutments the increase is from 1.1 to 2.15 depending on the shape of the abutment.

5. The approach flow velocity affects scour depth. The greater the velocity, the deeper the scour. There is a high probability that scour is affected by whether the flow is subcritical or supercritical. However, most research and data are for subcritical flow; i.e., flow with a Froude Number much less than one ($Fr < 1$).

6. Bed material characteristics such as size, gradation, and cohesion can affect local scour. Bed material in the sand size range has no affect on local scour depth. Larger size bed material that can be moved by the flow or by the vortices and turbulence created by the pier or abutment will not affect the maximum scour, but only the time it takes to attain it. Very large particles in the bed material, such as cobbles or boulders, may armor the scour hole. Research at the University of Aukland, New Zealand, and by the Washington State Department of Transportation (10) (11) (12) (13) developed an equation that takes into account the decrease in scour due to the armoring of the scour hole. Richardson and Richardson (14) combined the work of Raudkivi, Ettema, Melville, Sutherland, Cope, Johnson and MacIntosh into a simplified equation. However, field data are inadequate to support these equations at this time. The extent that large particles will decrease scour is not clearly understood.

   The size of the bed material also determines whether the scour

at a pier or abutment is clear-water or live-bed scour. This topic is discussed later in this chapter.

Fine bed material (silts and clays) will have scour depths as deep as sandbed streams. This is true even if bonded together by cohesion. The affect of cohesion is to influence the time it takes to reach the maximum scour. With sand bed material, the time to reach maximum depth of scour is measured in hours and can result from a single flood event. With cohesive bed materials it may take days, months, or even years to reach the maximum scour depth, the result of many flood events.

7. Angle of attack of the flow to the pier or abutment has a significant affect on local scour, as was pointed out in the discussion of pier length. Abutment scour is reduced when embankments are angled downstream and increased when embankments are angled upstream. According to the work of Ahmad, the maximum depth of scour at an embankment inclined 45 degrees downstream is reduced by 20 percent, whereas, the maximum scour at an embankment inclined 45 degrees upstream is increased about 10 percent.

8. Shape of the nose of a pier or an abutment has a significant affect on scour. Streamlining the front end of a pier reduces the strength of the horseshoe vortex, thereby reducing scour depth. Streamlining the downstream end of piers reduces the strength of the wake vortices. A square-nose pier will have maximum scour depths about 20 percent greater than a sharp-nose pier and 10 percent greater than either a cylindrical or round-nose pier.

   Full retaining abutments with vertical walls on the streamside (parallel to the flow) will produce scour depths about double that of spill-through abutments.

9. Bed configuration effects the magnitude of local scour. In streams with sand bed material, the shape of the bed (bed configuration) as determined by Richardson et al (15) may be ripples, dunes, plane bed and antidunes. The bed configuration depends on the size distribution of the sand bed material, flow conditions, and fluid viscosity. The bed configuration may change from dunes to plane bed or antidunes during an increase in flow for a single flood event. It may change back with a decrease in flow. The bed configuration may also change with a change in water temperature or change in suspended sediment concentration of silts and clays. The type of bed configuration and change in bed configuration will effect flow velocity, sediment transport, and scour. "Highways in the River Environment" (7) discusses bed configuration in detail.

10. Ice and debris potentially increase the width of the piers, change the shape of piers and abutments, increase the projected

length of an abutment and cause the flow to plunge downward against the bed. This can increase both the local and contraction scour. The magnitude of the increase is still largely undetermined. Debris can be taken into account in the scour equations by estimating how much the debris will increase the width of a pier or length of an abutment. Debris and ice affects on contraction scour can also be accounted for by estimating the amount of flow blockage (decrease in width of the bridge opening) in the equations for contraction scour. Limited field measurements of scour at ice jams indicate the scour can be as much as 10 or 20 feet.

F. CLEAR-WATER AND LIVE-BED SCOUR

There are two conditions for contraction and local scour. These are 1) clear-water scour and 2) live-bed scour. Clear-water scour occurs when there is no movement of the bed material of the stream upstream of the crossing, but the acceleration of the flow and vortices created by the piers or abutments causes the material in the crossing to move. Live-bed scour occurs when the bed material upstream of the crossing is moving.

Typical clear-water scour situations include: 1) course bed material streams, 2) flat gradient streams during low flow, 3) local deposits of larger bed materials that are larger than the biggest fraction being transported by the flow (rock riprap is a special case of this situation), 4) armored stream beds where the only locations that tractive forces are adequate to penetrate the armor layer are at piers and/or abutments and 5) vegetated channels where, again, the only locations the cover is penetrated is at piers and/or abutments.

During a flood event, bridges over streams with coarse bed material are often subjected to clear-water scour at low discharges, live-bed scour at the higher discharges and then clear-water scour on the falling stages. Clear-water scour reaches its maximum over a longer period of time than live-bed scour (See Figure 2.2). This is because clear-water scour occurs mainly in coarse bed material streams. In fact clear-water scour may not reach a maximum until after several floods. Maximum clear-water scour is about 10 percent greater than the maximum live-bed scour.

The following equation suggested by Neill (16) for determining the velocity associated with initiation of motion is an indicator for clear-water or live-bed scour.

$$V_c = 1.58\ [(S_s - 1)gD_{50}]^{1/2}\ (y/D_{50})^{1/6}$$

Where: V_c = critical velocity above which bed

materials of size D_{50} and smaller will be transported.

S_s = specific gravity of bed materials.

y = depth of flow

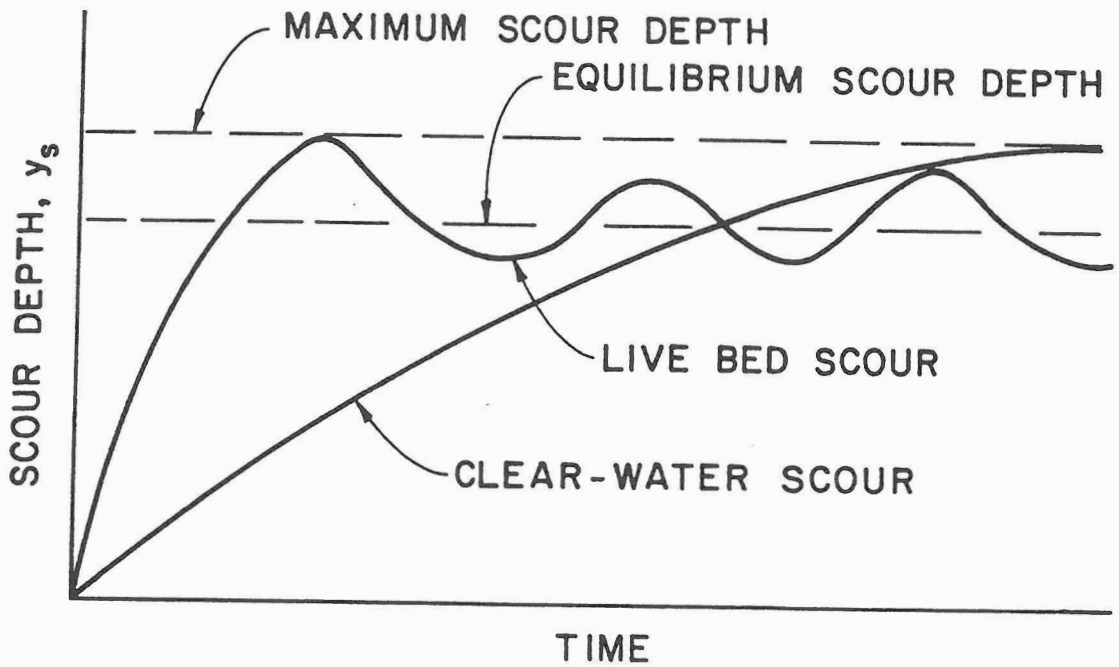

Figure 2.2 Scour Depth as a Function of Time

Live-bed scour in sand bed streams with a dune bed configuration fluctuates about the equilibrium scour depth. The reason for this is the variability of the bed material sediment transport in the approach flow when the bed configuration of the stream is dunes. In this case (dune bed configuration in the channel upstream of the bridge), maximum depth of scour is about 30 percent larger than equilibrium depth of scour.

The maximum depth of scour is the same as the equilibrium depth of scour for live-bed scour with a plain bed configuration. With antidunes occurring upstream and in the bridge crossing the maximum depth of scour from the limited research of Jain and Fisher (17) is about 10 percent greater than the equilibrium depth of scour.

For a discussion of bed forms in alluvial channel flow the reader is referred to Chapter 3 of "Highways in the River Environment" (7). Equations for estimating local scour at abutments or piers are given in Chapter 4 of this publication. These equations were developed from laboratory experiments and limited field data for both clear-water and live-bed scour.

G. LATERAL SHIFTING OF A STREAM

Streams are dynamic. Areas of flow concentration continually shift bank lines. A meandering stream has its "S" shaped plan form continually moving laterally and downstream. A braided stream has its various channels continually changing. Incidentally, the deepest natural scour occurs when two channels of a braided stream come together or when the flow comes together downstream of an island or bar. This has been observed to be 5 times the downstream flow depth.

A bridge is static. It fixes the stream at one place in time and space. A meandering stream continues to move laterally and downstream, eroding the approach embankment and affecting contraction and local scour because of changes in flow direction. A braided stream can shift its channels under a bridge, and have two channels come together at a pier or abutment, thus increasing scour. Descriptions of stream morphology are given in "Highways in the River Environment" (7) and in Hydraulic Engineering Circular 20 (6).

Factors that affect lateral shifting and the stability of a bridge are the geomorphology of the stream, location of the crossing on the stream, bed and bank materials, flood characteristics, the characteristics of the bed material and washload discharge.

It is difficult to anticipate when a change in plan form may occur. It may be gradual with time or the result of a major flood event. Also, the direction and magnitude of the movement of the stream is

not easily determined. **ALTHOUGH IT IS DIFFICULT TO PROPERLY EVALUATE THE VULNERABILITY OF A BRIDGE DUE TO CHANGES IN PLAN FORM, IT IS ESSENTIAL TO DO SO AND TO CONSIDER COUNTERMEASURES.**

Countermeasures may be changes in the bridge design, construction of river control works, protection of piers and/or abutments with riprap or even just careful monitoring of the river in a bridge inspection program. **SERIOUS CONSIDERATION SHOULD BE GIVEN TO PLACING FOOTINGS/FOUNDATIONS LOCATED ON FLOOD PLAINS AT ELEVATIONS APPROXIMATING THOSE LOCATED IN THE MAIN CHANNEL.**

To control lateral shifting requires river training works, bank stabilizing by riprap and/or guide banks. The design of these works is beyond the scope of this circular. Design methods are given by FHWA (18), U.S. Corps of Engineers (19, 20) and AASHTO (21) publications. Of particular importance are "Hydraulic Analyses for the Location and Design of Bridges," Volume VII-Highway Drainage Guidelines, 1982 (21); "Highways in the River Environment" (7); "Spur and Guide Banks" (22) and "Stream Stability" Hydraulic Engineering Circular 20 (6).

(blank)

CHAPTER 3

DESIGNING BRIDGES TO RESIST SCOUR

A. DESIGN PHILOSOPHY AND CONCEPTS

Bridges should be designed to withstand the effects of scour from a superflood (a flood exceeding the 100-year flood) with little risk of failing. This requires careful evaluation of the hydraulic, structural, and geotechnical aspects of bridge foundation design.

The guidance in this chapter is based on the following concepts.

- The foundation should be designed by an interdisciplinary team of engineers with expertise in hydraulic, geotechnical and structural design.

- Hydraulic studies of bridge sites are a necessary part of a bridge design. These studies should address both the sizing of the bridge waterway opening and the designing of the foundations to resist scour. The scope and depth of the analysis should be commensurate with the importance of the highway and the consequences of failure.

- Adequate consideration must be given to the limitations and gaps in existing knowledge when using currently available formulas for estimating scour. The designer needs to apply engineering judgment in comparing results obtained from scour computations with available hydrologic and hydraulic data to achieve a reasonable and prudent design. Such data should include:

  a. Performance of existing structures during past floods,

  b. Effects of regulation and control of flood discharges,

  c. Hydrologic characteristics and flood history of the stream and similar streams, and

  d. Whether the bridge is structurally continuous.

- The principles of economic analysis and experience with actual flood damage indicates that it is almost always cost-effective to provide a foundation that will not fail, even from a very large flood event or superflood. Occasional damage to highway approaches from rare floods can be repaired rather quickly to restore traffic service.

Preceding page blank

On the other hand, a bridge which collapses or suffers major structural damage from scour can create safety hazards to motorists as well as large social impacts and economic losses over a long period of time. Aside from the costs to the highway agency of replacing/repairing the bridge and constructing and maintaining detours, there can be significant costs to communities or entire regions due to additional detour travel time, inconveniences, and lost business opportunities. Therefore, a higher hydraulic standard is warranted for the design of bridge foundations as a protection against scour than is usually required for sizing of the bridge waterway. This concept is reflected in the following design procedure which is to be applied to the bridge design sized to accommodate the design discharge.

B. DESIGN PROCEDURE

The design procedure for scour outlined in the following steps is recommended for the proposed bridge type, size, and location (TS&L) of substructure units:

1. Select the flood event(s) with return periods of 100 years or less that are expected to produce the most severe scour conditions. Experience indicates that this is likely to be the overtopping flood which may or may not be equal to the 100-year flood. Check the 100-year flood, the overtopping flood (if less than the 100-year flood) and other flood events if there is evidence that such events would create deeper scour than the 100-year or overtopping floods.

2. Develop water surface profiles for the flood flows in Step 1, taking care to evaluate the range of potential tailwater conditions below the bridge which could occur during these floods. The FHWA microcomputer software WSPRO, "Bridge Waterways Analysis Model" (23), or the Corps of Engineers HEC 2, are recommended for this task.

3. Using the design procedures in Chapter 4, estimate total scour for the worst condition from Steps 1 and 2 above.

4. Plot the total scour depths obtained in Step 3 on a cross section of the stream channel and flood plain at the bridge site.

5. Evaluate the answers obtained in Steps 3 and 4. Are they reasonable, considering the limitations in current scour estimating procedures? The scour depth(s) adopted may differ from the equation value(s) based on engineering judgement.

6. Evaluate the bridge TS&L on the basis of the scour analysis

performed in Steps 3-5. Modify the TS&L as necessary.

- o Visualize the overall flood flow pattern at the bridge site for the design conditions. Use this mental picture to identify those bridge elements most vulnerable to flood flows and resulting scour.

- o The extent of protection to be provided should be determined by:

  a. The degree of uncertainty in the scour prediction method.
  b. The potential for and consequences of failure.
  c. The added cost of making the bridge less vulnerable to scour. Design measures incorporated in the original construction are almost always less costly than costly than retrofitting scour countermeasures.

7. Perform the bridge foundation analysis on the basis that all stream bed material in the scour prism above the total scour line (Step 4) has been removed and is not available for bearing or lateral support. All foundations should be designed in accordance with the AASHTO Standard Specifications for Highway Bridges. In the case of a pile foundation, the piling should be designed for additional lateral restraint and column action because of the increase in unsupported pile length after scour. In areas where the local scour is confined to the proximity of the footing, the lateral ground stresses on the pile length which remains embedded may not be significantly reduced from the pre-local scour conditions. The depth of local scour and volume of soil removed from above the pile group should be considered by geotechnical engineers when computing pile embedment to sustain vertical load.

   a. <u>Spread Footings On Soil</u>.

      - o Place the top of the footing below the design scour line from Step 4.

      - o Make sure that the bottom of the footing is at least 6.0 feet below the stream bed as per AASHTO standards.

   b. <u>Spread Footings On Rock Highly Resistant To Scour</u>.

      Place the bottom of the footing directly on the cleaned rock surface for massive rock formations (such as granite) that are highly resistant to scour. Small embedments (keying) should be avoided since blasting to achieve keying frequently damages the sub-footing rock structure and makes it more susceptible to scour. If

footings on smooth massive rock surfaces require lateral constraint, steel dowels should be drilled and grouted into the rock below the footing level.

c. Spread Footings On Erodible Rock.

Weathered or other potentially erodible rock formations need to be carefully assessed for scour. An engineering geologist familiar with the area geology should be consulted to determine if rock or soil or other criteria should be used to calculate the support for the spread footing foundation. The decision should be based on an analysis of intact rock cores including rock quality designations and local geology, as well as hydraulic data and anticipated structure life. An important consideration may be the existence of a high quality rock formation below a thin weathered zone. For deep deposits of weathered rock, the potential scour depth should be estimated (Steps 4 and 5) and the footing base placed below that depth. Excavation into weathered rock should be made with care. If blasting is required, light, closely spaced charges should be used to minimize overbreak beneath the footing level. Loose rock pieces should be removed and the zone filled with lean concrete. In any event, the final footing should be poured in contact with the sides of the excavation for the full designed footing thickness to minimize water intrusion below footing level. The excavation above the top of the spread footing should be filled with rock riprap sized to withstand flood flow velocities.

d. Spread Footings Placed On Tremie Seals And Supported On Soil.

- Place the tremie base three feet below the scour line (Step 4) if the tremie is structurally capable of sustaining the imposed structural load without lateral soil support.

- Check the design for the superflood to insure a safety factor of not less than 1.0.

e. For Deep Foundations (Drilled Shaft And Driven Piling) With Footings Or Caps.

Placing the top of the footing or pile cap below streambed a depth equal to the estimated contraction scour depth will minimize obstruction to flood flows and

resulting local scour. Even lower footing elevations may be desirable for pile supported footings when the piles could be damaged by erosion and corrosion from exposure to river currents.

f. Stub Abutments on Piling

Stub abutments positioned in the embankment should be founded on piling driven below the elevation of the thalweg in the bridge waterway to assure structural integrity in the event the thalweg shifts and the piling scour to the thalweg elevation.

8. Repeat the procedure in Steps 2 - 6 above and calculate the scour for a superflood. It is recommended that this superflood or check flood be on the order of a 500-year event or a flood 1.7 times the magnitude of the 100-year flood if the magnitude of the 500-year flood can not be estimated. However, flows greater or less than these suggested floods may be appropriate depending upon hydrologic considerations and the consequences associated with damage to the bridge. An overtopping flood within the range of the 100-year to 500-year flood may produce the worst-case situation for checking the foundation design. The foundation design determined under Step 7 should be reevaluated for the superflood condition and design modifications made where required.

- Check to make sure that the bottom of spread footings on soil or weathered rock is below the scour depth for the superflood.

- **All foundations should have a minimum factor of safety of 1.0 (ultimate load) under the superflood conditions.** Note that in actual practice, the calculations for Step 8 would be performed concurrently with Steps 1 through 7 for efficiency of operation.

C. CHECKLIST OF DESIGN CONSIDERATIONS

TABLE 3.1 CHECKLIST OF DESIGN CONSIDERATIONS

General

1. Raise the bridge superstructure elevation above the general elevation of the approach roadways wherever practicable. This provides for overtopping of approach embankments and relief from the hydraulic forces acting at the bridge. This is particularly important for streams carrying large amounts of debris which could clog the waterway of the bridge.

2. Superstructures should be securely anchored to the substructure if buoyant, debris, and ice forces are probable. Further, the superstructure should be shallow and open to minimize resistance to the flow where overtopping is likely.

3. Continuous span bridges withstand forces due to scour and resultant foundation movement better than simple span bridges. Continuous spans provide alternate load paths (redundancy) for unbalanced forces caused by settlement and/or rotation of the foundations. This type of structural design is especially recommended for bridges where there is a significant scour potential.

4. Local scour holes at piers and abutments may overlap one another in some instances. If local scour holes do overlap, the scour can be deeper. The top width of a local scour hole ranges from 1.0 to 2.75 times the depth of scour.

5. For pile and drilled shaft designs subject to scour, consideration should be given to using a lesser number of longer piles or shafts as compared with a greater number of shorter piles or shafts to develop bearing loads. This approach will provide a greater factor of safety against pile failure due to scour at little or no increase in cost.

6. At some bridge sites, hydraulics and traffic conditions may necessitate consideration of a bridge that will be partially or even totally inundated during high flows. This consideration results in pressure flow through the bridge waterway. Since this consideration has received no attention relative to estimation of bridge scour, there is no recommendation for determination of scour pending future research.

TABLE 3.1 CHECKLIST OF DESIGN CONSIDERATIONS

Piers

1. Pier foundations on floodplains should be designed to the same elevation as the pier foundations in the stream channel if there is a likelihood that the channel will shift its location on the floodplain over the life of the bridge.

2. Align piers with the direction of flood flows. Assess the hydraulic advantages of round piers, particularly where there are complex flow patterns during flood events.

3. Streamline pier shapes to decrease scour and minimize potential for buildup of ice and debris. Use ice and debris deflectors where appropriate.

4. Evaluate the hazards of ice and debris buildup when considering use of multiple pile bents in stream channels. Where ice and debris buildup is a problem, design the bent as though it were a solid pier for purposes of estimating scour. Consider use of other pier types where clogging of the waterway area could be a major problem.

Abutments

1. Recognizing that abutment scour solutions lack definition, it is recommended that rock riprap and/or guide banks be seriously considered for abutment protection. Properly designed, these two protective measures negate the need to compute abutment scour.

2. Relief openings, guide banks (spur dikes), and river training works should be used where needed to minimize the effects of adverse flow conditions at abutments.

3. Utilize rock riprap where needed to protect abutments. Design rock riprap to resist the hydraulic forces associated with design conditions using Hydraulic Engineering Circular No. 11, "Design of Riprap Revetment" (24) with rock riprap design guidance given in Chapter 7.

4. Where ice build-up is likely to be a problem, set the toe of spill-through slopes or vertical abutment walls some distance from the edge of the channel bank to facilitate passage of the ice.

5. Scour at spill-through abutments is about 50% of that of vertical wall abutments.

(blank)

CHAPTER 4

ESTIMATING SCOUR AT BRIDGES

I. INTRODUCTION

This chapter presents the methods and equations for determining total scour at a bridge; i.e., long-term aggradation or degradation, contraction scour and local scour. Example problems are given at the end of the chapter.

Prior to applying the various scour forecasting methods for contraction and local scour, it is necessary to 1) obtain the fixed-bed channel hydraulics, 2) estimate the long-term profile degradation or aggradation, 3) adjust the fixed-bed hydraulics to reflect these changes, and 4) compute the bridge hydraulics.

II. DESIGN APPROACH

The seven steps recommended for estimating scour at bridges are:

STEP 1. Determine scour analysis variables.

STEP 2. Analyze long-term bed elevation change.

STEP 3. Evaluate the scour analysis method.

STEP 4. Compute the magnitude of contraction scour.

STEP 5. Compute the magnitude of local scour at abutments.

STEP 6. Compute the magnitude of local scour at piers.

STEP 7. Plot the total scour depths

The procedures for each of the steps, including recommended scour equations, are discussed in detail in the following sections.

III. DETAILED PROCEDURES

A. STEP 1. DETERMINING SCOUR ANALYSIS VARIABLES

1. Determine the magnitude of the discharges for the floods in Step 1 of the Design Procedure, Chapter III, including the overtopping flood when applicable. If the magnitude of the 500-year flood is not available, use a discharge equal to 1.7 X Q_{100}. Experience has shown that the incipient overtopping discharge often puts the most stress on a bridge. However, special conditions (angle of attack, pressure flow, decrease in velocity or discharge resulting from high flows overtopping

Preceding page blank

approaches or going through relief bridges, ice jams, etc.) may cause a more severe condition for scour with a flow smaller than the overtopping or 100-year flood.

2. Determine the water-surface profiles for the discharges judged to produce the most scour from Step 1, using WSPRO or HEC 2. In some instances the designer may wish to use BRI-STARS. The engineer should anticipate future conditions at the bridge, in the stream's watershed, and at downstream water-surface elevation controls.

3. Determine if there are existing or potential future factors that will produce a combination of high discharge and low tailwater control. Are there bedrock or other controls (old diversion structures, erosion control checks, other bridges, etc.) that might be lowered or removed? Are there dams or locks downstream that would control the tailwater elevation seasonally? Are there dams upstream or downstream that could control the elevation of the water surface at the bridge? Select the lowest reasonable downstream water-surface elevation and the largest discharge to estimate the greatest scour potential. Assess the distribution of the velocity and discharge per foot of width for the design flow and other flows through the bridge opening. Consider also the approach flow and the flow distribution downstream (the contraction and expansion of the flow). This should take into consideration present conditions and anticipated future changes in the river.

4. From computer analysis and from other hydraulic studies, determine the discharge velocity and depth input variables needed for the scour calculations.

5. Collect and summarize the following information as appropriate.

   a. Boring logs to define geologic substrata at the bridge site.

   b. Bed material size and gradation distribution in the bridge reach.

   c. Existing stream and flood plain cross-section through the reach.

   d. Stream geomorphic plan form.

   e. Watershed characteristics.

   f. Scour data on other bridges in the area.

   g. Slope of energy grade line upstream and downstream of the

bridge.

h. Bed material sediment discharge estimates for flood discharges (flood discharges are mean annual, and 5, 10, 25, 50, 100 and 500 year frequencies). Use Colby's method for sand-bed streams and the Meyer-Peter, Muller equation for coarse bed streams (7).

i. History of flooding.

j. Location of bridge site with respect to other bridges in the area, confluence with tributaries close to the site, bed rock controls, man-made controls (dams, old check structures, river training works, etc.), and downstream confluences with another stream.

k. Character of the stream (perennial, flashy, intermittent, gradual peaks, etc.).

l. Geomorphology of the site (flood plain stream; crossing of a delta, youthful, mature or old age stream; crossing of an alluvial fan; meandering, straight or braided stream; etc.).

m. Erosion history of the stream.

n. Development history (past, present and future) of the stream and watershed. Collect maps, ground photographs, aerial photographs; interview local residents; check for water research projects planned or contemplated.

o. Sand and gravel mining from streambed up and downstream from site.

p. Other factors that could affect the bridge.

q. Make a qualitative evaluation of the site with an estimate of the potential for stream movement and its effect on the bridge.

B. STEP 2. <u>ANALYSIS OF LONG-TERM BED ELEVATION CHANGE</u>

1. Using the information collected in Step 1 above, determine qualitatively the long-term trend in the stream elevation. Where conditions indicate that significant aggradation or degradation is likely, estimate the change in bed elevation over the next 100 years using one or more of the following:

   a. Available computer programs such as BRI-STARS and the Corps of Engineers HEC 6,

b. Straight line extrapolation of present trends,

c. Engineering judgment,

d. The worse-case scenarios; i.e., in the case of a confluence with another stream just downstream of the bridge, assume the design flood would occur with a low downstream water-surface elevation through a qualitative assessment of the joint probability of flood magnitudes and river conditions on the main stream and its tributary.

2. If the stream is aggrading and this condition can be expected to affect the crossing, taking into account contraction scour, consider relocation of the bridge or raising the lower cord of the bridge.

3. If the stream is degrading, use the change in elevation in the calculations of total scour.

C. STEP 3. EVALUATE THE SCOUR ANALYSIS METHOD

The method is based on the assumption that the scour components develop independently. Thus, the potential local scour is added to the contraction scour without considering the effects of contraction scour on the channel and bridge hydraulics. If contraction scour is significant, an alternate method presented in Appendix A may be used.

- Estimate the natural channel hydraulics for a fixed-bed condition based on existing conditions,
- Assess the expected profile and plan form changes,
- Adjust the fixed-bed hydraulics to reflect any expected long-term profile or plan form changes,
- Estimate contraction scour using the empirical contraction formula and the adjusted fixed-bed hydraulics,
- Estimate local scour using the adjusted channel and bridge hydraulics, and
- Add the local scour to the contraction scour to obtain the total scour. Chapter 3, Design procedure, Step 5.

D. STEP 4. CONTRACTION SCOUR

1. General

Contraction scour can be caused by different bridge site conditions. There are four (4) conditions (cases) which are:

Case 1. Involves overbank flow on a flood plain being forced back to the main channel by the approaches to the bridge.

a. The river channel width becomes narrower either due to the bridge abutments projecting into the channel or the bridge being located at a narrowing reach of the river ($W_{c1} > W_{c2}$).

b. Does not involve any contraction of the main channel, but the overbank flow area is completely obstructed by the embankment ($W_{c1} = W_{c2}$).

c. Abutments set back from the stream channel (($W_{c1} < (W_{c2} + W_{setback})$)).

Case 2. Flow is confined to the main channel; i.e., there is no overbank flow. The normal river channel width becomes narrower due to the bridge itself or the bridge site being located at a narrower reach of the river.

Case 3. A relief bridge in the overbank area with little or no bed material transport in the overbank area; i.e., clear-water scour. ($W_1 > W_{c2}$)

Case 4. A relief bridge over a secondary stream in the overbank area. (Similar to Case 1).

W_{c1} = bottom width of the main channel
W_{c2} = bottom width of the contracted section
W_1 = width of upstream overbank area

These 4 cases are illustrated in Figure 4.1. The equations for solving each case are presented in the following sections.

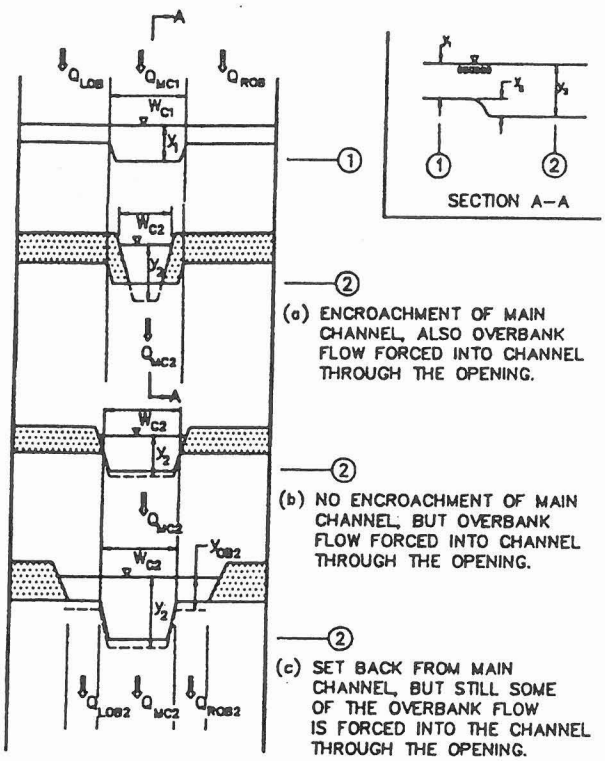

Case 1: Contraction w/ Overbank Flow.

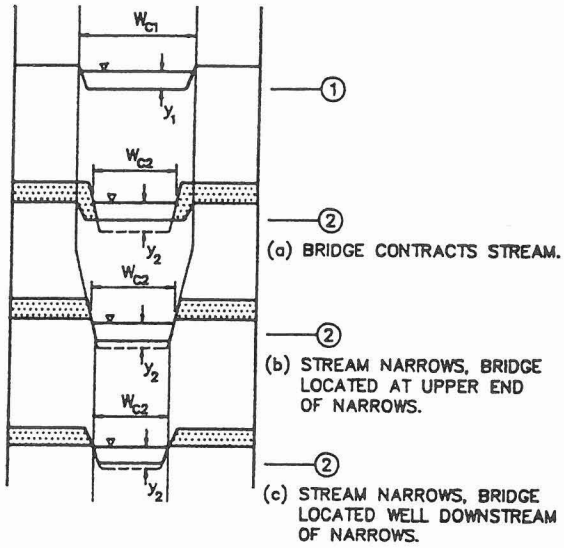

Case 2: Contraction w/ no Overbank Flow.

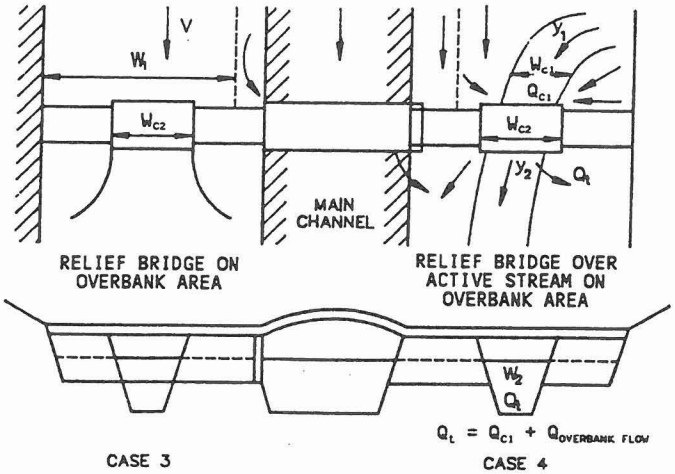

Case 3 and 4: Relief Bridge.

Figure 4.1 The Four Main Cases of Contraction Scour

2. Estimating Contraction Scour.

a. **CASE 1. CONTRACTION SCOUR, OVERBANK FLOW BEING FORCED BACK INTO THE MAIN CHANNEL. (Live-bed scour)**

For Cases 1a and 1b use Laursen's 1960 Equation (8) for a long contraction to predict the depth of scour in the contracted section. This equation was given in Chapter 2. It assumes that bed material is being transported in the main channel, but not in the overbank zones.

$$\frac{y_2}{y_1} = \left(\frac{Q_{mc2}}{Q_{mc1}}\right)^{\frac{6}{7}} \left(\frac{W_{c1}}{W_{c2}}\right)^{K_1} \left(\frac{n_2}{n_1}\right)^{K_2} \qquad (1)$$

$y_s = y_2 - y_1$ (Average scour depth)

Where:

- y_1 = average depth in the main channel
- y_2 = average depth in the contracted section
- W_{c1} = bottom width of the main channel
- W_{c2} = bottom width of the bridge opening
- Q_{mc1} = flow in the approach channel that is transporting sediment
- Q_{mc2} = flow in the contracted channel which is often Q_{total}, but not always
- n_2 = Manning's n for contracted section
- n_1 = Manning's n for main channel
- K_1 & K_2 = exponents determined below

V_{*c}/w	K_1	K_2	Mode of Bed Material Transport
<0.50	0.59	0.066	mostly contact bed material discharge
0.50 to 2.0	0.64	0.21	some suspended bed material discharge
>2.0	0.69	0.37	mostly suspended bed material discharge

V_{*c} = $(gy_1S_1)^{0.5}$, shear velocity

w = fall velocity of D_{50} of bed material. (See Figure 4.2)

g = gravity constant

S_1 = slope of energy grade line of main channel

Notes.

1. Q_{mc2} may be the total flow going through the bridge opening as in Cases 1a and 1b. It is <u>not</u> the total for Case 1c.

2. Q_{mc1} is the flow in the main channel upstream of the bridge.

3. The Manning's n ratio can be significant for a condition of dune bed in the main channel and a corresponding plain bed, washed out dunes or antidunes in the contracted channel (7). HOWEVER LAURSEN'S EQUATION DOES NOT CORRECTLY ACCOUNT FOR THE INCREASE IN TRANSPORT THAT WILL OCCUR AS THE RESULT OF THE BED PLANING OUT WHICH DECREASES RESISTANCE TO FLOW AND INCREASES VELOCITY AND THE TRANSPORT OF BED MATERIAL AT THE BRIDGE. THAT IS, LAURSEN'S EQUATION INDICATES A DECREASE IN SCOUR FOR THIS CASE WHEREAS IN REALITY THERE IS AN INCREASE IN SCOUR DEPTH. THEREFORE SET THE TWO n VALUES EQUAL.

4. The average width of the bridge opening (W_{c2}) is normally taken as the bottom width, with the width of the piers subtracted.

5. Laursen's equation will overestimate the depth of scour at the bridge if the bridge is located at the upstream end of the contraction or if the contraction is the result of the bridge abutments and piers. At this time, however, it is the best equation available.

<u>CASE 1a.</u>

Case 1a involves contraction of the channel and overbank flow. In this case:

$Q_{mc1} < Q_{mc2}$

Q_{mc2} = total flow going through the bridge. It equals Q_{mc1} plus $Q_{overbank}$ (Q_{ob}) less any flow going over the roadway, through a relief bridge or otherwise bypassing the main bridge.

$W_{c1} > W_{c2}$

W_{c2} = bottom width of the channel at the bridge less the width of piers.

$n_1 = n_2$

Equation 1 reduces to:

$$\frac{y_2}{y_1} = \left(\frac{Q_{mc2}}{Q_{mc1}}\right)^{\frac{6}{7}} \left(\frac{W_{c1}}{W_{c2}}\right)^{K_1} \qquad (2)$$

A typical application of Case 1a would be to evaluate the effect of piers in the main channel when there is overbank flow.

CASE 1b.

Case 1b involves overbank flow with out any contraction of the main channel (even by piers). In this case:

$Q_{mc1} < Q_{mc2}$

Q_{mc2} = total flow going through the bridge. It equals Q_{mc1} plus $Q_{overbank}$ less any flow going over the roadway, through a relief bridge or otherwise bypassing the main bridge. $(Q_t - Q_{bypass})$

$W_{c1} = W_{c2}$

$n_1 = n_2$

Then Equation 1 reduces to:

$$\frac{y_2}{y_1} = \left(\frac{Q_{mc2}}{Q_{mc1}}\right)^{\frac{6}{7}} \qquad (3)$$

CASE 1c.

Case 1c is very complex. The depth of contraction scour depends on factors such as 1) how far back from the bank line the abutment is set, 2) the condition of the bank (is it easily eroded, are there trees on the bank, is it a high bank, etc.), 3) whether the stream is narrower or wider at the bridge than at the upstream section, 4) the magnitude of the overbank flow that is returned to the bridge opening, 5) the distribution of the flow in the bridge section, etc.

Case 1c is a general situation that can be analyzed using the contraction scour equations given in Chapter 2. The contraction scour in the main channel portion is an application of Equation 1. The only difference in this portion of the cross section at the bridge and case 1a is that the magnitude of Q_{mc2} is not intuitively obvious.

Equation 1 for the main channel portion becomes:

$$\frac{y_2}{y_1} = \left(\frac{Q_{mc2}}{Q_{mc1}}\right)^{\frac{6}{7}} \left(\frac{W_{c1}}{W_{c2}}\right)^{K_1} \qquad (4)$$

Q_{mc1} = flow in upstream main channel.

Q_{mc2} = flow in the main channel portion of the bridge cross section.

W_{c1} = bottom width of the upstream main channel.

W_{c2} = bottom width of the channel at the bridge less the width of piers.

A water surface model like WSPRO (23) can be used to determine the distribution of flow between the main channel and the set-back overbank areas in the contracted bridge opening.

The set-back overbank area for Case 1c can be analyzed by using the clear water scour Equations 2a or 2b described in Chapter 2. Again, the problem is in determining the discharge that will be in the overbank area. Each overbank area could be treated as a separate channel, but this case represents a situation for which flow continuity may not be appropriate because some of the approach overbank flow will probably end up in the main channel in the contracted section.

For the set-back portion, apply Equation 2a given in Chapter 2 with:

$Q_2 = Q_{ob2}$

$W_2 = W_{setback}$

Where:

Q_{ob2} = overbank flow through the contracted section for the left or right overbank area.

$W_{setback}$ = distance the abutment is set back from the main channel.

$$y_2 = \left[\frac{Q_{ob2}^2}{120\ D_{50}^{\frac{2}{3}}\ W_{setback}^2}\right]^{\frac{3}{7}} \qquad (5)$$

The quantity and depth of flow in the overbank area (left or right) can be determined using a water surface model like WSPRO (23). A conservative assumption for determining contraction scour on the setback overbank area would be that all of the overbank flow (left or right) at the upstream section must pass through the setback area as it moves through the contraction. The value of y_1 can best be approximated by the depth of flow on the overbank area (left or right).

Then:

$$Q_{ob1} = Q_{ob2}$$

If the abutment is set back only a small distance from the bank (less than 3 to 5 times the depth of flow through the bridge), there is the possibility that the combination of contraction scour and abutment scour may destroy the bank. Also, the two scour mechanisms are not independent. Then consideration should be given of using a guide bank or of rock riprapping the bank and bed under the bridge in the overflow area, using HEC 11 (24) to determine the rock riprap size.

Also, Laursen's abutment scour equations given in Appendix B will estimate both contraction and local scour at abutments, but will not give contraction scour for the channel.

b. **CASE 2. CONTRACTION SCOUR, NO OVERBANK FLOW. (LIVE-BED SCOUR)**

Case 2 is a special case where there is no overbank flow and the main channel narrows either naturally or due to the bridge piers or the abutment and embankment occupying part of the main channel. Assuming that the main channel is transporting bed material (live-bed) then Equation 1 applies and reduces to:

$$\frac{y_2}{y_1} = \left(\frac{W_{c1}}{W_{c2}}\right)^{k_1} \qquad (6)$$

Although the computations are the same for Cases 2a, 2b, and 2c, the latter two cases represent situations where contraction scour is not bridge related. Nevertheless this contraction scour is flood related and needs to be considered in the design or evaluation of a foundation. In Case 2b, Laursen's long contraction scour given in Equation 1 is conservative.

c. **CASE 3. CONTRACTION SCOUR, RELIEF BRIDGE WITH NO BED MATERIAL TRANSPORT. (CLEAR-WATER SCOUR)**

Case 3 applies to a relief bridge on a floodplain where there is no bed material transport. Use Laursen's 1963 equation (9) given in Chapter 2.

With some algebraic manipulation:

$$\frac{y_s}{y_1} = 0.13 \left[\frac{Q}{D_m^{\frac{1}{3}}\, y_1^{\frac{7}{6}}\, W_2} \right]^{\frac{6}{7}} - 1 \qquad (7)$$

y_s = Depth of scour.

y_1 = Depth of flow on the flood plain upstream of the relief bridge.

Q = Discharge through the relief bridge.

D_m = Effective mean diameter (feet) of the bed material (1.25 D_{50}) in the bridge opening.

D_{50} = Median diameter (feet) of bed material at relief bridge. Use a weighted average of the material in the scour zone.

W_2 = Bottom width of the relief bridge less pier widths.

All above dimensions are in feet.

Note. The depth y_1 is the depth upstream of the relief bridge that has active flow.

d. **CASE 4. CONTRACTION SCOUR, RELIEF BRIDGE WITH BED MATERIAL TRANSPORT. (LIVE-BED SCOUR)**

Case 4 is similar to Case 3, but there is sediment transport into the relief opening (live-bed scour). This case can occur when a relief bridge is over a secondary channel on the flood plain (See Figure 4.1). Hydraulically this is no different from Case 1, but analysis is required to determine the flood plain width associated with the relief opening and the flow distribution going to and through the relief bridge. This information could be obtained from WSPRO (23).

Use the equation given for Case 1 with appropriate adjustments of the variables.

3. Other Contraction Scour Conditions.

Contraction scour resulting from variable water surfaces downstream of the bridge is analyzed by determining the lowest potential water-surface elevation downstream of the bridge in so far as scour processes are concerned. Use the WSPRO (23) computer program to determine the flow variables, such as velocity and depths, through the bridge. With these variables, determine contraction and local scour depths.

Contraction scour in a channel bendway resulting from the flow through the bridge being concentrated in one area is analyzed by determining the superelevation of the water surface on the outside of the bend and estimating the resulting velocities and depths through the bridge. The maximum velocity in the outer part of the bend can be 1.5 to 2 times the mean velocity. A physical model study can also be used to determine the velocity and scour depth distribution through the bridge for this case.

Estimating contraction scour for unusual situations involves particular skills in the application of principles of river mechanics to the specific site conditions and such studies should be undertaken by engineers experienced in the fields of hydraulics and river mechanics. Highways in the River Environment (7) will be of great assistance.

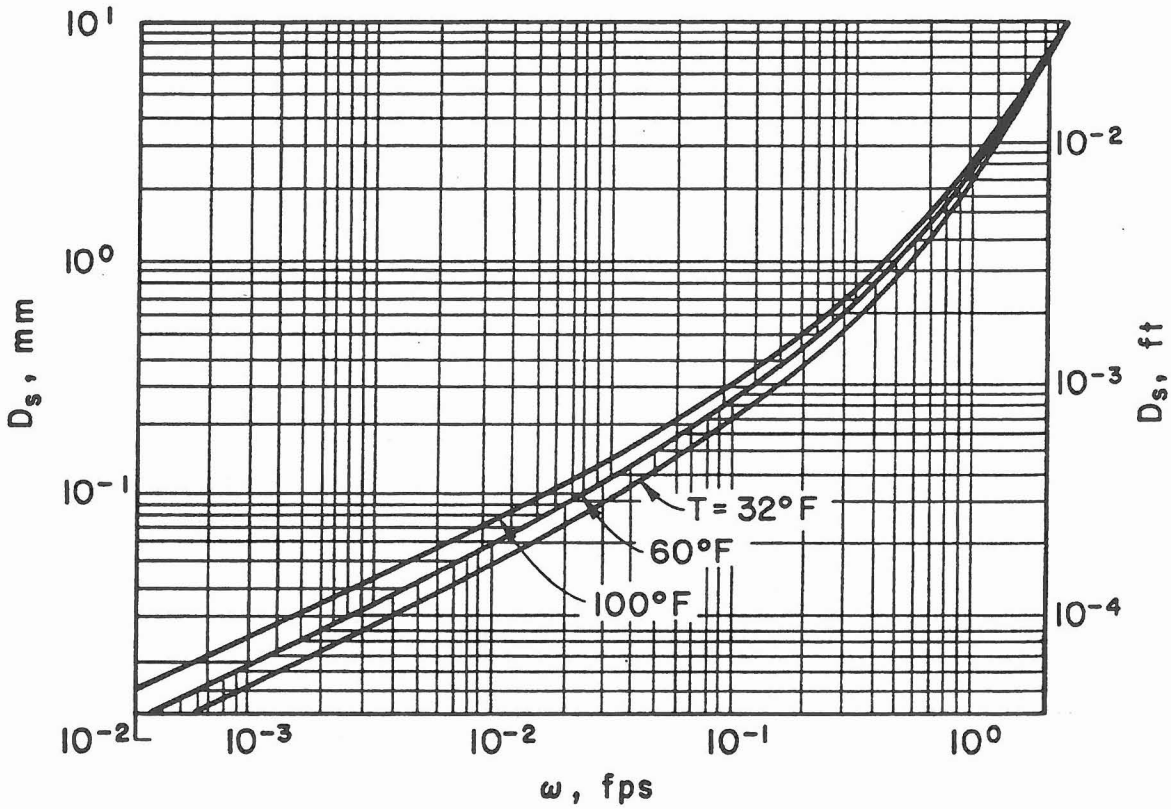

Figure 4.2 Fall Velocity of Sand Size Particles

E. STEP 5. LOCAL SCOUR AT ABUTMENTS

1. General.

Equations for predicting scour depths are based almost entirely on laboratory data. For example, Liu, et al's (1961) (25), Laursen's (1980) (26) and Froehlich's (1989) (27) equations are based entirely on laboratory data. The problem is that little field data on abutment scour exists. Liu, et al's equations were developed by dimensional analysis of the variables and a best-fit line was drawn through the laboratory data. Laursen's equations are based on inductive reasoning of the change in transport relations due to the acceleration of the flow caused by the abutment. Froehlich's equations are derived from a regression analysis of the available laboratory data.

EQUATIONS FOR ABUTMENT SCOUR ARE FOR THE WORSE-CASE CONDITIONS. THEY WILL PREDICT THE MAXIMUM SCOUR THAT COULD OCCUR FOR AN ABUTMENT PROJECTING INTO A STREAM WITH VELOCITIES AND DEPTHS UPSTREAM OF THE ABUTMENT SIMILAR TO THOSE IN THE MAIN CHANNEL. The reason for this is the way the experiments were conducted which do not represent many of the conditions in the field. For example, Liu's experiments were made in a rectangular laboratory flume with a sand bed. The abutments projected out various lengths from one wall or occasionally both walls of the flume. When they projected out from one flume wall then the other wall was taken as the centerline of the bridge. Other research was conducted similarly. Thus, the velocity, depth and sediment transport upstream of the abutment were about the same as in the main channel. Field conditions may have tree lined or vegetated banks, low velocities and shallow depths upstream of the abutment. If there is overland flow it often is at a shallower depth and lower velocity, with little bed material transport. **THEREFORE, ENGINEERING JUDGEMENT IS REQUIRED IN DESIGNING FOUNDATIONS FOR ABUTMENTS. IN MANY CASES FOUNDATIONS CAN BE DESIGNED WITH SHALLOWER DEPTHS THAN PREDICTED BY THE EQUATIONS AND THE FOUNDATIONS PROTECTED WITH ROCK RIPRAP PLACED BELOW THE STREAM BED OR A GUIDE BANK (SPUR DIKE) PLACED UPSTREAM OF THE ABUTMENT. COST WILL BE THE DECIDING FACTOR. A METHOD TO DETERMINE THE LENGTH OF A GUIDE BANK IS GIVEN IN APPENDIX C.**

2. Abutment Site Conditions.

Abutments can be set back from the natural stream bank or can project into the channel. They can have various shapes (vertical walls, spill through slopes) and can be set at varying angles to the flow. Scour at abutments can be live-bed or clear-water scour. Finally, there can be varying amounts of overbank flow intercepted by the approaches to the bridge and returned to the stream at the abutment.

3. Abutment Shape.

There are two general shapes for abutments; i.e., vertical-wall abutments with wing walls and spill-through abutments, Figure 4.3. Depth of scour is about double for vertical-wall abutments as compared with spill-through abutments.

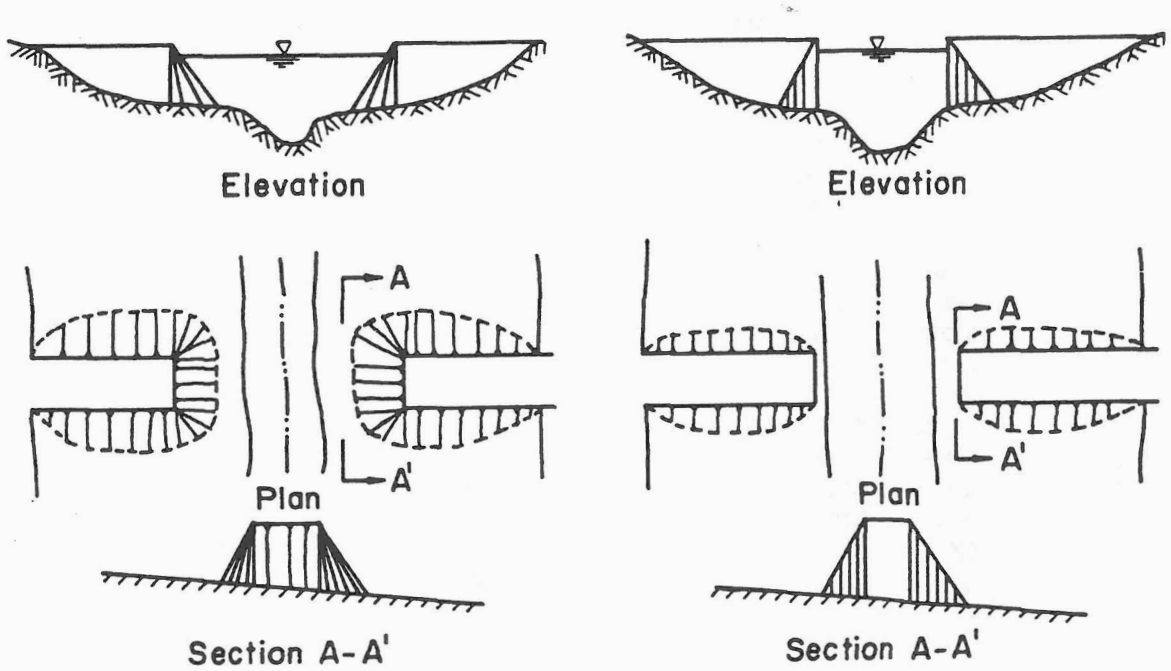

(A) SPILL THROUGH (B) VERTICAL WALL

Figure 4.3 Abutment Shape

4. Design for Scour at Abutments.

It is recommended that foundation depths for abutments be set by AASHTO standards. Protection can be provided using rock riprap with the guidance from Chapter 7 and the design procedures of HEC 11 (24), and/or guide banks (spur dikes), designed per Appendix C.

LIVE-BED SCOUR AT ABUTMENTS

As a check on the potential depth of scour to aid in the design of the foundation and placement of rock riprap or guide banks, Froehlich's (27) LIVE-BED SCOUR equation given below can be used. Appendix B presents an alternate design approach, using material contained in the original FHWA Interim Procedures for Evaluating Scour at Bridges.

Froehlich (27) analyzed 170 live-bed scour measurements in laboratory flumes to obtain the following equation:

$$y_s/y_a = 2.27\ K_1\ K_2\ (a'/y_a)^{0.43}\ Fr_e^{0.61} + 1 \qquad (8)$$

Where:

K_1 = coefficient for abutment shape

K_2 = coefficient for angle of embankment to flow

$K_2 = (\theta/90)^{0.13}$

$\theta<90^0$ if embankment points downstream

$\theta>90^0$ if embankment points upstream

a' = the length of abutment projected normal to flow

$a' = A_e/y_a$

A_e = the flow area of the approach cross-section obstructed by the embankment.

Fr_e = Froude number of approach flow upstream of the abutment.

$= V_e/(gy_a)^{0.5}$

$V_e = Q_e/A_e$

Q_e = the flow obstructed by the abutment and approach embankment.

y_a = depth of flood plain flow at the abutment

y_s = scour depth

Description	K_1
VERTICAL-WALL ABUTMENT	1.0
VERTICAL-WALL ABUTMENT WITH WING WALLS	0.82
SPILL-THROUGH ABUTMENT	0.55

TABLE 4.1 ABUTMENT SLOPE COEFFICIENTS

Froehlich (28) suggested that scour depth be increased by $y_1/6$ if there are dunes in the main channel upstream of the abutment.

CLEAR-WATER SCOUR AT AN ABUTMENT

Use Equation 8 for live-bed scour since Froehlich's clear-water scour equation presented in Appendix B potentially decreases scour at abutments due to the presence of coarser material. This decrease is unsubstantiated by field data, however. Froehlich's clear-water scour equation is not recommended.

F. STEP 6. COMPUTE LOCAL SCOUR AT PIERS

1. General.

Local scour at piers is a function of bed material size, flow characteristics, fluid properties and the geometry of the pier. The subject has been studied extensively in the laboratory, but there is limited field data. As a result of the many studies, there are many equations. In general, the equations are for live-bed scour in cohesionless sand bed streams, which give similar results.

The FHWA (29) compared many of the more common equations in 1983. Comparison of these equations is given in Figures 4.4 and 4.5. Some of the equations have velocity as a variable (normally in the form of a Froude number). However some equations, such as Laursen's do not include velocity. A Froude number of 0.3 was used in Figure 4.4 for purposes of comparing commonly used scour equations. In Figure 4.5 the equations are compared with some field data measurements. As can be seen from Figure 4.5, the Colorado State University (CSU) equation encloses all the points, but gives lower values of scour than Jain's, Laursen's and Neill's equations. The CSU equation includes the velocity of the flow just upstream of the pier by including the Froude Number in the

equation. Chang (30) pointed out that Laursen's (8) 1960 equation is essentially a special case of the CSU equation with the Fr = 0.4 (See Figure 4.6).

The equations illustrated in Figures 4.4, 4.5 and 4.6 do not take into account the possibility that larger sizes in the bed material could armor the scour hole. That is, the large sizes in the bed material will at some depth of scour limit the scour depth. Raudkivi and others (10,11,12,13) developed equations which take into consideration large particles in the bed. The significance of armoring the scour hole over a long time frame and over many floods is not known. THEREFORE, THESE EQUATIONS ARE NOT RECOMMENDED FOR USE AT THIS TIME.

TO DETERMINE PIER SCOUR, THE CSU EQUATION IS RECOMMENDED FOR BOTH LIVE-BED AND CLEAR-WATER SCOUR. The equation predicts equilibrium scour depths. In the unusual situation where a dune bed configuration exists at a site during flood flow, the maximum scour will be 30 percent greater than the predicted equation value. For the plane bed configuration, which is typical of most bridge sites for the flood frequencies employed in scour design, the maximum scour may be 10 percent greater than computed with CSU's equation.

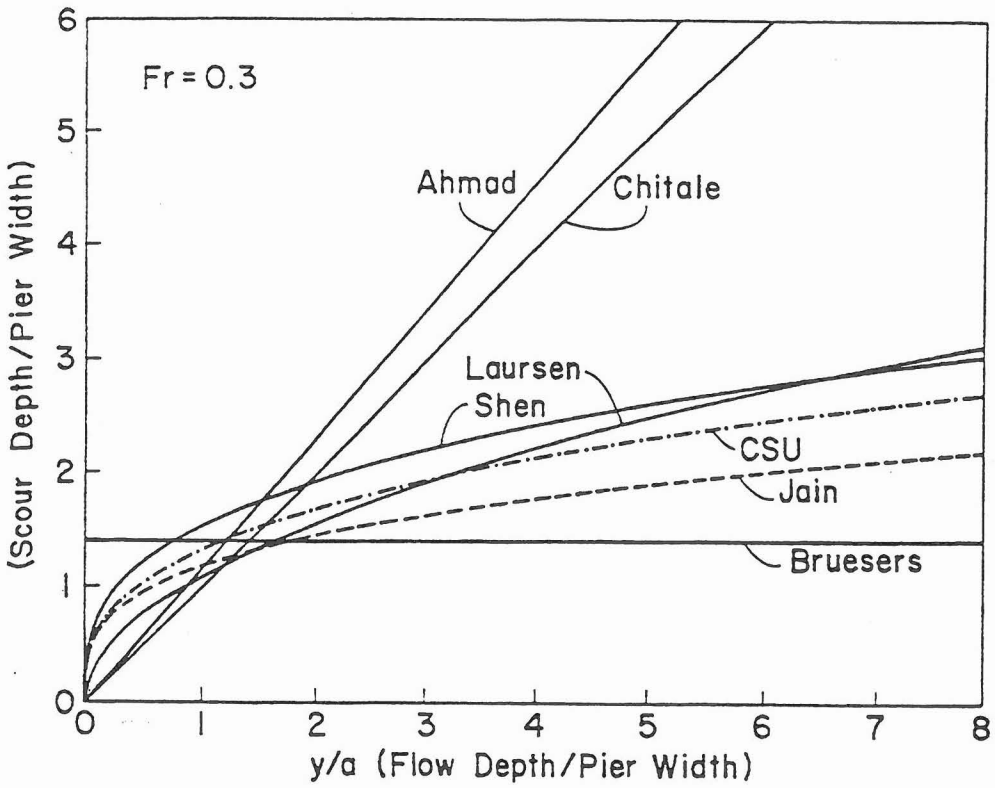

Figure 4.4 Comparison of Scour Formulas for Variable Depth Ratios (y/a) after Jones (29)

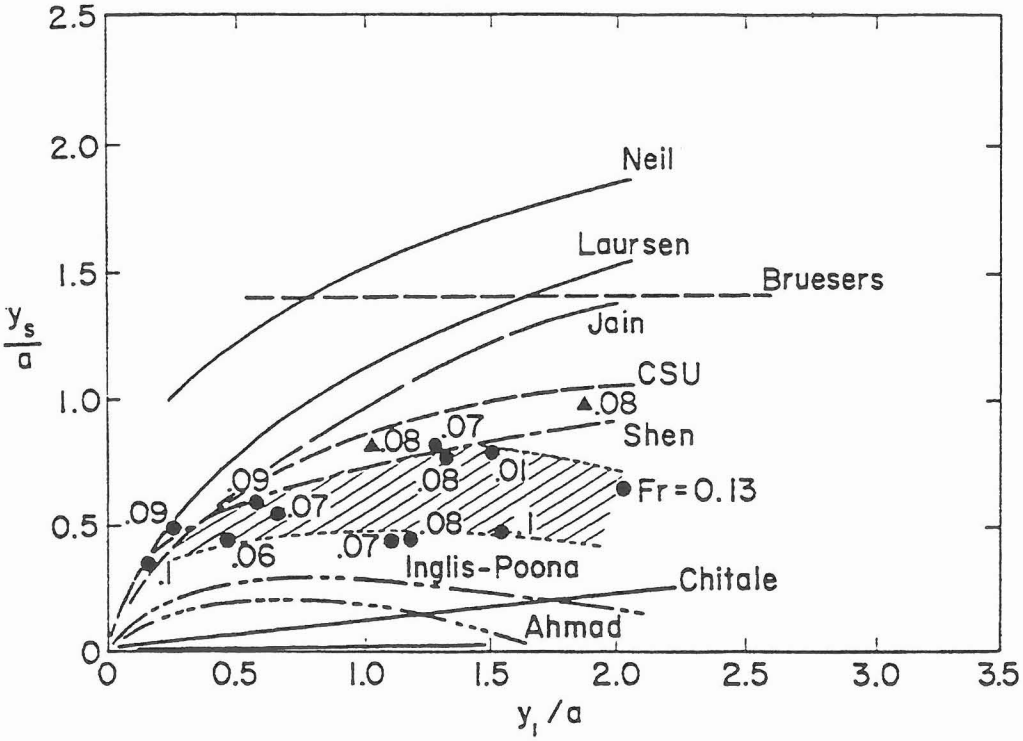

Figure 4.5 Comparison of Scour Formulas with Field Scour Measurements after Jones (29)

In Figure 4.6 the CSU equation relationship between y_s/a and y_1/a is given as a function of the Froude number. This relation was developed by Dr. Fred Chang (30). Note that Laursen's pier scour equation is a special case of the CSU equation when the Froude number is 0.4. Values of y_s/a values around 3.0 were obtained by Jain and Fisher (17) for chute and pool flows with Froude numbers as high as 1.5. The largest value of y_s/a for antidune flow was 2.5 with a Froude number of 1.2. Thus, the CSU equation will correctly predict scour depths for upper regime flows (plain bed, antidunes and chutes and pools).

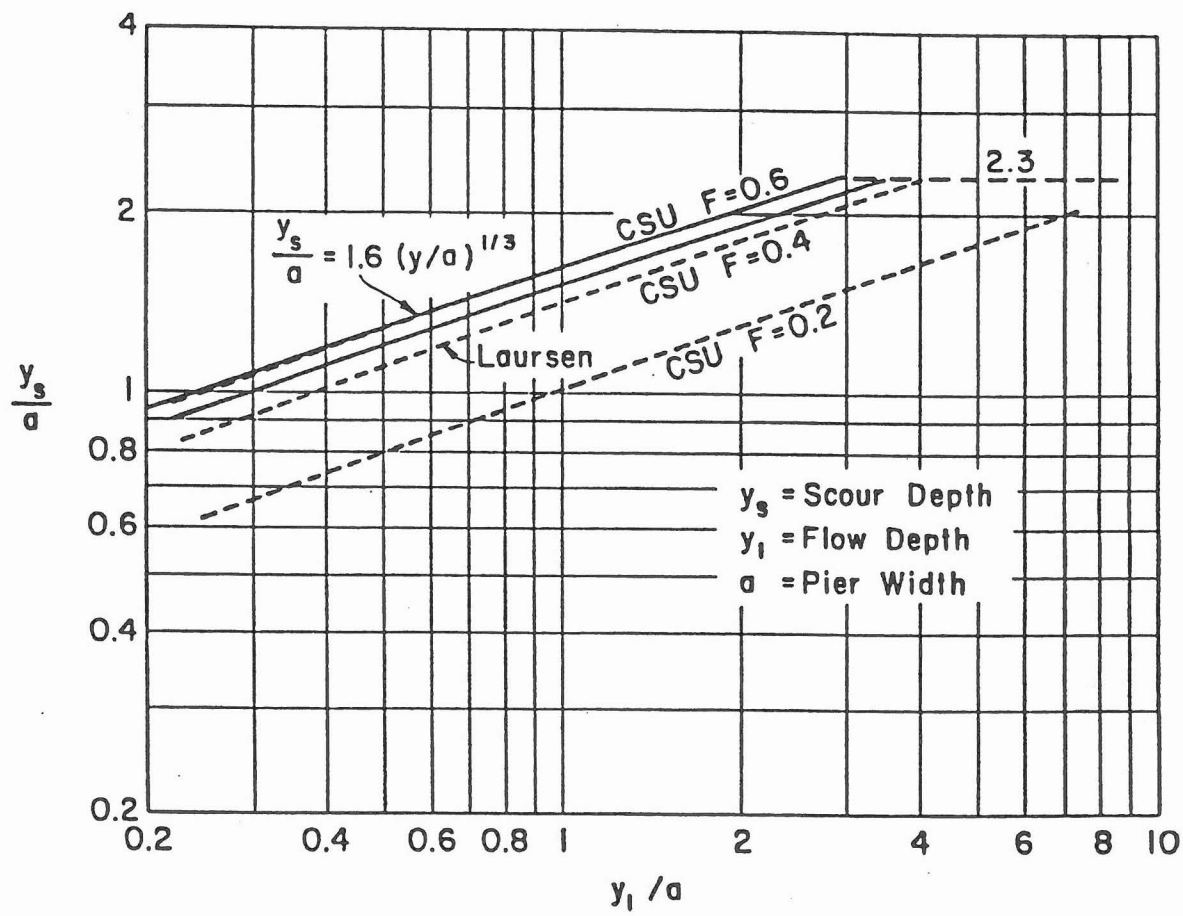

Figure 4.6 Values of y_s/a vs y_1/a for CSU'S Equation (30)

2. Computing Pier Scour.

The Colorado State University equation (7) is as follows:

$$\frac{y_s}{y_1} = 2.0\ K_1\ K_2\ \left(\frac{a}{y_1}\right)^{0.65}\ Fr_1^{0.43} \qquad (9)$$

Where:

y_s = scour depth
y_1 = flow depth just upstream of the pier
K_1 = correction for pier nose shape from Figure 4.7 and Table 4.3
K_2 = correction for angle of attack of flow from Table 4.4
a = pier width
Fr_1 = Froude number = $V_1/(gy_1)^{0.5}$

TABLE 4.2 CORRECTION FACTOR, K_1 for PIER NOSE SHAPE

	Shape of Pier Nose	K_1
(a)	Square nose	1.1
(b)	Round nose	1.0
(c)	Circular cylinder	1.0
(d)	Sharp nose	0.9
(e)	Group of cylinders	1.0

TABLE 4.3 CORRECTION FACTOR, K_2 for ANGLE of ATTACK of the FLOW

Angle	L/a=4	L/a=8	L/a=12
0	1.0	1.0	1.0
15	1.5	2.0	2.5
30	2.0	2.5	3.5
45	2.3	3.3	4.3
90	2.5	3.9	5.0

Angle = skew angle of flow
L = length of pier

Note. The correction factor k_1 for pier nose shape should be determined using Table 4.2 for flow angle of attack up to 5 degrees. For greater angles, pier nose shape loses its affect and k_1 should be considered as 1.0.

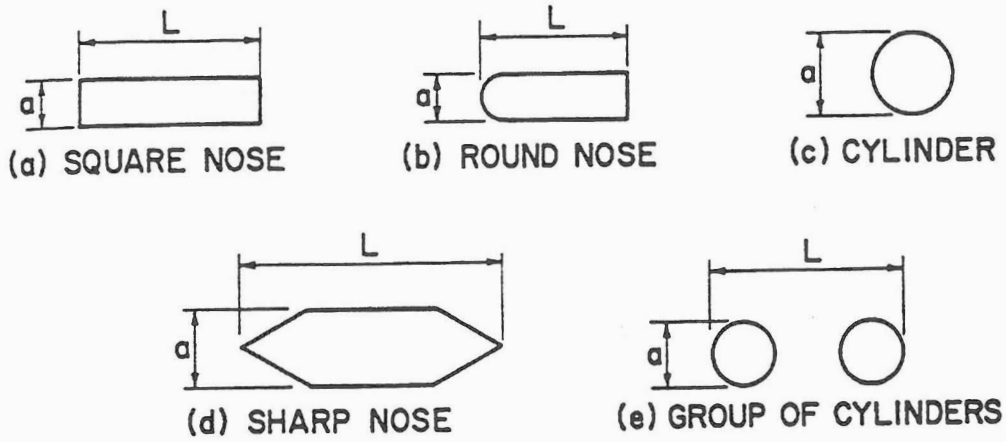

Figure 4.7 Common Pier Shapes

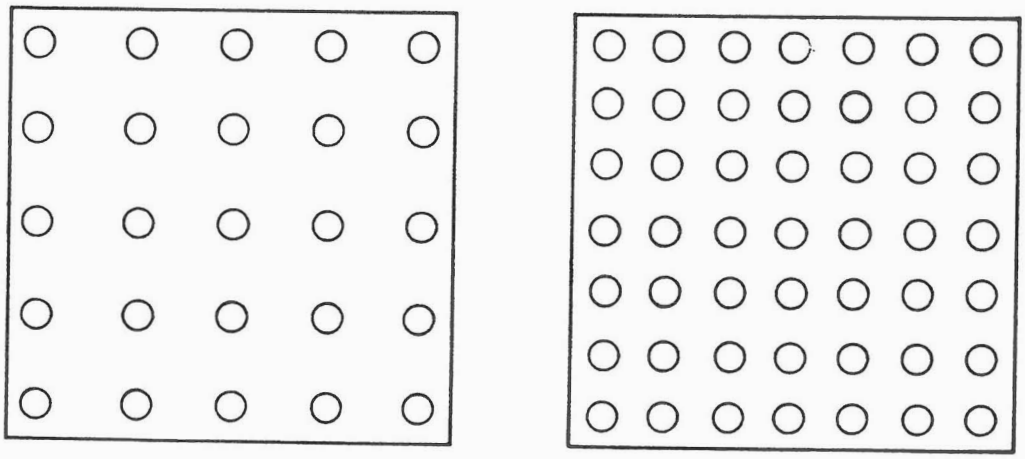

Figure 4.8 Pile Groups

3. Pier Scour for Exposed Footings

Often the pier footings and/or pile groups become exposed to the flow by scour. This may occur either from long term degradation, contraction scour, local scour or lateral shifting of the stream. Computations of local pier scour depths for footings or pile caps exposed to the flow based on footing or pile cap width appear to be too conservative. For example, calculations of scour depths for the Schoharie Creek bridge failure were closer to the measured model and prototype scour depths when pier width was used rather than footing width. Even in this case where the footing top was at the elevation of the bed surface the calculated depths were 47 percent larger than the measured (22 ft vs. 14 and 15 ft)(31). It appeared that the footing decreased the potential scour depth.

A recent model study of scour at the Acosta bridge at Jacksonville, Florida by FHWA (32) found that when the top of the footing was flush with the stream bed local scour was 20 percent less than for other conditions tested. The other conditions were bottom of the footing at the bed surface, the top of the footing at the water surface with pile group exposed and top of footing at mid depth. In a generalized study it was found that a footing with a lip extending upstream of the pier reduced pier scour when the top of the footing was located flush or below the bed but scour holes became deeper and larger in proportion to the extent that the footing projected into the flow field.

Based on this study, the following recommendation was made for calculating pier scour if the footing is or may be exposed to the flow (32).

> "It is recommended that the pier width be used for the value of 'a' in the pier scour equations if the top of the footing is at or below the streambed (taking into account contraction scour). If the pier footing extends above the stream bed, make a second computation using the width of the footing for the value of "a" and **the depth and average velocity in the flow zone obstructed by the footing for the 'y' and 'V' respectively in the scour equation. Use the larger of the two scour computations"**

Determine V_f obstructed by the footing using the following equation:

$$\frac{V_f}{V_1} = \ln(10.93\frac{y_f}{k_s}+1)/\ln(10.93\frac{y_1}{k_s}+1) \qquad (10)$$

Where:

V_f = average velocity in the flow zone below the top of the footing
y_f = distance from the bed to the top of the footing
k_s = the grain roughness of the bed. Normally taken as the D_{84} of the bed material.

The values of V_f and y_f would be used in the CSU equation given above.

4. Pier Scour for Exposed Pile Groups

FHWA (32) also conducted experiments to determine guidelines for specifying the characteristic width of a pile group (Figure 4.8) that are or may be exposed to the flow when the cylinders are spaced laterally as well as longitudinally in the stream flow. The following was concluded:

> "Pile groups that project above the stream bed can be analyzed conservatively by representing them as a single pier width equal to the projected area of the piles ignoring the clear space between piles. Good judgement needs to be used in accounting for debris because pile groups tend to collect debris that could effectively clog the clear spaces between pile and cause the pile group to act as a much larger mass."

For example, five 16-inch cylindrical piles spaced at 6 feet (Figure 4.8) would have an "a" value of 6.67 feet. This composite pier width would be used in Equation 9 to determine depth of pier scour. The correction factor "k_1" in Equation 9 for the multiple piles would be 1.0 regardless of shape. The depth of scour for exposed pile groups will be analyzed in this manner except when addressing the affect of debris lodged between piles. If debris is evaluated, it would be logical to consider the multiple columns and debris as a solid elongated pier. The appropriate L/a value and flow angle of attack would then be used to determine k_2 in Table 4.3.

5. Multiple columns

For multiple columns (as illustrated as a group of cylinders in Figure 4.8) skewed to the flow, the scour depth depends on the spacing between the piers. The correction factor for angle of attack would be smaller than for a solid pier. How much smaller is not known. Raudkivi (11) in discussing effects of alignment states "..the use of cylindrical columns would produce a shallower scour; for example, with five-diameter spacing the local scour can be limited to about 1.2 times the local scour at a single cylinder."

In application of the CSU equation with multiple columns, the pier

width "a" is the total projected width of all the columns in a single bent, normal to the flow angle of attack. For example, three 24-inch cylindrical columns spaced at 10 feet would have an "a" value ranging between 2 and 6 feet, depending upon the flow angle of attack. This composite pier width would be used in Equation 9 to determine depth of pier scour. The correction factor "k_1" in Equation 9 for the multiple column would be 1.0 regardless of column shape. The depth of scour for a multiple column bent will be analyzed in this manner except when addressing the affect of debris lodged between columns. If debris is evaluated, it would be logical to consider the multiple columns and debris as a solid elongated pier. The appropriate L/a value and flow angle of attack would then be used to determine k_2 in Table 4.3.

Additional laboratory studies are necessary to provide guidance on the limiting flow angles of attack for given distance between multiple columns beyond which multiple columns can be expected to function as solitary members with minimal influence from adjacent columns.

6. Pressure Flow Scour

Pressure flow at a bridge occurs when bridge decks intersects the flow or are submerged. Limited flume studies at Colorado State University were conducted in the spring of 1990 with a bridge deck partly submerged, with a single pier in the flume, with different distances from the stream bed to the deck and with different flow velocities. There was no sediment transport upstream of the bridge (clear-water scour)(33). Without the deck submerged, there was no contraction scour and local scour occurred. With the deck submerged, there was contraction scour and pier scour depths increased by a factor of two to three. The magnitude of the contraction and local scour, as was to be expected, depended on the velocity of the approach flow and the distance from the deck to the bed. For the same approach velocity, contraction scour and pier scour increased as the distance from the bed to the deck decreased. Further analysis of the results of these experiments and additional laboratory study will be necessary to define the impact of bridge submergence on contraction and local scour.

7. Width of Scour Holes

The top width of a scour hole in cohesionless bed material from one side of a pier or footing can be estimated from the following equation:

$$W = y_s\ (K + \cot\theta) \qquad (11)$$

Where:

- W = top width of the scour hole from the side of the pier or footing
- y_s = scour depth
- K = bottom width of the scour hole as a fraction of scour depth
- θ = Angle of repose of the bed material (it ranges from about 30 to 44 degrees)(7)

If the bottom width of the scour hole is equal to the depth of scour "y_s" (K = 1), an unlikely condition, then the top width in cohesionless sand would vary from 2.07 to 2.80 y_s. At the other extreme if K = 0, the top width would vary from 1.07 to 1.8 y_s. Thus, the range in top width would probably be from 1.0 to 2.8 y_s.

G. STEP 7. PLOT TOTAL SCOUR DEPTHS AND EVALUATE DESIGN

1. Plot the Total Scour Depths.

On the cross-section of the stream channel and floodplain at the bridge crossing, plot the estimate of 1) long-term bed elevation change, 2) contraction scour, and 3) local scour at the piers and abutments. Use a distorted scale so that the scour determinations will be easy to evaluate. Make a sketch of any plan form changes (lateral stream channel movement due to meander migration, etc.) that might be reasonably expected to occur.

- Long-term elevation changes may be either aggradation or degradation.
- Contraction scour is then plotted from and below the long-term aggradation or degradation lines.
- Local scour is then plotted from and below the contraction scour line.
- Plot not only the depth of scour at each pier and abutment, but also the scour hole width. The width can be determined by assuming the bottom of the scour hole is 5 feet wider than the pier or footing and using the angle of repose of the bed material commonly assumed to be 30° for sand bed stream for the side slope of the hole. Or use 2.75 y_s.

2. Evaluate the Total Scour Depths.

- Are the scour depths reasonable and consistent with the design engineer's previous experience, with his/her engineering judgement? If not, modify the depths to reflect the engineer's engineering judgement.

- Do the local scour holes from the piers or abutments intersect between spans? If so, local scour depths are larger and indeterminate. Therefore, the length of the bridge opening should be reevaluated and the opening increased or the number of piers decreased as necessary.

- Are there other factors (lateral movement of the stream, scour hole armoring, stream flow hydrograph, velocity and discharge distribution, moving of the thalweg, shifting of the flow direction, channel changes, type of stream, etc.) to be considered?

- Do the calculated scour depths appear too deep for the conditions in the field, relative to the laboratory conditions (**Abutment scour equations are for the worse case conditions**). Would rock riprap or spur dikes (guide bank) be a more cost effective solution.

- Evaluate cost, safety etc. Also, account for debris affects.

- In the design of bridge foundations, the foundation elevation(s) should be at or below the total scour elevation(s).

3. Reevaluate the Bridge Design.

Reevaluate the bridge design on the basis of the foregoing scour analysis. REVISE THE DESIGN AS NECESSARY. This evaluation should consider:

- Is the waterway area large enough; i.e., is contraction scour too large?

- Are the piers too close to each other or to the abutments; i.e., do the scour holes overlap? The top width of a scour hole is about 2.75 times the depth of scour. If scour holes overlap, local scour can be deeper.

- Is there a need for relief bridges? Should they or the main bridge be larger?

- Are bridge abutments properly aligned with the flow and located properly in regard to the stream channel and

flood plain?

- Is the bridge crossing of the stream and the floodplain in a desirable location? If the location presents problems:

  a. Can it be changed?

  b. Can river training works, guide banks or relief bridges serve to provide for an acceptable flow pattern at the bridges?

- Is the hydraulic study adequate to provide the necessary information for foundation design?

  a. Are flow patterns complex?

  b. Should a two-dimensional, water-surface profile model be used for analysis?

  c. Is the foundation design safe and cost effective?

  d. Is a physical model study needed/warranted?

IV. SCOUR EXAMPLE PROBLEMS

A. Example Problems.

STEP 1. DETERMINE SCOUR ANALYSIS VARIABLES

Q_{100} = 43,600 cfs. Q_{500} = 1.7 X 43,600 = 74,120 cfs.

- Main Channel:

  Dimensions

  Bank height = 7 ft

  Bottom width = 398 ft

  Top width at bank elevation 400 ft

  Q_{100}

  Average width = 400 ft, Average depth = 9.00 ft

  Hydraulic radius = A/WP = 3591/416 = 8.63 ft

  Slope = 0.00076, Manning n = 0.024

  Average velocity = 7.21 ft/s, Discharge = 25,890 cfs.

  Boring Results

  Bed material:

  D_{16} 0.18 mm, D_{50} 0.30 mm, D_{84} 2.8 mm.

  D_{50} of 0.30 mm. = 0.00098 ft with

  Fall velocity (w) = 0.13 ft/s (Figure 4.2)

  Description: Bed material is sand.

  Foundation material is sand similar to the bed material with some fine gravel lenses below 43 ft. Bed rock, which is shale, is 1,760 ft below stream bed.

  Bed Forms

  Low flow = Dunes, Max. height 2.4 ft. Q = 2,400 or less

  High flow = plane bed and antidunes.

  $Q_{bankfull}$

  Average width = 399 ft, Average depth = 7.00 ft

  Hydraulic radius = A/WP = 2793/412 = 6.78 ft

  Slope = 0.00076, Manning n = 0.020

  Average velocity = 7.36 ft/s, Discharge = 20,560 cfs.

- Right Overbank:

  Dimensions

  Top of bank above channel bed = 7 ft

  Length of overbank area = 52 ft

  Q_{100}

  Discharge = 70 +/- cfs, neglect.

  Average depth = 2.0 ft

  Average velocity = 0.67 ft/s

  Bed Material

  D_{16} _____, D_{50} 0.014 mm, D_{84} _____.

  Description Sandy loam first 2.8 ft of depth. Then same material as in the stream bed.

Overbank Area Condition

Trees, brush and grass back to a gravel terrace that is 50 ft high. The conditions continue for about a mile downstream from the bridge site.

Bank Condition

Stable, no signs of erosion, sandy loam with grass above the washline which is at about a height of 3 ft above the bed. The brush and trees grow right to the bank. The bank, if disturbed, will need to be riprapped above, through and below the bridge.

- <u>Left Overbank:</u>

Dimensions

Top of bank above channel bed = 7 ft
Length of overbank area = 1,870 ft

Q_{100}

Discharge = 17,700 cfs
Average depth = 2.8 ft
Average velocity = 3.38 ft/s
Depth at abutment= 4.8 ft

Bed Material

D_{16} _____, D_{50} 0.014 mm, D_{84} _____.
Description Sandy loam first 2.7 feet. Then same as material under stream channel.

Overbank Area Condition

Natural levee with trees, brush and grass back from the channel for about 30+/- ft. Then there is a field that is fairly level. The field is lower than the natural levee. The left side of the field ends at a gravel terrace over 100 ft high. The conditions continue for about a mile downstream from the bridge site.

Bank Condition

Same as the right bank. Stable, no signs of erosion, sandy loam with grass above the washline which is at about a height of 3 ft above the bed. The brush and trees grow right to the bank. The bank, if disturbed, will need to be riprapped above, through and below the bridge.

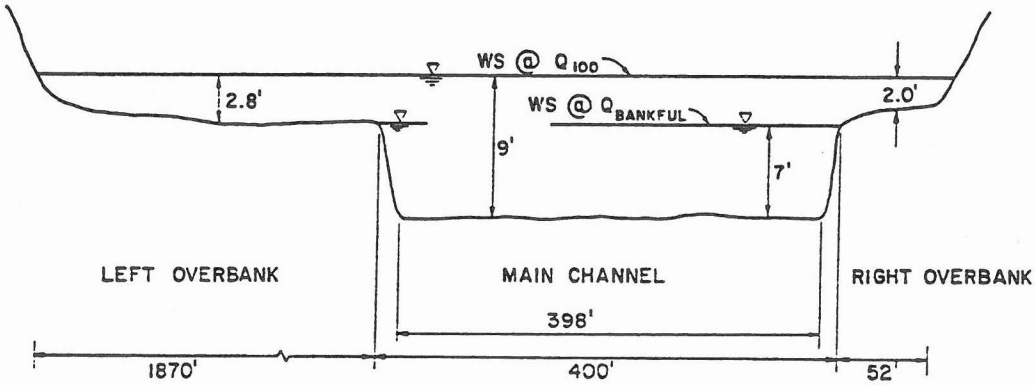

Figure 4.9 Conditions upstream of bridge

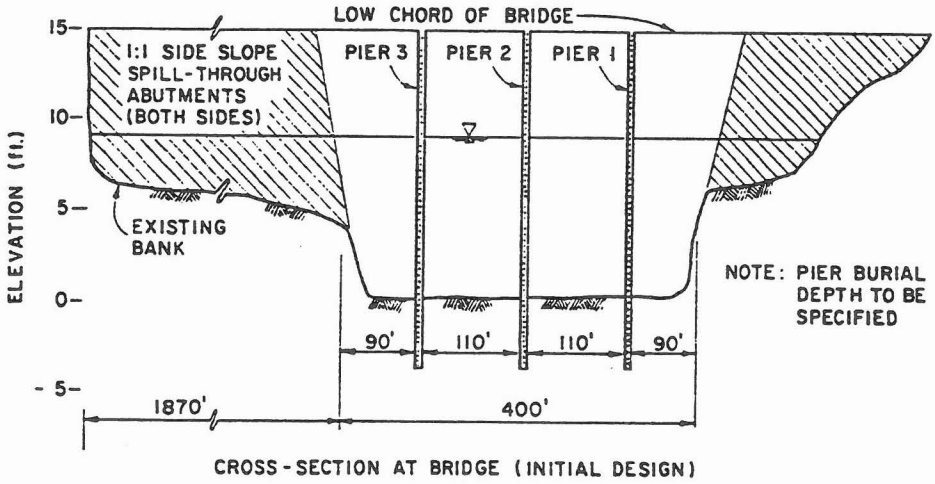

Figure 4.10 Location of piers and abutments

Bridge:

Dimensions

Bottom width first design = 398 ft

Abutments will start at or slightly inside the natural bank.

Number of piers. 3.

One pier is in center of the channel.

Spans between piers = 90, 110, 110, 90 ft

Distance from top of bank to bottom cord = 8 ft

Abutment is spill through with 1 to 1 slope.

Piers are numbered from right to left from the right bank (looking downstream)

Pier and footing geometry.

Pier width	= 3 ft
Pier length	= 36 ft
Pier shape	Round nose
Footing width	= 7 ft
Footing length	= 41 ft

Footing Elev. 2 ft below average stream bed elevation after contraction scour.

Q_{100} at Bridge

Discharge = 43,600 cfs, Manning n = 0.024

Right abutment

Angle with channel = 80^0

Left abutment

Angle with channel = 100^0

Pier 1

Angle of attack = 0^0

Pier 2

Angle of attack = 0^0

Pier 3

Angle of attack = 5^0

Channel Conditions:

Channel is straight for 3,000 ft upstream and for 4,600 ft downstream of the bridge site. The bends upstream and down are very mild so the flow through the bridge is fairly uniform, except for the flow moving to the bridge from the left overbank area.

STEP 2. ANALYZE LONG TERM BED ELEVATION CHANGE.

Analysis of the U. S. Geological Survey stage discharge relation at a gaging station five miles downstream of the bridge site indicates that there is a long term decrease in bed elevation. This decrease is gradual and averages about 0.02 ft per year. It results from erosion of a bed rock control located downstream of

the gage. Because this is a sand bed stream this shift will be reflected in a long term bed elevation decrease at the bridge site of 2 feet in 100 years. The decrease does not appear to affect the stream hydraulics, but the main channel is getting deeper with respect to the banks.

Even though this will add 2 feet of long-term bed elevation change to the contraction and local scour, it will not be considered that the deeper main channel results in an increase in main channel flow and a decrease in the overbank flow over time. That is, the hydraulics at the site will not be considered to change. This is a conservative approach.

STEP 3. <u>EVALUATE SCOUR ANALYSIS METHOD</u>

Contraction scour will be limited to around 6 feet by sizing the bridge opening and/or the use of relief bridge if necessary.

Scour components will develop independently so analysis method given in Chapter 4, Step 3 will be used.

The velocity in the pier and abutment scour equations will be adjusted by coefficients times the mean velocity to account for the increase or decrease in velocity resulting from their location in the flow.

STEP 4. <u>CONTRACTION SCOUR</u>

<u>Problem 1</u>

Contraction scour with abutments at the edge of the channel (Case 1b).

$$\frac{y_2}{y_1} = \left(\frac{Q_{mc2}}{Q_{mc1}}\right)^{\frac{6}{7}} \left(\frac{W_{c1}}{W_{c2}}\right)^{K_1} \qquad (2)$$

$y_s = y_2 - y_1$ Average scour depth

Coefficients for Laursen's equation:

Bed material is sand with D_{50} =0.30 mm. = 0.00098 ft

Fall velocity (w) = 0.13 ft/s

Average Shear stress = 62.4 X 8.64 X 0.00076 = 0.41 lb/ft^2

$V_{*c} = (0.41/1.94)^{0.5} = 0.46$ ft/s

$V_{*c}/w = 0.46/0.13 = 3.5$ The mode of bed material transport is mostly by suspension.

Therefore:

$$K_1 = 0.69 \quad \text{and} \quad K_2 = 0.37$$

$$y_2/9 = \left(\frac{43,600}{25,890}\right)^{6/7} \left(\frac{398}{389}\right)^{0.69} = 1.59$$

$$y_s = 14.3 - 9 = 5.3 \text{ ft}$$

Comments

This amount of contraction scour may be unacceptable because:

1. This amount of contraction scour plus the local scour could place the foundations (footings or pile caps and piles) too deep.

2. The bed material that would be scoured out will deposit downstream, either in the channel or on the floodplain. If deposited in the channel, it could increase flooding.

Solutions would be to set the abutments back from the channel. Another possibility would be a relief bridge.

A relief bridge to decrease the flow through the bridge would decrease the contraction scour further. However a relief bridge would be very costly.

Will accept this amount of contraction scour. In Problem 2, will calculate the discharge needed through the bridge opening to reduce the contraction scour to 2 feet.

Problem 2

What decrease in the discharge through the bridge is needed to reduce the contraction scour to 2 feet?

$y_s = y_2 - y_1, \quad 2 = y_2 - 9, \quad y_2 = 11, \quad y_2/9 = 1.22$

$$\frac{y_2}{9} = \left(\frac{X}{25{,}900}\right)^{6/7} \left(\frac{398}{389}\right)^{0.69} \left(\frac{0.024}{0.024}\right)^{0.37} = 1.22$$

$$\left(\frac{X}{25{,}900}\right)^{6/7} \left(\frac{398}{389}\right)^{0.69} = 1.22, \quad \frac{X}{25{,}900} = \left(\frac{1.22}{1.016}\right)^{7/6}$$

$$\left(\frac{X}{25{,}900}\right) = 1.20^{7/6}$$

$$X = 32{,}000 \text{ cfs}$$

Decrease is 43,600 - 32,000 = 11,600 cfs

<u>Problem 3</u>

Contraction scour for relief bridge in left approach.

Estimate scour using Laursen's Case 3 equation:

$$\frac{y_s}{y_1} = 0.13 \left[\frac{Q}{D_m^{\frac{1}{3}} \, y_1^{\frac{7}{6}} \, W_2} \right]^{\frac{6}{7}} - 1 \qquad (7)$$

$Q_{\text{relief bridge}} = 43{,}600 - 32{,}000 = 11{,}600$ cfs

$y_1 = 2.8$ ft
$W_2 = 200$ ft Assumed initial width within bridge waterway.
$D_{50} = .00098$ ft Use material under the soil layer at the relief bridge.
$D_m = 1.25 \times D_{50} = 0.00123$ ft

$$\frac{y_s}{2.8} = 0.13 \left[\frac{11{,}600}{0.00123^{\frac{1}{3}} \, 2.8^{\frac{7}{6}} \, 200} \right]^{\frac{6}{7}} - 1 \qquad (7)$$

$y_s = 9.20 \times 2.8$ ft = 25.6 ft

STEP 5. LOCAL SCOUR AT ABUTMENTS

Scour at abutments set at edge of main channel.

Use Froehlich's equation to calculate scour depths.

$$\frac{y_s}{y_a} = 2.27\ K_1\ K_2\ \left(\frac{a'}{y_a}\right)^{0.43} Fr_e^{0.61} + 1$$

K_1 = coefficient for abutment type

$K_2 = (\theta/90)^{0.13}$

a' = length of abutment intercepting overbank flow

$a' = A_e/y_a$

A_e = flow area of the approach cross-section obstructed by the embankment

Fr_e = Froude number of approach flow upstream of the abutment

$Fr_e = V_e/(gy_a)^{0.5}$

$V_e = Q_e/A_e$

Q_e = flow obstructed by the abutment and approach embankment

y_a = depth of flow at the abutment

Problem 1

Scour at right bank abutment.

Assume flow conditions in channel; use depth of flow in the main channel in the initial trial even though this may extent the imagination

$K_1 = 0.55$ (Table 4.1, Chapter 4)

$K_2 = (80/90)^{0.13} = 0.98$

$a' = (52 \times 2.0)/\ 9.0 = 11.6$ ft

$V_e = 70/(52 \times 2.0) = 0.67$ ft/s

$Fr_e = 0.67\ /\ (32.2 \times 9.0)^{0.5} = 0.04$

$$y_s/9.0 = 2.27 \times 0.55 \times 0.98 \times (11.6/9.0)^{0.43} \times 0.04^{0.61} + 1$$

$y_s/9.0 = 1.19, \quad y_s = 10.7$ ft

Does this appear reasonable? No? Why not? Based on this solution, the total depth of scour would be 18.0 feet below the present stream bed (10.7+5.3+2.0). The last two terms are the contraction scour and the long-term degradation.

Comments

This would seem to be much deeper scour than will occur! The limited flow coming around the abutment (70 cfs) intersects the flow in the channel, causing minor vortices, but will probably not produce 10.7 feet of abutment scour. The equations for abutment scour give worse case results. Also, this depth is caused by using the depth of flow of 9.0 feet at the toe of the abutment.

What to do?

1. **The scour depth would be between that calculated using the overbank flow depth at the abutment (2.0 ft) and the channel flow depth (9.0 ft) at the abutment.**

2. **To help in making a decision, calculate abutment scour using the overbank depth at the abutment.**

The depth (y_1) in overbank area near the channel upstream of the abutment is 2.0 feet.

$$K_1 = 0.55$$

$$K_2 = (80/90)^{0.13} = 0.98$$

$$a' = (52 \times 2.0)/\ 2.0 = 52 \text{ ft}$$

$$V_e = 70/(52 \times 2.0) = 0.67 \text{ ft/s}$$

$$Fr_e = 0.67\ /\ (32.2 \times 2.0)^{0.5} = 0.08$$

$$y_s/2.0 = 2.27 \times 0.55 \times 0.98 \times (52.0/2.0)^{0.43} \times 0.08^{0.61} + 1.0$$

$$y_s/2.0 = 2.1$$

$$y_s = 4.2 \text{ ft}$$

Does this appear reasonable? If not, why not? Based on this solution, the total depth of scour would be 11.5 feet below the present stream bed (4.2+5.3+2.0). The last two terms are the contraction scour and the long-term degradation.

Comments

Again, this may be deeper abutment scour than will occur. However, if the abutment was set back from the stream bank and the original bank was not disturbed, y_a would be based on the 2.0 feet of overbank flow depth used in the calculations. In that case, the scour would be the 4.2 feet from the toe of the abutment.

What to do?

Keep in mind that the abutment will, in all likelihood, be riprapped. This is the normal design practice within State highway agencies. From this perspective, should we be concerned what abutment scour depths are? Not really. That is precisely the reason why FHWA recommends in the text that abutment scour need not be calculated if appropriate protection (riprap and/or guide banks) is provided.

Problem 2

Scour at left bank abutment.

The depth (y_a) at the abutment is given as 4.8 ft. This is the flow depth at the toe of the abutment where it meets the top of main channel bank.

$K_1 = 0.55$

$K_2 = (100/90)^{0.13} = 1.01$

$a' = (1{,}870 \times 2.8)/ 4.8 = 1091$ ft

$V_e = 17{,}700/(1{,}870 \times 2.8) = 3.38$ ft/s

$Fr_e = 3.38 / (32.2 \times 4.8)^{0.5} = 0.27$

$y_s/4.8 = 2.27 \times 0.55 \times 1.01 \times (1091/4.8)^{0.43} \times 0.27^{0.61} + 1$

$y_s/4.8 = 6.85$

$y_s = 32.9$ ft

Calculations of scour depth using the depth of flow in the channel (9.0 ft) give a scour depth of 34.6 feet.

In appendix B an equation is given for a/y_1 greater than 25. In this problem $a/y_1 = 1{,}870/ 6.0 = 312$.

Therefore, try the equation for Case 6 given in Appendix B:

$y_s/y_1 = 4\ Fr_1^{0.33}$

$V_1 = \{43,600/(391 \times 9.0)\} \times 1.1 = 13.6$

$Fr_1 = 13.6/(32.2 \times 9.0)^{0.50} = 0.80$

$y_s/9.0 = 4\ (0.80)^{0.33} = 3.72$

$y_s = 9.0 \times 3.72 = 33.4$ ft

Does an abutment scour depth of about 33 feet sound reasonable? This would result in a total scour depth of in excess of 40.0 feet below the present stream bed (33+5.3+2.0).

Comments **All of these solutions are very deep! Even though these depths are judged to be very conservative, the scour potential is large what with the overbank flow of 17,700 cfs moving to and around the abutment.**

What to do?

Keep in mind that the abutment will, in all likelihood, be riprapped. This is the normal design practice within State highway agencies. From this perspective, should we be concerned what abutment scour depths are? Not really. That is precisely the reason why FHWA recommends in the text that abutment scour need not be calculated if appropriate protection (riprap and/or guide banks) is provided.

STEP 6. LOCAL SCOUR AT PIERS

Pier 1 and 2

$V_1 = 12.4$ ft/s (12.4 X 1.0)
$y_1 = 9.0$ ft
Angle of attack = θ^0

Pier 3

$V_1 = 14.9$ ft/s (12.4 X 1.2)
$y_1 = 9.0$ ft.
Angle of attack = 5^0

Problem 1.

Scour depth at Pier 1 and 2.

$y_s/y_1 = 2.0 \quad K_1 \quad K_2 \quad (a/y_1)^{0.65} \quad Fr_1^{0.43}$

$Fr_1 = 12.4 / (32.2 \times 9.0)^{0.5} = 0.73$

$y_s/9.0 = 2.0 \times 1.0 \times 1.0 \times (3.0 / 9.0)^{0.65} \times (0.73)^{0.43}$

$y_s/9.0 = 0.86$

$y_s = 7.7$ ft

Use $y_s = 7.7 \times 1.10 = 8.5$ ft (possible antidune flow)

Problem 2.

Pier 3 Scour depth.

$Fr_1 = 14.9 / (32.2 \times 9.0)^{0.5} = 0.88$

Angle of attack Coefficient TABLE 4.3

$L/a = 36 / 3 = 12$, $\theta = 5^0$, Coefficient = 1.5

$y_s/9.0 = 2.0 \times 1.0 \times 1.5 \times (3 / 9.0)^{0.65} \times (0.88)^{0.43}$

$y_s/9.0 = 1.4$

$y_s = 12.5$ ft

Use $y_s = 12.5 \times 1.10 = 13.8$ ft (possible antidune flow)

Comments

Would the same depth of scour occur at each pier? NO! Could the pier foundations be set at different depths if there was a substantial saving in cost? Yes. Why? Because it is in a long straight reach, has stable banks upstream and downstream and the channel flow is uniformly distributed across the width . It only has the deep scour at pier three when there is overbank flow.

STEP 7. <u>PLOT AND EVALUATE TOTAL SCOUR</u>

The plot of the scour for this problem is given in figure 4.11. Note that the scour holes for the left abutment and pier 3 overlap if the abutment scour is 33 ft.

Evaluation of scour

1. The abutment scour solutions are questionable even though the left overbank flow is very large, the bed material is sand and construction will disturb the area at the bridge. Use a guide bank with riprap on the left abutment and riprap the right.

2. Were there indications of stream instability, abutment foundations should be designed to at least the existing stream bed elevation with consideration given to an elevation dictated by long-term degradation plus contraction scour. Even though the stream is stable, abutment foundations will be evaluated to a depth of 7.3 feet (2 ft long term plus 5.3 ft contraction) below the stream bed.

3. When the left abutment is protected with a guide bank and riprap, the scour holes at the left abutment and pier 3 will not overlap.

4. Scour depths to be given geotechnical engineers are 15.8 feet (8.5+5.3+2.0) for pier 1 and 2 and 21.1 feet (13.8+5.3+2.0) for pier 3. Due to the channel being straight and the lack of overbank flow on the right side, it is possible to set piers 1 and 2 at shallower depths.

5. An interdisciplinary team consisting of hydraulic, geotechnical and structural engineer should review this bridge configuration and the scour depths. It might be advantageous to widen the bridge opening. Even a wider bridge would require a guide bank on the left side.

6. The structure should also be evaluated for the 500-year flood.

B. Other Example Problem.

Appendix F presents the scour analysis for the Great Pee Dee River in South Carolina.

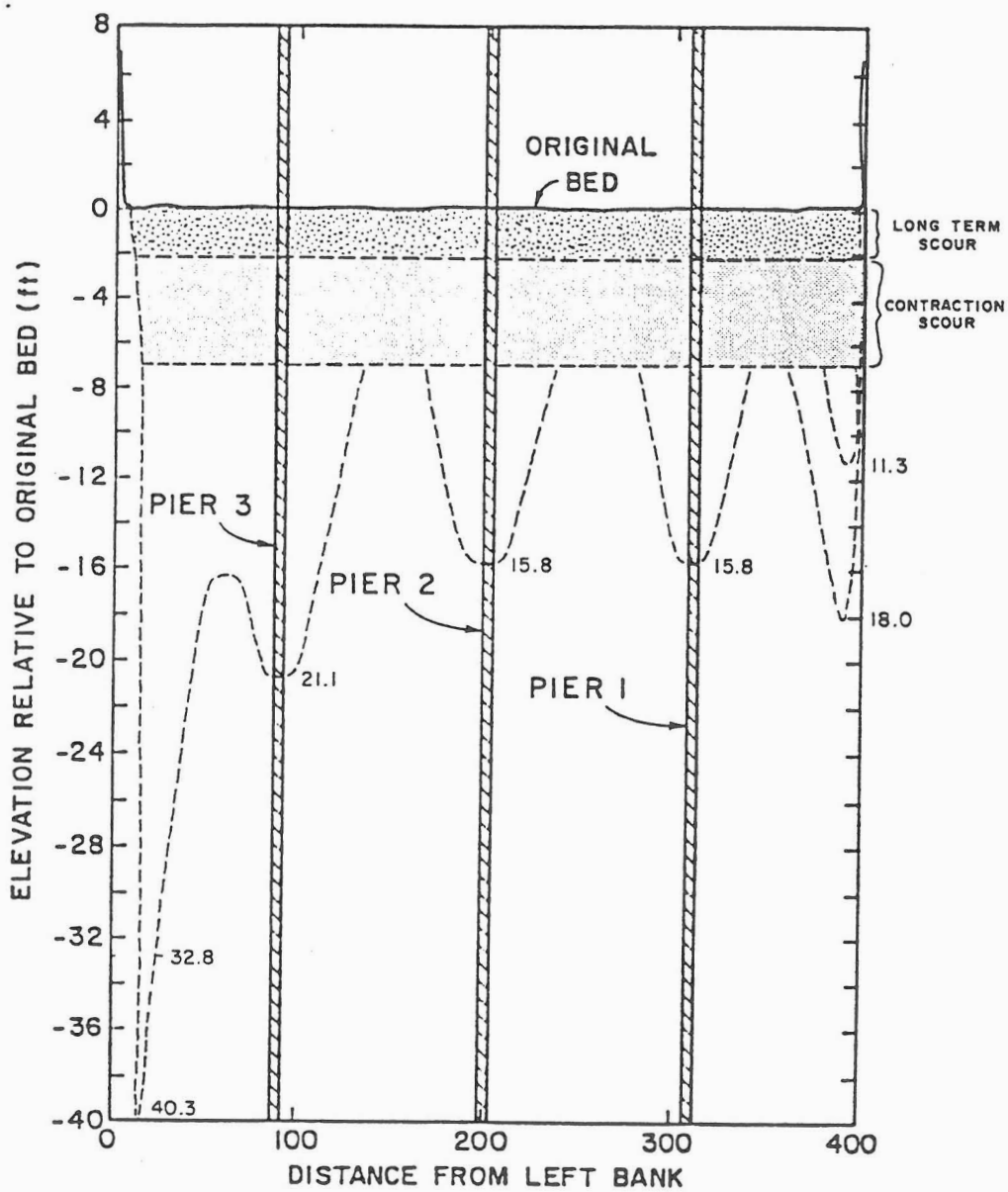

Figure 4.11 Plot of scour for example problem

(blank)

CHAPTER 5

EVALUATING THE VULNERABILITY OF EXISTING BRIDGES TO SCOUR

A. INTRODUCTION

Existing bridges over streams subject to scour should be evaluated to determine their vulnerability to floods and whether they are scour vulnerable. This assessment or evaluation should be conducted by an interdisciplinary team of professional, experienced engineers who can make the necessary engineering judgments to decide:

- priorities for making bridge scour evaluations;
- the scope of the scour evaluations to be performed in the office and in the field;
- whether or not a bridge is vulnerable to scour damage; i.e., whether the bridge is a scour-critical bridge;
- which alternative scour countermeasures may serve to make a bridge less vulnerable;
- which countermeasure is most suitable and cost-effective for a given bridge;
- priorities for installing scour countermeasures;
- monitoring and inspection schedules for scour-critical bridges; and
- interim procedures to protect the bridge and the public until the bridge is repaired, replaced or until suitable long-term countermeasures are in place.

The factors to be considered in a scour evaluation require a broader scope of study and effort than those considered in a bridge inspection. The major purpose of the bridge inspection is to identify changed conditions which may reflect an existing or potential problem. The scour evaluation is an engineering assessment of the risk of what might possibly happen in the future and what steps can be taken now to eliminate or minimize the risk.

Preceding page blank

B. THE EVALUATION PROCESS

The following approach is recommended regarding the development and implementation of a program to assess the vulnerability of existing bridges to scour:

STEP 1 Compile a list of those bridges with actual or potential problems due to scour. Structures that are candidates for this scour susceptible category include:

(a) Bridges currently experiencing scour or that have a history of scour problems during past floods as identified from maintenance records and experience, bridge inspection records, lane, etc.

(b) Bridges over erodible bed streams with design features that make them vulnerable to scour, including:

(1) piers and abutments designed with spread footings or short pile foundations;

(2) superstructures with simple spans or non-redundant support systems that render them vulnerable to collapse in the event of foundation movement; and

(3) bridges with inadequate waterway openings or with designs that collect ice and debris. Particular attention should be given to structures where there are no relief bridges or embankments for overtopping, and where all water must pass through or over the structure.

(c) Bridges on aggressive streams and waterways, including those with:

(1) active degradation or aggregation of the stream bed;

(2) significant lateral movement or erosion of stream banks;

(3) steep slopes or high velocities;

(4) in-stream materials mining operations in the vicinity of the bridge; and

(5) histories of flood damaged highways and bridges.

(d) Bridges located on stream reaches with adverse flow characteristics, including:

(1) crossings near stream confluences, especially bridge crossings of tributary streams near their confluence with larger streams;

(2) crossings on sharp bends in a stream; and

(3) locations on alluvial fans.

STEP 2 Prioritize the scour susceptible bridges, by conducting a preliminary office and field examination of the list of structures compiled in Step 1, using the following factors as a guide:

(a) The potential for bridge collapse or for damage to the bridge in the event of a major flood.

(b) The functional classification of the highway on which the bridge is located, and the effect of a bridge collapse on the safety of the traveling public and on the operation of the overall transportation system for the area or region.

See Appendix D which contains the North Carolina DOT's procedure for conducting office and field examinations for the prioritization of bridges.

STEP 3 Conduct field and office scour evaluations of the bridges on the prioritized list (Step 2) using an interdisciplinary team of hydraulic, geotechnical and structural engineers:

(a) The recommended evaluation procedure is to estimate scour for a superflood, a flood exceeding the 100-year flood, and then analyze the foundations for vertical and lateral stability for this condition of scour. This evaluation approach is similar in concept to the check procedure set forth in paragraph 6, Step 8 of the design procedure in Chapter III. FHWA recommends using the 500-year flood or a flow 1.7 times the 100-year flood for this purpose where the 500-year flood is unknown. The difference between designing a new bridge and assessing an old bridge is simply that the location and geometry of a new bridge and its foundation are not fixed as they are for an old bridge. Thus, the same steps for predicting scour at the piers and abutments should be carried out for an existing

bridge as for a new bridge. Just as with the design of a new bridge, engineering judgement must be exercised in establishing the total scour depth for an existing bridge. The maximum scour depths that can be withstood by the existing foundation are compared with the greater scour. An engineering assessment must then be made as to whether the bridge should be classified as a scour-critical bridge; that is, whether the bridge foundations can not withstand the greater scour without failing.

(b) Enter the results of the scour evaluation study in the bridge inventory in accordance with the instructions in the FHWA "Bridge Recording and Coding Guide." (See Reference 4 and Appendix E.) Update the list of the scour-critical bridges.

STEP 4 For bridges identified as scour critical from the office and field review in Step 2, determine a plan of action (See Chapter 7) for correcting the scour problem, including:

(a) Interim plan of action to protect the public until the bridge can be replaced or scour countermeasures installed. This could include:

i. Timely installation of temporary scour countermeasures such as riprap.

ii. Plans for monitoring scour-critical bridges during, and inspection after flood events, and for blocking traffic, if needed, until scour countermeasures are installed.

iii. Immediate bridge replacement or the installation of permanent scour countermeasures depending upon the risk involved.

(b) Establishing a time table for Step 5.

STEP 5 After completing the scour evaluations for the list of potential problems compiled in Step 1, the remaining waterway bridges included in the State's bridge inventory should be evaluated. In order to provide a logical sequence for accomplishing the remaining bridge scour evaluations, another bridge list should be established, giving priority status to the following:

(a) The functional classification of the highway on

which the bridge is located with highest priorities assigned to arterial highways and lowest priorities to local roads and streets.

(b) Bridges that serve as vital links in the transportation network and whose failure could adversely affect area or regional traffic operations.

The ultimate objectives of this scour evaluation program are 1) to review all bridges over streams in the National Bridge Inventory; 2) to determine those foundations which are stable for estimated scour conditions and those which are not; and 3) to provide interim scour protection for scour-critical bridges until adequate scour countermeasures are installed. This may include interim scour protection such as riprap, closing the bridge during high water, monitoring of scour-critical bridges during and inspection after flood events. The final objective 4) would be to replace the bridge or install scour countermeasures in a timely manner, depending upon the perceived risk involved.

C. CONDUCTING SCOUR EVALUATION STUDIES

An overall plan should be developed for conducting engineering bridge scour evaluation studies. An example of this type of a plan, prepared by the North Carolina Department of Transportation, is provided in Appendix D. It is recommended that each State develop its own plan for making engineering scour evaluations based on its own particular needs. The FHWA offers the following recommendations in regard to conducting these studies:

1. The first step of the scour evaluation study should be an office review of available information for purposes of assessing the stability of the stream and the adequacy of the bridge foundations to withstand a superflood (a Q500 flood or a flow 1.7 times Q100 flood, as recommended by the FHWA).

2. The use of worksheets is encouraged since they provide a consistent frame of reference for making field and office reviews and for documenting the results of the investigations.

3. To develop an efficient process for properly evaluating a large number of bridges, a logical sequence needs to be established for conducting the evaluations. This sequence should serve to screen out those bridges where scour is clearly not a problem. For example, sufficient information may be available in the office to indicate that the bridge foundations have been set well below maximum expected scour, and that a field inspection is not necessary for determining

that the bridge is not at risk from scour damage. However, a field inspection is generally recommended for bridges over streams that have one or more of the characteristics listed under Step 1 of the evaluation process, Section B of this chapter.

Where adequate hydraulic studies have been prepared and kept for the original bridge design, the scour estimates can be checked or recalculated from this information. Where hydraulic data is not available, it may have to be recalculated. For such instances, a "worse-case analysis" is suggested. If the bridge foundations are adequate for worse-case conditions, the bridge can be judged satisfactory. Where the worse-case analysis indicates that a scour problem may exist, further field and office analyses should be made.

THE FOLLOWING GUIDE IS OFFERED FOR CONDUCTING A WORSE-CASE ANALYSIS:

Water-Surface Elevations

Information may not be available on the water-surface elevations of the stream at some bridges. This can be compensated for by using procedures developed by the U.S. Geological Survey for many states. These procedures provide for estimating depths of flow by using hydrologic area, drainage area, flood frequency and error of estimate. Using these procedures, a conservative depth-discharge relationship can be determined. This relationship can then be used to develop rough estimates of scour.

Long-Term Aggradation and Degradation

Long-term stream bed profile changes will usually be difficult to assess. The main information sources are the records and knowledge of bridge inspectors, maintenance personnel, or others familiar with the bridge site and the behavior of the stream and other streams in the general area. If aggradation or degradation is a problem, there will usually be some knowledge of its occurrence in the area. Cross sections of the stream at the bridge site, for example, when taken by bridge inspectors over a period of time, may indicate a long-term trend in the elevation of the stream bed. Field inspections should be made at locations where the streams are known to be active and where significant aggradation/degradation or lateral channel movement is occurring. Further discussion on long-term stream bed elevation changes is included in Chapters 2, 3, and 4. Particular attention should be given to bridges at problem sites, as noted earlier in this section. Such bridges should be reviewed in the field. Additional information on conducting field reviews is included in Chapter 6.

Plan Form Changes

Assessing the significance of plan form changes, such as the shifting location of meanders, the formation of islands, and the overall pattern of streams, cannot usually be accomplished in the office. Records and photographs of bridge inspectors and maintenance personnel may provide some insight into the nature of the stream for the initial office assessments. Historical aerial photographs of the stream can be extremely valuable in this analysis. Ultimately, an engineering judgement must be made as to whether possible future or existing plan form changes represent a hazard to the bridge, and the extent of field work required to evaluate this condition.

Contraction Scour

Contraction scour may be calculated using the equations in Chapter 4 where the amount of overbank and main channel flow is known or can be estimated. The worst-case approach would involve estimating the largest reasonable amount of overbank flow on the floodplain beyond the bridge abutments and then calculating contraction scour on this basis. More detailed analyses are recommended for bridges at problem sites, especially where a large difference in the water-surface elevations may exist upstream and downstream of the bridge.

Local Pier Scour

To determine local pier scour use the equations given in Chapter 4.

Local Abutment Scour

Determination of local abutment scour using the equations in Chapter 4 requires an understanding of flow depths and velocities, and the flow distribution on the floodplain upstream of the bridge. However, some preliminary judgments may be developed as to the expected scour potential through an assessment of the abutment location, the amount of flow in the floodplain beyond the abutment and the extent of protection provided (riprap, guide banks, etc.).

D. DOCUMENTING BRIDGE SCOUR ASSESSMENTS

A record should be made of the results of field and office reviews of bridge scour assessments, and Item 113, Scour Critical Bridges, of the FHWA document "Recording and Coding Guide for the Structural Inventory and Appraisal of the Nation's Bridges" should be marked for inclusion in the national bridge inventory. The States have conducted field and office bridge scour assessments. An example of

the North Carolina DOT's procedure is given in Appendix D.

CHAPTER 6

INSPECTION OF BRIDGES FOR SCOUR

A. INTRODUCTION

There are two main objectives to be accomplished in inspecting bridges for scour:

- o to accurately record the present condition of the bridge and the stream; and
- o to identify conditions that are indicative of potential problems with scour and stream stability for further review and evaluation by others.

In order to accomplish these objectives, the inspector needs to recognize and understand the inter-relationship between the bridge, the stream, and the flood plain. Typically, a bridge spans the main channel of a stream and perhaps a portion of the flood plain. The road approaches to the bridge are typically on embankments which obstruct flow on the flood plain. This overbank or floodplain flow must, therefore, return to the stream at the bridge and/or overtop the approach roadways. Where overbank flow is forced to return to the main channel at the bridge, zones of turbulence are established and scour is likely to occur at the bridge abutments. Further, piers and abutments may present obstacles to flood flows in the main channel, creating conditions for local scour because of the turbulence around the foundations. After flowing through the bridge, the flood water will expand back to the flood plain, creating additional zones of turbulence and scour.

The following sections in this Chapter present guidance for the bridge inspector's use in developing a comprehension of the overall flood flow patterns at each bridge inspected; and to use this information for rating the present condition of the bridge and the potential for damage from scour. When an actual or potential scour problem is identified by a bridge inspector, the bridge should be further evaluated by an interdisciplinary team using the approach discussed in Chapter 5. The results of this evaluation should be recorded under Item 113 of the "Bridge Recording and Coding Guide", Appendix E (4).

If the bridge is determined to be scour critical, a plan of action (Chapter 7) should be developed for installing scour countermeasures. In this case, the rating of the bridge substructure (Item 60 of the "Bridge Recording and Coding Guide") should be revised to reflect the effect of the scour on the substructure.

B. OFFICE REVIEW

It is desirable to make an office review of bridge plans and previous inspection reports prior to making the bridge inspection. Information obtained from the office review provides a better basis for inspecting the bridge and the stream. Items for consideration in the office review include:

- Has an engineering scour evaluation study been made? If so, is the bridge scour critical?
- If the bridge is scour critical, has a plan of action been made for monitoring the bridge and/or installing scour countermeasures?
- What do comparisons of stream bed cross-sections taken during successive inspections reveal about the stream bed? Is it stable? Degrading? Aggrading? Moving laterally? Are there scour holes around piers and abutments?
- What equipment is needed to obtain stream bed cross-sections? (rods, poles, sounding lines, etc.)
- Are there sketches and aerial photographs to indicate the plan form location of the stream and whether the main channel is changing direction at the bridge?
- What type of bridge foundation was constructed? (Spread footings, piles, drilled shafts, etc.) Do the foundations appear to be vulnerable to scour?
- Do special conditions exist requiring particular methods and equipment for underwater inspections? (divers, boats, electronic gear for measuring stream bottom, etc.)
- Are there special items that should be looked at? (Examples might include damaged riprap, stream channel at adverse angle of flow, problems with debris, etc.)

C. BRIDGE INSPECTION

During the bridge inspection, the condition of the bridge waterway opening, substructure, channel protection, and scour countermeasures should be evaluated, along with the condition of the stream.

The 1988 FHWA "Bridge Recording and Coding Guide" (4) (Appendix E) contains material for the following three items:

- Item 60: Substructure,

- Item 61: Channel and Channel Protection, and

- Item 71: Waterway Adequacy.

The guidance in the "Bridge Recording and Coding Guide" for rating the present condition of Items 61 and 71 is set forth in detail. Guidance for rating the present condition of Item 60, Substructure, is general and does not include specific details for scour. The following sections present approaches to evaluating the present condition of the bridge foundation for scour and the overall scour potential at the bridge.

1. Substructure. Item 60, Substructure, is the key item for rating the bridge foundations for vulnerability to scour damage. When a bridge inspector finds that a scour problem has already occurred, it should be considered in the rating of Item 60. Both existing and potential problems with scour should be reported so that a scour evaluation can be made by others. The scour evaluation is reported on Item 113 in the revised "Bridge Recording and Coding Guide." If the bridge is determined to be scour critical, the rating of Item 60 should be evaluated to ensure that existing scour problems have been considered. The following items are recommended for consideration in inspecting the present condition of bridge foundations:

- Evidence of movement of piers and abutment;

  -rotational movement (check with plumb line),

  -settlement (check lines of substructure and superstructure, bridge rail, etc., for discontinuities; check for structural cracking or spalling),

  -check bridge seats for excessive movement.

- Damage to scour countermeasures protecting the foundations (riprap, guide banks, sheet piling, sills, etc.),

- Changes in streambed elevation at foundations (undermining of footings, exposure of piles), and

- Changes in streambed cross-section at the bridge, including location and depth of scour holes.

In order to note the conditions of the foundations, the inspector should take cross sections of the stream, noting location and condition of stream banks. Careful measurements should be made of scour holes at piers and abutments, probing soft material in scour holes to determine the location of a firm bottom. If equipment or conditions do not permit measurement of

the stream bottom, this condition should be noted for further action.

2. Assessing Scour Potential at Bridges. The items listed in Table 6.1 are provided for bridge inspectors' consideration in assessing the adequacy of the bridge to resist scour. In making this assessment, inspectors need to understand and recognize the interrelationships between Item 60 (Substructure), Item 61 (Channel and Channel Protection), and Item 71 (Waterway Adequacy). As noted earlier, additional follow-up by others should be made utilizing Item 113 (Scour Critical Bridges) when the bridge inspection reveals a potential problem with scour.

Table 6.1 ASSESSING THE SCOUR POTENTIAL AT BRIDGES

1. UPSTREAM CONDITIONS

a. Banks

STABLE: Natural vegetation, trees, bank stabilization measures such as riprap, paving, gabions, channel stabilization measures such as dikes and groins.

UNSTABLE: Bank sloughing, undermining, evidence of lateral movement, damage to stream stabilization installation's, etc.

b. Main Channel

- Clear and open with good approach flow conditions, or meandering or braided with main channel at an angle to the orientation of the bridge.
- Existence of islands, bars, debris, cattle guards, fences that may affect flow.
- Aggrading or degrading stream bed.
- Evidence of movement of channel with respect to bridge (make sketches, take pictures).

c. Floodplain

- Evidence of significant flow on flood plain.
- Flood plain flow patterns - does flow overtop road and/or return to main channel?
- Existence and hydraulic adequacy of relief bridges (if relief bridges are obstructed, they will affect flow patterns at the main channel bridge).
- Extent of flood plain development and any obstruction to flows approaching the bridge and its approaches.
- Evidence of overtopping approach roads (debris, erosion of embankment slopes, damage to riprap or pavement, etc.).

d. Debris

- Extent of debris in upstream channel.

TABLE 6.1 CONTINUED

e. Other Features

- Existence of upstream tributaries, bridges, dams, or other features, that may affect flow conditions at bridges.

2. CONDITIONS AT BRIDGE

a. Substructure

b. Superstructure

- Evidence of overtopping by floodwater (Is superstructure tied down to substructure to prevent displacement during floods?)

- Obstruction to flood flows (Does it collect debris or present a large surface to the flow?)

- Design (Is superstructure vulnerable to collapse in the event of foundation movement as are simple spans and non-redundant design for load transfer?)

c. Channel Protection and Scour Countermeasures

- Riprap (Is riprap adequately toed into the stream bed or is it being undermined and washed away? Is riprap pier protection intact, or has riprap been removed and replaced by bed load material? Can displaced riprap be seen in streambed below bridge?)

- Guide banks (Spur dikes) (Are guide banks in place? Have they been damaged by scour and erosion?)

- Stream and streambed (Is main current impinging upon piers and abutments at an angle? Is there evidence of scour and erosion of streambed and banks, especially adjacent to piers and abutments? Has stream cross section changed since last measurement? In what way?)

d. Waterway Area (Does waterway area appear small in relation to stream and its flood plain? Is there evidence of scour across a large portion of the stream bed at the bridge? Do bars, islands, vegetation, and debris constrict flow and concentrate it in one section of the bridge or cause it to attack piers and

TABLE 6.1 CONTINUED

abutments? Do the superstructure, piers, abutments, and fences, etc., collect debris and constrict flow? Are approach roads regularly overtopped? If waterway opening is inadequate, does this increase the scour potential at bridge foundations?)

3. DOWNSTREAM CONDITIONS

a. Banks

STABLE: Natural vegetation, trees, bank stabilization measures such as riprap, paving, gabions, channel stabilization measures such as dikes and groins.

UNSTABLE: Bank sloughing, undermining, evidence of lateral movement, damage to stream stabilization installations, etc.

b. Main Channel

- Clear and open with good "getaway" conditions, or meandering or braided with bends, islands, bars, cattle guards, and fences that retard and obstruct flow.

- Aggrading or degrading stream bed.

- Evidence of downstream movement of channel with respect to the bridge (make sketches and take pictures).

c. Flood plain

- Clear and open so that contracted flow at bridge will return smoothly to flood plain, or restricted and blocked by dikes, developments, trees, debris, or other obstructions.

- Evidence of scour and erosion due to downstream turbulence.

d. Other Features

- Downstream dams or confluence with larger stream which may cause variable tailwater depths. (This may create conditions for high velocity flow through bridge).

D. UNDERWATER INSPECTIONS

Perhaps the single most important aspect of inspecting the bridge for actual or potential damage from scour is the taking and plotting of measurements of stream bottom elevations in relation to the bridge foundations. Where conditions are such that the stream bottom cannot be accurately measured by rods, poles, sounding lines or other means, other arrangements need to be made to determine the condition of the foundations. Other approaches to determining the cross-section of the streambed at the bridge include:

- o use of divers; and
- o use of electronic scour and radar equipment (Appendix G).

For the purpose of evaluating resistance to scour of the substructure under Item 60 of the "Bridge Recording and Coding Guide," the questions remain essentially the same for foundations in deep water as for foundations in shallow water:

- o What does the stream cross-section look like at the bridge?
- o Have there been any changes as compared to previous cross-section measurements? If so, does this indicate that (1) the stream is aggrading or degrading; or (2) local or contraction scour is occurring around piers and abutments?
- o What are the shape and depths of scour holes?
- o Is the foundation footing (or the piling) exposed to the stream flow; and if so, what is the extent and probable consequences of this condition?
- o Has riprap around a pier been moved or removed?

E. NOTIFICATION PROCEDURES

A bridge inspector's site evaluation of the effect of water at the bridge is an important part of a bridge inspection. A positive means of promptly communicating inspection findings to proper agency personnel must be established. Any condition that a bridge inspector considers to be of an emergency or potentially hazardous nature should be reported immediately. That information as well as other conditions which do not pose an immediate hazard, but still warrant further action should be conveyed to the hydraulic/foundation engineers for review.

A report form is, therefore, needed to communicate pertinent problem information to the hydraulic/geotechnical engineers. An existing report form may currently be used by bridge inspectors within a State highway agency to advise maintenance personnel of

specific needs. Regardless of whether an existing report is used or a new one is developed, a bridge inspector should be provided the means of advising hydraulics and geotechnical engineers of problems in a timely manner.

(blank)

CHAPTER 7

PLAN OF ACTION FOR INSTALLING SCOUR COUNTERMEASURES

A. INTRODUCTION

Scour Countermeasures are those features incorporated at a later date to make a bridge less vulnerable to damage or failure from scour.

New bridges

For new bridges, recommended scour countermeasures have been addressed in Chapters 3 and 4. In summary, the best solutions for minimizing scour damage include:

- o locating the bridge to avoid adverse flood flow patterns,
- o streamlining bridge elements to minimize obstructions to the flow, and
- o deepening the foundations to accommodate scour.

Existing Bridges

For existing bridges, the alternatives available for protecting the bridge from scour are listed below in a rough order of cost:

- o providing riprap at piers and abutments,
- o constructing guide banks (spur dikes),
- o constructing channel improvements,
- o strengthening the bridge foundations,
- o constructing sills or drop structures, and
- o constructing relief bridges or lengthening existing bridges.

These alternatives should be evaluated using sound hydraulic engineering practice.

In developing a plan of action for protecting an existing scour-critical bridge, the four aspects that need to be considered are:

- o monitoring, inspecting and potentially closing a bridge until the countermeasures are installed,
- o installing temporary scour countermeasures, such as riprap around a pier, along with monitoring a bridge during high

Preceding page blank

flow,

- selecting and designing scour countermeasures, and
- scheduling construction of scour countermeasures.

These considerations are discussed in the following sections.

B. MONITORING, INSPECTING, AND POTENTIALLY CLOSING SCOUR-CRITICAL BRIDGES

As noted in Chapter 5, special attention should be given to monitoring scour-critical bridges during and after flood events. The plan-of-action for a bridge should include special instructions to the bridge inspector, including guidance as to when a bridge should be closed to traffic. Guidance should be given to other DOT officials on bridge closure. The intensity of the monitoring effort is related to the risk of scour hazard, as determined from the scour evaluation study. The following items are recommended for consideration when developing the plan-of-action monitoring effort.

1. Information on any existing rotational movement of abutments and piers or settlement of foundations.

2. Information on rates of stream bed degradation, aggradation, or lateral movement based on analysis of changes in stream cross sections taken during successive bridge inspections, sketches of the stream plan form, aerial photographs, etc.

3. Recommended procedures and equipment for taking measurements of stream bed elevations (use of rods, probes, weights, etc.) during and after floods.

4. Guidance on maximum permissible scour depths, flood flows, water surface elevations, etc., beyond which the bridge should be closed to traffic.

5. Reporting procedures for handling excess scour, larger than normal velocities and water surface elevation or discharge that may warrant bridge closure. Who makes closure decisions and how are they implemented?

6. Instructions regarding the checking of stream bed levels in deep channels where accurate measurements cannot be made from the bridge (use of divers, electronic instruments such as sonar, radar, etc.).

7. Instructions for inspecting existing countermeasures such as riprap, dikes, sills, etc.

8. Forms and procedures for documenting inspection results and instructions regarding follow-up actions when necessary.

9. Information on installation of scour depth warning devices.

C. TEMPORARY COUNTERMEASURES.

Monitoring of bridges during high flow may indicate that collapse from scour is imminent. It may be disadvantageous, however, to close the bridge during high flow because of traffic volume, poor alternate routes, the need for emergency vehicles to use the bridge, etc. Temporary scour countermeasures such as riprap could be installed, allaying the need for immediate closure. Temporary countermeasure installed at a bridge along with monitoring during and inspection after high flows could provide for the safety of the public without closing the bridge.

D. SCHEDULING CONSTRUCTION OF SCOUR COUNTERMEASURES

The engineering scour evaluation study should address the risk of failure at scour-critical bridges so that priorities and schedules can be prepared for installation of scour countermeasures at differing bridge sites. In some cases, the risk may be obvious, as where an inspection reveals that a spread footing for a pier has been partially undermined. Immediate action is warranted. In other cases, the need for immediate action is not so apparent, and considerable judgement must be exercised. An example of the latter case is where a stream meander is gradually encroaching upon a bridge abutment. A judgment must be made on the risk associated with the rate of change of the meander and its probable effect on the abutment and associated foundation.

Problems are common with such gradual river changes. As a consequence, the engineer may wait too long to take action. As the degree of encroachment and scour hazard increases, the number of alternative countermeasures is decreased and costs of correction are corresponding increased. In addition, monitoring a bridge during high flows and inspection after high flow may not determine that a bridge is about to collapse from scour.

E. TYPES OF COUNTERMEASURES

An overview of commonly used scour countermeasures is provided below, along with references for obtaining design procedures and criteria for their application to a specific site. Selection of the appropriate countermeasure is best accomplished through a field and office evaluation of the conditions at the stream crossing.

1. Rock Riprap at Piers and Abutments. The FHWA continues to

evaluate how best to design rock riprap at bridge abutments and piers.

Present knowledge is based on research conducted under laboratory conditions with little field verification, particularly for piers. Flow turbulence and velocities around a pier are of sufficient magnitude that large rocks move over time. Bridges have been lost (Schoharie Creek bridge for example) due to the removal of riprap at piers resulting from turbulence and high velocity flow. Usually this doesn't happen during one storm, but is the result of a sequence of high flows. **Therefore, if rock riprap is placed as scour protection around a pier, the bridge should be monitored and inspected after each high flow event until it is determined that the riprap is stable.**

Sizing Rock Riprap at Abutments

The FHWA conducted an as-yet-unpublished 1990 research study for transverse encroachments of up to about 20 percent of a flood plain width. This study indicates a multiplier of 1.8 times the average constricted or bridge waterway velocity for sizing rock riprap with the design approach of HEC 11 (24) is adequate. Because research must yet consider abutment conditions when contiguous to the main channel, these current recommendations are for abutments on the flood plain, set back from the main channel.

The FHWA study consistently indicated that rock riprap failed at the toe rather than on the slope of the abutment. **It is, therefore, recommended for encroachments not exceeding 20 percent of the flood plain width and abutments removed from the main channel that HEC 11 be used with the 1.8 velocity multiplier.**

The rock apron should extend along the entire length of the abutment toe, around the curved portions of the abutment to the point of tangency with the plane of the embankment slope, both upstream and downstream. The apron should extend away from the toe of the abutment into the bridge waterway a dimension equal to 15 percent of the distance from the edge of the flood plain, for the discharge under consideration, to the top of the main channel bank within the bridge waterway. Because the distance form the edge of flood plain to the main channel bank may well differ on the left and right sides of the main channel, the riprap apron extensions from the toe of abutments into the bridge waterway will differ as well. The designer must use judgement in limiting the apron extension into the waterway for wider flood plains. A maximum dimension of 25 feet would seem reasonable.

The face of the abutment should be protected by the same size

rock riprap. The rock riprap on the slope should be carried around the curved potions of an abutment, to terminate at the same point of tangency with the embankment slope discussed above for the apron. FHWA will give further guidance in 1992 on sizing abutment rock riprap for greater flood plain encroachments, pending completion of further research.

Sizing Riprap at Piers

Determine the D_{50} size of the riprap using the rearranged Ishbash equation (34) to solve for stone diameter (in feet, for fresh water):

$$D_{50} = \frac{0.692\ (K\ V)^2}{(s-1)\ 2g}$$

where:
D_{50} = median stone diameter (ft)
K = coefficient for pier shape
V = average velocity approaching pier (ft/sec)
s = specific gravity of riprap (normally 2.65)
g = 32.2 ft/sec^2

K = 1.5 for round-nose pier
K = 1.7 for rectangular pier

To determine V, multiply the average channel velocity (Q/A) by a coefficient that ranges from 0.9 for a pier near the bank in a straight uniform reach of the stream to 1.7 for a pier in the main current of flow around a bend.

- Provide a riprap mat width that extends horizontally at least two times the pier width, measured from the pier face.

- Place the top of a riprap mat at the same elevation as the stream bed. The deeper the riprap is placed into the stream bed, of course, the less likely it will be moved. Placing the bottom of a riprap mat on top of the stream bed is discouraged. **In all cases where riprap is used for scour control, the bridge must be monitored and inspected after high flows.**

  Note. A disadvantage to burying riprap so that the top of the mat is somewhat below the stream bed is that inspectors have difficulty determining if some or all of the riprap has been removed. Therefore, it is wiser to place the top of a riprap mat at the same elevation as the stream bed.

- The thickness of the riprap should be three stone diameters or more.

- In some conditions, place the riprap on filter cloth or a gravel filter. However, if a well-graded riprap is used, a filter may not be needed. In some flow conditions it may not be possible to place a filter or if the riprap is buried in the bed a filter may not be needed.

- The maximum size rock should be no greater than twice the D_{50} size.

2. Guide Banks . Methods for designing guide banks are contained in the FHWA publication Hydraulic Design Series No. 1, "Hydraulics of Bridge Waterways" and HEC 20 (6). A one page summary of the design is in Appendix C. The hydraulic effect of guide banks can be modeled through the use of the FHWA software, WSPRO (23). The purpose of the guide bank is to provide a smooth transition for flows on the flood plain returning to the main channel at the bridge. The guide bank serves to move the point of maximum scour upstream, away from the abutment. Guide banks should be considered for protecting bridge abutments whenever there is a significant amount of flow on the flood plain that must return to the main channel at the bridge.

3. Channel Improvements. A wide variety of countermeasures are available for stabilizing and controlling flow patterns in streams. References 6, 7, 18, 19, 20, 21, 22, 35 and 36 contain methods for designing channel improvements.

   a. Countermeasures for aggrading streams include:

      - contracting the waterway upstream and through the bridge to cause it to scour,

      - construction of upstream dams to create sedimentation basins,

      - periodic cleaning of the channel, and

      - raising the grade of the bridge and its approaches.

   b. Countermeasures for degrading streams include the construction of sills and the strengthening of foundations as discussed below.

   c. Countermeasures for controlling lateral movement of a stream due to stream meanders include placement of dikes along the stream banks to redirect the flow through the bridge along a favorable path that minimizes the angle of attack of the current on the bridge foundations.

      HEC No. 20 (6) addresses this type of countermeasure in

detail. Another useful reference is Transportation Research Record 950 (36).

4. Structural Scour Countermeasures. The use of structural designs to underpin existing foundations is discussed in the AASHTO Manual for Bridge Maintenance (35). While structural measures may be more costly, they generally provide more positive protection against scour than countermeasures such as riprap.

5. Constructing Sills or Drop Structures. The use of sills and drop structures at bridges to stabilize the stream bed and counteract the affects of degradation is discussed in FHWA publications (6) and (7).

6. Constructing Relief Bridges or Extra Spans on the Main Bridge. Providing additional waterway to relieve existing flow conditions is essentially a design problem and the guidance in Chapters 3 and 4 are applicable to its implementation. In some locations with very unstable banks, the addition of spans may be more cost effective than attempting to stabilize the channel slopes in the vicinity of the bridge.

SUMMARY - The foregoing discussion of countermeasures presents a wide variety of concepts and approaches for addressing scour problems at bridges. The Interdisciplinary Scour Team needs to collect and evaluate information about the behavior of streams and flood flow patterns through bridges so that the most appropriate countermeasures are selected for the particular set of site conditions under study. The FHWA publication "Countermeasures for Hydraulic Problems at Bridges (Volume 2, Case Histories)," is recommended as a guide for reviewing the performance of the countermeasures discussed above.

(blank)

LITERATURE CITED

1. Chang, F. F. M., 1973, "A Statistical Summary of the Cause and Cost of Bridge Failures," FHWA, Department of Transportation, Washington, D. C.

2. Brice, J. C., Blodgett, J. C., et al, 1978, "Countermeasures for Hydraulic Problems at Bridges," Volumes 1 and 2, FHWA, Department of Transportation, Washington, D. C.

3. Davis, S. R., 1984, "Case Histories of Scour Problems at Bridges," Transportation Research Record 950, Second Bridge Engineering Conference, Volume 2, Transportation Research Board, Washington, D. C.

4. "Recording and Coding Guide for the Structure Inventory and Appraisal of the Nation's Bridges," FHWA, Department of Transportation, 1988 Revision.

5. Technical Advisory 5140.20, 1988, "Scour at Bridges", FHWA, Department of Transportation, Washington, D. C.

6. Lagasse, P. F., Schall, J. D., Johnson, F. L., Richardson, E. V., Richardson, J. R., and Chang, F. F. M., 1990, "Stream Stability at Highway Structures," Hydraulic Engineering Circular No. 20, FHWA, Department of Transportation, Washington, D. C.

7. Richardson, E. V., Simons, D. B., and Julien, P., 1990, "Highways in the River Environment," FHWA-HI-90-016, Department of Transportation, Washington, D. C.

8. Laursen, E. M., 1960, "Scour at Bridge Crossings," Jour. Hydr. Div., ASCE, V. 89, No. HY3, May 1960.

9. Laursen, E. M., 1963, "An Analysis of Relief Bridge Scour," Jour. Hydr. Div., ASCE, V. 92, No. HY3, May 1963.

10. Raudkivi, A. J. and Ettema, R., 1977, "Effect of Sediment Gradation on Clear-Water Scour," ASCE, V. 103, No. Hy10.

11. Raudkivi, A. J.,1986, "Functional Trends of Scour at Bridge Piers", Jour. Hyd. Div., ASCE, V. 112, No. HY1, January 1986.

12. Copp, H. D., Johnson, I. P. and McIntosh, 1988, "Prediction Methods of Local Scour at Intermediate Bridge Piers," Paper presented at the 68 Annual TRB Meeting, Washington D. C.

Preceding page blank

13. Melville, B. W., and Sutherland, 1988, "Design Method for Local Scour at Bridge Piers," Hydr. Div. Jour., ASCE, V. 114, No. HY10, October 1988.

14. Richardson, E. V. and Richardson, J. R., 1989, " Bridge Scour," U. S. Interagency Sedimentation Committee Bridge Scour Symposium, Washington, D. C.

15. Richardson, E. V., Simons, D. B. and Haushild, W. L., 1962, "Boundary Form and Resistance to Flow in Alluvial Channels," Bul. Int. Assoc. of Scientific Hydrology, Belgium.

16. Neill, C. R., 1968, "Note on Initial Movement of Coarse Uniform Bed Material," Jour. of Hydr. Research, 27(2), 247-249.

17. Jain, S. C. and Fisher, R. E., 1979, "Scour Around Bridge Piers at High Froude Numbers," FHWA-RD-79-104, Department of Transportation, Washington, D. C., April 1979.

18. Brown, S. A., 1985, "Streambank Stabilization Measures for Highway Steam Crossings, Executive Summary," FHWA/RD-80/160, Department of Transportation, Washington, D. C.

19. U. S. Corps of Engineers, 1981, "Final Report to Congress, The Streambank Erosion Control Evaluation and Demonstration Act of 1974," Washington, D. C.

20. Keown, M. P., 1983, "Streambank Protection Guidelines," U. S. Corps of Engineers, Vicksburg, Mississippi.

21. AASHTO, 1982, "Highway Drainage Guidelines, Volume 7, Hydraulic Analyses for the Location and Design of Bridges," American Association of State Highway and Transportation Officials, Washington, D. C.

22. Richardson, E. V. and Simons, D. V., 1984, "Use of Spurs and Guidebanks for Highway Crossings," Transportation Research Record 950, Second Bridge Engineering Conference, Volume 2, Transportation Research Board, Washington, D. C.

23. J. O. Shearman, 1987, "Bridge Waterways Analysis Model for Mainframe and Microcomputers," WSPRO/HY-7, FHWA, Department of Transportation, Washington, D. C.

24. Hydraulic Engineering Circular No. 11, 1989, "Design of Riprap Revetment," FHWA-IP-89-016, Department of Transportation, Washington, D. C.

25. Liu, M. K., Chang, F. M. and Skinner, 1961, "Effect of Bridge Constriction on Scour and Backwater," Dept. of Civil Engr., Colorado State University, Report No. CER 60-HKL22, February 1961.

26. Laursen, E. M., 1980, "Predicting Scour at Bridge Piers and Abutments," General Report No. 3, Arizona Department of Transportation, Phoenix, Arizona.

27. Froehlich, D. C., 1989, " Abutment Scour Prediction," Paper presented at the 68th Annual TRB Meeting, Washington, D. C.

28. Froehlich, D. C., 1989, Personal Communication.

29. Jones, J. S., 1983, " Comparison of Prediction Equations for Bridge Pier and Abutment Scour," Transportation Research Record 950, Volume 2, Second Bridge Engineering Conference, Transportation Research Board, Washington, D.C.

30. Chang, F. F. M., 1987, Personal Communications.

31. Richardson, E. V., Lagasse, P. E., Schall, J. D., Ruff, J. F., Brisbane, T. E. and Frick, D. M., 1987, "Hydraulic, Erosion and Channel Stability Analysis of the Schoharie Creek Bridge Failure, New York," Resources Consultants, Inc., and Colorado State University, Fort Collins, Colorado.

32. Sterling Jones, 1989, "Laboratory Studies of the Effects of Footings and Pile Groups on Bridge Pier Scour," U. S. Interagency Sedimentation Committee Bridge Scour Symposium, Washington, D. C., October 1989.

33. Richardson, E. V., 1990, Personal Communication.

34. Graziano, F., Jones, J. S. and Parola, A. C., 1990, "Design of Riprap to Protect Bridge Piers from Local Scour," Public Roads Magazine, FHWA, Washington, D. C., September 1990.

35. AASHTO, 1987, "Manual for Bridge Maintenance," American Association of State Highway and Transportation Officials, Washington, D. C.

36. Transportation Research Record 950, 1984, Second Bridge Engineering Conference, Volume 2, Transportation Research Board, Washington, D. C.

ADDITIONAL REFERENCES

AASHTO, 1989, "Standard Specifications for Highway Bridges," American Association of State Highway and Transportation Officials, Washington, D. C.

AASHTO, 1883, "Manual for Maintenance Inspection of Bridges," American Association of State Highway and Transportation Officials, Washington, D. C.

Breusers, H.N.C., Nicolette, G., and Shen, H. W., 1977, "Local Scour Around Cylindrical Pier," Journal of Hydraulic Research.

APPENDICES

A. Alternate Scour Analysis Method

B. Equations for Abutment Scour

C. Computation of Guide Bank (Spur Dike) Length

D. North Carolina Scour Evaluation Procedures

E. FHWA 1988 Recording Guide for Structural Inventory

F. Scour Analysis for Great Pee Dee River, South Carolina

G. Scour Detection Equipment

APPENDIX A

ALTERNATE SCOUR ANALYSIS METHOD

This method has merit when contraction scour, discussed in Step 3 of Chapter 3 is significant. It is based on the premise that the contraction and local scour components are inter-dependent. As such, the local scour estimated with this method is determined based on the expected changes in the hydraulic variables and parameters due to contraction scour. Through an interactive process, the contraction scour and channel hydraulics are brought into balance before local scour is computed. The general approach for this method is:

- estimate the natural channel's hydraulics for a fixed bed condition based on existing site conditions;
- estimate the expected profile and plan form changes based on the procedures in this manual and any historic data;
- adjust the natural channel's hydraulics based on the expected profile and plan form changes;
- select a trial bridge opening and compute the bridge hydraulics;
- estimate contraction scour;
- revise the natural channel's geometry to reflect the contraction scour and then again revise the channel's hydraulics. Repeat this iteration until there is no significant change in either the revised channel hydraulics or bed elevation changes (a significant change would be 5 percent or greater variation in velocity, flow depth, or bed elevation);
- using the foregoing revised bridge and channel hydraulic variables and parameters obtained considering the contraction scour, calculate the local scour; and
- extend the local scour depths below the predicted contraction scour depths in order to obtain the total scour.

APPENDIX B

EQUATIONS FOR ABUTMENT SCOUR

In this appendix, scour at abutments is divided into its various cases and equations are given for each case (See Table B.1 and Figures B.1 to B.3). These equations are given for the designer who may want to calculate the potential scour depths using additional equations than the one recommended in the report. No single equation is supplied for a given situation when more than one equation is applicable, because with the lack of field data for verification, it is not known which equation is best. **It is suggested that the designer determine what case fits the design situation and then use all equations that apply to the case.**

COMMENTS ON THE SEVEN ABUTMENT SCOUR CASES.

1. Equations for these cases (except for Case 6) are based on laboratory studies with little or no field data.
2. The factor $a/y_1 = 25$ as a limit for Cases 1-5 is rather arbitrary, but it is not practical to assume that scour depth, y_s, would continue to increase with an increase in abutment length "a".
3. There are two general shapes for abutments. These are vertical wall abutments with wing walls and spill-through abutments. Depth of scour is about double for vertical wall abutments as compared with spill-through abutments.
4. Maximum Depth of Scour.
   For live-bed scour with a dune bed configuration, the maximum depth of scour is about 30 percent greater than equilibrium scour depth given by Liu, et al's (1) equations (Equations 1 and 2). Therefore, the values of scour that are calculated for these equations should be increased by 30 percent when the bed form is dunes upstream of the bridge. The reason for this is that the research that was used for determining scour depth for the live-bed scour case was run with a dune bed and equilibrium scour was measured.

   For clear-water scour the maximum depth of scour is about10 percent greater than live-bed scour. However, there is no need to increase the scour depths because the equations predict the maximum scour.

<u>IT IS MOST IMPORTANT THAT THE COMMENTARY ON EACH OF THE EQUATIONS BE READ AND UNDERSTOOD PRIOR TO ATTEMPTING TO USE THE EQUATIONS FOR DESIGN PURPOSES.</u> Engineering judgment must be used to select the depth of foundations. The designer should take into consideration the potential cost of repairs to an abutment and danger to the travelling public in selecting scour depths or in using design measures such as spur dikes and rock riprap.

CASE	ABUTMENT LOCATION	OVERBANK FLOW	VALUE OF a/y_1	BED LOAD CONDITION	ABUTMENT TYPE	EQUATION NUMBER
1	Projects into Channel	No	$a/y_1 < 25$	Live Bed	Vertical Wall	2, 3
					Spill-Through	1, 3
				Clear Water	Vertical Wall	4, 5
					Spill-Through	4, 5
2	Projects into Channel	Yes	$a/y_1 < 25$	Live Bed	Vertical Wall	3, 7
				Clear Water	Vertical Wall	4, 7
3	Set Back from Main Channel	Yes	$a/y_1 < 25$	Clear Water	Vertical Wall	4
4	Relief on Bridge Floodplain	Yes	$a/y_1 < 25$	Clear Water	Vertical Wall	4
5	Set at Edge of Main Channel	Yes	$a/y_1 < 25$	Live Bed	Vertical Wall	7
6	Not Designated	Yes	$a/y_1 > 25$	Not Designated	Spill-Through	8
7	Skewed to Stream	--	--	--	--	--

TABLE B.1 ABUTMENT SCOUR CASES

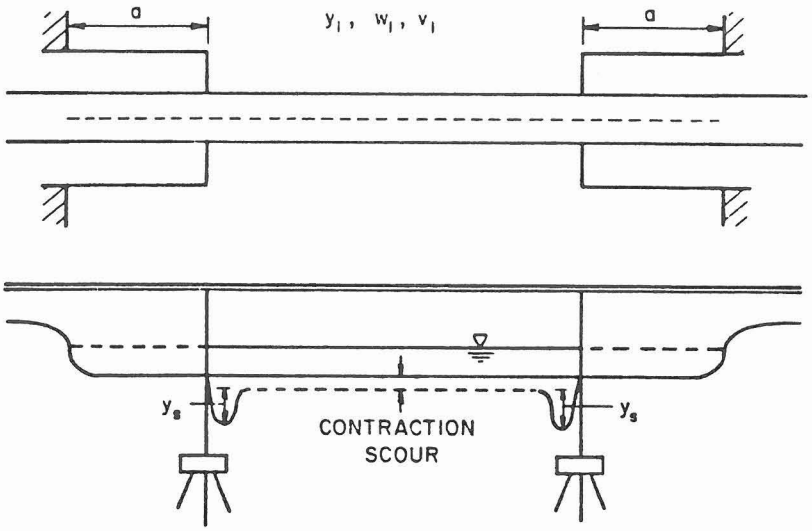

CASE 1 ABUTMENTS PROJECT INTO CHANNEL, NO OVERBANK FLOW

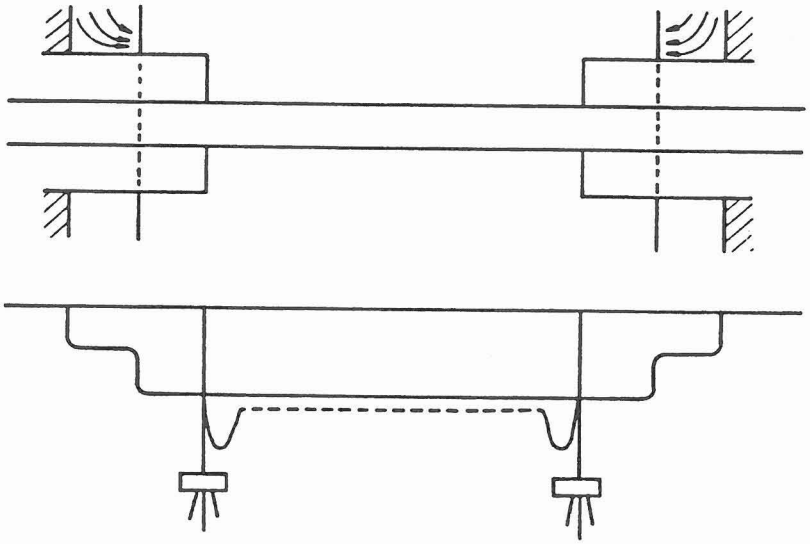

CASE 2 ABUTMENTS PROJECT INTO CHANNEL, OVERBANK FLOW

FIGURE B.1 ABUTMENT SCOUR CASES 1 AND 2.

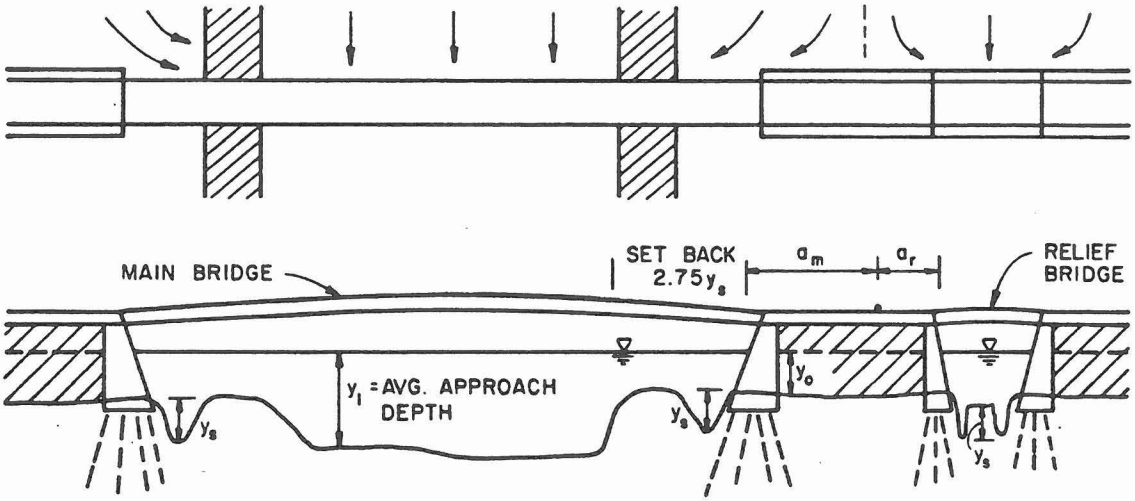

CASE 3 ABUTMENT SETBACK FROM THE CHANNEL MORE THAN 2.75 y_s.
CASE 4 RELIEF BRIDGE

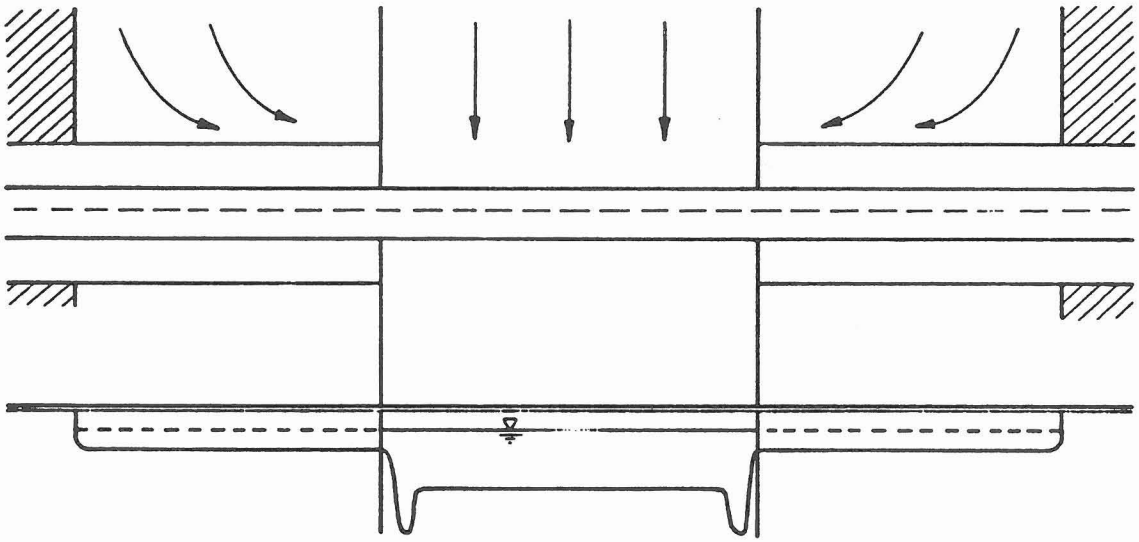

CASE 5 ABUTMENT SET AT EDGE OF CHANNEL, OVERBANK FLOW

FIGURE B.2 ABUTMENT SCOUR CASES 3, 4 AND 5.

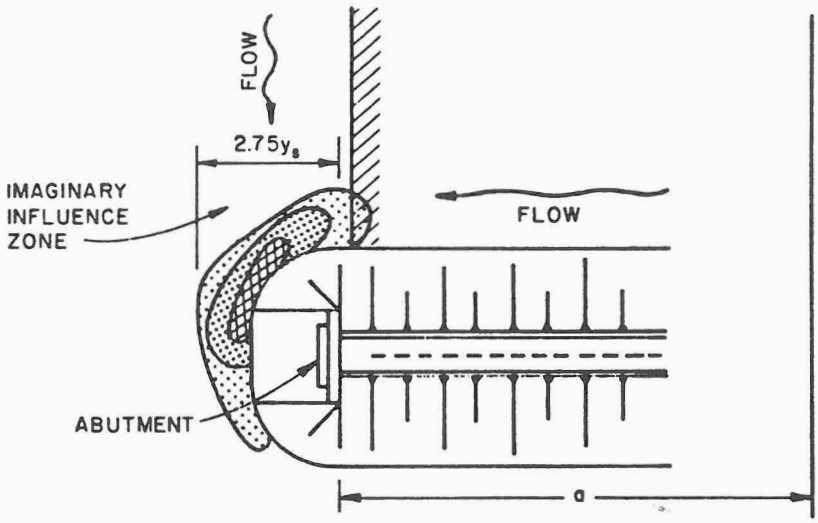

CASE 6 RATIO OF ABUTMENT LENGTH, a, TO FLOW DEPTH, y_1, > 25

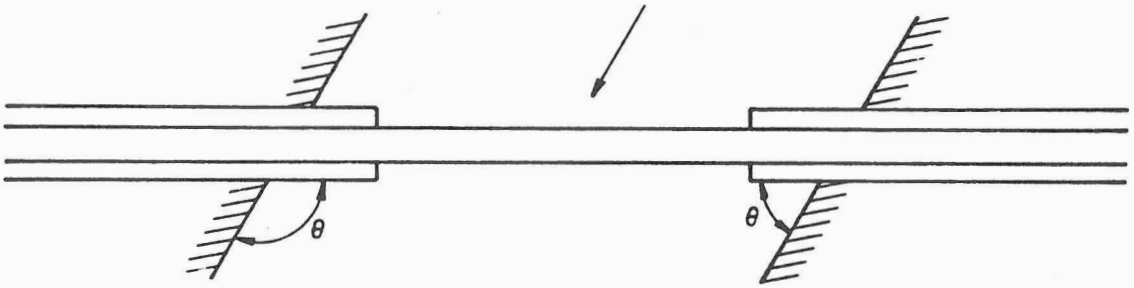

CASE 7 ABUTMENT SET AT AN ANGLE "θ" TO THE FLOW

FIGURE B.3 ABUTMENT SCOUR CASES 6 AND 7.

SCOUR AT ABUTMENTS

CASE 1 ABUTMENTS PROJECT INTO CHANNEL, NO OVERBANK FLOW

This Case is illustrated in Figure B.4.

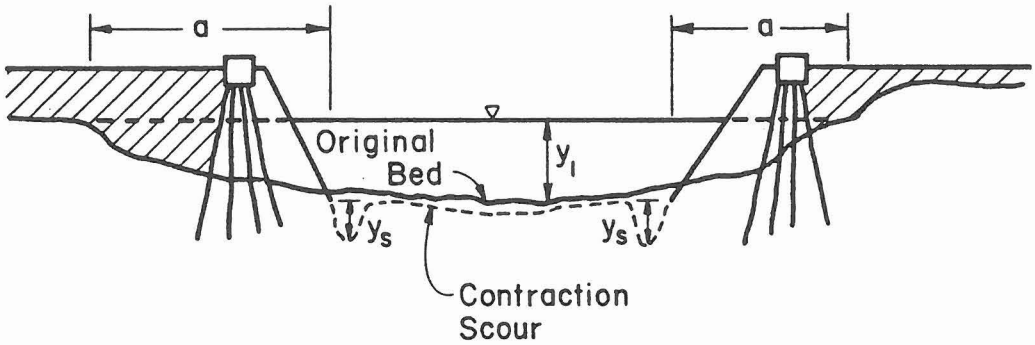

FIGURE B.4 DEFINITION SKETCH FOR CASE 1 ABUTMENT SCOUR

Six equations are given for this case. Two by Liu, et al (1), two by Laursen (2) and two by Froehlich (3).

<u>LIU,ET AL'S CASE 1 EQUATIONS</u>

Equation 1: Liu et al's (1) equation for live-bed scour at a spill through abutment.

According to the 1961 studies of Liu, et al., (1) the equilibrium scour depth for local live-bed scour in sand at a stable spill through slope with no overbank flow when the flow is subcritical is determined by Equation 1.

$$\frac{y_s}{y_1} = 1.1 \left(\frac{a}{y_1}\right)^{0.40} Fr_1^{0.33} \qquad (1)$$

y_s = equilibrium depth of scour (measured from the mean bed level to the bottom of the scour hole)

y_1 = average upstream flow depth in the main channel

a = abutment and embankment length (measured at the top of the water surface and normal to the side of the channel from where the top of the design flood hits the bank to the outer edge of the abutment)

Fr_1 = upstream Froude number

$$Fr_1 = \frac{v_1}{(g\, y_1)^{0.5}}$$

Equation 2: Lui, et al's (1) equation for live bed scour at a vertical wall abutment.

If the abutment terminates at a vertical wall and the wall on the upstream side is also vertical, then the scour hole in sand calculated by equation 1 nearly doubles (Liu, et al, (1) and Gill, (4).

Liu, et al's, (1) equation for the equilibrium scour depth for local live-bed scour in sand at a vertical wall abutment with no overbank flow when the flow is subcritical is determined by Equation 2.

$$\frac{y_s}{y_1} = 2.15 \left(\frac{a}{y_1}\right)^{0.40} Fr_1^{0.33} \qquad (2)$$

LAURSEN'S CASE 1 EQUATIONS

Equation 3: Laursen's (2) equation for live bed scour at a vertical wall abutment.

More recently, Laursen (1980) suggested two relationships for scour at vertical wall abutments for Case 1. One for live-bed scour and another for clear-water scour depending on the relative magnitude of the bed shear stresses to the critical shear stress for the bed material of the stream. For live-bed scour ($\tau_1 > \tau_c$), use equation 3. For other abutment types, see note 2 below.

$$\frac{a}{y_1} = 2.75 \frac{y_s}{y_1} \left[\left(\frac{y_s}{11.5\, y_1} + 1\right)^{1.7} - 1 \right] \qquad (3)$$

Simplified form:

$$\frac{y_s}{y_1} = 1.5 \left(\frac{a}{y_1}\right)^{0.48}$$

Equation 4: Laursen's (2) equation for clear water scour ($\tau_1 < \tau_c$) at a vertical wall abutment.

$$\frac{a}{y_1} = 2.75 \frac{y_s}{y_1} \left[\frac{\left(\frac{y_s}{11.5\, y_1} + 1\right)^{\frac{7}{6}}}{\left(\frac{\tau_1}{\tau_c}\right)^{0.5}} - 1 \right] \qquad (4)$$

τ_1 = shear stress on the bed upstream
τ_c = critical shear stress of the D_{50} of the upstream bed material. The value of τ_c can be obtained from Figure A.5.

Laursen's (1) scour depths for other abutment shapes,

Scour values given by Laursen's equations are for vertical wall abutments. He suggests the following multiplying factors for other abutment types for small encroachment lengths:

Abutment Type	Multiplying Factor
45 degree Wing Wall	0.90
Spill-Through	0.80

FROEHLICH'S CASE 1 EQUATIONS

1. Live bed scour at an abutment.

Froehlich's (3) equation for this case is given in Chapter 4 of the report. It is the recommended equation for all seven cases.

2. Clear-water scour at an abutment.

Froehlich (3) using dimensional analysis and multiple regression analysis of 164 clear-water scour measurements in laboratory flumes developed an equation for clear water scour. It is as follows:

$$\frac{y_s}{y_1} = 0.78\, k_1\, k_2 \left(\frac{a'}{y_1}\right)^{0.63} Fr_e^{1.16} \left(\frac{y_1}{D_{50}}\right)^{0.43} G^{-1.87} + 1 \qquad (5)$$

Where:

K_1 = coefficient for abutment shape

DESCRIPTION	k_1
VERTICAL ABUTMENT	1.00
VERTICAL ABUTMENT WITH WING WALLS	0.82
SPILL THROUGH ABUTMENT	0.55

K_2 = coefficient for angle of embankment to flow

$K_2 = (\theta/90)^{0.13}$

$\theta<90°$ if embankment points downstream
$\theta>90°$ if embankment points upstream

a' = length of abutment projected normal to flow

$a' = A_e/y_1$

A_e = is the flow area of the approach cross-section obstructed by the embankment.

Fr_e = Froude number of approach flow upstream of the abutment.
$= V_e/(gy_1)^{0.5}$

$V_e = Q_e/A_e$

Q_e = flow obstructed by the abutment and approach embankment.

y_1 = depth of flow at the abutment

G = geometric standard deviation of bed material
$G = (D_{84}/D_{16})^{0.5}$

D_{84}, D_{16} = grain sizes of the bed material. The subscript indicates the percent finer at which the grain size is determined.

The constant term unity (+1) in Froehlich's equations is a safety factor that makes the equation predict a scour depth larger than any of the measured scour depths in the experiments. This safety factor should be used in design.

In using Froehlich's clear water scour equation the D_{50} of the bed and foundation material should be equal to or larger than 0.25 ft and G should be equal to or larger than 1.5.

COMMENTS ON CASE 1 EQUATIONS

1. These equations are limited to cases where $a/y_1 < 25$. For $a/y_1 > 25$ go to Case 6.

2. Laursen's (2) equations are based on sediment transport relations. **THEY GIVE MAXIMUM SCOUR AND INCLUDE CONTRACTION SCOUR. FOR THESE EQUATIONS, DO NOT ADD CONTRACTION SCOUR TO OBTAIN TOTAL SCOUR AT THE ABUTMENT. FOR METHOD 1 ANALYSES LOCAL ABUTMENT SCOUR BELOW THE CONTRACTION SCOUR LINE IS EQUAL TO LOCAL ABUTMENT SCOUR -CONTRACTION SCOUR.**

4. Liu, et al's (1) equations are for a dune bed configuration. Therefore, for a dune bed configuration in the natural stream the scour given by their equations are for equilibrium scour and for maximum scour the values must be increased by 30 percent. For plane bed and antidune flow there are no equations given, but it is suggested that Liu, et al's equations could be used as given unless the antidunes would be occurring at the abutment. If antidunes exist or there is the possibility that they might break at the abutment then the scour depth given by their equation be increased by 20 percent.

5. **IT IS RECOMMENDED THAT THE MAXIMUM VALUE OF THE y_s/y_1 RATIO IN LAURSEN'S EQUATION BE TAKEN AS 4 BECAUSE HIS EQUATIONS ARE OPEN ENDED AND FIELD DATA FOR CASE 6 DID NOT EXCEED 4 y_1.**

6. Laursen's equations require trial and error solution. Nomographs developed by Chang (5) are given in Figure A.5. Note that the equations have been truncated at a value of y_s/y equal to 4.

7. These equations were developed from laboratory and theoretical studies with very little field data. The values obtained should be evaluated very carefully.

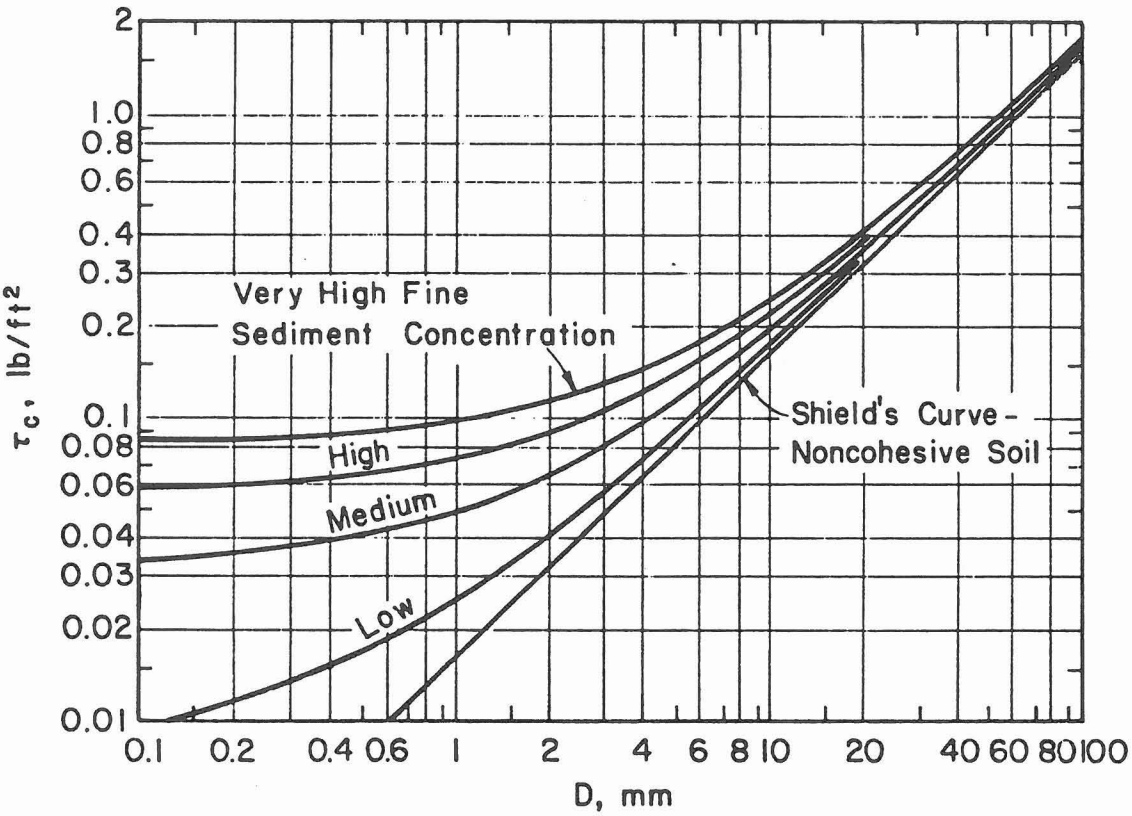

FIGURE B.5 CRITICAL SHEAR STRESS AS A FUNCTION OF BED MATERIAL SIZE AND SUSPENDED FINE SEDIMENT.

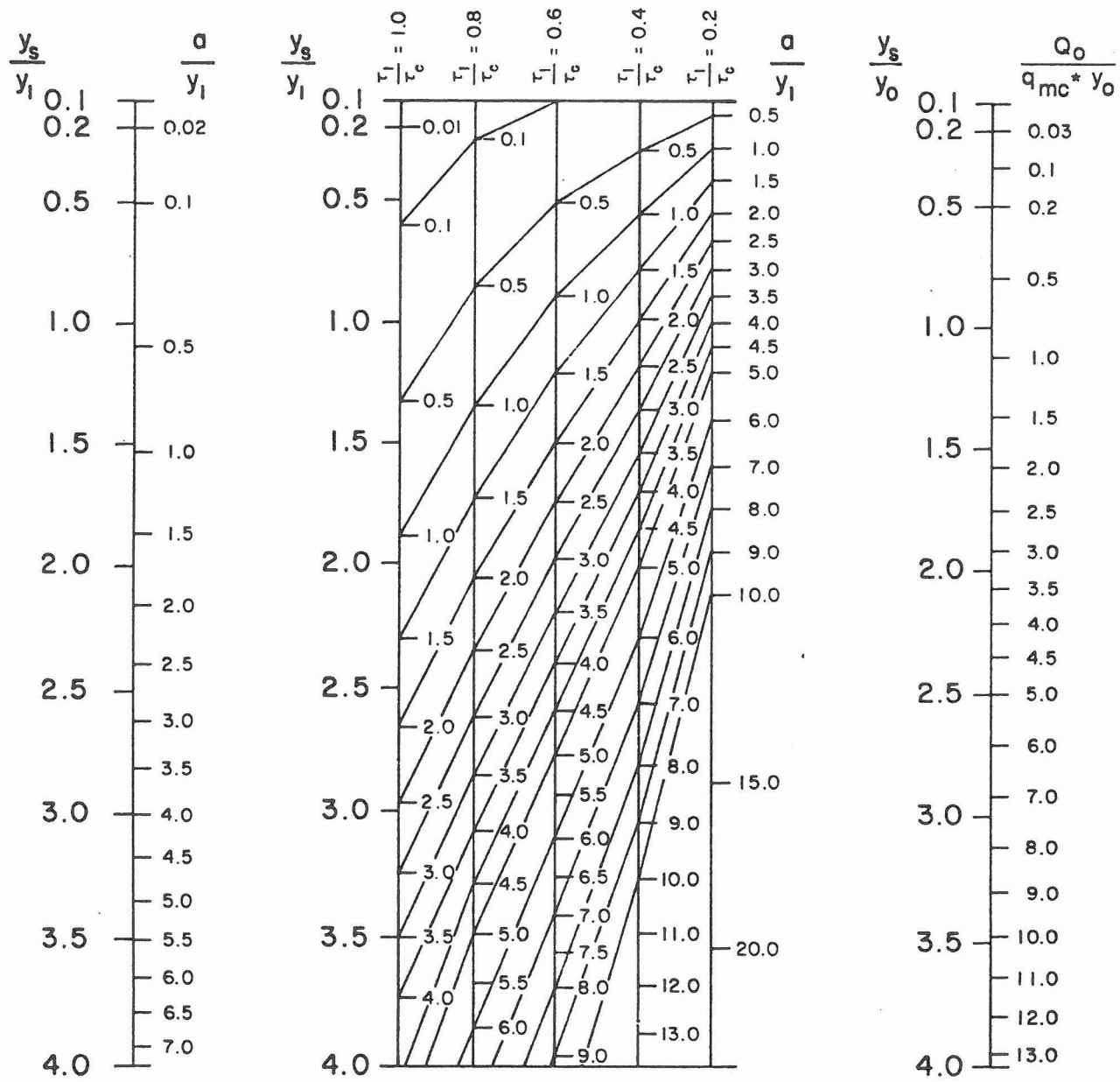

Equation 3 **Equation 4** **Equation 7**

FIGURE B.6 NOMOGRAPHS FOR LAURSEN'S ABUTMENT SCOUR EQUATIONS

CASE 2 ABUTMENT PROJECTS INTO THE CHANNEL, OVERBANK FLOW

No bed material is transported in the overbank area and $a/y_1 < 25$. This case is illustrated in Figure B.7.

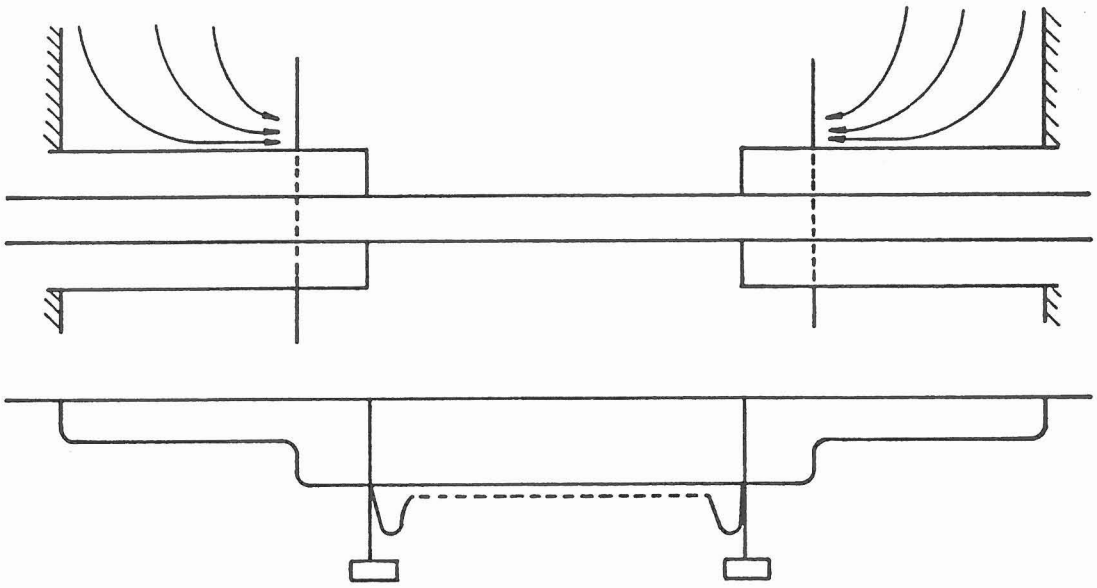

FIGURE B.7 BRIDGE ABUTMENT IN MAIN CHANNEL AND OVERBANK FLOW

Laursen's equation 3 or 4 should be used to calculate the scour depth with abutment length a determined by equation 6.

Laursen's equation 7 can also be used for this case with the appropriate selection of variables.

Live bed scour ($\tau_1 > \tau_c$) use equations 3 and 7.

Clear water scour ($\tau_1 < \tau_c$) use equations 4 and 7.

$$a = \frac{Q_o}{V_1 y_1} \qquad (6)$$

τ_1 = The shear stress in the main channel.
τ_c = The critical shear stress for D_{50} of the bed material in the main channel. The value can be determined from Figure A.5.
Q_o = Flow obstructed by abutment and bridge approach.
y_1 = Average upstream flow depth in the main channel.
V_1 = Average velocity in the main channel.

It is assumed that there is no bed material transported by the overbank flow or that the transport is so small that it will not decrease abutment scour.

CASE 3 ABUTMENT IS SET BACK FROM MAIN CHANNEL MORE THAN 2.75 y_s

There is overbank flow with no bed material transport (clear water scour). Figure B.8 illustrates this case.

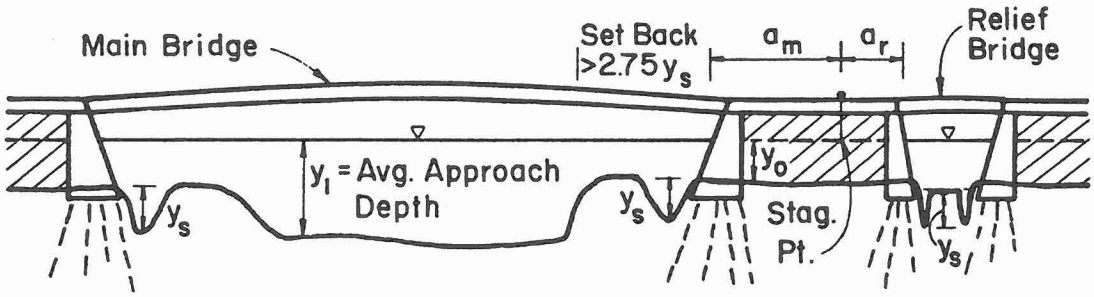

FIGURE B.8 BRIDGE ABUTMENT SET BACK FROM MAIN CHANNEL BANK AND RELIEF BRIDGE

With no bed material transport in overbank flow, scour at a bridge abutment, set back more than 2.75 times the scour depth from the main channel bank line, can be calculated using equation 4 from Laursen (2) with:

τ_o = Shear stress on the overbank area upstream of the abutment.

τ_c = Critical shear stress of material in overbank area. Can be determined from Figure B.5.

Notes.

1. Values of the critical shear stress, τ_c, can be determined from Figure A.5 using the D_{50} of the bed material of the cross-section under consideration. Alternately, they can be calculated using the Shield's relation for beginning of motion given in Highways in the River Environment by Richardson et al (6).
2. When there are relief bridges the a in equation 4 is taken as a_m.
3. The lateral extent of the scour hole is nearly always determinable from the depth of scour and the natural angle of repose of the bed material. Laursen (2) suggested that the width of the scour hole is $2.75y_s$.
4. With no bed material transported in the overbank flow, but the shear stress in the overbank area larger than the critical shear stress ($\tau_o < \tau_c$) then use equation 4 with the shear stress ratio set equal to 1. This can occur if the overland flow is over grass covered land.
5. If there is substantial bed material transport in the overland flow (transport of enough material that in your judgment it could change the scour) then equation 3 can be used. But again engineering judgment is

requires. The equation to be answered is " will the sediment being transported in the overland flow be sufficient to change the scour depth?"

CASE 4 ABUTMENT SCOUR AT RELIEF BRIDGE

Scour depth for a relief bridge on the overbank flow area having no bed material transport is calculated using equation 4 where y_1 is average flow depth on the flood plain. If on the flood plain $\tau_o > \tau_c$, but there is no sediment transport or the sediment transported in the judgement of the engineer will not effect the scour, use equation 4 with the shear ratio set to 1.

Use a_r for a in the equation. Draw stream lines or field observations to delineate where the separation point is for the flow going to the main channel and to the relief bridge. (See Figure B.8)

CASE 5 ABUTMENT SET AT EDGE OF CHANNEL

The case of scour around a vertical wall abutment set right at the edge of the main channel as sketched in Figure B.9 can be calculated with equation 7 proposed by Laursen (2) when $\tau_o < \tau_c$ on the flood plain or there is no appreciable bed material transport by the overbank flow..

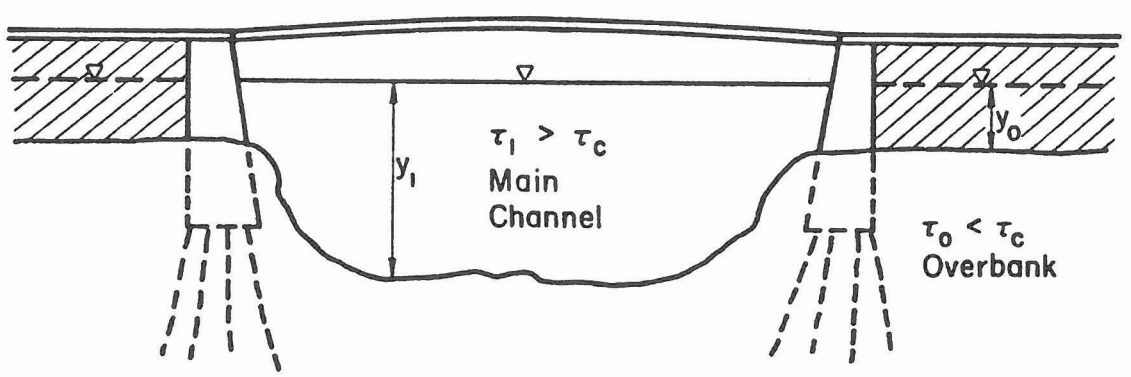

FIGURE B.9 ABUTMENT SET AT EDGE OF MAIN CHANNEL

$$\frac{Q_o}{q_{mc}\, y_0} = 2.75\, \frac{y_s}{y_0}\left[\left(\frac{y_s}{4.1 y_0} + 1\right)^{\frac{7}{6}} - 1\right] \qquad (7)$$

Where:

Q_o = overbank flow discharge
q_{mc} = the unit discharge in the main channel, Q_w/W
Q_w = discharge in main channel
W = width of the main channel
y_o = overbank flow depth

If there is no overbank flow for this case then there is no appreciable scour.

COMPARISON OF SCOUR DEPTHS CALCULATED BY EQUATIONS 3, 4 AND 7.

Values of calculated scour depth by equations 3, 4 an 7 are given in Figure B.10.

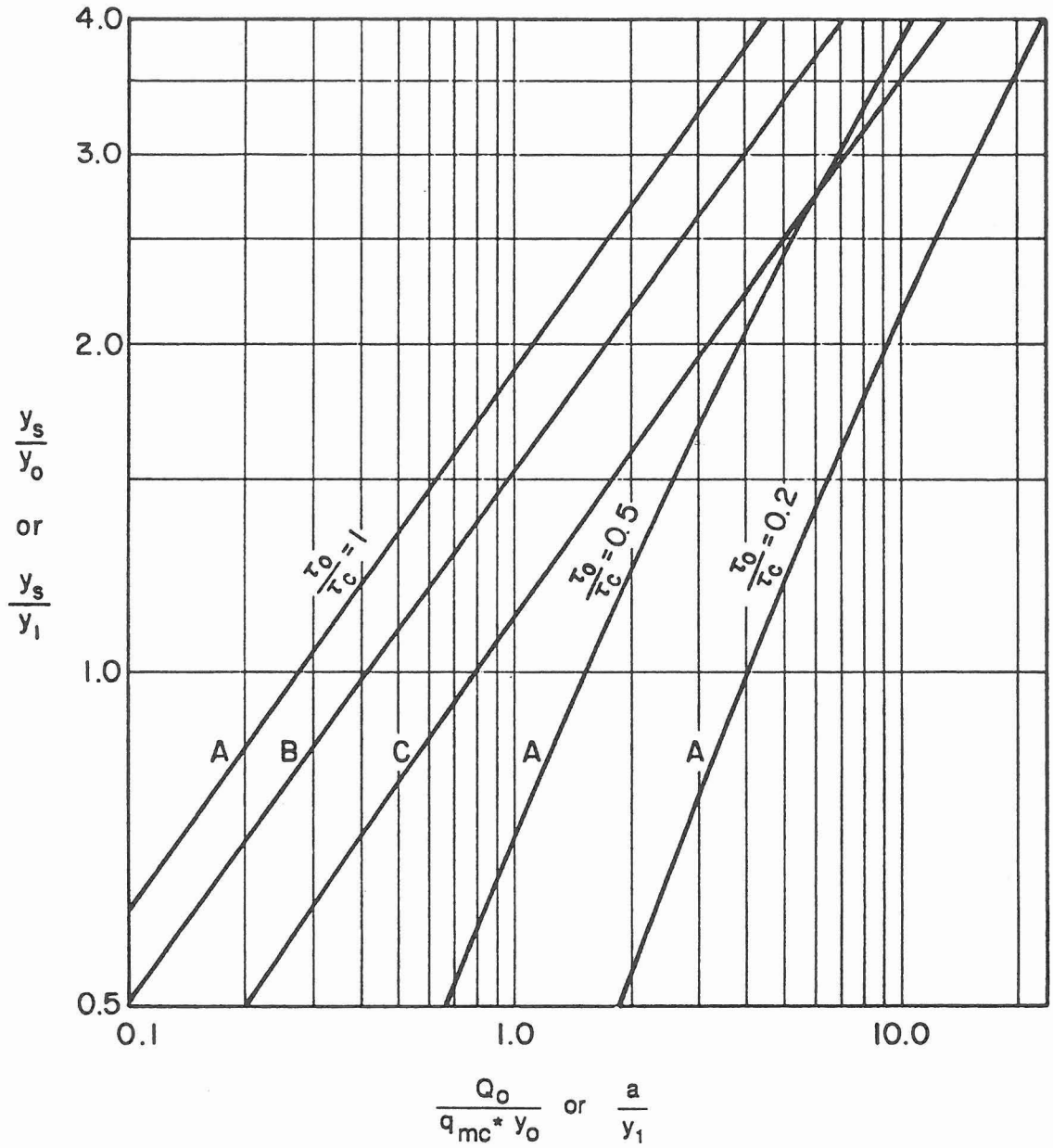

FIGURE B.10 VALUES OF CALCULATED SCOUR DEPTH FROM EQUATIONS 3, 4 and 7. (A is Eq. 4, B is Eq. 3 and C is Eq. 7)

CASE 6 SCOUR AT ABUTMENTS WHEN $a/y_1 > 25$

Field data for scour at abutments for various size streams are scarce, but data collected at rock dikes on the Mississippi indicate the equilibrium scour depth for large a/y_1 values can be estimated by equation 8:

$$\frac{y_s}{y_1} = 4\ Fr_1^{0.33} \qquad (8)$$

The data are scattered, primarily because equilibrium depths were not measured. Dunes as large as 20 to 60 feet high move down the Mississippi and associated time for dune movement is very large in comparison to time required to form live-bed local scour holes. Nevertheless, it is believed that these data represent the limit in scale for scour depths as compared to laboratory data and enables useful extrapolation of laboratory studies to field installations.

Accordingly, it is recommended that equations 1 through 7 be applied for abutments with $0 < a/y_1 < 25$ and equation 8 be used for $a/y_1 > 25$.

CASE 7 ABUTMENTS SKEWED TO THE STREAM

With skewed crossings, the approach embankment that is angled downstream has the depth of scour reduced because of the streamlining effect. Conversely, the approach embankment which is angled upstream will have a deeper scour hole. The calculated scour depth should be adjusted in accordance with the curve of Figure A.11 which is patterned after Ahmad (7).

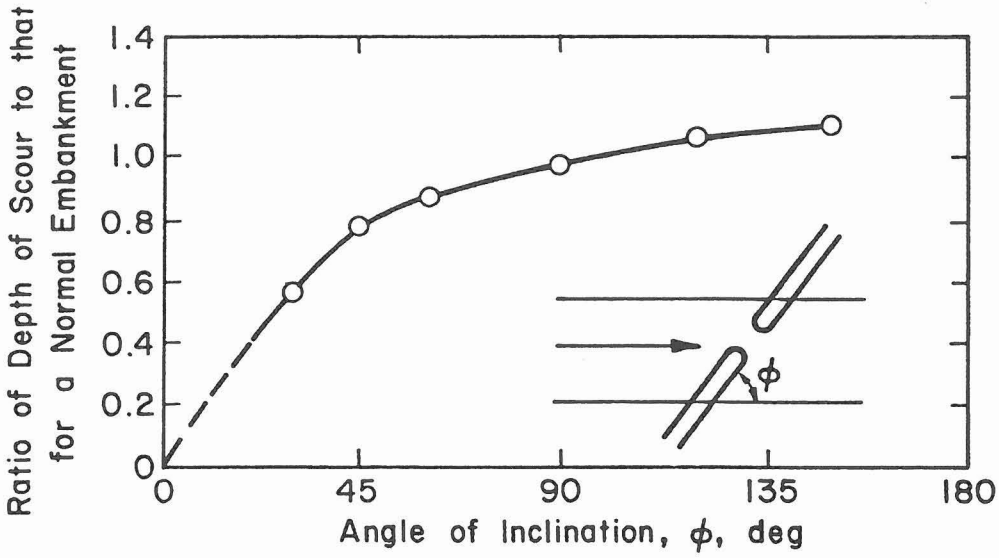

FIGURE B.11. SCOUR ESTIMATE ADJUSTMENT FOR SKEW.

LITERATURE CITED:

1. Liu, H. K., Chang, F. M. and Skinner, M. M., 1961, Effect of Bridge Constriction on Scour and Backwater, Dept. of Civil Eng.,

2. Laursen, E. M., 1980, Predicting Scour at Bridge Piers and Abutments, Gen. Report No. 3, Eng. Exp. Sta.,College of Eng. Uni. of Arizona, Tucson, Az.

3. Froehlich, D. C., 1989, Abutment Scour Prediction, Paper presented at the 68 TRB Annual meeting, Washington D. C.

4. Gill, M. A., 1972, Erosion of Sand Beds Around Spur Dikes, Jour. Hyd. Div., ASCE, Vol. 98, No. Hy. 9, Sept., PP 1587-1602.

5. Chang, F. M., 1987, Personnel Communication.

6. E. V. Richardson, D. B. Simons, P. Julien, 1989, Highways in the River Environment," FHWA, U.S. Department of Transportation, (Revision of 1975 edition).

7. Ahmad, M., 1953, Experiments on Design and Behavior of Spur Dikes: Proc. IAHR, ASCE Joint Meeting, Univ of Minn., Aug.

APPENDIX C
SCOUR AT ABUTMENTS
(Computation of Length of Spur Dike)

1. Determine Discharge Upstream of Bridge for Approach Section

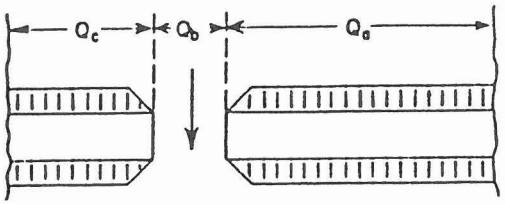

abutment c abutment a

1a. Discharge near abutment a (Q_a) _____

1b. Discharge thru bridge (Q_b) _____

1c. Discharge near abutment c (Q_c) _____

2. Calculate the discharge in the 100 ft. next to the abutment. (This is a portion of Q_b.)

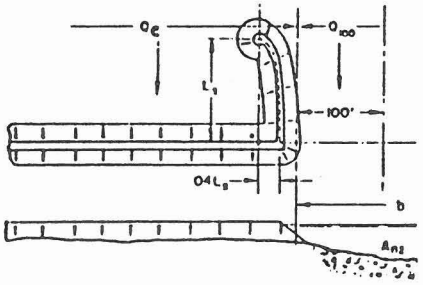

$(Q_{100})_a$ _____

$(Q_{100})_c$ _____

3. Calculate ratio

$Q_a/(Q_{100})_a$ _____

$Q_c/(Q_{100})_c$ _____

4. Calculate Average Velocity in bridge opening (V_{n2})_____

5. Find Length of Spur Dike for both abutments

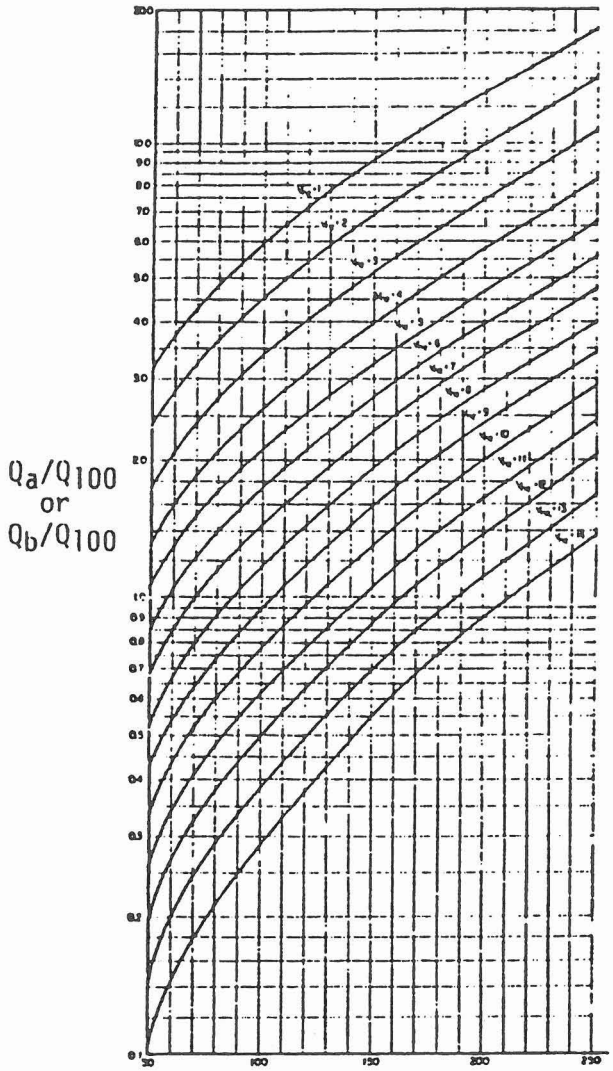

Length of Spur Dike needed for:

abutment a _____

abutment c _____

APPENDIX D

NORTH CAROLINA

DEPARTMENT OF TRANSPORTATION

DIVISION OF HIGHWAYS

STRUCTURE SCOUR EVALUATION PLAN FOR EXISTING STRUCTURES

JUNE 1990

INTERDISCIPLINARY SCOUR WORK GROUP

TABLE OF CONTENTS

		PAGE
Section 1	INTRODUCTION	1
Section 2	SCOUR EVALUATION PROCESS	2
Section 3	INITIAL SCREENING	4
3.1	FHWA Requirements	4
3.2	Low Risk (Category A)	7
3.3	Scour Susceptible (Category B)	8
3.3.1	Known Scour Problems	8
3.3.2	Bridges Built With a State Contract Project Number Before 1980	8
3.3.3	Bridges Built By Bridge Maintenance After 1965	9
3.4	Unknown Foundations (Category C)	9
3.5	Non-Scour Critical (Category D)	10
3.6	Conclusions	10
Section 4	PRIORITIZATION FOR SCOUR EVALUATION	12
4.1	Factors Considered for Prioritization Process	12
4.1.1	Known Scour Problem or Scour Evaluation Requested	12-13
4.1.2	Interstate	13
4.1.3	ADT	13-14
4.1.4	Foundation Type	16
4.1.5	Location in State	16, 18
4.1.6	Simple Spans	20
4.1.7	Latest Inspection Date	20
4.2	Prioritization For Scour Evaluation Flow Chart	20
4.3	Prioritization For Scour Evaluation Data	20
4.4	Conclusions	20

LIST OF APPENDIXES

		PAGE
APPENDIX A	Structures With Known Scour Problems Prioritized For Scour Evaluation	A1
	Section 1. Introduction	A1
	Section 2. Prioritization For Scour Evaluation	A1
APPENDIX B	Prioritization For Scour Evaluation	B1
	Section 1. Introduction	B1
	Section 2. Limitation on Computer Generated Data	B1
	Section 3. Conclusions	B1
APPENDIX C	Item 113 - Scour Critical Bridges	C1-C3

LIST OF TABLES

		PAGE
Table 1:	Data On Existing Structures	5
Table 2:	Initial Screening - Structures Over Water	11
Table 3:	Initial Screening - Structures Over Water Greater Than 20 Feet	11
Table 4:	Structures Over Water By ADT Ranges	15
Table 5:	Known Scour Problems By ADT Ranges	15
Table 6:	Number of Structures With Known Scour Problems By County	17
Table 7:	Prioritization By Location (Groups of Counties)	19
Table A1:	Known Scour Problems - Number of Structures By ADT	A1
Table A2:	Known Scour Problems - Number of Structures By County - Foundation Type	A2
Table A3:	Priority Listing For Structures With Known Scour Problems	A3-A5
Table B1:	Structures Over Water By System - ADT - Foundation Type	B2

LIST OF FIGURES

		PAGE
Figure 1:	Scour Evaluation Process Flow Chart	3
Figure 2:	Bridge Scour (FHWA Reporting Format)	6
Figure 3:	Screening, Prioritization, And Coding For Scour Evaluation Flow Chart	21

Section 1: INTRODUCTION

This "Structure Scour Evaluation Plan For Existing Structures" sets forth North Carolina's Policy for evaluating existing structures for vulnerability to scour and implementing appropriate scour countermeasures. Procedures for evaluating scour at existing structures will be based on FHWA Technical Advisory T 5140.20 entitled "Interim Procedures for Evaluating Scour at Bridges" dated November 7, 1988.

The Scour Evaluation Program Select Committee was formed by the State Highway Administrator to develop and implement a Scour Evaluation Program For Existing Structures. The Interdisciplinary Scour Work Group is advisory to the Scour Evaluation Program Select Committee and received the task to develop an approach to evaluate scour at existing structures in North Carolina.

Scour evaluation is an engineering assessment and prediction of bed form changes at a structure due to flooding and long term flow affects. This evaluation includes identification and assessment of steps that can be taken to eliminate or minimize potential damage to the structure.

A Scour Evaluation Process has been developed by an Interdisciplinary Scour Work Group of engineers representing Bridge Maintenance, Hydraulics, Foundations, Geotechnical, Structure Design, and FHWA. The Interdisciplinary Scour Work Group has developed a Structure Evaluation Plan which includes the following:

1. Initial Screening.
2. Priorities for making structure scour evaluations.
3. The Scope of the scour evaluations to be performed in the office and/or in the field.
4. Identify scour critical structures.
5. Identify alternative scour countermeasures which may serve to make a bridge less vulnerable.
6. Identify which countermeasure is most suitable and cost effective for a given situation.
7. Priorities for installing scour countermeasures.
8. Monitoring and inspection schedules for scour critical structures.

New bridges designed in accordance with Chapter 3 of FHWA Technical Advisory T 5140.20 will not require a Scour Evaluation by the interdisciplinary team. The Structure Design Unit will place a note on the Plans indicating that the bridge has been designed in accordance with FHWA Technical Advisory T 5140.20.

Section 2: SCOUR EVALUATION PROCESS

The following approach has been developed regarding implementation of a program to assess the vulnerability of existing structures to scour:

1. Initial Screening.
2. Prioritization for scour evaluation.
3. Office data collection.
4. Field data collection.
5. Scour calculation/evaluation.
6. Foundation stability analysis.
7. Scour Critical.
8. Structure/Scour monitoring and inspection schedule.
9. Countermeasure design.
10. Structure countermeasure prioritization.
11. Countermeasure implementation.

Figure 1 shows a flow chart of the Scour Evaluation Process.

SCOUR EVALUATION PROCESS

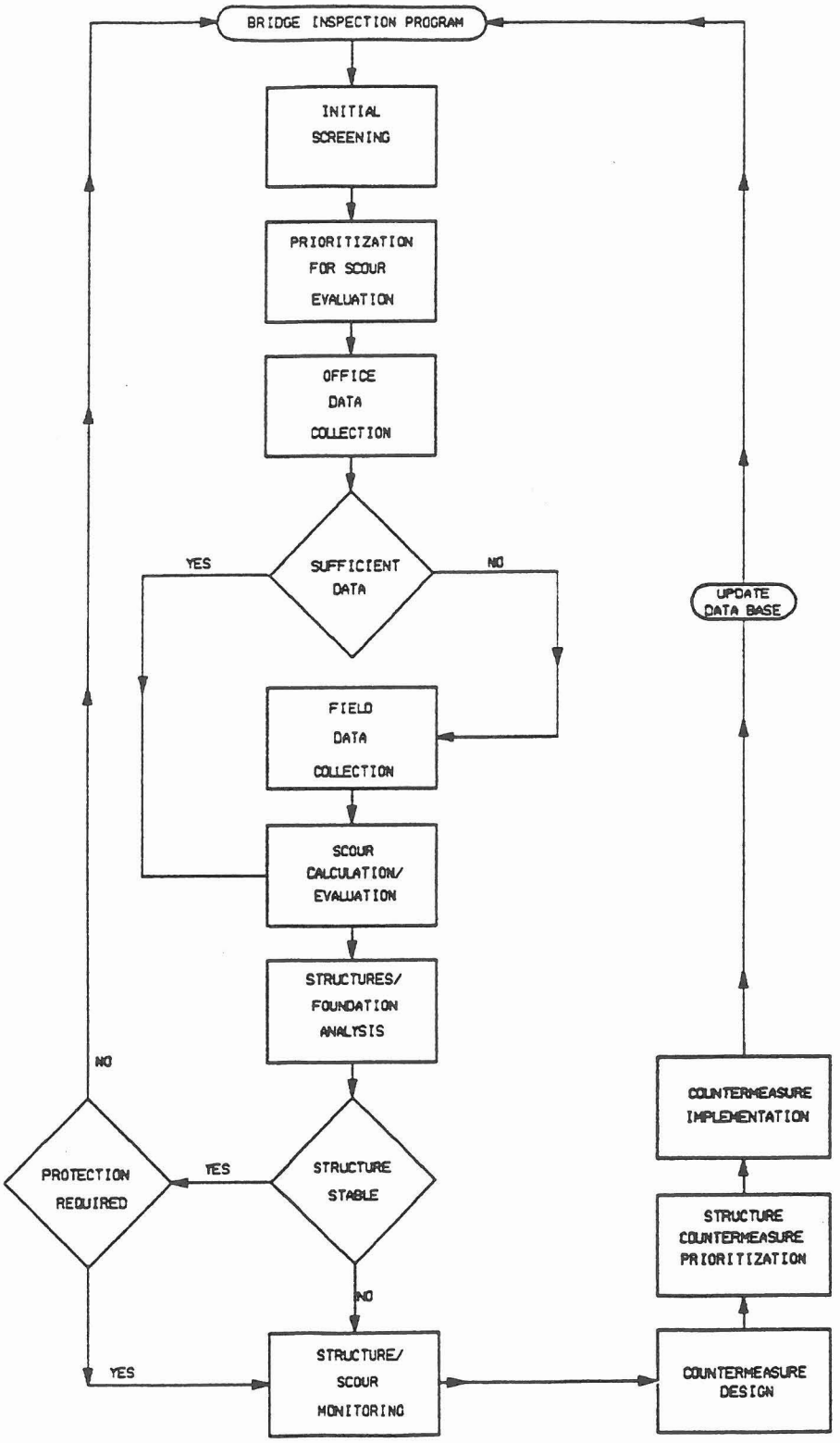

FIGURE 1

Section 3: INITIAL SCREENING

In April, 1990, North Carolina has approximately 16,900 State owned inventory structures of which approximately 14,600 are over water. Due to the massive number of structures over water, a method of prioritization for scour evaluation must be developed.

Table 1 shows data on existing structures in North Carolina which was considered in developing a Screening and Prioritization Process.

3.1 FHWA Requirements

By memorandum dated February 5, 1990, FHWA has established a requirement for the submission of biannual status reports covering bridge scour. See Figure 2 for the reporting format for this item (bridge scour) of the National Bridge Inspection Standards (NBIS). The status reports are due in Washington Headquarters each year by April 15 and November 15. FHWA has established a requirement that all screening to identify bridges which require scour analysis should be completed by March 31, 1991.

The FHWA memorandum suggests the screened structures be categorized into three categories:

A. Low Risk
B. Scour Susceptible
C. Unknown Foundations

The Initial Screening will prioritize structures for scour evaluation in accordance with the FHWA memorandum.

TABLE 1: DATA ON EXISTING STRUCTURES

April 1990

ITEM	STRUCTURES	BRIDGES	CULVERTS & PIPES (Greater Than 20 Feet)
INVENTORY OF STATE OWNED	16892	14147	2745
OVER WATER	14548	11803	2745
INTERSTATE (OVER WATER)	370	194	176
PRIMARY (OVER WATER)	2983	1923	1060
SECONDARY (OVER WATER)	11195	9686	1509
KNOWN SCOUR PROBLEMS	776	753	23
BUILT WITH STATE CONTRACT PROJECT NUMBER (OVER WATER)	2232	1514	718
BUILT BY BRIDGE MAINTENANCE, COUNTY, OR UNKNOWN(OVER WATER)	12316	10289	2027
INVENTORY OF MUNICIPAL OWNED	546	349	197
MUNICIPAL (OVER WATER)	455	264	191

NOTE: Unless otherwise noted on the individual table, the number of structures shown is for the North Carolina structure inventory which includes bridges less than 20 feet in length.

ATTACHMENT B

BRIDGE SCOUR

STATE_____

NUMBER OF BRIDGES

DATE_____

	FEDERAL AID SYSTEM	OFF SYSTEM	TOTAL NUMBER
OVER WATERWAYS			
SCREENED TOTAL			
A) LOW RISK			
B) SCOUR SUSCEPTIBLE			
C) UNKNOWN FOUNDATIONS			
D) CULVERTS & PIPES			
ANALYZED FOR SCOUR			
SCOUR CRITICAL			
COUNTERMEASURES PLANNED			
MONITORING PLANNED			

NOTE: CULVERTS & PIPES ARE INCLUDED IN THE TOTAL NUMBER OF STRUCTURES OVER WATERWAYS. D) CULVERTS & PIPES WERE ADDED SO THAT THE SCREENED TOTAL WOULD MATCH THE TOTAL OVER WATERWAY.

COMMENTS

3.2 Low Risk (Category A)

FHWA Memorandum of February 5, 1990, states "Many bridges can be screened as having reasonably risk-free or low-risk foundations, negating the need for further scour analysis." It is North Carolina's position that all bridges must be analyzed. However, placing some structures in a "low risk" classification is acceptable since it will provide for a more appropriate prioritization of potentially scour critical structures. The design of bridges in North Carolina since about 1976 has included detailed geological information with scour considered. A 1980 acceptance date was chosen to insure that bridges designed after 1976 are completed before being classified as low risk.

Bridges accepted (date built in the computer file) in 1980 or later and built with a State Contract Project number will be categorized as low risk for the following reasons:

1. North Carolina began obtaining geological information at Contract bridge sites in 1976. Scour was considered in the design phase when bottom of footing elevations and pile lengths were established. This scour consideration was based on the historical scour obtained from the geological information.

2. The only way to classify a bridge to be in this category using computer data is by date built which is the acceptance date.

3. Only bridges built with a State Contract Project number are included in the criteria for low risk because Bridge Maintenance has built bridges where scour was not considered.

Classifying these bridges as low risk does not indicate that they should not be evaluated for scour but postpones the time when they will be evaluated. Postponement of the time when these low risk bridges are evaluated allows other bridges which have a greater risk for damage from scour to be evaluated first. All bridges should be evaluated by the applicable parts of the Technical Advisory to be classified as not requiring further analysis for scour.

Bridges classified as low risk will be reclassified as scour susceptible if scour problems are detected.

3.3 Scour Susceptible (Category B)

Scour susceptible is defined in the Initial Screening Process as structures most likely to be susceptible to scour damage. Scour susceptible structures will require scour analysis.

The criteria for classifying structures as Scour Susceptible is as follows:

1. Structures with known scour problems or scour evaluation requested by a DOH Unit.
2. Bridge built with a State Contract Project Number before 1980.
3. Bridges built by Bridge Maintenance after 1965.

These structures can be generated from the computer data file.

3.3.1 Known Scour Problems

Structures that are identified as experiencing scour problems from site inspection or that have a history of scour problems as noted from maintenance records, experience, or bridge inspection records fall within this category.

An updated list of structures with known scour problems will be maintained. Any structure added to this list will also be screened into the scour susceptible category for further evaluation.

See Tables 2 and 3 for the number of structures with known scour problems as of April 1990.

3.3.2 Bridges built with a State Contract Project Number Before 1980

Bridges built with a State contract Project Number will generally have plans available, many will have hydraulic surveys, and some will have geologic information. Having this information available facilitates the scour evaluation.

A small number of bridges in this group will not have information on pile length or bottom of footing elevation. When initially evaluated, these bridges will be reclassified into the unknown foundation category.

See Tables 2 and 3 for the number of bridges built with a State Project Number.

3.3.3 Bridges built by Bridge Maintenance after 1965.

Bridges built by Bridge Maintenance after 1965 generally have foundation information available thru pile driving data.

The exact year Bridge Maintenance started keeping pile driving records is not precisely known; however, 1965 is the best estimate of the starting time.

There are some bridges built by Bridge Maintenance after 1965 that will not have this pile driving record. When initially evaluated, these bridges will be reclassified into the unknown foundation category.

See Tables 2 and 3 for the numbers of bridges built by Bridge Maintenance after 1965.

3.4 Unknown Foundations (Category C)

Data is not available in the computer file on bottom of footing elevation or pile length; therefore, a direct method of identifying bridges with unknown foundations is not available. Bridges with unknown foundations may also be scour susceptible; however, based on data not being available, scour evaluation will be delayed, unless the structure has been identified as a known scour problem structure.

All bridges which are not classified in the scour susceptible and low risk categories will be classified into the unknown foundations category.

See Tables 2 and 3 for bridges classified as having unknown foundations.

Bridges with unknown foundations will be coded on the Structure Inventory And Appraisal Sheet with a "6" in Item 113, Scour Critical Bridges. These bridges will be differentiated in the computer data file as "screened" unknown foundation structures from those structures for which a scour calculation/evaluation has not been made.

3.5 Non-Scour Critical (Category D)

Unless scour problems are identified, all culverts and pipes will be classified as non-scour critical structures requiring no evaluation due to the improbability of a catastrophic failure of a culvert or pipe from scour.

Any culvert or pipe which is discovered to have a scour problem will be added to the known scour problem list and be evaluated accordingly.

Culverts and pipes will be coded on the Structure Inventory And Appraisal Sheet with an "8" in Item 113, Scour Critical Bridges. These culverts and pipes will be differentiated in the computer data file as "screened" non-scour critical structures from those structures determined to be stable for the calculated scour above the top of footing condition.

See Tables 2 and 3 for the number of culverts and pipes classified as non-scour critical.

3.6 Conclusions

This Initial Screening Process allows postponement of scour evaluation for bridges with unknown foundations (where information cannot be obtained to evaluate the structure for scour) or low-risk bridges. It also allows culverts and pipes to be classified as non-scour critical with no evaluation required unless scour problems are detected. Structures classified as scour susceptible will be evaluated first. Any structure which is discovered to have a scour problem by the Bridge Inspection Program (either underwater or above water teams) will be added to the known scour problem list and evaluated accordingly.

Due to the potential safety risk to the traveling public which could result from the failure of a structure due to scour, all existing bridges over water in the bridge inventory will be eventually evaluated for scour.

See Figure 3 for "Screening, Prioritization And Coding for Scour Evaluation" Flow Chart. See Tables 2 and 3 for number of structures from Initial Screening.

Due to FHWA reporting requirements, the computer data file will be expanded in order to track the various components of the screening process. A computer program will be written to automate gathering data for FHWA reporting requirements.

TABLE 2: INITIAL SCREENING - STRUCTURES OVER WATER

ITEM		NO. OF STRUCTURES			CLASSIFICATION	CATEGORY
		FA	NFA	TOTAL		
BRIDGES BUILT 1980 AND LATER/W STATE CONTRACT PROJ. NO.		216	163	379	LOW RISK	A
KNOWN SCOUR PROBLEMS	BRIDGES	213	540	753	SCOUR SUSCEPTIBLE	B
	CULV. & PIPES	17	6	23		
	SUBTOTAL	230	546	776		
BUILT WITH STATE CONTRACT PROJECT NUMBER (BRIDGES) BEFORE 1980		632	578	1,210		
BUILT BY BRIDGE MAINTENANCE AFTER 1965 (BRIDGES)		92	631	723		
SUBTOTAL		954	1,755	2,709		
UNKNOWN FOUNDATIONS (BRIDGES)		1,598	7,140	8,738	UNKNOWN FOUNDATIONS	C
CULVERTS AND PIPES		1,409	1,313	2,722	NON-SCOUR CRITICAL	D
TOTALS		4,177	10,371	14,548		

TABLE 3: INTIAL SCREENING
STRUCTURES OVER WATER GREATER THAN 20 FEET

ITEM		NO. OF STRUCTURES			CLASSIFICATION	CATEGORY
		FA	NFA	TOTAL		
BRIDGES BUILT 1980 AND LATER /W STATE CONTRACT PROJ. NO		216	163	379	LOW RISK	A
KNOWN SCOUR PROBLEMS	BRIDGES	209	454	663	SCOUR SUSCEPTIBLE	B
	CULV. & PIPES	17	6	23		
	SUBTOTAL	226	460	686		
BUILT WITH STATE CONTRACT PROJECT NUMBER(BRIDGES) BEFORE 1980		632	578	1,210		
BUILT BY BRIDGE MAINTENANCE AFTER 1965 (BRIDGES)		91	619	710		
SUBTOTAL		949	1,657	2,606		
UNKNOWN FOUNDATIONS (BRIDGES)		1,533	5,874	7,407	UNKNOWN FOUNDATIONS	C
CULVERTS AND PIPES		1,409	1,313	2,722	NON-SCOUR CRITICAL	D
TOTALS		4,107	9,007	13,114		

Section 4: PRIORITIZATION FOR SCOUR EVALUATION

The Initial Screening process has defined broad categories of structures for scour evaluation. Since there are several thousand structures in some of the three categories: low-risk, scour susceptible, and unknown foundation; a priority order must be developed for scour evaluation of these structures.

4.1 Factors Considered for Prioritization Process

Structures will first be prioritized in broad areas which consider the following factors:

1. Structures with known scour problem or scour evaluation requested by a DOH Unit.
2. Interstate
3. ADT
4. Area of the State in which the structure is located.
5. Type of foundation.
6. Simple spans.
7. Latest inspection date.

4.1.1 Known Scour Problem or Scour Evaluation Requested

The top priority for scour evaluations will be those structures that are experiencing scour or that have a history of scour problems as identified from maintenance records, experience, bridge inspections records, etc.

An updated list of structures with known scour problems will be maintained. Any structure added to this list will also have top priority for "Scour Evaluation."

An equal prioritization criteria will be a Scour Evaluation Request from a DOH unit for a bridge over water that is proposed to be widened or rehabilitated. A bridge that is classified as Scour Critical will have an impact on decisions for:

1. Widening and/or rehabilitation vs. replacement.
2. Funding

A list of major structures in the Tidal Zone will be included in the priority as a Scour Evaluation Request.

Structures with a known scour problem or scour evaluation requested will be further prioritized by the following factors:

1. Interstate
2. ADT
3. Type Foundation
4. Simple spans
5. Latest inspection date

See Figure 3 for Screening, Prioritization and Coding Flow Chart.

See Appendix A for a partial listing of structures with known scour problems prioritized for scour evaluation.

4.1.2 Interstate

An initial assumption of the Interdisciplinary Scour Work Group was that the System Classification would be a prioritization factor. Concerns were expressed that lower ADT Primary System bridges would be evaluated before some Secondary System bridges with high ADT. The liability factor and disruption in the flow of traffic resulting from evaluating lower ADT Primary System bridges before high ADT Secondary System bridges was not considered acceptable if a failure due to scour should occur. Therefore, System Classification has been eliminated as a prioritization factor except for Interstate structures which were retained for the following reasons:

1. Interstate routes are part of the defense highway system.
2. The Interstate System is the highest order where a lane closure must be reported to the Washington Office of FHWA.
3. There are 25 Interstate bridges on the known scour problems list among the 194 Interstate bridges over water.
4. Interstate bridges are generally in the higher ADT categories.
5. Closure of an Interstate bridge would seriously disrupt Interstate Commerce due to lack of adequate detour and linkage routes for Interstate Commerce type traffic.

4.1.3 ADT

Average Daily Traffic (ADT) will be a prioritization factor because of the effects that a structure collapse would have on the safety of the traveling public and on the operation of the overall transportation system for the area or region.

ADT ranges less than or equal to 4,000 were obtained from "A LEVEL OF SERVICE SYSTEM FOR BRIDGE EVALUATION" developed for NCDOT by Dr. David W. Johnston of North Carolina State University for North Carolina in August 1983.

Initially ADT greater than 4,000 were placed in one group. In order to insure that structures with high ADT are evaluated before lower ADT structures, ADT ranges greater than 4,000 have been expanded.

ADT ranges for prioritization are as follows:

1. ADT > 50,000
2. ADT 25,001 - 50,000
3. ADT 10,001 - 25,000
4. ADT 4,001 - 10,000
5. ADT 2,001 -4,000
6. ADT 801 - 2,000
7. ADT less than or equal 800
8. Any other

See Tables 4 and 5 for Number of Structures By System and ADT ranges.

North Carolina pedestrian bridges over water will be included under the ADT prioritization range 8 (Any other).

TABLE 4: STRUCTURES OVER WATER BY ADT RANGES

ADT	STATE SYSTEM			ALL SYSTEMS	
	INTERSTATE	PRIMARY	SECONDARY	TOTAL	%
> 50,000	16	10	1	27	0.19
25,001 - 50,000	59	42	17	118	0.81
10,001 - 25,000	184	357	92	633	4.35
4,001 - 10,000	103	984	287	1374	9.45
2,001 - 4,000	2	692	427	1121	7.71
801 - 2,000	4	593	1331	1928	13.25
< 800	2	301	9,043	9346	64.24
TOTAL	370	2,979	11,198	14547	100
%	2.54	20.48	76.98	100	

TABLE 5: KNOWN SCOUR PROBLEMS BY ADT RANGES

ADT	STATE SYSTEM			ALL SYSTEMS	
	INTERSTATE	PRIMARY	SECONDARY	TOTAL	%
> 50,000	0	0	0	0	0
25,001 - 50,000	0	0	0	0	0
10,001 - 25,000	13	10	2	25	3.22
4,001 - 10,000	12	61	8	81	10.44
2,001 - 4,000	0	41	20	61	7.86
801 - 2,000	0	39	65	104	13.4
< 800	0	27	478	505	65.08
TOTAL	25	178	573	776	100
%	3.22	22.94	73.84	100	

4.1.4 Foundation Type

Structures will be prioritized by foundation type as follows:

1. Sill
2. Spread Footing
3. Pile Bent
4. Pile Footing
5. Other foundation types plus culverts and pipes.

A sill foundation is not a commonly recognized foundation type and consists of poured concrete or a timber member placed on the ground surface with posts placed on the sill to support the cap.

4.1.5 Location in State

North Carolina has three (3) geographical areas which are:

1. Mountains
2. Piedmont
3. Coastal Plain

An initial assumption of the Interdisciplinary Scour Work Group was that the Piedmont area would be the most susceptible to scour because naturally high stream velocities and occurrences of deep alluvial soils provide conditions conducive to foundation problems. The mountains were considered next in priority because of high stream velocities.

Analysis of the data for structures with known scour problems indicates there is not a "good fit" between the Piedmont area assumption and historical data for structures with known scour problems. Since data for structures with known scour problems is the only data available at this point in time, it was decided that location priority be established to parallel the data for the 776 structures with known scour problems.

Structures with known scour problems were tabulated by Major Rivers and Tributaries and by Highway Divisions. Analysis of the data indicated that neither of these factors could be correlate in any pattern.

Table 6 shows structures with known scour problems tabulated by county in descending order by number of structures.

TABLE 6: NUMBER OF STRUCTURES WITH KNOWN SCOUR PROBLEMS BY COUNTY

LOCATION	COUNTY	NO. OF STRUCTURES
1	Iredell	70
	Surry	68
	Wilkes	64
	Alleghany	47
	Robeson	46
SUBTOTAL	5	295
2	Ashe	39
	Cumberland	32
	Catawba	31
	Yadkin	29
	Caldwell	28
	Buncombe	25
	Bladen	23
	Watauga	22
	Columbus	22
SUBTOTAL	9	251
3	Yancey	16
	Graham	13
	Scotland	13
	Alexander	12
	Mitchell	12
	Jackson	11
SUBTOTAL	6	77

LOCATION	COUNTY	NO. OF STRUCTURES
4	Cleveland	9
	Henderson	9
	Madison	8
	Cherokee	8
	Macon	8
	Haywood	7
	Rockingham	6
	Transylvania	6
	McDowell	6
	Clay	6
	Hyde	6
	Avery	5
	Burke	5
	Swain	5
	Caswell	4
	Forsyth	3
	Chatham	3
	Rutherford	3
	Northampton	3
	Lenior	3
	Halifax	3
	Union	3
	Rowan	3
	Polk	3
	Nash	3
	Lincoln	2
	Cabarrus	2
	Mecklenburg	2
	Davidson	2
	Duplin	2
	Pender	2
	Edgecombe	2
	Wilson	2
	Gaston	1
	Alamance	1
	Randolph	1
	Stokes	1
	Greene	1
	Brunswick	1
	Durham	1
	Anson	1
	Dare	1
SUBTOTAL	42	153
5	Remainder of Counties	0
SUBTOTAL	38	0
TOTAL	100	776

Analysis of the data in Table 6 indicates four (4) levels of structures with known scour problems. An additional level is one in which there are no structures with known scour problems. Location Prioritization Categories are as follows:

Location	Range of Structures In A County With Known Scour Problems
1	greater than 45
2	21 - 45
3	10 - 20
4	1 - 9
5	0

There will be five (5) categories of location priority which is shown in Table 7 under STRUCTURES WITH KNOWN SCOUR PROBLEMS.

It is recommended that Location Priority be reviewed and evaluated periodically as experience is gained in Scour Evaluation. Adjustment of the number of Counties in the five (5) categories may be required as experience is gained in Scour Evaluation.

Location in the state will not be a prioritization factor for structures with known scour problems since a structure with an identified scour problem is critical at any location in the state.

TABLE 7: PRIORITIZATION BY LOCATION

PRIORITY				
LOCATION 1	LOCATION 2	LOCATION 3	LOCATION 4	LOCATION 5
COUNTIES	COUNTIES	COUNTIES	COUNTIES	COUNTIES
Iredell	Ashe	Yancey	Cleveland	Bertie
Surry	Cumberland	Alexander	Henderson	Camden
Wilkes	Catawba	Mitchell	Madison	Chowan
Alleghany	Yadkin	Graham	Cherokee	Currituck
Robeson	Caldwell	Scotland	Haywood	Hertford
	Buncombe	Jackson	Rockingham	Martin
	Watauga		Transylvania	Pasquotank
	Bladen		McDowell	Perquimans
	Columbus		Caswell	Tyrrell
			Forsyth	Washington
			Chatham	Beaufort
			Rutherford	Carteret
			Northampton	Craven
			Lenior	Pamlico
			Halifax	New Hanover
			Lincoln	Onslow
			Cabarrus	Sampson
			Mecklenburg	Johnston
			Davidson	Franklin
			Duplin	Granville
			Pender	Person
			Edgcombe	Warren
			Wilson	Harnett
			Gaston	Guilford
			Alamance	Orange
			Randolph	Montgomery
			Stokes	Richmond
			Greene	Stanly
			Brunswick	Gates
			Durham	Jones
			Macon	Pitt
			Clay	Wayne
			Hyde	Vance
			Avery	Wake
			Burke	Hoke
			Swain	Lee
			Union	Moore
			Rowan	Davie
			Polk	
			Nash	
			Anson	
			Dare	

4.1.6 Simple Spans

Structures with simple spans are more susceptible to collapse due to scour than are continuous spans. Therefore simple spans will be evaluated before continuous spans.

4.1.7 Latest Inspection Date

After structures have been prioritized by the factors discussed, there could be several hundred structures in some of the combinations of groups. The latest inspection date criteria will prioritize these group combinations into manageable numbers of structures for scour evaluation.

Structures with the most current data will be evaluated first. The latest inspection date either underwater or above water will be utilized.

4.2 Prioritization For Scour Evaluation Flow Chart

Figure 3 is a flow chart for "Screening, Prioritization, And Coding For Scour Evaluation" of existing structures.

4.3 Prioritization For Scour Evaluation Data

See APPENDIX B for Prioritization For Scour Evaluation Data.

4.4 Conclusions

This process for Prioritization For Scour Evaluation of existing structures accounts for the effect that a structure collapse would have on the safety of the traveling public and on the operation of the overall transportation system.

A computer program will be written to automate Prioritization For Scour Evaluation. See discussion in APPENDIX B for justification.

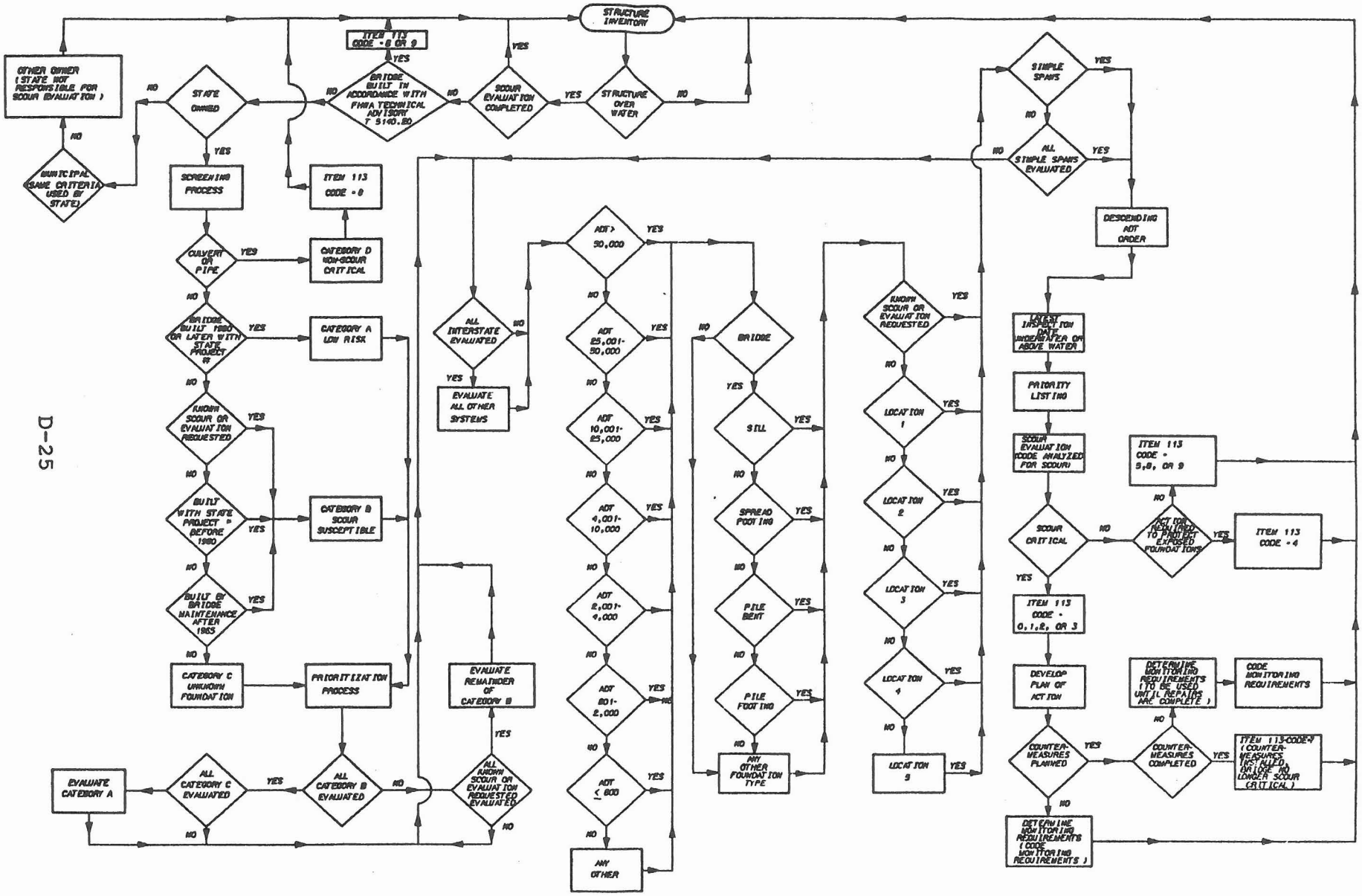

SCREENING, PRIORITIZATION AND CODING FOR SCOUR EVALUATION

FIGURE 3

APPENDIX A

Structures With Known Scour Problems

Prioritized For Scour Evaluation

Section 1. Introduction

Structures with known scour problems are the top priority for Scour Evaluation. Table A1 shows the number of structures with known scour problems by ADT and Foundation Type. Table A2 shows the number of structures with known scour problems by County and Foundation Type.

Section 2. Prioritization For Scour Evaluation

Table A3 is a partial listing of structures with known scour problems. Table A3 lists structures in priority order in accordance with the Screening, Prioritization, And Coding For Scour Evaluation flow chart.

Table A3 was prepared manually. A computer program will be developed to automate this process.

Bridge Maintenance will be responsible for maintaining a priority list for structures with known scour problems.

TABLE A1: KNOWN SCOUR PROBLEMS - NUMBER OF STRUCTURES BY ADT

ADT	FOUNDATION TYPE					TOTAL
	SPREAD	SILL	PILE BENT	PILE FOOTING	OTHER	
10,001-25,000	10	0	10	3	2	25
4,001-10,000	47	0	20	12	2	81
2,001-4,000	30	0	23	8	2	63
801-2,000	36	5	2	51	9	103
> or = 800	193	214	83	6	8	504
TOTALS	316	219	138	80	23	776

TABLE A2: KNOWN SCOUR PROBLEMS
NUMBER OF STRUCTURES BY COUNTY - FOUNDATION TYPE

COUNTY	FOUNDATION TYPE					TOTAL
	SPR.	SILL	PILE BT.	PILE FTG.	OTHER	
Iredell	26	23	16	5	0	70
Surry	34	25	5	4	0	68
Wilkes	16	44	3	1	0	64
Alleghany	5	38	1	0	3	47
Robeson	3	0	30	12	1	46
Ashe	27	11	1	0	0	39
Cumberland	14	0	12	6	0	32
Catawba	13	3	6	8	1	31
Yadkin	11	12	4	1	1	29
Caldwell	17	8	1	2	0	28
Buncombe	18	4	3	0	0	25
Bladen	4	0	12	7	0	23
Watauga	14	6	0	1	1	22
Columbus	2	0	11	9	0	22
Yancey	6	9	0	0	1	16
Graham	3	10	0	0	0	13
Scotland	0	0	11	2	0	13
Alexander	6	2	3	1	0	12
Mitchell	7	5	0	0	0	12
Jackson	4	5	1	0	1	11
Cleveland	5	1	1	2	0	9
Henderson	6	2	0	1	0	9
Madison	5	1	0	0	2	8
Cherokee	3	2	0	1	2	8
Macon	6	1	0	0	1	8
Haywood	6	0	0	1	0	7
Rockingham	5	0	0	1	0	6
Transylvania	4	2	0	0	0	6
McDowell	1	1	3	1	0	6
Clay	6	0	0	0	0	6
Hyde	0	0	0	1	5	6
Avery	5	0	0	0	0	5

COUNTY	FOUNDATION TYPE					TOTAL
	SPR.	SILL	PILE BT.	PILE FTG.	OTHER	
Burke	3	0	2	0	0	5
Swain	5	0	0	0	0	5
Caswell	1	1	0	2	0	4
Forsyth	1	1	0	1	0	3
Chatham	2	0	1	0	0	3
Rutherford	1	1	1	0	0	3
Northampton	2	0	0	1	0	3
Lenior	0	0	2	0	1	3
Halifax	1	0	0	0	2	3
Union	3	0	0	0	0	3
Rowan	0	0	2	1	0	3
Polk	2	0	0	1	0	3
Nash	2	0	1	0	0	3
Lincoln	1	0	1	0	0	2
Cabarrus	0	1	1	0	0	2
Mecklenburg	0	0	2	0	0	2
Davidson	1	0	0	1	0	2
Duplin	0	0	0	2	0	2
Pender	1	0	0	1	0	2
Edgecombe	2	0	0	0	0	2
Wilson	2	0	0	0	0	2
Gaston	0	0	0	0	1	1
Alamance	0	0	0	1	0	1
Randolph	1	0	0	0	0	1
Stokes	1	0	0	0	0	1
Greene	1	0	0	0	0	1
Brunswick	0	0	0	1	0	1
Durham	0	0	1	0	0	1
Anson	1	0	0	0	0	1
Dare	0	0	0	1	0	1
TOTALS	316	219	138	80	23	776

TABLE A3: PRIORITY LISTING FOR STRUCTURES WITH KNOWN SCOUR PROBLEMS

COUNTY	BRIDGE NUMBER	ROUTE	FEATURE INTERSECTED	ADT	FOUNDATION TYPE	PRIORITY
HAYWOOD	142	I-40	PIGEON RIVER	11,600	SPREAD	1
CATAWBA	177	I-40	LYLE CREEK	10,750	SPREAD	2
CATAWBA	178	I-40	LYLE CREEK	10,750	SPREAD	3
NORTHAMPTON	9	I-95	ROANOAKE RIVER	10,200	SPREAD	4
NORTHAMPTON	11	I-95	ROANOAKE RIVER	10,200	SPREAD	5
MECKLENBURG	296	I-85	MALLARD CREEK	17,000	PILE BENT	6
MECKLENBURG	298	I-85	MALLARD CREEK	17,000	PILE BENT	7
ROBESON	147	I-95	LUMBER RIVER	15,000	PILE BENT	8
ROBESON	146	I-95	LUMBER RIVER	14,800	PILE BENT	9
IREDELL	52	I-77	REEDS CREEK	11,000	PILE BENT	10
IREDELL	53	I-77	REEDS CREEK	11,000	PILE BENT	11
ROBESON	C89	I-95	ASHPOLE SWAMP	21,000	OTHER	12
CATAWBA	C71	I-40	CREEK	20,000	OTHER	13
IREDELL	6	I-40	CATAWBA RIVER	9,350	SPREAD	14
IREDELL	7	I-40	CATAWBA RIVER	9,350	SPREAD	15
CUMBERLAND	35	I-95	ROCKFISH CREEK	9,300	SPREAD	16
CUMBERLAND	36	I-95	ROCKFISH CREEK	9,300	SPREAD	17
CUMBERLAND	109	I-95	CAPE FEAR RIVER	8,850	SPREAD	18
CUMBERLAND	111	I-95	CAPE FEAR RIVER	8,850	SPREAD	19
IREDELL	186	I-40	S.YADKIN R. & SR 2145	8,250	SPREAD	20
CUMBERLAND	85	I-95	CAPE FEAR R. SR 1739 & SR 1737	8,200	SPREAD	21
SURRY	121	I-77	MITCHELL RIVER	7,750	SPREAD	22
SURRY	123	I-77	MITCHELL RIVER	7,750	SPREAD	23
CUMBERLAND	77	I-95	ROCKFISH CREEK	7,550	SPREAD	24
CUMBERLAND	83	I-95	ROCKFISH CREEK	7,550	SPREAD	25
CUMBERLAND	23	NC 24	LOWER LITTLE RIVER	21,200	SPREAD	26
BUNCOMBE	76	US 25	SWANNANOA RIVER SOUTH R\R & SR 3556	15,400	SPREAD	27
CUMBERLAND	49	NC 210	LOWER LITTLE RIVER	11,900	SPREAD	28
ROCKINGHAM	75	NC 700	SMITH CREEK	11,700	SPREAD	29
WILKES	48	US 421	YADKIN RIVER	11,000	SPREAD	30
CUMBERLAND	71	SR 1400	BEAVER CREEK	15,100	PILE BENT	31
ROBESON	125	NC 41	LUMBER RIVER	14,700	PILE BENT	32
ROBESON	43	NC 72	LUMBER RIVER	13,000	PILE BENT	33
CUMBERLAND	70	SR 1404	BEAVER CREEK	11,600	PILE BENT	34
CALDWELL	16	US 64	ZACKS FORK CREEK	25,000	PILE FOOTING	35
CATAWBA	91	NC 127	CATAWBA RIVER	12,700	PILE FOOTING	36
FORSYTH	33	US 158	MUDDY CREEK	10,500	PILE FOOTING	37
SURRY	81	US 601	STEWARTS CREEK	9,900	SPREAD	38
SURRY	26	US 52	ARARAT RIVER	9,800	SPREAD	39
SURRY	184	US 52	ARARAT RIVER	9,700	SPREAD	40
CHEROKEE	48	US 19	VALLEY RIVER	9,400	SPREAD	41
CUMBERLAND	14	US 401	LAKE RIM RUNOFF	9,000	SPREAD	42
YADKIN	177	SR 1314	SOUTH DEEP CREEK	8,700	SPREAD	43
ROCKINGHAM	63	US 220	DAN RIVER	8,300	SPREAD	44
SURRY	332	SR 1190	YADKIN R.	8,100	SPREAD	45
CHEROKEE	14	US 19	HIWASSEE RIVER	8,000	SPREAD	46

TABLE A3: PRIORITY LISTING FOR STRUCTURES WITH KNOWN SCOUR PROBLEMS (continued)

COUNTY	BRIDGE NUMBER	ROUTE	FEATURE INTERSECTED	ADT	FOUNDATION TYPE	PRIORITY
HALIFAX	51	NC 48	ROANOAKE RIVER	7,500	SPREAD	47
BUNCOMBE	39	NC 51	SWANNANOA RIVER	7,200	SPREAD	48
HENDERSON	115	US 64	FRENCH BREAD R.	7,200	SPREAD	49
SURRY	21	US 21	YADKIN R.	7,000	SPREAD	50
LINCOLN	50	NC 73	CATAWBA R.	7,000	SPREAD	51
CLEVELAND	101	US 74	BUFFALO CREEK	6,950	SPREAD	52
AVERY	27	US 221	LINVILLE R.	6,900	SPREAD	53
SURRY	111	NC 89	LOVILLES CREEK	6,600	SPREAD	54
SURRY	126	US 52	TOMS CREEK	6,550	SPREAD	55
CATAWBA	139	NC 16	CATAWBA R.	6,500	SPREAD	56
CUMBERLAND	144	NC 24	SOUTH R.	6,400	SPREAD	57
ALEXANDER	4	NC 16	LOWER LITTLE R.	6,100	SPREAD	58
SURRY	122	US 52	TOMS CREEK	6,000	SPREAD	59
BUNCOMBE	265	NC 151	HOMINY CREEK	5,900	SPREAD	60
WATAUGA	53	NC 194	BAIRDS CREEK	5,900	SPREAD	61
ALEXANDER	6	US 64	LOWER LITTLE R.	5,500	SPREAD	62
IREDELL	56	SR 1109	LAKE NORMAN	5,000	SPREAD	63
YADKIN	35	NC 67	YADKIN R.	5,000	SPREAD	64
COLUMBUS	55	US 74	WHITE MARSH SWAMP	4,800	SPREAD	65
BUNCOMBE	649	SR 1002	FRENCH BROAD R. & SOUTH.R/R	4,600	SPREAD	66
HAYWOOD	176	NC 215	PIGEON R.	4,600	SPREAD	67
TRANSYLVANIA	69	US 64	N.FORK FRENCH BROAD R.	4,500	SPREAD	68
AVERY	4	US 19	NORTH TOE R.	4,300	SPREAD	69
CLAY	6	US 64	HIWASSEE R.	4,300	SPREAD	70
CATAWBA	50	NC 127	HENRY FORK R.	4,100	SPREAD	71
ANSON	81	US 74	PEE DEE R.	4,050	SPREAD	72
SURRY	185	US 52	AVARAT R.	9,700	PILE BENT	73
CUMBERLAND	68	NC 59	ROCKFISH CREEK	8,100	PILE BENT	74
LENOIR	43	US 70	NEUSE R.	7,850	PILE BENT	75
LENOIR	42	US 70	NEUSE R.	7,600	PILE BENT	76
DURHAM	217	SR 1116	CREEK	7,300	PILE BENT	77
LINCOLN	35	NC 150	S.FORK CATAWBA R.	7,000	PILE BENT	78
ROWAN	85	US 70	NORTH SOUND CREEK	7,000	PILE BENT	79
COLUMBUS	53	US 74	WHITE MARSH SWAMP	6,900	PILE BENT	80
ROBESON	33	US 74	BACK SWAMP CREEK	6,300	PILE BENT	81
BLADEN	6	NC 131	BRYANT SWAMP	6,300	PILE BENT	82
ROBESON	118	US 74	LUMBER R.	6,100	PILE BENT	83
SCOTLAND	22	US 74	GUM SWAMP CREEK	6,050	PILE BENT	84
IREDELL	45	SR 1100	CREEK	6,000	PILE BENT	85
COLUMBUS	54	US 74	WHITE MARSH SWAMP	5,720	PILE BENT	86
CALDWELL	15	US 64	SPAINHOUR CREEK	5,700	PILE BENT	87

APRIL 1990

TABLE A3: PRIORITY LISTING FOR STRUCTURES WITH KNOWN SCOUR PROBLEMS (continued)

COUNTY	BRIDGE NUMBER	ROUTE	FEATURE INTERSECTED	ADT	FOUNDATION TYPE	PRIORITY
MCDOWELL	267	SR 1103	CATAWBA R.	5,200	PILE BENT	88
SCOTLAND	17	NC 15	GUM SWAMP	5,050	PILE BENT	89
ROBESON	16	NC 71	LUMBER R.	5,000	PILE BENT	90
ROBESON	420	SR 2289	LUMBER R.	5,000	PILE BENT	91
SCOTLAND	47	US 401	LUMBER R.	4,600	PILE BENT	92
BLADEN	17	NC 701	CAPE FEAR R.	9,200	PILE FOOTING	93
BLADEN	22	NC 211	BRYANT SWAMP	7,300	PILE FOOTING	94
CUMBERLAND	126	NC 24	CAPE FEAR R.	7,100	PILE FOOTING	95
MCDOWELL	104	US 221	ARMSTRONG CREEK	7,100	PILE FOOTING	96
CATAWBA	138	NC 150	LAKE NORMAN	6,700	PILE FOOTING	97
SCOTLAND	23	US 74	GUM SWAMP CREEK	6,050	PILE FOOTING	98
CLEVELAND	17	NC 18	HICKORY CREEK	5,800	PILE FOOTING	99
WATAUGA	72	US 221	GAP CREEK	5,400	PILE FOOTING	100
CATAWBA	97	NC 16	LYLE CREEK	5,000	PILE FOOTING	101
CUMBERLAND	219	SR 1006	CAPE FEAR R.	5,000	PILE FOOTING	102
CATAWBA	111	NC 16	BAKERS CREEK	4,900	PILE FOOTING	103
IREDELL	43	US 70	THIRD CREEK	4,350	PILE FOOTING	104
GASTON	C20	NC 27	DUTCHMAN'S CREEK	6,500	OTHER	105
MADISON	C35	US 25-70	WALNUT CREEK	5,200	OTHER	106
BUNCOMBE	292	NC 151	HOMINY CR. & SOUTH R\R	4,000	SPREAD	107
CUMBERLAND	21	NC 87	ROCKFISH CREEK	4,000	SPREAD	108
CUMBERLAND	60	US 40	LOWER LITTLE R.	4,000	SPREAD	109
CUMBERLAND	182	SR 1451	LITTLE R.	4,000	SPREAD	110
COLUMBUS	83	US 74	LIVINGSTON CREEK	3,750	SPREAD	111
HENDERSON	3	SR 1345	FRENCH BROAD R.	3,750	SPREAD	112
ROCKINGHAM	134	NC 700	DAN R.	3,400	SPREAD	113
AVERY	23	NC 194	ELK R.	3,300	SPREAD	114
SURRY	330	SR 2258	FISHER R.	3,300	SPREAD	115
YADKIN	54	US 601	YADKIN R. & SOUTH R\R	3,200	SPREAD	116
YADKIN	115	SR 1605	FORBUSH CREEK	3,200	SPREAD	117
WILSON	88	SR 1326	TOLSHOT RES.	3,100	SPREAD	118
JACKSON	52	NC 107	CONEY FORK CREEK	3,100	SPREAD	119
ROBESON	439	NC 72	LUMBER R.	3,100	SPREAD	120
TRANSYLVANIA	193	SR 1533	DAVISON R.	2,900	SPREAD	121
PENDER	28	NC 210	LONG CREEK	2,800	SPREAD	122
BLADEN	37	NC 211	BROWN MARSH SWAMP	2,800	SPREAD	123
BLADEN	48	NC 211	ELKTON SWAMP CK.	2,800	SPREAD	124
BUNCOMBE	511	SR 3413	HOMINY CREEK	2,800	SPREAD	125
IREDELL	91	US 21	DUTCHMAN CREEK	2,700	SPREAD	126
CATAWBA	141	NC 10	LYLE CREEK	2,600	SPREAD	127

APRIL 1990

APPENDIX B

Prioritization For Scour Evaluation

(For all structures except those with known scour problems.)

Section 1. Introduction

All structures must be prioritized for scour evaluation. Table B1 shows the number of structures over water by System, ADT, and Foundation Type.

Section 2. Limitation on Computer Generated Data

Whether spans are simple or continuous can not be computer generated at this time. This data will be entered in the computer file beginning in early 1990.

Approximately 7 to 8 hours of computer time was required to generate the data contained in Table B1. Approximately 40 individual computer runs were required to generate this data. It took a technician 2 to 3 days to write the programs and check the output.

In order to run location in the State, it would require that each county be run individually. To run each county individually would increase computer time, number of individual runs, and technician time by a factor of approximately 100. The effort and expense in running the data in this manner is not justified by the benefits that would be gained.

A similar type of manual effort will be required to generate lists of individual structures for scour evaluations. A computer program will be developed to automate this process.

Section 3. Conclusions

Although the data presented does not accurately reflect the Screening, Prioritization, And Coding For Scour Evaluation Flow Chart, it does give a "feel" for the numbers of structures in some of the areas of the flow chart.

Lists of individual structures prioritized for scour evaluation will be developed as needed.

TABLE B1: STRUCTURES OVER WATER
BY
SYSTEM-ADT-FOUNDATION TYPE

FOUNDATION TYPE	ADT	INTERSTATE			PRIMARY			SECONDARY			ALL SYSTEMS		
		MULTI-SPAN	SINGLE SPAN	TOTAL	MULTI-SPAN	SINGLE SPAN	TOTAL	MULTI-SPAN	SINGLE SPAN	TOTAL	MULTI-SPAN	SINGLE SPAN	TOTAL
SPREAD FOOTING	> 4,000	110	0	110	380	48	428	70	32	102	560	80	640
	2,001-4,000	2	0	2	154	37	191	76	46	122	232	83	315
	801-2,000	1	0	1	123	33	156	174	143	317	298	176	474
	< or = 800	0	0	0	81	37	118	716	1,057	1,773	797	1,094	1,891
	Pedestrian	0	0	0	0	0	0	0	0	0	0	0	0
	Subtotal	113	0	113	738	155	893	1,036	1,278	2,314	1,887	1,433	3,320
SILL	> 4,000	0	0	0	5	0	5	10	8	18	15	8	23
	2,001-4,000	0	0	0	2	2	4	25	20	45	27	22	49
	801-2,000	0	0	0	8	3	11	91	135	226	99	138	237
	< or = 800	0	0	0	3	8	11	750	2,442	3,192	753	2,450	3,203
	Pedestrian	0	0	0	0	0	0	0	0	0	0	0	0
	Subtotal	0	0	0	18	13	31	876	2,605	3,481	894	2,618	3,512
PILE BENT	> 4,000	35	0	35	270	7	277	117	5	122	422	12	434
	2,001-4,000	3	0	3	174	5	179	153	19	172	330	24	354
	801-2,000	0	0	0	214	14	228	469	84	553	683	98	781
	< or = 800	0	0	0	81	8	89	2,370	623	2,993	2,451	631	3,082
	Pedestrian	0	0	0	0	0	0	0	0	0	0	0	0
	Subtotal	38	0	38	739	34	773	3,109	731	3,840	3,886	765	4,651
PILE FOOTING	> 4,000	40	0	40	129	10	139	17	1	18	186	11	197
	2,001-4,000	2	0	2	53	4	57	7	0	7	62	4	66
	801-2,000	0	0	0	18	0	18	18	1	19	36	1	37
	< or = 800	0	0	0	10	3	13	47	3	50	57	6	63
	Pedestrian	1	0	1	0	0	0	0	0	0	1	0	1
	Subtotal	43	0	43	210	17	227	89	5	94	342	22	364
CULVERT PIPE AND OTHER FOUNDATION TYPES	> 4,000	176	0	176	548	0	548	137	0	137	858	0	858
	2,001-4,000	0	0	0	261	0	261	81	0	81	342	0	342
	801-2,000	0	0	0	180	0	180	216	0	216	396	0	396
	< or = 800	0	0	0	70	0	70	1,032	0	1,032	1,105	0	1,105
	Pedestrian	0	0	0	0	0	0	0	0	0	0	0	0
	Subtotal	176	0	176	1,059	0	1,059	1,466	0	1,466	2,701	0	2,701
TOTALS		370	0	370	2,764	219	2,983	6,576	4,619	11,195	9,710	4,838	14,548

APPENDIX E

RECORDING AND CODING GUIDE
for the
STRUCTURAL INVENTORY and APPRAISAL
of the
NATION'S BRIDGES

This appendix contains relevant material for recording and coding the results of the evaluation of scour at bridges. The material is excerpted from the Federal Highway Administration document "Recording and Coding Guide for the Structure Inventory and Appraisal of the Nation's Bridges," dated December 1988.

Items 58 through 62 - Indicate the Condition Ratings

In order to promote uniformity between bridge inspectors, these guidelines will be used to rate and code Items 58, 59, 60, 61, and 62.

Condition ratings are used to describe the existing, in-place bridge as compared to the as-built condition. Evaluation is for the materials related, physical condition of the deck, superstructure, and substructure components of a bridge. The condition evaluation of channels and channel protection and culverts is also included. Condition codes are properly used when they provide an overall characterization of the general condition of the entire component being rated. Conversely, they are improperly used if they attempt to describe localized or nominally occurring instances of deterioration or disrepair. Correct assignment of a condition code must, therefore, consider both the severity of the deterioration or disrepair and the extent to which it is widespread throughout the component being rated.

The load-carrying capacity will not be used in evaluating condition items. The fact that a bridge was designed for less than current legal loads and may be posted shall have no influence upon condition ratings.

Portions of bridges that are being supported or strengthened by temporary members will be rated based on their actual condition; that is, the temporary members are not considered in the rating of the item. (See Item 103 - Temporary Structure Designation for the definition of a temporary bridge.)

Completed bridges not yet opened to traffic, if rated, shall be coded as if open to traffic.

Item 60 - Substructure 1 digit

This item describes the physical condition of piers, abutments, piles, fenders, footings, or other components. Rate and code the condition in accordance with the previously described general condition ratings. Code N for all culverts.

All substructure elements should be inspected for visible signs of distress including evidence of cracking, section loss, settlement, misalignment, scour, collision damage, and corrosion. The rating given by Item 113 - Scour Critical Bridges, may have a significant effect on Item 60 if scour has substantially affected the overall condition of the substructure.

The substructure condition rating shall be made independent of the deck and superstructure.

Integral-abutment wingwalls to the first construction or expansion joint shall be included in the evaluation. For non-integral superstructure and substructure units, the substructure shall be considered as the portion below the bearings. For structures where the substructure and superstructure are integral, the substructure shall be considered as the portion below the superstructure.

1. Item 60 - Substructure:

CONDITION RATING FOR ITEM 60

Code	Description
N	NOT APPLICABLE
9	EXCELLENT CONDITION
8	VERY GOOD CONDITION - no problems noted.
7	GOOD CONDITION - some minor problems.
6	SATISFACTORY CONDITION - structural elements show some minor deterioration.
5	FAIR CONDITION - all primary structural elements are sound but may have minor section loss, cracking, spalling, or scour.
4	POOR CONDITION - advanced section loss, deterioration, spalling, or scour.
3	SERIOUS CONDITION - loss of section, deterioration, spalling, or scour have seriously affected primary structural components. Local failures are possible. Fatigue cracks in steel or shear cracks in concrete may be present.
2	CRITICAL CONDITION - advanced deterioration of primary structural elements. Fatigue cracks in steel or shear cracks in concrete may be present or scour may have removed substructure support. Unless closely monitored it may be necessary to close the bridge until corrective action is taken.
1	"IMMINENT" FAILURE CONDITION - major deterioration or section loss present in critical structural components or obvious vertical or horizontal movement affecting structure stability. Bridge is closed to traffic but corrective action may put back in light service.
0	FAILED CONDITION - out of service - beyond corrective action.

Item 61 - Channel and Channel Protection

This item describes the physical conditions associated with the flow of water through the bridge such as stream stability and the condition of the channel, riprap, slope protection, or stream control devices including spur dikes. The inspector should be particularly concerned with visible signs of excessive water velocity which may affect undermining of slope protection or footings, erosion of banks, and realignment of the stream which may result in immediate or potential problems. Accumulation of drift and debris on the superstructure and substructure should be noted on the inspection form but not included in the condition rating.

Rate and code the condition in accordance with the previously described general condition ratings and the following descriptive codes:

Code	Description
N	Not applicable. Use when bridge is not over a waterway.
9	There are no noticeable or noteworthy deficiencies which affect the condition of the channel.
8	Banks are protected or well vegetated. River control devices such as spur dikes and embankment protection are not required or are in a stable condition.
7	Bank protection is in need of minor repairs. River control devices and embankment protection have a little minor damage. Banks and/or channel have minor amounts of drift.
6	Bank is beginning to slump. River control devices and embankment protection have widespread minor damage. There is minor stream bed movement evident. Debris is restricting the waterway slightly.
5	Bank protection is being eroded. River control devices and/or embankment have major damage. Trees and brush restrict the channel.
4	Bank and embankment protection is severely undermined. River control devices have severe damage. Large deposits of debris are in the waterway.
3	Bank protection has failed. River control devices have been destroyed. Stream bed aggradation, degradation or lateral movement has changed the waterway to now threaten the bridge and/or approach roadway.
2	The waterway has changed to the extent the bridge is near a state of collapse.
1	Bridge closed because of channel failure. Corrective action may put back in light service.
0	Bridge closed because of channel failure. Replacement necessary.

Item 71 - Waterway Adequacy

This item appraises the waterway opening with respect to passage of flow through the bridge. The following codes shall be used in evaluating waterway adequacy. Site conditions may warrant somewhat higher or lower ratings than indicated by the table (e.g., flooding of an urban area due to a restricted bridge opening).

Where overtopping frequency information is available, the descriptions given in the table for chance of overtopping mean the following:

Remote	-	greater than 100 years
Slight	-	11 to 100 years
Occasional	-	3 to 10 years
Frequent	-	less than 3 years

Adjectives describing traffic delays mean the following:

Insignificant	-	Minor inconvenience. Highway passable in a matter of hours.
Significant	-	Traffic delays of up to several days.
Severe	-	Long term delays to traffic with resulting hardship.

Functional Classification			
Principal Arterials - Interstates, Freeways, or Expressways	Other Principal and Minor Arterials and Major Collectors	Minor Collectors, Locals	Description
Code			
N	N	N	Bridge not over a waterway.
9	9	9	Bridge deck and roadway approaches above flood water elevations (high water). Chance of overtopping is remote.
8	8	8	Bridge deck above roadway approaches. Slight chance of overtopping roadway approaches.
6	6	7	Slight chance of overtopping bridge deck and roadway approaches.
4	5	6	Bridge deck above roadway approaches. Occasional overtopping of roadway approaches with insignificant traffic delays.

(codes continued on the next page)

Item 71 - Waterway Adequacy (cont'd)

Functional Classification			Description
Principal Arterials - Interstates, Freeways, or Expressways	Other Principal and Minor Arterials and Major Collectors	Minor Collectors, Locals	
Code			
3	4	5	Bridge deck above roadway approaches. Occasional overtopping of roadway approaches with significant traffic delays.
2	3	4	Occasional overtopping of bridge deck and roadway approaches with significant traffic delays.
2	2	3	Frequent overtopping of bridge deck and roadway approaches with significant traffic delays.
2	2	2	Occasional or frequent overtopping of bridge deck and roadway approaches with severe traffic delays.
0	0	0	Bridge closed.

Item 92 - Critical Feature Inspection

Using a series of 3-digit code segments, denote critical features that need special inspections or special emphasis during inspections and the designated inspection interval in months as determined by the individual in charge of the inspection program. The designated inspection interval could vary from inspection to inspection depending on the condition of the bridge at the time of inspection.

Segment	Description	Length
92A	Fracture Critical Details	3 digits
92B	Underwater Inspection	3 digits
92C	Other Special Inspection	3 digits

For each of 92A, B, and C, code the first digit Y for special inspection or emphasis needed and code N for not needed. The first digit of 92A, B, and C must be coded for all structures to designate either a yes or no answer. In the second and third digits of each segment, code a 2-digit number to indicate the number of months between inspections only if the first digit is coded Y. If the first digit is coded N, the second and third digits are left blank.

EXAMPLES:	Item	Code
A 2-girder system structure which is being inspected yearly and no other special inspections are required.	92A 92B 92C	Y12 N__ N__
A structure where both fracture critical and underwater inspection are being performed on a 1-year interval. Other special inspections are not required.	92A 92B 92C	Y12 Y12 N__
A structure has been temporarily shored and is being inspected on a 6-month interval. Other special inspections are not required.	92A 92B 92C	N__ N__ Y06

Item 93 - Critical Feature Inspection Date

Code only if the first digit of Item 92A, B, or C is coded Y for yes. Record as a series of 4-digit code segments, the month and year that the last inspection of the denoted critical feature was performed.

Segment	Description	Length
93A	Fracture Critical Details	4 digits
93B	Underwater Inspection	4 digits
93C	Other Special Inspection	4 digits

For each segment of this item, when applicable, code a 4-digit number to represent the month and year. The number of the month should be coded in the first 2 digits with leading zeros as required and the last 2 digits of the year coded as the third and fourth digits of the field. If the first digit of any part of Item 92 is coded N, then the corresponding part of this item shall be blank.

EXAMPLES:	Item	Code
A structure has fracture critical members which were last inspected in March 1986. It does not require underwater or other special feature inspections.	93A 93B 93C	0386 (blank) (blank)
A structure has no fracture critical details, but requires underwater inspection and has other special features (for example, a temporary support) for which the State requires special inspection. The last underwater inspection was done in April 1986 and the last special feature inspection was done in November 1985.	93A 93B 93C	(blank) 0486 1185

Item 113 - Scour Critical Bridges

Use a single-digit code as indicated below to identify the current status of the bridge regarding its vulnerability to scour. The scour calculations/analyses and field inspections for this determination shall be made by hydraulic/foundation engineers. Details on conducting a scour analysis are included in the FHWA Technical Advisory entitled, "Scour at Bridges." Whenever a rating factor of 4 or below is determined for this item, the rating factor for Item 60 - Substructure may need to be revised to reflect the severity of actual scour and resultant damage to the bridge. For foundations on rock where scour cannot be calculated, use the coding most descriptive of site conditions. A scour critical bridge is one with abutment or pier foundations which are rated as unstable due to (1) observed scour at the bridge site or (2) a scour potential as determined from a scour evaluation study.

Code	Description
N	Bridge not over waterway.
9	Bridge foundations (including piles) well above flood water elevations.
8	Bridge foundations determined to be stable for calculated scour conditions; calculated scour is above top of footing. (Example A).
7	Countermeasures have been installed to correct a previously existing problem with scour. Bridge is no longer scour critical.
6	Scour calculation/evaluation has not been made. (Use only to describe case where bridge has not yet been evaluated for scour potential.
5	Bridge foundations determined to be stable for calculated scour conditions; scour within limits of footing or piles. (Example B).
4	Bridge foundations determined to be stable for calculated scour conditions; field review indicates action is required to protect exposed piles from effects of additional erosion and corrosion.
3	Bridge is scour critical; bridge foundations determined to be unstable for calculated scour conditions: - scour within limits of footing or piles (Example B) - scour below spread footing base or pile tips (Example C)
2	Bridge is scour critical; field review indicates that extensive scour has occurred at a bridge foundation. Immediate action is required to provide scour countermeasures.
1	Bridge is scour critical; field review indicates that failure of piers/abutments is imminent. Bridge is closed to traffic.
0	Bridge is scour critical. Bridge has failed and is closed to traffic.

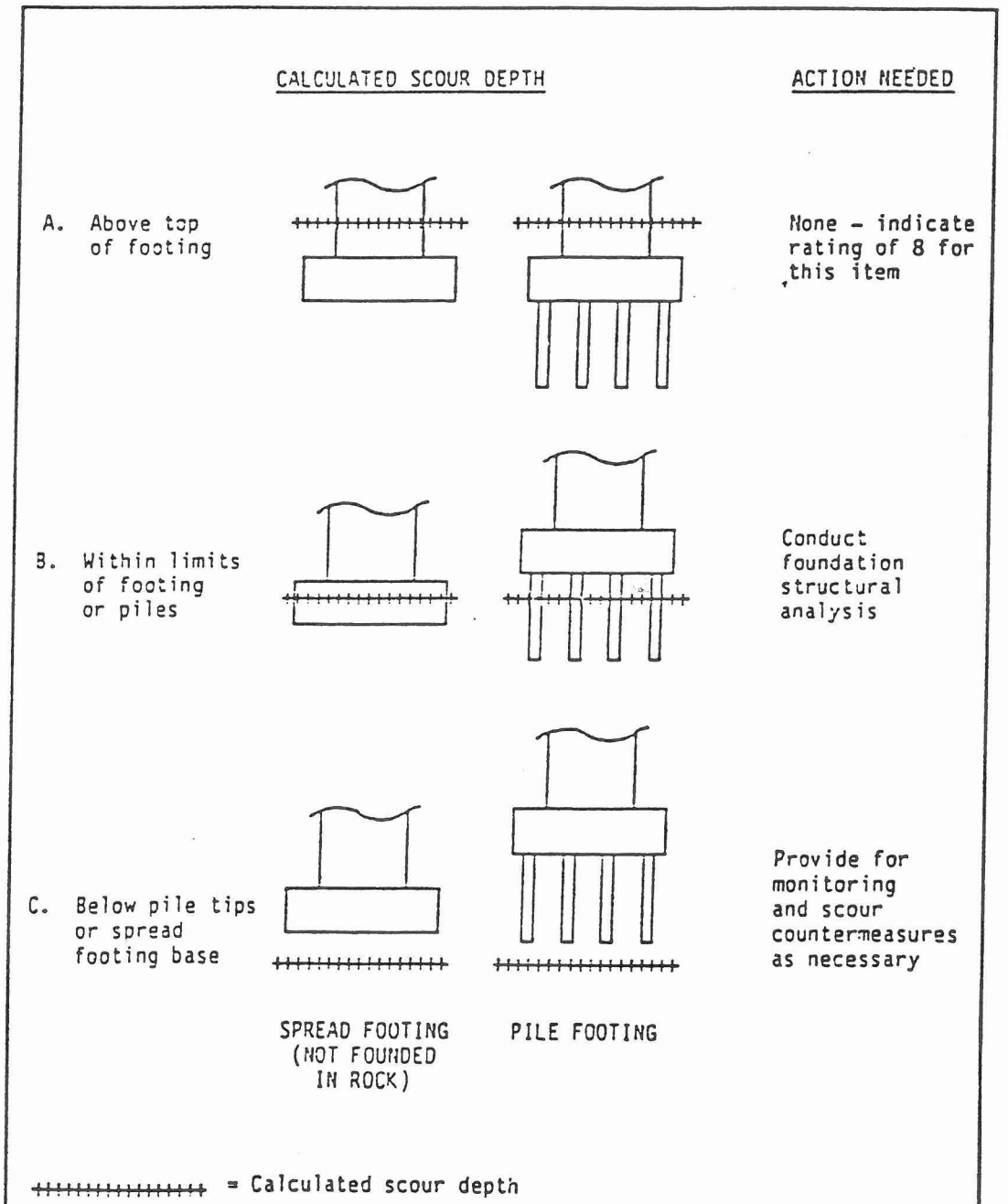

EXAMPLES FOR CODING GUIDE ITEM 113 - SCOUR CRITICAL BRIDGES

APPENDIX F

SCOUR ANALYSIS

FOR

GREAT PEE DEE RIVER
U. S. Route 76/301

FLORENCE AND MARION COUNTIES
SOUTH CAROLINA

SOUTH CAROLINA DEPARTMENT
OF
HIGHWAYS AND PUBLIC TRANSPORTATION

July 7, 1988

By: WILLIAM H. HULBERET
Hydraulic Engineer

SCOUR ANALYSIS FOR
GREAT PEE DEE RIVER
AT U.S. ROUTE 76-301
FLORENCE AND MARION COUNTIES
SOUTH CAROLINA

A scour analysis was performed for the replacement of the bridges on the West Bound Lane over the Great Pee Dee River for U. S. Route 76/301. The purpose of the study was to determine the scour potential around the piers in the main channel so that the Bridge Design Section could set the footing elevations. The potential scour impacts on the bridge abutments and in the overflow bridge were also investigated.

The drainage area of the Great Pee Dee River at this location is 8,830 square miles. The drainage area extends along a north northwest line from just inside Virginia's southern border across North Carolina through South Carolina to the Coast at Georgetown. Above Albemarle, North Carolina, the river is called the Yadkin River.

Most of the South Carolina reach of the river is characterized by a wide flood plain and a meandering channel. A study of aerial photographs of the basin shows numerous oxbow lakes indicating that the channel has shifted location many times during the past.

At the Route 76/301 crossing, the flood plain is approximately 11,000 feet wide with the river located on the east edge. The CSX Railroad crosses the river approximately 900 feet upstream at the channel and 2800 feet upstream at the West edge of the flood plain.

The Route 76 crossing was originally completed by 1947 as a two lane road. In the 1960's, a parallel crossing was added making the roadway into a four lane divided section. An older crossing was constructed in the 1920's approximately 1.6 miles down stream. This project is to replace the bridge structures built in the 1940's.

The crossing has twin main bridges 4698 feet long over the river channel and twin overflow bridges 600 feet long. All abutments are spill through type. At the channel end of the existing main bridges, there are six spans supported by piers. Both bridges have three piers in the channel. The replacement bridge will have four piers with only two in the channel. All piers are skewed approximately 33 degrees to line up with the channel. The remaining substructure of the bridges consists of prestressed concrete pile bents oriented normal to the roadway.

A field inspection was made to determine the existing scour patterns on the crossing. The most apparent sign of scour is along the bank on the east side of the river. For approximately 50 feet back of the low water line, the high bank has been scoured to within a few feet of the normal water level. Concrete rubble has been placed along this area in an effort to stabilize the bank.

The only other sign of scour was at the first interior bent from the west end of the main bridge. At this bent there is a small scour hole approximately 6 feet wide and one foot deep. This is just at the toe of the abutment. Under the second span from the west end of the east bound lane overflow bridge there is a hole approximately one foot deep almost filling the area below the span. It is difficult to determine how much of this is caused by scour and how much by vehicle traffic from fishermen and hunters who obviously use the area.

At the pier located in the center of the main channel, there is a considerable accumulation of drift. This has caused a sand bar to develop around the pier. At the current low water levels this sand bar is almost exposed.

It should be noted that all end fills were protected by riprap. The area along side of the fills, between the bridges, and under the bridges is covered by a dense growth of underbrush.

HYDRAULIC ANALYSIS

In order to do the scour analysis, a detailed hydraulic analysis of the river was made. This study was made simpler by the presence of a U. S. Geological Survey Gage on the site. The gage was located at the older downstream bridge site from 1938 to 1947. It was relocated to the current site in 1947. The Weather Bureau had a stage gage located at the old site from 1924 to 1938.

The U. S. Army Corps of Engineers' computer program HEC-2 was used to analyze the crossing. The Federal Highway Administration Water Surface Profile (WSPRO) was considered, but the difficulty in modeling the CSX Railroad bridge with the specific bridge approach section distances required by the program ruled this out. A version of FHWA's Hydraulics of Bridge Backwater program HY-4 modified locally to analyze multiple bridge crossings was used to determine bridge losses. This program balances the flow distribution between bridges based on equalizing the backwater.

A gage rating, flood frequency relationship, and copies of four discharge measurements were furnished by the local office of the U. S. Geological Survey. The flood frequency relationship was computed by the Log Pearson Type III method using regionalized skew coefficients. The resulting frequencies, probabilities, discharges, and water surface elevation are summarized in the following table:

Frequency	Probability	Discharge cfs	Elevation ft.
2	.500	41,300	48.36
5	.200	63,100	50.93
10	.100	80,500	52.57
25	.040	106,000	54.47
50	.020	128,000	55.80
100	.010	153,000	57.00
500	.002	223,000	59.50

The four measured discharges were:
1. 61,100 cfs at elevation 50.69
2. 60,100 cfs at elevation 50.64
3. 72,200 cfs at elevation 51.48
4. 52,800 cfs at elevation 49.44

The maximum flood of record is the 1945 flood. The discharge for this flood was 223,000 cfs (cubic feet per second) or the same as the 500 year flood estimate.

A summary of other available high water data for the river from Department records and gage records follows:

Location	Distance from Rt. 76	Year	Elevation
I-95	9.47 mi.	1945	64.0
76-301	---	1908	57.0
76-301	---	1945	58.75
Old 76	1.6 mi	1928	53.06
Old 76	" "	1936	50.56
Old 76	" "	1945	56.76
US 378	29.2 mi.	1908	41.0 (est.)
US 378	" "	1928	38.67
US 378	" "	1936	37.61
US 378	" "	1945	37.61

The data used to develop the HEC-2 model, came from U. S. G. S. topographic maps and from the Road Plans for the old and existing crossings. The distance that the model needed to be extended downstream was computed using the method from the Corps of Engineers' Accuracy of Computed Water Surface Profiles. The computation was based on the 100 year flood.

$$Ldn = 8000\ (HD)^{.8}\ /S = 8000X(15.82)^{.8}\ /.459 = 158{,}700 \text{ ft.} = 30 \text{ mi.}$$

where Ldn = required length
HD = hydraulic depth
S = slope in ft./mile (Based on slope from Mannings Equation computed at rated 100 year high water elevation)

The computed value is too long for practical purposes. Based on the topography a distance of approximately 14 miles was used. Since the gage rating is available, the starting elevation for each profile was adjusted until the computed elevation matched the gage elevations.

It was not possible to match the discharge distribution for the overflow bridge with the HEC-2 model or with the bridge backwater model. The discharges computed by the bridge backwater program were 22% too low while the HEC-2 values were 87% too low. To estimate the flow for various floods in the overflow bridge the discharges computed by the bridge backwater model were increased by adjusting the computed values by the 22%. This problem indicates that this crossing should have been modeled using the U. S. G. S.'s two dimensional flow model. However, there is not enough data available to support this model. Adjusting the computed data on the basis of the gage records and measurements should give sufficient accuracy to compute the scour produced by the bridge crossing.

SCOUR ANALYSIS

The scour analysis was computed using the methods listed in "FHWA Technical Advisory Scour at Bridges" by E. V. Richardson. Scour is computed in three parts: 1. contraction scour, due to the contraction forcing more water into the channel, 2. local scour at the piers, due to the turbulence caused by the piers, and 3. local scour at the abutments due to the turbulence at the abutment. Scour computations from the three sources are added together to compute total scour depths. Since this is the first time that the Department has used this particular method, several different ways of computing each type of scour were used where they were available.

Soils data supporting the scour analysis was from a report prepared by Foundation And Materials Engineering, Inc. for the site. Their study included test boring data and seive analysis of samples collected. The test data revealed the presence of a hard silt sand layer called the Black Creek Formation at an average elevation of 11.6 throughout the flood plain. Under the channel this layer ran as low as elevation 5.0 to 6.0. Above the Black Creek in the flood plain, the soils are a loose silt sand clay mixture, which took low blow counts, generally less than 10 per foot. In the river bottom, this upper layer contained wood fragments, which were evidence of previous scour events.

Several borings were made close to existing piers to detect signs of previous scour. The results were inconclusive.

Due to the length of the main bridge, the hydraulic analysis did not reveal any increase in discharge in the channel through the bridge area. Therefore, there will be no contraction scour in the channel.

There are two methods for computing local scour at piers in Richardson's advisory. Richardson has an equation for live bed scour which predicts equilibrium scour. Maximum scour will be 30% higher. This equation is:

$$Ys/Y1 = 2.0\ K1\ K2\ (a/Y1)^{0.65}\ Fr1^{0.43}$$

Ys = scour depth
a = pier width
K1 = correction for pier shape
k2 = Correction for flow angle of attack to pier
Y1 = flow depth just upstream from pier
Fr1 = Froude No. $V1/(g\ Y1\ S)^{0.5}$
g = gravitational acceleration
S = slope

The second equation was developed by F. M. Chang for live bed and clear water scour as an envelope curve for maximum scour. It is as Follows:

$$Ys/a = 1.6\ K1\ K2\ (Y1/a)^{0.33}$$

with terms defined as above.

Both methods were used to compute scour for piers for the main channel. Computations were made for the 2, 5, 10, 25, 50, 100, and 500 year floods. The slopes used, came from the HEC-2 energy grade for the sections at the bridge. The velocity form of Mannings equation was used to compute the velocity.

$$V= (1.486/n)R^{2/3}\ S^{1/2}$$

n = Mannings roughness coefficient
R = Hydraulic radius, in this case equal to the depth

Computation Summary

Freq. (Yr.)	Elev. (Ft.)	Slope (ft/ft)	Depth (ft)	Vel. (ft/sec)	Fr #	Ys(R) (ft.)	Ymax(R) (ft.)	Ymax(C) (ft.)
2	48.41	.000066	26.41	2.92	.10	5.88	7.64	12.2
5	52.05	.000083	29.05	3.66	.12	6.56	8.53	12.6
10	52.68	.000096	30.68	4.08	.13	6.93	9.01	12.8
25	54.39	.000121	32.39	4.75	.15	7.45	9.69	13.1
50	55.85	.000137	33.85	5.20	.16	7.80	10.1	13.2
100	57.18	.000157	35.18	5.71	.17	8.16	10.6	13.4
500	59.45	.000237	37.45	7.32	.21	9.16	11.9	13.7

The Richardson equation seems to give a more realistic variation in scour with discharge. However, at the 500 year flood level, the difference is only 1.8 feet. The value of 13.7 feet from the Chang equation would be a more conservative estimate for design purposes. Using the Richardson equation, the elevation of the top of the footings could be set at elevation 10.0. The top of the footings should be at elevation 8.0 if the Chang equation is considered more appropriate. Borings taken near the proposed footing locations indicate that the firmer Black Creek formation begins at elevation 9.0 to 9.5. The footings should be set no higher than the top of this material. Based on the borings and the scour computations, the recommended footing elevation is 8.0.

Abutment scour was computed for the abutments at each end of both bridges using three different computation methods. The first two use a relationship developed by E.M. Laurson for clear water scour at abutments. Since the ends of the bridges are well away from the channel in a densely vegetated flood plain, the clear water equations should apply. The basic equation is:

$$\frac{a}{Y1} = 2.75\,\frac{Ys}{Y1}\left[\frac{\left(11.5^{\frac{1}{(\tau_1/\tau_c)}}\,\frac{Ys}{Y1} + 1\right)^{(7/6)}}{\tau_1^{(1/2)}} - 1\right]$$

Where: a = distance for abutment to the edge of the flood plain or to the flow divide between bridges.

τ_1 = γ Y1 S =Shear stress on the overbank area upstream of the abutment.

γ = Specific weight of water

τ_c = Critical shear stress on material in overbank area.

$$(\tau_1/\tau_c) = \frac{V1^{(2)}}{120\,Y1^{(1/3)}\,d50^{(2/30)}}$$

(This relationship is from Laursen's 1958 report on "Scour at Bridge Crossings".)

V1 = Velocity upstream from the abutment

All other variables are as defined previously.

A second computation method used the same equation but (τ_1/τ_c) was taken from a graph in Richardson's report. Both of these solutions of Laursen's equation require a trial and error solution. This was readily accomplished using a programmable calculator.

The third method uses an equation which Richardson recommended as a limiting value for a/Y1 > 25. This equation is:

$$Ys/Y1 = 4(Fr1)^{0.33}$$

The results of these computations are summarized below.
Note: Ys(1) are the results using the computed (τ_1/τ_c).
Ys(2) uses the graph value of (τ_1/τ_c).
Ys(3) uses the limiting equation.

Computation Summary
West End Main Bridge

Freq. (yr.)	Ys(1) (ft.)	Ys(2) (ft.)	Ys(3) (ft.)
2	1.5	1.1	8.4
5	3.2	1.9	11.7
10	4.6	2.4	13.8
25	7.1	3.2	16.5
50	9.6	3.9	18.4
100	13.3	4.9	20.4
500	23.9	7.8	24.2

Nearest sample d50 = .33mm, 18.4% passing #200 seive, graph value of (τ_1/τ_c) =.014.

East End Main Bridge

Freq. (yr.)	Ys(1) (ft.)	Ys(2) (ft.)	Ys(3) (ft.)
2	dry	--	--
5	0.7	1.2	1.9
10	1.9	2.5	3.7
25	4.6	4.5	5.9
50	7.5	6.4	7.6
100	12.4	9.3	9.2
500	28.0	12.2	13.0

Nearest boring sample 80% passed #200 seive for computation assume d50 = 0.074 mm, graph value of (τ_1/τ_c)= 0.075.

West End of Overflow Bridge

Freq. (yr.)	Ys(1) (ft.)	Ys(2) (ft.)	Ys(3) (ft.)
2	0.4	0.4	6.4
5	1.0	0.7	9.4
10	2.5	1.0	11.5
25	2.6	1.4	14.1
50	3.8	1.7	16.0
100	5.4	2.2	17.9
500	11.7	3.8	*

Nearest Boring sample d50 = .11 mm, 37.3% passing #200 seive, graph value of (τ_1/τ_c) = .035.
* a/Y1 = 23.7 > 25

East End of Overflow Bridge

Freq. (yr.)	Ys(1) (ft.)	Ys(2) (ft.)	Ys(3) (ft.)
2	3.0	2.7	6.4
5	5.7	4.1	9.4
10	8.3	5.2	11.5
25	12.9	7.2	14.1
50	17.6	8.9	16.0
100	23.9	11.0	17.9
500	42.4	17.5	17.9

Nearest sample d50 = .088 mm, 45.5% passing #200 seive, graph value of (τ_1/τ_c) = 0.05.

In view of the physical evidence at the site these computed values appear to be far too high. The maximum flood that has occurred since the construction of this crossing in 1947, was the 1979 flood with 103,000 cfs. This is approximately equivalent to the 25 year flood. There have been seven floods which equaled or exceeded the five year flood of 63,100 cfs in this period. As noted above, there is no evidence of scour at any of the abutments and there was no sign of any repairs to the abutments or to the flood plain at the toe of the abutments.

The discrepancy between the predicted scour and the apparent lack of any actual occurrence, indicates that the models used to make the prediction are extremely conservative or do not apply to a crossing of this nature. There are two possible reasons for the discrepancy. The first was suggested by Stanley R. Davis, FHWA Hydraulic Branch Chief, in a telephone conversation with the author of this report. In his work to develop the models, Laurson considered the bridge opening as a long constriction. Davis suggested that the long constriction model may not be applicable to bridge crossings of this nature. This may certainly be true in the case of this crossing of the Great Pee Dee River where the 100 foot long constriction is approximately 1% of the 11,000 foot wide flood plain.

The second reason for the discrepancy is due to the effects of the dense under growth. The laboratory models used in the research relied on sand beds in flumes to simulate the flood plain. This completely ignored the ability of the plant material to armor the soil and resist scour.

General scour in the over flow bridge was computed using Laurson's equation for clear water scour.

$$\frac{Y2}{Y1} = \left(\frac{W1}{W2}\right)^{6/7} \left[\frac{V1^2}{120\ Y1^{1/3}\ d50^{2/3}}\right]^{3/7}$$

Where W1 = the flood plain width to to flow divide between the two bridges.
W2 = the width of the bridge opening.
Y2 = the depth in the bridge including scour so that
Ys = Y2 - Y1
The other variables are as defined previously.

Computation Summary for
General Scour in the Overflow Bridge
D50 = 0.11 mm

Freq. (Yr.)	W1 (ft.)	W2 (ft.)	Y1 (ft.)	Ys (ft.)
2	2492	544	10.0	1.7
5	2435	555	15.6	4.6
10	2442	562	17.4	4.8
25	2469	569	23.7	9.3
50	2483	575	29.8	14.0
100	2485	580	31.5	14.5
500	2507	589	45.1	25.6

Here again the computed values do not reflect field conditions. The same reasoning for the discrepancy applies.

Pier scour for the overflow bridge was computed using Chang's equation, since the overflow bridge will have clear water with no sediment supply. The value of "A" will be 1.5 feet, reflecting the 18 inch square prestressed piles. K1 will be 1.1 and K2 will be 1.0.

Computation Summary for
Pier Scour for Overflow Bridge

Freq. (yr.)	Ys (ft.)
2	4.7
5	5.1
10	5.3
25	5.6
50	5.7
100	5.9
500	6.2

These values may be acceptable since Chang's equation predicts the maximum scour that could occur. If there were no vegetation present, the predicted maximums may be reasonable.

Conclusions and Recommendations

The total scour that is predicted to occur within the bridges is the sum of all the different types of scour. But the results of the computations when compared with field conditions

indicate that the only reasonably accurate predictions are for pier scour in both the channel and overflow areas. As long as the pile bearing is achieved in the Black Creek formation in the overflow areas and the footings in the channel are set at elevation 8.0, no significant scour should occur around the piers or bents. Riprap protection should be sufficient to protect the abutments.

Much research, including considerable field work, must be done before reliable scour predictions can be made. The effects of vegetation and debris accumulation should be investigated.

The author has observed abutment failure due to scour at a number of bridges during floods that have occurred in the 22 year period that he has been with the Department. Other observed scour failures were due to the effects caused by extremely high accumulations of debris. The ability of the current methods to predict abutment scour as shown by this study is not reliable.

APPENDIX G

SCOUR DETECTION EQUIPMENT

In the past scour measurements have been made by 3 methods: pole, leadline, and fathometer. In shallow water a pole with graduated markings is used while the lead line is used in the areas with deeper water. However these are difficult to use in channels with faster currents since the current tends to carry them downstream. The electronic depth finders (fathometers) are useful in the deeper, faster moving streams. Also many of these units are equipped with an internal recording device that will provide agraphic representation of the channel bottom. This feature can bea real time saver for plotting river bottom profiles and cross sections. Any one of these methods can be used to determine the configuration of the stream and measure existing scour.

Scour is most prevalent during a flood, which is the time when monitoring is most difficult. Although a number of different types of permanently installed scour meters are presently being evaluated, no economical and reliable meters of this type are currently available for general use. Obtaining scour measurements from the bridge or by boat during peak flood flows has not been widely attempted because of the hazardous conditions, complex flow patterns, presence of drift and debris and problems getting personnel to the bridge site during peak flow conditions.

Geophysical Tools

After a flood, the stream velocity decreases which may result in the sediment being redeposited in the scour hole, also referred to as infilling. Since this material often has a different density than the adjacent unscoured material, we can measure the true extent of scour by determining the interface where the density change occurs. Methods for determining this include standard penetration testing, cone penetrometer exploration and geophysical techniques. While standard penetration testing is accurate it is expensive, time consuming and does not provide a continuous profile. Less expensive geophysical methods are available however which will provide continuous subsurface profiles by providing information on the physical properties.

The three geophysical tools which can be used to measure scour after infilling occurs are: ground penetrating radar, tuned transducer and color fathometer. Each of these methods has it's advantages and limitations. However if applied properly they can yield meaningful data in a very short period of time.

The U.S. Geological Survey in cooperation with the Federal Highway Administration has used each of these tools to study the extent of scour and the findings are documented a report entitled "The Use of Surface Geophysical Methods in Studying River Bed Scour". The following descriptions are taken from that report by S.R. Gorin and F.P. Haeni of the U.S. Geological Survey.

Ground Penetrating Radar

Ground penetrating radar (GPR) can be used to obtain high resolution, continuous, subsurface profiles on land or in relatively shallow water (less than 25 feet). This device transmitters short, 80 to 800 MHz electromagnetic pulses into the subsurface and measures the two way travel time for the signal to return to the receiver. When the electromagnetic energy reaches an interface between two materials with differing physical properties, a portion of the energy is reflected back to the surface, whilesome of it is attenuated and a portion is transmitted to deeper layers. The penetration depth of GPR is dependent upon the electrical properties of the material through which the signal is transmitted and the frequency of the signal transmitted. Highly conductive (low resistivity) materials such as clay materials severely attenuate radar signals. Similarly, sediments saturated with or overlain by salt water will yield poor radar results. Fresh water also attenuates the radar signal and limits the use of radar to sites with less than 25 feet of water. The lower frequency signals yield better penetration and reduced resolution, where as higher freqency signals yield higher resolution and less penetration. Ground penetrating radar systems which include a transmitter, receiver, high density tape recorder and player for storage of records and antenna cost approximately $50,000.

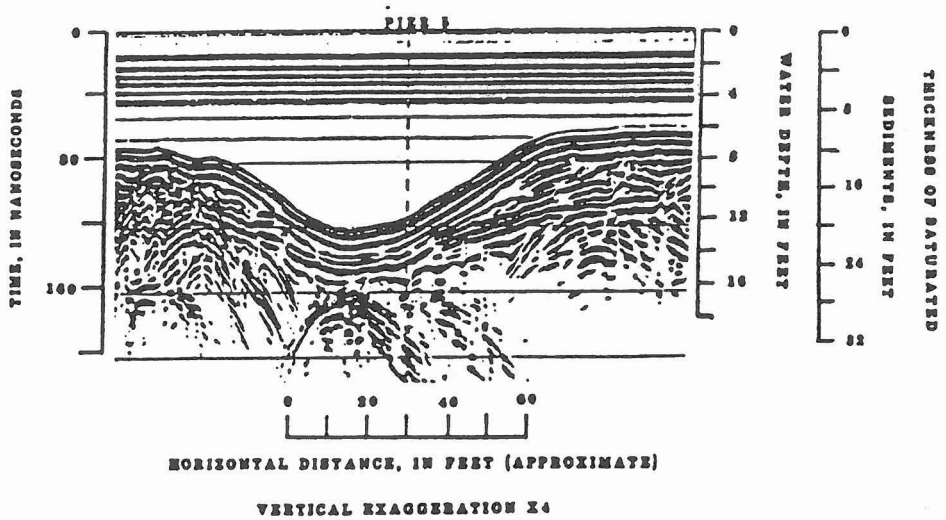

Figure 1 above shows a cross section generated by a ground penetrating radar signal upstream of a bridge pier. The scour hole is approximately 7 feet deeper than the river bottom base level and 60 to 70 feet wide. Two different infilled layers can be observed at this location. The apparent thickness of the infilled material at the center of the hole is 3 feet to the first interface and 6 feet to the second interface.

Tuned Transducer

The tuned transducer and the color fathometer are both seismic systems which operate through the transmission and reception of acoustic waves. A portion of the seismic signal is reflected back to the surface when there is a change in acoustical impedance between two layers. The major variable which separates these two devices from the fathometer is the frequency. The tuned transducer and color fathometer have lower frequency signals (3 20 KHz) which yield better penetration at the expense of resolution. High frequency fathometers (200 KHz) have good resolution with little or no penetration. In fine grained materials up to 100 feet of penetration can be obtained with a 3 to 7 KHz transducer, while in coarser material subsurface penetration may be limited to a few feet. The tuned transducer system cost approximately $25,000.

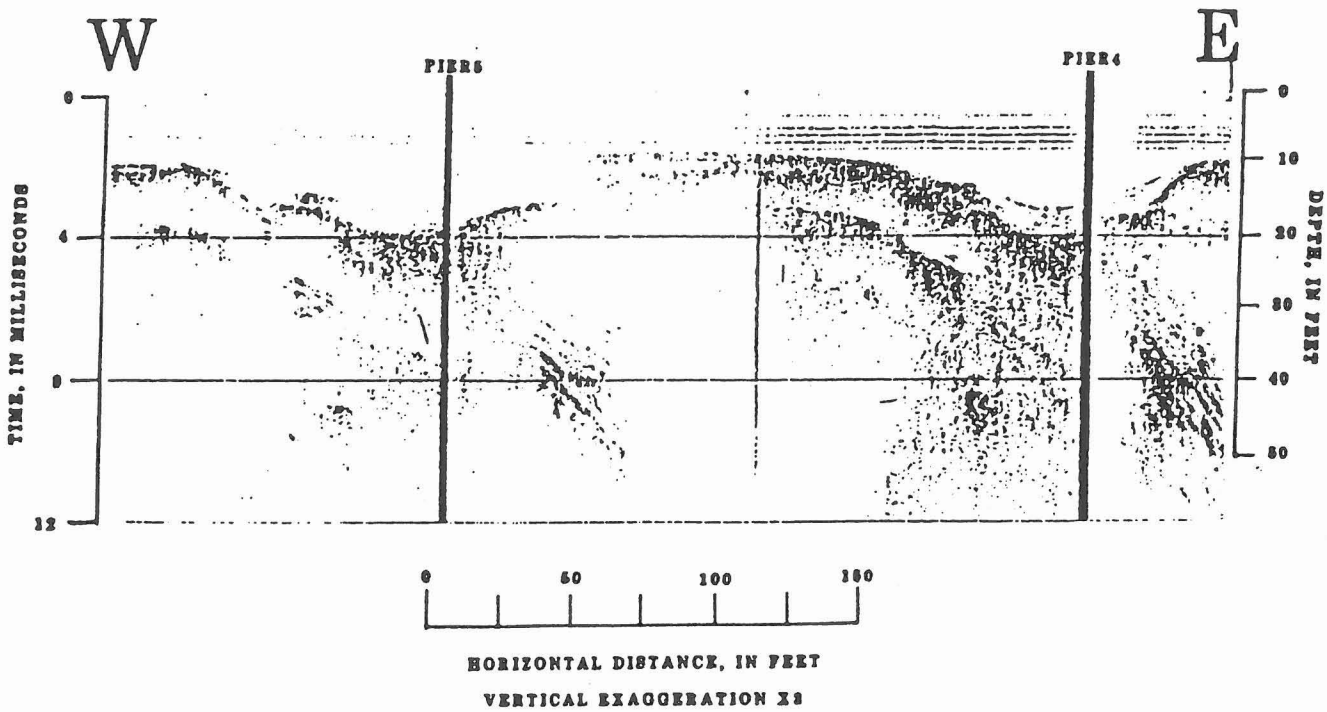

Figure 2 above shows a cross section record provided by a 14 KHz tuned transducer. This is the same location as the GPR record in figure 1. The record shows 6 feet of infilled material. The 2 layers which could be seen on the radar record are not evident on the tuned transducer record.

Color Fathometer

The color fathometer is a variable frequency seismic system that digitizes the reflected signal and displays a color image on a monitor. This system measures the reflected signal in decibels and it distinguishes between different interfaces by assigning color changes to a given degree of decibel change. Since

decibel changes in the reflected signal are related to density, porosity and median grain size it is able to identify and define shallow interfaces in the subsurface. Where infilling has occurred the soft material iseasily penetrated and shown to have low reflectivity as opposed to denser materials which have high reflectivity. Typically the materials which have a low reflectivity are assigned the "cool"colors such as blue and green while the denser material is represented by the "hot" colors such as red and orange. Since the data is displayed on a color monitor a hard copy is not readily available, however it can be stored on a cassette tape for playback and processing. The U.S. Geological Survey is presently working on developing a computer program to process the color fathometer record in order to remove some the extraneous and undesirable signals which make interpretation more difficult.

Black and White Fathometer

Even though the black and white fathometer is unable to penetrate the channel except in very soft mud, it is still considered an excellent tool for defining the channel bottom. The graphic recorder is easy to use, reasonably inexpensive and will provide an accurate bottom profile very quickly. Also when used in conjunction with the other tools it adds a degree of certainty to the other geophysical data. A 200 KHz fathometer with graphics capabilities can be purchased for approximately $1000.

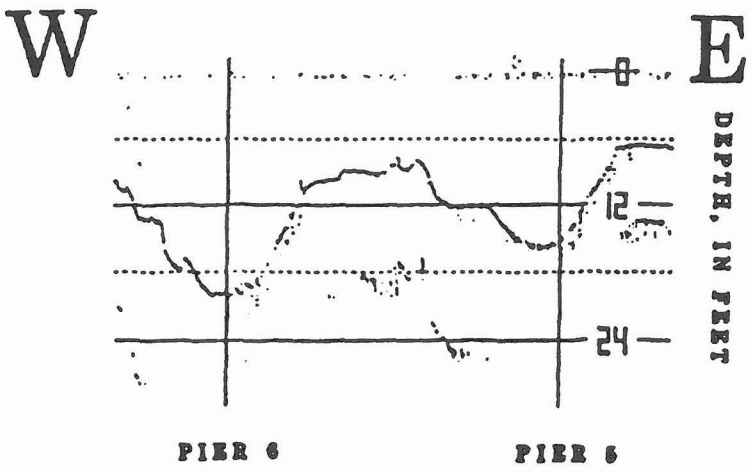

Figure 3 above shows a cross section using a 200 KHz fathometer. This record correlates with the radar and tuned transducer record shown in Figures 1 and 2 with the exception that the radar record was run 6 feet further upstream.

The FHWA Demonstration Projects Division is developing a project to demonstrate each of the devices discussed. This project entitled "Demonstration Project No. 80 Bridge Inspection Techniques and Equipment" will give participants an opportunity to view andparticipate in the operation of these and other underwater inspection equipment. Questions concerning this project can be directed to Dennis Decker at 202-366-1131.

☆ U.S.GOVERNMENT PRINTING OFFICE:1991-522-285/40107