ELEMENTARY SURVEYING

METHODS

699.004

Property of
Flood Control District of MC Library
Please Return to
2801 W. Durango
Phoenix, AZ 85009

ELEMENTARY SURVEYING METHODS

General Directions

Introduction: Despite the general availability of topographic maps and detailed air photos, hydrologists are commonly required to prepare sketch maps, river cross-sections, determine relative elevations of reference points such as the tops of well casings, etc. The purpose of this field work will be to learn elementary techniques of surveying with compass level and transit.

Notebooks: Notebooks containing information from surveys are valuable records and can even become legal evidence in court. Records in notebooks must be neat, legible, complete, and logical. Always record date, party members, weather conditions, location of survey, reference to established landmarks, type of survey, and purpose of survey. Your ability to keep a good notebook will be graded. Although some background material may be added later, a field notebook is a record of your activities in the field and should be completed in the field regardless of heat, rain, flies, hunger, or other sources of discomfort.

Calibration of pace and eye level: If you have not practiced pacing, this should be done as soon as possible. The length of your pace should be determined by pacing a known distance several times. With practice, you should have an error of less than 5%. Also, you should know the height of your eye above the ground. This information is necessary in order to determine elevation differences using a hand level. Additional height reference points such as ankle height, knee height, waist height and breast height are convenient for approximating stream depths. These values should be measured, recorded and learned.

General care of instruments: Surveying instruments are easily damaged. Please (a) avoid forcing any part of the instruments, (b) place the instruments in their protective boxes when not in use, (c) keep instruments out of direct sunlight as much as possible, (d) keep instruments dry, (e) keep instruments out of dirt and dust, and (f) pack instruments in vehicles so that they do not bounce or rattle when the vehicle is in motion. Please report any lost or broken parts without delay.

Compass and Pace Traverse

General nature of problem: A compass and pace traverse can be completed individually and is a quick method to lay out the base for an accurate sketch map. You will be required to determine the relative position of several points which will be flagged by stakes. The distances between points will be determined by pacing and the bearings of lines between points will be determined with a compass. Instruction on use of the Brunton compass will be given in the field. Additional reference material, from Compton (1962) is attached.

Directions: Start at any point on the traverse. Measure backsight and foresight bearings to nearest points, then pace to next point and repeat measurements. Data are to be recorded as follows:

First, make a sketch map showing a north arrow, an approximate scale, reference landmarks such as roads or bridges, and points on the traverse. Record bearings and paced distances directly on this map, following the example below.

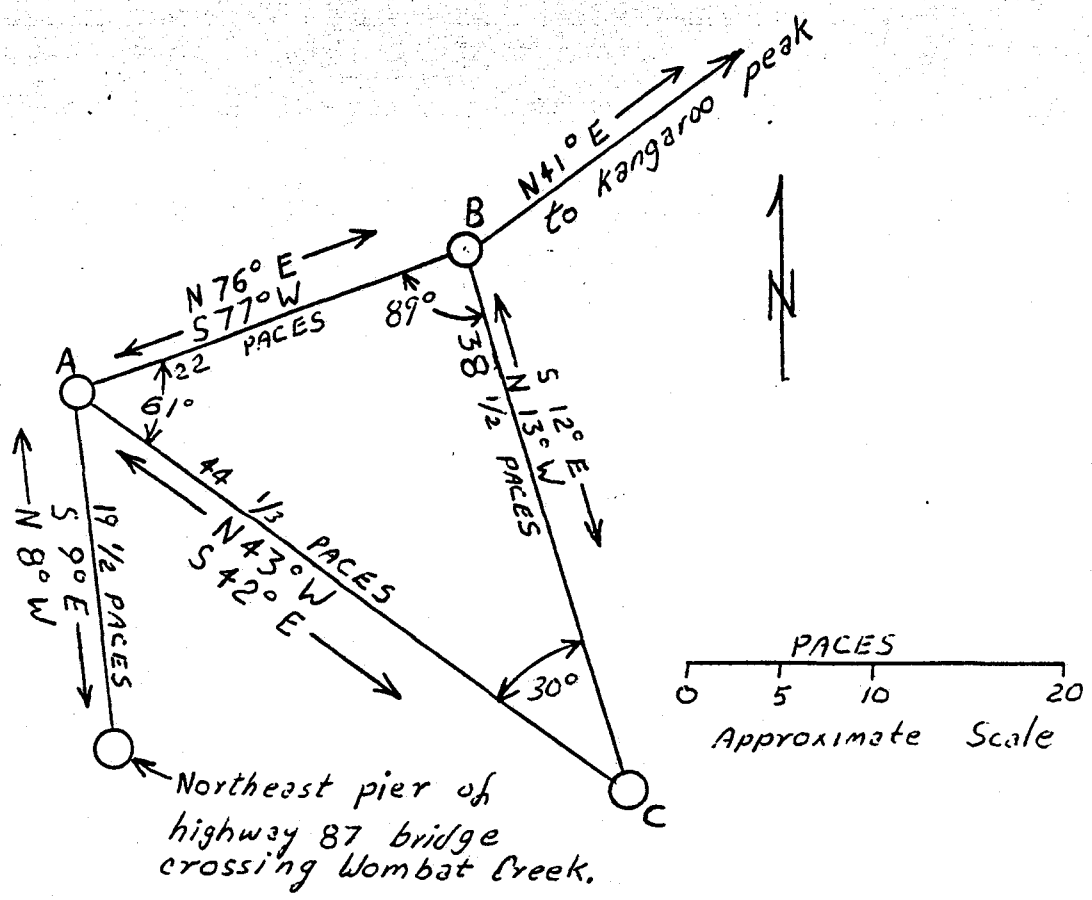

Second, record data in a table using the format given below:

Traverse Point	Paces	Distance (ft)	Forward bearing	Back bearing	Average (Forward)	Internal angle
A						61
	22	110	N76E	S77W	N76½E	
B						89
	38-1/2	192	S12E	N13W	S12½E	
C						30
	44-1/3	221	N43W	S42E	N42½W	
A						Σ180

Third, calculate error by filling out a table in the format given below:

125

100

45

Traverse point	D Distance	α Bearing	N(+)S(-) departure (use cos)	E(+)W(-) departure (use sin)
A				
	110	N76½E	+ 25.7	+106.9
B				
	192	S12½E	-187.4	+ 41.6
C				
	221	N42½W	+162.9	-149.3
A				
			+1.2	-0.8

Ideally these should be zero

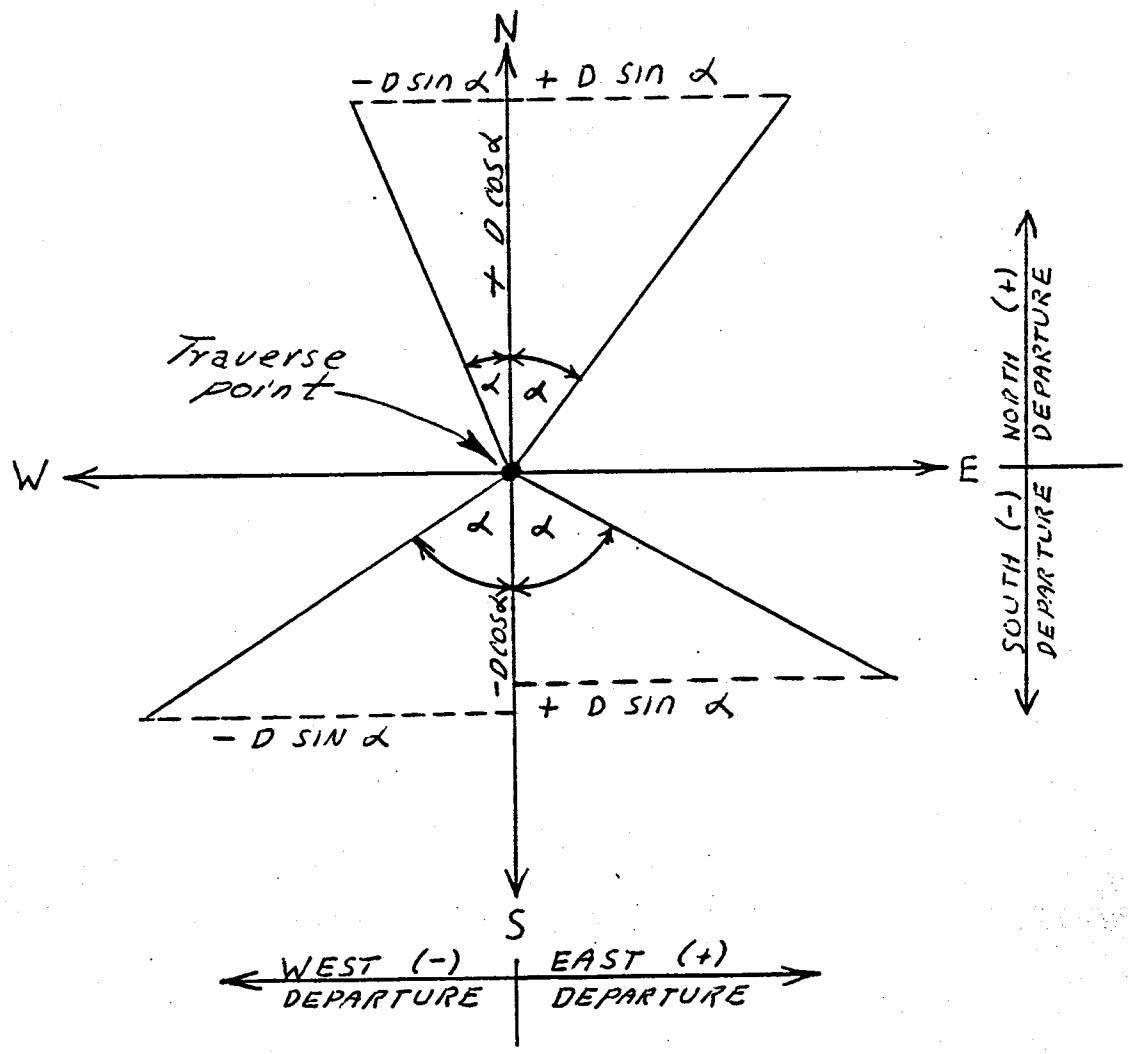

Level Traverse

General nature of the problem: You will be required to determine the elevation of several points. If the elevation of the starting point is known and if the level line returns to the starting point, the error in the survey is simply the difference between the known elevation and the final elevation. You will be required to make a full traverse and return to your original point. A sample format is given below for your notes. Abbreviations in common use are: BM (bench mark), TP (turning point), HI (height of instrument), BS (backsight), FS (foresight), and TBM (temporary bench mark).

Station	BS(+)	HI	FS(-)	Elev.	Notes
BM-1				721.05	Curb sw corner Elm and Lee
	7.11	728.16	1.24		
TP-1				726.92	
	8.83	735.75	1.11		
TP-2				734.64	
	11.72	746.36	10.21		
BM-2	27.66		12.56	736.15	Top boulder by bridge
	4.32	740.47	9.96		
TP-3				730.51	
	3.06	733.57	8.91		
TP-4				724.66	
	0.08	724.74	3.72		
BM-1	35.12		35.15	721.02	

Check for arithmetic: 736.15 − 721.05 = 15.10 ; 27.66 − 12.56 = 15.10

Error = 721.05 - 721.02 = 0.03 ft.

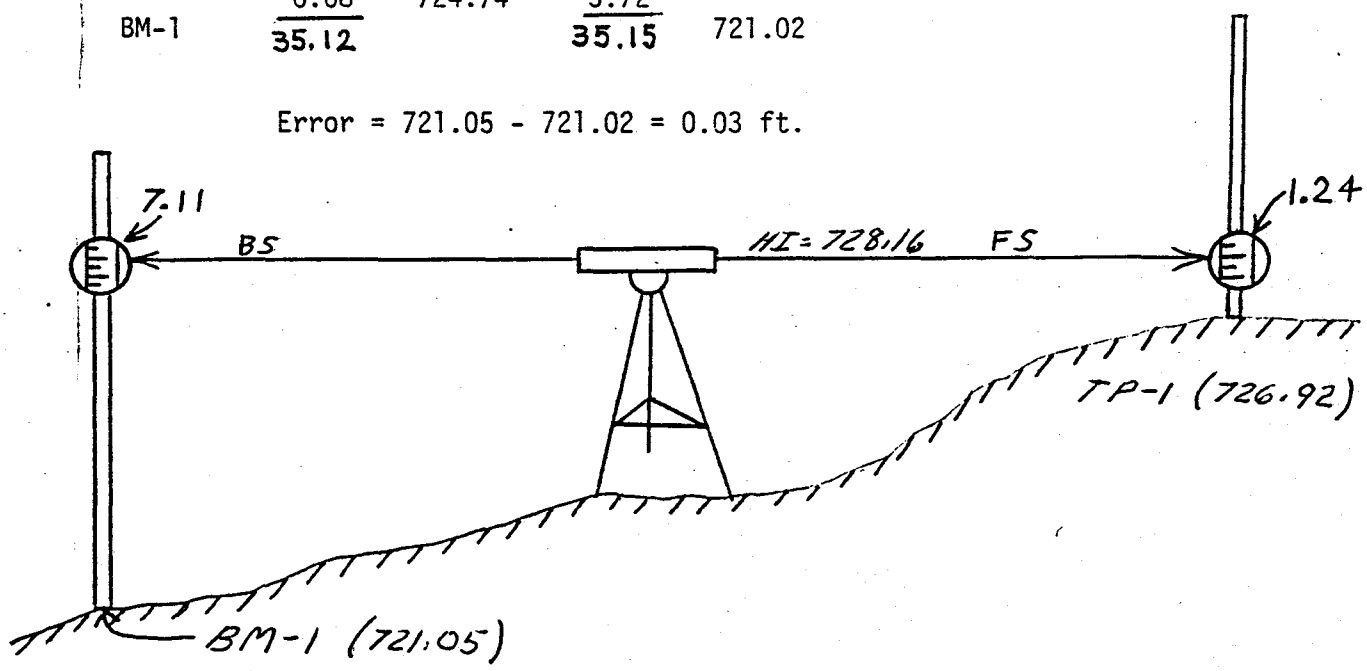

How to avoid large errors: Several sources of error are common. The following list gives the errors in approximate order of importance.

(1.) Numbers on level rod are not read properly. Practice reading the rod before starting your survey.

(2.) Instrument is not level because:

The instrument is in the sun and is heated unevenly.

The legs are not anchored.

The leg screws are loose.

The telescope is not locked in a horizontal position.

(3.) The rod is not held on the same turning point.

(4.) The rod is not held vertically.

(5.) The line of sight of the telescope is not parallel with the bubble tube. Balance foresight and backsight distances to correct this error.

(6.) Numbers are indistinct owing to heat waves. Reduce sighting distances to correct for this problem.

Lab Report: All required data reduction should be performed and recorded in the appropriate tables in your field notebook. Comments on the accuracy of your work would be appropriate here too. Field notebooks will be turned in at the time indicated. Your grade for this experiment will be based solely on the contents of your field notebook.

Check List for Surveying

1. Transit - level
2. Tripod
3. Brunton compass
4. Steel tapes (length, 100 ft. or more)
5. Red and blue flagging (bright plastic)
6. Short(8"±) wood stakes
7. Hammer to pound stakes
8. Very large hats or umbrella to shade surveying instruments
9. Notebook and #3 pencil.
10. Scale and straight edge
11. Protractor (cheap plastic protractor is ok)
12 Calculator

EXAMPLES OF TAKING NOTES IN THE FIELD

Sample 1: From "Manual of Field Geology," Robert R. Compton (1962), John Wiley & Sons, Inc.

Sample 2: From the personal field book of S. N. Davis on a trip to Riñihue, 1961.

Sample 3: From "Elementary Plane Surveying," R. E. Davis (1936), McGraw-Hill Book Co., Inc.

July 2, 1953

Fernly quad - Lower Stony Crk Area J.R. Doan

Map sheet F-3

1. Ss massive thru 120' of this large otcp; lt gray, hard calc, locally weathered tan, friable, well sorted, med. to coarse-grained; plag. ~20%, green chert (?) grains abnt.

2. Crags SE of 1, fine-grained Ss in 1-3' beds with grading and lam. as shown →

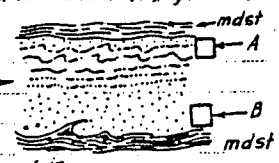

2 rock samples | Samples A and B show typical grain-size variations (see→) mdst. beds ½-1' thick are silty, apparently without forams.

3. Recon traverse from pts. 1 and 2 down ridge shows section:

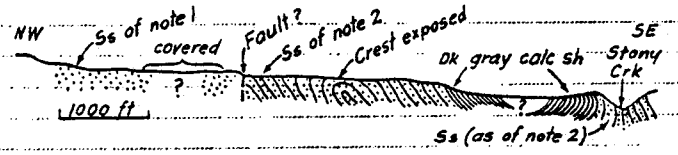

4. Fault that brings massive ss against thin-bdd unit well exposed here. Main fault and accessory shears dip 55-65°; gouge 6-15" thick, with frags rhy (?) not yet seen in area; one 3"-thick slice of $\bar{R}$sm(?) Grooves ½-3" deep plunge down-dip.

Photo no. 9 | Photo of next spur to NE where thin-bdd ss shows possible drag, indicating reverse movement →

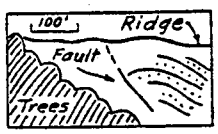

Fig. 1–2. Page from a geologic field notebook.

Trip with Juan Kansolovic 1961
overcast, cool, see map.

Feb 8 - Temuco to vicinity of Riñihue
Arrived at Slide #3 about 4:30
took picture.
recon of scarp-looking east

Feb 9 - At "Taco 3" Riñihue
Description of section, top first

Thickness m	
0.75	Modern A & B horizon of soil

Disturbed A_1 10 cm - Porous silty soil with moderate amount of organic material. Color dry: Dark yellowish brown 10YR 4/3. Former forest cover - some trees still present.

Disturbed A_3 10 cm - Porous silty soil. Color moist: 7½YR 4/3

B_1 15 cm - transition

Structure is not prominent in B horiz. slightcolumnar

(2) The levelman sets up the engineer's level, takes a backsight on a bench mark, and computes a rod reading such that the foot of the rod will be at the elevation of a given contour. (3) The rodman moves about as directed by the levelman, locating critical contour points.

SURVEY OF PROPOSED RICE FARM, C.K.PERRY

(For Contour Map)
Scale 1"=50', Contour Int.=1 ft.

Sta.	B.S.	H.I.	F.S.	Elev.	
B.M.,	5.31	105.31		100.00	(Assumed)
A-8			7.3	98.0	
B-8			6.0	99.3	
C-8			4.1	101.2	
D-8			2.2	103.1	
E-8			1.4	103.9	
E-7			2.9	102.4	
D-7			4.2	101.1	
C-7			5.0	100.3	
(B+50)-7			5.6	99.7	
B-7			4.8	100.5	
A-7			3.2	102.1	
A-(7+60)			6.2	99.1	
A-6			2.5	102.8	
(A+50)-6			0.4	104.9	
B-6			1.9	103.4	
C-6			3.6	101.7	
D-6			4.2	101.1	
E-6			3.5	101.8	
E-(5+40)			6.7	98.6	
E-5			6.1	99.2	

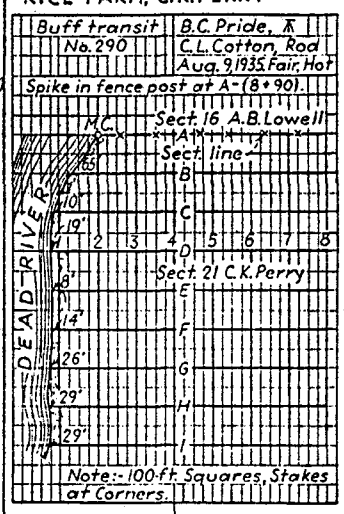

FIG. 218.—Notes for coordinate-point method.

When a contour point has been located, the plane-table man sights on the rod, determines the distance by stadia, and plots the contour point. (4) Definite details are located either by radiation or by intersection; distances to such details are determined either by stadia or by tape measurements, depending upon the scale of the map.

Notes on Using a Brunton Compass

From: Manual of Field Geology

Robert R. Compton

John Wiley & Sons, Inc.

1962

2

Using the Compass, Clinometer, and Hand Level

2–1. The Brunton Compass

A compass, clinometer, and hand level can be used to make a great variety of surveys and to measure the attitudes of various geologic structures. These three basic instruments are combined in the Brunton Pocket Transit, which is commonly called the Brunton compass. This compass is held by hand for most routine procedures, as those described in this chapter; however, it can be mounted on a tripod for more precise measurements, or can be used with a special ruler on a plane table (Section 6–2). Although the detailed instructions given in this chapter pertain especially to the Brunton compass, the same general procedures can be adapted readily to other kinds of compasses, clinometers, and hand levels.

The various parts of the Brunton compass are shown in Fig. 2–1. The compass is made of brass and aluminum—materials that will not affect the magnetized compass needle. When the compass is open, the compass needle rests on the pivot needle. The compass needle can be braked to a stop by pushing the lift pin, which is located near the rim of the box. When the compass box is closed, the lift pin protects the pivot needle from wear by lifting up the compass needle.

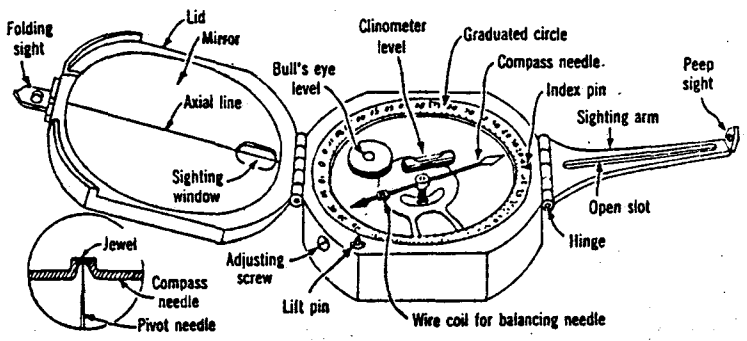

Fig. 2–1. The Brunton compass. Insert at lower left shows enlarged section through needle bearing.

The round bull's eye bubble is used to level the compass when a bearing is read, and the tube bubble is used to take readings with the clinometer. The clinometer is moved by a small lever on the underside of the compass box (not shown in the figure).

A compass should be checked to ascertain that: (1) both levels have bubbles, (2) the hinges are tight enough so that the lid, sighting arm, and peep sights do not fold down under their own weight, and (3) the point of the sighting arm meets the black axial line of the mirror when the mirror and sighting arm are turned together until they touch. Other adjustments that may be required are described in Section 2–10.

2–2. Setting the Magnetic Declination

The graduated circle of the compass can be rotated by turning the adjusting screw on the side of the case. The 0 point of the graduated circle is brought to the point of the index pin to measure bearings from magnetic north. To measure bearings from true north (the usual case), the graduated circle must be rotated to correct for the local magnetic declination. The local declination and its change per year are given in the margin of quadrangle maps; however, the correction for annual change will be only approximate if the map is more than about 20 years old. The declination can also be determined from an isogonic chart (Appendix 6). Finally, the declination at any given point can be determined by setting the compass on a firm, level surface and sighting on Polaris, the North Star. This reading should be corrected approximately for elongation (Section 7–9).

Because the east and west sides of the compass circle are reversed, it may be momentarily confusing as to which way to turn the circle. Each setting should be reasoned out and checked. A declination of 20° east, for example, means that magnetic north is 20° east of true north, and therefore the circle is turned so that the index points to 20 on the *E* side of 0. To check this, the compass is held level and oriented so that the white end of the needle comes to rest at 0. The entire compass is then rotated 20° in the direction known (geographically) to be east of north. If the needle then points in the direction of the sighting arm, which is magnetic north, the declination has been set correctly.

2–3. Taking Bearings with the Compass

A *bearing* is the compass direction from one point to another. A bearing always has a unidirectional sense; for example, if the bearing

from *A* to *B* is *N* 30 *W*, the bearing from *B* to *A* can only be *S* 30 *E*. Using the Brunton compass, the correct bearing sense is from the compass to the point sighted when the sighting arm is aimed at the point. The white end of the needle gives the bearing directly because the *E* and *W* markings are transposed. To read accurate bearings, three things must be done simultaneously: (1) the compass must be leveled, (2) the point sighted must be centered exactly in the sights, and (3) the needle must be brought nearly to rest. When the point sighted is visible from the level of the waist or chest, the following procedure should be used.

1. Open the lid about 135°; turn the sighting arm out and turn up its hinged point (Fig. 2–2*A*).
2. Standing with the feet somewhat apart, hold the compass at waist height with the box cupped in the left hand.
3. Center the bull's eye bubble, and, keeping it approximately centered, adjust the mirror with the right hand until the point sighted and the end of the sighting arm appear in it.
4. Holding the compass exactly level, rotate the whole compass (on an imaginary vertical axis) until the mirror images of the point sighted and the tip of the sighting arm are superimposed on the black axial line of the mirror.
5. Read the bearing indicated by the white end of the needle, which should be nearly at rest.
6. After reading the bearing, check to make sure the line of sight is correct and the compass is level.
7. Record or plot the bearing at once.

When the point sighted is visible only at eye level or by a steep downhill sight, the following instructions apply.

1. Fold out the sighting arm as above, but open the lid only about 45° (Fig. 2–2*B*).

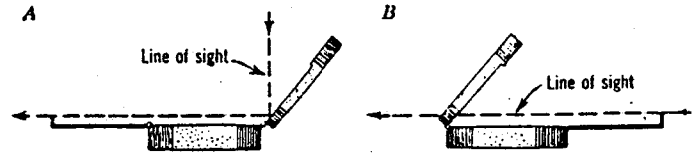

Fig. 2–2. Compass set for taking a bearing at waist height (*A*) and at height of eye (*B*).

2. Hold the compass in the left hand at eye level, with the sighting arm pointing toward, and about 1 ft from, the right eye.

3. Level the compass approximately by observing the mirror image of the bull's eye bubble, and, holding the compass approximately level, rotate it until the point sighted appears in the small sighting window of the lid.

4. Holding the compass exactly level, rotate it until the point sighted and the point of the sighting arm coincide with the axial line of the window.

5. Read the bearing in the mirror, double checking for alignment and level.

6. Transpose the direction of the bearing before recording or plotting it (the compass was pointed in reverse of its bearing direction).

With practice, bearings can be read to the nearest ½° provided the needle is steady. When holding the compass at waist level, the largest errors result from sighting the wrong point in the mirror. In the second method, a good deal of patience is required to level and read the compass from a mirror image. In either method, the compass must be leveled accurately to give good results on inclined sights. If the swing of the compass needle cannot be damped by the lift pin, the bearing must be read as the center of several degrees of swing. Unless much patience is used, these readings are likely to have errors of 1 or 2°.

2–4. Magnetic Deflections of Compass Bearings

The compass will give incorrect bearings if there is any local deflection of the earth's magnetic field. Objects containing iron, such as knives, hammers, and belt buckles, should be kept at a safe distance while a reading is made. This distance can be determined by placing the compass on a level surface and bringing the object toward it until the needle is deflected. A strong pocket magnet must never be carried near a compass. Steel fences, railroad rails, and steel pipelines should be avoided if possible.

Rocks and soils rich in iron, especially those containing the mineral magnetite, can cause deflections that are difficult to detect. Bodies of basalt, gabbro, skarn, and ultrabasic rocks are particularly likely to affect compass readings. Relatively strong effects can be tested by bringing large pieces of rock close to the compass. If the magnetic mass is small compared to the distance between two stations, foresights and backsights between the stations will give inconsistent re-

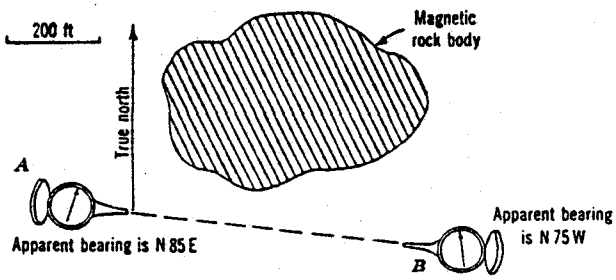

Fig. 2–3. Deflection of compass needles at two ends of a line that passes near a small magnetic rock body.

sults (Fig. 2–3). Where larger masses are involved, the deflection can be measured by pinpointing two stations on an accurate map, measuring the bearing between them with a protractor, and comparing this bearing with a compass bearing taken between the same stations in the field. This measurement will correct the declination for that part of the area. The same result may be achieved by taking readings on Polaris at a number of points within the area to be mapped. If the magnetic disturbances are moderate and vary systematically over a given area, a local isogonic map can be constructed from which corrections of compass readings may be made. If magnetic deflections are large and distributed irregularly, mapping must generally be done with other instruments, as the peep-sight alidade (Section 6–2) or the *sun compass,* a nonmagnetic instrument operated on the basis of the time of day and the direction of the sun's rays. It is also possible to make a compass traverse in such a way that the deflections are accounted for (Section 3–5).

2–5. Measuring Vertical Angles with the Clinometer

Vertical angles can be read to the nearest quarter of a degree with the clinometer of the Brunton compass. Instructions for this procedure are:

1. Open the lid about 45° and fold out the sighting arm, with its point turned up at right angles.
2. Hold the compass in a vertical plane, with the sighting arm pointing toward the right eye (Fig. 2–4). The compass must be about 1 ft from the eye so that the point sighted and the axial line in the sighting window can be focused clearly.

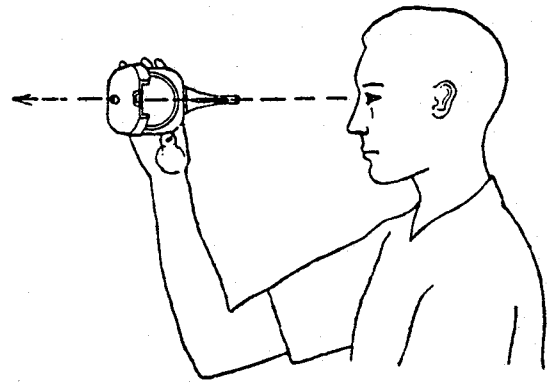

Fig. 2–4. Using the Brunton compass as a clinometer.

3. Look through the window of the lid and find the point to be sighted, then tilt the compass until the point of the sighting arm, the axial line of the window, and the point sighted coincide.

4. Move the clinometer by the lever on the back of the compass box until the tube bubble is centered, as observed in the mirror.

5. Check to make sure the sights are still aligned, then bring the compass down and read and record the angle.

Computing difference in elevation. The approximate difference in elevation between the point occupied and the point sighted can be computed in the field if the slope distance is paced and if a small table

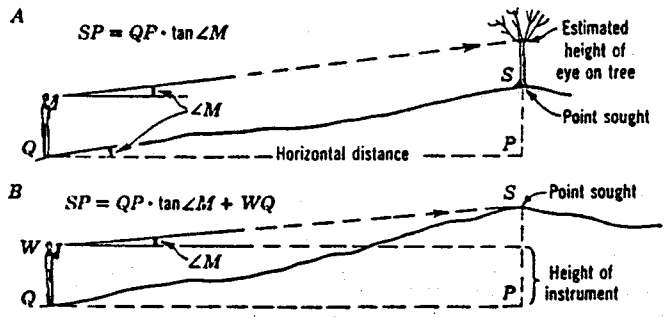

Fig. 2–5. Finding difference in elevation (SP) from a vertical angle (M) and horizontal distance (QP). (A) Relation used when sighting on a point at height of eye. (B) Relation used when sighting uphill to point itself.

of sines of angles is available (difference in elevation = slope distance × sine of vertical angle). The difference in elevation can also be determined if the horizontal distance between the points can be scaled from a map or aerial photograph, the difference in elevation then being computed from a table of tangents. The height of the instrument above the point occupied is taken into account either by (1) sighting to a point that is at an equal distance above the ground (Fig. 2–5*A*) or (2) sighting directly to the point on the ground and correcting the difference in elevation by adding the height of the instrument for uphill sights and subtracting it for downhill sights (Fig. 2–5*B*).

2–6. Using the Brunton Compass as a Hand Level

The Brunton compass is converted to a hand level by setting the clinometer exactly at 0, opening the lid 45°, and extending the sighting arm with the sighting point turned up. The compass is held in the same way as when measuring vertical angles. It is tilted slowly until the mirror image of the tube bubble is centered. Any point lined up with the tip of the sighting arm and the axial line of the sighting window is now at the same elevation as the eye of the observer. By carefully rotating the entire instrument with a horizontal motion, a series of points that are at the same elevation can be noted.

Difference in elevation by leveling. The difference in elevation between two points can be measured by using the Brunton compass as a hand level. The measurement is started by standing at the lower of the two points and finding a point on the ground that is level with the eye and on a course that can be walked between the

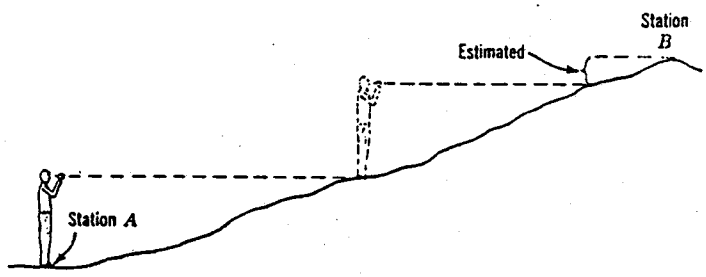

Fig. 2–6. Measuring the difference in elevation between two stations by using a hand level and counting eye-level increments.

two end points. As the first level sight is made, an object such as a stick, leaf, or stone is marked mentally and kept in sight while walking to it. Standing on this marker, another point at eye level is chosen farther uphill, and the procedure is repeated until the end point is reached (Fig. 2–6). The number of moves is tallied and multiplied by the height of the surveyor's eye, with the last fractional reading estimated to the nearest even foot or half a foot. If the country is reasonably open, the traverse can be made both quickly and accurately. The serious error of miscounting the tally can be prevented by keeping a pencil tally on the cover of the compass or by using a tally counter.

STADIA SURVEYING

AND

STADIA REDUCTION TABLES

From: "Elementary Plane Surveying," R. E. Davis (1936), McGraw-Hill Book Co., Inc.

CHAPTER XI

STADIA SURVEYING

127. The Stadia Method.—The stadia method of measuring distances is far more rapid than chaining and under certain conditions is as accurate. It is a useful means of checking more precise measurements. It is employed extensively in transit surveying, plane-table surveying, and leveling.

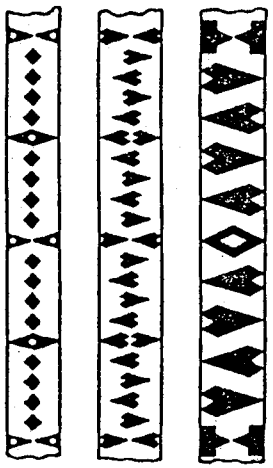

FIG. 127.—Stadia rods.

The equipment for stadia measurements consists of a telescope with *stadia hairs*, and a *stadia rod* graduated usually in feet and decimals. Any self-reading leveling rod may be used as a stadia rod, but for long sights special graduations are employed; some of these are shown in Fig. 127.

The process of taking a stadia measurement consists in observing through the telescope the apparent positions of the two stadia hairs on the rod, the rod being held vertical. The interval between the rod readings, called the *stadia interval* or *stadia reading*, is a direct function of the distance from instrument to rod. For most instruments the ratio of distance to stadia interval is 100.

For convenience and to lessen the chance of mistake, on transit or plane-table surveys the stadia interval is determined by setting the lower stadia hair on a foot mark and reading the position of the upper hair.

128. Principle of the Stadia.—In Fig. 128 the line of sight is horizontal, and the rod is vertical. The stadia hairs are indicated by the points a and b; the distance between the stadia hairs is i. The stadia interval is s.

In optics it is shown that a ray of light passing through the optical center of a lens remains undeviated in direction and, further, that rays which are parallel on one side of the lens are all brought to a focus at a fixed point on the optical axis. This point is called the

principal focus, and its distance from the optical center is called the *focal length* of the lens.

Considering Fig. 128, imagine that aa' and bb' are parallel rays emanating from the stadia hairs a and b. Then F is the principal focus, f is the focal length of the objective, and the emerging rays take the positions $a'FA$ and $b'FB$. Also imagine that aOA and bOB

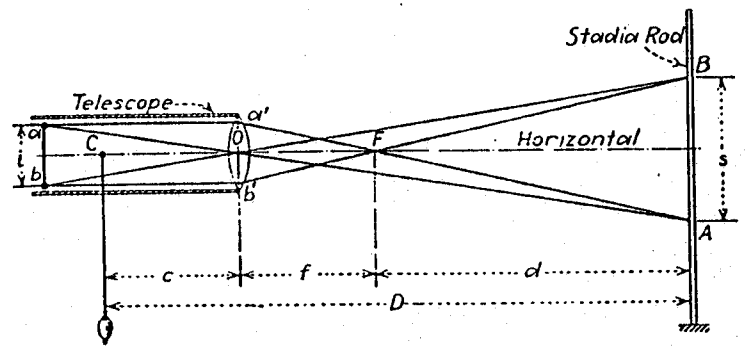

FIG. 128.

are rays emanating respectively from a and b that pass undeviated through the optical center O.

As $ab = a'b'$, by similar triangles

$$\frac{f}{i} = \frac{d}{s}$$

Hence the horizontal distance from the principal focus to the rod is $d = \frac{f}{i}s = Ks$, in which $K = \frac{f}{i}$ is a coefficient called the *stadia interval factor* which for a particular instrument is a constant so long as conditions remain unchanged. Thus for a horizontal sight the distance from principal focus to rod is obtained by multiplying the stadia interval factor by the stadia reading. The horizontal distance from center of instrument to rod is then

$$D = Ks + (f + c) \qquad (1)$$

This formula is employed in computing horizontal distances from stadia readings when sights are horizontal.

129. Stadia Constants.—The focal distance f is a constant for a given instrument. It can be determined with all necessary accuracy by focusing the objective on a distant point and then measuring the distance from the cross-hair ring to the objective. The distance c, though a variable depending upon the position of the objective, may

for all practical purposes be considered a constant. Its mean value can be determined by measuring the distance from the vertical axis to the objective when the objective is focused for an average length of sight.

Usually the value of $(f + c)$ is determined by the manufacturer and is stated on the inside of the instrument box. Under ordinary conditions $(f + c)$ may be considered as 1 ft. without error of consequence.

129a. Stadia Interval Factor.—The nominal value of the stadia interval factor $K = f/i$ is usually 100. The interval factor can be determined by observation. The usual procedure is to set up the instrument in a position where a horizontal sight can be obtained and with a tape to stake off, from a point distant $(f + c)$ in front of the instrument, distances of 100 ft., 200 ft., etc., up to perhaps 1,000 ft. The stadia rod is then held on each of the stakes thus established, and the stadia interval is read. The stadia interval factor is computed for each sight, and the mean is taken as the most probable value.

130. Inclined Sights.—In stadia surveying most sights are inclined, and usually it is desired to find both the horizontal and the vertical distances from instrument to rod. For convenience, the rod is always held vertical.

Figure 130 illustrates an inclined line of sight, AB being the stadia interval on the vertical rod, and $A'B'$ being the corresponding projection normal to the line of sight. The length of the inclined line of sight from center of instrument is

$$D_i = \frac{f}{i} A'B' + (f + c) \tag{2}$$

For all practical purposes the angles at A' and B' may be assumed to be 90°. Let $AB = s$; then $A'B' = s \cos \alpha$. Making this substitution in Eq. (2) and letting $K = f/i$, the inclined distance is

$$D_i = Ks \cos \alpha + (f + c) \tag{3}$$

The horizontal component of this inclined distance is

$$H = Ks \cos^2 \alpha + (f + c) \cos \alpha \tag{4}$$

which is the general equation for determining the horizontal distance from center of instrument to rod, when the line of sight is inclined.

The vertical component of the inclined distance is

$$V = Ks \cos \alpha \sin \alpha + (f + c) \sin \alpha$$

or

$$V = \tfrac{1}{2} Ks \sin 2\alpha + (f + c) \sin \alpha \tag{5}$$

which is the general equation for determining the difference in elevation between the center of the instrument and the point where the line of sight cuts the rod. To determine the difference in ground elevations, the height of instrument and the rod reading of the line of sight must be considered.

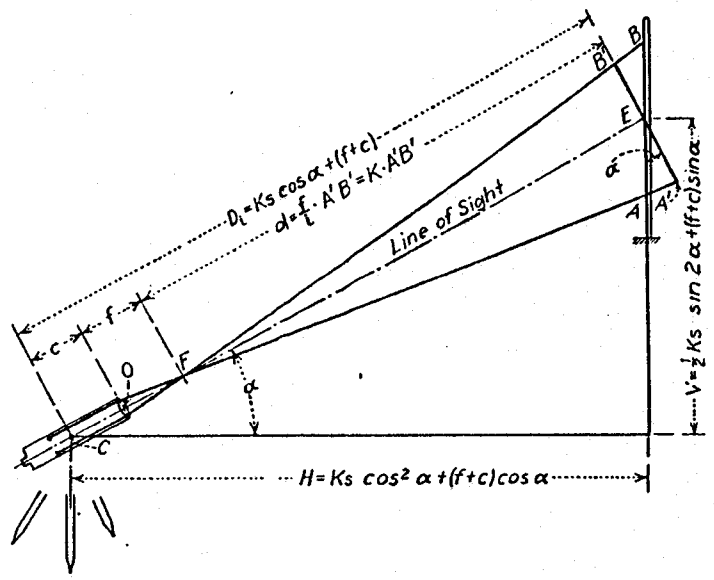

FIG. 130.

Equations (4) and (5) are known as the stadia formulas for inclined sights.

130a. Permissible Approximations.—More approximate forms of the stadia formulas are sufficiently precise for most stadia work. Generally distances are computed only to feet, and elevations to tenths of feet. For side shots where vertical angles are less than 3°, Eq. (4) may properly be reduced to the form

$$H = Ks + (f + c) \tag{6}$$

which is the same as for horizontal sights (Art. 128).

Owing to unequal refraction and to accidental inclination of the rod, observed stadia intervals are in general slightly too large. To offset the systematic errors from these sources, frequently on surveys of ordinary precision the $(f + c)$ constant is neglected. Hence in any ordinary case Eq. (4) may with sufficient accuracy be expressed in the form

27

$$H = Ks \cos^2 \alpha \text{ (approx.)} \tag{7}$$

Also Eq. (5) may be expressed with sufficient accuracy for ordinary work in the form

$$V = \tfrac{1}{2}Ks \sin 2\alpha \text{ (approx.)} \tag{8}$$

Equations (7) and (8) are simple in form and are most generally employed. The degree of approximation using these formulas may be still further reduced by adding 1 ft. to the observed stadia distance Ks.

When K is 100, the common practice is to multiply mentally the stadia interval by 100 at the time of observation and to record this value Ks in the field notebook. Thus, if the stadia interval were 7.37 ft., the *stadia distance* recorded would be 737 ft.

131. Stadia Reductions.—Ordinarily in practice the horizontal distances and the differences in elevation are not computed by actually solving the stadia formulas but are obtained by the use of a table, diagram, stadia slide rule, or stadia arc on the vertical circle of the transit, all of these devices being based upon these formulas.

Table VI gives, for each 02′ of vertical angle up to 30°, the horizontal distances (from principal focus to rod) and differences in elevation for $Ks = 100$ ft., computed from the equations $H = Ks \cos^2 \alpha$ and $V = \tfrac{1}{2}Ks \sin 2\alpha$ [see Eqs. (4), (5), (7), and (8)]. For any other value of Ks, the tabular quantities are to be multiplied by the value of Ks in hundreds of feet. The table also gives the horizontal distances and differences in elevation for three values of $(f + c)$, indicated as c in the table. More elaborate tables may be found in various other publications. If Table VI or a similar table is used, the necessary multiplications may be carried out with sufficient accuracy with the ordinary slide rule.

132. Uses of the Stadia in Leveling.—In *differential leveling*, the backsight and foresight distances are balanced conveniently if the level is equipped with stadia hairs.

In *profile leveling* or *cross-sectioning*, the stadia is a convenient means of finding distances from level to points on which rod readings are taken.

In rough *indirect leveling* with the transit, the stadia method is more rapid than any other. In running a line of levels by this method, the transit is set up in a convenient location. A backsight is taken on the rod held at the initial bench mark, first by observing the stadia interval and then by measuring the vertical angle to some arbitrarily chosen mark on the rod. A turning point is then established in advance of the transit, and similar observations are taken.

The transit is moved to a new position in advance of the turning point, and the process is repeated. So long as the index mark to which vertical angles are taken is unchanged, the difference in elevation computed from the stadia formula is also the difference in elevation between the two points on which the rod is held. If the chosen index reading cannot be sighted, the vertical angle is measured to some other graduation, and this rod reading is given in the notes. The notes are kept in a form similar to the following:

Station	Backsight		Foresight		El.
	Observations	Diff. el.	Observations	Diff. el.	

In the columns headed "Observations," both the stadia distance (or the stadia interval) and the vertical angle are recorded in the line opposite each station. Horizontal sights are taken wherever possible.

133. Transit-stadia Surveying.—On transit surveys of low precision where only horizontal angles and distances are required, the stadia is more rapid than chaining. In general, the surveying procedure parallels that when the tape is used. Stadia intervals are observed as each point is sighted. Horizontal angles are measured, but vertical angles are observed only if large enough to make the horizontal distance appreciably different from the stadia distance (say, when greater than 3°) and then are estimated without reading the vernier. The field party consists of a transitman, one or more rodmen, and usually a recorder.

On topographic and similar surveys, both the elevation of each point and its location in a horizontal plane are desired. As each point is sighted, both the horizontal and the vertical angle are measured, and the stadia interval is observed. This method may be employed merely for the location of details, the horizontal and vertical control being established by other means; or it may be employed for establishing control as well as for details.

If details only are to be located, the transit is set up at a traverse or triangulation station the elevation and location of which are known. The height of the instrument (H.I.) above the station is measured with a rod or tape. The transit is oriented by sighting along a line whose azimuth is known, this azimuth having been set off on the horizontal circle. The upper motion is unclamped, and sights to desired points are taken.

Where the required precision is not high, the control may be established by transit-stadia traverse, and the details may be located

at the same time. For the traverse it is customary to observe the stadia interval and vertical angle both forward and back from each set-up of the transit, employing the mean value in computations. In measuring vertical angles it is customary, wherever practicable, to sight at a rod reading equal to the height of instrument above the station over which the transit is set. Horizontal sights are taken wherever possible.

Figure 133 shows a page of notes for a stadia traverse for which side shots are taken as the work of running the traverse progresses.

PRELIMINARY (STADIA) SURVEY OF I.N.RY, BRIGHTON TO CAMBY

Obj.	Az.	Mag. B.	Stad. Dist.	Vert. Ang.	Hor. Dist.	Diff. Elev.	Elev.	Nov. 27, 1935 J.C. Clark, A
	Inst. at Sta. P49; HI = 4.7						785.1	Cold T.N. Tillman, Notes
P48	169°34'	S10°30'E	637	-2°27'	636	-22.2	757.9	W.W. & H.H., Rods
P50	38°21'	N33°15'E	681	+1°14'	681	+14.6	799.7	On slope
491	151°10'		366	-7°21'	360	-45.6	739.5	West bank Green River.
492	126°35'		418	-5°59'	413	-43.3	741.8	East " " " "
493	78°05'		385	-5°36'	381	-37.4	747.7	West " " "
494	81°20'		387	-5°40'	383	-38.0	747.1	East " " " "
495	295°55'		214	+6°34'	211	+24.3	809.4	Top slope.
	Inst. at Sta. P50; HI = 4.9						799.7	
P49	218°21'	S38°30'W	683	-1°13'	683	-14.5	785.2	
501	294°40'		415	+4°38'	412	+33.4	833.1	Top slope.
502	16°00'		308	0° on 21	308	+2.8	802.5	On slope.
503	137°35'		374	-6°36'	369	-42.8	756.9	West bank Green River.
504	136°10'		486	-5°52'	481	-49.4	750.3	East " " " "
505	5°45'		322	+7°36'	316	+41.8	841.5	Top slope.
P51	59°38'	N59°30'E	529	0° on 101	529	-5.2	794.5	On slope
506	94°25'		487	-3°36'	485	-30.5	769.2	West bank Green River.

FIG. 133.—Stadia notes.

The elevation of station *P* 49 has previously been determined as 785.1. Directions of the traverse lines are determined by azimuth and roughly checked by observed magnetic bearings, and stadia distances are recorded, rather than the rod intervals. The backsight from station *P* 50 to *P* 49 checks reasonably close with the foresight from station *P* 49 to *P* 50. The sights to points 502 and *P* 51 are horizontal; the rod reading is shown in the notes, and the difference in elevation is determined by direct leveling. In topographic surveying a sketch is included in the notes, the points to which sights are taken being numbered in the sketch.

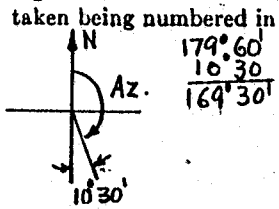

179°60'
10°30
169°30'

134. Errors in Stadia Surveying.—Many of the errors of stadia surveying are those common to all similar operations of measuring horizontal angles and differences in elevation, previously discussed. The sources of error in horizontal and vertical distances computed from observed stadia intervals are as follows:

1. *Stadia Interval Factor Not That Assumed.*—This produces a systematic error in distances, the error being proportional to that in the stadia interval factor.

2. *Rod Not Standard Length.*—In stadia work of ordinary precision, errors from this source are usually of no consequence.

3. *Incorrect Stadia Interval.*—An accidental error occurs due to the inability of the instrumentman to observe exactly the stadia interval. This is the principal error affecting the precision of computed distances. It may be kept to a minimum by proper focusing to eliminate parallax, by care in observing, and by taking observations at favorable times.

4. *Rod Not Plumb.*—This produces a small error in the vertical angle. It also produces an appreciable error in the observed stadia interval and hence in computed distances, this error being greater for larger vertical angles. It may be eliminated by using a rod level.

5. *Unequal Refraction.*—The sight on the lower stadia hair, being nearer the earth's surface, is affected by refraction more than the sight on the upper hair; hence a positive systematic error is produced. In ordinary stadia surveying the error is of no consequence.

134a. Errors in vertical angles have a relatively small effect upon the precision of computed horizontal distances but a relatively large effect upon the precision of corresponding differences in elevation. For example, in sighting on a point 300 ft. away and within the usual range of vertical angles, an error of 01′ in vertical angle produces no appreciable error in horizontal distance but produces an error in elevation of nearly 0.1 ft.

135. Precision of Stadia Surveying.—An important advantage of transit-stadia surveying over transit-tape surveying is that, in determining distances and differences in elevation by stadia, the important errors may be made accidental; whereas, in chaining, the important errors are systematic.

Many factors influence the precision of stadia surveying, and no definite statement of the precision for a given procedure can be made. Following are estimates which are believed to be fairly representative of several classes of stadia work, these estimates being based upon experience.

29

1. For side shots where a single observation is taken with sights steeply inclined and with no particular care taken to insure the rod's being plumb, horizontal distances may have a precision lower than $\frac{1}{100}$, and individual differences in elevation may be in error 2 ft. or more per 1,000 ft. of horizontal distance.

2. Under the same conditions as in (1) but with small vertical angles and reasonable care used in approximately plumbing the rod and with lengths of sight between 200 and 1,500 ft., the precision of horizontal distances should be not lower than $\frac{1}{200}$; differences in elevation per 1,000 ft. of horizontal distance need not be in error more than 0.3 ft. if vertical angles are observed to 01′ or more than 1 ft. if vertical angles are observed to 05′.

3. For a rapid stadia traverse of considerable length run through rough country with numerous long sights, angles being measured to minutes but without special precaution to eliminate systematic errors, the error of closure may be as low as 25 ft. per mile in plan and 3 ft. per mile in elevation.

4. For conditions as in (3) but for country fairly level so that all vertical angles are small, the error of closure ought not to exceed 15 ft. per mile in plan and 0.5 ft.$\sqrt{\text{distance in miles}}$ in elevation.

5. For rough country with vertical angles up to 15°, angles to minutes, rod standardized, rod plumbed with level, sights limited to 1,500 ft. and taken forward and back from each transit station, and interval factor carefully determined, the error of closure may be less than 15 ft.$\sqrt{\text{distance in miles}}$ in plan and 1 ft.$\sqrt{\text{distance in miles}}$ in elevation.

6. For conditions as in (5) but for level country so that all vertical angles are small, the error of closure may be as small as 6 ft. $\sqrt{\text{distance in miles}}$ in plan and 0.3 ft.$\sqrt{\text{distance in miles}}$ in elevation.

136. Numerical Problems.

1. With line of sight horizontal, a stadia reading is taken on a rod held at a chained distance of 600 + (f + c) ft. from the transit station. The rod reading of the lower stadia hair is 0.82 ft., and of the upper stadia hair is 6.77 ft. What stadia interval factor is indicated by this observation?

2. A stadia interval of 6.31 ft. is observed with a transit for which the stadia interval factor is 98.5, and (f + c) is 1 ft. The vertical angle is +7°42′. Determine the horizontal distance and difference in elevation by means of (*a*) the exact stadia formulas for inclined sights, (*b*) the approximate formulas, and (*c*) Table VI.

3. Following are the notes for a line of stadia levels. The elevation of B.M.$_1$ is 637.05. The stadia interval factor is 100.0, and (f + c) = 1.25 ft. By use of Table VI determine the elevations of remaining points.

Station	Backsight		Foresight	
	Stadia interval	Vertical angle	Stadia interval	Vertical angle
B.M.$_1$	4.26	−3°38′	....	.....
T.P.$_1$	2.85	−1°41′	3.18	+2°26′
T.P.$_2$	3.30	+0°56′	2.71	−4°04′
T.P.$_3$:	2.66	+2°09′	4.45	−0°38′
B.M.$_2$	....	.....	3.09	+7°27′

4. Following are stadia intervals and vertical angles for a transit-stadia traverse. The elevation of station *A* is 418.6 ft. The stadia interval factor is 100, and (f + c) = 1.0 ft. Compute the horizontal lengths of the courses and the elevations of the transit stations.

Station	Object	Stadia interval	Vertical angle
B	*A*	8.50	+0°48′
	C	4.37	+8°13′
C	*B*	4.34	−8°14′
	D	12.45	−2°22′
D	*C*	12.41	+2°21′
	E	7.18	+1°30′

5. Following are stadia intervals and vertical angles taken to locate points from a transit station the elevation of which is 415.7 ft. The height of instrument above the transit station is 4.8 ft. The stadia interval factor is 100, and (f + c) = 1.0 ft. Compute the horizontal distances and the elevations.

Object	Stadia interval	Vertical angle
41	6.30	−0°58′
42	7.26	−0°44′ (on rod at 9.2 ft.)
43	1.91	−3.4 ft. (direct levels)
44	2.08	+3°37′

30

TABLE VI.[1]—HORIZONTAL DISTANCES AND ELEVATIONS FROM STADIA READINGS

	0°		1°		2°		3°	
Minutes	Hor. Dist.	Diff. Elev.	Hor. Dist.	Diff. Elev.	Hor. Dist.	Diff. Elev.	Hor. Dist.	Diff. Elev.
0	100.00	0.00	99.97	1.74	99.88	3.49	99.73	5.23
2	100.00	0.06	99.97	1.80	99.87	3.55	99.72	5.28
4	100.00	0.12	99.97	1.86	99.87	3.60	99.71	5.34
6	100.00	0.17	99.96	1.92	99.87	3.66	99.71	5.40
8	100.00	0.23	99.96	1.98	99.86	3.72	99.70	5.46
10	100.00	0.29	99.96	2.04	99.86	3.78	99.69	5.52
12	100.00	0.35	99.96	2.09	99.85	3.84	99.69	5.57
14	100.00	0.41	99.95	2.15	99.85	3.90	99.68	5.63
16	100.00	0.47	99.95	2.21	99.84	3.95	99.68	5.69
18	100.00	0.52	99.95	2.27	99.84	4.01	99.67	5.75
20	100.00	0.58	99.95	2.33	99.83	4.07	99.66	5.80
22	100.00	0.64	99.94	2.38	99.83	4.13	99.66	5.86
24	100.00	0.70	99.94	2.44	99.82	4.18	99.65	5.92
26	99.99	0.76	99.94	2.50	99.82	4.24	99.64	5.98
28	99.99	0.81	99.93	2.56	99.81	4.30	99.63	6.04
30	99.99	0.87	99.93	2.62	99.81	4.36	99.63	6.09
32	99.99	0.93	99.93	2.67	99.80	4.42	99.62	6.15
34	99.99	0.99	99.93	2.73	99.80	4.48	99.62	6.21
36	99.99	1.05	99.92	2.79	99.79	4.53	99.61	6.27
38	99.99	1.11	99.92	2.85	99.79	4.59	99.60	6.33
40	99.99	1.16	99.92	2.91	99.78	4.65	99.59	6.38
42	99.99	1.22	99.91	2.97	99.78	4.71	99.59	6.44
44	99.98	1.28	99.91	3.02	99.77	4.76	99.58	6.50
46	99.98	1.34	99.90	3.08	99.77	4.82	99.57	6.56
48	99.98	1.40	99.90	3.14	99.76	4.88	99.56	6.61
50	99.98	1.45	99.90	3.20	99.76	4.94	99.56	6.67
52	99.98	1.51	99.89	3.26	99.75	4.99	99.55	6.73
54	99.98	1.57	99.89	3.31	99.74	5.05	99.54	6.78
56	99.97	1.63	99.89	3.37	99.74	5.11	99.53	6.84
58	99.97	1.69	99.88	3.43	99.73	5.17	99.52	6.90
60	99.97	1.74	99.88	3.49	99.73	5.23	99.51	6.96
c = 0.75.	0.75	0.01	0.75	0.02	0.75	0.03	0.75	0.05
c = 1.00.	1.00	0.01	1.00	0.03	1.00	0.04	1.00	0.06
c = 1.25.	1.25	0.02	1.25	0.03	1.25	0.05	1.25	0.08

[1] From "Theory and Practice of Surveying," by Prof. J. B. Johnson, John Wiley & Sons, Inc., New York.

TABLE VI.—HORIZONTAL DISTANCES AND ELEVATIONS FROM STADIA READINGS.—*Continued*

	4°		5°		6°		7°	
Minutes	Hor. Dist.	Diff. Elev.	Hor. Dist.	Diff. Elev.	Hor. Dist.	Diff. Elev.	Hor. Dist.	Diff. Elev.
0	99.51	6.96	99.24	8.68	98.91	10.40	98.51	12.10
2	99.51	7.02	99.23	8.74	98.90	10.45	98.50	12.15
4	99.50	7.07	99.22	8.80	98.88	10.51	98.48	12.21
6	99.49	7.13	99.21	8.85	98.87	10.57	98.47	12.26
8	99.48	7.19	99.20	8.91	98.86	10.62	98.46	12.32
10	99.47	7.25	99.19	8.97	98.85	10.68	98.44	12.38
12	99.46	7.30	99.18	9.03	98.83	10.74	98.43	12.43
14	99.46	7.36	99.17	9.08	98.82	10.79	98.41	12.49
16	99.45	7.42	99.16	9.14	98.81	10.85	98.40	12.55
18	99.44	7.48	99.15	9.20	98.80	10.91	98.39	12.60
20	99.43	7.53	99.14	9.25	98.78	10.96	98.37	12.66
22	99.42	7.59	99.13	9.31	98.77	11.02	98.36	12.72
24	99.41	7.65	99.11	9.37	98.76	11.08	98.34	12.77
26	99.40	7.71	99.10	9.43	98.74	11.13	98.33	12.83
28	99.39	7.76	99.09	9.48	98.73	11.19	98.31	12.88
30	99.38	7.82	99.08	9.54	98.72	11.25	98.29	12.94
32	99.38	7.88	99.07	9.60	98.71	11.30	98.28	13.00
34	99.37	7.94	99.06	9.65	98.69	11.36	98.27	13.05
36	99.36	7.99	99.05	9.71	98.68	11.42	98.25	13.11
38	99.35	8.05	99.04	9.77	98.67	11.47	98.24	13.17
40	99.34	8.11	99.03	9.83	98.65	11.53	98.22	13.22
42	99.33	8.17	99.01	9.88	98.64	11.59	98.20	13.28
44	99.32	8.22	99.00	9.94	98.63	11.64	98.19	13.33
46	99.31	8.28	98.99	10.00	98.61	11.70	98.17	13.39
48	99.30	8.34	98.98	10.05	98.60	11.76	98.16	13.45
50	99.29	8.40	98.97	10.11	98.58	11.81	98.14	13.50
52	99.28	8.45	98.96	10.17	98.57	11.87	98.13	13.56
54	99.27	8.51	98.94	10.22	98.56	11.93	98.11	13.61
56	99.26	8.57	98.93	10.28	98.54	11.98	98.10	13.67
58	99.25	8.63	98.92	10.34	98.53	12.04	98.08	13.73
60	99.24	8.68	98.91	10.40	98.51	12.10	98.06	13.78
c = 0.75.	0.75	0.06	0.75	0.07	0.75	0.08	0.74	0.10
c = 1.00.	1.00	0.08	0.99	0.09	0.99	0.11	0.99	0.13
c = 1.25.	1.25	0.10	1.24	0.11	1.24	0.14	1.24	0.16

31

TABLE VI.—HORIZONTAL DISTANCES AND ELEVATIONS FROM STADIA READINGS.—*Continued*

	8°		9°		10°		11°	
Minutes	Hor. Dist.	Diff. Elev.	Hor. Dist.	Diff. Elev.	Hor. Dist.	Diff. Elev.	Hor. Dist.	Diff. Elev.
0	98.06	13.78	97.55	15.45	96.98	17.10	96.36	18.73
2	98.05	13.84	97.53	15.51	96.96	17.16	96.34	18.78
4	98.03	13.89	97.52	15.56	96.94	17.21	96.32	18.84
6	98.01	13.95	97.50	15.62	96.92	17.26	96.29	18.89
8	98.00	14.01	97.48	15.67	96.90	17.32	96.27	18.95
10	97.98	14.06	97.46	15.73	96.88	17.37	96.25	19.00
12	97.97	14.12	97.44	15.78	96.86	17.43	96.23	19.05
14	97.95	14.17	97.43	15.84	96.84	17.48	96.21	19.11
16	97.93	14.23	97.41	15.89	96.82	17.54	96.18	19.16
18	97.92	14.28	97.39	15.95	96.80	17.59	96.16	19.21
20	97.90	14.34	97.37	16.00	96.78	17.65	96.14	19.27
22	97.88	14.40	97.35	16.06	96.76	17.70	96.12	19.32
24	97.87	14.45	97.33	16.11	96.74	17.76	96.09	19.38
26	97.85	14.51	97.31	16.17	96.72	17.81	96.07	19.43
28	97.83	14.56	97.29	16.22	96.70	17.86	96.05	19.48
30	97.82	14.62	97.28	16.28	96.68	17.92	96.03	19.54
32	97.80	14.67	97.26	16.33	96.66	17.97	96.00	19.59
34	97.78	14.73	97.24	16.39	96.64	18.03	95.98	19.64
36	97.76	14.79	97.22	16.44	96.62	18.08	95.96	19.70
38	97.75	14.84	97.20	16.50	96.60	18.14	95.93	19.75
40	97.73	14.90	97.18	16.55	96.57	18.19	95.91	19.80
42	97.71	14.95	97.16	16.61	96.55	18.24	95.89	19.86
44	97.69	15.01	97.14	16.66	96.53	18.30	95.86	19.91
46	97.68	15.06	97.12	16.72	96.51	18.35	95.84	19.96
48	97.66	15.12	97.10	16.77	96.49	18.41	95.82	20.02
50	97.64	15.17	97.08	16.83	96.47	18.46	95.79	20.07
52	97.62	15.23	97.06	16.88	96.45	18.51	95.77	20.12
54	97.61	15.28	97.04	16.94	96.42	18.57	95.75	20.18
56	97.59	15.34	97.02	16.99	96.40	18.62	95.72	20.23
58	97.57	15.40	97.00	17.05	96.38	18.68	95.70	20.28
60	97.55	15.45	96.98	17.10	96.36	18.73	95.68	20.34
c = 0.75.	0.74	0.11	0.74	0.12	0.74	0.14	0.73	0.15
c = 1.00.	0.99	0.15	0.99	0.16	0.98	0.18	0.98	0.20
c = 1.25.	1.23	0.18	1.23	0.21	1.23	0.23	1.22	0.25

TABLE VI.—HORIZONTAL DISTANCES AND ELEVATIONS FROM STADIA READINGS.—*Continued*

	12°		13°		14°		15°	
Minutes	Hor. Dist.	Diff. Elev.	Hor. Dist.	Diff. Elev.	Hor. Dist.	Diff. Elev.	Hor. Dist.	Diff. Elev.
0	95.68	20.34	94.94	21.92	94.15	23.47	93.30	25.00
2	95.65	20.39	94.91	21.97	94.12	23.52	93.27	25.05
4	95.63	20.44	94.89	22.02	94.09	23.58	93.24	25.10
6	95.61	20.50	94.86	22.08	94.07	23.63	93.21	25.15
8	95.58	20.55	94.84	22.13	94.04	23.68	93.18	25.20
10	95.56	20.60	94.81	22.18	94.01	23.73	93.16	25.25
12	95.53	20.66	94.79	22.23	93.98	23.78	93.13	25.30
14	95.51	20.71	94.76	22.28	93.95	23.83	93.10	25.35
16	95.49	20.76	94.73	22.34	93.93	23.88	93.07	25.40
18	95.46	20.81	94.71	22.39	93.90	23.93	93.04	25.45
20	95.44	20.87	94.68	22.44	93.87	23.99	93.01	25.50
22	95.41	20.92	94.66	22.49	93.84	24.04	92.98	25.55
24	95.39	20.97	94.63	22.54	93.81	24.09	92.95	25.60
26	95.36	21.03	94.60	22.60	93.79	24.14	92.92	25.65
28	95.34	21.08	94.58	22.65	93.76	24.19	92.89	25.70
30	95.32	21.13	94.55	22.70	93.73	24.24	92.86	25.75
32	95.29	21.18	94.52	22.75	93.70	24.29	92.83	25.80
34	95.27	21.24	94.50	22.80	93.67	24.34	92.80	25.85
36	95.24	21.29	94.47	22.85	93.65	24.39	92.77	25.90
38	95.22	21.34	94.44	22.91	93.62	24.44	92.74	25.95
40	95.19	21.39	94.42	22.96	93.59	24.49	92.71	26.00
42	95.17	21.45	94.39	23.01	93.56	24.55	92.68	26.05
44	95.14	21.50	94.36	23.06	93.53	24.60	92.65	26.10
46	95.12	21.55	94.34	23.11	93.50	24.65	92.62	26.15
48	95.09	21.60	94.31	23.16	93.47	24.70	92.59	26.20
50	95.07	21.66	94.28	23.22	93.45	24.75	92.56	26.25
52	95.04	21.71	94.26	23.27	93.42	24.80	92.53	26.30
54	95.02	21.76	94.23	23.32	93.39	24.85	92.49	26.35
56	94.99	21.81	94.20	23.37	93.36	24.90	92.46	26.40
58	94.97	21.87	94.17	23.42	93.33	24.95	92.43	26.45
60	94.94	21.92	94.15	23.47	93.30	25.00	92.40	26.50
c = 0.75.	0.73	0.16	0.73	0.17	0.73	0.19	0.72	0.20
c = 1.00.	0.98	0.22	0.97	0.23	0.97	0.25	0.96	0.27
c = 1.25.	1.22	0.27	1.21	0.29	1.21	0.31	1.20	0.34

32

TABLE VI.—HORIZONTAL DISTANCES AND ELEVATIONS FROM STADIA READINGS.—*Continued*

	16°		17°		18°		19°	
Minutes	Hor. Dist.	Diff. Elev.	Hor. Dist.	Diff. Elev.	Hor. Dist.	Diff. Elev.	Hor. Dist.	Diff. Elev.
0	92.40	26.50	91.45	27.96	90.45	29.39	89.40	30.78
2	92.37	26.55	91.42	28.01	90.42	29.44	89.36	30.83
4	92.34	26.59	91.39	28.06	90.38	29.48	89.33	30.87
6	92.31	26.64	91.35	28.10	90.35	29.53	89.29	30.92
8	92.28	26.69	91.32	28.15	90.31	29.58	89.26	30.97
10	92.25	26.74	91.29	28.20	90.28	29.62	89.22	31.01
12	92.22	26.79	91.26	28.25	90.24	29.67	89.18	31.06
14	92.19	26.84	91.22	28.30	90.21	29.72	89.15	31.10
16	92.15	26.89	91.19	28.34	90.18	29.76	89.11	31.15
18	92.12	26.94	91.16	28.39	90.14	29.81	89.08	31.19
20	92.09	26.99	91.12	28.44	90.11	29.86	89.04	31.24
22	92.06	27.04	91.09	28.49	90.07	29.90	89.00	31.28
24	92.03	27.09	91.06	28.54	90.04	29.95	88.96	31.33
26	92.00	27.13	91.02	28.58	90.00	30.00	88.93	31.38
28	91.97	27.18	90.99	28.63	89.97	30.04	88.89	31.42
30	91.93	27.23	90.96	28.68	89.93	30.09	88.86	31.47
32	91.90	27.28	90.92	28.73	89.90	30.14	88.82	31.51
34	91.87	27.33	90.89	28.77	89.86	30.19	88.78	31.56
36	91.84	27.38	90.86	28.82	89.83	30.23	88.75	31.60
38	91.81	27.43	90.82	28.87	89.79	30.28	88.71	31.65
40	91.77	27.48	90.79	28.92	89.76	30.32	88.67	31.69
42	91.74	27.52	90.76	28.96	89.72	30.37	88.64	31.74
44	91.71	27.57	90.72	29.01	89.69	30.41	88.60	31.78
46	91.68	27.62	90.69	29.06	89.65	30.46	88.56	31.83
48	91.65	27.67	90.66	29.11	89.61	30.51	88.53	31.87
50	91.61	27.72	90.62	29.15	89.58	30.55	88.49	31.92
52	91.58	27.77	90.59	29.20	89.54	30.60	88.45	31.96
54	91.55	27.81	90.55	29.25	89.51	30.65	88.41	32.01
56	91.52	27.86	90.52	29.30	89.47	30.69	88.38	32.05
58	91.48	27.91	90.48	29.34	89.44	30.74	88.34	32.09
60	91.45	27.96	90.45	29.39	89.40	30.78	88.30	32.14
c = 0.75.	0.72	0.21	0.72	0.23	0.71	0.24	0.71	0.25
c = 1.00.	0.96	0.28	0.95	0.30	0.95	0.32	0.94	0.33
c = 1.25.	1.20	0.35	1.19	0.38	1.19	0.40	1.18	0.42

TABLE VI.—HORIZONTAL DISTANCES AND ELEVATIONS FROM STADIA READINGS.—*Continued*

	20°		21°		22°		23°	
Minutes.	Hor. Dist.	Diff. Elev.	Hor. Dist.	Diff. Elev.	Hor. Dist.	Diff. Elev.	Hor. Dist.	Diff. Elev.
0	88.30	32.14	87.16	33.46	85.97	34.73	84.73	35.97
2	88.26	32.18	87.12	33.50	85.93	34.77	84.69	36.01
4	88.23	32.23	87.08	33.54	85.89	34.82	84.65	36.05
6	88.19	32.27	87.04	33.59	85.85	34.86	84.61	36.09
8	88.15	32.32	87.00	33.63	85.80	34.90	84.57	36.13
10	88.11	32.36	86.96	33.67	85.76	34.94	84.52	36.17
12	88.08	32.41	86.92	33.72	85.72	34.98	84.48	36.21
14	88.04	32.45	86.88	33.76	85.68	35.02	84.44	36.25
16	88.00	32.49	86.84	33.80	85.64	35.07	84.40	36.29
18	87.96	32.54	86.80	33.84	85.60	35.11	84.35	36.33
20	87.93	32.58	86.77	33.89	85.56	35.15	84.31	36.37
22	87.89	32.63	86.73	33.93	85.52	35.19	84.27	36.41
24	87.85	32.67	86.69	33.97	85.48	35.23	84.23	36.45
26	87.81	32.72	86.65	34.01	85.44	35.27	84.18	36.49
28	87.77	32.76	86.61	34.06	85.40	35.31	84.14	36.53
30	87.74	32.80	86.57	34.10	85.36	35.36	84.10	36.57
32	87.70	32.85	86.53	34.14	85.31	35.40	84.06	36.61
34	87.66	32.89	86.49	34.18	85.27	35.44	84.01	36.65
36	87.62	32.93	86.45	34.23	85.23	35.48	83.97	36.69
38	87.58	32.98	86.41	34.27	85.19	35.52	83.93	36.73
40	87.54	33.02	86.37	34.31	85.15	35.56	83.89	36.77
42	87.51	33.07	86.33	34.35	85.11	35.60	83.84	36.80
44	87.47	33.11	86.29	34.40	85.07	35.64	83.80	36.84
46	87.43	33.15	86.25	34.44	85.02	35.68	83.76	36.88
48	87.39	33.20	86.21	34.48	84.98	35.72	83.72	36.92
50	87.35	33.24	86.17	34.52	84.94	35.76	83.67	36.96
52	87.31	33.28	86.13	34.57	84.90	35.80	83.63	37.00
54	87.27	33.33	86.09	34.61	84.86	35.85	83.59	37.04
56	87.24	33.37	86.05	34.65	84.82	35.89	83.54	37.08
58	87.20	33.41	86.01	34.69	84.77	35.93	83.50	37.12
60	87.16	33.46	85.97	34.73	84.73	35.97	83.46	37.16
c = 0.75.	0.70	0.26	0.70	0.27	0.69	0.29	0.69	0.30
c = 1.00.	0.94	0.35	0.93	0.37	0.92	0.38	0.92	0.40
c = 1.25.	1.17	0.44	1.16	0.46	1.15	0.48	1.15	0.50

TABLE VI.—HORIZONTAL DISTANCES AND ELEVATIONS FROM STADIA READINGS.—*Continued*

	24°		25°		26°		27°	
Minutes	Hor. Dist.	Diff. Elev.	Hor. Dist.	Diff. Elev.	Hor. Dist.	Diff. Elev.	Hor. Dist.	Diff. Elev.
0	83.46	37.16	82.14	38.30	80.78	39.40	79.39	40.45
2	83.41	37.20	82.09	38.34	80.74	39.44	79.34	40.49
4	83.37	37.23	82.05	38.38	80.69	39.47	79.30	40.52
6	83.33	37.27	82.01	38.41	80.65	39.51	79.25	40.55
8	83.28	37.31	81.96	38.45	80.60	39.54	79.20	40.59
10	83.24	37.35	81.92	38.49	80.55	39.58	79.15	40.62
12	83.20	37.39	81.87	38.53	80.51	39.61	79.11	40.66
14	83.15	37.43	81.83	38.56	80.46	39.65	79.06	40.69
16	83.11	37.47	81.78	38.60	80.41	39.69	79.01	40.72
18	83.07	37.51	81.74	38.64	80.37	39.72	78.96	40.76
20	83.02	37.54	81.69	38.67	80.32	39.76	78.92	40.79
22	82.98	37.58	81.65	38.71	80.28	39.79	78.87	40.82
24	82.93	37.62	81.60	38.75	80.23	39.83	78.82	40.86
26	82.89	37.66	81.56	38.78	80.18	39.86	78.77	40.89
28	82.85	37.70	81.51	38.82	80.14	39.90	78.73	40.92
30	82.80	37.74	81.47	38.86	80.09	39.93	78.68	40.96
32	82.76	37.77	81.42	38.89	80.04	39.97	78.63	40.99
34	82.72	37.81	81.38	38.93	80.00	40.00	78.58	41.02
36	82.67	37.85	81.33	38.97	79.95	40.04	78.54	41.06
38	82.63	37.89	81.28	39.00	79.90	40.07	78.49	41.09
40	82.58	37.93	81.24	39.04	79.86	40.11	78.44	41.12
42	82.54	37.96	81.19	39.08	79.81	40.14	78.39	41.16
44	82.49	38.00	81.15	39.11	79.76	40.18	78.34	41.19
46	82.45	38.04	81.10	39.15	79.72	40.21	78.30	41.22
48	82.41	38.08	81.06	39.18	79.67	40.24	78.25	41.26
50	82.36	38.11	81.01	39.22	79.62	40.28	78.20	41.29
52	82.32	38.15	80.97	39.26	79.58	40.31	78.15	41.32
54	82.27	38.19	80.92	39.29	79.53	40.35	78.10	41.35
56	82.23	38.23	80.87	39.33	79.48	40.38	78.06	41.39
58	82.18	38.26	80.83	39.36	79.44	40.42	78.01	41.42
60	82.14	38.30	80.78	39.40	79.39	40.45	77.96	41.45
c = 0.75	0.68	0.31	0.68	0.32	0.67	0.33	0.66	0.35
c = 1.00	0.91	0.41	0.90	0.43	0.89	0.45	0.89	0.46
c = 1.25	1.14	0.52	1.13	0.54	1.12	0.56	1.11	0.58

TABLE VI.—HORIZONTAL DISTANCES AND ELEVATIONS FROM STADIA READINGS.—*Concluded*

	28°		29°		30°	
Minutes	Hor. Dist.	Diff. Elev.	Hor. Dist.	Diff. Elev.	Hor. Dist.	Diff. Elev.
0	77.96	41.45	76.50	42.40	75.00	43.30
2	77.91	41.48	76.45	42.43	74.95	43.33
4	77.86	41.52	76.40	42.46	74.90	43.36
6	77.81	41.55	76.35	42.49	74.85	43.39
8	77.77	41.58	76.30	42.53	74.80	43.42
10	77.72	41.61	76.25	42.56	74.75	43.45
12	77.67	41.65	76.20	42.59	74.70	43.47
14	77.62	41.68	76.15	42.62	74.65	43.50
16	77.57	41.71	76.10	42.65	74.60	43.53
18	77.52	41.74	76.05	42.68	74.55	43.56
20	77.48	41.77	76.00	42.71	74.49	43.59
22	77.42	41.81	75.95	42.74	74.44	43.62
24	77.38	41.84	75.90	42.77	74.39	43.65
26	77.33	41.87	75.85	42.80	74.34	43.67
28	77.28	41.90	75.80	42.83	74.29	43.70
30	77.23	41.93	75.75	42.86	74.24	43.73
32	77.18	41.97	75.70	42.89	74.19	43.76
34	77.13	42.00	75.65	42.92	74.14	43.79
36	77.09	42.03	75.60	42.95	74.09	43.82
38	77.04	42.06	75.55	42.98	74.04	43.84
40	76.99	42.09	75.50	43.01	73.99	43.87
42	76.94	42.12	75.45	43.04	73.93	43.90
44	76.89	42.15	75.40	43.07	73.88	43.93
46	76.84	42.19	75.35	43.10	73.83	43.95
48	76.79	42.22	75.30	43.13	73.78	43.98
50	76.74	42.25	75.25	43.16	73.73	44.01
52	76.69	42.28	75.20	43.18	73.68	44.04
54	76.64	42.31	75.15	43.21	73.63	44.07
56	76.59	42.34	75.10	43.24	73.58	44.09
58	76.55	42.37	75.05	43.27	73.52	44.12
60	76.50	42.40	75.00	43.30	73.47	44.15
c = 0.75	0.66	0.36	0.65	0.37	0.65	0.38
c = 1.00	0.88	0.48	0.87	0.49	0.86	0.51
c = 1.25	1.10	0.60	1.09	0.62	1.08	0.64

34

BASIC SURVEYING EXERCISES

1. Determine your average length of pace.
2. Learn to use instruments.
3. Measure a distance of approximately 200 ft. on nearly level ground by tape and stadia-transit and compare. Assume the tape measurement to be the standard and calculate the percentage error in the stadia method.
4. Make a Brunton and pace survey of the assigned polygon.
5. Make a transit-stadia survey of the polygon. Check your distances by tape.
6. Determine the elevations of the vertices of the polygon by using the transit level. Assume elevation of point A to be 100.00 ft.
7. Determine the error of closure of the polygon; if $\ell_t=\sqrt{\ell_x^2+\ell_y^2}$ is less than $\frac{\Sigma L}{100}$, compensate the x- and y-projections, so that the polygon closes.
8. Determine the coordinates of the polygon.
9. Calculate the area of the polygon.
10. Determine the error of closure in the leveling. If $\Delta E < 0.10$ ft, compensate the error, by the relation

$$\frac{\Delta E}{\text{total distance leveled}} = \frac{\text{error in the intermediate point (vertex)}}{\text{total distance leveled up to that point}}$$

This means that you must have an estimate of the distances leveled, which will not be in general equal to the sides of the polygon. The estimation by pacing will be adequate. If the errors are greater than the tolerances, the survey has to be repeated.

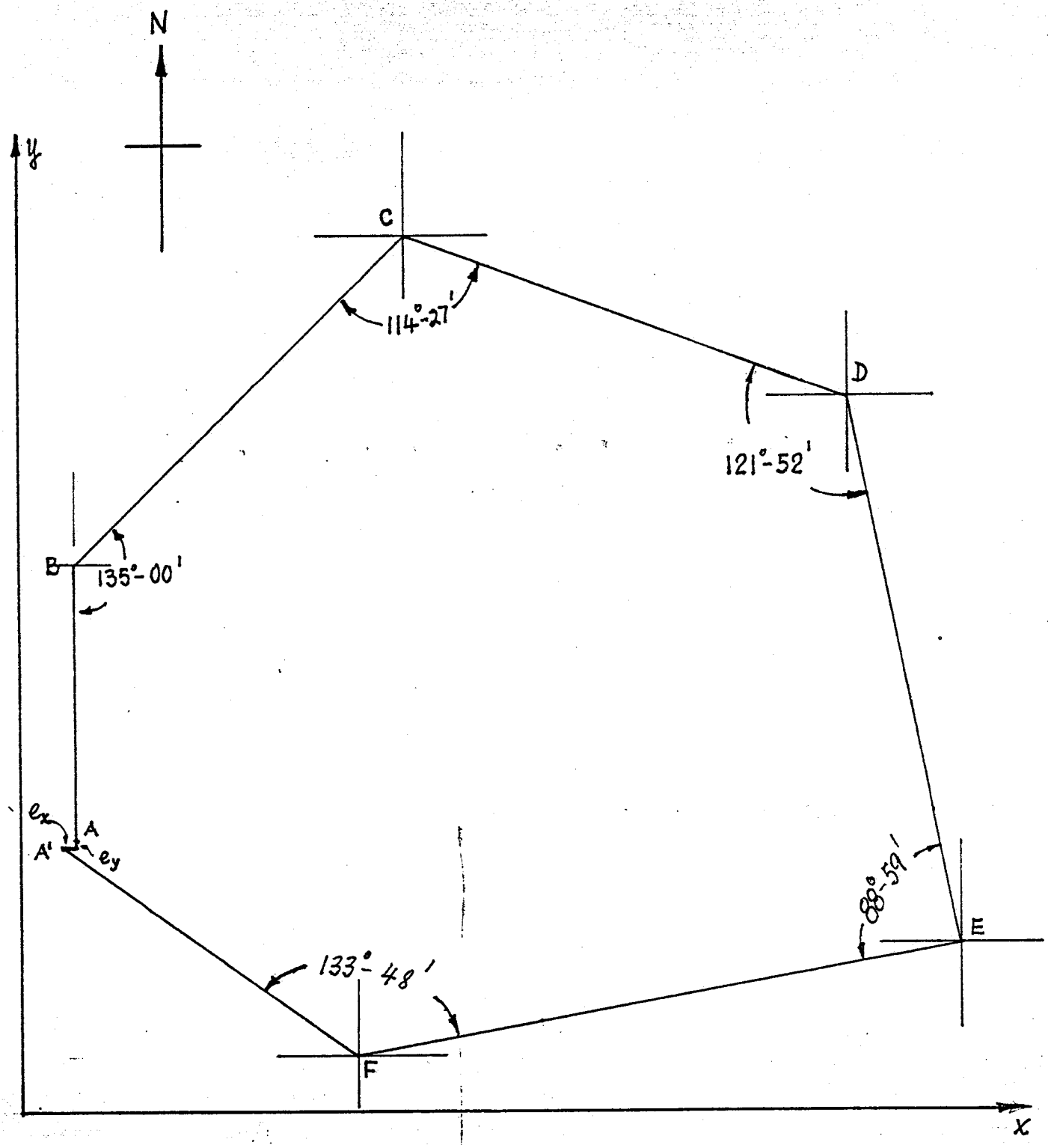

Scale: 1 cm = 100 m (or ft)

AMPAD EFFICIENCY LINE® 22-210

Side	Length L	Bearing	Azimuth Az	sin Az	cos Az	Original Projections $L_x = L \sin Az$	Original Projections $L_y = L \cos Az$	Corrections C_x	Corrections C_y	Corrected Projections L_x	Corrected Projections L_y	Coordinates x	Coordinates y	Points
												100.00	500.00	A
AB	500.00	N	0			0.00	500.00	0.00	2.45	0.00	502.45	100.00	1,002.45	B
BC	848.60	N45°-00'E	45°-00'	+ 0.7071	+ 0.7071	+ 600.05	+ 600.05	+ 5.90	+ 2.94	605.95	602.99	705.95	1,605.44	C
CD	854.40	S69°-27'E	110°-33'	+ 0.9364	- 0.3510	+ 800.06	- 299.92	+ 7.87	+ 1.47	807.93	- 298.45	1,513.88	1,306.99	D
DE	1,019.80	S11°-19'E	168°-41'	+ 0.1962	- 0.9806	+ 200.08	- 999.97	+ 1.97	+ 4.89	202.05	- 995.08	1,715.93	311.91	E
EF	1,118.00	S79°-42'W	259°-42'	- 0.9839	- 0.1788	- 1,099.98	- 199.90	+ 10.82	+ 0.98	-1,089.16	- 198.92	626.77	112.99	F
FA	656.80	N54°-06'W	305°-54'	- 0.8100	+ 0.5864	- 532.01	+ 385.13	+ 5.24	+ 1.88	- 526.77	+ 387.01	100.00	500.00	A
Sum	4,997.60					$e_x =$ - 31.80	$e_y =$ - 14.61	+ 31.80	+ 14.61	0.00	0.00			

$e_t = (e_x^2 + e_y^2)^{1/2} = 35.0$

Error of Closure: $\frac{35}{4997.6} = \frac{1}{143} < \frac{1}{100}$ O.K.

$\Sigma |L_x| = 3232.18$

$\Sigma |L_y| = 2984.97$

Corrections C_x and C_y to side CD:

$C_x = \frac{31.80}{3232.18} \times 800.06 = +7.87$

$C_y = \frac{14.61}{2984.97} \times 299.92 = +1.47$

Calculation of the area of a polygon.

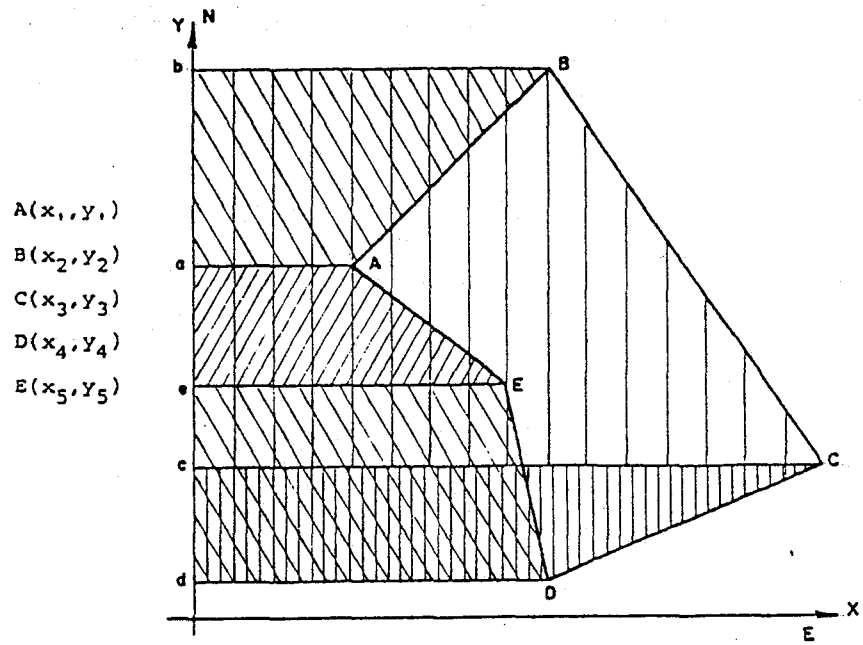

Area Polygon ABCDE = ⏢ bBCc + ⏢ cCDd − ⏢ bBAa − ⏢ aAEe − ⏢ eEDd

$$\text{Area of Polygon } ABCDE = \frac{x_2+x_3}{2}(y_2-y_3) + \frac{x_3+x_4}{2}(y_3-y_4) - \frac{x_2+x_1}{2}(y_2-y_1) - \frac{x_1+x_5}{2}(y_1-y_5) - \frac{x_5+x_4}{2}(y_5-y_4)$$

Finally

$$\text{Area} = \frac{1}{2}\left\{x_1(y_5-y_2) + x_2(y_1-y_3) + x_3(y_2-y_4) + x_4(y_3-y_5) + x_5(y_4-y_1)\right\}$$