FLOOD CONTROL DISTRICT OF MARICOPA COUNTY
CITY OF PEORIA, ARIZONA

Property of
Flood Control District of MC Library
Please Return to
2801 W. Durango
Phoenix, AZ 85009

FINAL

91ST AVENUE CHANNEL IMPROVEMENT ALIGNMENT STUDY

REGISTERED PROFESSIONAL ENGINEER (CIVIL)
CERTIFICATE NO.
9914
RONALD L.
EWING
Date Signed 3-15-89
ARIZONA, U.S.A.

Dibble and Associates
Consulting Engineers
2627 East Thomas Road
Phoenix, Arizona 85016

March 15, 1989

FLOOD CONTROL DISTRICT
RECEIVED
MAR 20 1989
REMARKS

FCD88-22

TABLE OF CONTENTS

	LIST OF TABLES	
	LIST OF FIGURES	
I.	INTRODUCTION	1
II.	REVIEW OF EXISTING REPORTS AND HYDROLOGIC MODELS	1
III.	PROCEDURE, METHODOLOGY, AND RESULTS	3
IV.	ANALYSIS OF ALTERNATIVES	9
V.	CONCLUSIONS AND RECOMMENDATIONS	14
VI.	REFERENCES	15

APPENDICES

A	SWMM Subbasin Width Calculations	16
B.	SWMM Subbasin % Impervious Calculations and Charts	18
C.	SWMM Detention Basin Calculations	26
D.	SWMM Subbasin Max. and Min. Infiltration Rates Calculations	29
E.	SWMM Computer Model Input and Output	34
F.	Alternate A1 Cross-Sections	73

LIST OF TABLES

1.	Design Storm Rainfall Intensity	6
2.	SWMM Input Parameter Summary	8
3.	Comparison of SWMM Results	8
4.	Gunite Channel with 2:1 Side Slopes (Alternate A1)	10
5.	Gunite Channel with 4:1 Side Slopes (Alternate A2)	11
6.	Reinforced Concrete Box Culvert & Channel (Alternate B)	12
7.	Alternate A1 Right-of-Way Requirements	13

LIST OF FIGURES

1.	Project Vicinity Map	2
2.	Drainage Basin Map	5
3.	Alternate A Plan	
4.	Alternate B Plan	
5.	Alternate A1 Profile	
6.	Alternate A2 Profile	
7.	Alternate A & B Profile	

REGISTERED PROFESSIONAL ENGINEER (CIVIL)
CERTIFICATE NO. 9914
RONALD L. EWING
Date Signed 2/15/89
ARIZONA, U.S.A.

FLOOD CONTROL DISTRICT OF MARICOPA COUNTY

CITY OF PEORIA, ARIZONA

91ST AVENUE CHANNEL IMPROVEMENTS ALIGNMENT STUDY

I. INTRODUCTION

The 91st Avenue Channel Improvements Project is a portion of the Bell Road Drainage Projects and consists of analyzing two (2) alternate routes and conveyance systems from Bell Road to New River. The first would entail improving the existing channel that extends from Bell Road to Greenway Road along the west section line of Section 3 and then east from the west section line along the Greenway Road Alignment to New River. The second, a closed storm drain system, would follow the existing and proposed 91st Avenue alignment from Bell Road to Greenway Road then east along the Greenway Road alignment to New River (Figure 1 shows the Project Vicinity).

The purpose of this study is to investigate the most recent information relating to hydrology, topography, utility locations, structures and other physical elements and features that might effect the location, design and construction of the project, with the objective of determining the most feasible and cost effective storm water conveyance routing and system for the calculated flows.

II. REVIEW OF PREVIOUS REPORTS AND HYDROLOGIC MODELS

One drainage study and two drainage master plans were reviewed relevant to this project, as listed below:

1. Bell Road Project Drainage Study prepared for Maricopa County Flood Control District by Greiner Engineering Sciences, Inc. Project No. E123061 (Reference 2)

2. Glendale-Peoria Area Drainage Master Plan and Addendum prepared for Maricopa County Flood Control District by Camp Dresser & McKee Inc. and James M. Montgomery Consulting Engineers, Inc. Project No. E845055 (Reference 3)

3. Peoria Master Plan of Storm Drainage prepared for the City of Peoria and Maricopa County Flood Control District by James M. Montgomery, Consulting Engineers, Inc. (Reference 4)

The Peoria Master Plan of Storm Drainage is the most recent report and was utilized in detail in preparing this study. The Storm Water Management Model (SWMM) Version III.3 developed by the Environmental Protection Agency was used to determine peak discharges of runoff from a 2-year, 2-hour storm. Input parameters used in the SWMM program of the Montgomery report were carefully evaluated by Dibble and Associates. Montgomery's Phoenix office was consulted to obtain further

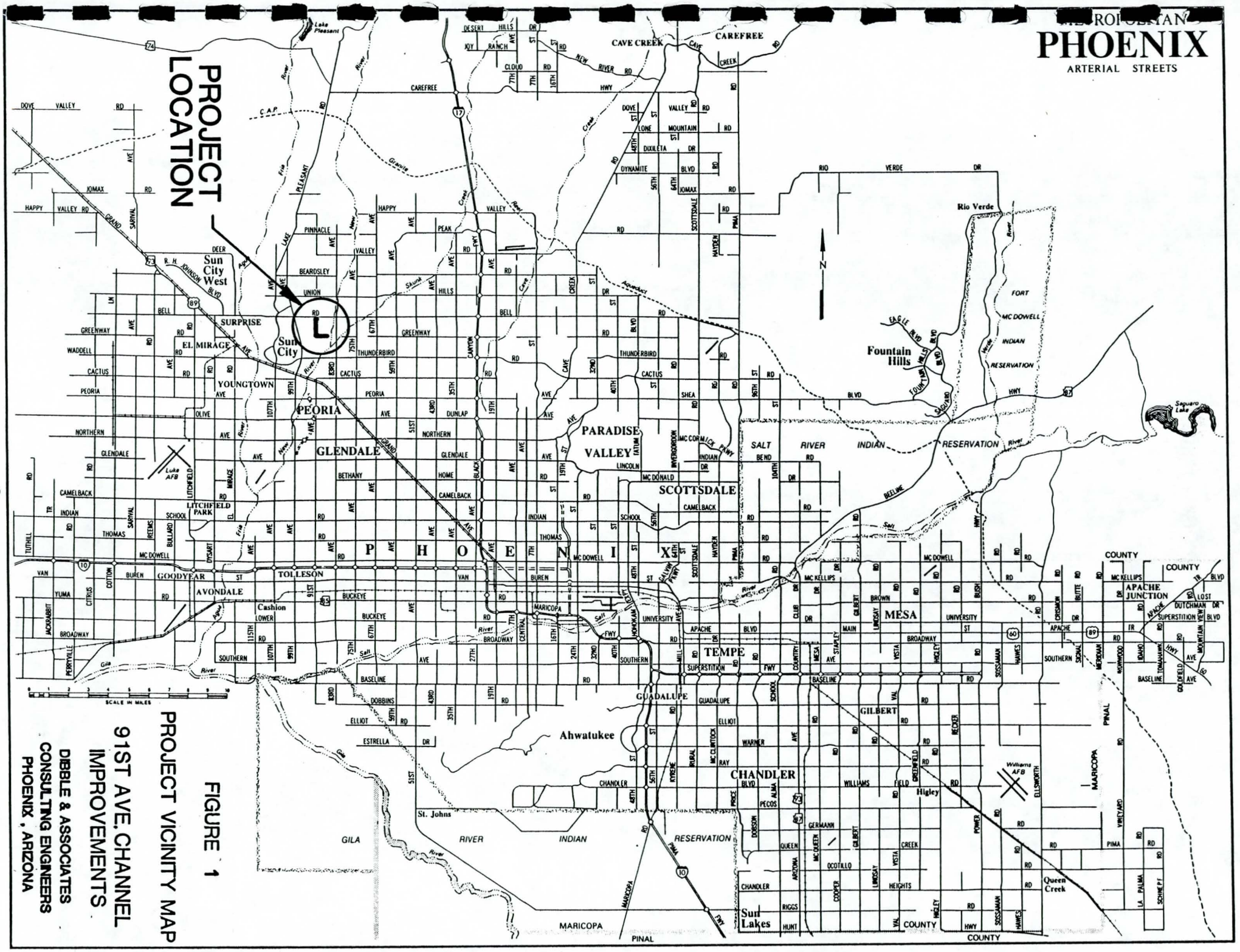
METROPOLITAN
PHOENIX
ARTERIAL STREETS
PROJECT LOCATION
L
Sun City West
Sun City
SURPRISE
EL MIRAGE
YOUNGTOWN
PEORIA
GLENDALE
Luke AFB
LITCHFIELD PARK
GOODYEAR
AVONDALE
Cashion
TOLLESON
BUCKEYE
MARICOPA
PHOENIX
PARADISE VALLEY
SCOTTSDALE
TEMPE
MESA
GILBERT
CHANDLER
Williams AFB
Higley
Ahwatukee
GUADALUPE
St. Johns
GILA RIVER INDIAN RESERVATION
Sun Lakes
Queen Creek
Rio Verde
Fountain Hills
FORT MC DOWELL INDIAN RESERVATION
SALT RIVER INDIAN RESERVATION
Saguaro Lake
Lake Pleasant
CAVE CREEK
CAREFREE
APACHE JUNCTION
MARICOPA COUNTY
PINAL COUNTY
SCALE IN MILES
FIGURE 1
PROJECT VICINITY MAP
91ST AVE. CHANNEL IMPROVEMENTS
DIBBLE & ASSOCIATES
CONSULTING ENGINEERS
PHOENIX, ARIZONA

information which included a copy of the original SWMM computer run. The most recent available data relevant to the hydrology of the 91st Avenue watershed was obtained by Dibble and Associates, evaluated pertinent to SWMM input parameter development and then compared to the parameters used in the Montgomery report. This data consisted of U.S.G.S. topographic maps, aerial surveys, U.S.D.A. soil survey maps, aerial photographs and the 1987 Peoria Master Land Use Plan.

After carefully developing SWMM input parameters from the above mentioned data, Dibble and Associates discovered discrepancies between the Montgomery report and Dibble's evaluations. These discrepancies were discussed and concurred with in a meeting held on August 31, 1988 that included the Flood Control District, City of Peoria and Dibble and Associates. It was determined at this meeting that the SWMM model should be updated to meet Dibble and Associates findings. Listed below are the major input parameter discrepancies that are updated in this report.

1. Subbasin Width

The width used for each subbasin can substantially effect the peak discharges obtained in the SWMM model, and is to be investigated in greater detail.

2. Percent of Impervious Subbasin Area

Changes in percent impervious affect the peak discharges obtained in the SWMM model to a greater degree than the width factor previously mentioned. Thus, existing and projected development in the watershed is to be examined thoroughly.

3. Retention Basin

The Montgomery report identifies a retention basin site north of Beardsley Road and east of 91st Avenue having the dimensions 800' x 1000' x 2.5'. This detention basin was not incorporated into the SWMM model but was calculated by hand as a storage volume that was subtracted from the total peak flow. Per directions from the City of Peoria, a 50 acre-foot detention basin located near the northeast corner of Beardsley Road and 91st Avenue is to be included in the SWMM model for this study.

III. PROCEDURE, METHODOLOGY AND RESULTS

The E.P.A. Storm Water Management Model is a comprehensive mathematical model developed to simulate urban runoff quantity and quality in storm and combined sewer systems. It was developed in 1969-1971 and has been continually maintained and updated with Version III.3 being utilized in the preparation of this report. The SWMM model simulates real storm events on the basis of rainfall (hyetograph) inputs and system (catchment, conveyance, storage/treatment, and receiving water) descriptions to predict outcomes in the form of quantity and quality values. No quality analysis is required for this project, so the pollutant load and treatment capabilities of the SWMM model were not utilized.

The SWMM program is divided into separate "blocks" that have various capabilities. The blocks used in the preparation of this study are:

1. The Executive Block. This block assigns logical units (disk/tape//drum), determines the block or sequence of blocks to be executed and on call produces graphs of selected results on the line printer.

2. The Runoff Block. This block generates surface runoff based on input rainfall hyetographs, antecedent conditions, land use and topography. The runoff block is capable of routing flows through a storm water conveyance system, using the non-linear reservoir, cascade of conduits method. Flow routing in the runoff block is often used to simulate smaller diameter pipes (less than 30-inches) using trapezoidal conduits called "gutters". This block provides no means for storage routing of the storm.

3. The Transport Block. This block provides flow routing through the sewer system using the kinematic wave, cascade of conduits method. Flow routing in the transport block is used to simulate larger diameter pipes (30 inches or greater) with a variety of (thirteen (13) different) geometrical cross-sections (e.g., circular, rectangular, trapezoid, etc.). This block has an option of using an integral storage model which acts as a transport element and provides storage routing of the storm at one or two separate points within the sewer system. This optional feature routes the flow through the storage unit for each time step based on the continuity equation in a manner analogous to flood routing through a reservoir.

After collection of the most recent data, as listed previously in this report, a thorough field investigation was conducted to determine or confirm existing conditions, boundaries and flow patterns for the contributing drainage basins. Watershed subbasins were delineated on U.S.G.S. contour quadrangle maps, based on the Montgomery report and verified through the field investigations. The 1987 Peoria Master Land Use Plan was used to identify future development within the watershed boundary. It was discovered that two (2) of the original subbasins identified in the Montgomery report needed revision due to new development and flow routing changes. Subbasin 15 (Westbrook Village Golf Course) was eliminated due to field investigations which revealed on-site retention with drainage from impervious areas dumping into lakes and retention basins within the development. Subbasin 19 was reduced in size due to the future drainage system proposed for Bell Road which will intercept runoff from the eastern portion of this subbasin and transport it east to New River. It was determined that an additional contributing subbasin needed to be included in the watershed boundary. Subbasin 20 was added to the drainage basin after field investigations revealed it to contribute runoff directly to the existing channel. Refer to Figure 2 for Drainage Subbasin breakdown.

The 2-year 2-hour storm that was synthetically derived by James M. Montgomery Engineers using nested distributions from rainfall intensity-duration-frequency curves from the City of Phoenix, (Reference 9), was checked and used in the SWMM model prepared for this report. Table 1 lists the rainfall intensity values used to develop the design storm hyetograph. This 2-hour event is consistent with the City of Peoria's current drainage criteria.

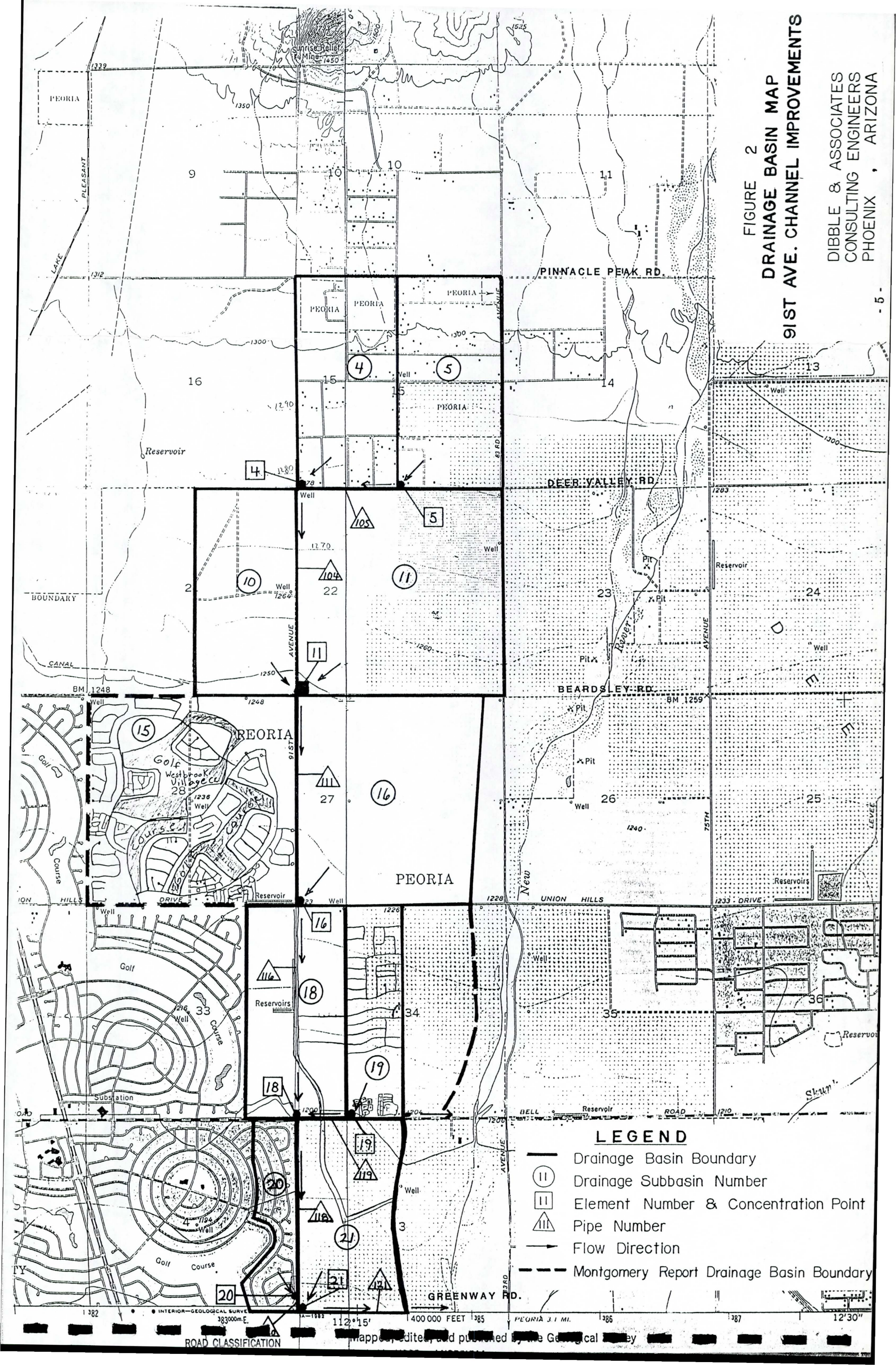

FIGURE 2
DRAINAGE BASIN MAP
91ST AVE. CHANNEL IMPROVEMENTS

DIBBLE & ASSOCIATES
CONSULTING ENGINEERS
PHOENIX, ARIZONA

TABLE 1

2-YEAR 2-HOUR RAINFALL INTENSITY

Time (Minutes)	Rainfall Intensity (Inches Per Hour)	Time (Minutes)	Rainfall Intensity (Inches Per Hour)
5	2.70	65	0.77
10	2.40	70	0.73
15	2.03	75	0.69
20	1.75	80	0.66
25	1.55	85	0.63
30	1.37	90	0.60
35	1.23	95	0.57
40	1.13	100	0.55
45	1.03	105	0.53
50	0.95	110	0.51
55	0.88	115	0.49
60	0.82	120	0.47

Table values derived from curves in Reference 9.

Subbasin width was calculated for future ultimate development of the watershed area, as outlined in the SWMM Manual, pages 4-33 through 4-41 (see Appendix A for calculations). Three (3) different subbasin configurations and flow were used to determine the width as follows:

1. Idealized case where the two sides of the subbasin are symmetrical about the drainage channel. Width = 2 x length of channel.

2. Drainage channel is off center with the two sides of subbasin not symmetrical. A skew factor is computed.

$$S.F. = \frac{A_2 - A_1}{\text{Total Area (Acres)}}$$

A_1 - Area to one side of channel (acres)

A_2 - Area to other side of channel (acres)

$$\text{Width} = (2 - S.F.)L$$

L - Length of Drainage Channel (ft.)

3. The drainage channel runs down one side of the subbasin. In this case the width equals the length of the drainage channel.

For each subbasin a percent impervious was calculated for ultimate development based on the City of Peoria's 1987 Land Use Plan and aerial photos (see Appendix B for calculations). Only impervious areas that are or will be directly connected to the drainage system were used. Impervious areas that contribute to pervious areas are not included in the percent impervious for the subbasin.

Per instructions from the City of Peoria, a 50 acre-foot detention basin is provided at the southwest corner of Subbasin Number 11 (N.E. corner of Beardsley Road and 91st Avenue) and was incorporated in the SWMM model using the transport blocks internal storage option. The detention basin is labeled Element Number 11. A depth - discharge - volume relationship was developed (See Appendix C) and incorporated in the SWMM model as outlined in the SWMM manual pages 6 - 25.

The slope for the overland flow across the subbasins and drainage conveyance system are the same as used in the Montgomery report. These slopes were checked using U.S.G.S. contour maps and field investigations.

The SWMM model uses an integrated form of the following Horton Infiltration Equation:

$$f_p = f_\infty + (f_o - f_\infty)e^{-xt}$$

where f_p = infiltration capacity, inches/hour

f_∞ = minimum or ultimate capacity, inches/hour

f_o = maximum or initial capacity, inches/hour

t = time from beginning of storm

x = decay coefficient

The values for f_∞ and f_o are based on hydrologic soil groups and antecedent conditions. Subbasin soil types were identified from the Soil Survey of Maricopa County, Arizona: Central Part USDA-SCS (Maps and pages 72 - 85). Subbasin soils consisted of three (3) soil series, 1. Loam, 2. Clay Loam, and 3. Clay and two (2) hydrologic groups, 1. B; and 2. D. f_∞ values were derived using a weighted average of percent of each soil group within each subbasin with the corresponding average f_∞ value assigned to each soil group per Table 4-7 of the SWMM Manual, page 4-49. f_o values were derived the same way as the f_∞ values using Table 4-9 Section A - Dry Soils, page 4-53 of the SWMM Manual (see Appendix D for calculations). A value of 0.00115 is used for x per the SWMM Manual, page 4-52 due to the fact that no field data is available relative to this decay coefficient.

Depression storage values of 0.03 inches for impervious areas and 0.10 inches for pervious areas are the same as used in the Montgomery report and are consistent with parameters described in the SWMM Manual.

Mannings Roughness Coefficient values used in the Montgomery report and this report for overland flow on pervious and impervious areas were 0.20 and 0.015 respectively. These values closely coincide with Table 4-5, pages 4-44 of the SWMM Manual. Mannings Roughness coefficient for flows through the pipe network in the transport block was 0.012 for concrete pipe.

Table 2 lists a summary of the varying input parameters discussed above and used in the SWMM model.

TABLE 2

SWMM INPUT PARAMETERS

Subbasin #	Area (Acres)	Width (ft.)	Percent Impervious	Subbasin Slope (ft/ft)	Max. Infiltration f_c in/hr)	Min. Infiltration f_o (in/hr)
4	320.3	14,700	12	.0065	3.0	0.22
5	322.4	13.690	14	.0053	1.8	0.17
10	329.5	13,470	15	.0060	3.0	0.16
11	617.0	17,280	15	.0054	2.3	0.16
16	532.1	15,880	34	.0042	2.0	0.18
18	309.1	10,560	70	.0047	2.0	0.16
19	169.7	5,300	69	.0041	1.5	0.17
20	91.8	8,000	60	.0050	3.0	0.20
21	283.6	11,040	62	.0052	3.0	0.20

In developing the final SWMM model several preliminary runs were made to test the sensitivity of the SWMM program to input parameter changes and to determine runoff from each subbasin separately. After updating input parameter information and modeling a retention basin into the transport block a SWMM model was developed using the same watershed boundary and subbasin size and configuration as the final model used in the Montgomery report. The resulting peak discharges at 91st Avenue and Bell Road and at 91st Avenue and Greenway Road were significantly higher then those of the Montgomery report. A meeting was held between the Flood Control District, City of Peoria, James M. Montgomery Engineers and Dibble and Associates in which it was determined that the main reason for the difference in peak discharge between the two models was the use of the Transport Block for piped storm water conveyance and storage routing of the detention basin in the Dibble model versus the Runoff Block with gutter conveyance and detention basin calculations outside of the model in the Montgomery report. Also contributing to the difference was the updated input parameters used in the Dibble model. Subsequent meetings were held that included various combinations of the Flood Control District, City of Peoria, James M. Montgomery Engineers, Cella Barr Engineers, and Dibble and Associates to determine the final changes and procedures to be used in the updated SWMM model presented in this report (see Appendix E for SWMM Input and Output printout).

Table 3 lists peak discharges from the Montgomery report model and Dibble and Associates final model presented in this report.

TABLE 3

COMPARISON OF SWMM RESULTS

Location	Montgomery Peak Discharge (C.F.S.)	Dibble Peak Discharge (C.F.S.)
91st Avenue and Bell Road	792	743
91st Avenue and Greenway Road	740	771

IV. ANALYSIS OF ALTERNATIVES

The purpose of this study is to determine the most cost-effective storm water conveyance system and route. Two alignments, Alternate A and Alternate B (see Figures 3, 4, 5, 6 and 7) as described below are compared with regard to cost, feasibility, effectiveness and right-of-way ramifications.

> Alternate A - Concrete lined open storm drain channel with a gravel surfaced service road adjacent to the alignment. The route of this alternate shall closely follow the existing channel along the section line as shown in Figure 3. Two different channel configurations, (A1 - 2:1 side slopes with 6' chain link fence; A2 - 4:1 side slopes, no fence) are analyzed along this alignment to determine the most cost effective and safe conveyance system for this alternate.

> Alternate B - Combination subsurface closed storm drain and open drainage channel system with catch basin collection points along the 91st Avenue roadway. This alternate is routed along the center of the 91st Avenue roadway alignment from Bell Road to Greenway Road then east along Greenway Road to New River as shown in Figure 4.

The beginning invert for both the channel and the box culvert was obtained from Cella Barr Associates Engineers. Cella Barr Associates are designing the storm drain system for Bell Road and were consulted in the preparation of this study report.

Both the channel and the box culvert were sized to carry the 743 cfs and the 771 cfs flows, calculated using the SWMM model as presented earlier in this report. The channel was sized to provide a minimum 1½' freeboard. The box culvert was designed to transport the 743 cfs without producing pressure flow. The channel and box culvert were then aligned horizontally and vertically to determine estimates of construction costs for the two alternate routes. Preliminary cost estimates for the three storm water conveyance systems are presented in Tables 4, 5 and 6. A list comparing the preliminary project costs for each Alternative is shown below.

	ALTERNATE	ESTIMATED COST
1.	A1 (Channel with 2:1 side slopes)	$2,605,250
2.	A2 (Channel with 4:1 side slopes)	$3,582,500
3.	Reinforced Concrete Box Culvert	$6,722,900

TABLE 4

FLOOD CONTROL DISTRICT OF MARICOPA COUNTY
AND THE CITY OF PEORIA

91ST AVENUE CHANNEL IMPROVEMENTS

ALTERNATE A1

GUNITE CHANNEL WITH 2:1 SIDE SLOPES

PRELIMINARY COST ESTIMATE

DESCRIPTION	QUANTITY	UNIT	UNIT COST	TOTAL
CLEARING & GRUBBING	1	LUMP SUM	$14,500	$14,500
TREE REMOVAL	265	EACH	50	13,250
EARTHWORK	70,000	C.Y.	3.00	210,000
GUNITE	46,000	S.Y.	20.00	920,000
CHAIN LINK FENCE	12,500	L.F.	10.00	125,000
CONCRETE BOX CULVERT	667	C.Y.	250	166,750
OUTLET PROTECTION	667	C.Y.	75	50,025
	SUBTOTAL			$1,499,525
	CONTINGENCY			224,475
	CONSTRUCTION TOTAL			$1,724,000

RIGHT OF WAY COSTS

INDUSTRIAL LAND	7.05	ACRES	125,000	$881,250
	RIGHT OF WAY TOTAL			$881,250

PROJECT TOTAL
EXCL ADMIN & CONSTR ENGR $2,605,250

TABLE 5

FLOOD CONTROL DISTRICT OF MARICOPA COUNTY
AND THE CITY OF PEORIA

91ST AVENUE CHANNEL IMPROVEMENTS

ALTERNATE A2

GUNITE CHANNEL WITH 4:1 SIDE SLOPES

PRELIMINARY COST ESTIMATE

DESCRIPTION	QUANTITY	UNIT	UNIT COST	TOTAL
CLEARING & GRUBBING	1	LUMP SUM	$20,000	$20,000
TREE REMOVAL	400	EACH	50	20,000
EARTHWORK	100,000	C.Y.	3.00	300,000
GUNITE	60,000	S.Y.	20.00	1,200,000
CONCRETE BOX CULVERT	667	C.Y.	250	166,750
OUTLET PROTECTION	667	C.Y.	75	50,025
	SUBTOTAL			$1,756,775
	CONTINGENCY			263,225
	CONSTRUCTION TOTAL			$2,020,000

RIGHT OF WAY COSTS

INDUSTRIAL LAND	12.50	ACRES	125,000	$1,562,500
	RIGHT OF WAY TOTAL			$1,562,500

PROJECT TOTAL EXCL ADMIN & CONSTR ENGR	$3,582,500

TABLE 6

FLOOD CONTROL DISTRICT OF MARICOPA COUNTY
AND THE CITY OF PEORIA

91ST AVENUE CHANNEL IMPROVEMENTS

ALTERNATE B

REINFORCED CONCRETE BOX CULVERT & CHANNEL

PRELIMINARY COST ESTIMATE

DESCRIPTION	QUANTITY	UNIT	UNIT COST	TOTAL
CLEARING & GRUBBING	1	LUMP SUM	$50,000	$50,000
TREE REMOVAL	265	EACH	75	19,875
PAVEMENT REPLACEMENT	4,000	S.Y.	20.00	80,000
CURB & GUTTER	1,920	L.F.	7.50	14,400
SIDEWALK	9,600	S.F.	2.50	24,000
TYPE 'N' CATCH BASINS PHX STD DET P-1570 (200' SPACING)	23	EACH	2,500	57,500
UTILITY RELOCATION	1	LUMP SUM	20,000	20,000
EARTHWORK	143,000	C.Y.	3.00	429,000
GUNITE	31,000	S.Y.	20.00	620,000
CONCRETE BOX CULVERT	16,390	C.Y.	250	4,097,500
OUTLET PROTECTION	667	C.Y.	75	50,025
	SUBTOTAL			$5,462,300
	CONTINGENCY			819,350
	CONSTRUCTION TOTAL			$6,281,650
RIGHT OF WAY COSTS				
INDUSTRIAL LAND	3.53	ACRES	125,000	$441,250
	RIGHT OF WAY TOTAL			$441,250
	PROJECT TOTAL EXCL ADMIN & CONSTR ENGR			$6,722,900

TABLE 7

FLOOD CONTROL DISTRICT OF MARICOPA COUNTY

CITY OF PEORIA

91ST AVENUE CHANNEL IMPROVEMENTS

ALTERNATE A1

RIGHT OF WAY REQUIREMENTS

ASSESSOR PARCEL #	LENGTH		WIDTH	AREA	
200-54-15E	1421 '	X	40 '	56,840 SF	
200-54-10E	1252 '	X	40 '	50,080 SF	
	1644 '	X	60 '	98,640 SF	
					148,720 SF
200-54-10F	475 '	X	60 '	28,500 SF	
	530 '	X	20 '	10,600 SF	
					39,100 SF
200-54-9D	2491 '	X	20 '	49,820 SF	
87TH AVE	80 '	X	20 '	1,600 SF	
200-54-12G	291 '	X	20 '	5,820 SF	
200-54-12J	270 '	X	20 '	5,400 SF	
				307,300 SF	
				7.05 AC	

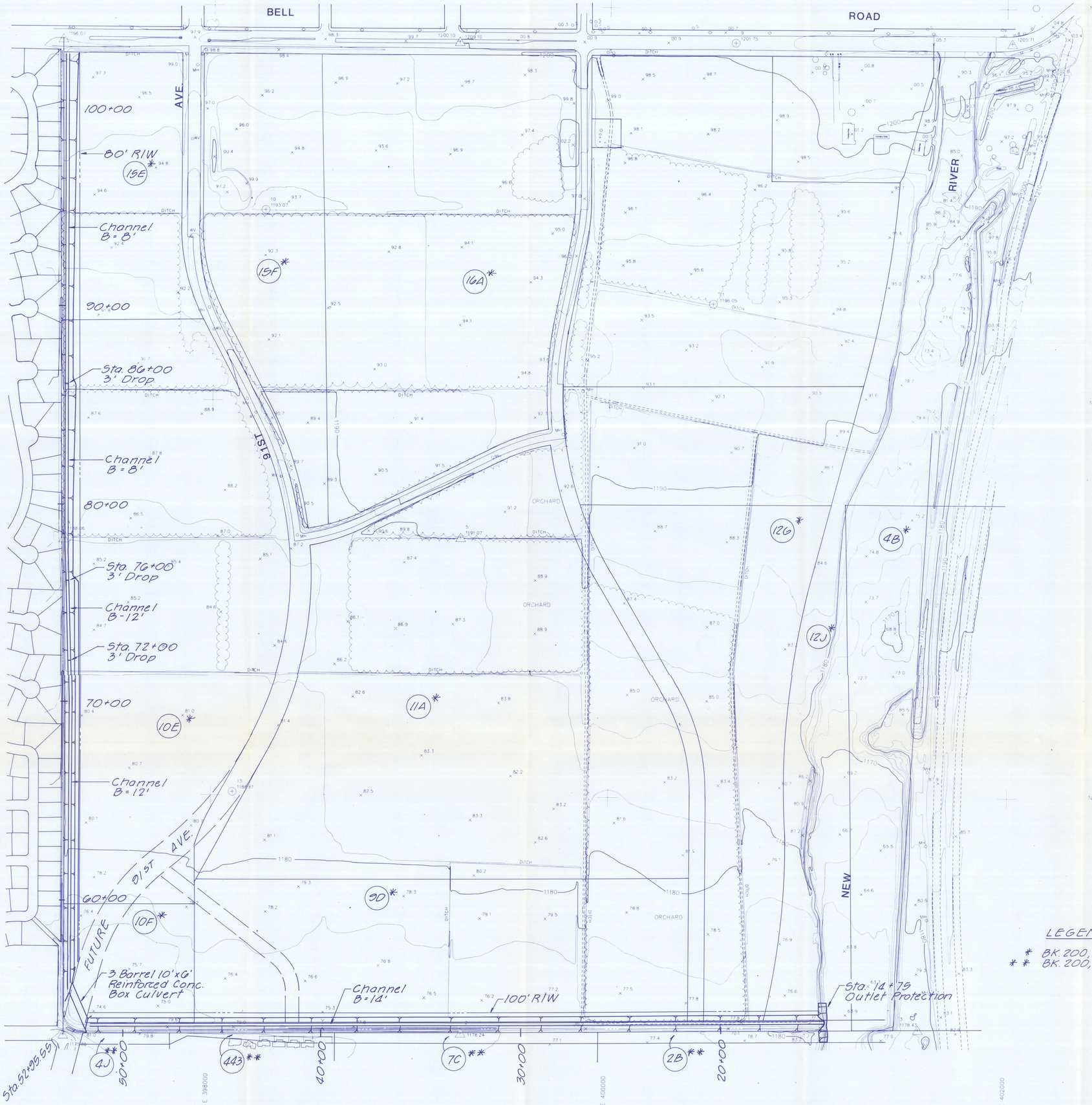

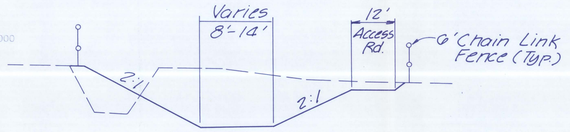

TYPICAL SECTION
GUNITE CHANNEL
ALTERNATE A1

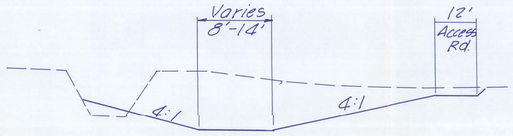

TYPICAL SECTION
GUNITE CHANNEL
ALTERNATE A2

LEGEND

* BK. 200, Map 54
** BK. 200, Map 61

FLOOD CONTROL DIST.
RECEIVED
MAR 20 1989

FIGURE 3
ALTERNATE A PLAN

91ST AVE. CHANNEL IMPROVEMENTS

DIBBLE & ASSOCIATES
CONSULTING ENGINEERS
PHOENIX, ARIZONA

0 100' 200' 400'

JOB NO. 880412

KENNEY AERIAL MAPPING INC.

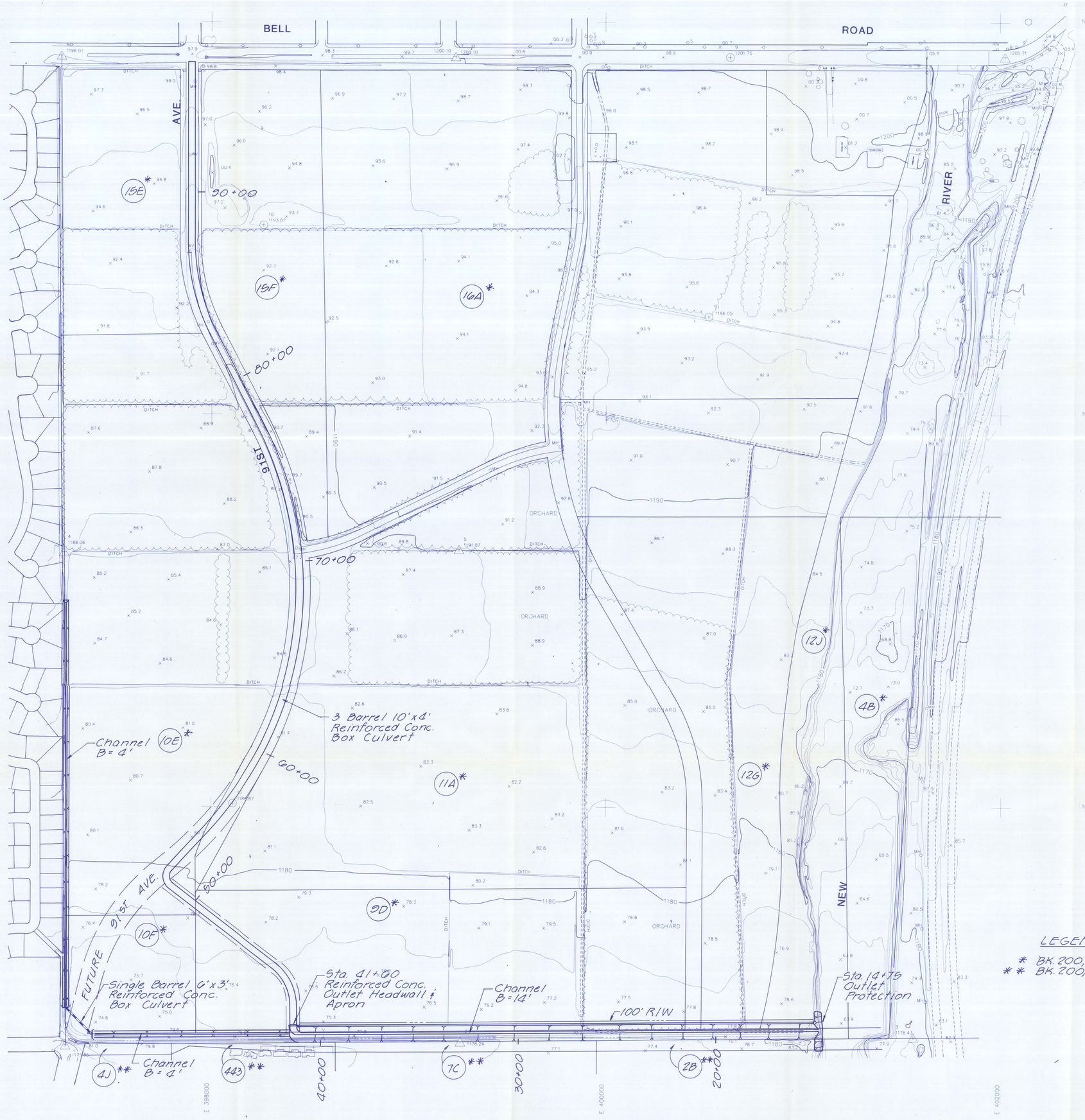

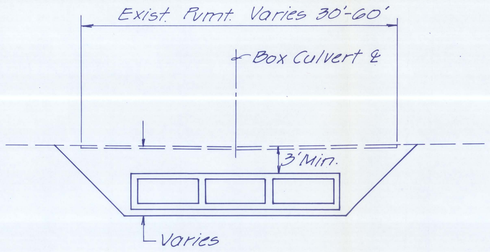

TYPICAL SECTION
3 BARREL 10'x4' BOX CULVERT
ALTERNATE B

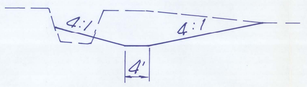

TYPICAL SECTION
GUNITE CHANNEL B-4'

LEGEND

* BK. 200, Map 64
** BK. 200, Map 61

FLOOD CONTROL DISTRICT
RECEIVED
MAR 20 1989
CH. ENG. | P & PM
DEP. | HYDRO
FORMEN | LANDS
FOREMAN | FILE
C & S
ENGR.
REMARKS

FIGURE 4
ALTERNATE B PLAN

91ST AVE. CHANNEL IMPROVEMENTS

DIBBLE & ASSOCIATES
CONSULTING ENGINEERS
PHOENIX, ARIZONA

0 100' 200' 400'

JOB NO. 880412

KENNEY AERIAL MAPPING INC.
PHOENIX - ARIZONA

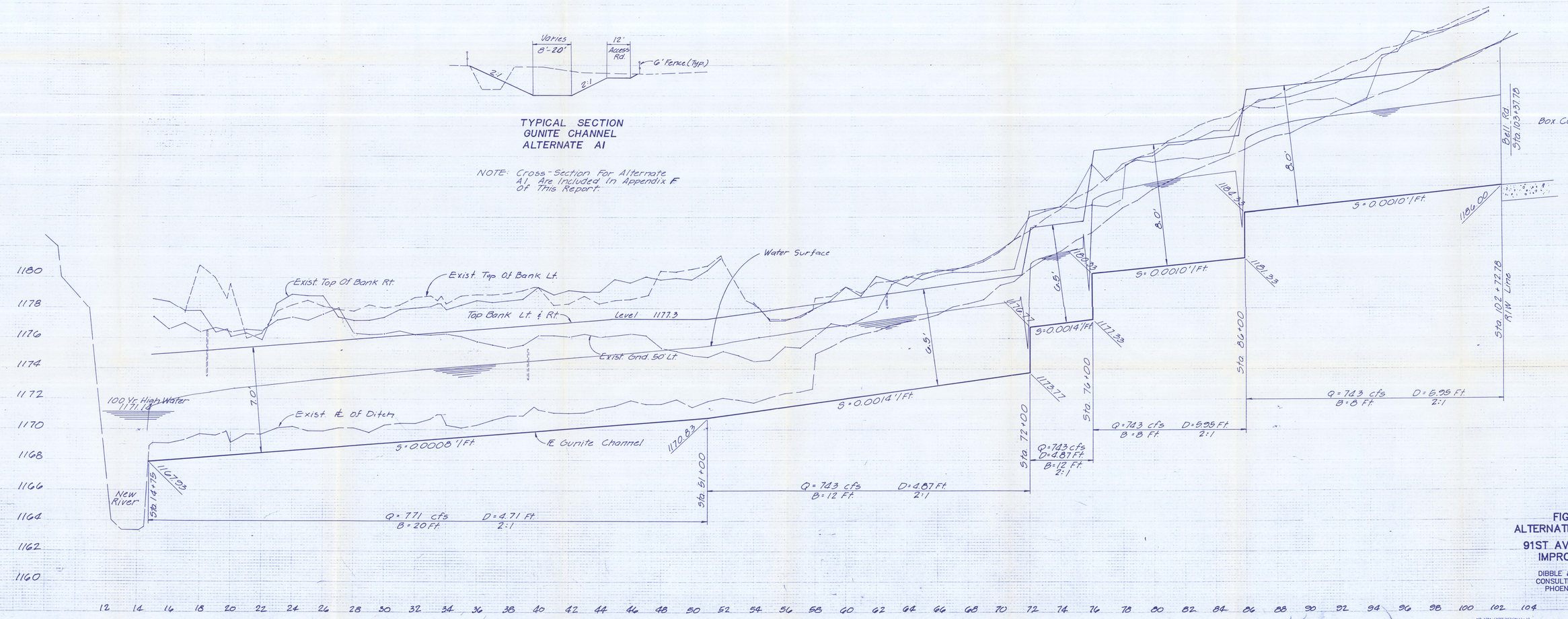

FIGURE 5
ALTERNATE AI PROFILE
91ST AVE. CHANNEL IMPROVEMENTS

DIBBLE & ASSOCIATES
CONSULTING ENGINEERS
PHOENIX, ARIZONA

MAR 20 1990

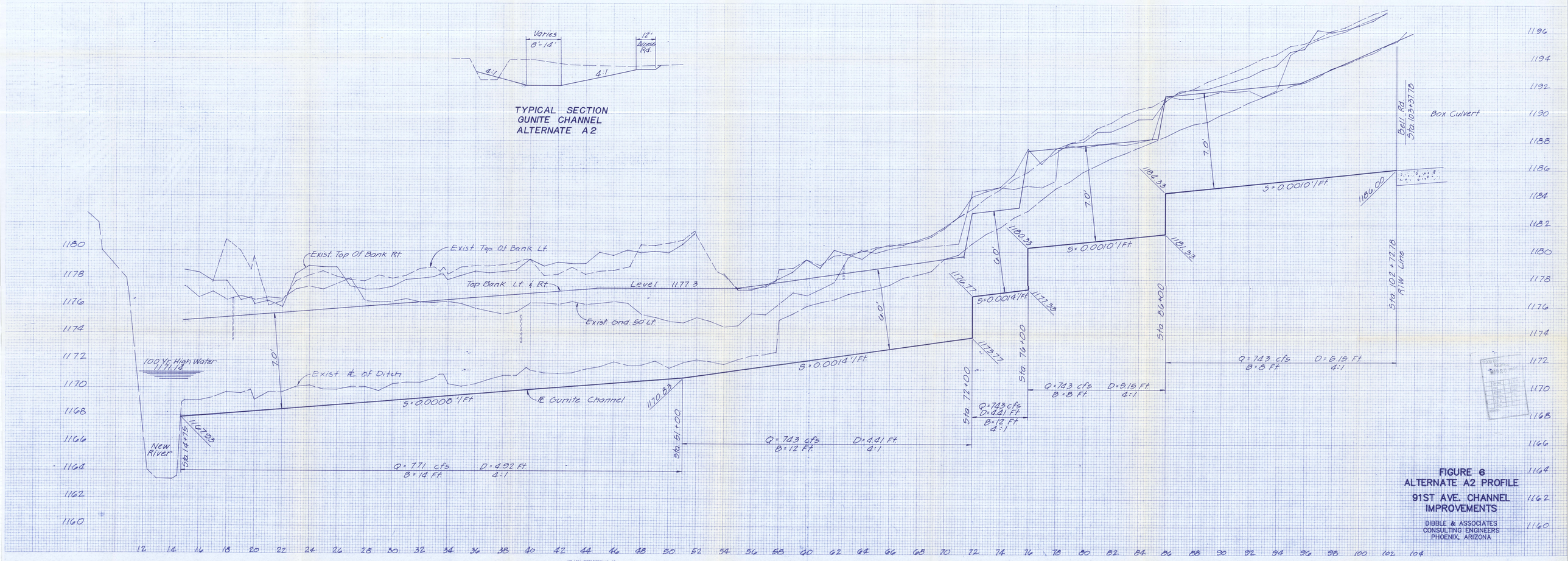

FIGURE 6
ALTERNATE A2 PROFILE
91ST AVE. CHANNEL IMPROVEMENTS

DIBBLE & ASSOCIATES
CONSULTING ENGINEERS
PHOENIX, ARIZONA

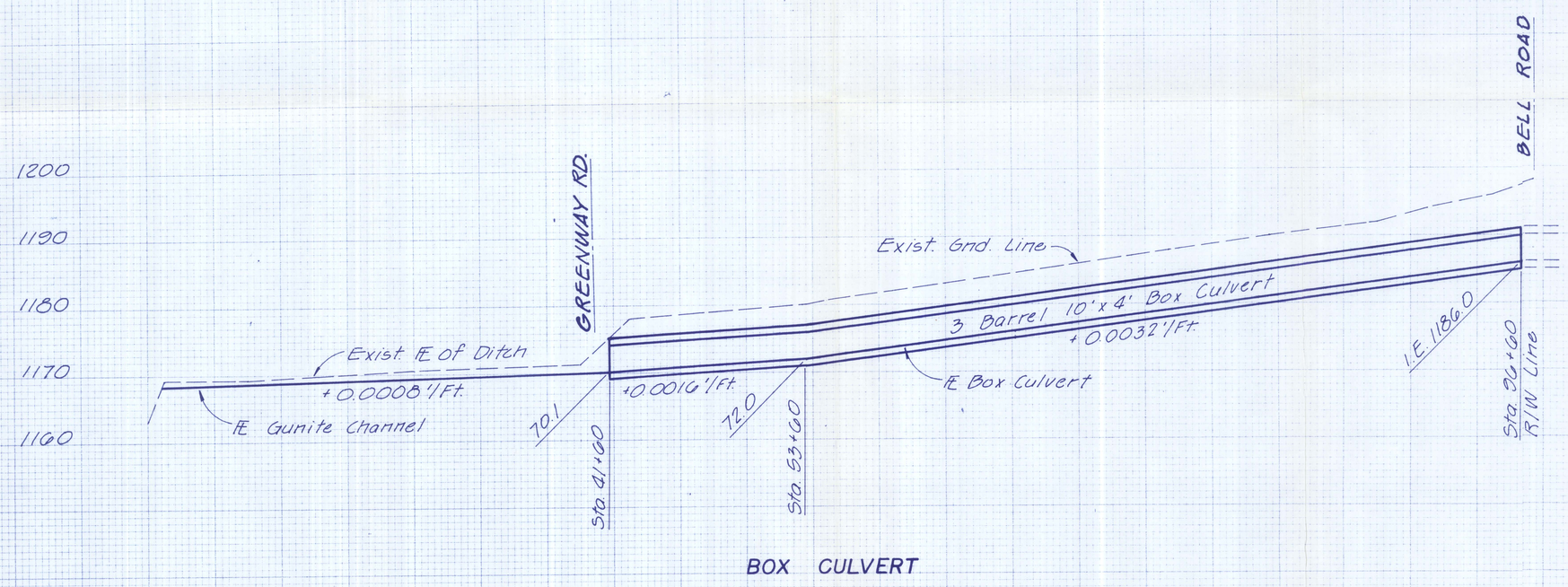

BOX CULVERT

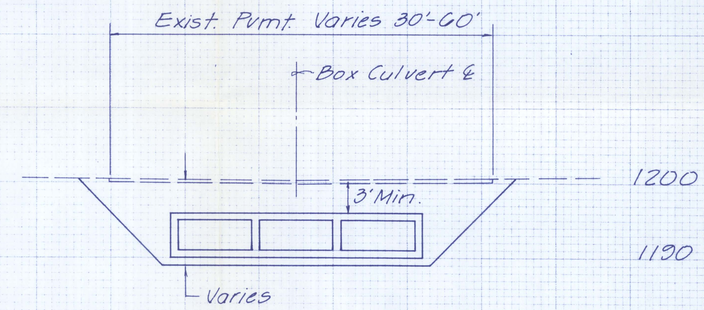

TYPICAL SECTION
3 BARREL 10'x4' BOX CULVERT

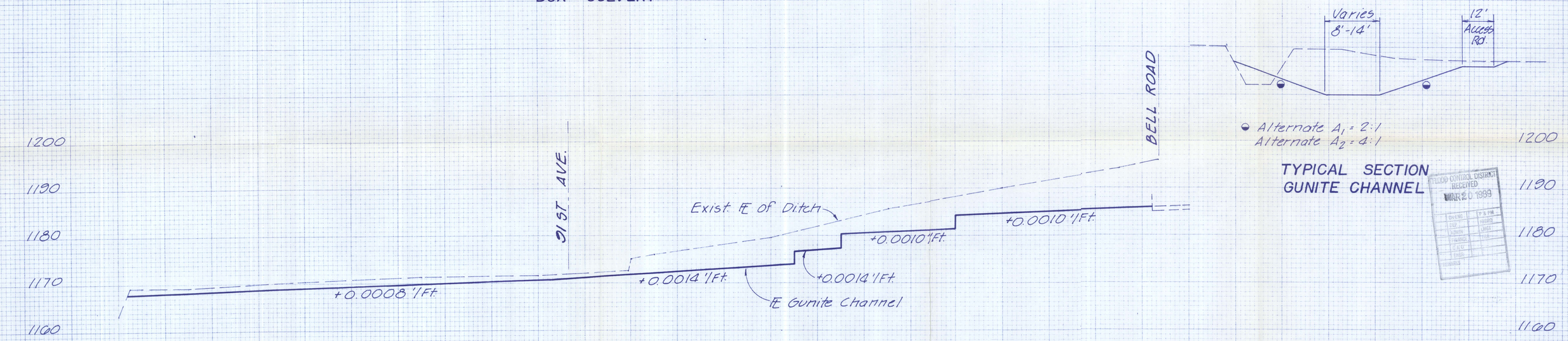

GUNITE CHANNEL

TYPICAL SECTION
GUNITE CHANNEL

FLOOD CONTROL DISTRICT
RECEIVED
MAR 20 1989
DRAWING NO. | P & PM
DATE | 10/20
SCALE | UNIT
DRAWN | J.F.
CHKD.
E. CHKD.
APPROVED

Scale: 1" = 400' Horiz.
= 10' Vert.

FIGURE 7
ALTERNATE A & B PROFILES

91ST AVE. CHANNEL
IMPROVEMENTS

DIBBLE & ASSOCIATES
CONSULTING ENGINEERS
PHOENIX, ARIZONA

NO. 1294—CROSS SECTION 10 x 10
"CLEARPRINT PAPER CO."
MADE IN U.S.A.

APPENDIX B

SWMM Subbasin % Impervious Calculations and Charts

DIBBLE & ASSOCIATES

CONSULTING ENGINEERS

CALC JVG DATE 9/23/88 update 1/11/89 TITLE 91st Ave Channel Improvements JOB 8806

CHKD DATE % Impervious Calculations SHT 1 OF 7

SWMM Manual pg 91 - Impervious areas that are not hydraulically (directly) connected to the drainage system are not to be designated as impervious in the model.

Subbasin #4

Land use - Low density residential. The majority of the existing lots are 1 acre parcels which are RE-43 to RE-35 zoning. City of Phoenix charts show 15% impervious for this zoning with 8.8% of the area being roadways. This 8.8% is directly connected to the drainage system. 15% - 8.8% = 6.2% (non roadway)

See sheet 2 for drawing of a typical lot for this zoning →

The driveway & 1/4 of the rooftop drain directly to the street and are hydraulically connected to the drainage system. For the typical lot this area is approximatly 1/2 of the impervious area left after subtracting out the streets. (1/2 x 6.2%)

Subbasin #4 % imp = 8.8% + (1/2 x 6.2%) = 11.9%

USE 12%

DIBBLE & ASSOCIATES

CONSULTING ENGINEERS

CALC J.V.G. DATE 9/23/88 update 1/11/89 TITLE 91st Ave Channel Improvements JOB 8806

CHKD ..... DATE ..... % Imp. Calcs. SHT 2 OF 7

RE-43, RE 35 Zoning $\sqrt{43,560} = 208.71$

Roof ≈ 50'x50' (2500 ft²) - Typical house

Check C.O.P. % Impervious Area

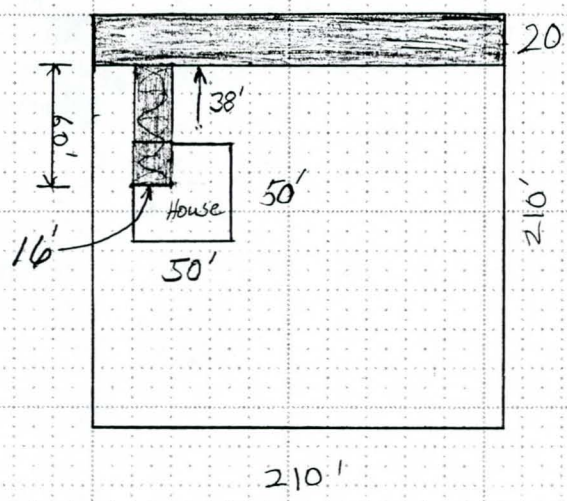

Lot 210 x 210 = 44,100 ft²

Roadway 20'x210 = 4200 ft²

House & D/W (16'x38')+(50x50) ≈ 3108 ft²

} 7308 use 7300

7300 ÷ 44,100 = 16.5% ≈ 15% by COP charts

(Roadway) 4200 ÷ 44,100 = 9.5% ≈ 8.8% " " "

% directly connected to drainage system (Shaded)

(20' x 210') + (16' x 60') = 11.7%
Road D/W & Roof

use 12% checks with previous sheet

Subbasin #5

Land use - Low Density Residential. This area is similar to #4 but existing development in the southern half contains lots that are ½ Acre, and the northern half contains lots that are 1 Acre, ½ Acre - (RE-43) 1 Acre - (RE-24)

Ave % Imp. = (15% + 18%)/2 = 16.5%

Ave % Rdwy = (8.8% + 11.4%)/2 = 10.1%

16.5% - 10.1% = 6.4% (Driveways & Rooftops)

Total % Imp = 10.1% + (½ × 6.4%) = 13.3%

USE 14%

Subbasins 10 & 11

Land use - Low Density Residential. These two areas have no development on them at this time. The Land use plan shows increasing density as you move from the North to the South of the watershed. These areas will be similar to #5 in development with a slightly higher density thus a slighty higher % impervious

USE 15%

Subbasin #16

Land use - (1) 42% High Density Residential, (2) 37% Low Density Residential, (3) 1% Community Comercial (4) 20% Parks or Golf Course.

		% Impervious
1. R-3	= 42% of Area	60%
2. R1-8	= 37% of Area	25%
3. CO	= 1% of Area	75%
4. Parks	= 20% of Area	0%

Directly connected to Drainage system

1. 21.3% is roadway and the remaining imperv. area is connected to roadway - (High Density)
2. 18.3% is roadway 25% - 18.3% = 6.7%
   18.3% + (½ x 6.7%) = 21.6%
3. All this area is connected 75%
4. None of this area is connected

$$100\%\ y = (42\% \times 60\%) + (21.6\% \times 37\%) + (1\% \times 75\%)$$

$$y = 33.9\%$$ impervious

USE 34%

Subbasin #18

Land use - 62% of area High Density Residential (R-3), 38% of area Community Comercial (C-3). Both of these zonings are considered directly connected to the drainage system. $(38\% \times 85\%) + (62\% \times 60\%) = 100\% \, y$

$y = 69.5\%$ impervious USE 70%

Subbasin #19

Land use - 65% High Density Residential (R-3), 35% Community Comercial (C-3). Partial development reflects this land use plan.

$(35\% \times 85\%) + (65\% \times 60\%) = 100\% \, y$

$y = 68.75\%$ USE 69%

Subbasin #21

Land use - 33% Low Density Residential (R1-18 to RE24), 67% Community Comercial (C-3). Low Density Residential has an average of 12% Roadway. $18\% - 12\% = 6\% \rightarrow 12\% + (6\%/15) = 16$

$100\% \, y = (33\% \times 16\%) + (67\% \times 85\%)$

$y = 62.2\%$ Imp. USE 62%

Subbasin #20

Land use is High Density Residential (R-3)

Use 60%

ZONING TYPES		% IMPERVIOUS
RE-43	Single Family Res. 43560 S. F. Lots Minimum /Acre	15.
RE-35	" " " 35000 S. F. Lots Minimum	15.
RE-24	" " " 24000 S. F. Lots Minimum ≈ ½ Acre	18.
RI-18	" " " 18000 S. F. Lots Minimum	18.
RI-14	" " " 14000 S. F. Lots Minimum ≈ 1/3 Acre	20.
RI-10	" " " 10000 S. F. Lots Minimum ≈ 1/4 Acre	25.
RI-8	" " " 8000 S. F. Lots Minimum	25.
RI-6	" " " 6000 S. F. Lots Minimum ≈ 1/6 Acre	25.
R-3	Multi-Family Res. 1-Unit For Each 3000 S. F.	60.
R-4	" " " " " " 1500 S. F.	65.
R-4A	" " " " " " 1000 S. F.	70.
R-5	" " " " " " 1000 S. F.	70.
C-0	Commericial Office District - Restricted Commercial	75.
HR	High Rise District	90.
PSC	Planned Shopping Center	90.
C-1	Neighborhood Commercial	85.
C-2	Intermediate Commercial	85.
C-3	General Commercial	85.
P-1	Parking (Open)	85.
P-2	Parking (Structures	85.
IND. PARK	Industrial Park	75.
A-1	Light Industrial	75.
A-2	Heavy Industrial	75.
P.A.D.	Planned Area Development	85.
D.G.	Dwelling Group	85.
RIGHT OF WAY (R.O.W.)		100.

TABLE 2. Runoff Curve Numbers for Hydrologic Soil-Cover Complexes
(Antecedent Moisture Condition II, and $I_a = 0.2\ S$)

Land Use Description/Treatment/Hydrologic Condition			Hydrologic Soil Group A	B	C	D
Residential:[1/]						
Average lot size	Average % Impervious[2/]					
1/8 acre or less	65		77	85	90	92
1/4 acre	38		61	75	83	87
1/3 acre	30		57	72	81	86
1/2 acre	25		54	70	80	85
1 acre	20		51	68	79	84
Paved parking lots, roofs, driveways, etc.[3/]			98	98	98	98
Streets and roads:						
paved with curbs and storm sewers[3/]			98	98	98	98
gravel			76	85	89	91
dirt			72	82	87	89
Commercial and business areas (85% impervious)			89	92	94	95
Industrial districts (72% impervious)			81	88	91	93
Open Spaces, lawns, parks, golf courses, cemeteries, etc.						
good condition: grass cover on 75% or more of the area			39	61	74	80
fair condition: grass cover on 50% to 75% of the area			49	69	79	84
Fallow	Straight row	---	77	86	91	94
Row crops	Straight row	Poor	72	81	88	91
	Straight row	Good	67	78	85	89
	Contoured	Poor	70	79	84	88
	Contoured	Good	65	75	82	86
	Contoured & terraced	Poor	66	74	80	82
	Contoured & terraced	Good	62	71	78	81
Small grain	Straight row	Poor	65	76	84	88
		Good	63	75	83	87
	Contoured	Poor	63	74	82	85
		Good	61	73	81	84
	Contoured & terraced	Poor	61	72	79	82
		Good	59	70	78	81
Close -seeded legumes[4/] or rotation meadow	Straight row	Poor	66	77	85	89
	Straight row	Good	58	72	81	85
	Contoured	Poor	64	75	83	85
	Contoured	Good	55	69	78	83
	Contoured & terraced	Poor	63	73	80	83
	Contoured & terraced	Good	51	67	76	80
Pasture or range		Poor	68	79	86	89
		Fair	49	69	79	84
		Good	39	61	74	80
	Contoured	Poor	47	67	81	88
	Contoured	Fair	25	59	75	83
	Contoured	Good	6	35	70	79
Meadow		Good	30	58	71	78
Woods or Forest land		Poor	45	66	77	83
		Fair	36	60	73	79
		Good	25	55	70	77
Farmsteads		---	59	74	82	86

1/ Curve numbers are computed assuming the runoff from the house and driveway is directed towards the street with a minimum of roof water directed to lawns where additional infiltration could occur.

2/ The remaining pervious areas (lawn) are considered to be in good pasture condition for these curve numbers.

3/ In some warmer climates of the country a curve number of 95 may be used.

4/ Close -drilled or broadcast.

APPENDIX C

SWMM Detention Basin Calculations

DIBBLE & ASSOCIATES

CONSULTING ENGINEERS

CALC JUG DATE 9/19/88 TITLE 91st Ave Channel Improvements JOB 8806

CHKD ..... DATE ..... Detention Basin SHT 1 OF 2

Per telephone conversation w/ Judy Musgrove - City of Peoria one of two developers will be required to provide 50 Acre-ft of detention storage located near S.W. Corner of Section 22.

Subbasin #	Peak Flow (C.F.S.) *	Total Loads (Acre ft) *
4	104.0	2.98
5	115.2	4.52
10	311.4	11.46
11		

Total (2-year 2-hr) = 18.96 < 50 OK

For simplification assume a square detention basin and 3' max depth with 0.5' freeboard. 4:1 Side slopes

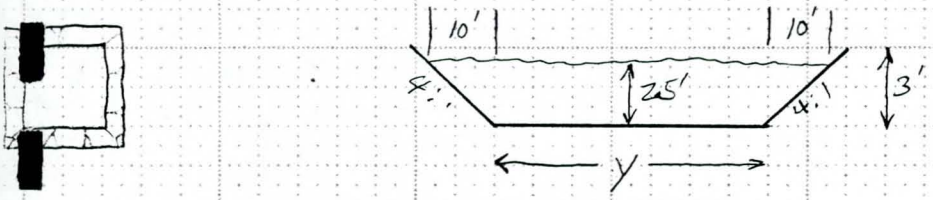

capacity = 50 Acre ft.

= 2,178,000 ft³

$$(2.5)(y^2) + \tfrac{1}{2}(10')(2.5')[(4)(y+5')] = 2{,}178{,}000\ ft^3$$

$$2.5y^2 + (12.5)(4y+20) = 2{,}178{,}000\ ft^3$$

$$2.5y^2 + 50y + 32.5 = 2{,}178{,}000$$

$$y^2 + 20y + 13 = 871{,}200$$

$$y^2 + 20y = 871{,}187$$

$$y = 923.4276' \quad \text{use } 925'$$

* From SWMM Run Output

DIBBLE & ASSOCIATES

CONSULTING ENGINEERS

CALC JVG DATE 9/19/88 TITLE 91st Ave Channel JOB 8806

CHKD ..... DATE ..... Detention Basin SHT 2 OF 2

Chapter 9

SWMM Manual Pg 420-424 & Urban Stormwater Management Report No 49

n	Elevation h *	Depth y	Surface Area	Discharge C.F.S.	Volume ft^3
1	1240	0		0	0
2	1240.25	0.25		0.5	214,369
3	1240.5	0.5		1.1	429,664.5
4	1240.75	0.75		2.9	645,888
5	1241	1.0		4.7	863,041
6	1241.25	1.25		6.5	1,081,125
7	1241.5	1.5		8.3	1,300,141.5
8	1241.75	1.75		10.1	1,520,092
9	1242	2.0		12.0	1,740,978
10	1242.25	2.25		14.0	1,962,801
11	1242.5	2.50		15.1	2,185,562.5

* Elevations are very rough Estimates

$$\text{Volume} = (925')^2 y + (y)(4y)(1/2)\left[(4y/2 + 925)(4)\right]$$

$$= 855625\,y + 2y^2(8y + 3700)$$

$$= 16y^3 + 7400y^2 + 855625\,y$$

Discharge - Hydraulic Design of Highway Culverts U.S.D.O.T. FHA Pg. 181

General - Urban Storm Water Management Special Report #49 American Public Works Administration

APPENDIX D

SWMM Subbasin Maximum and Minimum
Infiltration Rates Calculations

DIBBLE & ASSOCIATES

CONSULTING ENGINEERS

CALC JNG DATE 9/24/88 TITLE 91st Ave Channel Improvements JOB 8806

CHKD ..... DATE ..... Max & Min Infiltration Rates SHT 1 OF 4

Reference: Soil Survey of Maricopa County, Ariz. Central Part USDA-SCS Pg (72-85)

Subbasin #	Soil Series	Hydrologic Group	% of Subbasin
4	LcA (Loam)	B	
	Mr (Clay Loam)	B	
	Mp " "	B	
	PT (Loam)	D	0.42
	Tu "	B	
5	Mr (Clay Loam)	B	
	Vf (Clay)	D	16.9
	GN (Loam)	B	
10	LcA (Loam)	B	
	PT "	D	22.2
	Te (Clay Loam)	B	
	Mp " "	B	
	GxA (Loam)	B	
11	LcA (Loam)	B	
	Mr (Clay loam)	B	
	Vf (Clay)	D	12.7
	Tw (Loam)	B	
	Tg (Clay Loam)	B	
	Te " "	B	
	Th " "	B	
	Tu (Loam)	B	
	Mp (Clay Loam)	B	
	GxA (Loam)	B	
16	Mr (Clay Loam)	B	
	LcA (Loam)	B	
	GxA "	B	
	Mp (Clay Loam)	B	
	Vf (Clay)	D	0.60
	Th (Clay Loam)	B	

DIBBLE & ASSOCIATES

CONSULTING ENGINEERS

CALC JVG DATE 9/24/88 TITLE 91st Ave Channel Improvements JOB 8806

CHKD DATE Max & Min Infiltration Rates SHT 2 OF 4

Subbasin #	Soil Series	Hydrologic Group	% of Subbasin
18	Mr (clay Loam)	B	
	LcA (Loam)	B	
	GxA "	B	
	Ve (Clay)	D	4.10
	PT (Loam)	D	5.90
	Mp (Clay Loam)	B	
	RbA (Loam)	B	
	PeA "	B	
	Th (clay Loam)	B	
	Ms " "	B	
19	Mr (Clay Loam)	B	
	Mp " "	B	
	Es (Loam)	B	
	Vt (clay)	D	1.79
	Tg (clay Loam)	B	
	GxA (Loam)	B	
21 & 20	LcA (Loam)	B	
	Mr (clay Loam)	B	
	Tw (Loam)	B	
	Th (clay Loam)	B	
	Le (Loam)	B	
	PeA "	B	
	RbA "	B	

Min Rates per Soil Group - SWMM Manual Pg 4-49

Group B 0.30 - 0.15 use Ave (or weighted) - 0.225 varies in/hr

Group D 0.05 - 0.0 use Ave (or weighted) - 0.025 varies in/hr

Max Rates per Soil Series - SWMM Manual Pg 4-53

Loam Soils - 3 in/hr

Clay Soils - 1 in/hr

Subbasin #4
Predominantly B Loam - 0.42% D Loam

Min → $100y = (95.58 \times 0.225) + (0.42 \times 0.025)$
$y = 0.215$ use 0.22 in/hr

Max → Very small amount of clay use 3 in/hr (all Loam)

Subbasin #5
Predominantly B Clay Loam - 16.9% D clay

Min → $100y = (83.1 \times 0.18) + (16.9)(.01)$
$y = 0.169$ Use 0.17 in/hr

Max → $100y = (83.1 \times 2) + (16.9 \times 1)$
$y = 1.83$ Use 1.8 in/hr

Subbasin #10
Predominantly B Loam 22.2% D Loam

Min → $100y = (77.8 \times 0.20) + (22.2 \times .025)$
$y = 0.161$ Use 0.16 in/hr

Max → Very small amount of clay Use 3.0 in/hr

Subbasin #11
Predominantly B Loam & Clay Loam 12.7% D Clay

Min → $100y = (87.3 \times 0.18) + (12.7 \times .01)$
$y = 0.158$ Use 0.16 in/hr

Max → $100y = (87.3 \times 2.5) + (12.7 \times 1)$
$y = 2.31$ Use 2.3 in/hr

DIBBLE & ASSOCIATES

CONSULTING ENGINEERS

CALC JVG DATE 9/24/88 TITLE 91st Ave Channel Improvements JOB 8806

CHKD ..... DATE ..... Max & Min Infiltration Rates SHT 4 OF 4

Subbasin #16

Predominantly B clay Loam, Loam 0.60 % D clay

Min → $100y = (99.4 \times 0.18) + (0.6 \times .01)$

$y = 0.179$ Use 0.18 in/hr

Max → $100y = (99.4 \times 2) + (0.6 \times 1)$

$y = 1.99$ Use 2.0 in/hr

Subbasin #18

Predominantly B clay-Loam, Loam 4.1% D clay 5.9% D Loam

Min → $100y = (90 \times 0.18) + (4.1 \times .01) + (5.9 \times .025)$

$y = 0.164$ Use 0.16 in/hr

Max → $100y = (90 \times 2) + (4.1 \times 1) + (5.9 \times 3)$

$y = 2.01$ Use 2.0 in/hr

Subbasin #19

Predominantly B clay Loam 1.79% D clay

Min → $100y = (98.21 \times 0.17) + (1.79 \times .01)$

$y = 0.167$ Use 0.17 in/hr

Max → $100y = (98.21 \times 1.5) + (1.79 \times 1)$

$y = 1.49$ Use 1.5 in/hr

Subbasin #21 & #20

Predominantly B Loam, Clay Loam No D

Min → Use 0.20 in/hr

Max → Use 3.0 in/hr

APPENDIX E

SWMM Computer Model Input and Output

```
   0   8   8   9   9  10
   1   2
RUNOFF
A1      91st AVE. CHANNEL IMPROVEMENTS - STUDY PHASE
A1      2-YEAR 2-HOUR STORM ULTIMATE CONDITIONS
B1  0 0  0    1    0    0    0
B2     120    5   25
E1      24    5
E2    0.04 0.11 0.11 0.12 0.17 0.18 0.19 0.24 0.40 0.76
E2    1.30 2.70 2.10 0.90 0.47 0.42 0.23 0.18 0.17 0.17
E2    0.12 0.11 0.11 0.04
G2
H1      -2                              .015       .03  .10                .00115
H1  1    4    414700320.3   12.0065        .20            3.0  .22
H1  1    5    513690322.4   14.0053        .20            1.8  .17
H1  1   10   1113470329.5   15.0060        .20            3.0  .16
H1  1   11   1117280617.0   15.0054        .20            2.3  .16
H1  1   16   1615880532.1   34.0042        .20            2.0  .18
H1  1   18   1810560309.1   70.0047        .20            2.0  .16
H1  1   19   19 5300169.7   69.0041        .20            1.5  .17
H1  1   20   20 8000 91.8   60.0050        .20            3.0  .20
H1  1   21   2111040283.6   62.0052        .20            3.0  .20
H2
M1  8    1
M2  4    5   11   16   18   19   20   21
TRANSPORT
A1  0    0
C1     91st AVE. CHANNEL IMPROVEMENTS
C1     2-YEAR 2-HOUR STORM
D1      48          8    8    0    0    0    4         0    0    1
D2   300.0    0.0001
D3  0    0    0    1
E1   5              16
E1   4 105          16
E1  11 104          19
E1  16 111          16
E1  18 116 119      16
E1  19              16
E1  20 118          16
E1  21 120          16
E1 105   5           1 2600.   5.0    0.200   .012
E1 104   4           1 5220.   6.0    0.682   .012
E1 111  11           1 5280.   2.0    0.476   .012
E1 116  16           1 5500.   8.0    0.476   .012
E1 119  19           1 1200.   7.5    0.200   .012
E1 118  18          13 4560.   7.0    0.100   .017      10.0    1.0     0.25
E1 120  20          13  480.   6.5    0.140   .017      10.0    1.0     0.25
E1 121  21          13 3720    6.5    0.040   .017      10.0    1.0     0.25
E2
G1       0
G2  0.0                   0.0   0.0
G2  0.25             214369.0   0.5
G2  0.5              429664.5   1.1
G2  0.75             645888.0   2.9
G2  1.0              863041.0   4.7
G2  1.25            1081125.0   6.5
G2  1.5             1300141.5   8.3
G2  1.75            1520092.0  10.1
G2  2.0             1740978.0  12.0
G2  2.25            1962801.0  14.0
G2  2.5             2185562.5  15.1
G2
G5  0.0
J1  4    5   11   16   18   19   20   21
J2  4    5   11   16   18   19   20   21
ENDPROGRAM
```

ENVIRONMENTAL PROTECTION AGENCY - STORM WATER MANAGEMENT MODEL *** RELEASE III.3 ***

DEVELOPED BY METCALF & EDDY, INC.

UNIVERSITY OF FLORIDA

WATER RESOURCES ENGINEERS, INC.

SEPTEMBER 1970

UPDATED BY THE UNIVERSITY OF FLORIDA

MARCH 1975

NOVEMBER 1977

NOVEMBER 1981

AUGUST 1983

THIS IS A NEW RELEASE OF THE SWMM. IF ANY PROBLEMS

OCCUR IN RUNNING THIS MODEL PLEASE CONTACT WAYNE

HUBER AT THE UNIVERSITY OF FLORIDA.

PHONE 1-904-392-0846

DISK OR TAPE ASSIGNMENTS FOR BLOCKS CALLED. THEY ARE IN THE SAME ORDER IN WHICH THE BLOCKS ARE CALLED.

JIN(1)	JIN(2)	JIN(3)	JIN(4)	JIN(5)	JIN(6)	JIN(7)	JIN(8)	JIN(9)	JIN(10)
0	8	9	0	0	0	0	0	0	0

JOUT(1)	JOUT(2)	JOUT(3)	JOUT(4)	JOUT(5)	JOUT(6)	JOUT(7)	JOUT(8)	JOUT(9)	JOUT(10)
8	9	10	0	0	0	0	0	0	0

SCRATCH DISKS OR TAPES WHICH CAN BE USED BY ANY BLOCK CALLED.

NSCRAT(1)	NCSRAT(2)	NSCRAT(3)	NSCRAT(4)	NSCRAT(5)
1	2	0	0	0

RUNOFF BLOCK CALLED.

ENTRY MADE TO RUNOFF BLOCK

RUNOFF BLOCK WAS LAST UPDATED BY THE UNIVERSITY OF FLORIDA JANUARY 1983.

91st AVE. CHANNEL IMPROVEMENTS - STUDY PHASE

2-YEAR 2-HOUR STORM ULTIMATE CONDITIONS

CONTINUOUS SWMM PARAMETER - ICRAIN.....	0
SNOWMELT PARAMETER - ISNOW.....	0
NUMBER OF RAIN GAGES - NRGAG.....	1
HORTON IFILTRATION EQUATION USED - INFILM.....	0
QUALITY IS NOT SIMULATED - KWALTY.....	0
DEFAULT EVAPORATION RATE USED - IVAP.....	0
HOUR OF DAY AT START OF STORM - NHR.....	0
MINUTE OF HOUR AT START OF STORM - NMN.....	0
TIME TZERO AT START OF STORM (HOURS).....	0.000
USE U.S. CUSTOMARY UNITS FOR MOST I/O - METRIC...	0
INPUT NUMBER OF TIME STEPS - NSTEP.....	120
INTEGRATION TIME INTERVAL (MINUTES) - DELT.....	5.00
MONTH, DAY, YEAR OF START OF STORM IS:	1/ 1/ 0
PERCENT OF IMPERVIOUS AREA WITH ZERO DETENTION DEPTH	25.0

**HORTON INFILTRATION MODEL BEING USED
RATE FOR REGENERATION OF INFILTRATION = REGEN * DECAY
DECAY IS READ IN FOR EACH SUBCATCHMENT
REGEN = ... 0.01000

FOR 24 RAINFALL STEPS, THE TIME INTERVAL IS 5.00 MINUTES UNITS ARE IN/HR.

FOR RAINGAGE NUMBER 1, RAINFALL HISTORY IS

0.04	0.11	0.11	0.12	0.17	0.18	0.19	0.24	0.40	0.76
1.30	2.70	2.10	0.90	0.47	0.42	0.23	0.18	0.17	0.17
0.12	0.11	0.11	0.04						

CARD GROUP F1

EVAPORATION RATE (IN/DAY).

JAN.	FEB.	MAR.	APR.	MAY	JUN.	JUL.	AUG.	SEP.	OCT.	NOV.	DEC.
0.10	0.10	0.10	0.10	0.10	0.10	0.10	0.10	0.10	0.10	0.10	0.10

* * * * * NO GUTTER OR PIPE NETWORK * * * * *

***** SUBCATCHMENT DATA *****

SUBCATCH-MENT NO.	GUTTER OR INLET	WIDTH (FT)	AREA (AC)	PERCENT IMPERV.	SLOPE (FT/FT)	RESISTANCE FACTOR IMPERV.	RESISTANCE FACTOR PERV.	DEPRES. STORAGE(IN) IMPERV.	DEPRES. STORAGE(IN) PERV.	INFILTRATION RATE(IN/HR) MAXIMUM	INFILTRATION RATE(IN/HR) MINIMUM	DECAY RATE (1/SEC)	GAGE NO.
1	4	4	14700.00	320.30	12.00	0.0065	0.015	0.200	0.030	0.100	3.00	0.22	0.00115	1
2	5	5	13690.00	322.40	14.00	0.0053	0.015	0.200	0.030	0.100	1.80	0.17	0.00115	1
3	10	11	13470.00	329.50	15.00	0.0060	0.015	0.200	0.030	0.100	3.00	0.16	0.00115	1
4	11	11	17280.00	617.00	15.00	0.0054	0.015	0.200	0.030	0.100	2.30	0.16	0.00115	1
5	16	16	15880.00	532.10	34.00	0.0042	0.015	0.200	0.030	0.100	2.00	0.18	0.00115	1
6	18	18	10560.00	309.10	70.00	0.0047	0.015	0.200	0.030	0.100	2.00	0.16	0.00115	1
7	19	19	5300.00	169.70	69.00	0.0041	0.015	0.200	0.030	0.100	1.50	0.17	0.00115	1
8	20	20	8000.00	91.80	60.00	0.0050	0.015	0.200	0.030	0.100	3.00	0.20	0.00115	1
9	21	21	11040.00	283.60	62.00	0.0052	0.015	0.200	0.030	0.100	3.00	0.20	0.00115	1

TOTAL NUMBER OF SUBCATCHMENTS.. 9

TOTAL TRIBUTARY AREA (ACRES).... 2975.50

IMPERVIOUS AREA (ACRES)..... 970.84

PERVIOUS AREA (ACRES)..... 2004.66

TOTAL WIDTH (FEET)..... 109920.00

PERCENT IMPERVIOUSNESS..... 32.63

* * * * * ARRANGEMENT OF SUBCATCHMENTS AND GUTTERS/PIPE * * * * *

INLET	TRIBUTARY GUTTERS AND/OR PIPES	TRIBUTARY SUBAREAS	
4		4	
5		5	
11		10	11
16		16	
18		18	
19		19	
20		20	
21		21	

HYDROGRAPHS WILL BE STORED FOR THE FOLLOWING 8 INLETS

4 5 11 16 18 19 20 21

```
.....QUALITY SIMULATION NOT INCLUDED IN THIS RUN .....


* * *  CARD GROUP M1  * * *


TOTAL NUMBER OF PRINTED GUTTERS/INLETS...NPRNT..    8
NUMBER OF TIME STEPS BETWEEN PRINTINGS..INTERV..    1
STARTING AND STOPPING PRINTOUT DATES............     0     0
                                                     0     0
                                                     0     0
                                                     0     0
                                                     0     0


* * *  CARD GROUP M2 * * *


GUTTER INLET PRINT CARDS......     4     5    11    16    18    19    20    21


MESSAGE FROM SUBROUTINE HYDRO...     THE PLOTTING INTERVAL FOR SUBROUTINE HCURVE IS..     1 TIME STEPS


END OF TIME STEP DO-LOOP IN RUNOFF.

FINAL DATE (MO/DAY/YEAR) =  1/ 1/ 0
FINAL JULIAN DATE =   1
FINAL TIME OF DAY = 10.0000 HOURS.
FINAL RUNNING TIME =  0.3600000E+05 SECONDS.
TOTAL NUMBER OF TIME STEPS =    120
```

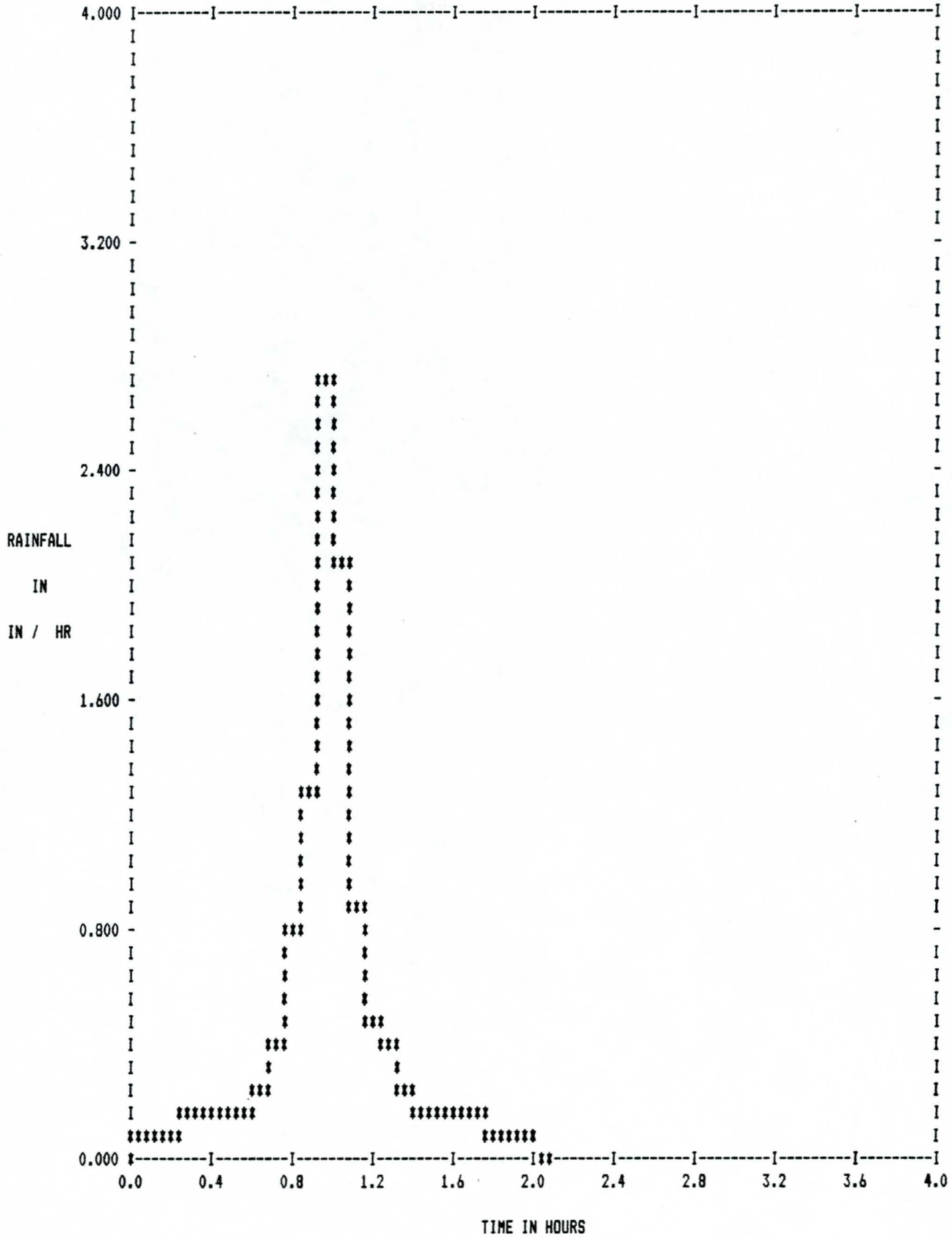

RAINFALL HYETOGRAPH INLETS 0

HYETOGRAPH FOR RAIN GAGE NUMBER 1

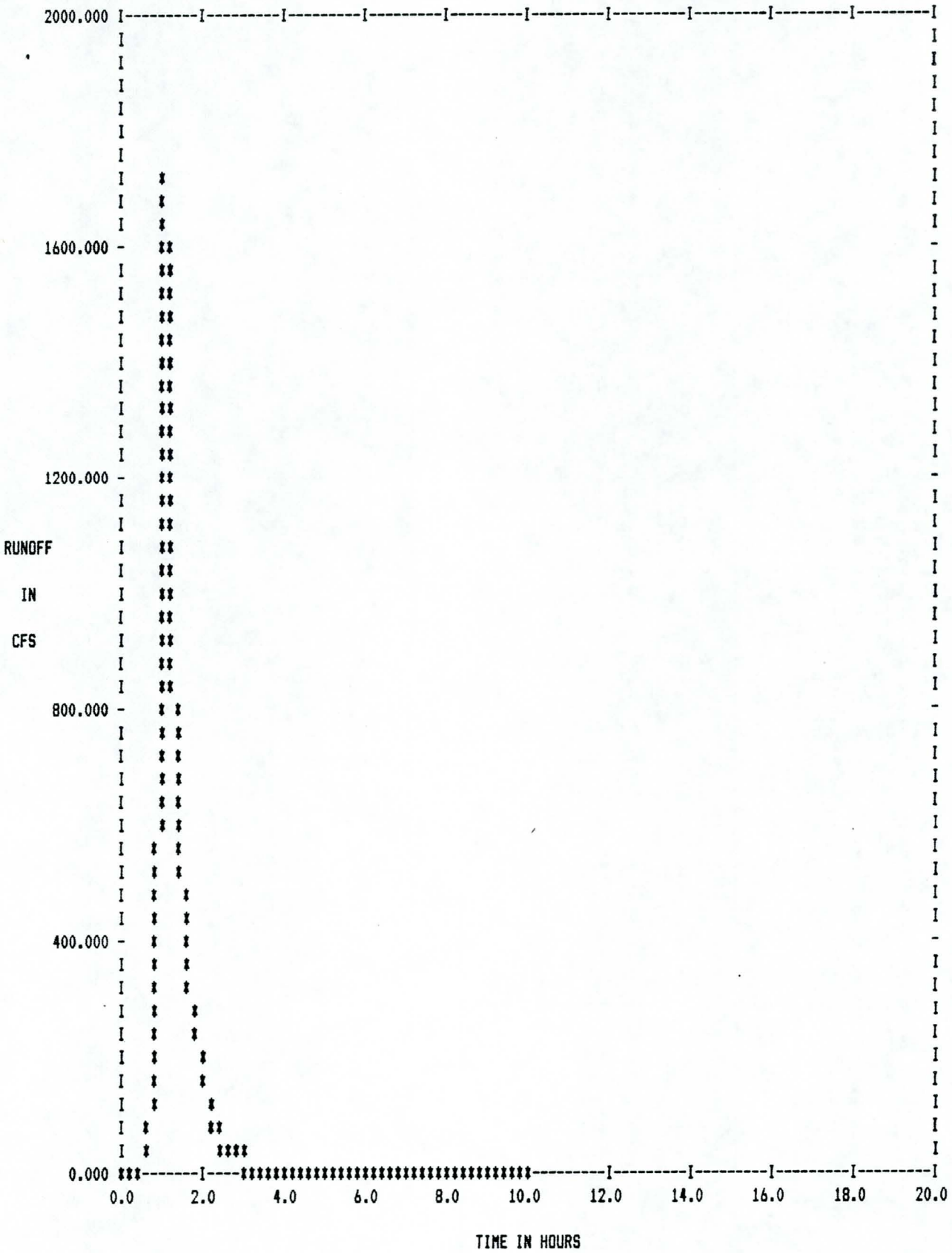

INLET HYDROGRAPH INLETS 0

THE HYDROGRAPH IS THE SUM OF THE FLOW IN ALL INLETS

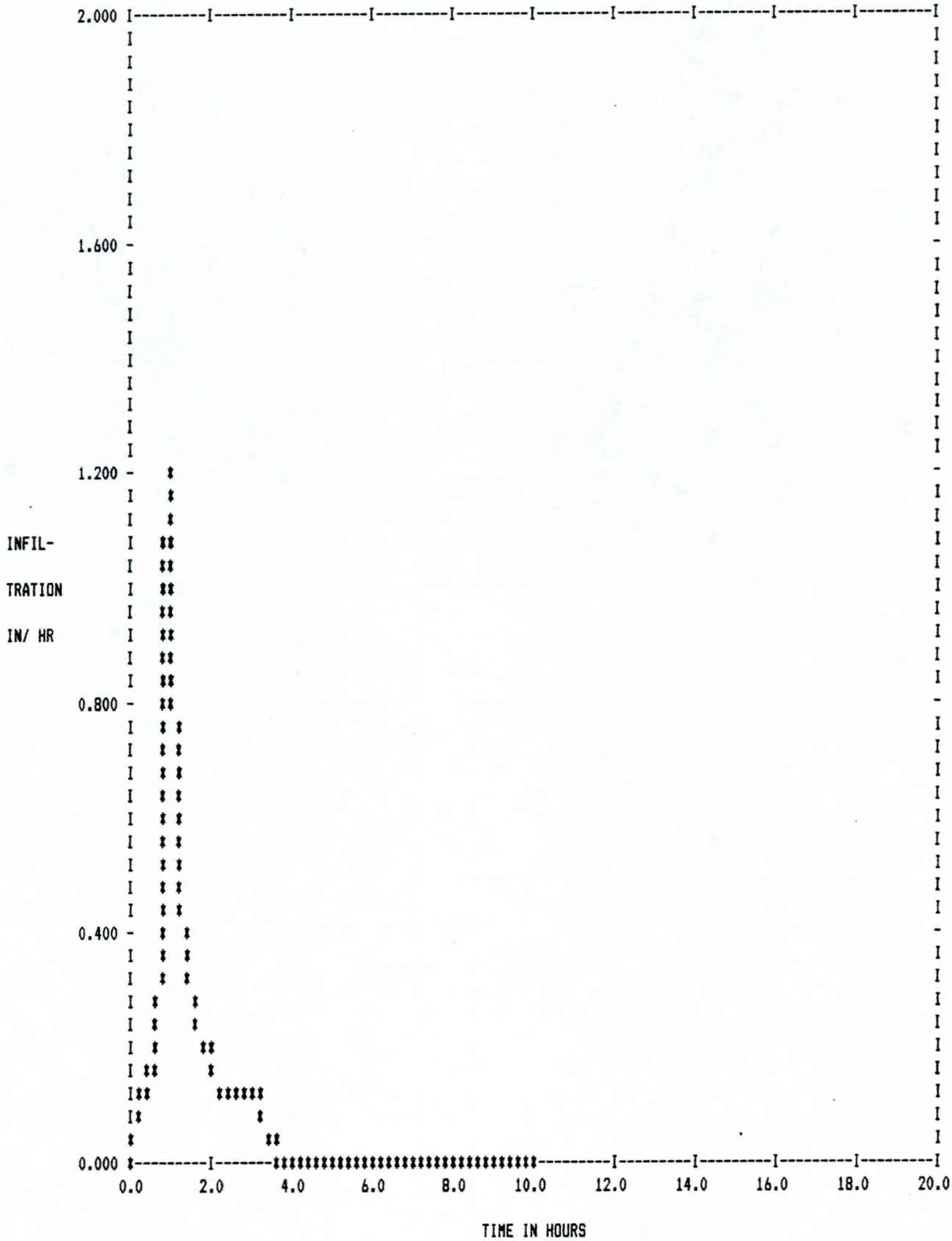

INFILTRATION VERSUS TIME INLETS 0

THE INFILTRATION PLOT IS THE ACTUAL INFILTRATION OVER THE PERVIOUS AREA ONLY

$ $ $ --- CONTINUITY CHECK FOR QUANTITY --- $ $ $

	CUBIC FEET	INCHES OVER TOTAL BASIN
TOTAL PRECIPITATION (RAIN PLUS SNOW)	1.020701E+07	0.945
TOTAL INFILTRATION	6.639040E+06	0.615
TOTAL EVAPORATION	2.229740E+05	0.021
TOTAL GUTTER/PIPE/SUBCAT FLOW AT INLETS	3.337236E+06	0.309
TOTAL WATER REMAINING IN GUTTER/PIPES	0.000000E-01	0.000
TOTAL WATER REMAINING IN SURFACE STORAGE	3.641556E+04	0.003
INFILTRATION OVER THE PERVIOUS AREA...	6.639040E+06	0.912

INFILTRATION + EVAPORATION + SNOW REMOVAL + INLET FLOW + WATER REMAINING IN GUTTER/PIPES + WATER REMAINING IN SURFACE STORAGE + WATER REMAINING IN SNOW COVER.....	1.023567E+07	0.948

THE ERROR IN CONTINUITY IS CALCULATED AS

```
****************************************
* PRECIPITATION + INITIAL SNOW COVER  *
*      - INFILTRATION -               *
*EVAPORATION - SNOW REMOVAL -          *
*INLET FLOW - WATER IN GUTTER/PIPES -  *
*WATER IN SURFACE STORAGE -            *
*WATER REMAINING IN SNOW COVER         *
*--------------------------------------*
* PRECIPITATION + INITIAL SNOW COVER  *
****************************************
```

ERROR..... -0.281 PERCENT

91st AVE. CHANNEL IMPROVEMENTS - STUDY PHASE

2-YEAR 2-HOUR STORM ULTIMATE CONDITIONS

SUMMARY OF QUANTITY RESULTS (INFLOW IN CFS) AT LOCATION 4

DATE MO/DA/YR	TIME HR:MIN	FLOW CFS
1/ 1/ 0	0 5.0	0.028
1/ 1/ 0	0 10.0	0.244
1/ 1/ 0	0 15.0	0.497
1/ 1/ 0	0 20.0	0.738
1/ 1/ 0	0 25.0	2.141
1/ 1/ 0	0 30.0	3.972
1/ 1/ 0	0 35.0	5.470
1/ 1/ 0	0 40.0	7.362
1/ 1/ 0	0 45.0	12.032
1/ 1/ 0	0 50.0	24.087
1/ 1/ 0	0 55.0	45.694
1/ 1/ 0	0 60.0	103.957
1/ 1/ 0	1 5.0	82.829
1/ 1/ 0	1 10.0	41.377
1/ 1/ 0	1 15.0	23.714
1/ 1/ 0	1 20.0	18.484
1/ 1/ 0	1 25.0	12.117
1/ 1/ 0	1 30.0	8.994
1/ 1/ 0	1 35.0	7.580
1/ 1/ 0	1 40.0	6.966
1/ 1/ 0	1 45.0	5.705
1/ 1/ 0	1 50.0	4.929
1/ 1/ 0	1 55.0	4.542
1/ 1/ 0	2 0.0	3.169
1/ 1/ 0	2 5.0	1.904
1/ 1/ 0	2 10.0	1.232
1/ 1/ 0	2 15.0	0.837
1/ 1/ 0	2 20.0	0.588
1/ 1/ 0	2 25.0	0.422
1/ 1/ 0	2 30.0	0.307
1/ 1/ 0	2 35.0	0.225
1/ 1/ 0	2 40.0	0.164
1/ 1/ 0	2 45.0	0.119
1/ 1/ 0	2 50.0	0.084
1/ 1/ 0	2 55.0	0.058
1/ 1/ 0	2 60.0	0.038
1/ 1/ 0	3 5.0	0.022
1/ 1/ 0	3 10.0	0.011
1/ 1/ 0	3 15.0	0.004
1/ 1/ 0	3 20.0	0.000

FLOW WT'D MEANS 3.605

FLOW WT'D STD-DEVS 153.677

TOTAL LOADS 129793.094 CUB-FT

91st AVE. CHANNEL IMPROVEMENTS - STUDY PHASE

2-YEAR 2-HOUR STORM ULTIMATE CONDITIONS

SUMMARY OF QUANTITY RESULTS (INFLOW IN CFS) AT LOCATION 5

DATE MO/DA/YR	TIME HR:MIN	FLOW CFS
1/ 1/ 0	0 5.0	0.024
1/ 1/ 0	0 10.0	0.214
1/ 1/ 0	0 15.0	0.460
1/ 1/ 0	0 20.0	0.721
1/ 1/ 0	0 25.0	2.020
1/ 1/ 0	0 30.0	3.861
1/ 1/ 0	0 35.0	5.579
1/ 1/ 0	0 40.0	7.767
1/ 1/ 0	0 45.0	12.774
1/ 1/ 0	0 50.0	25.529
1/ 1/ 0	0 55.0	49.298
1/ 1/ 0	0 60.0	115.168
1/ 1/ 0	1 5.0	106.553
1/ 1/ 0	1 10.0	63.613
1/ 1/ 0	1 15.0	42.505
1/ 1/ 0	1 20.0	35.645
1/ 1/ 0	1 25.0	27.646
1/ 1/ 0	1 30.0	22.917
1/ 1/ 0	1 35.0	20.310
1/ 1/ 0	1 40.0	18.846
1/ 1/ 0	1 45.0	16.637
1/ 1/ 0	1 50.0	14.973
1/ 1/ 0	1 55.0	13.810
1/ 1/ 0	2 0.0	11.354
1/ 1/ 0	2 5.0	8.845
1/ 1/ 0	2 10.0	7.040
1/ 1/ 0	2 15.0	5.636
1/ 1/ 0	2 20.0	4.491
1/ 1/ 0	2 25.0	3.533
1/ 1/ 0	2 30.0	2.718
1/ 1/ 0	2 35.0	2.025
1/ 1/ 0	2 40.0	1.439
1/ 1/ 0	2 45.0	0.953
1/ 1/ 0	2 50.0	0.565
1/ 1/ 0	2 55.0	0.281
1/ 1/ 0	2 60.0	0.118
1/ 1/ 0	3 5.0	0.084
1/ 1/ 0	3 10.0	0.061
1/ 1/ 0	3 15.0	0.043
1/ 1/ 0	3 20.0	0.028
1/ 1/ 0	3 25.0	0.016
1/ 1/ 0	3 30.0	0.008
1/ 1/ 0	3 35.0	0.002

FLOW WT'D MEANS 5.468

FLOW WT'D STD-DEVS 195.326

TOTAL LOADS 196832.797 CUB-FT

91st AVE. CHANNEL IMPROVEMENTS - STUDY PHASE

2-YEAR 2-HOUR STORM ULTIMATE CONDITIONS

SUMMARY OF QUANTITY RESULTS (INFLOW IN CFS) AT LOCATION 11

DATE MO/DA/YR	TIME HR:MIN	FLOW CFS
1/ 1/ 0	0 5.0	0.055
1/ 1/ 0	0 10.0	0.510
1/ 1/ 0	0 15.0	1.135
1/ 1/ 0	0 20.0	1.848
1/ 1/ 0	0 25.0	5.090
1/ 1/ 0	0 30.0	9.922
1/ 1/ 0	0 35.0	14.856
1/ 1/ 0	0 40.0	21.313
1/ 1/ 0	0 45.0	35.483
1/ 1/ 0	0 50.0	71.161
1/ 1/ 0	0 55.0	139.806
1/ 1/ 0	0 60.0	324.412
1/ 1/ 0	1 5.0	311.447
1/ 1/ 0	1 10.0	186.208
1/ 1/ 0	1 15.0	116.253
1/ 1/ 0	1 20.0	89.159
1/ 1/ 0	1 25.0	63.416
1/ 1/ 0	1 30.0	48.345
1/ 1/ 0	1 35.0	40.122
1/ 1/ 0	1 40.0	35.645
1/ 1/ 0	1 45.0	29.994
1/ 1/ 0	1 50.0	26.017
1/ 1/ 0	1 55.0	23.485
1/ 1/ 0	2 0.0	18.134
1/ 1/ 0	2 5.0	12.838
1/ 1/ 0	2 10.0	9.343
1/ 1/ 0	2 15.0	6.890
1/ 1/ 0	2 20.0	5.098
1/ 1/ 0	2 25.0	3.759
1/ 1/ 0	2 30.0	2.760
1/ 1/ 0	2 35.0	2.039
1/ 1/ 0	2 40.0	1.591
1/ 1/ 0	2 45.0	1.287
1/ 1/ 0	2 50.0	1.046
1/ 1/ 0	2 55.0	0.851
1/ 1/ 0	2 60.0	0.693
1/ 1/ 0	3 5.0	0.563
1/ 1/ 0	3 10.0	0.455
1/ 1/ 0	3 15.0	0.365
1/ 1/ 0	3 20.0	0.290
1/ 1/ 0	3 25.0	0.228
1/ 1/ 0	3 30.0	0.176
1/ 1/ 0	3 35.0	0.133
1/ 1/ 0	3 40.0	0.099
1/ 1/ 0	3 45.0	0.073
1/ 1/ 0	3 50.0	0.052
1/ 1/ 0	3 55.0	0.034
1/ 1/ 0	3 60.0	0.021
1/ 1/ 0	4 5.0	0.010
1/ 1/ 0	4 10.0	0.003

FLOW WT'D MEANS 13.871

FLOW WT'D STD-DEVS 544.898

TOTAL LOADS 499353.687
CUB-FT

91st AVE. CHANNEL IMPROVEMENTS - STUDY PHASE

2-YEAR 2-HOUR STORM ULTIMATE CONDITIONS

SUMMARY OF QUANTITY RESULTS (INFLOW IN CFS) AT LOCATION 16

DATE MO/DA/YR	TIME HR:MIN	FLOW CFS
1/ 1/ 0	0 5.0	0.025
1/ 1/ 0	0 10.0	0.240
1/ 1/ 0	0 15.0	0.582
1/ 1/ 0	0 20.0	1.040
1/ 1/ 0	0 25.0	2.804
1/ 1/ 0	0 30.0	5.747
1/ 1/ 0	0 35.0	9.410
1/ 1/ 0	0 40.0	14.700
1/ 1/ 0	0 45.0	25.731
1/ 1/ 0	0 50.0	53.114
1/ 1/ 0	0 55.0	110.923
1/ 1/ 0	0 60.0	271.058
1/ 1/ 0	1 5.0	330.988
1/ 1/ 0	1 10.0	258.119
1/ 1/ 0	1 15.0	188.401
1/ 1/ 0	1 20.0	148.559
1/ 1/ 0	1 25.0	113.170
1/ 1/ 0	1 30.0	89.063
1/ 1/ 0	1 35.0	73.340
1/ 1/ 0	1 40.0	62.960
1/ 1/ 0	1 45.0	53.188
1/ 1/ 0	1 50.0	45.804
1/ 1/ 0	1 55.0	40.437
1/ 1/ 0	2 0.0	33.272
1/ 1/ 0	2 5.0	26.289
1/ 1/ 0	2 10.0	21.048
1/ 1/ 0	2 15.0	17.010
1/ 1/ 0	2 20.0	13.835
1/ 1/ 0	2 25.0	11.305
1/ 1/ 0	2 30.0	9.273
1/ 1/ 0	2 35.0	7.640
1/ 1/ 0	2 40.0	6.343
1/ 1/ 0	2 45.0	5.355
1/ 1/ 0	2 50.0	4.647
1/ 1/ 0	2 55.0	4.057
1/ 1/ 0	2 60.0	3.557
1/ 1/ 0	3 5.0	3.130
1/ 1/ 0	3 10.0	2.764
1/ 1/ 0	3 15.0	2.447
1/ 1/ 0	3 20.0	2.172
1/ 1/ 0	3 25.0	1.932
1/ 1/ 0	3 30.0	1.721
1/ 1/ 0	3 35.0	1.535
1/ 1/ 0	3 40.0	1.370
1/ 1/ 0	3 45.0	1.224
1/ 1/ 0	3 50.0	1.093
1/ 1/ 0	3 55.0	0.976
1/ 1/ 0	3 60.0	0.872
1/ 1/ 0	4 5.0	0.778
1/ 1/ 0	4 10.0	0.693
1/ 1/ 0	4 15.0	0.616

91st AVE. CHANNEL IMPROVEMENTS - STUDY PHASE

2-YEAR 2-HOUR STORM ULTIMATE CONDITIONS

SUMMARY OF QUANTITY RESULTS (INFLOW IN CFS) AT LOCATION 16

DATE MO/DA/YR	TIME HR:MIN	FLOW CFS
1/ 1/ 0	4 20.0	0.547
1/ 1/ 0	4 25.0	0.484
1/ 1/ 0	4 30.0	0.427
1/ 1/ 0	4 35.0	0.375
1/ 1/ 0	4 40.0	0.328
1/ 1/ 0	4 45.0	0.286
1/ 1/ 0	4 50.0	0.247
1/ 1/ 0	4 55.0	0.212
1/ 1/ 0	5 0.0	0.180
1/ 1/ 0	5 5.0	0.151
1/ 1/ 0	5 10.0	0.125
1/ 1/ 0	5 15.0	0.101
1/ 1/ 0	5 20.0	0.081
1/ 1/ 0	5 25.0	0.062
1/ 1/ 0	5 30.0	0.046
1/ 1/ 0	5 35.0	0.032
1/ 1/ 0	5 40.0	0.020
1/ 1/ 0	5 45.0	0.011
1/ 1/ 0	5 50.0	0.004
1/ 1/ 0	5 55.0	0.000

FLOW WT'D MEANS 17.417

FLOW WT'D STD-DEVS 602.369

TOTAL LOADS 627022.875 CUB-FT

91st AVE. CHANNEL IMPROVEMENTS - STUDY PHASE

2-YEAR 2-HOUR STORM ULTIMATE CONDITIONS

SUMMARY OF QUANTITY RESULTS (INFLOW IN CFS) AT LOCATION 18

DATE MO/DA/YR	TIME HR:MIN	FLOW CFS
1/ 1/ 0	0 5.0	0.018
1/ 1/ 0	0 10.0	0.171
1/ 1/ 0	0 15.0	0.422
1/ 1/ 0	0 20.0	0.773
1/ 1/ 0	0 25.0	2.084
1/ 1/ 0	0 30.0	4.332
1/ 1/ 0	0 35.0	7.272
1/ 1/ 0	0 40.0	11.672
1/ 1/ 0	0 45.0	20.868
1/ 1/ 0	0 50.0	43.819
1/ 1/ 0	0 55.0	94.086
1/ 1/ 0	0 60.0	236.334
1/ 1/ 0	1 5.0	316.357
1/ 1/ 0	1 10.0	277.665
1/ 1/ 0	1 15.0	222.458
1/ 1/ 0	1 20.0	184.536
1/ 1/ 0	1 25.0	147.688
1/ 1/ 0	1 30.0	120.129
1/ 1/ 0	1 35.0	100.535
1/ 1/ 0	1 40.0	86.552
1/ 1/ 0	1 45.0	73.799
1/ 1/ 0	1 50.0	63.825
1/ 1/ 0	1 55.0	56.238
1/ 1/ 0	2 0.0	47.359
1/ 1/ 0	2 5.0	38.898
1/ 1/ 0	2 10.0	32.310
1/ 1/ 0	2 15.0	27.093
1/ 1/ 0	2 20.0	22.902
1/ 1/ 0	2 25.0	19.497
1/ 1/ 0	2 30.0	16.708
1/ 1/ 0	2 35.0	14.411
1/ 1/ 0	2 40.0	12.519
1/ 1/ 0	2 45.0	10.979
1/ 1/ 0	2 50.0	9.732
1/ 1/ 0	2 55.0	8.666
1/ 1/ 0	2 60.0	7.747
1/ 1/ 0	3 5.0	6.951
1/ 1/ 0	3 10.0	6.257
1/ 1/ 0	3 15.0	5.649
1/ 1/ 0	3 20.0	5.113
1/ 1/ 0	3 25.0	4.640
1/ 1/ 0	3 30.0	4.219
1/ 1/ 0	3 35.0	3.844
1/ 1/ 0	3 40.0	3.509
1/ 1/ 0	3 45.0	3.208
1/ 1/ 0	3 50.0	2.937
1/ 1/ 0	3 55.0	2.692
1/ 1/ 0	3 60.0	2.471
1/ 1/ 0	4 5.0	2.270
1/ 1/ 0	4 10.0	2.087
1/ 1/ 0	4 15.0	1.919

91st AVE. CHANNEL IMPROVEMENTS - STUDY PHASE

2-YEAR 2-HOUR STORM ULTIMATE CONDITIONS

SUMMARY OF QUANTITY RESULTS (INFLOW IN CFS) AT LOCATION 18

DATE MO/DA/YR	TIME HR:MIN	FLOW CFS
1/ 1/ 0	4 20.0	1.767
1/ 1/ 0	4 25.0	1.627
1/ 1/ 0	4 30.0	1.499
1/ 1/ 0	4 35.0	1.381
1/ 1/ 0	4 40.0	1.272
1/ 1/ 0	4 45.0	1.172
1/ 1/ 0	4 50.0	1.079
1/ 1/ 0	4 55.0	0.993
1/ 1/ 0	5 0.0	0.914
1/ 1/ 0	5 5.0	0.840
1/ 1/ 0	5 10.0	0.772
1/ 1/ 0	5 15.0	0.708
1/ 1/ 0	5 20.0	0.649
1/ 1/ 0	5 25.0	0.594
1/ 1/ 0	5 30.0	0.543
1/ 1/ 0	5 35.0	0.495
1/ 1/ 0	5 40.0	0.451
1/ 1/ 0	5 45.0	0.409
1/ 1/ 0	5 50.0	0.371
1/ 1/ 0	5 55.0	0.334
1/ 1/ 0	6 0.0	0.301
1/ 1/ 0	6 5.0	0.269
1/ 1/ 0	6 10.0	0.240
1/ 1/ 0	6 15.0	0.213
1/ 1/ 0	6 20.0	0.188
1/ 1/ 0	6 25.0	0.164
1/ 1/ 0	6 30.0	0.142
1/ 1/ 0	6 35.0	0.122
1/ 1/ 0	6 40.0	0.104
1/ 1/ 0	6 45.0	0.087
1/ 1/ 0	6 50.0	0.071
1/ 1/ 0	6 55.0	0.057
1/ 1/ 0	7 0.0	0.044
1/ 1/ 0	7 5.0	0.033
1/ 1/ 0	7 10.0	0.023
1/ 1/ 0	7 15.0	0.015
1/ 1/ 0	7 20.0	0.008
1/ 1/ 0	7 25.0	0.003
1/ 1/ 0	7 30.0	0.000

FLOW WT'D MEANS 20.151

FLOW WT'D STD-DEVS 633.892

TOTAL LOADS 725452.312
CUB-FT

91st AVE. CHANNEL IMPROVEMENTS - STUDY PHASE

2-YEAR 2-HOUR STORM ULTIMATE CONDITIONS

SUMMARY OF QUANTITY RESULTS (INFLOW IN CFS) AT LOCATION 19

DATE MO/DA/YR	TIME HR:MIN	FLOW CFS
1/ 1/ 0	0 5.0	0.008
1/ 1/ 0	0 10.0	0.081
1/ 1/ 0	0 15.0	0.199
1/ 1/ 0	0 20.0	0.366
1/ 1/ 0	0 25.0	0.988
1/ 1/ 0	0 30.0	2.059
1/ 1/ 0	0 35.0	3.474
1/ 1/ 0	0 40.0	5.608
1/ 1/ 0	0 45.0	10.075
1/ 1/ 0	0 50.0	21.242
1/ 1/ 0	0 55.0	45.908
1/ 1/ 0	0 60.0	116.886
1/ 1/ 0	1 5.0	160.490
1/ 1/ 0	1 10.0	145.538
1/ 1/ 0	1 15.0	120.081
1/ 1/ 0	1 20.0	101.725
1/ 1/ 0	1 25.0	83.122
1/ 1/ 0	1 30.0	68.771
1/ 1/ 0	1 35.0	58.285
1/ 1/ 0	1 40.0	50.616
1/ 1/ 0	1 45.0	43.573
1/ 1/ 0	1 50.0	37.971
1/ 1/ 0	1 55.0	33.629
1/ 1/ 0	2 0.0	28.643
1/ 1/ 0	2 5.0	23.883
1/ 1/ 0	2 10.0	20.109
1/ 1/ 0	2 15.0	17.069
1/ 1/ 0	2 20.0	14.586
1/ 1/ 0	2 25.0	12.535
1/ 1/ 0	2 30.0	10.825
1/ 1/ 0	2 35.0	9.387
1/ 1/ 0	2 40.0	8.171
1/ 1/ 0	2 45.0	7.140
1/ 1/ 0	2 50.0	6.263
1/ 1/ 0	2 55.0	5.521
1/ 1/ 0	2 60.0	4.897
1/ 1/ 0	3 5.0	4.390
1/ 1/ 0	3 10.0	3.968
1/ 1/ 0	3 15.0	3.598
1/ 1/ 0	3 20.0	3.270
1/ 1/ 0	3 25.0	2.979
1/ 1/ 0	3 30.0	2.721
1/ 1/ 0	3 35.0	2.489
1/ 1/ 0	3 40.0	2.282
1/ 1/ 0	3 45.0	2.095
1/ 1/ 0	3 50.0	1.926
1/ 1/ 0	3 55.0	1.774
1/ 1/ 0	3 60.0	1.635
1/ 1/ 0	4 5.0	1.509
1/ 1/ 0	4 10.0	1.394
1/ 1/ 0	4 15.0	1.289

91st AVE. CHANNEL IMPROVEMENTS - STUDY PHASE

2-YEAR 2-HOUR STORM ULTIMATE CONDITIONS

SUMMARY OF QUANTITY RESULTS (INFLOW IN CFS) AT LOCATION 19

DATE MO/DA/YR	TIME HR:MIN	FLOW CFS
1/ 1/ 0	4 20.0	1.193
1/ 1/ 0	4 25.0	1.105
1/ 1/ 0	4 30.0	1.023
1/ 1/ 0	4 35.0	0.948
1/ 1/ 0	4 40.0	0.879
1/ 1/ 0	4 45.0	0.815
1/ 1/ 0	4 50.0	0.756
1/ 1/ 0	4 55.0	0.701
1/ 1/ 0	5 0.0	0.651
1/ 1/ 0	5 5.0	0.603
1/ 1/ 0	5 10.0	0.559
1/ 1/ 0	5 15.0	0.518
1/ 1/ 0	5 20.0	0.480
1/ 1/ 0	5 25.0	0.444
1/ 1/ 0	5 30.0	0.411
1/ 1/ 0	5 35.0	0.380
1/ 1/ 0	5 40.0	0.351
1/ 1/ 0	5 45.0	0.323
1/ 1/ 0	5 50.0	0.298
1/ 1/ 0	5 55.0	0.274
1/ 1/ 0	6 0.0	0.251
1/ 1/ 0	6 5.0	0.230
1/ 1/ 0	6 10.0	0.210
1/ 1/ 0	6 15.0	0.192
1/ 1/ 0	6 20.0	0.174
1/ 1/ 0	6 25.0	0.158
1/ 1/ 0	6 30.0	0.143
1/ 1/ 0	6 35.0	0.128
1/ 1/ 0	6 40.0	0.115
1/ 1/ 0	6 45.0	0.102
1/ 1/ 0	6 50.0	0.090
1/ 1/ 0	6 55.0	0.079
1/ 1/ 0	7 0.0	0.069
1/ 1/ 0	7 5.0	0.060
1/ 1/ 0	7 10.0	0.051
1/ 1/ 0	7 15.0	0.043
1/ 1/ 0	7 20.0	0.036
1/ 1/ 0	7 25.0	0.029
1/ 1/ 0	7 30.0	0.023
1/ 1/ 0	7 35.0	0.017
1/ 1/ 0	7 40.0	0.012
1/ 1/ 0	7 45.0	0.008
1/ 1/ 0	7 50.0	0.005
1/ 1/ 0	7 55.0	0.002
1/ 1/ 0	8 0.0	0.001

FLOW WT'D MEANS 11.100

FLOW WT'D STD-DEVS 336.172

TOTAL LOADS 399595.750
CUB-FT

91st AVE. CHANNEL IMPROVEMENTS - STUDY PHASE

2-YEAR 2-HOUR STORM ULTIMATE CONDITIONS

SUMMARY OF QUANTITY RESULTS (INFLOW IN CFS) AT LOCATION 20

DATE MO/DA/YR	TIME HR:MIN	FLOW CFS
1/ 1/ 0	0 5.0	0.014
1/ 1/ 0	0 10.0	0.129
1/ 1/ 0	0 15.0	0.301
1/ 1/ 0	0 20.0	0.517
1/ 1/ 0	0 25.0	1.399
1/ 1/ 0	0 30.0	2.802
1/ 1/ 0	0 35.0	4.400
1/ 1/ 0	0 40.0	6.587
1/ 1/ 0	0 45.0	11.202
1/ 1/ 0	0 50.0	22.679
1/ 1/ 0	0 55.0	45.742
1/ 1/ 0	0 60.0	107.865
1/ 1/ 0	1 5.0	114.132
1/ 1/ 0	1 10.0	75.005
1/ 1/ 0	1 15.0	48.306
1/ 1/ 0	1 20.0	35.977
1/ 1/ 0	1 25.0	25.490
1/ 1/ 0	1 30.0	19.131
1/ 1/ 0	1 35.0	15.437
1/ 1/ 0	1 40.0	13.252
1/ 1/ 0	1 45.0	10.990
1/ 1/ 0	1 50.0	9.389
1/ 1/ 0	1 55.0	8.339
1/ 1/ 0	2 0.0	6.555
1/ 1/ 0	2 5.0	4.820
1/ 1/ 0	2 10.0	3.654
1/ 1/ 0	2 15.0	2.838
1/ 1/ 0	2 20.0	2.247
1/ 1/ 0	2 25.0	1.807
1/ 1/ 0	2 30.0	1.472
1/ 1/ 0	2 35.0	1.212
1/ 1/ 0	2 40.0	1.007
1/ 1/ 0	2 45.0	0.842
1/ 1/ 0	2 50.0	0.709
1/ 1/ 0	2 55.0	0.599
1/ 1/ 0	2 60.0	0.508
1/ 1/ 0	3 5.0	0.432
1/ 1/ 0	3 10.0	0.367
1/ 1/ 0	3 15.0	0.313
1/ 1/ 0	3 20.0	0.266
1/ 1/ 0	3 25.0	0.226
1/ 1/ 0	3 30.0	0.192
1/ 1/ 0	3 35.0	0.162
1/ 1/ 0	3 40.0	0.135
1/ 1/ 0	3 45.0	0.113
1/ 1/ 0	3 50.0	0.093
1/ 1/ 0	3 55.0	0.076
1/ 1/ 0	3 60.0	0.061
1/ 1/ 0	4 5.0	0.048
1/ 1/ 0	4 10.0	0.036
1/ 1/ 0	4 15.0	0.027

91st AVE. CHANNEL IMPROVEMENTS - STUDY PHASE

2-YEAR 2-HOUR STORM ULTIMATE CONDITIONS

SUMMARY OF QUANTITY RESULTS (INFLOW IN CFS) AT LOCATION 20

DATE MO/DA/YR	TIME HR:MIN	FLOW CFS
1/ 1/ 0	4 20.0	0.018
1/ 1/ 0	4 25.0	0.012
1/ 1/ 0	4 30.0	0.006
1/ 1/ 0	4 35.0	0.002
1/ 1/ 0	4 40.0	0.000

FLOW WT'D MEANS 5.083

FLOW WT'D STD-DEVS 196.226

TOTAL LOADS 182982.703 CUB-FT

91st AVE. CHANNEL IMPROVEMENTS - STUDY PHASE

2-YEAR 2-HOUR STORM ULTIMATE CONDITIONS

SUMMARY OF QUANTITY RESULTS (INFLOW IN CFS) AT LOCATION 21

DATE MO/DA/YR	TIME HR:MIN	FLOW CFS
1/ 1/ 0	0 5.0	0.019
1/ 1/ 0	0 10.0	0.187
1/ 1/ 0	0 15.0	0.457
1/ 1/ 0	0 20.0	0.827
1/ 1/ 0	0 25.0	2.228
1/ 1/ 0	0 30.0	4.597
1/ 1/ 0	0 35.0	7.618
1/ 1/ 0	0 40.0	12.054
1/ 1/ 0	0 45.0	21.308
1/ 1/ 0	0 50.0	44.322
1/ 1/ 0	0 55.0	93.733
1/ 1/ 0	0 60.0	230.745
1/ 1/ 0	1 5.0	290.382
1/ 1/ 0	1 10.0	236.281
1/ 1/ 0	1 15.0	177.406
1/ 1/ 0	1 20.0	140.882
1/ 1/ 0	1 25.0	108.044
1/ 1/ 0	1 30.0	85.091
1/ 1/ 0	1 35.0	69.684
1/ 1/ 0	1 40.0	59.214
1/ 1/ 0	1 45.0	49.736
1/ 1/ 0	1 50.0	42.573
1/ 1/ 0	1 55.0	37.339
1/ 1/ 0	2 0.0	30.906
1/ 1/ 0	2 5.0	24.802
1/ 1/ 0	2 10.0	20.239
1/ 1/ 0	2 15.0	16.750
1/ 1/ 0	2 20.0	14.031
1/ 1/ 0	2 25.0	11.875
1/ 1/ 0	2 30.0	10.142
1/ 1/ 0	2 35.0	8.731
1/ 1/ 0	2 40.0	7.568
1/ 1/ 0	2 45.0	6.600
1/ 1/ 0	2 50.0	5.787
1/ 1/ 0	2 55.0	5.099
1/ 1/ 0	2 60.0	4.511
1/ 1/ 0	3 5.0	4.006
1/ 1/ 0	3 10.0	3.570
1/ 1/ 0	3 15.0	3.191
1/ 1/ 0	3 20.0	2.859
1/ 1/ 0	3 25.0	2.568
1/ 1/ 0	3 30.0	2.311
1/ 1/ 0	3 35.0	2.084
1/ 1/ 0	3 40.0	1.881
1/ 1/ 0	3 45.0	1.701
1/ 1/ 0	3 50.0	1.539
1/ 1/ 0	3 55.0	1.393
1/ 1/ 0	3 60.0	1.262
1/ 1/ 0	4 5.0	1.144
1/ 1/ 0	4 10.0	1.037
1/ 1/ 0	4 15.0	0.940

91st AVE. CHANNEL IMPROVEMENTS - STUDY PHASE

2-YEAR 2-HOUR STORM ULTIMATE CONDITIONS

SUMMARY OF QUANTITY RESULTS (INFLOW IN CFS) AT LOCATION 21

DATE MO/DA/YR	TIME HR:MIN	FLOW CFS
1/ 1/ 0	4 20.0	0.851
1/ 1/ 0	4 25.0	0.771
1/ 1/ 0	4 30.0	0.697
1/ 1/ 0	4 35.0	0.630
1/ 1/ 0	4 40.0	0.568
1/ 1/ 0	4 45.0	0.511
1/ 1/ 0	4 50.0	0.460
1/ 1/ 0	4 55.0	0.412
1/ 1/ 0	5 0.0	0.368
1/ 1/ 0	5 5.0	0.328
1/ 1/ 0	5 10.0	0.291
1/ 1/ 0	5 15.0	0.257
1/ 1/ 0	5 20.0	0.225
1/ 1/ 0	5 25.0	0.196
1/ 1/ 0	5 30.0	0.170
1/ 1/ 0	5 35.0	0.146
1/ 1/ 0	5 40.0	0.124
1/ 1/ 0	5 45.0	0.103
1/ 1/ 0	5 50.0	0.085
1/ 1/ 0	5 55.0	0.069
1/ 1/ 0	6 0.0	0.054
1/ 1/ 0	6 5.0	0.041
1/ 1/ 0	6 10.0	0.029
1/ 1/ 0	6 15.0	0.019
1/ 1/ 0	6 20.0	0.011
1/ 1/ 0	6 25.0	0.005
1/ 1/ 0	6 30.0	0.001

FLOW WT'D MEANS 16.006

FLOW WT'D STD-DEVS 540.267

TOTAL LOADS 576203.125 CUB-FT

* * * * * RUNOFF SIMULATION ENDED NORMALLY * * * * *

```
TRANSPORT            BLOCK CALLED.

  ENTRY MADE TO TRANSPORT BLOCK

  TRANSPORT BLOCK UPDATED BY UNIVERSITY OF FLORIDA   JANUARY 1983.
            91st AVE. CHANNEL IMPROVEMENTS
            2-YEAR 2-HOUR STORM


NUMBER OF TIME STEPS (NDT)........................  48

NO. OF ELEMENTS FOR CARD HYDROGRAPH INPUT (NINPUT)   0

NO. OF ELEMENTS FOR INPUT HYDROGRAPH PRINT (NNYN).   8

NO. OF ELEMENTS FOR OUTPUT HYDROGRAPH PRINT (NNPE)   8

NO. TIME STEPS BETWEEN I/O PRINTS (INTPRT)........   1

NO. OF ELEMENTS FOR INTERFACE TRANSFER (NOUTS)....   0

NO. OF POLLUTANTS SIMULATED (NPOLL)...............   0

NO. OF ITERATIONS FOR FLOW ROUTING (NITER)........   4


$$$$$ WARNING FROM SUB TRANS. NOUTS=   0 AND JOUT=   9.  BOTH MUST BE GT 0 TO GENERATE INTERFACE FILE.
SIMULATION WILL CONTINUE, BUT NO NEW INTERFACE FILE WILL BE GENERATED.


FOR THE FOLLOWING PARAMETERS, 1=YES, 0=NO:

   PRINT INTERNAL ERROR MESSAGES (NPRINT)......... 0

HYDROGRAPH INPUT FROM CARDS ONLY (NCNTRL)......... 0

CALL INFILTRATION ROUTINE (NINFIL)................ 0

CALL DRY-WEATHER FLOW ROUTINE (NFILTH)............ 0

USE HYDRAULIC DESIGN ROUTINE (NDESN)............... 1


USE U.S. CUSTOMARY UNITS FOR INPUT/OUTPUT (METRIC=0).


SIZE OF TIME STEP (DT, SECONDS)...................  300.0

ALLOWABLE ROUTING CONVERGENCE ERROR (EPSIL).......0.000100

NO. DRY DAYS PRIOR TO SIMULATION (DWDAYS)......... 0.00

KINEMATIC VISCOSITY (GNU, SQ FT/SEC)..............0.0000100

TOTAL CATCHMENT AREA (TRIBA. ACRES)...............    0.00
```

HEADER INFORMATION FROM INTERFACE FILE:

TITLE FROM FIRST COMPUTATIONAL BLOCK:

91st AVE. CHANNEL IMPROVEMENTS - STUDY PHASE
2-YEAR 2-HOUR STORM ULTIMATE CONDITIONS

TITLE FROM IMMEDIATELY PRECEDING COMPUTATIONAL BLOCK

91st AVE. CHANNEL IMPROVEMENTS - STUDY PHASE
2-YEAR 2-HOUR STORM ULTIMATE CONDITIONS

NAME OF PRECEDING BLOCK: RUNOFF BLOCK

FROM INTERFACE FILE,

NO. TIME STEPS..... 120

SIZE OF TIME STEP (SECONDS)..... 300.00

NO. TRANSFERED INPUT LOCATIONS..... 8

NO. TRANSFERED POLLUTANTS..... 0

SIZE OF TOTAL CATCHMENT AREA (ACRES)..... 2975.50

INITIAL DATE, YR/MO/DAY (IDATEZ)..... 101

INITIAL HOUR OF DAY (TZERO)..... 0.000

ELEMENT NUMBERS OF INLET LOCATIONS:

4	5	11	16	18	19	20	21

POLLUTANTS ON INTERFACE FILE:

NO.	NAME	UNITS	TYPE OF UNITS

CONVERSION FACTOR TO CFS FOR FLOW UNITS ON INTERFACE FILE. MULTIPLY BY: 1.00000

STARTING DATE OF SIMULATION (YR/MO/DAY) = 1900/ 1/ 1

STARTING TIME OF DAY = 0.000 HRS = 0 HRS, 0.000 MIN.

TOTAL NUMBER OF ELEMENTS, NE, INPUT INTO TRANSPORT BLOCK IN CARD GROUP E1 = 16

* * * * * ELEMENT LINKAGES AND COMPUTATION SEQUENCE * * * * *

ELEMENT NO. ZERO IS GIVEN INTERNAL NO. = NO. ELEMENTS + 1 = 17

EXTERNAL ELEMENT NUMBER	INTERNAL ELEMENT NUMBER	TYPE	DESCRIPTION	UPSTREAM ELEMENTS (EXTERNAL NOS.) 1	2	3
5	1	16	MANHOLE	0	0	0
4	2	16	MANHOLE	105	0	0
11	3	19	STORAGE UNIT	104	0	0
16	4	16	MANHOLE	111	0	0
18	5	16	MANHOLE	116	119	0
19	6	16	MANHOLE	0	0	0
20	7	16	MANHOLE	118	0	0
21	8	16	MANHOLE	120	0	0
105	9	1	CIRCULAR	5	0	0
104	10	1	CIRCULAR	4	0	0
111	11	1	CIRCULAR	11	0	0
116	12	1	CIRCULAR	16	0	0
119	13	1	CIRCULAR	19	0	0
118	14	13	TRAPEZOID	18	0	0
120	15	13	TRAPEZOID	20	0	0
121	16	13	TRAPEZOID	21	0	0

ORDER OF COMPUTATIONS AT EACH TIME STEP (PROCEEDING DOWNSTREAM)

COMPUTATION SEQUENCE	EXTERNAL NUMBER	INTERNAL NUMBER	INTERNAL UPSTREAM ELEMENT NUMBERS		
1	5	1	17	17	17
2	19	6	17	17	17
3	105	9	1	17	17
4	4	2	9	17	17
5	104	10	2	17	17
6	11	3	10	17	17
7	111	11	3	17	17
8	16	4	11	17	17
9	116	12	4	17	17
10	119	13	6	17	17
11	18	5	12	13	17
12	118	14	5	17	17
13	20	7	14	17	17
14	120	15	7	17	17
15	21	8	15	17	17
16	121	16	8	17	17

* * * * * ELEMENT PARAMETERS * * * * *

>>>>> CAUTION: COLUMN HEADINGS ARE FOR CONDUITS. REFER TO USERS MANUAL FOR MEANING FOR NON-CONDUITS. <<<<<

EXT. ELE. NUM.	TYPE	DESCRIPTION	SLOPE (FT/FT)	DISTANCE (FT)	MANNING ROUGHNESS	GEOM1 (FT)	GEOM2 (FT)	GEOM3 (FT)	NUMBER OF BARRELS	AFULL (SQ.FT)	QFULL (CFS)	QMAX (CFS)	SUPER-CRITICAL FLOW WHEN LESS THAN 95% FULL?
5	16	MANHOLE	0.00	0.00	0.0000	0.00	0.00	0.00	1.0	0.000	0.000	0.000	
4	16	MANHOLE	0.00	0.00	0.0000	0.00	0.00	0.00	1.0	0.000	0.000	0.000	
11	19	STORAGE UNIT	0.00	0.00	0.0000	0.00	0.00	0.00	1.0	0.000	0.000	0.000	
16	16	MANHOLE	0.00	0.00	0.0000	0.00	0.00	0.00	1.0	0.000	0.000	0.000	
18	16	MANHOLE	0.00	0.00	0.0000	0.00	0.00	0.00	1.0	0.000	0.000	0.000	
19	16	MANHOLE	0.00	0.00	0.0000	0.00	0.00	0.00	1.0	0.000	0.000	0.000	
20	16	MANHOLE	0.00	0.00	0.0000	0.00	0.00	0.00	1.0	0.000	0.000	0.000	
21	16	MANHOLE	0.00	0.00	0.0000	0.00	0.00	0.00	1.0	0.000	0.000	0.000	
105	1	CIRCULAR	0.0020	2600.00	0.0120	5.00	0.00	0.00	1.0	19.635	126.519	136.641	NO
104	1	CIRCULAR	0.0068	5220.00	0.0120	6.00	0.00	0.00	1.0	28.274	379.913	410.306	NO
111	1	CIRCULAR	0.0048	5280.00	0.0120	2.00	0.00	0.00	1.0	3.142	16.954	18.310	NO
116	1	CIRCULAR	0.0048	5500.00	0.0120	8.00	0.00	0.00	1.0	50.265	683.542	738.225	NO
119	1	CIRCULAR	0.0020	1200.00	0.0120	7.50	0.00	0.00	1.0	44.179	373.021	402.863	NO
118	13	TRAPEZOID	0.0010	4560.00	0.0170	7.00	10.00	0.00	1.0	266.000	1835.329	1835.329	NO
120	13	TRAPEZOID	0.0014	480.00	0.0170	6.50	10.00	0.00	1.0	234.000	1828.892	1828.892	NO
121	13	TRAPEZOID	0.0004	3720.00	0.0170	6.50	10.00	0.00	1.0	234.000	977.584	977.584	NO

STORAGE ELEMENT INPUT DATA

****
STORAGE ELEMENT # 11
****

DEPTH-AREA-STORAGE-OUTFLOW RELATIONSHIPS(LOUT = 0) :

DEPTH,FT.	SURFACE AREA,SQ.FT.	STORAGE,CU.FT.	OUTFLOW,CFS+
0.00	0.0	0.0	0.00
0.25	0.0	214369.0	0.50
0.50	0.0	429664.5	1.10
0.75	0.0	645888.0	2.90
1.00	0.0	863041.0	4.70
1.25	0.0	1081125.0	6.50
1.50	0.0	1300141.5	8.30
1.75	0.0	1520092.0	10.10
2.00	0.0	1740978.0	12.00
2.25	0.0	1962801.0	14.00
2.50	0.0	2185562.5	15.10

+ GOVERNED BY OUTFLOWS FROM CARD GROUP G2

INITIAL CONDITIONS:

VOLUME,CU.FT. : 0.0000E+00

INPUT HYDROGRAPHS (AND POLLUTOGRAPHS) TO BE PRINTED FOR THE FOLLOWING ELEMENT NUMBERS (CARD GROUP J1):
4 5 11 16 18 19 20 21

OUTPUT HYDROGRAPHS (AND POLLUTOGRAPHS) TO BE PRINTED FOR THE FOLLOWING ELEMENT NUMBERS (CARD GROUP J2):
4 5 11 16 18 19 20 21

ELEMENT FLOWS, AREAS, AND CONCENTRATIONS ARE INITIALIZED TO DRY WEATHER FLOW AND INFILTRATION VALUES.

ELEMENT NUMBER	TYPE	FLOW (CFS)	AREA (SQ FT)	VELOCITY (FT/SEC)
5	16	0.000	0.000	0.000
19	16	0.000	0.000	0.000
105	1	0.000	0.000	0.000
4	16	0.000	0.000	0.000
104	1	0.000	0.000	0.000
11	19	0.000	0.000	0.000
111	1	0.000	0.000	0.000
16	16	0.000	0.000	0.000
116	1	0.000	0.000	0.000
119	1	0.000	0.000	0.000
18	16	0.000	0.000	0.000
118	13	0.000	0.000	0.000
20	16	0.000	0.000	0.000
120	13	0.000	0.000	0.000
21	16	0.000	0.000	0.000
121	13	0.000	0.000	0.000

91st AVE. CHANNEL IMPROVEMENTS
2-YEAR 2-HOUR STORM

THE TOTAL SIMULATION TIME = 14400.0 SEC, = 240.00 MIN, = 4.00 HRS. THE TIME STEP = 300.0 SECONDS.

THE ENDING DATE (YR/MO/DAY) = 0/ 1/ 1

THE ENDING TIME OF DAY = 4.00 HOURS.

HYDRAULIC DESIGN ROUTINE FINAL RESULTS.

FINAL CONDUIT DIMENSIONS. ASTERISK INDICATES ALTERED CONDUITS.

$$$ NOTE, PIPE SIZES ARE INCREASED BY U.S. STD. SIZES (E.G., 6 IN.) AND MAY NOT AGREE WITH METRIC STANDARDS.

* * * * * ELEMENT PARAMETERS * * * * *

>>>>> CAUTION: COLUMN HEADINGS ARE FOR CONDUITS. REFER TO USERS MANUAL FOR MEANING FOR NON-CONDUITS. <<<<<

EXT. ELE. NUM.	TYPE	DESCRIPTION	SLOPE (FT/FT)	DISTANCE (FT)	MANNING ROUGHNESS	GEOM1 (FT)	GEOM2 (FT)	GEOM3 (FT)	NUMBER OF BARRELS	AFULL (SQ.FT)	QFULL (CFS)	QMAX (CFS)	SUPER-CRITICAL FLOW WHEN LESS THAN 95% FULL?
105	1	CIRCULAR	0.00200	2600.00	0.0120	5.000	0.000	0.000	1.0	19.635	126.519	136.641	NO
104	1	CIRCULAR	0.00682	5220.00	0.0120	6.000	0.000	0.000	1.0	28.274	379.913	410.306	NO
111	1	CIRCULAR	0.00476	5280.00	0.0120	2.000	0.000	0.000	1.0	3.142	16.954	18.310	NO
116	1	CIRCULAR	0.00476	5500.00	0.0120	8.000	0.000	0.000	1.0	50.265	683.542	738.225	NO
119	1	CIRCULAR	0.00200	1200.00	0.0120	7.500	0.000	0.000	1.0	44.179	373.021	402.863	NO
118	13	TRAPEZOID	0.00100	4560.00	0.0170	7.000	10.000	0.250	1.0	266.000	1835.329	1835.329	NO
120	13	TRAPEZOID	0.00140	480.00	0.0170	6.500	10.000	0.250	1.0	234.000	1828.892	1828.892	NO
121	13	TRAPEZOID	0.00040	3720.00	0.0170	6.500	10.000	0.250	1.0	234.000	977.584	977.584	NO

91st AVE. CHANNEL IMPROVEMENTS
2-YEAR 2-HOUR STORM

$$$$$$ SELECTED INFLOW HYDROGRAPHS $$$$$$

ALL FLOW RATES ARE IN UNITS OF CFS.

DATE MO/DA/YR	TIME HR:MIN	TIME STEP	INFLOW ELE 5	INFLOW ELE 19	INFLOW ELE 4	INFLOW ELE 11	INFLOW ELE 16	INFLOW ELE 18	INFLOW ELE 20	INFLOW ELE 21	INFLOW	INFLOW
1/ 1/ 0	0 5.0	1	0.024	0.008	0.028	0.055	0.025	0.018	0.014	0.019		
1/ 1/ 0	0 10.0	2	0.214	0.081	0.244	0.510	0.240	0.171	0.129	0.187		
1/ 1/ 0	0 15.0	3	0.460	0.199	0.497	1.135	0.582	0.422	0.301	0.457		
1/ 1/ 0	0 20.0	4	0.721	0.366	0.738	1.848	1.040	0.773	0.517	0.827		
1/ 1/ 0	0 25.0	5	2.020	0.988	2.141	5.090	2.804	2.084	1.399	2.228		
1/ 1/ 0	0 30.0	6	3.861	2.059	3.972	9.922	5.747	4.332	2.802	4.597		
1/ 1/ 0	0 35.0	7	5.579	3.474	5.470	14.856	9.410	7.272	4.400	7.618		
1/ 1/ 0	0 40.0	8	7.767	5.608	7.362	21.313	14.700	11.672	6.587	12.054		
1/ 1/ 0	0 45.0	9	12.774	10.075	12.032	35.483	25.731	20.868	11.202	21.308		
1/ 1/ 0	0 50.0	10	25.529	21.242	24.087	71.161	53.114	43.819	22.679	44.322		
1/ 1/ 0	0 55.0	11	49.298	45.908	45.694	139.806	110.922	94.086	45.742	93.733		
1/ 1/ 0	1 0.0	12	115.168	116.885	103.957	324.412	271.058	236.334	107.865	230.745		
1/ 1/ 0	1 5.0	13	106.553	160.490	82.829	311.447	330.988	316.356	114.132	290.382		
1/ 1/ 0	1 10.0	14	63.613	145.538	41.377	186.208	258.119	277.665	75.005	236.281		
1/ 1/ 0	1 15.0	15	42.505	120.081	23.714	116.253	188.401	222.458	48.306	177.406		
1/ 1/ 0	1 20.0	16	35.645	101.725	18.484	89.159	148.559	184.536	35.977	140.882		
1/ 1/ 0	1 25.0	17	27.646	83.122	12.117	63.416	113.170	147.688	25.490	108.044		
1/ 1/ 0	1 30.0	18	22.917	68.771	8.994	48.345	89.063	120.129	19.131	85.091		
1/ 1/ 0	1 35.0	19	20.310	58.285	7.580	40.122	73.340	100.535	15.437	69.684		
1/ 1/ 0	1 40.0	20	18.846	50.616	6.966	35.645	62.960	86.552	13.252	59.214		
1/ 1/ 0	1 45.0	21	16.637	43.573	5.705	29.994	53.188	73.799	10.990	49.736		
1/ 1/ 0	1 50.0	22	14.973	37.971	4.929	26.017	45.804	63.825	9.389	42.573		
1/ 1/ 0	1 55.0	23	13.810	33.629	4.542	23.485	40.437	56.238	8.339	37.339		
1/ 1/ 0	2 0.0	24	11.354	28.643	3.169	18.134	33.272	47.359	6.555	30.906		
1/ 1/ 0	2 5.0	25	8.845	23.883	1.904	12.838	26.289	38.898	4.820	24.802		
1/ 1/ 0	2 10.0	26	7.040	20.109	1.232	9.343	21.048	32.310	3.654	20.239		
1/ 1/ 0	2 15.0	27	5.636	17.069	0.837	6.890	17.010	27.093	2.838	16.750		
1/ 1/ 0	2 20.0	28	4.491	14.586	0.588	5.098	13.835	22.902	2.247	14.031		
1/ 1/ 0	2 25.0	29	3.533	12.535	0.422	3.759	11.305	19.497	1.807	11.875		
1/ 1/ 0	2 30.0	30	2.718	10.825	0.307	2.760	9.273	16.708	1.472	10.142		
1/ 1/ 0	2 35.0	31	2.025	9.387	0.225	2.039	7.640	14.411	1.212	8.731		
1/ 1/ 0	2 40.0	32	1.439	8.171	0.164	1.591	6.343	12.519	1.007	7.568		
1/ 1/ 0	2 45.0	33	0.953	7.140	0.119	1.287	5.355	10.979	0.842	6.600		
1/ 1/ 0	2 50.0	34	0.565	6.263	0.084	1.046	4.647	9.732	0.709	5.787		
1/ 1/ 0	2 55.0	35	0.281	5.521	0.058	0.851	4.057	8.666	0.599	5.099		
1/ 1/ 0	3 0.0	36	0.118	4.897	0.038	0.693	3.557	7.747	0.508	4.511		
1/ 1/ 0	3 5.0	37	0.084	4.390	0.022	0.563	3.130	6.951	0.432	4.006		
1/ 1/ 0	3 10.0	38	0.061	3.968	0.011	0.455	2.764	6.257	0.367	3.570		
1/ 1/ 0	3 15.0	39	0.043	3.598	0.004	0.365	2.447	5.649	0.313	3.191		
1/ 1/ 0	3 20.0	40	0.028	3.270	0.000	0.290	2.172	5.113	0.266	2.859		
1/ 1/ 0	3 25.0	41	0.016	2.979	0.000	0.228	1.932	4.640	0.226	2.568		
1/ 1/ 0	3 30.0	42	0.008	2.721	0.000	0.176	1.721	4.219	0.192	2.311		
1/ 1/ 0	3 35.0	43	0.002	2.489	0.000	0.133	1.535	3.844	0.162	2.084		
1/ 1/ 0	3 40.0	44	0.000	2.282	0.000	0.099	1.370	3.509	0.135	1.881		
1/ 1/ 0	3 45.0	45	0.000	2.095	0.000	0.073	1.224	3.208	0.113	1.701		
1/ 1/ 0	3 50.0	46	0.000	1.926	0.000	0.052	1.093	2.937	0.093	1.539		
1/ 1/ 0	3 55.0	47	0.000	1.774	0.000	0.034	0.976	2.692	0.076	1.393		
1/ 1/ 0	4 0.0	48	0.000	1.635	0.000	0.021	0.872	2.471	0.061	1.262		
AVERAGE FLOW.....			13.669	27.351	9.013	34.677	43.422	49.832	12.704	39.794		
STANDARD DEVIATION OF FLOW.....			3.637	5.912	2.989	10.410	11.110	11.319	3.733	9.891		

FLOW VOLUME (CUBIC FEET)..... 196832.8 393855.3 129793.1 499349.8 625280.5 717583.1 182937.7 573040.6

91st AVE. CHANNEL IMPROVEMENTS
2-YEAR 2-HOUR STORM

$$$$$$ SELECTED OUTFLOW HYDROGRAPHS $$$$$$

ALL FLOW RATES ARE IN UNITS OF CFS.

DATE MO/DA/YR	TIME HR:MIN	TIME STEP	OUTFLOW ELE 5	OUTFLOW ELE 19	OUTFLOW ELE 4	OUTFLOW ELE 11	OUTFLOW ELE 16	OUTFLOW ELE 18	OUTFLOW ELE 20	OUTFLOW ELE 21	OUTFLOW	OUTFLOW
1/ 1/ 0	0 5.0	1	0.024	0.008	0.028	0.000	0.025	0.018	0.014	0.019		
1/ 1/ 0	0 10.0	2	0.214	0.081	0.244	0.000	0.240	0.171	0.129	0.187		
1/ 1/ 0	0 15.0	3	0.460	0.199	0.497	0.001	0.582	0.422	0.301	0.466		
1/ 1/ 0	0 20.0	4	0.721	0.366	0.758	0.002	1.040	0.797	0.517	0.932		
1/ 1/ 0	0 25.0	5	2.020	0.988	2.141	0.004	2.804	2.179	1.399	2.563		
1/ 1/ 0	0 30.0	6	3.861	2.059	4.271	0.010	5.747	4.908	2.802	5.883		
1/ 1/ 0	0 35.0	7	5.579	3.474	7.050	0.018	9.410	9.533	4.400	10.569		
1/ 1/ 0	0 40.0	8	7.767	5.608	10.818	0.032	14.700	17.561	6.587	17.007		
1/ 1/ 0	0 45.0	9	12.774	10.075	17.759	0.055	25.731	32.884	11.202	29.566		
1/ 1/ 0	0 50.0	10	25.529	21.242	34.656	0.098	53.114	69.952	22.679	60.803		
1/ 1/ 0	0 55.0	11	49.298	45.908	69.622	0.185	110.922	160.229	46.424	129.646		
1/ 1/ 0	1 0.0	12	115.168	116.885	161.231	0.379	271.058	417.404	123.232	326.125		
1/ 1/ 0	1 5.0	13	106.553	160.490	185.214	0.710	330.988	706.965	261.556	513.821		
1/ 1/ 0	1 10.0	14	63.613	145.538	141.696	1.053	258.140	742.642	472.759	660.058		
1/ 1/ 0	1 15.0	15	42.505	120.081	88.727	1.732	188.458	611.915	602.310	756.042		
1/ 1/ 0	1 20.0	16	35.645	101.725	63.103	2.279	148.873	489.925	635.334	770.551		
1/ 1/ 0	1 25.0	17	27.646	83.122	48.810	2.667	113.967	395.644	587.572	710.363		
1/ 1/ 0	1 30.0	18	22.917	68.771	38.082	2.952	90.435	317.491	512.599	613.116		
1/ 1/ 0	1 35.0	19	20.310	58.285	31.675	3.173	75.254	261.732	431.854	519.630		
1/ 1/ 0	1 40.0	20	18.846	50.616	28.093	3.354	65.332	222.199	361.975	435.498		
1/ 1/ 0	1 45.0	21	16.637	43.573	25.148	3.508	55.926	191.332	306.293	368.314		
1/ 1/ 0	1 50.0	22	14.973	37.971	22.298	3.640	48.835	165.379	262.996	315.202		
1/ 1/ 0	1 55.0	23	13.810	33.629	20.167	3.756	43.700	145.214	227.219	273.254		
1/ 1/ 0	2 0.0	24	11.354	28.643	17.659	3.855	36.722	126.470	198.358	236.394		
1/ 1/ 0	2 5.0	25	8.845	23.883	14.382	3.935	29.899	107.093	174.727	205.614		
1/ 1/ 0	2 10.0	26	7.040	20.109	11.390	3.998	24.786	89.542	153.103	179.371		
1/ 1/ 0	2 15.0	27	5.636	17.069	9.104	4.047	20.851	75.498	132.570	155.226		
1/ 1/ 0	2 20.0	28	4.491	14.586	7.335	4.083	17.761	63.949	114.425	133.717		
1/ 1/ 0	2 25.0	29	3.533	12.535	5.967	4.110	15.295	54.845	98.534	115.226		
1/ 1/ 0	2 30.0	30	2.718	10.825	4.843	4.130	13.312	47.180	85.250	99.469		
1/ 1/ 0	2 35.0	31	2.025	9.387	3.899	4.143	11.716	40.886	73.963	86.337		
1/ 1/ 0	2 40.0	32	1.439	8.171	3.106	4.152	10.448	35.740	64.386	75.131		
1/ 1/ 0	2 45.0	33	0.953	7.140	2.460	4.158	9.480	31.412	56.352	65.702		
1/ 1/ 0	2 50.0	34	0.565	6.263	1.887	4.161	8.786	27.825	49.527	57.739		
1/ 1/ 0	2 55.0	35	0.281	5.521	1.434	4.161	8.206	24.875	43.713	50.942		
1/ 1/ 0	3 0.0	36	0.118	4.897	1.043	4.160	7.712	22.473	38.753	45.140		
1/ 1/ 0	3 5.0	37	0.084	4.390	0.687	4.157	7.289	20.420	34.597	40.212		
1/ 1/ 0	3 10.0	38	0.061	3.968	0.472	4.153	6.923	18.726	31.039	36.040		
1/ 1/ 0	3 15.0	39	0.043	3.598	0.338	4.147	6.605	17.246	28.048	32.464		
1/ 1/ 0	3 20.0	40	0.028	3.270	0.250	4.140	6.327	15.947	25.498	29.437		
1/ 1/ 0	3 25.0	41	0.016	2.979	0.192	4.133	6.083	14.804	23.303	26.825		
1/ 1/ 0	3 30.0	42	0.008	2.721	0.149	4.125	5.866	13.793	21.397	24.558		
1/ 1/ 0	3 35.0	43	0.002	2.489	0.117	4.116	5.673	12.896	19.730	22.575		
1/ 1/ 0	3 40.0	44	0.000	2.282	0.092	4.108	5.501	12.097	18.263	20.830		
1/ 1/ 0	3 45.0	45	0.000	2.095	0.067	4.098	5.347	11.369	16.975	19.290		
1/ 1/ 0	3 50.0	46	0.000	1.926	0.050	4.089	5.208	10.733	15.813	17.921		
1/ 1/ 0	3 55.0	47	0.000	1.774	0.038	4.080	5.082	10.164	14.777	16.686		
1/ 1/ 0	4 0.0	48	0.000	1.635	0.029	4.070	4.969	9.616	13.877	15.593		
AVERAGE FLOW.....			13.669	27.351	22.689	2.752	45.857	122.544	133.940	173.501		
STANDARD DEVIATION OF FLOW.....			3.637	5.912	6.097	0.255	10.974	27.498	26.243	33.149		

FLOW VOLUME (CUBIC FEET)..... 196832.8 393855.3 326723.2 39635.1 660337.9 1764628.4 1928739.9 2498415.7

TRANSPORT SIMULATION ENDED NORMALLY.

```
ENDPROGRAM          BLOCK CALLED.

* * * * *  STORMWATER SIMULATION ENDED NORMALLY  * * *  * *
```

APPENDIX F

Alternate A1 Cross-Sections

ALTERNATE A1
EARTHWORK X-SECTIONS
PROJECT NO. 88-22

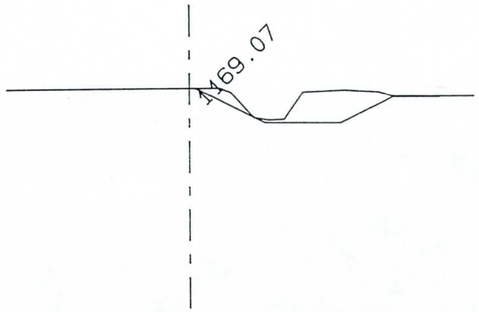

STATION 29 + 00

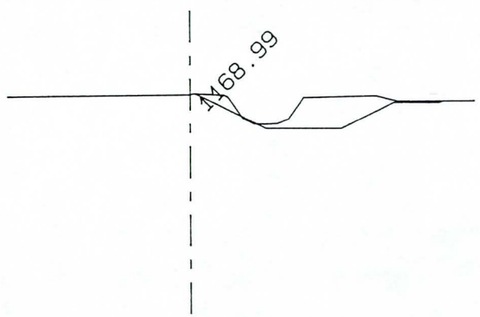

STATION 28 + 00

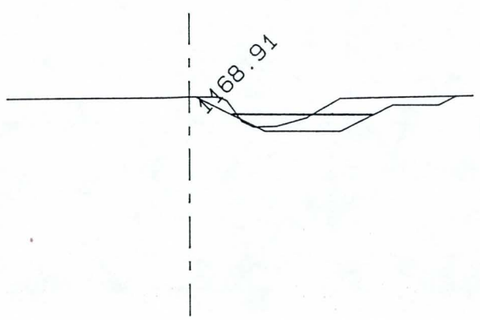

STATION 27 + 00

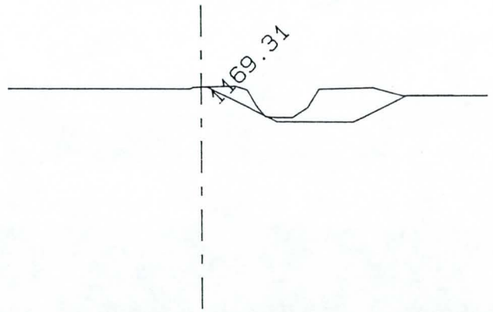

STATION 32 + 00

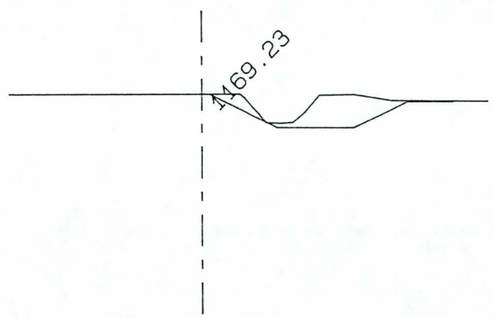

STATION 31 + 00

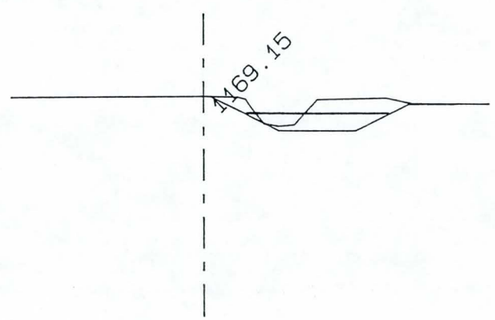

STATION 30 + 00

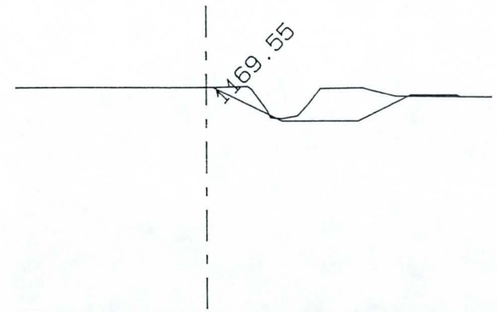

STATION 35 + 00

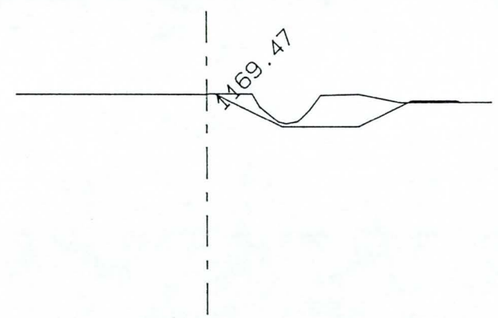

STATION 34 + 00

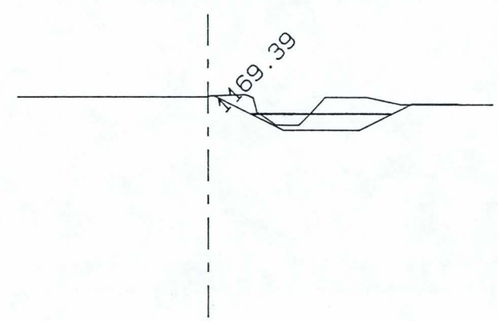

STATION 33 + 00

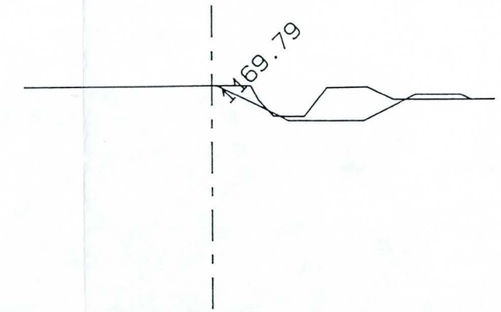

STATION 38 + 00

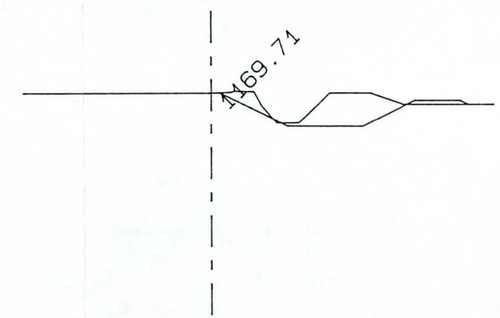

STATION 37 + 00

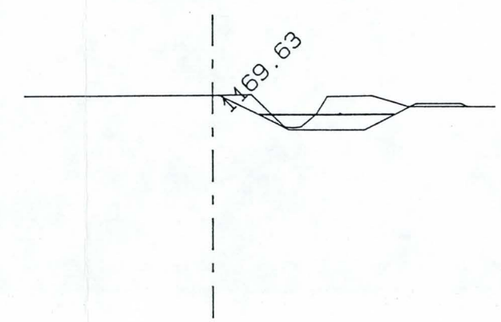

STATION 36 + 00

ALTERNATE AI
EARTHWORK X-SECTIONS
PROJECT NO. 88-22

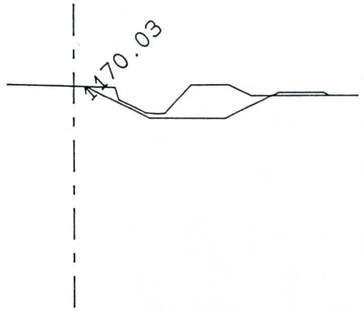

STATION 41 + 00

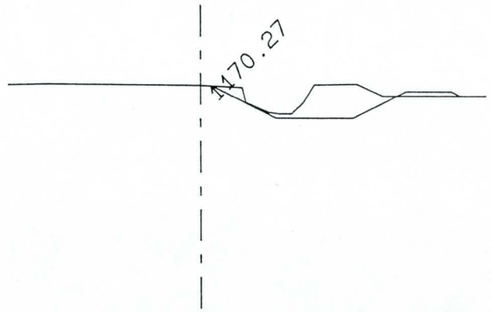

STATION 44 + 00

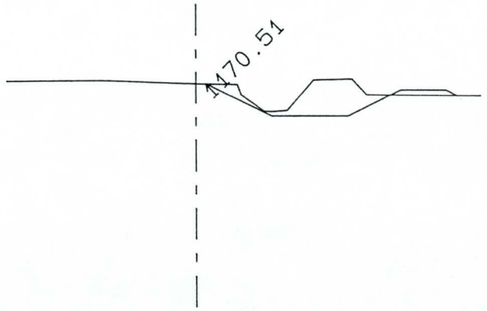

STATION 47 + 00

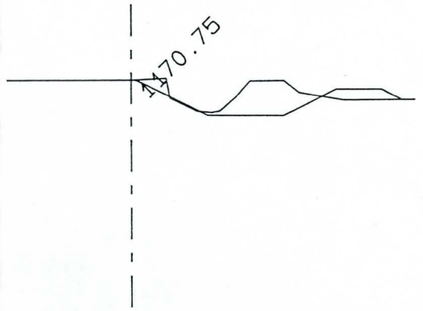

STATION 50 + 00

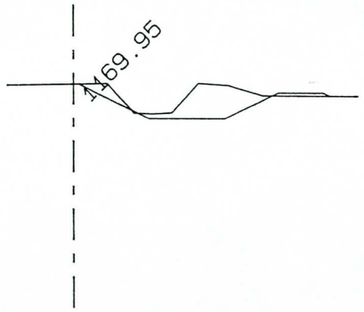

STATION 40 + 00

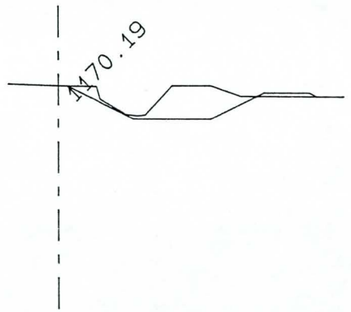

STATION 43 + 00

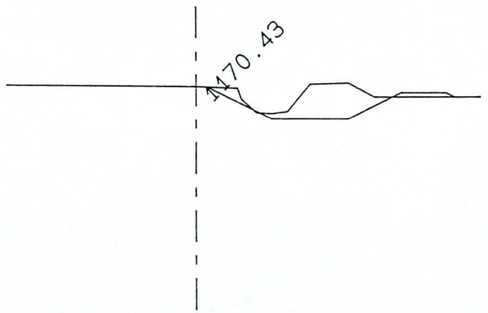

STATION 46 + 00

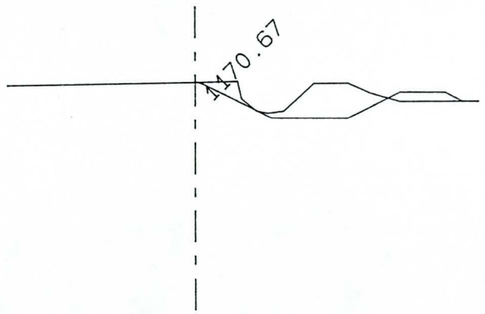

STATION 49 + 00

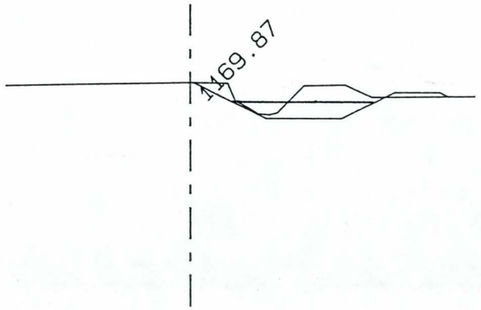

STATION 39 + 00

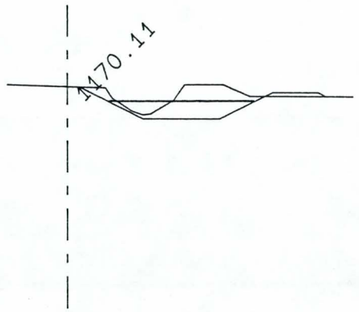

STATION 42 + 00

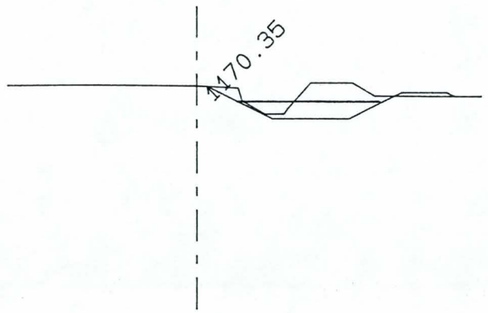

STATION 45 + 00

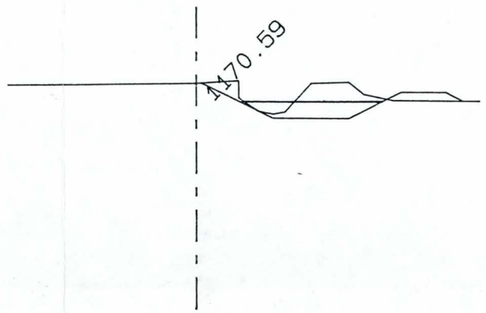

STATION 48 + 00

ALTERNATE AI
EARTHWORK X-SECTIONS
PROJECT NO. 88-22

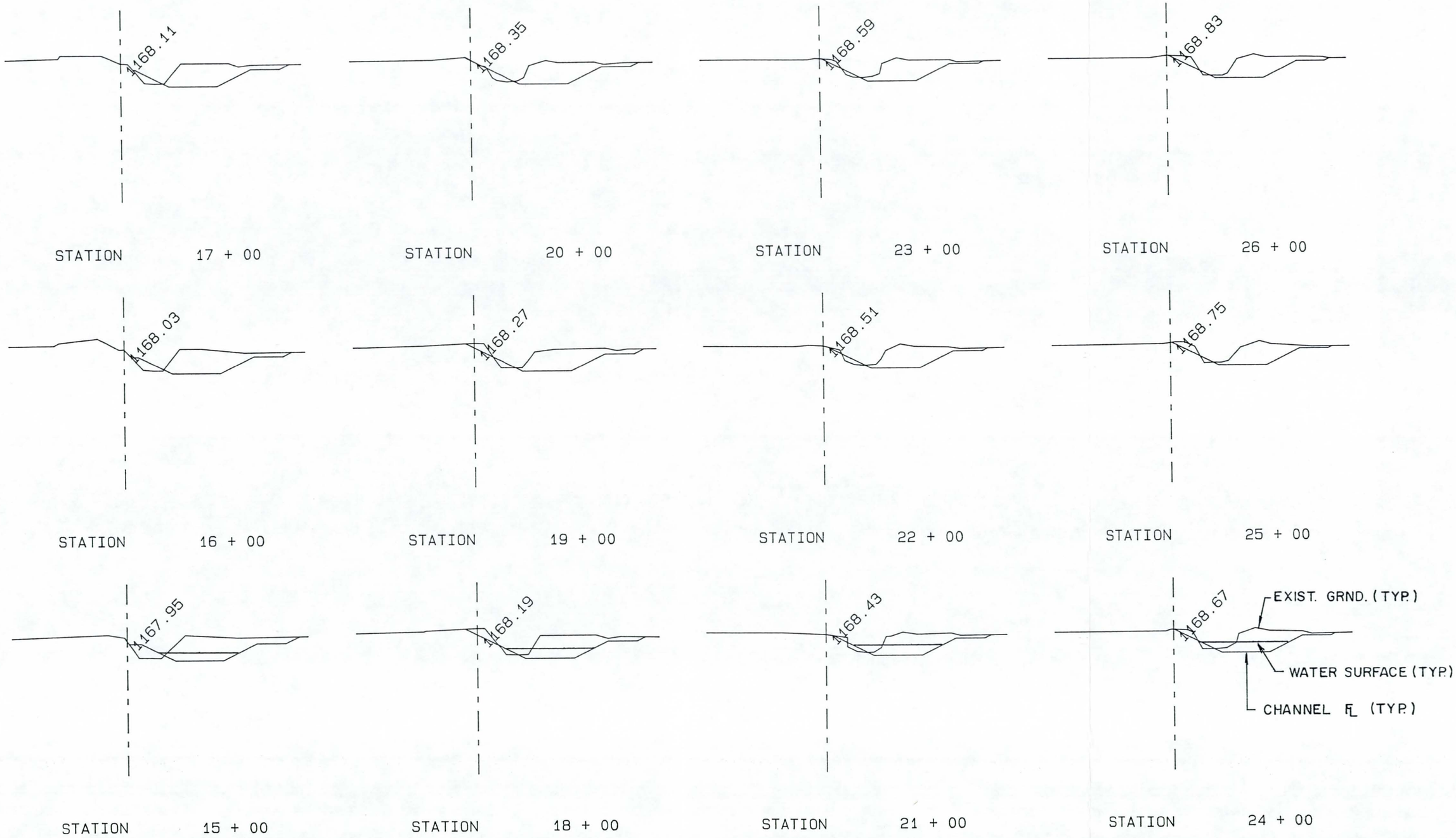

ALTERNATE AI
EARTHWORK X-SECTIONS
PROJECT NO. 88-22

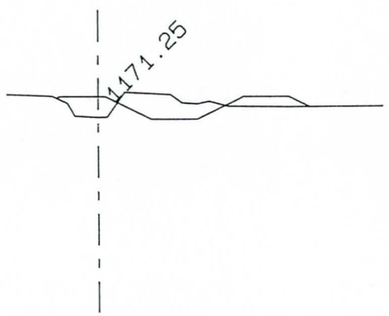

STATION 54 + 00

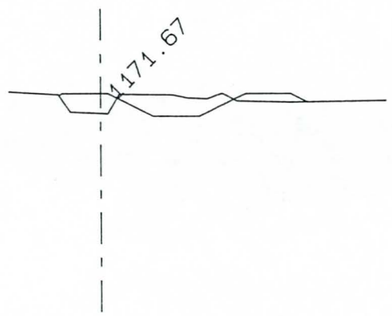

STATION 57 + 00

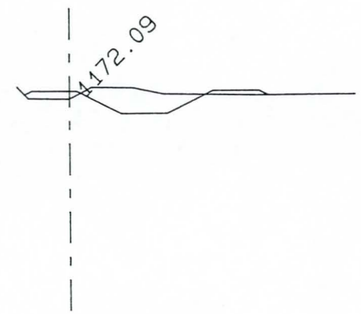

STATION 60 + 00

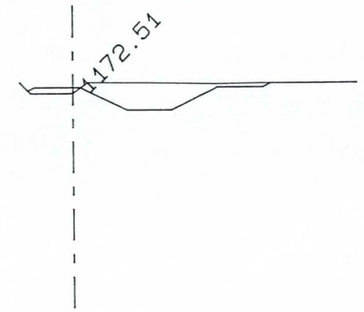

STATION 63 + 00

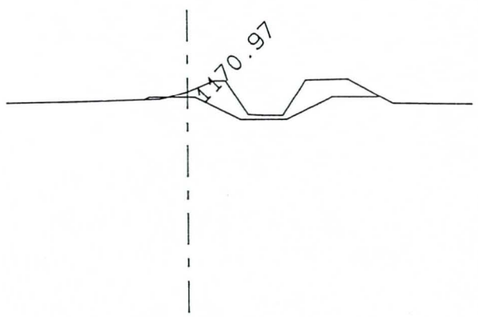

STATION 52 + 00

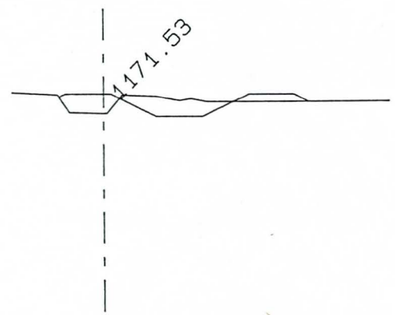

STATION 56 + 00

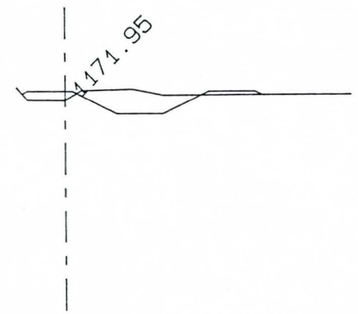

STATION 59 + 00

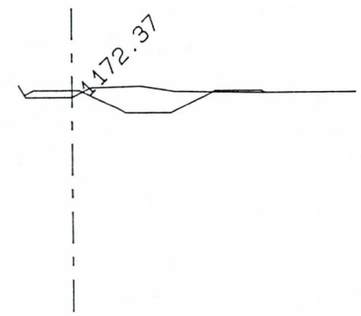

STATION 62 + 00

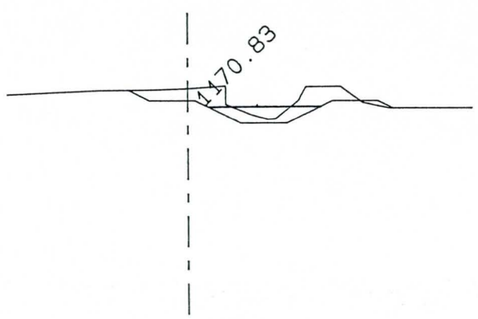

STATION 51 + 00

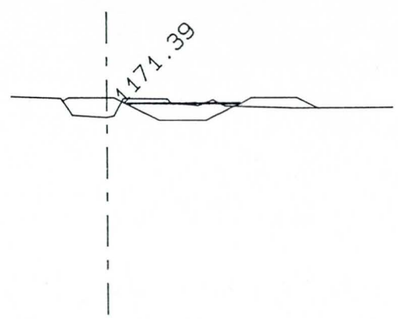

STATION 55 + 00

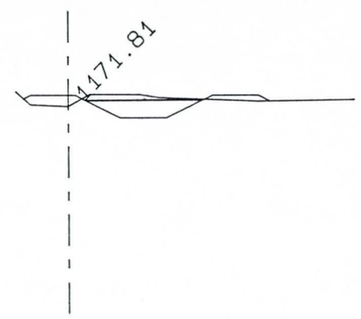

STATION 58 + 00

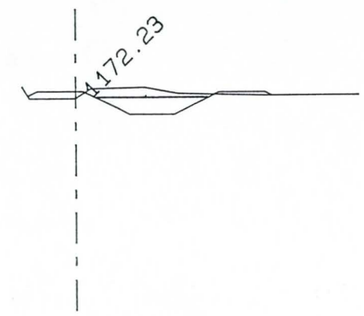

STATION 61 + 00

ALTERNATE AI
EARTHWORK X-SECTIONS
PROJECT NO. 88-22

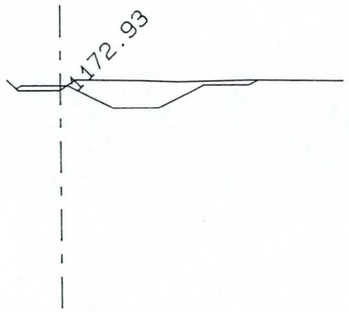

STATION 66 + 00

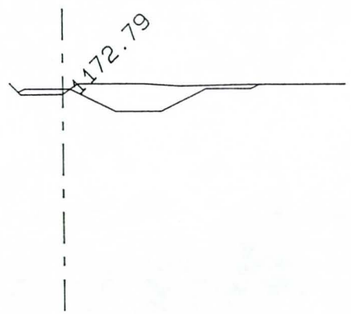

STATION 65 + 00

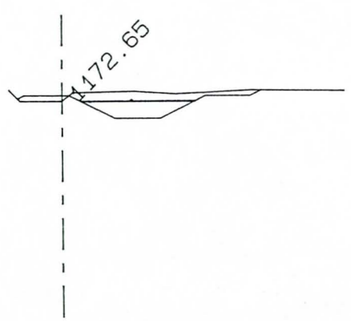

STATION 64 + 00

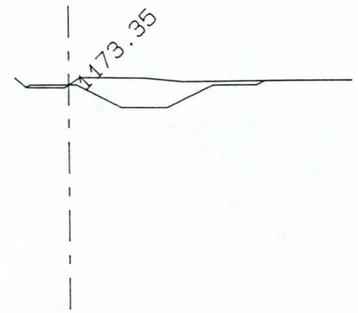

STATION 69 + 00

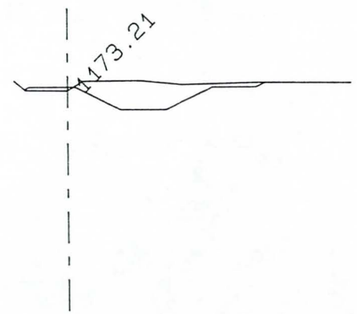

STATION 68 + 00

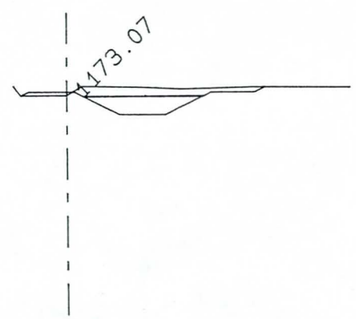

STATION 67 + 00

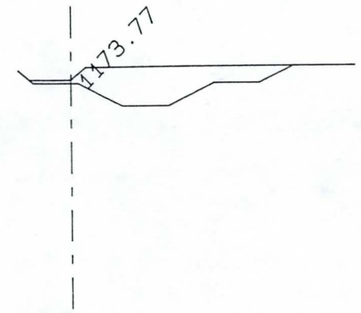

STATION 72 + 00

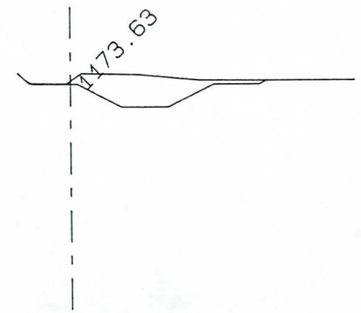

STATION 71 + 00

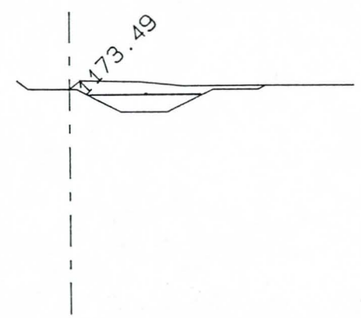

STATION 70 + 00

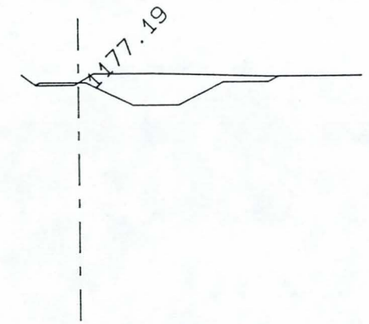

STATION 75 + 00

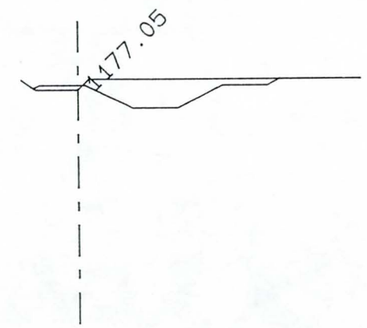

STATION 74 + 00

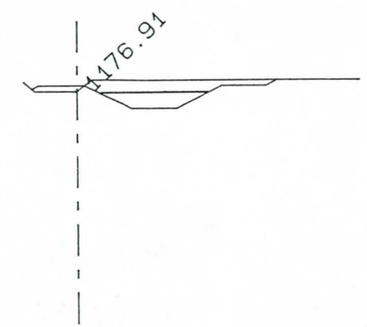

STATION 73 + 00

ALTERNATE AI
EARTHWORK X-SECTIONS
PROJECT NO. 88-22

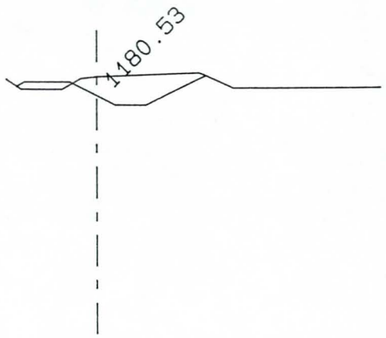

STATION 78 + 00

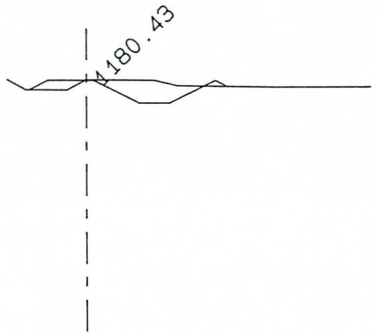

STATION 77 + 00

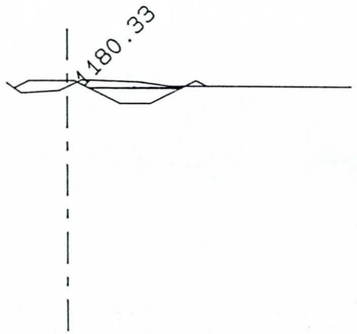

STATION 76 + 01

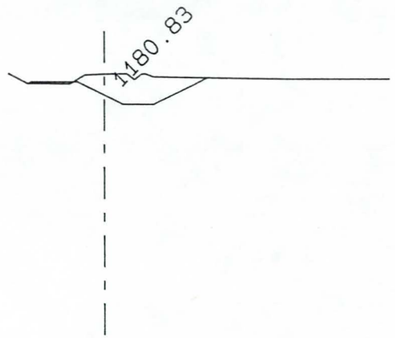

STATION 81 + 00

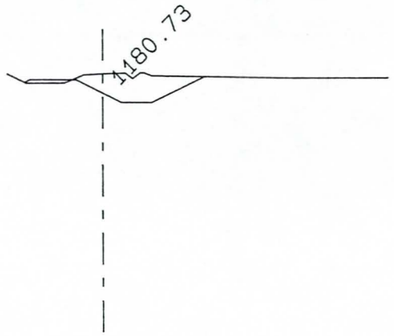

STATION 80 + 00

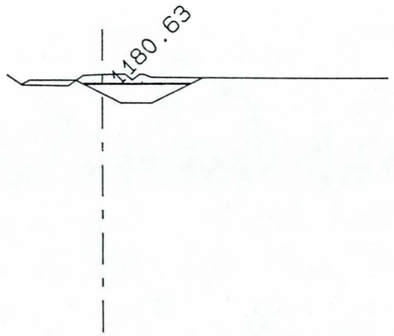

STATION 79 + 00

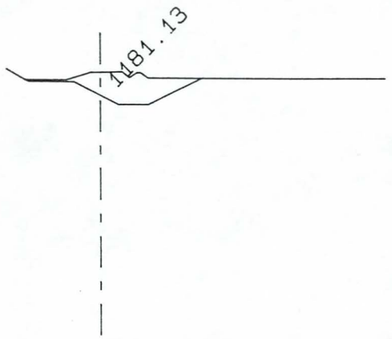

STATION 84 + 00

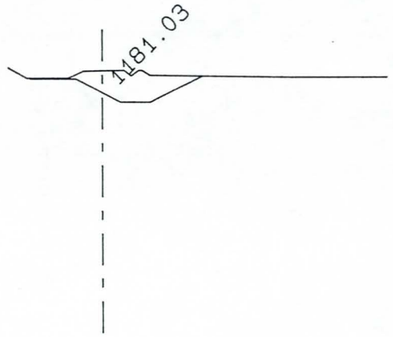

STATION 83 + 00

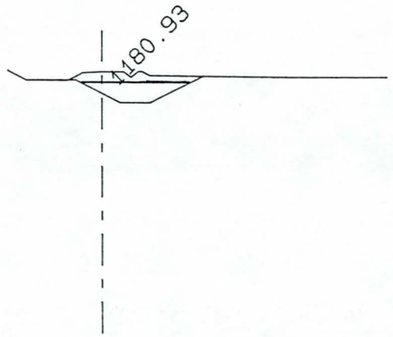

STATION 82 + 00

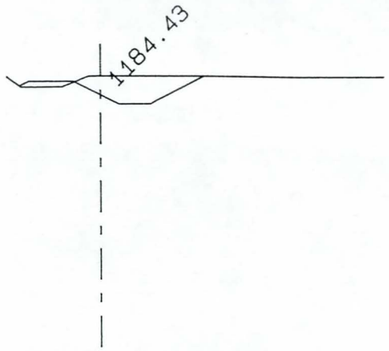

STATION 87 + 00

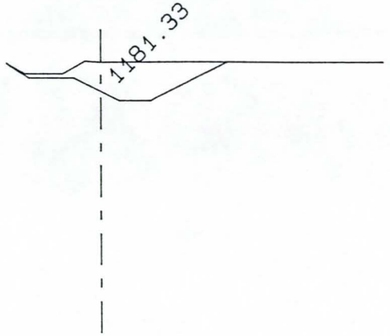

STATION 86 + 00

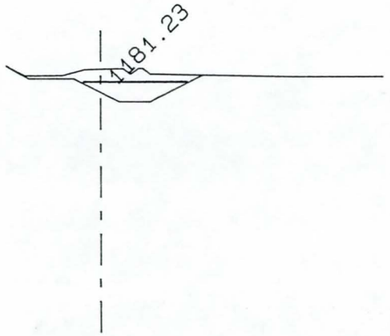

STATION 85 + 00

ALTERNATE AI
EARTHWORK X-SECTIONS
PROJECT NO. 88-22

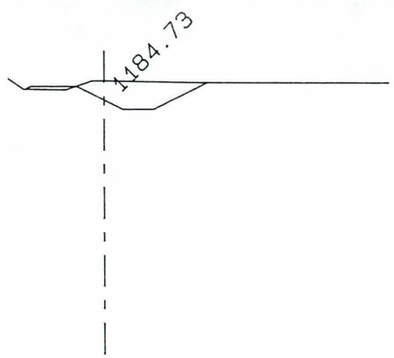

STATION 90 + 00

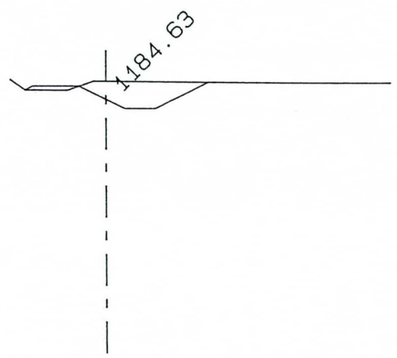

STATION 89 + 00

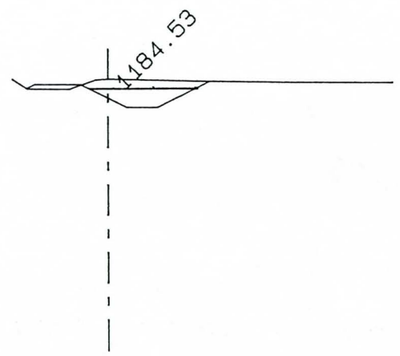

STATION 88 + 00

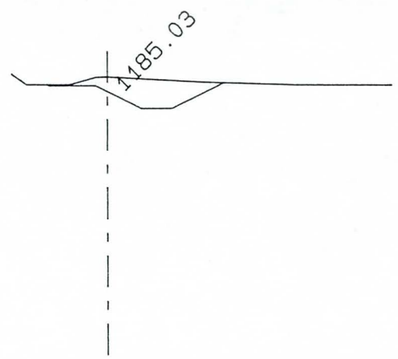

STATION 93 + 00

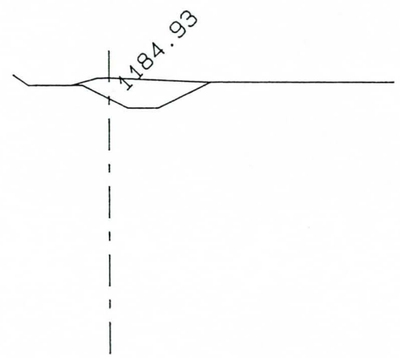

STATION 92 + 00

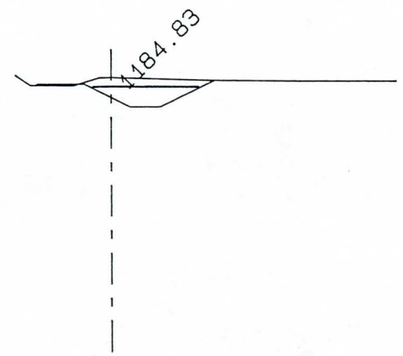

STATION 91 + 00

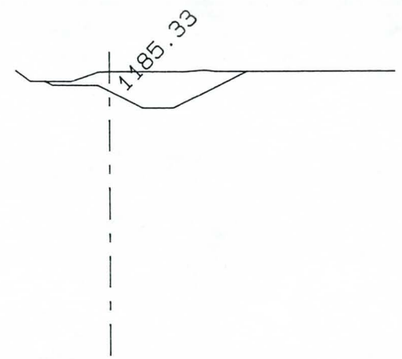

STATION 96 + 00

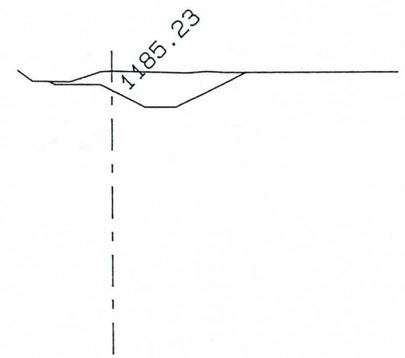

STATION 95 + 00

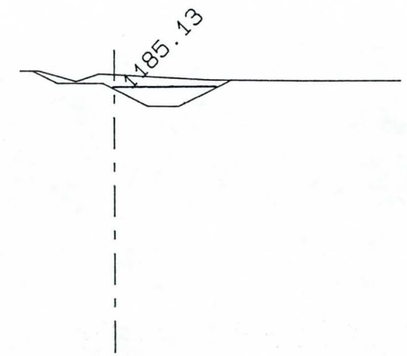

STATION 94 + 00

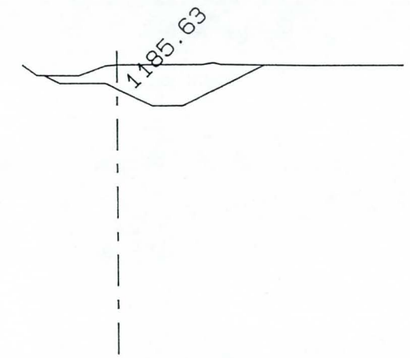

STATION 99 + 00

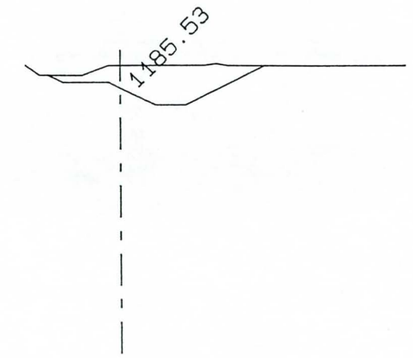

STATION 98 + 00

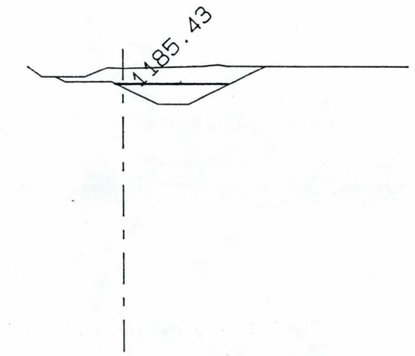

STATION 97 + 00

ALTERNATE AI
EARTHWORK X-SECTIONS
PROJECT NO. 88-22

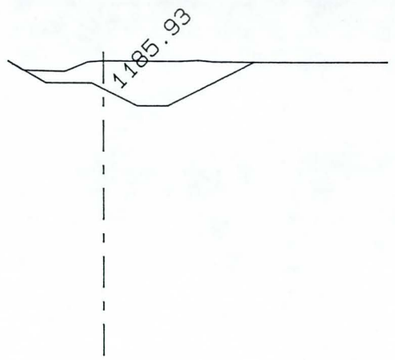

STATION 102 + 00

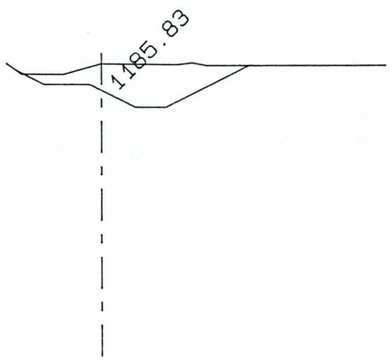

STATION 101 + 00

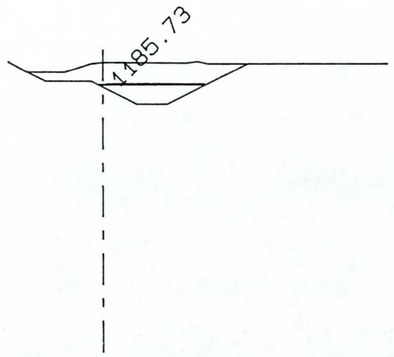

STATION 100 + 00

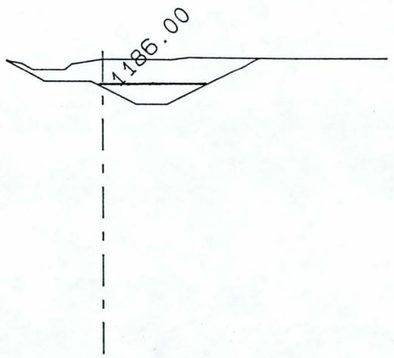

STATION 102 + 70