Contract No. FCD 98-30

OSBORN ROAD STORM DRAIN

Property of
Flood Control District of MC Library
Please Return to
2801 W. Durango
Phoenix, AZ 85009

FINAL

DESIGN REPORT

MARCH 31, 2000

Submitted to:

FLOOD CONTROL DISTRICT OF MARICOPA COUNTY

Submitted by:

PARSONS BRINCKERHOFF

PCN No. 027 04 30

TABLE OF CONTENTS

PAGE

EXECUTIVE SUMMARY 1
Introduction 1
Design Criteria 1
Original HEC-1 Models 2

1.0 INTRODUCTION 3
1.1 Location 3
1.2 History 3
1.3 Report Purpose 6
1.4 Construction Sequence 6

2.0 DESIGN CRITERIA 6
2.1 Design Storm 6
2.2 Inlet Spacing 6
2.3 Pavement Encroachment 7
2.4 Tailwater Elevation at Indian Bend Wash 7
2.5 Tailwater Elevation at Paiute Park 7
2.6 Protection of Local Neighborhoods 8
2.7 Extension of Proposed Laterals 8

3.0 HYDROLOGIC MODELING 8
3.1 Original HEC-1 Models 8
3.2 Modifications to Original HEC-1 Models 9
3.3 Marriott Brighton Gardens Stage/Storage/Discharge Curve 13
3.4 Paiute Park Stage/Storage/Discharge Curve 13

4.0 HYDRAULIC MODELING 16
4.1 Hydraulic Design 16
4.2 Trunk Line Design 16
4.3 Lateral Design 17
4.4 Transition Structures 18
4.5 Inlets 18

5.0 CONCLUSIONS AND RECOMMENDATIONS 26

TECHNICAL APPENDIX

Registered Professional Engineer (Civil)
CERTIFICATE NO.
28163
ALAN J.
HUMPHREY
Date Signed 3/30/00
ARIZONA, U.S.A.

LIST OF FIGURES

FIGURE		PAGE
1	Vicinity Map	4
2	Trunkline Route Schematic	5
3	Drainage Map	10
4	Catch Basin Collection	22

LIST OF TABLES

TABLE		PAGE
1	Time Dependent Analysis	15
2	Lateral Design Flows	19
3	Design Flows	20
4	Catch Basin Bypass Relationship	23
5	Check of Hydraulic Grade Line at Inlets	24

EXECUTIVE SUMMARY

Introduction

Runoff generated on the east slopes of the Papago Buttes flows east/northeast and ponds along the west side of the Cross Cut Canal. The canal is elevated above the adjacent grade, trapping runoff and causing localized flooding. A storm drain was recommended to convey runoff from the detention basin at Marriott Brighton Gardens to a detention basin in Paiute Park. A second storm drain would convey runoff from Paiute Park to Indian Bend Wash. The storm drains are also intended to collect local runoff between Marriott Brighton Gardens and Indian Bend Wash. The proposed storm drain is conveying runoff under the physical barrier of the Cross Cut Canal from one watershed to another. Care has been taken to assure that the imported flows do not cause damage between Paiute Park and the wash.

Design Criteria

The storm drain/detention basin system is designed in accordance with the *Drainage Design Manual for Maricopa County, Arizona, Volume I, Hydrology January 1, 1995 and Volume II, Hydraulics, January 28, 1996.*

Design Storm

The project design storm is the 10-year, 6-hour storm. Precipitation depth is 2.05 inches. The trunk line is designed to convey the peak flow from the 10-year storm.

Inlet Spacing

Inlets along the route of the trunk line are designed to meet the pavement encroachment criterion described below. These streets include Thomas Road, 61st Place, Catalina Drive, Osborn Road, 71st Street and Earll Drive. Streets that intersect the route of the trunk line are provided with inlets, but these inlets are not designed to collect the 10-year storm. Intersecting streets provided with inlets are Navajo Trail, Pinto Lane, 68th Street, Supai Way, 70th Street, Civic Center Boulevard, 75th Street and Miller Road. Inlets on intersecting streets are designed to collect the runoff which the street would convey if flowing in a curb full condition. Inlets capable of collecting the 10-year peak flow on these intersecting streets are not included as part of this project. However, the laterals on these streets are designed to ultimately convey the 10-year peak flow. This creates an interim condition until the City of Scottsdale installs additional inlets.

Pavement Encroachment

The allowable spread on two-lane roadways shall be 6 feet on each side from the centerline of the street and on four-lane roadways shall be 12 feet on each side from the centerline of the road. The only four-lane roadways within the project are Thomas Road at 61st Place and Osborn Road from 70th Street to 71st Street. All other roadways are two-lane.

Tailwater Elevation at Indian Bend Wash

For purposes of system design, the tailwater elevation at the outlet is assumed to be at the pipe soffit. The proposed pipe will not be designed to operate with large flows in Indian Bend Wash.

Original HEC-1 Models

Hydrologic modeling of the project watersheds was performed by Kimley –Horn, Inc. as part of the *STP Papago Regional Flood Control Project Watershed Study, 1997.* The models have been reviewed and accepted by the Flood Control District of Maricopa County and were used in the development of this project. It was necessary to make revisions to the models to reflect changes in physical conditions that have occurred since the models were completed or to model changes to the hydrology as a result of proposed improvements. Changes are documented in the body of the models.

1.0 INTRODUCTION

1.1 Location

The project site is located in Scottsdale, Arizona. It is bounded on the south and west by the Papago Buttes, on the north by the Arizona Canal and on the east by Indian Bend Wash. The general alignment of the project is between Thomas Road and 61st Place to Paiute Park and then west on Osborn Road and Earll Drive to Indian Bend Wash. The project area is shown on the Vicinity Map, Figure 1. The Osborn Road Storm Drain, which is approximately 2.5 miles long, begins at a detention basin located at the Marriott Brighton Gardens assisted living facility at Thomas Road and 61st Place. The proposed storm drain will convey flows from this existing detention basin to a second proposed detention basin in Paiute Park, east of the Cross Cut Canal and south of Osborn Road. A second section of storm drain conveys the runoff from Paiute Park to Indian Bend Wash primarily along Osborn Road and Earll Drive. Figure 2 is a schematic representation of the storm drain.

1.2 History

Runoff generated on the east slopes of the Papago Buttes flows east/northeast and ponds along the west side of the Cross Cut Canal. The canal is elevated above the adjacent grade, trapping runoff and causing localized flooding. The flooding prompted the Flood Control District of Maricopa County to authorize a study titled *Scottsdale-Tempe-Phoenix (STP) Papago Regional Flood Control Project Watershed Study, 1997* by Kimley-Horn and Associates, Inc. The study documents the hydrology of the 10-year, 6-hour storm in the area and recommends improvements to mitigate the flooding.

A storm drain was recommended to convey runoff from the detention basin at Marriott Brighton Gardens to a detention basin in Paiute Park. A second storm drain would convey runoff from Paiute Park to Indian Bend Wash. The storm drains are also intended to collect local runoff between Marriott Brighton Gardens and Indian Bend Wash. The proposed storm drain is conveying runoff under the physical barrier of the Cross Cut Canal from one watershed to another. Care has been taken to assure that the imported flows do not cause damage between Paiute Park and the wash.

The *STP Papago Study* recommended construction of a storm drain along Osborn Road from Paiute Park to Indian Bend Wash. A subsequent change order (*Change Order #2, Alternatives for Osborn Road Alignment, STP Papago Regional Flood Control Project, 1998* by Kimley-Horn and Associates, Inc.) considered three additional routes for the storm drain between Paiute Park and Indian Bend Wash. A third study, *Osborn Road Storm Drain Alternative Analysis Report, 1999* by Parsons Brinckerhoff was funded to select one of the four alignment considered by the STP Papago Studies. The alignment described in the first paragraph was selected for design and construction as a result of the *Alternative Analysis Report.*

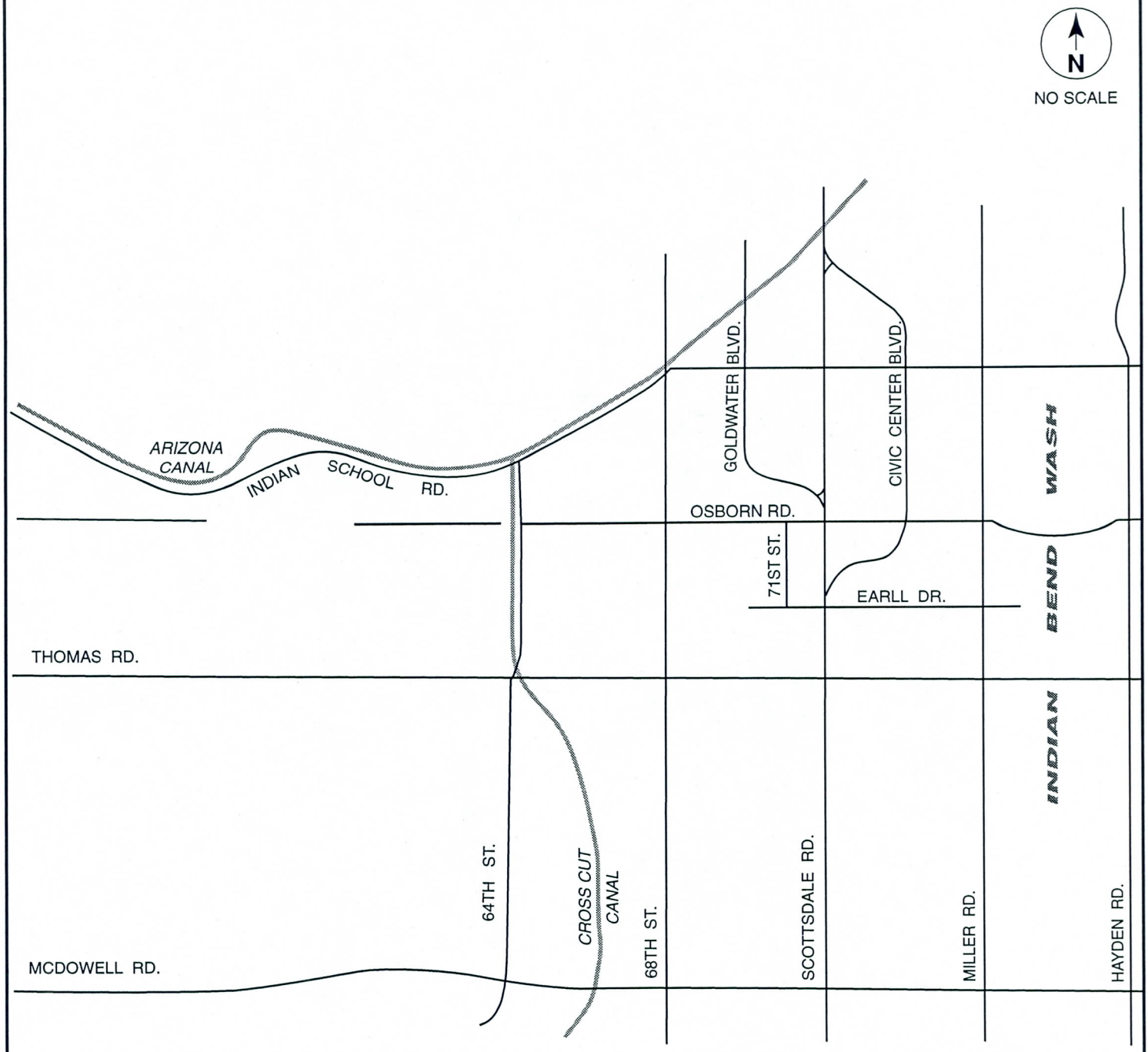

OSBORN OUTFALL
ALTERNATIVE ANALYSIS

VICINITY MAP

PARSONS BRINCKERHOFF

FIGURE 1

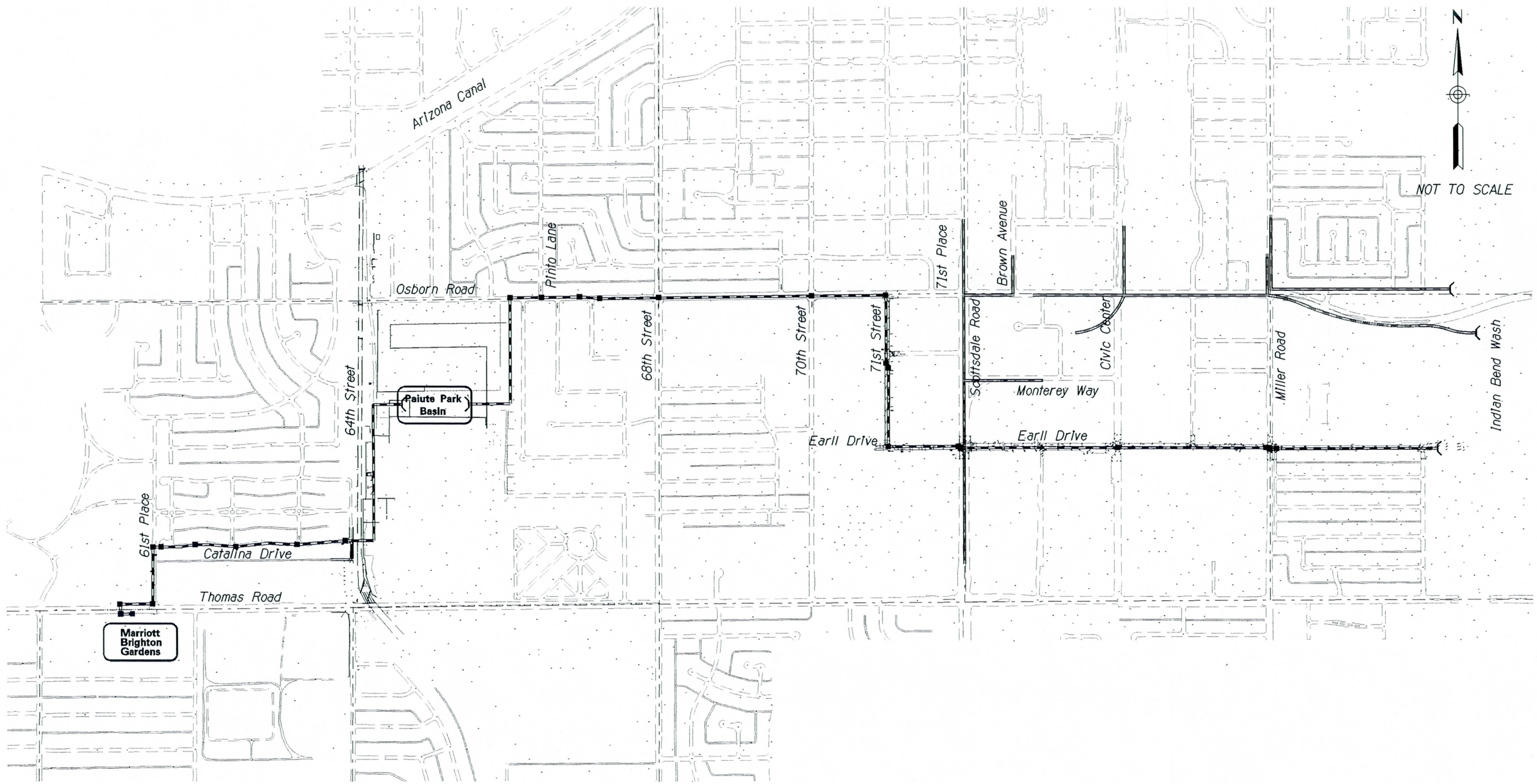

Existing Storm Drain
New Storm Drain

OSBORN OUTFALL

TRUNKLINE ROUTE SCHEMATIC

PARSONS BRINCKERHOFF

FIGURE 2

h:\osborn\report\dfig07.dgn
Fri Nov 5 12:00:32 1999

1.3 Report Purpose

The purpose of this Report is to document the design of the Osborn Road Storm Drain. The report includes discussion of design criteria, documentation of changes to the original HEC-1 models created for the *STP Papago Regional Flood Control Project* and calculations to support the hydraulic design of the system.

1.4 Construction Sequence

The proposed storm drain improvements are to be constructed under two projects. The first project is the widening of 64th Street from Thomas Road to Indian School Road. The proposed storm drain from Paiute Park to Catalina Drive will be installed as part of this project. Construction is expected to begin in late 1999. The majority of the storm drain and both detention basins are to be constructed under a separate contract. Construction of the second contract is expected to begin in mid 2000.

2.0 DESIGN CRITERIA

The storm drain/detention basin system is designed in accordance with the *Drainage Design Manual for Maricopa County, Arizona, Volume I, Hydrology January 1, 1995 and Volume II, Hydraulics, January 28, 1996.* The following discussion lists design criteria particular to the project.

2.1 Design Storm

The project design storm is the 10-year, 6-hour storm. Precipitation depth is 2.05 inches. The trunk line is designed to convey the peak flow from the 10-year storm.

2.2 Inlet Spacing

Inlets along the route of the trunk line are designed to meet the pavement encroachment criterion described below. These streets include Thomas Road, 61st Place, Catalina Drive, Osborn Road, 71st Street and Earll Drive. Streets that intersect the route of the trunk line are provided with inlets, but these inlets are not designed to collect the 10-year storm. Intersecting streets provided with inlets are Navajo Trail, Pinto Lane, 68th Street, Supai Way, 70th Street, Civic Center Boulevard, 75th Street and Miller Road. Inlets on intersecting streets are designed to collect the runoff which the street would convey if flowing in a curb full condition. Inlets capable of collecting the 10-year peak flow on these intersecting streets are not included as part of this project. However, the laterals on these streets are designed to ultimately convey the 10-year peak flow. This creates an interim condition until the City of Scottsdale installs additional inlets.

Design of inlets on intersecting streets considers the interim condition. Inlet capacity required to collect the curb full flow is calculated. If an inlet is required on an intersecting street, a minimum 20-foot curb inlet is provided. In many cases, the 20-foot inlet is capable of collecting more runoff than the curb full condition, but the extra

capacity will improve street drainage in the interim condition with very little added expense.

Inlets along the route of the storm drain are designed to collect flows generated by the roadway pavement and properties draining directly to the roadway. Flows bypassing a catch basin along the route of the storm drain are calculated as part of the inflow to the next catch basin down stream. Bypass flows from intersecting streets are assumed to be zero for the purpose of designing inlets along the route of the trunk line.

Inlets which collect pavement flow from 64th Street were designed and installed as part of the 64th Street widening project between Thomas and Indian School Roads.

2.3 Pavement Encroachment

The allowable spread on two-lane roadways shall be 6 feet on each side from the centerline of the street and on four-lane roadways shall be 12 feet on each side from the centerline of the road. The only four-lane roadways within the project are Thomas Road at 61st Place and Osborn Road from 70th Street to 71st Street. All other roadways are two-lane.

2.4 Tailwater Elevation at Indian Bend Wash

The peak flow of the 10-year storm in Indian Bend Wash at Earll Drive is 1230.62 (Scottsdale datum). The peak flow is approximately 8,000 cfs. The watershed contributing to Indian Bend Wash above the outfall of the Osborn Storm Drain is much larger than the project watershed, so it is expected to have a different time to peak than the local watershed. The peak flow from the 10-year, 6-hour storm in Indian Bend Wash is not expected to coincide with the peak flow in the proposed storm drain. For purposes of system design, the tailwater elevation at the outlet is assumed to be at the pipe soffit. The proposed pipe will not be designed to operate with large flows in Indian Bend Wash, but the function of the system must be considered as if there were a high water surface elevation in the wash.

The storm drain system was checked under the condition of simultaneous 10-year peak flows in storm drain and Indian Bend Wash. The check shows the hydraulic grade line (HGL) in the pipe below the ground elevation from Paiute Park to 75th Street. The hydraulic grade line rises above the ground at 75th Street. Runoff would be expected to bubble out of inlets at 75th Street under these flow conditions. A printout of the check model is included in the Appendix.

2.5 Tailwater Elevation at Paiute Park

The design of the storm drain between the Marriott Brighton Gardens detention basin and the Paiute Park detention basin is based on the tailwater conditions in Paiute Park. In accordance with Section 4.3.1 of the *Drainage Design Manual for Maricopa County, Arizona, Volume II, Hydraulics, January 28, 1999*, the tailwater elevation of the system is based on the water surface elevation in the basin at the time of the peak stage in the detention basin.

2.6 Protection of Local Neighborhoods

Backflow protection is not provided on the outfall at Indian Bend Wash. As the water level rises in the wash, water will back up into the storm drain to the west. Local neighborhoods are to be protected from backflow from Indian Bend Wash. Design of backflow protection assumes no flow in the storm drain from Paiute Park or local neighborhoods. Backflow protection is intended to prevent damage from flows originating in Indian Bend Wash. Backflow would exit the storm drain through openings such as manholes and inlets. The only reach in the system susceptible to discharging flow from Indian Bend Wash is the reach between 75th Street and Indian Bend Wash.

A berm separates Earll Drive from Indian Bend Wash. The top of the berm is at elevation 1233.0. The existing ground elevation west of Indian Bend Wash is lower than the high water elevation of 1230.62 expected during a 10-year storm in Indian Bend Wash. The ground elevation at Earll Drive immediately west of Indian Bend Wash is approximately 1227.5. Earll Drive rises to the west to approximately 1231.2 at Miller Road and 1233.1 at 75th Street. If the HGL in the storm drain is above 1233.0, flow from the wash is overtopping the berm at the east end of Earll Drive. Once runoff from the wash has overtopped the berm, discharge from the inlets would be considered inconsequential.

The gutter elevation at the intersection of Miller Road and Earll Drive is approximately 1231.2. This is approximately 0.6 feet above the 10-year water surface elevation in Indian Bend Wash. Storms which produce a peak flow higher than the 10-year storm in Indian Bend Wash would produce backflow which would discharge from unprotected openings between the wash and Miller Road. The manholes in this reach will be bolted down to prevent flow from Indian Bend Wash from bubbling out of the storm drain into the adjacent neighborhood. No inlets are proposed between Miller Road and Indian Bend Wash.

The inlets at Miller Road and the inlets on Earll Drive between Miller Road and 75th Street are equipped with check valves to prevent discharge of flows from Indian Bend Wash during larger storms within the wash. Tide Flex check valves are provided on the Miller Lateral and the inlets between Miller Road and 75th Street with gutter elevations lower than 1233.0 (Stations 144+60, 146+32 and 147+77). Headloss curves for the proposed valves are included in the Technical Appendix. The headloss curves shown in the Appendix were developed for standard weight valves. It is recommended that Ultra Light weight valves be used. Ultra Light valves are able to operate with half the headloss of standard weight valves. Installation of the check valve on the Miller Road lateral is expected to limit the capacity of the lateral to 35 to 40 cfs during the 10-year peak flow in the trunk line.

2.7 Extension of Proposed Laterals

Laterals are designed to convey the peak flow generated during the 10-year design storm. The laterals to be constructed as part of this project are stubbed out past the last inlet. In the future, the City of Scottsdale may extend the laterals and add

additional catch basins. The information required to design the laterals is included in Section 4.3 of this report.

It will not be necessary to extend the Miller Road Lateral. As discussed in Section 4.3, the collection and conveyance capacity of the Miller Road lateral is limited to 35 to 40 cfs. The proposed lateral and inlets are sufficient to collect 35 to 40 cfs if impacted by the full 10-year peak flow.

3.0 HYDROLOGIC MODELING

3.1 Original HEC-1 Models

Hydrologic modeling of the project watersheds was performed by Kimley –Horn, Inc. as part of the *STP Papago Regional Flood Control Project Watershed Study, 1997*. Four original models were created using HEC-1, one for each alternative alignment considered. The models have been reviewed and accepted by the Flood Control District of Maricopa County and were used in the development of this project.

Refinement of the hydrologic models or manipulation of the models to change or calibrate peak flows is beyond the scope of this project. However, it was necessary to make revisions to the models to reflect changes in physical conditions that have occurred since the models were completed or to model changes to the hydrology as a result of proposed improvements. Changes are documented in the body of the models. The following is a detailed discussion of the revisions.

3.2 Modifications to Original HEC-1 Models

The original HEC-1 model developed for the current alignment, pbaltd.dat, was further modified as design continued on the project. Figure 3 is a reproduction of the original drainage area map from the *STP Papago Regional Flood Control Project Watershed Study, 1997*. It has been annotated to show revisions made as part of this project.

Marriott Brighton Gardens Stage/Storage/Discharge Curve, Operation 07Det

The Paiute Park Stage/storage/discharge relationship used in the original model required revisions due to changes anticipated in the proposed storm drain downstream from Paiute Park. Revisions to the model are discussed in detail in Section 3.4 of this report.

Thomas Road and 61st Place, Subbasins 070410 and 070420

Subbasins 070410 and 070420 contribute flow to the south side of Thomas Road, east of 61st Place. Flows from these subbasins are collected by inlets on the south side of Thomas Road near Marriott Brighton Gardens. The model is revised to combine the flows from these subbasins to provide a design flow. A divert card is entered to model flows collected by an existing inlet on the south side of Thomas Road at Marriott Brighton Gardens. The existing inlet is connected to the City of Phoenix storm drain system. Flows collected by this inlet are removed from the model.

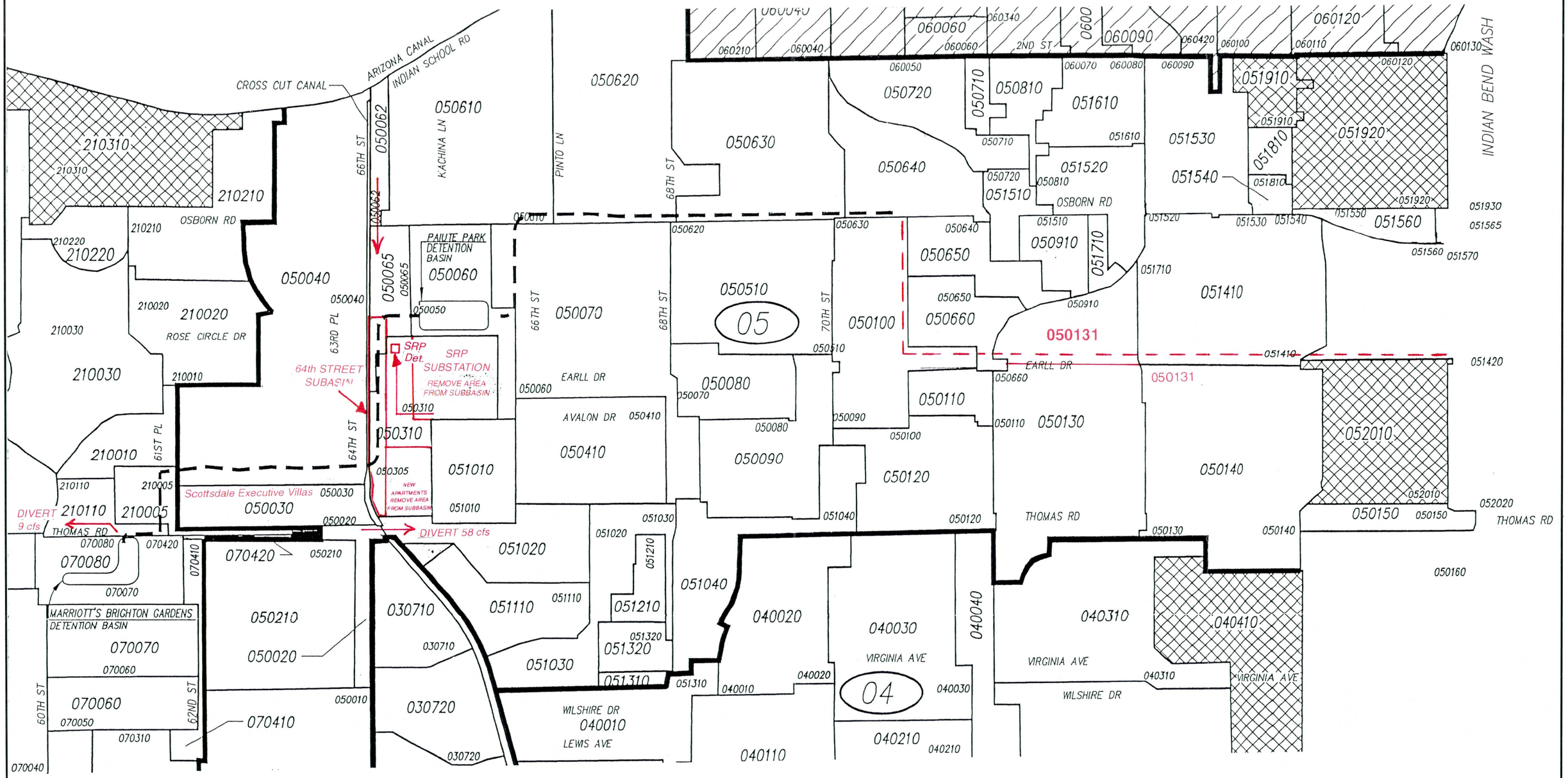

PORTION OF ORIGINAL DRAINAGE MAP FROM
STP PAPAGO WATERSHED STUDY
KIMLEY-HORN, 1997
PARSONS BRINCKERHOFF ANNOTATIONS IN RED

N
NO SCALE

OSBORN OUTFALL
ALTERNATIVE ANALYSIS

DRAINAGE MAP

PARSONS BRINCKERHOFF

FIGURE 3

Thomas Road and 61st Place, Subbasin 210005

Subbasin 210005 is primarily comprised of the grocery store at the northwest corner of the intersection of Thomas Road and 61st Place. The runoff from the building and the parking lot currently drain to dry wells located in the north east corner of the parking lot. The rim elevations of the dry wells is approximately 1268.4. A pipe stub from the trunkline is to be provided for a future catch basin connection.

64th Street and Thomas Road, Concentration Point 050020

Recently constructed storm drain improvements on 64th Street have diverted flow out of the project watershed. A storm drain was constructed in 64th Street between Oak Street and Thomas Road. The performance of this storm drain is documented in the *Final Drainage Design Report, Addendum No. 1, 64th Street Improvements, McDowell Road to Thomas Road, Entellus, revised March 1998.* The storm drain diverts flows generated by the Papago Buttes and 64th Street pavement (subbasins 050020 and 050210). Runoff is collected and diverted east in Thomas at 64th Street. The original hydrology model had these flows crossing Thomas Road to the north and impacting the Scottsdale Executive Villas office complex (subbasin 050030). The storm drain has an estimated capacity of 58 cfs. A divert is added to the model to remove the first 58 cfs arriving at concentration point 050020.

Catalina Drive, Operation Alley

A hydrograph combine is added at the alley at 64th Street and Catalina Drive west of the Cross Cut Canal. This hydrograph combination gives a design flow for proposed inlets in the Scottsdale Executive Villas.

64th Street, Cross Cut Canal to Paiute Park, Subbasin 050310

The pavement on 64th Street will be drained into the trunk line between Catalina Drive and the park. The pavement was originally included in subbasin 050310. The pavement area was removed from subbasin 050310 and modeled as a separate subbasin (S 64th).

64th Street, North of Osborn Road, Subbasin 050062

Proposed improvements to 64th Street between Thomas Road and Indian School Road change the drainage patterns with regard to the area contributing to 64th Street north of Osborn Road. The original model by Kimley-Horn routed the runoff from this area (subbasin 050062) to the proposed Osborn Outfall inlets at Pinto Lane. Storm drain designed by PB as part of the 64th Street Improvement plans will collect the flow and convey it to Paiute Park. The hydrograph location and routing cards were modified to reflect the changed condition.

SRP Substation, Subbasin 050310

The SRP substation near Paiute Park occupies the majority of subbasin 050310. Approximately two thirds of the substation drains to the east side of the substation site. SRP intends to retain this water on-site. The flows do not and will not impact the 64th Street storm drains.

An apartment complex is currently under construction in the south end of the subbasin. The City of Scottsdale has confirmed that the development will provide on-site retention

for the 100-year, 2-hour storm. The remainder of the subbasin is comprised of the pavement on 64th Street south of Paiute Park, the western third of the substation and a paved area between the substation and the apartments.

The western third of the substation and the paved area north of the apartments drain to an existing concrete lined detention basin near the entrance to the substation. A reservoir route was added to the model to determine if the detention basin is capable of intercepting the 10-year storm from the reduced drainage area. The detention basin is capable of detaining the runoff generated on the site and metering it to the trunkline.

The basin area card for this subbasin was revised to remove the eastern portion of the substation, the pavement on 64th Street and the apartments.

Paiute Park Stage/Storage/Discharge Curve, Operation 05Det

The Paiute Park Stage/storage/discharge curve used in the original model requires revision due to changes anticipated in the proposed storm drain downstream from Paiute Park. Revisions to the curve are discussed in detail in Section 3.4 of this report.

71st Street, Subbasin 050100

In the original model, runoff generated west of 71st Street (subbasin 050100) is combined with the existing storm drain in Scottsdale Road. The model was altered to delete the combination of flows. The flows in the proposed trunk line continue east to Indian Bend Wash and the flows in Scottsdale Road continue south.

The basin area cards for this subbasin were also revised. Figure 3 shows that the proposed route of the trunk line dividing subbasin 050100. The area in subbasin 050100 that is south of the trunk line does not drain to the trunkline. The area card is revised to show the reduced contributing area.

No flows were collected east of Scottsdale Road. The model was revised to exclude the flow from the Scottsdale Road storm drain and to collect flow on Earll Drive at Civic Center Boulevard and Miller Road.

Earll Drive and Civic Center Boulevard Subbasin 050130

The proposed alignment of the trunk line divides subbasin 050130. New hydrograph cards were created to determine the flow from this subbasin at the intersection of Earll Drive and Civic Center Boulevard. The area north of Earll Drive and west of Civic Center Boulevard that drains to the trunk line is represented by subbasin 050131. Combine cards are added to include the runoff from this subbasin with the flow in the trunk line. A routing routine was added between Civic Center Boulevard and Miller Road along Earll Drive.

General Revisions

Routing cards are revised throughout the model to reflect changes in pipe roughness coefficients and pipe lengths.

3.3 Marriott Brighton Gardens Stage\Storage\Discharge Curve

The goal of the project was to expand the existing channel/detention basin at the Marriott Brighton Gardens assisted living facility to reduce the flooding potential adjacent to Thomas Road and/or to reduce the size of the proposed storm drain.

Design of the Marriott basin included consideration of the following issues:

- Limited land available for detention basin;
- Minimal depth in basin for storage;
- Numerous utilities in Thomas Road;
- Attempt to utilize the existing 30" pipe crossing in Thomas Road;
- Retention basin alternative eliminated per FCDMC;
- Thomas Road "on-site" drainage restrictions (i.e., spread, etc.).

The hydrologic analysis performed by Kimley Horn indicated a 10-year peak discharge of 168 cfs contributed to the basin. The 10-year outlet peak discharge for the proposed "in-line" detention basin is 41 cfs. Culvert hydraulics software was used to model the outlet pipe as a culvert. The inflow curve developed by the culvert hydraulics software is input into the HEC-1 model as the stage/discharge relationship for the detention basin. Results of the analysis are included in the Technical Appendix.

The proposed detention basin is independent from Thomas Road. Off-site runoff from subbasins 070410 and 070420 collects in a sump on Thomas Road at Marriott Brighton Gardens. An attempt was made to collect runoff from Thomas Road and discharge it to the Marriott detention basin. The analysis shows the maximum water surface elevation in the basin (1272.3) exceeds the gutter elevation in the street (1271.0). There is not enough differential head between the basin and the gutter to operate a check valve. Therefore, discharging the runoff to the detention basin it is not feasible.

The runoff in Thomas Road is collected in an inlet near the intersection of Thomas Road and 61st Place. The catch basin is located just downstream form the scupper that drains subbasin 070410 to Thomas Road. The runoff is conveyed across Thomas Road in a proposed storm drain. The proposed storm drain is located approximately 4 feet east of the existing discharge pipe from the detention basin. It is hoped that a corridor clear of existing utilities exists adjacent to the existing pipe. Potholing of the utilities is not completed at this time. The proposed storm drain is at or above the invert elevation of the existing pipe across Thomas Road.

3.4 Paiute Park Stage/Storage/Discharge Curve

Final grading of the detention basin provides significantly more storage at lower elevations than the preliminary basin configuration considered in the Alternative Analysis. The increase is due primarily to the removal of the City of Scottsdale maintenance yard. Reconfiguration of the slopes in the bottom of the basin also provides additional storage capacity at lower elevations. The grading plan for the basin is included in the Technical Appendix. Flow diversions upstream from Paiute Park reduce the amount of runoff routed to the park, further contributing to a lowering of the

water surface elevations. The flow diversions include 64th Street to Thomas Road, 61st Place and Thomas Road and the removal of subbasin 210005.

The elevation of the invert of the outlet structure to Paiute Park was lowered from elevation 1248 to 1245 during final design. Lowering the outlet structure allows the system to provide more driving head at the outlet during the storm, despite the lowered water surface elevation in the park.

The outlet structure is analyzed by calculating the inflow capacity as a function of depth. The outlet structure has a trash rack over a drop inlet. Additional inflow area is provided by rectangular holes at ground level. A drawing of the inlet is included in the Technical Appendix. The combined inlet capacities of the grate and rectangular openings are calculated as a function of depth. The inlet capacity of the pipe is determined by use of a culvert hydraulics software. The outlet pipe is modeled as a culvert with no backwater condition. The trash rack and rectangular openings have lower inlet capacities below elevation 1252. Above this elevation, the pipe has a lower inlet capacity. The curve developed by these calculations is used as the SQ card in the discharge route in the HEC-1 model.

The output from the HEC-1 model, PBOsb.dat is considered at discreet time steps to check the performance of the system. Table 1 shows the time considered, the flows at various points in the system at that time, the water surface elevation in the park and the HGL in the pipe downstream from the park. The HGL in the pipe is calculated by using StormCad. Flows input into the StormCad model are those shown in Table 1. The HGL from the pipe is input into the culvert program as a tailwater elevation. Table 1 shows the water surface elevation in the detention basin is usually higher than the HGL in the outlet pipe. However, at time 310 to time 318, the HGL in the storm drain is higher than the water surface elevation in the park. This condition was first observed during the Alternative Analysis.

When the HGL in the storm drain exceeds the water surface elevation in the park, water obviously cannot flow from the park to the storm drain. The HGL in the pipe is calculated using assumed outflow from the park. However, water is physically unable to flow from the park into the pipe. Therefore, the calculated HGL in the pipe is artificially high due to the modeled inflow from the park. Under actual operating conditions, the HGL in the pipe will restrict flow from the park. During the 12-minute time period in which the park outlet is restricted, approximately 3 acre-feet of water enter the detention basin. At the beginning of the flow restriction, the water surface elevation in the park is approximately1250. Assuming the outflow from the park is zero for the entire 12-minute time period, the water surface elevation would be expected to increase 1 foot above the elevations calculated by HEC-1.

In conclusion, the stage/discharge curve in the HEC-1 model provides a reasonable estimation of the functioning of the storm drain system. The peak flows calculated by HEC-1 are slightly higher than the flows expected under operating conditions. Therefore, the storm drain design is slightly conservative. The water surface elevation in the Paiute Park detention basin may be up to 1 foot higher than calculated by HEC-1 after time 308. A note has been added to the HEC-1 model warning of this condition.

Table 1
Time Dependant Analysis

Time	Paiute Park				Paiute	Pinto	68th St	70th St	71st St	Scottsdale	Civic Center	Miller
	Outflow	HEC-1 Stage	StormCad HGL	Park vs. Pipe								
306	26	49.1	46.63	Park	26	101	166	243	229	207	186	289
308	33	49.5	47.18	Park	33	127	216	311	301	296	273	378
310	41	49.8	51.14	Pipe	41	135	242	340	342	373	361	464
314	57	50.2	54.13	Pipe	57	129	228	313	329	410	446	556
318	71	50.4	50.85	Pipe	71	124	199	263	277	352	405	517
320	76	50.5	48.24	Park	76	124	190	244	256	320	370	474
322	80	50.6	48.23	Park	80	124	183	230	240	294	337	430

The water surface elevation in Paiute Park also effects the design of the trunk line between Catalina Drive and Paiute Park. The peak in this reach of storm drain occurs at time 314, which is after the outlet is restricted. The corresponding water surface elevation in the park is 1250.2 as calculated by the HEC-1 model. The water surface is increased to 1251.2 as the design condition for the storm drain. A second StormCad model was created to check the trunk line performance during the peak stage in the basin (time 350, elevation 1252 after accounting for the increased water surface). The HGL in the storm drain above Paiute Park is 6 inches or more below gutter elevation throughout the system under both conditions.

4.0 HYDRAULIC MODELING

4.1 Hydraulic Design

The principal hydraulic design software being used for the project is StormCad by Haestad Methods, v1.5. Electronic copies of the models used to design the storm drain system have been submitted with this report. The printed copies of the models included in the Technical Appendix show schematic diagrams of the systems being modeled. All printouts have the file name of the model in the lower left corner.

Hydraulic design criteria and methodology are performed in accordance with the *Drainage Design Manual for Maricopa County, Arizona, Volume II, Hydraulics, January, 1996.* Head losses at manholes and inlets were calculated in accordance with the *Drainage Design Manual for Maricopa County, Arizona, Volume II, Hydraulics, January, 1996*, Section 4.3.3. Loss calculations are done on a separate spreadsheet and input into the StormCad model. Losses at junctions are calculated using Equation 4.9b. Discussions with County staff have allowed the elimination of the D_2-D_1 factor of in the equation 4.9b if it is possible to match pipe soffits. Head loss calculations are included in the Technical Appendix.

StormCad models and system schematics are included in the Technical Appendix. Separate models are included for the reach between Marriott Brighton Gardens and Paiute Park, the reach between Paiute Park and Indian Bend Wash and for the laterals on intersecting streets.

4.2 Trunk Line Design

The trunk line is designed to maintain a minimum of 6 inches between the HGL in the pipe and the gutter elevation at inlets. As discussed in Section 3.4 of this report, during the peak of the 10-year storm, the HGL in the trunk line is expected to raise to the point where there is no outflow from the park. The analysis discussed in this report presents a range of conditions under which the storm drain system below Paiute Park will operate. The hydraulic analysis of the trunk line below Paiute Park is modeled using two StormCad models, finaldn.stm and paiute.stm. The model finaldn.stm includes flows from Paiute Park as if the outlet from the park is operating as an unrestricted culvert. The model paiute.stm has a nominal flow of 5 cfs discharging from the park.

Flows used to create paiute.stm are generated by a second HEC-1 model, PBOsb.dat. Actual operating conditions are expected to be bracketed by these models, but neither model truly reflects the actual conditions within the system. The most accurate representation of the operation of the system is presented in Section 3.4.

The slope of the trunk line is at the minimum allowable slope of 0.0010 feet per foot from Scottsdale Road to Miller Drive. A longitudinal slope this flat is not desirable, but it is necessary to cross over the sanitary sewer line at Miller Road. The alternative to a slope of 0.0010 feet per foot is a slope of 0.0015 feet per foot (marginally better) and a step in the invert of the trunk line to cross over the sewer at Miller Road. The step in the invert would be approximately 2.5 feet high. The sump created at the step would not drain and would require excessively high maintenance.

The flat slope results in a reduction in capacity of the pipe. It is necessary to increase the pipe size from 75th Street to Miller Road (approximately 500 feet). Due to low cover and numerous utility conflicts, a 10'x6' box culvert proves more desirable than a 102-inch pipe.

Due to physical constraints, the Miller Road lateral is unable to collect the peak flow of 83 cfs produced by the 10-year storm. The constraints are discussed in Sections 2.3 and 4.3 of this report. However, the hydrologic and hydraulic models used to design the system assume the full peak flow is collected. In reality, the HGL in the trunk line will be somewhat lower than modeled. As a result, the Miller Road lateral is expected to collect slightly more flow than the calculated 35 to 40 cfs.

4.3 Lateral Design

Laterals are required at Navajo Trail, Pinto Lane, 68th Street, Supai Way, 70th Street, Civic Center Boulevard, 75th Street and Miller Road. Laterals are conservatively modeled to assume the peak flow in the trunk line coincides with the peak flow in the lateral. Table 2 shows the peak flow used to design the laterals and the corresponding HGL in the trunk line. These flows are input into StormCad models to check the performance of the lateral. Laterals are generally checked to the junction of the first inlets.

A small diameter lateral is to be installed between Catalina Drive and the Scottsdale Executive Villas. The lateral will be routed through the alley along the west side of the Cross Cut Canal. Approximately 120 cfs has historically impacted the Scottsdale Executive Villas during the 10-year storm. The flow path for these flows has been from the executive park, through holes in the wall along the north side of the park, into the alley and north on 64th Street. However, 58 cfs have been diverted by a recently constructed storm drain in 64th Street. As a result of the diversion, the Executive Villas is expected to receive little off-site flow until the flows exceed the capacity of the 64th Street storm drain. The small diameter lateral is provided as a positive drain for the executive park. Utility conflicts within the alley precluded the installation of a lateral large enough to convey the remaining 62 cfs of the 120 cfs expected from the 10-year storm. The lateral is expected to convey a peak flow of approximately 20 cfs. The capacity of the lateral is limited by the available driving head at the inlet.

The Miller Road lateral is not expected to collect the expected 83 cfs peak flow produced by the 10-year design storm. The inlets along Miller Road are lower than the berm along Indian Bend Wash. The lateral is equipped with a check valve to prevent backflow from the wash from discharging at the inlets. Headlosses through the check valve limit the flow through the valve. The maximum capacity of the lateral is expected to be 35 to 40 cfs during the peak flow in the trunk line. As the HGL in the trunk line drops, headlosses through the check valve will decrease and performance of the lateral is expected to improve. Flows which bypass the inlets will continue south along Miller Road to Thomas Road. The check valve degrades the performance of the system, but it is required to prevent flooding by water from Indian Bend Wash. Although it is somewhat conservative, hydraulic models assume the full 83 cfs peak flow is collected at Miller Road.

4.4 Transition Structures

Transition structures will be required at crossings of sanitary sewer lines. Box culverts will be used at the point where the storm drain crosses the sewer line. Special transition structures have been designed to convert from circular pipe to box culvert. The transition structures are designed so that they are smooth. In the *Handbook of Hydraulics, 1976,* page 8-32, Brater and King define a 'well designed' transition as "one in which all plane surfaces are connected by tangent curves and a straight line connecting flow lines at the two ends does not make an angle greater than 12 and one-half degrees with the axis of the channel". Final design has maintained a maximum angle of 12 and one-half degree in the transition pieces.

Box culverts are selected so that the open area of the culvert nearly matches the open area of the pipe. Fillets between interior surfaces of transition pieces were considered to provide a smooth connection between the pieces of the transition structure. However, the constructability of these fillets is questionable at best. Increased head losses were modeled at the transitions to account for the lack of smooth continuous surfaces through the transition. The transitions were considered to have sudden expansions and contractions.

4.5 Inlets

Spreadsheets are used to calculate spread width, depth of flow, street capacities and inlet capacities. Design flows at intersections were determined by proportioning the peak flows calculated by the HEC-1 models. Discrete areas were broken out of the original HEC-1 subbasins to determine flows at specific points of interest. The contributing areas were measured and proportional flows calculated. Spreadsheets and maps documenting these calculations are included in the Technical Appendix. For small areas (generally the south side of a street) the Rational Method was used to estimate peak flows. The Rational Method calculations are included in the HEC-12 spreadsheets. Table 3 shows the design flows at principal intersections. Rational Method flows are included in Table 3 as noted.

Table 2
Lateral Design

Lateral	Pipe Diameter (in)	HEC-1 Subbasin	Proportional Subbasin Peak (cfs)	Tail Water HGL[1] (ft)	Upstream HGL[2] (ft)	Inlet Elevation (ft)	Freeboard (ft)
Navajo	36	50610	49	1256.91	1257.60	1259.33	1.73
Pinto	36	50610	49	1255.06	1255.47	1259.03	3.56
68th St	42	50620	88	1252.18	1252.92	1255.65	2.73
Supai	36	50630	43	1248.48	1248.85	1252.17	3.32
70th St	36	50630	71	1247.18	1248.18	1251.19	3.01
Civic Center	30	50131	34	1233.67	1234.86	1236.13	1.27
75th St	36	51410	56	1231.45	1232.28	1233.35	1.07
Miller	42	51410	35 to 40[3]	1229.33	1230.82	1230.97	0.12

[1]Mainline HGL at junction of lateral. Use this elevation for design of lateral extension.
[2]Upstream HGL calculated at lowest inlet on lateral, peak flow in pipe below lateral.
[3]Estimated inflow during peak flow in trunk line. Estimated 10-year peak flow is 83 cfs

Table 3
Design Flows

Intersection	Quadrant	HEC-1 Flows					Local Street Flow (Rational Method)
		Subbasin	Subbasin Peak (cfs)	Total Area (ac)	Subarea (ac)	Proportional Flows (cfs)	
Thomas @ 61st Pl	S	070410 and 070420	21			21	
Catalina @ 61st Pl	E						3
Catalina @ 62nd St	S						3
Catalina @ 64th St	S						3
Catalina @ 64th St/Alley	S	ALLEY	62			62	
Osborn @ Navajo	N	50610	99	51.8	25.43	49	
Osborn @ Pinto	N	50610	99	51.8	25.43	49	
Osborn @ Pinto	W	50610	99	51.8	0.99	1.9	
Osborn @ 68th St		Measured areas do not agree with model input. Total area of 50620 is 54.10 acres. Reduce peak flow proportionally.					
Osborn @ 68th St	N	50620	110	63.4	50.87	88	
Osborn @ 68th St	W	50620	110	63.4	3.23	6	
Osborn @ Supai		Measured areas do not agree with model input. Total area of 50630 is 41.97 acres. Increase peak flow proportionally.					
	N	50630	120	39.68	14.08	43	
	W				3.54	11	
Osborn @ 70th St		Measured areas do not agree with model input. Total area of 50630 is 41.97 acres. Increase peak flow proportionally.					
	N	50630	120	39.68	23.43	71	
	W	50630	120	39.68	0.92	3	
Osborn @ 71st St	N	50640	65	20.48	3.75	12	
West side of 71st St.	Church	50100	79	20.5	5.75	22	
	Apts.	50100	79	20.5	1.49	6	
Earll @ 71st St		Split flows 50/50 between N and W					
		50100	79	20.5	11.86	46	
	N					Use 23	2
	W					Use 23	1
Earll @ Scottsdale	N	50100	79	20.5	1.36	5	
	S						3
Earll @ Civic Center	N	50131	55	15.36	8.74	34	
	W	50131	55	15.36	7.48	29	
Earll @ 75th St	N	51410	178	46.1	14.63	56	
	W	51410	178	46.1	4.75	18	
Earll @ Miller	NW	51410	178	46.1	13.85	53	
	NE	51410	178	46.1	7.8	30	
	W	51410	178	46.1	5.3	20	

Inlets were designed to collect the 10-year flow while meeting spread criteria on streets where the trunk line parallels the centerline. These include 61st Street, Catalina Drive, Osborn Road, 71st Street and Earll Drive. On intersecting streets, (Pinto Lane, 68th Street, etc) inlets were designed to collect flow equal to the capacity of the street (curb full). The curb full collection criterion is intended to be an interim condition. Inlets on the intersecting streets will be connected to the trunk line with laterals sized to accommodate the 10-year design flow. In the future, the City of Scottsdale can connect additional inlets to the laterals to collect the full 10-year flow. Figure 4 and Table 4 are a schematic representation of catch basin bypass relationships and calculated inflows. Table 5 is a check of the HGL at the inlets.

Three inlets on Earll Drive between Miller Road and 75th Street are equipped with check valves to prevent street flooding during high flows in Indian Bend Wash. These inlets are modeled using StormCad to accurately access their performance. The model finaldn.stm shows the inlet at Station 146+32 will have only 0.4 feet of freeboard at the inlet. Design criteria requires a minimum of 0.5 feet of freeboard. The other inlets have sufficient freeboard to meet design criteria.

In most cases, the proposed inlets are Detail P-1569, wing length 17 feet. This is a 20-foot curb opening inlet with no grate. The maximum wing length of 17 feet is recommended in most locations to improve system performance during the interim condition. During the interim condition, large bypass flows are expected from the intersecting streets. Lengthening the wings on downstream catch basins will improve their interception of the bypass flows with very little increase in cost. Grated inlets are used as required to reduce utility conflicts. Grated inlets are Detail P-1570, double grate. Grated inlets are only used to avoid conflicts with existing utilities. The catch basin details are included in the plan set.

Design Exceptions

1. The inlets shown on Catalina Drive are not spaced to meet spread criteria. The street has such a low conveyance capacity that a nearly continuous inlet would be required to meet spread criteria. Two inlets are proposed on Catalina Drive to collect nuisance flows.

2. Runoff enters the project corridor as concentrated point flows in several locations. The runoff is typically generated on private property and discharged to the roadway via a driveway or scupper. This occurs at Thomas Road and 61st Place (concentration point 070420 shown on Figure 3) and on 71st Street between Osborn Road and Earll Drive. The flows are collected as quickly as possible, but localized flooding of the pavement is expected at the point of discharge.

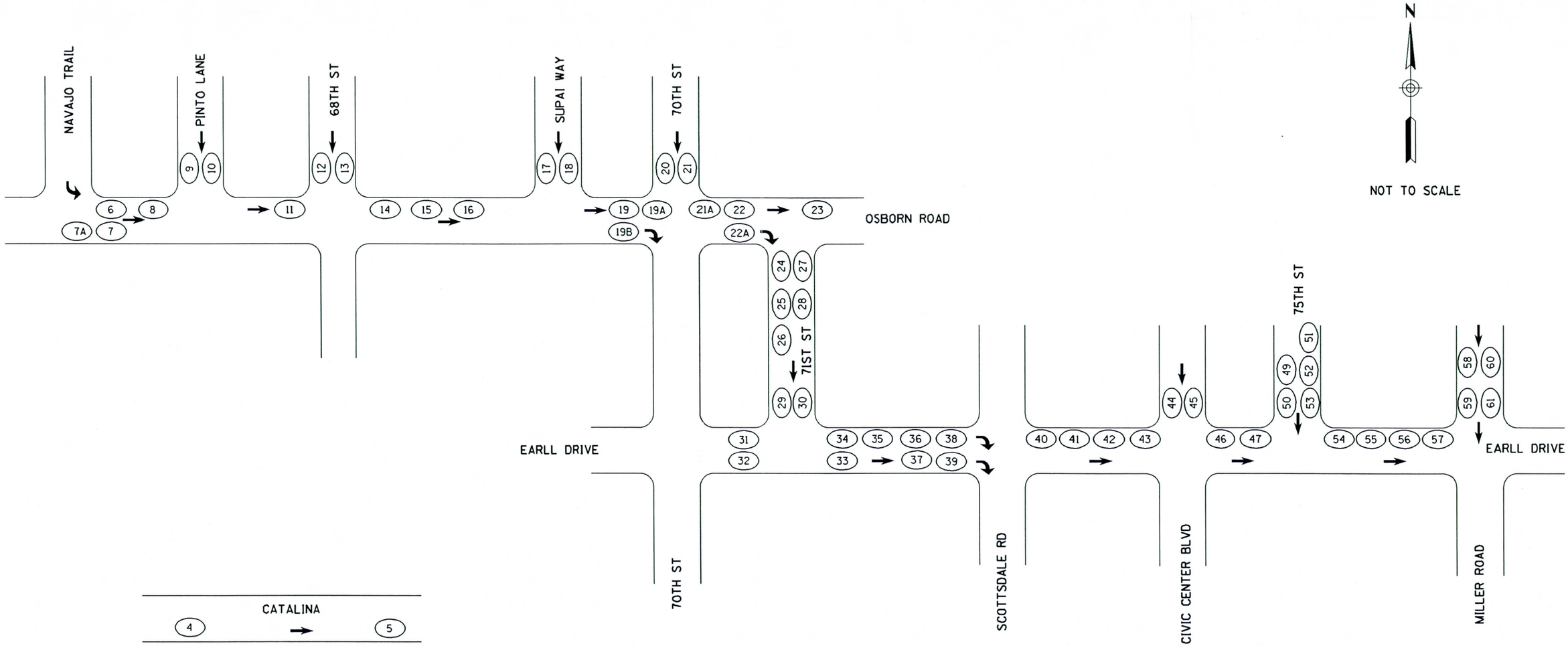

OSBORN OUTFALL

CATCH BASIN COLLECTION SCHEMATIC

PARSONS BRINCKERHOFF

FIGURE 4

h:\osborn\drng\cbschema.dgn
Wed Mar 29 14:40:50 2000

Table 4
Catch Basin Bypass Relationships

Inlet	Station and Offset	Design Condition	Flow at Inlet (cfs)	Bypass to Inlet (cfs)	Flow Captured (cfs)	Bypass Flow (cfs)	Half Street Width (ft)	Allowable Spread (ft)	Calculated Spread (ft)
1	11+95, 84' Rt	HEC-1	21	0	9	12	35	23	31[1]
2	Exst @ 10+80, 84' Rt	HEC-1	0	12	12	0	35	23	19
3	17+90, 30' Rt	Rational	3	0	2	1	20	14	8
4	27+47, 7' Rt	Rational	3	0	3	0	15	9	13[1]
5	34+71, 23' Rt	Rational	3	0	3	0	15	9	13[1]
6	50' Lt @ Navajo Tr.	Curb Full	5	0	5	0	NA	NA	NA
7	68+83, 72' Lt	Curb Full	8	0	5	3	NA	NA	NA
7A	68+83, 58' Lt	Curb Full	0	3	2	1	NA	NA	NA
8	71+70, 7' Lt	HEC-1	2	0	2	0	21	15	10
9	72+17, 34' Lt	Curb Full	4	0	4	0	NA	NA	NA
10	72+52, 45' Lt	Curb Full	4	0	4	0	NA	NA	NA
11	81+42, 7' Lt	HEC-1	6	0	6	0	22	16	12
12	82+05, 34' Lt	Curb Full	4	0	4	0	NA	NA	NA
13	82+73, 68' Lt	Curb Full	4	0	4	0	NA	NA	NA
14	86+30, 16' Lt	HEC-1	6	0	3	3	32	26	21
15	88+30, 40' Lt	HEC-1	3	3	3	3	32	26	17
16	92+20, 38' Lt	HEC-1	3	3	4	2	32	26	20
17	92+85, 120' Lt	Curb Full	3	0	3	0	NA	NA	NA
18	93+13, 63' Lt	Curb Full	2	0	1.5	0.5	NA	NA	NA
19	95+10, 39' Lt	HEC-1	3	2	4	1	32	26	19
19A	95+10, 39' Lt (Exst)	HEC-1	0	1	0.3	0.7	32	26	9
19B	95+10, 33' Rt (Exst)	Rational	3	0	2	1	32	26	9
20	95+38, 61' Lt	Curb Full	8	0	7	1	NA	NA	NA
21	95+80, 143' Lt	Curb Full	8	0	6	2	NA	NA	NA
21A	96+20, 39' Lt (Exst)	HEC-1	0	0	0	0	32	20	0
22	99+00, 37' Lt	HEC-1	6	2	5	3	32	20	20
22A	101+56, 27' Rt (Exst)	Rational	2	0	1	1	32	20	20
23	101+85, 38' Lt	HEC-1	6	2	6	2	32	20	19
24	104+56, 10' Rt	HEC-1	13	0	8	5	20	14	20[1]
25	106+36, 10' Rt	HEC-1	0	5	5	0	20	14	16[1]
26	108+11, 10' Rt	HEC-1	6	0	5	1	20	14	17[1]
27	105+04, 31' Lt	HEC-1	11	0	7	4	20	14	20[1]
28	106+21, 30' Lt	HEC-1	0	4	4	0	20	14	16[1]
29	114+59, 10' Rt	HEC-1	12	1	6	7	20	14	20[1]
30	114+71, 30' Lt	HEC-1	15	0	8	7	20	14	20[1]
31	114+98, 36' Rt	HEC-1	13	0	9	4	20	14	20[1]
32	20' Rt @ 71st St.	HEC-1	11	0	7	4	20	14	19[1]
33	116+50, 4' Rt	HEC-1	0	10[2]	5	5	20	14	18[1]
34	116+01, 37' Lt	HEC-1	0	13[2]	7	6	20	14	17[1]
35	116+13, 37' Lt	HEC-1	0	6	4	2	20	14	13
36	118+65, 36' Lt	HEC-1	3	2	5	0	20	14	14
37	118+81, 3' Rt	HEC-1	0	5	3	2	20	14	13
38	121+18, 37' Lt	HEC-1	3	0	3	0	20	14	15
39	121+17' 3' Rt	Rational	1	2	2	1	20	14	13
40	129+25, 51' Lt	HEC-1	15	0	9	6	32	26	23
41	131+95, 51' Lt	HEC-1	7	6	7	6	32	26	24
42	132+80, 50' Lt	HEC-1	7	6	7	6	32	26	20
43	134+56, 55' Lt	HEC-1	0	6	3	3	32	26	15
44	134+84, 101' Lt	Curb Full	9	0	7	2	NA	NA	NA
45	135+49, 97' Lt	Curb Full	9	0	5	4	NA	NA	NA
46	136+03, 58' Lt	HEC-1	0	3	3	0	30	24	8
47	139+49, 61' Lt	HEC-1	18	0	18	0	32	26	25
49	141+54, 143' Lt	Curb Full	16	0	13	4	NA	NA	NA
50	141+54, 88' Lt	Curb Full	0	4	3.5	0.5	NA	NA	NA
51	141+95, 231' Lt	Curb Full	13	0	4	9	NA	NA	NA
52	141+95, 128' Lt	Curb Full	0	9	5	4	NA	NA	NA
53	141+95, 71' Lt	Curb Full	0	4	3	1	NA	NA	NA
54	142+30, 47' Lt	HEC-1	5	0	4	1	20	14	17[3]
55	144+00, 49' Lt	HEC-1	5	1	4	2	20	14	18[3]
56	146+32, 49' Lt	HEC-1	5	1	6	0	20	14	17[3]
57	147+77, 49' Lt	HEC-1	5	1	5	1	20	14	14
58	148+11, 110' Lt	Curb Full	11	0	8	3	NA	NA	NA
59	148+11, 81' Lt	Curb Full	0	3	3	0	NA	NA	NA
60	148+58, 130' Lt	Curb Full	9	0	7	2	NA	NA	NA
61	148+58, 70' Lt	Curb Full	0	2	2	0	NA	NA	NA

(1) Runoff enters street as point discharge. Encroachment criteria temporarily exceeded.

(2) Half street capacity exceeded, flows will overtop crown. Bypass from catch basins 29, 30, 31and 32 divided between catch basins 33 and 34.

(3) Pavement spread exceeded on north half of roadway. Total 16' dry pavement expected during 10-year storm.

Table 5
Check of Hydraulic Grade Line at Inlets

Inlet	Flow Captured (cfs)	Connector Size (in)	Connector Length (ft)	Friction Loss (ft)[1]	Entrance Loss (ft)[2]	HGL at Connection (ft)[3]	HGL at Inlet (ft)	Inlet Elevation (ft)	Freeboard (ft)
1	9	Modeled by Storm Cad					1269.8	1271.1	1.3
3	2	Modeled by Storm Cad					1264.2	1267.5	3.3
4	3	Modeled by Storm Cad					1265.0	1267.0	2.0
5	3	Modeled by Storm Cad					1264.0	1266.7	2.7
6	5	18	14	0.03	0.06	1257.1	1257.2	1259.5	2.3
7 & 7A	7	18	34	0.13	0.12	1257.1	1257.4	1259.7	2.3
8	2	18	14	0.00	0.01	1257.1	1257.1	1259.1	2.0
9	4	18	27	0.03	0.04	1255.2	1255.3	1259.2	3.9
10	4	18	10	0.01	0.04	1255.2	1255.3	1259.1	3.8
11	6	18	14	0.04	0.09	1252.3	1252.4	1256.1	3.7
12	4	18	15	0.02	0.04	1252.6	1252.7	1256.1	3.4
13	4	18	56	0.07	0.04	1252.6	1252.7	1255.8	3.1
14	3	18	17	0.01	0.02	1250.0	1250.1	1254.1	4.0
15	2	Modeled by Storm Cad					1249.4	1253.3	3.9
16	4	12	44	0.46	0.20	1248.5	1249.1	1252.0	2.9
17	3	18	33	0.02	0.02	1248.7	1248.7	1252.5	3.8
18	1.5	18	7	0.00	0.01	1248.7	1248.7	1252.2	3.5
19 & 19A	4	Modeled by Storm Cad					1248.1	1250.8	2.7
19B	2	15	25	0.02	0.02	1246.5	1246.5	1250.1	3.6
20	7	18	7	0.03	0.12	1247.7	1247.9	1251.4	3.5
21	6	18	33	0.09	0.09	1247.7	1247.9	1251.7	3.8
21A	0	12	35	0.00	0.00	1246.5	1246.5	1250.3	3.8
22	5	18	40	0.08	0.06	1244.2	1244.3	1248.5	4.2
22A	1	12	25	0.02	0.01	1244.2	1244.2	1247.6	3.4
23	6	Modeled by Storm Cad					1245.5	1247.6	2.1
24	8	Modeled by Storm Cad					1243.8	1247.5	3.7
25	5	Modeled by Storm Cad					1243.3	1246.8	3.5
26	5	Modeled by Storm Cad					1242.9	1245.9	3.0
27	7	18	29	0.11	0.12	1243.6	1243.8	1247.4	3.6
28	4	18	29	0.04	0.04	1243.6	1243.7	1246.9	3.2
29	6	18	13	0.04	0.09	1239.6	1239.7	1243.1	3.4
30	8	18	29	0.14	0.16	1239.6	1239.9	1243.0	3.1
31	9	18	38	0.23	0.20	1239.6	1240.0	1242.8	2.8
32	7	18	22	0.08	0.12	1239.6	1239.8	1243.0	3.2
33	5	18	6	0.01	0.06	1239.6	1239.7	1242.4	2.7
34 & 35	11	18	37	0.34	0.30	1239.6	1240.2	1242.5	2.3
36	5	Modeled by Storm Cad					1239.0	1241.8	2.8
37	3	18	8	0.01	0.02	1238.6	1238.7	1241.9	3.2
38	3	Modeled by Storm Cad					1237.9	1241.3	3.4
39	2	18	8	0.00	0.01	1237.6	1237.6	1241.0	3.4
40	9	18	50	0.31	0.20	1235.1	1235.6	1238.5	2.9
41	7	18	50	0.19	0.12	1235.1	1235.4	1237.5	2.1
42	7	18	50	0.19	0.12	1234.0	1234.3	1237.1	2.8
43	3	18	50	0.03	0.02	1233.3	1233.3	1236.1	2.8
44	7	18	18	0.07	0.12	1234.2	1234.4	1236.1	1.7
45	5	18	46	0.09	0.06	1234.2	1234.4	1236.3	1.9
46	3	18	55	0.04	0.02	1232.8	1232.8	1235.4	2.6
47	18	Modeled by Storm Cad					1232.0	1233.5	1.5
49	13	24	37	0.47	0.13	1231.9	1232.5	1234.0	1.5
50	3.5	18	37	0.03	0.03	1231.9	1231.9	1233.6	1.7
51	4	18	4	0.00	0.04	1231.9	1231.9	1234.5	2.6
52	5	18	4	0.01	0.06	1231.9	1231.9	1234.0	2.1
53	3	18	4	0.00	0.02	1231.9	1231.9	1233.5	1.6
54	4	18	45	0.05	0.04	1230.9	1231.0	1233.0	2.0
55	4	Modeled by Storm Cad					1231.7	1232.4	0.7
56	6	Modeled by Storm Cad					1231.2	1231.6	0.4
57	5	Modeled by Storm Cad					1230.8	1231.3	0.5
58	8	18	39	0.19	0.16	1230.9	1231.2	1231.2	0.0
59	3	18	39	0.03	0.02	1230.9	1230.9	1231.1	0.2
60	7	18	5	0.02	0.12	1230.9	1231.0	1231.3	0.3
61	2	18	5	0.00	0.01	1230.9	1230.9	1231.1	0.2

[1] Assumes connector pipe is flooded for full length.

[2] Assumes entrance loss at inlet equal 0.5 times velocity head.

[3] HGL at Storm Cad node near inlet. See mainline model or lateral models.

3. The encroachment criterion is exceeded by 1 foot at the north west corner of Scottsdale Road and Earll Drive. Approximately 5 feet of dry pavement is expected north of the street centerline, while design criteria require 6 feet. An additional catch basin is not recommended in this reach for several reasons. The connector pipes have to cross Earll Drive, impacting traffic in both directions. There are numerous businesses located on Earll Drive, west of Scottsdale Road. Additional crossings of Earll Drive will increase construction time and cause additional interruptions to the businesses. Multiple inlets are currently proposed along both the north and south sides of Earll Drive between 71st Street and Scottsdale Road, so runoff is being collected at relatively short intervals. Additional catch basins may be indicated by a strict adherence to design criteria. However, if the north and south sides of the road are considered, 12 feet of dry pavement is expected during the 10-year storm. This meets the minimum width of 12 feet of dry pavement required by the design criteria.

4. The inlet at Station 146+32 is expected to collect 6 cfs with only 0.4 feet of freeboard. The connector pipe is restricted by a check valve. The lack of collection capacity impacts the spread condition in Earll Drive in this reach. The spread condition is discussed in design exception number 5, below.

5. Encroachment criterion is exceeded on the north side of Earll Drive between 75th Street and Miller Road. A peak flow of approximately 18 cfs is expected to be generated by the area draining to the pavement in this area. Four catch basins are spaced at 100 to 200 foot intervals to collect the flow. The expected spread width is 17 to 18 feet wide. The allowable spread width is 14 feet. Additional catch basins are not recommended in this reach for several reasons. The connector pipes have to cross Earll Drive, impacting traffic in both directions. There are numerous utility crossings for each connector pipe, including 2 sanitary sewers and an 8-inch water line. Avoidance of the sanitary sewers requires vertical relocation of the water line. The south side of the street remains relatively dry in this reach. Runoff is not expected to cross the crown of Earll Drive from the north to the south, so the only runoff in the south gutter is the runoff generated on the pavement of Earll Drive. The pavement encroachment from the small flows in the south gutter is expected to be less than 7 feet, leaving 13 feet of dry pavement on the south side of the roadway. The total width of dry pavement is expected to be 16 feet during the 10-year storm. Excess flows will continue south along Miller Road to Thomas Road.

6. Flow from Thomas Road is collected by a proposed catch basin near the point of discharge from subbasin 070420, at Station 12+00, 84 feet right. The most efficient inlet for this location is a curb opening with a 6-foot wing. Bypass flows from the catch basin are collected in the existing catch basin approximately 10 feet west of the existing discharge pipe from Marriott Brighton Gardens. The existing inlet is a 15-foot curb opening inlet. It is capable of collecting the bypass flows with a spread width of about 19 feet. This inlet discharges into an existing City of Phoenix storm drain system.

5. The capacity of the Miller Road lateral is limited to 35 to 40 cfs due to headlosses though a check valve. The expected peak flow from the 10-year storm is 83 cfs. Excess flows will continue south along Miller Road to Thomas Road.

5.0 STRUCTURAL CALCULATIONS

Structural calculations are included in the Technical Appendix. Design of structures is per AASHTO Specifications, 1996 edition and ADOT Bridge Group Standard Detail B-2.10, 1992 edition.

Contract No. FCD 98-30

OSBORN ROAD STORM DRAIN

FINAL

DESIGN REPORT

TECHNICAL APPENDIX

MARCH 31, 2000

Submitted to:

FLOOD CONTROL DISTRICT OF MARICOPA COUNTY

Submitted by:

PARSONS BRINCKERHOFF

PCN No. 027 04 30

Technical Appendix Contents

HEC-1 MODELING
PBOsb.DAT

INLET CALCULATIONS
HEC-12 Spreadsheets
Proportional Mapping for Lateral Design

STORMCAD MODELS

DETENTION BASIN CALCULATIONS
Marriott Brighton Gardens
Paiute Park

HEADLOSS CALCULATIONS

STRUCTURAL CALCULATIONS

HEC-1 MODELING

PBOsb.DAT

```
1****************************************
 *                                      *
 *   FLOOD HYDROGRAPH PACKAGE  (HEC-1)  *
 *              MAY   1991              *
 *           VERSION 4.0.1E             *
 *     Lahey F77L-EM/32 version 5.01    *
 *       Dodson & Associates, Inc.      *
 *  RUN DATE  03/10/00  TIME  12:09:34  *
 ****************************************
```

```
****************************************
*                                      *
*    U.S. ARMY CORPS OF ENGINEERS      *
*    HYDROLOGIC ENGINEERING CENTER     *
*          609 SECOND STREET           *
*       DAVIS, CALIFORNIA 95616        *
*           (916) 551-1748             *
*                                      *
****************************************
```

```
X     X  XXXXXXX   XXXXX           X
X     X  X        X     X         XX
X     X  X        X                X
XXXXXXX  XXXX     X        XXXXX   X
X     X  X        X                X
X     X  X        X     X          X
X     X  XXXXXXX   XXXXX          XXX
```

THIS PROGRAM REPLACES ALL PREVIOUS VERSIONS OF HEC-1 KNOWN AS HEC1 (JAN 73), HEC1GS, HEC1DB, AND HEC1KW.

THE DEFINITIONS OF VARIABLES -RTIMP- AND -RTIOR- HAVE CHANGED FROM THOSE USED WITH THE 1973-STYLE INPUT STRUCTURE.
THE DEFINITION OF -AMSKK- ON RM-CARD WAS CHANGED WITH REVISIONS DATED 28 SEP 81. THIS IS THE FORTRAN77 VERSION
NEW OPTIONS: DAMBREAK OUTFLOW SUBMERGENCE , SINGLE EVENT DAMAGE CALCULATION, DSS:WRITE STAGE FREQUENCY,
DSS:READ TIME SERIES AT DESIRED CALCULATION INTERVAL LOSS RATE:GREEN AND AMPT INFILTRATION
KINEMATIC WAVE: NEW FINITE DIFFERENCE ALGORITHM

1 HEC-1 INPUT PAGE 1

```
LINE          ID.......1.......2.......3.......4.......5.......6.......7.......8.......9......10

              * ******************************************************************************
              * This is ALTERNATIVE D hydrology for Change Order #2
              *
              * - This model is based on the Recommended Plan - Part A for the Osborn Road
              *     Outfall with the following changes:
              *         Osborn Road Outfall has been modified to include a storm drain in
              *         Osborn Road running from the Paiute Basin to 71st Street, south on
              *         71st Street to Earll Drive and east on Earll Dr. to Indian Bend Wash.
              *         Use of the existing storm drain in Osborn Road for excess runoff has
```

```
                 *        not been included in this model, since the benefit of this alternative
                 *        is the elimination of any construction activities in Osborn Road east
                 *        of Scottsdale Road.
                 *
                 *
  1              ID    ************************************************************************
  2              ID    STP-PAPAGO REGIONAL FLOOD CONTROL PROJECT
  3              ID    SCOTTSDALE - TEMPE - PHOENIX
  4              ID    ************************************************************************
  5              ID
  6              ID    Kimley-Horn and Associates, Inc.
  7              ID    KVL Consultants, Inc.
  8              ID
  9              ID    10-Year, 6-Hour Storm Event
 10              ID    10/97
 11              ID
 12              ID    PARSONS BRINCKERHOFF MODIFICATIONS TO ORIGINAL KIMLEY HORN MODEL
 13              ID    FILE NAME: PBOSB.DAT
 14              ID    FILE MODIFIED BY PARSONS BRINCKERHOFF/PREMIER ENGINEERING TO BE USED IN
 15              ID    DESIGN OF OSBORN OUTFALL.
 16              ID    MODIFICATIONS:
 17              ID    1) SUBBASIN 050062 REROUTED DIRECTLY TO PAIUTE PARK- IMPROVEMENTS TO 64TH ST
 18              ID       CONVEY FLOW TO DETENTION BASIN. AREA REDUCED TO 3.9 ACRES (0.0061 SM).
 19              ID    2) PAIUTE PARK STAGE/DISCHARGE CURVE ADJUSTED TO REFLECT GRADING
 20              ID       BY PREMIER ENGINEERING. ASSUME PAIUTE PARK OUTLET FUNCTIONS AS CULVERT IN
 21              ID       INLET CONTROL.
 22              ID    3) SUBBASINS CONTRIBUTING TO 66" ADOT PIPE AND SCOTTSDALE ROAD SOUTH OF
 23              ID       OSBORN ROAD REMOVED FROM MODEL (SUBBASINS 050710, 050720,058810, 050640,
 24              ID       050910, and 050650. FLOWS COLLECTED AND CONVEYED BY SCOTTSDALE ROAD
 25              ID       STORM DRAIN.
 26              ID    4) REVISE AREA OF SUBBASIN 050310 FROM 0.041 SM TO 0.0063 SM.AND ROUTE TO
 27              ID       EXISTING DETENTION BASIN. REMAINING AREA IS SRP PROPERTY WHICH DRAINS
 28              ID       WEST.
 29              ID       AREA REDUCTION DUE TO:
 30              ID       REMOVE APARTMENTS AT THOMAS AND 64TH ST DUE TO ON-SITE RETENTION.
 31              ID       REMOVE PORTION OF SRP SUBSTATION WHICH DRAINS EAST.
 32              ID       COLLECT PAVEMENT FLOWS FROM 64TH ST (THOMAS TO PAIUTE PARK) IN TRUNKLINE.
 33              ID       COLLECT FLOWS FROM PAVED AREA BETWEEN SUBSTATION AND APARTMENTS IN
 34              ID       TRUNKLINE
 35              ID    5) REVISE HYDROGRAPH CARDS FOR SUBBASIN 050130.  INSERT CONCENTRATION
 36              ID       POINT AT EARLL AND CIVIC CENTER.
 37              ID    6) REVISE HYDROGRAPH CARDS FOR SUBBASIN 050100.  EARLL ALIGNMENT DIVIDES
 38              ID       SUBBASIN. ROUTE FLOWS TO CONCENTRATION POINT AT EARLL AND SCOTTSDALE.
 39              ID    7) REVISE PIPE SIZES/LENGTHS IN ROUTE CARDS TO REFLECT PB DESIGN
 40              ID    8) DIVERT 58 CFS EAST ON THOMAS IN 45" ABANDONED WATERLINE PER ENTELLUS
 41              ID       DRAINAGE REPORT FOR 64TH STREET (ADDENDUM NO. 1, 3/27/98). DIVERSION
```

```
LINE          ID.......1.......2.......3.......4.......5.......6.......7.......8.......9......10

  42          ID       FROM CONCENTRATION POINT 50020.
  43          ID    9) MARRIOTT BRIGHTON GARDENS STAGE/DISCHARGE CURVE ADJUSTED TO REFLECT
  44          ID       GRADING BY PREMIER ENGINEERING. ASSUME OUTFLOW FROM MARRIOTT IS SAME
  45          ID       AS CULVERT IN INLET CONTROL.
  46          ID
  47          ID
  48          ID    Parsons Brinckerhoff
  49          ID    Alan Humphrey
  50          ID    5/5/99
  51          ID    Revised 8/11/99 FOR 50% SUBMITTAL
  52          ID    Revised 11/4/99 FOR 90% SUBMITTAL
  53          ID    Revised 3/10/00 FOR 100% SUBMITTAL
              *
              *DIAGRAM
  54          IT       2                     300
  55          IO       5

  56          KK  070808   BASIN
  57          BA   0.017
  58          PH       0       0    0.50    0.97    1.61    1.76    1.86    2.05
  59          LS       0      88       0       0      98       0
  60          UK     300  0.0100    0.20      99
  61          UK     100  0.0100    0.10       1
  62          RK    1600   0.214    0.03            TRAP       2     3.5
              *
              * The 10 year flows are diverted into a proposed storm drain along Oak Street.
              * In storm events greater than the 10 yr, the remaining flow will follow its
              * natural course across and sheet flow across Oak Street to the north.
              *

  63          KK   808PP  Divert 10-year flows into storm drain
  64          DT  808OUT
  65          DI       0      12      13      15      50     100
  66          DQ       0    0.01       1       3      38      88

  67          KK  070610 FROM  070808
  68          RK     240  0.0066   0.013            CIRC    3.00

  69          KK  070610   BASIN
  70          BA   0.007
  71          LS       0      88       0       0      98       0
  72          UK     300  0.0100    0.20      99
  73          UK     100  0.0100    0.10       1
  74          RK     500   0.054    0.03            TRAP       2     3.5
```

```
 75          KK   610PP  Divert 10-year flows into storm drain
 76          DT  610OUT
 77          DI       0       5       6      10      50     100
 78          DQ       0     .01       1       5      45      95
1                                          HEC-1 INPUT                                                    PAGE  3

LINE         ID.......1.......2.......3.......4.......5.......6.......7.......8.......9......10


 79          KK  070610 COMBINE
 80          HC       2

 81          KK  070508    FROM  070610
 82          RK     420  0.0066   0.013            CIRC    3.00

 83          KK  070508   BASIN
 84          BA   0.008
 85          LS       0      85       0       0      98       0
 86          UK     300  0.0100    0.20      99
 87          UK     100  0.0100    0.10       1
 88          RK     600   0.048    0.03            TRAP       9     1.0

 89          KK   508PP  Divert 10-year flows into storm drain
 90          DT  508OUT
 91          DI       0       4       5      15      50     100
 92          DQ       0     .01       1      11      46      96

 93          KK  070508 COMBINE
 94          HC       2

 95          KK  070010    FROM  070508
 96          RK     270  0.0066   0.013            CIRC    3.00

 97          KK  070010   BASIN
 98          BA   0.009
 99          LS       0      88       0       0      98       0
100          UK     300  0.0100    0.20      99
101          UK     100  0.0100    0.10       1
102          RK    1200   0.042    0.03            TRAP       2     3.5

103          KK   010PP  Divert 10-year flows into storm drain
104          DT  010OUT
105          DI       0       7      10      15      50     100
106          DQ       0     .01       3       8      43      93

107          KK  070010 COMBINE
```

```
 108          HC       2

 109          KK  070210    FROM  070010
 110          RK     120  0.0033   0.013            CIRC    3.00

 111          KK  070209   BASIN
 112          BA   0.018
 113          LS       0      87       0       0      98       0
 114          UK     300  0.0100    0.20      99
 115          UK     100  0.0100    0.10       1
 116          RK    1200   0.252    0.03            TRAP       2     3.5
1                                          HEC-1 INPUT                                                    PAGE  4

LINE          ID.......1.......2.......3.......4.......5.......6.......7.......8.......9......10


 117          KK  070210    FROM  070209
 118          RK     750   0.252   0.013            TRAP      10       1

 119          KK  070210   BASIN
 120          BA   0.008
 121          LS       0      87       0       0      98       0
 122          UK     300  0.0100    0.20      99
 123          UK     100  0.0100    0.10       1
 124          RK     600   0.043    0.03            TRAP       2     3.5

 125          KK  070210 COMBINE
 126          HC       2

 127          KK   210PP  Divert 10-year flows into storm drain
 128          DT  210OUT
 129          DI       0      17      20      30      50     100
 130          DQ       0     .01       3      13      33      83

 131          KK  070210 COMBINE
 132          HC       2

 133          KK  050005   FROM 070210
 134          RK     950   0.008   0.013            CIRC    3.00

 135          KK  050005   BASIN
 136          BA   0.038
 137          LS       0      85       0       0      98       0
 138          UK     300  0.0100    0.20      99
 139          UK     100  0.0100    0.10       1
 140          RK    1650    0.09    0.03            TRAP      30     1.0
```

```
141          KK   005PP  Divert 10-year flows into storm drain
142          DT  005OUT
143          DI       0      21      22     100     150     200
144          DQ       0     .01       1      79     129     179
             *
             * The start of the Osborn Road outfall hydrology
             *

145          KK  070010
146          KM    Retrieve overland flows at CP 070010
147          DR  010OUT

148          KK  070020    FROM  070010
149          RK     178  0.0131   0.013            CIRC     1.0

150          KK  070030    FROM  070020
151          RK     520  0.0146   0.025            TRAP     9.0       1
1                                          HEC-1 INPUT                                                    PAGE  5

LINE         ID.......1.......2.......3.......4.......5.......6.......7.......8.......9......10


152          KK  070030   BASIN
153          BA   0.004
154          LS       0      85       0       0      98       0
155          UK     150  0.0100    0.30      65
156          UK      50  0.0100    0.10      35
157          RK     522  0.0146    0.03            TRAP       2     3.5

158          KK  070030 COMBINE
159          HC       2

160          KK  070040    FROM  070030
161          RK     177  0.0146   0.017            TRAP    54.8       1

162          KK  070210
163          KM    Retrieve overland flows at CP 070210
164          DR  210OUT

165          KK  070220    FROM  070210
166          RK     164  0.0131   0.013            CIRC     1.0

167          KK  070040    FROM  070220
168          RK     723  0.0146   0.017            TRAP    54.8       1

169          KK  070040   BASIN
170          BA   0.006
```

```
171          LS       0      86       0       0      98       0
172          UK     181  0.0100    0.28      72
173          UK      60  0.0100    0.10      28
174          RK    1946  0.0146    0.02            TRAP      30     1.0

175          KK  070040 COMBINE
176          HC       3

177          KK  070050    FROM  070040
178          RK     878  0.0146   0.025            TRAP    20.0     1.0

179          KK  070050   BASIN
180          BA   0.018
181          LS       0      86       0       0      98       0
182          UK     150  0.0100    0.30      65
183          UK      50  0.0100    0.10      35
184          RK     290  0.0058    0.02            TRAP      11     1.0
185          RK     981  0.0146    0.02            TRAP      11     1.0

186          KK  070050 COMBINE
187          HC       2

188          KK  070060    FROM  070050
189          RK     872  0.0058   0.025            TRAP     1.0     1.0
```



```
LINE         ID.......1.......2.......3.......4.......5.......6.......7.......8.......9......10

190          KK  070310   BASIN
191          BA   0.023
192          LS       0      86       0       0      98       0
193          UK     150  0.0100    0.30      65
194          UK      50  0.0100    0.10      35
195          RK     278  0.0058    0.02            TRAP      11     1.0
196          RK     986  0.0146    0.02            TRAP      11     1.0

197          KK  070060    FROM  070310
198          RK     745  0.0058   0.025            TRAP     1.0     1.0

199          KK  070060   BASIN
200          BA   0.020
201          LS       0      86       0       0      98       0
202          UK     150  0.0100    0.30      65
203          UK      50  0.0100    0.10      35
204          RK    1096  0.0058    0.03            TRAP       2     1.0
```

```
205          KK  070060 COMBINE
206          HC       3

207          KK  070070    FROM  070060
208          RK     726  0.0146   0.025            TRAP    30.0     1.0

209          KK  070070   BASIN
210          BA   0.032
211          LS       0      86       0       0      98       0
212          UK     150  0.0100    0.30      65
213          UK      50  0.0100    0.10      35
214          RK    1209  0.0146    0.03            TRAP       2     1.0

215          KK  070080   BASIN
216          BA   0.021
217          LS       0      83       0       0      98       0
218          UK      29  0.0100    0.39       9
219          UK     189  0.0100    0.10      91
220          RK    1257  0.0058    0.02            TRAP      30     1.0
             *

221          KK  070080 COMBINE
222          HC       3

223          KK   07Det   Detention basin at Marriott's Brighton Gardens
224          KO       2
225          RS       1    STOR
             * SV CARD MODIFIED BY PREMIER ENGINEERING FOR 100% SUBMITTAL
             * SV     0    0.53    1.22    2.03    3.07    4.37    5.92
             * SV     0    0.17    1.00    1.95    3.09    4.42    5.94
226          SV       0      .1     .47    1.49    2.60    3.82    5.15
227          SE      66      67      68      69      70      71      72      73
             * SE    66      67      68      69      70      71      72
228          SQ       0       2       8      16      29      38      48
             * SQ     0       4      16      34      60      80     150
             *
             * Marriott's Brighton Gardens outfall - 07Qpip is the outflow in the storm drain
             * 07Qspl is the flow overtopping the basin
             *
```



```
LINE         ID.......1.......2.......3.......4.......5.......6.......7.......8.......9......10

229          KK  07Qpip
230          DT  07Qspl
231          DI       0      71     112     172     245     329     420     518     623
```

```
232          DQ       0     0.1      26      72     132     204     285     374     471
             *

233          KK  07000A
234          KM   Route from Marriott across Thomas Road
235          RK     105  .00001    .013            CIRC     2.5
             *

236          KK  07042A   FROM 07Qpip
237          KM   Route from manhole to Thomas and 61st Place
             * PB MODIFICATION FOR 90% SUBMITTAL
238          RK     261  0.0055   0.013            CIRC     3.0
             * RK  1000   0.005   0.013            CIRC     3.0
             *

239          KK  070410   BASIN
240          BA   0.011
241          LS       0      84       0       0      98       0
242          UK     144  0.0100    0.32      44
243          UK     121  0.0100    0.10      56
244          RK    1816  0.0146    0.02            TRAP      23     1.0

245          KK  070420    FROM  070410
246          RK     183  0.0058   0.017            TRAP    52.5       1

247          KK  070420   BASIN
248          BA   0.003
249          LS       0      79       0       0      98       0
250          UK     177  0.0100    0.31      25
251          UK     200  0.0100    0.10      75
252          RK    1046  0.0058    0.02            TRAP      49     1.0
             *

253          KK  07042C
254          KM   COMBINE FLOWS FROM BASIN 070410 AND 070420
255          HC       2
             *
             * PB MODIFICATION FOR 90% SUBMITTAL
             * DIVERT FLOWS WEST TO CITY OF PHOENIX STORM DRAIN
             * CONTINUING HYDROGRAPH IS FLOW COLLECTED BY PROPOSED CATCH BASIN IN THOMAS

256          KK  07042D
257          DT  70west
258          DI       0       2       4       6       9      14      18      22      26
259          DQ       0       0       0       0       0       5       9      12      17
             *
```

```
LINE          ID.......1.......2.......3.......4.......5.......6.......7.......8.......9......10

 260          KK  07042C
 261          KM   COMBINE FLOWS FROM MARRIOTT AND THOMAS CATCH BASIN
 262          HC       2
              *

 263          KK  21000A
 264          KM   Route from Thomas & 61st Place to 61st Place & Catalina
              * PB MODIFICATION FOR 90% SUBMITTAL
 265          RK     490  0.0069   0.013            CIRC     3.5
              * RK   450   0.005   0.013            CIRC     3.5
              *
              * PB MODIFICATION FOR 90% SUBMITTAL
              * Basin 210005 Removed from Model  -- no inlet provided
              * KK210005   BASIN
              * BA 0.008
              * LS     0      79       0       0      98       0
              * UK    94  0.0100    0.34      26
              * UK   116  0.0100    0.10      74
              * RK   523  0.0032    0.02            TRAP      38     1.0
              * RK  1250  0.0020    0.02            TRAP      45     1.0
              *
              * KK210005 COMBINE
              * KM  FLOW IN PIPE FROM MARRIOTT
              * HC     2
              *

 266          KK  050030   FROM 210005
              * PB MODIFICATION FOR 90% SUBMITTAL
 267          RK    1579  0.0050   0.013            CIRC     4.0
              *

 268          KK  050005
 269          KM    Retrieve overland flows at CP 050005
 270          DR  005OUT

 271          KK  050010   FROM 050005
 272          RK    1300   0.015    0.02            TRAP      35       1

 273          KK  050010   BASIN
 274          BA   0.066
 275          LS       0      81       0       0      98       0
 276          UK     144  0.0100    0.30      52
 277          UK      57  0.0100    0.10      48
```

```
 278          RK    1189  0.0033    0.02            TRAP      30     1.0
 279          RK    1197  0.0038    0.02            TRAP      60     1.0

 280          KK  050010   COMBINE
 281          HC       2
```



```
LINE          ID.......1.......2.......3.......4.......5.......6.......7.......8.......9......10

 282          KK  050020    FROM  050010
 283          RK    1370  0.0038   0.017            TRAP    37.5       1

 284          KK  050210   BASIN
 285          BA   0.054
 286          LS       0      79       0       0      98       0
 287          UK     200  0.0100    0.30      28
 288          UK     200  0.0100    0.10      72
 289          RK     564  0.0038    0.02            TRAP      23     1.0
 290          RK    1199  0.0033    0.02            TRAP      23     1.0

 291          KK   210ST STORAGE
 292          RS       1    STOR
 293          SV    0.00    7.72    7.72
 294          SE    0.00    1.00    2.00
 295          SQ    0.00    0.01    0.01
 296          ST     1.0     500     3.0     1.5

 297          KK  050020    FROM  050210
 298          RK     278  0.0033   0.017            TRAP    60.0       1

 299          KK  050020   BASIN
 300          BA   0.009
 301          LS       0      79       0       0      98       0
 302          UK     166  0.0100    0.30      39
 303          UK      98  0.0100    0.10      61
 304          RK    1304  0.0038    0.02            TRAP      60     1.0

 305          KK  050020 COMBINE
 306          HC       3
              * PB MODIFICATION FOR 90% SUBMITTAL
              * DIVERT 58 CFS EAST IN ABANDONED STORM DRAIN. SYSTEM INSTALLED
              * WITH 64TH ST. IMPROVEMENTS

 307          KK  050020
 308          KM   EXCESS FLOW FROM 64TH ST./THOMAS SYSTEM
 309          DT  020OUT
```

```
310          DI       0      58     500
311          DQ       0      58      58

312          KK  050030    FROM  050020
313          RK     347  0.0038   0.017            TRAP    37.5       1

314          KK  050030   BASIN
315          BA   0.020
316          LS       0      79       0       0      98       0
317          UK     150  0.0100    0.30      15
318          UK      50  0.0100    0.10      85
319          RK     278  0.0038    0.02            TRAP       9     1.0
320          RK    1468  0.0033    0.02            TRAP       9     1.0
             *
             * Scottsdale Executive Villas natural storage in parking lot
             *
```



```
LINE         ID.......1.......2.......3.......4.......5.......6.......7.......8.......9......10


321          KK   030ST STORAGE
322          RS       1    STOR
323          SV       0    0.01    0.06    0.62    2.72    2.72
324          SE      65      66      67      68      69      70
325          SQ    0.00    0.01    0.01    0.01    0.01    0.01
326          ST      68     150     3.0     1.5
             * PB MODIFICATION FOR 50% SUBMITTAL

327          KK   ALLEY COMBINE
328          KO       2
329          KM    FLOW IN ALLEY AT CATALINA AND 64TH STREET
330          HC       2

331          KK  050030 COMBINE
332          HC       2

333          KK  050050   FROM 050030
334          KM   Cross Cut Canal to 6' X 4' RCBC
335          KO       2
             * PB MODIFICATION FOR 90% SUBMITTAL
336          RK     841   0.002   0.013            CIRC     5.5
             * RK   150   0.002   0.013            CIRC     5.5
             * PB MODIFICATION FOR 90% SUBMITTAL
             * REMOVE ROUTE- REPLACE WITH STORAGE ROUTE THROUGH
             * EXISTING SRP DETENTION BASIN. SEE BELOW
             * KK050050   FROM 050305
```

```
                 * RK   647   0.002   0.013            TRAP       6       0

 337             KK  050040   BASIN
 338             BA   0.102
 339             LS       0      79       0       0      98       0
 340             UK     150  0.0100    0.30      57
 341             UK      50  0.0100    0.10      43
 342             RK    2230  0.0038    0.02            TRAP      38     1.0
 343             RK    2654  0.0038    0.02            TRAP      38     1.0

 344             KK  40STOR  Storage on west side of cross-cut canal
 345             RS       1
 346             SV       0       0       0       0     2.6    13.5    13.5
 347             SE      58      59      60      61      62      63      64
 348             SQ       0      10      22      32      40      50      55

 349             KK  050050    FROM  050040
 350             KO       2
 351             RK     491  0.0334   0.013            CIRC     2.5
                 * ******************************************************************
                 * PB Modification:
                 * Reduce Area of Subbasin 050310 to 4.0 Acres (0.0063 SM)
                 * Remaining area is west side of SRP substation
                 * Remove one routing card for internal flows- this reduces route
                 * length.
                 * Add storage route through existing detention basin
                 * Flows from apartments and east side of substation retained on-site.
                 * Flow from 64th St pavement collected by trunkline in 64th St.
                 * ******************************************************************
1                                          HEC-1 INPUT                                                    PAGE 11

LINE             ID.......1.......2.......3.......4.......5.......6.......7.......8.......9......10


 352             KK  050310   BASIN
                 * BA 0.041
 353             BA   0.0063
 354             LS       0      79       0       0      98       0
 355             UK     200  0.0100    0.30      28
 356             UK     200  0.0100    0.10      72
 357             RK     816  0.0033    0.02            TRAP      30     1.0
                 * RK   848  0.0038    0.02            TRAP      30     1.0

 358             KK  SRPDet
 359             KO       2
 360             RS       1    STOR
 361             SA   0.152   0.207   0.207
```

```
362          SE    53.4      56      57
363          SQ       0       2       4       5       8      10      20      40
364          SE    53.4    54.0    54.3    54.5    54.9    55.1   53.48      57
             * ****************************************************************
             * PB Modification:
             * Add subbasin to represent flows from pavement of 64th St south
             * of Paiute Park and paved area between SRP substation and new
             * apartments. Area to be collected by large pipe in 64th St.

365          KK  S 64th   BASIN
366          KO       2
367          BA   0.011
368          LS       0      79       0       0      83       0
369          UK     100   0.004     0.1      53
370          UK     100   0.008     0.1      47
371          RK    1430   0.004   0.015            TRAP      35       1

372          KK  050065   BASIN
373          KO       2
374          BA   0.014
375          LS       0      79       0       0      98       0
376          UK     100    0.01     0.3      15
377          UK     100    0.01     0.1      85
378          RK     500   0.005   0.012            TRAP      60       1
             * ****************************************************************
             * PB Modification
             * Relocate hydrograph and subsequent route for Basin 050060
             * Combine separately to get peak flow in main pipe
             * KK050060   BASIN
             * BA 0.029
             * LS     0      79       0       0      98       0
             * UK   105    0.01     0.3      20
             * UK   160    0.01     0.1      80
             * RK  1300  0.0038    0.03            TRAP     100     1.0
             *
             * ****************************************************************
             * PB Modification
             * Relocate hydrograph and subsequent route for Basin 050062
             * Modify pipe length to reflect storm drain route on 64th St
             * Insert hydrographs at this location
             * Revise basin area to 3.9 acres (0.0061 square miles)
             * ****************************************************************
```



```
LINE         ID.......1.......2.......3.......4.......5.......6.......7.......8.......9......10
```

```
KK  050062   BASIN
BA   0.0061
* Original KH model had 2 BA cards. The 0.006 card was first, leaving
* the 0.014 card to be used in the model.
* BA 0.006
* BA 0.014
LS       0      79       0       0      98       0
UK     100    0.01     0.3      15
UK      50    0.01     0.1      85
RK     900   0.005   0.012            TRAP      60       1

KK  050050   FROM 050062
KO       2
RK    1000   0.002   0.013            CIRC     2.5       1
*
* Flows combined from 050040, 050305, revised 050310 and 050065
* into main pipe above Paiute Park. PB- Add 050062 and S 64th
*

KK  050050 COMBINE
KO       2
KM   Peak flow in main pipe above Paiute Park
HC       6
* Revise Hydrograph combine count from 5 to 6
* Move Subbasin 050060 (Paiute Park) to combine here.

KK  050060   BASIN
BA   0.029
LS       0      79       0       0      98       0
UK     105    0.01     0.3      20
UK     160    0.01     0.1      80
RK    1300  0.0038    0.03            TRAP     100     1.0

KK  050050 COMBINE
KM   Paiute Park inflow
HC       2
*

KK  05005A
KM   Station 80+50 to Pauite Park
* PB MODIFICATION FOR 90% SUBMITTAL
RK     140   0.002   0.013            TRAP       6       0
*
* ******************************************************************
* PB Modification:
* Revise Kimley-Horn stage/storage/discharge curve
* Revisions based on iterative calculations which included effect of
```

```
                  * Paiute Park discharges on downstream pipe system.
                  * ******************************************************************
LINE              ID.......1.......2.......3.......4.......5.......6.......7.......8.......9......10

 404              KK   05Det  Storage
 405              KO       2
 406              KM   ****** CAUTION- WATER SURFACE ELEVATIONS IN PAIUTE PARK ARE ***********
 407              KM   ****** 1 FOOT HIGHER THAN CALCULATED AFTER TIME 0308        ***********
                  * Original KH Curve
                  * RS     1    STOR
                  * SV     0    0.64    2.37    5.14    8.40    11.7    15.1    18.5    22.1
                  *    22.1S
                  * SE    49      50      51      52      53      54      55      56      57
                  *       58
                  * SQ   4.5      22      37      47      56      65      73      81      88
                  *      156
                  * Revised Premier Curve 7/10/99 jjh
                  * SV Revised by Premier 7/22/99
                  * SV revised by Premier 8/6/99 to reflect maintenance yard use in detention
                  * basin; SQ revised to reflect no flow from basin
                  * Final discharge curve by Premier 11/2/99- inlet control
 408              RS       1    STOR
                  * SV     0    4.92    9.18   13.51   17.92   22.39   26.92   36.48
                  * SV     0    2.40    6.57   10.83   15.17   19.58   24.06   33.52
 409              SV       0    1.89    4.93    8.55   12.30   16.16   20.15   28.50
 410              SE      48      50      51      52      53      54      55      57
                  * SQ     0      15      38      70     110     115     125     140
 411              SQ       0      46     105     136     156     156     156     156
                  *
                  * Revised PB Curve
                  * SA  1.20    1.84    3.17    3.21    3.31    3.35    3.42    3.49
                  * SE    50      51      52      53      54      55      56      57
                  * SQ     0      20      40      60      80     100     120     140
                  * SE    50    50.8   51.18   51.78   52.39   52.94   53.48   54.04
                  *
                  * Paiute Park outfall - 05Qpip is the outflow in the storm drain
                  * 05Qspl is the flow overtopping the basin
                  *
                  *
                  * Overflows to CP 050060
                  *

 412              KK  05Qpip
 413              DT  05Qspl
```

```
414          DI       0     160     382     780    1292    1897
415          DQ       0    0.01     212     600    1102    1697
             *
             * Begin storm drain system in Osborn Road
             *
             * ****************************************************************
             * PB Modification
             * Relocate hydrograph and subsequent route for Basin 050062
             * Remove hydrographs from this location
             * ****************************************************************
             * KK050062   BASIN
             * BA 0.006
             * BA 0.014
             * LS     0      79       0       0      98       0
             * UK   100    0.01     0.3      15
             * UK    50    0.01     0.1      85
             * RK   900   0.005   0.012            TRAP      60       1
             * KK050610   FROM 050062
             * RK  1500   0.003   0.013            TRAP      60       1
             *
```



```
LINE         ID.......1.......2.......3.......4.......5.......6.......7.......8.......9......10

416          KK  05DETA
417          KM   Route from Paiute Park to Osborn & Pinto
418          RK    1180  0.0041   0.013            CIRC     4.5
             *

419          KK  050610   BASIN
420          BA   0.081
421          LS       0      79       0       0      98       0
422          UK     130  0.0100    0.32      56
423          UK      70  0.0100    0.10      44
424          RK    1450  0.0038    0.02            TRAP      45     1.0
425          RK    1240  0.0033    0.02            TRAP      60     1.0
             * ****************************************************************
             * PB Modification
             * Revise combine operation from 3 to 2 hydrographs due to hydrograph
             * relocation.
             * ****************************************************************

426          KK  050610    COMBINE
427          KM   OSBORN & PINTO
428          KO       2
429          HC       2
```

```
430          KK  05062A    FROM  050610
431          KM   Route from Osborn & Pinto to Osborn & 68th Street
             * ****************************************************************
             * PB Modification
             * FOR 50% SUBMITTAL
             * Revise pipe size in routing card to reflect PB preliminary design.
             * ****************************************************************
432          RK     980  0.0036   0.013            CIRC       5
             * RK  1050  0.0037   0.013            CIRC       6

433          KK  050620   BASIN
434          BA   0.099
435          LS       0      79       0       0      98       0
436          UK     147  0.0100    0.30      56
437          UK      53  0.0100    0.10      44
438          RK     940  0.0033    0.02            TRAP      41     1.0
439          RK    2545  0.0038    0.02            TRAP      60     1.0

440          KK  050620 COMBINE
441          KM   OSBORN AND 68TH STREET
442          KO       2
443          HC       2

444          KK  05063A    FROM  050620
445          KM   Route from Osborn and 68th Street to Osborn & 70th Street
             * ****************************************************************
             * PB Modification
             * FOR 50% SUBMITTAL
             * Revise pipe size in routing card to reflect PB preliminary design.
             * ****************************************************************
446          RK    1350  0.0047   0.013            CIRC     6.5
             * RK  1440  0.0028   0.013            CIRC       7
```



```
LINE         ID.......1.......2.......3.......4.......5.......6.......7.......8.......9......10


447          KK  050630   BASIN
448          BA   0.062
449          LS       0      79       0       0      98       0
450          UK     138  0.0100    0.31      33
451          UK      64  0.0100    0.10      67
452          RK    1205  0.0038    0.02            TRAP      41     1.0
453          RK    1348  0.0033    0.02            TRAP      60     1.0

454          KK  050630 COMBINE
```

```
KM   OSBORN AND 70TH STREET
KO       2
HC       2

KK  05064A    FROM  050630
KM   Route flow from Osborn and 70th St to Osborn and 71st St.
RK     680  0.0015   0.012            CIRC     7.5
* ****************************************************************
* PB Modification
* FOR 50% SUBMITTAL
* Revise pipe size in routing card to reflect PB preliminary design.
* ****************************************************************
* Add Subbasin 050640 to this version of model.
* Portion of subbasin 050640 contributes to storm drain.
* Divide Basin 050640 for split at 71st Street per PB 10/12/99
* Modify routes and combine
*

KK  050640   BASIN
BA   0.006
LS       0      79       0       0      98       0
UK      64  0.0100     0.3      15
UK     149     .01     .10      85
RK     400  0.0038    0.02            TRAP      41     1.0
*

KK  050640 COMBINE
KM   Combine Hydrograph at Osborn and 71st Street
HC       2                                                                    HC
*

KK  05066A    FROM  050630
KM   Route flow from Osborn and 71st St to Scottsdale Road & Earl Drive
RK    1950  0.0015   0.013            CIRC     7.5
*
* ****************************************************************
* PB Modification:
* Remove flows and subsequent routes from Subbasins 050710, 050720,
* 050810, 050640, 050910, and 050650 from model. Flows drain to
* Scottsdale Road. Allow flows to be collected by Scottsdale Road
* system. Do not collect in Earll Road system.
* ****************************************************************
* KK050710   BASIN
* BA 0.005
* LS     0      79       0       0      98       0
* UK    21  0.0100    0.40      15
* UK   200  0.0100    0.10      85
```

```
* RK   610  0.0038    0.02            TRAP      55     1.0
* KK050720    FROM  050710
* RK   316  0.0045   0.013            CIRC     5.5
* KK050720   BASIN
* BA 0.028
* LS     0      79       0       0      98       0
* UK    57  0.0100    0.38      17
* UK   188  0.0100    0.10      83
* RK   580  0.0038    0.02            TRAP      45     1.0
* RK  1594  0.0033    0.02            TRAP      55     1.0
* KK050720   COMBINE
* HC     2
* KK050640    FROM  050720
* RK   422  0.0045   0.013            CIRC     5.5
* KK050810   BASIN
* BA 0.013
* LS     0      79       0       0      98       0
* UK    88  0.0100    0.36      20
* UK   200  0.0100    0.10      80
* RK   164  0.0033    0.02            TRAP      28     1.0
* RK  1031  0.0038    0.02            TRAP      55     1.0
* KK050640    FROM  050810
* RK   705  0.0025   0.013            CIRC     4.0
* KK050640   BASIN
* BA 0.032
* LS     0      79       0       0      98       0
* UK    64  0.0100    0.37      15
* UK   149  0.0100    0.10      85
* RK  1605  0.0038    0.02            TRAP      41     1.0
* RK  1168  0.0033    0.02            TRAP      60     1.0
* KK050640 COMBINE
* HC     3
* KK050650   FROM 050640
* RK   700  0.0029   0.013            CIRC       6
* KK050910   BASIN
* BA 0.012
* LS     0      79       0       0      98       0
* UK   170  0.0100    0.32      26
* UK   200  0.0100    0.10      74
* RK   837  0.0038    0.02            TRAP      38     1.0
* KK050650    FROM  050910
* RK   751  0.0045   0.013            DEEP     5.0
* KK050650   BASIN
* BA 0.019
* LS     0      79       0       0      98       0
* UK    29  0.0100    0.40      16
* UK   200  0.0100    0.10      84
```

```
* RK   598  0.0033    0.02            TRAP      23     1.0
* RK   566  0.0038    0.02            TRAP      90     1.0
* KK050650 COMBINE
* HC     3
* KK050660    FROM  050650
* RK   648  0.0027   0.013            CIRC     7.5
*
* This alternative includes a storm drain in 71st St.  This storm drain will
* intercept flows from the north part of the existing conditions subbasin
* 050100.  For this reason, subbasin 050100 has been split into two with 050100
* being north of Earll Drive and 050105 south of earll drive.  See drainage
* figure in the Appendix of the Final Report.
*
```



```
LINE          ID.......1.......2.......3.......4.......5.......6.......7.......8.......9......10

 473          KK  050100   BASIN
 474          BA   0.034
 475          LS       0      79       0       0      98       0
 476          UK      20  0.0100    0.40       7
 477          UK     200  0.0100    0.10      93
 478          RK     505  0.0033    0.02            TRAP      30     1.0
 479          RK    1727  0.0038    0.02            TRAP      23     1.0
              * ******************************************************************
              * PB Modification:
              * Remove flows from Subbasin 050660 from model. Drains to Scottsdale Road.
              * Allow flows to be collected by Scottsdale Road system.
              * Adjust combine card from 4 to 2
              * ******************************************************************
              * KK050660   BASIN
              * BA 0.018
              * LS     0      79       0       0      98       0
              * UK    20  0.0100    0.40      15
              * UK   200  0.0100    0.10      85
              * RK   578  0.0033    0.02            TRAP      49     1.0
              * RK   582  0.0038    0.02            TRAP      90     1.0

 480          KK  050660 COMBINE
 481          KM   SCOTTSDALE ROAD AND EARL DRIVE
 482          KO       2
 483          HC       2
              * ******************************************************************
              * PB Modification:
              * Collect local flows into large pipe. Earll Drive divides subbasin
              * 50130.  Runoff generated north of Earll Drive to be collected
```

```
                 * at Earll Drive.  New subbasin north of Earll to be 050131. Add
                 * required combine and route cards. Modify routing card from 050660.
                 * Revise KH routes from TRAP to CIRC.
                 * ****************************************************************
                 *

484              KK  05013A
485              KM   Route from Scottsdale Road to Civic Center Blvd.
                 * KK051410   FROM 050660
                 * KH routing card
                 * RK  2640  0.0015   0.013            TRAP      16
                 * PB MODIFICATION FOR 50% SUBMITTAL
486              RK    1402  0.0010   0.012            CIRC     7.5

487              KK  050131
                 * BA 0.096
488              BA   0.024
489              LS       0      79       0       0      98       0
490              UK      45  0.0100    0.38      15
491              UK     171  0.0100    0.10      85
                 * RK  1905  0.0038    0.02            TRAP      71     1.0
                 * RK  1212  0.0033    0.02            TRAP      71     1.0
492              RK    1000   0.004    0.02            TRAP      71     1.0
1                                          HEC-1 INPUT                                                    PAGE 17

LINE             ID.......1.......2.......3.......4.......5.......6.......7.......8.......9......10


493              KK  050131   COMBINE
494              KM   EARL DRIVE AND 74TH STREET
495              KO       2
496              HC       2

497              KK  05141A   FROM 050131
498              KM   ROUTE FROM CIVIC CENTER TO MILLER
                 * PB MODIFICATION FOR 50% SUBMITTAL
499              RK    1241   0.001   0.013            CIRC       8
                 * RK  1300  0.0015   0.013            CIRC       8

500              KK  051410   BASIN
501              BA   0.072
502              LS       0      79       0       0      98       0
503              UK      64  0.0100    0.37       9
504              UK     150  0.0100    0.10      91
505              RK    1170  0.0033    0.02            TRAP      38     1.0
506              RK    1180  0.0038    0.02            TRAP      55     1.0
```

```
507          KK  051410    COMBINE
508          KM   EARL DRIVE AND MILLER ROAD
509          KO       2
510          HC       2
             *
             * EARLL DR OUTFALL TO INDIAN BEND WASH
             *
             * ******************************************************************
             * PB Modification:
             * Revise route to reflect storm drain from Miller to IBW
             * Use 105-inch pipe to represent 10' x 6' box culvert.
             * ******************************************************************

511          KK  05142A    FROM  051410
512          KM   Route from Miller Road to IBW
             * RK  1460  0.0015   0.013            TRAP      14
             * PB MODIFICATION FOR 50% SUBMITTAL
513          RK    1466  0.0020   0.013            TRAP      10       0
             *
             * ******************************************************************
             * PB Modification:
             * End of area of interest. Remove subsequent hydrographs from model.
             * ******************************************************************
             *
             * FLOW IN BASIN 05 EAST OF 71ST STREET FOLLOWS DRAINAGE PATHS OF EXISTING
             * CONDITIONS MODEL IN THIS ALTERNATIVE - FLOWS IN THIS SECTION ARE NORTH OF
             * OSBORN RD WITH THE EXCEPTION OF BASIN 051710 AND FLOW NATURALLY TO THE EAST
             *
             * KK051510   BASIN
             * BA 0.010
             * LS     0      79       0       0      98       0
             * UK    59  0.0100    0.38      18
             * UK   200  0.0100    0.10      82
             * RK   139  0.0038    0.02            TRAP      41     1.0
             * RK   521  0.0033    0.02            TRAP      71     1.0
             * KK051520    FROM  051510
             * RK   680  0.0028   0.013            CIRC     9.5
             * KK051610   BASIN
             * BA 0.021
             * LS     0      79       0       0      98       0
             * UK   165  0.0100    0.32      25
             * UK   200  0.0100    0.10      75
             * RK   624  0.0038    0.02            TRAP      41     1.0
             * RK   792  0.0033    0.02            TRAP      60     1.0
             * KK051520    FROM  051610
             * RK   601  0.0047   0.013            CIRC     5.0
             * KK051710   BASIN
```

```
* BA 0.004
* LS      0       79        0        0       98        0
* UK    146   0.0100     0.33       24
* UK    200   0.0100     0.10       76
* RK    515   0.0038     0.02             TRAP       30      1.0
* RK    287   0.0033     0.02             TRAP       30      1.0
* KK051520     FROM   051710
* RK    567   0.0032    0.013             CIRC      4.0
* KK051520    BASIN
* BA 0.023
* LS      0       79        0        0       98        0
* UK    179   0.0100     0.31       26
* UK    198   0.0100     0.10       74
* RK    473   0.0038     0.02             TRAP       60      1.0
* RK    704   0.0033     0.02             TRAP       71      1.0
* KK051520 COMBINE
* HC      4
* KK051530     FROM   051520
* RK    926    0.001    0.013             CIRC      6.0
* KK051530    BASIN
* BA 0.041
* LS      0       79        0        0       98        0
* UK     26   0.0100     0.40       15
* UK    193   0.0100     0.10       85
* RK    889   0.0038     0.02             TRAP       38      1.0
* RK    860   0.0033     0.02             TRAP       60      1.0
* KK051530 COMBINE
* HC      2
* KK051540     FROM   051530
* RK    360    0.001    0.013             CIRC      6.0
* KK051810    BASIN
* BA 0.005
* LS      0       79        0        0       98        0
* UK     23   0.0100     0.40       16
* UK    196   0.0100     0.10       84
* RK    272   0.0033     0.02             TRAP       19      1.0
* RK    272   0.0038     0.02             TRAP       30      1.0
* KK051540     FROM   051810
* RK    218   0.0045    0.013             CIRC      4.5
* KK051540    BASIN
* BA 0.004
* LS      0       79        0        0       98        0
* UK     44   0.0100     0.38       16
* UK    172   0.0100     0.10       84
* RK    233   0.0038     0.02             TRAP       12      1.0
* RK    265   0.0033     0.02             TRAP       60      1.0
* KK051540 COMBINE
```

```
* HC     3
* KK051550    FROM  051540
* RK   273   0.001   0.013            TRAP     8.0     1.0
* KK051560    FROM  051550
* RK   800  0.0038   0.013            CIRC     7.0
* KK051560   BASIN
* BA 0.008
* LS     0      79       0       0      98       0
* UK   116  0.0100    0.33      47
* UK    89  0.0100    0.10      53
* RK  1126  0.0033    0.02            TRAP      60     1.0
* KK051560 COMBINE
* HC     2
*
* Osborn Rd outfall to Indian Bend Wash
*
* KK051570    FROM  051560
* RK   228   0.003   0.013            CIRC     7.0
*
* Begin Thomas Rd outfall
*
* KK05Qspl  Retrieve spill from Paiute Park detention basin
* DR05Qspl
* KK050060    Qspl FROM  05Det
* RK   500   0.002   0.027            TRAP       5       1
* KK050070    FROM  050060
* RK  1429  0.0033   0.030            TRAP     5.0     1.0
* KK050410   BASIN
* BA 0.041
* LS     0      79       0       0      98       0
* UK    77  0.0100    0.36      25
* UK   137  0.0100    0.10      75
* RK   694  0.0038    0.02            TRAP      38     1.0
* RK  1177  0.0033    0.02            TRAP      38     1.0
* KK050070    FROM  050410
* RK   187  0.0038   0.017            TRAP    60.0       1
* KK050070   BASIN
* BA 0.084
* LS     0      79       0       0      98       0
* UK    22  0.0100    0.40       8
* UK   198  0.0100    0.10      92
* RK  3223  0.0038    0.02            TRAP      38     1.0
* KK050070 COMBINE
* HC     3
* KK050080    FROM  050070
* RK  1112  0.0027   0.013            CIRC     4.5
* KK050080   BASIN
```

```
* BA 0.021
* LS      0       79        0        0       98        0
* UK    132   0.0100     0.31       60
* UK     71   0.0100     0.10       40
* RK   1365   0.0033     0.02             TRAP       38      1.0
* KK050080 COMBINE
* HC      2
* KK050090     FROM  050080
* RK    416   0.0052    0.013             CIRC      4.0
* KK050510    BASIN
* BA 0.054
* LS      0       79        0        0       98        0
* UK    109   0.0100     0.33       48
* UK     97   0.0100     0.10       52
* RK   1096   0.0038     0.02             TRAP       41      1.0
* RK   1304   0.0033     0.02             TRAP       41      1.0
* KK050090     FROM  050510
* RK    626   0.0052    0.013             CIRC      4.0
* KK050090    BASIN
* BA 0.037
* LS      0       79        0        0       98        0
* UK     44   0.0100     0.38       23
* UK    172   0.0100     0.10       77
* RK    965   0.0038     0.02             TRAP       23      1.0
* RK   1064   0.0033     0.02             TRAP       45      1.0
* KK050090 COMBINE
* HC      3
* KK050105     FROM  050090
* RK    609   0.0028    0.013             CIRC      4.5
*
* This alternative includes a storm drain in 71st St.  This storm drain will
* intercept flows from the north part of the existing conditions subbasin
* 050100.  For this reason, subbasin 050100 has been split into two with 050100
* being north of Earll Drive and 050105 south of Earll Drive.  See drainage
* figure in the appendix of the Final Report.
*
* KK050105    BASIN
* BA 0.011
* LS      0       79        0        0       98        0
* UK     20   0.0100     0.40        7
* UK    200   0.0100     0.10       93
* RK    587   0.0033     0.02             TRAP       30      1.0
* RK    410   0.0038     0.02             TRAP       23      1.0
* KK050105 COMBINE
* HC      2
* KK050110     FROM  050105
* RK    692   0.0058    0.013             CIRC      4.0
```

```
* KK050110   BASIN
* BA 0.010
* LS     0      79       0       0      98       0
* UK    20  0.0100    0.40      15
* UK   200  0.0100    0.10      85
* RK   587  0.0033    0.02            TRAP      46     1.0
* RK   406  0.0038    0.02            TRAP      77     1.0
* KK050110 COMBINE
* HC     2
* KK050120    FROM  050110
* RK   888  0.0027   0.013            CIRC     7.5
* KK051010   BASIN
* BA 0.023
* LS     0      79       0       0      98       0
* UK   200  0.0100    0.30      28
* UK   200  0.0100    0.10      72
* RK   517  0.0033    0.02            TRAP      30     1.0
* RK   822  0.0038    0.02            TRAP      30     1.0
* KK1010ST STORAGE
* RS     1    STOR
* SV     0    0.20    0.70    1.49    1.49
* SE    58      59      60      61      62
* SQ     0    0.01    0.01    0.01    0.01
* ST    61     800     3.0     1.5
* KK051020    FROM  051010
* RK   948  0.0033   0.017            TRAP    60.0       1
* KK051110   BASIN
* BA 0.025
* LS     0      79       0       0      98       0
* UK    20  0.0100    0.40      10
* UK   200  0.0100    0.10      90
* RK   326  0.0038    0.02            TRAP       9     1.0
* RK  1382  0.0033    0.02            TRAP      19     1.0
* KK051020    FROM  051110
* RK   541  0.0038   0.017            TRAP    33.0       1
* KK051020   BASIN
* BA 0.027
* LS     0      79       0       0      98       0
* UK    64  0.0100    0.37      22
* UK   174  0.0100    0.10      78
* RK   409  0.0038    0.02            TRAP      26     1.0
* RK  1595  0.0033    0.02            TRAP      60     1.0
* KK051020 COMBINE
* HC     3
* KK051030    FROM  051020
* RK   694  0.0033   0.017            TRAP    60.0       1
* KK051210   BASIN
```

```
* BA 0.008
* LS      0       79        0        0       98        0
* UK     20   0.0100     0.40       15
* UK    200   0.0100     0.10       85
* RK    682   0.0038     0.02             TRAP        9      1.0
* KK051030     FROM   051210
* RK    241   0.0038    0.017             TRAP     60.0        1
* KK051310    BASIN
* BA 0.003
* LS      0       79        0        0       98        0
* UK     20   0.0100     0.40        6
* UK    200   0.0100     0.10       94
* RK    544   0.0033     0.02             TRAP       18      1.0
* KK051320     FROM   051310
* RK    333   0.0038    0.017             TRAP     60.0        1
* KK051320    BASIN
* BA 0.009
* LS      0       79        0        0       98        0
* UK     20   0.0100     0.40        7
* UK    200   0.0100     0.10       93
* RK    254   0.0038     0.02             TRAP        9      1.0
* RK    543   0.0033     0.02             TRAP       18      1.0
* KK051320 COMBINE
* HC      2
* KK051030     FROM   051320
* RK    960   0.0038    0.017             TRAP     60.0        1
* KK051030    BASIN
* BA 0.031
* LS      0       79        0        0       98        0
* UK     28   0.0100     0.39       13
* UK    190   0.0100     0.10       87
* RK   2532   0.0033     0.02             TRAP       49      1.0
* KK051030 COMBINE
* HC      4
* KK051040     FROM   051030
* RK   1501   0.0033    0.017             TRAP     60.0        1
* KK051040    BASIN
* BA 0.036
* LS      0       79        0        0       98        0
* UK    105   0.0100     0.34       39
* UK    102   0.0100     0.10       61
* RK   1159   0.0038     0.02             TRAP       45      1.0
* RK   1501   0.0033     0.02             TRAP       65      1.0
* KK051040 COMBINE
* HC      2
* KK050120     FROM   051040
* RK   1222    0.003    0.013             TRAP        8
```

```
* KK050120   BASIN
* BA 0.039
* LS     0      79       0       0      98       0
* UK    24  0.0100    0.40      14
* UK   195  0.0100    0.10      86
* RK   763  0.0038    0.02            TRAP      23     1.0
* RK  1114  0.0033    0.02            TRAP      90     1.0
* KK050120 COMBINE
* HC     3
* KK050130    FROM  050120
* RK  1265  0.0027   0.013            DEEP     7.0
* KK050130   BASIN
* BA 0.096
* LS     0      79       0       0      98       0
* UK    45  0.0100    0.38      15
* UK   171  0.0100    0.10      85
* RK  1905  0.0038    0.02            TRAP      71     1.0
* RK  1212  0.0033    0.02            TRAP      71     1.0
* KK050130 COMBINE
* HC     2
* KK050140    FROM  050130
* RK  1319  0.0027   0.013            DEEP     7.0
* KK050140   BASIN
* BA 0.086
* LS     0      79       0       0      98       0
* UK    94  0.0100    0.35      25
* UK   154  0.0100    0.10      75
* RK  1224  0.0038    0.02            TRAP       9     1.0
* RK  1267  0.0033    0.02            TRAP      79     1.0
* KK050140 COMBINE
* HC     2
* KK050150    FROM  050140
* RK  1252  0.0006   0.013            DEEP     5.0
* KK050150   BASIN
* BA 0.011
* LS     0      79       0       0      98       0
* UK   159  0.0100    0.30      57
* UK    57  0.0100    0.10      43
* RK  1202  0.0033    0.02            TRAP      60     1.0
* KK050150 COMBINE
* HC     2
*
* Thomas Rd Outfall to Indian Bend Wash
*
* KK050160    FROM  050150
* RK   332  0.0048   0.013            DEEP     6.0
*
```

* Notice:
* This document, together with the concepts and designs presented herein, as an
* instrument of service, is intended for the specific purpose and client for
* which it was prepared. Reuse of and improper reliance on this document
* without written authorization and adaptation by Kimley-Horn and Associates,
* Inc. shall be without liability to Kimley-Horn and Associates, Inc.
*


```
          LINE          ID.......1.......2.......3.......4.......5.......6.......7.......8.......9......10

           514          ZZ
1
                SCHEMATIC DIAGRAM OF STREAM NETWORK
 INPUT
  LINE      (V) ROUTING          (--->) DIVERSION OR PUMP FLOW

   NO.      (.) CONNECTOR        (<---) RETURN OF DIVERTED OR PUMPED FLOW

    56      070808
                 .
                 .
    64           .-------> 808OUT
    63       808PP
                 V
                 V
    67      070610
                 .
                 .
    69           .      070610
                 .           .
                 .           .
    76           .           .-------> 610OUT
    75           .       610PP
                 .           .
                 .           .
    79      070610............
                 V
                 V
    81      070508
                 .
                 .
    83           .      070508
                 .           .
                 .           .
    90           .           .-------> 508OUT
    89           .       508PP
```

```
                .           .
                .           .
 93        070508............
                V
                V
 95        070010
                .
                .
 97             .      070010
                .           .
                .           .
104             .           .-------> 010OUT
103             .       010PP
                .           .
                .           .
107        070010............
                V
                V
109        070210
                .
                .
111             .      070209
                .           V
                .           V
117             .      070210
                .           .
                .           .
119             .           .      070210
                .           .           .
                .           .           .
125             .      070210............
                .           .
                .           .
128             .           .-------> 210OUT
127             .       210PP
                .           .
                .           .
131        070210............
                V
                V
133        050005
                .
                .
135             .      050005
                .           .
                .           .
142             .           .-------> 005OUT
```

```
141          .       005PP
             .          .
             .          .
147          .          .          .<-------  010OUT
145          .          .     070010
             .          .          V
             .          .          V
148          .          .     070020
             .          .          V
             .          .          V
150          .          .     070030
             .          .          .
             .          .          .
152          .          .          .      070030
             .          .          .           .
             .          .          .           .
158          .          .     070030............
             .          .          V
             .          .          V
160          .          .     070040
             .          .          .
             .          .          .
164          .          .          .           .<-------  210OUT
162          .          .          .      070210
             .          .          .           V
             .          .          .           V
165          .          .          .      070220
             .          .          .           V
             .          .          .           V
167          .          .          .      070040
             .          .          .           .
             .          .          .           .
169          .          .          .           .      070040
             .          .          .           .           .
             .          .          .           .           .
175          .          .     070040........................
             .          .          V
             .          .          V
177          .          .     070050
             .          .          .
             .          .          .
179          .          .          .      070050
             .          .          .           .
             .          .          .           .
186          .          .     070050............
             .          .          V
             .          .          V
```

```
188          .          .     070060
             .          .          .
             .          .          .
190          .          .          .      070310
             .          .          .           V
             .          .          .           V
197          .          .          .      070060
             .          .          .           .
             .          .          .           .
199          .          .          .           .      070060
             .          .          .           .           .
             .          .          .           .           .
205          .          .     070060.......................
             .          .          V
             .          .          V
207          .          .     070070
             .          .          .
             .          .          .
209          .          .          .      070070
             .          .          .           .
             .          .          .           .
215          .          .          .           .      070080
             .          .          .           .           .
             .          .          .           .           .
221          .          .     070080.......................
             .          .          V
             .          .          V
223          .          .      07Det
             .          .          .
             .          .          .
230          .          .          .-------> 07Qspl
229          .          .     07Qpip
             .          .          V
             .          .          V
233          .          .     07000A
             .          .          V
             .          .          V
236          .          .     07042A
             .          .          .
             .          .          .
239          .          .          .      070410
             .          .          .           V
             .          .          .           V
245          .          .          .      070420
             .          .          .           .
             .          .          .           .
247          .          .          .           .      070420
```

```
                .         .         .         .         .
                .         .         .         .         .
253             .         .         .     07042C............
                .         .         .         .
                .         .         .         .
257             .         .         .         .-------> 70west
256             .         .         .     07042D
                .         .         .         .
                .         .         .         .
260             .         .   07042C............
                .         .       V
                .         .       V
263             .         .   21000A
                .         .       V
                .         .       V
266             .         .   050030
                .         .         .
                .         .         .
270             .         .         .         .<------- 005OUT
268             .         .         .     050005
                .         .         .         V
                .         .         .         V
271             .         .         .     050010
                .         .         .         .
                .         .         .         .
273             .         .         .         .     050010
                .         .         .         .         .
                .         .         .         .         .
280             .         .         .     050010............
                .         .         .         V
                .         .         .         V
282             .         .         .     050020
                .         .         .         .
                .         .         .         .
284             .         .         .         .     050210
                .         .         .         .         V
                .         .         .         .         V
291             .         .         .         .      210ST
                .         .         .         .         V
                .         .         .         .         V
297             .         .         .         .     050020
                .         .         .         .         .
                .         .         .         .         .
299             .         .         .         .         .     050020
                .         .         .         .         .         .
                .         .         .         .         .         .
305             .         .         .     050020........................
```

```
                .         .         .         .
                .         .         .         .
309             .         .         .         .-------> 020OUT
307             .         .         .    050020
                .         .         .         V
                .         .         .         V
312             .         .         .    050030
                .         .         .         .
                .         .         .         .
314             .         .         .         .    050030
                .         .         .         .         V
                .         .         .         .         V
321             .         .         .         .     030ST
                .         .         .         .         .
                .         .         .         .         .
327             .         .         .     ALLEY...........
                .         .         .         .
                .         .         .         .
331             .         .   050030...........
                .         .         V
                .         .         V
333             .         .   050050
                .         .         .
                .         .         .
337             .         .         .    050040
                .         .         .         V
                .         .         .         V
344             .         .         .    40STOR
                .         .         .         V
                .         .         .         V
349             .         .         .    050050
                .         .         .         .
                .         .         .         .
352             .         .         .         .    050310
                .         .         .         .         V
                .         .         .         .         V
358             .         .         .         .    SRPDet
                .         .         .         .         .
                .         .         .         .         .
365             .         .         .         .         .    S 64th
                .         .         .         .         .         .
                .         .         .         .         .         .
372             .         .         .         .         .         .    050065
                .         .         .         .         .         .         .
                .         .         .         .         .         .         .
379             .         .         .         .         .         .         .    050062
                .         .         .         .         .         .         .         V
```

```
                                                                                  V
385                                                                          050050
                                                                                  .
                                                                                  .
388                  050050.......................................................
                          .
                          .
392                       .      050060
                          .           .
                          .           .
398                  050050............
                          V
                          V
401                  05005A
                          V
                          V
404                   05Det
                          .
                          .
413                       .-------> 05Qspl
412                  05Qpip
                          V
                          V
416                  05DETA
                          .
                          .
419                       .      050610
                          .           .
                          .           .
426                  050610............
                          V
                          V
430                  05062A
                          .
                          .
433                       .      050620
                          .           .
                          .           .
440                  050620............
                          V
                          V
444                  05063A
                          .
                          .
447                       .      050630
                          .           .
                          .           .
```

```
454          .          .      050630............
             .          .           V
             .          .           V
458          .          .      05064A
             .          .           .
             .          .           .
461          .          .           .      050640
             .          .           .           .
             .          .           .           .
467          .          .      050640............
             .          .           V
             .          .           V
470          .          .      05066A
             .          .           .
             .          .           .
473          .          .           .      050100
             .          .           .           .
             .          .           .           .
480          .          .      050660............
             .          .           V
             .          .           V
484          .          .      05013A
             .          .           .
             .          .           .
487          .          .           .      050131
             .          .           .           .
             .          .           .           .
493          .          .      050131............
             .          .           V
             .          .           V
497          .          .      05141A
             .          .           .
             .          .           .
500          .          .           .      051410
             .          .           .           .
             .          .           .           .
507          .          .      051410............
             .          .           V
             .          .           V
511          .          .      05142A
```

(***) RUNOFF ALSO COMPUTED AT THIS LOCATION

```
1*************************************
 *                                   *
 *   FLOOD HYDROGRAPH PACKAGE  (HEC-1)   *
 *              MAY   1991           *
 *           VERSION 4.0.1E          *
```

```
*************************************
*                                   *
*    U.S. ARMY CORPS OF ENGINEERS   *
*    HYDROLOGIC ENGINEERING CENTER  *
*          609 SECOND STREET        *
```

```
*************************************************************************
STP-PAPAGO REGIONAL FLOOD CONTROL PROJECT
SCOTTSDALE - TEMPE - PHOENIX
*************************************************************************

Kimley-Horn and Associates, Inc.
KVL Consultants, Inc.

10-Year, 6-Hour Storm Event
10/97

PARSONS BRINCKERHOFF MODIFICATIONS TO ORIGINAL KIMLEY HORN MODEL
FILE NAME: PBOSB.DAT
FILE MODIFIED BY PARSONS BRINCKERHOFF/PREMIER ENGINEERING TO BE USED IN
DESIGN OF OSBORN OUTFALL.
MODIFICATIONS:
1) SUBBASIN 050062 REROUTED DIRECTLY TO PAIUTE PARK- IMPROVEMENTS TO 64TH ST
   CONVEY FLOW TO DETENTION BASIN. AREA REDUCED TO 3.9 ACRES (0.0061 SM).
2) PAIUTE PARK STAGE/DISCHARGE CURVE ADJUSTED TO REFLECT GRADING
   BY PREMIER ENGINEERING. ASSUME PAIUTE PARK OUTLET FUNCTIONS AS CULVERT IN
   INLET CONTROL.
3) SUBBASINS CONTRIBUTING TO 66" ADOT PIPE AND SCOTTSDALE ROAD SOUTH OF
   OSBORN ROAD REMOVED FROM MODEL (SUBBASINS 050710, 050720,058810, 050640,
   050910, and 050650. FLOWS COLLECTED AND CONVEYED BY SCOTTSDALE ROAD
   STORM DRAIN.
4) REVISE AREA OF SUBBASIN 050310 FROM 0.041 SM TO 0.0063 SM.AND ROUTE TO
   EXISTING DETENTION BASIN. REMAINING AREA IS SRP PROPERTY WHICH DRAINS
   WEST.
   AREA REDUCTION DUE TO:
   REMOVE APARTMENTS AT THOMAS AND 64TH ST DUE TO ON-SITE RETENTION.
   REMOVE PORTION OF SRP SUBSTATION WHICH DRAINS EAST.
   COLLECT PAVEMENT FLOWS FROM 64TH ST (THOMAS TO PAIUTE PARK) IN TRUNKLINE.
   COLLECT FLOWS FROM PAVED AREA BETWEEN SUBSTATION AND APARTMENTS IN
   TRUNKLINE
5) REVISE HYDROGRAPH CARDS FOR SUBBASIN 050130.  INSERT CONCENTRATION
   POINT AT EARLL AND CIVIC CENTER.
6) REVISE HYDROGRAPH CARDS FOR SUBBASIN 050100.  EARLL ALIGNMENT DIVIDES
   SUBBASIN. ROUTE FLOWS TO CONCENTRATION POINT AT EARLL AND SCOTTSDALE.
```

```
                    7) REVISE PIPE SIZES/LENGTHS IN ROUTE CARDS TO REFLECT PB DESIGN
                    8) DIVERT 58 CFS EAST ON THOMAS IN 45" ABANDONED WATERLINE PER ENTELLUS
                       DRAINAGE REPORT FOR 64TH STREET (ADDENDUM NO. 1, 3/27/98). DIVERSION
                       FROM CONCENTRATION POINT 50020.
                    9) MARRIOTT BRIGHTON GARDENS STAGE/DISCHARGE CURVE ADJUSTED TO REFLECT
                       GRADING BY PREMIER ENGINEERING. ASSUME OUTFLOW FROM MARRIOTT IS SAME
                       AS CULVERT IN INLET CONTROL.


                    Parsons Brinckerhoff
                    Alan Humphrey
                    5/5/99
                    Revised 8/11/99 FOR 50% SUBMITTAL
                    Revised 11/4/99 FOR 90% SUBMITTAL
                    Revised 3/10/00 FOR 100% SUBMITTAL

 55 IO          OUTPUT CONTROL VARIABLES
                      IPRNT           5  PRINT CONTROL
                      IPLOT           0  PLOT CONTROL
                      QSCAL          0.  HYDROGRAPH PLOT SCALE

    IT          HYDROGRAPH TIME DATA
                       NMIN           2  MINUTES IN COMPUTATION INTERVAL
                      IDATE      1    0  STARTING DATE
                      ITIME        0000  STARTING TIME
                         NQ         300  NUMBER OF HYDROGRAPH ORDINATES
                     NDDATE      1    0  ENDING DATE
                     NDTIME        0958  ENDING TIME
                     ICENT          19  CENTURY MARK

                  COMPUTATION INTERVAL    0.03 HOURS
                       TOTAL TIME BASE    9.97 HOURS

          ENGLISH UNITS
               DRAINAGE AREA          SQUARE MILES
               PRECIPITATION DEPTH    INCHES
               LENGTH, ELEVATION      FEET
               FLOW                   CUBIC FEET PER SECOND
               STORAGE VOLUME         ACRE-FEET
               SURFACE AREA           ACRES
               TEMPERATURE            DEGREES FAHRENHEIT


*** *** *** *** *** *** *** *** *** *** *** *** *** *** *** *** *** *** *** *** *** *** *** *** *** *** *** *** *** *** *** *** *** *** ***
```

```
                **************
                *            *
223 KK          *     07Det  *        Detention basin at Marriott's Brighton Gardens
                *            *
                **************

224 KO            OUTPUT CONTROL VARIABLES
                        IPRNT           2  PRINT CONTROL
                        IPLOT           0  PLOT CONTROL
                        QSCAL          0.  HYDROGRAPH PLOT SCALE

                HYDROGRAPH ROUTING DATA

225 RS            STORAGE ROUTING
                        NSTPS           1  NUMBER OF SUBREACHES
                         ITYP        STOR  TYPE OF INITIAL CONDITION
                       RSVRIC        0.00  INITIAL CONDITION
                            X        0.00 WORKING R AND D COEFFICIENT

226 SV              STORAGE         0.0       0.1       0.5       1.5       2.6       3.8       5.2

227 SE            ELEVATION       66.00     67.00     68.00     69.00     70.00     71.00     72.00

228 SQ            DISCHARGE         0.        2.        8.       16.       29.       38.       48.
                                                                  ***
```

****

HYDROGRAPH AT STATION 07Det

****

DA	MON	HRMN	ORD	OUTFLOW	STORAGE	STAGE	DA	MON	HRMN	ORD	OUTFLOW	STORAGE	STAGE	DA	MON	HRMN	ORD	OUTFLOW	STORAGE	STAGE
1		0000	1	0.	0.0	66.0	1		0320	101	35.	3.4	70.6	1		0640	201	10.	0.7	68.2
1		0002	2	0.	0.0	66.0	1		0322	102	36.	3.5	70.8	1		0642	202	10.	0.7	68.2
1		0004	3	0.	0.0	66.0	1		0324	103	37.	3.7	70.9	1		0644	203	9.	0.7	68.2
1		0006	4	0.	0.0	66.0	1		0326	104	38.	3.8	71.0	1		0646	204	9.	0.6	68.2
1		0008	5	0.	0.0	66.0	1		0328	105	39.	3.9	71.1	1		0648	205	9.	0.6	68.1
1		0010	6	0.	0.0	66.0	1		0330	106	39.	4.0	71.1	1		0650	206	9.	0.6	68.1
1		0012	7	0.	0.0	66.0	1		0332	107	40.	4.1	71.2	1		0652	207	9.	0.6	68.1
1		0014	8	0.	0.0	66.0	1		0334	108	40.	4.1	71.2	1		0654	208	9.	0.6	68.1
1		0016	9	0.	0.0	66.0	1		0336	109	41.	4.2	71.3	1		0656	209	8.	0.5	68.1
1		0018	10	0.	0.0	66.0	1		0338	110	41.	4.2	71.3	1		0658	210	8.	0.5	68.0
1		0020	11	0.	0.0	66.0	1		0340	111	41.	4.2	71.3	1		0700	211	8.	0.5	68.0
1		0022	12	0.	0.0	66.0	1		0342	112	41.	4.2	71.3	1		0702	212	8.	0.5	68.0

1	0024	13	0.	0.0	66.0	*	1	0344	113	41.	4.2	71.3	*	1	0704	213	8.	0.5	68.0
1	0026	14	0.	0.0	66.0	*	1	0346	114	41.	4.2	71.3	*	1	0706	214	8.	0.4	67.9
1	0028	15	0.	0.0	66.0	*	1	0348	115	41.	4.2	71.3	*	1	0708	215	7.	0.4	67.9
1	0030	16	0.	0.0	66.0	*	1	0350	116	40.	4.1	71.2	*	1	0710	216	7.	0.4	67.8
1	0032	17	0.	0.0	66.0	*	1	0352	117	40.	4.1	71.2	*	1	0712	217	7.	0.4	67.8
1	0034	18	0.	0.0	66.0	*	1	0354	118	40.	4.1	71.2	*	1	0714	218	6.	0.4	67.7
1	0036	19	0.	0.0	66.0	*	1	0356	119	39.	4.0	71.1	*	1	0716	219	6.	0.4	67.7
1	0038	20	0.	0.0	66.0	*	1	0358	120	39.	4.0	71.1	*	1	0718	220	6.	0.3	67.7
1	0040	21	0.	0.0	66.0	*	1	0400	121	39.	3.9	71.1	*	1	0720	221	6.	0.3	67.6
1	0042	22	0.	0.0	66.0	*	1	0402	122	38.	3.9	71.0	*	1	0722	222	6.	0.3	67.6
1	0044	23	0.	0.0	66.0	*	1	0404	123	38.	3.8	71.0	*	1	0724	223	5.	0.3	67.6
1	0046	24	0.	0.0	66.0	*	1	0406	124	37.	3.7	70.9	*	1	0726	224	5.	0.3	67.5
1	0048	25	0.	0.0	66.0	*	1	0408	125	37.	3.7	70.9	*	1	0728	225	5.	0.3	67.5
1	0050	26	0.	0.0	66.0	*	1	0410	126	37.	3.6	70.8	*	1	0730	226	5.	0.3	67.5
1	0052	27	0.	0.0	66.0	*	1	0412	127	36.	3.6	70.8	*	1	0732	227	5.	0.3	67.4
1	0054	28	0.	0.0	66.0	*	1	0414	128	36.	3.5	70.7	*	1	0734	228	4.	0.3	67.4
1	0056	29	0.	0.0	66.0	*	1	0416	129	35.	3.4	70.7	*	1	0736	229	4.	0.2	67.4
1	0058	30	0.	0.0	66.0	*	1	0418	130	35.	3.4	70.6	*	1	0738	230	4.	0.2	67.4
1	0100	31	0.	0.0	66.0	*	1	0420	131	34.	3.3	70.6	*	1	0740	231	4.	0.2	67.3
1	0102	32	0.	0.0	66.0	*	1	0422	132	34.	3.3	70.5	*	1	0742	232	4.	0.2	67.3
1	0104	33	0.	0.0	66.0	*	1	0424	133	33.	3.2	70.5	*	1	0744	233	4.	0.2	67.3
1	0106	34	0.	0.0	66.0	*	1	0426	134	33.	3.1	70.4	*	1	0746	234	4.	0.2	67.3
1	0108	35	0.	0.0	66.0	*	1	0428	135	32.	3.1	70.4	*	1	0748	235	3.	0.2	67.2
1	0110	36	0.	0.0	66.0	*	1	0430	136	32.	3.0	70.3	*	1	0750	236	3.	0.2	67.2
1	0112	37	0.	0.0	66.0	*	1	0432	137	32.	3.0	70.3	*	1	0752	237	3.	0.2	67.2
1	0114	38	0.	0.0	66.0	*	1	0434	138	31.	2.9	70.2	*	1	0754	238	3.	0.2	67.2
1	0116	39	0.	0.0	66.0	*	1	0436	139	31.	2.8	70.2	*	1	0756	239	3.	0.2	67.2
1	0118	40	0.	0.0	66.0	*	1	0438	140	30.	2.8	70.1	*	1	0758	240	3.	0.2	67.2
1	0120	41	0.	0.0	66.0	*	1	0440	141	30.	2.7	70.1	*	1	0800	241	3.	0.1	67.1
1	0122	42	0.	0.0	66.0	*	1	0442	142	29.	2.7	70.0	*	1	0802	242	3.	0.1	67.1
1	0124	43	0.	0.0	66.0	*	1	0444	143	29.	2.6	70.0	*	1	0804	243	3.	0.1	67.1
1	0126	44	0.	0.0	66.0	*	1	0446	144	28.	2.5	69.9	*	1	0806	244	3.	0.1	67.1
1	0128	45	0.	0.0	66.0	*	1	0448	145	28.	2.5	69.9	*	1	0808	245	2.	0.1	67.1
1	0130	46	0.	0.0	66.0	*	1	0450	146	27.	2.4	69.8	*	1	0810	246	2.	0.1	67.1
1	0132	47	0.	0.0	66.0	*	1	0452	147	26.	2.4	69.8	*	1	0812	247	2.	0.1	67.0
1	0134	48	0.	0.0	66.0	*	1	0454	148	26.	2.3	69.8	*	1	0814	248	2.	0.1	67.0
1	0136	49	0.	0.0	66.0	*	1	0456	149	25.	2.3	69.7	*	1	0816	249	2.	0.1	67.0
1	0138	50	0.	0.0	66.0	*	1	0458	150	25.	2.2	69.7	*	1	0818	250	2.	0.1	67.0
1	0140	51	0.	0.0	66.0	*	1	0500	151	24.	2.2	69.6	*	1	0820	251	2.	0.1	67.0
1	0142	52	0.	0.0	66.0	*	1	0502	152	23.	2.1	69.6	*	1	0822	252	2.	0.1	66.9
1	0144	53	0.	0.0	66.0	*	1	0504	153	23.	2.1	69.5	*	1	0824	253	2.	0.1	66.9
1	0146	54	0.	0.0	66.0	*	1	0506	154	22.	2.0	69.5	*	1	0826	254	2.	0.1	66.9
1	0148	55	0.	0.0	66.0	*	1	0508	155	22.	2.0	69.5	*	1	0828	255	2.	0.1	66.8
1	0150	56	0.	0.0	66.0	*	1	0510	156	21.	2.0	69.4	*	1	0830	256	2.	0.1	66.8
1	0152	57	0.	0.0	66.0	*	1	0512	157	21.	1.9	69.4	*	1	0832	257	2.	0.1	66.8
1	0154	58	0.	0.0	66.0	*	1	0514	158	20.	1.9	69.3	*	1	0834	258	1.	0.1	66.7
1	0156	59	0.	0.0	66.1	*	1	0516	159	20.	1.8	69.3	*	1	0836	259	1.	0.1	66.7

1	0158	60	0.	0.0	66.1	*	1	0518	160	20.	1.8	69.3	*	1	0838	260	1.	0.1	66.7
1	0200	61	0.	0.0	66.1	*	1	0520	161	19.	1.8	69.2	*	1	0840	261	1.	0.1	66.6
1	0202	62	0.	0.0	66.1	*	1	0522	162	19.	1.7	69.2	*	1	0842	262	1.	0.1	66.6
1	0204	63	0.	0.0	66.1	*	1	0524	163	18.	1.7	69.2	*	1	0844	263	1.	0.1	66.6
1	0206	64	0.	0.0	66.1	*	1	0526	164	18.	1.6	69.1	*	1	0846	264	1.	0.1	66.6
1	0208	65	0.	0.0	66.1	*	1	0528	165	17.	1.6	69.1	*	1	0848	265	1.	0.1	66.6
1	0210	66	0.	0.0	66.1	*	1	0530	166	17.	1.6	69.1	*	1	0850	266	1.	0.1	66.5
1	0212	67	0.	0.0	66.2	*	1	0532	167	17.	1.5	69.1	*	1	0852	267	1.	0.1	66.5
1	0214	68	0.	0.0	66.2	*	1	0534	168	16.	1.5	69.0	*	1	0854	268	1.	0.0	66.5
1	0216	69	0.	0.0	66.2	*	1	0536	169	16.	1.5	69.0	*	1	0856	269	1.	0.0	66.5
1	0218	70	0.	0.0	66.2	*	1	0538	170	16.	1.5	69.0	*	1	0858	270	1.	0.0	66.5
1	0220	71	1.	0.0	66.3	*	1	0540	171	15.	1.4	68.9	*	1	0900	271	1.	0.0	66.4
1	0222	72	1.	0.0	66.3	*	1	0542	172	15.	1.4	68.9	*	1	0902	272	1.	0.0	66.4
1	0224	73	1.	0.0	66.3	*	1	0544	173	15.	1.4	68.9	*	1	0904	273	1.	0.0	66.4
1	0226	74	1.	0.0	66.4	*	1	0546	174	15.	1.3	68.9	*	1	0906	274	1.	0.0	66.4
1	0228	75	1.	0.0	66.4	*	1	0548	175	15.	1.3	68.8	*	1	0908	275	1.	0.0	66.4
1	0230	76	1.	0.0	66.4	*	1	0550	176	14.	1.3	68.8	*	1	0910	276	1.	0.0	66.4
1	0232	77	1.	0.0	66.5	*	1	0552	177	14.	1.3	68.8	*	1	0912	277	1.	0.0	66.4
1	0234	78	1.	0.1	66.5	*	1	0554	178	14.	1.2	68.7	*	1	0914	278	1.	0.0	66.3
1	0236	79	1.	0.1	66.6	*	1	0556	179	14.	1.2	68.7	*	1	0916	279	1.	0.0	66.3
1	0238	80	1.	0.1	66.7	*	1	0558	180	14.	1.2	68.7	*	1	0918	280	1.	0.0	66.3
1	0240	81	1.	0.1	66.7	*	1	0600	181	13.	1.2	68.7	*	1	0920	281	1.	0.0	66.3
1	0242	82	2.	0.1	66.9	*	1	0602	182	13.	1.1	68.6	*	1	0922	282	1.	0.0	66.3
1	0244	83	2.	0.1	67.0	*	1	0604	183	13.	1.1	68.6	*	1	0924	283	1.	0.0	66.3
1	0246	84	2.	0.1	67.1	*	1	0606	184	13.	1.1	68.6	*	1	0926	284	1.	0.0	66.3
1	0248	85	3.	0.1	67.1	*	1	0608	185	13.	1.1	68.6	*	1	0928	285	1.	0.0	66.3
1	0250	86	3.	0.2	67.2	*	1	0610	186	12.	1.0	68.6	*	1	0930	286	1.	0.0	66.3
1	0252	87	4.	0.2	67.3	*	1	0612	187	12.	1.0	68.5	*	1	0932	287	0.	0.0	66.2
1	0254	88	5.	0.3	67.4	*	1	0614	188	12.	1.0	68.5	*	1	0934	288	0.	0.0	66.2
1	0256	89	6.	0.3	67.6	*	1	0616	189	12.	1.0	68.5	*	1	0936	289	0.	0.0	66.2
1	0258	90	7.	0.4	67.8	*	1	0618	190	12.	0.9	68.5	*	1	0938	290	0.	0.0	66.2
1	0300	91	8.	0.5	68.0	*	1	0620	191	11.	0.9	68.4	*	1	0940	291	0.	0.0	66.2
1	0302	92	10.	0.7	68.2	*	1	0622	192	11.	0.9	68.4	*	1	0942	292	0.	0.0	66.2
1	0304	93	12.	1.0	68.5	*	1	0624	193	11.	0.9	68.4	*	1	0944	293	0.	0.0	66.2
1	0306	94	15.	1.4	68.9	*	1	0626	194	11.	0.8	68.4	*	1	0946	294	0.	0.0	66.2
1	0308	95	20.	1.8	69.3	*	1	0628	195	11.	0.8	68.3	*	1	0948	295	0.	0.0	66.2
1	0310	96	24.	2.2	69.6	*	1	0630	196	11.	0.8	68.3	*	1	0950	296	0.	0.0	66.2
1	0312	97	28.	2.5	69.9	*	1	0632	197	10.	0.8	68.3	*	1	0952	297	0.	0.0	66.2
1	0314	98	30.	2.8	70.1	*	1	0634	198	10.	0.8	68.3	*	1	0954	298	0.	0.0	66.2
1	0316	99	32.	3.0	70.3	*	1	0636	199	10.	0.7	68.3	*	1	0956	299	0.	0.0	66.2
1	0318	100	33.	3.2	70.5	*	1	0638	200	10.	0.7	68.2	*	1	0958	300	0.	0.0	66.2
						*							*						

****

PEAK FLOW	TIME	MAXIMUM AVERAGE FLOW			
		6-HR	24-HR	72-HR	9.97-HR
+ (CFS)	(HR)				

```
                                (CFS)
+      41.       3.70                    17.         10.         10.         10.
                              (INCHES)  1.271       1.287       1.287       1.287
                               (AC-FT)    8.          9.          9.          9.

 PEAK STORAGE   TIME                              MAXIMUM AVERAGE STORAGE
                                          6-HR       24-HR       72-HR      9.97-HR
+  (AC-FT)      (HR)
        4.      3.70                      2.          1.          1.          1.

  PEAK STAGE    TIME                              MAXIMUM AVERAGE STAGE
                                          6-HR       24-HR       72-HR      9.97-HR
+   (FEET)      (HR)
     71.30      3.70                     68.82       67.76       67.76       67.76

                         CUMULATIVE AREA =    0.12 SQ MI


*** *** *** *** *** *** *** *** *** *** *** *** *** *** *** *** *** *** *** *** *** *** *** *** *** *** *** *** *** *** *** *** *** ***


            **************
            *            *
  327 KK    *     ALLEY  *      COMBINE
            *            *
            **************

  328 KO          OUTPUT CONTROL VARIABLES
                        IPRNT           2  PRINT CONTROL
                        IPLOT           0  PLOT CONTROL
                        QSCAL          0.  HYDROGRAPH PLOT SCALE
                             FLOW IN ALLEY AT CATALINA AND 64TH STREET

  330 HC          HYDROGRAPH COMBINATION
                        ICOMP           2  NUMBER OF HYDROGRAPHS TO COMBINE

                                                                  ***

*****************************************************************************************************************************************

                                                   HYDROGRAPH AT STATION    ALLEY
                                                        SUM OF  2 HYDROGRAPHS

*****************************************************************************************************************************************
                                  *                                   *                                   *
```

DA	MON	HRMN	ORD	FLOW	*	DA	MON	HRMN	ORD	FLOW	*	DA	MON	HRMN	ORD	FLOW	*	DA	MON	HRMN	ORD	FLOW
					*						*						*					
1		0000	1	0.	*	1		0230	76	0.	*	1		0500	151	1.	*	1		0730	226	0.
1		0002	2	0.	*	1		0232	77	0.	*	1		0502	152	1.	*	1		0732	227	0.
1		0004	3	0.	*	1		0234	78	0.	*	1		0504	153	1.	*	1		0734	228	0.
1		0006	4	0.	*	1		0236	79	0.	*	1		0506	154	1.	*	1		0736	229	0.
1		0008	5	0.	*	1		0238	80	0.	*	1		0508	155	1.	*	1		0738	230	0.
1		0010	6	0.	*	1		0240	81	0.	*	1		0510	156	1.	*	1		0740	231	0.
1		0012	7	0.	*	1		0242	82	0.	*	1		0512	157	1.	*	1		0742	232	0.
1		0014	8	0.	*	1		0244	83	0.	*	1		0514	158	1.	*	1		0744	233	0.
1		0016	9	0.	*	1		0246	84	0.	*	1		0516	159	1.	*	1		0746	234	0.
1		0018	10	0.	*	1		0248	85	0.	*	1		0518	160	1.	*	1		0748	235	0.
1		0020	11	0.	*	1		0250	86	0.	*	1		0520	161	1.	*	1		0750	236	0.
1		0022	12	0.	*	1		0252	87	0.	*	1		0522	162	1.	*	1		0752	237	0.
1		0024	13	0.	*	1		0254	88	0.	*	1		0524	163	1.	*	1		0754	238	0.
1		0026	14	0.	*	1		0256	89	0.	*	1		0526	164	1.	*	1		0756	239	0.
1		0028	15	0.	*	1		0258	90	0.	*	1		0528	165	1.	*	1		0758	240	0.
1		0030	16	0.	*	1		0300	91	0.	*	1		0530	166	1.	*	1		0800	241	0.
1		0032	17	0.	*	1		0302	92	0.	*	1		0532	167	1.	*	1		0802	242	0.
1		0034	18	0.	*	1		0304	93	0.	*	1		0534	168	1.	*	1		0804	243	0.
1		0036	19	0.	*	1		0306	94	0.	*	1		0536	169	1.	*	1		0806	244	0.
1		0038	20	0.	*	1		0308	95	12.	*	1		0538	170	1.	*	1		0808	245	0.
1		0040	21	0.	*	1		0310	96	54.	*	1		0540	171	1.	*	1		0810	246	0.
1		0042	22	0.	*	1		0312	97	63.	*	1		0542	172	1.	*	1		0812	247	0.
1		0044	23	0.	*	1		0314	98	58.	*	1		0544	173	1.	*	1		0814	248	0.
1		0046	24	0.	*	1		0316	99	47.	*	1		0546	174	1.	*	1		0816	249	0.
1		0048	25	0.	*	1		0318	100	36.	*	1		0548	175	1.	*	1		0818	250	0.
1		0050	26	0.	*	1		0320	101	26.	*	1		0550	176	1.	*	1		0820	251	0.
1		0052	27	0.	*	1		0322	102	20.	*	1		0552	177	1.	*	1		0822	252	0.
1		0054	28	0.	*	1		0324	103	17.	*	1		0554	178	1.	*	1		0824	253	0.
1		0056	29	0.	*	1		0326	104	16.	*	1		0556	179	1.	*	1		0826	254	0.
1		0058	30	0.	*	1		0328	105	14.	*	1		0558	180	1.	*	1		0828	255	0.
1		0100	31	0.	*	1		0330	106	13.	*	1		0600	181	1.	*	1		0830	256	0.
1		0102	32	0.	*	1		0332	107	12.	*	1		0602	182	1.	*	1		0832	257	0.
1		0104	33	0.	*	1		0334	108	11.	*	1		0604	183	1.	*	1		0834	258	0.
1		0106	34	0.	*	1		0336	109	10.	*	1		0606	184	1.	*	1		0836	259	0.
1		0108	35	0.	*	1		0338	110	10.	*	1		0608	185	1.	*	1		0838	260	0.
1		0110	36	0.	*	1		0340	111	9.	*	1		0610	186	1.	*	1		0840	261	0.
1		0112	37	0.	*	1		0342	112	8.	*	1		0612	187	1.	*	1		0842	262	0.
1		0114	38	0.	*	1		0344	113	7.	*	1		0614	188	1.	*	1		0844	263	0.
1		0116	39	0.	*	1		0346	114	7.	*	1		0616	189	1.	*	1		0846	264	0.
1		0118	40	0.	*	1		0348	115	6.	*	1		0618	190	1.	*	1		0848	265	0.
1		0120	41	0.	*	1		0350	116	6.	*	1		0620	191	1.	*	1		0850	266	0.
1		0122	42	0.	*	1		0352	117	5.	*	1		0622	192	1.	*	1		0852	267	0.
1		0124	43	0.	*	1		0354	118	5.	*	1		0624	193	1.	*	1		0854	268	0.
1		0126	44	0.	*	1		0356	119	5.	*	1		0626	194	1.	*	1		0856	269	0.
1		0128	45	0.	*	1		0358	120	4.	*	1		0628	195	1.	*	1		0858	270	0.

1	0130	46	0.	*	1	0400	121	4.	*	1	0630	196	1.	*	1	0900	271	0.
1	0132	47	0.	*	1	0402	122	4.	*	1	0632	197	1.	*	1	0902	272	0.
1	0134	48	0.	*	1	0404	123	3.	*	1	0634	198	1.	*	1	0904	273	0.
1	0136	49	0.	*	1	0406	124	3.	*	1	0636	199	0.	*	1	0906	274	0.
1	0138	50	0.	*	1	0408	125	3.	*	1	0638	200	0.	*	1	0908	275	0.
1	0140	51	0.	*	1	0410	126	3.	*	1	0640	201	0.	*	1	0910	276	0.
1	0142	52	0.	*	1	0412	127	3.	*	1	0642	202	0.	*	1	0912	277	0.
1	0144	53	0.	*	1	0414	128	3.	*	1	0644	203	0.	*	1	0914	278	0.
1	0146	54	0.	*	1	0416	129	2.	*	1	0646	204	0.	*	1	0916	279	0.
1	0148	55	0.	*	1	0418	130	2.	*	1	0648	205	0.	*	1	0918	280	0.
1	0150	56	0.	*	1	0420	131	2.	*	1	0650	206	0.	*	1	0920	281	0.
1	0152	57	0.	*	1	0422	132	2.	*	1	0652	207	0.	*	1	0922	282	0.
1	0154	58	0.	*	1	0424	133	2.	*	1	0654	208	0.	*	1	0924	283	0.
1	0156	59	0.	*	1	0426	134	2.	*	1	0656	209	0.	*	1	0926	284	0.
1	0158	60	0.	*	1	0428	135	2.	*	1	0658	210	0.	*	1	0928	285	0.
1	0200	61	0.	*	1	0430	136	2.	*	1	0700	211	0.	*	1	0930	286	0.
1	0202	62	0.	*	1	0432	137	2.	*	1	0702	212	0.	*	1	0932	287	0.
1	0204	63	0.	*	1	0434	138	2.	*	1	0704	213	0.	*	1	0934	288	0.
1	0206	64	0.	*	1	0436	139	2.	*	1	0706	214	0.	*	1	0936	289	0.
1	0208	65	0.	*	1	0438	140	2.	*	1	0708	215	0.	*	1	0938	290	0.
1	0210	66	0.	*	1	0440	141	2.	*	1	0710	216	0.	*	1	0940	291	0.
1	0212	67	0.	*	1	0442	142	2.	*	1	0712	217	0.	*	1	0942	292	0.
1	0214	68	0.	*	1	0444	143	2.	*	1	0714	218	0.	*	1	0944	293	0.
1	0216	69	0.	*	1	0446	144	1.	*	1	0716	219	0.	*	1	0946	294	0.
1	0218	70	0.	*	1	0448	145	1.	*	1	0718	220	0.	*	1	0948	295	0.
1	0220	71	0.	*	1	0450	146	1.	*	1	0720	221	0.	*	1	0950	296	0.
1	0222	72	0.	*	1	0452	147	1.	*	1	0722	222	0.	*	1	0952	297	0.
1	0224	73	0.	*	1	0454	148	1.	*	1	0724	223	0.	*	1	0954	298	0.
1	0226	74	0.	*	1	0456	149	1.	*	1	0726	224	0.	*	1	0956	299	0.
1	0228	75	0.	*	1	0458	150	1.	*	1	0728	225	0.	*	1	0958	300	0.
				*					*					*				

****

PEAK FLOW	TIME		MAXIMUM AVERAGE FLOW			
			6-HR	24-HR	72-HR	9.97-HR
+ (CFS)	(HR)					
		(CFS)				
+ 63.	3.20		3.	2.	2.	2.
		(INCHES)	0.208	0.208	0.208	0.208
		(AC-FT)	2.	2.	2.	2.

CUMULATIVE AREA = 0.15 SQ MI

*** ***

```
              **************
              *            *
333 KK        *    050050  *        FROM 050030
              *            *
              **************

335 KO            OUTPUT CONTROL VARIABLES
                        IPRNT           2  PRINT CONTROL
                        IPLOT           0  PLOT CONTROL
                        QSCAL          0.  HYDROGRAPH PLOT SCALE

                HYDROGRAPH ROUTING DATA

336 RK            KINEMATIC WAVE STREAM ROUTING
                           L        841.  CHANNEL LENGTH
                           S      0.0020  SLOPE
                           N       0.013  CHANNEL ROUGHNESS COEFFICIENT
                          CA        0.00  CONTRIBUTING AREA
                       SHAPE        CIRC  CHANNEL SHAPE
                          WD        5.50  BOTTOM WIDTH OR DIAMETER
                           Z        0.00  SIDE SLOPE
                      NDXMIN           2  MINIMUM NUMBER OF DX INTERVALS

                                                   ***
                                  COMPUTED KINEMATIC PARAMETERS
                                       VARIABLE TIME STEP
                                   (DT SHOWN IS A MINIMUM)

                 ELEMENT    ALPHA       M         DT        DX       PEAK    TIME TO     VOLUME    MAXIMUM
                                                                              PEAK                  CELERITY
                                                (MIN)      (FT)     (CFS)     (MIN)       (IN)      (FPS)

                MAIN          3.67      1.25       0.55    280.33     91.42    193.53      0.72       8.74

CONTINUITY SUMMARY (AC-FT) - INFLOW=0.1098E+02  EXCESS=0.0000E+00 OUTFLOW=0.1098E+02 BASIN STORAGE=0.2023E-02 PERCENT ERROR=   0.0

                                  INTERPOLATED TO SPECIFIED COMPUTATION INTERVAL

                MAIN          3.67      1.25       2.00              91.17    194.00      0.72
*****************************************************************************************************************************
```

HYDROGRAPH AT STATION 050050

DA	MON	HRMN	ORD	FLOW	DA	MON	HRMN	ORD	FLOW	DA	MON	HRMN	ORD	FLOW	DA	MON	HRMN	ORD	FLOW
1		0000	1	0.	1		0230	76	1.	1		0500	151	28.	1		0730	226	6.
1		0002	2	0.	1		0232	77	1.	1		0502	152	27.	1		0732	227	6.
1		0004	3	0.	1		0234	78	1.	1		0504	153	26.	1		0734	228	5.
1		0006	4	0.	1		0236	79	1.	1		0506	154	26.	1		0736	229	5.
1		0008	5	0.	1		0238	80	1.	1		0508	155	25.	1		0738	230	5.
1		0010	6	0.	1		0240	81	1.	1		0510	156	25.	1		0740	231	5.
1		0012	7	0.	1		0242	82	1.	1		0512	157	24.	1		0742	232	5.
1		0014	8	0.	1		0244	83	1.	1		0514	158	24.	1		0744	233	5.
1		0016	9	0.	1		0246	84	2.	1		0516	159	23.	1		0746	234	4.
1		0018	10	0.	1		0248	85	2.	1		0518	160	23.	1		0748	235	4.
1		0020	11	0.	1		0250	86	2.	1		0520	161	22.	1		0750	236	4.
1		0022	12	0.	1		0252	87	3.	1		0522	162	22.	1		0752	237	4.
1		0024	13	0.	1		0254	88	3.	1		0524	163	21.	1		0754	238	4.
1		0026	14	0.	1		0256	89	4.	1		0526	164	21.	1		0756	239	4.
1		0028	15	0.	1		0258	90	5.	1		0528	165	20.	1		0758	240	4.
1		0030	16	0.	1		0300	91	7.	1		0530	166	20.	1		0800	241	3.
1		0032	17	0.	1		0302	92	9.	1		0532	167	19.	1		0802	242	3.
1		0034	18	0.	1		0304	93	12.	1		0534	168	19.	1		0804	243	3.
1		0036	19	0.	1		0306	94	16.	1		0536	169	19.	1		0806	244	3.
1		0038	20	0.	1		0308	95	23.	1		0538	170	18.	1		0808	245	3.
1		0040	21	0.	1		0310	96	51.	1		0540	171	18.	1		0810	246	3.
1		0042	22	0.	1		0312	97	84.	1		0542	172	17.	1		0812	247	3.
1		0044	23	0.	1		0314	98	91.	1		0544	173	17.	1		0814	248	3.
1		0046	24	0.	1		0316	99	87.	1		0546	174	17.	1		0816	249	3.
1		0048	25	0.	1		0318	100	79.	1		0548	175	17.	1		0818	250	3.
1		0050	26	0.	1		0320	101	71.	1		0550	176	16.	1		0820	251	2.
1		0052	27	0.	1		0322	102	65.	1		0552	177	16.	1		0822	252	2.
1		0054	28	0.	1		0324	103	62.	1		0554	178	16.	1		0824	253	2.
1		0056	29	0.	1		0326	104	61.	1		0556	179	16.	1		0826	254	2.
1		0058	30	0.	1		0328	105	60.	1		0558	180	16.	1		0828	255	2.
1		0100	31	0.	1		0330	106	60.	1		0600	181	15.	1		0830	256	2.
1		0102	32	0.	1		0332	107	59.	1		0602	182	15.	1		0832	257	2.
1		0104	33	0.	1		0334	108	58.	1		0604	183	15.	1		0834	258	2.
1		0106	34	0.	1		0336	109	58.	1		0606	184	15.	1		0836	259	2.
1		0108	35	0.	1		0338	110	57.	1		0608	185	14.	1		0838	260	2.
1		0110	36	0.	1		0340	111	56.	1		0610	186	14.	1		0840	261	2.
1		0112	37	0.	1		0342	112	55.	1		0612	187	14.	1		0842	262	2.
1		0114	38	0.	1		0344	113	54.	1		0614	188	14.	1		0844	263	2.
1		0116	39	0.	1		0346	114	53.	1		0616	189	14.	1		0846	264	2.
1		0118	40	0.	1		0348	115	52.	1		0618	190	13.	1		0848	265	1.
1		0120	41	0.	1		0350	116	51.	1		0620	191	13.	1		0850	266	1.

1	0122	42	0.	*	1	0352	117	50.	*	1	0622	192	13.	*	1	0852	267	1.
1	0124	43	0.	*	1	0354	118	49.	*	1	0624	193	13.	*	1	0854	268	1.
1	0126	44	0.	*	1	0356	119	48.	*	1	0626	194	13.	*	1	0856	269	1.
1	0128	45	0.	*	1	0358	120	47.	*	1	0628	195	12.	*	1	0858	270	1.
1	0130	46	0.	*	1	0400	121	46.	*	1	0630	196	12.	*	1	0900	271	1.
1	0132	47	0.	*	1	0402	122	46.	*	1	0632	197	12.	*	1	0902	272	1.
1	0134	48	0.	*	1	0404	123	45.	*	1	0634	198	12.	*	1	0904	273	1.
1	0136	49	0.	*	1	0406	124	44.	*	1	0636	199	11.	*	1	0906	274	1.
1	0138	50	0.	*	1	0408	125	43.	*	1	0638	200	11.	*	1	0908	275	1.
1	0140	51	0.	*	1	0410	126	43.	*	1	0640	201	11.	*	1	0910	276	1.
1	0142	52	0.	*	1	0412	127	42.	*	1	0642	202	11.	*	1	0912	277	1.
1	0144	53	0.	*	1	0414	128	41.	*	1	0644	203	11.	*	1	0914	278	1.
1	0146	54	0.	*	1	0416	129	41.	*	1	0646	204	11.	*	1	0916	279	1.
1	0148	55	0.	*	1	0418	130	40.	*	1	0648	205	10.	*	1	0918	280	1.
1	0150	56	0.	*	1	0420	131	39.	*	1	0650	206	10.	*	1	0920	281	1.
1	0152	57	0.	*	1	0422	132	39.	*	1	0652	207	10.	*	1	0922	282	1.
1	0154	58	0.	*	1	0424	133	38.	*	1	0654	208	10.	*	1	0924	283	1.
1	0156	59	0.	*	1	0426	134	38.	*	1	0656	209	10.	*	1	0926	284	1.
1	0158	60	0.	*	1	0428	135	37.	*	1	0658	210	9.	*	1	0928	285	1.
1	0200	61	0.	*	1	0430	136	36.	*	1	0700	211	9.	*	1	0930	286	1.
1	0202	62	0.	*	1	0432	137	36.	*	1	0702	212	9.	*	1	0932	287	1.
1	0204	63	0.	*	1	0434	138	35.	*	1	0704	213	9.	*	1	0934	288	1.
1	0206	64	0.	*	1	0436	139	35.	*	1	0706	214	9.	*	1	0936	289	1.
1	0208	65	0.	*	1	0438	140	34.	*	1	0708	215	9.	*	1	0938	290	1.
1	0210	66	0.	*	1	0440	141	34.	*	1	0710	216	8.	*	1	0940	291	1.
1	0212	67	0.	*	1	0442	142	33.	*	1	0712	217	8.	*	1	0942	292	1.
1	0214	68	0.	*	1	0444	143	33.	*	1	0714	218	8.	*	1	0944	293	1.
1	0216	69	0.	*	1	0446	144	32.	*	1	0716	219	8.	*	1	0946	294	1.
1	0218	70	0.	*	1	0448	145	32.	*	1	0718	220	7.	*	1	0948	295	1.
1	0220	71	0.	*	1	0450	146	31.	*	1	0720	221	7.	*	1	0950	296	1.
1	0222	72	0.	*	1	0452	147	30.	*	1	0722	222	7.	*	1	0952	297	0.
1	0224	73	0.	*	1	0454	148	30.	*	1	0724	223	7.	*	1	0954	298	0.
1	0226	74	0.	*	1	0456	149	29.	*	1	0726	224	6.	*	1	0956	299	0.
1	0228	75	1.	*	1	0458	150	28.	*	1	0728	225	6.	*	1	0958	300	0.
				*					*					*				

****

PEAK FLOW	TIME		MAXIMUM AVERAGE FLOW			
			6-HR	24-HR	72-HR	9.97-HR
+ (CFS)	(HR)					
		(CFS)				
+ 91.	3.23		22.	13.	13.	13.
		(INCHES)	0.710	0.717	0.717	0.717
		(AC-FT)	11.	11.	11.	11.

CUMULATIVE AREA = 0.29 SQ MI

```
*** *** *** *** *** *** *** *** *** *** *** *** *** *** *** *** *** *** *** *** *** *** *** *** *** *** *** *** *** *** *** *** *** *** ***

          **************
          *            *
349 KK    *    050050  *         FROM  050040
          *            *
          **************

350 KO          OUTPUT CONTROL VARIABLES
                      IPRNT           2  PRINT CONTROL
                      IPLOT           0  PLOT CONTROL
                      QSCAL          0.  HYDROGRAPH PLOT SCALE

              HYDROGRAPH ROUTING DATA

351 RK          KINEMATIC WAVE STREAM ROUTING
                          L        491.  CHANNEL LENGTH
                          S      0.0334  SLOPE
                          N       0.013  CHANNEL ROUGHNESS COEFFICIENT
                         CA        0.00  CONTRIBUTING AREA
                      SHAPE        CIRC  CHANNEL SHAPE
                         WD        2.50  BOTTOM WIDTH OR DIAMETER
                          Z        0.00  SIDE SLOPE
                     NDXMIN           2  MINIMUM NUMBER OF DX INTERVALS

                                                  ***
                                  COMPUTED KINEMATIC PARAMETERS
                                       VARIABLE TIME STEP
                                    (DT SHOWN IS A MINIMUM)

                 ELEMENT    ALPHA       M         DT        DX       PEAK    TIME TO     VOLUME    MAXIMUM
                                                                              PEAK                  CELERITY
                                                (MIN)      (FT)     (CFS)     (MIN)       (IN)      (FPS)

                  MAIN        13.17      1.25       0.14    163.67     36.67    220.33      1.09     20.20

CONTINUITY SUMMARY (AC-FT) - INFLOW=0.5915E+01  EXCESS=0.0000E+00 OUTFLOW=0.5930E+01 BASIN STORAGE=-.2270E-01 PERCENT ERROR=   0.1

                                  INTERPOLATED TO SPECIFIED COMPUTATION INTERVAL
```

MAIN 13.17 1.25 2.00 36.67 220.00 1.09

****

HYDROGRAPH AT STATION 050050

****

DA	MON	HRMN	ORD	FLOW	*	DA	MON	HRMN	ORD	FLOW	*	DA	MON	HRMN	ORD	FLOW	*	DA	MON	HRMN	ORD	FLOW
1		0000	1	32.	*	1		0230	76	0.	*	1		0500	151	6.	*	1		0730	226	1.
1		0002	2	6.	*	1		0232	77	0.	*	1		0502	152	6.	*	1		0732	227	1.
1		0004	3	0.	*	1		0234	78	1.	*	1		0504	153	6.	*	1		0734	228	1.
1		0006	4	0.	*	1		0236	79	1.	*	1		0506	154	6.	*	1		0736	229	1.
1		0008	5	0.	*	1		0238	80	1.	*	1		0508	155	5.	*	1		0738	230	1.
1		0010	6	0.	*	1		0240	81	1.	*	1		0510	156	5.	*	1		0740	231	1.
1		0012	7	0.	*	1		0242	82	1.	*	1		0512	157	5.	*	1		0742	232	1.
1		0014	8	0.	*	1		0244	83	1.	*	1		0514	158	5.	*	1		0744	233	1.
1		0016	9	0.	*	1		0246	84	2.	*	1		0516	159	5.	*	1		0746	234	1.
1		0018	10	0.	*	1		0248	85	2.	*	1		0518	160	5.	*	1		0748	235	1.
1		0020	11	0.	*	1		0250	86	3.	*	1		0520	161	5.	*	1		0750	236	1.
1		0022	12	0.	*	1		0252	87	4.	*	1		0522	162	5.	*	1		0752	237	1.
1		0024	13	0.	*	1		0254	88	6.	*	1		0524	163	5.	*	1		0754	238	1.
1		0026	14	0.	*	1		0256	89	8.	*	1		0526	164	5.	*	1		0756	239	1.
1		0028	15	0.	*	1		0258	90	11.	*	1		0528	165	4.	*	1		0758	240	1.
1		0030	16	0.	*	1		0300	91	16.	*	1		0530	166	4.	*	1		0800	241	1.
1		0032	17	0.	*	1		0302	92	23.	*	1		0532	167	4.	*	1		0802	242	1.
1		0034	18	0.	*	1		0304	93	31.	*	1		0534	168	4.	*	1		0804	243	1.
1		0036	19	0.	*	1		0306	94	32.	*	1		0536	169	4.	*	1		0806	244	1.
1		0038	20	0.	*	1		0308	95	32.	*	1		0538	170	4.	*	1		0808	245	1.
1		0040	21	0.	*	1		0310	96	33.	*	1		0540	171	4.	*	1		0810	246	1.
1		0042	22	0.	*	1		0312	97	33.	*	1		0542	172	4.	*	1		0812	247	1.
1		0044	23	0.	*	1		0314	98	34.	*	1		0544	173	4.	*	1		0814	248	1.
1		0046	24	0.	*	1		0316	99	35.	*	1		0546	174	4.	*	1		0816	249	1.
1		0048	25	0.	*	1		0318	100	35.	*	1		0548	175	4.	*	1		0818	250	1.
1		0050	26	0.	*	1		0320	101	35.	*	1		0550	176	4.	*	1		0820	251	1.
1		0052	27	0.	*	1		0322	102	36.	*	1		0552	177	4.	*	1		0822	252	1.
1		0054	28	0.	*	1		0324	103	36.	*	1		0554	178	4.	*	1		0824	253	1.
1		0056	29	0.	*	1		0326	104	36.	*	1		0556	179	4.	*	1		0826	254	1.
1		0058	30	0.	*	1		0328	105	36.	*	1		0558	180	4.	*	1		0828	255	1.
1		0100	31	0.	*	1		0330	106	36.	*	1		0600	181	4.	*	1		0830	256	0.
1		0102	32	0.	*	1		0332	107	37.	*	1		0602	182	3.	*	1		0832	257	0.
1		0104	33	0.	*	1		0334	108	37.	*	1		0604	183	3.	*	1		0834	258	0.
1		0106	34	0.	*	1		0336	109	37.	*	1		0606	184	3.	*	1		0836	259	0.
1		0108	35	0.	*	1		0338	110	37.	*	1		0608	185	3.	*	1		0838	260	0.
1		0110	36	0.	*	1		0340	111	37.	*	1		0610	186	3.	*	1		0840	261	0.
1		0112	37	0.	*	1		0342	112	37.	*	1		0612	187	3.	*	1		0842	262	0.

1	0114	38	0.	*	1	0344	113	37.	*	1	0614	188	3.	*	1	0844	263	0.
1	0116	39	0.	*	1	0346	114	37.	*	1	0616	189	3.	*	1	0846	264	0.
1	0118	40	0.	*	1	0348	115	37.	*	1	0618	190	3.	*	1	0848	265	0.
1	0120	41	0.	*	1	0350	116	36.	*	1	0620	191	3.	*	1	0850	266	0.
1	0122	42	0.	*	1	0352	117	36.	*	1	0622	192	3.	*	1	0852	267	0.
1	0124	43	0.	*	1	0354	118	36.	*	1	0624	193	3.	*	1	0854	268	0.
1	0126	44	0.	*	1	0356	119	36.	*	1	0626	194	3.	*	1	0856	269	0.
1	0128	45	0.	*	1	0358	120	36.	*	1	0628	195	3.	*	1	0858	270	0.
1	0130	46	0.	*	1	0400	121	36.	*	1	0630	196	3.	*	1	0900	271	0.
1	0132	47	0.	*	1	0402	122	36.	*	1	0632	197	3.	*	1	0902	272	0.
1	0134	48	0.	*	1	0404	123	36.	*	1	0634	198	3.	*	1	0904	273	0.
1	0136	49	0.	*	1	0406	124	35.	*	1	0636	199	2.	*	1	0906	274	0.
1	0138	50	0.	*	1	0408	125	35.	*	1	0638	200	2.	*	1	0908	275	0.
1	0140	51	0.	*	1	0410	126	35.	*	1	0640	201	2.	*	1	0910	276	0.
1	0142	52	0.	*	1	0412	127	35.	*	1	0642	202	2.	*	1	0912	277	0.
1	0144	53	0.	*	1	0414	128	35.	*	1	0644	203	2.	*	1	0914	278	0.
1	0146	54	0.	*	1	0416	129	35.	*	1	0646	204	2.	*	1	0916	279	0.
1	0148	55	0.	*	1	0418	130	34.	*	1	0648	205	2.	*	1	0918	280	0.
1	0150	56	0.	*	1	0420	131	34.	*	1	0650	206	2.	*	1	0920	281	0.
1	0152	57	0.	*	1	0422	132	34.	*	1	0652	207	2.	*	1	0922	282	0.
1	0154	58	0.	*	1	0424	133	34.	*	1	0654	208	2.	*	1	0924	283	0.
1	0156	59	0.	*	1	0426	134	34.	*	1	0656	209	2.	*	1	0926	284	0.
1	0158	60	0.	*	1	0428	135	33.	*	1	0658	210	2.	*	1	0928	285	0.
1	0200	61	0.	*	1	0430	136	33.	*	1	0700	211	2.	*	1	0930	286	0.
1	0202	62	0.	*	1	0432	137	33.	*	1	0702	212	2.	*	1	0932	287	0.
1	0204	63	0.	*	1	0434	138	33.	*	1	0704	213	2.	*	1	0934	288	0.
1	0206	64	0.	*	1	0436	139	33.	*	1	0706	214	1.	*	1	0936	289	0.
1	0208	65	0.	*	1	0438	140	32.	*	1	0708	215	1.	*	1	0938	290	0.
1	0210	66	0.	*	1	0440	141	32.	*	1	0710	216	1.	*	1	0940	291	0.
1	0212	67	0.	*	1	0442	142	12.	*	1	0712	217	1.	*	1	0942	292	0.
1	0214	68	0.	*	1	0444	143	7.	*	1	0714	218	1.	*	1	0944	293	0.
1	0216	69	0.	*	1	0446	144	7.	*	1	0716	219	1.	*	1	0946	294	0.
1	0218	70	0.	*	1	0448	145	7.	*	1	0718	220	1.	*	1	0948	295	0.
1	0220	71	0.	*	1	0450	146	7.	*	1	0720	221	1.	*	1	0950	296	0.
1	0222	72	0.	*	1	0452	147	7.	*	1	0722	222	1.	*	1	0952	297	0.
1	0224	73	0.	*	1	0454	148	6.	*	1	0724	223	1.	*	1	0954	298	0.
1	0226	74	0.	*	1	0456	149	6.	*	1	0726	224	1.	*	1	0956	299	0.
1	0228	75	0.	*	1	0458	150	6.	*	1	0728	225	1.	*	1	0958	300	0.
				*					*					*				

****

PEAK FLOW	TIME	MAXIMUM AVERAGE FLOW			
		6-HR	24-HR	72-HR	9.97-HR
+ (CFS)	(HR)				
		(CFS)			
+ 37.	3.67	12.	7.	7.	7.
		(INCHES) 1.071	1.091	1.091	1.091

```
                    (AC-FT)        6.          6.          6.          6.

                    CUMULATIVE AREA =    0.10 SQ MI


*** *** *** *** *** *** *** *** *** *** *** *** *** *** *** *** *** *** *** *** *** *** *** *** *** *** *** *** *** *** *** *** *** *** ***


          **************
          *            *
 358 KK   *    SRPDet  *
          *            *
          **************

 359 KO          OUTPUT CONTROL VARIABLES
                      IPRNT           2  PRINT CONTROL
                      IPLOT           0  PLOT CONTROL
                      QSCAL          0.  HYDROGRAPH PLOT SCALE

              HYDROGRAPH ROUTING DATA

 360 RS          STORAGE ROUTING
                      NSTPS           1  NUMBER OF SUBREACHES
                       ITYP        STOR  TYPE OF INITIAL CONDITION
                     RSVRIC        0.00  INITIAL CONDITION
                          X        0.00 WORKING R AND D COEFFICIENT

 361 SA               AREA         0.2       0.2       0.2

 362 SE          ELEVATION       53.40     56.00     57.00

 363 SQ          DISCHARGE          0.        2.        4.        5.        8.       10.       20.       40.

 364 SE          ELEVATION       53.40     54.00     54.30     54.50     54.90     55.10     53.48     57.00
                                                                  ***

                                                   COMPUTED STORAGE-ELEVATION DATA

           STORAGE       0.00      0.46      0.67
         ELEVATION      53.40     56.00     57.00

                                                 COMPUTED STORAGE-OUTFLOW-ELEVATION DATA

           STORAGE       0.00      0.09      0.14      0.18      0.25      0.29      0.46      0.67
```

OUTFLOW	0.00	2.00	4.00	5.00	8.00	10.00	34.32	40.00
ELEVATION	53.40	54.00	54.30	54.50	54.90	55.10	56.00	57.00

****

HYDROGRAPH AT STATION SRPDet

****

DA	MON	HRMN	ORD	OUTFLOW	STORAGE	STAGE	DA	MON	HRMN	ORD	OUTFLOW	STORAGE	STAGE	DA	MON	HRMN	ORD	OUTFLOW	STORAGE	STAGE
1		0000	1	0.	0.0	53.4	1		0320	101	5.	0.2	54.4	1		0640	201	0.	0.0	53.5
1		0002	2	0.	0.0	53.4	1		0322	102	5.	0.2	54.4	1		0642	202	0.	0.0	53.5
1		0004	3	0.	0.0	53.4	1		0324	103	5.	0.2	54.4	1		0644	203	0.	0.0	53.5
1		0006	4	0.	0.0	53.4	1		0326	104	5.	0.2	54.4	1		0646	204	0.	0.0	53.5
1		0008	5	0.	0.0	53.4	1		0328	105	5.	0.2	54.4	1		0648	205	0.	0.0	53.5
1		0010	6	0.	0.0	53.4	1		0330	106	4.	0.2	54.4	1		0650	206	0.	0.0	53.5
1		0012	7	0.	0.0	53.4	1		0332	107	4.	0.2	54.4	1		0652	207	0.	0.0	53.5
1		0014	8	0.	0.0	53.4	1		0334	108	4.	0.2	54.3	1		0654	208	0.	0.0	53.5
1		0016	9	0.	0.0	53.4	1		0336	109	4.	0.1	54.3	1		0656	209	0.	0.0	53.5
1		0018	10	0.	0.0	53.4	1		0338	110	4.	0.1	54.3	1		0658	210	0.	0.0	53.5
1		0020	11	0.	0.0	53.4	1		0340	111	4.	0.1	54.3	1		0700	211	0.	0.0	53.4
1		0022	12	0.	0.0	53.4	1		0342	112	4.	0.1	54.2	1		0702	212	0.	0.0	53.4
1		0024	13	0.	0.0	53.4	1		0344	113	3.	0.1	54.2	1		0704	213	0.	0.0	53.4
1		0026	14	0.	0.0	53.4	1		0346	114	3.	0.1	54.2	1		0706	214	0.	0.0	53.4
1		0028	15	0.	0.0	53.4	1		0348	115	3.	0.1	54.2	1		0708	215	0.	0.0	53.4
1		0030	16	0.	0.0	53.4	1		0350	116	3.	0.1	54.1	1		0710	216	0.	0.0	53.4
1		0032	17	0.	0.0	53.4	1		0352	117	3.	0.1	54.1	1		0712	217	0.	0.0	53.4
1		0034	18	0.	0.0	53.4	1		0354	118	3.	0.1	54.1	1		0714	218	0.	0.0	53.4
1		0036	19	0.	0.0	53.4	1		0356	119	2.	0.1	54.1	1		0716	219	0.	0.0	53.4
1		0038	20	0.	0.0	53.4	1		0358	120	2.	0.1	54.0	1		0718	220	0.	0.0	53.4
1		0040	21	0.	0.0	53.4	1		0400	121	2.	0.1	54.0	1		0720	221	0.	0.0	53.4
1		0042	22	0.	0.0	53.4	1		0402	122	2.	0.1	54.0	1		0722	222	0.	0.0	53.4
1		0044	23	0.	0.0	53.4	1		0404	123	2.	0.1	54.0	1		0724	223	0.	0.0	53.4
1		0046	24	0.	0.0	53.4	1		0406	124	2.	0.1	54.0	1		0726	224	0.	0.0	53.4
1		0048	25	0.	0.0	53.4	1		0408	125	2.	0.1	54.0	1		0728	225	0.	0.0	53.4
1		0050	26	0.	0.0	53.4	1		0410	126	2.	0.1	53.9	1		0730	226	0.	0.0	53.4
1		0052	27	0.	0.0	53.4	1		0412	127	2.	0.1	53.9	1		0732	227	0.	0.0	53.4
1		0054	28	0.	0.0	53.4	1		0414	128	2.	0.1	53.9	1		0734	228	0.	0.0	53.4
1		0056	29	0.	0.0	53.4	1		0416	129	2.	0.1	53.9	1		0736	229	0.	0.0	53.4
1		0058	30	0.	0.0	53.4	1		0418	130	2.	0.1	53.9	1		0738	230	0.	0.0	53.4
1		0100	31	0.	0.0	53.4	1		0420	131	1.	0.1	53.8	1		0740	231	0.	0.0	53.4
1		0102	32	0.	0.0	53.4	1		0422	132	1.	0.1	53.8	1		0742	232	0.	0.0	53.4
1		0104	33	0.	0.0	53.4	1		0424	133	1.	0.1	53.8	1		0744	233	0.	0.0	53.4
1		0106	34	0.	0.0	53.4	1		0426	134	1.	0.1	53.8	1		0746	234	0.	0.0	53.4
1		0108	35	0.	0.0	53.4	1		0428	135	1.	0.1	53.8	1		0748	235	0.	0.0	53.4
1		0110	36	0.	0.0	53.4	1		0430	136	1.	0.1	53.8	1		0750	236	0.	0.0	53.4

1	0112	37	0.	0.0	53.4	*	1	0432	137	1.	0.1	53.8	*	1	0752	237	0.	0.0	53.4
1	0114	38	0.	0.0	53.4	*	1	0434	138	1.	0.1	53.8	*	1	0754	238	0.	0.0	53.4
1	0116	39	0.	0.0	53.4	*	1	0436	139	1.	0.1	53.7	*	1	0756	239	0.	0.0	53.4
1	0118	40	0.	0.0	53.4	*	1	0438	140	1.	0.1	53.7	*	1	0758	240	0.	0.0	53.4
1	0120	41	0.	0.0	53.4	*	1	0440	141	1.	0.0	53.7	*	1	0800	241	0.	0.0	53.4
1	0122	42	0.	0.0	53.4	*	1	0442	142	1.	0.0	53.7	*	1	0802	242	0.	0.0	53.4
1	0124	43	0.	0.0	53.4	*	1	0444	143	1.	0.0	53.7	*	1	0804	243	0.	0.0	53.4
1	0126	44	0.	0.0	53.4	*	1	0446	144	1.	0.0	53.7	*	1	0806	244	0.	0.0	53.4
1	0128	45	0.	0.0	53.4	*	1	0448	145	1.	0.0	53.7	*	1	0808	245	0.	0.0	53.4
1	0130	46	0.	0.0	53.4	*	1	0450	146	1.	0.0	53.7	*	1	0810	246	0.	0.0	53.4
1	0132	47	0.	0.0	53.4	*	1	0452	147	1.	0.0	53.7	*	1	0812	247	0.	0.0	53.4
1	0134	48	0.	0.0	53.4	*	1	0454	148	1.	0.0	53.7	*	1	0814	248	0.	0.0	53.4
1	0136	49	0.	0.0	53.4	*	1	0456	149	1.	0.0	53.6	*	1	0816	249	0.	0.0	53.4
1	0138	50	0.	0.0	53.4	*	1	0458	150	1.	0.0	53.6	*	1	0818	250	0.	0.0	53.4
1	0140	51	0.	0.0	53.4	*	1	0500	151	1.	0.0	53.6	*	1	0820	251	0.	0.0	53.4
1	0142	52	0.	0.0	53.4	*	1	0502	152	1.	0.0	53.6	*	1	0822	252	0.	0.0	53.4
1	0144	53	0.	0.0	53.4	*	1	0504	153	1.	0.0	53.6	*	1	0824	253	0.	0.0	53.4
1	0146	54	0.	0.0	53.4	*	1	0506	154	1.	0.0	53.6	*	1	0826	254	0.	0.0	53.4
1	0148	55	0.	0.0	53.4	*	1	0508	155	1.	0.0	53.6	*	1	0828	255	0.	0.0	53.4
1	0150	56	0.	0.0	53.4	*	1	0510	156	1.	0.0	53.6	*	1	0830	256	0.	0.0	53.4
1	0152	57	0.	0.0	53.4	*	1	0512	157	1.	0.0	53.6	*	1	0832	257	0.	0.0	53.4
1	0154	58	0.	0.0	53.4	*	1	0514	158	1.	0.0	53.6	*	1	0834	258	0.	0.0	53.4
1	0156	59	0.	0.0	53.4	*	1	0516	159	1.	0.0	53.6	*	1	0836	259	0.	0.0	53.4
1	0158	60	0.	0.0	53.4	*	1	0518	160	1.	0.0	53.6	*	1	0838	260	0.	0.0	53.4
1	0200	61	0.	0.0	53.4	*	1	0520	161	1.	0.0	53.6	*	1	0840	261	0.	0.0	53.4
1	0202	62	0.	0.0	53.4	*	1	0522	162	1.	0.0	53.6	*	1	0842	262	0.	0.0	53.4
1	0204	63	0.	0.0	53.4	*	1	0524	163	1.	0.0	53.6	*	1	0844	263	0.	0.0	53.4
1	0206	64	0.	0.0	53.4	*	1	0526	164	1.	0.0	53.6	*	1	0846	264	0.	0.0	53.4
1	0208	65	0.	0.0	53.4	*	1	0528	165	1.	0.0	53.6	*	1	0848	265	0.	0.0	53.4
1	0210	66	0.	0.0	53.4	*	1	0530	166	0.	0.0	53.5	*	1	0850	266	0.	0.0	53.4
1	0212	67	0.	0.0	53.4	*	1	0532	167	0.	0.0	53.5	*	1	0852	267	0.	0.0	53.4
1	0214	68	0.	0.0	53.4	*	1	0534	168	0.	0.0	53.5	*	1	0854	268	0.	0.0	53.4
1	0216	69	0.	0.0	53.4	*	1	0536	169	0.	0.0	53.5	*	1	0856	269	0.	0.0	53.4
1	0218	70	0.	0.0	53.4	*	1	0538	170	0.	0.0	53.5	*	1	0858	270	0.	0.0	53.4
1	0220	71	0.	0.0	53.4	*	1	0540	171	0.	0.0	53.5	*	1	0900	271	0.	0.0	53.4
1	0222	72	0.	0.0	53.4	*	1	0542	172	0.	0.0	53.5	*	1	0902	272	0.	0.0	53.4
1	0224	73	0.	0.0	53.4	*	1	0544	173	0.	0.0	53.5	*	1	0904	273	0.	0.0	53.4
1	0226	74	0.	0.0	53.4	*	1	0546	174	0.	0.0	53.5	*	1	0906	274	0.	0.0	53.4
1	0228	75	0.	0.0	53.4	*	1	0548	175	0.	0.0	53.5	*	1	0908	275	0.	0.0	53.4
1	0230	76	0.	0.0	53.4	*	1	0550	176	0.	0.0	53.5	*	1	0910	276	0.	0.0	53.4
1	0232	77	0.	0.0	53.4	*	1	0552	177	0.	0.0	53.5	*	1	0912	277	0.	0.0	53.4
1	0234	78	0.	0.0	53.4	*	1	0554	178	0.	0.0	53.5	*	1	0914	278	0.	0.0	53.4
1	0236	79	0.	0.0	53.4	*	1	0556	179	0.	0.0	53.5	*	1	0916	279	0.	0.0	53.4
1	0238	80	0.	0.0	53.4	*	1	0558	180	0.	0.0	53.5	*	1	0918	280	0.	0.0	53.4
1	0240	81	0.	0.0	53.4	*	1	0600	181	0.	0.0	53.5	*	1	0920	281	0.	0.0	53.4
1	0242	82	0.	0.0	53.4	*	1	0602	182	0.	0.0	53.5	*	1	0922	282	0.	0.0	53.4
1	0244	83	0.	0.0	53.4	*	1	0604	183	0.	0.0	53.5	*	1	0924	283	0.	0.0	53.4

1	0246	84	0.	0.0	53.4	*	1	0606	184	0.	0.0	53.5	*	1	0926	284	0.	0.0	53.4
1	0248	85	0.	0.0	53.4	*	1	0608	185	0.	0.0	53.5	*	1	0928	285	0.	0.0	53.4
1	0250	86	0.	0.0	53.4	*	1	0610	186	0.	0.0	53.5	*	1	0930	286	0.	0.0	53.4
1	0252	87	0.	0.0	53.5	*	1	0612	187	0.	0.0	53.5	*	1	0932	287	0.	0.0	53.4
1	0254	88	0.	0.0	53.5	*	1	0614	188	0.	0.0	53.5	*	1	0934	288	0.	0.0	53.4
1	0256	89	0.	0.0	53.5	*	1	0616	189	0.	0.0	53.5	*	1	0936	289	0.	0.0	53.4
1	0258	90	0.	0.0	53.5	*	1	0618	190	0.	0.0	53.5	*	1	0938	290	0.	0.0	53.4
1	0300	91	1.	0.0	53.6	*	1	0620	191	0.	0.0	53.5	*	1	0940	291	0.	0.0	53.4
1	0302	92	1.	0.0	53.6	*	1	0622	192	0.	0.0	53.5	*	1	0942	292	0.	0.0	53.4
1	0304	93	1.	0.0	53.7	*	1	0624	193	0.	0.0	53.5	*	1	0944	293	0.	0.0	53.4
1	0306	94	1.	0.1	53.8	*	1	0626	194	0.	0.0	53.5	*	1	0946	294	0.	0.0	53.4
1	0308	95	2.	0.1	54.0	*	1	0628	195	0.	0.0	53.5	*	1	0948	295	0.	0.0	53.4
1	0310	96	3.	0.1	54.1	*	1	0630	196	0.	0.0	53.5	*	1	0950	296	0.	0.0	53.4
1	0312	97	4.	0.1	54.2	*	1	0632	197	0.	0.0	53.5	*	1	0952	297	0.	0.0	53.4
1	0314	98	4.	0.1	54.3	*	1	0634	198	0.	0.0	53.5	*	1	0954	298	0.	0.0	53.4
1	0316	99	4.	0.2	54.4	*	1	0636	199	0.	0.0	53.5	*	1	0956	299	0.	0.0	53.4
1	0318	100	5.	0.2	54.4	*	1	0638	200	0.	0.0	53.5	*	1	0958	300	0.	0.0	53.4
						*							*						

```
****************************************************************************************************************************************

  PEAK FLOW      TIME                             MAXIMUM AVERAGE FLOW
                                         6-HR          24-HR         72-HR        9.97-HR
+    (CFS)        (HR)
                              (CFS)
+        5.       3.37                     1.             1.            1.             1.
                           (INCHES)      1.446          1.456         1.456          1.456
                            (AC-FT)        0.             0.            0.             0.

 PEAK STORAGE    TIME                            MAXIMUM AVERAGE STORAGE
                                         6-HR          24-HR         72-HR        9.97-HR
+  (AC-FT)        (HR)
         0.       3.37                     0.             0.            0.             0.

  PEAK STAGE     TIME                             MAXIMUM AVERAGE STAGE
                                         6-HR          24-HR         72-HR        9.97-HR
+    (FEET)       (HR)
      54.43       3.37                   53.64          53.55         53.55          53.55

                            CUMULATIVE AREA =     0.01 SQ MI


*** *** *** *** *** *** *** *** *** *** *** *** *** *** *** *** *** *** *** *** *** *** *** *** *** *** *** *** *** *** *** *** ***


             **************
```

```
                *            *
365 KK          *    S 64th  *        BASIN
                *            *
                **************

366 KO              OUTPUT CONTROL VARIABLES
                          IPRNT           2  PRINT CONTROL
                          IPLOT           0  PLOT CONTROL
                          QSCAL          0.  HYDROGRAPH PLOT SCALE

                  SUBBASIN RUNOFF DATA

367 BA              SUBBASIN CHARACTERISTICS
                          TAREA        0.01  SUBBASIN AREA

                    PRECIPITATION DATA

 58 PH                                  DEPTHS FOR   0-PERCENT HYPOTHETICAL STORM
                    ..... HYDRO-35 ......   ............... TP-40 ...............   ........... TP-49 ...........
                    5-MIN  15-MIN  60-MIN    2-HR    3-HR    6-HR   12-HR   24-HR   2-DAY   4-DAY   7-DAY  10-DAY
                     0.50    0.97    1.61    1.76    1.86    2.05    0.00    0.00    0.00    0.00    0.00    0.00

                                                     STORM AREA =    0.01

368 LS              SCS LOSS RATE
                          STRTL        0.53  INITIAL ABSTRACTION
                         CRVNBR       79.00  CURVE NUMBER
                          RTIMP        0.00  PERCENT IMPERVIOUS AREA

                      LOSS RATE VARIABLES FOR SECOND OVERLAND FLOW ELEMENT
                          STRTL        0.41  INITIAL ABSTRACTION
                         CRVNBR       83.00  CURVE NUMBER
                          RTIMP        0.00  PERCENT IMPERVIOUS AREA

                    KINEMATIC WAVE
369 UK                OVERLAND-FLOW ELEMENT NO. 1
                                L        100.  OVERLAND FLOW LENGTH
                                S      0.0040  SLOPE
                                N       0.100  ROUGHNESS COEFFICIENT
                               PA        53.0  PERCENT OF SUBBASIN
                          DXMIN           5  MINIMUM NUMBER OF DX INTERVALS
370 UK                OVERLAND-FLOW ELEMENT NO. 2
                                L        100.  OVERLAND FLOW LENGTH
                                S      0.0080  SLOPE
                                N       0.100  ROUGHNESS COEFFICIENT
                               PA        47.0  PERCENT OF SUBBASIN
                          DXMIN           5  MINIMUM NUMBER OF DX INTERVALS
```

371 RK KINEMATIC WAVE
MAIN CHANNEL

L	1430.	CHANNEL LENGTH
S	0.0040	SLOPE
N	0.015	CHANNEL ROUGHNESS COEFFICIENT
CA	0.01	CONTRIBUTING AREA
SHAPE	TRAP	CHANNEL SHAPE
WD	35.00	BOTTOM WIDTH OR DIAMETER
Z	1.00	SIDE SLOPE
NDXMIN	2	MINIMUM NUMBER OF DX INTERVALS
RUPSTQ	NO	ROUTE UPSTREAM HYDROGRAPH

***

COMPUTED KINEMATIC PARAMETERS
VARIABLE TIME STEP
(DT SHOWN IS A MINIMUM)

ELEMENT	ALPHA	M	DT (MIN)	DX (FT)	PEAK (CFS)	TIME TO PEAK (MIN)	VOLUME (IN)	MAXIMUM CELERITY (FPS)
PLANE1	0.94	1.67	1.96	16.67	3.63	194.04	0.55	0.15
PLANE2	1.33	1.67	1.55	20.00	5.76	188.48	0.72	0.23
MAIN	0.73	1.58	2.00	357.50	6.87	198.14	0.63	2.81

CONTINUITY SUMMARY (AC-FT) - INFLOW=0.0000E+00 EXCESS=0.3727E+00 OUTFLOW=0.3676E+00 BASIN STORAGE=0.1836E-02 PERCENT ERROR= 0.9

INTERPOLATED TO SPECIFIED COMPUTATION INTERVAL

MAIN	0.73	1.58	2.00	6.87	198.00	0.63

****

HYDROGRAPH AT STATION S 64th

****

DA	MON	HRMN	ORD	RAIN	LOSS	EXCESS	COMP Q	*	DA	MON	HRMN	ORD	RAIN	LOSS	EXCESS	COMP Q
								*								
1		0000	1	0.00	0.00	0.00	0.	*	1		0500	151	0.00	0.00	0.00	0.
1		0002	2	0.00	0.00	0.00	0.	*	1		0502	152	0.00	0.00	0.00	0.
1		0004	3	0.00	0.00	0.00	0.	*	1		0504	153	0.00	0.00	0.00	0.
1		0006	4	0.00	0.00	0.00	0.	*	1		0506	154	0.00	0.00	0.00	0.

1	0008	5	0.00	0.00	0.00	0.	*	1	0508	155	0.00	0.00	0.00	0.
1	0010	6	0.00	0.00	0.00	0.	*	1	0510	156	0.00	0.00	0.00	0.
1	0012	7	0.00	0.00	0.00	0.	*	1	0512	157	0.00	0.00	0.00	0.
1	0014	8	0.00	0.00	0.00	0.	*	1	0514	158	0.00	0.00	0.00	0.
1	0016	9	0.00	0.00	0.00	0.	*	1	0516	159	0.00	0.00	0.00	0.
1	0018	10	0.00	0.00	0.00	0.	*	1	0518	160	0.00	0.00	0.00	0.
1	0020	11	0.00	0.00	0.00	0.	*	1	0520	161	0.00	0.00	0.00	0.
1	0022	12	0.00	0.00	0.00	0.	*	1	0522	162	0.00	0.00	0.00	0.
1	0024	13	0.00	0.00	0.00	0.	*	1	0524	163	0.00	0.00	0.00	0.
1	0026	14	0.00	0.00	0.00	0.	*	1	0526	164	0.00	0.00	0.00	0.
1	0028	15	0.00	0.00	0.00	0.	*	1	0528	165	0.00	0.00	0.00	0.
1	0030	16	0.00	0.00	0.00	0.	*	1	0530	166	0.00	0.00	0.00	0.
1	0032	17	0.00	0.00	0.00	0.	*	1	0532	167	0.00	0.00	0.00	0.
1	0034	18	0.00	0.00	0.00	0.	*	1	0534	168	0.00	0.00	0.00	0.
1	0036	19	0.00	0.00	0.00	0.	*	1	0536	169	0.00	0.00	0.00	0.
1	0038	20	0.00	0.00	0.00	0.	*	1	0538	170	0.00	0.00	0.00	0.
1	0040	21	0.00	0.00	0.00	0.	*	1	0540	171	0.00	0.00	0.00	0.
1	0042	22	0.00	0.00	0.00	0.	*	1	0542	172	0.00	0.00	0.00	0.
1	0044	23	0.00	0.00	0.00	0.	*	1	0544	173	0.00	0.00	0.00	0.
1	0046	24	0.00	0.00	0.00	0.	*	1	0546	174	0.00	0.00	0.00	0.
1	0048	25	0.00	0.00	0.00	0.	*	1	0548	175	0.00	0.00	0.00	0.
1	0050	26	0.00	0.00	0.00	0.	*	1	0550	176	0.00	0.00	0.00	0.
1	0052	27	0.00	0.00	0.00	0.	*	1	0552	177	0.00	0.00	0.00	0.
1	0054	28	0.00	0.00	0.00	0.	*	1	0554	178	0.00	0.00	0.00	0.
1	0056	29	0.00	0.00	0.00	0.	*	1	0556	179	0.00	0.00	0.00	0.
1	0058	30	0.00	0.00	0.00	0.	*	1	0558	180	0.00	0.00	0.00	0.
1	0100	31	0.00	0.00	0.00	0.	*	1	0600	181	0.00	0.00	0.00	0.
1	0102	32	0.00	0.00	0.00	0.	*	1	0602	182	0.00	0.00	0.00	0.
1	0104	33	0.00	0.00	0.00	0.	*	1	0604	183	0.00	0.00	0.00	0.
1	0106	34	0.00	0.00	0.00	0.	*	1	0606	184	0.00	0.00	0.00	0.
1	0108	35	0.00	0.00	0.00	0.	*	1	0608	185	0.00	0.00	0.00	0.
1	0110	36	0.00	0.00	0.00	0.	*	1	0610	186	0.00	0.00	0.00	0.
1	0112	37	0.00	0.00	0.00	0.	*	1	0612	187	0.00	0.00	0.00	0.
1	0114	38	0.00	0.00	0.00	0.	*	1	0614	188	0.00	0.00	0.00	0.
1	0116	39	0.00	0.00	0.00	0.	*	1	0616	189	0.00	0.00	0.00	0.
1	0118	40	0.00	0.00	0.00	0.	*	1	0618	190	0.00	0.00	0.00	0.
1	0120	41	0.00	0.00	0.00	0.	*	1	0620	191	0.00	0.00	0.00	0.
1	0122	42	0.00	0.00	0.00	0.	*	1	0622	192	0.00	0.00	0.00	0.
1	0124	43	0.00	0.00	0.00	0.	*	1	0624	193	0.00	0.00	0.00	0.
1	0126	44	0.00	0.00	0.00	0.	*	1	0626	194	0.00	0.00	0.00	0.
1	0128	45	0.00	0.00	0.00	0.	*	1	0628	195	0.00	0.00	0.00	0.
1	0130	46	0.00	0.00	0.00	0.	*	1	0630	196	0.00	0.00	0.00	0.
1	0132	47	0.00	0.00	0.00	0.	*	1	0632	197	0.00	0.00	0.00	0.
1	0134	48	0.00	0.00	0.00	0.	*	1	0634	198	0.00	0.00	0.00	0.
1	0136	49	0.00	0.00	0.00	0.	*	1	0636	199	0.00	0.00	0.00	0.
1	0138	50	0.00	0.00	0.00	0.	*	1	0638	200	0.00	0.00	0.00	0.
1	0140	51	0.00	0.00	0.00	0.	*	1	0640	201	0.00	0.00	0.00	0.

1	0142	52	0.00	0.00	0.00	0.	*	1	0642	202	0.00	0.00	0.00	0.
1	0144	53	0.00	0.00	0.00	0.	*	1	0644	203	0.00	0.00	0.00	0.
1	0146	54	0.00	0.00	0.00	0.	*	1	0646	204	0.00	0.00	0.00	0.
1	0148	55	0.00	0.00	0.00	0.	*	1	0648	205	0.00	0.00	0.00	0.
1	0150	56	0.00	0.00	0.00	0.	*	1	0650	206	0.00	0.00	0.00	0.
1	0152	57	0.00	0.00	0.00	0.	*	1	0652	207	0.00	0.00	0.00	0.
1	0154	58	0.00	0.00	0.00	0.	*	1	0654	208	0.00	0.00	0.00	0.
1	0156	59	0.00	0.00	0.00	0.	*	1	0656	209	0.00	0.00	0.00	0.
1	0158	60	0.00	0.00	0.00	0.	*	1	0658	210	0.00	0.00	0.00	0.
1	0200	61	0.00	0.00	0.00	0.	*	1	0700	211	0.00	0.00	0.00	0.
1	0202	62	0.00	0.00	0.00	0.	*	1	0702	212	0.00	0.00	0.00	0.
1	0204	63	0.00	0.00	0.00	0.	*	1	0704	213	0.00	0.00	0.00	0.
1	0206	64	0.00	0.00	0.00	0.	*	1	0706	214	0.00	0.00	0.00	0.
1	0208	65	0.00	0.00	0.00	0.	*	1	0708	215	0.00	0.00	0.00	0.
1	0210	66	0.00	0.00	0.00	0.	*	1	0710	216	0.00	0.00	0.00	0.
1	0212	67	0.00	0.00	0.00	0.	*	1	0712	217	0.00	0.00	0.00	0.
1	0214	68	0.00	0.00	0.00	0.	*	1	0714	218	0.00	0.00	0.00	0.
1	0216	69	0.00	0.00	0.00	0.	*	1	0716	219	0.00	0.00	0.00	0.
1	0218	70	0.00	0.00	0.00	0.	*	1	0718	220	0.00	0.00	0.00	0.
1	0220	71	0.01	0.01	0.00	0.	*	1	0720	221	0.00	0.00	0.00	0.
1	0222	72	0.01	0.01	0.00	0.	*	1	0722	222	0.00	0.00	0.00	0.
1	0224	73	0.01	0.01	0.00	0.	*	1	0724	223	0.00	0.00	0.00	0.
1	0226	74	0.01	0.01	0.00	0.	*	1	0726	224	0.00	0.00	0.00	0.
1	0228	75	0.01	0.01	0.00	0.	*	1	0728	225	0.00	0.00	0.00	0.
1	0230	76	0.01	0.01	0.00	0.	*	1	0730	226	0.00	0.00	0.00	0.
1	0232	77	0.02	0.02	0.00	0.	*	1	0732	227	0.00	0.00	0.00	0.
1	0234	78	0.02	0.02	0.00	0.	*	1	0734	228	0.00	0.00	0.00	0.
1	0236	79	0.02	0.02	0.00	0.	*	1	0736	229	0.00	0.00	0.00	0.
1	0238	80	0.02	0.02	0.00	0.	*	1	0738	230	0.00	0.00	0.00	0.
1	0240	81	0.02	0.02	0.00	0.	*	1	0740	231	0.00	0.00	0.00	0.
1	0242	82	0.02	0.02	0.00	0.	*	1	0742	232	0.00	0.00	0.00	0.
1	0244	83	0.03	0.03	0.00	0.	*	1	0744	233	0.00	0.00	0.00	0.
1	0246	84	0.03	0.03	0.00	0.	*	1	0746	234	0.00	0.00	0.00	0.
1	0248	85	0.04	0.04	0.00	0.	*	1	0748	235	0.00	0.00	0.00	0.
1	0250	86	0.04	0.04	0.00	0.	*	1	0750	236	0.00	0.00	0.00	0.
1	0252	87	0.05	0.04	0.00	0.	*	1	0752	237	0.00	0.00	0.00	0.
1	0254	88	0.06	0.06	0.00	0.	*	1	0754	238	0.00	0.00	0.00	0.
1	0256	89	0.08	0.07	0.01	0.	*	1	0756	239	0.00	0.00	0.00	0.
1	0258	90	0.11	0.09	0.02	0.	*	1	0758	240	0.00	0.00	0.00	0.
1	0300	91	0.20	0.15	0.05	0.	*	1	0800	241	0.00	0.00	0.00	0.
1	0302	92	0.20	0.13	0.07	0.	*	1	0802	242	0.00	0.00	0.00	0.
1	0304	93	0.16	0.09	0.07	1.	*	1	0804	243	0.00	0.00	0.00	0.
1	0306	94	0.10	0.05	0.05	1.	*	1	0806	244	0.00	0.00	0.00	0.
1	0308	95	0.08	0.04	0.04	2.	*	1	0808	245	0.00	0.00	0.00	0.
1	0310	96	0.05	0.02	0.03	3.	*	1	0810	246	0.00	0.00	0.00	0.
1	0312	97	0.04	0.02	0.02	5.	*	1	0812	247	0.00	0.00	0.00	0.
1	0314	98	0.04	0.02	0.02	6.	*	1	0814	248	0.00	0.00	0.00	0.

1	0316	99	0.04	0.02	0.02	7.	*	1	0816	249	0.00	0.00	0.00	0.
1	0318	100	0.03	0.01	0.01	7.	*	1	0818	250	0.00	0.00	0.00	0.
1	0320	101	0.02	0.01	0.01	7.	*	1	0820	251	0.00	0.00	0.00	0.
1	0322	102	0.02	0.01	0.01	6.	*	1	0822	252	0.00	0.00	0.00	0.
1	0324	103	0.02	0.01	0.01	6.	*	1	0824	253	0.00	0.00	0.00	0.
1	0326	104	0.02	0.01	0.01	5.	*	1	0826	254	0.00	0.00	0.00	0.
1	0328	105	0.02	0.01	0.01	5.	*	1	0828	255	0.00	0.00	0.00	0.
1	0330	106	0.02	0.01	0.01	4.	*	1	0830	256	0.00	0.00	0.00	0.
1	0332	107	0.01	0.00	0.00	4.	*	1	0832	257	0.00	0.00	0.00	0.
1	0334	108	0.01	0.00	0.00	4.	*	1	0834	258	0.00	0.00	0.00	0.
1	0336	109	0.01	0.00	0.00	3.	*	1	0836	259	0.00	0.00	0.00	0.
1	0338	110	0.01	0.00	0.00	3.	*	1	0838	260	0.00	0.00	0.00	0.
1	0340	111	0.01	0.00	0.00	3.	*	1	0840	261	0.00	0.00	0.00	0.
1	0342	112	0.01	0.00	0.00	2.	*	1	0842	262	0.00	0.00	0.00	0.
1	0344	113	0.01	0.00	0.00	2.	*	1	0844	263	0.00	0.00	0.00	0.
1	0346	114	0.00	0.00	0.00	2.	*	1	0846	264	0.00	0.00	0.00	0.
1	0348	115	0.00	0.00	0.00	2.	*	1	0848	265	0.00	0.00	0.00	0.
1	0350	116	0.00	0.00	0.00	2.	*	1	0850	266	0.00	0.00	0.00	0.
1	0352	117	0.00	0.00	0.00	2.	*	1	0852	267	0.00	0.00	0.00	0.
1	0354	118	0.00	0.00	0.00	1.	*	1	0854	268	0.00	0.00	0.00	0.
1	0356	119	0.00	0.00	0.00	1.	*	1	0856	269	0.00	0.00	0.00	0.
1	0358	120	0.00	0.00	0.00	1.	*	1	0858	270	0.00	0.00	0.00	0.
1	0400	121	0.00	0.00	0.00	1.	*	1	0900	271	0.00	0.00	0.00	0.
1	0402	122	0.00	0.00	0.00	1.	*	1	0902	272	0.00	0.00	0.00	0.
1	0404	123	0.00	0.00	0.00	1.	*	1	0904	273	0.00	0.00	0.00	0.
1	0406	124	0.00	0.00	0.00	1.	*	1	0906	274	0.00	0.00	0.00	0.
1	0408	125	0.00	0.00	0.00	1.	*	1	0908	275	0.00	0.00	0.00	0.
1	0410	126	0.00	0.00	0.00	1.	*	1	0910	276	0.00	0.00	0.00	0.
1	0412	127	0.00	0.00	0.00	1.	*	1	0912	277	0.00	0.00	0.00	0.
1	0414	128	0.00	0.00	0.00	1.	*	1	0914	278	0.00	0.00	0.00	0.
1	0416	129	0.00	0.00	0.00	1.	*	1	0916	279	0.00	0.00	0.00	0.
1	0418	130	0.00	0.00	0.00	1.	*	1	0918	280	0.00	0.00	0.00	0.
1	0420	131	0.00	0.00	0.00	1.	*	1	0920	281	0.00	0.00	0.00	0.
1	0422	132	0.00	0.00	0.00	1.	*	1	0922	282	0.00	0.00	0.00	0.
1	0424	133	0.00	0.00	0.00	1.	*	1	0924	283	0.00	0.00	0.00	0.
1	0426	134	0.00	0.00	0.00	1.	*	1	0926	284	0.00	0.00	0.00	0.
1	0428	135	0.00	0.00	0.00	1.	*	1	0928	285	0.00	0.00	0.00	0.
1	0430	136	0.00	0.00	0.00	1.	*	1	0930	286	0.00	0.00	0.00	0.
1	0432	137	0.00	0.00	0.00	1.	*	1	0932	287	0.00	0.00	0.00	0.
1	0434	138	0.00	0.00	0.00	1.	*	1	0934	288	0.00	0.00	0.00	0.
1	0436	139	0.00	0.00	0.00	1.	*	1	0936	289	0.00	0.00	0.00	0.
1	0438	140	0.00	0.00	0.00	1.	*	1	0938	290	0.00	0.00	0.00	0.
1	0440	141	0.00	0.00	0.00	1.	*	1	0940	291	0.00	0.00	0.00	0.
1	0442	142	0.00	0.00	0.00	0.	*	1	0942	292	0.00	0.00	0.00	0.
1	0444	143	0.00	0.00	0.00	0.	*	1	0944	293	0.00	0.00	0.00	0.
1	0446	144	0.00	0.00	0.00	0.	*	1	0946	294	0.00	0.00	0.00	0.
1	0448	145	0.00	0.00	0.00	0.	*	1	0948	295	0.00	0.00	0.00	0.

```
        1     0450  146    0.00    0.00    0.00         0.       *        1     0950  296    0.00    0.00    0.00         0.
        1     0452  147    0.00    0.00    0.00         0.       *        1     0952  297    0.00    0.00    0.00         0.
        1     0454  148    0.00    0.00    0.00         0.       *        1     0954  298    0.00    0.00    0.00         0.
        1     0456  149    0.00    0.00    0.00         0.       *        1     0956  299    0.00    0.00    0.00         0.
        1     0458  150    0.00    0.00    0.00         0.       *        1     0958  300    0.00    0.00    0.00         0.
                                                                  *
 ************************************************************************************************************************

    TOTAL RAINFALL =    2.05, TOTAL LOSS =    1.41, TOTAL EXCESS =    0.64

  PEAK FLOW     TIME                          MAXIMUM AVERAGE FLOW
                                      6-HR       24-HR       72-HR      9.97-HR
+   (CFS)       (HR)
                            (CFS)
+       7.      3.30                   1.          0.          0.          0.
                          (INCHES)   0.625       0.627       0.627       0.627
                           (AC-FT)      0.          0.          0.          0.

                           CUMULATIVE AREA =    0.01 SQ MI


 *** *** *** *** *** *** *** *** *** *** *** *** *** *** *** *** *** *** *** *** *** *** *** *** *** *** *** *** *** *** *** *** *** ***


            **************
            *            *
  372 KK    *    050065  *        BASIN
            *            *
            **************

  373 KO          OUTPUT CONTROL VARIABLES
                        IPRNT          2  PRINT CONTROL
                        IPLOT          0  PLOT CONTROL
                        QSCAL         0.  HYDROGRAPH PLOT SCALE

                SUBBASIN RUNOFF DATA

  374 BA          SUBBASIN CHARACTERISTICS
                        TAREA       0.01  SUBBASIN AREA

                  PRECIPITATION DATA

   58 PH                                 DEPTHS FOR   0-PERCENT HYPOTHETICAL STORM
                  ..... HYDRO-35 .....   ............... TP-40 ...............   ........... TP-49 ...........
                  5-MIN  15-MIN  60-MIN    2-HR    3-HR    6-HR   12-HR   24-HR   2-DAY   4-DAY   7-DAY  10-DAY
```

```
                0.50    0.97    1.61    1.76    1.86    2.05    0.00    0.00    0.00    0.00    0.00    0.00

                                                STORM AREA =    0.01

375 LS          SCS LOSS RATE
                     STRTL        0.53  INITIAL ABSTRACTION
                    CRVNBR       79.00  CURVE NUMBER
                     RTIMP        0.00  PERCENT IMPERVIOUS AREA

                  LOSS RATE VARIABLES FOR SECOND OVERLAND FLOW ELEMENT
                     STRTL        0.04  INITIAL ABSTRACTION
                    CRVNBR       98.00  CURVE NUMBER
                     RTIMP        0.00  PERCENT IMPERVIOUS AREA

                KINEMATIC WAVE
376 UK            OVERLAND-FLOW ELEMENT NO. 1
                         L        100.  OVERLAND FLOW LENGTH
                         S      0.0100  SLOPE
                         N       0.300  ROUGHNESS COEFFICIENT
                        PA        15.0  PERCENT OF SUBBASIN
                     DXMIN           5  MINIMUM NUMBER OF DX INTERVALS
377 UK            OVERLAND-FLOW ELEMENT NO. 2
                         L        100.  OVERLAND FLOW LENGTH
                         S      0.0100  SLOPE
                         N       0.100  ROUGHNESS COEFFICIENT
                        PA        85.0  PERCENT OF SUBBASIN
                     DXMIN           5  MINIMUM NUMBER OF DX INTERVALS

                KINEMATIC WAVE
378 RK            MAIN CHANNEL
                         L        500.  CHANNEL LENGTH
                         S      0.0050  SLOPE
                         N       0.012  CHANNEL ROUGHNESS COEFFICIENT
                        CA        0.01  CONTRIBUTING AREA
                     SHAPE        TRAP  CHANNEL SHAPE
                        WD       60.00  BOTTOM WIDTH OR DIAMETER
                         Z        1.00  SIDE SLOPE
                    NDXMIN           2  MINIMUM NUMBER OF DX INTERVALS
                    RUPSTQ          NO  ROUTE UPSTREAM HYDROGRAPH

                                                    ***
                                  COMPUTED KINEMATIC PARAMETERS
                                        VARIABLE TIME STEP
                                     (DT SHOWN IS A MINIMUM)

                  ELEMENT    ALPHA       M         DT        DX       PEAK    TIME TO     VOLUME    MAXIMUM
                                                                                  PEAK               CELERITY
```

			(MIN)	(FT)	(CFS)	(MIN)	(IN)	(FPS)
PLANE1	0.50	1.67	1.88	9.09	0.95	204.23	0.55	0.09
PLANE2	1.49	1.67	0.99	20.00	39.29	183.80	1.82	0.38
MAIN	0.68	1.61	0.57	166.67	37.43	184.88	1.63	5.64

CONTINUITY SUMMARY (AC-FT) - INFLOW=0.0000E+00 EXCESS=0.1219E+01 OUTFLOW=0.1218E+01 BASIN STORAGE=0.1294E-02 PERCENT ERROR= 0.0

INTERPOLATED TO SPECIFIED COMPUTATION INTERVAL

MAIN	0.68	1.61	2.00		36.96	184.00	1.63

****

HYDROGRAPH AT STATION 050065

****

DA	MON	HRMN	ORD	RAIN	LOSS	EXCESS	COMP Q	*	DA	MON	HRMN	ORD	RAIN	LOSS	EXCESS	COMP Q
1		0000	1	0.00	0.00	0.00	0.	*	1		0500	151	0.00	0.00	0.00	1.
1		0002	2	0.00	0.00	0.00	0.	*	1		0502	152	0.00	0.00	0.00	1.
1		0004	3	0.00	0.00	0.00	0.	*	1		0504	153	0.00	0.00	0.00	1.
1		0006	4	0.00	0.00	0.00	0.	*	1		0506	154	0.00	0.00	0.00	1.
1		0008	5	0.00	0.00	0.00	0.	*	1		0508	155	0.00	0.00	0.00	1.
1		0010	6	0.00	0.00	0.00	0.	*	1		0510	156	0.00	0.00	0.00	1.
1		0012	7	0.00	0.00	0.00	0.	*	1		0512	157	0.00	0.00	0.00	1.
1		0014	8	0.00	0.00	0.00	0.	*	1		0514	158	0.00	0.00	0.00	1.
1		0016	9	0.00	0.00	0.00	0.	*	1		0516	159	0.00	0.00	0.00	1.
1		0018	10	0.00	0.00	0.00	0.	*	1		0518	160	0.00	0.00	0.00	1.
1		0020	11	0.00	0.00	0.00	0.	*	1		0520	161	0.00	0.00	0.00	1.
1		0022	12	0.00	0.00	0.00	0.	*	1		0522	162	0.00	0.00	0.00	1.
1		0024	13	0.00	0.00	0.00	0.	*	1		0524	163	0.00	0.00	0.00	1.
1		0026	14	0.00	0.00	0.00	0.	*	1		0526	164	0.00	0.00	0.00	1.
1		0028	15	0.00	0.00	0.00	0.	*	1		0528	165	0.00	0.00	0.00	1.
1		0030	16	0.00	0.00	0.00	0.	*	1		0530	166	0.00	0.00	0.00	1.
1		0032	17	0.00	0.00	0.00	0.	*	1		0532	167	0.00	0.00	0.00	1.
1		0034	18	0.00	0.00	0.00	0.	*	1		0534	168	0.00	0.00	0.00	1.
1		0036	19	0.00	0.00	0.00	0.	*	1		0536	169	0.00	0.00	0.00	1.
1		0038	20	0.00	0.00	0.00	0.	*	1		0538	170	0.00	0.00	0.00	1.
1		0040	21	0.00	0.00	0.00	0.	*	1		0540	171	0.00	0.00	0.00	1.
1		0042	22	0.00	0.00	0.00	0.	*	1		0542	172	0.00	0.00	0.00	1.
1		0044	23	0.00	0.00	0.00	0.	*	1		0544	173	0.00	0.00	0.00	1.
1		0046	24	0.00	0.00	0.00	0.	*	1		0546	174	0.00	0.00	0.00	1.

1	0048	25	0.00	0.00	0.00	0.	*	1	0548	175	0.00	0.00	0.00	0.
1	0050	26	0.00	0.00	0.00	0.	*	1	0550	176	0.00	0.00	0.00	0.
1	0052	27	0.00	0.00	0.00	0.	*	1	0552	177	0.00	0.00	0.00	0.
1	0054	28	0.00	0.00	0.00	0.	*	1	0554	178	0.00	0.00	0.00	0.
1	0056	29	0.00	0.00	0.00	0.	*	1	0556	179	0.00	0.00	0.00	0.
1	0058	30	0.00	0.00	0.00	0.	*	1	0558	180	0.00	0.00	0.00	0.
1	0100	31	0.00	0.00	0.00	0.	*	1	0600	181	0.00	0.00	0.00	0.
1	0102	32	0.00	0.00	0.00	0.	*	1	0602	182	0.00	0.00	0.00	0.
1	0104	33	0.00	0.00	0.00	0.	*	1	0604	183	0.00	0.00	0.00	0.
1	0106	34	0.00	0.00	0.00	0.	*	1	0606	184	0.00	0.00	0.00	0.
1	0108	35	0.00	0.00	0.00	0.	*	1	0608	185	0.00	0.00	0.00	0.
1	0110	36	0.00	0.00	0.00	0.	*	1	0610	186	0.00	0.00	0.00	0.
1	0112	37	0.00	0.00	0.00	0.	*	1	0612	187	0.00	0.00	0.00	0.
1	0114	38	0.00	0.00	0.00	0.	*	1	0614	188	0.00	0.00	0.00	0.
1	0116	39	0.00	0.00	0.00	0.	*	1	0616	189	0.00	0.00	0.00	0.
1	0118	40	0.00	0.00	0.00	0.	*	1	0618	190	0.00	0.00	0.00	0.
1	0120	41	0.00	0.00	0.00	0.	*	1	0620	191	0.00	0.00	0.00	0.
1	0122	42	0.00	0.00	0.00	0.	*	1	0622	192	0.00	0.00	0.00	0.
1	0124	43	0.00	0.00	0.00	0.	*	1	0624	193	0.00	0.00	0.00	0.
1	0126	44	0.00	0.00	0.00	0.	*	1	0626	194	0.00	0.00	0.00	0.
1	0128	45	0.00	0.00	0.00	0.	*	1	0628	195	0.00	0.00	0.00	0.
1	0130	46	0.00	0.00	0.00	0.	*	1	0630	196	0.00	0.00	0.00	0.
1	0132	47	0.00	0.00	0.00	0.	*	1	0632	197	0.00	0.00	0.00	0.
1	0134	48	0.00	0.00	0.00	0.	*	1	0634	198	0.00	0.00	0.00	0.
1	0136	49	0.00	0.00	0.00	0.	*	1	0636	199	0.00	0.00	0.00	0.
1	0138	50	0.00	0.00	0.00	0.	*	1	0638	200	0.00	0.00	0.00	0.
1	0140	51	0.00	0.00	0.00	0.	*	1	0640	201	0.00	0.00	0.00	0.
1	0142	52	0.00	0.00	0.00	0.	*	1	0642	202	0.00	0.00	0.00	0.
1	0144	53	0.00	0.00	0.00	0.	*	1	0644	203	0.00	0.00	0.00	0.
1	0146	54	0.00	0.00	0.00	0.	*	1	0646	204	0.00	0.00	0.00	0.
1	0148	55	0.00	0.00	0.00	0.	*	1	0648	205	0.00	0.00	0.00	0.
1	0150	56	0.00	0.00	0.00	0.	*	1	0650	206	0.00	0.00	0.00	0.
1	0152	57	0.00	0.00	0.00	0.	*	1	0652	207	0.00	0.00	0.00	0.
1	0154	58	0.00	0.00	0.00	0.	*	1	0654	208	0.00	0.00	0.00	0.
1	0156	59	0.00	0.00	0.00	0.	*	1	0656	209	0.00	0.00	0.00	0.
1	0158	60	0.00	0.00	0.00	0.	*	1	0658	210	0.00	0.00	0.00	0.
1	0200	61	0.00	0.00	0.00	0.	*	1	0700	211	0.00	0.00	0.00	0.
1	0202	62	0.00	0.00	0.00	0.	*	1	0702	212	0.00	0.00	0.00	0.
1	0204	63	0.00	0.00	0.00	0.	*	1	0704	213	0.00	0.00	0.00	0.
1	0206	64	0.00	0.00	0.00	0.	*	1	0706	214	0.00	0.00	0.00	0.
1	0208	65	0.00	0.00	0.00	0.	*	1	0708	215	0.00	0.00	0.00	0.
1	0210	66	0.00	0.00	0.00	0.	*	1	0710	216	0.00	0.00	0.00	0.
1	0212	67	0.00	0.00	0.00	0.	*	1	0712	217	0.00	0.00	0.00	0.
1	0214	68	0.00	0.00	0.00	0.	*	1	0714	218	0.00	0.00	0.00	0.
1	0216	69	0.00	0.00	0.00	0.	*	1	0716	219	0.00	0.00	0.00	0.
1	0218	70	0.00	0.00	0.00	0.	*	1	0718	220	0.00	0.00	0.00	0.
1	0220	71	0.01	0.00	0.00	0.	*	1	0720	221	0.00	0.00	0.00	0.

1	0222	72	0.01	0.00	0.00	1.	*	1	0722	222	0.00	0.00	0.00	0.
1	0224	73	0.01	0.00	0.00	1.	*	1	0724	223	0.00	0.00	0.00	0.
1	0226	74	0.01	0.00	0.00	1.	*	1	0726	224	0.00	0.00	0.00	0.
1	0228	75	0.01	0.00	0.00	1.	*	1	0728	225	0.00	0.00	0.00	0.
1	0230	76	0.01	0.00	0.00	1.	*	1	0730	226	0.00	0.00	0.00	0.
1	0232	77	0.02	0.01	0.01	1.	*	1	0732	227	0.00	0.00	0.00	0.
1	0234	78	0.02	0.01	0.01	1.	*	1	0734	228	0.00	0.00	0.00	0.
1	0236	79	0.02	0.01	0.01	1.	*	1	0736	229	0.00	0.00	0.00	0.
1	0238	80	0.02	0.01	0.01	1.	*	1	0738	230	0.00	0.00	0.00	0.
1	0240	81	0.02	0.01	0.02	2.	*	1	0740	231	0.00	0.00	0.00	0.
1	0242	82	0.02	0.01	0.02	2.	*	1	0742	232	0.00	0.00	0.00	0.
1	0244	83	0.03	0.01	0.02	3.	*	1	0744	233	0.00	0.00	0.00	0.
1	0246	84	0.03	0.01	0.02	3.	*	1	0746	234	0.00	0.00	0.00	0.
1	0248	85	0.04	0.01	0.03	4.	*	1	0748	235	0.00	0.00	0.00	0.
1	0250	86	0.04	0.01	0.03	5.	*	1	0750	236	0.00	0.00	0.00	0.
1	0252	87	0.05	0.01	0.03	6.	*	1	0752	237	0.00	0.00	0.00	0.
1	0254	88	0.06	0.01	0.05	7.	*	1	0754	238	0.00	0.00	0.00	0.
1	0256	89	0.08	0.02	0.07	9.	*	1	0756	239	0.00	0.00	0.00	0.
1	0258	90	0.11	0.02	0.09	13.	*	1	0758	240	0.00	0.00	0.00	0.
1	0300	91	0.20	0.03	0.17	20.	*	1	0800	241	0.00	0.00	0.00	0.
1	0302	92	0.20	0.03	0.17	30.	*	1	0802	242	0.00	0.00	0.00	0.
1	0304	93	0.16	0.02	0.14	37.	*	1	0804	243	0.00	0.00	0.00	0.
1	0306	94	0.10	0.01	0.09	35.	*	1	0806	244	0.00	0.00	0.00	0.
1	0308	95	0.08	0.01	0.07	30.	*	1	0808	245	0.00	0.00	0.00	0.
1	0310	96	0.05	0.00	0.04	24.	*	1	0810	246	0.00	0.00	0.00	0.
1	0312	97	0.04	0.00	0.04	19.	*	1	0812	247	0.00	0.00	0.00	0.
1	0314	98	0.04	0.00	0.04	15.	*	1	0814	248	0.00	0.00	0.00	0.
1	0316	99	0.04	0.00	0.03	13.	*	1	0816	249	0.00	0.00	0.00	0.
1	0318	100	0.03	0.00	0.02	11.	*	1	0818	250	0.00	0.00	0.00	0.
1	0320	101	0.02	0.00	0.02	10.	*	1	0820	251	0.00	0.00	0.00	0.
1	0322	102	0.02	0.00	0.02	9.	*	1	0822	252	0.00	0.00	0.00	0.
1	0324	103	0.02	0.00	0.02	8.	*	1	0824	253	0.00	0.00	0.00	0.
1	0326	104	0.02	0.00	0.02	7.	*	1	0826	254	0.00	0.00	0.00	0.
1	0328	105	0.02	0.00	0.02	7.	*	1	0828	255	0.00	0.00	0.00	0.
1	0330	106	0.02	0.00	0.02	6.	*	1	0830	256	0.00	0.00	0.00	0.
1	0332	107	0.01	0.00	0.01	6.	*	1	0832	257	0.00	0.00	0.00	0.
1	0334	108	0.01	0.00	0.01	5.	*	1	0834	258	0.00	0.00	0.00	0.
1	0336	109	0.01	0.00	0.01	4.	*	1	0836	259	0.00	0.00	0.00	0.
1	0338	110	0.01	0.00	0.01	4.	*	1	0838	260	0.00	0.00	0.00	0.
1	0340	111	0.01	0.00	0.01	3.	*	1	0840	261	0.00	0.00	0.00	0.
1	0342	112	0.01	0.00	0.00	3.	*	1	0842	262	0.00	0.00	0.00	0.
1	0344	113	0.01	0.00	0.00	3.	*	1	0844	263	0.00	0.00	0.00	0.
1	0346	114	0.00	0.00	0.00	2.	*	1	0846	264	0.00	0.00	0.00	0.
1	0348	115	0.00	0.00	0.00	2.	*	1	0848	265	0.00	0.00	0.00	0.
1	0350	116	0.00	0.00	0.00	2.	*	1	0850	266	0.00	0.00	0.00	0.
1	0352	117	0.00	0.00	0.00	2.	*	1	0852	267	0.00	0.00	0.00	0.
1	0354	118	0.00	0.00	0.00	2.	*	1	0854	268	0.00	0.00	0.00	0.

1	0356	119	0.00	0.00	0.00	2.	*	1	0856	269	0.00	0.00	0.00	0.
1	0358	120	0.00	0.00	0.00	2.	*	1	0858	270	0.00	0.00	0.00	0.
1	0400	121	0.00	0.00	0.00	1.	*	1	0900	271	0.00	0.00	0.00	0.
1	0402	122	0.00	0.00	0.00	1.	*	1	0902	272	0.00	0.00	0.00	0.
1	0404	123	0.00	0.00	0.00	1.	*	1	0904	273	0.00	0.00	0.00	0.
1	0406	124	0.00	0.00	0.00	1.	*	1	0906	274	0.00	0.00	0.00	0.
1	0408	125	0.00	0.00	0.00	1.	*	1	0908	275	0.00	0.00	0.00	0.
1	0410	126	0.00	0.00	0.00	1.	*	1	0910	276	0.00	0.00	0.00	0.
1	0412	127	0.00	0.00	0.00	1.	*	1	0912	277	0.00	0.00	0.00	0.
1	0414	128	0.00	0.00	0.00	1.	*	1	0914	278	0.00	0.00	0.00	0.
1	0416	129	0.00	0.00	0.00	1.	*	1	0916	279	0.00	0.00	0.00	0.
1	0418	130	0.00	0.00	0.00	1.	*	1	0918	280	0.00	0.00	0.00	0.
1	0420	131	0.00	0.00	0.00	1.	*	1	0920	281	0.00	0.00	0.00	0.
1	0422	132	0.00	0.00	0.00	1.	*	1	0922	282	0.00	0.00	0.00	0.
1	0424	133	0.00	0.00	0.00	1.	*	1	0924	283	0.00	0.00	0.00	0.
1	0426	134	0.00	0.00	0.00	1.	*	1	0926	284	0.00	0.00	0.00	0.
1	0428	135	0.00	0.00	0.00	1.	*	1	0928	285	0.00	0.00	0.00	0.
1	0430	136	0.00	0.00	0.00	1.	*	1	0930	286	0.00	0.00	0.00	0.
1	0432	137	0.00	0.00	0.00	1.	*	1	0932	287	0.00	0.00	0.00	0.
1	0434	138	0.00	0.00	0.00	1.	*	1	0934	288	0.00	0.00	0.00	0.
1	0436	139	0.00	0.00	0.00	1.	*	1	0936	289	0.00	0.00	0.00	0.
1	0438	140	0.00	0.00	0.00	1.	*	1	0938	290	0.00	0.00	0.00	0.
1	0440	141	0.00	0.00	0.00	1.	*	1	0940	291	0.00	0.00	0.00	0.
1	0442	142	0.00	0.00	0.00	1.	*	1	0942	292	0.00	0.00	0.00	0.
1	0444	143	0.00	0.00	0.00	1.	*	1	0944	293	0.00	0.00	0.00	0.
1	0446	144	0.00	0.00	0.00	1.	*	1	0946	294	0.00	0.00	0.00	0.
1	0448	145	0.00	0.00	0.00	1.	*	1	0948	295	0.00	0.00	0.00	0.
1	0450	146	0.00	0.00	0.00	1.	*	1	0950	296	0.00	0.00	0.00	0.
1	0452	147	0.00	0.00	0.00	1.	*	1	0952	297	0.00	0.00	0.00	0.
1	0454	148	0.00	0.00	0.00	1.	*	1	0954	298	0.00	0.00	0.00	0.
1	0456	149	0.00	0.00	0.00	1.	*	1	0956	299	0.00	0.00	0.00	0.
1	0458	150	0.00	0.00	0.00	1.	*	1	0958	300	0.00	0.00	0.00	0.
							*							

****

TOTAL RAINFALL = 2.05, TOTAL LOSS = 0.42, TOTAL EXCESS = 1.63

PEAK FLOW	TIME		MAXIMUM AVERAGE FLOW			
			6-HR	24-HR	72-HR	9.97-HR
+ (CFS)	(HR)					
		(CFS)				
+ 37.	3.07		2.	1.	1.	1.
		(INCHES)	1.626	1.631	1.631	1.631
		(AC-FT)	1.	1.	1.	1.

CUMULATIVE AREA = 0.01 SQ MI

```
*** *** *** *** *** *** *** *** *** *** *** *** *** *** *** *** *** *** *** *** *** *** *** *** *** *** *** *** *** *** *** *** *** *** ***

            **************
            *            *
385 KK      *    050050  *        FROM 050062
            *            *
            **************

386 KO          OUTPUT CONTROL VARIABLES
                      IPRNT           2  PRINT CONTROL
                      IPLOT           0  PLOT CONTROL
                      QSCAL          0.  HYDROGRAPH PLOT SCALE

               HYDROGRAPH ROUTING DATA

387 RK          KINEMATIC WAVE STREAM ROUTING
                          L       1000.  CHANNEL LENGTH
                          S      0.0020  SLOPE
                          N       0.013  CHANNEL ROUGHNESS COEFFICIENT
                         CA        0.00  CONTRIBUTING AREA
                      SHAPE        CIRC  CHANNEL SHAPE
                         WD        2.50  BOTTOM WIDTH OR DIAMETER
                          Z        1.00  SIDE SLOPE
                     NDXMIN           2  MINIMUM NUMBER OF DX INTERVALS

                                                  ***
                                  COMPUTED KINEMATIC PARAMETERS
                                       VARIABLE TIME STEP
                                    (DT SHOWN IS A MINIMUM)

                 ELEMENT    ALPHA       M         DT        DX       PEAK    TIME TO     VOLUME    MAXIMUM
                                                                              PEAK                  CELERITY
                                                (MIN)      (FT)     (CFS)     (MIN)       (IN)      (FPS)

                  MAIN        3.22      1.25       1.07    333.33     15.56    187.40      1.64       5.53

CONTINUITY SUMMARY (AC-FT) - INFLOW=0.5227E+00  EXCESS=0.0000E+00 OUTFLOW=0.5236E+00 BASIN STORAGE=0.4824E-04 PERCENT ERROR=  -0.2

                                  INTERPOLATED TO SPECIFIED COMPUTATION INTERVAL
```

MAIN 3.22 1.25 2.00 15.38 188.00 1.64

****

HYDROGRAPH AT STATION 050050

****

DA	MON	HRMN	ORD	FLOW	*	DA	MON	HRMN	ORD	FLOW	*	DA	MON	HRMN	ORD	FLOW	*	DA	MON	HRMN	ORD	FLOW
1		0000	1	0.	*	1		0230	76	0.	*	1		0500	151	0.	*	1		0730	226	0.
1		0002	2	0.	*	1		0232	77	0.	*	1		0502	152	0.	*	1		0732	227	0.
1		0004	3	0.	*	1		0234	78	0.	*	1		0504	153	0.	*	1		0734	228	0.
1		0006	4	0.	*	1		0236	79	0.	*	1		0506	154	0.	*	1		0736	229	0.
1		0008	5	0.	*	1		0238	80	0.	*	1		0508	155	0.	*	1		0738	230	0.
1		0010	6	0.	*	1		0240	81	0.	*	1		0510	156	0.	*	1		0740	231	0.
1		0012	7	0.	*	1		0242	82	1.	*	1		0512	157	0.	*	1		0742	232	0.
1		0014	8	0.	*	1		0244	83	1.	*	1		0514	158	0.	*	1		0744	233	0.
1		0016	9	0.	*	1		0246	84	1.	*	1		0516	159	0.	*	1		0746	234	0.
1		0018	10	0.	*	1		0248	85	1.	*	1		0518	160	0.	*	1		0748	235	0.
1		0020	11	0.	*	1		0250	86	1.	*	1		0520	161	0.	*	1		0750	236	0.
1		0022	12	0.	*	1		0252	87	2.	*	1		0522	162	0.	*	1		0752	237	0.
1		0024	13	0.	*	1		0254	88	2.	*	1		0524	163	0.	*	1		0754	238	0.
1		0026	14	0.	*	1		0256	89	2.	*	1		0526	164	0.	*	1		0756	239	0.
1		0028	15	0.	*	1		0258	90	3.	*	1		0528	165	0.	*	1		0758	240	0.
1		0030	16	0.	*	1		0300	91	4.	*	1		0530	166	0.	*	1		0800	241	0.
1		0032	17	0.	*	1		0302	92	7.	*	1		0532	167	0.	*	1		0802	242	0.
1		0034	18	0.	*	1		0304	93	11.	*	1		0534	168	0.	*	1		0804	243	0.
1		0036	19	0.	*	1		0306	94	15.	*	1		0536	169	0.	*	1		0806	244	0.
1		0038	20	0.	*	1		0308	95	15.	*	1		0538	170	0.	*	1		0808	245	0.
1		0040	21	0.	*	1		0310	96	14.	*	1		0540	171	0.	*	1		0810	246	0.
1		0042	22	0.	*	1		0312	97	11.	*	1		0542	172	0.	*	1		0812	247	0.
1		0044	23	0.	*	1		0314	98	9.	*	1		0544	173	0.	*	1		0814	248	0.
1		0046	24	0.	*	1		0316	99	7.	*	1		0546	174	0.	*	1		0816	249	0.
1		0048	25	0.	*	1		0318	100	6.	*	1		0548	175	0.	*	1		0818	250	0.
1		0050	26	0.	*	1		0320	101	5.	*	1		0550	176	0.	*	1		0820	251	0.
1		0052	27	0.	*	1		0322	102	5.	*	1		0552	177	0.	*	1		0822	252	0.
1		0054	28	0.	*	1		0324	103	4.	*	1		0554	178	0.	*	1		0824	253	0.
1		0056	29	0.	*	1		0326	104	4.	*	1		0556	179	0.	*	1		0826	254	0.
1		0058	30	0.	*	1		0328	105	3.	*	1		0558	180	0.	*	1		0828	255	0.
1		0100	31	0.	*	1		0330	106	3.	*	1		0600	181	0.	*	1		0830	256	0.
1		0102	32	0.	*	1		0332	107	3.	*	1		0602	182	0.	*	1		0832	257	0.
1		0104	33	0.	*	1		0334	108	3.	*	1		0604	183	0.	*	1		0834	258	0.
1		0106	34	0.	*	1		0336	109	2.	*	1		0606	184	0.	*	1		0836	259	0.
1		0108	35	0.	*	1		0338	110	2.	*	1		0608	185	0.	*	1		0838	260	0.
1		0110	36	0.	*	1		0340	111	2.	*	1		0610	186	0.	*	1		0840	261	0.
1		0112	37	0.	*	1		0342	112	2.	*	1		0612	187	0.	*	1		0842	262	0.

1	0114	38	0.	*	1	0344	113	2.	*	1	0614	188	0.	*	1	0844	263	0.
1	0116	39	0.	*	1	0346	114	1.	*	1	0616	189	0.	*	1	0846	264	0.
1	0118	40	0.	*	1	0348	115	1.	*	1	0618	190	0.	*	1	0848	265	0.
1	0120	41	0.	*	1	0350	116	1.	*	1	0620	191	0.	*	1	0850	266	0.
1	0122	42	0.	*	1	0352	117	1.	*	1	0622	192	0.	*	1	0852	267	0.
1	0124	43	0.	*	1	0354	118	1.	*	1	0624	193	0.	*	1	0854	268	0.
1	0126	44	0.	*	1	0356	119	1.	*	1	0626	194	0.	*	1	0856	269	0.
1	0128	45	0.	*	1	0358	120	1.	*	1	0628	195	0.	*	1	0858	270	0.
1	0130	46	0.	*	1	0400	121	1.	*	1	0630	196	0.	*	1	0900	271	0.
1	0132	47	0.	*	1	0402	122	1.	*	1	0632	197	0.	*	1	0902	272	0.
1	0134	48	0.	*	1	0404	123	1.	*	1	0634	198	0.	*	1	0904	273	0.
1	0136	49	0.	*	1	0406	124	1.	*	1	0636	199	0.	*	1	0906	274	0.
1	0138	50	0.	*	1	0408	125	1.	*	1	0638	200	0.	*	1	0908	275	0.
1	0140	51	0.	*	1	0410	126	1.	*	1	0640	201	0.	*	1	0910	276	0.
1	0142	52	0.	*	1	0412	127	1.	*	1	0642	202	0.	*	1	0912	277	0.
1	0144	53	0.	*	1	0414	128	1.	*	1	0644	203	0.	*	1	0914	278	0.
1	0146	54	0.	*	1	0416	129	1.	*	1	0646	204	0.	*	1	0916	279	0.
1	0148	55	0.	*	1	0418	130	0.	*	1	0648	205	0.	*	1	0918	280	0.
1	0150	56	0.	*	1	0420	131	0.	*	1	0650	206	0.	*	1	0920	281	0.
1	0152	57	0.	*	1	0422	132	0.	*	1	0652	207	0.	*	1	0922	282	0.
1	0154	58	0.	*	1	0424	133	0.	*	1	0654	208	0.	*	1	0924	283	0.
1	0156	59	0.	*	1	0426	134	0.	*	1	0656	209	0.	*	1	0926	284	0.
1	0158	60	0.	*	1	0428	135	0.	*	1	0658	210	0.	*	1	0928	285	0.
1	0200	61	0.	*	1	0430	136	0.	*	1	0700	211	0.	*	1	0930	286	0.
1	0202	62	0.	*	1	0432	137	0.	*	1	0702	212	0.	*	1	0932	287	0.
1	0204	63	0.	*	1	0434	138	0.	*	1	0704	213	0.	*	1	0934	288	0.
1	0206	64	0.	*	1	0436	139	0.	*	1	0706	214	0.	*	1	0936	289	0.
1	0208	65	0.	*	1	0438	140	0.	*	1	0708	215	0.	*	1	0938	290	0.
1	0210	66	0.	*	1	0440	141	0.	*	1	0710	216	0.	*	1	0940	291	0.
1	0212	67	0.	*	1	0442	142	0.	*	1	0712	217	0.	*	1	0942	292	0.
1	0214	68	0.	*	1	0444	143	0.	*	1	0714	218	0.	*	1	0944	293	0.
1	0216	69	0.	*	1	0446	144	0.	*	1	0716	219	0.	*	1	0946	294	0.
1	0218	70	0.	*	1	0448	145	0.	*	1	0718	220	0.	*	1	0948	295	0.
1	0220	71	0.	*	1	0450	146	0.	*	1	0720	221	0.	*	1	0950	296	0.
1	0222	72	0.	*	1	0452	147	0.	*	1	0722	222	0.	*	1	0952	297	0.
1	0224	73	0.	*	1	0454	148	0.	*	1	0724	223	0.	*	1	0954	298	0.
1	0226	74	0.	*	1	0456	149	0.	*	1	0726	224	0.	*	1	0956	299	0.
1	0228	75	0.	*	1	0458	150	0.	*	1	0728	225	0.	*	1	0958	300	0.
				*					*					*				

****

PEAK FLOW	TIME	MAXIMUM AVERAGE FLOW			
		6-HR	24-HR	72-HR	9.97-HR
+ (CFS)	(HR)				
		(CFS)			
+ 15.	3.13	1.	1.	1.	1.
		(INCHES) 1.631	1.636	1.636	1.636

```
                    (AC-FT)        1.          1.          1.          1.

                    CUMULATIVE AREA =    0.01 SQ MI


*** *** *** *** *** *** *** *** *** *** *** *** *** *** *** *** *** *** *** *** *** *** *** *** *** *** *** *** *** *** *** *** *** *** ***


          **************
          *            *
 388 KK   *    050050  *      COMBINE
          *            *
          **************

 389 KO          OUTPUT CONTROL VARIABLES
                      IPRNT           2  PRINT CONTROL
                      IPLOT           0  PLOT CONTROL
                      QSCAL          0.  HYDROGRAPH PLOT SCALE
                          Peak flow in main pipe above Paiute Park

 391 HC          HYDROGRAPH COMBINATION
                      ICOMP           6  NUMBER OF HYDROGRAPHS TO COMBINE

                                                  ***
*****************************************************************************************************************************
```

HYDROGRAPH AT STATION 050050
SUM OF 6 HYDROGRAPHS

DA	MON	HRMN	ORD	FLOW	DA	MON	HRMN	ORD	FLOW	DA	MON	HRMN	ORD	FLOW	DA	MON	HRMN	ORD	FLOW
1		0000	1	32.	1		0230	76	2.	1		0500	151	36.	1		0730	226	7.
1		0002	2	6.	1		0232	77	2.	1		0502	152	35.	1		0732	227	7.
1		0004	3	0.	1		0234	78	2.	1		0504	153	34.	1		0734	228	7.
1		0006	4	0.	1		0236	79	3.	1		0506	154	33.	1		0736	229	6.
1		0008	5	0.	1		0238	80	4.	1		0508	155	33.	1		0738	230	6.
1		0010	6	0.	1		0240	81	4.	1		0510	156	32.	1		0740	231	6.
1		0012	7	0.	1		0242	82	5.	1		0512	157	31.	1		0742	232	6.
1		0014	8	0.	1		0244	83	6.	1		0514	158	31.	1		0744	233	6.
1		0016	9	0.	1		0246	84	8.	1		0516	159	30.	1		0746	234	5.
1		0018	10	0.	1		0248	85	9.	1		0518	160	29.	1		0748	235	5.
1		0020	11	0.	1		0250	86	12.	1		0520	161	29.	1		0750	236	5.

1	0022	12	0.	*	1	0252	87	15.	*	1	0522	162	28.	*	1	0752	237	5.
1	0024	13	0.	*	1	0254	88	18.	*	1	0524	163	28.	*	1	0754	238	5.
1	0026	14	0.	*	1	0256	89	24.	*	1	0526	164	27.	*	1	0756	239	5.
1	0028	15	0.	*	1	0258	90	32.	*	1	0528	165	26.	*	1	0758	240	4.
1	0030	16	0.	*	1	0300	91	47.	*	1	0530	166	26.	*	1	0800	241	4.
1	0032	17	0.	*	1	0302	92	71.	*	1	0532	167	25.	*	1	0802	242	4.
1	0034	18	0.	*	1	0304	93	93.	*	1	0534	168	25.	*	1	0804	243	4.
1	0036	19	0.	*	1	0306	94	101.	*	1	0536	169	24.	*	1	0806	244	4.
1	0038	20	0.	*	1	0308	95	105.	*	1	0538	170	24.	*	1	0808	245	4.
1	0040	21	0.	*	1	0310	96	127.	*	1	0540	171	23.	*	1	0810	246	4.
1	0042	22	0.	*	1	0312	97	155.	*	1	0542	172	23.	*	1	0812	247	4.
1	0044	23	0.	*	1	0314	98	159.	*	1	0544	173	23.	*	1	0814	248	3.
1	0046	24	0.	*	1	0316	99	153.	*	1	0546	174	22.	*	1	0816	249	3.
1	0048	25	0.	*	1	0318	100	143.	*	1	0548	175	22.	*	1	0818	250	3.
1	0050	26	0.	*	1	0320	101	133.	*	1	0550	176	22.	*	1	0820	251	3.
1	0052	27	0.	*	1	0322	102	125.	*	1	0552	177	21.	*	1	0822	252	3.
1	0054	28	0.	*	1	0324	103	120.	*	1	0554	178	21.	*	1	0824	253	3.
1	0056	29	0.	*	1	0326	104	117.	*	1	0556	179	21.	*	1	0826	254	3.
1	0058	30	0.	*	1	0328	105	116.	*	1	0558	180	20.	*	1	0828	255	3.
1	0100	31	0.	*	1	0330	106	114.	*	1	0600	181	20.	*	1	0830	256	3.
1	0102	32	0.	*	1	0332	107	112.	*	1	0602	182	20.	*	1	0832	257	3.
1	0104	33	0.	*	1	0334	108	110.	*	1	0604	183	20.	*	1	0834	258	2.
1	0106	34	0.	*	1	0336	109	108.	*	1	0606	184	19.	*	1	0836	259	2.
1	0108	35	0.	*	1	0338	110	106.	*	1	0608	185	19.	*	1	0838	260	2.
1	0110	36	0.	*	1	0340	111	104.	*	1	0610	186	19.	*	1	0840	261	2.
1	0112	37	0.	*	1	0342	112	102.	*	1	0612	187	18.	*	1	0842	262	2.
1	0114	38	0.	*	1	0344	113	100.	*	1	0614	188	18.	*	1	0844	263	2.
1	0116	39	0.	*	1	0346	114	99.	*	1	0616	189	18.	*	1	0846	264	2.
1	0118	40	0.	*	1	0348	115	97.	*	1	0618	190	17.	*	1	0848	265	2.
1	0120	41	0.	*	1	0350	116	95.	*	1	0620	191	17.	*	1	0850	266	2.
1	0122	42	0.	*	1	0352	117	93.	*	1	0622	192	17.	*	1	0852	267	2.
1	0124	43	0.	*	1	0354	118	92.	*	1	0624	193	16.	*	1	0854	268	2.
1	0126	44	0.	*	1	0356	119	91.	*	1	0626	194	16.	*	1	0856	269	2.
1	0128	45	0.	*	1	0358	120	89.	*	1	0628	195	16.	*	1	0858	270	2.
1	0130	46	0.	*	1	0400	121	88.	*	1	0630	196	16.	*	1	0900	271	2.
1	0132	47	0.	*	1	0402	122	87.	*	1	0632	197	15.	*	1	0902	272	2.
1	0134	48	0.	*	1	0404	123	85.	*	1	0634	198	15.	*	1	0904	273	1.
1	0136	49	0.	*	1	0406	124	84.	*	1	0636	199	15.	*	1	0906	274	1.
1	0138	50	0.	*	1	0408	125	83.	*	1	0638	200	14.	*	1	0908	275	1.
1	0140	51	0.	*	1	0410	126	82.	*	1	0640	201	14.	*	1	0910	276	1.
1	0142	52	0.	*	1	0412	127	81.	*	1	0642	202	14.	*	1	0912	277	1.
1	0144	53	0.	*	1	0414	128	80.	*	1	0644	203	13.	*	1	0914	278	1.
1	0146	54	0.	*	1	0416	129	79.	*	1	0646	204	13.	*	1	0916	279	1.
1	0148	55	0.	*	1	0418	130	78.	*	1	0648	205	13.	*	1	0918	280	1.
1	0150	56	0.	*	1	0420	131	77.	*	1	0650	206	13.	*	1	0920	281	1.
1	0152	57	0.	*	1	0422	132	76.	*	1	0652	207	12.	*	1	0922	282	1.
1	0154	58	0.	*	1	0424	133	75.	*	1	0654	208	12.	*	1	0924	283	1.

1	0156	59	0.	*	1	0426	134	75.	*	1	0656	209	12.	*	1	0926	284	1.
1	0158	60	0.	*	1	0428	135	74.	*	1	0658	210	12.	*	1	0928	285	1.
1	0200	61	0.	*	1	0430	136	73.	*	1	0700	211	11.	*	1	0930	286	1.
1	0202	62	0.	*	1	0432	137	72.	*	1	0702	212	11.	*	1	0932	287	1.
1	0204	63	0.	*	1	0434	138	71.	*	1	0704	213	11.	*	1	0934	288	1.
1	0206	64	0.	*	1	0436	139	70.	*	1	0706	214	11.	*	1	0936	289	1.
1	0208	65	1.	*	1	0438	140	69.	*	1	0708	215	10.	*	1	0938	290	1.
1	0210	66	1.	*	1	0440	141	69.	*	1	0710	216	10.	*	1	0940	291	1.
1	0212	67	1.	*	1	0442	142	48.	*	1	0712	217	10.	*	1	0942	292	1.
1	0214	68	1.	*	1	0444	143	43.	*	1	0714	218	9.	*	1	0944	293	1.
1	0216	69	1.	*	1	0446	144	42.	*	1	0716	219	9.	*	1	0946	294	1.
1	0218	70	1.	*	1	0448	145	41.	*	1	0718	220	9.	*	1	0948	295	1.
1	0220	71	1.	*	1	0450	146	40.	*	1	0720	221	8.	*	1	0950	296	1.
1	0222	72	1.	*	1	0452	147	39.	*	1	0722	222	8.	*	1	0952	297	1.
1	0224	73	1.	*	1	0454	148	38.	*	1	0724	223	8.	*	1	0954	298	1.
1	0226	74	2.	*	1	0456	149	38.	*	1	0726	224	8.	*	1	0956	299	1.
1	0228	75	2.	*	1	0458	150	37.	*	1	0728	225	7.	*	1	0958	300	1.
				*					*					*				

****

PEAK FLOW	TIME		MAXIMUM AVERAGE FLOW			
			6-HR	24-HR	72-HR	9.97-HR
+ (CFS)	(HR)					
		(CFS)				
+ 159.	3.23		39.	24.	24.	24.
		(INCHES)	0.846	0.858	0.858	0.858
		(AC-FT)	19.	19.	19.	19.

CUMULATIVE AREA = 0.43 SQ MI

*** ***

```
              **************
              *            *
  404 KK      *     05Det  *       Storage
              *            *
              **************

  405 KO          OUTPUT CONTROL VARIABLES
                        IPRNT           2  PRINT CONTROL
                        IPLOT           0  PLOT CONTROL
                        QSCAL          0.  HYDROGRAPH PLOT SCALE
                            ****** CAUTION- WATER SURFACE ELEVATIONS IN PAIUTE PARK ARE **********
```

****** 1 FOOT HIGHER THAN CALCULATED AFTER TIME 0308 **********

HYDROGRAPH ROUTING DATA

408 RS STORAGE ROUTING

NSTPS	1	NUMBER OF SUBREACHES
ITYP	STOR	TYPE OF INITIAL CONDITION
RSVRIC	0.00	INITIAL CONDITION
X	0.00	WORKING R AND D COEFFICIENT

409 SV	STORAGE	0.0	1.9	4.9	8.6	12.3	16.2	20.1	28.5
410 SE	ELEVATION	48.00	50.00	51.00	52.00	53.00	54.00	55.00	57.00
411 SQ	DISCHARGE	0.	46.	105.	136.	156.	156.	156.	156.

***

****

HYDROGRAPH AT STATION 05Det

****

DA	MON	HRMN	ORD	OUTFLOW	STORAGE	STAGE	*	DA	MON	HRMN	ORD	OUTFLOW	STORAGE	STAGE	*	DA	MON	HRMN	ORD	OUTFLOW	STORAGE	STAGE
1		0000	1	0.	0.0	48.0	*	1		0320	101	79.	3.6	50.6	*	1		0640	201	21.	0.9	48.9
1		0002	2	1.	0.1	48.1	*	1		0322	102	83.	3.8	50.6	*	1		0642	202	21.	0.9	48.9
1		0004	3	2.	0.1	48.1	*	1		0324	103	87.	4.0	50.7	*	1		0644	203	20.	0.8	48.9
1		0006	4	2.	0.1	48.1	*	1		0326	104	90.	4.1	50.7	*	1		0646	204	20.	0.8	48.9
1		0008	5	2.	0.1	48.1	*	1		0328	105	92.	4.3	50.8	*	1		0648	205	20.	0.8	48.9
1		0010	6	1.	0.1	48.1	*	1		0330	106	94.	4.4	50.8	*	1		0650	206	19.	0.8	48.8
1		0012	7	1.	0.1	48.1	*	1		0332	107	96.	4.5	50.9	*	1		0652	207	19.	0.8	48.8
1		0014	8	1.	0.1	48.1	*	1		0334	108	98.	4.6	50.9	*	1		0654	208	18.	0.8	48.8
1		0016	9	1.	0.0	48.1	*	1		0336	109	99.	4.6	50.9	*	1		0656	209	18.	0.7	48.8
1		0018	10	1.	0.0	48.0	*	1		0338	110	101.	4.7	50.9	*	1		0658	210	18.	0.7	48.8
1		0020	11	1.	0.0	48.0	*	1		0340	111	102.	4.8	50.9	*	1		0700	211	17.	0.7	48.8
1		0022	12	1.	0.0	48.0	*	1		0342	112	102.	4.8	51.0	*	1		0702	212	17.	0.7	48.7
1		0024	13	1.	0.0	48.0	*	1		0344	113	103.	4.8	51.0	*	1		0704	213	17.	0.7	48.7
1		0026	14	1.	0.0	48.0	*	1		0346	114	103.	4.8	51.0	*	1		0706	214	16.	0.7	48.7
1		0028	15	1.	0.0	48.0	*	1		0348	115	103.	4.8	51.0	*	1		0708	215	16.	0.7	48.7
1		0030	16	1.	0.0	48.0	*	1		0350	116	103.	4.8	51.0	*	1		0710	216	16.	0.6	48.7
1		0032	17	1.	0.0	48.0	*	1		0352	117	103.	4.8	51.0	*	1		0712	217	15.	0.6	48.7
1		0034	18	1.	0.0	48.0	*	1		0354	118	103.	4.8	51.0	*	1		0714	218	15.	0.6	48.6
1		0036	19	1.	0.0	48.0	*	1		0356	119	103.	4.8	51.0	*	1		0716	219	14.	0.6	48.6
1		0038	20	1.	0.0	48.0	*	1		0358	120	102.	4.8	51.0	*	1		0718	220	14.	0.6	48.6
1		0040	21	1.	0.0	48.0	*	1		0400	121	102.	4.8	51.0	*	1		0720	221	14.	0.6	48.6

1	0042	22	0.	0.0	48.0	*	1	0402	122	102.	4.8	50.9	*	1	0722	222	13.	0.6	48.6
1	0044	23	0.	0.0	48.0	*	1	0404	123	101.	4.7	50.9	*	1	0724	223	13.	0.5	48.6
1	0046	24	0.	0.0	48.0	*	1	0406	124	100.	4.7	50.9	*	1	0726	224	13.	0.5	48.6
1	0048	25	0.	0.0	48.0	*	1	0408	125	100.	4.7	50.9	*	1	0728	225	13.	0.5	48.5
1	0050	26	0.	0.0	48.0	*	1	0410	126	99.	4.6	50.9	*	1	0730	226	12.	0.5	48.5
1	0052	27	0.	0.0	48.0	*	1	0412	127	98.	4.6	50.9	*	1	0732	227	12.	0.5	48.5
1	0054	28	0.	0.0	48.0	*	1	0414	128	98.	4.6	50.9	*	1	0734	228	12.	0.5	48.5
1	0056	29	0.	0.0	48.0	*	1	0416	129	97.	4.5	50.9	*	1	0736	229	11.	0.5	48.5
1	0058	30	0.	0.0	48.0	*	1	0418	130	96.	4.5	50.8	*	1	0738	230	11.	0.4	48.5
1	0100	31	0.	0.0	48.0	*	1	0420	131	95.	4.4	50.8	*	1	0740	231	11.	0.4	48.5
1	0102	32	0.	0.0	48.0	*	1	0422	132	95.	4.4	50.8	*	1	0742	232	10.	0.4	48.5
1	0104	33	0.	0.0	48.0	*	1	0424	133	94.	4.3	50.8	*	1	0744	233	10.	0.4	48.4
1	0106	34	0.	0.0	48.0	*	1	0426	134	93.	4.3	50.8	*	1	0746	234	10.	0.4	48.4
1	0108	35	0.	0.0	48.0	*	1	0428	135	92.	4.3	50.8	*	1	0748	235	10.	0.4	48.4
1	0110	36	0.	0.0	48.0	*	1	0430	136	91.	4.2	50.8	*	1	0750	236	9.	0.4	48.4
1	0112	37	0.	0.0	48.0	*	1	0432	137	90.	4.2	50.8	*	1	0752	237	9.	0.4	48.4
1	0114	38	0.	0.0	48.0	*	1	0434	138	89.	4.1	50.7	*	1	0754	238	9.	0.4	48.4
1	0116	39	0.	0.0	48.0	*	1	0436	139	89.	4.1	50.7	*	1	0756	239	8.	0.3	48.4
1	0118	40	0.	0.0	48.0	*	1	0438	140	88.	4.0	50.7	*	1	0758	240	8.	0.3	48.4
1	0120	41	0.	0.0	48.0	*	1	0440	141	87.	4.0	50.7	*	1	0800	241	8.	0.3	48.3
1	0122	42	0.	0.0	48.0	*	1	0442	142	86.	3.9	50.7	*	1	0802	242	8.	0.3	48.3
1	0124	43	0.	0.0	48.0	*	1	0444	143	84.	3.8	50.6	*	1	0804	243	8.	0.3	48.3
1	0126	44	0.	0.0	48.0	*	1	0446	144	82.	3.7	50.6	*	1	0806	244	7.	0.3	48.3
1	0128	45	0.	0.0	48.0	*	1	0448	145	80.	3.6	50.6	*	1	0808	245	7.	0.3	48.3
1	0130	46	0.	0.0	48.0	*	1	0450	146	78.	3.5	50.5	*	1	0810	246	7.	0.3	48.3
1	0132	47	0.	0.0	48.0	*	1	0452	147	76.	3.4	50.5	*	1	0812	247	7.	0.3	48.3
1	0134	48	0.	0.0	48.0	*	1	0454	148	74.	3.3	50.5	*	1	0814	248	6.	0.3	48.3
1	0136	49	0.	0.0	48.0	*	1	0456	149	72.	3.2	50.4	*	1	0816	249	6.	0.3	48.3
1	0138	50	0.	0.0	48.0	*	1	0458	150	70.	3.2	50.4	*	1	0818	250	6.	0.3	48.3
1	0140	51	0.	0.0	48.0	*	1	0500	151	69.	3.1	50.4	*	1	0820	251	6.	0.2	48.3
1	0142	52	0.	0.0	48.0	*	1	0502	152	67.	3.0	50.4	*	1	0822	252	6.	0.2	48.3
1	0144	53	0.	0.0	48.0	*	1	0504	153	66.	2.9	50.3	*	1	0824	253	6.	0.2	48.2
1	0146	54	0.	0.0	48.0	*	1	0506	154	64.	2.8	50.3	*	1	0826	254	5.	0.2	48.2
1	0148	55	0.	0.0	48.0	*	1	0508	155	62.	2.7	50.3	*	1	0828	255	5.	0.2	48.2
1	0150	56	0.	0.0	48.0	*	1	0510	156	61.	2.7	50.3	*	1	0830	256	5.	0.2	48.2
1	0152	57	0.	0.0	48.0	*	1	0512	157	60.	2.6	50.2	*	1	0832	257	5.	0.2	48.2
1	0154	58	0.	0.0	48.0	*	1	0514	158	58.	2.5	50.2	*	1	0834	258	5.	0.2	48.2
1	0156	59	0.	0.0	48.0	*	1	0516	159	57.	2.4	50.2	*	1	0836	259	5.	0.2	48.2
1	0158	60	0.	0.0	48.0	*	1	0518	160	55.	2.4	50.2	*	1	0838	260	5.	0.2	48.2
1	0200	61	0.	0.0	48.0	*	1	0520	161	54.	2.3	50.1	*	1	0840	261	4.	0.2	48.2
1	0202	62	0.	0.0	48.0	*	1	0522	162	53.	2.2	50.1	*	1	0842	262	4.	0.2	48.2
1	0204	63	0.	0.0	48.0	*	1	0524	163	52.	2.2	50.1	*	1	0844	263	4.	0.2	48.2
1	0206	64	0.	0.0	48.0	*	1	0526	164	50.	2.1	50.1	*	1	0846	264	4.	0.2	48.2
1	0208	65	0.	0.0	48.0	*	1	0528	165	49.	2.1	50.1	*	1	0848	265	4.	0.2	48.2
1	0210	66	0.	0.0	48.0	*	1	0530	166	48.	2.0	50.0	*	1	0850	266	4.	0.2	48.2
1	0212	67	0.	0.0	48.0	*	1	0532	167	47.	1.9	50.0	*	1	0852	267	4.	0.1	48.2
1	0214	68	0.	0.0	48.0	*	1	0534	168	46.	1.9	50.0	*	1	0854	268	4.	0.1	48.2

1	0216	69	0.	0.0	48.0	*	1	0536	169	45.	1.8	49.9	*	1	0856	269	3.	0.1	48.1
1	0218	70	0.	0.0	48.0	*	1	0538	170	43.	1.8	49.9	*	1	0858	270	3.	0.1	48.1
1	0220	71	0.	0.0	48.0	*	1	0540	171	42.	1.7	49.8	*	1	0900	271	3.	0.1	48.1
1	0222	72	0.	0.0	48.0	*	1	0542	172	41.	1.7	49.8	*	1	0902	272	3.	0.1	48.1
1	0224	73	1.	0.0	48.0	*	1	0544	173	40.	1.6	49.7	*	1	0904	273	3.	0.1	48.1
1	0226	74	1.	0.0	48.0	*	1	0546	174	39.	1.6	49.7	*	1	0906	274	3.	0.1	48.1
1	0228	75	1.	0.0	48.0	*	1	0548	175	38.	1.6	49.6	*	1	0908	275	3.	0.1	48.1
1	0230	76	1.	0.0	48.0	*	1	0550	176	37.	1.5	49.6	*	1	0910	276	3.	0.1	48.1
1	0232	77	1.	0.0	48.0	*	1	0552	177	36.	1.5	49.6	*	1	0912	277	3.	0.1	48.1
1	0234	78	1.	0.0	48.0	*	1	0554	178	35.	1.4	49.5	*	1	0914	278	3.	0.1	48.1
1	0236	79	1.	0.0	48.0	*	1	0556	179	34.	1.4	49.5	*	1	0916	279	2.	0.1	48.1
1	0238	80	1.	0.1	48.1	*	1	0558	180	33.	1.4	49.5	*	1	0918	280	2.	0.1	48.1
1	0240	81	1.	0.1	48.1	*	1	0600	181	33.	1.3	49.4	*	1	0920	281	2.	0.1	48.1
1	0242	82	2.	0.1	48.1	*	1	0602	182	32.	1.3	49.4	*	1	0922	282	2.	0.1	48.1
1	0244	83	2.	0.1	48.1	*	1	0604	183	31.	1.3	49.4	*	1	0924	283	2.	0.1	48.1
1	0246	84	2.	0.1	48.1	*	1	0606	184	30.	1.3	49.3	*	1	0926	284	2.	0.1	48.1
1	0248	85	3.	0.1	48.1	*	1	0608	185	30.	1.2	49.3	*	1	0928	285	2.	0.1	48.1
1	0250	86	4.	0.1	48.2	*	1	0610	186	29.	1.2	49.3	*	1	0930	286	2.	0.1	48.1
1	0252	87	4.	0.2	48.2	*	1	0612	187	29.	1.2	49.2	*	1	0932	287	2.	0.1	48.1
1	0254	88	5.	0.2	48.2	*	1	0614	188	28.	1.1	49.2	*	1	0934	288	2.	0.1	48.1
1	0256	89	7.	0.3	48.3	*	1	0616	189	27.	1.1	49.2	*	1	0936	289	2.	0.1	48.1
1	0258	90	8.	0.3	48.4	*	1	0618	190	27.	1.1	49.2	*	1	0938	290	2.	0.1	48.1
1	0300	91	11.	0.4	48.5	*	1	0620	191	26.	1.1	49.1	*	1	0940	291	2.	0.1	48.1
1	0302	92	15.	0.6	48.6	*	1	0622	192	26.	1.1	49.1	*	1	0942	292	2.	0.1	48.1
1	0304	93	21.	0.8	48.9	*	1	0624	193	25.	1.0	49.1	*	1	0944	293	2.	0.1	48.1
1	0306	94	28.	1.1	49.2	*	1	0626	194	25.	1.0	49.1	*	1	0946	294	2.	0.1	48.1
1	0308	95	35.	1.4	49.5	*	1	0628	195	24.	1.0	49.0	*	1	0948	295	2.	0.1	48.1
1	0310	96	44.	1.8	49.9	*	1	0630	196	24.	1.0	49.0	*	1	0950	296	1.	0.1	48.1
1	0312	97	52.	2.2	50.1	*	1	0632	197	23.	1.0	49.0	*	1	0952	297	1.	0.1	48.1
1	0314	98	60.	2.6	50.2	*	1	0634	198	23.	0.9	49.0	*	1	0954	298	1.	0.1	48.1
1	0316	99	67.	3.0	50.4	*	1	0636	199	22.	0.9	49.0	*	1	0956	299	1.	0.1	48.1
1	0318	100	74.	3.3	50.5	*	1	0638	200	22.	0.9	48.9	*	1	0958	300	1.	0.1	48.1
						*							*						

****

PEAK FLOW	TIME		MAXIMUM AVERAGE FLOW			
			6-HR	24-HR	72-HR	9.97-HR
+ (CFS)	(HR)					
		(CFS)				
+ 103.	3.83		43.	27.	27.	27.
		(INCHES)	0.886	0.901	0.901	0.901
		(AC-FT)	22.	22.	22.	22.

PEAK STORAGE	TIME	MAXIMUM AVERAGE STORAGE			
		6-HR	24-HR	72-HR	9.97-HR
+ (AC-FT)	(HR)				
5.	3.83	2.	1.	1.	1.

PEAK STAGE (FEET)	TIME (HR)	MAXIMUM AVERAGE STAGE 6-HR	24-HR	72-HR	9.97-HR
+ 50.97	3.83	49.50	48.92	48.92	48.92

CUMULATIVE AREA = 0.45 SQ MI

*** ***

```
            **************
            *            *
426 KK      *    050610  *          COMBINE
            *            *
            **************

428 KO          OUTPUT CONTROL VARIABLES
                      IPRNT           2  PRINT CONTROL
                      IPLOT           0  PLOT CONTROL
                      QSCAL          0.  HYDROGRAPH PLOT SCALE

429 HC          HYDROGRAPH COMBINATION
                      ICOMP           2  NUMBER OF HYDROGRAPHS TO COMBINE
```

***

****

HYDROGRAPH AT STATION 050610
SUM OF 2 HYDROGRAPHS

****

DA	MON	HRMN	ORD	FLOW	DA	MON	HRMN	ORD	FLOW	DA	MON	HRMN	ORD	FLOW	DA	MON	HRMN	ORD	FLOW
1		0000	1	0.	1		0230	76	1.	1		0500	151	74.	1		0730	226	13.
1		0002	2	0.	1		0232	77	1.	1		0502	152	72.	1		0732	227	13.
1		0004	3	1.	1		0234	78	2.	1		0504	153	71.	1		0734	228	12.
1		0006	4	2.	1		0236	79	2.	1		0506	154	69.	1		0736	229	12.
1		0008	5	2.	1		0238	80	2.	1		0508	155	67.	1		0738	230	12.
1		0010	6	2.	1		0240	81	3.	1		0510	156	66.	1		0740	231	11.
1		0012	7	1.	1		0242	82	3.	1		0512	157	64.	1		0742	232	11.
1		0014	8	1.	1		0244	83	4.	1		0514	158	63.	1		0744	233	11.

1	0016	9	1.	*	1	0246	84	5.	*	1	0516	159	61.	*	1	0746	234	11.
1	0018	10	1.	*	1	0248	85	6.	*	1	0518	160	60.	*	1	0748	235	10.
1	0020	11	1.	*	1	0250	86	8.	*	1	0520	161	58.	*	1	0750	236	10.
1	0022	12	1.	*	1	0252	87	10.	*	1	0522	162	57.	*	1	0752	237	10.
1	0024	13	1.	*	1	0254	88	13.	*	1	0524	163	56.	*	1	0754	238	9.
1	0026	14	1.	*	1	0256	89	17.	*	1	0526	164	55.	*	1	0756	239	9.
1	0028	15	1.	*	1	0258	90	22.	*	1	0528	165	53.	*	1	0758	240	9.
1	0030	16	1.	*	1	0300	91	31.	*	1	0530	166	52.	*	1	0800	241	9.
1	0032	17	1.	*	1	0302	92	46.	*	1	0532	167	51.	*	1	0802	242	8.
1	0034	18	1.	*	1	0304	93	71.	*	1	0534	168	50.	*	1	0804	243	8.
1	0036	19	1.	*	1	0306	94	102.	*	1	0536	169	49.	*	1	0806	244	8.
1	0038	20	1.	*	1	0308	95	129.	*	1	0538	170	47.	*	1	0808	245	8.
1	0040	21	1.	*	1	0310	96	137.	*	1	0540	171	46.	*	1	0810	246	7.
1	0042	22	1.	*	1	0312	97	136.	*	1	0542	172	45.	*	1	0812	247	7.
1	0044	23	1.	*	1	0314	98	132.	*	1	0544	173	44.	*	1	0814	248	7.
1	0046	24	0.	*	1	0316	99	129.	*	1	0546	174	42.	*	1	0816	249	7.
1	0048	25	0.	*	1	0318	100	127.	*	1	0548	175	41.	*	1	0818	250	7.
1	0050	26	0.	*	1	0320	101	127.	*	1	0550	176	40.	*	1	0820	251	6.
1	0052	27	0.	*	1	0322	102	127.	*	1	0552	177	39.	*	1	0822	252	6.
1	0054	28	0.	*	1	0324	103	127.	*	1	0554	178	38.	*	1	0824	253	6.
1	0056	29	0.	*	1	0326	104	128.	*	1	0556	179	38.	*	1	0826	254	6.
1	0058	30	0.	*	1	0328	105	128.	*	1	0558	180	37.	*	1	0828	255	6.
1	0100	31	0.	*	1	0330	106	129.	*	1	0600	181	36.	*	1	0830	256	6.
1	0102	32	0.	*	1	0332	107	129.	*	1	0602	182	35.	*	1	0832	257	5.
1	0104	33	0.	*	1	0334	108	130.	*	1	0604	183	34.	*	1	0834	258	5.
1	0106	34	0.	*	1	0336	109	130.	*	1	0606	184	33.	*	1	0836	259	5.
1	0108	35	0.	*	1	0338	110	129.	*	1	0608	185	33.	*	1	0838	260	5.
1	0110	36	0.	*	1	0340	111	129.	*	1	0610	186	32.	*	1	0840	261	5.
1	0112	37	0.	*	1	0342	112	127.	*	1	0612	187	31.	*	1	0842	262	5.
1	0114	38	0.	*	1	0344	113	126.	*	1	0614	188	31.	*	1	0844	263	4.
1	0116	39	0.	*	1	0346	114	125.	*	1	0616	189	30.	*	1	0846	264	4.
1	0118	40	0.	*	1	0348	115	123.	*	1	0618	190	29.	*	1	0848	265	4.
1	0120	41	0.	*	1	0350	116	122.	*	1	0620	191	29.	*	1	0850	266	4.
1	0122	42	0.	*	1	0352	117	120.	*	1	0622	192	28.	*	1	0852	267	4.
1	0124	43	0.	*	1	0354	118	119.	*	1	0624	193	28.	*	1	0854	268	4.
1	0126	44	0.	*	1	0356	119	118.	*	1	0626	194	27.	*	1	0856	269	4.
1	0128	45	0.	*	1	0358	120	116.	*	1	0628	195	26.	*	1	0858	270	4.
1	0130	46	0.	*	1	0400	121	115.	*	1	0630	196	26.	*	1	0900	271	4.
1	0132	47	0.	*	1	0402	122	114.	*	1	0632	197	25.	*	1	0902	272	3.
1	0134	48	0.	*	1	0404	123	113.	*	1	0634	198	25.	*	1	0904	273	3.
1	0136	49	0.	*	1	0406	124	111.	*	1	0636	199	24.	*	1	0906	274	3.
1	0138	50	0.	*	1	0408	125	110.	*	1	0638	200	24.	*	1	0908	275	3.
1	0140	51	0.	*	1	0410	126	109.	*	1	0640	201	23.	*	1	0910	276	3.
1	0142	52	0.	*	1	0412	127	108.	*	1	0642	202	23.	*	1	0912	277	3.
1	0144	53	0.	*	1	0414	128	107.	*	1	0644	203	22.	*	1	0914	278	3.
1	0146	54	0.	*	1	0416	129	106.	*	1	0646	204	22.	*	1	0916	279	3.
1	0148	55	0.	*	1	0418	130	105.	*	1	0648	205	21.	*	1	0918	280	3.

1	0150	56	0.	*	1	0420	131	103.	*	1	0650	206	21.	*	1	0920	281	3.
1	0152	57	0.	*	1	0422	132	102.	*	1	0652	207	20.	*	1	0922	282	3.
1	0154	58	0.	*	1	0424	133	101.	*	1	0654	208	20.	*	1	0924	283	2.
1	0156	59	0.	*	1	0426	134	100.	*	1	0656	209	19.	*	1	0926	284	2.
1	0158	60	0.	*	1	0428	135	99.	*	1	0658	210	19.	*	1	0928	285	2.
1	0200	61	0.	*	1	0430	136	98.	*	1	0700	211	19.	*	1	0930	286	2.
1	0202	62	0.	*	1	0432	137	97.	*	1	0702	212	18.	*	1	0932	287	2.
1	0204	63	0.	*	1	0434	138	96.	*	1	0704	213	18.	*	1	0934	288	2.
1	0206	64	0.	*	1	0436	139	95.	*	1	0706	214	17.	*	1	0936	289	2.
1	0208	65	0.	*	1	0438	140	94.	*	1	0708	215	17.	*	1	0938	290	2.
1	0210	66	0.	*	1	0440	141	93.	*	1	0710	216	17.	*	1	0940	291	2.
1	0212	67	0.	*	1	0442	142	92.	*	1	0712	217	16.	*	1	0942	292	2.
1	0214	68	0.	*	1	0444	143	90.	*	1	0714	218	16.	*	1	0944	293	2.
1	0216	69	0.	*	1	0446	144	88.	*	1	0716	219	16.	*	1	0946	294	2.
1	0218	70	1.	*	1	0448	145	86.	*	1	0718	220	15.	*	1	0948	295	2.
1	0220	71	1.	*	1	0450	146	84.	*	1	0720	221	15.	*	1	0950	296	2.
1	0222	72	1.	*	1	0452	147	82.	*	1	0722	222	14.	*	1	0952	297	2.
1	0224	73	1.	*	1	0454	148	80.	*	1	0724	223	14.	*	1	0954	298	2.
1	0226	74	1.	*	1	0456	149	78.	*	1	0726	224	14.	*	1	0956	299	2.
1	0228	75	1.	*	1	0458	150	76.	*	1	0728	225	13.	*	1	0958	300	1.
				*					*					*				

****

PEAK FLOW	TIME		MAXIMUM AVERAGE FLOW			
			6-HR	24-HR	72-HR	9.97-HR
+ (CFS)	(HR)	(CFS)				
+ 137.	3.17		53.	32.	32.	32.
		(INCHES)	0.916	0.931	0.931	0.931
		(AC-FT)	26.	27.	27.	27.

CUMULATIVE AREA = 0.54 SQ MI

*** ***

```
              **************
              *            *
440 KK        *   050620   *      COMBINE
              *            *
              **************

442 KO            OUTPUT CONTROL VARIABLES
                      IPRNT           2  PRINT CONTROL
```

IPLOT 0 PLOT CONTROL
QSCAL 0. HYDROGRAPH PLOT SCALE

443 HC HYDROGRAPH COMBINATION
ICOMP 2 NUMBER OF HYDROGRAPHS TO COMBINE

***

HYDROGRAPH AT STATION 050620
SUM OF 2 HYDROGRAPHS

DA	MON	HRMN	ORD	FLOW	DA	MON	HRMN	ORD	FLOW	DA	MON	HRMN	ORD	FLOW	DA	MON	HRMN	ORD	FLOW
1		0000	1	0.	1		0230	76	2.	1		0500	151	80.	1		0730	226	14.
1		0002	2	0.	1		0232	77	2.	1		0502	152	79.	1		0732	227	14.
1		0004	3	0.	1		0234	78	2.	1		0504	153	77.	1		0734	228	14.
1		0006	4	0.	1		0236	79	3.	1		0506	154	75.	1		0736	229	13.
1		0008	5	1.	1		0238	80	3.	1		0508	155	73.	1		0738	230	13.
1		0010	6	2.	1		0240	81	4.	1		0510	156	71.	1		0740	231	12.
1		0012	7	2.	1		0242	82	5.	1		0512	157	70.	1		0742	232	12.
1		0014	8	1.	1		0244	83	6.	1		0514	158	68.	1		0744	233	12.
1		0016	9	1.	1		0246	84	7.	1		0516	159	67.	1		0746	234	11.
1		0018	10	1.	1		0248	85	9.	1		0518	160	65.	1		0748	235	11.
1		0020	11	1.	1		0250	86	12.	1		0520	161	64.	1		0750	236	11.
1		0022	12	1.	1		0252	87	15.	1		0522	162	62.	1		0752	237	11.
1		0024	13	1.	1		0254	88	20.	1		0524	163	61.	1		0754	238	10.
1		0026	14	1.	1		0256	89	26.	1		0526	164	59.	1		0756	239	10.
1		0028	15	1.	1		0258	90	34.	1		0528	165	58.	1		0758	240	10.
1		0030	16	1.	1		0300	91	50.	1		0530	166	57.	1		0800	241	9.
1		0032	17	1.	1		0302	92	74.	1		0532	167	56.	1		0802	242	9.
1		0034	18	1.	1		0304	93	114.	1		0534	168	54.	1		0804	243	9.
1		0036	19	1.	1		0306	94	167.	1		0536	169	53.	1		0806	244	9.
1		0038	20	1.	1		0308	95	217.	1		0538	170	52.	1		0808	245	8.
1		0040	21	1.	1		0310	96	243.	1		0540	171	51.	1		0810	246	8.
1		0042	22	1.	1		0312	97	243.	1		0542	172	49.	1		0812	247	8.
1		0044	23	1.	1		0314	98	231.	1		0544	173	48.	1		0814	248	8.
1		0046	24	1.	1		0316	99	215.	1		0546	174	47.	1		0816	249	7.
1		0048	25	0.	1		0318	100	202.	1		0548	175	46.	1		0818	250	7.
1		0050	26	0.	1		0320	101	193.	1		0550	176	45.	1		0820	251	7.
1		0052	27	0.	1		0322	102	186.	1		0552	177	43.	1		0822	252	7.
1		0054	28	0.	1		0324	103	181.	1		0554	178	42.	1		0824	253	7.
1		0056	29	0.	1		0326	104	177.	1		0556	179	41.	1		0826	254	6.
1		0058	30	0.	1		0328	105	174.	1		0558	180	41.	1		0828	255	6.

1	0100	31	0.	*	1	0330	106	172.	*	1	0600	181	40.	*	1	0830	256	6.
1	0102	32	0.	*	1	0332	107	171.	*	1	0602	182	39.	*	1	0832	257	6.
1	0104	33	0.	*	1	0334	108	170.	*	1	0604	183	38.	*	1	0834	258	6.
1	0106	34	0.	*	1	0336	109	168.	*	1	0606	184	37.	*	1	0836	259	6.
1	0108	35	0.	*	1	0338	110	166.	*	1	0608	185	36.	*	1	0838	260	5.
1	0110	36	0.	*	1	0340	111	163.	*	1	0610	186	36.	*	1	0840	261	5.
1	0112	37	0.	*	1	0342	112	160.	*	1	0612	187	35.	*	1	0842	262	5.
1	0114	38	0.	*	1	0344	113	157.	*	1	0614	188	34.	*	1	0844	263	5.
1	0116	39	0.	*	1	0346	114	153.	*	1	0616	189	33.	*	1	0846	264	5.
1	0118	40	0.	*	1	0348	115	150.	*	1	0618	190	33.	*	1	0848	265	5.
1	0120	41	0.	*	1	0350	116	146.	*	1	0620	191	32.	*	1	0850	266	5.
1	0122	42	0.	*	1	0352	117	143.	*	1	0622	192	31.	*	1	0852	267	4.
1	0124	43	0.	*	1	0354	118	140.	*	1	0624	193	31.	*	1	0854	268	4.
1	0126	44	0.	*	1	0356	119	138.	*	1	0626	194	30.	*	1	0856	269	4.
1	0128	45	0.	*	1	0358	120	135.	*	1	0628	195	29.	*	1	0858	270	4.
1	0130	46	0.	*	1	0400	121	133.	*	1	0630	196	29.	*	1	0900	271	4.
1	0132	47	0.	*	1	0402	122	130.	*	1	0632	197	28.	*	1	0902	272	4.
1	0134	48	0.	*	1	0404	123	128.	*	1	0634	198	27.	*	1	0904	273	4.
1	0136	49	0.	*	1	0406	124	126.	*	1	0636	199	27.	*	1	0906	274	4.
1	0138	50	0.	*	1	0408	125	124.	*	1	0638	200	26.	*	1	0908	275	3.
1	0140	51	0.	*	1	0410	126	122.	*	1	0640	201	26.	*	1	0910	276	3.
1	0142	52	0.	*	1	0412	127	121.	*	1	0642	202	25.	*	1	0912	277	3.
1	0144	53	0.	*	1	0414	128	119.	*	1	0644	203	24.	*	1	0914	278	3.
1	0146	54	0.	*	1	0416	129	117.	*	1	0646	204	24.	*	1	0916	279	3.
1	0148	55	0.	*	1	0418	130	116.	*	1	0648	205	23.	*	1	0918	280	3.
1	0150	56	0.	*	1	0420	131	114.	*	1	0650	206	23.	*	1	0920	281	3.
1	0152	57	0.	*	1	0422	132	113.	*	1	0652	207	22.	*	1	0922	282	3.
1	0154	58	0.	*	1	0424	133	111.	*	1	0654	208	22.	*	1	0924	283	3.
1	0156	59	0.	*	1	0426	134	110.	*	1	0656	209	21.	*	1	0926	284	3.
1	0158	60	0.	*	1	0428	135	108.	*	1	0658	210	21.	*	1	0928	285	3.
1	0200	61	0.	*	1	0430	136	107.	*	1	0700	211	20.	*	1	0930	286	3.
1	0202	62	0.	*	1	0432	137	106.	*	1	0702	212	20.	*	1	0932	287	2.
1	0204	63	0.	*	1	0434	138	104.	*	1	0704	213	19.	*	1	0934	288	2.
1	0206	64	0.	*	1	0436	139	103.	*	1	0706	214	19.	*	1	0936	289	2.
1	0208	65	0.	*	1	0438	140	102.	*	1	0708	215	19.	*	1	0938	290	2.
1	0210	66	0.	*	1	0440	141	100.	*	1	0710	216	18.	*	1	0940	291	2.
1	0212	67	0.	*	1	0442	142	99.	*	1	0712	217	18.	*	1	0942	292	2.
1	0214	68	0.	*	1	0444	143	97.	*	1	0714	218	17.	*	1	0944	293	2.
1	0216	69	1.	*	1	0446	144	95.	*	1	0716	219	17.	*	1	0946	294	2.
1	0218	70	1.	*	1	0448	145	93.	*	1	0718	220	17.	*	1	0948	295	2.
1	0220	71	1.	*	1	0450	146	91.	*	1	0720	221	16.	*	1	0950	296	2.
1	0222	72	1.	*	1	0452	147	89.	*	1	0722	222	16.	*	1	0952	297	2.
1	0224	73	1.	*	1	0454	148	86.	*	1	0724	223	15.	*	1	0954	298	2.
1	0226	74	1.	*	1	0456	149	84.	*	1	0726	224	15.	*	1	0956	299	2.
1	0228	75	1.	*	1	0458	150	82.	*	1	0728	225	15.	*	1	0958	300	2.
				*					*					*				

****

```
  PEAK FLOW     TIME                          MAXIMUM AVERAGE FLOW
                                      6-HR       24-HR       72-HR       9.97-HR
+   (CFS)       (HR)
                              (CFS)
+     243.      3.17                  64.         39.         39.          39.
                          (INCHES)   0.943       0.957       0.957        0.957
                           (AC-FT)    32.         32.         32.          32.

                           CUMULATIVE AREA =    0.63 SQ MI


*** *** *** *** *** *** *** *** *** *** *** *** *** *** *** *** *** *** *** *** *** *** *** *** *** *** *** *** *** *** *** *** *** *** ***


            **************
            *            *
 454 KK     *    050630  *      COMBINE
            *            *
            **************

 456 KO          OUTPUT CONTROL VARIABLES
                      IPRNT           2  PRINT CONTROL
                      IPLOT           0  PLOT CONTROL
                      QSCAL          0.  HYDROGRAPH PLOT SCALE

 457 HC          HYDROGRAPH COMBINATION
                      ICOMP           2  NUMBER OF HYDROGRAPHS TO COMBINE

                                                    ***

*****************************************************************************************************************************

                                        HYDROGRAPH AT STATION   050630
                                            SUM OF  2 HYDROGRAPHS

*****************************************************************************************************************************
                                 *                                 *                                 *
   DA MON HRMN  ORD      FLOW    *   DA MON HRMN  ORD      FLOW    *   DA MON HRMN  ORD      FLOW    *   DA MON HRMN  ORD      FLOW
                                 *                                 *                                 *
    1     0000    1        0.    *    1     0230   76        3.    *    1     0500  151       85.    *    1     0730  226       15.
    1     0002    2        0.    *    1     0232   77        3.    *    1     0502  152       83.    *    1     0732  227       15.
    1     0004    3        0.    *    1     0234   78        3.    *    1     0504  153       81.    *    1     0734  228       14.
    1     0006    4        0.    *    1     0236   79        4.    *    1     0506  154       79.    *    1     0736  229       14.
    1     0008    5        0.    *    1     0238   80        5.    *    1     0508  155       77.    *    1     0738  230       13.
```

1	0010	6	1.	*	1	0240	81	6.	*	1	0510	156	76.	*	1	0740	231	13.
1	0012	7	2.	*	1	0242	82	7.	*	1	0512	157	74.	*	1	0742	232	13.
1	0014	8	2.	*	1	0244	83	8.	*	1	0514	158	72.	*	1	0744	233	12.
1	0016	9	2.	*	1	0246	84	11.	*	1	0516	159	71.	*	1	0746	234	12.
1	0018	10	1.	*	1	0248	85	13.	*	1	0518	160	69.	*	1	0748	235	12.
1	0020	11	1.	*	1	0250	86	17.	*	1	0520	161	67.	*	1	0750	236	11.
1	0022	12	1.	*	1	0252	87	22.	*	1	0522	162	66.	*	1	0752	237	11.
1	0024	13	1.	*	1	0254	88	28.	*	1	0524	163	64.	*	1	0754	238	11.
1	0026	14	1.	*	1	0256	89	37.	*	1	0526	164	63.	*	1	0756	239	11.
1	0028	15	1.	*	1	0258	90	50.	*	1	0528	165	62.	*	1	0758	240	10.
1	0030	16	1.	*	1	0300	91	69.	*	1	0530	166	60.	*	1	0800	241	10.
1	0032	17	1.	*	1	0302	92	106.	*	1	0532	167	59.	*	1	0802	242	10.
1	0034	18	1.	*	1	0304	93	166.	*	1	0534	168	58.	*	1	0804	243	9.
1	0036	19	1.	*	1	0306	94	244.	*	1	0536	169	56.	*	1	0806	244	9.
1	0038	20	1.	*	1	0308	95	312.	*	1	0538	170	55.	*	1	0808	245	9.
1	0040	21	1.	*	1	0310	96	342.	*	1	0540	171	54.	*	1	0810	246	9.
1	0042	22	1.	*	1	0312	97	338.	*	1	0542	172	52.	*	1	0812	247	8.
1	0044	23	1.	*	1	0314	98	316.	*	1	0544	173	51.	*	1	0814	248	8.
1	0046	24	1.	*	1	0316	99	290.	*	1	0546	174	50.	*	1	0816	249	8.
1	0048	25	1.	*	1	0318	100	266.	*	1	0548	175	49.	*	1	0818	250	8.
1	0050	26	1.	*	1	0320	101	247.	*	1	0550	176	48.	*	1	0820	251	7.
1	0052	27	0.	*	1	0322	102	234.	*	1	0552	177	46.	*	1	0822	252	7.
1	0054	28	0.	*	1	0324	103	223.	*	1	0554	178	45.	*	1	0824	253	7.
1	0056	29	0.	*	1	0326	104	215.	*	1	0556	179	44.	*	1	0826	254	7.
1	0058	30	0.	*	1	0328	105	209.	*	1	0558	180	43.	*	1	0828	255	7.
1	0100	31	0.	*	1	0330	106	204.	*	1	0600	181	42.	*	1	0830	256	6.
1	0102	32	0.	*	1	0332	107	200.	*	1	0602	182	41.	*	1	0832	257	6.
1	0104	33	0.	*	1	0334	108	197.	*	1	0604	183	41.	*	1	0834	258	6.
1	0106	34	0.	*	1	0336	109	194.	*	1	0606	184	40.	*	1	0836	259	6.
1	0108	35	0.	*	1	0338	110	190.	*	1	0608	185	39.	*	1	0838	260	6.
1	0110	36	0.	*	1	0340	111	186.	*	1	0610	186	38.	*	1	0840	261	6.
1	0112	37	0.	*	1	0342	112	181.	*	1	0612	187	37.	*	1	0842	262	5.
1	0114	38	0.	*	1	0344	113	176.	*	1	0614	188	37.	*	1	0844	263	5.
1	0116	39	0.	*	1	0346	114	171.	*	1	0616	189	36.	*	1	0846	264	5.
1	0118	40	0.	*	1	0348	115	166.	*	1	0618	190	35.	*	1	0848	265	5.
1	0120	41	0.	*	1	0350	116	162.	*	1	0620	191	34.	*	1	0850	266	5.
1	0122	42	0.	*	1	0352	117	157.	*	1	0622	192	33.	*	1	0852	267	5.
1	0124	43	0.	*	1	0354	118	153.	*	1	0624	193	33.	*	1	0854	268	5.
1	0126	44	0.	*	1	0356	119	150.	*	1	0626	194	32.	*	1	0856	269	4.
1	0128	45	0.	*	1	0358	120	146.	*	1	0628	195	31.	*	1	0858	270	4.
1	0130	46	0.	*	1	0400	121	143.	*	1	0630	196	31.	*	1	0900	271	4.
1	0132	47	0.	*	1	0402	122	140.	*	1	0632	197	30.	*	1	0902	272	4.
1	0134	48	0.	*	1	0404	123	138.	*	1	0634	198	29.	*	1	0904	273	4.
1	0136	49	0.	*	1	0406	124	135.	*	1	0636	199	28.	*	1	0906	274	4.
1	0138	50	0.	*	1	0408	125	133.	*	1	0638	200	28.	*	1	0908	275	4.
1	0140	51	0.	*	1	0410	126	131.	*	1	0640	201	27.	*	1	0910	276	4.
1	0142	52	0.	*	1	0412	127	128.	*	1	0642	202	27.	*	1	0912	277	4.

1	0144	53	0.	*	1	0414	128	126.	*	1	0644	203	26.	*	1	0914	278	3.
1	0146	54	0.	*	1	0416	129	124.	*	1	0646	204	25.	*	1	0916	279	3.
1	0148	55	0.	*	1	0418	130	123.	*	1	0648	205	25.	*	1	0918	280	3.
1	0150	56	0.	*	1	0420	131	121.	*	1	0650	206	24.	*	1	0920	281	3.
1	0152	57	0.	*	1	0422	132	119.	*	1	0652	207	24.	*	1	0922	282	3.
1	0154	58	0.	*	1	0424	133	117.	*	1	0654	208	23.	*	1	0924	283	3.
1	0156	59	0.	*	1	0426	134	116.	*	1	0656	209	22.	*	1	0926	284	3.
1	0158	60	0.	*	1	0428	135	114.	*	1	0658	210	22.	*	1	0928	285	3.
1	0200	61	0.	*	1	0430	136	113.	*	1	0700	211	21.	*	1	0930	286	3.
1	0202	62	0.	*	1	0432	137	111.	*	1	0702	212	21.	*	1	0932	287	3.
1	0204	63	0.	*	1	0434	138	110.	*	1	0704	213	20.	*	1	0934	288	3.
1	0206	64	0.	*	1	0436	139	108.	*	1	0706	214	20.	*	1	0936	289	3.
1	0208	65	0.	*	1	0438	140	107.	*	1	0708	215	20.	*	1	0938	290	2.
1	0210	66	0.	*	1	0440	141	105.	*	1	0710	216	19.	*	1	0940	291	2.
1	0212	67	1.	*	1	0442	142	104.	*	1	0712	217	19.	*	1	0942	292	2.
1	0214	68	1.	*	1	0444	143	102.	*	1	0714	218	18.	*	1	0944	293	2.
1	0216	69	1.	*	1	0446	144	100.	*	1	0716	219	18.	*	1	0946	294	2.
1	0218	70	1.	*	1	0448	145	98.	*	1	0718	220	17.	*	1	0948	295	2.
1	0220	71	1.	*	1	0450	146	96.	*	1	0720	221	17.	*	1	0950	296	2.
1	0222	72	1.	*	1	0452	147	94.	*	1	0722	222	17.	*	1	0952	297	2.
1	0224	73	2.	*	1	0454	148	91.	*	1	0724	223	16.	*	1	0954	298	2.
1	0226	74	2.	*	1	0456	149	89.	*	1	0726	224	16.	*	1	0956	299	2.
1	0228	75	2.	*	1	0458	150	87.	*	1	0728	225	15.	*	1	0958	300	2.
				*					*					*				

****

PEAK FLOW	TIME		MAXIMUM AVERAGE FLOW			
			6-HR	24-HR	72-HR	9.97-HR
+ (CFS)	(HR)					
		(CFS)				
+ 342.	3.17		74.	45.	45.	45.
		(INCHES)	0.982	0.996	0.996	0.996
		(AC-FT)	36.	37.	37.	37.

CUMULATIVE AREA = 0.70 SQ MI

*** ***

```
             **************
             *            *
480 KK       *    050660  *      COMBINE
             *            *
             **************
```

```
482 KO          OUTPUT CONTROL VARIABLES
                      IPRNT          2  PRINT CONTROL
                      IPLOT          0  PLOT CONTROL
                      QSCAL         0.  HYDROGRAPH PLOT SCALE

483 HC          HYDROGRAPH COMBINATION
                      ICOMP          2  NUMBER OF HYDROGRAPHS TO COMBINE

                                                  ***
```

****

HYDROGRAPH AT STATION 050660
SUM OF 2 HYDROGRAPHS

****

DA	MON	HRMN	ORD	FLOW	DA	MON	HRMN	ORD	FLOW	DA	MON	HRMN	ORD	FLOW	DA	MON	HRMN	ORD	FLOW
1		0000	1	0.	1		0230	76	2.	1		0500	151	91.	1		0730	226	16.
1		0002	2	0.	1		0232	77	3.	1		0502	152	89.	1		0732	227	16.
1		0004	3	0.	1		0234	78	3.	1		0504	153	87.	1		0734	228	15.
1		0006	4	0.	1		0236	79	3.	1		0506	154	85.	1		0736	229	15.
1		0008	5	0.	1		0238	80	4.	1		0508	155	83.	1		0738	230	15.
1		0010	6	0.	1		0240	81	5.	1		0510	156	81.	1		0740	231	14.
1		0012	7	0.	1		0242	82	6.	1		0512	157	79.	1		0742	232	14.
1		0014	8	0.	1		0244	83	7.	1		0514	158	77.	1		0744	233	14.
1		0016	9	0.	1		0246	84	9.	1		0516	159	76.	1		0746	234	13.
1		0018	10	0.	1		0248	85	11.	1		0518	160	74.	1		0748	235	13.
1		0020	11	1.	1		0250	86	14.	1		0520	161	72.	1		0750	236	13.
1		0022	12	1.	1		0252	87	18.	1		0522	162	71.	1		0752	237	12.
1		0024	13	2.	1		0254	88	24.	1		0524	163	69.	1		0754	238	12.
1		0026	14	1.	1		0256	89	32.	1		0526	164	68.	1		0756	239	12.
1		0028	15	1.	1		0258	90	42.	1		0528	165	66.	1		0758	240	11.
1		0030	16	1.	1		0300	91	59.	1		0530	166	65.	1		0800	241	11.
1		0032	17	1.	1		0302	92	87.	1		0532	167	63.	1		0802	242	11.
1		0034	18	1.	1		0304	93	133.	1		0534	168	62.	1		0804	243	10.
1		0036	19	1.	1		0306	94	207.	1		0536	169	61.	1		0806	244	10.
1		0038	20	1.	1		0308	95	298.	1		0538	170	59.	1		0808	245	10.
1		0040	21	1.	1		0310	96	374.	1		0540	171	58.	1		0810	246	9.
1		0042	22	1.	1		0312	97	411.	1		0542	172	57.	1		0812	247	9.
1		0044	23	1.	1		0314	98	411.	1		0544	173	55.	1		0814	248	9.
1		0046	24	1.	1		0316	99	387.	1		0546	174	54.	1		0816	249	9.
1		0048	25	1.	1		0318	100	354.	1		0548	175	53.	1		0818	250	8.
1		0050	26	1.	1		0320	101	323.	1		0550	176	52.	1		0820	251	8.
1		0052	27	1.	1		0322	102	297.	1		0552	177	50.	1		0822	252	8.

1	0054	28	1.	*	1	0324	103	276.	*	1	0554	178	49.	*	1	0824	253	8.
1	0056	29	1.	*	1	0326	104	260.	*	1	0556	179	48.	*	1	0826	254	8.
1	0058	30	1.	*	1	0328	105	247.	*	1	0558	180	47.	*	1	0828	255	7.
1	0100	31	1.	*	1	0330	106	237.	*	1	0600	181	46.	*	1	0830	256	7.
1	0102	32	0.	*	1	0332	107	229.	*	1	0602	182	45.	*	1	0832	257	7.
1	0104	33	0.	*	1	0334	108	223.	*	1	0604	183	44.	*	1	0834	258	7.
1	0106	34	0.	*	1	0336	109	218.	*	1	0606	184	43.	*	1	0836	259	7.
1	0108	35	0.	*	1	0338	110	213.	*	1	0608	185	42.	*	1	0838	260	6.
1	0110	36	0.	*	1	0340	111	208.	*	1	0610	186	41.	*	1	0840	261	6.
1	0112	37	0.	*	1	0342	112	202.	*	1	0612	187	40.	*	1	0842	262	6.
1	0114	38	0.	*	1	0344	113	196.	*	1	0614	188	40.	*	1	0844	263	6.
1	0116	39	0.	*	1	0346	114	190.	*	1	0616	189	39.	*	1	0846	264	6.
1	0118	40	0.	*	1	0348	115	184.	*	1	0618	190	38.	*	1	0848	265	6.
1	0120	41	0.	*	1	0350	116	179.	*	1	0620	191	37.	*	1	0850	266	5.
1	0122	42	0.	*	1	0352	117	173.	*	1	0622	192	36.	*	1	0852	267	5.
1	0124	43	0.	*	1	0354	118	168.	*	1	0624	193	35.	*	1	0854	268	5.
1	0126	44	0.	*	1	0356	119	163.	*	1	0626	194	35.	*	1	0856	269	5.
1	0128	45	0.	*	1	0358	120	159.	*	1	0628	195	34.	*	1	0858	270	5.
1	0130	46	0.	*	1	0400	121	155.	*	1	0630	196	33.	*	1	0900	271	5.
1	0132	47	0.	*	1	0402	122	151.	*	1	0632	197	32.	*	1	0902	272	5.
1	0134	48	0.	*	1	0404	123	148.	*	1	0634	198	32.	*	1	0904	273	4.
1	0136	49	0.	*	1	0406	124	145.	*	1	0636	199	31.	*	1	0906	274	4.
1	0138	50	0.	*	1	0408	125	142.	*	1	0638	200	30.	*	1	0908	275	4.
1	0140	51	0.	*	1	0410	126	139.	*	1	0640	201	29.	*	1	0910	276	4.
1	0142	52	0.	*	1	0412	127	136.	*	1	0642	202	29.	*	1	0912	277	4.
1	0144	53	0.	*	1	0414	128	134.	*	1	0644	203	28.	*	1	0914	278	4.
1	0146	54	0.	*	1	0416	129	132.	*	1	0646	204	27.	*	1	0916	279	4.
1	0148	55	0.	*	1	0418	130	130.	*	1	0648	205	27.	*	1	0918	280	4.
1	0150	56	0.	*	1	0420	131	128.	*	1	0650	206	26.	*	1	0920	281	4.
1	0152	57	0.	*	1	0422	132	126.	*	1	0652	207	25.	*	1	0922	282	3.
1	0154	58	0.	*	1	0424	133	124.	*	1	0654	208	25.	*	1	0924	283	3.
1	0156	59	0.	*	1	0426	134	122.	*	1	0656	209	24.	*	1	0926	284	3.
1	0158	60	0.	*	1	0428	135	120.	*	1	0658	210	24.	*	1	0928	285	3.
1	0200	61	0.	*	1	0430	136	118.	*	1	0700	211	23.	*	1	0930	286	3.
1	0202	62	0.	*	1	0432	137	117.	*	1	0702	212	23.	*	1	0932	287	3.
1	0204	63	0.	*	1	0434	138	115.	*	1	0704	213	22.	*	1	0934	288	3.
1	0206	64	0.	*	1	0436	139	114.	*	1	0706	214	22.	*	1	0936	289	3.
1	0208	65	0.	*	1	0438	140	112.	*	1	0708	215	21.	*	1	0938	290	3.
1	0210	66	0.	*	1	0440	141	111.	*	1	0710	216	21.	*	1	0940	291	3.
1	0212	67	0.	*	1	0442	142	109.	*	1	0712	217	20.	*	1	0942	292	3.
1	0214	68	0.	*	1	0444	143	108.	*	1	0714	218	20.	*	1	0944	293	3.
1	0216	69	1.	*	1	0446	144	106.	*	1	0716	219	19.	*	1	0946	294	2.
1	0218	70	1.	*	1	0448	145	104.	*	1	0718	220	19.	*	1	0948	295	2.
1	0220	71	1.	*	1	0450	146	102.	*	1	0720	221	18.	*	1	0950	296	2.
1	0222	72	1.	*	1	0452	147	100.	*	1	0722	222	18.	*	1	0952	297	2.
1	0224	73	1.	*	1	0454	148	98.	*	1	0724	223	17.	*	1	0954	298	2.
1	0226	74	1.	*	1	0456	149	95.	*	1	0726	224	17.	*	1	0956	299	2.

```
    1     0228   75        2.   *    1     0458  150       93.   *    1     0728  225       17.   *    1     0958  300        2.
                                *                                 *                                 *
*****************************************************************************************************************************

  PEAK FLOW     TIME                          MAXIMUM AVERAGE FLOW
                                     6-HR       24-HR       72-HR      9.97-HR
+   (CFS)       (HR)
                            (CFS)
+     411.      3.20                  81.         49.         49.         49.
                         (INCHES)   1.020       1.035       1.035       1.035
                          (AC-FT)     40.         41.         41.         41.

                          CUMULATIVE AREA =    0.74 SQ MI


*** *** *** *** *** *** *** *** *** *** *** *** *** *** *** *** *** *** *** *** *** *** *** *** *** *** *** *** *** *** *** *** ***


            **************
            *            *
 493 KK     *    050131  *        COMBINE
            *            *
            **************

 495 KO          OUTPUT CONTROL VARIABLES
                       IPRNT          2  PRINT CONTROL
                       IPLOT          0  PLOT CONTROL
                       QSCAL         0.  HYDROGRAPH PLOT SCALE

 496 HC          HYDROGRAPH COMBINATION
                       ICOMP          2  NUMBER OF HYDROGRAPHS TO COMBINE

                                                      ***

*****************************************************************************************************************************

                                          HYDROGRAPH AT STATION   050131
                                               SUM OF  2 HYDROGRAPHS

*****************************************************************************************************************************
                                *                                 *                                 *
   DA MON HRMN  ORD      FLOW   *   DA MON HRMN  ORD      FLOW   *   DA MON HRMN  ORD      FLOW   *   DA MON HRMN  ORD      FLOW
                                *                                 *                                 *
    1     0000    1        0.   *    1     0230   76        2.   *    1     0500  151       95.   *    1     0730  226       17.
    1     0002    2        0.   *    1     0232   77        2.   *    1     0502  152       92.   *    1     0732  227       17.
```

1	0004	3	0.	*	1	0234	78	3.	*	1	0504	153	90.	*	1	0734	228	16.
1	0006	4	0.	*	1	0236	79	3.	*	1	0506	154	88.	*	1	0736	229	16.
1	0008	5	0.	*	1	0238	80	4.	*	1	0508	155	86.	*	1	0738	230	15.
1	0010	6	0.	*	1	0240	81	5.	*	1	0510	156	84.	*	1	0740	231	15.
1	0012	7	0.	*	1	0242	82	6.	*	1	0512	157	82.	*	1	0742	232	15.
1	0014	8	0.	*	1	0244	83	7.	*	1	0514	158	80.	*	1	0744	233	14.
1	0016	9	0.	*	1	0246	84	9.	*	1	0516	159	79.	*	1	0746	234	14.
1	0018	10	0.	*	1	0248	85	11.	*	1	0518	160	77.	*	1	0748	235	14.
1	0020	11	0.	*	1	0250	86	14.	*	1	0520	161	75.	*	1	0750	236	13.
1	0022	12	0.	*	1	0252	87	17.	*	1	0522	162	74.	*	1	0752	237	13.
1	0024	13	1.	*	1	0254	88	23.	*	1	0524	163	72.	*	1	0754	238	12.
1	0026	14	1.	*	1	0256	89	30.	*	1	0526	164	70.	*	1	0756	239	12.
1	0028	15	1.	*	1	0258	90	41.	*	1	0528	165	69.	*	1	0758	240	12.
1	0030	16	1.	*	1	0300	91	58.	*	1	0530	166	67.	*	1	0800	241	11.
1	0032	17	1.	*	1	0302	92	83.	*	1	0532	167	66.	*	1	0802	242	11.
1	0034	18	1.	*	1	0304	93	127.	*	1	0534	168	65.	*	1	0804	243	11.
1	0036	19	1.	*	1	0306	94	187.	*	1	0536	169	63.	*	1	0806	244	11.
1	0038	20	1.	*	1	0308	95	274.	*	1	0538	170	62.	*	1	0808	245	10.
1	0040	21	1.	*	1	0310	96	362.	*	1	0540	171	61.	*	1	0810	246	10.
1	0042	22	1.	*	1	0312	97	424.	*	1	0542	172	59.	*	1	0812	247	10.
1	0044	23	1.	*	1	0314	98	447.	*	1	0544	173	58.	*	1	0814	248	9.
1	0046	24	1.	*	1	0316	99	437.	*	1	0546	174	57.	*	1	0816	249	9.
1	0048	25	1.	*	1	0318	100	408.	*	1	0548	175	55.	*	1	0818	250	9.
1	0050	26	1.	*	1	0320	101	372.	*	1	0550	176	54.	*	1	0820	251	9.
1	0052	27	1.	*	1	0322	102	340.	*	1	0552	177	53.	*	1	0822	252	8.
1	0054	28	1.	*	1	0324	103	312.	*	1	0554	178	51.	*	1	0824	253	8.
1	0056	29	1.	*	1	0326	104	290.	*	1	0556	179	50.	*	1	0826	254	8.
1	0058	30	1.	*	1	0328	105	273.	*	1	0558	180	49.	*	1	0828	255	8.
1	0100	31	1.	*	1	0330	106	259.	*	1	0600	181	48.	*	1	0830	256	8.
1	0102	32	1.	*	1	0332	107	249.	*	1	0602	182	47.	*	1	0832	257	7.
1	0104	33	1.	*	1	0334	108	240.	*	1	0604	183	46.	*	1	0834	258	7.
1	0106	34	1.	*	1	0336	109	233.	*	1	0606	184	45.	*	1	0836	259	7.
1	0108	35	0.	*	1	0338	110	226.	*	1	0608	185	44.	*	1	0838	260	7.
1	0110	36	0.	*	1	0340	111	220.	*	1	0610	186	43.	*	1	0840	261	7.
1	0112	37	0.	*	1	0342	112	215.	*	1	0612	187	42.	*	1	0842	262	6.
1	0114	38	0.	*	1	0344	113	208.	*	1	0614	188	41.	*	1	0844	263	6.
1	0116	39	0.	*	1	0346	114	202.	*	1	0616	189	40.	*	1	0846	264	6.
1	0118	40	0.	*	1	0348	115	195.	*	1	0618	190	40.	*	1	0848	265	6.
1	0120	41	0.	*	1	0350	116	189.	*	1	0620	191	39.	*	1	0850	266	6.
1	0122	42	0.	*	1	0352	117	183.	*	1	0622	192	38.	*	1	0852	267	6.
1	0124	43	0.	*	1	0354	118	177.	*	1	0624	193	37.	*	1	0854	268	5.
1	0126	44	0.	*	1	0356	119	172.	*	1	0626	194	36.	*	1	0856	269	5.
1	0128	45	0.	*	1	0358	120	167.	*	1	0628	195	35.	*	1	0858	270	5.
1	0130	46	0.	*	1	0400	121	162.	*	1	0630	196	35.	*	1	0900	271	5.
1	0132	47	0.	*	1	0402	122	158.	*	1	0632	197	34.	*	1	0902	272	5.
1	0134	48	0.	*	1	0404	123	154.	*	1	0634	198	33.	*	1	0904	273	5.
1	0136	49	0.	*	1	0406	124	151.	*	1	0636	199	32.	*	1	0906	274	5.

1	0138	50	0.	*	1	0408	125	147.	*	1	0638	200	32.	*	1	0908	275	4.
1	0140	51	0.	*	1	0410	126	144.	*	1	0640	201	31.	*	1	0910	276	4.
1	0142	52	0.	*	1	0412	127	141.	*	1	0642	202	30.	*	1	0912	277	4.
1	0144	53	0.	*	1	0414	128	139.	*	1	0644	203	29.	*	1	0914	278	4.
1	0146	54	0.	*	1	0416	129	136.	*	1	0646	204	29.	*	1	0916	279	4.
1	0148	55	0.	*	1	0418	130	134.	*	1	0648	205	28.	*	1	0918	280	4.
1	0150	56	0.	*	1	0420	131	132.	*	1	0650	206	27.	*	1	0920	281	4.
1	0152	57	0.	*	1	0422	132	130.	*	1	0652	207	27.	*	1	0922	282	4.
1	0154	58	0.	*	1	0424	133	127.	*	1	0654	208	26.	*	1	0924	283	4.
1	0156	59	0.	*	1	0426	134	126.	*	1	0656	209	25.	*	1	0926	284	3.
1	0158	60	0.	*	1	0428	135	124.	*	1	0658	210	25.	*	1	0928	285	3.
1	0200	61	0.	*	1	0430	136	122.	*	1	0700	211	24.	*	1	0930	286	3.
1	0202	62	0.	*	1	0432	137	120.	*	1	0702	212	24.	*	1	0932	287	3.
1	0204	63	0.	*	1	0434	138	118.	*	1	0704	213	23.	*	1	0934	288	3.
1	0206	64	0.	*	1	0436	139	117.	*	1	0706	214	23.	*	1	0936	289	3.
1	0208	65	0.	*	1	0438	140	115.	*	1	0708	215	22.	*	1	0938	290	3.
1	0210	66	0.	*	1	0440	141	114.	*	1	0710	216	22.	*	1	0940	291	3.
1	0212	67	0.	*	1	0442	142	112.	*	1	0712	217	21.	*	1	0942	292	3.
1	0214	68	0.	*	1	0444	143	111.	*	1	0714	218	21.	*	1	0944	293	3.
1	0216	69	1.	*	1	0446	144	109.	*	1	0716	219	20.	*	1	0946	294	3.
1	0218	70	1.	*	1	0448	145	108.	*	1	0718	220	20.	*	1	0948	295	3.
1	0220	71	1.	*	1	0450	146	106.	*	1	0720	221	19.	*	1	0950	296	2.
1	0222	72	1.	*	1	0452	147	104.	*	1	0722	222	19.	*	1	0952	297	2.
1	0224	73	1.	*	1	0454	148	102.	*	1	0724	223	18.	*	1	0954	298	2.
1	0226	74	1.	*	1	0456	149	99.	*	1	0726	224	18.	*	1	0956	299	2.
1	0228	75	2.	*	1	0458	150	97.	*	1	0728	225	17.	*	1	0958	300	2.
				*					*					*				

****

PEAK FLOW	TIME		MAXIMUM AVERAGE FLOW			
			6-HR	24-HR	72-HR	9.97-HR
+ (CFS)	(HR)					
		(CFS)				
+ 447.	3.23		85.	52.	52.	52.
		(INCHES)	1.039	1.053	1.053	1.053
		(AC-FT)	42.	43.	43.	43.

CUMULATIVE AREA = 0.76 SQ MI

*** ***

****
* *

```
507 KK      *    051410  *         COMBINE
            *            *
            **************

509 KO          OUTPUT CONTROL VARIABLES
                      IPRNT           2  PRINT CONTROL
                      IPLOT           0  PLOT CONTROL
                      QSCAL          0.  HYDROGRAPH PLOT SCALE

510 HC          HYDROGRAPH COMBINATION
                      ICOMP           2  NUMBER OF HYDROGRAPHS TO COMBINE

                                                    ***
```

****

HYDROGRAPH AT STATION 051410
SUM OF 2 HYDROGRAPHS

****

DA	MON	HRMN	ORD	FLOW	DA	MON	HRMN	ORD	FLOW	DA	MON	HRMN	ORD	FLOW	DA	MON	HRMN	ORD	FLOW
1		0000	1	0.	1		0230	76	3.	1		0500	151	101.	1		0730	226	18.
1		0002	2	0.	1		0232	77	3.	1		0502	152	99.	1		0732	227	18.
1		0004	3	0.	1		0234	78	4.	1		0504	153	96.	1		0734	228	17.
1		0006	4	0.	1		0236	79	5.	1		0506	154	94.	1		0736	229	17.
1		0008	5	0.	1		0238	80	6.	1		0508	155	92.	1		0738	230	16.
1		0010	6	0.	1		0240	81	7.	1		0510	156	90.	1		0740	231	16.
1		0012	7	0.	1		0242	82	8.	1		0512	157	88.	1		0742	232	16.
1		0014	8	0.	1		0244	83	10.	1		0514	158	86.	1		0744	233	15.
1		0016	9	0.	1		0246	84	13.	1		0516	159	84.	1		0746	234	15.
1		0018	10	0.	1		0248	85	16.	1		0518	160	82.	1		0748	235	14.
1		0020	11	0.	1		0250	86	20.	1		0520	161	80.	1		0750	236	14.
1		0022	12	0.	1		0252	87	26.	1		0522	162	79.	1		0752	237	14.
1		0024	13	0.	1		0254	88	33.	1		0524	163	77.	1		0754	238	13.
1		0026	14	0.	1		0256	89	44.	1		0526	164	75.	1		0756	239	13.
1		0028	15	0.	1		0258	90	59.	1		0528	165	74.	1		0758	240	13.
1		0030	16	1.	1		0300	91	84.	1		0530	166	72.	1		0800	241	12.
1		0032	17	1.	1		0302	92	125.	1		0532	167	71.	1		0802	242	12.
1		0034	18	1.	1		0304	93	195.	1		0534	168	69.	1		0804	243	12.
1		0036	19	1.	1		0306	94	289.	1		0536	169	68.	1		0806	244	11.
1		0038	20	1.	1		0308	95	379.	1		0538	170	66.	1		0808	245	11.
1		0040	21	1.	1		0310	96	465.	1		0540	171	65.	1		0810	246	11.
1		0042	22	1.	1		0312	97	527.	1		0542	172	64.	1		0812	247	10.
1		0044	23	1.	1		0314	98	556.	1		0544	173	62.	1		0814	248	10.
1		0046	24	1.	1		0316	99	549.	1		0546	174	61.	1		0816	249	10.

1	0048	25	1.	*	1	0318	100	519.	*	1	0548	175	60.	*	1	0818	250	10.
1	0050	26	1.	*	1	0320	101	477.	*	1	0550	176	58.	*	1	0820	251	9.
1	0052	27	1.	*	1	0322	102	433.	*	1	0552	177	57.	*	1	0822	252	9.
1	0054	28	1.	*	1	0324	103	394.	*	1	0554	178	56.	*	1	0824	253	9.
1	0056	29	1.	*	1	0326	104	361.	*	1	0556	179	54.	*	1	0826	254	9.
1	0058	30	1.	*	1	0328	105	335.	*	1	0558	180	53.	*	1	0828	255	8.
1	0100	31	1.	*	1	0330	106	314.	*	1	0600	181	52.	*	1	0830	256	8.
1	0102	32	1.	*	1	0332	107	297.	*	1	0602	182	51.	*	1	0832	257	8.
1	0104	33	1.	*	1	0334	108	283.	*	1	0604	183	50.	*	1	0834	258	8.
1	0106	34	1.	*	1	0336	109	271.	*	1	0606	184	49.	*	1	0836	259	7.
1	0108	35	1.	*	1	0338	110	261.	*	1	0608	185	48.	*	1	0838	260	7.
1	0110	36	1.	*	1	0340	111	252.	*	1	0610	186	47.	*	1	0840	261	7.
1	0112	37	1.	*	1	0342	112	244.	*	1	0612	187	46.	*	1	0842	262	7.
1	0114	38	0.	*	1	0344	113	235.	*	1	0614	188	45.	*	1	0844	263	7.
1	0116	39	0.	*	1	0346	114	227.	*	1	0616	189	44.	*	1	0846	264	7.
1	0118	40	0.	*	1	0348	115	219.	*	1	0618	190	43.	*	1	0848	265	6.
1	0120	41	0.	*	1	0350	116	211.	*	1	0620	191	42.	*	1	0850	266	6.
1	0122	42	0.	*	1	0352	117	203.	*	1	0622	192	41.	*	1	0852	267	6.
1	0124	43	0.	*	1	0354	118	196.	*	1	0624	193	40.	*	1	0854	268	6.
1	0126	44	0.	*	1	0356	119	189.	*	1	0626	194	39.	*	1	0856	269	6.
1	0128	45	0.	*	1	0358	120	183.	*	1	0628	195	38.	*	1	0858	270	6.
1	0130	46	0.	*	1	0400	121	177.	*	1	0630	196	37.	*	1	0900	271	5.
1	0132	47	0.	*	1	0402	122	172.	*	1	0632	197	37.	*	1	0902	272	5.
1	0134	48	0.	*	1	0404	123	167.	*	1	0634	198	36.	*	1	0904	273	5.
1	0136	49	0.	*	1	0406	124	163.	*	1	0636	199	35.	*	1	0906	274	5.
1	0138	50	0.	*	1	0408	125	159.	*	1	0638	200	34.	*	1	0908	275	5.
1	0140	51	0.	*	1	0410	126	155.	*	1	0640	201	33.	*	1	0910	276	5.
1	0142	52	0.	*	1	0412	127	152.	*	1	0642	202	32.	*	1	0912	277	5.
1	0144	53	0.	*	1	0414	128	149.	*	1	0644	203	32.	*	1	0914	278	4.
1	0146	54	0.	*	1	0416	129	146.	*	1	0646	204	31.	*	1	0916	279	4.
1	0148	55	0.	*	1	0418	130	143.	*	1	0648	205	30.	*	1	0918	280	4.
1	0150	56	0.	*	1	0420	131	140.	*	1	0650	206	29.	*	1	0920	281	4.
1	0152	57	0.	*	1	0422	132	138.	*	1	0652	207	29.	*	1	0922	282	4.
1	0154	58	0.	*	1	0424	133	135.	*	1	0654	208	28.	*	1	0924	283	4.
1	0156	59	0.	*	1	0426	134	133.	*	1	0656	209	27.	*	1	0926	284	4.
1	0158	60	0.	*	1	0428	135	131.	*	1	0658	210	27.	*	1	0928	285	4.
1	0200	61	0.	*	1	0430	136	129.	*	1	0700	211	26.	*	1	0930	286	4.
1	0202	62	0.	*	1	0432	137	127.	*	1	0702	212	25.	*	1	0932	287	3.
1	0204	63	0.	*	1	0434	138	125.	*	1	0704	213	25.	*	1	0934	288	3.
1	0206	64	0.	*	1	0436	139	123.	*	1	0706	214	24.	*	1	0936	289	3.
1	0208	65	0.	*	1	0438	140	122.	*	1	0708	215	23.	*	1	0938	290	3.
1	0210	66	0.	*	1	0440	141	120.	*	1	0710	216	23.	*	1	0940	291	3.
1	0212	67	1.	*	1	0442	142	118.	*	1	0712	217	22.	*	1	0942	292	3.
1	0214	68	1.	*	1	0444	143	117.	*	1	0714	218	22.	*	1	0944	293	3.
1	0216	69	1.	*	1	0446	144	115.	*	1	0716	219	21.	*	1	0946	294	3.
1	0218	70	1.	*	1	0448	145	114.	*	1	0718	220	21.	*	1	0948	295	3.
1	0220	71	1.	*	1	0450	146	112.	*	1	0720	221	20.	*	1	0950	296	3.

1	0222	72	1.	*	1	0452	147	110.	*	1	0722	222	20.	*	1	0952	297	3.
1	0224	73	2.	*	1	0454	148	108.	*	1	0724	223	19.	*	1	0954	298	3.
1	0226	74	2.	*	1	0456	149	106.	*	1	0726	224	19.	*	1	0956	299	2.
1	0228	75	2.	*	1	0458	150	103.	*	1	0728	225	18.	*	1	0958	300	2.
				*					*					*				

****

PEAK FLOW	TIME		MAXIMUM AVERAGE FLOW			
			6-HR	24-HR	72-HR	9.97-HR
+ (CFS)	(HR)					
		(CFS)				
+ 556.	3.23		98.	60.	60.	60.
		(INCHES)	1.094	1.109	1.109	1.109
		(AC-FT)	49.	49.	49.	49.

CUMULATIVE AREA = 0.83 SQ MI

1

RUNOFF SUMMARY
FLOW IN CUBIC FEET PER SECOND
TIME IN HOURS, AREA IN SQUARE MILES

	OPERATION	STATION	PEAK FLOW	TIME OF PEAK	AVERAGE FLOW FOR MAXIMUM PERIOD 6-HOUR	24-HOUR	72-HOUR	BASIN AREA	MAXIMUM STAGE	TIME OF MAX STAGE
+	HYDROGRAPH AT	070808	12.	3.43	2.	1.	1.	0.02		
+	DIVERSION TO	808OUT	0.	3.43	0.	0.	0.	0.02		
+	HYDROGRAPH AT	808PP	12.	3.43	2.	1.	1.	0.02		
+	ROUTED TO	070610	12.	3.43	2.	1.	1.	0.02		
+	HYDROGRAPH AT	070610	5.	3.43	1.	0.	0.	0.01		
+	DIVERSION TO	610OUT	0.	3.40	0.	0.	0.	0.01		
+	HYDROGRAPH AT	610PP	5.	3.40	1.	0.	0.	0.01		

	2 COMBINED AT						
+		070610	17.	3.43	3.	2.	2.	0.02
	ROUTED TO						
+		070508	17.	3.43	3.	2.	2.	0.02
	HYDROGRAPH AT						
+		070508	4.	3.50	1.	0.	0.	0.01
	DIVERSION TO						
+		508OUT	0.	3.50	0.	0.	0.	0.01
	HYDROGRAPH AT						
+		508PP	4.	3.50	1.	0.	0.	0.01
	2 COMBINED AT						
+		070508	21.	3.47	3.	2.	2.	0.03
	ROUTED TO						
+		070010	21.	3.47	3.	2.	2.	0.03
	HYDROGRAPH AT						
+		070010	7.	3.43	1.	1.	1.	0.01
	DIVERSION TO						
+		010OUT	0.	3.43	0.	0.	0.	0.01
	HYDROGRAPH AT						
+		010PP	6.	3.43	1.	1.	1.	0.01
	2 COMBINED AT						
+		070010	27.	3.47	4.	3.	3.	0.04
	ROUTED TO						
+		070210	27.	3.47	4.	3.	3.	0.04
	HYDROGRAPH AT						
+		070209	12.	3.47	2.	1.	1.	0.02
	ROUTED TO						
+		070210	12.	3.47	2.	1.	1.	0.02
	HYDROGRAPH AT						
+		070210	5.	3.47	1.	0.	0.	0.01
	2 COMBINED AT						
+		070210	17.	3.47	3.	2.	2.	0.03

	DIVERSION TO							
+		210OUT	0.	3.43	0.	0.	0.	0.03
	HYDROGRAPH AT							
+		210PP	17.	3.43	3.	2.	2.	0.03
	2 COMBINED AT							
+		070210	44.	3.47	7.	4.	4.	0.07
	ROUTED TO							
+		050005	44.	3.47	7.	4.	4.	0.07
	HYDROGRAPH AT							
+		050005	21.	3.53	3.	2.	2.	0.04
	DIVERSION TO							
+		005OUT	0.	3.53	0.	0.	0.	0.04
	HYDROGRAPH AT							
+		005PP	21.	3.53	3.	2.	2.	0.04
	HYDROGRAPH AT							
+		070010	0.	3.37	0.	0.	0.	0.00
	ROUTED TO							
+		070020	0.	3.47	0.	0.	0.	0.00
	ROUTED TO							
+		070030	0.	3.67	0.	0.	0.	0.00
	HYDROGRAPH AT							
+		070030	5.	3.07	1.	0.	0.	0.00
	2 COMBINED AT							
+		070030	5.	3.07	1.	0.	0.	0.00
	ROUTED TO							
+		070040	5.	3.10	1.	0.	0.	0.00
	HYDROGRAPH AT							
+		070210	0.	3.47	0.	0.	0.	0.00
	ROUTED TO							
+		070220	0.	3.47	0.	0.	0.	0.00
	ROUTED TO							

+		070040	0.	3.77	0.	0.	0.	0.00		
	HYDROGRAPH AT									
+		070040	5.	3.20	1.	0.	0.	0.01		
	3 COMBINED AT									
+		070040	9.	3.13	1.	1.	1.	0.01		
	ROUTED TO									
+		070050	9.	3.17	1.	1.	1.	0.01		
	HYDROGRAPH AT									
+		070050	23.	3.07	2.	1.	1.	0.02		
	2 COMBINED AT									
+		070050	30.	3.10	4.	2.	2.	0.03		
	ROUTED TO									
+		070060	30.	3.13	4.	2.	2.	0.03		
	HYDROGRAPH AT									
+		070310	30.	3.07	3.	2.	2.	0.02		
	ROUTED TO									
+		070060	30.	3.10	3.	2.	2.	0.02		
	HYDROGRAPH AT									
+		070060	26.	3.10	3.	2.	2.	0.02		
	3 COMBINED AT									
+		070060	83.	3.10	9.	6.	6.	0.07		
	ROUTED TO									
+		070070	82.	3.13	9.	6.	6.	0.07		
	HYDROGRAPH AT									
+		070070	43.	3.07	4.	3.	3.	0.03		
	HYDROGRAPH AT									
+		070080	52.	3.13	4.	2.	2.	0.02		
	3 COMBINED AT									
+		070080	168.	3.13	17.	10.	10.	0.12		
	ROUTED TO									
+		07Det	41.	3.70	17.	10.	10.	0.12		
+									71.30	3.70

	DIVERSION TO						
+		07Qspl	0.	3.70	0.	0.	0.	0.12
	HYDROGRAPH AT						
+		07Qpip	41.	3.70	17.	10.	10.	0.12
	ROUTED TO						
+		07000A	41.	3.70	17.	10.	10.	0.12
	ROUTED TO						
+		07042A	41.	3.73	17.	10.	10.	0.12
	HYDROGRAPH AT						
+		070410	17.	3.13	2.	1.	1.	0.01
	ROUTED TO						
+		070420	17.	3.13	2.	1.	1.	0.01
	HYDROGRAPH AT						
+		070420	5.	3.20	0.	0.	0.	0.00
	2 COMBINED AT						
+		07042C	21.	3.17	2.	1.	1.	0.01
	DIVERSION TO						
+		70west	12.	3.17	0.	0.	0.	0.01
	HYDROGRAPH AT						
+		07042D	10.	3.17	2.	1.	1.	0.01
	2 COMBINED AT						
+		07042C	47.	3.53	19.	11.	11.	0.14
	ROUTED TO						
+		21000A	47.	3.57	19.	11.	11.	0.14
	ROUTED TO						
+		050030	47.	3.60	19.	11.	11.	0.14
	HYDROGRAPH AT						
+		050005	0.	3.40	0.	0.	0.	0.00
	ROUTED TO						
+		050010	0.	4.63	0.	0.	0.	0.00
	HYDROGRAPH AT						

+	050010	96.	3.13	8.	5.	5.	0.07		
2 COMBINED AT									
+	050010	96.	3.13	8.	5.	5.	0.07		
ROUTED TO									
+	050020	93.	3.17	8.	5.	5.	0.07		
HYDROGRAPH AT									
+	050210	100.	3.13	8.	5.	5.	0.05		
ROUTED TO									
+	210ST	0.	5.53	0.	0.	0.	0.05		
+								0.55	9.97
ROUTED TO									
+	050020	0.	4.73	0.	0.	0.	0.05		
HYDROGRAPH AT									
+	050020	13.	3.17	1.	1.	1.	0.01		
3 COMBINED AT									
+	050020	105.	3.17	10.	6.	6.	0.13		
DIVERSION TO									
+	020OUT	58.	3.17	9.	5.	5.	0.13		
HYDROGRAPH AT									
+	050020	47.	3.17	1.	1.	1.	0.13		
ROUTED TO									
+	050030	46.	3.20	1.	1.	1.	0.13		
HYDROGRAPH AT									
+	050030	54.	3.10	3.	2.	2.	0.02		
ROUTED TO									
+	030ST	20.	3.27	2.	1.	1.	0.02		
+								68.13	3.27
2 COMBINED AT									
+	ALLEY	63.	3.20	3.	2.	2.	0.15		
2 COMBINED AT									
+	050030	92.	3.20	22.	13.	13.	0.29		
ROUTED TO									

+		050050	91.	3.23	22.	13.	13.	0.29		
	HYDROGRAPH AT									
+		050040	105.	3.20	12.	7.	7.	0.10		
	ROUTED TO									
+		40STOR	37.	3.67	12.	7.	7.	0.10		
+									61.58	3.67
	ROUTED TO									
+		050050	37.	3.67	12.	7.	7.	0.10		
	HYDROGRAPH AT									
+		050310	11.	3.13	1.	1.	1.	0.01		
	ROUTED TO									
+		SRPDet	5.	3.37	1.	1.	1.	0.01		
+									54.43	3.37
	HYDROGRAPH AT									
+		S 64th	7.	3.30	1.	0.	0.	0.01		
	HYDROGRAPH AT									
+		050065	37.	3.07	2.	1.	1.	0.01		
	HYDROGRAPH AT									
+		050062	16.	3.10	1.	1.	1.	0.01		
	ROUTED TO									
+		050050	15.	3.13	1.	1.	1.	0.01		
	6 COMBINED AT									
+		050050	159.	3.23	39.	24.	24.	0.43		
	HYDROGRAPH AT									
+		050060	53.	3.17	5.	3.	3.	0.03		
	2 COMBINED AT									
+		050050	208.	3.20	44.	27.	27.	0.45		
	ROUTED TO									
+		05005A	208.	3.23	44.	27.	27.	0.45		
	ROUTED TO									
+		05Det	103.	3.83	43.	27.	27.	0.45		
+									50.97	3.83

	DIVERSION TO						
+		05Qspl	0.	3.83	0.	0.	0.	0.45
	HYDROGRAPH AT						
+		05Qpip	103.	3.83	43.	27.	27.	0.45
	ROUTED TO						
+		05DETA	103.	3.83	43.	27.	27.	0.45
	HYDROGRAPH AT						
+		050610	99.	3.17	10.	6.	6.	0.08
	2 COMBINED AT						
+		050610	137.	3.17	53.	32.	32.	0.54
	ROUTED TO						
+		05062A	136.	3.20	53.	32.	32.	0.54
	HYDROGRAPH AT						
+		050620	110.	3.17	12.	7.	7.	0.10
	2 COMBINED AT						
+		050620	243.	3.17	64.	39.	39.	0.63
	ROUTED TO						
+		05063A	243.	3.20	64.	39.	39.	0.63
	HYDROGRAPH AT						
+		050630	120.	3.13	9.	6.	6.	0.06
	2 COMBINED AT						
+		050630	342.	3.17	74.	45.	45.	0.70
	ROUTED TO						
+		05064A	339.	3.20	74.	45.	45.	0.70
	HYDROGRAPH AT						
+		050640	15.	3.10	1.	1.	1.	0.01
	2 COMBINED AT						
+		050640	349.	3.20	75.	46.	46.	0.70
	ROUTED TO						
+		05066A	347.	3.23	75.	46.	46.	0.70
	HYDROGRAPH AT						
+		050100	79.	3.17	6.	4.	4.	0.03

	2 COMBINED AT							
+		050660	411.	3.20	81.	49.	49.	0.74
	ROUTED TO							
+		05013A	409.	3.23	81.	49.	49.	0.74
	HYDROGRAPH AT							
+		050131	55.	3.13	4.	3.	3.	0.02
	2 COMBINED AT							
+		050131	447.	3.23	85.	52.	52.	0.76
	ROUTED TO							
+		05141A	443.	3.27	85.	52.	52.	0.76
	HYDROGRAPH AT							
+		051410	178.	3.13	13.	8.	8.	0.07
	2 COMBINED AT							
+		051410	556.	3.23	98.	60.	60.	0.83
	ROUTED TO							
+		05142A	551.	3.27	98.	60.	60.	0.83

1

SUMMARY OF KINEMATIC WAVE - MUSKINGUM-CUNGE ROUTING
(FLOW IS DIRECT RUNOFF WITHOUT BASE FLOW)

SUMMARIES REMOVED FOR PRINTOUT- SEE ELECTRONIC FILE

1 SUMMARY OF DAM OVERTOPPING/BREACH ANALYSIS FOR STATION 210ST
(PEAKS SHOWN ARE FOR INTERNAL TIME STEP USED DURING BREACH FORMATION)

PLAN 1 .....

	INITIAL VALUE	SPILLWAY CREST	TOP OF DAM
ELEVATION	0.00	1.00	1.00
STORAGE	0.	8.	8.
OUTFLOW	0.	0.	0.

RATIO OF PMF	MAXIMUM RESERVOIR W.S.ELEV	MAXIMUM DEPTH OVER DAM	MAXIMUM STORAGE AC-FT	MAXIMUM OUTFLOW CFS	DURATION OVER TOP HOURS	TIME OF MAX OUTFLOW HOURS	TIME OF FAILURE HOURS
1.00	0.55	0.00	4.	0.	0.00	9.97	0.00

1

SUMMARY OF DAM OVERTOPPING/BREACH ANALYSIS FOR STATION 030ST
(PEAKS SHOWN ARE FOR INTERNAL TIME STEP USED DURING BREACH FORMATION)

PLAN 1 .....

	INITIAL VALUE	SPILLWAY CREST	TOP OF DAM
ELEVATION	65.00	68.00	68.00
STORAGE	0.	1.	1.
OUTFLOW	0.	0.	0.

RATIO OF PMF	MAXIMUM RESERVOIR W.S.ELEV	MAXIMUM DEPTH OVER DAM	MAXIMUM STORAGE AC-FT	MAXIMUM OUTFLOW CFS	DURATION OVER TOP HOURS	TIME OF MAX OUTFLOW HOURS	TIME OF FAILURE HOURS
1.00	68.13	0.13	1.	20.	6.87	3.27	0.00

*** NORMAL END OF HEC-1 ***

INLET CALCULATIONS

HEC-12 Spreadsheets

FCDMC / HEC-12
Osborn Outfall
Pavement Drainage

JOB: MAG Roll Curb- 6" in macro

Street or Intersection: Thomas, 61st Pl and Catalina								
Clogging factors:			80%	50%	67%			
Return Period	10	10	10	10	10	10	10	10
HYDROLOGY COMPUTATION:								
Intersection Quadrant	S	S	S	S	S	SE	S	S
Computation	Thomas Street Capacity	Thomas Street Capacity	Thomas Gutter Capacity	Thomas Existing Inlet Inlet No. 1	Thomas S Inlet No. 1	61st Pl @ Catalina	Catalina @ 64th St.	Catalina @ 64th St. near 62nd Pl
Structure location or station (ft):				10+00 minus 5 feet	11+95	17+90		27+47
Contributing watershed area (acres):						**0.75**	**2.54**	
Composite Runoff Coefficient "C":	West of	West of	Check Capacity	Catch basin works		0.95	0.90	
Precipitation intensity (in/hr):	62nd St.	62nd St.	of 6" curb and gutter	in conjunction with		4.20	3.00	Assume
Time of Concentration Calculations:			at Sta 12+00	proposed basin at				half
Length of longest flow path (miles)	Peak flow	Peak flow		Sta 12+00		0.23	0.25	of
Slope of flow path (ft/mile)	from subbasin	from subbasins				34.0	5.0	contributing
Roughness Coefficient- See Table 3.1, FCDMC Manual	70410	70410				0.0408	0.0374	area
Kb Parameter		and 70420				-0.0065	-0.0065	produces
Kb Parameter						0.04	0.04	half
Time of Concentration (hrs)						0.20	0.41	peak
Subarea discharge Q (cfs):	5.0	21.0			21.0	3.0	6.9	
Previous by-pass flow (cfs):	0.0	0.0		12.2	0.0	0.0	0.0	
Discharge added by operator:	---	---	---	---	---	---	---	3.4
Total discharge Q (cfs):	**5.0**	**21.0**	**4.0**	**12.2**	**21.0**	**3.0**	**6.9**	**3.4**
SHOULDER AND GUTTER CONFIGURATION:		**Spread Exceeded**		**Spread = 19' at Sag- OK**				
Manning's n:	0.016	0.016	0.016	0.016	0.016	0.016	0.016	0.016
Longitudinal slope S (ft/ft):	0.0038	0.0008	0.0008	0.0008	0.0008	0.0057	0.0015	0.0015
Inlet type (1=grate, 2=side opening or slotted):	2	2	2	2	2	1	2	2
Longitudinal profile (1=on-grade, 2=sag):	1	1	1	2	1	1	1	1
Gutter Configuration (1=roll, 2=vertical):	2	2	2	2	2	1	1	1
Inlet description:	None	None	P-1569	P-1569	P-1569	P-1570	None	P-1569
Grate width:	0	0	0	0	0	2	0	0
Grate length:	0.0	0.0	0.0	0.0	0.0	6.0	0.0	0.0
Pavement cross-slope (Sx):	0.026	0.026	0.026	0.026	0.026	0.037	0.027	0.027
Width of gutter from flowline (ft):	0.83	0.83	0.083	0.083	0.083	0.42	0.42	0.42
Gutter depression from horizontal (ft):	0.083	0.083	0.083	0.083	0.083	0.042	0.042	0.042
Gutter cross-slope Sw: (S'w=Sw-Sx)	0.100	0.100	1.000	1.000	1.000	0.100	0.100	0.100
Half Street Width at Inlet (ft):	35.0	35.0	35.0	35.0	35.0	20.0	15.0	15.0
Flooded Width from flowline (ft): before inlet	**13.3**	**30.7**	**16.5**	**NA**	**30.8**	**7.7**	**16.7**	**12.9**
Depth at flowline (ft): before inlet	0.41	0.86	0.51	0.00	0.88	0.31	0.48	0.37
Water cross-area (sq.ft): before inlet	2.32	12.29	3.55	0.00	12.31	1.22	4.09	2.43
Velocity V for total discharge (fps): before inlet	2.15	1.71	1.13	0.00	1.71	2.45	1.68	1.41
Ratio of gutter depression flow to total Q (Eod):	17.9%	7.5%	1.6%	100.0%	0.8%	30.2%	19.1%	21.5%
Equivalent cross-slope (Se):	0.039	0.032	0.041	1.000	0.034	0.056	0.041	0.042
GRATE INLETS ON-GRADE:								
Ratio of grate frontal flow to total flow:	-----	-----	-----	-----	-----	44.1%	-----	-----
Inlet frontal flow in cfs (Qw):	-----	-----	-----	-----	-----	1.32	-----	-----
Vo for effective length (P-1-7/8, Chart 7 HEC 12):	-----	-----	-----	-----	-----	10.3	-----	-----
Fraction of frontal flow intercepted (Rf):	-----	-----	-----	-----	-----	100.0%	-----	-----
Side flow in cfs (Qs):	-----	-----	-----	-----	-----	1.67	-----	-----
Effective grate length w/clogging:	-----	-----	-----	-----	-----	3.00	-----	-----
Fraction of side flow interception (Rs):	-----	-----	-----	-----	-----	37.7%	-----	-----
Grate Efficiency (E):	-----	-----	-----	-----	-----	65.2%	-----	-----
Total flow intercepted (cfs):	-----	-----	-----	-----	-----	**1.95**	-----	-----
Grate flow-by (cfs):	-----	-----	-----	-----	-----	**1.04**	-----	-----
SLOTTED DRAINS AND SIDE-OPENING INLETS ON-GRADE:								
Length required for total interception (ft): w/clogging	-----	-----	-----	-----	23.2	-----	-----	11.4
Length of inlet provided L (ft):					9			13
Interception for length L (cfs):	-----	-----	-----	-----	8.77	-----	-----	3.43
Efficiency for length L:	-----	-----	-----	-----	0.4	-----	-----	1.0
Slotted drain or side opening flow-by (cfs):	-----	-----	-----	-----	**12.23**	-----	-----	**0.00**
INTERCEPTION CAPACITY OF INLETS IN SAG LOCATION:								
Head available for weir flow at sag (ft):				0.5				
Capacity of grate in a sag (3-sided weir):	-----	-----	-----	**0.00**	-----	-----	-----	-----
Capacity of grate in a sag (4-sided weir):	-----	-----	-----	0.0	-----	-----	-----	-----
Length provided of curb-opening inlet at sag:				15.0				
Capacity of curb-opening inlet in a sag (weir):	-----	-----	-----	12.2	-----	-----	-----	-----
Length of the vertical curve (ft x 100):								
approach grade #1 (%):								
approach grade #2 (%):								
ABS (algebraic diff. in approach grades) (%):	-----	-----	-----	0.00	-----	-----	-----	-----
K = Min(Lc/A,167) (Table 5, HEC-12):	-----	-----	-----	#DIV/0!	-----	-----	-----	-----
Flanking inlets maximum distance (ft):	-----	-----	-----	#DIV/0!	-----	-----	-----	-----
TRIANGULAR MEDIAN HYDRAULICS:								
Manning's n for median finish:								
Cross-slope of median sides:								
Depth of flow at center of median (ft):	-----	-----	-----	-----	-----	-----	-----	-----
Flooded width in the median (ft):	-----	-----	-----	-----	-----	-----	-----	-----
Water velocity in the median (fps):	-----	-----	-----	-----	-----	-----	-----	-----

Design by: Alan Humphrey

FCDMC / HEC-12
Osborn Outfall
Pavement Drainage

JOB: MAG Roll Curb- 6" in macro

Street or Intersection: Thomas, 61st Pl and Catalina

Return Period	10
HYDROLOGY COMPUTATION:	
Intersection Quadrant	S
Computation	Catalina @ 64th St.
Structure location or station (ft):	34+71
Contributing watershed area (acres):	
Composite Runoff Coefficient "C":	
Precipitation intensity (in/hr):	Half of peak
Time of Concentration Calculations:	plus bypass
Length of longest flow path (miles)	from
Slope of flow path (ft/mile)	Sta 27+40
Roughness Coefficient- See Table 3.1, FCDMC Manual	
Kb Parameter	
Kb Parameter	
Time of Concentration (hrs)	
Subarea discharge Q (cfs):	
Previous by-pass flow (cfs):	0.0
Discharge added by operator:	3.4
Total discharge Q (cfs):	**3.4**
SHOULDER AND GUTTER CONFIGURATION:	
Manning's n:	0.016
Longitudinal slope S (ft/ft):	0.0015
Inlet type (1=grate, 2=side opening or slotted):	2
Longitudinal profile (1=on-grade, 2=sag):	1
Gutter Configuration (1=roll, 2=vertical):	1
Inlet description:	P-1569
Grate width:	0
Grate length:	0.0
Pavement cross-slope (Sx):	0.027
Width of gutter from flowline (ft):	0.42
Gutter depression from horizontal (ft):	0.042
Gutter cross-slope Sw: (S'w=Sw-Sx)	0.100
Half Street Width at Inlet (ft):	15.0
Flooded Width from flowline (ft): before inlet	**12.9**
Depth at flowline (ft): before inlet	0.37
Water cross-area (sq.ft): before inlet	2.43
Velocity V for total discharge (fps): before inlet	1.41
Ratio of gutter depression flow to total Q (Eod):	21.5%
Equivalent cross-slope (Se):	0.042
GRATE INLETS ON-GRADE:	
Ratio of grate frontal flow to total flow:	-----
Inlet frontal flow in cfs (Qw):	-----
Vo for effective length (P-1-7/8, Chart 7 HEC 12):	-----
Fraction of frontal flow intercepted (Rf):	-----
Side flow in cfs (Qs):	-----
Effective grate length w/clogging:	-----
Fraction of side flow interception (Rs):	-----
Grate Efficiency (E):	-----
Total flow intercepted (cfs):	-----
Grate flow-by (cfs):	-----
SLOTTED DRAINS AND SIDE-OPENING INLETS ON-GRADE:	
Length required for total interception (ft): w/clogging	11.4
Length of inlet provided L (ft):	13
Interception for length L (cfs):	3.43
Efficiency for length L:	1.0
Slotted drain or side opening flow-by (cfs):	**0.00**
INTERCEPTION CAPACITY OF INLETS IN SAG LOCATION:	
Head available for weir flow at sag (ft):	
Capacity of grate in a sag (3-sided weir):	-----
Capacity of grate in a sag (4-sided weir):	-----
Length provided of curb-opening inlet at sag:	
Capacity of curb-opening inlet in a sag (weir):	-----
Length of the vertical curve (ft x 100):	
approach grade #1 (%):	
approach grade #2 (%):	
ABS (algebraic diff. in approach grades) (%):	-----
K = Min(Lc/A,167) (Table 5, HEC-12):	-----
Flanking inlets maximum distance (ft):	-----
TRIANGULAR MEDIAN HYDRAULICS:	
Manning's n for median finish:	
Cross-slope of median sides:	
Depth of flow at center of median (ft):	-----
Flooded width in the median (ft):	-----
Water velocity in the median (fps):	-----

Design by: Alan Humphrey

FCDMC / HEC-12
Osborn Outfall
Pavement Drainage

JOB: MAG Roll Curb- 6" in macro

	Clogging factors:		80%	50%	67%		
Street or Intersection: Osborn and Navajo							
Return Period	10	10	10	10	10	10	10
HYDROLOGY COMPUTATION:							
Intersection Quadrant	EN	EN	EN	SE	SE	SE	SE
Computation	1/2 Street Capacity	Curb Full Capacity	Inlet No. 1 Design	1/2 Street Capacity	Curb Full Capacity	Inlet No. 1 Design	Inlet No. 2 Design
Structure location or station (ft):			50' left @ Navajo			68+90, 72' LT	68+90, 58' LT
Contributing watershed area (acres):							
Composite Runoff Coefficient "C":	Max Depth =0.77	Design for curb full condition	HEC-1 proportional flow=49 cfs	Max Depth =0.65	Design for curb full condition	Runoff in north gutter exceeds half street capacity.	
Precipitation intensity (in/hr):							
Time of Concentration Calculations:							
Length of longest flow path (miles)							
Slope of flow path (ft/mile)							
Roughness Coefficient- See Table 3.1, FCDMC Manual							
Kb Parameter						Expected flow =49-14.5=34.5 cfs which is greater than curb full capacity	Bypass from Inlet No. 1
Kb Parameter							
Time of Concentration (hrs)							
Subarea discharge Q (cfs):							3.1
Previous by-pass flow (cfs):							
Discharge added by operator:							
Total discharge Q (cfs):	**14.5**	**4.5**	**4.5**	**16.0**	**7.5**	**7.5**	**3.1**
SHOULDER AND GUTTER CONFIGURATION:							
Manning's n:	0.016	0.016	0.016	0.016	0.016	0.016	0.016
Longitudinal slope S (ft/ft):	0.0013	0.0013	0.0013	0.0026	0.0026	0.0026	0.0026
Inlet type (1=grate, 2=side opening or slotted):	2	2	2	2	2	1	1
Longitudinal profile (1=on-grade, 2=sag):	1	1	1	1	1	1	1
Gutter Configuration (1=roll, 2=vertical):	2	2	2	2	2	2	2
Inlet description:	None	None	P-1569	None	None	P-1570	P-1570
Grate width:	0	0	0	0	0	2	2
Grate length:	0.0	0.0	0.0	0.0	0.0	6.0	6.0
Pavement cross-slope (Sx):	0.039	0.039	0.039	0.030	0.030	0.030	0.030
Width of gutter from flowline (ft):	1.42	1.42	1.42	1.42	1.42	1.42	1.42
Gutter depression from horizontal (ft):	0.083	0.083	0.083	0.083	0.083	0.083	0.083
Gutter cross-slope Sw: (S'w=Sw-Sx)	0.058	0.058	0.058	0.058	0.058	0.058	0.058
Half Street Width at Inlet (ft):	20.0	20.0	20.0	22.0	22.0	22.0	22.0
Flooded Width from flowline (ft): before inlet	**18.9**	**12.2**	**12.2**	**20.5**	**15.4**	**15.4**	**11.0**
Depth at flowline (ft): before inlet	0.77	0.50	0.50	0.65	0.50	0.50	0.37
Water cross-area (sq.ft): before inlet	7.01	2.91	2.91	6.23	3.52	3.52	1.81
Velocity V for total discharge (fps): before inlet	2.07	1.55	1.55	2.57	2.13	2.13	1.72
Ratio of gutter depression flow to total Q (Eod):	19.3%	29.2%	29.2%	18.3%	24.2%	24.2%	33.3%
Equivalent cross-slope (Se):	0.043	0.045	0.045	0.035	0.036	0.036	0.039
GRATE INLETS ON-GRADE:							
Ratio of grate frontal flow to total flow:	-----	-----	-----	-----	-----	32.3%	43.5%
Inlet frontal flow in cfs (Qw):	-----	-----	-----	-----	-----	2.4	1.4
Vo for effective length (P-1-7/8, Chart 7 HEC 12):	-----	-----	-----	-----	-----	10.30	10.30
Fraction of frontal flow intercepted (Rf):	-----	-----	-----	-----	-----	100.0%	100.0%
Side flow in cfs (Qs):	-----	-----	-----	-----	-----	5.08	1.76
Effective grate length w/clogging:	-----	-----	-----	-----	-----	3.00	3.00
Fraction of side flow interception (Rs):	-----	-----	-----	-----	-----	38.7%	48.2%
Grate Efficiency (E):	-----	-----	-----	-----	-----	58.5%	70.7%
Total flow intercepted (cfs):	-----	-----	-----	-----	-----	**4.39**	**2.20**
Grate flow-by (cfs):	-----	-----	-----	-----	-----	**3.1**	**0.9**
SLOTTED DRAINS AND SIDE-OPENING INLETS ON-GRADE:							
Length required for total interception (ft): w/clogging	-----	-----	11.9	-----	-----	-----	-----
Length of inlet provided L (ft):			20				
Interception for length L (cfs):	-----	-----	4.5	-----	-----	-----	-----
Efficiency for length L:	-----	-----	100.0%	-----	-----	-----	-----
Slotted drain or side opening flow-by (cfs):	-----	-----	**0.0**	-----	-----	-----	-----
INTERCEPTION CAPACITY OF INLETS IN SAG LOCATION:							
Head available for weir flow at sag (ft):							
Capacity of grate in a sag (3-sided weir):	-----	-----	-----	-----	-----	-----	-----
Capacity of grate in a sag (4-sided weir):	-----	-----	-----	-----	-----	-----	-----
Length provided of curb-opening inlet at sag:							
Capacity of curb-opening inlet in a sag (weir):	-----	-----	-----	-----	-----	-----	-----
Length of the vertical curve (ft x 100):							
approach grade #1 (%):							
approach grade #2 (%):							
ABS (algebraic diff. in approach grades) (%):	-----	-----	-----	-----	-----	-----	-----
K = Min(Lc/A,167) (Table 5, HEC-12):	-----	-----	-----	-----	-----	-----	-----
Flanking inlets maximum distance (ft):	-----	-----	-----	-----	-----	-----	-----
TRIANGULAR MEDIAN HYDRAULICS:							
Manning's n for median finish:							
Cross-slope of median sides:							
Depth of flow at center of median (ft):	-----	-----	-----	-----	-----	-----	-----
Flooded width in the median (ft):	-----	-----	-----	-----	-----	-----	-----
Water velocity in the median (fps):	-----	-----	-----	-----	-----	-----	-----

Design by: Alan Humphrey

FCDMC / HEC-12
Osborn Outfall
Pavement Drainage

JOB: MAG Roll Curb- 6" in macro

	Clogging factors:		80%	50%	67%				
Street or Intersection: Osborn and Pinto									
Return Period	10	10	10	10	10	10	10	10	10
HYDROLOGY COMPUTATION:									
Intersection Quadrant	WN	WN	WN	NW	NW	NW	NE	NE	NE
Computation	1/2 Street Capacity	Max Spread	Inlet No. 1 Design	Curb Full Capacity	1/2 Street Capacity	Inlet No. 1 Design	Curb Full Capacity	1/2 Street Capacity	Inlet No. 1 Design
Structure location or station (ft):			71+80			72+10			72+50
Contributing watershed area (acres):									
Composite Runoff Coefficient "C":	Max Depth =0.65	Maintain 6 feet dry pavement each side.	HEC-1 Proportional Flow Q=1.9 cfs		Max Depth =0.56	Design for curb full condition.		Max Depth =0.56	Design for curb full condition.
Precipitation intensity (in/hr):									
Time of Concentration Calculations:									
Length of longest flow path (miles)									
Slope of flow path (ft/mile)						HEC-1 Proportional Flow Q=49 cfs			10-yr flow to overtop crown on Pinto from west.
Roughness Coefficient- See Table 3.1, FCDMC Manual									
Kb Parameter									
Kb Parameter									
Time of Concentration (hrs)									
Subarea discharge Q (cfs):									
Previous by-pass flow (cfs):									
Discharge added by operator:			1.9						
Total discharge Q (cfs):	**11.5**	**6.0**	**1.9**	**3.5**	**15.0**	**3.5**	**3.5**	**15.0**	**3.5**
SHOULDER AND GUTTER CONFIGURATION:									
Manning's n:	0.016	0.016	0.016	0.016	0.016	0.016	0.016	0.016	0.016
Longitudinal slope S (ft/ft):	0.0010	0.0010	0.0010	0.0041	0.0041	0.0041	0.0041	0.0041	0.0041
Inlet type (1=grate, 2=side opening or slotted):	2	2	2	2	2	2	2	2	2
Longitudinal profile (1=on-grade, 2=sag):	1	1	1	1	1	1	1	1	1
Gutter Configuration (1=roll, 2=vertical):	1	1	1	1	1	1	1	1	1
Inlet description:	None	None	P-1569	None	None	P-1569	None	None	P-1569
Grate width:	0	0	0	0	0	0	0	0	0
Grate length:	0.0	0.0	0.0	0.0	0.0	0.0	0.0	0.0	0.0
Pavement cross-slope (Sx):	0.033	0.033	0.033	0.033	0.033	0.033	0.033	0.033	0.033
Width of gutter from flowline (ft):	0.42	0.42	0.42	0.42	0.42	0.42	0.42	0.42	0.42
Gutter depression from horizontal (ft):	0.042	0.042	0.042	0.042	0.042	0.042	0.042	0.042	0.042
Gutter cross-slope Sw: (S'w=Sw-Sx)	0.100	0.100	0.100	0.100	0.100	0.100	0.100	0.100	0.100
Half Street Width at Inlet (ft):	21.0	21.0	21.0	17.0	17.0	17.0	17.0	17.0	
Flooded Width from flowline (ft): before inlet	**19.3**	**15.1**	**9.7**	**9.3**	**16.2**	**9.3**	**9.3**	**16.2**	**9.3**
Depth at flowline (ft): before inlet	0.65	0.52	0.34	0.33	0.56	0.33	0.33	0.56	0.33
Water cross-area (sq.ft): before inlet	6.68	4.10	1.72	1.60	4.79	1.60	1.60	4.79	1.60
Velocity V for total discharge (fps): before inlet	1.72	1.46	1.10	2.19	3.13	2.19	2.19	3.13	2.19
Ratio of gutter depression flow to total Q (Eod):	19.8%	21.6%	26.1%	26.8%	21.2%	26.8%	26.8%	21.2%	26.8%
Equivalent cross-slope (Se):	0.046	0.047	0.050	0.051	0.047	0.051	0.051	0.047	0.051
GRATE INLETS ON-GRADE:									
Ratio of grate frontal flow to total flow:	-----	-----	-----	-----	-----	-----	-----	-----	-----
Inlet frontal flow in cfs (Qw):	-----	-----	-----	-----	-----	-----	-----	-----	-----
Vo for effective length (P-1-7/8, Chart 7 HEC 12):	-----	-----	-----	-----	-----	-----	-----	-----	-----
Fraction of frontal flow intercepted (Rf):	-----	-----	-----	-----	-----	-----	-----	-----	-----
Side flow in cfs (Qs):	-----	-----	-----	-----	-----	-----	-----	-----	-----
Effective grate length w/clogging:	-----	-----	-----	-----	-----	-----	-----	-----	-----
Fraction of side flow interception (Rs):	-----	-----	-----	-----	-----	-----	-----	-----	-----
Grate Efficiency (E):	-----	-----	-----	-----	-----	-----	-----	-----	-----
Total flow intercepted (cfs):	-----	-----	-----	-----	-----	-----	-----	-----	-----
Grate flow-by (cfs):	-----	-----	-----	-----	-----	-----	-----	-----	-----
SLOTTED DRAINS AND SIDE-OPENING INLETS ON-GRADE:									
Length required for total interception (ft): w/clogging	-----	-----	7.1	-----	-----	13.9	-----	-----	13.9
Length of inlet provided L (ft):			20			20			20
Interception for length L (cfs):	-----	-----	1.9	-----	-----	3.5	-----	-----	3.5
Efficiency for length L:	-----	-----	100.0%	-----	-----	100.0%	-----	-----	100.0%
Slotted drain or side opening flow-by (cfs):	-----	-----	**0.0**	-----	-----	**0.0**	-----	-----	**0.0**
INTERCEPTION CAPACITY OF INLETS IN SAG LOCATION:									
Head available for weir flow at sag (ft):									
Capacity of grate in a sag (3-sided weir):	-----	-----	-----	-----	-----	-----	-----	-----	-----
Capacity of grate in a sag (4-sided weir):	-----	-----	-----	-----	-----	-----	-----	-----	-----
Length provided of curb-opening inlet at sag:									
Capacity of curb-opening inlet in a sag (weir):	-----	-----	-----	-----	-----	-----	-----	-----	-----
Length of the vertical curve (ft x 100):									
approach grade #1 (%):									
approach grade #2 (%):									
ABS (algebraic diff. in approach grades) (%):	-----	-----	-----	-----	-----	-----	-----	-----	-----
K = Min(Lc/A,167) (Table 5, HEC-12):	-----	-----	-----	-----	-----	-----	-----	-----	-----
Flanking inlets maximum distance (ft):	-----	-----	-----	-----	-----	-----	-----	-----	-----
TRIANGULAR MEDIAN HYDRAULICS:									
Manning's n for median finish:									
Cross-slope of median sides:									
Depth of flow at center of median (ft):	-----	-----	-----	-----	-----	-----	-----	-----	-----
Flooded width in the median (ft):	-----	-----	-----	-----	-----	-----	-----	-----	-----
Water velocity in the median (fps):	-----	-----	-----	-----	-----	-----	-----	-----	-----

Design by: Alan Humphrey

FCDMC / HEC-12
Osborn Outfall
Pavement Drainage

JOB: MAG Roll Curb- 6" in macro

	Clogging factors:		80%	50%	67%				
Street or Intersection: Osborn and 68th									
Return Period	10	10	10	10	10	10	10	10	10
HYDROLOGY COMPUTATION:									
Intersection Quadrant	WN	WN	WN	NW	NW	NW	NE	NE	NE
Computation	Max Spread	1/2 Street Capacity	Inlet No. 1 Design	Curb Full Capacity	1/2 Street Capacity	Inlet No. 1 Design	Curb Full Capacity	1/2 Street Capacity	Inlet No. 1 Design
Structure location or station (ft):			81+40			82+10			82+80
Contributing watershed area (acres):									
Composite Runoff Coefficient "C":	Maintain 6 feet dry pavement each side.	Max Depth d=0.64	HEC-1 Proportional Flow Q=5.6 cfs		4-inch median curb. Estimate capacity to toe of median curb. Max Depth d=.75	Design for curb full condition. HEC-1 Proportional Flow Q=88 cfs		4-inch median curb. Estimate capacity to toe of median curb. Max Depth d=.74	Design for curb full condition. 10-yr flow to overtop crown on 68th from west.
Precipitation intensity (in/hr):									
Time of Concentration Calculations:									
Length of longest flow path (miles)									
Slope of flow path (ft/mile)									
Roughness Coefficient- See Table 3.1, FCDMC Manual									
Kb Parameter									
Kb Parameter									
Time of Concentration (hrs)									
Subarea discharge Q (cfs):									
Previous by-pass flow (cfs):									
Discharge added by operator:			5.6						
Total discharge Q (cfs):	**10.0**	**23.0**	**5.6**	**4.0**	**42.0**	**4.0**	**3.5**	**33.0**	**3.5**
SHOULDER AND GUTTER CONFIGURATION:									
Manning's n:	0.016	0.016	0.016	0.016	0.016	0.016	0.016	0.016	0.016
Longitudinal slope S (ft/ft):	0.0039	0.0039	0.0039	0.0031	0.0031	0.0031	0.0035	0.0035	0.0035
Inlet type (1=grate, 2=side opening or slotted):	2	2	2	2	2	2	2	2	2
Longitudinal profile (1=on-grade, 2=sag):	1	1	1	1	1	1	1	1	1
Gutter Configuration (1=roll, 2=vertical):	1	1	1	1	1	1	1	1	1
Inlet description:	None	None	P-1569	None	None	P-1569	None	None	P-1569
Grate width:	0	0	0	0	0	0	0	0	0
Grate length:	0.0	0.0	0.0	0.0	0.0	0.0	0.0	0.0	0.0
Pavement cross-slope (Sx):	0.029	0.029	0.029	0.021	0.021	0.021	0.029	0.029	0.029
Width of gutter from flowline (ft):	0.42	0.42	0.42	0.42	0.42	0.42	0.42	0.42	0.42
Gutter depression from horizontal (ft):	0.042	0.042	0.042	0.042	0.042	0.042	0.042	0.042	0.042
Gutter cross-slope Sw: (S'w=Sw-Sx)	0.100	0.100	0.100	0.100	0.100	0.100	0.100	0.100	0.100
Half Street Width at Inlet (ft):	22.0	22.0	22.0	35.0	35.0	35.0	26.0	26.0	26.0
Flooded Width from flowline (ft): before inlet	**15.2**	**20.9**	**12.2**	**13.8**	**33.5**	**13.8**	**10.6**	**24.7**	**10.6**
Depth at flowline (ft): before inlet	0.47	0.64	0.39	0.33	0.75	0.33	0.33	0.74	0.33
Water cross-area (sq.ft): before inlet	3.71	6.95	2.40	2.20	12.90	2.20	1.76	9.54	1.76
Velocity V for total discharge (fps): before inlet	2.70	3.31	2.34	1.82	3.26	1.82	1.99	3.46	1.99
Ratio of gutter depression flow to total Q (Eod):	20.6%	18.3%	22.7%	19.4%	13.3%	19.4%	24.2%	17.1%	24.2%
Equivalent cross-slope (Se):	0.044	0.042	0.045	0.037	0.032	0.037	0.046	0.041	0.046
GRATE INLETS ON-GRADE:									
Ratio of grate frontal flow to total flow:	-----	-----	-----	-----	-----	-----	-----	-----	-----
Inlet frontal flow in cfs (Qw):	-----	-----	-----	-----	-----	-----	-----	-----	-----
Vo for effective length (P-1-7/8, Chart 7 HEC 12):	-----	-----	-----	-----	-----	-----	-----	-----	-----
Fraction of frontal flow intercepted (Rf):	-----	-----	-----	-----	-----	-----	-----	-----	-----
Side flow in cfs (Qs):	-----	-----	-----	-----	-----	-----	-----	-----	-----
Effective grate length w/clogging:	-----	-----	-----	-----	-----	-----	-----	-----	-----
Fraction of side flow interception (Rs):	-----	-----	-----	-----	-----	-----	-----	-----	-----
Grate Efficiency (E):	-----	-----	-----	-----	-----	-----	-----	-----	-----
Total flow intercepted (cfs):	-----	-----	-----	-----	-----	-----	-----	-----	-----
Grate flow-by (cfs):	-----	-----	-----	-----	-----	-----	-----	-----	-----
SLOTTED DRAINS AND SIDE-OPENING INLETS ON-GRADE:									
Length required for total interception (ft): w/clogging	-----	-----	18.0	-----	-----	16.5	-----	-----	14.2
Length of inlet provided L (ft):			20			20			20
Interception for length L (cfs):	-----	-----	5.6	-----	-----	4.0	-----	-----	3.5
Efficiency for length L:	-----	-----	100.0%	-----	-----	100.0%	-----	-----	100.0%
Slotted drain or side opening flow-by (cfs):	-----	-----	**0.0**	-----	-----	**0.0**	-----	-----	**0.0**
INTERCEPTION CAPACITY OF INLETS IN SAG LOCATION:									
Head available for weir flow at sag (ft):									
Capacity of grate in a sag (3-sided weir):	-----	-----	-----	-----	-----	-----	-----	-----	-----
Capacity of grate in a sag (4-sided weir):	-----	-----	-----	-----	-----	-----	-----	-----	-----
Length provided of curb-opening inlet at sag:									
Capacity of curb-opening inlet in a sag (weir):	-----	-----	-----	-----	-----	-----	-----	-----	-----
Length of the vertical curve (ft x 100):									
approach grade #1 (%):									
approach grade #2 (%):									
ABS (algebraic diff. in approach grades) (%):	-----	-----	-----	-----	-----	-----	-----	-----	-----
K = Min(Lc/A,167) (Table 5, HEC-12):	-----	-----	-----	-----	-----	-----	-----	-----	-----
Flanking inlets maximum distance (ft):	-----	-----	-----	-----	-----	-----	-----	-----	-----
TRIANGULAR MEDIAN HYDRAULICS:									
Manning's n for median finish:									
Cross-slope of median sides:									
Depth of flow at center of median (ft):	-----	-----	-----	-----	-----	-----	-----	-----	-----
Flooded width in the median (ft):	-----	-----	-----	-----	-----	-----	-----	-----	-----
Water velocity in the median (fps):	-----	-----	-----	-----	-----	-----	-----	-----	-----

Design by: Alan Humphrey

FCDMC / HEC-12
Osborn Outfall
Pavement Drainage

JOB: MAG Roll Curb- 6" in macro

Street or Intersection: Osborn and Supai									
Clogging factors:			80%	50%	67%				
Return Period	10	10	10	10	10	10	10	10	10
HYDROLOGY COMPUTATION:									
Intersection Quadrant	WN	WN	WN	WN	WN	NW	NW	NW	NE
Computation	Max Spread	1/2 Street Capacity	Inlet No. 1 Design	Inlet No. 2 Design	Inlet No. 3 Design	Curb Full Capacity	1/2 Street Capacity	Inlet No. 1 Design	Curb Full Capacity
Structure location or station (ft):			86+30	88+30	92+20			92+80	
Contributing watershed area (acres):									
Composite Runoff Coefficient "C":	Maintain	Max Depth	HEC-1	Inlet	Inlet		Max Depth	Design for	
Precipitation intensity (in/hr):	6 feet dry	d=0.53	Proportional	No. 1	No. 2		d=0.52	curb full	
Time of Concentration Calculations:	pavement		Flow	bypass	bypass			condition.	
Length of longest flow path (miles)	each side		Q=11 cfs	plus 1/4	plus 1/4				
Slope of flow path (ft/mile)			plus bypass	HEC-1 flows	HEC-1 flows			HEC-1	
Roughness Coefficient- See Table 3.1, FCDMC Manual			from 68th.					Proportional	
Kb Parameter			Too much flow					Flow	
Kb Parameter			for one inlet.					Q=43 cfs	
Time of Concentration (hrs)			Place 1st inlet at						
Subarea discharge Q (cfs):			half way point.						
Previous by-pass flow (cfs):			0.0	3.0	3.2				
Discharge added by operator:			5.5	2.7	2.7				
Total discharge Q (cfs):	**14.0**	**17.0**	**5.5**	**5.7**	**5.9**	**2.6**	**9.5**	**2.6**	**2.3**
SHOULDER AND GUTTER CONFIGURATION:									
Manning's n:	0.016	0.016	0.016	0.016	0.016	0.016	0.016	0.016	0.016
Longitudinal slope S (ft/ft):	0.0036	0.0036	0.0041	0.0041	0.0036	0.0028	0.0028	0.0028	0.0025
Inlet type (1=grate, 2=side opening or slotted):	2	2	1	1	2	2	2	2	2
Longitudinal profile (1=on-grade, 2=sag):	1	1	1	1	1	1	1	1	1
Gutter Configuration (1=roll, 2=vertical):	2	2	2	2	2	1	1	1	1
Inlet description:	None	None	P-1570	P-1570	P-1569	None	None	P-1569	None
Grate width:	0	0	2	2	2	0	0	0	0
Grate length:	0.0	0.0	6.0	6.0	6.0	0.0	0.0	0.0	0.0
Pavement cross-slope (Sx):	0.017	0.017	0.013	0.013	0.017	0.035	0.035	0.035	0.041
Width of gutter from flowline (ft):	1.42	1.42	1.42	1.42	1.42	0.42	0.42	0.42	0.42
Gutter depression from horizontal (ft):	0.083	0.083	0.083	0.083	0.083	0.042	0.042	0.042	0.042
Gutter cross-slope Sw: (S'w=Sw-Sx)	0.058	0.058	0.058	0.058	0.058	0.100	0.100	0.100	0.100
Half Street Width at Inlet (ft):	32.0	32.0	32.0	32.0	32.0	15.0	15.0	15.0	15.0
Flooded Width from flowline (ft): before inlet	**25.8**	**27.8**	**20.8**	**21.2**	**18.6**	**8.6**	**14.1**	**8.6**	**7.5**
Depth at flowline (ft): before inlet	0.50	0.53	0.34	0.34	0.37	0.33	0.52	0.33	0.33
Water cross-area (sq.ft): before inlet	5.72	6.62	2.87	2.96	2.97	1.45	3.86	1.45	1.33
Velocity V for total discharge (fps): before inlet	2.45	2.57	1.92	1.94	1.98	1.79	2.46	1.79	1.73
Ratio of gutter depression flow to total Q (Eod):	15.4%	14.3%	20.1%	19.8%	21.7%	28.2%	22.8%	28.2%	31.3%
Equivalent cross-slope (Se):	0.023	0.023	0.022	0.022	0.026	0.053	0.050	0.053	0.059
GRATE INLETS ON-GRADE:									
Ratio of grate frontal flow to total flow:	-----	-----	26.4%	25.9%	-----	-----	-----	-----	-----
Inlet frontal flow in cfs (Qw):	-----	-----	1.4	1.5	-----	-----	-----	-----	-----
Vo for effective length (P-1-7/8, Chart 7 HEC 12):	-----	-----	10.30	10.30	-----	-----	-----	-----	-----
Fraction of frontal flow intercepted (Rf):	-----	-----	100.0%	100.0%	-----	-----	-----	-----	-----
Side flow in cfs (Qs):	-----	-----	4.05	4.24	-----	-----	-----	-----	-----
Effective grate length w/clogging:	-----	-----	3.00	3.00	-----	-----	-----	-----	-----
Fraction of side flow interception (Rs):	-----	-----	25.2%	24.8%	-----	-----	-----	-----	-----
Grate Efficiency (E):	-----	-----	44.9%	44.3%	-----	-----	-----	-----	-----
Total flow intercepted (cfs):	-----	-----	**2.47**	**2.54**	-----	-----	-----	-----	-----
Grate flow-by (cfs):	-----	-----	**3.0**	**3.2**	-----	-----	-----	-----	-----
SLOTTED DRAINS AND SIDE-OPENING INLETS ON-GRADE:									
Length required for total interception (ft): w/clogging	-----	-----	-----	-----	25.0	-----	-----	10.7	-----
Length of inlet provided L (ft):					19			20	
Interception for length L (cfs):	-----	-----	-----	-----	4.3	-----	-----	2.6	-----
Efficiency for length L:	-----	-----	-----	-----	72.3%	-----	-----	100.0%	-----
Slotted drain or side opening flow-by (cfs):	-----	-----	-----	-----	**1.6**	-----	-----	**0.0**	-----
INTERCEPTION CAPACITY OF INLETS IN SAG LOCATION:									
Head available for weir flow at sag (ft):									
Capacity of grate in a sag (3-sided weir):	-----	-----	-----	-----	-----	-----	-----	-----	-----
Capacity of grate in a sag (4-sided weir):	-----	-----	-----	-----	-----	-----	-----	-----	-----
Length provided of curb-opening inlet at sag:									
Capacity of curb-opening inlet in a sag (weir):	-----	-----	-----	-----	-----	-----	-----	-----	-----
Length of the vertical curve (ft x 100):									
approach grade #1 (%):									
approach grade #2 (%):									
ABS (algebraic diff. in approach grades) (%):	-----	-----	-----	-----	-----	-----	-----	-----	-----
K = Min(Lc/A,167) (Table 5, HEC-12):	-----	-----	-----	-----	-----	-----	-----	-----	-----
Flanking inlets maximum distance (ft):	-----	-----	-----	-----	-----	-----	-----	-----	-----
TRIANGULAR MEDIAN HYDRAULICS:									
Manning's n for median finish:									
Cross-slope of median sides:									
Depth of flow at center of median (ft):	-----	-----	-----	-----	-----	-----	-----	-----	-----
Flooded width in the median (ft):	-----	-----	-----	-----	-----	-----	-----	-----	-----
Water velocity in the median (fps):	-----	-----	-----	-----	-----	-----	-----	-----	-----

Design by: Alan Humphrey

FCDMC / HEC-12
Osborn Outfall
Pavement Drainage

JOB: MAG Roll Curb- 6" in macro

Street or Intersection: Osborn and Supai

Return Period	10	10	10
HYDROLOGY COMPUTATION:			
Intersection Quadrant	NE	NE	ES
Computation	1/2 Street Capacity	Inlet No. 1 Design	1/2 Street Flow
Structure location or station (ft):		93+20	
Contributing watershed area (acres):			**0.37**
Composite Runoff Coefficient "C":	Max Depth	Design for	0.95
Precipitation intensity (in/hr):	d=0.61	curb full	3.80
Time of Concentration Calculations:		condition.	
Length of longest flow path (miles)			0.10
Slope of flow path (ft/mile)		10-yr flow to	20.7
Roughness Coefficient- See Table 3.1, FCDMC Manual		overtop	0.0428
Kb Parameter		crown on	-0.0065
Kb Parameter		Supai from	0.04
Time of Concentration (hrs)		west.	0.16
Subarea discharge Q (cfs):			1.4
Previous by-pass flow (cfs):			0.0
Discharge added by operator:			---
Total discharge Q (cfs):	**12.5**	**2.3**	**1.4**
SHOULDER AND GUTTER CONFIGURATION:			**No Inlet Needed**
Manning's n:	0.016	0.016	0.016
Longitudinal slope S (ft/ft):	0.0025	0.0025	0.0041
Inlet type (1=grate, 2=side opening or slotted):	2	1	2
Longitudinal profile (1=on-grade, 2=sag):	1	1	1
Gutter Configuration (1=roll, 2=vertical):	1	1	2
Inlet description:	None	P-1570	None
Grate width:	0	2	0
Grate length:	0.0	6.0	0.0
Pavement cross-slope (Sx):	0.041	0.041	0.007
Width of gutter from flowline (ft):	0.42	0.42	1.42
Gutter depression from horizontal (ft):	0.042	0.042	0.083
Gutter cross-slope Sw: (S'w=Sw-Sx)	0.100	0.100	0.058
Half Street Width at Inlet (ft):	15.0	15.0	32.0
Flooded Width from flowline (ft): before inlet	**14.4**	**7.5**	**18.3**
Depth at flowline (ft): before inlet	0.61	0.33	0.19
Water cross-area (sq.ft): before inlet	4.75	1.33	1.16
Velocity V for total discharge (fps): before inlet	2.63	1.73	1.17
Ratio of gutter depression flow to total Q (Eod):	24.2%	31.3%	27.9%
Equivalent cross-slope (Se):	0.055	0.059	0.021
GRATE INLETS ON-GRADE:			
Ratio of grate frontal flow to total flow:	-----	45.2%	-----
Inlet frontal flow in cfs (Qw):	-----	1.0	-----
Vo for effective length (P-1-7/8, Chart 7 HEC 12):	-----	10.30	-----
Fraction of frontal flow intercepted (Rf):	-----	100.0%	-----
Side flow in cfs (Qs):	-----	1.26	-----
Effective grate length w/clogging:	-----	3.00	-----
Fraction of side flow interception (Rs):	-----	55.8%	-----
Grate Efficiency (E):	-----	75.8%	-----
Total flow intercepted (cfs):	**-----**	**1.74**	**-----**
Grate flow-by (cfs):	**-----**	**0.6**	**-----**
SLOTTED DRAINS AND SIDE-OPENING INLETS ON-GRADE:			
Length required for total interception (ft): w/clogging	-----	-----	-----
Length of inlet provided L (ft):		0	
Interception for length L (cfs):	-----	-----	-----
Efficiency for length L:	-----	-----	-----
Slotted drain or side opening flow-by (cfs):	**-----**	**-----**	**-----**
INTERCEPTION CAPACITY OF INLETS IN SAG LOCATION:			
Head available for weir flow at sag (ft):			
Capacity of grate in a sag (3-sided weir):	**-----**	**-----**	**-----**
Capacity of grate in a sag (4-sided weir):	-----	-----	-----
Length provided of curb-opening inlet at sag:			
Capacity of curb-opening inlet in a sag (weir):	-----	-----	-----
Length of the vertical curve (ft x 100):			
approach grade #1 (%):			
approach grade #2 (%):			
ABS (algebraic diff. in approach grades) (%):	-----	-----	-----
K = Min(Lc/A,167) (Table 5, HEC-12):	-----	-----	-----
Flanking inlets maximum distance (ft):	-----	-----	-----
TRIANGULAR MEDIAN HYDRAULICS:			
Manning's n for median finish:			
Cross-slope of median sides:			
Depth of flow at center of median (ft):	-----	-----	-----
Flooded width in the median (ft):	-----	-----	-----
Water velocity in the median (fps):	-----	-----	-----

Design by: Alan Humphrey

FCDMC / HEC-12
Osborn Outfall
Pavement Drainage

JOB: MAG Roll Curb- 6" in macro

Street or Intersection: Osborn and 70th									
	Clogging factors:		80%	50%	67%				
Return Period	10	10	10	10	10	10	10	10	10
HYDROLOGY COMPUTATION:									
Intersection Quadrant	WN	WN	WN	WN	WN	WS	NW	NW	NW
Computation	Max Spread	1/2 Street Capacity	Check Exst. Inlet	Inlet No. 1 Design	Use Exst. Inlet	1/2 Street Flow	Curb Full Capacity	1/2 Street Capacity	Inlet No. 1 Design
Structure location or station (ft):				95+10					95+40
Contributing watershed area (acres):						0.92			
Composite Runoff Coefficient "C":	Maintain	Max Depth		Design for		0.95		Max Depth	Design for
Precipitation intensity (in/hr):	6 feet dry	d=0.46		max spread		3.80		d=0.64	curb full
Time of Concentration Calculations:	pavement			condition.					condition.
Length of longest flow path (miles)	each side.					0.24			
Slope of flow path (ft/mile)			HEC-1	HEC-1		23.7			HEC-1
Roughness Coefficient- See Table 3.1, FCDMC Manual			proportional	proportional	Bypass to	0.0402			Proportional
Kb Parameter			flow=2.8 cfs	flow=2.8 cfs	existing	-0.0065			Flow
Kb Parameter			plus bypass	plus bypass	inlet	0.04			Q=71 cfs
Time of Concentration (hrs)			from Supai	from Supai		0.24			
Subarea discharge Q (cfs):			1.6	1.6	1.0	3.3			
Previous by-pass flow (cfs):			2.8	2.8	-----	0.0			
Discharge added by operator:						---			
Total discharge Q (cfs):	**11.5**	**13.0**	**4.4**	**4.4**	**1.0**	**3.3**	**8.0**	**16.0**	**8.0**
			Inadequate			**Check Exst**			
SHOULDER AND GUTTER CONFIGURATION:			**Collection**			**Inlet**			
Manning's n:	0.016	0.016	0.016	0.016	0.016	0.016	0.016	0.016	0.016
Longitudinal slope S (ft/ft):	0.0040	0.0040	0.0040	0.0040	0.0040	0.0042	0.0032	0.0032	0.0032
Inlet type (1=grate, 2=side opening or slotted):	2	2	2	2	2	2	2	2	2
Longitudinal profile (1=on-grade, 2=sag):	1	1	1	1	1	1	1	1	1
Gutter Configuration (1=roll, 2=vertical):	2	2	2	2	2	2	2	2	2
Inlet description:	None	None	P-1569	P-1569	P-1569	None	None	None	P-1569
Grate width:	0	0	0	0	0	0	0	0	0
Grate length:	0.0	0.0	0.0	0.0	0.0	0.0	0.0	0.0	0.0
Pavement cross-slope (Sx):	0.014	0.014	0.014	0.014	0.014	0.038	0.032	0.032	0.032
Width of gutter from flowline (ft):	1.42	1.42	1.42	1.42	1.42	1.42	1.42	1.42	1.42
Gutter depression from horizontal (ft):	0.083	0.083	0.083	0.083	0.083	0.083	0.083	0.083	0.083
Gutter cross-slope Sw: (S'w=Sw-Sx)	0.058	0.058	0.058	0.058	0.058	0.058	0.058	0.058	0.058
Half Street Width at Inlet (ft):	32.0	32.0	32.0	32.0	32.0	32.0	20.0	20.0	20.0
Flooded Width from flowline (ft): before inlet	**26.1**	**27.3**	**18.1**	**18.1**	**9.9**	**8.8**	**14.4**	**18.7**	**14.4**
Depth at flowline (ft): before inlet	0.44	0.46	0.32	0.32	0.21	0.36	0.50	0.64	0.50
Water cross-area (sq.ft): before inlet	4.94	5.41	2.40	2.40	0.75	1.49	3.35	5.65	3.35
Velocity V for total discharge (fps): before inlet	2.33	2.40	1.85	1.85	1.31	2.22	2.39	2.83	2.39
Ratio of gutter depression flow to total Q (Eod):	15.6%	14.9%	23.0%	23.0%	42.3%	39.3%	25.5%	19.8%	25.5%
Equivalent cross-slope (Se):	0.021	0.021	0.025	0.025	0.033	0.046	0.039	0.037	0.039
GRATE INLETS ON-GRADE:									
Ratio of grate frontal flow to total flow:	-----	-----	-----	-----	-----	-----	-----	-----	-----
Inlet frontal flow in cfs (Qw):	-----	-----	-----	-----	-----	-----	-----	-----	-----
Vo for effective length (P-1-7/8, Chart 7 HEC 12):	-----	-----	-----	-----	-----	-----	-----	-----	-----
Fraction of frontal flow intercepted (Rf):	-----	-----	-----	-----	-----	-----	-----	-----	-----
Side flow in cfs (Qs):	-----	-----	-----	-----	-----	-----	-----	-----	-----
Effective grate length w/clogging:	-----	-----	-----	-----	-----	-----	-----	-----	-----
Fraction of side flow interception (Rs):	-----	-----	-----	-----	-----	-----	-----	-----	-----
Grate Efficiency (E):	-----	-----	-----	-----	-----	-----	-----	-----	-----
Total flow intercepted (cfs):	-----	-----	-----	-----	-----	-----	-----	-----	-----
Grate flow-by (cfs):	-----	-----	-----	-----	-----	-----	-----	-----	-----
SLOTTED DRAINS AND SIDE-OPENING INLETS ON-GRADE:									
Length required for total interception (ft): w/clogging	-----	-----	23.7	23.7	10.5	14.6	-----	-----	21.6
Length of inlet provided L (ft):			3	20	3	8			20
Interception for length L (cfs):	-----	-----	0.7	3.4	0.3	1.9	-----	-----	6.6
Efficiency for length L:	-----	-----	14.8%	77.8%	31.7%	56.2%	-----	-----	82.6%
Slotted drain or side opening flow-by (cfs):	-----	-----	**3.8**	**1.0**	**0.7**	**1.5**	-----	-----	**1.4**
INTERCEPTION CAPACITY OF INLETS IN SAG LOCATION:									
Head available for weir flow at sag (ft):									
Capacity of grate in a sag (3-sided weir):	-----	-----	-----	-----	-----	-----	-----	-----	-----
Capacity of grate in a sag (4-sided weir):	-----	-----	-----	-----	-----	-----	-----	-----	-----
Length provided of curb-opening inlet at sag:									
Capacity of curb-opening inlet in a sag (weir):	-----	-----	-----	-----	-----	-----	-----	-----	-----
Length of the vertical curve (ft x 100):									
approach grade #1 (%):									
approach grade #2 (%):									
ABS (algebraic diff. in approach grades) (%):	-----	-----	-----	-----	-----	-----	-----	-----	-----
K = Min(Lc/A,167) (Table 5, HEC-12):	-----	-----	-----	-----	-----	-----	-----	-----	-----
Flanking inlets maximum distance (ft):	-----	-----	-----	-----	-----	-----	-----	-----	-----
TRIANGULAR MEDIAN HYDRAULICS:									
Manning's n for median finish:									
Cross-slope of median sides:									
Depth of flow at center of median (ft):	-----	-----	-----	-----	-----	-----	-----	-----	-----
Flooded width in the median (ft):	-----	-----	-----	-----	-----	-----	-----	-----	-----
Water velocity in the median (fps):	-----	-----	-----	-----	-----	-----	-----	-----	-----

Design by: Alan Humphrey

FCDMC / HEC-12
Osborn Outfall
Pavement Drainage

JOB: MAG Roll Curb- 6" in macro

Street or Intersection: Osborn and 70th

Return Period	10	10	10	10
HYDROLOGY COMPUTATION:				
Intersection Quadrant	NE	NE	NE	EN
Computation	Curb Full Capacity	1/2 Street Capacity	Inlet No. 1 Design	Existing CB Curb opening- 8'
Structure location or station (ft):			95+80	96+20
Contributing watershed area (acres):				
Composite Runoff Coefficient "C":		Max Depth	Design for	Collect bypass
Precipitation intensity (in/hr):		d=0.62	curb full	from WN
Time of Concentration Calculations:			condition.	
Length of longest flow path (miles)				
Slope of flow path (ft/mile)			10-yr flow to	
Roughness Coefficient- See Table 3.1, FCDMC Manual			overtop	
Kb Parameter			crown on	
Kb Parameter			70th from	
Time of Concentration (hrs)			west.	
Subarea discharge Q (cfs):				
Previous by-pass flow (cfs):				1.0
Discharge added by operator:				
Total discharge Q (cfs):	**8.4**	**15.0**	**8.4**	**1.0**
SHOULDER AND GUTTER CONFIGURATION:				
Manning's n:	0.016	0.016	0.016	0.016
Longitudinal slope S (ft/ft):	0.0032	0.0032	0.0032	0.0080
Inlet type (1=grate, 2=side opening or slotted):	2	2	2	2
Longitudinal profile (1=on-grade, 2=sag):	1	1	1	1
Gutter Configuration (1=roll, 2=vertical):	2	2	2	2
Inlet description:	None	None	P-1569	P-1569
Grate width:	0	0	0	0
Grate length:	0.0	0.0	0.0	0.0
Pavement cross-slope (Sx):	0.031	0.031	0.031	0.003
Width of gutter from flowline (ft):	1.42	1.42	1.42	1.42
Gutter depression from horizontal (ft):	0.083	0.083	0.083	0.083
Gutter cross-slope Sw: (S'w=Sw-Sx)	0.058	0.058	0.058	0.058
Half Street Width at Inlet (ft):	20.0	20.0	20.0	20.0
Flooded Width from flowline (ft): before inlet	**15.0**	**18.7**	**15.0**	**22.9**
Depth at flowline (ft): before inlet	0.50	0.62	0.50	0.15
Water cross-area (sq.ft): before inlet	3.50	5.42	3.50	0.84
Velocity V for total discharge (fps): before inlet	2.40	2.77	2.40	1.17
Ratio of gutter depression flow to total Q (Eod):	24.7%	19.9%	24.7%	29.4%
Equivalent cross-slope (Se):	0.038	0.036	0.038	0.019
GRATE INLETS ON-GRADE:				
Ratio of grate frontal flow to total flow:	-----	-----	-----	-----
Inlet frontal flow in cfs (Qw):	-----	-----	-----	-----
Vo for effective length (P-1-7/8, Chart 7 HEC 12):	-----	-----	-----	-----
Fraction of frontal flow intercepted (Rf):	-----	-----	-----	-----
Side flow in cfs (Qs):	-----	-----	-----	-----
Effective grate length w/clogging:	-----	-----	-----	-----
Fraction of side flow interception (Rs):	-----	-----	-----	-----
Grate Efficiency (E):	-----	-----	-----	-----
Total flow intercepted (cfs):	-----	-----	-----	-----
Grate flow-by (cfs):	-----	-----	-----	-----
SLOTTED DRAINS AND SIDE-OPENING INLETS ON-GRADE:				
Length required for total interception (ft): w/clogging	-----	-----	22.3	17.9
Length of inlet provided L (ft):			13	8
Interception for length L (cfs):	-----	-----	4.9	0.5
Efficiency for length L:	-----	-----	58.9%	47.3%
Slotted drain or side opening flow-by (cfs):	-----	-----	**3.5**	**0.5**
INTERCEPTION CAPACITY OF INLETS IN SAG LOCATION:				
Head available for weir flow at sag (ft):				
Capacity of grate in a sag (3-sided weir):	-----	-----	-----	-----
Capacity of grate in a sag (4-sided weir):	-----	-----	-----	-----
Length provided of curb-opening inlet at sag:				
Capacity of curb-opening inlet in a sag (weir):	-----	-----	-----	-----
Length of the vertical curve (ft x 100):				
approach grade #1 (%):				
approach grade #2 (%):				
ABS (algebraic diff. in approach grades) (%):	-----	-----	-----	-----
K = Min(Lc/A,167) (Table 5, HEC-12):	-----	-----	-----	-----
Flanking inlets maximum distance (ft):	-----	-----	-----	-----
TRIANGULAR MEDIAN HYDRAULICS:				
Manning's n for median finish:				
Cross-slope of median sides:				
Depth of flow at center of median (ft):	-----	-----	-----	-----
Flooded width in the median (ft):	-----	-----	-----	-----
Water velocity in the median (fps):	-----	-----	-----	-----

Design by: Alan Humphrey

FCDMC / HEC-12
Osborn Outfall
Pavement Drainage

JOB: MAG Roll Curb- 6" in macro

Street or Intersection: Osborn and 71st							
	Clogging factors:		80%	50%	67%		
Return Period	10	10	10	10	10	10	10
HYDROLOGY COMPUTATION:							
Intersection Quadrant	WN	WN	WN	WN	WN	WS	WS
Computation	Max Spread	1/2 Street Capacity	Inlet No. 1 Design	Inlet No. 1 Design	Inlet No. 2 Design	1/2 Street Flow	Exst Inlet
Structure location or station (ft):				99+00	101+70		
Contributing watershed area (acres):						0.48	
Composite Runoff Coefficient "C":	Maintain	Max Depth	Design for	Design for	Design for	0.95	Check
Precipitation intensity (in/hr):	12 feet dry	d=0.70	max spread	max spread	max spread	4.80	existing
Time of Concentration Calculations:	pavement		condition.	condition.	condition.		inlet:
Length of longest flow path (miles)	each side.					0.13	
Slope of flow path (ft/mile)			HEC-1	Half HEC-1	Half HEC-1	25.9	
Roughness Coefficient- See Table 3.1, FCDMC Manual			Proportional	Proportional	Proportional	0.0421	
Kb Parameter			Flow	Flow	Flow	-0.0065	
Kb Parameter			Q=12 cfs	Q=6 cfs	Q=6 cfs	0.04	
Time of Concentration (hrs)			plus bypass	plus bypass	plus bypass	0.16	
Subarea discharge Q (cfs):			from 70th	from 70th	from Inlet 1	2.2	
Previous by-pass flow (cfs):			3.5	3.5	3.3	0.0	
Discharge added by operator:			12.0	6.0	6.0	---	
Total discharge Q (cfs):	**9.5**	**26.0**	**15.5**	**9.5**	**9.3**	**2.2**	**2.2**
			Spread			**No inlet**	
SHOULDER AND GUTTER CONFIGURATION:			**Exceeded**			**Needed**	
Manning's n:	0.016	0.016	0.016	0.016	0.016	0.016	0.016
Longitudinal slope S (ft/ft):	0.0026	0.0026	0.0026	0.0034	0.0026	0.0047	0.0047
Inlet type (1=grate, 2=side opening or slotted):	2	2	2	2	2	2	2
Longitudinal profile (1=on-grade, 2=sag):	1	1	1	1	1	1	1
Gutter Configuration (1=roll, 2=vertical):	2	2	2	2	2	2	2
Inlet description:	None	None	None	P-1569	P-1569	None	P-1568
Grate width:	0	0	0	0	0	0	0
Grate length:	0.0	0.0	0.0	0.0	0.0	0.0	0.0
Pavement cross-slope (Sx):	0.022	0.022	0.022	0.018	0.022	0.021	0.021
Width of gutter from flowline (ft):	1.42	1.42	1.42	1.42	1.42	1.42	1.42
Gutter depression from horizontal (ft):	0.083	0.083	0.083	0.083	0.083	0.083	0.083
Gutter cross-slope Sw: (S'w=Sw-Sx)	0.058	0.058	0.058	0.058	0.058	0.058	0.058
Half Street Width at Inlet (ft):	32.0	32.0	32.0	32.0	32.0	32.0	32.0
Flooded Width from flowline (ft): before inlet	**20.3**	**29.7**	**24.4**	**21.9**	**20.1**	**10.6**	**10.7**
Depth at flowline (ft): before inlet	0.50	0.70	0.59	0.45	0.49	0.27	0.27
Water cross-area (sq.ft): before inlet	4.53	9.67	6.54	4.29	4.47	1.20	1.21
Velocity V for total discharge (fps): before inlet	2.10	2.69	2.36	2.20	2.09	1.81	1.82
Ratio of gutter depression flow to total Q (Eod):	19.1%	13.0%	15.9%	18.2%	19.2%	36.6%	36.4%
Equivalent cross-slope (Se):	0.029	0.027	0.028	0.025	0.029	0.034	0.034
GRATE INLETS ON-GRADE:							
Ratio of grate frontal flow to total flow:	-----	-----	-----	-----	-----	-----	-----
Inlet frontal flow in cfs (Qw):	-----	-----	-----	-----	-----	-----	-----
Vo for effective length (P-1-7/8, Chart 7 HEC 12):	-----	-----	-----	-----	-----	-----	-----
Fraction of frontal flow intercepted (Rf):	-----	-----	-----	-----	-----	-----	-----
Side flow in cfs (Qs):	-----	-----	-----	-----	-----	-----	-----
Effective grate length w/clogging:	-----	-----	-----	-----	-----	-----	-----
Fraction of side flow interception (Rs):	-----	-----	-----	-----	-----	-----	-----
Grate Efficiency (E):	-----	-----	-----	-----	-----	-----	-----
Total flow intercepted (cfs):	-----	-----	-----	-----	-----	-----	-----
Grate flow-by (cfs):	-----	-----	-----	-----	-----	-----	-----
SLOTTED DRAINS AND SIDE-OPENING INLETS ON-GRADE:							
Length required for total interception (ft): w/clogging	-----	-----	-----	30.5	25.7	-----	15.1
Length of inlet provided L (ft):				20	20		8
Interception for length L (cfs):	-----	-----	-----	6.1	6.8	-----	1.2
Efficiency for length L:	-----	-----	-----	64.7%	73.4%	-----	54.5%
Slotted drain or side opening flow-by (cfs):	-----	-----	-----	**3.3**	**2.5**	-----	**1.0**
							OK
INTERCEPTION CAPACITY OF INLETS IN SAG LOCATION:							
Head available for weir flow at sag (ft):							
Capacity of grate in a sag (3-sided weir):	-----	-----	-----	-----	-----	-----	-----
Capacity of grate in a sag (4-sided weir):	-----	-----	-----	-----	-----	-----	-----
Length provided of curb-opening inlet at sag:							
Capacity of curb-opening inlet in a sag (weir):	-----	-----	-----	-----	-----	-----	-----
Length of the vertical curve (ft x 100):							
approach grade #1 (%):							
approach grade #2 (%):							
ABS (algebraic diff. in approach grades) (%):	-----	-----	-----	-----	-----	-----	-----
K = Min(Lc/A,167) (Table 5, HEC-12):	-----	-----	-----	-----	-----	-----	-----
Flanking inlets maximum distance (ft):	-----	-----	-----	-----	-----	-----	-----
TRIANGULAR MEDIAN HYDRAULICS:							
Manning's n for median finish:							
Cross-slope of median sides:							
Depth of flow at center of median (ft):	-----	-----	-----	-----	-----	-----	-----
Flooded width in the median (ft):	-----	-----	-----	-----	-----	-----	-----
Water velocity in the median (fps):	-----	-----	-----	-----	-----	-----	-----

Design by: Alan Humphrey

FCDMC / HEC-12
Osborn Outfall
Pavement Drainage

JOB: MAG Roll Curb- 6" in macro

Street or Intersection: 71st and Earll- Osborn to Scottsdale		Clogging factors:	80%	50%	67%	
Return Period	10	10	10	10	10	10
HYDROLOGY COMPUTATION:						
Intersection Quadrant	Church (W)	Church (W)	Church (W)	Church (W)	Church (E)	Church (E)
Computation	1/2 Street Capacity	Max Spread	Inlet No. 1 Design	Inlet No. 2 Design	1/2 Street Capacity	Max Spread
Structure location or station (ft):			104+50	106+30		
Contributing watershed area (acres):						
Composite Runoff Coefficient "C":	Top	Maintain	HEC-1	Flow intercepted	Top	Maintain
Precipitation intensity (in/hr):	of	6 feet dry	proportional	by Inlet No. 1 is	of	6 feet dry
Time of Concentration Calculations:	curb	pavement	flow=22 cfs.	average of	curb	pavement
Length of longest flow path (miles)	above	each side	Bypass from WS	interceptions	above	each side
Slope of flow path (ft/mile)	crown.		on Osborn.	calculated for	crown.	
Roughness Coefficient- See Table 3.1, FCDMC Manual	Spreadsheet		Divide flow in	Inlet No. 1 and	Spreadsheet	
Kb Parameter	invalid		gutters by sub-	1/2 Street capacity.	invalid	
Kb Parameter	above		tracting gutter	Qin=(5.5+7.6)/2=6.6	above	
Time of Concentration (hrs)	depth=0.43		capacities and	Bypass	depth=0.39	
Subarea discharge Q (cfs):			splitting excess 50/50	=12.5-6.6=5.9 cfs		
Previous by-pass flow (cfs):			1.0			
Discharge added by operator:			22.0			
Total discharge Q (cfs):	**7.5**	**4.2**	**12.5**	**5.9**	**5.5**	**3.4**
SHOULDER AND GUTTER CONFIGURATION:						
Manning's n:	0.016	0.016	0.016	0.016	0.016	0.016
Longitudinal slope S (ft/ft):	0.0037	0.0037	0.0037	0.0037	0.0032	0.0032
Inlet type (1=grate, 2=side opening or slotted):	2	2	2	2	2	2
Longitudinal profile (1=on-grade, 2=sag):	1	1	1	1	1	1
Gutter Configuration (1=roll, 2=vertical):	2	2	2	2	2	2
Inlet description:	None	None	P-1569	P-1569	None	None
Grate width:	0	0	0	0	0	0
Grate length:	0.0	0.0	0.0	0.0	0.0	0.0
Pavement cross-slope (Sx):	0.022	0.022	0.022	0.022	0.020	0.020
Width of gutter from flowline (ft):	1.42	1.42	1.42	1.42	1.42	1.42
Gutter depression from horizontal (ft):	0.083	0.083	0.083	0.083	0.083	0.083
Gutter cross-slope Sw: (S'w=Sw-Sx)	0.058	0.058	0.058	0.058	0.058	0.058
Half Street Width at Inlet (ft):	20.0	20.0	20.0	20.0	20.0	20.0
Flooded Width from flowline (ft): before inlet	**17.5**	**14.0**	**21.3**	**16.0**	**17.0**	**14.1**
Depth at flowline (ft): before inlet	0.43	0.35	0.51	0.40	0.39	0.33
Water cross-area (sq.ft): before inlet	3.33	2.15	4.90	2.78	2.85	1.98
Velocity V for total discharge (fps): before inlet	2.25	1.96	2.55	2.12	1.93	1.72
Ratio of gutter depression flow to total Q (Eod):	22.2%	27.7%	18.2%	24.3%	23.2%	28.0%
Equivalent cross-slope (Se):	0.030	0.032	0.028	0.030	0.029	0.030
GRATE INLETS ON-GRADE:						
Ratio of grate frontal flow to total flow:	-----	-----	-----	-----	-----	-----
Inlet frontal flow in cfs (Qw):	-----	-----	-----	-----	-----	-----
Vo for effective length (P-1-7/8, Chart 7 HEC 12):	-----	-----	-----	-----	-----	-----
Fraction of frontal flow intercepted (Rf):	-----	-----	-----	-----	-----	-----
Side flow in cfs (Qs):	-----	-----	-----	-----	-----	-----
Effective grate length w/clogging:	-----	-----	-----	-----	-----	-----
Fraction of side flow interception (Rs):	-----	-----	-----	-----	-----	-----
Grate Efficiency (E):	-----	-----	-----	-----	-----	-----
Total flow intercepted (cfs):	-----	-----	-----	-----	-----	-----
Grate flow-by (cfs):	-----	-----	-----	-----	-----	-----
SLOTTED DRAINS AND SIDE-OPENING INLETS ON-GRADE:						
Length required for total interception (ft): w/clogging	25.7	-----	32.8	22.9	22.1	-----
Length of inlet provided L (ft):	20		20	20	20	
Interception for length L (cfs):	5.5	-----	7.6	4.7	4.5	-----
Efficiency for length L:	73.4%	-----	61.1%	79.5%	81.3%	-----
Slotted drain or side opening flow-by (cfs):	**2.0**	-----	**4.9**	**1.2**	**1.0**	-----

Spreadsheet configured to calculate flow depths associated with a given flow in a street with a triangular cross section. Depth of flow calculated for actual flow in 1/2 street cross section is slightly deeper than would be expected from the true full street cross section. Assume intercepted flow is average of 1/2 street capacity and amount intercepted in full design flow calculation.

Design by: Alan Humphrey

FCDMC / HEC-12
Osborn Outfall
Pavement Drainage

JOB: MAG Roll Curb- 6" in macro

Street or Intersection: 71st and Earll- Osborn to Scottsdale

Return Period	10	10	10	10	10	10
HYDROLOGY COMPUTATION:						
Intersection Quadrant	Church (E)	Church (E)	Sml Apts. (W)	Sml Apts. (W)	Sml Apts. (W)	Lrg Apts. (NW)
Computation	Inlet No. 1 Design	Inlet No. 2 Design	1/2 Street Capacity	Max Spread	Inlet No. 1 Design	West Street Flow Check
Structure location or station (ft):	105+00	106+20			108+11	
Contributing watershed area (acres):						0.32
Composite Runoff Coefficient "C":	Street	Flow intercepted	Top	Maintain	HEC-1	0.95
Precipitation intensity (in/hr):	capacity	by Inlet No. 1 is	of	6 feet dry	proportional	4.2
Time of Concentration Calculations:	13 cfs	average of	curb	pavement	flow=5.7 cfs	
Length of longest flow path (miles)	to crown	4.5 and 6.8	above	each side	and bypass	0.16
Slope of flow path (ft/mile)	use inlets	or 5.7 cfs.	crown.		2nd Church	26.8
Roughness Coefficient- See Table 3.1, FCDMC Manual	both sides	Bypass is	Spreadsheet		inlet (west).	0.0432
Kb Parameter	of street.	10.5-5.7=4.9	invalid		Flow close	-0.0065
Kb Parameter	12.5 cfs west,		above		to 1/2 street	0.04
Time of Concentration (hrs)	10.5 cfs east		depth=0.36		capacity.	0.18
Subarea discharge Q (cfs):						1.3
Previous by-pass flow (cfs):					1.2	2.4
Discharge added by operator:					5.7	---
Total discharge Q (cfs):	**10.5**	**4.9**	**6.2**	**4.0**	**6.9**	**3.7**
SHOULDER AND GUTTER CONFIGURATION:						**Spread OK**
Manning's n:	0.016	0.016	0.016	0.016	0.016	0.016
Longitudinal slope S (ft/ft):	0.0032	0.0032	0.0059	0.0059	0.0059	0.0020
Inlet type (1=grate, 2=side opening or slotted):	2	2	2	2	2	2
Longitudinal profile (1=on-grade, 2=sag):	1	1	1	1	1	1
Gutter Configuration (1=roll, 2=vertical):	2	2	2	2	2	2
Inlet description:	P-1569	P-1569	None	None	P-1569	None
Grate width:	0	0	0	0	0	0
Grate length:	0.0	0.0	0.0	0.0	0.0	0.0
Pavement cross-slope (Sx):	0.020	0.020	0.018	0.018	0.018	0.023
Width of gutter from flowline (ft):	1.42	1.42	1.42	1.42	1.42	1.42
Gutter depression from horizontal (ft):	0.083	0.083	0.083	0.083	0.083	0.083
Gutter cross-slope Sw: (S'w=Sw-Sx)	0.058	0.058	0.058	0.058	0.058	0.058
Half Street Width at Inlet (ft):	20.0	20.0	20.0	20.0	20.0	20.0
Flooded Width from flowline (ft): before inlet	**21.7**	**16.2**	**16.6**	**14.0**	**17.3**	**14.5**
Depth at flowline (ft): before inlet	0.48	0.37	0.36	0.31	0.37	0.38
Water cross-area (sq.ft): before inlet	4.65	2.61	2.53	1.81	2.74	2.41
Velocity V for total discharge (fps): before inlet	2.26	1.88	2.45	2.21	2.52	1.51
Ratio of gutter depression flow to total Q (Eod):	18.1%	24.3%	24.0%	28.6%	23.0%	26.5%
Equivalent cross-slope (Se):	0.027	0.029	0.028	0.030	0.027	0.032
GRATE INLETS ON-GRADE:						
Ratio of grate frontal flow to total flow:	-----	-----	-----	-----	-----	-----
Inlet frontal flow in cfs (Qw):	-----	-----	-----	-----	-----	-----
Vo for effective length (P-1-7/8, Chart 7 HEC 12):	-----	-----	-----	-----	-----	-----
Fraction of frontal flow intercepted (Rf):	-----	-----	-----	-----	-----	-----
Side flow in cfs (Qs):	-----	-----	-----	-----	-----	-----
Effective grate length w/clogging:	-----	-----	-----	-----	-----	-----
Fraction of side flow interception (Rs):	-----	-----	-----	-----	-----	-----
Grate Efficiency (E):	-----	-----	-----	-----	-----	-----
Total flow intercepted (cfs):	-----	-----	-----	-----	-----	-----
Grate flow-by (cfs):	-----	-----	-----	-----	-----	-----
SLOTTED DRAINS AND SIDE-OPENING INLETS ON-GRADE:						
Length required for total interception (ft): w/clogging	30.3	20.9	28.4	-----	30.0	-----
Length of inlet provided L (ft):	20	20	20		20	
Interception for length L (cfs):	6.8	4.1	4.2	-----	4.5	-----
Efficiency for length L:	65.0%	84.2%	68.2%	-----	65.5%	-----
Slotted drain or side opening flow-by (cfs):	**3.7**	**0.8**	**2.0**	-----	**2.4**	-----
					Bypass OK for spread.	

Design by: Alan Humphrey

FCDMC / HEC-12
Osborn Outfall
Pavement Drainage

JOB: MAG Roll Curb- 6" in macro

Street or Intersection: 71st and Earll- Osborn to Scottsdale

Return Period	10	10	10	10	10
HYDROLOGY COMPUTATION:					
Intersection Quadrant	Lrg Apts. (NW)	Lrg Apts. (NW)	Lrg Apts. (NW)	Lrg Apts. (NE)	Lrg Apts. (NE)
Computation	1/2 Street Capacity	Max Spread	Inlet No. 1 Design	1/2 Street Capacity	1/2 Street Capacity
Structure location or station (ft):			114+50		
Contributing watershed area (acres):					
Composite Runoff Coefficient "C":	Top	Maintain	HEC-1 Proportional	Top	Top
Precipitation intensity (in/hr):	of	6 feet dry	flow=23 cfs plus	of	of
Time of Concentration Calculations:	curb	pavement	street runoff from north	curb	curb
Length of longest flow path (miles)	above	each side	(2x1.3=2.6) plus bypass	above	above
Slope of flow path (ft/mile)	crown.		from CB to north	crown.	crown.
Roughness Coefficient- See Table 3.1, FCDMC Manual	Spreadsheet		(1.3+0.8=2.1). Total=28	Spreadsheet	Spreadsheet
Kb Parameter	invalid		Divide flow in gutters by	invalid	invalid
Kb Parameter	above		subtracting both gutter	above	above
Time of Concentration (hrs)	depth=0.33		capacities and	depth=0.48	depth=0.45
Subarea discharge Q (cfs):			splitting excess 50/50		
Previous by-pass flow (cfs):			west=12.5		
Discharge added by operator:			east=15.3		
Total discharge Q (cfs):	**3.5**	**2.3**	**12.5**	**7.5**	**6.3**
SHOULDER AND GUTTER CONFIGURATION:					
Manning's n:	0.016	0.016	0.016	0.016	0.016
Longitudinal slope S (ft/ft):	0.0026	0.0026	0.0026	0.0020	0.0020
Inlet type (1=grate, 2=side opening or slotted):	2	2	2	2	2
Longitudinal profile (1=on-grade, 2=sag):	1	1	1	1	1
Gutter Configuration (1=roll, 2=vertical):	2	2	2	2	2
Inlet description:	None	None	P-1569	None	None
Grate width:	0	0	0	0	0
Grate length:	0.0	0.0	0.0	0.0	0.0
Pavement cross-slope (Sx):	0.017	0.017	0.017	0.023	0.023
Width of gutter from flowline (ft):	1.42	1.42	1.42	1.42	1.42
Gutter depression from horizontal (ft):	0.083	0.083	0.083	0.083	0.083
Gutter cross-slope Sw: (S'w=Sw-Sx)	0.058	0.058	0.058	0.058	0.058
Half Street Width at Inlet (ft):	20.0	20.0	20.0	20.0	20.0
Flooded Width from flowline (ft): before inlet	**16.5**	**14.0**	**26.8**	**19.1**	**17.9**
Depth at flowline (ft): before inlet	0.33	0.29	0.50	0.48	0.45
Water cross-area (sq.ft): before inlet	2.28	1.66	5.98	4.16	3.64
Velocity V for total discharge (fps): before inlet	1.53	1.39	2.09	1.80	1.73
Ratio of gutter depression flow to total Q (Eod):	24.6%	29.1%	14.9%	20.2%	21.6%
Equivalent cross-slope (Se):	0.027	0.029	0.023	0.030	0.030
GRATE INLETS ON-GRADE:					
Ratio of grate frontal flow to total flow:	-----	-----	-----	-----	-----
Inlet frontal flow in cfs (Qw):	-----	-----	-----	-----	-----
Vo for effective length (P-1-7/8, Chart 7 HEC 12):	-----	-----	-----	-----	-----
Fraction of frontal flow intercepted (Rf):	-----	-----	-----	-----	-----
Side flow in cfs (Qs):	-----	-----	-----	-----	-----
Effective grate length w/clogging:	-----	-----	-----	-----	-----
Fraction of side flow interception (Rs):	-----	-----	-----	-----	-----
Grate Efficiency (E):	-----	-----	-----	-----	-----
Total flow intercepted (cfs):	-----	-----	-----	-----	-----
Grate flow-by (cfs):	-----	-----	-----	-----	-----
SLOTTED DRAINS AND SIDE-OPENING INLETS ON-GRADE:					
Length required for total interception (ft): w/clogging	17.8	-----	33.6	21.4	19.6
Length of inlet provided L (ft):	20		20	20	20
Interception for length L (cfs):	3.5	-----	7.5	6.2	6.3
Efficiency for length L:	100.0%	-----	59.9%	83.1%	100.0%
Slotted drain or side opening flow-by (cfs):	**0.0**	-----	**7.1**	**1.3**	**0.0**

Flow intercepted by Inlet No. 1 is average of 3.5 and 7.6 or 5.6 cfs. Bypass is 12.7-5.6=7.1

Spreadsheet configured to calculate flow depths as given flow in a street with a triangular cross section calculated for actual flow in 1/2 street cross section than would be expected from the true full street cro Assume intercepted flow is average of 1/2 street ca amount intercepted in full design flow calculation.

Design by: Alan Humphrey

FCDMC / HEC-12
Osborn Outfall
Pavement Drainage

JOB: MAG Roll Curb- 6" in macro

Street or Intersection: 71st and Earll- Osborn to Scottsdale

Return Period	10	10	10	10	10	10
HYDROLOGY COMPUTATION:						
Intersection Quadrant	Lrg Apts. (NE)	Lrg Apts. (NE)	Lrg Apts. (WN)	Lrg Apts. (WN)	Lrg Apts. (S)	Lrg Apts. (S)
Computation	East Side Street Flow Check	Inlet No. 1 Design	1/2 Street Capacity	Inlet No. 1 Design	1/2 Street Capacity	1/2 Street Flow
Structure location or station (ft):		114+60		114+98		
Contributing watershed area (acres):	**0.32**					**0.30**
Composite Runoff Coefficient "C":	0.95	Flow is calculated	Max Depth	HEC-1	Max Depth	0.95
Precipitation intensity (in/hr):	4.20	for catch basin in	d=0.56	proportional	d=0.52	4.80
Time of Concentration Calculations:		NW gutter.		flow=23 cfs		
Length of longest flow path (miles)	0.16					0.13
Slope of flow path (ft/mile)	26.8			10 cfs to cross		26.8
Roughness Coefficient- See Table 3.1, FCDMC Manual	0.0432			crown to south.		0.0434
Kb Parameter	-0.0065					-0.0065
Kb Parameter	0.04					0.04
Time of Concentration (hrs)	0.18					0.16
Subarea discharge Q (cfs):	1.3					1.4
Previous by-pass flow (cfs):	0.8					0.0
Discharge added by operator:	---			23.0		---
Total discharge Q (cfs):	**2.0**	**15.3**	**13.0**	**13.0**	**11.5**	**1.4**
SHOULDER AND GUTTER CONFIGURATION:	**Spread OK**					
Manning's n:	0.016	0.016	0.016	0.016	0.016	0.016
Longitudinal slope S (ft/ft):	0.0020	0.0020	0.0036	0.0036	0.0036	0.0036
Inlet type (1=grate, 2=side opening or slotted):	2	2	2	2	2	2
Longitudinal profile (1=on-grade, 2=sag):	1	1	1	1	1	1
Gutter Configuration (1=roll, 2=vertical):	2	2	2	2	2	2
Inlet description:	None	P-1569	None	P-1569	None	None
Grate width:	0	0	0	0	0	0
Grate length:	0.0	0.0	0.0	0.0	0.0	0.0
Pavement cross-slope (Sx):	0.023	0.023	0.028	0.028	0.026	0.026
Width of gutter from flowline (ft):	1.42	1.42	1.42	1.42	1.42	1.42
Gutter depression from horizontal (ft):	0.083	0.083	0.083	0.083	0.083	0.083
Gutter cross-slope Sw: (S'w=Sw-Sx)	0.058	0.058	0.058	0.058	0.058	0.058
Half Street Width at Inlet (ft):	20.0	20.0	20.0	20.0	20.0	20.0
Flooded Width from flowline (ft): before inlet	**11.6**	**25.1**	**18.4**	**18.4**	**18.6**	**8.2**
Depth at flowline (ft): before inlet	0.31	0.62	0.56	0.56	0.52	0.25
Water cross-area (sq.ft): before inlet	1.55	7.11	4.78	4.78	4.46	0.88
Velocity V for total discharge (fps): before inlet	1.32	2.15	2.72	2.72	2.58	1.54
Ratio of gutter depression flow to total Q (Eod):	33.1%	15.4%	20.4%	20.4%	20.4%	44.8%
Equivalent cross-slope (Se):	0.034	0.028	0.034	0.034	0.032	0.040
GRATE INLETS ON-GRADE:						
Ratio of grate frontal flow to total flow:	-----	-----	-----	-----	-----	-----
Inlet frontal flow in cfs (Qw):	-----	-----	-----	-----	-----	-----
Vo for effective length (P-1-7/8, Chart 7 HEC 12):	-----	-----	-----	-----	-----	-----
Fraction of frontal flow intercepted (Rf):	-----	-----	-----	-----	-----	-----
Side flow in cfs (Qs):	-----	-----	-----	-----	-----	-----
Effective grate length w/clogging:	-----	-----	-----	-----	-----	-----
Fraction of side flow interception (Rs):	-----	-----	-----	-----	-----	-----
Grate Efficiency (E):	-----	-----	-----	-----	-----	-----
Total flow intercepted (cfs):	-----	-----	-----	-----	-----	-----
Grate flow-by (cfs):	-----	-----	-----	-----	-----	-----
SLOTTED DRAINS AND SIDE-OPENING INLETS ON-GRADE:						
Length required for total interception (ft): w/clogging	-----	29.9	29.5	29.5	29.1	10.4
Length of inlet provided L (ft):		20	20	20	20	20
Interception for length L (cfs):	-----	10.1	8.6	8.6	7.7	1.4
Efficiency for length L:	-----	65.8%	66.4%	66.4%	67.2%	100.0%
Slotted drain or side opening flow-by (cfs):	-----	**7.1**	**4.4**	**4.4**	**3.8**	**0.0**
	ssociated with a h. Depth of flow h is slightly deeper oss section. apacity and	Flow intercepted by Inlet No. 1 is average of 6.3 and 10.1 or 8.2 cfs. Bypass is 15.3-8.2=7.1		Bypass OK for spread.		

Design by: Alan Humphrey

FCDMC / HEC-12
Osborn Outfall
Pavement Drainage

JOB: MAG Roll Curb- 6" in macro

Street or Intersection: 71st and Earll- Osborn to Scottsdale

Return Period	10	10	10	10	10	10
HYDROLOGY COMPUTATION:						
Intersection Quadrant	Lrg Apts. (S)	Lrg Apts. (S)	Lrg Apts. (S)	Lrg Apts. (S)	71st & Earll (EN)	71st & Earll (EN)
Computation	Max Spread	Inlet No. 1 Design	Inlet No. 2 Design	Inlet No. 3 Design	Inlet No. 1 Design	Inlet No. 2 Design
Structure location or station (ft):		115+00, 20' Rt	116+50	118+81	116+00	116+20
Contributing watershed area (acres):						
Composite Runoff Coefficient "C":	Maintain 6 feet dry pavement each side	10 cfs from WN gutter plus street flow 10+1.4=11.4 cfs	Collect bypass from Inlet 1 (S) and flow from north side of intersection. Approx. 6 cfs expected to overtop crown. See Inlet No. 1, (EN) at 71st and Earll.	Bypass from Lrg Apts. (S) Inlet No. 2	Flow is bypass from WN, NW and NE Half street capacity to west = 13 cfs Assume same capacity in intersection. Assume 6 cfs over crown	Flow is bypass from Inlet No. 1
Precipitation intensity (in/hr):						
Time of Concentration Calculations:						
Length of longest flow path (miles)						
Slope of flow path (ft/mile)						
Roughness Coefficient- See Table 3.1, FCDMC Manual						
Kb Parameter						
Kb Parameter						
Time of Concentration (hrs)						
Subarea discharge Q (cfs):						
Previous by-pass flow (cfs):			3.7	4.9	18.6	6.4
Discharge added by operator:			6.0		-6.0	
Total discharge Q (cfs):	**6.5**	**11.4**	**9.7**	**4.9**	**12.6**	**6.4**
SHOULDER AND GUTTER CONFIGURATION:						
Manning's n:	0.016	0.016	0.016	0.016	0.016	0.016
Longitudinal slope S (ft/ft):	0.0036	0.0036	0.0036	0.0036	0.0037	0.0037
Inlet type (1=grate, 2=side opening or slotted):	2	2	1	1	2	2
Longitudinal profile (1=on-grade, 2=sag):	1	1	1	1	1	1
Gutter Configuration (1=roll, 2=vertical):	2	2	2	2	2	2
Inlet description:	None	P-1569	P-1570	P-1570	P-1569	P-1569
Grate width:	0	0	2	2	0	0
Grate length:	0.0	0.0	6.0	6.0	0.0	0.0
Pavement cross-slope (Sx):	0.026	0.026	0.026	0.026	0.031	0.031
Width of gutter from flowline (ft):	1.42	1.42	1.42	1.42	1.42	1.42
Gutter depression from horizontal (ft):	0.083	0.083	0.083	0.083	0.083	0.083
Gutter cross-slope Sw: (S'w=Sw-Sx)	0.058	0.058	0.058	0.058	0.058	0.058
Half Street Width at Inlet (ft):	20.0	20.0	20.0	20.0	20.0	20.0
Flooded Width from flowline (ft): before inlet	**15.0**	**18.6**	**17.5**	**13.4**	**17.0**	**13.2**
Depth at flowline (ft): before inlet	0.43	0.52	0.49	0.39	0.57	0.45
Water cross-area (sq.ft): before inlet	2.90	4.43	3.93	2.33	4.50	2.71
Velocity V for total discharge (fps): before inlet	2.24	2.57	2.48	2.09	2.80	2.37
Ratio of gutter depression flow to total Q (Eod):	25.3%	20.5%	21.7%	28.1%	21.9%	27.9%
Equivalent cross-slope (Se):	0.034	0.032	0.033	0.035	0.037	0.039
GRATE INLETS ON-GRADE:						
Ratio of grate frontal flow to total flow:	-----	-----	29.0%	37.0%	-----	-----
Inlet frontal flow in cfs (Qw):	-----	-----	2.8	1.8	-----	-----
Vo for effective length (P-1-7/8, Chart 7 HEC 12):	-----	-----	10.30	10.30	-----	-----
Fraction of frontal flow intercepted (Rf):	-----	-----	100.0%	100.0%	-----	-----
Side flow in cfs (Qs):	-----	-----	6.90	3.07	-----	-----
Effective grate length w/clogging:	-----	-----	3.00	3.00	-----	-----
Fraction of side flow interception (Rs):	-----	-----	29.4%	36.0%	-----	-----
Grate Efficiency (E):	-----	-----	49.9%	59.7%	-----	-----
Total flow intercepted (cfs):	-----	-----	**4.85**	**2.91**	-----	-----
Grate flow-by (cfs):	-----	-----	**4.9**	**2.0**	-----	-----
SLOTTED DRAINS AND SIDE-OPENING INLETS ON-GRADE:						
Length required for total interception (ft): w/clogging	-----	28.9	-----	-----	28.0	20.6
Length of inlet provided L (ft):		20			13	13
Interception for length L (cfs):	-----	7.7	-----	-----	6.1	4.0
Efficiency for length L:	-----	67.4%	-----	-----	48.9%	62.9%
Slotted drain or side opening flow-by (cfs):	-----	**3.7**	-----	-----	**6.4**	**2.4**
				Bypass OK for spread.	Utility conflicts- use 10' wing	Utility conflicts- use 10' wing

Design by: Alan Humphrey

FCDMC / HEC-12
Osborn Outfall
Pavement Drainage

JOB: MAG Roll Curb- 6" in macro

Street or Intersection: 71st and Earll- Osborn to Scottsdale

Return Period	10	10	10	10	10
HYDROLOGY COMPUTATION:					
Intersection Quadrant	Earll & Scottsdale(WN)	Earll & Scottsdale(WN)	Earll & Scottsdale(WN)	Earll & Scottsdale(WS)	Earll & Scottsdale(WS)
Computation	Spread Check	Inlet No. 1 Design	Inlet No. 2 Design	Spread Check @ Scottsdale Rd.	Inlet No. 1 Design
Structure location or station (ft):		118+81	121+18		121+15
Contributing watershed area (acres):				0.29	
Composite Runoff Coefficient "C":	Flow is	Flow is	Flow is	0.95	Flow is bypass from
Precipitation intensity (in/hr):	bypass	bypass	bypass	4.20	Inlet @118+50
Time of Concentration Calculations:	from	from	from		and half Rational flow
Length of longest flow path (miles)	71st and Earll (EN)	71st and Earll (EN)	Inlet No. 1	0.12	
Slope of flow path (ft/mile)	and HEC-1	and 1/2 HEC-1	and 1/2 HEC-1	18.0	
Roughness Coefficient- See Table 3.1, FCDMC Manual	proportional	proportional	proportional	0.0435	
Kb Parameter	flow = 5.2 cfs	flow = 2.6 cfs		-0.0065	
Kb Parameter				0.04	
Time of Concentration (hrs)				0.19	
Subarea discharge Q (cfs):				1.2	1.2
Previous by-pass flow (cfs):	2.4	2.4	0.0	2.0	2.0
Discharge added by operator:	5.2	2.6	2.6		
Total discharge Q (cfs):	**7.6**	**5.0**	**2.6**	**3.1**	**3.2**
	Spread				
SHOULDER AND GUTTER CONFIGURATION:	**Exceeded**				
Manning's n:	0.016	0.016	0.016	0.016	0.016
Longitudinal slope S (ft/ft):	0.0022	0.0023	0.0022	0.0033	0.0033
Inlet type (1=grate, 2=side opening or slotted):	2	2	2	2	2
Longitudinal profile (1=on-grade, 2=sag):	1	1	1	1	1
Gutter Configuration (1=roll, 2=vertical):	2	2	2	2	2
Inlet description:	None	P-1569	P-1569	None	P-1569
Grate width:	0	0	0	0	0
Grate length:	0.0	0.0	0.0	0.0	0.0
Pavement cross-slope (Sx):	0.017	0.027	0.017	0.020	0.020
Width of gutter from flowline (ft):	1.42	1.42	1.42	1.42	1.42
Gutter depression from horizontal (ft):	0.083	0.083	0.083	0.083	0.083
Gutter cross-slope Sw: (S'w=Sw-Sx)	0.058	0.058	0.058	0.058	0.058
Half Street Width at Inlet (ft):	20.0	20.0	20.0	20.0	20.0
Flooded Width from flowline (ft): before inlet	**22.5**	**14.4**	**14.9**	**13.3**	**13.4**
Depth at flowline (ft): before inlet	0.44	0.43	0.31	0.32	0.32
Water cross-area (sq.ft): before inlet	4.33	2.78	1.92	1.82	1.84
Velocity V for total discharge (fps): before inlet	1.75	1.79	1.35	1.71	1.72
Ratio of gutter depression flow to total Q (Eod):	17.8%	26.1%	27.2%	29.4%	29.3%
Equivalent cross-slope (Se):	0.024	0.035	0.028	0.031	0.031
GRATE INLETS ON-GRADE:					
Ratio of grate frontal flow to total flow:	-----	-----	-----	-----	-----
Inlet frontal flow in cfs (Qw):	-----	-----	-----	-----	-----
Vo for effective length (P-1-7/8, Chart 7 HEC 12):	-----	-----	-----	-----	-----
Fraction of frontal flow intercepted (Rf):	-----	-----	-----	-----	-----
Side flow in cfs (Qs):	-----	-----	-----	-----	-----
Effective grate length w/clogging:	-----	-----	-----	-----	-----
Fraction of side flow interception (Rs):	-----	-----	-----	-----	-----
Grate Efficiency (E):	-----	-----	-----	-----	-----
Total flow intercepted (cfs):	-----	-----	-----	-----	-----
Grate flow-by (cfs):	-----	-----	-----	-----	-----
SLOTTED DRAINS AND SIDE-OPENING INLETS ON-GRADE:					
Length required for total interception (ft): w/clogging	-----	17.1	14.5	-----	16.8
Length of inlet provided L (ft):		20	20		13
Interception for length L (cfs):	-----	5.0	2.6	-----	2.3
Efficiency for length L:	-----	100.0%	100.0%	-----	73.3%
Slotted drain or side opening flow-by (cfs):	-----	**0.0**	**0.0**	-----	**0.8**

Design by: Alan Humphrey

FCDMC / HEC-12
Osborn Outfall
Pavement Drainage

JOB: MAG Roll Curb- 6" in macro

Street or Intersection: Earll and Civic Center								
	Clogging factors:		80%	50%	67%			
Return Period	10	10	10	10	10	10	10	10
HYDROLOGY COMPUTATION:								
Intersection Quadrant	WN	WN	WN	WN	WN	WN	WN	WS
Computation	Curb Full Capacity	Max Spread	Inlet No. 1 Design	Inlet No. 1 Design	Inlet No. 2 Design	Inlet No. 3 Design	Inlet No. 4 Design	1/2 Street Flow
Structure location or station (ft):			(@ Civic Cen.)	129+25	131+95	132+80	134+56	
Contributing watershed area (acres):			**No Good**					**0.91**
Composite Runoff Coefficient "C":		Maintain	HEC-1	Half HEC-1	Use 2nd inlet	Bypass from	Too much	0.95
Precipitation intensity (in/hr):		6 feet dry	proportional	proportional	between	Inlet 2	bypass into	3.80
Time of Concentration Calculations:		pavement	flow=29 cfs	flow=14.5 cfs	73rd and	and 1/4	intersection.	
Length of longest flow path (miles)		each side.			Civic Center	HEC-1	Add second	0.24
Slope of flow path (ft/mile)						Flow	inlet at Civic	17.3
Roughness Coefficient- See Table 3.1, FCDMC Manual			Too much		Bypass from		Center	0.0403
Kb Parameter			runoff. Use		Inlet 1			-0.0065
Kb Parameter			multiple		and 1/4			0.04
Time of Concentration (hrs)			inlets		HEC-1			0.26
Subarea discharge Q (cfs):					Flow			3.3
Previous by-pass flow (cfs):					6.1	6.4	6.3	0.0
Discharge added by operator:					7.3	7.3		---
Total discharge Q (cfs):	**14.5**	**27.0**	**29.0**	**14.5**	**13.4**	**13.7**	**6.3**	**3.3**
								No inlet Needed
SHOULDER AND GUTTER CONFIGURATION:								
Manning's n:	0.016	0.016	0.016	0.016	0.016	0.016	0.016	0.016
Longitudinal slope S (ft/ft):	0.0056	0.0056	0.0056	0.0034	0.0046	0.0056	0.0056	0.0056
Inlet type (1=grate, 2=side opening or slotted):	2	2	2	2	2	2	2	2
Longitudinal profile (1=on-grade, 2=sag):	1	1	1	1	1	1	1	1
Gutter Configuration (1=roll, 2=vertical):	2	2	2	2	2	2	2	2
Inlet description:	None	None	None	P-1569	P-1569	P-1569	P-1569	None
Grate width:	0	0	0	0	0	0	0	0
Grate length:	0.0	0.0	0.0	0.0	0.0	0.0	0.0	0.0
Pavement cross-slope (Sx):	0.022	0.022	0.022	0.021	0.018	0.022	0.022	0.022
Width of gutter from flowline (ft):	1.42	1.42	1.42	1.42	1.42	1.42	1.42	1.42
Gutter depression from horizontal (ft):	0.083	0.083	0.083	0.083	0.083	0.083	0.083	0.083
Gutter cross-slope Sw: (S'w=Sw-Sx)	0.058	0.058	0.058	0.058	0.058	0.058	0.058	0.058
Half Street Width at Inlet (ft):	32.0	32.0	32.0	32.0	32.0	32.0	32.0	32.0
Flooded Width from flowline (ft): before inlet	**20.7**	**26.2**	**27.0**	**23.5**	**23.8**	**20.3**	**15.1**	**11.7**
Depth at flowline (ft): before inlet	0.50	0.62	0.63	0.54	0.48	0.49	0.38	0.31
Water cross-area (sq.ft): before inlet	4.68	7.48	7.89	5.72	5.01	4.47	2.49	1.52
Velocity V for total discharge (fps): before inlet	3.10	3.61	3.67	2.54	2.68	3.05	2.52	2.16
Ratio of gutter depression flow to total Q (Eod):	18.7%	14.7%	14.3%	16.6%	16.7%	19.1%	25.7%	33.0%
Equivalent cross-slope (Se):	0.028	0.027	0.027	0.027	0.024	0.029	0.031	0.034
GRATE INLETS ON-GRADE:								
Ratio of grate frontal flow to total flow:	-----	-----	-----	-----	-----	-----	-----	-----
Inlet frontal flow in cfs (Qw):	-----	-----	-----	-----	-----	-----	-----	-----
Vo for effective length (P-1-7/8, Chart 7 HEC 12):	-----	-----	-----	-----	-----	-----	-----	-----
Fraction of frontal flow intercepted (Rf):	-----	-----	-----	-----	-----	-----	-----	-----
Side flow in cfs (Qs):	-----	-----	-----	-----	-----	-----	-----	-----
Effective grate length w/clogging:	-----	-----	-----	-----	-----	-----	-----	-----
Fraction of side flow interception (Rs):	-----	-----	-----	-----	-----	-----	-----	-----
Grate Efficiency (E):	-----	-----	-----	-----	-----	-----	-----	-----
Total flow intercepted (cfs):	-----	-----	-----	-----	-----	-----	-----	-----
Grate flow-by (cfs):	-----	-----	-----	-----	-----	-----	-----	-----
SLOTTED DRAINS AND SIDE-OPENING INLETS ON-GRADE:								
Length required for total interception (ft): w/clogging	-----	-----	54.5	35.1	39.5	38.2	26.3	-----
Length of inlet provided L (ft):			20	20	20	20	13	
Interception for length L (cfs):	-----	-----	11.5	8.4	7.1	7.4	3.2	-----
Efficiency for length L:	-----	-----	39.8%	57.9%	52.6%	54.0%	51.5%	-----
Slotted drain or side opening flow-by (cfs):	-----	-----	**17.5**	**6.1**	**6.4**	**6.3**	**3.0**	-----
INTERCEPTION CAPACITY OF INLETS IN SAG LOCATION:								
Head available for weir flow at sag (ft):								
Capacity of grate in a sag (3-sided weir):	-----	-----	-----	-----	-----	-----	-----	-----
Capacity of grate in a sag (4-sided weir):	-----	-----	-----	-----	-----	-----	-----	-----
Length provided of curb-opening inlet at sag:								
Capacity of curb-opening inlet in a sag (weir):	-----	-----	-----	-----	-----	-----	-----	-----
Length of the vertical curve (ft x 100):								
approach grade #1 (%):								
approach grade #2 (%):								
ABS (algebraic diff. in approach grades) (%):	-----	-----	-----	-----	-----	-----	-----	-----
K = Min(Lc/A,167) (Table 5, HEC-12):	-----	-----	-----	-----	-----	-----	-----	-----
Flanking inlets maximum distance (ft):	-----	-----	-----	-----	-----	-----	-----	-----
TRIANGULAR MEDIAN HYDRAULICS:								
Manning's n for median finish:								
Cross-slope of median sides:								
Depth of flow at center of median (ft):	-----	-----	-----	-----	-----	-----	-----	-----
Flooded width in the median (ft):	-----	-----	-----	-----	-----	-----	-----	-----
Water velocity in the median (fps):	-----	-----	-----	-----	-----	-----	-----	-----

Design by: Alan Humphrey

FCDMC / HEC-12
Osborn Outfall
Pavement Drainage

JOB: MAG Roll Curb- 6" in macro

Street or Intersection: Earll and Civic Center

Return Period	10	10	10	10	10
HYDROLOGY COMPUTATION:					
Intersection Quadrant	NW	NW	NW	NE	EN
Computation	1/2 Street Capacity	Curb Full Capacity	Inlet No. 1 Design	Inlet No. 1 Design	Inlet No. 1 Design
Structure location or station (ft):			134+90	135+50	136+00
Contributing watershed area (acres):					
Composite Runoff Coefficient "C":	Max Depth	Design for	HEC-1 flows		
Precipitation intensity (in/hr):	d=0.72	curb full	exceed 1/2	9 cfs expected	Collect
Time of Concentration Calculations:		condition.	street capacity.	in NE gutter	bypass from
Length of longest flow path (miles)				from west	from WN
Slope of flow path (ft/mile)			HEC-1	side of	quadrant of
Roughness Coefficient- See Table 3.1, FCDMC Manual			Proportional	Civic Center	intersection
Kb Parameter			Flow		
Kb Parameter			=34 cfs		
Time of Concentration (hrs)					
Subarea discharge Q (cfs):			9 cfs expected		
Previous by-pass flow (cfs):			in NE gutter		3.0
Discharge added by operator:					
Total discharge Q (cfs):	**25.0**	**8.5**	**8.5**	**9.0**	**3.0**
SHOULDER AND GUTTER CONFIGURATION:					
Manning's n:	0.016	0.016	0.016	0.016	0.016
Longitudinal slope S (ft/ft):	0.0021	0.0021	0.0021	0.0039	0.0100
Inlet type (1=grate, 2=side opening or slotted):	2	2	2	2	2
Longitudinal profile (1=on-grade, 2=sag):	1	1	1	1	1
Gutter Configuration (1=roll, 2=vertical):	2	2	2	2	2
Inlet description:	None	None	P-1569	P-1569	P-1569
Grate width:	0	0	0	0	0
Grate length:	0.0	0.0	0.0	0.0	0.0
Pavement cross-slope (Sx):	0.023	0.023	0.023	0.014	0.034
Width of gutter from flowline (ft):	1.42	1.42	1.42	1.42	1.42
Gutter depression from horizontal (ft):	0.083	0.083	0.083	0.083	0.083
Gutter cross-slope Sw: (S'w=Sw-Sx)	0.058	0.058	0.058	0.058	0.058
Half Street Width at Inlet (ft):	32.0	32.0	32.0	32.0	30.0
Flooded Width from flowline (ft): before inlet	**29.9**	**19.9**	**19.9**	**24.2**	**7.7**
Depth at flowline (ft): before inlet	0.72	0.50	0.50	0.40	0.30
Water cross-area (sq.ft): before inlet	10.10	4.48	4.48	4.16	1.03
Velocity V for total discharge (fps): before inlet	2.47	1.90	1.90	2.16	2.94
Ratio of gutter depression flow to total Q (Eod):	12.9%	19.4%	19.4%	17.0%	44.8%
Equivalent cross-slope (Se):	0.027	0.029	0.029	0.022	0.045
GRATE INLETS ON-GRADE:					
Ratio of grate frontal flow to total flow:	-----	-----	-----	-----	-----
Inlet frontal flow in cfs (Qw):	-----	-----	-----	-----	-----
Vo for effective length (P-1-7/8, Chart 7 HEC 12):	-----	-----	-----	-----	-----
Fraction of frontal flow intercepted (Rf):	-----	-----	-----	-----	-----
Side flow in cfs (Qs):	-----	-----	-----	-----	-----
Effective grate length w/clogging:	-----	-----	-----	-----	-----
Fraction of side flow interception (Rs):	-----	-----	-----	-----	-----
Grate Efficiency (E):	-----	-----	-----	-----	-----
Total flow intercepted (cfs):	-----	-----	-----	-----	-----
Grate flow-by (cfs):	-----	-----	-----	-----	-----
SLOTTED DRAINS AND SIDE-OPENING INLETS ON-GRADE:					
Length required for total interception (ft): w/clogging	-----	-----	23.0	34.1	18.5
Length of inlet provided L (ft):			20	20	20
Interception for length L (cfs):	-----	-----	6.7	5.3	3.0
Efficiency for length L:	-----	-----	79.3%	59.3%	100.0%
Slotted drain or side opening flow-by (cfs):	-----	-----	**1.8**	**3.7**	**0.0**
INTERCEPTION CAPACITY OF INLETS IN SAG LOCATION:					
Head available for weir flow at sag (ft):					
Capacity of grate in a sag (3-sided weir):	-----	-----	-----	-----	-----
Capacity of grate in a sag (4-sided weir):	-----	-----	-----	-----	-----
Length provided of curb-opening inlet at sag:					
Capacity of curb-opening inlet in a sag (weir):	-----	-----	-----	-----	-----
Length of the vertical curve (ft x 100):					
approach grade #1 (%):					
approach grade #2 (%):					
ABS (algebraic diff. in approach grades) (%):	-----	-----	-----	-----	-----
K = Min(Lc/A,167) (Table 5, HEC-12):	-----	-----	-----	-----	-----
Flanking inlets maximum distance (ft):	-----	-----	-----	-----	-----
TRIANGULAR MEDIAN HYDRAULICS:					
Manning's n for median finish:					
Cross-slope of median sides:					
Depth of flow at center of median (ft):	-----	-----	-----	-----	-----
Flooded width in the median (ft):	-----	-----	-----	-----	-----
Water velocity in the median (fps):	-----	-----	-----	-----	-----

Design by: Alan Humphrey

FCDMC / HEC-12
Osborn Outfall
Pavement Drainage

JOB: MAG Roll Curb- 6" in macro

Street or Intersection: Earll and 75th							
	Clogging factors:		80%	50%	67%		
Return Period	10	10	10	10	10	10	10
HYDROLOGY COMPUTATION:							
Intersection Quadrant	WN	WN	WN	NW	NE	75th @ Earll	NW
Computation	Max Spread	1/2 Street Capacity	Inlet No. 1 Design	1/2 Street Capacity	1/2 Street Capacity	Curb Full Capacity	Inlet No. 1 Design
Structure location or station (ft):			139+49				141+50, 143' lt
Contributing watershed area (acres):							
Composite Runoff Coefficient "C":	Maintain	Max. Depth	HEC-1	Top of curb	Top of curb	Spreadsheet	Design inlets for
Precipitation intensity (in/hr):	6 feet dry	d=0.76	proportional	above crown.	above crown.	inaccurate	flow in west half of
Time of Concentration Calculations:	pavement		flow=18cfs	Depth to crown	Depth to crown	above crown.	street=
Length of longest flow path (miles)	each side.			=0.40	=0.30	Add flow from	8+16.2/2=16.1 cfs
Slope of flow path (ft/mile)			Design to dry			NW and NE gutters	
Roughness Coefficient- See Table 3.1, FCDMC Manual			up intersection			plus prisim above	
Kb Parameter			at Civic Center.			crown =	HEC-1
Kb Parameter						40'x0.15'x2.7fps=	proportional
Time of Concentration (hrs)						16.2 cfs	flow=56 cfs
Subarea discharge Q (cfs):							at intersection
Previous by-pass flow (cfs):						NW=8 cfs	
Discharge added by operator:						NE=5 cfs	
Total discharge Q (cfs):	**21.0**	**30.0**	**18.0**	**8.0**	**5.0**	**29.2**	**16.1**
SHOULDER AND GUTTER CONFIGURATION:							
Manning's n:	0.016	0.016	0.016	0.016	0.016		0.016
Longitudinal slope S (ft/ft):	0.0026	0.0026	0.0026	0.0058	0.0087		0.0058
Inlet type (1=grate, 2=side opening or slotted):	2	2	2	2	2		2
Longitudinal profile (1=on-grade, 2=sag):	1	1	1	1	1		1
Gutter Configuration (1=roll, 2=vertical):	2	2	2	2	2		2
Inlet description:	None	None	P-1569	None	None		P-1569
Grate width:	0	0	0	0	0		0
Grate length:	0.0	0.0	0.0	0.0	0.0		0.0
Pavement cross-slope (Sx):	0.024	0.024	0.024	0.020	0.016		0.020
Width of gutter from flowline (ft):	1.42	1.42	1.42	1.42	1.42		1.42
Gutter depression from horizontal (ft):	0.083	0.083	0.083	0.083	0.083		0.083
Gutter cross-slope Sw: (S'w=Sw-Sx)	0.058	0.058	0.058	0.058	0.058		0.058
Half Street Width at Inlet (ft):	32.0	32.0	32.0	20.0	20.0		20.0
Flooded Width from flowline (ft): before inlet	**26.0**	**29.7**	**24.5**	**17.2**	**15.6**		**22.5**
Depth at flowline (ft): before inlet	0.67	0.76	0.63	0.40	0.30		0.50
Water cross-area (sq.ft): before inlet	8.06	10.54	7.18	3.00	1.92		5.10
Velocity V for total discharge (fps): before inlet	2.60	2.85	2.51	2.66	2.60		3.16
Ratio of gutter depression flow to total Q (Eod):	14.7%	12.9%	15.6%	22.8%	26.4%		17.4%
Equivalent cross-slope (Se):	0.029	0.028	0.029	0.029	0.027		0.027
GRATE INLETS ON-GRADE:							
Ratio of grate frontal flow to total flow:	-----	-----	-----	-----	-----		-----
Inlet frontal flow in cfs (Qw):	-----	-----	-----	-----	-----		-----
Vo for effective length (P-1-7/8, Chart 7 HEC 12):	-----	-----	-----	-----	-----		-----
Fraction of frontal flow intercepted (Rf):	-----	-----	-----	-----	-----		-----
Side flow in cfs (Qs):	-----	-----	-----	-----	-----		-----
Effective grate length w/clogging:	-----	-----	-----	-----	-----		-----
Fraction of side flow interception (Rs):	-----	-----	-----	-----	-----		-----
Grate Efficiency (E):	-----	-----	-----	-----	-----		-----
Total flow intercepted (cfs):	-----	-----	-----	-----	-----		-----
Grate flow-by (cfs):	-----	-----	-----	-----	-----		-----
SLOTTED DRAINS AND SIDE-OPENING INLETS ON-GRADE:							
Length required for total interception (ft): w/clogging	-----	-----	33.7	-----	29.8		43.2
Length of inlet provided L (ft):			37		20		37
Interception for length L (cfs):	-----	-----	18.0	-----	3.3		12.6
Efficiency for length L:	-----	-----	100.0%	-----	65.9%		78.4%
Slotted drain or side opening flow-by (cfs):	-----	-----	**0.0**	-----	**1.7**		**3.5**

Spreadsheet configured to calculate flow depths associated with a given flow in a street with a triangular cross section. Depth of flow calculated for actual flow in 1/2 street cross section is slightly deeper than would be expected from the true full street cross section. Assume intercepted flow is average of 1/2 street capacity and amount intercepted in full design flow calculation.

Design by: Alan Humphrey

FCDMC / HEC-12
Osborn Outfall
Pavement Drainage

JOB: MAG Roll Curb- 6" in macro

Street or Intersection: Earll and 75th

Return Period	10	10	10	10	10
HYDROLOGY COMPUTATION:					
Intersection Quadrant	NW	NE	NE	NE	WS
Computation	Inlet No. 2 Design	Inlet No. 1 Design	Inlet No. 2 Design	Inlet No. 3 Design	1/2 Street Flow
Structure location or station (ft):	141+50, 88' lt	141+95, 231' lt	141+95, 128' lt	141+95, 71' lt	
Contributing watershed area (acres):					**0.30**
Composite Runoff Coefficient "C":		Design inlets for	Flow intercepted	Bypass still	0.95
Precipitation intensity (in/hr):		flow in east half of	by Inlet No. 1 is	significant.	4.20
Time of Concentration Calculations:		street=	average of	Add 3rd inlet	
Length of longest flow path (miles)		5+16.2/2=13.1 cfs	3.3 and 5.8		0.13
Slope of flow path (ft/mile)			or 4.6 cfs.		21.7
Roughness Coefficient- See Table 3.1, FCDMC Manual			Bypass is		0.0434
Kb Parameter		HEC-1	16.1-4.6=8.5 cfs		-0.0065
Kb Parameter		proportional			0.04
Time of Concentration (hrs)		flow=56 cfs			0.18
Subarea discharge Q (cfs):		at intersection			1.2
Previous by-pass flow (cfs):	3.5			3.9	0.0
Discharge added by operator:					---
Total discharge Q (cfs):	**3.5**	**13.1**	**8.5**	**3.9**	**1.2**
					No inlet Needed
SHOULDER AND GUTTER CONFIGURATION:					
Manning's n:	0.016	0.016	0.016	0.016	0.016
Longitudinal slope S (ft/ft):	0.0058	0.0087	0.0087	0.0087	0.0056
Inlet type (1=grate, 2=side opening or slotted):	2	2	2	2	2
Longitudinal profile (1=on-grade, 2=sag):	1	1	1	1	1
Gutter Configuration (1=roll, 2=vertical):	2	2	2	2	2
Inlet description:	P-1569	P-1569	P-1569	P-1569	None
Grate width:	0	0	0	0	0
Grate length:	0.0	0.0	0.0	0.0	0.0
Pavement cross-slope (Sx):	0.020	0.016	0.016	0.016	0.030
Width of gutter from flowline (ft):	1.42	1.42	1.42	1.42	1.42
Gutter depression from horizontal (ft):	0.083	0.083	0.083	0.083	0.083
Gutter cross-slope Sw: (S'w=Sw-Sx)	0.058	0.058	0.058	0.058	0.058
Half Street Width at Inlet (ft):	20.0	20.0	20.0	20.0	20.0
Flooded Width from flowline (ft): before inlet	**12.5**	**22.1**	**18.7**	**13.9**	**6.5**
Depth at flowline (ft): before inlet	0.30	0.41	0.36	0.28	0.23
Water cross-area (sq.ft): before inlet	1.59	3.96	2.85	1.59	0.65
Velocity V for total discharge (fps): before inlet	2.18	3.31	2.98	2.48	1.84
Ratio of gutter depression flow to total Q (Eod):	31.4%	18.3%	21.7%	29.5%	53.2%
Equivalent cross-slope (Se):	0.032	0.024	0.025	0.029	0.045
GRATE INLETS ON-GRADE:					
Ratio of grate frontal flow to total flow:	-----	-----	-----	-----	-----
Inlet frontal flow in cfs (Qw):	-----	-----	-----	-----	-----
Vo for effective length (P-1-7/8, Chart 7 HEC 12):	-----	-----	-----	-----	-----
Fraction of frontal flow intercepted (Rf):	-----	-----	-----	-----	-----
Side flow in cfs (Qs):	-----	-----	-----	-----	-----
Effective grate length w/clogging:	-----	-----	-----	-----	-----
Fraction of side flow interception (Rs):	-----	-----	-----	-----	-----
Grate Efficiency (E):	-----	-----	-----	-----	-----
Total flow intercepted (cfs):	-----	-----	-----	-----	-----
Grate flow-by (cfs):	-----	-----	-----	-----	-----
SLOTTED DRAINS AND SIDE-OPENING INLETS ON-GRADE:					
Length required for total interception (ft): w/clogging	20.3	48.0	38.6	26.0	-----
Length of inlet provided L (ft):	20	20	20	20	
Interception for length L (cfs):	3.0	5.8	4.6	2.9	-----
Efficiency for length L:	85.6%	44.5%	53.5%	72.8%	-----
Slotted drain or side opening flow-by (cfs):	**0.5**	**7.3**	**3.9**	**1.1**	-----

Design by: Alan Humphrey

FCDMC / HEC-12
Osborn Outfall
Pavement Drainage

JOB: MAG Roll Curb- 6" in macro

	Clogging factors:		80%	50%	67%		
Street or Intersection: Earll and Miller							
Return Period	10	10	10	10	10	10	10
HYDROLOGY COMPUTATION:							
Intersection Quadrant	WS	WN	WN	WN	WN	WN	WN
Computation	1/2 Street Flow	Max Spread	1/2 Street Capacity	Inlet No. 1 Design	Inlet No. 2 Design	Inlet No. 3 Design	Inlet No. 4 Design
Structure location or station (ft):				142+30	144+00	146+30	147+70
Contributing watershed area (acres):	**0.60**						
Composite Runoff Coefficient "C":	0.95	Maintain	Max depth	HEC-1	Bypass from	Bypass from	Bypass from
Precipitation intensity (in/hr):	3.80	12 feet dry	=0.56	proportional	Inlet 1	Inlet 2	Inlet 3
Time of Concentration Calculations:		pavement		flow=20 cfs	and 1/4	and 1/4	and 1/4
Length of longest flow path (miles)	0.25	in roadway.	Design for		HEC-1	HEC-1	HEC-1
Slope of flow path (ft/mile)	21.9	Not enough	spread.	Divide HEC-1	Flow	Flow	Flow
Roughness Coefficient- See Table 3.1, FCDMC Manual	0.0415	capacity in		flows equally			
Kb Parameter	-0.0065	north gutter.		between inlets.	Lateral contains	Lateral contains	Lateral contains
Kb Parameter	0.04	Consider			24" check valve	24" check valve	24" check valve
Time of Concentration (hrs)	0.25	total road-		Bypass from			
Subarea discharge Q (cfs):	2.2	way width in		75th St.			
Previous by-pass flow (cfs):	0.0	meeting		0.0	0.8	1.4	0.0
Discharge added by operator:	---	criteria.		5.0	5.0	5.0	5.0
Total discharge Q (cfs):	**2.2**	**5.0**	**12.0**	**5.0**	**5.8**	**6.4**	**5.0**
SHOULDER AND GUTTER CONFIGURATION:							
Manning's n:	0.016	0.016	0.016	0.016	0.016	0.016	0.016
Longitudinal slope S (ft/ft):	0.0021	0.0027	0.0027	0.0029	0.0036	0.0018	0.0027
Inlet type (1=grate, 2=side opening or slotted):	2	2	2	2	2	2	2
Longitudinal profile (1=on-grade, 2=sag):	1	1	1	1	1	1	1
Gutter Configuration (1=roll, 2=vertical):	2	2	2	2	2	2	2
Inlet description:	P-1570	None	None	P-1569	P-1569	P-1569	P-1569
Grate width:	0	0	0	0	0	0	0
Grate length:	0.0	0.0	0.0	0.0	0.0	0.0	0.0
Pavement cross-slope (Sx):	0.034	0.027	0.027	0.019	0.017	0.027	0.027
Width of gutter from flowline (ft):	1.42	1.42	1.42	1.42	1.42	1.42	1.42
Gutter depression from horizontal (ft):	0.083	0.083	0.083	0.083	0.083	0.083	0.083
Gutter cross-slope Sw: (S'w=Sw-Sx)	0.058	0.058	0.058	0.058	0.058	0.058	0.058
Half Street Width at Inlet (ft):	20.0	20.0	20.0	20.0	20.0	20.0	20.0
Flooded Width from flowline (ft): before inlet	**9.0**	**13.9**	**19.4**	**17.0**	**18.4**	**16.5**	**13.9**
Depth at flowline (ft): before inlet	0.35	0.42	0.56	0.38	0.37	0.49	0.42
Water cross-area (sq.ft): before inlet	1.43	2.62	5.07	2.77	2.92	3.68	2.62
Velocity V for total discharge (fps): before inlet	1.50	1.91	2.37	1.80	1.98	1.74	1.91
Ratio of gutter depression flow to total Q (Eod):	38.9%	27.0%	19.5%	23.3%	21.9%	22.8%	27.0%
Equivalent cross-slope (Se):	0.044	0.035	0.033	0.028	0.026	0.034	0.035
GRATE INLETS ON-GRADE:							
Ratio of grate frontal flow to total flow:	-----	-----	-----	-----	-----	-----	-----
Inlet frontal flow in cfs (Qw):	-----	-----	-----	-----	-----	-----	-----
Vo for effective length (P-1-7/8, Chart 7 HEC 12):	-----	-----	-----	-----	-----	-----	-----
Fraction of frontal flow intercepted (Rf):	-----	-----	-----	-----	-----	-----	-----
Side flow in cfs (Qs):	-----	-----	-----	-----	-----	-----	-----
Effective grate length w/clogging:	-----	-----	-----	-----	-----	-----	-----
Fraction of side flow interception (Rs):	-----	-----	-----	-----	-----	-----	-----
Grate Efficiency (E):	-----	-----	-----	-----	-----	-----	-----
Total flow intercepted (cfs):	-----	-----	-----	-----	-----	-----	-----
Grate flow-by (cfs):	-----	-----	-----	-----	-----	-----	-----
SLOTTED DRAINS AND SIDE-OPENING INLETS ON-GRADE:							
Length required for total interception (ft): w/clogging	10.2	-----	-----	20.8	24.7	17.9	17.8
Length of inlet provided L (ft):	20			20	20	20	20
Interception for length L (cfs):	2.2	-----	-----	4.2	4.4	6.4	5.0
Efficiency for length L:	100.0%	-----	-----	84.5%	75.6%	100.0%	100.0%
Slotted drain or side opening flow-by (cfs):	**0.0**	-----	-----	**0.8**	**1.4**	**0.0**	**0.0**
INTERCEPTION CAPACITY OF INLETS IN SAG LOCATION:							
Head available for weir flow at sag (ft):							
Capacity of grate in a sag (3-sided weir):	-----	-----	-----	-----	-----	-----	-----
Capacity of grate in a sag (4-sided weir):	-----	-----	-----	-----	-----	-----	-----
Length provided of curb-opening inlet at sag:							
Capacity of curb-opening inlet in a sag (weir):	-----	-----	-----	-----	-----	-----	-----
Length of the vertical curve (ft x 100):							
approach grade #1 (%):							
approach grade #2 (%):							
ABS (algebraic diff. in approach grades) (%):	-----	-----	-----	-----	-----	-----	-----
K = Min(Lc/A,167) (Table 5, HEC-12):	-----	-----	-----	-----	-----	-----	-----
Flanking inlets maximum distance (ft):	-----	-----	-----	-----	-----	-----	-----
TRIANGULAR MEDIAN HYDRAULICS:							
Manning's n for median finish:							
Cross-slope of median sides:							
Depth of flow at center of median (ft):	-----	-----	-----	-----	-----	-----	-----
Flooded width in the median (ft):	-----	-----	-----	-----	-----	-----	-----
Water velocity in the median (fps):	-----	-----	-----	-----	-----	-----	-----

Design by: Alan Humphrey

FCDMC / HEC-12
Osborn Outfall
Pavement Drainage

JOB: MAG Roll Curb- 6" in macro

Street or Intersection: Earll and Miller

Return Period	10	10	10	10	10	10	10	10
HYDROLOGY COMPUTATION:								
Intersection Quadrant	NW	NW	NW	NW	NE	NE	NE	NE
Computation	1/2 Street Capacity	Curb Full Capacity	Inlet No. 1 Design	Inlet No. 2 Design	1/2 Street Capacity	Curb Full Capacity	Inlet No. 1 Design	Inlet No. 2 Design
Structure location or station (ft):			148+10, 110' Lt	148+10, 80' Lt			148+60, 130' Lt	148+60, 70' Lt
Contributing watershed area (acres):								
Composite Runoff Coefficient "C":		Design for curb full condition.	HEC-1 proportional flow=53 cfs	Bypass still significant. Add 2nd inlet		Design for curb full condition.	HEC-1 proportional flow=30 cfs	Bypass still significant. Add 2nd inlet
Precipitation intensity (in/hr):								
Time of Concentration Calculations:								
Length of longest flow path (miles)								
Slope of flow path (ft/mile)								
Roughness Coefficient- See Table 3.1, FCDMC Manual								
Kb Parameter								
Kb Parameter								
Time of Concentration (hrs)								
Subarea discharge Q (cfs):								
Previous by-pass flow (cfs):				3.4				2.0
Discharge added by operator:								
Total discharge Q (cfs):	**13.0**	**11.0**	**11.0**	**3.4**	**20.0**	**9.0**	**9.0**	**2.0**
SHOULDER AND GUTTER CONFIGURATION:								
Manning's n:	0.016	0.016	0.016	0.016	0.016	0.016	0.016	0.016
Longitudinal slope S (ft/ft):	0.0036	0.0036	0.0036	0.0036	0.0022	0.0022	0.0022	0.0022
Inlet type (1=grate, 2=side opening or slotted):	2	2	2	2	2	2	2	2
Longitudinal profile (1=on-grade, 2=sag):	1	1	1	1	1	1	1	1
Gutter Configuration (1=roll, 2=vertical):	2	2	2	2	2	2	2	2
Inlet description:	None	None	P-1569	P-1569	None	None	P-1569	P-1569
Grate width:	0	0	0	0	0	0	0	0
Grate length:	0.0	0.0	0.0	0.0	0.0	0.0	0.0	0.0
Pavement cross-slope (Sx):	0.026	0.026	0.026	0.026	0.023	0.023	0.023	0.023
Width of gutter from flowline (ft):	1.42	1.42	1.42	1.42	1.42	1.42	1.42	1.42
Gutter depression from horizontal (ft):	0.083	0.083	0.083	0.083	0.083	0.083	0.083	0.083
Gutter cross-slope Sw: (S'w=Sw-Sx)	0.058	0.058	0.058	0.058	0.058	0.058	0.058	0.058
Half Street Width at Inlet (ft):	20.0	20.0	20.0	20.0	22.0	22.0	22.0	22.0
Flooded Width from flowline (ft): before inlet	**19.2**	**18.0**	**18.0**	**11.5**	**27.3**	**20.1**	**20.1**	**11.4**
Depth at flowline (ft): before inlet	0.55	0.52	0.52	0.35	0.66	0.50	0.50	0.31
Water cross-area (sq.ft): before inlet	4.86	4.28	4.28	1.77	8.39	4.60	4.60	1.50
Velocity V for total discharge (fps): before inlet	2.68	2.57	2.57	1.93	2.38	1.96	1.96	1.37
Ratio of gutter depression flow to total Q (Eod):	19.7%	21.0%	21.0%	32.4%	14.1%	19.2%	19.2%	33.6%
Equivalent cross-slope (Se):	0.033	0.033	0.033	0.037	0.028	0.029	0.029	0.035
GRATE INLETS ON-GRADE:								
Ratio of grate frontal flow to total flow:	-----	-----	-----	-----	-----	-----	-----	-----
Inlet frontal flow in cfs (Qw):	-----	-----	-----	-----	-----	-----	-----	-----
Vo for effective length (P-1-7/8, Chart 7 HEC 12):	-----	-----	-----	-----	-----	-----	-----	-----
Fraction of frontal flow intercepted (Rf):	-----	-----	-----	-----	-----	-----	-----	-----
Side flow in cfs (Qs):	-----	-----	-----	-----	-----	-----	-----	-----
Effective grate length w/clogging:	-----	-----	-----	-----	-----	-----	-----	-----
Fraction of side flow interception (Rs):	-----	-----	-----	-----	-----	-----	-----	-----
Grate Efficiency (E):	-----	-----	-----	-----	-----	-----	-----	-----
Total flow intercepted (cfs):	-----	-----	-----	-----	-----	-----	-----	-----
Grate flow-by (cfs):	-----	-----	-----	-----	-----	-----	-----	-----
SLOTTED DRAINS AND SIDE-OPENING INLETS ON-GRADE:								
Length required for total interception (ft): w/clogging	-----	-----	28.1	16.2	-----	-----	23.9	11.6
Length of inlet provided L (ft):			20	20			20	20
Interception for length L (cfs):	-----	-----	7.6	3.4	-----	-----	7.0	2.0
Efficiency for length L:	-----	-----	68.8%	100.0%	-----	-----	77.3%	100.0%
Slotted drain or side opening flow-by (cfs):	-----	-----	**3.4**	**0.0**	-----	-----	**2.0**	**0.0**
INTERCEPTION CAPACITY OF INLETS IN SAG LOCATION:								
Head available for weir flow at sag (ft):								
Capacity of grate in a sag (3-sided weir):	-----	-----	-----	-----	-----	-----	-----	-----
Capacity of grate in a sag (4-sided weir):	-----	-----	-----	-----	-----	-----	-----	-----
Length provided of curb-opening inlet at sag:								
Capacity of curb-opening inlet in a sag (weir):	-----	-----	-----	-----	-----	-----	-----	-----
Length of the vertical curve (ft x 100):								
approach grade #1 (%):								
approach grade #2 (%):								
ABS (algebraic diff. in approach grades) (%):	-----	-----	-----	-----	-----	-----	-----	-----
K = Min(Lc/A,167) (Table 5, HEC-12):	-----	-----	-----	-----	-----	-----	-----	-----
Flanking inlets maximum distance (ft):	-----	-----	-----	-----	-----	-----	-----	-----
TRIANGULAR MEDIAN HYDRAULICS:								
Manning's n for median finish:								
Cross-slope of median sides:								
Depth of flow at center of median (ft):	-----	-----	-----	-----	-----	-----	-----	-----
Flooded width in the median (ft):	-----	-----	-----	-----	-----	-----	-----	-----
Water velocity in the median (fps):	-----	-----	-----	-----	-----	-----	-----	-----

Design by: Alan Humphrey

FCDMC / HEC-12
Osborn Outfall
Pavement Drainage

JOB: MAG Roll Curb- 6" in macro

Street or Intersection: Earll and Miller

Return Period	10	10	10	10
HYDROLOGY COMPUTATION:	**Check Full 10-yr Design Storrm**			
Intersection Quadrant	NW	NW	NE	NE
Computation	Inlet No. 1 Design	Inlet No. 2 Design	Inlet No. 1 Design	Inlet No. 2 Design
Structure location or station (ft):	148+10, 110' Lt	148+10, 80' Lt	148+60, 130' Lt	148+60, 70' Lt
Contributing watershed area (acres):				
Composite Runoff Coefficient "C":	HEC-1	Bypass still	HEC-1	Bypass still
Precipitation intensity (in/hr):	proportional	significant.	proportional	significant.
Time of Concentration Calculations:	flow=53 cfs	Add 2nd inlet	flow=30 cfs	Add 2nd inlet
Length of longest flow path (miles)				
Slope of flow path (ft/mile)				
Roughness Coefficient- See Table 3.1, FCDMC Manual				
Kb Parameter				
Kb Parameter	Spread sheet			
Time of Concentration (hrs)	limitations allow			
Subarea discharge Q (cfs):	max flow = 25cfs			
Previous by-pass flow (cfs):		12.3		11.6
Discharge added by operator:				
Total discharge Q (cfs):	**25.0**	**12.3**	**25.0**	**11.6**
SHOULDER AND GUTTER CONFIGURATION:				
Manning's n:	0.016	0.016	0.016	0.016
Longitudinal slope S (ft/ft):	0.0036	0.0036	0.0022	0.0022
Inlet type (1=grate, 2=side opening or slotted):	2	2	2	2
Longitudinal profile (1=on-grade, 2=sag):	1	1	1	1
Gutter Configuration (1=roll, 2=vertical):	2	2	2	2
Inlet description:	P-1569	P-1569	P-1569	P-1569
Grate width:	0	0	0	0
Grate length:	0.0	0.0	0.0	0.0
Pavement cross-slope (Sx):	0.026	0.026	0.023	0.023
Width of gutter from flowline (ft):	1.42	1.42	1.42	1.42
Gutter depression from horizontal (ft):	0.083	0.083	0.083	0.083
Gutter cross-slope Sw: (S'w=Sw-Sx)	0.058	0.058	0.058	0.058
Half Street Width at Inlet (ft):	20.0	20.0	22.0	22.0
Flooded Width from flowline (ft): before inlet	**24.6**	**18.8**	**29.7**	**22.2**
Depth at flowline (ft): before inlet	0.69	0.54	0.72	0.55
Water cross-area (sq.ft): before inlet	7.94	4.65	9.93	5.56
Velocity V for total discharge (fps): before inlet	3.15	2.64	2.52	2.08
Ratio of gutter depression flow to total Q (Eod):	15.5%	20.2%	13.0%	17.4%
Equivalent cross-slope (Se):	0.031	0.033	0.027	0.029
GRATE INLETS ON-GRADE:				
Ratio of grate frontal flow to total flow:	-----	-----	-----	-----
Inlet frontal flow in cfs (Qw):	-----	-----	-----	-----
Vo for effective length (P-1-7/8, Chart 7 HEC 12):	-----	-----	-----	-----
Fraction of frontal flow intercepted (Rf):	-----	-----	-----	-----
Side flow in cfs (Qs):	-----	-----	-----	-----
Effective grate length w/clogging:	-----	-----	-----	-----
Fraction of side flow interception (Rs):	-----	-----	-----	-----
Grate Efficiency (E):	-----	-----	-----	-----
Total flow intercepted (cfs):	-----	-----	-----	-----
Grate flow-by (cfs):	-----	-----	-----	-----
SLOTTED DRAINS AND SIDE-OPENING INLETS ON-GRADE:				
Length required for total interception (ft): w/clogging	41.1	29.6	38.5	26.9
Length of inlet provided L (ft):	20	20	20	20
Interception for length L (cfs):	12.7	8.1	13.4	8.2
Efficiency for length L:	50.9%	66.2%	53.7%	71.1%
Slotted drain or side opening flow-by (cfs):	**12.3**	**4.1**	**11.6**	**3.3**
INTERCEPTION CAPACITY OF INLETS IN SAG LOCATION:				
Head available for weir flow at sag (ft):				
Capacity of grate in a sag (3-sided weir):	-----	-----	-----	-----
Capacity of grate in a sag (4-sided weir):	-----	-----	-----	-----
Length provided of curb-opening inlet at sag:				
Capacity of curb-opening inlet in a sag (weir):	-----	-----	-----	-----
Length of the vertical curve (ft x 100):				
approach grade #1 (%):				
approach grade #2 (%):				
ABS (algebraic diff. in approach grades) (%):	-----	-----	-----	-----
K = Min(Lc/A,167) (Table 5, HEC-12):	-----	-----	-----	-----
Flanking inlets maximum distance (ft):	-----	-----	-----	-----
TRIANGULAR MEDIAN HYDRAULICS:				
Manning's n for median finish:				
Cross-slope of median sides:				
Depth of flow at center of median (ft):	-----	-----	-----	-----
Flooded width in the median (ft):	-----	-----	-----	-----
Water velocity in the median (fps):	-----	-----	-----	-----

Design by: Alan Humphrey

INLET CALCULATIONS

Proportional Mapping for Lateral Design

h:\osborn\ajhdrgn2.dgn Jul. 30, 1999 06:44:23

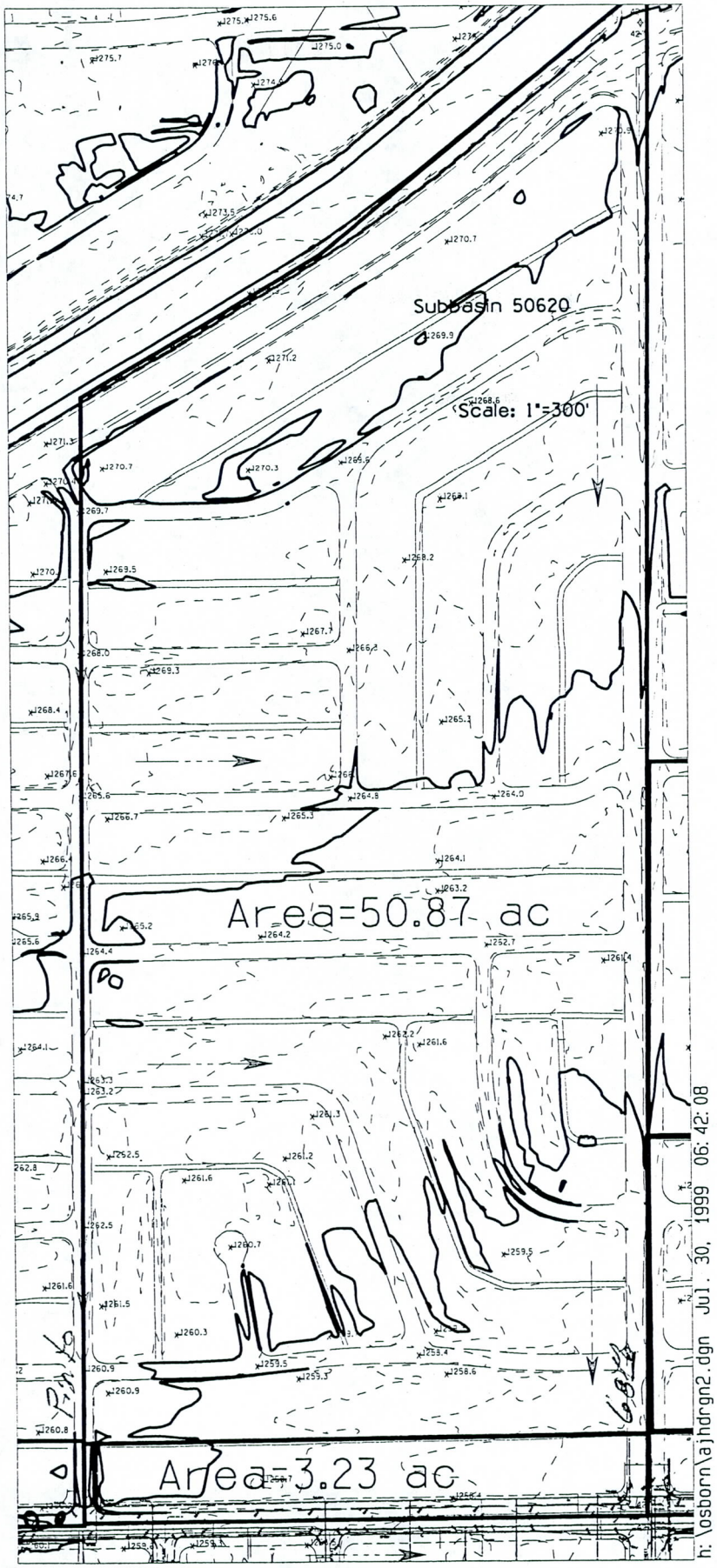

h:\osborn\ajhdrgn2.dgn Jul. 30, 1999 06:42:08

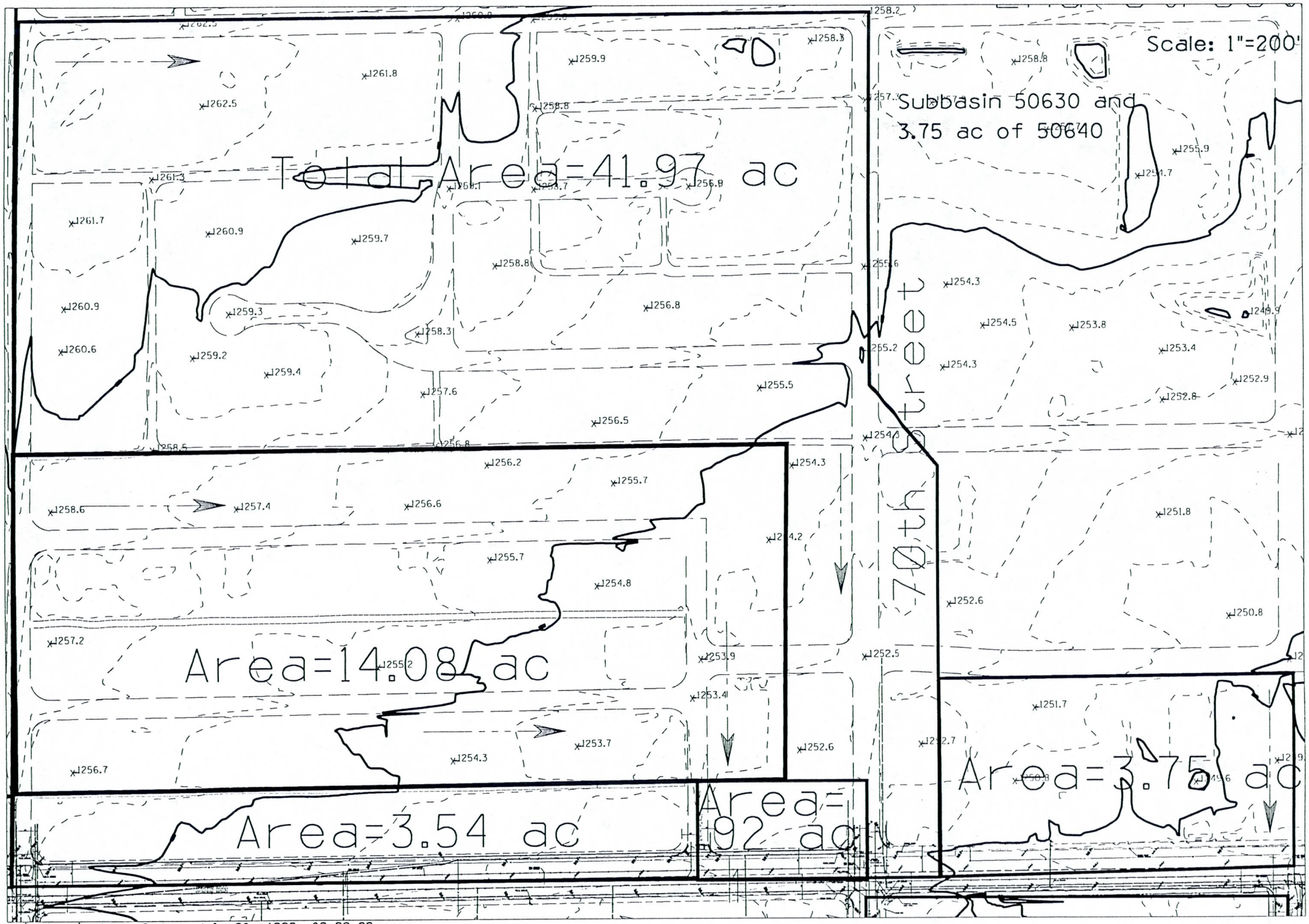

h:\osborn\ajhdrgn2.dgn Jul. 30, 1999 06:39:26

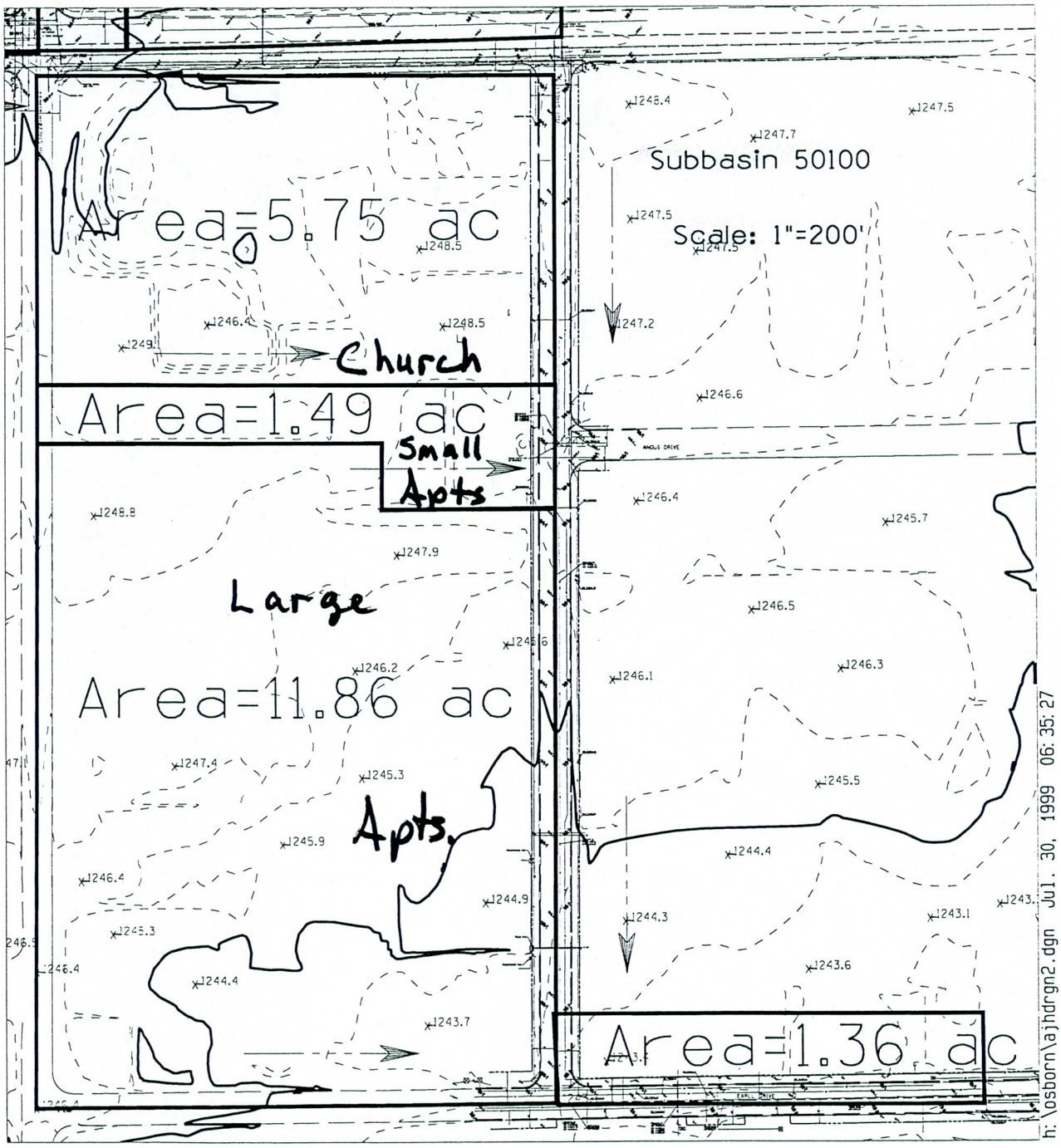
Subbasin 50100
Scale: 1"=200'
Area=5.75 ac
Church
Area=1.49 ac
Small Apts
Large Apts
Area=11.86 ac
Area=1.36 ac
ANGUS DRIVE
EARL DRIVE
h:\osborn\ajhdrgn2.dgn Jul. 30, 1999 06:35:27

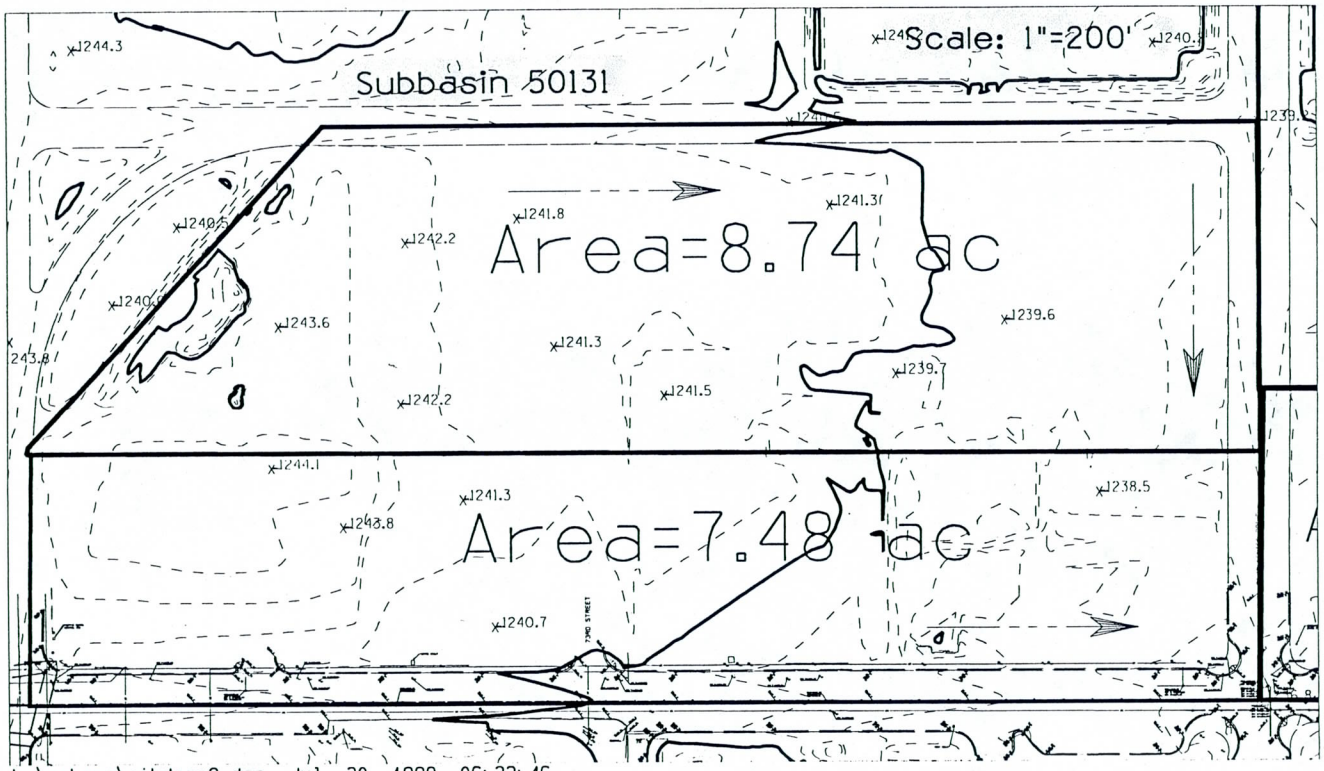

h:\osborn\ajhdrgn2.dgn Jul. 30, 1999 06:33:46

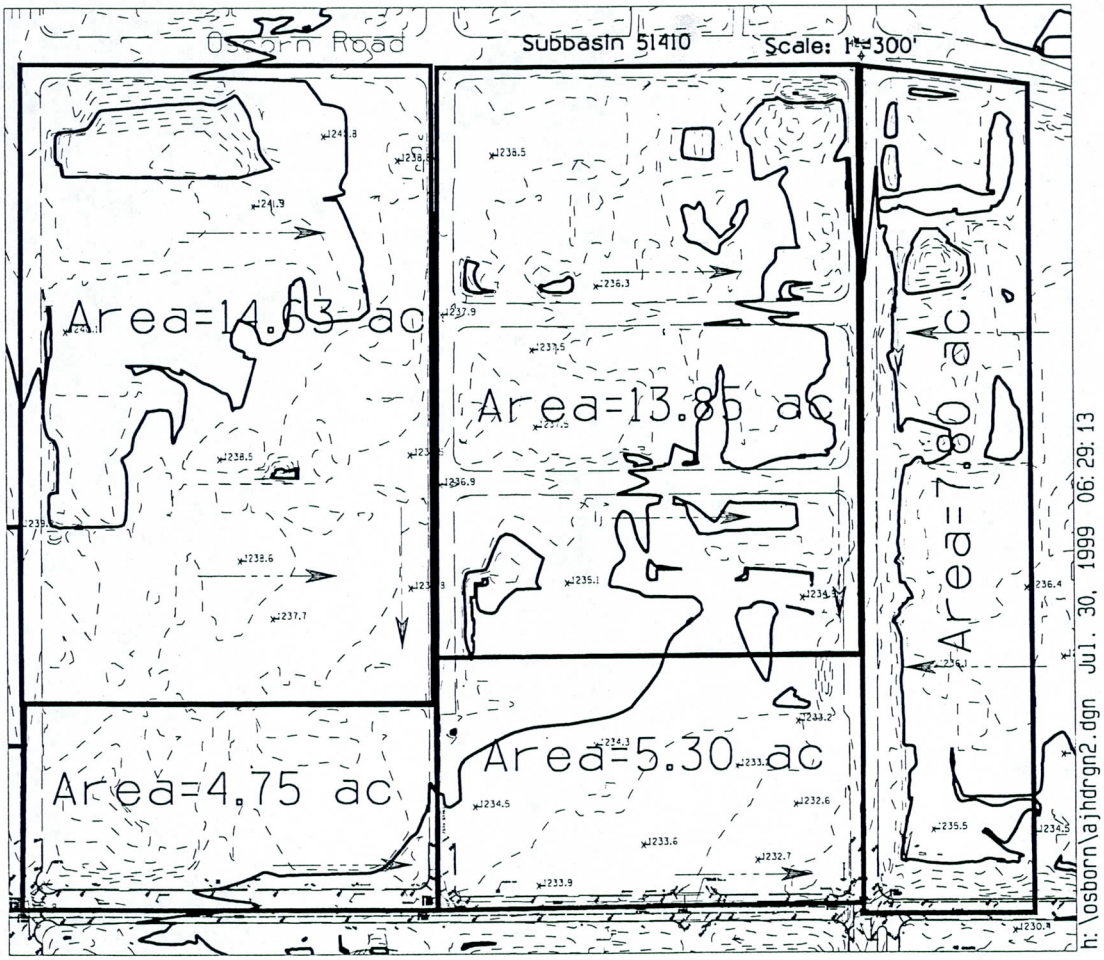

h:\osborn\ajhdrgn2.dgn Jul. 30, 1999 06:29:13

STORMCAD MODELS

OSBORN OUTFALL

MARRIOTT BRIGHTON GARDENS TO PAIUTE PARK

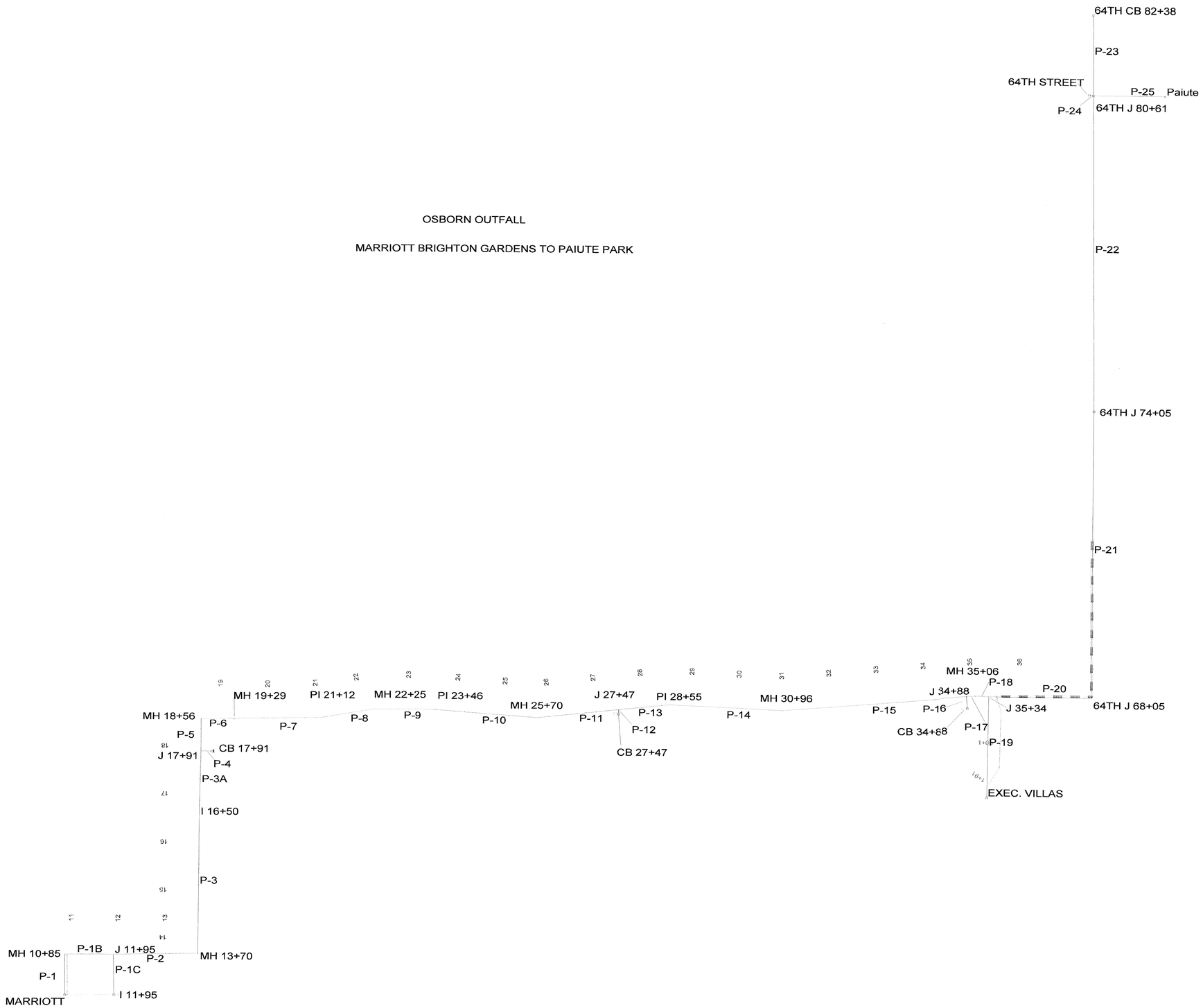

OSBORN OUTFALL

PAIUTE PARK TO SCOTTSDALE ROAD

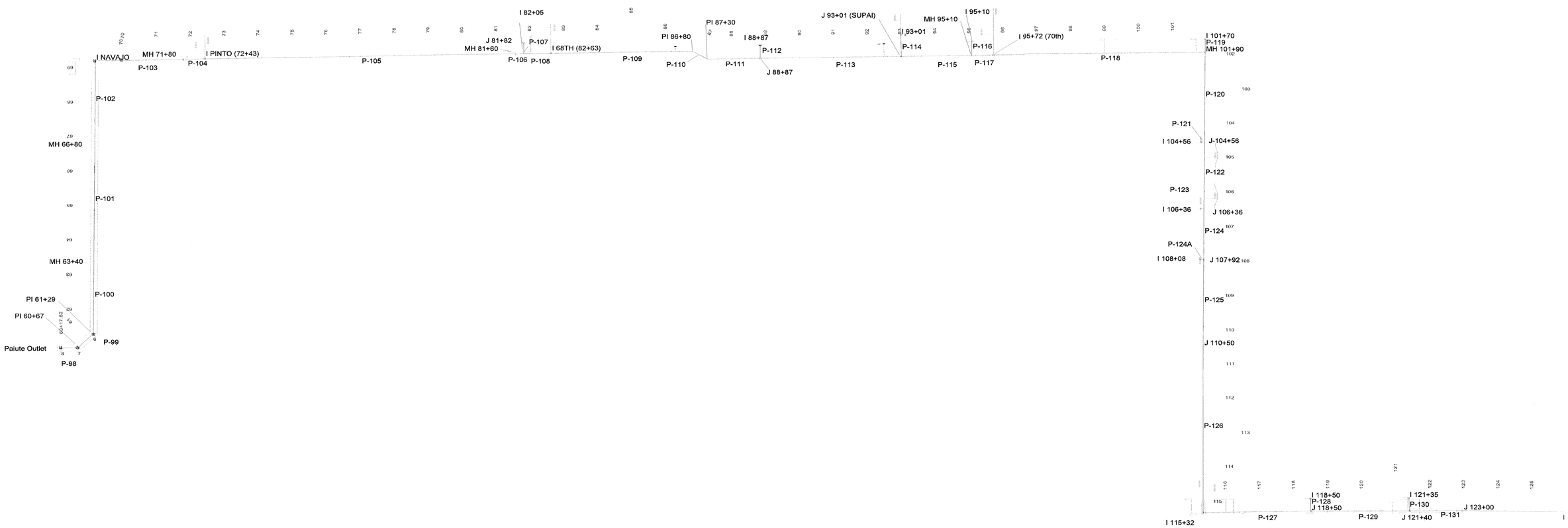

OSBORN OUTFALL

SCOTTSDALE ROAD TO INDIAN BEND WASH

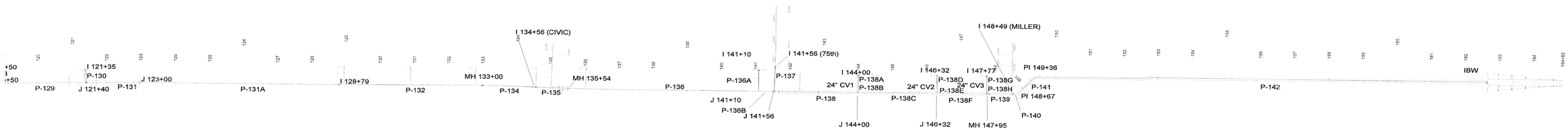

StormCad Models
Description List

1. Finaldn.stm- Final model of storm drain from Paiute Park to Indian Bend Wash. Various inlets are included in the model to spot check HGL at inlets. Flows at major intersections are set to peak flow calculated by HEC-1 models at that node. Includes 44 cfs discharge from Paiute Park as calculated by HEC-1, although actual flow from Paiute Park anticipated to be zero at time of peak flow in storm drain. Hydraulic grade line shown on plans between Paiute Park and Osborn Road based on this model.
2. IBW10yr.stm- Check of storm drain performance with simultaneous 10-year peak flows in Indian Bend Wash and pipe below Paiute Park. Hydraulic grade line at wash set at 1230.62.
3. Paiute.stm- Check of pipe from Paiute Park at peak stage in storm drain. Based on zero outflow from Paiute Park at time of peak flow in pipe. See HEC-1 model PBOsb2.dat for flows. Electronic copy provided. Paper printout not included in report. Flows adjusted at downstream nodes.
4. Finalup.stm- Final model of storm drain from Marriott Brighton Gardens to Paiute Park. Various inlets are included in the model to spot check HGL at inlets. Flows at major intersections are set to peak flow calculated by HEC-1 models at that node.
5. 64thchk.stm- check of storm drain in 64th Street during peak stage in Paiute Park. Flows in pipe taken from HEC-1 model at time of peak stage (t=3.83, stage=1251.0+1=1252.0). 1 foot added to peak stage to account for restriction at park outlet.
6. Navajo.stm- Design model for lateral at Navajo Trail. Flows taken from HEC-1 model at time of peak in lateral.
7. Pinto.stm- Design model for lateral at Pinto Lane. Flows taken from HEC-1 model at time of peak in lateral.
8. 68thlat.stm- Design model for lateral at 68th Street. Flows taken from HEC-1 model at time of peak in lateral.
9. Supai.stm- Design model for lateral at Supai Way. Flows taken from HEC-1 model at time of peak in lateral.
10. 70th.stm- Design model for lateral at 70th Street. Flows taken from HEC-1 model at time of peak in lateral.
11. Civic.stm- Design model for lateral at Civic Center Boulevard. Flows taken from HEC-1 model at time of peak in lateral.
12. 75th.stm- Design model for lateral at 75th Street. Flows taken from HEC-1 model at time of peak in lateral.
13. Mill60.stm- Design model for lateral at Miller Road. Includes 60" check valve in lateral. Flows taken from HEC-1 model at time of peak in lateral.
14. Park###.stm- various models used in the time dependant analysis of the outflow from Paiute Park. The numbers indicate the time at which the flows were analyzed.

Note: The background shown in the printed schematic sheets is generated by AutoCad files (*.dfx) included with the electronic files. The path will have to be reset in Storm Cad (under Options\Drawing Options) to see the background in the electronic file.

Osborn Outfall, Paiute Park to IBW

Pipe	Upstream Node	Downstream Node	Section Size	Length (ft)	Discharge (cfs)	Velocity (ft/s)	Upstream Ground Elevation (ft)	Upstream HGL (ft)	Upstream Invert Elevation (ft)	Downstream Ground Elevation (ft)	Downstream HGL (ft)	Downstream Invert Elevation (ft)
P-98	Paiute Outlet	PI 60+67	54 inch	50.00	44.00	2.77	1,257.00	1,257.37	1,245.32	1,257.50	1,257.35	1,245.10
P-99	PI 60+67	PI 61+29	54 inch	61.00	44.00	2.77	1,257.50	1,257.30	1,245.10	1,257.50	1,257.28	1,244.84
P-100	PI 61+29	MH 63+40	54 inch	211.00	44.00	2.77	1,257.50	1,257.23	1,244.84	1,257.80	1,257.14	1,243.92
P-101	MH 63+40	MH 66+80	54 inch	340.00	44.00	2.77	1,257.80	1,257.13	1,243.92	1,259.50	1,256.99	1,242.53
P-102	MH 66+80	I NAVAJO	54 inch	241.00	44.00	2.77	1,259.50	1,256.97	1,242.53	1,260.00	1,256.87	1,241.55
P-103	I NAVAJO	MH 71+80	60 inch	259.00	103.00	5.25	1,260.00	1,255.56	1,241.05	1,259.90	1,255.22	1,240.00
P-104	MH 71+80	I PINTO (72+43)	60 inch	63.00	137.00	6.98	1,259.90	1,255.18	1,240.00	1,259.70	1,255.03	1,239.77
P-105	I PINTO (72+43)	MH 81+60	60 inch	917.00	137.00	6.98	1,259.70	1,254.45	1,239.77	1,256.00	1,252.29	1,236.43
P-107	I 82+05	J 81+82	18 inch	32.00	6.00	5.11	1,255.93	1,252.55	1,251.60	1,256.10	1,252.25	1,238.48
P-106	MH 81+60	J 81+82	78 inch	22.00	137.00	4.13	1,256.00	1,252.26	1,234.93	1,256.10	1,252.25	1,234.83
P-108	J 81+82	I 68TH (82+63)	78 inch	81.00	143.00	4.31	1,256.10	1,252.20	1,234.83	1,256.00	1,252.15	1,234.45
P-109	I 68TH (82+63)	PI 86+80	78 inch	417.00	243.00	7.32	1,256.00	1,251.25	1,234.45	1,253.00	1,250.48	1,232.48
P-110	PI 86+80	PI 87+30	78 inch	50.00	243.00	7.32	1,253.00	1,250.03	1,232.48	1,253.00	1,249.94	1,232.25
P-111	PI 87+30	J 88+87	78 inch	155.00	243.00	7.32	1,253.00	1,249.61	1,232.25	1,253.00	1,249.32	1,231.51
P-112	I 88+87	J 88+87	18 inch	38.00	6.00	3.40	1,253.24	1,249.43	1,246.74	1,253.00	1,249.32	1,236.49
P-113	J 88+87	J 93+01 (SUPAI)	78 inch	415.00	249.00	7.50	1,253.00	1,249.24	1,231.51	1,252.00	1,248.45	1,229.58
P-114	I 93+01	J 93+01 (SUPAI)	12 inch	63.00	3.00	3.52	1,251.79	1,248.75	1,235.75	1,252.00	1,248.45	1,231.54
P-115	J 93+01 (SUPAI)	MH 95+10	78 inch	209.00	285.00	8.59	1,252.00	1,247.75	1,229.58	1,251.40	1,247.22	1,228.59
P-116	I 95+10	MH 95+10	18 inch	40.00	4.00	4.41	1,250.65	1,248.07	1,247.30	1,251.40	1,247.22	1,229.90
P-117	MH 95+10	I 95+72 (70th)	90 inch	62.00	289.00	6.54	1,251.40	1,247.22	1,227.64	1,251.35	1,247.14	1,227.55
P-118	I 95+72 (70th)	MH 101+90	90 inch	625.00	342.00	7.74	1,251.35	1,246.45	1,227.55	1,247.53	1,245.40	1,226.62
P-119	I 101+70	MH 101+90	18 inch	39.00	6.00	3.40	1,247.51	1,245.51	1,243.18	1,247.53	1,245.40	1,232.47
P-120	MH 101+90	J-104+56	90 inch	261.00	348.00	7.88	1,247.53	1,244.17	1,226.62	1,246.96	1,243.71	1,226.23
P-121	I 104+56	J-104+56	18 inch	10.00	8.00	4.53	1,247.37	1,243.76	1,241.04	1,246.96	1,243.71	1,232.68
P-123	I 106+36	J 106+36	18 inch	10.00	5.00	2.83	1,246.64	1,243.29	1,240.31	1,246.72	1,243.27	1,232.68
P-122	J-104+56	J 106+36	90 inch	192.00	356.00	8.06	1,246.96	1,243.62	1,226.23	1,246.72	1,243.27	1,225.94
P-124	J 106+36	J 107+92	90 inch	148.00	361.00	8.17	1,246.72	1,243.16	1,225.94	1,245.96	1,242.88	1,225.72
P-124A	I 108+08	J 107+92	18 inch	11.00	5.00	2.83	1,245.71	1,242.90	1,241.38	1,245.96	1,242.88	1,232.25
P-125	J 107+92	J 110+50	90 inch	252.00	366.00	8.28	1,245.96	1,242.82	1,225.72	1,244.80	1,242.33	1,225.27
P-126	J 110+50	I 115+32	90 inch	484.00	366.00	8.28	1,244.80	1,242.28	1,225.32	1,242.63	1,241.34	1,224.60
P-127	I 115+32	J 118+50	90 inch	318.00	392.00	8.87	1,242.63	1,239.58	1,224.60	1,241.81	1,238.88	1,224.13
P-128	I 118+50	J 118+50	18 inch	36.00	5.00	2.83	1,241.11	1,238.95	1,234.78	1,241.81	1,238.88	1,229.96
P-130	I 121+35	J 121+40	18 inch	37.00	3.00	1.70	1,241.15	1,237.85	1,234.82	1,241.02	1,237.83	1,229.52
P-129	J 118+50	J 121+40	90 inch	290.00	406.00	9.19	1,241.81	1,238.64	1,224.13	1,241.02	1,237.83	1,223.69
P-131	J 121+40	J 123+00	10 x 4 ft	158.00	411.00	10.28	1,241.02	1,237.63	1,223.69	1,240.37	1,236.95	1,223.53
P-131A	J 123+00	I 128+79	90 inch	582.00	411.00	9.30	1,240.37	1,236.73	1,223.43	1,238.69	1,235.31	1,222.85
P-132	I 128+79	MH 133+00	90 inch	420.00	411.00	9.30	1,238.69	1,235.11	1,222.85	1,237.38	1,234.08	1,222.43

Osborn Outfall, Paiute Park to IBW

Pipe	Upstream Node	Downstream Node	Section Size	Length (ft)	Discharge (cfs)	Velocity (ft/s)	Upstream Ground Elevation (ft)	Upstream HGL (ft)	Upstream Invert Elevation (ft)	Downstream Ground Elevation (ft)	Downstream HGL (ft)	Downstream Invert Elevation (ft)
P-134	MH 133+00	I 134+56 (CIVIC)	90 inch	156.00	411.00	9.30	1,237.38	1,234.02	1,222.43	1,236.00	1,233.63	1,222.27
P-135	I 134+56 (CIVIC)	MH 135+54	90 inch	98.00	447.00	10.12	1,236.00	1,233.26	1,222.27	1,235.65	1,232.98	1,222.17
P-136A	I 141+10	J 141+10	24 inch	62.00	18.00	5.73	1,233.25	1,231.98	1,229.92	1,233.34	1,231.64	1,224.14
P-136	MH 135+54	J 141+10	96 inch	556.00	447.00	8.89	1,235.65	1,232.78	1,222.17	1,233.34	1,231.64	1,221.64
P-137	I 141+56 (75th)	J 141+56	36 inch	71.00	34.00	4.81	1,233.35	1,231.57	1,225.26	1,233.12	1,231.41	1,222.34
P-136B	J 141+10	J 141+56	96 inch	45.00	465.00	9.25	1,233.34	1,231.51	1,221.64	1,233.12	1,231.41	1,221.59
P-138A	I 144+00	24" CV1	24 inch	39.00	4.00	1.27	1,232.40	1,231.70	1,228.90	1,232.40	1,231.69	1,224.82
P-138	J 141+56	J 144+00	10 x 6 ft	246.00	499.00	8.32	1,233.12	1,230.91	1,221.59	1,232.40	1,230.43	1,221.36
P-138B	24" CV1	J 144+00	24 inch	10.00	4.00	1.27	1,232.40	1,230.44	1,224.82	1,232.40	1,230.43	1,223.47
P-138D	I 146+32	24" CV2	24 inch	40.00	6.00	1.91	1,231.61	1,231.21	1,227.11	1,232.11	1,231.18	1,224.00
P-138G	I 147+77	24" CV3	24 inch	42.00	5.00	1.59	1,231.31	1,230.80	1,223.87	1,231.31	1,230.79	1,222.26
P-138C	J 144+00	J 146+32	10 x 6 ft	231.00	503.00	8.38	1,232.40	1,230.38	1,221.36	1,231.60	1,229.93	1,221.10
P-138E	24" CV2	J 146+32	24 inch	10.00	6.00	1.91	1,232.11	1,229.93	1,224.00	1,231.60	1,229.93	1,223.10
P-138H	24" CV3	MH 147+95	24 inch	10.00	5.00	1.59	1,231.31	1,229.54	1,222.26	1,231.33	1,229.53	1,222.21
P-138F	J 146+32	MH 147+95	10 x 6 ft	145.00	509.00	8.48	1,231.60	1,229.88	1,221.10	1,231.33	1,229.53	1,220.94
P-139	MH 147+95	I 148+49 (MILLER)	10 x 6 ft	77.00	514.00	8.57	1,231.33	1,229.47	1,220.96	1,231.34	1,229.31	1,220.82
P-140	I 148+49 (MILLER)	PI 148+67	10 x 6 ft	15.00	556.00	9.27	1,231.34	1,228.57	1,220.82	1,231.00	1,228.54	1,220.79
P-141	PI 148+67	PI 149+36	10 x 6 ft	68.00	556.00	9.27	1,231.00	1,228.00	1,220.79	1,231.00	1,227.84	1,220.65
P-142	PI 149+36	IBW	10 x 6 ft	1,325.00	556.00	9.27	1,231.00	1,227.21	1,220.65	1,228.00	1,224.00	1,218.00

Check- Simultaneous 10-year Storms

Pipe	Upstream Node	Downstream Node	Section Size	Length (ft)	Discharge (cfs)	Velocity (ft/s)	Upstream Ground Elevation (ft)	Upstream HGL (ft)	Upstream Invert Elevation (ft)	Downstream Ground Elevation (ft)	Downstream HGL (ft)	Downstream Invert Elevation (ft)
P-98	Paiute Outlet	PI 60+67	54 inch	50.00	44.00	2.77	1,257.00	1,258.30	1,245.32	1,257.50	1,258.27	1,245.10
P-99	PI 60+67	PI 61+29	54 inch	61.00	44.00	2.77	1,257.50	1,258.30	1,245.10	1,257.50	1,258.27	1,244.84
P-100	PI 61+29	MH 63+40	54 inch	211.00	44.00	2.77	1,257.50	1,258.36	1,244.84	1,257.80	1,258.27	1,243.92
P-101	MH 63+40	MH 66+80	54 inch	340.00	44.00	2.77	1,257.80	1,258.42	1,243.92	1,259.50	1,258.27	1,242.53
P-102	MH 66+80	I NAVAJO	54 inch	241.00	44.00	2.77	1,259.50	1,258.26	1,242.53	1,260.00	1,258.16	1,241.55
P-103	I NAVAJO	MH 71+80	60 inch	259.00	103.00	5.25	1,260.00	1,256.85	1,241.05	1,259.90	1,256.50	1,240.00
P-104	MH 71+80	I PINTO (72+43)	60 inch	63.00	137.00	6.98	1,259.90	1,256.46	1,240.00	1,259.70	1,256.32	1,239.77
P-105	I PINTO (72+43)	MH 81+60	60 inch	917.00	137.00	6.98	1,259.70	1,255.74	1,239.77	1,256.00	1,253.57	1,236.43
P-106	MH 81+60	J 81+82	78 inch	22.00	137.00	4.13	1,256.00	1,253.55	1,234.93	1,256.10	1,253.53	1,234.83
P-107	I 82+05	J 81+82	18 inch	32.00	6.00	3.40	1,255.93	1,253.62	1,251.60	1,256.10	1,253.53	1,238.48
P-108	J 81+82	I 68TH (82+63)	78 inch	81.00	143.00	4.31	1,256.10	1,253.48	1,234.83	1,256.00	1,253.43	1,234.45
P-109	I 68TH (82+63)	PI 86+80	78 inch	417.00	243.00	7.32	1,256.00	1,252.53	1,234.45	1,253.00	1,251.77	1,232.48
P-110	PI 86+80	PI 87+30	78 inch	50.00	243.00	7.32	1,253.00	1,251.32	1,232.48	1,253.00	1,251.23	1,232.25
P-112	I 88+87	J 88+87	18 inch	38.00	6.00	3.40	1,253.24	1,250.72	1,246.74	1,253.00	1,250.61	1,236.49
P-111	PI 87+30	J 88+87	78 inch	155.00	243.00	7.32	1,253.00	1,250.89	1,232.25	1,253.00	1,250.61	1,231.51
P-113	J 88+87	J 93+01 (SUPAI)	78 inch	415.00	249.00	7.50	1,253.00	1,250.53	1,231.51	1,252.00	1,249.73	1,229.58
P-114	I 93+01	J 93+01 (SUPAI)	12 inch	63.00	3.00	3.52	1,251.79	1,250.04	1,235.75	1,252.00	1,249.73	1,231.54
P-116	I 95+10	MH 95+10	18 inch	40.00	4.00	2.57	1,250.65	1,248.53	1,247.30	1,251.40	1,248.51	1,229.90
P-115	J 93+01 (SUPAI)	MH 95+10	78 inch	209.00	285.00	8.59	1,252.00	1,249.03	1,229.58	1,251.40	1,248.51	1,228.59
P-117	MH 95+10	I 95+72 (70th)	90 inch	62.00	289.00	6.54	1,251.40	1,248.51	1,227.64	1,251.35	1,248.43	1,227.55
P-118	I 95+72 (70th)	MH 101+90	90 inch	625.00	342.00	7.74	1,251.35	1,247.74	1,227.55	1,247.53	1,246.69	1,226.62
P-119	I 101+70	MH 101+90	18 inch	39.00	6.00	3.40	1,247.51	1,246.79	1,243.18	1,247.53	1,246.69	1,232.47
P-121	I 104+56	J-104+56	18 inch	10.00	8.00	4.53	1,247.37	1,245.05	1,241.04	1,246.96	1,245.00	1,232.68
P-120	MH 101+90	J-104+56	90 inch	261.00	348.00	7.88	1,247.53	1,245.46	1,226.62	1,246.96	1,245.00	1,226.23
P-123	I 106+36	J 106+36	18 inch	10.00	5.00	2.83	1,246.64	1,244.58	1,240.31	1,246.72	1,244.56	1,232.68
P-122	J-104+56	J 106+36	90 inch	192.00	356.00	8.06	1,246.96	1,244.91	1,226.23	1,246.72	1,244.56	1,225.94
P-124	J 106+36	J 107+92	90 inch	148.00	361.00	8.17	1,246.72	1,244.45	1,225.94	1,245.96	1,244.17	1,225.72
P-124A	I 108+08	J 107+92	18 inch	11.00	5.00	2.83	1,245.71	1,244.19	1,241.38	1,245.96	1,244.17	1,232.25
P-125	J 107+92	J 110+50	90 inch	252.00	366.00	8.28	1,245.96	1,244.11	1,225.72	1,244.80	1,243.62	1,225.27
P-126	J 110+50	I 115+32	90 inch	484.00	366.00	8.28	1,244.80	1,243.57	1,225.32	1,242.63	1,242.63	1,224.60
P-127	I 115+32	J 118+50	90 inch	318.00	392.00	8.87	1,242.63	1,241.26	1,224.60	1,241.81	1,240.55	1,224.13
P-128	I 118+50	J 118+50	18 inch	36.00	5.00	2.83	1,241.11	1,240.62	1,234.78	1,241.81	1,240.55	1,229.96
P-129	J 118+50	J 121+40	90 inch	290.00	406.00	9.19	1,241.81	1,240.31	1,224.13	1,241.02	1,239.50	1,223.69
P-130	I 121+35	J 121+40	18 inch	37.00	3.00	1.70	1,241.15	1,239.52	1,234.82	1,241.02	1,239.50	1,229.52
P-131	J 121+40	J 123+00	10 x 4 ft	158.00	411.00	10.28	1,241.02	1,239.30	1,223.69	1,240.37	1,238.62	1,223.53
P-131A	J 123+00	I 128+79	90 inch	582.00	411.00	9.30	1,240.37	1,238.40	1,223.43	1,238.69	1,236.98	1,222.85
P-132	I 128+79	MH 133+00	90 inch	420.00	411.00	9.30	1,238.69	1,236.78	1,222.85	1,237.38	1,235.76	1,222.43

Check- Simultaneous 10-year Storms

Pipe	Upstream Node	Downstream Node	Section Size	Length (ft)	Discharge (cfs)	Velocity (ft/s)	Upstream Ground Elevation (ft)	Upstream HGL (ft)	Upstream Invert Elevation (ft)	Downstream Ground Elevation (ft)	Downstream HGL (ft)	Downstream Invert Elevation (ft)
P-134	MH 133+00	I 134+56 (CIVIC)	90 inch	156.00	411.00	9.30	1,237.38	1,235.69	1,222.43	1,236.00	1,235.31	1,222.27
P-135	I 134+56 (CIVIC)	MH 135+54	90 inch	98.00	447.00	10.12	1,236.00	1,234.94	1,222.27	1,235.65	1,234.66	1,222.17
P-136	MH 135+54	J 141+10	96 inch	556.00	447.00	8.89	1,235.65	1,234.46	1,222.17	1,233.34	1,233.32	1,221.64
P-136A	I 141+10	J 141+10	24 inch	62.00	18.00	5.73	1,233.25	1,233.65	1,229.92	1,233.34	1,233.32	1,224.14
P-137	I 141+56 (75th)	J 141+56	36 inch	71.00	34.00	4.81	1,233.35	1,233.25	1,225.26	1,233.12	1,233.09	1,222.34
P-136B	J 141+10	J 141+56	96 inch	45.00	465.00	9.25	1,233.34	1,233.19	1,221.64	1,233.12	1,233.09	1,221.59
P-138A	I 144+00	24" CV1	24 inch	39.00	4.00	1.27	1,232.40	1,232.41	1,228.90	1,232.40	1,232.40	1,224.82
P-138D	I 146+32	24" CV2	24 inch	40.00	6.00	1.91	1,231.61	1,232.13	1,227.11	1,232.11	1,232.11	1,224.00
P-138	J 141+56	J 144+00	10 x 6 ft	246.00	499.00	8.32	1,233.12	1,232.59	1,221.59	1,232.40	1,232.11	1,221.36
P-138B	24" CV1	J 144+00	24 inch	10.00	4.00	1.27	1,232.40	1,232.11	1,224.82	1,232.40	1,232.11	1,223.47
P-138E	24" CV2	J 146+32	24 inch	10.00	6.00	1.91	1,232.11	1,231.61	1,224.00	1,231.60	1,231.60	1,223.10
P-138C	J 144+00	J 146+32	10 x 6 ft	231.00	503.00	8.38	1,232.40	1,232.06	1,221.36	1,231.60	1,231.60	1,221.10
P-138G	I 147+77	24" CV3	24 inch	42.00	5.00	1.59	1,231.31	1,231.36	1,223.87	1,231.31	1,231.34	1,222.26
P-138F	J 146+32	MH 147+95	10 x 6 ft	145.00	509.00	8.48	1,231.60	1,231.69	1,221.10	1,231.33	1,231.34	1,220.94
P-138H	24" CV3	MH 147+95	24 inch	10.00	5.00	1.59	1,231.31	1,231.34	1,222.26	1,231.33	1,231.34	1,222.21
P-139	MH 147+95	I 148+49 (MILLER)	10 x 6 ft	77.00	514.00	8.57	1,231.33	1,231.50	1,220.96	1,231.34	1,231.34	1,220.82
P-140	I 148+49 (MILLER)	PI 148+67	10 x 6 ft	15.00	556.00	9.27	1,231.34	1,231.04	1,220.82	1,231.00	1,231.00	1,220.79
P-141	PI 148+67	PI 149+36	10 x 6 ft	68.00	556.00	9.27	1,231.00	1,231.16	1,220.79	1,231.00	1,231.00	1,220.65
P-142	PI 149+36	IBW	10 x 6 ft	1,325.00	556.00	9.27	1,231.00	1,233.83	1,220.65	1,228.00	1,230.62	1,218.00

Check- Pipe Peak, No Paiute Outflow

Pipe	Upstream Node	Downstream Node	Section Size	Length (ft)	Discharge (cfs)	Velocity (ft/s)	Upstream Ground Elevation (ft)	Upstream HGL (ft)	Upstream Invert Elevation (ft)	Downstream Ground Elevation (ft)	Downstream HGL (ft)	Downstream Invert Elevation (ft)
P-98	Paiute Outlet	PI 60+67	54 inch	50.00	5.00	0.31	1,257.00	1,252.72	1,245.32	1,257.50	1,252.72	1,245.10
P-99	PI 60+67	PI 61+29	54 inch	61.00	5.00	0.31	1,257.50	1,252.72	1,245.10	1,257.50	1,252.72	1,244.84
P-100	PI 61+29	MH 63+40	54 inch	211.00	5.00	0.31	1,257.50	1,252.72	1,244.84	1,257.80	1,252.72	1,243.92
P-101	MH 63+40	MH 66+80	54 inch	340.00	5.00	0.31	1,257.80	1,252.72	1,243.92	1,259.50	1,252.72	1,242.53
P-102	MH 66+80	I NAVAJO	54 inch	241.00	5.00	0.31	1,259.50	1,252.72	1,242.53	1,260.00	1,252.71	1,241.55
P-103	I NAVAJO	MH 71+80	60 inch	259.00	49.00	2.50	1,260.00	1,251.40	1,241.05	1,259.90	1,251.33	1,240.00
P-104	MH 71+80	I PINTO (72+43)	60 inch	63.00	49.00	2.50	1,259.90	1,251.29	1,240.00	1,259.70	1,251.27	1,239.77
P-105	I PINTO (72+43)	MH 81+60	60 inch	917.00	99.00	5.04	1,259.70	1,250.69	1,239.77	1,256.00	1,249.56	1,236.43
P-106	MH 81+60	J 81+82	78 inch	22.00	99.00	2.98	1,256.00	1,249.54	1,234.93	1,256.10	1,249.54	1,234.83
P-107	I 82+05	J 81+82	18 inch	32.00	6.00	5.11	1,255.93	1,252.55	1,251.60	1,256.10	1,249.54	1,238.48
P-108	J 81+82	I 68TH (82+63)	78 inch	81.00	105.00	3.16	1,256.10	1,249.49	1,234.83	1,256.00	1,249.46	1,234.45
P-109	I 68TH (82+63)	PI 86+80	78 inch	417.00	209.00	6.30	1,256.00	1,248.56	1,234.45	1,253.00	1,248.00	1,232.48
P-110	PI 86+80	PI 87+30	78 inch	50.00	209.00	6.30	1,253.00	1,247.55	1,232.48	1,253.00	1,247.48	1,232.25
P-111	PI 87+30	J 88+87	78 inch	155.00	209.00	6.30	1,253.00	1,247.23	1,232.25	1,253.00	1,247.02	1,231.51
P-112	I 88+87	J 88+87	18 inch	38.00	6.00	5.11	1,253.24	1,247.69	1,246.74	1,253.00	1,247.02	1,236.49
P-113	J 88+87	J 93+01 (SUPAI)	78 inch	415.00	215.00	6.48	1,253.00	1,246.94	1,231.51	1,252.00	1,246.35	1,229.58
P-114	I 93+01	J 93+01 (SUPAI)	12 inch	63.00	3.00	3.52	1,251.79	1,246.65	1,235.75	1,252.00	1,246.35	1,231.54
P-115	J 93+01 (SUPAI)	MH 95+10	78 inch	209.00	243.00	7.32	1,252.00	1,245.65	1,229.58	1,251.40	1,245.26	1,228.59
P-116	I 95+10	MH 95+10	18 inch	40.00	4.00	4.41	1,250.65	1,248.07	1,247.30	1,251.40	1,245.26	1,229.90
P-117	MH 95+10	I 95+72 (70th)	90 inch	62.00	247.00	5.59	1,251.40	1,245.26	1,227.64	1,251.35	1,245.21	1,227.55
P-119	I 101+70	MH 101+90	18 inch	39.00	6.00	5.11	1,247.51	1,244.13	1,243.18	1,247.53	1,243.65	1,232.47
P-118	I 95+72 (70th)	MH 101+90	90 inch	625.00	311.00	7.04	1,251.35	1,244.52	1,227.55	1,247.53	1,243.65	1,226.62
P-120	MH 101+90	J-104+56	90 inch	261.00	317.00	7.18	1,247.53	1,242.42	1,226.62	1,246.96	1,242.04	1,226.23
P-121	I 104+56	J-104+56	18 inch	10.00	8.00	5.78	1,247.37	1,242.14	1,241.04	1,246.96	1,242.04	1,232.68
P-122	J-104+56	J 106+36	90 inch	192.00	325.00	7.36	1,246.96	1,241.95	1,226.23	1,246.72	1,241.65	1,225.94
P-123	I 106+36	J 106+36	18 inch	10.00	5.00	2.99	1,246.64	1,241.66	1,240.31	1,246.72	1,241.65	1,232.68
P-124	J 106+36	J 107+92	90 inch	148.00	330.00	7.47	1,246.72	1,241.54	1,225.94	1,245.96	1,241.31	1,225.72
P-124A	I 108+08	J 107+92	18 inch	11.00	5.00	4.77	1,245.71	1,242.24	1,241.38	1,245.96	1,241.31	1,232.25
P-125	J 107+92	J 110+50	90 inch	252.00	335.00	7.58	1,245.96	1,241.25	1,225.72	1,244.80	1,240.84	1,225.27
P-126	J 110+50	I 115+32	90 inch	484.00	335.00	7.58	1,244.80	1,240.80	1,225.32	1,242.63	1,240.01	1,224.60
P-127	I 115+32	J 118+50	90 inch	318.00	365.00	8.26	1,242.63	1,238.25	1,224.60	1,241.81	1,237.64	1,224.13
P-128	I 118+50	J 118+50	18 inch	36.00	5.00	2.83	1,241.11	1,237.71	1,234.78	1,241.81	1,237.64	1,229.96
P-129	J 118+50	J 121+40	90 inch	290.00	370.00	8.38	1,241.81	1,237.40	1,224.13	1,241.02	1,236.73	1,223.69
P-130	I 121+35	J 121+40	18 inch	37.00	3.00	1.70	1,241.15	1,236.75	1,234.82	1,241.02	1,236.73	1,229.52
P-131	J 121+40	J 123+00	10 x 4 ft	158.00	385.00	9.63	1,241.02	1,236.53	1,223.69	1,240.37	1,235.93	1,223.53
P-131A	J 123+00	I 128+79	90 inch	582.00	385.00	8.71	1,240.37	1,235.71	1,223.43	1,238.69	1,234.47	1,222.85
P-132	I 128+79	MH 133+00	90 inch	420.00	385.00	8.71	1,238.69	1,234.27	1,222.85	1,237.38	1,233.37	1,222.43

Check- Pipe Peak, No Paiute Outflow

Pipe	Upstream Node	Downstream Node	Section Size	Length (ft)	Discharge (cfs)	Velocity (ft/s)	Upstream Ground Elevation (ft)	Upstream HGL (ft)	Upstream Invert Elevation (ft)	Downstream Ground Elevation (ft)	Downstream HGL (ft)	Downstream Invert Elevation (ft)
P-134	MH 133+00	I 134+56 (CIVIC)	90 inch	156.00	385.00	8.71	1,237.38	1,233.31	1,222.43	1,236.00	1,232.97	1,222.27
P-135	I 134+56 (CIVIC)	MH 135+54	90 inch	98.00	418.00	9.46	1,236.00	1,232.60	1,222.27	1,235.65	1,232.36	1,222.17
P-136	MH 135+54	J 141+10	96 inch	556.00	418.00	8.32	1,235.65	1,232.16	1,222.17	1,233.34	1,231.16	1,221.64
P-136A	I 141+10	J 141+10	24 inch	62.00	18.00	6.99	1,233.25	1,231.45	1,229.92	1,233.34	1,231.16	1,224.14
P-137	I 141+56 (75th)	J 141+56	36 inch	71.00	34.00	4.81	1,233.35	1,231.10	1,225.26	1,233.12	1,230.94	1,222.34
P-136B	J 141+10	J 141+56	96 inch	45.00	436.00	8.67	1,233.34	1,231.03	1,221.64	1,233.12	1,230.94	1,221.59
P-138	J 141+56	I 143+98	10 x 6 ft	243.00	470.00	7.83	1,233.12	1,230.44	1,221.59	1,232.42	1,230.02	1,221.33
P-139	I 143+98	MH 147+95	10 x 6 ft	397.00	470.00	7.83	1,232.42	1,229.81	1,221.33	1,231.33	1,229.13	1,220.93
P-139A	MH 147+95	I 148+49 (MILLER)	10 x 6 ft	54.00	475.00	7.92	1,231.33	1,229.08	1,220.93	1,231.34	1,228.98	1,220.89
P-140	I 148+49 (MILLER)	PI 148+67	10 x 6 ft	18.00	531.00	8.85	1,231.34	1,228.24	1,220.89	1,231.00	1,228.20	1,220.85
P-141	PI 148+67	PI 149+36	10 x 6 ft	71.00	531.00	8.85	1,231.00	1,227.71	1,220.85	1,231.00	1,227.56	1,220.71
P-142	PI 149+36	IBW	10 x 6 ft	1,325.00	531.00	8.85	1,231.00	1,226.93	1,220.71	1,228.00	1,224.00	1,218.00

Osborn Outfall, Marriott to Paiute Park

Pipe	Upstream Node	Downstream Node	Section Size	Length (ft)	Discharge (cfs)	Velocity (ft/s)	Upstream Ground Elevation (ft)	Upstream HGL (ft)	Upstream Invert Elevation (ft)	Downstream Ground Elevation (ft)	Downstream HGL (ft)	Downstream Invert Elevation (ft)
P-1	MARRIOTT	MH 10+85	30 inch	85.00	38.00	7.74	1,273.00	1,271.11	1,267.75	1,272.30	1,270.48	1,267.74
P-1C	I 11+95	J 11+95	18 inch	84.00	9.00	6.13	1,271.10	1,269.66	1,268.50	1,272.50	1,268.76	1,266.83
P-1B	MH 10+85	J 11+95	36 inch	105.00	38.00	7.56	1,272.30	1,269.26	1,267.25	1,272.50	1,268.76	1,266.05
P-2	J 11+95	MH 13+70	36 inch	178.00	47.00	8.33	1,272.50	1,268.28	1,266.05	1,271.50	1,267.06	1,264.17
P-3	MH 13+70	I 16+50	42 inch	285.00	47.00	7.62	1,271.50	1,265.81	1,263.67	1,269.00	1,263.50	1,261.71
P-3A	I 16+50	J 17+91	42 inch	136.00	47.00	7.62	1,269.00	1,263.85	1,261.71	1,267.46	1,263.74	1,260.76
P-4	CB 17+91	J 17+91	18 inch	23.00	3.00	4.02	1,267.46	1,264.19	1,263.53	1,267.46	1,263.74	1,261.87
P-5	J 17+91	MH 18+56	42 inch	68.00	50.00	5.95	1,267.46	1,263.61	1,260.76	1,268.00	1,263.59	1,260.30
P-6	MH 18+56	MH 19+29	48 inch	71.00	50.00	7.39	1,268.00	1,262.42	1,260.30	1,268.10	1,261.35	1,259.11
P-7	MH 19+29	PI 21+12	36 inch	185.00	50.00	7.07	1,268.10	1,260.46	1,253.94	1,268.20	1,259.42	1,253.76
P-8	PI 21+12	MH 22+25	36 inch	113.00	50.00	7.07	1,268.20	1,259.38	1,253.76	1,268.80	1,258.75	1,253.64
P-9	MH 22+25	PI 23+46	48 inch	124.00	50.00	3.98	1,268.80	1,258.73	1,253.64	1,268.40	1,258.60	1,253.52
P-10	PI 23+46	MH 25+70	48 inch	225.00	50.00	3.98	1,268.40	1,258.60	1,253.52	1,268.40	1,258.37	1,253.30
P-12	CB 27+47	J 27+47	18 inch	10.00	3.50	4.22	1,267.95	1,265.00	1,264.29	1,268.00	1,258.18	1,256.09
P-11	MH 25+70	J 27+47	48 inch	172.00	50.00	3.98	1,268.40	1,258.35	1,253.30	1,268.00	1,258.18	1,253.12
P-13	J 27+47	PI 28+55	48 inch	108.00	53.50	4.26	1,268.00	1,258.09	1,253.11	1,268.00	1,257.96	1,253.01
P-14	PI 28+55	MH 30+96	48 inch	241.00	53.50	4.26	1,268.00	1,257.94	1,253.01	1,268.10	1,257.66	1,252.77
P-16	CB 34+88	J 34+88	18 inch	25.00	3.50	4.22	1,266.76	1,264.00	1,263.29	1,266.76	1,257.18	1,255.59
P-15	MH 30+96	J 34+88	48 inch	392.00	53.50	4.26	1,268.10	1,257.65	1,252.77	1,266.76	1,257.18	1,252.38
P-17	J 34+88	MH 35+06	48 inch	18.00	57.00	4.54	1,266.76	1,257.08	1,252.38	1,266.90	1,257.06	1,252.36
P-18	MH 35+06	J 35+57	66 inch	29.00	57.00	2.65	1,266.90	1,257.03	1,252.36	1,266.70	1,257.03	1,252.30
P-19	EXEC. VILLAS	J 35+57	48 inch	211.00	20.00	5.55	1,266.90	1,261.22	1,259.90	1,266.70	1,257.03	1,253.05
P-20	J 35+57	64TH J 68+05	66 inch	218.00	101.00	5.45	1,266.70	1,256.31	1,252.30	1,266.89	1,256.17	1,251.87
P-21	64TH J 68+05	64TH J 74+05	66 inch	601.00	101.00	6.56	1,266.89	1,255.24	1,251.85	1,259.40	1,254.71	1,250.66
P-24	64TH STREET	64TH J 80+61	30 inch	9.00	37.00	7.54	1,256.77	1,253.91	1,251.00	1,256.77	1,253.85	1,249.50
P-22	64TH J 74+05	64TH J 80+61	6 x 4 ft	658.00	101.00	4.52	1,259.40	1,254.37	1,250.64	1,256.77	1,253.85	1,249.35
P-23	64TH CB 82+38	64TH J 80+61	42 inch	166.00	24.00	2.49	1,255.99	1,253.93	1,249.95	1,256.77	1,253.85	1,249.50
P-25	64TH J 80+61	Paiute	10 x 4 ft	152.00	162.00	6.86	1,256.77	1,251.69	1,249.33	1,256.50	1,251.20	1,249.12

64th Street Check- Paiute Peak

Pipe	Upstream Node	Downstream Node	Section Size	Discharge (cfs)	Velocity (ft/s)	Upstream Ground Elevation (ft)	Upstream HGL (ft)	Upstream Invert Elevation (ft)	Downstream Ground Elevation (ft)	Downstream HGL (ft)	Downstream Invert Elevation (ft)
P-1	MARRIOTT	MH 10+85	30 inch	40.00	8.15	1,273.00	1,271.28	1,267.75	1,272.30	1,270.59	1,267.74
P-1C	I 11+95	J 11+95	18 inch	2.00	3.55	1,271.10	1,269.03	1,268.50	1,272.50	1,268.64	1,266.83
P-1B	MH 10+85	J 11+95	36 inch	40.00	7.73	1,272.30	1,269.31	1,267.25	1,272.50	1,268.64	1,266.05
P-2	J 11+95	MH 13+70	36 inch	42.00	7.90	1,272.50	1,268.16	1,266.05	1,271.50	1,266.83	1,264.17
P-3	MH 13+70	I 16+50	42 inch	42.00	7.31	1,271.50	1,265.69	1,263.67	1,269.00	1,263.39	1,261.71
P-4	CB 17+91	J 17+91	18 inch	3.00	4.02	1,267.46	1,264.19	1,263.53	1,267.46	1,263.50	1,261.87
P-3A	I 16+50	J 17+91	42 inch	42.00	7.31	1,269.00	1,263.73	1,261.71	1,267.46	1,263.50	1,260.76
P-5	J 17+91	MH 18+56	42 inch	45.00	5.84	1,267.46	1,263.37	1,260.76	1,268.00	1,263.40	1,260.30
P-6	MH 18+56	MH 19+29	48 inch	45.00	7.13	1,268.00	1,262.31	1,260.30	1,268.10	1,260.53	1,259.11
P-7	MH 19+29	PI 21+12	36 inch	45.00	6.37	1,268.10	1,259.34	1,253.94	1,268.20	1,258.50	1,253.76
P-8	PI 21+12	MH 22+25	36 inch	45.00	6.37	1,268.20	1,258.47	1,253.76	1,268.80	1,257.96	1,253.64
P-9	MH 22+25	PI 23+46	48 inch	45.00	3.58	1,268.80	1,257.94	1,253.64	1,268.40	1,257.83	1,253.52
P-10	PI 23+46	MH 25+70	48 inch	45.00	3.58	1,268.40	1,257.83	1,253.52	1,268.40	1,257.65	1,253.30
P-12	CB 27+47	J 27+47	18 inch	3.50	4.22	1,267.95	1,265.00	1,264.29	1,268.00	1,257.49	1,256.09
P-11	MH 25+70	J 27+47	48 inch	45.00	3.58	1,268.40	1,257.64	1,253.30	1,268.00	1,257.49	1,253.12
P-13	J 27+47	PI 28+55	48 inch	48.50	3.86	1,268.00	1,257.40	1,253.11	1,268.00	1,257.30	1,253.01
P-14	PI 28+55	MH 30+96	48 inch	48.50	3.86	1,268.00	1,257.29	1,253.01	1,268.10	1,257.05	1,252.77
P-15	MH 30+96	J 34+88	48 inch	48.50	3.86	1,268.10	1,257.04	1,252.77	1,266.76	1,256.66	1,252.38
P-16	CB 34+88	J 34+88	18 inch	3.50	4.22	1,266.76	1,264.00	1,263.29	1,266.76	1,256.66	1,255.59
P-17	J 34+88	MH 35+06	48 inch	52.00	4.14	1,266.76	1,256.56	1,252.38	1,266.90	1,256.54	1,252.36
P-19	EXEC. VILLAS	J 35+34	48 inch	20.00	5.55	1,266.90	1,261.22	1,259.90	1,266.70	1,256.51	1,253.05
P-18	MH 35+06	J 35+34	66 inch	52.00	2.70	1,266.90	1,256.51	1,252.36	1,266.70	1,256.51	1,252.30
P-20	J 35+34	64TH J 68+05	66 inch	72.00	4.53	1,266.70	1,255.79	1,252.30	1,266.89	1,255.71	1,251.87
P-21	64TH J 68+05	64TH J 74+05	66 inch	72.00	4.69	1,266.89	1,255.24	1,251.85	1,259.40	1,255.04	1,250.66
P-24	64TH STREET	64TH J 80+61	30 inch	37.00	7.54	1,256.77	1,254.29	1,251.00	1,256.77	1,254.23	1,249.50
P-22	64TH J 74+05	64TH J 80+61	6 x 4 ft	96.00	4.00	1,259.40	1,254.77	1,250.64	1,256.77	1,254.23	1,249.35
P-23	64TH CB 82+38	64TH J 80+61	42 inch	3.00	0.31	1,255.99	1,254.23	1,249.95	1,256.77	1,254.23	1,249.50
P-25	64TH J 80+61	Paiute	10 x 4 ft	136.00	4.96	1,256.77	1,252.07	1,249.33	1,256.50	1,252.00	1,249.12

Osborn Outfall
Navajo Lateral

70-70

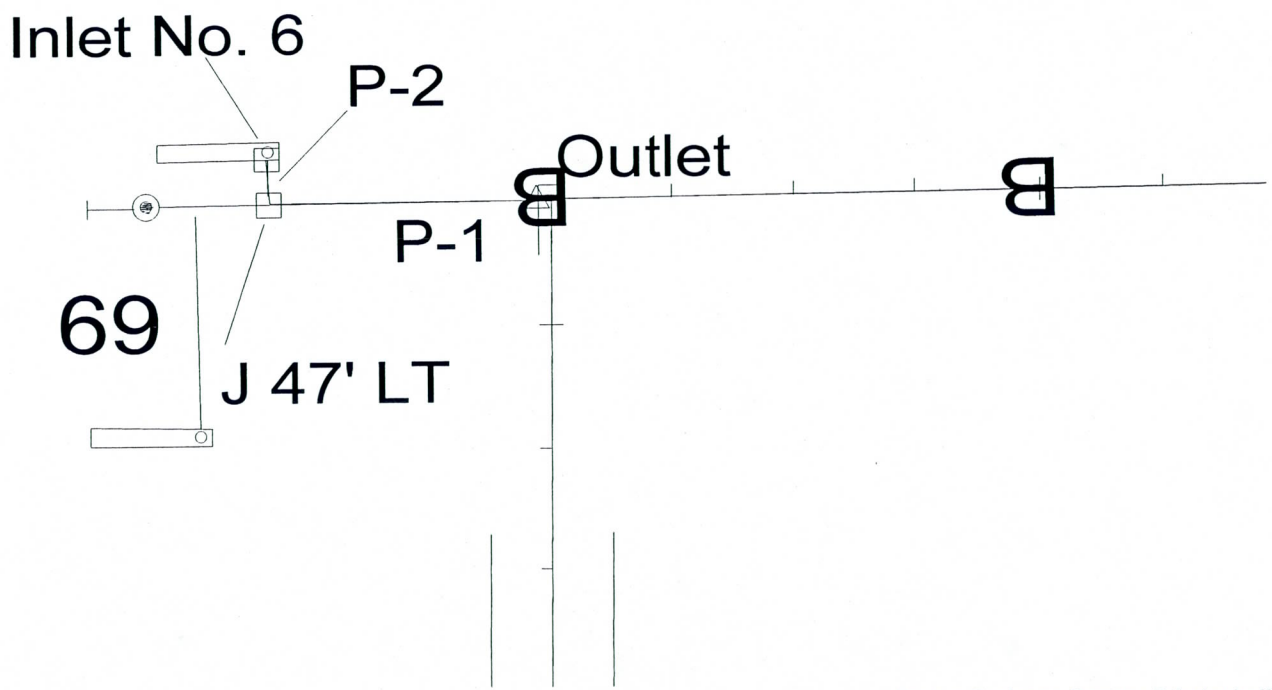

Navajo Lateral

Pipe	Upstream Node	Downstream Node	Section Size	Length (ft)	Discharge (cfs)	Velocity (ft/s)	Upstream Ground Elevation (ft)	Upstream HGL (ft)	Upstream Invert Elevation (ft)	Downstream Ground Elevation (ft)	Downstream HGL (ft)	Downstream Invert Elevation (ft)
P-2	Inlet No. 6	J 47' LT	18 inch	7.00	5.00	2.83	1,259.37	1,257.60	1,256.00	1,259.60	1,257.58	1,244.74
P-1	J 47' LT	Outlet	36 inch	44.00	49.00	6.93	1,259.60	1,257.11	1,242.39	1,259.40	1,256.91	1,242.35

Osborn Outfall

Pinto Lane Lateral

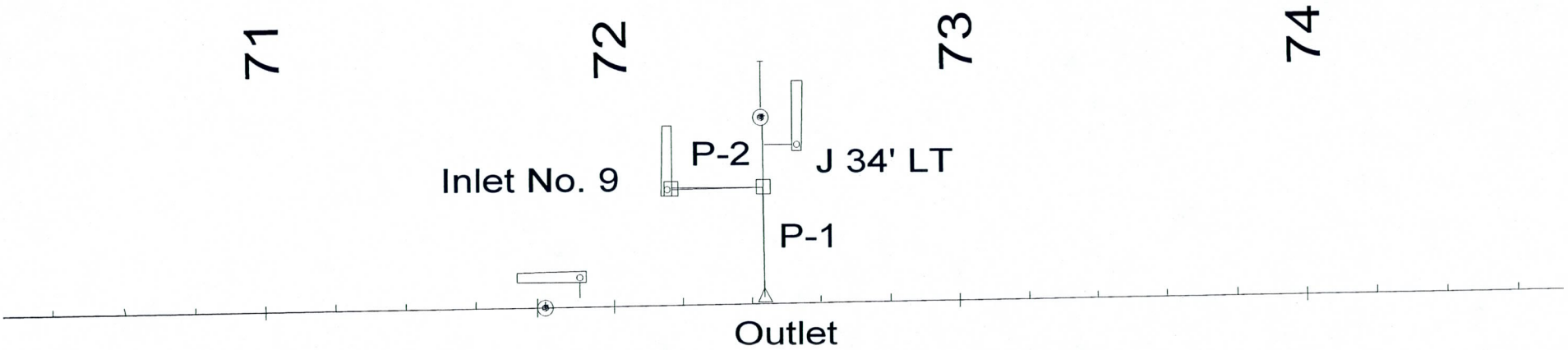

Pinto Lateral

Pipe	Upstream Node	Downstream Node	Section Size	Length (ft)	Discharge (cfs)	Velocity (ft/s)	Upstream Ground Elevation (ft)	Upstream HGL (ft)	Upstream Invert Elevation (ft)	Downstream Ground Elevation (ft)	Downstream HGL (ft)	Downstream Invert Elevation (ft)
P-2	Inlet No. 9	J 34' LT	18 inch	27.00	4.00	4.41	1,259.03	1,255.47	1,254.70	1,259.30	1,255.43	1,245.89
P-1	J 34' LT	Outlet	36 inch	31.00	49.00	6.93	1,259.30	1,255.20	1,244.70	1,259.10	1,255.06	1,241.09

Osborn Outfall
68th Street Lateral

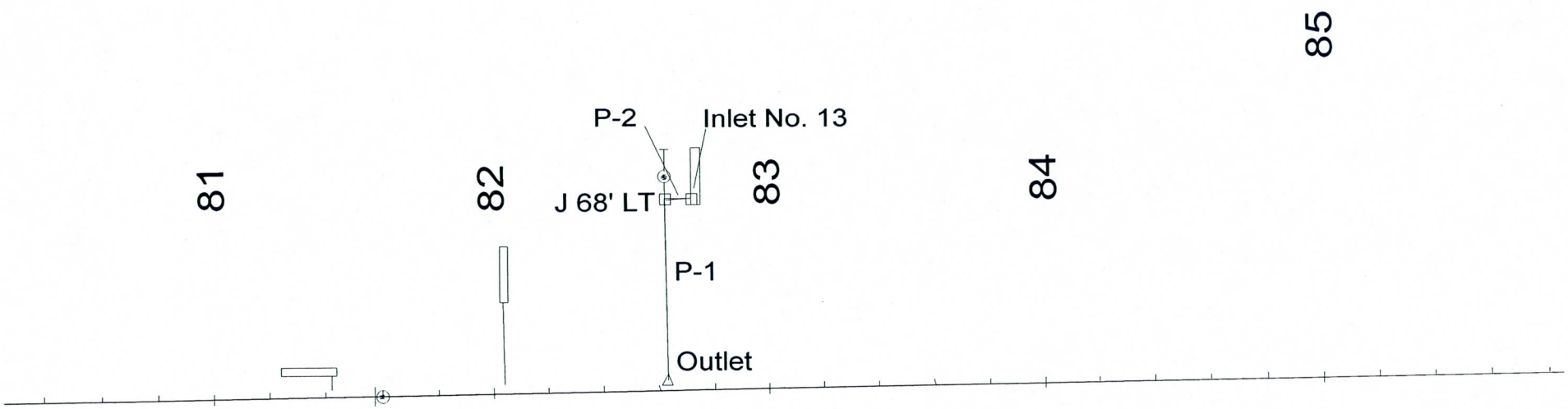

68th Street Lateral

Pipe	Upstream Node	Downstream Node	Section Size	Length (ft)	Discharge (cfs)	Velocity (ft/s)	Upstream Ground Elevation (ft)	Upstream HGL (ft)	Upstream Invert Elevation (ft)	Downstream Ground Elevation (ft)	Downstream HGL (ft)	Downstream Invert Elevation (ft)
P-2	Inlet No. 13	J 68' LT	18 inch	10.00	4.00	2.26	1,255.65	1,252.92	1,250.32	1,255.65	1,252.90	1,243.80
P-1	J 68' LT	Outlet	42 inch	65.00	88.00	9.15	1,255.65	1,252.60	1,241.63	1,254.30	1,252.18	1,236.18

Osborn Outfall

Supai Way Lateral

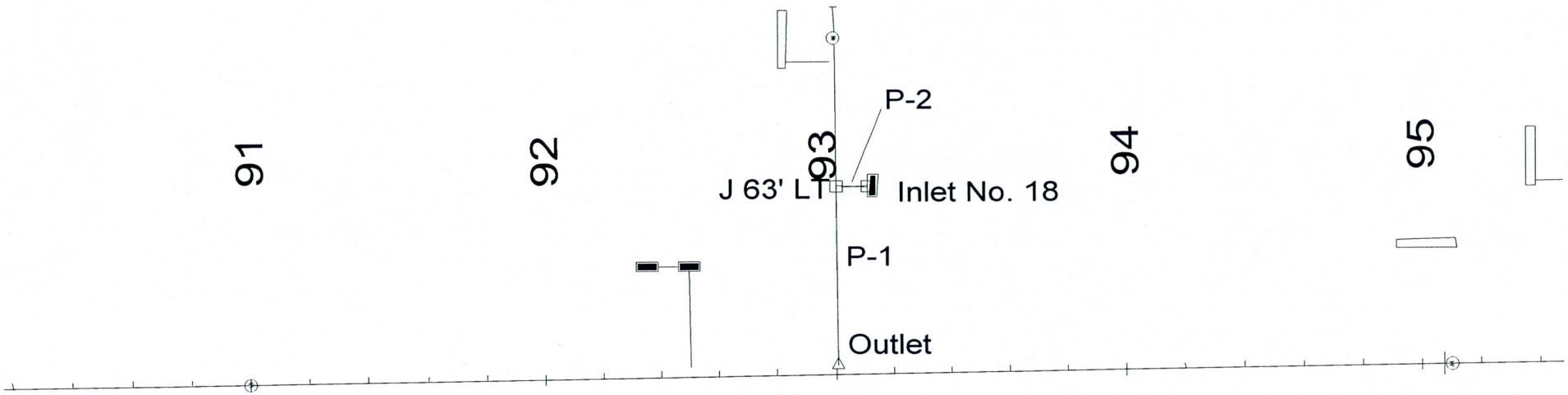

© Haestad Methods, Inc.

Parsons Brinckerhoff
37 Brookside Road Waterbury, CT 06708 USA (203) 755-1666

Supai Lateral

Pipe	Upstream Node	Downstream Node	Section Size	Length (ft)	Discharge (cfs)	Velocity (ft/s)	Upstream Ground Elevation (ft)	Upstream HGL (ft)	Upstream Invert Elevation (ft)	Downstream Ground Elevation (ft)	Downstream HGL (ft)	Downstream Invert Elevation (ft)
P-2	Inlet No. 18	J 63' LT	18 inch	11.00	2.00	1.13	1,252.17	1,248.85	1,247.17	1,252.45	1,248.84	1,237.67
P-1	J 63' LT	Outlet	36 inch	60.00	43.00	6.08	1,252.45	1,248.69	1,235.74	1,251.75	1,248.48	1,231.54

Osborn Outfall
70th Street Lateral

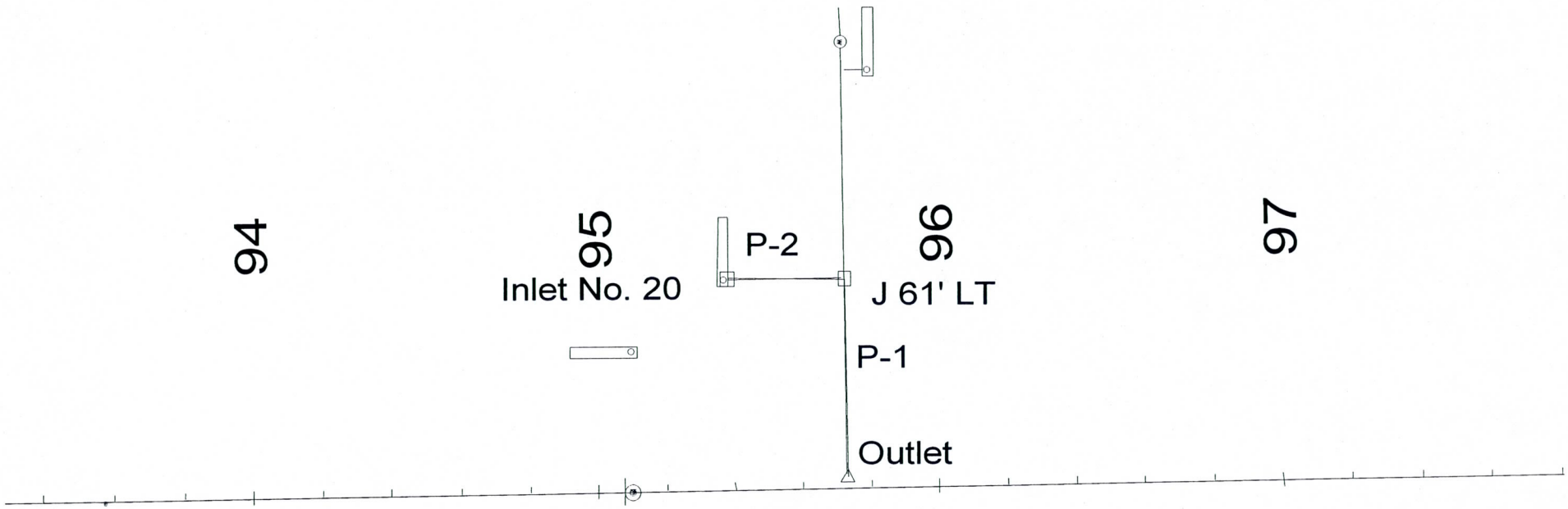

70th Street Lateral

Pipe	Upstream Node	Downstream Node	Section Size	Length (ft)	Discharge (cfs)	Velocity (ft/s)	Upstream Ground Elevation (ft)	Upstream HGL (ft)	Upstream Invert Elevation (ft)	Downstream Ground Elevation (ft)	Downstream HGL (ft)	Downstream Invert Elevation (ft)
P-2	Inlet No. 20	J 61' LT	18 inch	34.00	7.00	3.96	1,251.19	1,248.18	1,244.86	1,251.40	1,248.05	1,243.84
P-1	J 61' LT	Outlet	36 inch	57.00	71.00	10.04	1,251.40	1,247.73	1,242.70	1,250.80	1,247.18	1,230.28

OSBORN OUTFALL

CIVIC CENTER LATERAL

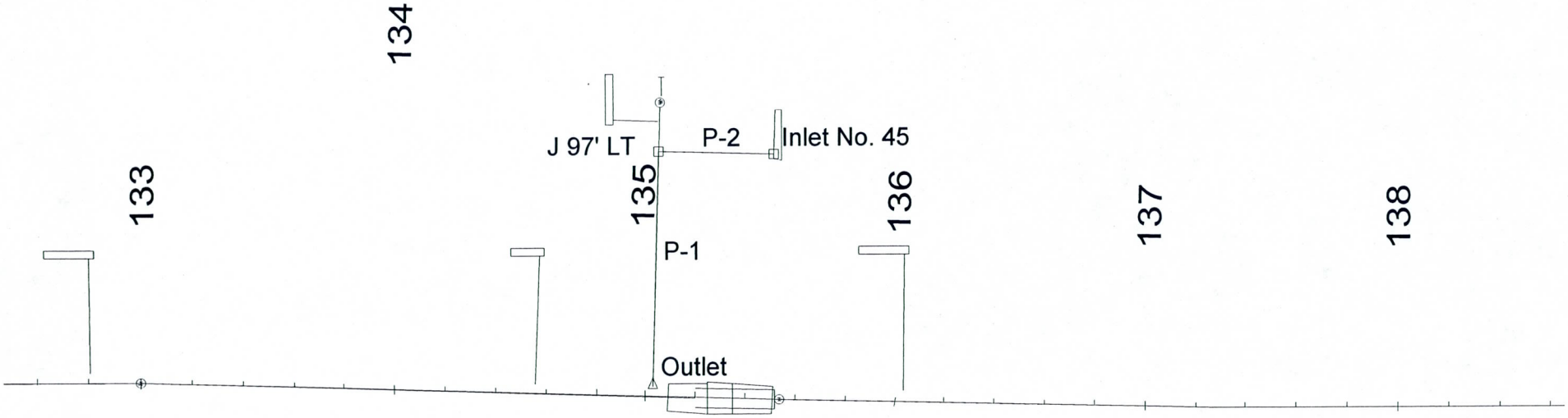

Civic Center Lateral

Pipe	Upstream Node	Downstream Node	Section Size	Length (ft)	Discharge (cfs)	Velocity (ft/s)	Upstream Ground Elevation (ft)	Upstream HGL (ft)	Upstream Invert Elevation (ft)	Downstream Ground Elevation (ft)	Downstream HGL (ft)	Downstream Invert Elevation (ft)
P-2	Inlet No. 45	J 97' LT	18 inch	47.00	5.00	2.83	1,236.13	1,234.86	1,232.80	1,236.50	1,234.76	1,232.01
P-1	J 97' LT	Outlet	30 inch	93.00	34.00	6.93	1,236.50	1,234.21	1,231.40	1,236.40	1,233.67	1,225.36

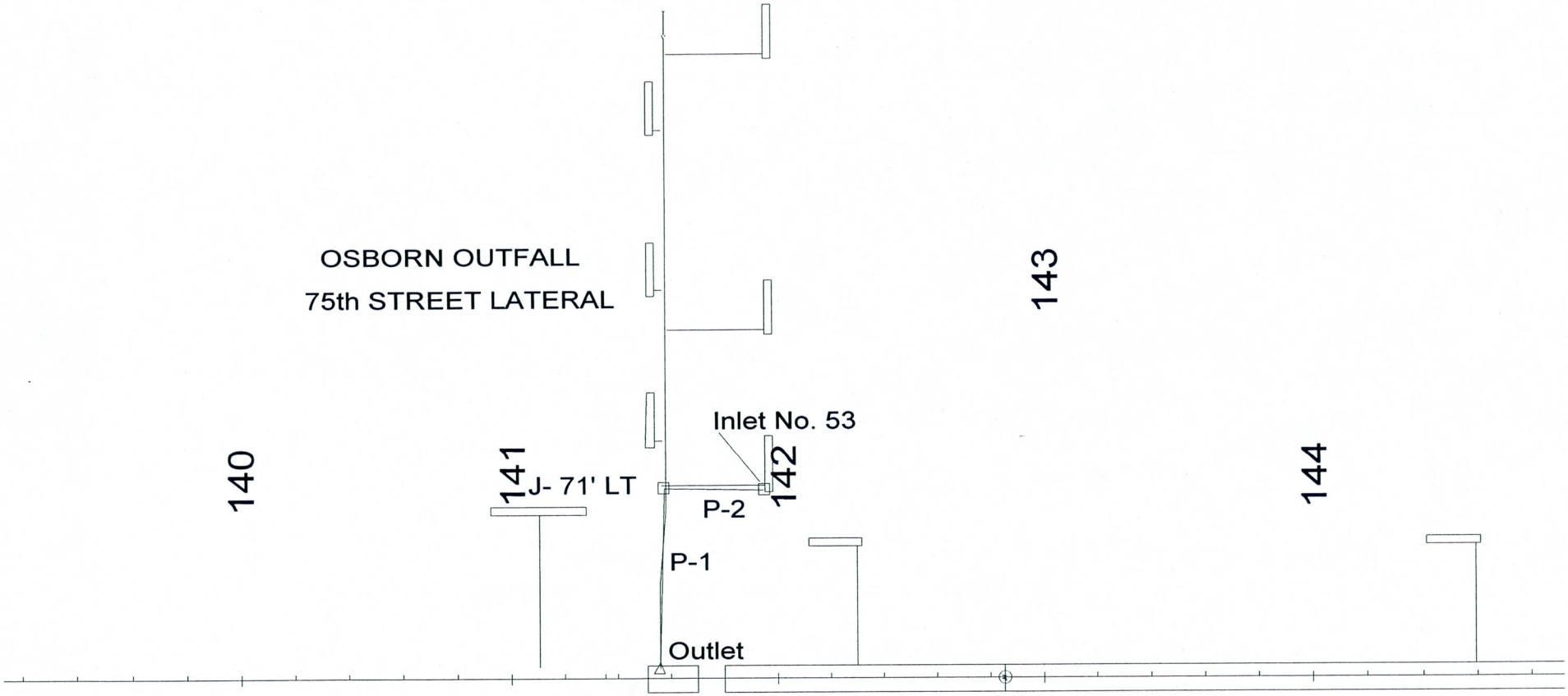

© Haestad Methods, Inc.

Parsons Brinckerhoff
37 Brookside Road Waterbury, CT 06708 USA (203) 755-1666

75th Street lateral

Pipe	Upstream Node	Downstream Node	Section Size	Length (ft)	Discharge (cfs)	Velocity (ft/s)	Upstream Ground Elevation (ft)	Upstream HGL (ft)	Upstream Invert Elevation (ft)	Downstream Ground Elevation (ft)	Downstream HGL (ft)	Downstream Invert Elevation (ft)
P-2	Inlet No. 53	J- 71' LT	18 inch	37.00	3.00	1.70	1,233.35	1,232.28	1,230.02	1,233.90	1,232.25	1,226.96
P-1	J- 71' LT	Outlet	36 inch	67.00	56.00	7.92	1,233.90	1,231.85	1,225.26	1,232.80	1,231.45	1,222.34

© Haestad Methods, Inc.

Parsons Brinckerhoff
37 Brookside Road Waterbury, CT 06708 USA (203) 755-1666

Osborn Outfall

Miller Road Lateral

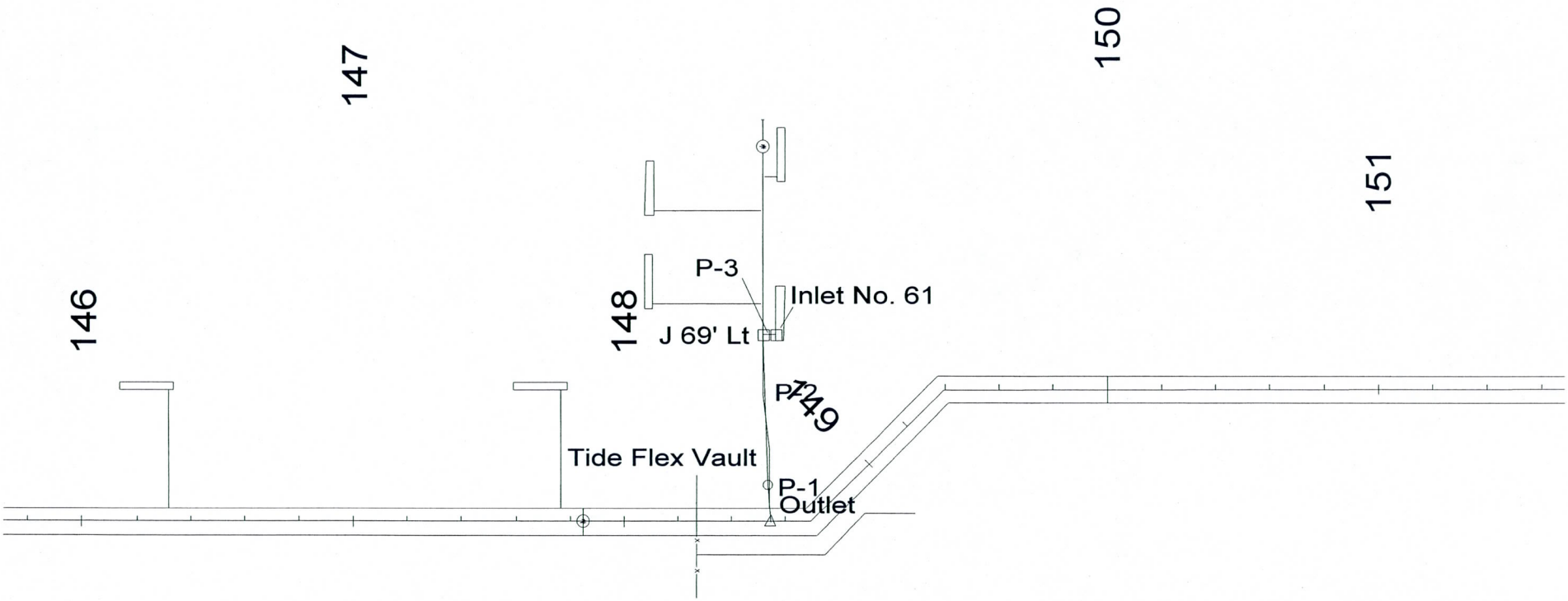

Miller Lateral, 60" Tide Flex Valve

Pipe	Upstream Node	Downstream Node	Section Size	Length (ft)	Discharge (cfs)	Velocity (ft/s)	Upstream Ground Elevation (ft)	Upstream HGL (ft)	Upstream Invert Elevation (ft)	Downstream Ground Elevation (ft)	Downstream HGL (ft)	Downstream Invert Elevation (ft)
P-3	Inlet No. 61	J 69' Lt	18 inch	5.00	2.00	1.13	1,230.97	1,230.88	1,226.64	1,231.21	1,230.88	1,224.78
P-2	J 69' Lt	Tide Flex Vault	42 inch	55.00	35.00	3.64	1,231.21	1,230.85	1,222.80	1,231.00	1,230.79	1,222.05
P-1	Tide Flex Vault	Outlet	12 x 6 ft	14.00	35.00	0.49	1,231.00	1,229.33	1,220.99	1,231.00	1,229.33	1,220.89

Time 306

Pipe	Upstream Node	Downstream Node	Section Size	Length (ft)	Discharge (cfs)	Velocity (ft/s)	Upstream Ground Elevation (ft)	Upstream HGL (ft)	Upstream Invert Elevation (ft)	Downstream Ground Elevation (ft)	Downstream HGL (ft)	Downstream Invert Elevation (ft)
P-100	Paiute Outlet	PI 61+40	54 inch	140.00	26.00	5.83	1,257.00	1,246.78	1,245.32	1,257.00	1,246.63	1,244.75
P-101	PI 61+40	MH 66+80	54 inch	539.00	26.00	5.83	1,257.00	1,246.21	1,244.75	1,259.50	1,244.04	1,242.53
P-102	MH 66+80	J-48	54 inch	264.00	26.00	5.83	1,259.50	1,243.99	1,242.53	1,260.00	1,243.26	1,241.52
P-103	J-48	J-49	54 inch	268.00	26.00	4.80	1,260.00	1,243.20	1,241.52	1,259.90	1,243.26	1,240.50
P-104	J-49	I PINTO (72+43)	60 inch	63.00	26.00	1.94	1,259.90	1,243.22	1,240.00	1,259.70	1,243.22	1,239.77
P-105	I PINTO (72+43)	MH 81+60	60 inch	917.00	101.00	8.69	1,259.70	1,242.63	1,239.77	1,256.00	1,239.94	1,236.43
P-106	MH 81+60	J 81+82	78 inch	22.00	101.00	3.69	1,256.00	1,239.92	1,234.93	1,256.10	1,239.92	1,234.83
P-107	I 81+82	J 81+82	18 inch	8.00	0.00	0.00	1,256.10	1,251.10	1,251.10	1,256.10	1,250.10	1,250.10
P-108	J 81+82	I 68TH (82+63)	78 inch	81.00	101.00	3.64	1,256.10	1,239.89	1,234.83	1,256.00	1,239.89	1,234.45
P-109	I 68TH (82+63)	PI 86+80	78 inch	417.00	166.00	6.74	1,256.00	1,238.97	1,234.45	1,253.00	1,238.92	1,232.48
P-110	PI 86+80	PI 87+30	78 inch	50.00	166.00	5.19	1,253.00	1,238.47	1,232.48	1,253.00	1,238.45	1,232.25
P-111	PI 87+30	J-50	78 inch	68.00	166.00	5.17	1,253.00	1,238.28	1,232.25	1,253.00	1,238.25	1,231.93
P-112	I 87+98	J-50	18 inch	40.00	0.00	0.00	1,253.54	1,248.53	1,248.53	1,253.00	1,247.53	1,247.53
P-114	I 92+57	J-62	12 inch	40.00	0.00	0.00	1,251.79	1,246.79	1,246.79	1,252.00	1,245.79	1,245.79
P-113	J-50	J-62	78 inch	459.00	166.00	5.06	1,253.00	1,238.20	1,231.93	1,252.00	1,237.82	1,229.60
P-116	I 95+10	MH 95+10	18 inch	40.00	0.00	0.00	1,251.80	1,246.50	1,246.50	1,251.40	1,245.00	1,245.00
P-115	J-62	MH 95+10	78 inch	253.00	166.00	5.00	1,252.00	1,237.14	1,229.60	1,251.40	1,236.93	1,228.59
P-117	MH 95+10	I 95+72 (70th)	90 inch	62.00	166.00	3.76	1,251.40	1,236.93	1,227.64	1,251.35	1,236.90	1,227.55
P-118	I 95+72 (70th)	I-71ST ST	90 inch	624.00	243.00	5.50	1,251.35	1,236.49	1,227.55	1,247.53	1,235.96	1,226.62
P-119	I 101+70	I-71ST ST	18 inch	47.00	0.00	0.00	1,247.85	1,242.85	1,242.85	1,247.53	1,241.85	1,241.85
P-120	I-71ST ST	J-104+53	90 inch	261.00	243.00	5.50	1,247.53	1,234.53	1,226.62	1,246.96	1,234.31	1,226.23
P-121	I 104+53	J-104+53	18 inch	10.00	0.00	0.00	1,246.96	1,241.96	1,241.96	1,246.96	1,240.96	1,240.96
P-123	I 106+45	J 106+45	18 inch	10.00	0.00	0.00	1,246.72	1,241.72	1,241.72	1,246.72	1,240.72	1,240.72
P-122	J-104+53	J 106+45	90 inch	192.00	243.00	5.50	1,246.96	1,234.16	1,226.23	1,246.72	1,233.99	1,225.94
P-124	J 106+45	J-51	90 inch	148.00	243.00	5.50	1,246.72	1,233.84	1,225.94	1,245.96	1,233.72	1,225.72
P-124A	I 107+92	J-51	18 inch	11.00	0.00	0.00	1,245.96	1,240.96	1,240.96	1,245.96	1,239.96	1,239.96
P-125	J-51	J 110+50	90 inch	252.00	243.00	5.50	1,245.96	1,233.67	1,225.72	1,244.80	1,233.45	1,225.27
P-126	J 110+50	J-52	90 inch	484.00	243.00	5.50	1,244.80	1,233.43	1,225.32	1,242.63	1,233.01	1,224.60
P-128	I 118+50	J-53	18 inch	36.00	0.00	0.00	1,241.89	1,236.89	1,236.89	1,241.81	1,235.89	1,235.89
P-127	J-52	J-53	90 inch	318.00	243.00	6.27	1,242.63	1,230.74	1,224.60	1,241.81	1,230.52	1,224.13
P-129	J-53	I-Scottsdale	90 inch	290.00	243.00	6.20	1,241.81	1,230.35	1,224.13	1,241.02	1,230.11	1,223.69
P-130	I 121+40	I-Scottsdale	18 inch	43.00	0.00	0.00	1,241.02	1,236.02	1,236.02	1,241.02	1,231.02	1,231.02
P-131	I-Scottsdale	J 123+00	10 x 4 ft	158.00	243.00	6.08	1,241.02	1,229.94	1,223.69	1,240.37	1,229.70	1,223.53
P-131A	J 123+00	J-55	90 inch	581.00	243.00	6.34	1,240.37	1,229.50	1,223.43	1,238.69	1,229.02	1,222.85
P-132	J-55	J-56	90 inch	421.00	243.00	6.50	1,238.69	1,228.77	1,222.85	1,237.38	1,228.39	1,222.43
P-134	J-56	I 134+56 (CIVIC)	90 inch	156.00	243.00	6.48	1,237.38	1,228.36	1,222.43	1,236.00	1,228.22	1,222.27
P-135	I 134+56 (CIVIC)	MH 135+54	90 inch	98.00	243.00	6.55	1,236.00	1,228.14	1,222.27	1,235.65	1,228.06	1,222.17

Time 306

Pipe	Upstream Node	Downstream Node	Section Size	Length (ft)	Discharge (cfs)	Velocity (ft/s)	Upstream Ground Elevation (ft)	Upstream HGL (ft)	Upstream Invert Elevation (ft)	Downstream Ground Elevation (ft)	Downstream HGL (ft)	Downstream Invert Elevation (ft)
P-136	MH 135+54	J-58	96 inch	576.00	243.00	6.59	1,235.65	1,227.68	1,222.17	1,233.12	1,227.19	1,221.60
P-137	J-57	J-58	36 inch	61.00	0.00	0.00	1,233.07	1,228.07	1,228.07	1,233.12	1,227.19	1,227.07
P-138	J-58	J-59	10 x 6 ft	268.00	243.00	4.85	1,233.12	1,226.61	1,221.60	1,232.42	1,226.52	1,221.33
P-139	J-59	J-60	10 x 6 ft	397.00	243.00	4.74	1,232.42	1,226.46	1,221.33	1,231.33	1,226.33	1,220.93
P-139A	J-60	I 148+49 (MILLER)	10 x 6 ft	54.00	243.00	4.51	1,231.33	1,226.32	1,220.93	1,231.34	1,226.30	1,220.89
P-140	I 148+49 (MILLER)	PI 148+67	10 x 6 ft	18.00	289.00	6.32	1,231.34	1,225.46	1,220.89	1,231.00	1,225.45	1,220.85
P-141	PI 148+67	PI 149+36	10 x 6 ft	69.00	289.00	6.68	1,231.00	1,225.18	1,220.85	1,231.00	1,225.15	1,220.71
P-142	PI 149+36	IBW	10 x 6 ft	1,326.00	289.00	7.59	1,231.00	1,224.52	1,220.71	1,228.00	1,224.00	1,218.00

Time 308

Pipe	Upstream Node	Downstream Node	Section Size	Length (ft)	Discharge (cfs)	Velocity (ft/s)	Upstream Ground Elevation (ft)	Upstream HGL (ft)	Upstream Invert Elevation (ft)	Downstream Ground Elevation (ft)	Downstream HGL (ft)	Downstream Invert Elevation (ft)
P-100	Paiute Outlet	PI 61+40	54 inch	140.00	33.00	5.85	1,257.00	1,247.05	1,245.32	1,257.00	1,247.18	1,244.75
P-101	PI 61+40	MH 66+80	54 inch	539.00	33.00	4.26	1,257.00	1,246.96	1,244.75	1,259.50	1,246.95	1,242.53
P-102	MH 66+80	J-48	54 inch	264.00	33.00	2.08	1,259.50	1,246.94	1,242.53	1,260.00	1,246.88	1,241.52
P-103	J-48	J-49	54 inch	268.00	33.00	2.07	1,260.00	1,246.82	1,241.52	1,259.90	1,246.76	1,240.50
P-104	J-49	I PINTO (72+43)	60 inch	63.00	33.00	1.68	1,259.90	1,246.72	1,240.00	1,259.70	1,246.71	1,239.77
P-105	I PINTO (72+43)	MH 81+60	60 inch	917.00	127.00	6.47	1,259.70	1,246.12	1,239.77	1,256.00	1,244.26	1,236.43
P-107	I 81+82	J 81+82	18 inch	8.00	0.00	0.00	1,256.10	1,251.10	1,251.10	1,256.10	1,250.10	1,250.10
P-106	MH 81+60	J 81+82	78 inch	22.00	127.00	3.83	1,256.00	1,244.24	1,234.93	1,256.10	1,244.23	1,234.83
P-108	J 81+82	I 68TH (82+63)	78 inch	81.00	127.00	3.83	1,256.10	1,244.20	1,234.83	1,256.00	1,244.16	1,234.45
P-109	I 68TH (82+63)	PI 86+80	78 inch	417.00	216.00	6.51	1,256.00	1,243.24	1,234.45	1,253.00	1,242.63	1,232.48
P-110	PI 86+80	PI 87+30	78 inch	50.00	216.00	6.51	1,253.00	1,242.18	1,232.48	1,253.00	1,242.11	1,232.25
P-111	PI 87+30	J-50	78 inch	68.00	216.00	6.51	1,253.00	1,241.85	1,232.25	1,253.00	1,241.75	1,231.93
P-112	I 87+98	J-50	18 inch	40.00	0.00	0.00	1,253.54	1,248.53	1,248.53	1,253.00	1,247.53	1,247.53
P-114	I 92+57	J-62	12 inch	40.00	0.00	0.00	1,251.79	1,246.79	1,246.79	1,252.00	1,245.79	1,245.79
P-113	J-50	J-62	78 inch	459.00	216.00	6.51	1,253.00	1,241.70	1,231.93	1,252.00	1,241.04	1,229.60
P-115	J-62	MH 95+10	78 inch	253.00	216.00	6.51	1,252.00	1,240.36	1,229.60	1,251.40	1,239.99	1,228.59
P-116	I 95+10	MH 95+10	18 inch	40.00	0.00	0.00	1,251.80	1,246.50	1,246.50	1,251.40	1,245.00	1,245.00
P-117	MH 95+10	I 95+72 (70th)	90 inch	62.00	216.00	4.89	1,251.40	1,239.99	1,227.64	1,251.35	1,239.95	1,227.55
P-119	I 101+70	I-71ST ST	18 inch	47.00	0.00	0.00	1,247.85	1,242.85	1,242.85	1,247.53	1,241.85	1,241.85
P-118	I 95+72 (70th)	I-71ST ST	90 inch	624.00	311.00	7.04	1,251.35	1,239.54	1,227.55	1,247.53	1,238.67	1,226.62
P-121	I 104+53	J-104+53	18 inch	10.00	0.00	0.00	1,246.96	1,241.96	1,241.96	1,246.96	1,240.96	1,240.96
P-120	I-71ST ST	J-104+53	90 inch	261.00	311.00	7.04	1,247.53	1,237.24	1,226.62	1,246.96	1,236.87	1,226.23
P-122	J-104+53	J 106+45	90 inch	192.00	311.00	7.04	1,246.96	1,236.72	1,226.23	1,246.72	1,236.45	1,225.94
P-123	I 106+45	J 106+45	18 inch	10.00	0.00	0.00	1,246.72	1,241.72	1,241.72	1,246.72	1,240.72	1,240.72
P-124A	I 107+92	J-51	18 inch	11.00	0.00	0.00	1,245.96	1,240.96	1,240.96	1,245.96	1,239.96	1,239.96
P-124	J 106+45	J-51	90 inch	148.00	311.00	7.04	1,246.72	1,236.30	1,225.94	1,245.96	1,236.10	1,225.72
P-125	J-51	J 110+50	90 inch	252.00	311.00	7.04	1,245.96	1,236.05	1,225.72	1,244.80	1,235.69	1,225.27
P-126	J 110+50	J-52	90 inch	484.00	311.00	7.04	1,244.80	1,235.65	1,225.32	1,242.63	1,234.98	1,224.60
P-127	J-52	J-53	90 inch	318.00	311.00	7.04	1,242.63	1,232.71	1,224.60	1,241.81	1,232.26	1,224.13
P-128	I 118+50	J-53	18 inch	36.00	0.00	0.00	1,241.89	1,236.89	1,236.89	1,241.81	1,235.89	1,235.89
P-130	I 121+40	I-Scottsdale	18 inch	43.00	0.00	0.00	1,241.02	1,236.02	1,236.02	1,241.02	1,231.62	1,231.02
P-129	J-53	I-Scottsdale	90 inch	290.00	311.00	7.04	1,241.81	1,232.09	1,224.13	1,241.02	1,231.62	1,223.69
P-131	I-Scottsdale	J 123+00	10 x 4 ft	158.00	311.00	7.78	1,241.02	1,231.45	1,223.69	1,240.37	1,231.06	1,223.53
P-131A	J 123+00	J-55	90 inch	581.00	311.00	7.05	1,240.37	1,230.86	1,223.43	1,238.69	1,230.12	1,222.85
P-132	J-55	J-56	90 inch	421.00	311.00	7.23	1,238.69	1,229.87	1,222.85	1,237.38	1,229.35	1,222.43
P-134	J-56	I 134+56 (CIVIC)	90 inch	156.00	311.00	7.33	1,237.38	1,229.30	1,222.43	1,236.00	1,229.11	1,222.27
P-135	I 134+56 (CIVIC)	MH 135+54	90 inch	98.00	311.00	7.42	1,236.00	1,229.03	1,222.27	1,235.65	1,228.90	1,222.17

Time 308

Pipe	Upstream Node	Downstream Node	Section Size	Length (ft)	Discharge (cfs)	Velocity (ft/s)	Upstream Ground Elevation (ft)	Upstream HGL (ft)	Upstream Invert Elevation (ft)	Downstream Ground Elevation (ft)	Downstream HGL (ft)	Downstream Invert Elevation (ft)
P-136	MH 135+54	J-58	96 inch	576.00	311.00	7.27	1,235.65	1,228.52	1,222.17	1,233.12	1,227.90	1,221.60
P-137	J-57	J-58	36 inch	61.00	0.00	0.00	1,233.07	1,228.07	1,228.07	1,233.12	1,227.90	1,227.07
P-138	J-58	J-59	10 x 6 ft	268.00	311.00	5.44	1,233.12	1,227.32	1,221.60	1,232.42	1,227.21	1,221.33
P-139	J-59	J-60	10 x 6 ft	397.00	311.00	5.35	1,232.42	1,227.15	1,221.33	1,231.33	1,226.94	1,220.93
P-139A	J-60	I 148+49 (MILLER)	10 x 6 ft	54.00	311.00	5.20	1,231.33	1,226.92	1,220.93	1,231.34	1,226.86	1,220.89
P-140	I 148+49 (MILLER)	PI 148+67	10 x 6 ft	18.00	378.00	7.37	1,231.34	1,226.02	1,220.89	1,231.00	1,226.01	1,220.85
P-141	PI 148+67	PI 149+36	10 x 6 ft	69.00	378.00	7.92	1,231.00	1,225.62	1,220.85	1,231.00	1,225.57	1,220.71
P-142	PI 149+36	IBW	10 x 6 ft	1,326.00	378.00	8.93	1,231.00	1,224.94	1,220.71	1,228.00	1,224.00	1,218.00

Time 310

Pipe	Upstream Node	Downstream Node	Section Size	Length (ft)	Discharge (cfs)	Velocity (ft/s)	Upstream Ground Elevation (ft)	Upstream HGL (ft)	Upstream Invert Elevation (ft)	Downstream Ground Elevation (ft)	Downstream HGL (ft)	Downstream Invert Elevation (ft)
P-100	Paiute Outlet	PI 61+40	54 inch	140.00	41.00	2.58	1,257.00	1,251.19	1,245.32	1,257.00	1,251.14	1,244.75
P-101	PI 61+40	MH 66+80	54 inch	539.00	41.00	2.58	1,257.00	1,251.05	1,244.75	1,259.50	1,250.85	1,242.53
P-102	MH 66+80	J-48	54 inch	264.00	41.00	2.58	1,259.50	1,250.84	1,242.53	1,260.00	1,250.75	1,241.52
P-103	J-48	J-49	54 inch	268.00	41.00	2.58	1,260.00	1,250.69	1,241.52	1,259.90	1,250.59	1,240.50
P-104	J-49	I PINTO (72+43)	60 inch	63.00	41.00	2.09	1,259.90	1,250.55	1,240.00	1,259.70	1,250.53	1,239.77
P-105	I PINTO (72+43)	MH 81+60	60 inch	917.00	135.00	6.88	1,259.70	1,249.94	1,239.77	1,256.00	1,247.84	1,236.43
P-107	I 81+82	J 81+82	18 inch	8.00	0.00	0.00	1,256.10	1,251.10	1,251.10	1,256.10	1,250.10	1,250.10
P-106	MH 81+60	J 81+82	78 inch	22.00	135.00	4.07	1,256.00	1,247.82	1,234.93	1,256.10	1,247.81	1,234.83
P-108	J 81+82	I 68TH (82+63)	78 inch	81.00	135.00	4.07	1,256.10	1,247.78	1,234.83	1,256.00	1,247.73	1,234.45
P-109	I 68TH (82+63)	PI 86+80	78 inch	417.00	242.00	7.29	1,256.00	1,246.81	1,234.45	1,253.00	1,246.05	1,232.48
P-110	PI 86+80	PI 87+30	78 inch	50.00	242.00	7.29	1,253.00	1,245.60	1,232.48	1,253.00	1,245.51	1,232.25
P-112	I 87+98	J-50	18 inch	40.00	0.00	0.00	1,253.54	1,248.53	1,248.53	1,253.00	1,247.53	1,247.53
P-111	PI 87+30	J-50	78 inch	68.00	242.00	7.29	1,253.00	1,245.18	1,232.25	1,253.00	1,245.06	1,231.93
P-114	I 92+57	J-62	12 inch	40.00	0.00	0.00	1,251.79	1,246.79	1,246.79	1,252.00	1,245.79	1,245.79
P-113	J-50	J-62	78 inch	459.00	242.00	7.29	1,253.00	1,245.01	1,231.93	1,252.00	1,244.17	1,229.60
P-116	I 95+10	MH 95+10	18 inch	40.00	0.00	0.00	1,251.80	1,246.50	1,246.50	1,251.40	1,245.00	1,245.00
P-115	J-62	MH 95+10	78 inch	253.00	242.00	7.29	1,252.00	1,243.49	1,229.60	1,251.40	1,243.03	1,228.59
P-117	MH 95+10	I 95+72 (70th)	90 inch	62.00	242.00	5.48	1,251.40	1,243.03	1,227.64	1,251.35	1,242.98	1,227.55
P-118	I 95+72 (70th)	I-71ST ST	90 inch	624.00	340.00	7.70	1,251.35	1,242.57	1,227.55	1,247.53	1,241.53	1,226.62
P-119	I 101+70	I-71ST ST	18 inch	47.00	0.00	0.00	1,247.85	1,242.85	1,242.85	1,247.53	1,241.85	1,241.85
P-120	I-71ST ST	J-104+53	90 inch	261.00	342.00	7.74	1,247.53	1,240.10	1,226.62	1,246.96	1,239.66	1,226.23
P-121	I 104+53	J-104+53	18 inch	10.00	0.00	0.00	1,246.96	1,241.96	1,241.96	1,246.96	1,240.96	1,240.96
P-123	I 106+45	J 106+45	18 inch	10.00	0.00	0.00	1,246.72	1,241.72	1,241.72	1,246.72	1,240.72	1,240.72
P-122	J-104+53	J 106+45	90 inch	192.00	342.00	7.74	1,246.96	1,239.51	1,226.23	1,246.72	1,239.18	1,225.94
P-124	J 106+45	J-51	90 inch	148.00	342.00	7.74	1,246.72	1,239.03	1,225.94	1,245.96	1,238.78	1,225.72
P-124A	I 107+92	J-51	18 inch	11.00	0.00	0.00	1,245.96	1,240.96	1,240.96	1,245.96	1,239.96	1,239.96
P-125	J-51	J 110+50	90 inch	252.00	342.00	7.74	1,245.96	1,238.73	1,225.72	1,244.80	1,238.31	1,225.27
P-126	J 110+50	J-52	90 inch	484.00	342.00	7.74	1,244.80	1,238.26	1,225.32	1,242.63	1,237.44	1,224.60
P-127	J-52	J-53	90 inch	318.00	342.00	7.74	1,242.63	1,235.17	1,224.60	1,241.81	1,234.64	1,224.13
P-128	I 118+50	J-53	18 inch	36.00	0.00	0.00	1,241.89	1,236.89	1,236.89	1,241.81	1,235.89	1,235.89
P-129	J-53	I-Scottsdale	90 inch	290.00	342.00	7.74	1,241.81	1,234.47	1,224.13	1,241.02	1,233.89	1,223.69
P-130	I 121+40	I-Scottsdale	18 inch	43.00	0.00	0.00	1,241.02	1,236.02	1,236.02	1,241.02	1,233.89	1,231.02
P-131	I-Scottsdale	J 123+00	10 x 4 ft	158.00	373.00	9.33	1,241.02	1,233.72	1,223.69	1,240.37	1,233.16	1,223.53
P-131A	J 123+00	J-55	90 inch	581.00	373.00	8.44	1,240.37	1,232.96	1,223.43	1,238.69	1,231.79	1,222.85
P-132	J-55	J-56	90 inch	421.00	373.00	8.44	1,238.69	1,231.54	1,222.85	1,237.38	1,230.70	1,222.43
P-134	J-56	I 134+56 (CIVIC)	90 inch	156.00	373.00	8.44	1,237.38	1,230.64	1,222.43	1,236.00	1,230.33	1,222.27
P-135	I 134+56 (CIVIC)	MH 135+54	90 inch	98.00	373.00	8.44	1,236.00	1,230.25	1,222.27	1,235.65	1,230.05	1,222.17

Time 310

Pipe	Upstream Node	Downstream Node	Section Size	Length (ft)	Discharge (cfs)	Velocity (ft/s)	Upstream Ground Elevation (ft)	Upstream HGL (ft)	Upstream Invert Elevation (ft)	Downstream Ground Elevation (ft)	Downstream HGL (ft)	Downstream Invert Elevation (ft)
P-136	MH 135+54	J-58	96 inch	576.00	373.00	7.62	1,235.65	1,229.67	1,222.17	1,233.12	1,228.93	1,221.60
P-137	J-57	J-58	36 inch	61.00	0.00	0.00	1,233.07	1,228.93	1,228.07	1,233.12	1,228.93	1,227.07
P-138	J-58	J-59	10 x 6 ft	268.00	373.00	6.22	1,233.12	1,228.35	1,221.60	1,232.42	1,228.06	1,221.33
P-139	J-59	J-60	10 x 6 ft	397.00	373.00	6.22	1,232.42	1,228.00	1,221.33	1,231.33	1,227.57	1,220.93
P-139A	J-60	I 148+49 (MILLER)	10 x 6 ft	54.00	373.00	6.22	1,231.33	1,227.54	1,220.93	1,231.34	1,227.48	1,220.89
P-140	I 148+49 (MILLER)	PI 148+67	10 x 6 ft	18.00	464.00	8.07	1,231.34	1,226.64	1,220.89	1,231.00	1,226.63	1,220.85
P-141	PI 148+67	PI 149+36	10 x 6 ft	69.00	464.00	8.75	1,231.00	1,226.16	1,220.85	1,231.00	1,226.09	1,220.71
P-142	PI 149+36	IBW	10 x 6 ft	1,326.00	464.00	9.76	1,231.00	1,225.46	1,220.71	1,228.00	1,224.00	1,218.00

Time 314

Pipe	Upstream Node	Downstream Node	Section Size	Length (ft)	Discharge (cfs)	Velocity (ft/s)	Upstream Ground Elevation (ft)	Upstream HGL (ft)	Upstream Invert Elevation (ft)	Downstream Ground Elevation (ft)	Downstream HGL (ft)	Downstream Invert Elevation (ft)
P-100	Paiute Outlet	PI 61+40	54 inch	140.00	57.00	3.58	1,257.00	1,254.23	1,245.32	1,257.00	1,254.13	1,244.75
P-101	PI 61+40	MH 66+80	54 inch	539.00	57.00	3.58	1,257.00	1,253.97	1,244.75	1,259.50	1,253.59	1,242.53
P-102	MH 66+80	J-48	54 inch	264.00	57.00	3.58	1,259.50	1,253.57	1,242.53	1,260.00	1,253.38	1,241.52
P-103	J-48	J-49	54 inch	268.00	57.00	3.58	1,260.00	1,253.32	1,241.52	1,259.90	1,253.13	1,240.50
P-104	J-49	I PINTO (72+43)	60 inch	63.00	57.00	2.90	1,259.90	1,253.09	1,240.00	1,259.70	1,253.06	1,239.77
P-105	I PINTO (72+43)	MH 81+60	60 inch	917.00	129.00	6.57	1,259.70	1,252.47	1,239.77	1,256.00	1,250.55	1,236.43
P-106	MH 81+60	J 81+82	78 inch	22.00	129.00	3.89	1,256.00	1,250.53	1,234.93	1,256.10	1,250.52	1,234.83
P-107	I 81+82	J 81+82	18 inch	8.00	0.00	0.00	1,256.10	1,251.10	1,251.10	1,256.10	1,250.52	1,250.10
P-108	J 81+82	I 68TH (82+63)	78 inch	81.00	129.00	3.89	1,256.10	1,250.49	1,234.83	1,256.00	1,250.45	1,234.45
P-109	I 68TH (82+63)	PI 86+80	78 inch	417.00	228.00	6.87	1,256.00	1,249.53	1,234.45	1,253.00	1,248.85	1,232.48
P-110	PI 86+80	PI 87+30	78 inch	50.00	228.00	6.87	1,253.00	1,248.40	1,232.48	1,253.00	1,248.32	1,232.25
P-112	I 87+98	J-50	18 inch	40.00	0.00	0.00	1,253.54	1,248.53	1,248.53	1,253.00	1,247.92	1,247.53
P-111	PI 87+30	J-50	78 inch	68.00	228.00	6.87	1,253.00	1,248.03	1,232.25	1,253.00	1,247.92	1,231.93
P-113	J-50	J-62	78 inch	459.00	228.00	6.87	1,253.00	1,247.87	1,231.93	1,252.00	1,247.13	1,229.60
P-114	I 92+57	J-62	12 inch	40.00	0.00	0.00	1,251.79	1,247.13	1,246.79	1,252.00	1,247.13	1,245.79
P-115	J-62	MH 95+10	78 inch	253.00	228.00	6.87	1,252.00	1,246.45	1,229.60	1,251.40	1,246.04	1,228.59
P-116	I 95+10	MH 95+10	18 inch	40.00	0.00	0.00	1,251.80	1,246.50	1,246.50	1,251.40	1,246.04	1,245.00
P-117	MH 95+10	I 95+72 (70th)	90 inch	62.00	228.00	5.16	1,251.40	1,246.04	1,227.64	1,251.35	1,246.00	1,227.55
P-119	I 101+70	I-71ST ST	18 inch	47.00	0.00	0.00	1,247.85	1,244.70	1,242.85	1,247.53	1,244.70	1,241.85
P-118	I 95+72 (70th)	I-71ST ST	90 inch	624.00	313.00	7.08	1,251.35	1,245.59	1,227.55	1,247.53	1,244.70	1,226.62
P-120	I-71ST ST	J-104+53	90 inch	261.00	329.00	7.45	1,247.53	1,243.27	1,226.62	1,246.96	1,242.86	1,226.23
P-121	I 104+53	J-104+53	18 inch	10.00	0.00	0.00	1,246.96	1,242.86	1,241.96	1,246.96	1,242.86	1,240.96
P-123	I 106+45	J 106+45	18 inch	10.00	0.00	0.00	1,246.72	1,242.41	1,241.72	1,246.72	1,242.41	1,240.72
P-122	J-104+53	J 106+45	90 inch	192.00	329.00	7.45	1,246.96	1,242.71	1,226.23	1,246.72	1,242.41	1,225.94
P-124A	I 107+92	J-51	18 inch	11.00	0.00	0.00	1,245.96	1,242.03	1,240.96	1,245.96	1,242.03	1,239.96
P-124	J 106+45	J-51	90 inch	148.00	329.00	7.45	1,246.72	1,242.26	1,225.94	1,245.96	1,242.03	1,225.72
P-125	J-51	J 110+50	90 inch	252.00	329.00	7.45	1,245.96	1,241.98	1,225.72	1,244.80	1,241.59	1,225.27
P-126	J 110+50	J-52	90 inch	484.00	329.00	7.45	1,244.80	1,241.55	1,225.32	1,242.63	1,240.79	1,224.60
P-127	J-52	J-53	90 inch	318.00	329.00	7.45	1,242.63	1,238.52	1,224.60	1,241.81	1,238.02	1,224.13
P-128	I 118+50	J-53	18 inch	36.00	0.00	0.00	1,241.89	1,238.02	1,236.89	1,241.81	1,238.02	1,235.89
P-130	I 121+40	I-Scottsdale	18 inch	43.00	0.00	0.00	1,241.02	1,237.32	1,236.02	1,241.02	1,237.32	1,231.02
P-129	J-53	I-Scottsdale	90 inch	290.00	329.00	7.45	1,241.81	1,237.85	1,224.13	1,241.02	1,237.32	1,223.69
P-131	I-Scottsdale	J 123+00	10 x 4 ft	158.00	410.00	10.25	1,241.02	1,237.15	1,223.69	1,240.37	1,236.48	1,223.53
P-131A	J 123+00	J-55	90 inch	581.00	410.00	9.28	1,240.37	1,236.28	1,223.43	1,238.69	1,234.86	1,222.85
P-132	J-55	J-56	90 inch	421.00	410.00	9.28	1,238.69	1,234.61	1,222.85	1,237.38	1,233.59	1,222.43
P-134	J-56	I 134+56 (CIVIC)	90 inch	156.00	410.00	9.28	1,237.38	1,233.52	1,222.43	1,236.00	1,233.15	1,222.27
P-135	I 134+56 (CIVIC)	MH 135+54	90 inch	98.00	446.00	10.10	1,236.00	1,233.07	1,222.27	1,235.65	1,232.78	1,222.17

Time 314

Pipe	Upstream Node	Downstream Node	Section Size	Length (ft)	Discharge (cfs)	Velocity (ft/s)	Upstream Ground Elevation (ft)	Upstream HGL (ft)	Upstream Invert Elevation (ft)	Downstream Ground Elevation (ft)	Downstream HGL (ft)	Downstream Invert Elevation (ft)
P-137	J-57	J-58	36 inch	61.00	0.00	0.00	1,233.07	1,231.23	1,228.07	1,233.12	1,231.23	1,227.07
P-136	MH 135+54	J-58	96 inch	576.00	446.00	8.87	1,235.65	1,232.40	1,222.17	1,233.12	1,231.23	1,221.60
P-138	J-58	J-59	10 x 6 ft	268.00	446.00	7.43	1,233.12	1,230.65	1,221.60	1,232.42	1,230.23	1,221.33
P-139	J-59	J-60	10 x 6 ft	397.00	446.00	7.43	1,232.42	1,230.17	1,221.33	1,231.33	1,229.55	1,220.93
P-139A	J-60	I 148+49 (MILLER)	10 x 6 ft	54.00	446.00	7.43	1,231.33	1,229.51	1,220.93	1,231.34	1,229.43	1,220.89
P-140	I 148+49 (MILLER)	PI 148+67	10 x 6 ft	18.00	556.00	9.27	1,231.34	1,228.59	1,220.89	1,231.00	1,228.54	1,220.85
P-141	PI 148+67	PI 149+36	10 x 6 ft	69.00	556.00	9.27	1,231.00	1,228.01	1,220.85	1,231.00	1,227.84	1,220.71
P-142	PI 149+36	IBW	10 x 6 ft	1,326.00	556.00	9.27	1,231.00	1,227.21	1,220.71	1,228.00	1,224.00	1,218.00

Time 318

Pipe	Upstream Node	Downstream Node	Section Size	Length (ft)	Discharge (cfs)	Velocity (ft/s)	Upstream Ground Elevation (ft)	Upstream HGL (ft)	Upstream Invert Elevation (ft)	Downstream Ground Elevation (ft)	Downstream HGL (ft)	Downstream Invert Elevation (ft)
P-100	Paiute Outlet	PI 61+40	54 inch	140.00	71.00	4.46	1,257.00	1,251.00	1,245.32	1,257.00	1,250.85	1,244.75
P-101	PI 61+40	MH 66+80	54 inch	539.00	71.00	4.46	1,257.00	1,250.60	1,244.75	1,259.50	1,250.00	1,242.53
P-102	MH 66+80	J-48	54 inch	264.00	71.00	4.46	1,259.50	1,249.97	1,242.53	1,260.00	1,249.68	1,241.52
P-103	J-48	J-49	54 inch	268.00	71.00	4.46	1,260.00	1,249.62	1,241.52	1,259.90	1,249.32	1,240.50
P-104	J-49	I PINTO (72+43)	60 inch	63.00	71.00	3.62	1,259.90	1,249.28	1,240.00	1,259.70	1,249.24	1,239.77
P-105	I PINTO (72+43)	MH 81+60	60 inch	917.00	124.00	6.32	1,259.70	1,248.65	1,239.77	1,256.00	1,246.88	1,236.43
P-106	MH 81+60	J 81+82	78 inch	22.00	124.00	3.74	1,256.00	1,246.86	1,234.93	1,256.10	1,246.85	1,234.83
P-107	I 81+82	J 81+82	18 inch	8.00	0.00	0.00	1,256.10	1,251.10	1,251.10	1,256.10	1,250.10	1,250.10
P-108	J 81+82	I 68TH (82+63)	78 inch	81.00	124.00	3.74	1,256.10	1,246.82	1,234.83	1,256.00	1,246.78	1,234.45
P-109	I 68TH (82+63)	PI 86+80	78 inch	417.00	199.00	6.00	1,256.00	1,245.86	1,234.45	1,253.00	1,245.34	1,232.48
P-110	PI 86+80	PI 87+30	78 inch	50.00	199.00	6.00	1,253.00	1,244.89	1,232.48	1,253.00	1,244.83	1,232.25
P-112	I 87+98	J-50	18 inch	40.00	0.00	0.00	1,253.54	1,248.53	1,248.53	1,253.00	1,247.53	1,247.53
P-111	PI 87+30	J-50	78 inch	68.00	199.00	6.00	1,253.00	1,244.61	1,232.25	1,253.00	1,244.53	1,231.93
P-114	I 92+57	J-62	12 inch	40.00	0.00	0.00	1,251.79	1,246.79	1,246.79	1,252.00	1,245.79	1,245.79
P-113	J-50	J-62	78 inch	459.00	199.00	6.00	1,253.00	1,244.48	1,231.93	1,252.00	1,243.91	1,229.60
P-115	J-62	MH 95+10	78 inch	253.00	199.00	6.00	1,252.00	1,243.23	1,229.60	1,251.40	1,242.92	1,228.59
P-116	I 95+10	MH 95+10	18 inch	40.00	0.00	0.00	1,251.80	1,246.50	1,246.50	1,251.40	1,245.00	1,245.00
P-117	MH 95+10	I 95+72 (70th)	90 inch	62.00	199.00	4.50	1,251.40	1,242.92	1,227.64	1,251.35	1,242.89	1,227.55
P-119	I 101+70	I-71ST ST	18 inch	47.00	0.00	0.00	1,247.85	1,242.85	1,242.85	1,247.53	1,241.85	1,241.85
P-118	I 95+72 (70th)	I-71ST ST	90 inch	624.00	263.00	5.95	1,251.35	1,242.48	1,227.55	1,247.53	1,241.85	1,226.62
P-121	I 104+53	J-104+53	18 inch	10.00	0.00	0.00	1,246.96	1,241.96	1,241.96	1,246.96	1,240.96	1,240.96
P-120	I-71ST ST	J-104+53	90 inch	261.00	277.00	6.27	1,247.53	1,240.42	1,226.62	1,246.96	1,240.13	1,226.23
P-123	I 106+45	J 106+45	18 inch	10.00	0.00	0.00	1,246.72	1,241.72	1,241.72	1,246.72	1,240.72	1,240.72
P-122	J-104+53	J 106+45	90 inch	192.00	277.00	6.27	1,246.96	1,239.98	1,226.23	1,246.72	1,239.77	1,225.94
P-124	J 106+45	J-51	90 inch	148.00	277.00	6.27	1,246.72	1,239.62	1,225.94	1,245.96	1,239.46	1,225.72
P-124A	I 107+92	J-51	18 inch	11.00	0.00	0.00	1,245.96	1,240.96	1,240.96	1,245.96	1,239.96	1,239.96
P-125	J-51	J 110+50	90 inch	252.00	277.00	6.27	1,245.96	1,239.41	1,225.72	1,244.80	1,239.13	1,225.27
P-126	J 110+50	J-52	90 inch	484.00	277.00	6.27	1,244.80	1,239.10	1,225.32	1,242.63	1,238.56	1,224.60
P-128	I 118+50	J-53	18 inch	36.00	0.00	0.00	1,241.89	1,236.89	1,236.89	1,241.81	1,235.94	1,235.89
P-127	J-52	J-53	90 inch	318.00	277.00	6.27	1,242.63	1,236.29	1,224.60	1,241.81	1,235.94	1,224.13
P-130	I 121+40	I-Scottsdale	18 inch	43.00	0.00	0.00	1,241.02	1,236.02	1,236.02	1,241.02	1,235.39	1,231.02
P-129	J-53	I-Scottsdale	90 inch	290.00	277.00	6.27	1,241.81	1,235.77	1,224.13	1,241.02	1,235.39	1,223.69
P-131	I-Scottsdale	J 123+00	10 x 4 ft	158.00	352.00	8.80	1,241.02	1,235.22	1,223.69	1,240.37	1,234.72	1,223.53
P-131A	J 123+00	J-55	90 inch	581.00	352.00	7.97	1,240.37	1,234.52	1,223.43	1,238.69	1,233.48	1,222.85
P-132	J-55	J-56	90 inch	421.00	352.00	7.97	1,238.69	1,233.23	1,222.85	1,237.38	1,232.48	1,222.43
P-134	J-56	I 134+56 (CIVIC)	90 inch	156.00	352.00	7.97	1,237.38	1,232.43	1,222.43	1,236.00	1,232.15	1,222.27
P-135	I 134+56 (CIVIC)	MH 135+54	90 inch	98.00	405.00	9.17	1,236.00	1,232.07	1,222.27	1,235.65	1,231.84	1,222.17

Time 318

Pipe	Upstream Node	Downstream Node	Section Size	Length (ft)	Discharge (cfs)	Velocity (ft/s)	Upstream Ground Elevation (ft)	Upstream HGL (ft)	Upstream Invert Elevation (ft)	Downstream Ground Elevation (ft)	Downstream HGL (ft)	Downstream Invert Elevation (ft)
P-137	J-57	J-58	36 inch	61.00	0.00	0.00	1,233.07	1,230.49	1,228.07	1,233.12	1,230.49	1,227.07
P-136	MH 135+54	J-58	96 inch	576.00	405.00	8.06	1,235.65	1,231.46	1,222.17	1,233.12	1,230.49	1,221.60
P-138	J-58	J-59	10 x 6 ft	268.00	405.00	6.75	1,233.12	1,229.91	1,221.60	1,232.42	1,229.57	1,221.33
P-139	J-59	J-60	10 x 6 ft	397.00	405.00	6.75	1,232.42	1,229.51	1,221.33	1,231.33	1,229.00	1,220.93
P-139A	J-60	I 148+49 (MILLER)	10 x 6 ft	54.00	405.00	6.75	1,231.33	1,228.96	1,220.93	1,231.34	1,228.89	1,220.89
P-140	I 148+49 (MILLER)	PI 148+67	10 x 6 ft	18.00	517.00	8.62	1,231.34	1,228.05	1,220.89	1,231.00	1,228.01	1,220.85
P-141	PI 148+67	PI 149+36	10 x 6 ft	69.00	517.00	8.62	1,231.00	1,227.55	1,220.85	1,231.00	1,227.41	1,220.71
P-142	PI 149+36	IBW	10 x 6 ft	1,326.00	517.00	8.62	1,231.00	1,226.78	1,220.71	1,228.00	1,224.00	1,218.00

Time 320

Pipe	Upstream Node	Downstream Node	Section Size	Length (ft)	Discharge (cfs)	Velocity (ft/s)	Upstream Ground Elevation (ft)	Upstream HGL (ft)	Upstream Invert Elevation (ft)	Downstream Ground Elevation (ft)	Downstream HGL (ft)	Downstream Invert Elevation (ft)
P-100	Paiute Outlet	PI 61+40	54 inch	140.00	76.00	6.91	1,257.00	1,248.26	1,245.32	1,257.00	1,248.24	1,244.75
P-101	PI 61+40	MH 66+80	54 inch	539.00	76.00	7.11	1,257.00	1,247.62	1,244.75	1,259.50	1,247.29	1,242.53
P-102	MH 66+80	J-48	54 inch	264.00	76.00	4.78	1,259.50	1,247.26	1,242.53	1,260.00	1,246.92	1,241.52
P-103	J-48	J-49	54 inch	268.00	76.00	4.78	1,260.00	1,246.86	1,241.52	1,259.90	1,246.52	1,240.50
P-104	J-49	I PINTO (72+43)	60 inch	63.00	76.00	3.87	1,259.90	1,246.48	1,240.00	1,259.70	1,246.43	1,239.77
P-105	I PINTO (72+43)	MH 81+60	60 inch	917.00	124.00	6.32	1,259.70	1,245.84	1,239.77	1,256.00	1,244.07	1,236.43
P-107	I 81+82	J 81+82	18 inch	8.00	0.00	0.00	1,256.10	1,251.10	1,251.10	1,256.10	1,250.10	1,250.10
P-106	MH 81+60	J 81+82	78 inch	22.00	124.00	3.74	1,256.00	1,244.05	1,234.93	1,256.10	1,244.04	1,234.83
P-108	J 81+82	I 68TH (82+63)	78 inch	81.00	124.00	3.74	1,256.10	1,244.01	1,234.83	1,256.00	1,243.97	1,234.45
P-109	I 68TH (82+63)	PI 86+80	78 inch	417.00	190.00	5.73	1,256.00	1,243.05	1,234.45	1,253.00	1,242.58	1,232.48
P-110	PI 86+80	PI 87+30	78 inch	50.00	190.00	5.73	1,253.00	1,242.13	1,232.48	1,253.00	1,242.08	1,232.25
P-111	PI 87+30	J-50	78 inch	68.00	190.00	5.73	1,253.00	1,241.87	1,232.25	1,253.00	1,241.80	1,231.93
P-112	I 87+98	J-50	18 inch	40.00	0.00	0.00	1,253.54	1,248.53	1,248.53	1,253.00	1,247.53	1,247.53
P-113	J-50	J-62	78 inch	459.00	190.00	5.73	1,253.00	1,241.75	1,231.93	1,252.00	1,241.23	1,229.60
P-114	I 92+57	J-62	12 inch	40.00	0.00	0.00	1,251.79	1,246.79	1,246.79	1,252.00	1,245.79	1,245.79
P-116	I 95+10	MH 95+10	18 inch	40.00	0.00	0.00	1,251.80	1,246.50	1,246.50	1,251.40	1,245.00	1,245.00
P-115	J-62	MH 95+10	78 inch	253.00	190.00	5.73	1,252.00	1,240.55	1,229.60	1,251.40	1,240.27	1,228.59
P-117	MH 95+10	I 95+72 (70th)	90 inch	62.00	190.00	4.30	1,251.40	1,240.27	1,227.64	1,251.35	1,240.24	1,227.55
P-118	I 95+72 (70th)	I-71ST ST	90 inch	624.00	244.00	5.52	1,251.35	1,239.83	1,227.55	1,247.53	1,239.29	1,226.62
P-119	I 101+70	I-71ST ST	18 inch	47.00	0.00	0.00	1,247.85	1,242.85	1,242.85	1,247.53	1,241.85	1,241.85
P-121	I 104+53	J-104+53	18 inch	10.00	0.00	0.00	1,246.96	1,241.96	1,241.96	1,246.96	1,240.96	1,240.96
P-120	I-71ST ST	J-104+53	90 inch	261.00	256.00	5.79	1,247.53	1,237.86	1,226.62	1,246.96	1,237.62	1,226.23
P-123	I 106+45	J 106+45	18 inch	10.00	0.00	0.00	1,246.72	1,241.72	1,241.72	1,246.72	1,240.72	1,240.72
P-122	J-104+53	J 106+45	90 inch	192.00	256.00	5.79	1,246.96	1,237.47	1,226.23	1,246.72	1,237.28	1,225.94
P-124A	I 107+92	J-51	18 inch	11.00	0.00	0.00	1,245.96	1,240.96	1,240.96	1,245.96	1,239.96	1,239.96
P-124	J 106+45	J-51	90 inch	148.00	256.00	5.79	1,246.72	1,237.13	1,225.94	1,245.96	1,236.99	1,225.72
P-125	J-51	J 110+50	90 inch	252.00	256.00	5.79	1,245.96	1,236.94	1,225.72	1,244.80	1,236.70	1,225.27
P-126	J 110+50	J-52	90 inch	484.00	256.00	5.79	1,244.80	1,236.68	1,225.32	1,242.63	1,236.22	1,224.60
P-128	I 118+50	J-53	18 inch	36.00	0.00	0.00	1,241.89	1,236.89	1,236.89	1,241.81	1,235.89	1,235.89
P-127	J-52	J-53	90 inch	318.00	256.00	5.79	1,242.63	1,233.95	1,224.60	1,241.81	1,233.65	1,224.13
P-129	J-53	I-Scottsdale	90 inch	290.00	256.00	5.79	1,241.81	1,233.48	1,224.13	1,241.02	1,233.16	1,223.69
P-130	I 121+40	I-Scottsdale	18 inch	43.00	0.00	0.00	1,241.02	1,236.02	1,236.02	1,241.02	1,233.16	1,231.02
P-131	I-Scottsdale	J 123+00	10 x 4 ft	158.00	320.00	8.00	1,241.02	1,232.99	1,223.69	1,240.37	1,232.58	1,223.53
P-131A	J 123+00	J-55	90 inch	581.00	320.00	7.24	1,240.37	1,232.38	1,223.43	1,238.69	1,231.52	1,222.85
P-132	J-55	J-56	90 inch	421.00	320.00	7.24	1,238.69	1,231.27	1,222.85	1,237.38	1,230.64	1,222.43
P-134	J-56	I 134+56 (CIVIC)	90 inch	156.00	320.00	7.24	1,237.38	1,230.60	1,222.43	1,236.00	1,230.37	1,222.27
P-135	I 134+56 (CIVIC)	MH 135+54	90 inch	98.00	370.00	8.38	1,236.00	1,230.29	1,222.27	1,235.65	1,230.10	1,222.17

Time 320

Pipe	Upstream Node	Downstream Node	Section Size	Length (ft)	Discharge (cfs)	Velocity (ft/s)	Upstream Ground Elevation (ft)	Upstream HGL (ft)	Upstream Invert Elevation (ft)	Downstream Ground Elevation (ft)	Downstream HGL (ft)	Downstream Invert Elevation (ft)
P-136	MH 135+54	J-58	96 inch	576.00	370.00	7.53	1,235.65	1,229.72	1,222.17	1,233.12	1,229.00	1,221.60
P-137	J-57	J-58	36 inch	61.00	0.00	0.00	1,233.07	1,229.00	1,228.07	1,233.12	1,229.00	1,227.07
P-138	J-58	J-59	10 x 6 ft	268.00	370.00	6.17	1,233.12	1,228.42	1,221.60	1,232.42	1,228.13	1,221.33
P-139	J-59	J-60	10 x 6 ft	397.00	370.00	6.17	1,232.42	1,228.07	1,221.33	1,231.33	1,227.64	1,220.93
P-139A	J-60	I 148+49 (MILLER)	10 x 6 ft	54.00	370.00	6.17	1,231.33	1,227.61	1,220.93	1,231.34	1,227.56	1,220.89
P-140	I 148+49 (MILLER)	PI 148+67	10 x 6 ft	18.00	474.00	8.13	1,231.34	1,226.72	1,220.89	1,231.00	1,226.71	1,220.85
P-141	PI 148+67	PI 149+36	10 x 6 ft	69.00	474.00	8.82	1,231.00	1,226.22	1,220.85	1,231.00	1,226.16	1,220.71
P-142	PI 149+36	IBW	10 x 6 ft	1,326.00	474.00	9.83	1,231.00	1,225.53	1,220.71	1,228.00	1,224.00	1,218.00

Time 322

Pipe	Upstream Node	Downstream Node	Section Size	Length (ft)	Discharge (cfs)	Velocity (ft/s)	Upstream Ground Elevation (ft)	Upstream HGL (ft)	Upstream Invert Elevation (ft)	Downstream Ground Elevation (ft)	Downstream HGL (ft)	Downstream Invert Elevation (ft)
P-100	Paiute Outlet	PI 61+40	54 inch	140.00	80.00	7.31	1,257.00	1,248.24	1,245.32	1,257.00	1,248.23	1,244.75
P-101	PI 61+40	MH 66+80	54 inch	539.00	80.00	8.34	1,257.00	1,247.37	1,244.75	1,259.50	1,245.63	1,242.53
P-102	MH 66+80	J-48	54 inch	264.00	80.00	7.03	1,259.50	1,245.56	1,242.53	1,260.00	1,245.43	1,241.52
P-103	J-48	J-49	54 inch	268.00	80.00	5.53	1,260.00	1,245.37	1,241.52	1,259.90	1,245.10	1,240.50
P-104	J-49	I PINTO (72+43)	60 inch	63.00	80.00	4.07	1,259.90	1,245.06	1,240.00	1,259.70	1,245.00	1,239.77
P-105	I PINTO (72+43)	MH 81+60	60 inch	917.00	124.00	6.52	1,259.70	1,244.41	1,239.77	1,256.00	1,242.72	1,236.43
P-107	I 81+82	J 81+82	18 inch	8.00	0.00	0.00	1,256.10	1,251.10	1,251.10	1,256.10	1,250.10	1,250.10
P-106	MH 81+60	J 81+82	78 inch	22.00	124.00	3.74	1,256.00	1,242.69	1,234.93	1,256.10	1,242.68	1,234.83
P-108	J 81+82	I 68TH (82+63)	78 inch	81.00	124.00	3.74	1,256.10	1,242.65	1,234.83	1,256.00	1,242.62	1,234.45
P-109	I 68TH (82+63)	PI 86+80	78 inch	417.00	183.00	5.51	1,256.00	1,241.70	1,234.45	1,253.00	1,241.26	1,232.48
P-110	PI 86+80	PI 87+30	78 inch	50.00	183.00	5.51	1,253.00	1,240.81	1,232.48	1,253.00	1,240.76	1,232.25
P-112	I 87+98	J-50	18 inch	40.00	0.00	0.00	1,253.54	1,248.53	1,248.53	1,253.00	1,247.53	1,247.53
P-111	PI 87+30	J-50	78 inch	68.00	183.00	5.51	1,253.00	1,240.57	1,232.25	1,253.00	1,240.50	1,231.93
P-113	J-50	J-62	78 inch	459.00	183.00	5.51	1,253.00	1,240.45	1,231.93	1,252.00	1,239.97	1,229.60
P-114	I 92+57	J-62	12 inch	40.00	0.00	0.00	1,251.79	1,246.79	1,246.79	1,252.00	1,245.79	1,245.79
P-116	I 95+10	MH 95+10	18 inch	40.00	0.00	0.00	1,251.80	1,246.50	1,246.50	1,251.40	1,245.00	1,245.00
P-115	J-62	MH 95+10	78 inch	253.00	183.00	5.51	1,252.00	1,239.29	1,229.60	1,251.40	1,239.03	1,228.59
P-117	MH 95+10	I 95+72 (70th)	90 inch	62.00	183.00	4.14	1,251.40	1,239.03	1,227.64	1,251.35	1,239.00	1,227.55
P-119	I 101+70	I-71ST ST	18 inch	47.00	0.00	0.00	1,247.85	1,242.85	1,242.85	1,247.53	1,241.85	1,241.85
P-118	I 95+72 (70th)	I-71ST ST	90 inch	624.00	230.00	5.21	1,251.35	1,238.59	1,227.55	1,247.53	1,238.11	1,226.62
P-121	I 104+53	J-104+53	18 inch	10.00	0.00	0.00	1,246.96	1,241.96	1,241.96	1,246.96	1,240.96	1,240.96
P-120	I-71ST ST	J-104+53	90 inch	261.00	240.00	5.43	1,247.53	1,236.68	1,226.62	1,246.96	1,236.47	1,226.23
P-122	J-104+53	J 106+45	90 inch	192.00	240.00	5.43	1,246.96	1,236.32	1,226.23	1,246.72	1,236.16	1,225.94
P-123	I 106+45	J 106+45	18 inch	10.00	0.00	0.00	1,246.72	1,241.72	1,241.72	1,246.72	1,240.72	1,240.72
P-124A	I 107+92	J-51	18 inch	11.00	0.00	0.00	1,245.96	1,240.96	1,240.96	1,245.96	1,239.96	1,239.96
P-124	J 106+45	J-51	90 inch	148.00	240.00	5.43	1,246.72	1,236.01	1,225.94	1,245.96	1,235.88	1,225.72
P-125	J-51	J 110+50	90 inch	252.00	240.00	5.43	1,245.96	1,235.83	1,225.72	1,244.80	1,235.62	1,225.27
P-126	J 110+50	J-52	90 inch	484.00	240.00	5.43	1,244.80	1,235.60	1,225.32	1,242.63	1,235.20	1,224.60
P-128	I 118+50	J-53	18 inch	36.00	0.00	0.00	1,241.89	1,236.89	1,236.89	1,241.81	1,235.89	1,235.89
P-127	J-52	J-53	90 inch	318.00	240.00	5.43	1,242.63	1,232.93	1,224.60	1,241.81	1,232.66	1,224.13
P-130	I 121+40	I-Scottsdale	18 inch	43.00	0.00	0.00	1,241.02	1,236.02	1,236.02	1,241.02	1,232.21	1,231.02
P-129	J-53	I-Scottsdale	90 inch	290.00	240.00	5.43	1,241.81	1,232.49	1,224.13	1,241.02	1,232.21	1,223.69
P-131	I-Scottsdale	J 123+00	10 x 4 ft	158.00	294.00	7.35	1,241.02	1,232.04	1,223.69	1,240.37	1,231.69	1,223.53
P-131A	J 123+00	J-55	90 inch	581.00	294.00	6.65	1,240.37	1,231.49	1,223.43	1,238.69	1,230.77	1,222.85
P-132	J-55	J-56	90 inch	421.00	294.00	6.65	1,238.69	1,230.52	1,222.85	1,237.38	1,229.99	1,222.43
P-134	J-56	I 134+56 (CIVIC)	90 inch	156.00	294.00	6.65	1,237.38	1,229.96	1,222.43	1,236.00	1,229.76	1,222.27
P-135	I 134+56 (CIVIC)	MH 135+54	90 inch	98.00	337.00	7.64	1,236.00	1,229.68	1,222.27	1,235.65	1,229.53	1,222.17

Time 322

Pipe	Upstream Node	Downstream Node	Section Size	Length (ft)	Discharge (cfs)	Velocity (ft/s)	Upstream Ground Elevation (ft)	Upstream HGL (ft)	Upstream Invert Elevation (ft)	Downstream Ground Elevation (ft)	Downstream HGL (ft)	Downstream Invert Elevation (ft)
P-137	J-57	J-58	36 inch	61.00	0.00	0.00	1,233.07	1,228.53	1,228.07	1,233.12	1,228.53	1,227.07
P-136	MH 135+54	J-58	96 inch	576.00	337.00	7.24	1,235.65	1,229.15	1,222.17	1,233.12	1,228.53	1,221.60
P-138	J-58	J-59	10 x 6 ft	268.00	337.00	5.62	1,233.12	1,227.95	1,221.60	1,232.42	1,227.71	1,221.33
P-139	J-59	J-60	10 x 6 ft	397.00	337.00	5.62	1,232.42	1,227.65	1,221.33	1,231.33	1,227.30	1,220.93
P-139A	J-60	I 148+49 (MILLER)	10 x 6 ft	54.00	337.00	5.62	1,231.33	1,227.28	1,220.93	1,231.34	1,227.23	1,220.89
P-140	I 148+49 (MILLER)	PI 148+67	10 x 6 ft	18.00	430.00	7.82	1,231.34	1,226.39	1,220.89	1,231.00	1,226.38	1,220.85
P-141	PI 148+67	PI 149+36	10 x 6 ft	69.00	430.00	8.46	1,231.00	1,225.93	1,220.85	1,231.00	1,225.88	1,220.71
P-142	PI 149+36	IBW	10 x 6 ft	1,326.00	430.00	9.47	1,231.00	1,225.25	1,220.71	1,228.00	1,224.00	1,218.00

DETENTION BASIN CALCULATIONS

Marriott Brighton Gardens

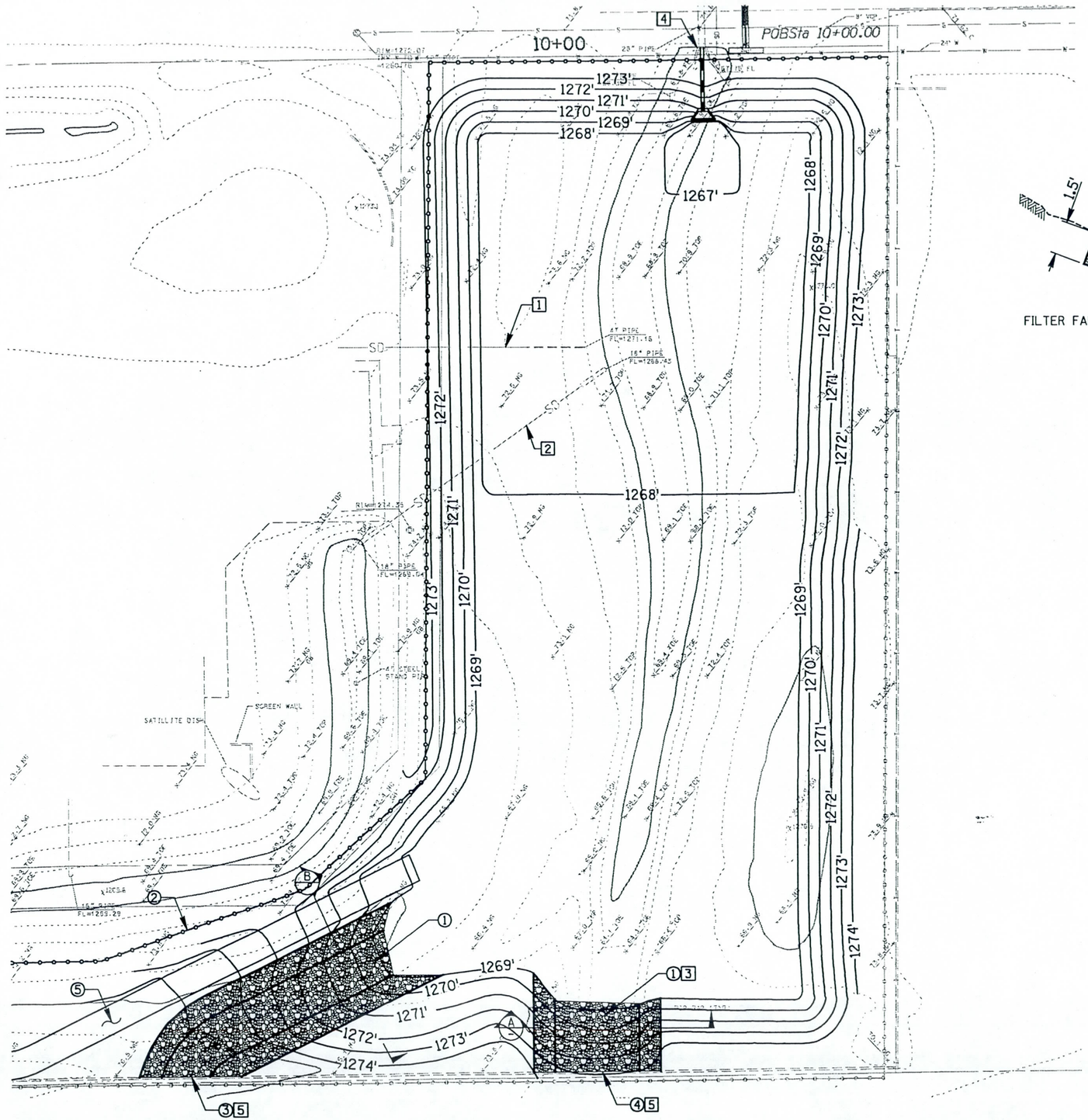

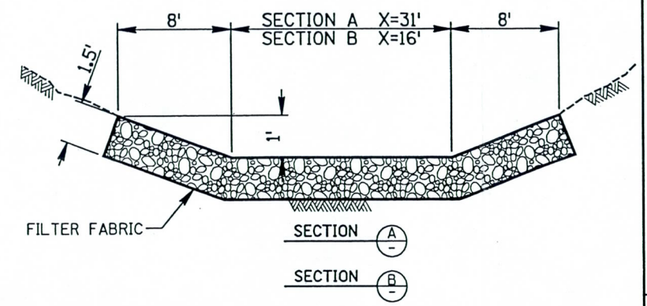

REMOVE		
1	REMOVE 4" PIPE	14 LF
2	REMOVE 18" PIPE AND END SECTION	43 LF
3	SALVAGE AND REPLACE RIPRAP (D_{50} = 8")	35 CY
4	REMOVE 30" HEADWALL	3 CY
5	REMOVE GRATE INLET	2 EA

NEW CONSTRUCTION		
1	NEW RIPRAP (D_{50}=8")	230 CY
2	CONSTRUCT VIEW FENCE SEE DETAIL AND LANDSCAPE PLANS	967 LF
3	CONSTRUCT 6' GRATE INLET	2 EA
4	CONSTRUCT 16' GRATE INLET	2 EA
5	CONSTRUCT 10' WIDE ACCESS ROAD - SEE LANDSCAPE SHEETS AND MDB-1 AND MDB-3	533 CY

N

10 0 10 20
Scale In Feet

Two working days before you dig CALL FOR THE BLUE STAKES 1-800-STAKE-IT Blue Stake Center 1-800-782-5348

NO.	REVISION	BY	DATE
3			
2			
1			

FLOOD CONTROL DISTRICT OF MARICOPA COUNTY
ENGINEERING DIVISION

OSBORN ROAD STORM DRAIN
THOMAS RD & 61ST PL TO INDIAN BEND WASH
PROJECT CONTROL NO. 027-04 30

PRELIMINARY NOT FOR CONSTRUCTION

	BY	DATE
DESIGNED	M. LUECKER	3/22/00
DRAWN	M. ROSS	3/22/00
CHECKED	J. HOLZMEISTER	3/22/00

PREMIER

DRAWING NO. MDB-4

MARRIOTT BRIGHTON GARDENS BASIN
GRADING PLAN

SHEET OF 103 132

w:\9907\cadd\drainage\marriott\m_grade.dgn
Plotted By: MGR 23 MAR 100 09:53:48

EXISTING UTILITIES AND OTHER FACILITIES HAVE BEEN PLACED ON THE PLANS FROM FIELD SURVEYS, EXISTING MAPS AND OTHER CURRENT PLANS WITHIN THE AREA OF THIS PROJECT. THE CONTRACTOR WILL DETERMINE THE EXACT LOCATION AND/OR ELEVATION OF EXISTING UTILITIES.

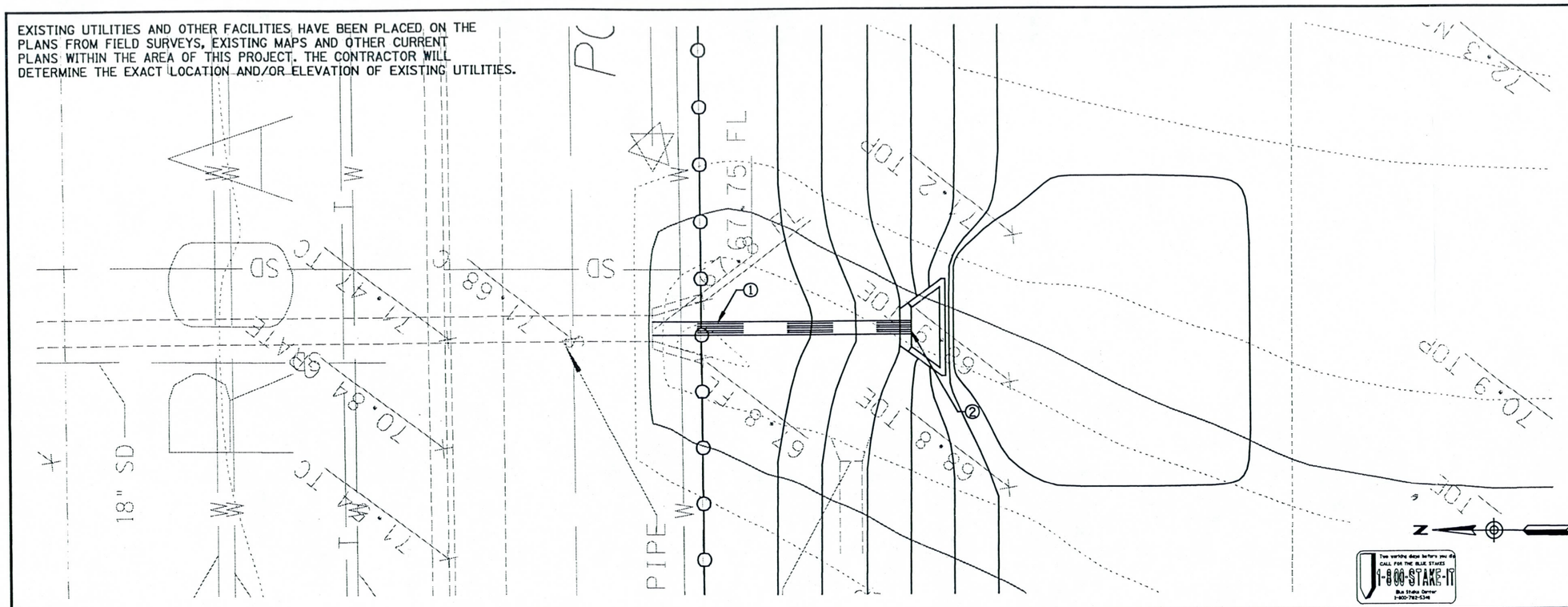

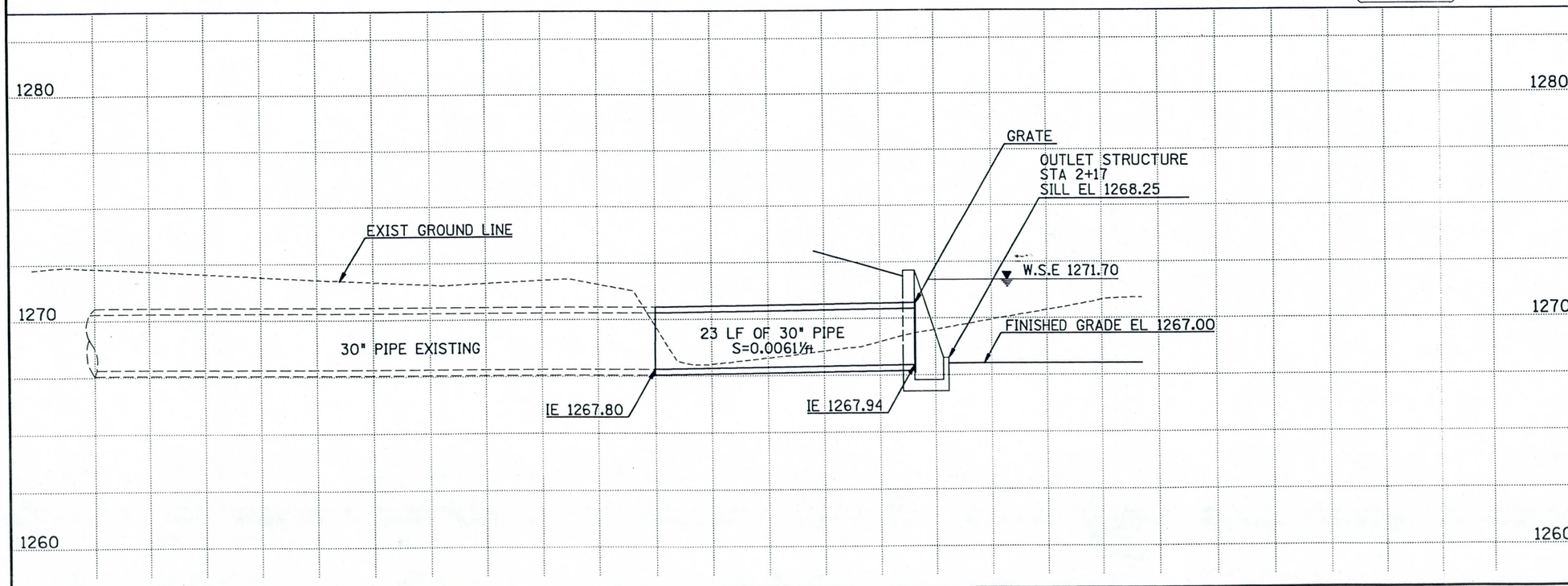

☐ REMOVE ☐

NO.	STA	DESCRIPTION

○ CONSTRUCT ○

INSTALL NEW STORM DRAIN PIPE

NO.	STA TO STA	LF	SIZE

INSTALL NEW STORM DRAIN MANHOLES

NO.	STA	SHAFT	BASE

INSTALL NEW CATCH BASIN AND PIPE CONNECTIONS

NO.	INLET STA	INLET TYPE	CONN TYPE	PIPE LF	PIPE SIZE
1	2+17	MAG DET 501-5		23	30

OTHER NEW CONSTRUCTION

NO.	STA	DESCRIPTION
2	2+17	ADOT DET C-13.75

GENERAL NOTES

1. PROTECT EXIST PUBLIC UTILITY LINE IN PLACE.

NO.	REVISION	BY	DATE
3			
2			
1			

FLOOD CONTROL DISTRICT OF MARICOPA COUNTY
ENGINEERING DIVISION

OSBORN ROAD STORM DRAIN
THOMAS RD & 61ST PL TO INDIAN BEND WASH
PROJECT CONTROL NO. 027-04 30

PRELIMINARY NOT FOR CONSTRUCTION

	BY	DATE
DESIGNED	M. LUECKER	3/22/00
DRAWN	M. ROSS	3/22/00
CHECKED	J. HOLZMEISTER	3/22/00

PREMIER

DRAWING NO. MDB-5 | MARRIOTT BRIGHTON GARDENS BASIN PLAN AND PROFILE | SHEET OF 104 132

w:\9907\cadd\drainage\marriott\sdpipe.dgn
Plotted By: MGR 23 MAR 100 09:55:29

Marriot
Brighton
Gardens

Outlet Rating
Curve

```
*********************
*  CULVERT PROGRAM  *
*********************
```

ARIZONA DEPT. OF TRANSPORTATION ..... STRUCTURES SECTION

PROJECT NO. : 9907 DATE : 11-05-1999 TIME : 10:50:31 1 of 4
PROJECT NAME : Osborn Shea Drain
COMPUTED BY : GH CHK BY : ML

****

HYDRAULIC ANALYSIS OF 1 - 2.5 FT. X 105.00 FT. P.C.
n = 0.0120

OUTLET CONTROL GOVERNS

HEADWATER COMPUTATION

Q	INLET CONT. HW/D	INLET CONT. HW	Ke	H	Dc	(Dc+D)/2	TW	OUTLET CONTROL HW = H+ho-LSo ho	LSo	HW
8.00	0.52	1.30	0.20	0.08	0.94	1.72	1.70	1.72	0.01	1.79

CONTROL HW= 1.79 OUTLET VEL= 2.25 DHW= 69.54 AHW= 73.00 DN= 2.50

DHW = 69.1

not full pipe flow condition

```
*********************
*  CULVERT PROGRAM  *
*********************
```

ARIZONA DEPT. OF TRANSPORTATION ..... STRUCTURES SECTION

PROJECT NO. : 9907 DATE : 11-05-1999 TIME : 10:46:40
PROJECT NAME : Osborn Storm Drain
COMPUTED BY : JH CHK BY : ML

****

HYDRAULIC ANALYSIS OF 1 - 2.5 FT. X 105.00 FT. P.C.
n = 0.0120

OUTLET CONTROL GOVERNS

HEADWATER COMPUTATION

	INLET CONT.				OUTLET CONTROL HW = H+ho-LSo					
Q	HW/D	HW	Ke	H	Dc	(Dc+D)/2	TW	ho	LSo	HW
16.00	0.78	1.95	0.20	0.33	1.35	1.93	2.00	2.00	0.01	2.32

CONTROL HW= 2.32 OUTLET VEL= 3.80 DHW= 70.07 AHW= 73.00 DN= 2.50

```
*********************
*  CULVERT PROGRAM  *
*********************
```

ARIZONA DEPT. OF TRANSPORTATION ..... STRUCTURES SECTION

PROJECT NO. : 9907 DATE : 11-05-1999 TIME : 10:49:19
PROJECT NAME : Osborn Skra Drain
COMPUTED BY : GH CHK BY : NL

****

HYDRAULIC ANALYSIS OF 1 - 2.5 FT. X 105.00 FT. P.C.
n = 0.0120

OUTLET CONTROL GOVERNS

HEADWATER COMPUTATION

	INLET CONT.				OUTLET CONTROL HW = H+ho-LSo					
Q	HW/D	HW	Ke	H	Dc	(Dc+D)/2	TW	ho	LSo	HW
29.00	1.13	2.84	0.20	1.10	1.84	2.17	2.17	2.17	0.01	3.26

CONTROL HW= 3.26 OUTLET VEL= 6.41 DHW= 71.01 AHW= 73.00 DN= 2.50

```
*********************
*  CULVERT PROGRAM  *
*********************
```

ARIZONA DEPT. OF TRANSPORTATION ..... STRUCTURES SECTION

PROJECT NO. : 9907 DATE : 11-05-1999 TIME : 10:47:35
PROJECT NAME : Osborn Storm Drain
COMPUTED BY : GH CHK BY : MM

****

HYDRAULIC ANALYSIS OF 1 - 2.5 FT. X 105.00 FT. P.C.
n = 0.0120

OUTLET CONTROL GOVERNS

HEADWATER COMPUTATION

	INLET CONT.				OUTLET CONTROL HW = H+ho-LSo					
Q	HW/D	HW	Ke	H	Dc	(Dc+D)/2	TW	ho	LSo	HW
38.00	1.45	3.62	0.20	1.88	2.08	2.29	2.29	2.29	0.01	4.17

CONTROL HW= 4.17 OUTLET VEL= 8.07 DHW= 71.92 AHW= 73.00 DN= 2.50

Paiute Park Storage Volume			
Elevation	Volume (CY)	Volume (CF)	Volume (AC-FT)
1248	0	0	0.00
1249	423	11410	0.26
1250	3055	82482	1.89
1251	7956	214809	4.93
1252	13804	372708	8.56
1253	19841	535712	12.30
1254	26072	703944	16.16
1255	32501	877535	20.15
1256	39134	1056621	24.26
1257	45975	1241317	28.50
1258	53121	1434259	32.93

Marriott Basin Storage Volume			
Elevation	Volume (CY)	Volume (CF)	Volume (AC-FT)
1268	0	0	0.00
1269	762	20579	0.47
1270	2400	64792	1.49
1271	4192	113187	2.60
1272	6159	166282	3.82
1273	8315	224497	5.15

Marriott
Brighton
Gardens

Volume Calcs

Triangle Volume Report

Original Surface: 1442
Design Surface: alt5-mar

Cut (cu yd)	Fill (cu yd)	Net (cu yd)
7872.23	187.12	7685.12

Original Surface: 1268
Design Surface: alt5-mar

Cut (cu yd)	Fill (cu yd)	Net (cu yd)
0.00	4172.79	-4172.79

Original Surface: 1269
Design Surface: alt5-mar

Cut (cu yd)	Fill (cu yd)	Net (cu yd)
762.23	2456.17	-1693.94

Original Surface: 1270
Design Surface: alt5-mar

Cut (cu yd)	Fill (cu yd)	Net (cu yd)
2399.65	1614.74	784.91

Original Surface: 1271
Design Surface: alt5-mar

Cut (cu yd)	Fill (cu yd)	Net (cu yd)
4192.06	928.30	3263.76

Original Surface: 1272
Design Surface: alt5-mar

Cut (cu yd)	Fill (cu yd)	Net (cu yd)
6158.64	416.04	5742.60

Original Surface: 1273
Design Surface: alt5-mar

Cut (cu yd)	Fill (cu yd)	Net (cu yd)
8314.66	93.21	8221.45

Original Surface: 1274
Design Surface: alt5-mar

Cut (cu yd)	Fill (cu yd)	Net (cu yd)
10717.64	17.34	10700.30

Original Surface: 1275
Design Surface: alt5-mar

Cut (cu yd)	Fill (cu yd)	Net (cu yd)
13179.15	0.00	13179.15

DETENTION BASIN CALCULATIONS

Paiute Park

EXISTING UTILITIES AND OTHER FACILITIES HAVE BEEN PLACED ON THE PLANS FROM FIELD SURVEYS, EXISTING MAPS AND OTHER CURRENT PLANS WITHIN THE AREA OF THIS PROJECT. THE CONTRACTOR WILL DETERMINE THE EXACT LOCATION AND/OR ELEVATION OF EXISTING UTILITIES.

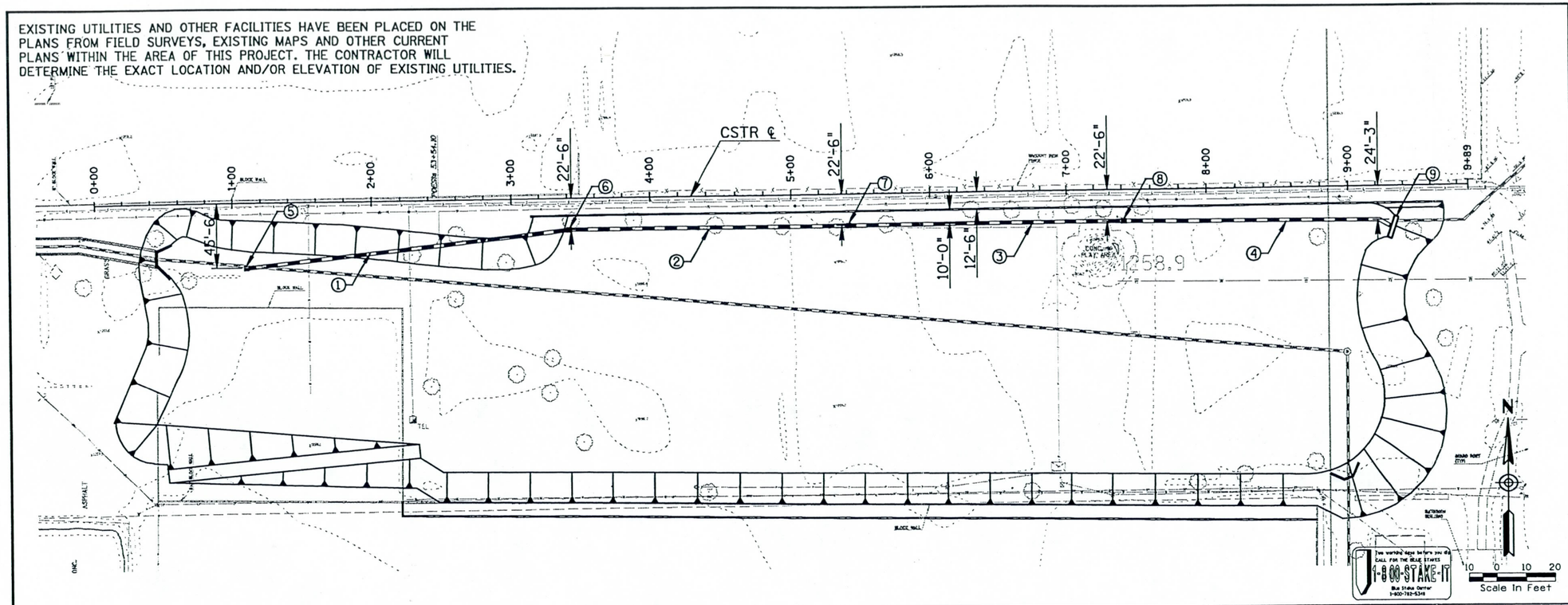

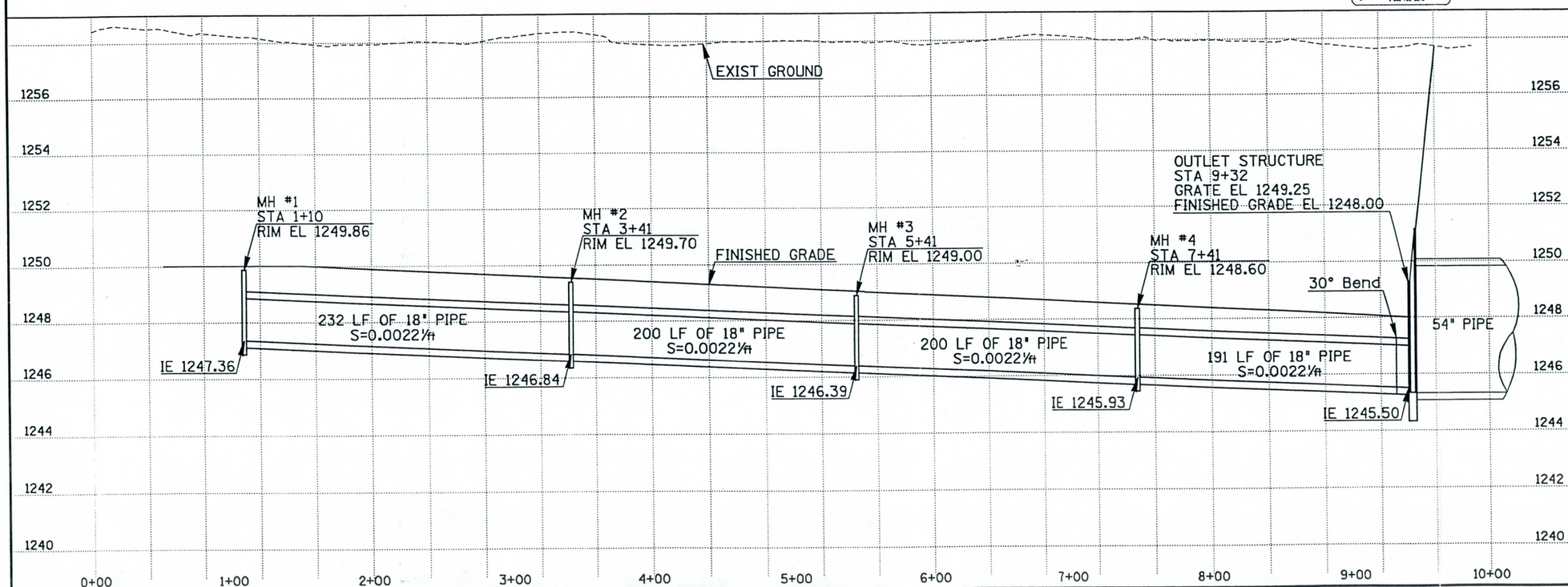

☐ REMOVE ☐

NO.	STA	DESCRIPTION

○ CONSTRUCT ○

INSTALL NEW STORM DRAIN PIPE

NO.	STA TO STA	LF	SIZE
①	1+10 TO 3+41	232	18
②	3+41 TO 5+41	200	18
③	5+41 TO 7+41	200	18
④	7+41 TO 9+32	191	18

INSTALL NEW STORM DRAIN MANHOLES

NO.	STA	SHAFT	BASE

INSTALL NEW CATCH BASIN AND PIPE CONNECTIONS

NO.	INLET STA	INLET TYPE	CONN TYPE	PIPE LF	PIPE SIZE
⑤	1+10	DET 538			
⑥	3+41	DET 538			
⑦	5+41	DET 538			
⑧	7+41	DET 538			
⑨	9+32	SP DET			

OTHER NEW CONSTRUCTION

NO.	STA	DESCRIPTION

GENERAL NOTES

① PROTECT EXIST PUBLIC UTILITY LINE IN PLACE.

NO.	REVISION	BY	DATE
3			
2			
1			

FLOOD CONTROL DISTRICT OF MARICOPA COUNTY
ENGINEERING DIVISION

OSBORN ROAD STORM DRAIN
THOMAS RD & 61ST PL TO INDIAN BEND WASH
PROJECT CONTROL NO. 027-04 30

PRELIMINARY NOT FOR CONSTRUCTION

	BY	DATE
DESIGNED	M. LUECKER	3/22/00
DRAWN	M. ROSS	3/22/00
CHECKED	J. HOLZMEISTER	3/22/00

PREMIER

DRAWING NO. PDB-3 | PLAN AND PROFILE PAIUTE PARK BASIN | SHEET OF 108132

w:\9907\cadd\drainage\paiute\sdpipe.dgn
Plotted By: MAL 23 MAR 100 08:06:42

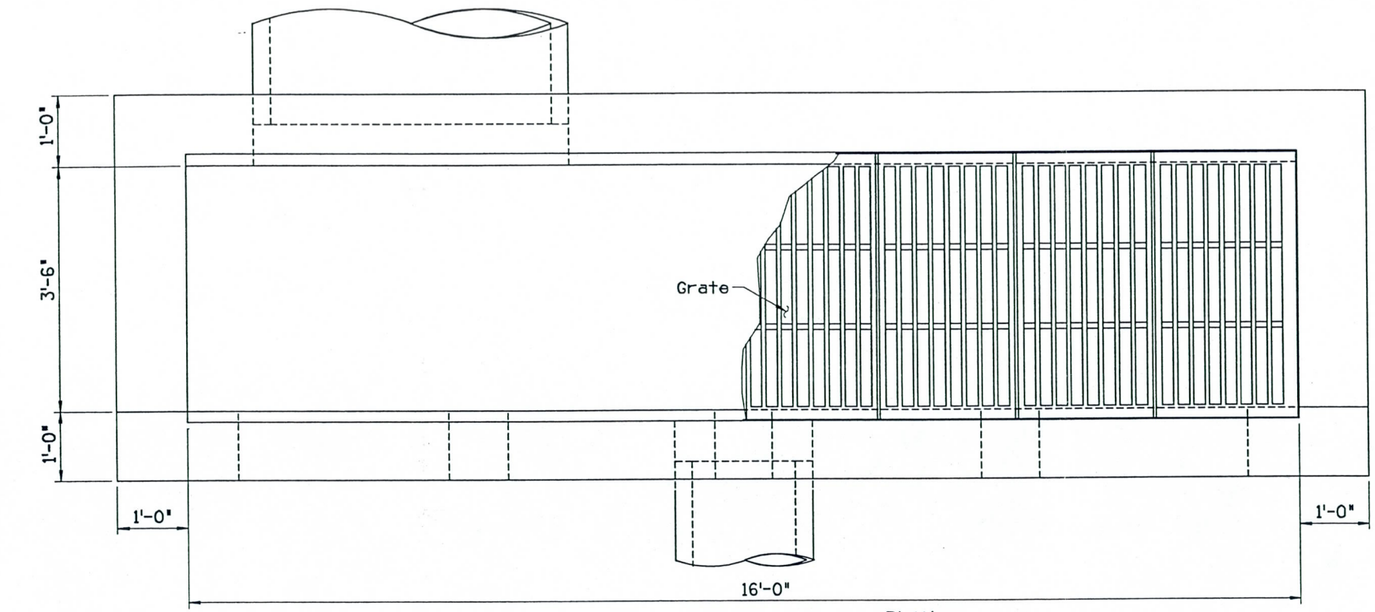

PLAN
1"=1'-0"

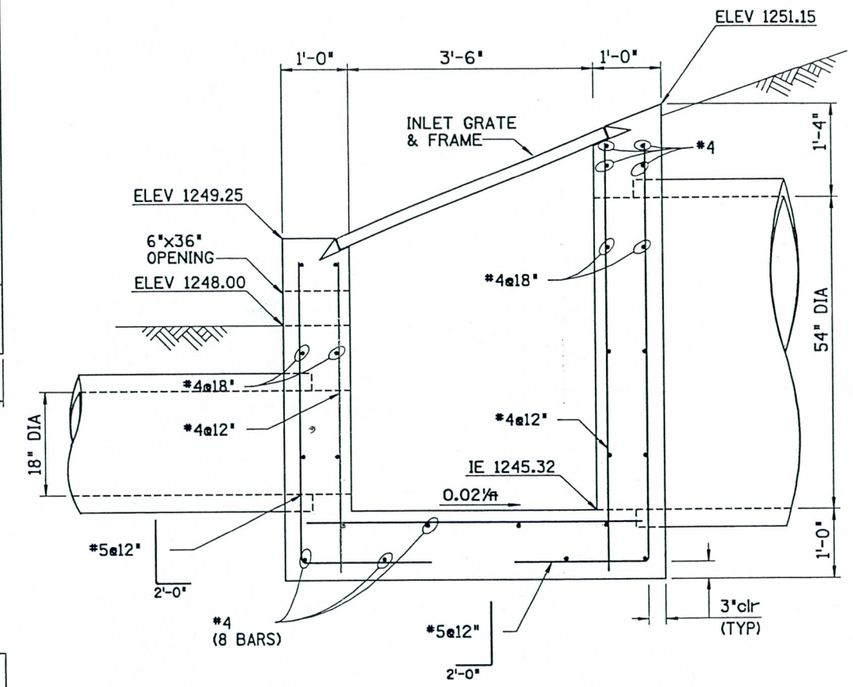

SECTION A
1"=1'-0"

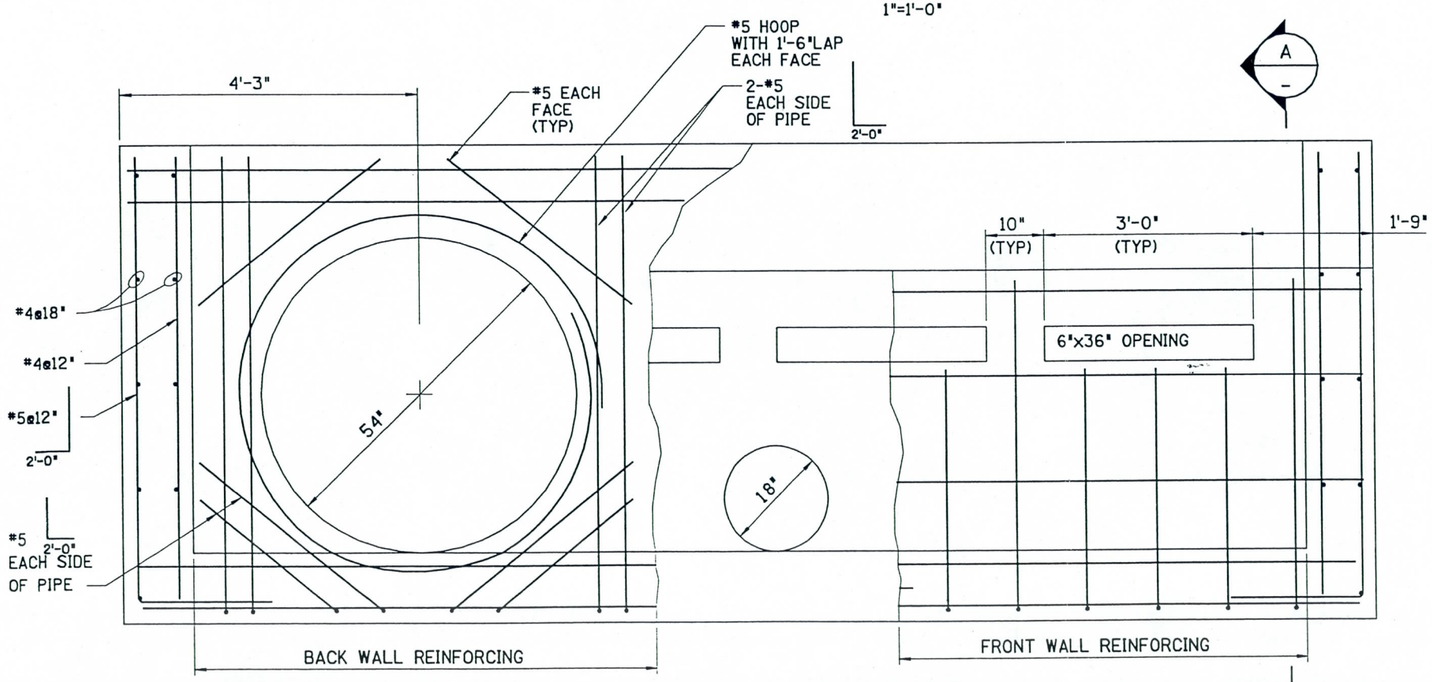

ELEVATION
1"=1'-0"

NO.	REVISION	BY	DATE
3			
2			
1			

FLOOD CONTROL DISTRICT OF MARICOPA COUNTY
ENGINEERING DIVISION

OSBORN ROAD STORM DRAIN
THOMAS RD & 61ST PL TO INDIAN BEND WASH
PROJECT CONTROL NO. 027-04 30

		BY	DATE
PRELIMINARY NOT FOR CONSTRUCTION	DESIGNED	T. REGIS	3/22/00
	DRAWN	J. CARLILE	3/22/00
	CHECKED	J. HOLZMEISTER	3/22/00

PREMIER

DRAWING NO. PDB-4

PAIUTE PARK BASIN
OUTLET STRUCTURE STA 9+32

SHEET OF 109 132

w:\9907\cadd\structure\pipext.dgn
Plotted By: MGR 22 MAR 100 12:29:58

PREMIER
ENGINEERING CORPORATION

SHEET NO 1 OF

JOB NUMBER 9907

TITLE Osborn Storm Drain

SUBJECT Paiute Park Outlet - Inflow Capacities

MADE BY GH DATE 11/4/99 CHECKED BY ML DATE

TASK: DETERMINE THE INLET CAPACITY FOR THE OUTLET STRUCTURE IN PAIUTE PARK BASIN.

GIVEN: OUTLET STRUCTURE (PER PLANS)

NEENAH GRATE R-3801-B (MEDIAN DRAIN)

OPEN AREA = 29.8 FT^2

PERIMETER = 42 FT

ASSUME 50% CLOGGING FACTOR FOR GRATE

CURB OPEN TYPE INLET

4 - 3' x 0.5' OPENINGS @ ELEVATION = 1248.0

DETERMINE: INLET CAPACITY AT ELEVATIONS 49, 50, 51, 52 & 53

FOR ELE 49 - NO FLOW IN GRATE

$Q_i = C_o h L (2g d_o)^{0.5}$

$Q_i = (0.67)(0.5)(12)[(2)(32.2)(0.75)]^{0.5}$

$Q_i = 27.9$ CFS

67% CLOGGING FACTOR → 18.7 CFS USE 19 CFS

FOR ELEV 50 - PARTIAL FLOW IN GRATE

SLOPE OF GRATE $(51.15 - 49.25)/5 = 0.38$

51.15 - .38 = 50.77 ELEV AT TOP EDGE OF GRATE

50.77 - 50.0 = 0.77/.38 = 2' LENGTH

$2/\cos 20.2' = 2.14'$

4 - 2.14 = 1.86' OF GRATE AVAILABLE

USE RATIO TO DETERMINE AREA

$\left(\frac{1.86}{4}\right)(29.8) = 13.9\ ft^2$ P = 17+17+1.86+1.86 = 37.72 FT

PREMIER
ENGINEERING CORPORATION

SHEET NO 2 OF

JOB NUMBER

TITLE Osborn Storm Drain

SUBJECT

MADE BY JH DATE 11/4/99 CHECKED BY ML DATE

GRATE AT 50:

FOR ORIFICE

$Q_i = C_o A (2gd)^{0.5}$ $d = ((49.25+50)/2) - 49.25 = .375$

$Q_i = (0.67)(13.9)[(2)(32.2)(0.375)]^{0.5}$

$Q_i = 45$ CFS

50% CLOGGING FACTOR = 22.5 CFS

FOR WEIR

$Q_i = C_w P d^{1.5}$ FRONT

$Q_i = (3.0)(17)(0.75)^{1.5}$

$Q_i = 33$ CFS

$Q_i = (3.0)(1.86)(0.375)^{1.5}$ SIDES

$Q_i = 1.28$ CFS

$Q_T = 1.28 + 1.28 + 33 = 35.5$ CFS

50% CLOGGING FACTOR : $\boxed{18 \text{ CFS}}$ ← USE THIS

CURB OPENING

$Q = C_o h L (2g d_o)^{0.5}$

$Q_i = (0.67)(0.5)(12)[(2)(32.2)(1.75)]^{0.5}$

$Q_i = 42.7$ CFS

67% CLOGGING FACTOR 28 CFS

TOTAL INFLOW AT ELEV 50 = 28 + 18 = $\boxed{46 \text{ CFS}}$

PREMIER
ENGINEERING CORPORATION

SHEET NO _____ OF _____
JOB NUMBER _____

TITLE _____

SUBJECT _____

MADE BY _____ DATE _____ CHECKED BY _____ DATE _____

GRATE AT 51 :

$d = \left(\frac{49.25 + 51}{2}\right) - 49.25 = 0.875$

FOR ORIFICE :

$Q = (0.67)(29.8)[(2)(32.2)(0.875)]^{0.5}$

$Q = 149$ CFS

50% CLOGGING FACTOR = 75 CFS

FOR WEIR

$Q_L = (3)(17)(1.75)^{1.5}$ FRONT

$Q_i = 118$ CFS

$Q_i = (3)(4)(0.875)^{1.5}$

$Q_i = 9.8$ CFS

$Q_T = 9.8 + 9.8 + 118 = 138$ CFS

50% CLOGGING = $\boxed{69 \text{ CFS}}$ ←

CURB OPENING

$Q_i = (0.67)(0.5)(12)[(2)(32.2)(2.75)]^{0.5}$

$Q_i = 53$ CFS

67% CLOGGING FACTOR = 36 CFS

TOTAL INFLOW AT ELEV 51 = 36 + 69 = $\boxed{105 \text{ CFS}}$

PREMIER
ENGINEERING CORPORATION

SHEET NO 3 OF

JOB NUMBER 9907

TITLE Osborn Storm Drain

SUBJECT

MADE BY GH DATE 11/4/99 CHECKED BY MK DATE

GRATE AT S2

FOR ORIFICE:

$Q = (0.67)(29.8)[(2)(32.2)(1.375)]^{0.5}$

$Q = 187$ CFS

50% CLOGGING = $\boxed{94 \text{ CFS}}$ ←

FOR WEIR:

$Q_i = (3)(17)(2.75)^{1.5}$ FRONT

$Q_i = 232$ CFS

$Q_i = (3)(17)(1.23)^{1.5}$ BACK

$Q_i = 70$ CFS

$Q_i = (3)(4)(1.375)^{1.5}$ SIDE

$Q_i = 19.34$ CFS

$Q_T = 232 + 70 + 19 + 19 = 340$ CFS

50% CLOGGING = 170 CFS

CURB OPENING

$Q_i = (0.67)(0.5)(12)[(2)(32.2)(3.75)]^{0.5}$

$Q_i = 62$ CFS

67% CLOGGING = 42 CFS

TOTAL INTERCEPTION AT S2 = 42 + 94 = $\boxed{136 \text{ CFS}}$

Paiute Park
Outlet
Rating Curve
1 of 3

```
*********************
*  CULVERT PROGRAM  *
*********************
```

ARIZONA DEPT. OF TRANSPORTATION ..... STRUCTURES SECTION

PROJECT NO. : 9907 DATE : 11-04-1999 TIME : 22:17:29
PROJECT NAME : Osborn Storm Drain
COMPUTED BY : GH CHK BY : MM

****

HYDRAULIC ANALYSIS OF 1 - 4.5 FT. X 140.00 FT. P.C.
n = 0.0120

INLET CONTROL GOVERNS

HEADWATER COMPUTATION

Q	INLET CONT. HW/D	HW	Ke	H	Dc	OUTLET CONTROL HW = H+ho-LSo (Dc+D)/2	TW	ho	LSo	HW
99.00	1.04	4.68	0.70	1.32	2.92	3.71	3.70	3.71	0.57	4.46

CONTROL HW= 4.68 OUTLET VEL= 9.38 DHW= 50.00 AHW= 57.00 DN= 2.83

```
*********************
*  CULVERT PROGRAM  *
*********************
```

ARIZONA DEPT. OF TRANSPORTATION ..... STRUCTURES SECTION

PROJECT NO. : 9907 DATE : 11-04-1999 TIME : 22:20:08
PROJECT NAME : Osborn Storm Drain
COMPUTED BY : GH CHK BY : MM

****

HYDRAULIC ANALYSIS OF 1 - 4.5 FT. X 140.00 FT. P.C.
n = 0.0120

INLET CONTROL GOVERNS

HEADWATER COMPUTATION

	INLET CONT.				OUTLET CONTROL HW = H+ho-LSo					
Q	HW/D	HW	Ke	H	Dc	(Dc+D)/2	TW	ho	LSo	HW
122.00	1.27	5.70	0.70	2.01	3.25	3.88	3.89	3.89	0.57	5.33

CONTROL HW= 5.70 OUTLET VEL= 8.35 DHW= 51.02 AHW= 57.00 DN= 3.31

```
*********************
*  CULVERT PROGRAM  *
*********************
```

ARIZONA DEPT. OF TRANSPORTATION ..... STRUCTURES SECTION

PROJECT NO. : 9907 DATE : 11-04-1999 TIME : 16:49:39
PROJECT NAME : Osborn Storm Drain
COMPUTED BY : gH CHK BY : MC

****

HYDRAULIC ANALYSIS OF 1 - 4.5 FT. X 140.00 FT. P.C.
n = 0.0120

INLET CONTROL GOVERNS

HEADWATER COMPUTATION

	INLET CONT.				OUTLET CONTROL HW = H+ho-LSo					
Q	HW/D	HW	Ke	H	Dc	(Dc+D)/2	TW	ho	LSo	HW
140.00	1.48	6.65	0.70	2.65	3.48	3.99	4.00	4.00	0.57	6.08

CONTROL HW= 6.65 OUTLET VEL= 9.37 DHW= 51.97 AHW= 57.00 DN= 3.80

Paiute Park Elev : 52
pipe capacity = 140 (no backwater effects)

Paiute Park Storage Volume			
Elevation	Volume (CY)	Volume (CF)	Volume (AC-FT)
1248	0	0	0.00
1249	423	11410	0.26
1250	3055	82482	1.89
1251	7956	214809	4.93
1252	13804	372708	8.56
1253	19841	535712	12.30
1254	26072	703944	16.16
1255	32501	877535	20.15
1256	39134	1056621	24.26
1257	45975	1241317	28.50
1258	53121	1434259	32.93

Marriott Basin Storage Volume			
Elevation	Volume (CY)	Volume (CF)	Volume (AC-FT)
1268	0	0	0.00
1269	762	20579	0.47
1270	2400	64792	1.49
1271	4192	113187	2.60
1272	6159	166282	3.82
1273	8315	224497	5.15

Paiute Park
Grading
Volume Calcs

tinvol.rpt
Monday, October 18, 1999 02:27:15 Page: 1
Triangle Volume Report

Original Surface: 1543 (PB Existing Surface)
Design Surface: alt4

Cut (cu yd)	Fill (cu yd)	Net (cu yd)
47748.3191	60.6780	47687.6411

Original Surface: 1248
Design Surface: alt4

Cut (cu yd)	Fill (cu yd)	Net (cu yd)
0.0000	20801.1455	-20801.1455

Original Surface: 1249
Design Surface: alt4

Cut (cu yd)	Fill (cu yd)	Net (cu yd)
422.6142	13836.5161	-13413.9019

Original Surface: 1250
Design Surface: alt4

Cut (cu yd)	Fill (cu yd)	Net (cu yd)
3054.8991	9081.5573	-6026.6582

Original Surface: 1251
Design Surface: alt4

Cut (cu yd)	Fill (cu yd)	Net (cu yd)
7955.9333	6595.3478	1360.5854

Original Surface: 1252
Design Surface: alt4

Cut (cu yd)	Fill (cu yd)	Net (cu yd)
13803.9794	5056.1503	8747.8291

Original Surface: 1253
Design Surface: alt4

Cut (cu yd)	Fill (cu yd)	Net (cu yd)
19841.2377	3706.1650	16135.0727

Original Surface: 1254
Design Surface: alt4

Cut (cu yd)	Fill (cu yd)	Net (cu yd)
26072.0357	2549.7193	23522.3164

Original Surface: 1255
Design Surface: alt4

Cut (cu yd)	Fill (cu yd)	Net (cu yd)
32501.3356	1591.7756	30909.5600

Original Surface: 1256
Design Surface: alt4

Cut (cu yd)	Fill (cu yd)	Net (cu yd)
39134.1056	837.3019	38296.8037

Original Surface: 1257
Design Surface: alt4

Cut (cu yd)	Fill (cu yd)	Net (cu yd)
45974.7149	290.6521	45684.0628

Original Surface: 1258
Design Surface: alt4

Cut (cu yd)	Fill (cu yd)	Net (cu yd)
53120.7193	49.4349	53071.2844

OSBORN OUTFALL

NAVAJO LATERAL

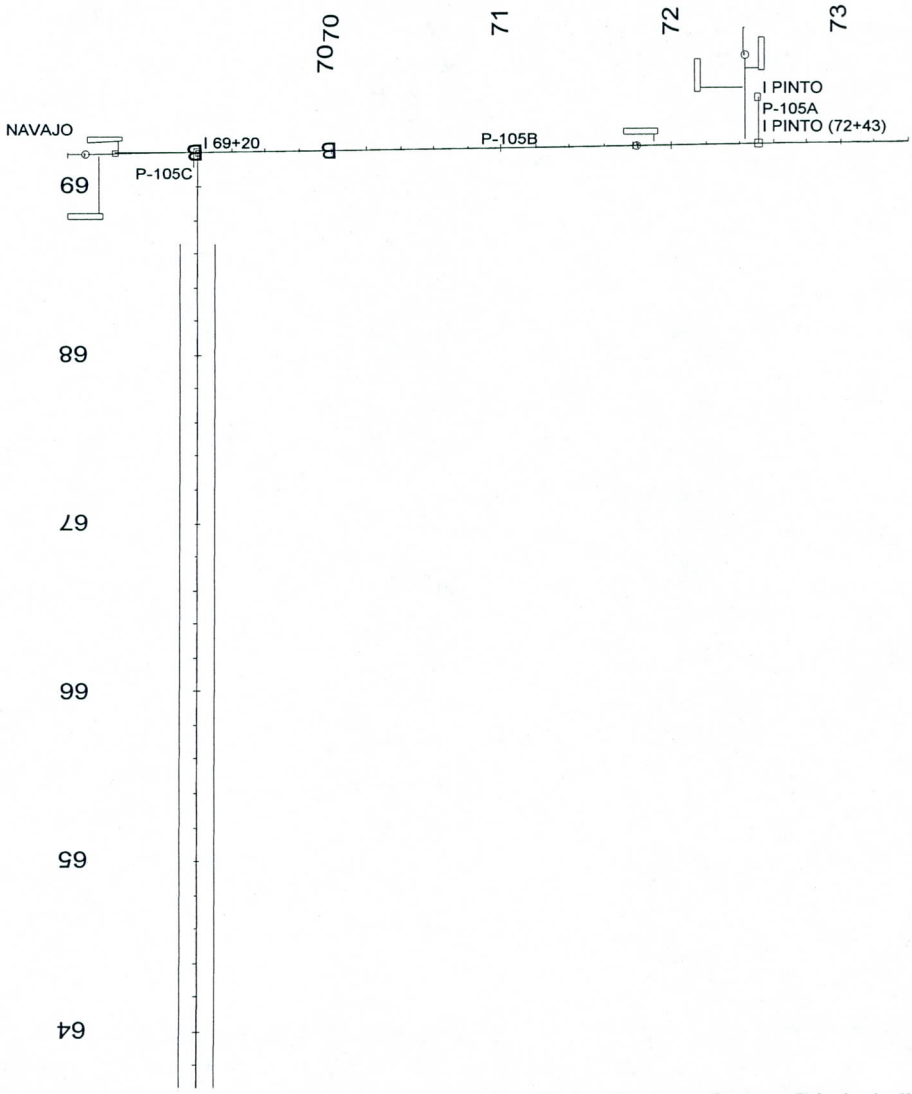

HEADLOSS CALCULATIONS

Inlet Loss Coefficients
FCDMC Drainage Manual, Vol. II, Sec 4.3.3

Equation 4.9b:

$$hj = \frac{\frac{Q_2^2}{A_2 g} - \frac{Q_1^2}{A_1 g} - \frac{Q_3^2 \cos()_3}{A_3 g} - \frac{Q_4^2 \cos()_4}{A_4 g}}{\frac{(A_1 + A_2)}{2}} + D2 - D1$$

Marriott to Paiute

	Condition	Q_1	D_1	A_1	Q_2	D_2	A_2	Q_3	D_3	A_3	$\cos()_3$	k_e	h_j
Marriott Outlet	Culvert Inlet											**0.50**	**StormCad**
MH 10+85	90 Degree Bend											1.38	StormCad
	Pipe Size Change	Match crowns- no headloss											0.00
	Total											**1.38**	**StormCad**
J 11+95	CB Connector	38	36	7.1	47	36	7.1	9	24	3.1	0	na	**0.48**
MH 13+70	90 Degree Bend											**1.38**	**StormCad**
J 17+91	CB Connector	47	42	9.6	50	42	9.6	3	18	1.8	0	na	**0.10**
MH 18+65	90 Degree Bend											**1.38**	**StormCad**
MH 19+29	Junction Structure, Expansion	v=	7	fps	Assume D1/D2=4							0.92	0.70
	Junction Structure, Contraction	v=	5	fps	Assume D1/D2=8							0.49	0.19
	Total												**0.89**
PI 21+12	10 Degree Bend											**0.05**	**StormCad**
MH 22+25	10 Degree Bend											0.05	
	Transition from 36" Pipe	Enlargement		D1/D2=1.3								0.04	
	Total											**0.09**	**StormCad**
PI 23+46	5 Degree Bend											**0.00**	**StormCad**
MH 25+70	10 Degree Bend											**0.05**	**StormCad**
J 27+47	CB Connector	65	48	12.6	68.5	48	12.6	3.5	18	1.8	0	na	**0.09**
PI 28+55	10 Degree Bend											**0.05**	**StormCad**
MH 30+96	10 Degree Bend											**0.05**	**StormCad**
J 34+48	CB Connector	68.5	48	12.6	72	48	12.6	3.5	18	1.8	0	na	**0.10**
MH 35+06	Pipe Enlargement- 48" to 66"											**0.25**	**StormCad**
J 35+34	CB Connector	72	66	23.8	135	66	23.8	63.0	48	12.6	0	na	**0.72**
64th St J 68+05	90 Degree Bend											**1.38**	**StormCad**
64th St J 74+05	Transition to Box Culvert	Consider cross sectional areas of pipe and inside of junction box for calculating D1/D2											
	Enlargement	D1/D2=2.5										0.67	
	Contraction	D1/D2=2.5										0.41	
	Total											**1.08**	**StormCad**
64th St J 80+61	CB Connector	100	66.3	24.0	159	85.6	40.0	59	42	9.6	0	na	1.82
	90 Degree Bend, 6x4	v=	4	fps								1.38	0.34
	Total												**2.16**

Inlet Loss Coefficients
FCDMC Drainage Manual, Vol. II, Sec 4.3.3

Equation 4.9b:

$$hj = \frac{\frac{Q_2^2}{A_2 g} - \frac{Q_1^2}{A_1 g} - \frac{Q_3^2 \cos()_3}{A_3 g} - \frac{Q_4^2 \cos()_4}{A_4 g}}{\frac{(A_1 + A_2)}{2}} + D2 - D1$$

Paiute to Indian Bend Wash

	Condition	Q_1	D_1	A_1	Q_2	D_2	A_2	Q_3	D_3	A_3	$\cos()_3$	k_e	h_j
Paiute Park Inlet	Culvert Inlet											**0.50**	**StormCad**
PI 60+67	45 Degree bend @60+67											**0.40**	**StormCad**
PI 61+29	45 Degree bend @61+29											**0.40**	**StormCad**
MH 63+40	MH @ 63+40											**0.05**	**StormCad**
MH 66+80	MH @ 66+80											**0.05**	**StormCad**
Navajo Junction	Lateral @ mainline*	49	36	7.1	103	60	19.6	44	54	15.9	0	na	0.47
	*Lateral to Navajo is Pipe 1, mainline in Osborn is Pipe 2 and mainline in alley is Pipe 3- adjust equation 4.9a to remove D1-D2 factor.												
	Junction Structure, Expansion	v=	7	fps	Assume D1/D2=8							0.90	0.68
	Junction Structure, Contraction	v=	5	fps	Assume D1/D2=3							0.42	0.16
	Total												**1.31**
Navajo Lateral	Losses at connectors	41	36	7.1	49	36	7.1	8	18	1.8	0	na	**0.45**
MH 71+80	MH	v=	5	fps								0.05	0.02
	Catch basin connection	49	60	19.6	51	60	19.6	2	18	1.8	0	na	0.02
	Total												**0.04**
Pinto (72+43)	Lateral @ mainline	51	60	19.6	99	60	19.6	49	48	12.6	0	na	**0.58**
Pinto Lateral	Losses at connectors	45	36	7.1	49	36	7.1	4	18	1.8	0	na	**0.23**
MH 81+60	MH @ 76+65 and 81+60											**0.10**	**StormCad**
J 81+82	Catch basin connection	137	78	33.2	143	78	33.2	6	18	1.8	0	na	**0.05**
I 82+63	68th St Lateral @ mainline*	137	78	33.2	225	78	33.2	88	60	19.6	0		**0.90**
	*HEC-1 model contains slight discrepancy in areas of Subbasin 050620. Reduce peak flow from 68th St. proportionally to 88 cfs to calculate headloss.												
68th Street Lateral	Losses at connectors	84	42	9.6	88	42	9.6	4	18	1.8	0	na	**0.23**
PI 86+80	45 Degree bend											0.40	
	MH 86+40											0.05	
	Total											**0.45**	**StormCad**
PI 87+30	45 Degree bend											**0.40**	**StormCad**
J 88+87	Catch basin connection	243	78	33.2	249	78	33.2	6	18	1.8	0	na	**0.08**
J 93+01	Supai Lateral @ mainline*	242	78	33.2	285	78	33.2	43	36	7.1	0	na	0.64
	*HEC-1 model contains slight discrepancy in areas of Subbasin 050630. Increase peak flow from Supai proportionally to 43 cfs to calculate headloss.												
	MH 91+00	v=	9	fps								0.05	0.06
	Total												**0.70**
Supai Lateral	Losses at connectors	40	36	7.1	43	36	7.1	3	18	1.8	0	na	**0.15**
MH 95+10	Catch basin connection	285	78	33.2	289	90	44.2	4	18	1.8	0	na	-0.45
	Change of pipe size with matching crowns- adjust equation 4.9a to remove D1-D2 factor. Result is negative. Assume no head loss, no gain in energy.												**Use 0.0**
I 95+72	70th St Lateral @ mainline*	271	90	44.2	342	90	44.2	71	42	9.6	0		**0.69**
	*HEC-1 model contains slight discrepancy in areas of Subbasin 050630. Increase peak flow from 70th St proportionally to 71 cfs to calculate headloss.												
70th Street Lateral	Losses at connectors	64	42	9.6	71	42	9.6	7	18	1.8	0	na	**0.32**
MH 101+90	90 Degree Bend	v=	4	fps	Velocity calculated based on smallest cross section within junction structure.							1.38	0.34
	Junction Structure, Expansion	v=	8	fps	Assume D1/D2=2							0.53	0.53
	Junction Structure, Contraction	v=	8	fps	Assume D1/D2=2							0.36	0.36
	Total												**1.23**
J 104+53	Church Inlet No. 1	348	90	44.2	356	90	44.2	8	18	1.8	0	na	**0.09**
J 106+45	Church Inlet No. 2	356	90	44.2	361	90	44.2	5	18	1.8	0	na	0.06
	MH 106+00	v=	8	fps								0.05	0.05
	Total												**0.11**
J 107+92	Small Apartment	361	90	44.2	366	90	44.2	5	18	1.8	0	na	**0.06**
J 110+50	MH @ 110+50											**0.05**	**StormCad**
I 115+32 71st & Osborn	Junction Structure, Expansion	v=	8	fps	Assume D1/D2=3							0.74	0.74
	Junction Structure, Contraction	v=	9	fps	Assume D1/D2=2							0.36	0.45
	Sewer Transition, Contraction	v=	8	fps	Assume D1/D2=1.1							0.04	0.04
	90 Degree Bend	v=	5	fps	Velocity calculated based on smallest cross section within structure.							1.38	0.54
	Total												**1.76**
J 118+50	Inlet @ 118+50	392	90	44.2	406	90	44.2	14	18	1.8	0	na	**0.18**
	MH 119+00	v=	9	fps								0.05	0.06
	Total												**0.24**
J 121+40	Inlets at Earll and Scottsdale	406	90	44.2	411	90	44.2	5	18	1.8	0	na	0.06
	MH @ 121+40	v=	10	fps								0.05	0.08
	Sewer Transition- Contraction	v=	10	fps	D1/D2=1.1							0.04	0.06
	Total												**0.20**
J 123+00	MH @ 123+00	v=	10	fps								0.05	0.08
	Sewer Transition- Expansion	v=	10	fps	D1/D2=1.1, Expansion Angle = 12 deg							0.09	0.14
	Total												**0.22**
I 128+79	Inlet at Earll and 73rd	411	90	44.2	420	90	44.2	9	18	1.8	0	na	0.12
	MH 128+00	v=	10	fps								0.05	0.08
	Total												**0.20**
MH 133+00	MH											**0.05**	**StormCad**
I 134+56	Civic Cen. Lateral @ mainline	420	90	44.2	447	90	44.2	27	18	1.8	0	na	**0.37**
Civic Center Lateral	Losses at connectors	27	30	4.9	34	30	4.9	7	18	1.8	0	na	**0.55**
MH 135+54	Sewer Transition, Expansion	v=	10	fps	D1/D2=1.1, Expansion Angle = 12.5 deg							0.04	0.06
	Sewer Transition, Contraction	v=	10	fps	D1/D2=1.1							0.04	0.06
	MH 135+57	v=	10	fps								0.05	0.08
	Total												**0.20**
I 141+10	Large Inlet @ 75th	447	96	50.3	459	95.7	50.0	12	18	1.8	0	na	0.13
I 141+30	75th St Lateral @ mainline	459	96	50.3	493	95.7	50.0	34	18	1.8	0	na	0.39
	MH 139+00	v=	8	fps								0.05	0.05
	Sewer Transition- Contraction	v=	8	fps	D1/D2=1.1							0.04	0.04
	Sewer Transition- Expansion	v=	8	fps	D1/D2=1.2, Expansion Angle = 6 deg							0.02	0.02
	Total												**0.50**
75th Street Lateral	Losses at connectors	50	36	7.1	56	36	7.1	6	18	1.8	0	na	**0.40**
I 143+98	4 Inlets along Earll- 75th to Miller	481	104.9	60.0	500	104.9	60.0	19	18	1.8	0	na	**0.16**
	MH 143+98	v=	8	fps								0.05	0.05
	Total												**0.21**
144+00, 147+77, 146+32	Inlets with 24" Tide Flex Valve	Q=5 cfs											**1.25**
MH 147+95	MH											**0.05**	**StormCad**
I 148+49- Miller Lateral	Lateral at mainline	521	104.9	60.0	556	104.9	60.0	35	42	9.6	0	na	0.32
Lateral Design	Junction Structure- Expansion	v=	4	fps	D1/D2=2							0.55	0.14
	60" Tide Flex Valve												1.00
	Total												**1.46**
Miller Lateral	Losses at connectors	18	42	9.6	20	42	9.6	2	18	1.8	0	na	**0.03**
I 148+49- Miller Lateral	Lateral @ mainline	500	104.9	60.0	556	104.9	60.0	56	42	9.6	0	na	0.51
Trunkline Design	Junction Structure- Expansion	v=	9	fps	D1/D2=1.2							0.10	0.13
	Junction Structure- Contraction	v=	9	fps	D1/D2=1.2							0.08	0.10
	Total												**0.74**
PI 148+67	45 Degree bend											**0.40**	**StormCad**
PI 149+36	45 Degree bend	v=	9	fps								0.40	0.50
	MH @ 153+00 and 158+00	v=	9	fps								0.10	0.13
	Total												**0.63**

FACSIMILE

Red Valve Company, Inc.

Mike Duer
700 North Bell Avenue
P.O. Box 548
Carnegie, PA 15106
Ph: (412) 279-0044
Fax: (412) 279-5410
mikeduer@aol.com

March 21, 2000

Mr. Alan Humphrey
Parsons Brinkerhoff
Phoenix, AZ
(480) 921-6883
(480) 966-9234 fax

RECEIVED
MAR 21 2000
PARSONS BRINCKERHOFF
TEMPE

Reference: Ultra-Light Tideflex
24" and 60" 37G

Project: Osborn Road Storm Drain

Dear Alan,

As discussed yesterday, I am writing to confirm that the headloss characteristic of the Ultra-Light Tideflex is one half the headloss of the standard Tideflex construction. So, the actual headloss of the Ultra-Light Valves would be half of what is shown on the headloss curves supplied to you previously.

I am also faxing the general arrangement drawings showing the valves rotated 45°, as required.

Please call if any questions.

Regards,
RED VALVE COMPANY, INC.

Michael Duer
Sr. Design Engineer
c:\office\wpwin\files\tideflex\engineer\parsonsbrink\humphrey0001.doc

cc: Mr. Gary weber

60" TIDEFLEX SERIES 37

HEADLOSS vs. FLOW (SUB. DISCHARGE)

REDUCE HEADLOSSES BY ONE-HALF FOR ULTRA LIGHT CONSTRUCTION

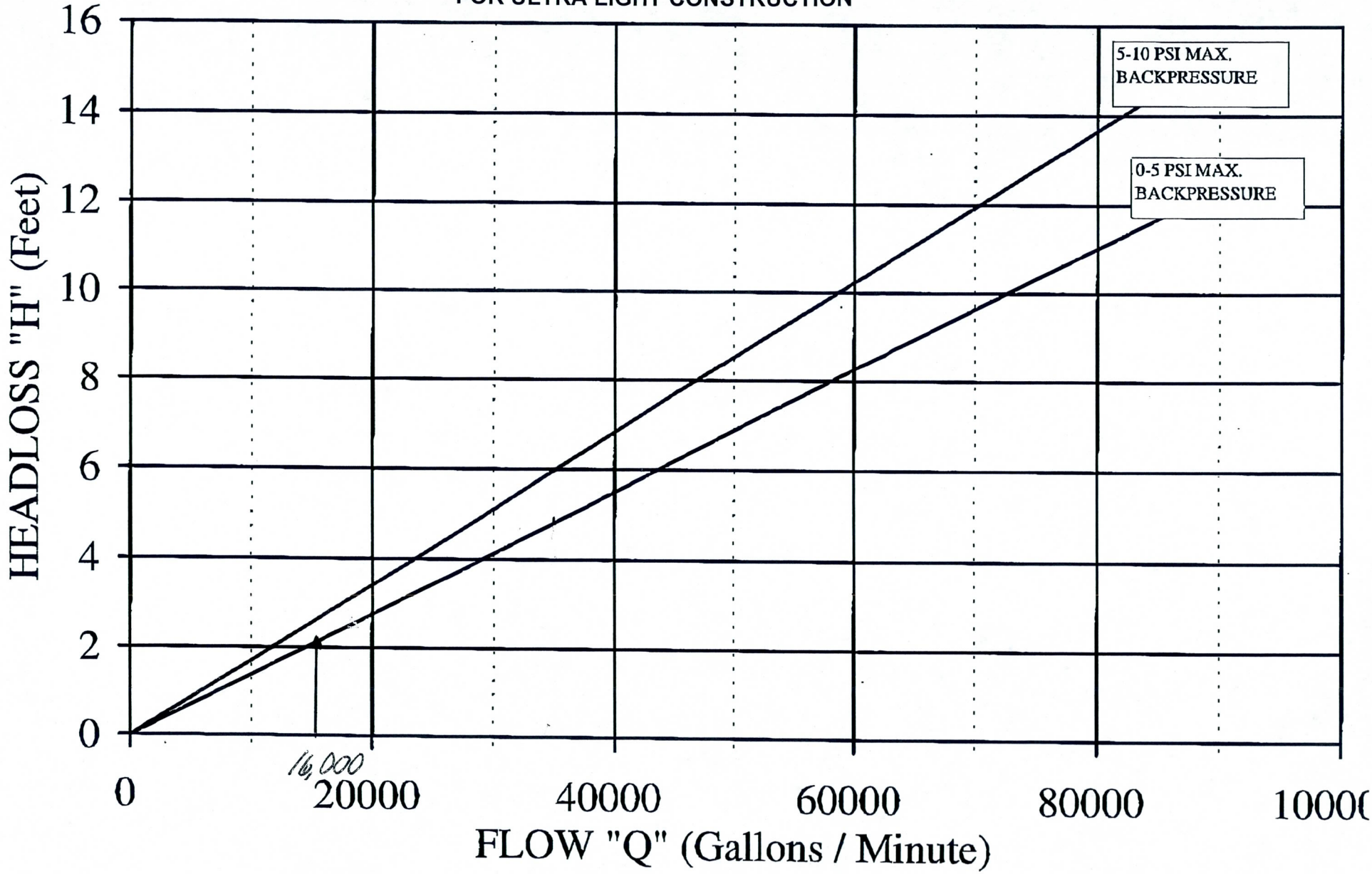

24" TIDEFLEX SERIES 37

HEADLOSS vs. FLOW (SUB. DISCHARGE)

REDUCE HEADLOSSES BY ONE-HALF
FOR ULTRA LIGHT CONSTRUCTION

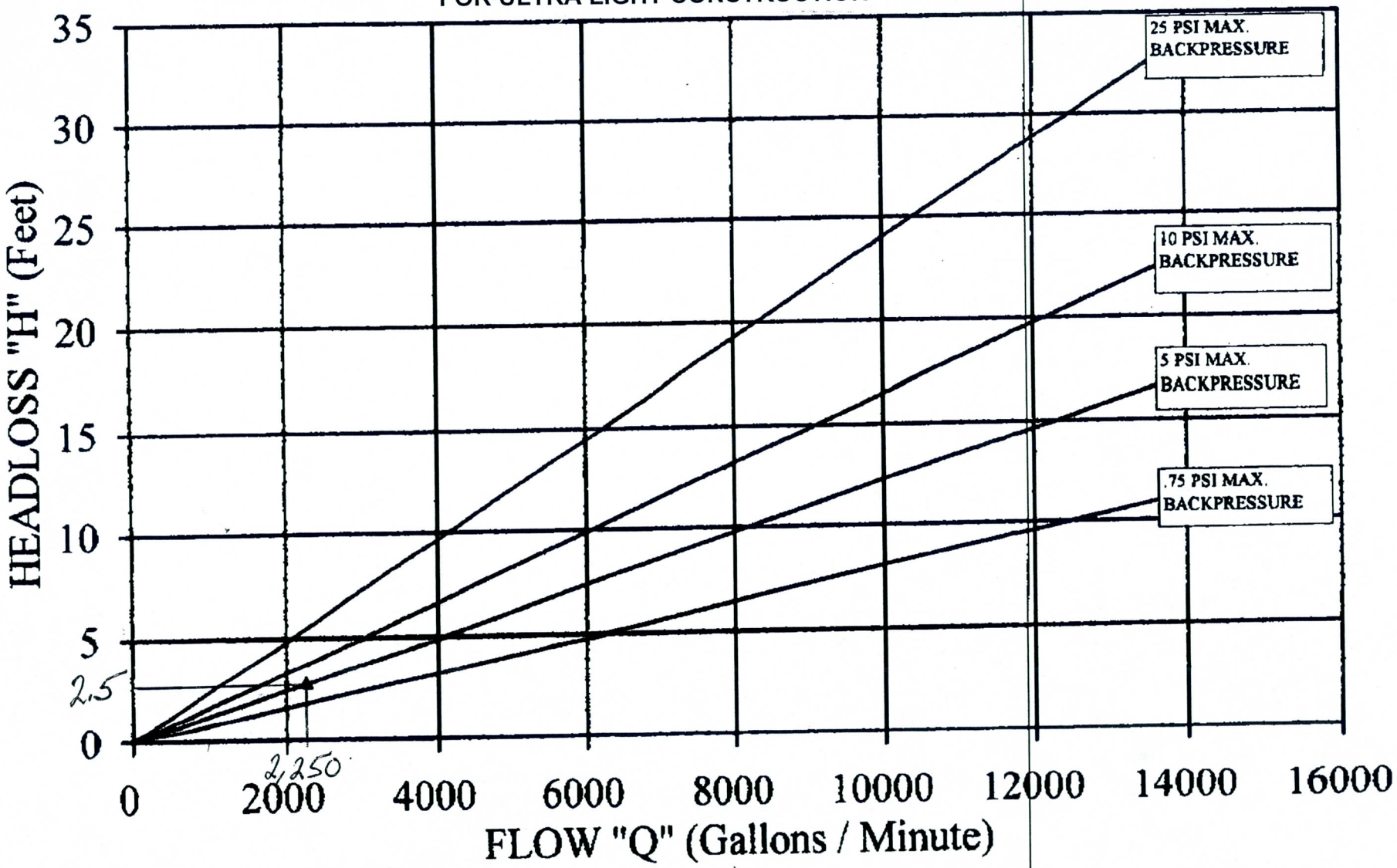

ALL [illegible]ATION PRESENTED HEREIN IS BASED ON LABORATORY TESTING AND EN[illegible]ERING CALCULATIONS AND IS REPRESENTED IN GOOD FAITH.
BEC[illegible]SE THE ACTUAL FIELD INSTALLATION MAY DEVIATE FROM LABORATORY TEST[illegible]DITIONS, SOME VARIATION FROM PUBLISHED RESULTS MAY OCCUR.

DISK No:2398

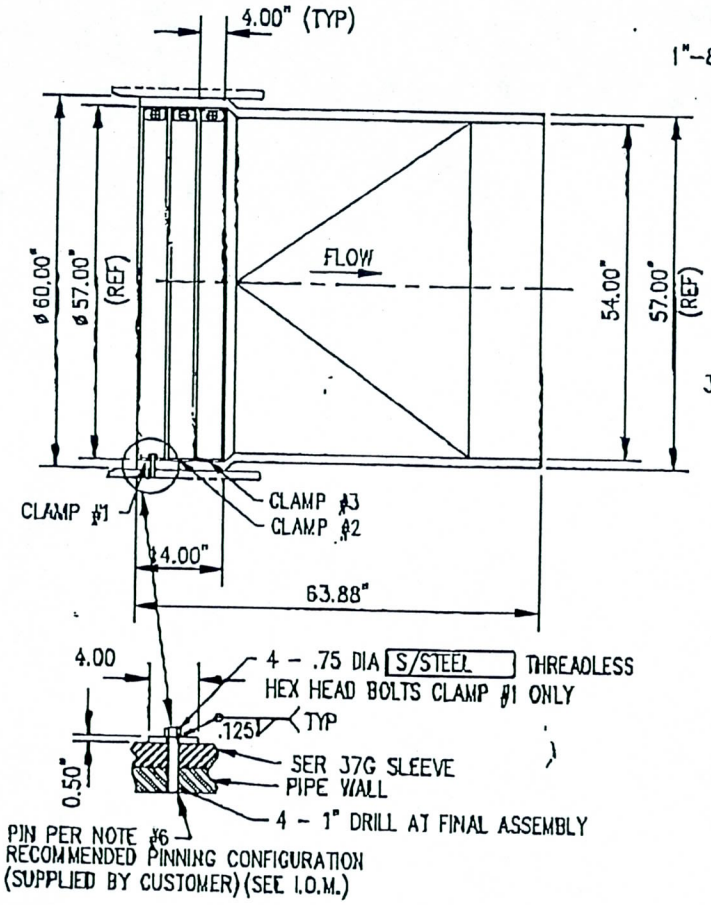

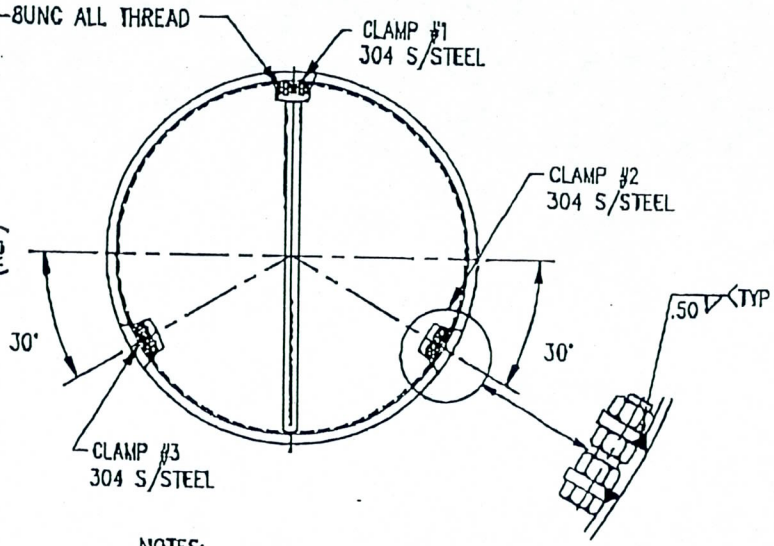

NOTES:

1. MAXIMUM BACK PRESSURE – MUST BE SUPPLIED
   LINE PRESSURE – MUST BE SUPPLIED
2. VALVE IS TO BE INSTALLED WITH THE OUTLET VERTICAL
3. PIPE INSIDE DIAMETER 60.00"
4. MATERIAL: NEOPRENE/NEOPRENE COVER
5. TO INCLUDE (3) RED VALVE STANDARD INTERNAL VALVE CLAMPS.
6. IT IS RECOMMENDED TO BOLT OR PIN TIDEFLEX TO PIPE AS SHOWN, 4 PLACES 90° APART

PRELIMINARY DRAWING
NOT FOR APPROVAL PURPOSES

SIGNED _____ DATE _____

SALES ORDER No:

PROPRIETARY NOTICE

THIS DOCUMENT CONTAINS PROPRIETARY INFORMATION OF RED VALVE COMPANY, INC. IT IS LOANED BY RED VALVE COMPANY, INC. SUBJECT TO THE CONDITIONS THAT IT AND THE INFORMATION EMBODIED THEREIN SHALL BE USED ONLY FOR RECORD AND REFERENCE PURPOSES. IT SHALL NOT BE USED OR CAUSED TO BE USED IN ANY WAY PREJUDICIAL TO THE INTERESTS OF RED VALVE CO. IT SHALL NOT BE REPRODUCED OR COPIED IN WHOLE OR PART, OR DISCLOSED TO ANYONE WITHOUT THE DIRECT WRITTEN PERMISSION OF RED VALVE COMPANY, INC., AND SHALL BE RETURNED UPON REQUEST.

RED VALVE COMPANY, INC.
CARNEGIE, PA. 15106-0548

CUSTOMER:

ORDER No:

RV PRODUCT: 60" SER 37G CHECK VALVE		
RV PART No: 37-600-APPROVAL		
DR. BY: W.K. DATE:	CHKD. BY: DATE:	
CAD SCALE: FULL	FILE NAME: RS18425	REV
PLOT SCALE: .05	DWG No: RVS-	

DISK Nº:2464

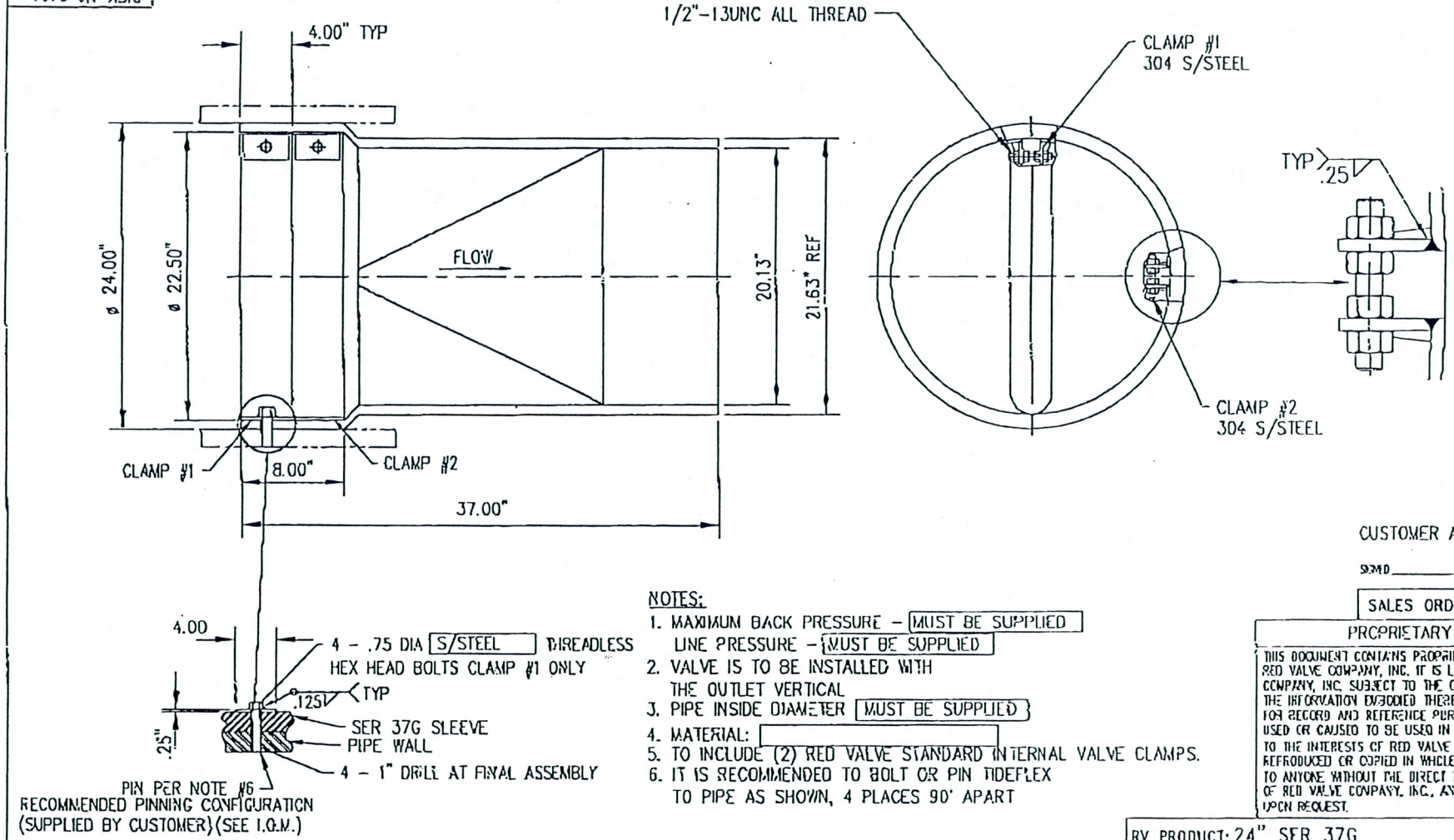

NOTES:

1. MAXIMUM BACK PRESSURE - MUST BE SUPPLIED
   LINE PRESSURE - MUST BE SUPPLIED
2. VALVE IS TO BE INSTALLED WITH THE OUTLET VERTICAL
3. PIPE INSIDE DIAMETER MUST BE SUPPLIED
4. MATERIAL:
5. TO INCLUDE (2) RED VALVE STANDARD INTERNAL VALVE CLAMPS.
6. IT IS RECOMMENDED TO BOLT OR PIN TIDEFLEX TO PIPE AS SHOWN, 4 PLACES 90° APART

CUSTOMER APPROVAL

SIGND _____ DATE _____

SALES ORDER Nº:

PROPRIETARY NOTICE

THIS DOCUMENT CONTAINS PROPRIETARY INFORMATION OF RED VALVE COMPANY, INC. IT IS LOANED BY RED VALVE COMPANY, INC. SUBJECT TO THE CONDITIONS THAT IT AND THE INFORMATION EMBODIED THEREON SHALL BE USED ONLY FOR RECORD AND REFERENCE PURPOSES. IT SHALL NOT BE USED OR CAUSED TO BE USED IN ANY WAY PREJUDICIAL TO THE INTERESTS OF RED VALVE CO. IT SHALL NOT BE REPRODUCED OR COPIED IN WHOLE OR PART, OR DISCLOSED TO ANYONE WITHOUT THE DIRECT WRITTEN PERMISSION OF RED VALVE COMPANY, INC., AND SHALL BE RETURNED UPON REQUEST.

RV PRODUCT: 24" SER 37G			
RV PART Nº: 37-240-APPROVAL			
DR. BY: W.K. DATE:	CHKD. BY: DATE:		
CAD SCALE: FULL	FILE NAME: RS19786	REV	
PLOT SCALE: .125	DWG Nº: RVS-		

RED VALVE COMPANY, INC.
CARNEGIE, PA. 15106-0548

CUSTOMER:

ORDER Nº:

STRUCTURAL CALCULATIONS

Registered Professional Engineer (Civil)
CERTIFICATE NO.
24025
NASSER ALI
SEYEDMADANI
Date Signed 3-29-09
ARIZONA U.S.A.

Parsons Brinckerhoff **Computation Sheet**

Subject OSBORN Rd. JUNCTION STRUCTURES

Page ____ of ____

Made by Ali

Date 11-99

Checked by ____

Date ____

DESIGN SPECIFICATIONS:

1, AASHTO Spec 1996 Ed.

2, ADOT Bridge Group stds. B-02-10, 1992 Ed.

For Reinforced single Barrel Box culverts

LOADS

1, soil pressure (30 PCF up to 35 PCF) ACTIVE pressure, 55PCF AT Rest

2, soil unit wt. 120 PCF

3, Concrete unit wt. 150 PCF

4, Live Load HS 20-44

stresses

1, Concrete $f'_c = 3000$ psi @ 28 days

2, steel $f_y = 24000$ psi

Design Method

1, Working stress (Service Load Design)

2, Using ADOT RCBC Design table, Modify for openning, provide Reinforcing around opening

GENERAL NOTES

1. CONSTRUCTION SHALL CONFORM TO THE M.A.G. STANDARD DETAILS AND M.A.G. SPECIFICATIONS, INCLUDING SUPPLEMENTS REFERENCED IN THE CONTRACT DOCUMENTS, UNLESS OTHERWISE NOTED. WHERE SPECIFICALLY NOTED, CONSTRUCTION TO ARIZONA DEPARTMENT OF TRANSPORTATION (ADOT) STANDARDS SHALL CONFORM TO CONSTRUCTION STANDARD DRAWINGS (C-STDS) 1995 AND ADOT BRIDGE GROUP STANDARD DRAWINGS S (B-STDS)1995.
2. FACILITIES WHICH ARE NOT SPECIFICALLY LOCATED WITH ACTUAL HORIZONTAL AND VERTICAL CONTROL ARE LOCATED APPROXIMATELY AND TO THE BEST AVAILABLE INFORMATION.
3. EXISTING UTILITIES AND OTHER FACILITIES HAVE BEEN PLACED ON THE PLANS FROM FIELD SURVEYS, EXISTING MAPS & OTHER CURRENT PLANS WITHIN THE AREA OF THIS PROJECT. THE CONTRACTOR WILL DETERMINE THE EXACT LOCATION AND/ OR ELEVATION OF EXISTING UTILITIES WHICH PERTAIN TO AND AFFECT THE CONSTRUCTION OF THIS PROJECT.
4. TWO (2) WORKING DAYS PRIOR TO EXCAVATION, THE CONTRACTOR SHALL CALL FOR BLUE STAKES: PHONE NO. 263-1100, BLUE STAKE CENTER.
5. CATCH BASIN CONNECTOR PIPES SHALL BE LAID ON A STRAIGHT ALIGNMENT AND SLOPE UNLESS OTHERWISE SPECIFIED. IF BREAKS IN ALIGNMENT OR SLOPE ARE NECESSARY TO MEET FIELD CONDITIONS, THE MAXIMUM DEFLECTION SHALL BE TWENTY-TWO AND A HALF (22.5) DEGREES. CONTRACTOR SHALL PROVIDE A PIPE SUPPORT AT EACH CATCH BASIN WITH A CONCRETE PIPE COLLAR PER M.A.G. DET. 505 COST OF COLLAR SHALL BE INCIDENTAL TO THE COST OF THE CATCH BASIN. RECOMMEND CONTRACTOR SET OD OF PIPE AT FLOOR CATCH BASIN AND GROUT TO INVERT.
6. DIMENSIONS LOCATING CATCH BASIN ARE FROM CONSTRUCTION CENTERLINE TO CENTERLINE OF CATCH BASIN AT BACK OF CURB UNLESS OTHERWISE SPECIFIED.
7. NOTIFY EITHER THE CITY OF PHOENIX OR THE CITY OF SCOTTSDALE WATER SERVICES DEPARTMENT, WHICHEVER APPLIES, AT LEAST 72 HOURS IN ADVANCE OF ANY WATER LINE WORK REQUIRING SHUTDOWNS OR TAPPING OF WATER LINES. NOTIFY THE CITY OF PHOENIX WATER SERVICES (262-6251) FOR WATER LINES ALONG THOMAS ROAD. NOTIFY THE CITY OF SCOTTSDALE WATER SERVICES (480) 312-5650 FOR OTHER WATER LINES.
8. EXISTING IRRIGATION BERMS DISTRUBED BY NEW CONSTRUCTION SHALL BE REPLACED TO ORIGINAL GRADE AND ELEVATION UNLESS OTHERWISE SHOWN ON THE PLANS.
9. ALL EXISTING ROADWAY PAVEMENT DISTRUBED DURING CONSTRUCTION SHALL BE REPLACED IN KIND OR WITH 5: AC, WHICHEVER IS GREATER, TO THE ORIGINAL GRADE AND ELEVATION UNLESS OTHERWISE SHOWN ON THE PLANS. PAVEMENT REPLACEMENT SHALL BE A MINIMUM OF 5" OF AC (2-2 $^{5}/_{64}$ " LIFTS OF 19MM OVER 8" ABC, IN ACCORDANCE WITH M.A.G. SPECIFICATION 336.2.2. THE STREET SHALL BE SEAL COATED AFTER INSTALLATION OF PERMANENT PAVEMENT REPLACEMENT. THE SLURRY SEAL COAT SHALL BE DONE IN ACCORDANCE WITH M.A.G. SPECIFICATION 332 WITH A TYPE II AGGREGATE MIX (M.A.G. SECTION 715). THE COST OF THE SLURRY SEAL COAT SHALL BE INCLUDED IN THE UNIT BID PRICE FOR PAVEMENT REPLACEMENT.
10. SANITARY SEWER MAINS AND TAPS CROSSING OVER NEW STROM DRAIN OR CATCH BASIN CONNECTOR PIPE SHALL BE SUPPORTED PER M.A.G. STD. DET. 403-1 OR 403-2. SANITARY SEWER MAINS AND TAPS CROSSING UNDER NEW STORM DRAIN OR CATTCH BASIN CONNECTOR PIPE AS NOTED IN THE PLANS SHALL BE SUPPORTED PER M.A.G. STD. DET. 403-1 OR 403-2. OTHER UTILITIES SHALL BE SUPPORTED PER M.A.G. STD. DET. 403-1, 403-2 OR 403-3 AS NOTED ON THE PLANS OR AS REQUIRED BY THE ENGINEER.
11. REINFORCED CONCRETE PIPE SHALL BE BEDDED IN ACCORDANCE WITH THE TRENCH DETAILS SHOWN ON THESE PLANS, OR M.A.G. SPECIFICATIONS, WHICHEVER APPLIES.
12. STATIONS AND LINEAR FEET OF PIPE SHOWN ON PROFILE ARE ALONG THE CONSTRUCTION CENTERLINE.
13. VERTICAL CONTROL IS BASED ON CITY OF SCOTTSDALE DATUM (NGVD 1929)
14. THE CONTRACTOR SHALL EXERCISE EXTREME CAUTION WHEN EXCAVATION IN THE VICINITY OF OVERHEAD POWER LINES.
15. ALL TRAFFIC SIGNAL FACILITIES DAMAGED DURING CONSTRCUTION SHALL BE REPLACED TO THE CITY OF SCOTTSDALE STANDARDS.
16. ALL MANHOLE RIMS ARE TO MATCH NEW OR EXISTING PAVEMENT.
17. ALL TRAFFIC AND PRIVATE SIGNS ARE TO BE PROTECTED IN PLACE IF POSSIBLE. ANY SIGNS REMOVED FOR CONSTRUCTION ARE TO BE REINSTALLED PER ORIGINAL LAYOUT AND INSTALLATION.
18. ALL UTILITIES WHICH ARE NOT TO BE RELOCATED SHALL BE PROTECTED IN PLACE.
19. ALL EXISTING DRIVEWAYS AND ALLEYS SHALL BE GRADED TO MATCH THE NEW WORK IN ACCORDANCE WITH C.O.P. STD. DET. P-1164 UNLESS OTHERWISE SPECIFIED. EXISTING SURFACIING SHALL BE REMOVED AND REPLACED, IN KIND, AS NECESSARY.
20. EXISTING SWALES ON THE SOUTH SIDE OF NON-CURB AND GUTTER AREAS OF EARLL DRIVE DISTURBED BY NEW CONSTRUCTION SHALL BE REPLACED TO ORIGINAL GRADE AND ELEVATION UNLESS OTHERWISE SHOWN ON THE PLANS.
21. ALL NEW WATERLINES SHALL BE M.J.D.I.P. WITH RESTRAINED JOINTS IN ACCORDANCE WITH M.A.G. STD. DET. 302, OR APPROVED EQUAL.
22. UNLESS OTHERWISE SHOWN ON THE PLANS, ALL TRENCHES WITHIN THE STREET SHALL BE BACKFILLED IN ACCORDANCE WITH C.O.S. DET. 2200, "T-TOP" PAVEMENT REPLACEMENT.
23. STREET WIDTHS SHOWN ON PLANS ARE TO BACK OF CURB.
24. POTHOLE ELEVATIONS SHOWN ARE TO THE TOP OF UTILITY.

JUNCTION STRUCTURE NOTES:

DESIGN SPECIFICATIONS:

AMERICAN ASSOCIATION OF STATE HIGHWAY AND TRANSPORTATION OFFICIALS STANDARD SPECIFICATIONS FOR HIGHWAY BRIDGES, 16TH EDITION DATED 1996, AS AMENDED BY THE 1997 AND 1998 INTERIM REVISIONS.

CONSTRUCTION SPECIFICATIONS

MARICOPA ASSOCIATION OF GOVERNMENTS (MAG) UNIFORM STANDARD SPECIFICATIONS FOR PUBLIC WORKS CONSTRUCTION, 1992, WITH REVISIONS THROUGH 1996.

DESIGN LOADINGS

VERTICAL EARTH PRESSURE: 120 PCF (ASSUMED)
ACTIVE EARTH PRESSURE: 30 PCF (ASSUMED)

CONCRETE AND REINFORCEMENT STRESSES

F' C = 3,000 PSI AT 28 DAYS, CAST-IN-PLACE CONCRETE
FS = 24,000 PSI - REINFORCING STEEL

ALL CONCRETE SHALL BE MAG CLASS AA.

REINFORCING STEEL SHALL CONFORM TO ASTM A615, GRADE 60.

ALL PLACEMENT DIMENSIONS FOR REINFORCING STEEL SHALL BE TO CENTER OF BARS. ALL BEND DIMENSIONS FOR REINF. STEEL SHALL BE OUT TO OUT. ALL BAR BENDS TO CONFORM TO AASHTO 8.23 CONTRACTOR TO SUBMIT REINFORCING STEEL SHOP DRAWINGS TO THE ENGINEER FOR REVIEW AND APPROVAL PRIOR TO PROCEEDING WITH THE WORK.

CONCRETE CLEAR COVER SHALL BE AS FOLLOWS UNLESS NOTED OTHERWISE:

TOP SLAB:	TOP BARS	2 INCHES
	BOTTOM BARS	1 INCH
BOTTOM SLAB:	TOP BARS	2 INCHES
	BOTTOM BARS	3 INCHES
WALLS:	OUTSIDE BARS	2 INCHES
	INSIDE BARS	1 $^{55}/_{64}$ INCHES

CAST IN PLACE CONCRETE BOX SECTIONS

DIMENSIONS SHOWN ON THE PLANS FOR CAST IN PLACE BOX CULVERT SECTIONS ARE BASED ON ADOT STD NO. B-02.10

PRECAST CONCRETE BOX SECTIONS

DIMENSIONS SHOWN ON THE PLANS FOR PRECAST CONCRETE BOX CULVERT SECTIONS ARE BASED ON ASTM C789 AND ASSUMED CONSTRUCTION TOLERANCES. CONTRACTOR TO VERIFY ALL OUT-TO-OUT DIMENSIONS SHOWN AT TRANSITION BETWEEN CAST-IN-PLACE AND PRECAST UNITS.

STRUCTURE BACKFILL

STRUCTURE BACKFILL SHALL BE FREE-DRAINING MATERIAL MEETING THE REQUIREMENTS FOR TYPE A SELECT MATERIAL GIVEN IN TABLE 702 OF THE CONTRUCTION SPECIFICATIONS. BACKFILL SHALL BE COMPACTED IN ACCORDANCE WITH TABLE 601-2, TYPE III. WATER CONSOLIDATION IS NOT RMITTED.

CONSTRUCTION JOINTS

SANDBLAST ALL CONSTRUCTION JOINTS AND ROUGHEN TO $^{57}/_{64}$ " MIN AMPLITUDE PRIOR TO CONCRETE PLACMENT.

COORDINATION

CONTRACTOR SHALL COORDINATE ALL EXISTING CONDITIONS DURING CONSTRUCTION OF PROJECT. CONFLICTS WITH ELEMENTS OF THE CONTRACT DOCUMENTS SHALL BE REPORTED TO THE ENGINEER AND RESOLVED PRIOR TO PROCEEDING WITH THE WORK.

DIMENSIONS

DIMENSIONS SHALL NOT BE SCALED FROM THE DRAWINGS.

NO.	REVISION	BY	DATE
3			
2			
1			

FLOOD CONTROL DISTRICT OF MARICOPA COUNTY
ENGINEERING DIVISION

OSBORN ROAD STORM DRAIN
THOMAS RD & 61ST PL TO INDIAN BEND WASH
PROJECT CONTROL NO. 027-04 30

PRELIMINARY NOT FOR CONSTRUCTION		BY	DATE
	DESIGNED	A. HUMPHREY	11/07/99
	DRAWN	CPG	11/07/99
	CHECKED	C. D'ARCANGELIS	11/07/99

PARSONS BRINCKERHOFF

DRAWING NO.	GENERAL NOTES	SHEET OF
		2 110

H:\Osborn\dwg\gindex01.dgn
Mon Nov 8 16:49:05 1999

10/19/99

Osborn Road Storm Drain Structures

Structure Location	Approximate Ground Elevation
69+20	1260
101+96.77	1253
115+32	1244
121+60	1242
122+80	1242
135+25	1237
135+35	1236
141+51	1234
141+70	1234
147+85	1231

MADE BY: Ali

Gr = 1243.5

F.H.W.A. REGION	STATE	PROJECT NO.	SHEET NO.	TOTAL SHEETS	RECORD DRAWING
9	AZ.	98-30			

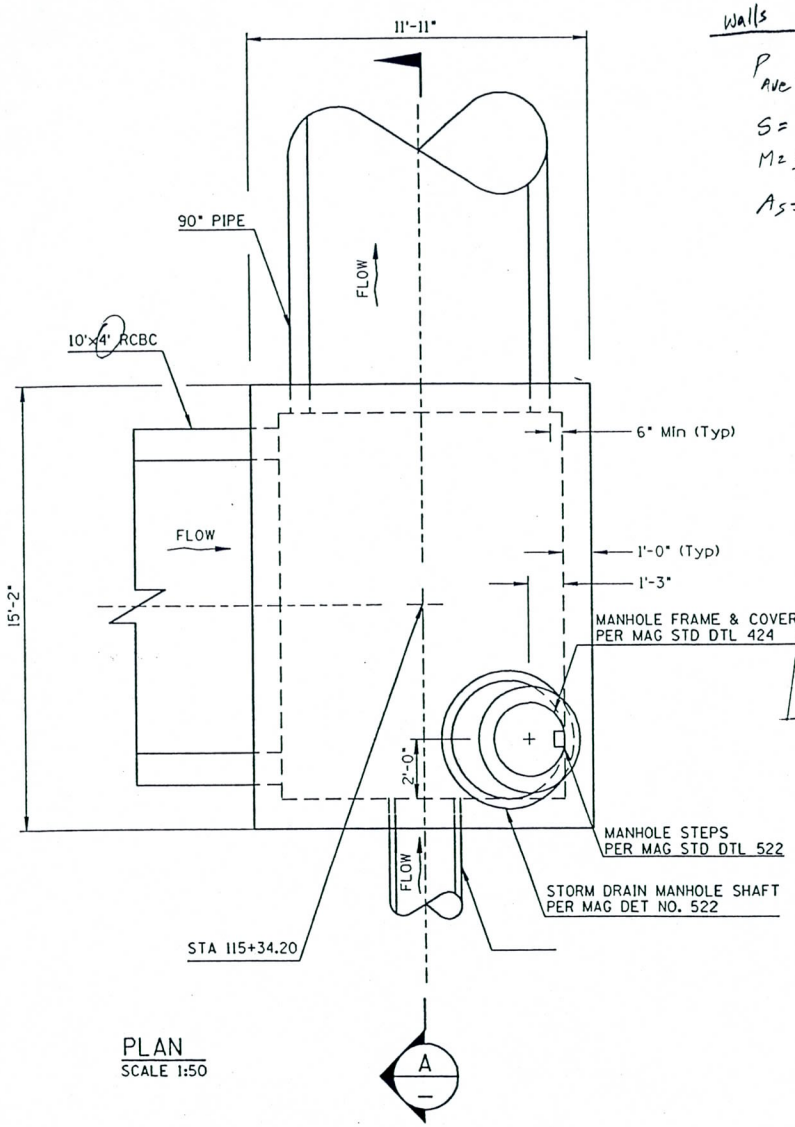

PLAN
SCALE 1:50

Walls

$P_{AVE} = \frac{0.5 \times 1.1}{2} = 0.8$ k/ft

$S = 9'$

$M = \frac{WL^2}{10} = 8.1$ k-'/' $d = 10.5"$

$A_s = 0.44$ in²/ft #6@12"

H soil = 9.2'

Top of Box

Wt. = 9.2 x 0.12 = 1.1 k/'

Span = 9'

$M = \frac{WL^2}{10} = 8.9$ k-'/' $d = 10.5"$

$A_s = \frac{8.9 \times 12}{24 \times .88 \times 10.5} = 0.48$ in²/ft #6@11"

Span 13' M = 18.6 k-'/' d = 10.5"

$A_s = 1$ in²/ft #6@5½"

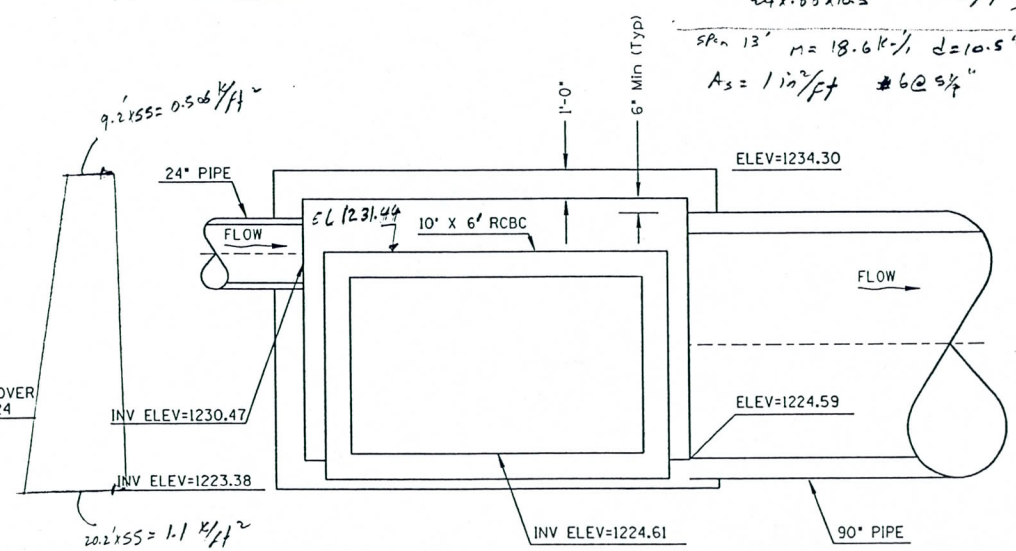

Header on Top of 10'x6 RCBC

Load = 1.1 k/ft² x 6' = 6.6 k/ft

$M = \frac{WL^2}{10} = \frac{6.6(13.2')^2}{10} = 115$ k-'

$d = (1231.44 - 1234.30) - 2" = 32"$

$A_s = \frac{115 \times 12}{.88 \times 24 \times 32} = 2$ in² USE 3-#8

$V = \frac{6.6 \times 13.2}{2} = 43.5$ k

$V_c = 0.95\sqrt{F_c'}\,bd = .95\sqrt{3000} \times 12 \times 32 = 20$ k

$A_v = \frac{43.5 - 20}{24 \times 32"} \times 12 = 0.36$ in²/ft

2-#5@18"

SECTION A
SCALE 1:50

JUNCTION STRUCTURE
STA 115+34.20

NO.	REVISION	BY	DATE

FLOOD CONTROL DISTRICT
OF MARICOPA COUNTY

OSBORN ROAD
PROJECT NO. 98-30

		BY	DATE
PRELIMINARY NOT FOR CONSTRUCTION	DESIGNED	CAD	10/7/99
	DRAWN	JPJ	10/7/99
	CHECKED		

PARSONS BRINCKERHOFF

JUNCTION STRUCTURE
STA 115+34.20

SHEET OF

TRACS NO.

h:\osborn\details\jb_det3.dgn
Tue Oct 19 15:31:59 1999

PARSONS BRINCKERHOFF COMPUTATION SHEET

Subject: JUCTION STR. STA 115+34.20

Page 1 of 2
Made by: Ali
Date: 11-99
Checked by:
Date:

Height of soil on top of Box 9.2'

TOP OF BOX Design

Wt. = 9.2 x 0.12 = 1.1 k/ft²

Short span of Box top is 9'

$$M_{soil} = \frac{wL^2}{10} = \frac{1.1 \times 9^2}{10} = 8.9 \text{ k-'/'}$$

$$d = 12'' - 1.5'' = 10.5''$$

$$A_s = \frac{8.9 \times 12}{24 \times 0.88 \times 10.5} = 0.48 \text{ in}^2/\text{ft} \quad \#6 @ 11''$$

Long span Direction is 13'

$M = 18.6$ k-'/' → $A_s = 1$ in²/ft Conservative

Wall: Design Assume AT REST Pressure of 55 PCF

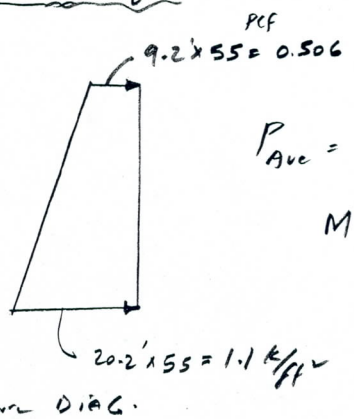

Pressure DIAG.

$$P_{Ave} = \frac{0.506 + 1.1}{2} = 0.8 \text{ k/ft}^2 \quad S = 9'$$

$$M = \frac{wL^2}{10} = 8.1 \text{ k-'/'} \quad d = 10.5''$$

$$A_s = \frac{8.1 \times 12}{24 \times .88 \times 10.5} = 0.44 \text{ in}^2 \quad \#6 @ 12''$$

PARSONS BRINCKERHOFF COMPUTATION SHEET

Page 2 of 2

Made by A.I.

Date 11-99

Checked by

Date

Subject JUNCTION STR STA 115+34.20 Cont'd.

CHECK Header on Top of 10x6 CBC

Load From Top slab = $1.1\ k/ft^2 \times 6' = 6.6\ k/ft$

$M = \frac{wL^2}{10} = \frac{6.6 \times 13.2'^2}{10} = 115\ k\text{-}'$ $\qquad V = \frac{6.6 \times 13.2}{2} = 43.5^k$

$d = (EL\ 1231.44 - 1234.3) - 2'' = 32''$

$A_s = \frac{115 \times 12}{.88 \times 24 \times 32} = 2\ in^2$ USE 3-#8

$V_c = 0.95\sqrt{f'c}\ bd = 0.95\frac{\sqrt{3000}}{1000} \times 12 \times 32 = 20^k$

$A_v = \frac{43.5 - 20}{24 \times 32} \times 12 = 0.36\ in^2/ft$ USE 2-#5 @18"

MADE BY : AW 11/99

F.H.W.A. REGION	STATE	PROJECT NO.	SHEET NO.	TOTAL SHEETS	RECORD DRAWING
9	AZ.	98-30			

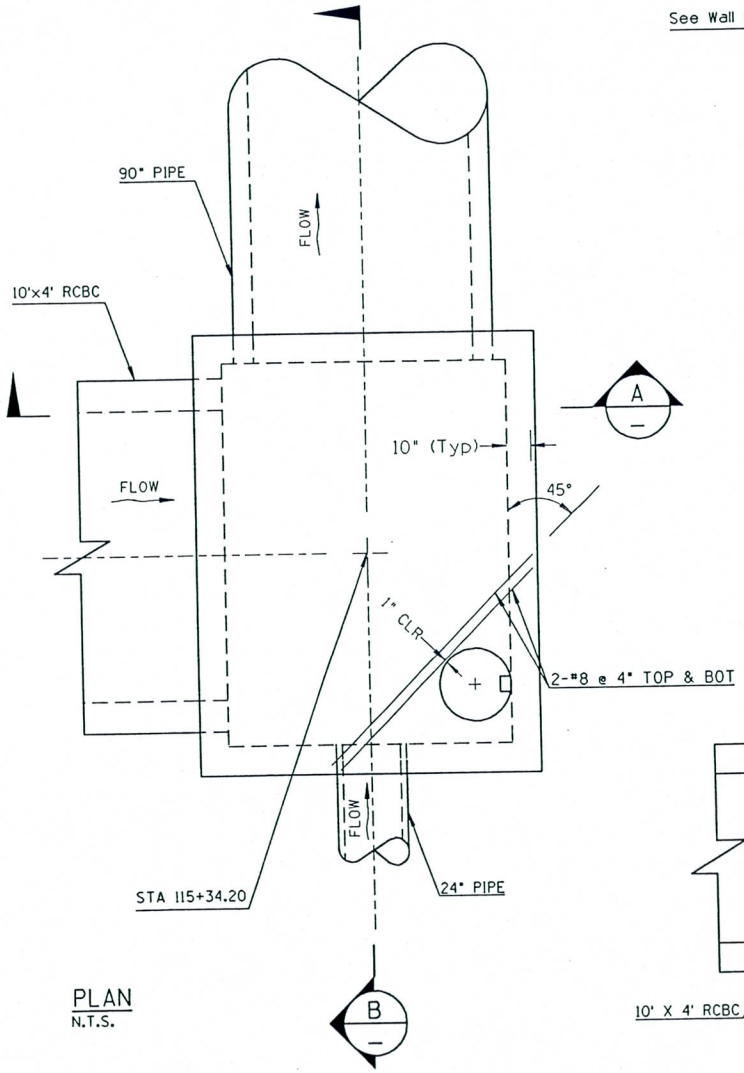

PLAN
N.T.S.

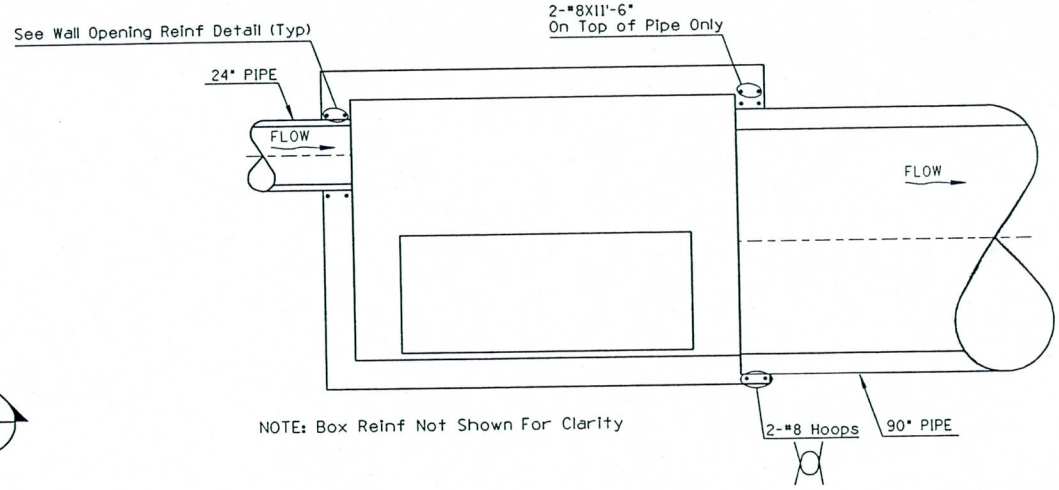

SECTION B
N.T.S.

JUNCTION STRUCTURE
STA 115+34.20

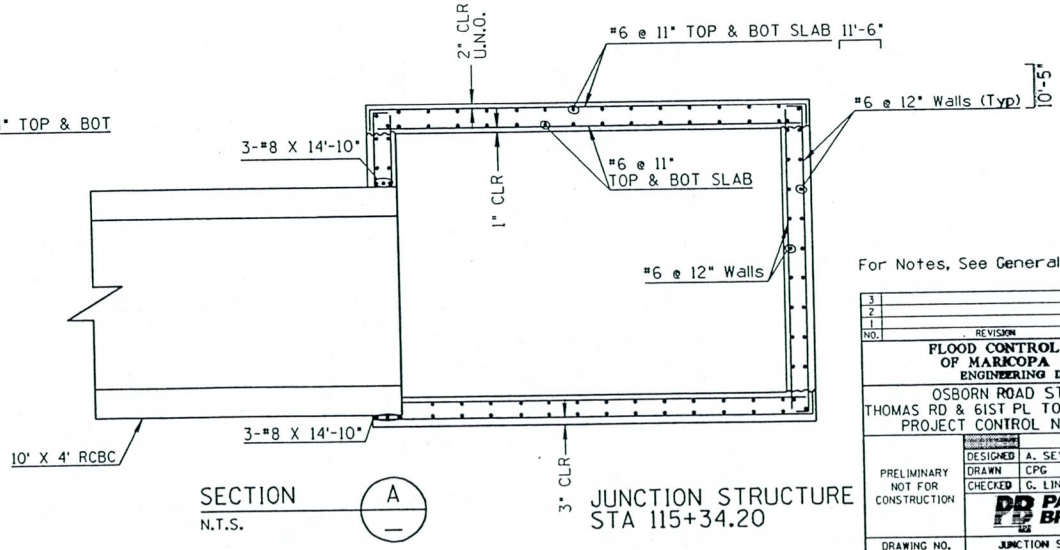

SECTION A
N.T.S.

JUNCTION STRUCTURE
STA 115+34.20

For Notes, See General Note Drawing

NO.	REVISION	BY	DATE
3			
2			
1			

FLOOD CONTROL DISTRICT
OF MARICOPA COUNTY
ENGINEERING DIVISION

OSBORN ROAD STORM DRAIN
THOMAS RD & 61ST PL TO INDIAN BEND WASH
PROJECT CONTROL NO. 027-04 30

PRELIMINARY
NOT FOR
CONSTRUCTION

	BY	DATE
DESIGNED	A. SEYEDMADANI	11/07/99
DRAWN	CPG	11/07/99
CHECKED	G. LINGOR	11/07/99

PARSONS BRINCKERHOFF

DRAWING NO.	JUNCTION STRUCTURE STA 115 + 34.20	SHEET OF 68 110

h:\osborn\drng\details\ref_det03.dgn

MADE BY: Ali 11-99

F.H.W.A. REGION	STATE	PROJECT NO.	SHEET NO.	TOTAL SHEETS	RECORD DRAWING
9	AZ.	98-30			

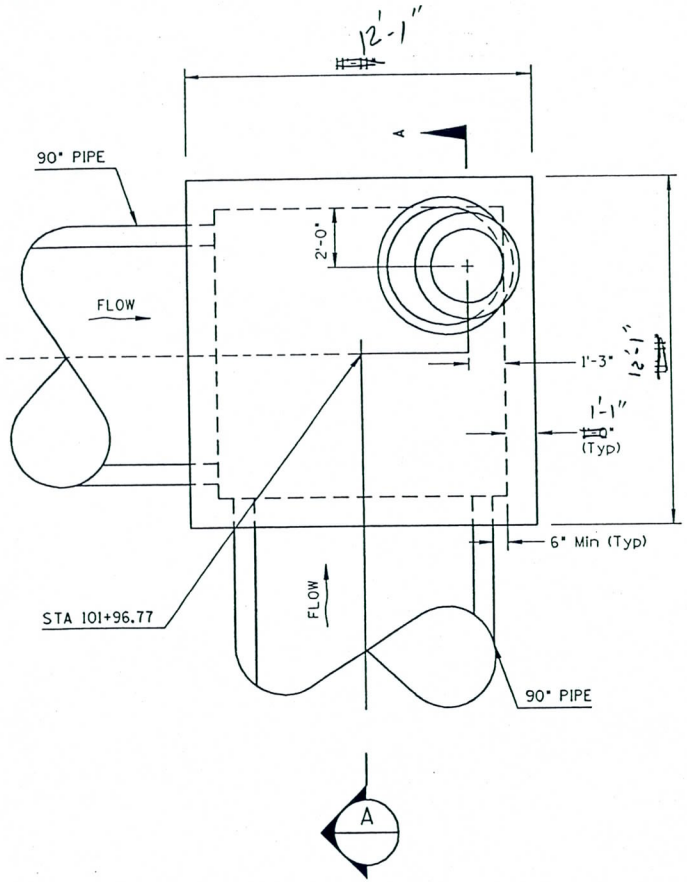

PLAN
SCALE 1:50

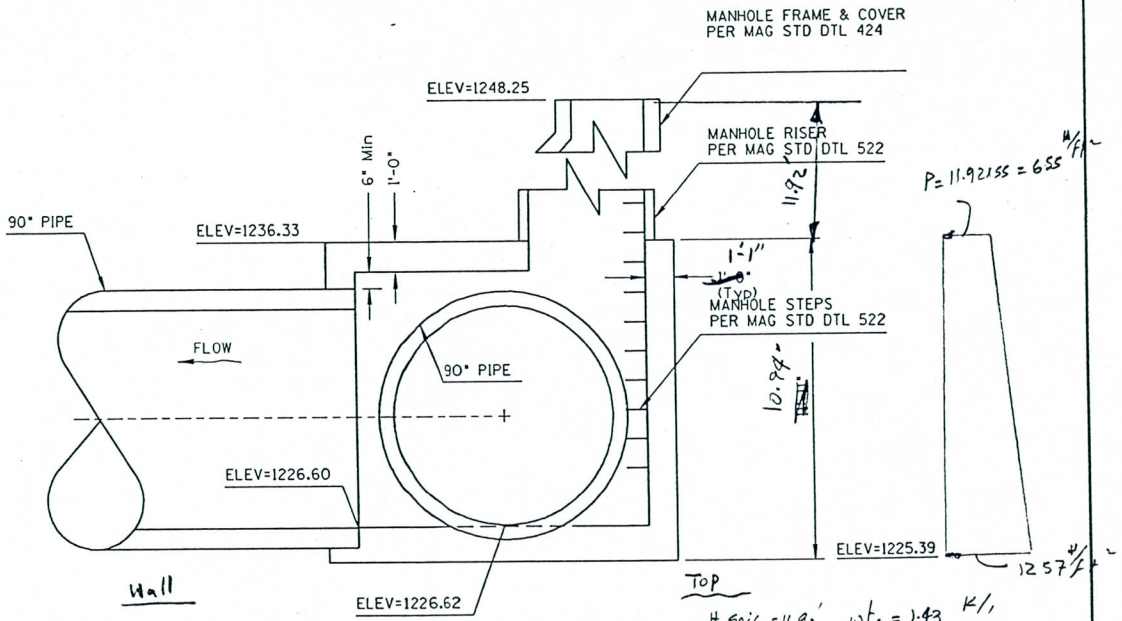

Wall

$P_{AVE} = \frac{655+1257}{2} = 0.96$ K/ft²

$S = 9'$

$M = \frac{WL^2}{10} = 7.8$ K-'/,

$A_s = \frac{7.8 \times 12}{.88 \times 24 \times 10.5} = 0.43$ in²/ft USE #6@12"

SECTION A
SCALE 1:50

Top

H soil = 11.92' wt. = 1.43 K/,

span 12'-2' = 10'

$M = \frac{WL^2}{10} = 14.3$ K-'/, d = 12" - 1.5" = 10.5"

$A_s = \frac{14.3 \times 12}{.88 \times 24 \times 10.5"} = 0.77$ in²/ft USE #6 @ 7"

NO.	REVISION	BY	DATE

FLOOD CONTROL DISTRICT
OF MARICOPA COUNTY

OSBORN ROAD
PROJECT NO. 98-30

		BY	DATE
PRELIMINARY NOT FOR CONSTRUCTION	DESIGNED	CAD	10/7/99
	DRAWN	JPJ	10/7/99
	CHECKED		

PARSONS BRINCKERHOFF

JUNCTION STRUCTURE
STA 101+96.77

SHEET OF

TRACS NO.

h:\osborn\details\jb_det4.dgn

PARSONS BRINCKERHOFF COMPUTATION SHEET

Subject: JUNCTION STR. STA 101+96.77

Page ____ of ____

Made by: Ali

Date: 11-99

Checked by: ____

Date: ____

Height of soil on Top of Box is 11.92'

Top of Box Design

wt. soil $= 11.92 \times 0.12\ k/ft^3 = 1.43\ k/ft^2$

Span length $= 12' - 2' = 10'$

$M = \frac{wL^2}{10} = \frac{1.43 \times 10^2}{10} = 14.3\ k'$, $d = 12 - 1.5 = 10.5''$

$A_s = \frac{14.3 \times 12}{.88 \times 24 \times 10.5''} = 0.77\ in^2/ft^2$ USE #6@6" $= 0.88\ in^2/ft$

Wall Design

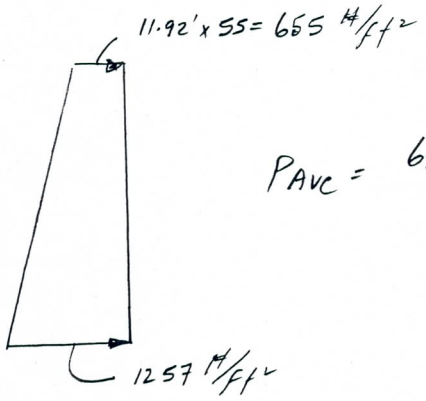

$P_{AVG} = \frac{655 + 1257}{2} = 0.96\ k/ft^2$

Span = 9'

$M = \frac{wL^2}{10} = \frac{0.96 \times 9^2}{10} = 7.8\ k'$

$A_s = \frac{7.8 \times 12}{.88 \times 24 \times 10.5} = 0.43\ in^2/ft$ USE #6@12"

MADE BY: Ali 11-99

F.H.W.A. REGION	STATE	PROJECT NO.	SHEET NO.	TOTAL SHEETS	RECORD DRAWING
9	AZ.	98-30			

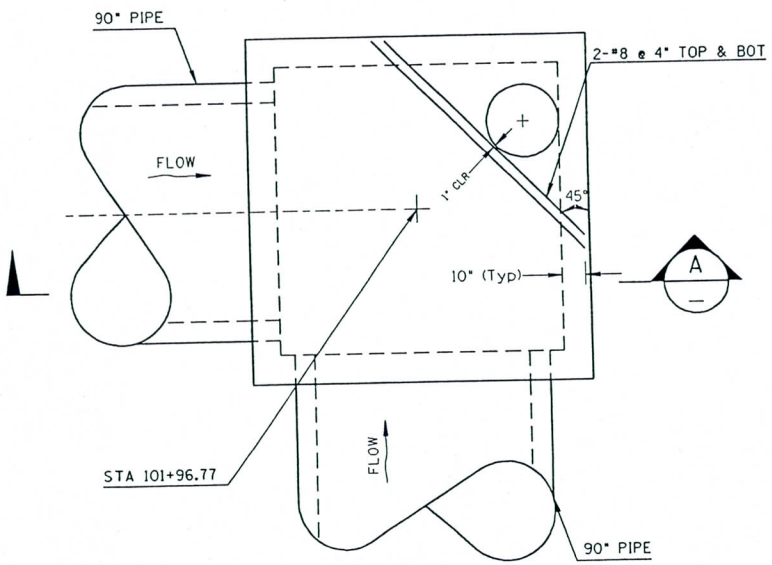

PLAN
N.T.S.

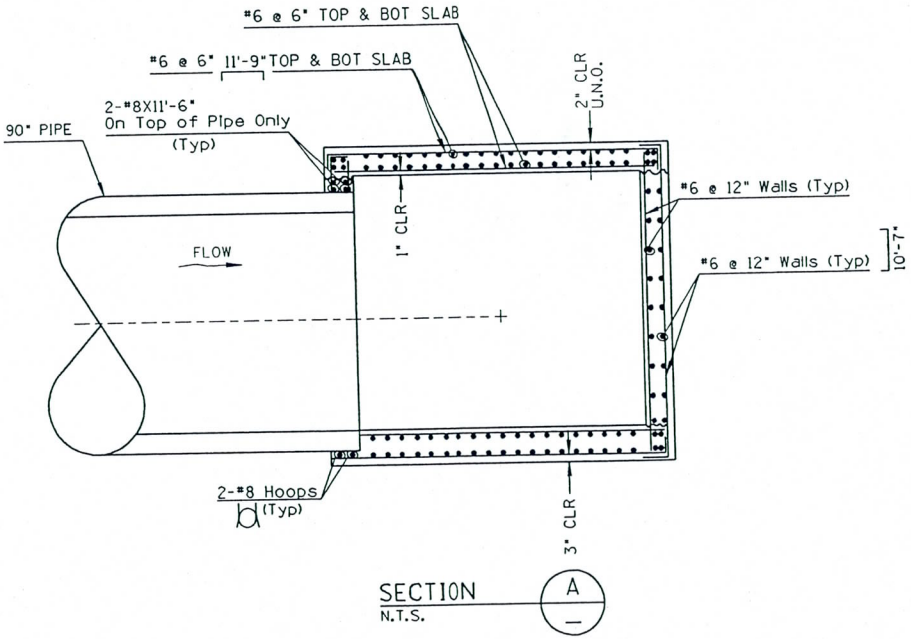

SECTION A
N.T.S.

For Notes, See General Note Drawing

NO.	REVISION	BY	DATE
3			
2			
1			

FLOOD CONTROL DISTRICT
OF MARICOPA COUNTY
ENGINEERING DIVISION

OSBORN ROAD STORM DRAIN
THOMAS RD & 61ST PL TO INDIAN BEND WASH
PROJECT CONTROL NO. 027-04 30

		BY	DATE
PRELIMINARY NOT FOR CONSTRUCTION	DESIGNED	A. SEYEDMADANI	11/07/99
	DRAWN	CPG	11/07/99
	CHECKED	G. LINGOR	11/07/99

PARSONS BRINCKERHOFF

DRAWING NO. | JUNCTION STRUCTURE STA 101 + 96.77 | SHEET 65 OF 110

ht\osborn\drng\details\ref_det02.dgn

MADE BY: Ali 11-99

F.H.W.A. REGION	STATE	PROJECT NO.	SHEET NO.	TOTAL SHEETS	RECORD DRAWING
9	AZ.	98-30			

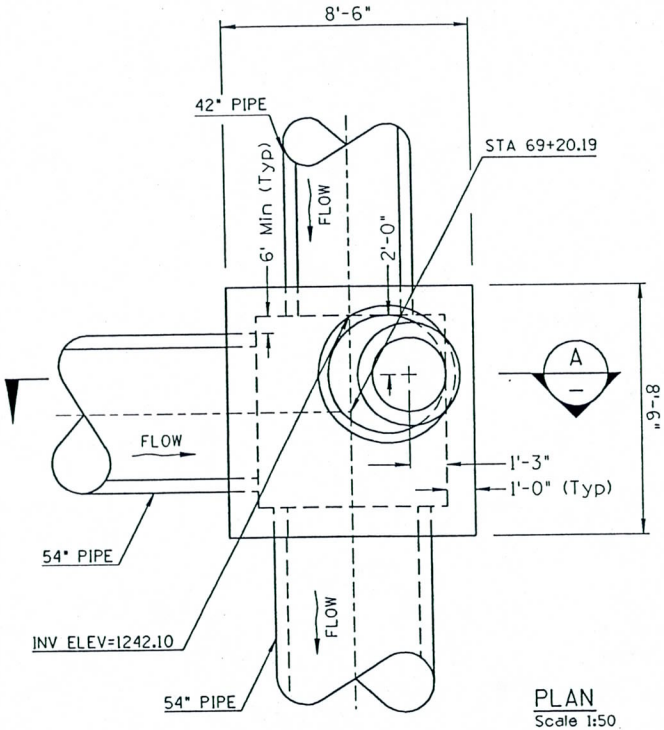

PLAN
Scale 1:50

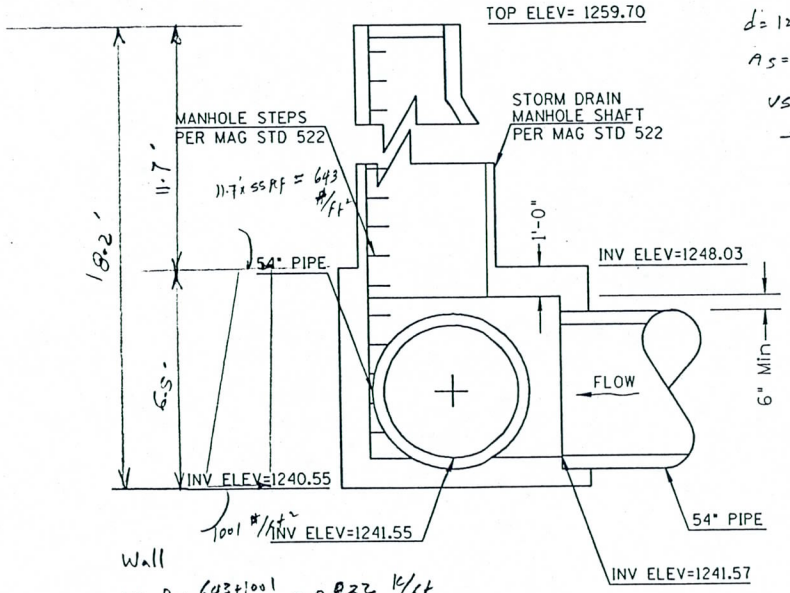

SECTION A
Scale 1:50

JUNCTION STRUCTURE
STA 69+20.19

soil

$H = 11.7'$
TOP & BOT
$wt. = 11.7 \times 120\ pcf = 1.4\ k/ft$

$span = 8'-6'' - 2' = 6.5'$

$M = \frac{wL^2}{10} = 5.9\ k\text{-}'/'$

$d = 12'' - 3'' = 9''$

$A_s = \frac{5.9 \times 12}{24 \times 0.88 \times 9''} = 0.38\ in^2/ft$

USE #6 @ 12" BOTH Direction
Top & BOT

Wall

$Ave\ P = \frac{643 + 1001}{2} = 0.822\ k/ft$

$M = \frac{wL^2}{10} = \frac{0.822 \times 4.5^2}{10} = 1.66\ k\text{-}'/'$

$A_s = \frac{1.66 \times 12}{24 \times 0.88 \times 9} \times 1.33 = 0.14\ in^2/ft$ USE #5 @ 12" BOTH FACE BOTH Direct.

TOTAL wall Reinf $= 0.14 \times (8.5' \cdot 2') = 0.9\ in^2 = 3\#5$

NO.	REVISION	BY	DATE
1			
2			
3			
4			

FLOOD CONTROL DISTRICT
OF MARICOPA COUNTY

OSBORN ROAD
PROJECT NO. 98-30

		BY	DATE
PRELIMINARY NOT FOR CONSTRUCTION	DESIGNED	CAD	10/7/99
	DRAWN	JPJ	10/7/99
	CHECKED		

PARSONS BRINCKERHOFF

JUNCTION STRUCTURE
STA 69+20.19

SHEET OF

TRACS NO.

PARSONS BRINCKERHOFF COMPUTATION SHEET

Page _____ of _____

Made by AL

Date 11-99

Checked by _____

Date _____

Subject Junction STR at STA 69+20.19

Height of soil on Top of Box = 11.7'

Top slab Design

Wt. of soil = 11.7' x 0.12 = 1.4 k/ft

span = (8'-6") - 2' = 6.5'

$M = \frac{wL^2}{10} = 5.9$ k-'/' $\quad d = 12" - 3" = 9"$

$A_s = \frac{5.9 \times 12}{.88 \times 24 \times 9"} = 0.38$ in²/ft $\quad$ USE #6@12" = 0.44 in²/ft

Wall Design

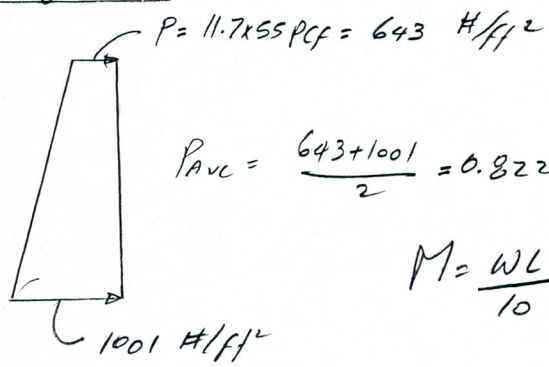

$P_{AVG} = \frac{643 + 1001}{2} = 0.822$ k/ft

$M = \frac{wL^2}{10} = \frac{0.822 \times 4.5^2}{10} = 1.66$ k-'/'

Pressure DIAG.

$A_s = \frac{1.66 \times 12}{.88 \times 24 \times 9"} \times 1.33 = 0.14$ in²/ft

TOTAL Reinf Req. = 0.14 x (8.5'-2') = 0.9 in² = 3-#5

MADE BY: Ali 11-99

F.H.W.A. REGION	STATE	PROJECT NO.	SHEET NO.	TOTAL SHEETS	RECORD DRAWING
9	AZ.	98-30			

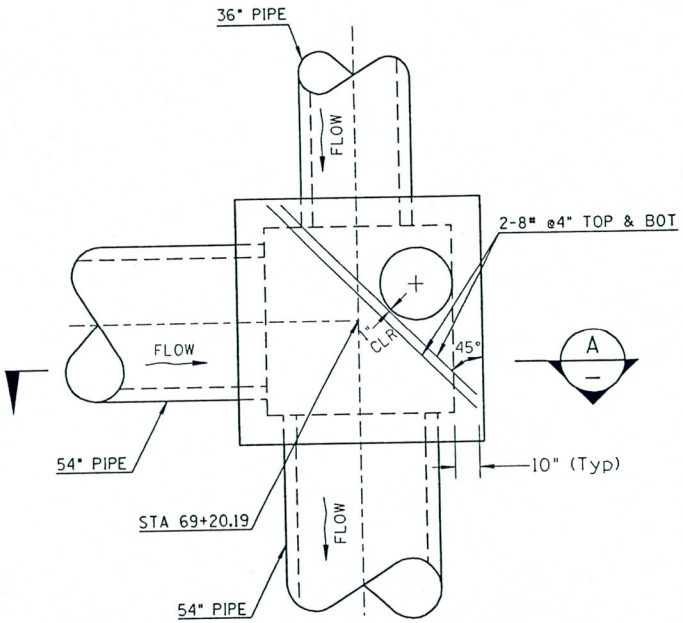

PLAN
N.T.S.

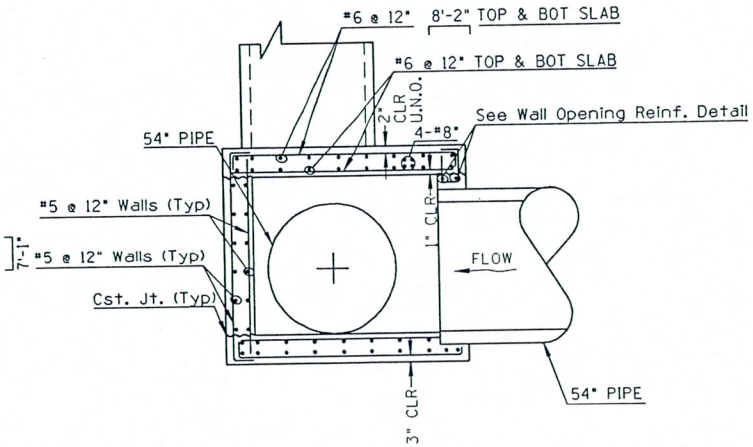

SECTION A
N.T.S.

JUNCTION STRUCTURE
STA 69+20.19

For Notes, See General Note Drawing.

NO.	REVISION	BY	DATE
3			
2			
1			

FLOOD CONTROL DISTRICT
OF MARICOPA COUNTY
ENGINEERING DIVISION

OSBORN ROAD STORM DRAIN
THOMAS RD & 61ST PL TO INDIAN BEND WASH
PROJECT CONTROL NO. 027-04 30

		BY	DATE
PRELIMINARY NOT FOR CONSTRUCTION	DESIGNED	R. SEYEDMADANI	11/07/99
	DRAWN	JPG	11/07/99
	CHECKED	C. LINGOR	11/07/99

PARSONS BRINCKERHOFF

DRAWING NO.	JUNCTION STRUCTURE STA 69 + 20.19	SHEET OF 63 110

h:\osborn\dwg\details\ref_detl.dgn

Neoprene

Series TF-1

Tideflex® Check Valve

Red Valve Company, Inc.

Features & Benefits

- Ideal for manhole installations
- Lightweight, all-elastomer design
- Seals around entrapped solids
- Cost-effective, maintenance-free design

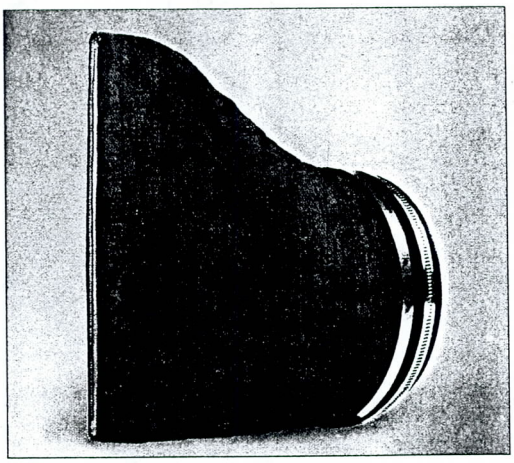

We are pleased to announce the introduction of the revolutionary TF-1 Check Valve. It functions and operates under the same simple principle of operation as the original TF-2 Tideflex®.

This design is ideal for existing manhole installations where the invert of the pipe is close to the floor of the vault. There are many check valves in interceptors, manholes, and vaults. These vaults are designed so that there would be a maximum gravity head; thus, the invert pipe is as close to the base as possible. The TF-1 allows installations in such applications.

The Red Valve Series TF-1 Tideflex® Check Valve is designed for applications in manholes, where the bottom of the manhole is close to the invert of the pipe. The TF-1 configuration allows the valve to be properly installed without manhole modification, ensuring positive backflow prevention and a lifetime of maintenance-free performance.

Materials of Construction

- Elastomers available in Pure Gum Rubber, Neoprene, Hypalon, Chlorobutyl, Buna-N, Viton, and EPDM

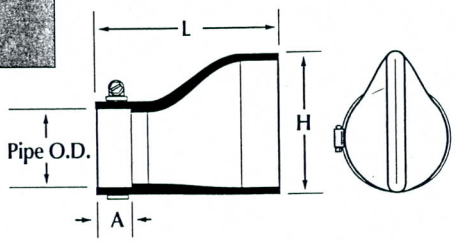

Tideflex® TF-1

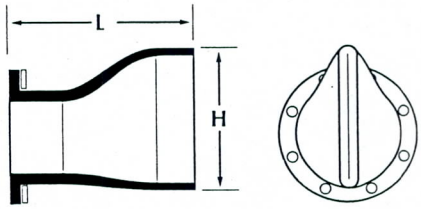

Flanged Style TF-1

Dimensions Series TF-1 Tideflex® Check Valve

Line Size	Tideflex® TF-1 Mating Pipe O.D. Minimum	Tideflex® TF-1 Mating Pipe O.D. Maximum (less than)	Tideflex® TF-1 Cuff Slip-On Length A	TF-1 Flanged ANSI Flange Size	Maximum Length L	Maximum Height H
4"	3-7/8"	5-7/8"	1-1/2"	4"	10"	8"
6"	5-7/8"	7-7/8"	2"	6"	14"	12"
8"	7-7/8"	9-7/8"	2"	8"	17-1/4"	15-1/4"
10"	9-7/8"	11-3/4"	3"	10"	21-1/2"	18-3/4"
12"	11-3/4"	15-3/4"	4"	12"	26"	22"
16"	15-3/4"	19-3/4"	5"	16"	32"	29"
20"	19-3/4"	23-3/4"	8"	20"	40"	36"
24"	23-3/4"	29-3/4"	8"	24"	46"	43"
30"	29-3/4"	35-3/4"	9"	30"	55-1/4"	54-3/4
36"	35-3/4"	41-3/4"	10"	36"	65"	69"
42"	41-3/4"	47-3/4"	10"	42"	59-1/2"	70-1/2
48"	47-3/4"	59-3/4"	10"	48"	71"	91"
60"	59-3/4"	72"	13"	60"	80-3/4"	95"

Red Valve Company, Inc. • 700 North Bell Avenue, Carnegie, PA 15106 • 412-279-0044 • Fax 412 279-7878 • www.redvalve.com (Bulletin #547-97)

MADE BY: Ali 11-99

F.H.W.A. REGION	STATE	PROJECT NO.	SHEET NO.	TOTAL SHEETS	RECORD DRAWING
9	AZ.	98-30			

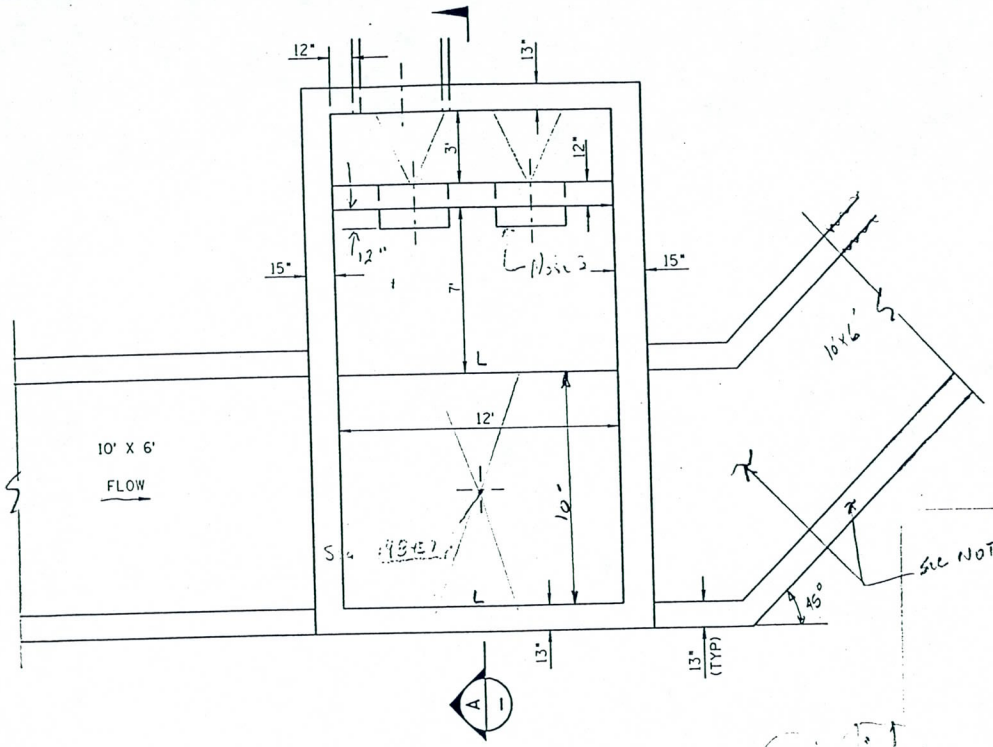

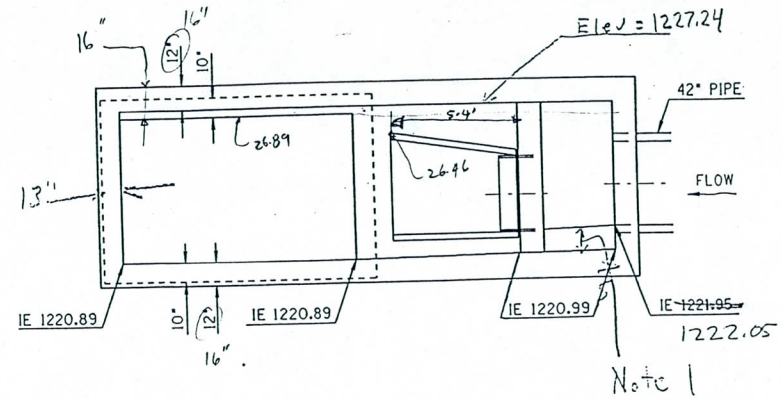

SECTION A

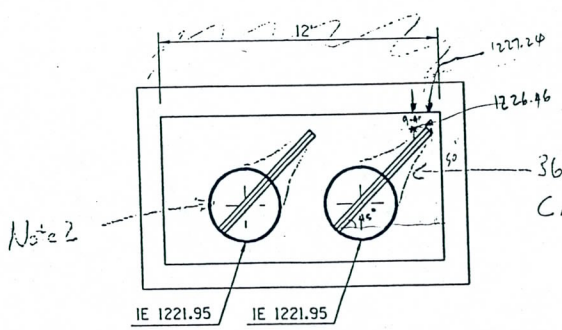

Load Dist: Assume $0.4X = 0.4 \times \frac{10'}{2} = 2'$

Load $LL = \underset{1\ \text{Axle}}{16^k} \times 1.3\ \text{Impact} = 20.8^k$

$DL = 2.75' \times 0.12 = 0.33\ ^{KSF}$

Top slab

$M_D = \frac{WL^2}{10} = 0.33 \times \frac{10^2}{10} = 3.3^{k\text{-}'/'}$

$M_{LL} = \frac{PL}{4} = 20.8 \times \frac{10'}{4} \times \frac{1}{2} = 26^{k\text{-}'/'}$

$M_{Total} = 26 + 3.3 = 29.3^{k\text{-}'/'}$

D = 16"
d = 14"

$A_s = \frac{29.3 \times 12}{0.88 \times 24 \times 14''} = 1.19\ in^2/ft$ USE #7 @6" = 1.2 in²/ft

Beam Reaction

$DL = 0.33 \times \left(\frac{10'}{2} + \frac{7'}{2}\right) = 2.8^{k/ft}$

1 Lane, $LL = 20.8 \times 2 = 41.6^k$

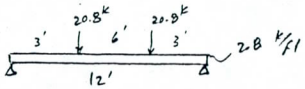

$M_D = \frac{WL^2}{8} = 50.4^{k\text{-}'}$

$M_{LL} = 20.8 \times 3' = 62.4^{k\text{-}'}$

$M_T = 112.8^{k\text{-}'}$

$d = 16'' - 1'' - \frac{1.41}{2} = 14.3''$

$A_s = \frac{112.8 \times 12}{.88 \times 24 \times 14.3''} = 4.49\ in^2$ USE 4-#11 @4" = 6.24 in²

NOTES:

1. Match No. of Transverse Top & Bot. slab Bars to the exterior wall. Fan Reinf. in slabs to max spacing of 7". Bend Longitudinal bars at 45° and make them Continuous.

NOT USED

PARSONS BRINCKERHOFF COMPUTATION SHEET

Page 1 of 2

Made by ALi

Date 11-99

Checked by

Date

Subject Junction Box STA 148+57

Design Box For Combination of DL & Live Load (16^k + Impact)

- Live Load Disturbution Per AASHTO
- Load Path to The nearest stiff member

Live Load Dist. $= 0.4X = 0.4 \times \frac{10'}{2} = 2'$

Loads: $LL = 16^k \times 1.3$ Impact $= 20.8^k$

$DL = 2.75' \times 0.12 = 0.33$ KSF

Top SLAB Design

$M_D = \frac{WL^2}{10} = 0.33 \times \frac{10^2}{10} = 3.3$ k-'/'

$M_{LL} = \frac{PL}{4} = 20.8 \times \frac{10'}{4} \times \frac{1}{2'} = 26$ k-'/'

$M_{Total} = 26 + 3.3 = 29.3$ k-'/'

$d = 16'' - 2'' = 14''$

$A_s = \frac{29.3 \times 12}{.88 \times 24 \times 14} = 1.19 \text{ in}^2/\text{ft}$ USE #7@6" $= 1.2 \text{ in}^2/\text{ft}$

Subject Junction Box Sta 148+57 Cont'd

Design edge Beam For SLAB Support

Load:

$$DL = 0.33\ KSF \times \left(\frac{10'}{2} + \frac{7'}{2}\right) = 2.8\ k/ft$$

1 Lane, LL = $16^k \times 1.3$ impact = 20.8^k

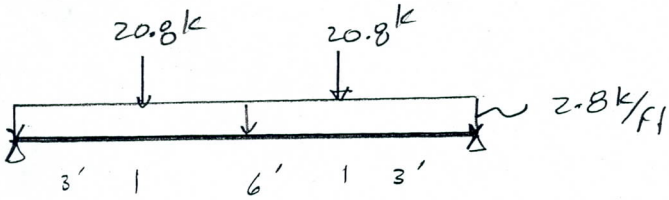

$$M_D = \frac{wL^2}{8} = \frac{20.8 \times 12^2}{8} = 50.4^{k\text{-}'}$$

$$M_{LL} = 20.8^k(6') - 20.8^k(3') = 62.4^k$$

$$M_{TOTAL} = 112.8^{k\text{-}'}$$

$$d = 16'' - 1'' - \frac{1.41}{2} = 14.3''$$

$$A_s = \frac{112.8 \times 12}{.88 \times 24 \times 14.3} = 4.49\ in^2 \quad \text{USE } \underline{4\text{-}\#11\ @4''} = 6.24\ in^2$$

- Two way Reinforced Deck, shear Check NOT REQ.

MADE BY: Ali 11-99

F.H.W.A. REGION	STATE	PROJECT NO.	SHEET NO.	TOTAL SHEETS	RECORD DRAWING
9	AZ.	98-30			

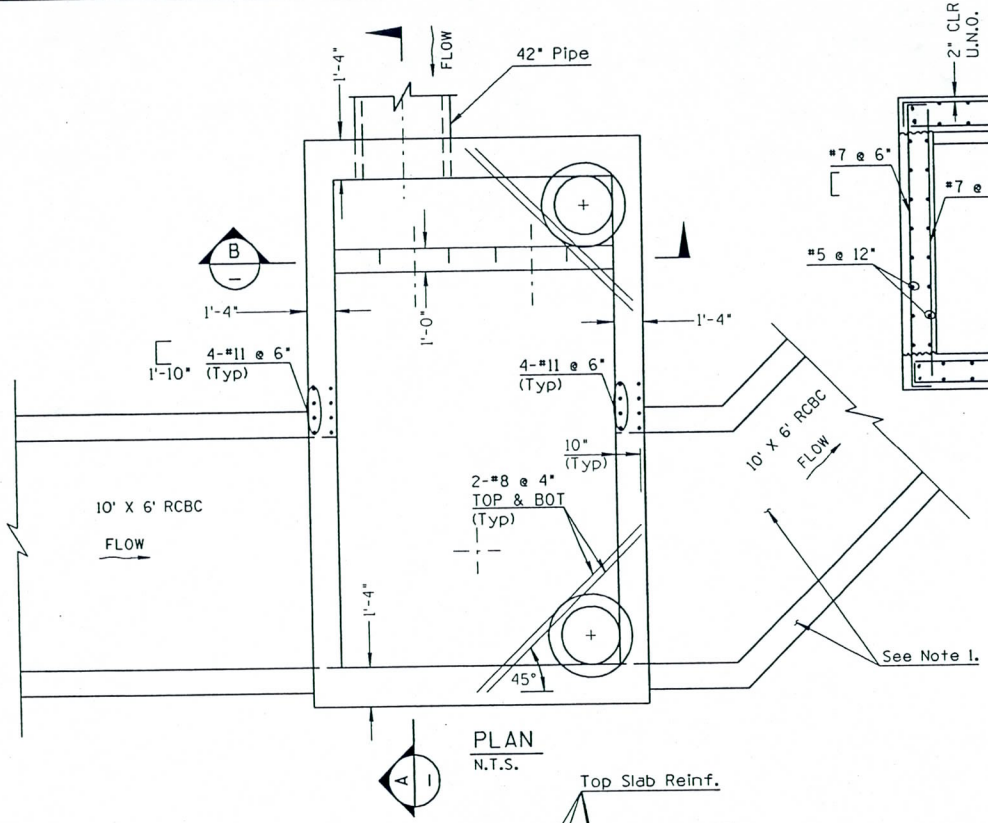

PLAN
N.T.S.

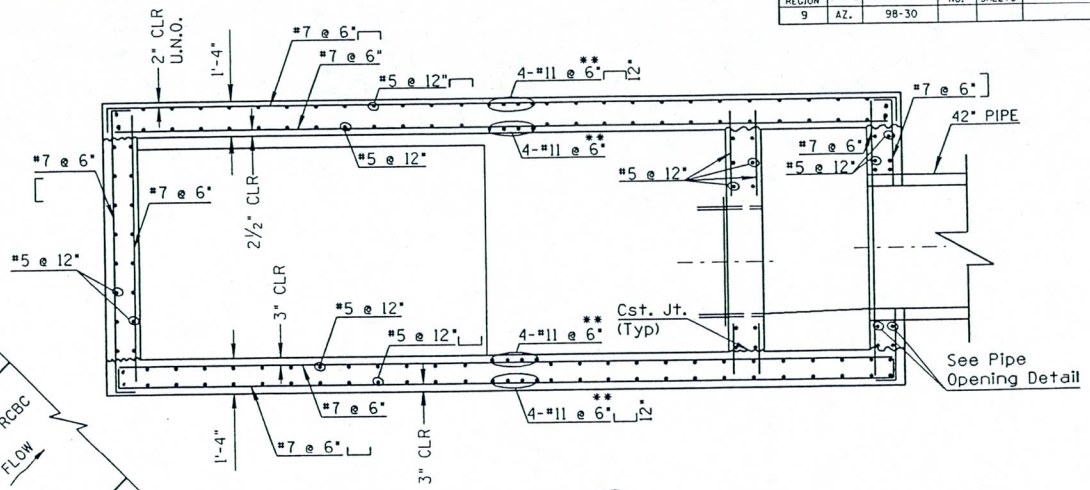

SECTION A
N.T.S.

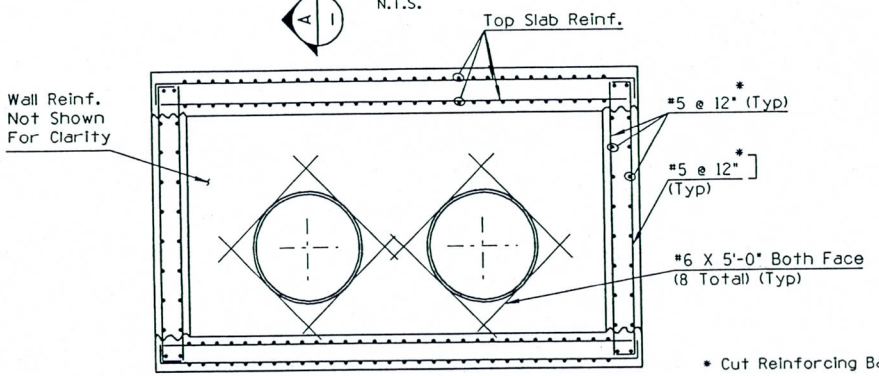

SECTION A
N.T.S.

NOTES:

1. Match No. of Transverse Top and Bottom Slab Bars to the Exterior Wall Reinforcing. Fan Reinforcing in Slabs to Maximum of 7" Spacing. Bend Longitudinal Bars at 45° and Make Them Continous.

** 2. Match #11 Bars Spacing in Top and Bottom Slabs to #11 Bars in the Walls.

3. For Additional Notes See General Note Drawing.

* Cut Reinforcing Bars at 10' X 6' RCBC Opening

NOT USED

NO.	REVISION	BY	DATE
3			
2			
1			

FLOOD CONTROL DISTRICT OF MARICOPA COUNTY
ENGINEERING DIVISION

OSBORN ROAD STORM DRAIN
THOMAS RD & 61ST PL TO INDIAN BEND WASH
PROJECT CONTROL NO. 027-04 30

		BY	DATE
PRELIMINARY NOT FOR CONSTRUCTION	DESIGNED	A. SEYEDMADANI	11/07/99
	DRAWN	CPG	11/07/99
	CHECKED	G. LINGOR	11/07/99

PARSONS BRINCKERHOFF

DRAWING NO.	JUNCTION STRUCTURE STA 148+57	SHEET 77 OF 110

h:\osborn\drng\details\ref_det05.dgn
Mon Nov 8 16:50:04 1999

PARSONS BRINCKERHOFF COMPUTATION SHEET

Subject: Box culvert to Pipe Transition STR.

Page ____ of ____

Made by: Ali

Date: 11-99

Checked by: ____

Date: ____

Transition STRUCTURE FROM PIPE TO BOX culvert

STA	PIPE size	BOX size
115+10	90"	10'x4'
121+60	90"	10'x4'
122+80	90"	10'x4'
135+25	90"	10'x4'
135+35	96"	10'x4'
141+51	96"	16x5'

Largest Transition Box size is 96" + 6" + 6" = 108" = 9'

Therefore: USE ADOT STd. B-02.10 For CBC

USE 10'x10' & 10'x4' Reinforcing Whichever

Governs and Detail a Transition structure

TABLE NO. I
0'-10' FILL

Span "S"	Height "H"	Slab "T"	Walls "W"	aa Spacing	aa Length	cc Number ✦	ee Bar Size	ee Spacing	ee Length	gg Number ✦	hh Bar Size	hh Spacing	hh Length	F
6'	3'	9½"	9"	12"	4'-2	20	5	6"	7'-2	14	4	9"	5'-2	2'-6
	4'	9½"	9"	12"	5'-2	24	5	6"	7'-2	16	4	8"	5'-11	2'-9
	5'	9½"	9"	12"	6'-2	24	5	6"	7'-2	16	4	6"	6'-5	2'-9
	6'	9½"	9"	12"	7'-2	28	6	8"	7'-2	18	4	6"	7'-2	3'-0
	7'	9½"	9"	12"	8'-2	32	6	8"	7'-2	18	4	6"	7'-8	3'-0
8'	3'	10"	11"	12"	4'-3	20	6	9"	9'-6	18	4	6"	6'-2	3'-5
	4'	10"	11"	12"	5'-3	24	6	8"	9'-6	20	4	6"	6'-8	3'-5
	5'	10"	11"	12"	6'-3	24	6	8"	9'-6	20	4	6"	7'-1	3'-4
	6'	10"	11"	12"	7'-3	28	6	8"	9'-6	20	4	6"	7'-7	3'-4
	7'	10"	11"	12"	8'-3	32	6	6"	9'-6	22	4	6"	8'-0	3'-3
	8'	10"	11"	12"	9'-3	32	6	6"	9'-6	22	4	6"	8'-5	3'-2
10'	3'	10"	13"	12"	4'-3	20	6	8"	11'-10	22	5	6"	7'-4	4'-5
	4'	10"	13"	12"	5'-3	24	6	8"	11'-10	22	5	6"	7'-10	4'-5
	5'	10"	13"	12"	6'-3	24	6	7"	11'-10	24	5	7"	8'-3	4'-4
	6'	10"	13"	12"	7'-3	28	6	7"	11'-10	24	5	7"	8'-9	4'-4
	7'	10"	13"	12"	8'-3	32	6	7"	11'-10	26	5	7"	9'-2	4'-3
	8'	10"	13"	12"	9'-3	32	6	7"	11'-10	26	5	7"	9'-8	4'-3
	9'	10"	13"	12"	10'-3	36	6	6"	11'-10	28	5	8"	10'-1	4'-2
	10'	10½"	13"	12"	11'-4	40	6	6"	11'-10	28	5	8"	10'-7	4'-2
12'	8'	11½"	15"	9"	9'-6	32	7	6"	14'-2	38	6	6"	10'-4	4'-8
	9'	11½"	15"	8"	10'-6	36	8	8"	14'-2	38	6	6"	10'-10	4'-8
	10'	11½"	15"	6"	11'-6	40	7	6"	14'-2	40	6	6"	11'-4	4'-8
	11'	12"	15"	8"	12'-7	40	8	8"	14'-2	42	6	6"	11'-6	4'-4
	12'	12"	15"	6"	13'-7	44	8	6"	14'-2	46	6	6"	12'-2	4'-6

TABLE NO. II
10'-15' FILL

Span "S"	Height "H"	Slab "T"	Walls "W"	aa Spacing	aa Length	cc Number ✦	ee Bar Size	ee Spacing	ee Length	gg Number ✦	hh Bar Size	hh Spacing	hh Length	F
6'	3'	8"	9"	12"	3'-11	20	5	8"	7'-2	14	4	6"	5'-1	2'-6
	4'	8"	9"	12"	4'-11	24	5	8"	7'-2	14	4	6"	5'-7	2'-6
	5'	8"	9"	12"	5'-11	24	5	6"	7'-2	14	4	5"	6'-1	2'-6
	6'	8"	9"	12"	6'-11	28	6	9"	7'-2	14	4	6"	6'-7	2'-6
	7'	8"	9"	12"	7'-11	32	6	9"	7'-2	14	4	6"	7'-1	2'-6
8'	3'	9"	11"	9"	4'-1	20	5	6"	9'-6	18	5	6"	5'-8	2'-10
	4'	9"	11"	9"	5'-1	24	5	6"	9'-6	18	5	6"	6'-2	2'-10
	5'	9½"	11"	9"	6'-2	24	6	6"	9'-6	18	5	6"	6'-8	2'-10
	6'	9½"	11"	9"	7'-2	28	6	6"	9'-6	18	5	6"	7'-1	2'-9
	7'	9½"	11"	12"	8'-2	32	6	6"	9'-6	18	5	6"	7'-7	2'-9
	8'	9½"	11"	12"	9'-2	32	6	6"	9'-6	18	5	6"	8'-1	2'-9
10'	3'	10½"	13"	8"	4'-4	20	6	6"	11'-10	22	6	6"	6'-9	3'-8
	4'	10½"	13"	8"	5'-4	24	6	6"	11'-10	22	6	6"	7'-2	3'-7
	5'	10½"	13"	9"	6'-4	24	6	6"	11'-10	22	6	6"	7'-7	3'-6
	6'	11"	13"	8"	7'-5	28	7	8"	11'-10	22	6	8"	8'-1	3'-6
	7'	11"	13"	8"	8'-5	32	7	8"	11'-10	22	6	8"	8'-6	3'-5
	8'	11"	13"	10"	9'-5	32	7	7"	11'-10	22	6	7"	9'-0	3'-5
	9'	11½"	13"	11"	10'-6	36	7	7"	11'-10	22	6	7"	9'-6	3'-4
	10'	11½"	13"	11"	11'-6	40	7	6"	11'-10	22	6	9"	10'-0	3'-4
12'	8'	13"	15"	10"	9'-9	32	8	7"	14'-2	26	6	7"	9'-5	3'-8
	9'	13"	15"	10"	10'-9	36	8	7"	14'-2	26	6	7"	9'-11	3'-8
	10'	13"	15"	10"	11'-9	40	8	7"	14'-2	26	6	7"	10'-5	3'-8
	11'	13"	15"	10"	12'-9	40	9	7"	14'-2	26	6	7"	11'-0	3'-9
	12'	13½"	15"	7"	13'-10	44	8	7"	14'-2	26	6	7"	11'-7	3'-9

TABLE NO. III
15'-20' FILL

Span "S"	Height "H"	Slab "T"	Walls "W"	aa Spacing	aa Length	cc Number ✦	ee Bar Size	ee Spacing	ee Length	gg Number ✦	hh Bar Size	hh Spacing	hh Length	F
6'	3'	9"	9"	12"	4'-1	20	5	6"	7'-2	14	4	6"	5'-2	2'-6
	4'	9"	9"	12"	5'-1	24	5	6"	7'-2	14	4	6"	5'-8	2'-6
	5'	9"	9"	12"	6'-1	24	6	8"	7'-2	14	4	6"	6'-2	2'-6
	6'	9"	9"	12"	7'-1	28	6	6"	7'-2	14	4	6"	6'-7	2'-6
	7'	9"	9"	12"	8'-1	32	6	6"	7'-2	14	4	6"	7'-2	2'-6
8'	3'	10½"	11"	7"	4'-4	20	6	7"	9'-6	18	5	7"	5'-7	2'-8
	4'	10½"	11"	10"	5'-4	24	6	6"	9'-6	18	5	6"	6'-1	2'-8
	5'	10½"	11"	9"	6'-4	24	6	6"	9'-6	18	5	6"	6'-7	2'-8
	6'	11"	11"	11"	7'-5	28	7	7"	9'-6	18	5	7"	7'-2	2'-8
	7'	11"	11"	11"	8'-5	32	7	8"	9'-6	18	5	8"	7'-8	2'-8
	8'	11"	11"	12"	9'-5	32	7	6"	9'-6	18	5	8"	8'-2	2'-8
10'	3'	12½"	13"	6"	4'-8	20	6	6"	11'-10	22	6	6"	6'-7	3'-4
	4'	12½"	13"	7"	5'-8	24	7	7"	11'-10	22	6	7"	7'-1	3'-4
	5'	12½"	13"	7"	6'-8	24	7	7"	11'-10	22	6	7"	7'-7	3'-4
	6'	12½"	13"	7"	7'-8	28	7	7"	11'-10	22	6	7"	8'-1	3'-4
	7'	12½"	13"	9"	8'-8	32	7	6"	11'-10	22	5	6"	8'-3	3'-2
	8'	13"	13"	9"	9'-9	32	7	6"	11'-10	22	5	6"	8'-10	3'-2
	9'	13"	13"	10"	10'-9	36	8	6"	11'-10	22	5	6"	9'-4	3'-2
	10'	13"	13"	11"	11'-9	40	8	6"	11'-10	22	5	6"	9'-10	3'-2
12'	8'	15"	15"	10"	10'-1	32	8	7"	14'-2	26	6	7"	9'-6	3'-7
	9'	15"	15"	10"	11'-1	36	9	7"	14'-2	26	6	7"	10'-0	3'-7
	10'	15½"	15"	10"	12'-2	40	8	6"	14'-2	26	6	8"	10'-7	3'-7
	11'	15½"	15"	10"	13'-2	40	8	6"	14'-2	26	6	6"	11'-2	3'-8
	12'	15½"	15"	6"	14'-2	44	8	6"	14'-2	26	6	6"	11'-9	3'-9

TABLE NO. IV
20'-25' FILL

Span "S"	Height "H"	Slab "T"	Walls "W"	aa Spacing	aa Length	cc Number ✦	ee Bar Size	ee Spacing	ee Length	gg Number ✦	hh Bar Size	hh Spacing	hh Length	F
6'	3'	10"	9"	12"	4'-3	20	6	8"	7'-2	14	4	6"	5'-3	2'-6
	4'	10"	9"	12"	5'-3	24	6	6"	7'-2	14	4	6"	5'-9	2'-6
	5'	10"	9"	12"	6'-3	24	6	6"	7'-2	14	4	6"	6'-3	2'-6
	6'	10"	9"	12"	7'-3	28	7	9"	7'-2	14	4	6"	6'-8	2'-6
	7'	10"	9"	12"	8'-3	32	7	9"	7'-2	14	4	6"	7'-3	2'-6
8'	3'	12"	11"	11"	4'-7	20	7	7"	9'-6	18	5	7"	5'-9	2'-8
	4'	12"	11"	12"	5'-7	24	7	8"	9'-6	18	5	6"	6'-1	2'-8
	5'	12"	11"	12"	6'-7	24	7	6"	9'-6	18	5	8"	6'-7	2'-8
	6'	12"	11"	12"	7'-7	28	7	7"	9'-6	18	5	7"	6'-1	2'-8
	7'	12"	11"	12"	8'-7	32	7	6"	9'-6	18	5	9"	6'-7	2'-8
	8'	12½"	11"	12"	9'-8	32	7	6"	9'-6	18	4	6"	6'-1	2'-8
10'	3'	14"	13"	6"	4'-11	20	8	9"	11'-10	22	6	6"	6'-6	3'-2
	4'	14"	13"	6"	5'-11	24	8	8"	11'-10	22	6	8"	7'-0	3'-2
	5'	14"	13"	7"	6'-11	24	8	7"	11'-10	22	6	7"	7'-6	3'-2
	6'	14½"	13"	7"	8'-0	28	8	7"	11'-10	22	6	7"	8'-1	3'-2
	7'	14½"	13"	8"	9'-0	32	9	8"	11'-10	22	5	6"	8'-5	3'-2
	8'	14½"	13"	8"	10'-0	32	9	8"	11'-10	22	5	6"	8'-11	3'-2
	9'	14½"	13"	9"	11'-0	36	9	9"	11'-10	22	5	6"	9'-5	3'-2
	10'	15"	13"	8"	12'-0	40	9	8"	11'-10	22	5	6"	9'-11	3'-2
12'	8'	17"	15"	10"	10'-5	32	8	6"	14'-2	26	5	6"	9'-6	3'-6
	9'	17½"	15"	9"	11'-6	36	9	6"	14'-2	26	6	9"	10'-3	3'-7
	10'	17½"	15"	10"	12'-6	40	10	9"	14'-2	26	5	6"	10'-7	3'-7
	11'	17½"	15"	7"	13'-6	40	9	7"	14'-2	26	6	7"	11'-5	3'-8
	12'	17½"	15"	7"	14'-6	44	10	7"	14'-2	26	6	7"	12'-0	3'-9

✦Total number of bars in the cross-section.

TABLE NO. V
25'-30' FILL

Span "S"	Height "H"	Slab "T"	Walls "W"	aa Spacing	aa Length	cc Number ✦	ee Bar Size	ee Spacing	ee Length	gg Number ✦	hh Bar Size	hh Spacing	hh Length	F
6'	3'	10½"	9"	12"	4'-4	20	6	6"	7'-2	14	4	6"	5'-3	2'-6
	4'	11"	9"	12"	5'-5	24	6	6"	7'-2	14	4	6"	5'-10	2'-6
	5'	11"	9"	12"	6'-5	24	6	6"	7'-2	14	4	6"	6'-4	2'-6
	6'	11"	9"	12"	7'-5	28	7	8"	7'-2	14	4	6"	6'-10	2'-6
	7'	11"	9"	12"	8'-5	32	7	8"	7'-2	14	4	6"	7'-4	2'-6
8'	3'	13"	11"	7"	4'-9	20	7	7"	9'-6	18	5	7"	5'-10	2'-8
	4'	13"	11"	10"	5'-9	24	7	6"	9'-6	18	5	6"	6'-4	2'-8
	5'	13½"	11"	10"	6'-10	24	8	8"	9'-6	18	5	8"	6'-10	2'-8
	6'	13½"	11"	11"	7'-10	28	8	8"	9'-6	18	5	8"	7'-4	2'-8
	7'	13½"	11"	11"	8'-10	32	8	6"	9'-6	18	4	6"	7'-10	2'-8
	8'	13½"	11"	12"	9'-10	32	8	8"	9'-6	18	4	6"	8'-4	2'-8
10'	3'	16"	13"	6"	5'-3	20	7	6"	11'-10	22	6	8"	7'-0	3'-5
	4'	16"	13"	7"	6'-3	24	8	7"	11'-10	22	6	7"	7'-6	3'-5
	5'	16"	13"	8"	7'-3	24	8	8"	11'-10	22	6	8"	8'-0	3'-4
	6'	16"	13"	8"	8'-3	28	8	8"	11'-10	22	6	8"	8'-4	3'-4
	7'	16"	13"	8"	9'-3	32	8	8"	11'-10	22	5	6"	8'-8	3'-3
	8'	16"	13"	9"	10'-3	32	8	6"	11'-10	22	5	6"	9'-2	3'-3
	9'	16"	13"	9"	11'-3	36	8	6"	11'-10	22	5	6"	9'-7	3'-2
	10'	16½"	13"	12"	12'-4	40	8	6"	11'-10	22	5	6"	10'-1	3'-2
12'	8'	19½"	15"	8"	10'-10	32	10	8"	14'-2	26	5	6"	9'-8	3'-6
	9'	19½"	15"	10"	11'-10	36	10	7"	14'-2	26	5	7"	10'-2	3'-6
	10'	19½"	15"	10"	12'-10	40	9	6"	14'-2	26	5	6"	10'-8	3'-7
	11'	19½"	15"	8"	13'-10	40	10	8"	14'-2	26	6	8"	11'-6	3'-8
	12'	20"	15"	10"	14'-11	44	9	6"	14'-2	26	6	6"	12'-0	3'-9

QUANTITIES PER LINEAR FOOT OF BARREL

Span "S"	Height "H"	Table I Concrete C.Y.	Table I Reinf. Steel Lbs.	Table II Concrete C.Y.	Table II Reinf. Steel Lbs.	Table III Concrete C.Y.	Table III Reinf. Steel Lbs.	Table IV Concrete C.Y.	Table IV Reinf. Steel Lbs.	Table V Concrete C.Y.	Table V Reinf. Steel Lbs.
6'	3'	0.635	90.0	0.563	95.7	0.611	104.2	0.659	107.7	0.684	118.6
	4'	0.691	104.4	0.618	104.7	0.667	113.2	0.715	127.4	0.763	128.4
	5'	0.746	123.0	0.674	118.4	0.722	121.8	0.771	133.6	0.819	134.7
	6'	0.802	137.8	0.729	126.1	0.778	141.5	0.826	138.6	0.874	144.5
	7'	0.858	146.7	0.785	135.1	0.833	150.4	0.882	147.5	0.930	153.4
8'	3'	0.841	123.8	0.778	123.7	0.872	129.7	0.966	143.5	1.029	150.7
	4'	0.908	138.8	0.846	133.3	0.940	149.2	1.034	150.1	1.097	173.0
	5'	0.976	144.3	0.945	157.9	1.008	157.7	1.102	160.7	1.196	164.0
	6'	1.044	153.3	1.013	166.8	1.107	165.4	1.170	163.8	1.264	170.5
	7'	1.112	177.1	1.081	170.8	1.175	158.8	1.238	171.2	1.332	220.3
	8'	1.180	182.7	1.149	177.0	1.243	181.8	1.337	198.7	1.400	199.5
10'	3'	1.022	151.4	1.060	193.8	1.215	197.7	1.330	210.9	1.485	209.8
	4'	1.102	160.4	1.140	204.6	1.295	206.9	1.410	213.3	1.565	238.6
	5'	1.182	165.0	1.221	210.6	1.375	215.6	1.491	241.0	1.645	220.3
	6'	1.262	173.4	1.340	202.0	1.455	227.0	1.610	253.6	1.725	229.1
	7'	1.343	182.5	1.420	211.6	1.535	225.8	1.690	255.2	1.806	232.1
	8'	1.423	188.1	1.500	235.3	1.654	233.6	1.770	262.5	1.886	267.4
	9'	1.503	198.3	1.619	243.4	1.735	269.9	1.850	255.2	1.966	276.4
	10'	1.622	206.4	1.699	244.4	1.815	276.6	1.969	282.4	2.085	277.7
12'	8'	1.803	313.2	1.940	289.8	2.123	291.5	2.307	295.4	2.535	336.2
	9'	1.896	325.9	2.033	300.2	2.216	337.3	2.445	348.2	2.628	352.8
	10'	1.988	353.4	2.126	310.5	2.354	321.2	2.538	326.2	2.721	357.9
	11'	2.127	345.8	2.218	354.4	2.447	362.5	2.630	375.1	2.813	373.9
	12'	2.219	414.3	2.356	345.2	2.540	398.4	2.723	431.2	2.952	421.0

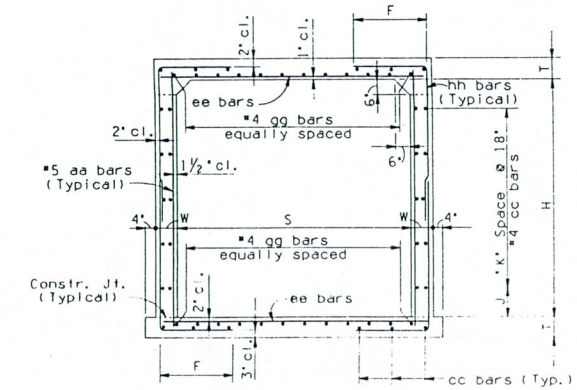

TYPICAL SECTION

Height "H"	"J" Dim.	"K" Spaces
3'	9"	1
4'	3"	2
5'	12"	2
6'	9"	3
7'	3"	4
8'	12"	4
9'	9"	5
10'	1"	6
11'	12"	6
12'	9"	7

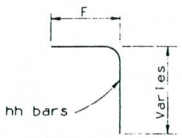

BENDS

NOTE: See B-01.10 for General Notes and Miscellaneous Details.

DESIGN APPROVED

APPROVED FOR DISTRIBUTION

ARIZONA
DEPARTMENT OF TRANSPORTATION
HIGHWAYS DIVISION
STANDARD DRAWINGS

SINGLE BARREL
BOX CULVERT

REVISION

STANDARD NO.
B-02.10

MADE BY : AD 2,00

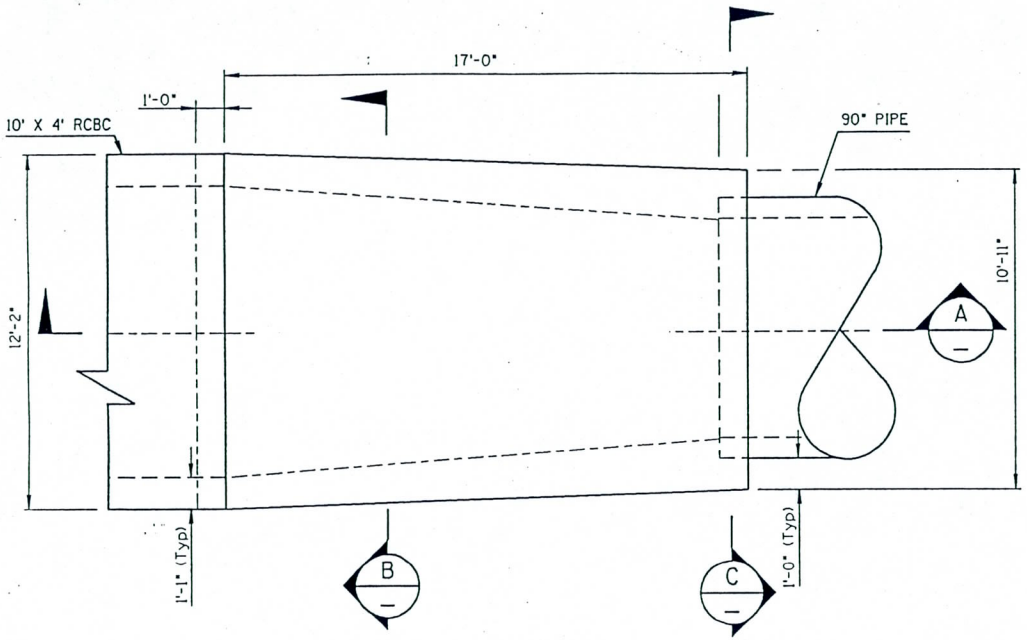

PLAN
N.T.S.

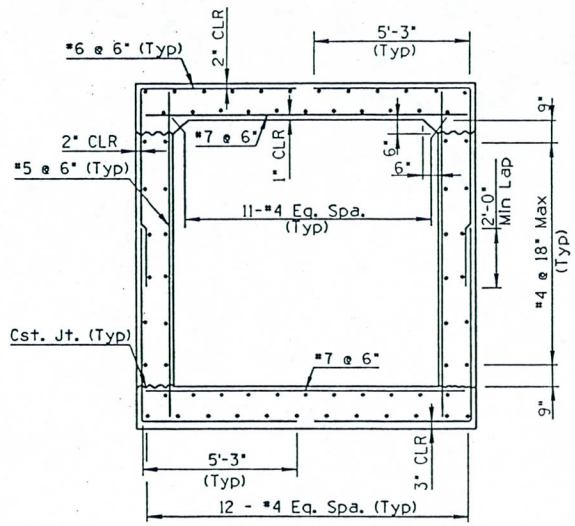

SECTION B
N.T.S.

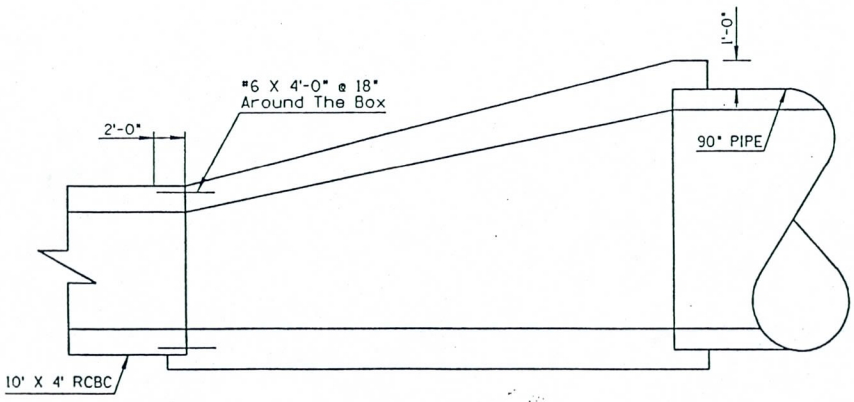

SECTION A
N.T.S.

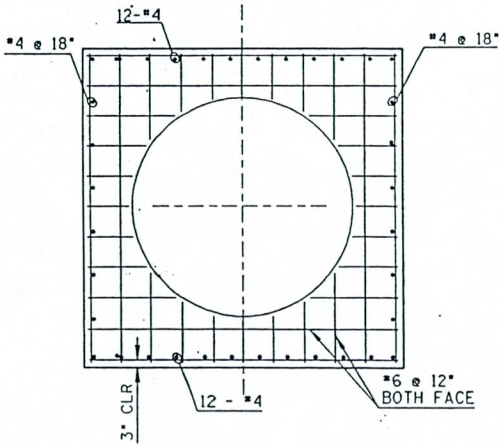

SECTION C
N.T.S.

Notes:

1. This Detail Applies to all RCBC Transition to Pipe Structures.

2. Field Verify reinforcing Dimensions prior to Fabrication.

3. For Additional Notes See General Note Drawing.

NO.	REVISION	BY	DATE
3			
2			
1			

FLOOD CONTROL DISTRICT
OF MARICOPA COUNTY
ENGINEERING DIVISION

OSBORN ROAD STORM DRAIN
THOMAS RD & 61ST PL TO INDIAN BEND WASH
PROJECT CONTROL NO. 027-04 30

PRELIMINARY
90%
REVIEW
NOT FOR CONSTRUCTION OR RECORDING

	BY	DATE
DESIGNED	A. SEYEDMADANI	11/12/99
DRAWN	CPG	11/12/99
CHECKED	G. LINGOR	11/12/99

PARSONS BRINCKERHOFF

DRAWING NO. | TRANSITION STRUCTURE STA 122 + 80 | SHEET OF 71 112

MADE BY: Ali 11-99

F.H.W.A. REGION	STATE	PROJECT NO.	SHEET NO.	TOTAL SHEETS	RECORD DRAWING
9	AZ.	98-30			

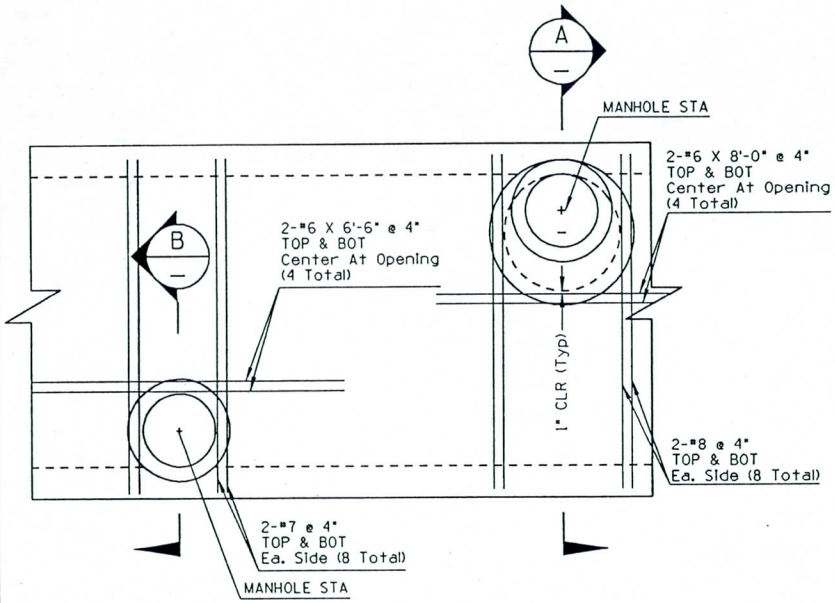

Note: Cut RCBC Reinforciing to Clear Opening By 1".

PLAN

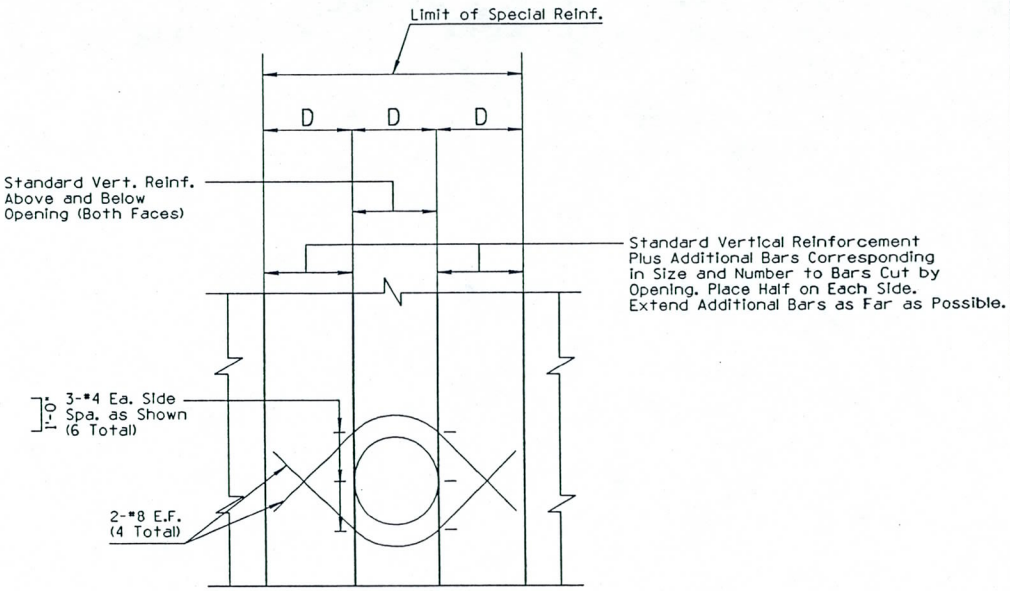

Wall Opening Reinforcing Detail (C)
N.T.S.

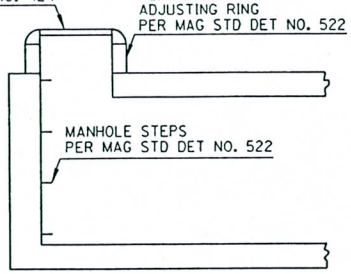

SECTION (B)

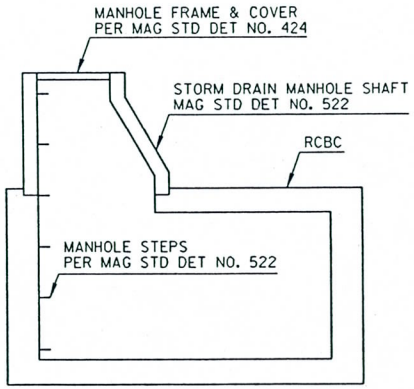

SECTION (A)

NOTES:

1. All Reinforcing to Clear Opening by 2" Min.
2. Cut Horizontal Steel as Required.
3. See General Note Drawing For Additional Notes.

NO.	REVISION	BY	DATE
3			
2			
1			

FLOOD CONTROL DISTRICT
OF MARICOPA COUNTY
ENGINEERING DIVISION

OSBORN ROAD STORM DRAIN
THOMAS RD & 61ST PL TO INDIAN BEND WASH
PROJECT CONTROL NO. 027-04 30

		BY	DATE
PRELIMINARY NOT FOR CONSTRUCTION	DESIGNED	A. SEYEDMADANI	11/07/99
	DRAWN	CPG	11/07/99
	CHECKED	G. LINGOR	11/07/99

PARSONS BRINCKERHOFF

DRAWING NO. — TYPICAL RCBC ACCESS OPENINGS — SHEET 78 OF 110

h:\osborn\dwg\details\ref_det06.dgn
Mon Nov 8 15:50:09 1999