Property of
Flood Control District of MC Library
Please Return to
2801 W. Durango
Phoenix, AZ 85009

CITY OF SCOTTSDALE

DESERT GREENBELT
PIMA ROAD THREE BASINS PROJECT

10% DESIGN REPORT
(DRAFT)

The Desert Greenbelt
SCOTTSDALE, ARIZONA

SCI Project Number: 28900051

November 1997

Stantech
Consulting

CITY OF SCOTTSDALE

DESERT GREENBELT
PIMA ROAD THREE BASINS PROJECT

10% DESIGN REPORT
(DRAFT)

STANTECH CONSULTING INC.
7776 Pointe Parkway W., #290
Phoenix, Arizona 85044
(602) 438-2200

SCI Project No: 28900051

November 1997

Table of Contents

		Page
1.0	**INTRODUCTION**	**1**
1.1	General	1
1.2	Background	1
1.3	Purpose	2
1.4	Information Sources	3
2.0	**10% DESIGN OBJECTIVES**	**4**
2.1	General	4
2.2	Detention Basins	5
2.3	Conduit Systems	5
2.4	Channels And Drop Structures	5
2.5	Major Structures	6
2.6	Path And Trail System	6
2.7	Native Plant Salvage, Landscape And Aesthetics	6
3.0	**10% DESIGN METHODOLOGY**	**7**
3.1	Detention Basins	7
3.2	Conduit Systems	7
3.3	Channels And Drop Structures	7
3.4	Major Structures	8
	3.4.1 TPC Outlet Structure	8
	3.4.2 Roadway Crossing Culverts	8
4.0	**10% DESIGN RESULTS**	**9**
4.1	Detention Basins	9
	4.1.1 General	9
	4.1.2 Sediment Storage Volumes	9
	4.1.3 Happy Valley and Deer Valley Detention Basins	9
	4.1.4 Union Hills Detention Basin	11
4.2	Conduit Systems	12
	4.2.1 Happy Valley Detention Basin Outlet Conduit	12
	4.2.2 Pima Road Storm Drain (DVDB to Sierra Pinta Outlet Structure)	13
	4.2.3 Union Hills Detention Basin to TPC Outlet: Line H	15
4.3	Pima Road Channel	17
	4.3.1 General	17
	4.3.2 Channel Geometry and Materials	18
	4.3.3 Drop Structure Geometry and Materials	18
4.4	Collector Channels	21

4.4.1 General 21
4.4.2 Channel Geometry and Materials 21
4.5 Major Structures 22
4.5.1 TPC Outlet Structure 22
4.5.2 Roadway Culverts 23
4.5.3 Channel Inlets to the Detention Basins 23
4.5.4 Grade Separated Crossings 23
4.6 Path and Trail 24
4.7 Landscaping and Aesthetics 25

5.0 COST ESTIMATES 26

TABLES

Table 4-1: Summary of Design Discharges for Pima Road Storm Drain
Table 4-2: Summary of Design Discharges from UHDB to TPC Outlet Conduit (Line H)
Table 4-3: Summary of Normal Depth Calculations at Select Locations along Pima Road Channel
Table 4-4: Summary of Normal Depth Calculations for Collector Segments
Table 5-1: Engineers Estimate of Construction Cost - Summary
Table 5-2: Engineers Estimate of Construction Cost
Table 5-3: Engineers Estimate of Required Land Acquisitions

APPENDICES

Appendix A: Pima Road Three Basins Landscape and Aesthetics, 10% Design Narrative, by Larson, Voss and Associates, Inc.
Appendix B: Grade Separation Structures Alternatives Report, by T.Y. Lin International
Appendix C: Hydraulic Grade Line Calculations and Output from StormCAD
Appendix D: Pima Road Channel Hydraulic Calculations from FlowMaster
Appendix E: Collector Channels Hydraulic Calculations from FlowMaster
Appendix F: TPC Outlet Structure Hydraulic Calculations
Appendix G: Culvert Hydraulic Analyses from HY-8

1.0 Introduction

1.1 GENERAL

The City of Scottsdale, Desert Greenbelt, **Pima Road Three Basins Project** (PR3B) is a continuous system of mainline and collector channels, detention basins, and outlet conduits that extend from approximately one-quarter mile north of Jomax Road to the U.S. Bureau of Reclamation (USBR) detention basin with the City of Scottsdale's Tournament Player's Club (TPC) Golf Course. A contiguous network of paths and trails, with five grade separated crossings are also included in the scope of this project. The entire system is comprised of approximately 4 miles of mainline channel along Pima Road, 1.5 miles of collector channels, three regional detention basins located at Happy Valley Road, Deer Valley Road, and Union Hills Drive, approximately 5.5 miles of path and trail, and grade separated crossing structures at Hualapai Road, Thompson Peak Parkway, Pima Road at Deer Valley Road, Pinnacle Peak Road, and Happy Valley Road. The PR3B system drains a total watershed area of approximately 11.3 square miles, with peak discharges ranging from 150 cfs to 2,700 cfs. See the 10% plans (Sheet G1) for a vicinity map and key map showing the general project limits and major features.

1.2 BACKGROUND

In November 1992, the Desert Greenbelt Project was established by the City of Scottsdale through the adoption of an amendment to the Drainage Element of the General Plan. The purpose and goal of the Desert Greenbelt Project is to effectively manage stormwaters on a regional basis by defining major watercourse corridors, with additional consideration for providing passive recreational opportunities for the community in a natural desert setting. This is accomplished through the establishment of effective flood control and open space amenities within the environmentally sensitive Sonoran desert, and a balance of homeowner concerns, development objectives, public safety, landholder requirements and other City-wide goals. Clearly, the Desert Greenbelt Project is a multi-objective public works project that must achieve technical, environmental, aesthetic, recreational, and public safety goals while remaining within the financial constraints of prudent community expenditures for such projects.

Three major watercourse corridors; Reata Pass/Beardsley Wash, Rawhide Wash, and Pima Road Channel (now named Pima Road Three Basins), were established for the Desert Greenbelt Project. In June 1996, the City of Scottsdale requested that George V. Sabol Consulting Engineers, Inc. (GVSCE) review two concepts for the Pima Road Channel portion of the Desert Greenbelt. Concept 1 was the design alternative developed by Greiner, Inc., the consultant to the City of Scottsdale for the Desert Greenbelt Project and Concept A was the design alternative developed by Pacific Advanced Civil Engineering, Inc. (PACE) for Grayhawk Development to investigate an alternative to the proposed Pima Road Channel design. The results of the Concept 1 and Concept A review are presented in a report by GVSCE titled City of Scottsdale, Desert Greenbelt Project, Pima Road Channel, Concept Review , November 1996. The City of Scottsdale then contracted GVSCE to prepare a recommended concept design based on the conclusions of the Concept Review Report, and that design is presented in the GVSCE report titled City of Scottsdale, Desert Greenbelt Project, Pima Road Channel, Recommended Concept Design and Construction Cost Estimate, June 1997, which is herein referred to as the Concept Design Report. That report presents the basis for the 10% designs described herein. It should be noted that in February 1997, the Pima Road Channel portion of the Desert Greenbelt was renamed to **Pima Road Three Basins Project** to reflect the new design configuration and approach.

1.3 PURPOSE

The purpose of this report is to present the 10% design objectives, describe the methodology used to arrive at the design results shown on the 10% construction drawings, discuss major concerns to be resolved in the next level of design, and present a 10% design estimate of construction costs.

1.4 INFORMATION SOURCES

All design hydrology and peak discharge estimates are obtained from the Stantech Consulting, Inc. report titled; City of Scottsdale, Desert Greenbelt, Pima Road Three Basin Project, System Operations Design and Final Hydrology Report, draft report, November 1997, which is herein referred to as the System Ops Report. Other major sources of information include the Drainage

Design Manual for Maricopa County, Volume II, Hydraulics, January 1996, herein referred to as the County Hydraulics Manual and the City of Scottsdale, Design Standards and Procedures Manual, Chapter 2, Drainage, herein referred to as the COS Design Manual. Additional information, maps, land ownership, cost data, and analyses are obtained from the GVSCE and Greiner file data, as well as the City of Scottsdale records and staff. Where appropriate, the source of information is identified.

2.0 10% DESIGN OBJECTIVES

2.1 GENERAL

The **Pima Road Three Basins Project** (PR3B) is divided into the following six (6) design element groups for presentation in this report:

1. **Detention Basins**
2. **Conduit Systems**
3. **Channels and Drop Structures**
4. **Major Structures**
5. **Path and Trail System**
6. **Landscape and Aesthetics**

General design objectives applicable to all of the elements listed above include:

- Identify location and alignment of various design elements,
- Identify right-of-way and/or easement requirements and the ownership of properties from which they need to be obtained.
- Provide effective flood control facilities and public amenities that minimize impact to the native desert surroundings. Flood control facilities are to be designed for the 100-year storm.
- Coordinate project facilities design with other regional projects such as ADOT's Loop 101 Freeway, and the City of Scottsdale's Water Campus, CAP Water Treatment Plant, Solid Waster Transfer Facility, Water Campus Force Main Extensions, and Pima Road Improvement Projects.
- Coordinate design efforts with various public and private entities such as the City of Scottsdale Tournament Players Club (TPC) Golf Course, U.S. Bureau of Reclamation, and the Perimeter Center, Grayhawk, and DC Ranch Developments.
- Develop 10% design construction cost estimates.

Specific design objectives for each of the design element groups are summarized in the following sections.

2.2 DETENTION BASINS

Happy Valley and Deer Valley Detention Basins

- Construct non-jurisdictional embankment/spillway at downstream end of basin to provide approximately 5 feet of stormwater storage above the lowest adjacent natural grade.
- Provide detention storage for the 100-year, 6-hour storm, without operating emergency spillway.
- Contour basins to minimize the visual impact and enhance aesthetics.
- Landscape basins to match the native desert surroundings and provide minimal amenities within basin envelope.

Union Hills Detention Basin

- Construct basin to natural grade with overland downstream overflow.
- Provide detention storage for the 100-year, 24-hour storm.
- Contour basin floor and side slopes where feasible, to accommodate future City of Scottsdale Parks and Recreation improvements.
- Provide temporary hydroseed landscaping in lower third of basin and areas to be regraded with the park design, as temporary cover.
- Provide permanent landscaping in the upper two-thirds of basin along side slopes not to be included in the park design.

2.3 CONDUIT SYSTEMS

- Size conduits to convey peak design discharges and maintain the desired stage versus discharge rating relations for detention basin hydrology.
- Define system junction locations to accommodate drainage from other projects.
- Perform preliminary system hydraulic analyses.

2.4 CHANNELS AND DROP STRUCTURES

- Develop typical channel cross sections and longitudinal slopes to convey design discharges.
- Maximum channel normal depth velocity is 15 fps or less.
- Drop structures are to be 2 to 4 feet high with a 1V:2H face and will include a 50-foot flat downstream apron.

- Design preliminary channel profile and position drop structures to accommodate inflow locations, avoid potential utility conflicts and minimize channel depth.
- Perform preliminary normal depth hydraulic calculations.

2.5 MAJOR STRUCTURES

- Select TPC Outlet Structure type/size and perform preliminary hydraulic analyses.
- Provide three-dimensional rendering of selected TPC Outlet Structure to assess visual impact to TPC Golf Course.
- Preliminarily size culvert structures at roadway crossings.
- Preliminarily design channel inlets/spillways into detention basins.
- Evaluate structure type alternatives for grade separated crossings.
- Design preliminary grade separated crossing profiles.
- Maximum path and trail slope not to exceed 5 percent.
- Evaluate alternative entrance and exit treatments to grade separated crossings.

2.6 PATH AND TRAIL SYSTEM

- Coordinate and address path and trail system integration and tie-ins with other regional path and trail systems.
- Identify path links and potential trailhead locations.

2.7 NATIVE PLANT SALVAGE, LANDSCAPE AND AESTHETICS

- Estimate preliminary native plant salvage and revegetation areas.
- Develop preliminary planting palette and approximate densities.
- Develop and recommend alternate design motifs for the PR3B Project.
- Preliminarily address irrigation methods.
- Recommend aesthetic enhancement alternatives for structures, railings, and retaining walls.
- Provide recommendations for path and trail, educational, and interpretive signage.

3.0 10% DESIGN METHODOLOGY

3.1 DETENTION BASINS

Detention basin designs and contouring are dictated by the hydrology and storage routing requirements addressed in the System Ops Report. Those analyses are based on HEC-1 modeling of the stage versus storage versus discharge relations for each basin, and are performed using the Modified Puls, level pool option. Refer to the System Ops Report for more detail.

3.2 CONDUIT SYSTEMS

Open channel and pressure flow hydraulic models of each conduit system are developed using the StormCAD® computer program, version 1.0, by Haestad Methods, Inc. and the peak discharges reported in the System Ops Report. Standard velocity head coefficients for estimation of junction, bend, and manhole losses are obtained from the County Hydraulics Manual.

3.3 CHANNELS AND DROP STRUCTURES

Preliminary sizing of the PR3B channels are accomplished by normal depth channel calculations using Manning's Equation. Those calculations are performed using the FlowMaster® computer program, version 5.13, by Haestad Methods, Inc. Estimates of Manning's n are developed with guidance from the County Hydraulics Manual and judgement.

The drop structure design is generally based on the results of the model study conducted at the Colorado State University, Engineering Research Center in Fort Collins, Colorado, with minor modifications made to "fit" the design to the PR3B channel system. The results and conclusions of that study are documented in the Reata Pass Wash Channel Hydraulic Model, November 1997, by Colorado State University. The model study indicates that the energy grade line of the supercritical channel upstream and downstream of the modeled drop essentially parallels the bed slope and the water surface recovers to an approximate normal depth downstream of the drop.

3.4 MAJOR STRUCTURES

3.4.1 TPC Outlet Structure

A non-typical outlet structure is required for the Union Hills Detention Basin to TPC Outlet Conduit System due to the magnitude of flow and velocity that will be discharging into the USBR retention basin at the TPC Golf Course "Dry Lake." The structure preliminarily selected to dissipate the energy is patterned after the Contra Costa energy dissipater developed at the University of California, Berkley, in conjunction with Contra Costa County, California. Design procedures and criteria for this structure are outlined in the Federal Highway Administration's Hydraulic Design of Energy Dissipaters for Culverts and Channels, Hydraulic Engineering Circular No. 14, December 1975.

3.4.2 Roadway Crossing Culverts

Preliminary culvert sizing and hydraulics are accomplished using the Federal Highway Administration's Hydraulic Design of Highway Culverts, Hydraulic Engineering Circular No. 5, September 1985. Analyses are performed using the HY-8 computer program, version 6.0, as distributed by the McTrans Center for Microcomputers in Transportation at the University of Florida.

4.0 10% DESIGN RESULTS

4.1 DETENTION BASINS

4.1.1 General

Three detention basins are included as part of the overall PR3B system. The primary function of the detention basins is to reduce the Pima Road Channel peak discharges by providing stormwater detention storage. The hydrology and stage/storage/discharge characteristics for all three basins are addressed and summarized in the System Ops Report. Refer to the 10% construction drawings, sheets GR1, GR2, and GR3, for basin grading configurations and details.

4.1.2 Sediment Storage Volumes

Allowances for sediment deposition are included as dead storage areas in the design of each basin. Sediment yield volumes and dead storage requirements used are those summarized in Table 3, City of Scottsdale, Desert Greenbelt Project, Pima Road Channel, Concept Review, November 1996, by George V. Sabol Consulting Engineers, Inc.. In summary, the allocated dead storage volumes for Happy Valley, Deer Valley, and Union Hills Detention Basins are 11.3, 13.2, and 8.4 acre-feet, respectively. Typically, the basin areas immediately downstream of the channel inlets are designated for sediment deposition areas.

4.1.3 Happy Valley and Deer Valley Detention Basins

Location and Land Ownership - Happy Valley Detention Basin (HVDB) is located at the northeast corner of Happy Valley Road and Pima Road. The basin is situated in a tract of land encompassing approximately 36 acres (gross) that is currently state owned land administered by the Arizona State Land Department (ASLD). Fifty-foot strips are provided along the north and east property lines to buffer adjacent landowners and those will be left in a natural condition. It is assumed that Happy Valley Road will ultimately be realigned to match the western segment at the range line (Pima Road) and a future right-of-way width of 80 feet is assumed. It is also assumed that the future half street right-of-way for Pima Road will be 75 feet.

Deer Valley Detention Basin (DVDB) is located at the northeast corner of the Deer Valley Road alignment and Pima Road. The basin is situated in a tract of land encompassing approximately 35 acres (gross) that is currently state owned land administered by the Arizona State Land Department (ASLD). Fifty-foot strips are provided along the north and east property lines to buffer adjacent landowners and those will be left in a natural condition. Currently, no permanent roadway exists along the Deer Valley Road alignment, and it is assumed that no future roadway will be constructed. It is also assumed that the future half street right-of-way for Pima Road will be 75 feet.

Planning - Neither basin is currently planned for additional development, such as parking lots or sporting fields, but may have long term potential for use as a passive municipal parks. A small path and trail stopover is currently planned for HVDB, with a shade ramada, picnicking, and drinking water. See Sheet L5 and L6 for landscaping treatment of the HVDB and DVDB, respectively.

Design - Both basins are designed to detain the 100-year, 6-hour storm without overtopping and are graded to provide gentle contouring of the slopes to enhance the visual setting. Low flow channels are designed to provide positive drainage of detained runoff to the basin outlet, once the storm has passed. Raised embankments with an effective height of less than 6 feet (non-jurisdictional per Arizona Department of Water Resources regulations) are provided along the southwestern end of each basin to provide additional stormwater storage capacity. Each embankment will consist of a cement stabilized alluvium (CSA) core covered by earthen backfill and landscaped. The CSA core serves as an emergency spillway for storm events greater than the design storm, and is designed with a 200-foot long, 1.5-foot deep notch to help concentrate lesser overtopping flows to a confined location. Inlet channels with roller compacted concrete (RCC) spillways enter each basin at the northwest and southeast corners. The HVDB is drained by a 42-inch circular conduit and the DVDB is drained by a 54-inch circular conduit. Small diversion berms and channels are designed along the north and east edges of each basin to direct local runoff to the channel inlet RCC locations.

Becomes Levee. FEMA Freeboard

Does it drain?

Quantities and Costs - The approximate construction envelope area and excavation volume for HVDB are 30.5 acres and 560,000 cubic-yards. The same estimates for DVDB are 28.2 acres and 710,000 cubic yards. Other quantities and cost estimates are summarized in Section 5 of this report.

4.1.4 Union Hills Detention Basin

Location and Land Ownership - Union Hills Detention Basin (UHDB) is an irregular shaped basin generally located south of the existing Union Hills Drive alignment and approximately 500 feet west of existing Pima Road. The future ADOT Loop 101 Freeway (Segment 9A) and future Union Hills Drive alignment form the southern and eastern boundaries of the basin. The total basin area comprises a major portion of Tracts N and I of State Plat No. 27 Amended, Core North, as platted in Book 352, Page 28, Records of Maricopa County, Arizona. The total basin area (gross) encompasses approximately 41 acres and is currently state owned land administered by the ASLD.

Planning - UHDB is planned as a multi-purpose sports-oriented regional park, with lighted softball and soccer fields, and picnic/ramada areas. The park is also a potential trailhead for the path and trail system. See the 10% drawings (Sheets GR1 and L7) for tentative planimetrics of the preliminary park facilities. A 50-foot flat area is designed along the future Union Hills Drive right-of-way to buffer the basin from the roadway and to provide additional grading area for the future overpass of Union Hills Drive over the Loop 101 Freeway.

Design - UHDB is designed to detain the 100-year, 24-hour storm without overflowing and does not incorporate a raised embankment for storage. The basin grading is contoured more efficiently than HVDB and DVDB, with side slopes varying from 1H:4V to 1H:6V. A small portion of the basin is graded within the ADOT Loop 101 Freeway right-of-way, per the IGA negotiated between ADOT and City of Scottsdale. Low flow channels are designed to provide positive drainage of detained runoff to the basin outlet and direct nuisance runoff around and away from the sporting fields. Pima Road Channel (Segment D) enters the basin from the east along the future Union Hills Drive alignment and the Hayden Road to UHDB Collector Channel (Segment A) enters the basin from the west along the Loop 101 Freeway alignment. Local offsite runoff

and portions of the Grayhawk development drain to the northern edge of the basin. Those flows are intercepted in small header channels and directed to specified inflow locations. Existing culverts along the existing Union Hills Drive will be removed and replaced by a new collection system. Due to physical restrictions, no RCC spillway is planned at the Pima Road Channel inflow location. The proposed design is to continue dropping the channel using the standard drop structure and channel configuration until the basin bottom elevation is attained. The Hayden Road to UHDB Collector Channel (Segment A) is designed with an RCC spillway to the basin floor.

Why not? What is the Consequence?

Utilities - The construction of UHDB will require the relocation of an existing water line within the Union Hills Drive alignment. The City of Scottsdale is also planning construction of a new 12-inch or 15-inch sanitary sewer along the ADOT frontage and southern edge of the basin. No costs or quantities are estimated for this line in this report.

Quantities and Costs - The construction envelope for UHDB is anticipated to include the entire basin area of approximately 41 acres plus approximately 1.1 acres of ADOT right-of-way. The total excavation volume is approximately 1,000,000 cubic yards. Other quantities and cost estimates are summarized in Section 5.

4.2 CONDUIT SYSTEMS

4.2.1 Happy Valley Detention Basin Outlet Conduit

Happy Valley DB

Location and Land Ownership - The pipeline originates at the headworks within HVDB and extends 710 feet downstream to the beginning of Pima Road Channel Segment F. A portion of the pipeline is situated within the property limits of the parcel for HVDB, which is ASLD land. The lower 300 feet is located within the proposed 100-foot drainage easement, that is privately owned at this time.

Design - A 42-inch reinforced concrete pipe (RCP) is sized for the pipeline, with a total length of approximately 710 feet and one 50-degree bend through a manhole. The pipeline conveys a peak 100-year, 6-hour discharge of 142 cfs and operates under pressure flow conditions. The hydraulic grade line (HGL) at the manhole will require the installation of a "watertight" manhole due to

Not necessarily, if the HGL is well below Ground.

pressure flow conditions. Supporting hydraulic grade line calculations and output from the StormCAD program are supplied in Appendix C.

Utilities - The pipeline crosses an 8-inch and 12-inch water line, but the planned culvert depth is likely to be below the elevations of the existing lines. There are therefore no utility conflicts expected.

Show in profile if known to guide future design.

Quantities and Costs - Quantities and cost estimates for this reach of pipeline are included in the cost estimates for Happy Valley Detention Basin.

4.2.2 Pima Road Storm Drain (DVDB to Sierra Pinta Outlet Structure)

Location and Land Ownership - The pipeline originates at the headworks within DVDB and extends approximately 5,300 feet downstream to a common headwall structure with a box culvert draining DC Ranch's Sierra Pinta Channel. The discharge point is also the beginning of Pima Road Channel Segment D. A portion of the pipeline is situated within the property limits of the parcel for DVDB, which is ASLD land. The remainder of the pipeline is generally located 5 feet west of the Pima Road monument line and within the existing right-of-way for Pima Road.

Specify Pipe type - CIPP, RCP, RCCP?

Design - The pipeline conveys peak 100-year, 6-hour discharges from DVDB and a small portion of DC Ranch. Pipe sizes range from 54-inch to 66-inch with a short segment of 53-inch by 83-inch horizontal elliptical pipe. An in-line junction structure is planned north of Thompson Peak Parkway to provide a connection and stub-out for the interception of DC Ranch runoff. The ultimate design of that junction structure will be coordinated with the engineering consultant sizing the lateral extension and inlet structure. For this 10% design, the main pipeline is designed such that the HGL is maintained at the crown of the pipe. Additional laterals are provided at manholes to drain the proposed catch basins within Pima Road and those laterals are also to be designed by others.

Provide stub-outs.

Two separate hydraulic grade line (HGL) calculations are required for this reach of storm drain due to time differentials between controlling hydrographs upstream and downstream of the DC

Ranch inflow junction (upstream of Thompson Peak Parkway (TPP)). The upper segment hydraulics are dictated by the peak DVDB discharge hydrograph and are not controlled by the hydraulic grade line at the DC Ranch junction. The lower segment and junction hydraulics are dictated by the DC Ranch inflow hydrograph at the design junction. Table 4-1 summarizes the design discharges for each HGL calculation. Supporting hydraulic grade line calculations and output from the StormCAD program are supplied in Appendix C.

TABLE 4-1

Summary of design discharges for Pima Road Storm Drain

Design Segment	Controlling Hydrograph	Time to Peak	Discharge Upstream of Junction	Discharge Downstream of Junction
		hours	cfs	cfs
(1)	(2)	(3)	(4)	(5)
Upper	DVDB	6.75	261	265
Lower	DC Ranch	3.25	121	356

It should be noted that the final design and construction of this reach of the PR3B system is being accomplished as part of the Pima Road Improvement Plans. The drawings (Sheets SD1 through SD11) included in the 10% package are actually the 60% design drawings that are part of the Pima Road improvement plan set, and are titled *Pima Road Storm Drain Plans*. All stationing and alignment references for this segment are tied to the Pima Road improvement project and match location call-outs are provided in the PR3B 10% plans upstream and downstream of the reach.

Utilities - All utility conflicts and relocation designs are identified on the *Pima Road Storm Drain Plans*. Refer to those drawings for further information.

Quantity and Costs - Quantity and cost estimates for the 60% design package are included in this report.

4.2.3 Union Hills Detention Basin to TPC Outlet: Line H

Location and Land Ownership - This pipeline originates at the UHDB headworks and extends easterly along ADOT Loop 101 Freeway and then southerly parallel to the proposed City of Scottsdale Water Campus Force Main (COSWCFM) project to the TPC retention basin. The portion of the pipeline paralleling ADOT Loop 101 Freeway will be constructed within the freeway right-of-way. The pipeline then passes south along ADOT right-of-way and parallel to COSWCFM to Bell Road through the Perimeter Center Development. South of Bell Road the pipeline passes through a private parcel (referred to as the Bell Road Parcel) and then proceeds to the outfall within the TPC Golf Course. Land within the TPC Golf Course is either owned privately or by the USBR, and is encumbered by a perpetual golf course easement granted to the City of Scottsdale. The Perimeter Center easement and a portion of the Bell Road Parcel easement will be shared with the COSWCFM project. The remaining reach south of the Bell Road Parcel will require a drainage easement.

Design - The pipeline (Sheets PP1 through PP8) is designed to convey the peak 100-year, 24-hour discharges from UHDB and the local 100-year, 24-hour runoff (concentration point C1A) collected within the channel paralleling the new Pima Road alignment (Pima Road to Pima TI: Segment C) and the channel paralleling ADOT Loop 101 Freeway east of UHDB (UHDB to Pima TI: Segment B). The main line pipe sizes range from 96-inch to 108-inch. An inline junction at the Pima Road TI is designed with an 84-inch lateral for collection of the accumulated flows at the Pima Road TI.

The hydraulic design of this pipeline is similar to the Pima Road Storm Drain in that two separate hydraulic grade line (HGL) calculations are required due to time differentials between controlling hydrographs upstream and downstream of the Pima Road TI junction. The upper segment hydraulics are dictated by the peak UHDB discharge hydrograph. The lower segment and

junction hydraulics are dictated by the local runoff inflow hydrograph. Table 4-2 summarizes the design discharges for each HGL calculation. Supporting hydraulic grade line calculations and output from the StormCAD program are supplied in Appendix C.

TABLE 4-2

Summary of design discharges conduit from UHDB to TPC Outlet Conduit (Line H)

Design Segment	Controlling Hydrograph	Time to Peak	Discharge Upstream of Junction	Discharge Downstream of Junction
		hours	cfs	cfs
(1)	(2)	(3)	(4)	(5)
Upper	UHDB	15.00	814	829
Lower	C1A	12.25	215	1,032

Utilities - The majority of utility crossings occur at Bell Road. The conduit at this location is preliminarily designed to pass under most if not all of the utilities. Refer to the 10% design (Sheets PP1 through PP8) for other potential utility conflicts.

Quantity and Costs - Quantity and cost estimates for the pipeline are summarized in Section 5. The majority of 108-inch pipe is planned to be cast-in-place construction, with the segments passing under roadway embankments being reinforced concrete pipe. The suitability for cast-in-place construction of this large diameter pipe will be assessed at the 30% design phase. Due to HGL pressures, the entire length of 96-inch pipeline will need to be reinforced concrete pipe.

4.3 PIMA ROAD CHANNEL

4.3.1 General

The Pima Road Channel is subdivided into three segments for the 10% design. Segment D is the reach of channel starting at UHDB and extending north to the Sierra Pinta alignment. Segment F starts at DVDB and extends north to HVDB. Segment G starts at HVDB and extends north to approximately one-quarter mile north of Jomax Road.

Location and Land Ownership

Segment D - The channel and path/trail easement for Segment D (Sheets PP9 through PP16) is located along the west side of Pima Road. The corridor is 250 feet wide as measured from the edge of the western Pima Road right-of-way line. Included in that corridor is a 50-foot buffer immediately adjacent to Pima Road. The reach from UHDB to Hualapai Road is owned by the City of Scottsdale. The reach approximately 530 feet north of Hualapai Road is state owned land, and the remaining reach extending north to Sierra Pinta (Beardsley) is owned by Grayhawk.

Segment F - The channel and path/trail easement for Segment F (Sheets PP18 through PP28) is located along the east side of Pima Road. The corridor is 150 feet wide as measured from the edge of the eastern Pima Road right-of-way line. Included in that corridor is a 50-foot buffer immediately adjacent to Pima Road. The entire length of corridor is privately owned property, except where the channel enters DVDB. Some of the corridor is already dedicated by developments within the reach and it is anticipated that other developments will be required to do the same. The half right-of-way along Pima Road varies from 55 feet to 75 feet. The corridor alignments shown on the 10% drawings assume that a full 75 right-of-way will be required for the entire strip.

Segment G - The channel and path/trail easement for Segment G (Sheets PP29 through PP36) is continued along the east side of Pima Road and the same 150-foot corridor and 50-foot buffer is maintained. It is assumed that a 75-foot halt right-of-way for Pima Road will be required for the entire strip. The entire length of corridor is currently state owned land.

4.3.2 Channel Geometry and Materials

In general, two primary channel configurations are proposed for the Pima Road Channel segments and those are indicated on the 10% drawings (Sheets D1 and D2) as Options 1 and 2. Both channels are fully lined with 750 psi strength cement stabilized alluvium (CSA) constructed with a nominal thickness of 3 feet. In essence, the two options present two methods of CSA construction. Option 1 channels are trapezoidal with 1V:4H side slopes and either a flat bottom for the narrower sections or incorporate a low-flow invert for the larger sections. The CSA lining for Option 1 is constructed by plating the entire channel. Option 2 channels are also trapezoidal with 1V:2H side slopes and slightly wider bottom widths than their Option 1 counterparts. The CSA lining of the side slopes for the Option 2 channels is constructed by bench or stair-step techniques. The maximum channel slope is 1.0 percent and the maximum design normal depth velocity is 15 feet per second (fps). A Manning's n of 0.022 is used to approximate the CSA lining roughness and the height of CSA lining for both options is extended to the freeboard elevation as calculated using the Maricopa County Hydraulics Manual. Table 4-3 summarizes normal depth calculations for the cross sections indicated on the 10% drawings at selected locations along the Pima Road Channel reach. Supporting printout from the FlowMaster program are included in Appendix D.

4.3.3 Drop Structure Geometry and Materials

Two options are provided for drop structures. Option A is a stair-step structure constructed of RCC. The face is at a slope of 1V:2H. A small drop, about 9 inches in height occurs in the channel bed about 10 feet upstream of the main drop. That small drop functions as a warning to unauthorized "recreational" users of the channel that "unexpected" conditions may exist. Option B is a rock structure constructed of large rock. The voids between the rock is filled with concrete grout. The rock structure is built upon a foundation of CSA channel lining. The small warning drop is also incorporated into the design. The rocks are sized to resist the benefit of the grout restraining forces.

The Option A structures may be more economical than the Option B structure, but the Option B structures may be desired where environmental enhancement is desired. For the Phase 1 portion

$h = \gamma h$
$= 62.4 \frac{lb}{ft^3} \times 4$ $\frac{250}{144} \frac{lb}{ft^2} =$ 2 psi

of the project, there may be only a few, if any, locations where the rock structure is warranted. However, some of the rock structures should be constructed during Phase I to demonstrate the utility of those structures for use during Phase 2 when more aesthetic treatment may be desired. The 10% cost estimate assumes all Option A drop structures. Illustration of the drop structures is provided in Sheet L2.

Special Design Considerations

All three segments of the Pima Road Channel will convey the peak discharges as supercritical flow. Froude numbers based on the normal depth calculations, however, indicate that the channel flows are only mildly supercritical (1.5 to 2.0). Some curvature of the channel is required at a few locations, and special consideration regarding potential superelevation and translatory wave formation at these changes in alignment will be considered at the later design phases. It may also be necessary to limit the channel construction to Option 2 in these locations to mitigate the effect of "run-up" on the side slopes. It is probable that additional freeboard will be required at these bend locations. The radii shown on the 10% plans are based on calculations using the minimum allowable radius formula presented in the Maricopa County Hydraulics Manual.

Utilities - Several major utility crossings occur along the reach of Pima Road Channel. Refer to the 10% design sheets for identification of existing and proposed utilities and potential conflicts.

TABLE 4-3

Summary of normal depth calculations at select locations along Pima Road Channel

					Option 1 Channel			Option 2 Channel		
Segment	Station	Location Description	Cross Section ID	Design Discharge	Normal Depth	Normal Velocity	Freeboard	Normal Depth	Normal Velocity	Freeboard
				cfs	feet	fps	feet	feet	fps	feet
(1)	(2)	(3)	(4)	(5)	(6)	(7)	(8)	(9)	(10)	(11)
Down Stream D	189+00	US of UHDB	A-A	2,860	4.97	14.49	2.12	4.58	15.17	2.08
D	242+00	DS of Sierra Pinta	A-A	2,250	4.45	13.54	2.00	4.05	14.02	2.00
F	1007+00	US of DVDB	B-B	2,020	4.90	13.57	2.00	4.41	14.37	2.00
F	1038+00	DS of Pinnacle Pk	B-B	1,810	4.67	13.18	2.00	4.17	13.88	2.00
F	1052+00	500' N of Pinnacle Pk	C-C	1,240	4.15	12.16	2.00	4.01	13.43	2.00
F	1074+00	½m N of Pinnacle Pk	C-C	250	1.97	8.00	2.00	1.65	8.26	2.00
F	1094+00	DS of HVDB Outlet	D-D	140	1.47	6.83	2.00	1.18	6.81	2.00
G	1008+00	US of HVDB	B-B	2,200	5.09	13.88	2.02	4.60	14.75	2.00
G	1023+00	US of Desert Hghlnds	C-C	1,510	4.52	12.79	2.00	4.45	14.20	2.00
Upstream G	1053+00	US of Jomax	C-C	1,230	4.13	12.14	2.00	3.99	13.4	2.00

Quantity and Costs

Significant excavation and CSA costs are associated with the construction of the Pima Road Channel segments. Cost optimization calculations were performed to determine the most economical and hydraulically effective channel configurations for the Pima Road Channel. The results of the optimization study generally indicate that Option 1 channels are about 15 percent higher cost than the Option 2 counterpart. In order to provide a conservative 10% design level cost estimate, all channels are assumed to be Option 1 unless specifically noted otherwise.

4.4 Collector Channels

4.4.1 General

Four collector channels are included in the PR3B project. Segment A (Sheets PP42 and PP43) is a collector channel paralleling the ADOT Loop 101 Freeway, from Hayden Road east to UHDB. Segment B (Sheets PP38 through PP40) is a collector channel paralleling the ADOT Loop 101 Freeway, from UHDB east to the Pima Road TI. Segment C (Sheet PP41) s a collector channel paralleling the new Pima Road alignment, from the existing Pima Road south to the Pima Road TI. Segment E (Sheet PP44) parallels the new Union Hills Drive alignment from the existing Pima Road west to its junction with Pima Road Channel Segment D.

Location and Land Ownership

The drainage easement corridors for Collector Segments A, B, and C are all located on state owned land, and a portion of Segment B is situated within the existing ADOT right-of-way. Collector Segment E is completely located within land owned by the City. See the 10% drawings for proposed drainage easement boundaries.

4.4.2 Channel Geometry and Materials

Collector Segments A, B, and C are shotcrete lined trapezoidal sections with 8-foot wide bottoms and 1V:2H side slopes. Collector Segment E is similar except for a 10-foot bottom width. Manning's n for the shotcrete lining is estimated to be 0.022. Table 4-4 summarizes the design discharges and normal depth calculations for each channel. Hydraulic analyses for the collector channels are provided in Appendix E.

TABLE 4-4

Summary of normal depth calculations for Collector Segments

Segment	Peak Discharge	Channel Slope	Bottom Width	Normal Depth	Normal Velocity	Freeboard
	cfs	ft/ft	feet	feet	fps	feet
(1)	(2)	(3)	(4)	(5)	(6)	(7)
A	776	0.0025	8	5.53	7.36	2.00
B	309	0.0075	8	2.68	8.63	2.00
C	196	0.0100	8	1.96	8.42	2.00
E	446	0.0085	10	2.88	9.83	2.00

Quantity and Costs

See Section 5 for quantity estimates and material costs

4.5 MAJOR STRUCTURES

4.5.1 TPC Outlet Structure

Calculations summarizing the preliminary sizing of the Contra Costa energy dissipater are provided in Appendix F. In summary, the structure incorporates a series of two baffles, one half size and then one full size to receive the impact of the jet of water discharging from the conduit and dissipate the energy. The basin is specifically designed to operate in conditions where there is no tailwater. The finished structure will be approximately 75 feet long, 18 feet high, and approximately 54 feet wide at the top of the sloping sidewalls. The first baffle is 4 feet high and the second baffle is 8 feet high. Refer to the landscape concept plans for a perspective rendering of the structure as it would be positioned at the TPC.

4.5.2 Roadway Culverts

Roadway culverts shown on the 10% plans are preliminarily designed using the nomographs of HEC-5 and the HY-8 program. Box sizes on Pima Road Channel are estimated to maximize the span width and maintain a headwater depth no greater than 7 feet to keep the flows within the lined portions of the channel. Due to the steep channels and supercritical profiles, each box is typically defaulting to inlet control during the peak discharges. At the 30% design level, hydraulic modeling will be performed to analyze the boxes as bridges with piers. Summary output from the HY-8 runs are provided in Appendix G. Illustration of a culvert crossing is provided in Sheet L2.

The costs included in the 10% cost estimate reflect the inclusion of special structural enhancements such as bull-nose extensions of the culvert walls at the inlets to mitigate clogging potential and help streamline flows into the box. Special transitions will also be designed to move the supercritical flows smoothly into and away from the box. A design-build alternative to the standard ADOT concrete box structures is the ConArch culvert system. According to discussions with the representatives, a comparable ConArch culvert system can be constructed for half the cost of a standard box.

Not robust as conventional culvert.

4.5.3 Channel Inlets to the Detention Basins

Roller compacted concrete (RCC) spillways are proposed to drop the inlet channels into the Happy Valley and Deer Valley Detention Basins. The RCC spillway is designed as a series of staggered steps with periodic 5 to 8 foot landings. According to studies performed by the USBR the tumbling affect of the runoff moving over the spillways will provide adequate energy dissipation. The staggering of the steps will also mitigate the "fish ladder" appearance of the structure.

How much energy dissipation? To the point where unlined earthern banks & invert will be okay?

4.5.4 Grade Separated Crossings

As part of the 10% design, grade separation structures (Sheets PP45 through PP49) are proposed at five locations along the project corridor. The Grade Separated Crossings (GSC's) are a part of the proposed path and trail system and are located at Hualapai Road, Thompson Peak Parkway, Pima Road at Deer Valley Road, Pinnacle Peak Road and Happy Valley Road. The GSC's will provide the trail and path system users (equestrians, pedestrians, bicyclists, etc.) a box culvert in which they can safely cross beneath these roadways. Typically, the GSC's are 14 feet to 16 feet

below natural ground and provide a usable interior area 20 feet wide and 10 feet to 12 feet high. Equestrian users will be separated from other users by a safety rail which equally divides the GSC's. Illustration of the grade separated crossing is shown in Sheet L8.

A Grade Separation Structures Alternative Report was prepared by TY Lin International and is included in Appendix B. Three alternative structure types were evaluated and typical cross sections of each are included. TY Lin provided cost estimates for each structure type using a "cost per foot of structure" approach which were then applied in the 10% cost estimate. The use of ConArch or similar system should be evaluated beyond the 10% design as a possible cost saving alternative.

4.6 PATH AND TRAIL

The 10% plans include illustrating the general location of the proposed multi-use path and trail system with the project corridor from approximately Union Hills Road to Jomax Road. Bicyclists, joggers, walkers and other recreationalists will be provided a paved path. Equestrians will be provided an unpaved trail. The path and trail will typically be separated from one another except at the five proposed Grade Separated Crossing locations and will be positioned between the Pima Road and the proposed drainage channel. The path and trail system is located on the west side of Pima Road from the Union Hills Detention Basin to the GSC at Deer Valley Road. The path and trail system is located on the east side of Pima Road from the Deer Valley Detention Basin to Jomax Road.

Larson, Voss and Associates, Inc. (LVA) prepared a report entitled Pima Road Three Basins Landscape and Aesthetics, 10% Design Narrative, which, in part, addresses the trail and path system landscape and aesthetics (Appendix A). A typical design for the path and trail at the GSC's and well as motif alternatives to be used in safety rail design are included in the 10% plans (Sheets L4 and L8). In addition, LVA prepared a Master Path and Trail Plan which illustrates future potential paths and trails and connection nodes within the project corridor (Appendix A).

Ten percent level cost estimates for the trail and path system were prepared using a "cost per foot" approach.

4.7 LANDSCAPING AND AESTHETICS

Larson, Voss and Associates, Inc., addresses the project's overall landscape and aesthetic design issues in their report, Pima Road Three Basins Landscape and Aesthetics, 10% Design Narrative, included as Appendix A. Typical landscape designs for the channel, detention basins, culverts, drop structures and grade separated crossings are illustrated in the 10% plans (Sheets L1 through L8). It is the intent that view of the channel and detention basins be minimized as much as practical. This will be accomplished by "screening" the view of the channel and detention basins from Pima Road and other cross streets using a 50 foot to 100 foot wide "Scenic Corridor" buffer. The vegetation within the "Scenic Corridor" will be natural, enhanced or, where disturbed by construction activities, revegetated using native arid plant species including trees, cacti, shrubs and ground cover.

Ten percent cost estimates assumed $0.50 per square foot for native plant salvage, $1.00 per square foot for landscaping (revegetation) and irrigation, and $0.05 per square foot for non-irrigated hydroseed.

5.0 Cost Estimates

Engineers estimate of construction cost are provided in the following tables. Table 5-1 provides a summary of estimated construction cost for the Phase 1 and 2 portions of the PR3B Project and the total for the project. Table 5-2 (18 sheets) provides details of the cost estimate for each major item that is shown in Table 5-1. Table 5-3 provides an estimate of the land acquisition requirements for the various land parcels. Land acquisition costs for those parcels are not provided at the 10% design level. Some of those land parcels are to be dedicated to the PR3B Project. Certain land parcels may only require land easements. Those issues will be resolved prior to final design.

Table 5-1
Engineers Estimate of Construction Cost - Summary

City of Scottsdale - Transportation Department				
Pima Road Three Basins Project - 10% Design				
	Construction	Engineering	Contingency	Total
Description	Cost	Cost (10%)	Cost(15%)	Cost
Phase 1				
Deer ValleyDetention Basin	$4,633,486.41	$463,348.64	$695,022.96	$5,791,858.01
Union Hills Detention Basin	$6,187,362.51	$618,736.25	$928,104.38	$7,734,203.14
Collector Channel Segment - "A" (Hayden Rd to Union Hills Basin)	$485,307.48	$48,530.75	$72,796.12	$606,634.35
Collector Channel Segment - "B" (South along exist. Pima Rd to new Pima Road)	$122,702.69	$12,270.27	$18,405.40	$153,378.36
Collector Channel Segment - "C" (East along freeway to new Pima Road)	$432,546.87	$43,254.69	$64,882.03	$540,683.59
Mainline Channel Segment - "D" (Sierra Pinta to Union Hills Basin)	$4,113,407.34	$411,340.73	$617,011.10	$5,141,759.18
Collector Channel Segment - "E" (Ties into Segment "D")	$293,337.03	$29,333.70	$44,000.55	$366,671.29
Pima Road Storm Drain (Deer Valley to Sierra Pinta)	$1,110,931.50	$111,093.15	$166,639.73	$1,388,664.38
Storm Drain Line "H"(Union Hills Basin to CAP Basin)	$3,240,404.11	$324,040.41	$486,060.62	$4,050,505.14
Deer Valley Road Grade Separated Crossing	$756,443.21	$75,644.32	$113,466.48	$945,554.01
Subtotal Phase 1	$21,375,929.15	$2,137,592.91	$3,206,389.37	$26,719,911.43
Phase 2				
Happy Valley Detention Basin	$4,539,908.73	$453,990.87	$680,986.31	$5,674,885.91
Mainline Channel Segment - "F" (Happy Valley to Deer Valley Basin)	$5,443,301.85	$544,330.19	$816,495.28	$6,804,127.31
Mainline Channel Segment - "G" (N/O of Jomax to Happy Valley Basin)	$2,829,152.20	$282,915.22	$424,372.83	$3,536,440.25
Hualapai Road Grade Separated Crossing	$712,451.90	$71,245.19	$106,867.79	$890,564.88
Thompson Peak Road Grade Separated Crossing	$881,173.70	$88,117.37	$132,176.06	$1,101,467.13
Pinnacle Peak Road Grade Separated Crossing	$890,014.73	$89,001.47	$133,502.21	$1,112,518.42
Happy Valley Road Grade Separated Crossing	$485,912.05	$48,591.20	$72,886.81	$607,390.06
Subtotal Phase 2	$15,781,915.17	$1,578,191.52	$2,367,287.27	$19,727,393.96
Total	$37,157,844.31	$3,715,784.43	$5,573,676.65	$46,447,305.39

Table 5-2
Engineers Estimate of Construction Cost

City of Scottsdale - Transportation Department					Rev 12-1-97 cvg	
Pima Road Three Basins Project - 10% Design						
Item No.	Description	Unit	Quantity	Unit Price	Cost	Totals
Happy Valley Detention Basin						
1	Mobilization	LS	1	$216,186.13	$216,186.13	
2	Project Signing Allowance	LS	1	$5,000.00	$5,000.00	
3	Traffic Control	LS	1	$10,000.00	$10,000.00	
4	NPDES/SWPPP Permit	LS	1	$10,000.00	$10,000.00	
5	Vegetation Salvage	AC	30.54	$21,780.00	$665,161.20	
6	Construction Staking and As-Builts	LS	1	$10,000.00	$10,000.00	
7	Clear and Grub	AC	30.54	$1,600.00	$48,864.00	
8	Basin Excavation	CY	560000	$3.00	$1,680,000.00	
9	Spillway Embankment	CY	4000	$3.00	$12,000.00	
10	Spillway Cutoff Trench Excavation & Backfill	CY	5200	$4.00	$20,800.00	
11	Spillway Inner Core (750 psi CSA)	CY	6325	$35.00	$221,375.00	
12	42 inch Inlet Headwall ADOT B11.12	EA	1	$3,000.00	$3,000.00	
13	42 inch Outlet Headwall ADOT B11.12	EA	1	$4,000.00	$4,000.00	
14	42 inch RCP Storm Drain	LF	700	$110.00	$77,000.00	
15	42" Storm Drain Manhole (Watertight)	EA	1	$4,000.00	$4,000.00	
16	Roller Compacted Concrete Spillway Inlet	CY	1380	$90.00	$124,200.00	
17	Dumped Rip-Rap	CY	1525	$40.00	$61,000.00	
18	Basin Fine Grading	SY	148000	$0.25	$37,000.00	
19	Landscaping/Revegetation/Irrigation	AC	30.54	$43,560.00	$1,330,322.40	
						$4,539,908.73

Table 5-2
Engineers Estimate of Construction Cost

City of Scottsdale - Transportation Department					Rev 12-1-97 cvg	
Pima Road Three Basins Project - 10% Design						
Item No.	Description	Unit	Quantity	Unit Price	Cost	Totals
Deer Valley Detention Basin						
1	Mobilization	LS	1	$220,642.21	$220,642.21	
2	Project Signing Allowance	LS	1	$5,000.00	$5,000.00	
3	Traffic Control	LS	1	$10,000.00	$10,000.00	
4	NPDES/SWPPP Permit	LS	1	$10,000.00	$10,000.00	
5	Vegetation Salvage	AC	28.18	$21,780.00	$613,760.40	
6	Construction Staking and As-Builts	LS	1	$10,000.00	$10,000.00	
7	Clear and Grub	AC	28.18	$1,600.00	$45,088.00	
8	Basin Excavation	CY	710000	$3.00	$2,130,000.00	
9	Spillway Embankment	CY	1850	$3.00	$5,550.00	
10	Spillway Cutoff Trench Excavation & Backfill	CY	2625	$4.00	$10,500.00	
11	Spillway Inner Core (750 psi CSA)	CY	2975	$35.00	$104,125.00	
12	54 inch Inlet Headwall ADOT B11.12	EA	1	$5,000.00	$5,000.00	
13	54 inch RCP Storm Drain	LF	225	$140.00	$31,500.00	
14	54 inch Storm Drain Manhole (Watertight)	EA	1	$6,000.00	$6,000.00	
15	Roller Compacted Concrete Spillway Inlet	CY	1720	$90.00	$154,800.00	
16	Basin Fine Grading	SY	136000	$0.25	$34,000.00	
18	Landscaping/Revegetation/Irrigation	AC	28.18	$43,560.00	$1,227,520.80	
19	Utility Relocation	LS	1	$10,000.00	$10,000.00	
						$4,633,486.41

Table 5-2
Engineers Estimate of Construction Cost

City of Scottsdale - Transportation Department					Rev 12-1-97 cvg	
Pima Road Three Basins Project - 10% Design						
Item No.	Description	Unit	Quantity	Unit Price	Cost	Totals
Union Hills Detention Basin						
1	Mobilization	LS	1	$294,636.31	$294,636.31	
2	Project Signing Allowance	LS	1	$5,000.00	$5,000.00	
3	Traffic Control	LS	1	$20,000.00	$20,000.00	
4	NPDES/SWPPP Permit	LS	1	$20,000.00	$20,000.00	
5	Vegetation Salvage	AC	41.25	$21,780.00	$898,425.00	
6	Construction Staking and As-Builts	LS	1	$25,000.00	$25,000.00	
7	Clear and Grub	AC	41.25	$1,600.00	$66,000.00	
8	Basin Excavation	CY	1000000	$3.00	$3,000,000.00	
9	Dumped Rip-Rap	CY	475	$40.00	$19,000.00	
10	Roller Compacted Concrete Spillway Inlet	CY	4800	$90.00	$432,000.00	
11	Basin Fine Grading	SY	200000	$0.25	$50,000.00	
12	Hydroseed/Irrigation	AC	18.90	$13,068.00	$246,985.20	
13	Landscaping/Revegetation/Irrigation	AC	22.35	$43,560.00	$973,566.00	
14	Utility Relocation	LS	1	$75,000.00	$75,000.00	
15	36" CMP Culvert	LF	150	$40.00	$6,000.00	
16	36" Headwall	EA	1	$2,000.00	$2,000.00	
17	60" CMP Culvert	LF	350	$125.00	$43,750.00	
18	60" Headwall	EA	2	$5,000.00	$10,000.00	
						$6,187,362.51

Table 5-2
Engineers Estimate of Construction Cost

City of Scottsdale - Transportation Department					Rev 12-1-97 cvg	
Pima Road Three Basins Project - 10% Design						
Item No.	Description	Unit	Quantity	Unit Price	Cost	Totals
Hayden to UHDB Collector Channel: Segment A						
1	Mobilization	LS	1	$23,109.88	$23,109.88	
2	Traffic Control	LS	1	$5,000.00	$5,000.00	
3	Project Signing Allowance	LS	1	$2,500.00	$2,500.00	
4	NPDES/SWPPP Permit	LS	1	$5,000.00	$5,000.00	
5	Vegetation Salvage	AC	3.92	$21,780.00	$85,377.60	
6	Construction Staking and As-Builts	LS	1	$5,000.00	$5,000.00	
7	Clear and Grub	AC	3.92	$1,600.00	$6,272.00	
8	Channel Excavation	CY	28000	$3.00	$84,000.00	
9	6" Shotcrete Channel Lining	SY	12500	$17.00	$212,500.00	
10	Landscaping/Revegetation/Irrigation	AC	0.8	$43,560.00	$34,848.00	
11	Roller Compacted Concrete Drop Structure	CY	130	$90.00	$11,700.00	
12	Utility Relocation	LS	1	$10,000.00	$10,000.00	
						$485,307.48

Table 5-2
Engineers Estimate of Construction Cost

City of Scottsdale - Transportation Department					Rev 12-1-97 cvg	
Pima Road Three Basins Project - 10% Design						
Item No.	Description	Unit	Quantity	Unit Price	Cost	Totals
UHDB to Pima TI Collector Channel: Segment B						
1	Mobilization	LS	1	$5,604.89	$5,604.89	
2	Traffic Control	LS	1	$5,000.00	$5,000.00	
3	Project Signing Allowance	LS	1	$2,500.00	$2,500.00	
4	NPDES/SWPPP Permit	LS	1	$5,000.00	$5,000.00	
5	Vegetation Salvage	AC	0.93	$21,780.00	$20,255.40	
6	Construction Staking and As-Builts	LS	1	$5,000.00	$5,000.00	
7	Clear and Grub	AC	0.93	$1,600.00	$1,488.00	
8	Channel Excavation	CY	4900	$3.00	$14,700.00	
9	6" Shotcrete Channel Lining	SY	3100	$17.00	$52,700.00	
10	Landscaping/Revegetation/Irrigation	AC	0.24	$43,560.00	$10,454.40	
						$122,702.69

Table 5-2
Engineers Estimate of Construction Cost

City of Scottsdale - Transportation Department					Rev 12-1-97 cvg	
Pima Road Three Basins Project - 10% Design						
Item No.	Description	Unit	Quantity	Unit Price	Cost	Totals
Union Hills Basin to Pima TI Collector Channel: Segment C						
1	Mobilization	LS	1	$20,597.47	$20,597.47	
2	Project Signing Allowance	LS	1	$3,000.00	$3,000.00	
3	Traffic Control	LS	1	$5,000.00	$5,000.00	
4	NPDES/SWPPP Permit	LS	1	$5,000.00	$5,000.00	
5	Vegetation Salvage	AC	3.49	$21,780.00	$76,012.20	
6	Construction Staking and As-Builts	LS	1	$10,000.00	$10,000.00	
7	Clear and Grub	AC	3.49	$1,600.00	$5,584.00	
8	Channel Excavation	CY	16400	$3.00	$49,200.00	
9	6" Shotcrete Channel Lining	SY	12700	$17.00	$215,900.00	
10	Landscaping/Revegetation/Irrigation	AC	0.97	$43,560.00	$42,253.20	
						$432,546.87

Table 5-2
Engineers Estimate of Construction Cost

City of Scottsdale - Transportation Department					Rev 12-1-97 cvg	
Pima Road Three Basins Project - 10% Design						
Item No.	Description	Unit	Quantity	Unit Price	Cost	Totals
Pima Road Channel: Segment D						
1	Mobilization	LS	1	$195,876.54	$195,876.54	
2	Project Signing Allowance	LS	1	$5,000.00	$5,000.00	
3	Traffic Control	LS	1	$10,000.00	$10,000.00	
4	NPDES/SWPPP Permit	LS	1	$10,000.00	$10,000.00	
5	Vegetation Salvage	AC	17.42	$21,780.00	$379,407.60	
6	Construction Staking and As-Builts	LS	1	$25,000.00	$25,000.00	
7	Clear and Grub	AC	17.42	$1,600.00	$27,872.00	
8	Channel Excavation	CY	189000	$3.00	$567,000.00	
9	Dumped Rip-Rap	CY	230	$40.00	$9,200.00	
10	Soil Cement Channel Lining (750 psi)	CY	51900	$35.00	$1,816,500.00	
11	Roller Compacted Concrete Drop Structure	CY	4900	$90.00	$441,000.00	
12	4 Barrel 12' x 8' RCB Culvert	LF	150	$2,000.00	$300,000.00	
13	4 Barrel 12' x 8' RCB Culvert Outlet Structure	EA	2	$19,000.00	$38,000.00	
14	4 Barrel 12' x 8' RCB Culvert Inlet Structure	EA	2	$19,000.00	$38,000.00	
15	Landscaping/Revegetation/Irrigation	AC	3.02	$43,560.00	$131,551.20	
16	Utility Relocation	LS	1	$25,000.00	$25,000.00	
17	1'x2' Concrete Cutoff Wall	CY	940	$100.00	$94,000.00	
						$4,113,407.34

Table 5-2
Engineers Estimate of Construction Cost

City of Scottsdale - Transportation Department					Rev 12-1-97 cvg	
Pima Road Three Basins Project - 10% Design						
Item No.	Description	Unit	Quantity	Unit Price	Cost	Totals
Union Hills Collector Channel: Segment E						
1	Mobilization	LS	1	$13,968.43	$13,968.43	
2	Project Signing Allowance	LS	1	$2,500.00	$2,500.00	
3	Traffic Control	LS	1	$10,000.00	$10,000.00	
4	NPDES/SWPPP Permit	LS	1	$2,500.00	$2,500.00	
5	Vegetation Salvage	AC	2.09	$21,780.00	$45,520.20	
6	Construction Staking and As-Builts	LS	1	$10,000.00	$10,000.00	
7	Clear and Grub	AC	2.09	$1,600.00	$3,344.00	
8	Channel Excavation	CY	4700	$3.00	$14,100.00	
9	10' x 6' RCB Culvert	LF	90	$430.00	$38,700.00	
10	10' x 6' RCB Culvert Outlet Structure	EA	1	$5,000.00	$5,000.00	
11	10' x 6' RCB Culvert Inlet Structure	EA	1	$3,000.00	$3,000.00	
12	6" Shotcrete Channel Lining	CY	3100	$17.00	$52,700.00	
13	Landscaping/Revegetation/Irrigation	AC	0.74	$43,560.00	$32,234.40	
14	Utility Relocation	LS	1	$10,000.00	$10,000.00	
15	Subgrade Preparation	SY	2700	$1.50	$4,050.00	
16	Aggregate Base Course, 8" thick	TON	1000	$20.00	$20,000.00	
17	Asphalt Concrete, 4" thick, C-3/4	TON	600	$38.00	$22,800.00	
18	Prime and Tack Coats	TON	6.4	$300.00	$1,920.00	
19	12 inch CMP Culvert	LF	40	$25.00	$1,000.00	
						$293,337.03

Table 5-2
Engineers Estimate of Construction Cost

City of Scottsdale - Transportation Department					Rev 12-1-97 cvg	
Pima Road Three Basins Project - 10% Design						
Item No.	Description	Unit	Quantity	Unit Price	Cost	Totals
Pima Road Channel: Segment F						
1	Mobilization	LS	1	$259,204.85	$259,204.85	
2	Project Signing Allowance	LS	1	$5,000.00	$5,000.00	
3	Traffic Control	LS	1	$25,000.00	$25,000.00	
4	NPDES/SWPPP Permit	LS	1	$10,000.00	$10,000.00	
5	Vegetation Salvage	AC	20.59	$21,780.00	$448,450.20	
6	Construction Staking and As-Builts	LS	1	$25,000.00	$25,000.00	
7	Clear and Grub	AC	20.59	$1,600.00	$32,944.00	
8	Channel Excavation	CY	173700	$3.00	$521,100.00	
9	Soil Cement Channel Lining (750 psi)	CY	53550	$35.00	$1,874,250.00	
10	Roller Compacted Concrete Drop Structure	CY	6370	$90.00	$573,300.00	
11	Landscaping/Revegetation/Irrigation	AC	3.88	$43,560.00	$169,012.80	
12	Utility Relocation	LS	1	$50,000.00	$50,000.00	
13	1'x2' Concrete Cutoff Wall	CY	1157	$100.00	$115,700.00	
14	4 Barrel 10' x 8' RCB Culvert	LF	100	$1,510.00	$151,000.00	
15	4 Barrel 10' x 8' RCB Culvert Outlet Structure	EA	1	$15,000.00	$15,000.00	
16	4 Barrel 10' x 8' RCB Culvert Inlet Structure	EA	1	$20,000.00	$20,000.00	
17	4 Barrel 10' x 6' RCB Culvert	LF	519	$1,360.00	$705,840.00	
18	4 Barrel 10' x 6' RCB Culvert Outlet Structure	EA	6	$15,000.00	$90,000.00	
19	4 Barrel 10' x 6' RCB Culvert Inlet Structure	EA	6	$20,000.00	$120,000.00	
20	3 Barrel 8' x 6' RCB Culvert	LF	150	$850.00	$127,500.00	
21	3 Barrel 8' x 6' RCB Culvert Outlet Structure	EA	3	$15,000.00	$45,000.00	
22	3 Barrel 8' x 6' RCB Culvert Inlet Structure	EA	3	$20,000.00	$60,000.00	
						$5,443,301.85

Table 5-2
Engineers Estimate of Construction Cost

City of Scottsdale - Transportation Department					Rev 12-1-97 cvg	
Pima Road Three Basins Project - 10% Design						
Item No.	Description	Unit	Quantity	Unit Price	Cost	Totals
Pima Road Channel: Segment G						
1	Mobilization	LS	1	$131,388.20	$131,388.20	
2	Project Signing Allowance	LS	1	$5,000.00	$5,000.00	
3	Traffic Control	LS	1	$25,000.00	$25,000.00	
4	NPDES/SWPPP Permit	LS	1	$10,000.00	$10,000.00	
5	Vegetation Salvage	AC	11.92	$21,780.00	$259,617.60	
6	Construction Staking and As-Builts	LS	1	$25,000.00	$25,000.00	
7	Clear and Grub	AC	11.92	$1,600.00	$19,072.00	
8	Channel Excavation	CY	120000	$3.00	$360,000.00	
9	Soil Cement Channel Lining (750 psi)	CY	30300	$35.00	$1,060,500.00	
10	Roller Compacted Concrete Drop Structure	CY	4500	$90.00	$405,000.00	
11	Landscaping/Revegetation/Irrigation	AC	2.24	$43,560.00	$97,574.40	
12	4 Barrel 10' x 8' RCB Culvert	LF	130	$1,510.00	$196,300.00	
13	4 Barrel 10' x 8' RCB Culvert Outlet Structure	EA	1	$22,500.00	$22,500.00	
14	4 Barrel 10' x 8' RCB Culvert Inlet Structure	EA	1	$29,000.00	$29,000.00	
15	3 Barrel 8' x 6' RCB Culvert	LF	72	$850.00	$61,200.00	
16	3 Barrel 8' x 6' RCB Culvert Outlet Structure	EA	1	$22,000.00	$22,000.00	
17	3 Barrel 8' x 6' RCB Culvert Inlet Structure	EA	1	$25,000.00	$25,000.00	
18	Utility Relocation	LS	1	$5,000.00	$5,000.00	
19	1'x2' Concrete Cutoff Wall	CY	700	$100.00	$70,000.00	
						$2,829,152.20

Table 5-2
Engineers Estimate of Construction Cost

City of Scottsdale - Transportation Department					Rev 12-1-97 cvg	
Pima Road Three Basins Project - 10% Design						
Item No.	Description	Unit	Quantity	Unit Price	Cost	Totals
Pima Road Storm Drain						
1	Mobilization	LS	1	$52,901.50	$52,901.50	
2	Construction Surveying and As-Builts	LS	1	$10,000.00	$10,000.00	
3	Channel Excavation	CY	500	$3.00	$1,500.00	
4	Remove Pipes (less than 24")	LF	25	$15.00	$375.00	
5	Remove Pipes (24" to 48")	LF	216	$25.00	$5,400.00	
6	Traffic Control	LS	1	$10,000.00	$10,000.00	
7	Off-Duty Police Officer	HR	20	$20.00	$400.00	
8	53" X 83" HE Headwall, Wingwall & Apron	LS	1	$25,000.00	$25,000.00	
9	66" X 66" X 60" Junction Structure	EA	1	$10,000.00	$10,000.00	
10	60" X 66" X 60" Junction Structure	EA	1	$10,000.00	$10,000.00	
11	Pipe Plug, 12" - 36", MAG 427	EA	3	$300.00	$900.00	
12	Pipe Plug, 33" - 72", MAG 427	EA	1	$900.00	$900.00	
13	Pipe Plug, 53" x 83" HE	EA	1	$1,200.00	$1,200.00	
14	27" Sewer Line	LF	254	$95.00	$24,130.00	
15	Connect to Existing 27" Sewer Manhole	EA	2	$5,000.00	$10,000.00	
16	54" Storm Drain Pipe	LF	1750	$140.00	$245,000.00	
17	60" Storm Drain Pipe	LF	500	$150.00	$75,000.00	
18	66" Storm Drain Pipe	LF	2957	$160.00	$473,120.00	
19	53" x 83" HE RGRCP Storm Drain Pipe	LF	127	$615.00	$78,105.00	
20	5' Dia. Sewer Manhole 20'+ depth, MAG 420 (27")	EA	2	$5,000.00	$10,000.00	
21	Sewer Manhole Drop Conn., MAG 426, Type B (27")	EA	1	$5,000.00	$5,000.00	
22	54" X 45 Deg. Bend Storm Drain Manhole, MAG 522 & 521 (Mod)	EA	1	$6,000.00	$6,000.00	
23	60" X 53" X 83" X 33 Deg Bend Sorm Dain Transition Manhole	EA	1	$10,000.00	$10,000.00	
24	54" X 60" Storm Drain Transition Manhole, COP P-1560	EA	1	$6,000.00	$6,000.00	
25	54" Storm Drain Manhole, MAG 522 & 521	EA	2	$5,000.00	$10,000.00	
26	66" Storm Drain Manhole, MAG 522 & 521	EA	4	$5,000.00	$20,000.00	
27	Storm Drain Manhole Shaft, MAG 522	EA	2	$5,000.00	$10,000.00	
						$1,110,931.50

Table 5-2
Engineers Estimate of Construction Cost

City of Scottsdale - Transportation Department					Rev 12-1-97 cvg	
Pima Road Three Basins Project - 10% Design						
Item No.	Description	Unit	Quantity	Unit Price	Cost	Totals
UHDB to TPC Outlet Conduit: Line H						
1	Mobilization	LS	1	$147,366.47	$147,366.47	
2	Vegetation Salvage	AC	6.69	$21,780.00	$145,708.20	
3	Vegetation Salvage (within golf course)	AC	1.46	$23,958.00	$34,978.68	
4	Clear and Grub	AC	8.16	$1,600.00	$13,056.00	
5	Construction Surveying and As-Builts	LS	1	$10,000.00	$10,000.00	
6	NPDES/SWPPP Permit	LS	1	$5,000.00	$5,000.00	
7	Traffic Control	LS	1	$5,000.00	$5,000.00	
8	Project Signing Allowance	LS	1	$5,000.00	$5,000.00	
9	108 inch Outlet Structure	LS	1	$65,000.00	$65,000.00	
10	Safety Railing	LF	204	$25.00	$5,100.00	
11	Decorative Stone Veneer	SF	792	$10.00	$7,920.00	
12	Gunite Apron	SY	406	$26.00	$10,556.00	
13	Decorative Boulders	TON	25	$125.00	$3,125.00	
14	Channel Excavation	CY	4500	$3.00	$13,500.00	
15	108 inch RCP Storm Drain	LF	4585	$340.00	$1,558,900.00	
16	108 inch Storm Drain Manhole Structure	EA	6	$10,000.00	$60,000.00	
17	108 inch Storm Drain Manhole (Shaft Only)	EA	3	$5,000.00	$15,000.00	
18	108 inch Pipe Collar	EA	1	$5,000.00	$5,000.00	
19	96 inch Inlet Headwall ADOT B12.10	EA	1	$9,000.00	$9,000.00	

Table 5-2
Engineers Estimate of Construction Cost

City of Scottsdale - Transportation Department					Rev 12-1-97 cvg	
Pima Road Three Basins Project - 10% Design						
Item No.	Description	Unit	Quantity	Unit Price	Cost	Totals
20	96 inch RCP Storm Drain	LF	2520	$275.00	$693,000.00	
21	96 inch Storm Drain Manhole Structure (Watertight)	EA	1	$9,000.00	$9,000.00	
22	96 inch Storm Drain Manhole (Shaft Only, Watertight)	EA	3	$5,000.00	$15,000.00	
23	108" X 96" X 84" Junction Structure	EA	1	$15,000.00	$15,000.00	
24	84 inch Inlet Headwall ADOT B11.12	EA	1	$5,000.00	$5,000.00	
25	84 inch RCP Storm Drain	LF	110	$200.00	$22,000.00	
26	30 inch RCP Storm Drain	LF	8	$65.00	$520.00	
27	Pipe Plug, 12" - 36", MAG 427	EA	1	$300.00	$300.00	
28	Landscaping/Revegetation/Irrigation	AC	6.69	$43,560.00	$291,416.40	
29	Landscaping/Revegetation/Irrigation (within golf course)	AC	1.46	$47,916.00	$69,957.36	
						$3,240,404.11

Table 5-2
Engineers Estimate of Construction Cost

City of Scottsdale - Transportation Department					Rev 12-1-97 cvg	
Pima Road Three Basins Project - 10% Design						
Item No.	Description	Unit	Quantity	Unit Price	Cost	Totals
Hualapai Road Grade Separated Crossing						
1	Mobilization	LS	1	$33,926.28	$33,926.28	
2	Project Signing Allowance	LS	1	$2,000.00	$2,000.00	
3	Traffic Control	LS	1	$25,000.00	$25,000.00	
4	NPDES/SWPPP Permit	LS	1	$2,500.00	$2,500.00	
5	Vegetation Salvage	AC	0.94	$21,780.00	$20,473.20	
6	Construction Staking and As-Builts	LS	1	$10,000.00	$10,000.00	
7	Clear and Grub	AC	0.94	$1,600.00	$1,504.00	
8	Excavation	CY	3783	$3.00	$11,349.00	
9	8' Retaining Wall	SF	6720	$22.69	$152,476.80	
10	6' Retaining Wall	SF	2280	$21.89	$49,909.20	
11	5' Retaining Wall	SF	4730	$22.59	$106,850.70	
12	4' Retaining Wall	SF	1808	$24.09	$43,554.72	
13	Hand Rail	LF	870	$35.00	$30,450.00	
14	Upper Hand Rail	LF	840	$25.00	$21,000.00	
15	Path/sidewalk	SF	8700	$1.00	$8,700.00	
16	Box Culvert	LF	100	$1,488.00	$148,800.00	
17	Decorative Stone Veneer	SF	500	$10.00	$5,000.00	
18	Landscaping/Revegetation/Irrigation	AC	0.55	$43,560.00	$23,958.00	
19	Stormwater Pump	LS	1	$15,000.00	$15,000.00	
						$712,451.90

Table 5-2
Engineers Estimate of Construction Cost

City of Scottsdale - Transportation Department					Rev 12-1-97 cvg	
Pima Road Three Basins Project - 10% Design						
Item No.	Description	Unit	Quantity	Unit Price	Cost	Totals
Thompson Peak Road Grade Separated Crossing						
1	Mobilization	LS	1	$41,960.65	$41,960.65	
2	Project Signing Allowance	LS	1	$2,000.00	$2,000.00	
3	Traffic Control	LS	1	$25,000.00	$25,000.00	
4	NPDES/SWPPP Permit	LS	1	$2,500.00	$2,500.00	
5	Vegetation Salvage	AC	0.97	$21,780.00	$21,126.60	
6	Construction Staking and As-Builts	LS	1	$10,000.00	$10,000.00	
7	Clear and Grub	AC	0.97	$1,600.00	$1,552.00	
8	Excavation	CY	6257	$3.00	$18,771.00	
9	8' Retaining Wall	SF	7664	$22.69	$173,896.16	
10	6' Retaining Wall	SF	1140	$21.89	$24,954.60	
11	5' Retaining Wall	SF	5715	$22.59	$129,101.85	
12	4' Retaining Wall	SF	456	$24.09	$10,985.04	
13	Hand Rail	LF	903	$35.00	$31,605.00	
14	Upper Hand Rail	LF	958	$25.00	$23,950.00	
15	Path/sidewalk	SF	7120	$1.00	$7,120.00	
16	Box Culvert	LF	191	$1,488.00	$284,208.00	
17	Decorative Stone Veneer	SF	500	$10.00	$5,000.00	
18	Landscaping/Revegetation/Irrigation	AC	0.63	$43,560.00	$27,442.80	
19	Utility Relocation	LS	1	$25,000.00	$25,000.00	
20	Stormwater Pump	LS	1	$15,000.00	$15,000.00	
						$881,173.70

Table 5-2
Engineers Estimate of Construction Cost

City of Scottsdale - Transportation Department					Rev 12-1-97 cvg	
Pima Road Three Basins Project - 10% Design						
Item No.	Description	Unit	Quantity	Unit Price	Cost	Totals
Deer Valley Road Grade Separated Crossing						
1	Mobilization	LS	1	$36,021.11	$36,021.11	
2	Project Signing Allowance	LS	1	$2,000.00	$2,000.00	
3	Traffic Control	LS	1	$25,000.00	$25,000.00	
4	NPDES/SWPPP Permit	LS	1	$2,500.00	$2,500.00	
5	Vegetation Salvage	AC	0.83	$21,780.00	$18,077.40	
6	Construction Staking and As-Builts	LS	1	$10,000.00	$10,000.00	
7	Clear and Grub	AC	0.83	$1,600.00	$1,328.00	
8	Excavation	CY	4740	$3.00	$14,220.00	
9	8' Retaining Wall	SF	7472	$22.69	$169,539.68	
10	6' Retaining Wall	SF	1356	$21.89	$29,682.84	
11	5' Retaining Wall	SF	4010	$22.59	$90,585.90	
12	4' Retaining Wall	SF	572	$24.09	$13,779.48	
13	Hand Rail	LF	892	$35.00	$31,220.00	
14	Upper Hand Rail	LF	934	$25.00	$23,350.00	
15	Path/sidewalk	SF	7470	$1.00	$7,470.00	
16	Box Culvert	LF	145	$1,488.00	$215,760.00	
17	Decorative Stone Veneer	SF	500	$10.00	$5,000.00	
18	Landscaping/Revegetation/Irrigation	AC	0.48	$43,560.00	$20,908.80	
19	Utility Relocation	LS	1	$25,000.00	$25,000.00	
20	Stormwater Pump	LS	1	$15,000.00	$15,000.00	
						$756,443.21

Table 5-2
Engineers Estimate of Construction Cost

City of Scottsdale - Transportation Department					Rev 12-1-97 cvg	
Pima Road Three Basins Project - 10% Design						
Item No.	Description	Unit	Quantity	Unit Price	Cost	Totals
Pinnacle Peak Road Grade Separated Crossing						
1	Mobilization	LS	1	$42,381.65	$42,381.65	
2	Project Signing Allowance	LS	1	$2,000.00	$2,000.00	
3	Traffic Control	LS	1	$25,000.00	$25,000.00	
4	NPDES/SWPPP Permit	LS	1	$2,500.00	$2,500.00	
5	Vegetation Salvage	AC	1	$21,780.00	$21,780.00	
6	Construction Staking and As-Builts	LS	1	$10,000.00	$10,000.00	
7	Clear and Grub	AC	1	$1,600.00	$1,600.00	
8	Excavation	CY	6841	$3.00	$20,523.00	
9	8' Retaining Wall	SF	9520	$22.69	$216,008.80	
10	6' Retaining Wall	SF	1680	$21.89	$36,775.20	
11	5' Retaining Wall	SF	9900	$22.59	$223,641.00	
12	4' Retaining Wall	SF	192	$24.09	$4,625.28	
13	Hand Rail	LF	955	$35.00	$33,425.00	
14	Upper Hand Rail	LF	1190	$25.00	$29,750.00	
15	Path/sidewalk	SF	8500	$1.00	$8,500.00	
16	Box Culvert	LF	105	$1,488.00	$156,240.00	
17	Decorative Stone Veneer	SF	500	$10.00	$5,000.00	
18	Landscaping/Revegetation/Irrigation	AC	0.58	$43,560.00	$25,264.80	
19	Utility Relocation	LS	1	$10,000.00	$10,000.00	
20	Stormwater Pump	LS	1	$15,000.00	$15,000.00	
						$890,014.73

Table 5-2
Engineers Estimate of Construction Cost

City of Scottsdale - Transportation Department					Rev 12-1-97 cvg	
Pima Road Three Basins Project - 10% Design						
Item No.	Description	Unit	Quantity	Unit Price	Cost	Totals
Happy Valley Road Grade Separated Crossing						
1	Mobilization	LS	1	$23,138.67	$23,138.67	
2	Project Signing Allowance	LS	1	$2,000.00	$2,000.00	
3	Traffic Control	LS	1	$5,000.00	$5,000.00	
4	NPDES/SWPPP Permit	LS	1	$2,500.00	$2,500.00	
5	Vegetation Salvage	AC	0.62	$21,780.00	$13,503.60	
6	Construction Staking and As-Builts	LS	1	$10,000.00	$10,000.00	
7	Clear and Grub	AC	0.62	$1,600.00	$992.00	
8	Excavation	CY	3681	$3.00	$11,043.00	
9	8' Retaining Wall	SF	4960	$22.69	$112,542.40	
10	6' Retaining Wall	SF	756	$21.89	$16,548.84	
11	5' Retaining Wall	SF	2790	$22.59	$63,026.10	
12	4' Retaining Wall	SF	576	$24.09	$13,875.84	
13	Hand Rail	LF	612	$35.00	$21,420.00	
14	Upper Hand Rail	LF	620	$25.00	$15,500.00	
15	Path/sidewalk	SF	5220	$1.00	$5,220.00	
16	Box Culvert	LF	90	$1,488.00	$133,920.00	
17	Decorative Stone Veneer	SF	500	$10.00	$5,000.00	
18	Landscaping/Revegetation/Irrigation	AC	0.36	$43,560.00	$15,681.60	
19	Stormwater Pump	LS	1	$15,000.00	$15,000.00	
						$485,912.05

Table 5-3
Engineers Estimate of Required Land Acquisition

City of Scottsdale - Transportation Department		
Pima Road Three Basins Project - 10% Design		
Description	Land Area (Acres)	Present Landowner
Phase 1		
Deer Valley Detention Basin	33.50	State Land Department
Union Hills Detention Basin	43.50	State Land Department
Collector Channel Segment - "A" (Hayden Rd to Union Hills Basin)	3.92	State Land Department
Collector Channel Segment - "B" (South along exist. Pima Rd to new Pima Road)	0.93	State Land Department
Collector Channel Segment - "C" (East along freeway to new Pima Road)	3.49	State Land Department
Mainline Channel Segment - "D" (Sierra Pinta to Union Hills Basin)	6.65	GrayHawk
	1.26	State Land Department
Collector Channel Segment - "E" (Ties into Segment "D")	2.09	State Land Department
Pima Road Storm Drain (Deer Valley to Sierra Pinta)	0.90	GrayHawk
	0.30	State Land Department
Storm Drain Line "H" (Union Hills Basin to CAP Basin)	2.74	State Land Department
	1.29	Private
	0.83	Perimeter Center
Deer Valley Road Grade Separated Crossing	0.21	GrayHawk

Table 5-3
Engineers Estimate of Required Land Acquisition

City of Scottsdale - Transportation Department		
Pima Road Three Basins Project - 10% Design		
Description	Land Area (Acres)	Present Landowner
Phase 2		
Happy Valley Detention Basin	32.00	State Land Department
Mainline Channel Segment - "F" (Happy Valley to Deer Valley Basin)	20.59	Private
Mainline Channel Segment - "G" (N/O of Jomax to Happy Valley Basin)	11.92	State Land Department
Hualapai Road Grade Separated Crossing	1.28	State Land Department
Thompson Peak Road Grade Separated Crossing	0.38	State Land Department
	0.76	GrayHawk
Pinnacle Peak Road Grade Separated Crossing	1.53	Private
Happy Valley Road Grade Separated Crossing	(1)	State Land Department

(1) Land purchased as part of Happy Valley Basin construction

APPENDIX A

Pima Road Three Basins Summary Landscape and Aesthetics 10% Design Narrative, by Larson, Voss and Associates, Inc.

Pima Road Three Basins
Landscape and Aesthetics,
10% Design Narrative

Larson, Voss and Associates, Inc.

Outline:

- Overview of General Visual/Aesthetic and Design Issues
- Potential Path and Trail Development
- Structural Design Enhancements
- Planting, Revegetation and Irrigation
- Stormwater Detention Basins
- Signage
- Educational and Interpretive Potential

Overview of General Visual/aesthetic and Design Issues

The "Pima Road Three Basins" project is part of the City of Scottsdale's "Desert Greenbelt" flood control program, and extends along Pima Road from the 101 freeway at Union Hills Drive north to Jomax Road. From Union Hills to Deer Valley Road the channel is on the west side of Pima, and a portion will be undergrounded. From Deer Valley Rd. north the channel is on the east side of Pima. There are three detention basins: south of Union Hills Rd., north of Deer Valley Road, and north of Happy Valley Road

The Pima Corridor slopes fairly evenly from north to south, and within the project area ranges in elevation from 1650 to 2150 feet. Pima Road is a high-speed, high-volume arterial with dominant north-south view-lines, though the McDowell Mountains are visually prominent to the east.

Except for the commercial/retail core at Pinnacle Peak Road, land use along the corridor is characterized by residential development. Large scale planned communities are visually prominent, especially Grayhawk and D.C. Ranch, with McDowell Mountain Ranch at the southern boundary and Desert Highlands at the north end.

The Pima channel and basins will re-define the visual character of the corridor. Where the flow is undergrounded only revegetated land within a "Scenic Corridor" buffer will be visible. The channel will be an earth-colored engineering feature of variable width, with a simple barrier railing on each side, separated from Pima Road by either a 50 ft. or 100 ft. "Scenic Corridor" buffer. It will be desirable to minimize views of the channel from Pima Road and cross streets.

Stormwater detention basins at Happy Valley Road and Deer Valley Road (both east of Pima) will be highly visible, and full revegetation is essential to avoid an artificial appearance. These basins will open up views to the McDowell Mountains to the east. The third basin, south of Union Hills adjacent to the future Pima Freeway, is planned for development as a Scottsdale park with lighted sports fields.

Potential Public Path and Trail

A paved multi-use path and an unpaved multi-use trail designed to Scottsdale standards are not included in flood control funding for this project. This 10% report shows proposed path and trail routes and alternatives for grade-separated crossings. Any at-grade crossings would follow Scottsdale standards. Implementation of portions of the system may occur through future road improvements and public or private path/trail funding.

Structural Design Enhancements

Elements that may have aesthetic enhancement may include:

Walls (retaining and free-standing)
Pavement (the paved path)
Railings (channel safety railing; underpass safety railing; bridge safety railing)
Bridge structures (piers, end-walls, etc.)

Potential enhancements include:

Walls: Make more organic, less "engineered."
If cast concrete: Add textures and surface designs through the use of form-liners, and design motifs through applied or in-form patterns; use integral coloring to create a more earthy appearance. Curving alignments are costly.
If unit-block such as Amastone, Keystone: This provides a dry-laid more informal look; integral coloring would be used. Curving alignments are easily done.
If CMU: Integrally-colored split-face or earth-tint painted stucco finish. Curving alignments are possible.

Pavement: Reduce sun glare, add textural interest.
Integral or surface-applied coloring in selected areas.
Imprinting wet concrete with design motifs at selected points.

Railings: Identify the Pima project through unique design motifs; reduce visual intrusion.

Incorporate design motifs (in custom railings) that identify the Pima project.
Paint or stain metalwork to reduce visual prominence.
AVOID rusting, especially when set on concrete, by using state-of-the-art coatings.

TYPE	USE(S)
A.	
Uniform Building Code Safety Railing (plain or ornamented)	• On walls associated with any grade-separated crossing. • Where pedestrian use abuts a drop of 2.5' or greater.
B.	
Scottsdale Standard 3-Rail Handrail (plain or ornamented)	• On top of culvert headwalls and other drainage structures. • May be modified to use square steel tubing. • This is not intended as a safety railing per UBC.
C.	
Channel Edge Barrier	• As requested by the Flood Control District. A 36" single railing could serve to visually identify the channel and alert pedestrians or cyclists, especially important when the channel is carrying a water flow. This is not intended as a safety railing under the Uniform Building Code.
D.	
Path/Trail Separation Railing (5 ft. ht.)	• To separate horses from path users at grade-separated crossings.

Colors: All railings are proposed to be a Terra Cotta color of a deep hue.

Design ornamentation: Type "B" railing may be ornamented continuously or at intervals. A design motif using Arizona cattle brands (primary) and/or an Arizona petroglyph water symbol (secondary) is proposed. Ornamentation of "B" railings would occur at highly-visible culvert headwalls at street crossings.

Drop Structures

Two alternative types of drop structure are proposed: a stepped roller-compacted concrete cascade, and a "waterfall" built from cemented granite

boulders. The second type would be used in more visible locations, such as upstream from road crossings.

TPC Outlet Structure

The Pima system outlets to the Bureau of Reclamation detention basin between the 14th and 15th greens of the Tournament Players Club golf course. The outlet structure has several baffle walls to reduce outlet velocity. As proposed, the structure would have integrally-colored concrete and boulders set in gunite along the apron. Stone veneer of the vertical walls is an option.

Visibility of this structure should be low. It will be about 1000 feet south-east of the 14th green tee-boxes, and will be hidden from view from the north. See the exhibit included in this section.

Planting, Revegetation and Irrigation

There will be three types of landscape zone:

- Undisturbed areas.
- Areas revegetated by hydroseeding.
- Areas revegetated by planting.

The 10% plans do not yet delineate these three types. The quantity and size of salvaged native plants has not yet been determined.

Undisturbed areas. Some portions of the project area will remain undisturbed, and will be fenced and protected during construction activity.

Hydroseeding will consist of a water-slurry of wood fiber, native seeds, fertilizer and binder applied to ground that has been roughened by rake or harrow. Seed will consist of native shrubs and grasses at a rate of 20 to 30 lbs. of seed per acre. Hydroseeded areas will be served by temporary spray irrigation systems.

- This type of revegetation is successfully used on highways and other large-scale projects.
- Areas to be hydroseeded have low visibility and/or low public access (e.g., far from roads and path/trail).
- Areas to be hydroseeded are intended to have a more natural, untended look.
- Seed species may be varied based on availability and cost at the time of construction.

Typical Revegetation seed mix

Triangle leaf bursage (dominant)	Desert marigold
Indian wheat	Creosote bush
Brittlebush	Desert bluebells
Arizona buckwheat	Desert senna
Needle grama	Gaillardia
Catclaw acacia	Desert mallow

Planted areas will have salvaged and nursery-grown Arizona/Sonoran Desert species and will be irrigated with an automatic drip-type system. Portions may receive crushed granite mulch for erosion control, but native soil will be the typical surface.

- This is a high-cost method compared to hydroseeding.
- Areas to be planted have high visibility or high public contact (e.g., along Pima Road).
- Drip-type irrigation systems are needed wherever salvaged native plants or nursery plants are used.

Nursery stock:
Average density 20 to 30 native shrubs/cacti per 1000 s.f. (2-3 per 10' x 10' area), typically 1 gallon plants, and 1 tree, min. 15 gallon size per 1000 to 2500 s.f., on an automatic irrigation system.

Typical plants (may vary due to availability or cost)

Bursage	Agave, e.g. Parryi
Brittlebush	Jojoba
Creosote bush	Native cacti
Terpentine bush	Blackfoot daisy
Native fairy duster	Mormon tea
Chuparosa	Desert hackberry
Desert marigold	Goldeneye
Globemallow	Penstemon
Desert verbena	Paperflower
Catclaw acacia	Desert milkweed

Typical trees
Nursery-grown native mesquite, multi-trunked.
Nursery-grown Foothills and Blue palo verde, multi-trunked.

Re-planted Salvaged Native Plants. The number, size and species of salvaged material has not yet been determined. Material will range from nature desert trees and saguaros, to ocotillo and smaller cacti. Salvaged material will be used along "visually sensitive" margins such as detention basin edges, and where the channel crosses streets. All salvaged material will be served by a drip irrigation system.

Drip system: Automatic operation, separate tree and shrub circuits, rigid PVC pipe throughout, 1 GPH emitters to shrubs, 1 multi-port emitter per tree, 2 ea. 0.5 gph emitter per salvaged saguaro on tree circuits. Due to the risk of rodent damage to flexible pipe, and anticipated low maintenance and low visibility of portions of the project, a rigid PVC distribution system is required.

Temporary spray irrigation system for hydroseed areas: PVC or metal pipe on ground surface, low-flow spray heads of various radii, automatic operation.

Stormwater Detention Basins

The lower basin at Union Hills Rd. is planned to be a lighted, sports-oriented Scottsdale municipal park, and could also be a major trailhead for the path/trail system. No schedule for development has been adopted. The basin will receive hydroseed revegetation as part of this project.

The two upper basins are shown as revegetated natural areas. Though they are currently not planned for additional development, they have the long-range potential for being developed as passive-use municipal parks. The bottoms of the basins will be subject to sedimentation from the channel's sediment load, and will require periodic maintenance.

Signage

Any future trail and path signage will follow Scottsdale's standards for safety and identification signage. Additional signage along any future path/trail could possibly consist of:

- Identification of cross-streets at grade-separated crossings.
- Identification of trailheads at Union Hills and Pinnacle Peak Rd.
- Identification of links to other path systems, especially the southward link to the extended Camelback Walk system that connects to the Indian Bend Wash path system.
- Elevation markers to show elevation gain on the path/trail.
- Identification signage for native plants.
- Mileage markers starting at Union Hills Drive.

Some types of signage may be developed after the path/trail is built. Project identification and informational signage will use a common "Desert Greenbelt" sign design developed for the Reata Pass channel project

Educational and Interpretive Potential

Signage or exhibits addressing the natural or cultural features found along the corridor may be incorporated in the future at highly accessible nodes, such as the Pinnacle Peak crossing and the proposed park at the Union Hills basin.

Signage identifying the nearby McDowell Mountains could be incorporated at the northern detention basins, since these basins will open up views to the east.

A museum and interpretive center is planned for the nearby *McDowell Sonoran Preserve Gateway Access*, which is intended as a large-scale facility to be located at Bell Rd. and Thompson Peak Parkway. This site will offer an excellent opportunity for a manned center that presents local geology, geomorphology, hydrology (including washes), wildlife, plants, prehistory and history.

■

9709 pc sys 3

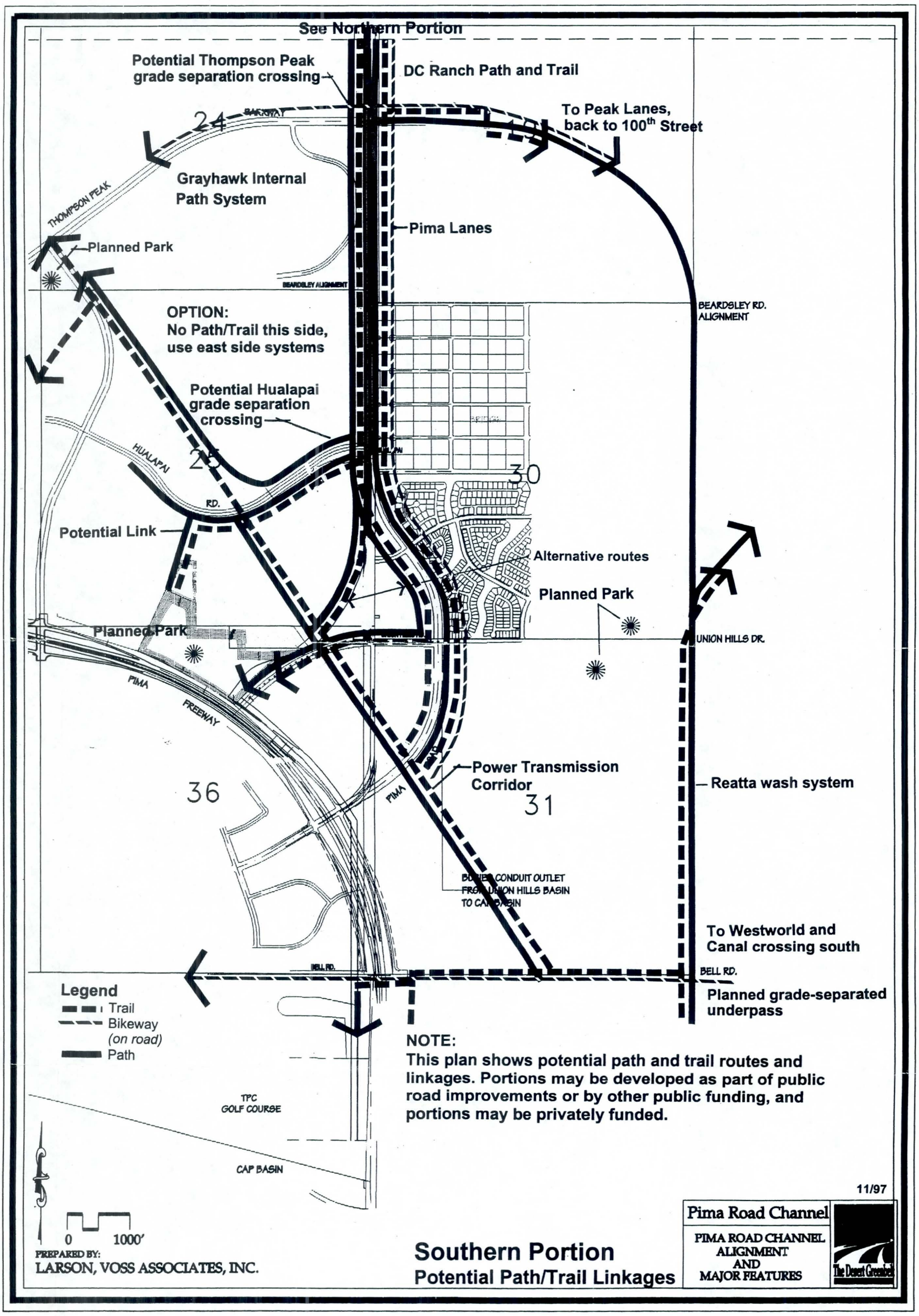

Southern Portion
Potential Path/Trail Linkages

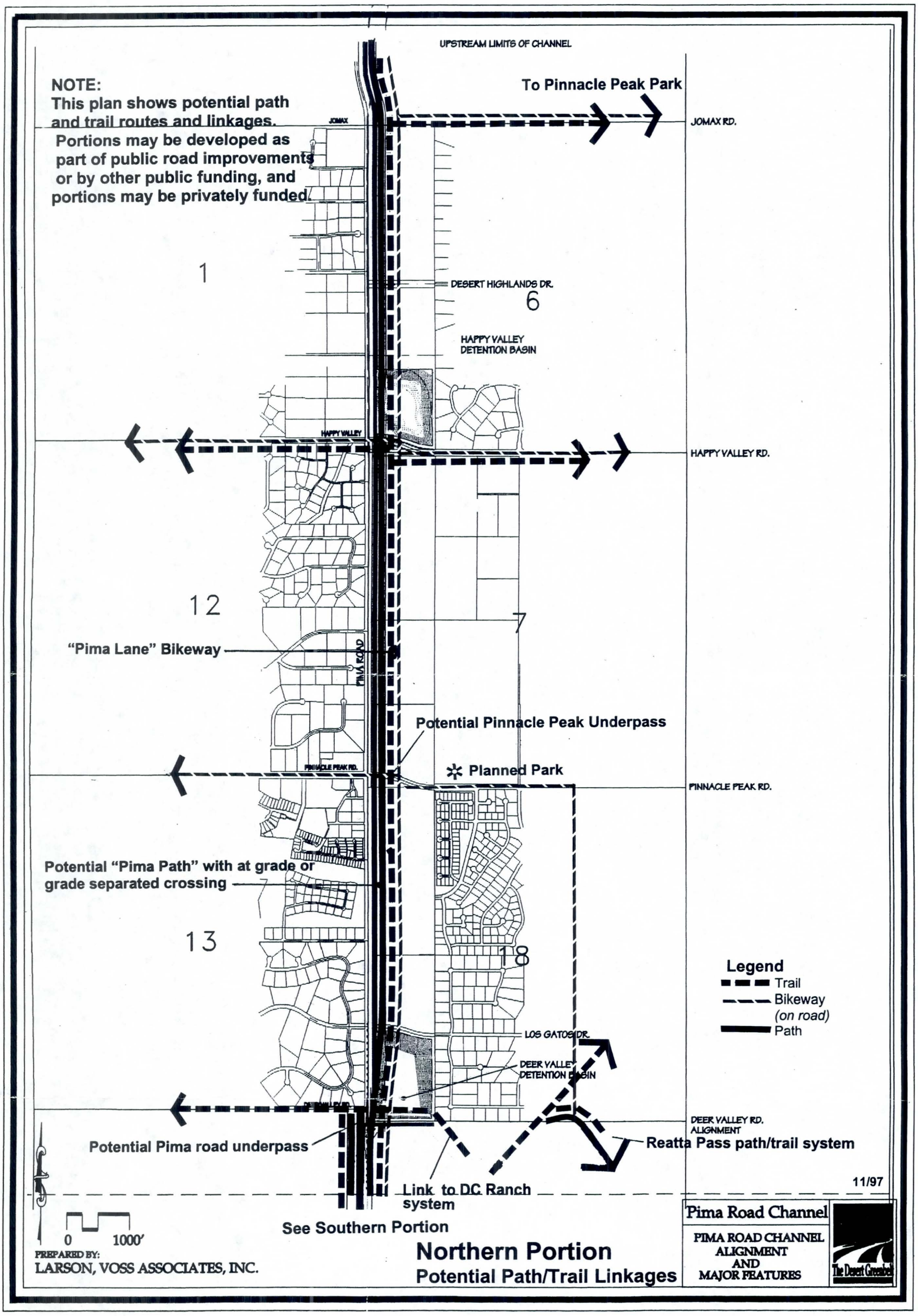
NOTE:
This plan shows potential path and trail routes and linkages.
Portions may be developed as part of public road improvements or by other public funding, and portions may be privately funded.
UPSTREAM LIMITS OF CHANNEL
To Pinnacle Peak Park
JOMAX
JOMAX RD.
1
DESERT HIGHLANDS DR.
6
HAPPY VALLEY DETENTION BASIN
HAPPY VALLEY
HAPPY VALLEY RD.
12
7
"Pima Lane" Bikeway
PIMA ROAD
Potential Pinnacle Peak Underpass
PINNACLE PEAK RD.
Planned Park
PINNACLE PEAK RD.
Potential "Pima Path" with at grade or grade separated crossing
13
18
Legend
Trail
Bikeway (on road)
Path
LOS GATOS DR.
DEER VALLEY DETENTION BASIN
DEER VALLEY RD.
DEER VALLEY RD. ALIGNMENT
Potential Pima road underpass
Reatta Pass path/trail system
Link to DC Ranch system
11/97
0 1000'
See Southern Portion
PREPARED BY:
LARSON, VOSS ASSOCIATES, INC.
Northern Portion
Potential Path/Trail Linkages
Pima Road Channel
PIMA ROAD CHANNEL ALIGNMENT AND MAJOR FEATURES
The Desert Greenbelt

APPENDIX B

Grade Separation Structures Alternatives Report, by T.Y. Lin International

City of Scottsdale
Desert Greenbelt
Pima Road Three Basins Project

Grade Separation Structures Alternatives Report

Prepared and Submitted by:
T·Y·LIN INTERNATIONAL

City of Scottsdale
Transportation Department

November 1997

GRADE SEPARATION STRUCTURES ALTERNATIVES REPORT

November 1997

Prepared for:

The City of Scottsdale
Transportation Department

Prepared by:

T.Y. Lin International
1270 E. Broadway Road, Suite 122
Tempe, Arizona 85282
(602) 968-8814

TABLE OF CONTENT

1.0 EXECUTIVE SUMMARY 2

2.0 PROJECT LOCATION 2

3.0 TYPICAL SECTION 2

4.0 MATERIAL ALTERNATIVES 3

4.1 ALTERNATIVE 1: CAST-IN-PLACE CONCRETE BOX CULVERT 3
4.2 ALTERNATIVE 2: CAST-IN-PLACE CONCRETE BOX CULVERT WITH AN ARCH ROOF 3
4.3 ALTERNATIVE 3: CORRUGATED METAL PLATE ARCH CULVERT 3

5.0 PROJECT AESTHETICS 4

5.1 FORMLINERS 4
5.2 RAMP RETAINING WALLS 4

6.0 COST COMPARISON AND ESTIMATE 4

7.0 CONCLUSIONS AND RECOMMENDATIONS 5

LIST OF FIGURES

FIGUTE 1: CONCRETE BOX CULVERT-ALTERNATIVE 1: 6
FIGURE 2: CONCRETE BOX CULVERT WITH ARCH ROOF-ALTERNATIVE 2 7
FIGURE 3: CORRUGATED METAL PLATE ARCH-ALTERNATIVE 3: 8

APPENDIX QUANTITIES

1.0 EXECUTIVE SUMMARY

This Grade Separation Structures Alternatives Report presents the engineering evaluation performed to determine the most cost effective and functional structure for five grade separation structures located in north Scottsdale as part of the Desert Greenbelt Project. The five structures will be located below Pima Road, Thompson Peak Parkway, Pinnacle Peak Road, Happy Valley Road and Hualapai Road. One-half of each structure will accommodate pedestrians while the other half will provide a trail for equestrians.

Types of structures considered and detailed in this report include:

- Cast-in-place Concrete Box Culvert
- Cast-in-place Concrete Box Culvert with an Arch Roof
- Corrugated Metal Plate Arch Culvert

The recommended type of structure for all five sites is a cast-in-place concrete box culvert with either a level roof slab or an arch roof.

2.0 PROJECT LOCATION

The Desert Greenbelt Pima Road Three Basins Project will provide a pedestrian/equestrian trail that runs north/south through north Scottsdale. Where the trail intersects surface streets, a grade separation structure will be constructed underneath the road. Five locations have been identified for grade separation structures, namely Pima Road, Thompson Peak Parkway, Pinnacle Peak Road, Happy Valley Road and Hualapai Road.

3.0 TYPICAL SECTION

A typical section of all the grade separation structures must provide enough room to accommodate both pedestrians and equestrians simultaneously. As such, the structure must provide an opening 20-foot wide to accommodate both 10-foot wide trails. Furthermore, the opening must provide enough vertical clearance for horseback riders. Thus the roof/top of the structure will be a minimum of 10 feet above the trail. With these horizontal and vertical requirements in mind, a typical section of a grade separation structure is shown in Figure 1. Note, a safety rail is provided

that segregates horses and pedestrians. Finally, the length of the five structures will vary between 100 feet and 180 feet depending upon location.

4.0 MATERIAL ALTERNATIVES

Three possible structure types were considered for the Pima Road Three Basins Project, namely:

- Cast-in-place Concrete Box Culvert
- Cast-in-place Concrete Box Culvert with an Arch Roof
- Corrugated Metal Plate Arch Culvert.

The three structure types are shown in Figures 1, 2 and 3.

4.1 Alternative 1: Cast-in-place Concrete Box Culvert

Alternative one is a concrete structure cast entirely using formwork. Soil is excavated to the elevation of the bottom slab, which is then poured on grade. Forms are then placed to facilitate in the construction of the two walls and the level roof slab.

In order to maintain traffic on the five surface streets during the construction of each structure, work will proceed in two phases. Phase one is the excavation and construction of approximately one-half of the structure on one side of the surface street. Once completed, traffic can be detoured over the partial structure and phase two will commence with the excavation and construction of the other half of the grade separation structure. Finally, traffic is routed onto its original alignment.

4.2 Alternative 2: Cast-in-place Concrete Box Culvert with an Arch Roof

Alternative two is identical to alternative one except that the roof/top slab is an arch. Alternative two is also constructed in two phases. By introducing an arch roof, it not only provides additional vertical clearance but also provides some aesthetic appeal for the public.

4.3 Alternative 3: Corrugated Metal Plate Arch Culvert

The last alternative is made of corrugated steel plates and lowered into a trench with a crane. Sections of the metal arch are first placed on cast concrete footings and then bolted together. Construction also proceeds in two phases.

5.0 PROJECT AESTHETICS

5.1 Formliners

Formliners can be utilized during constrcution of the two cast-in-place alternatives to provide an appealing, textured surface on the walls and roof. The artist - working in conjunction with the City of Scottsdale on the Pima Road Three Basins Project - envisions using a formliner that simulates a fractured stone finish. The fiberglass or rubber liners are affixed to the formwork and continually removed and re-used. While formliners are not feasible for the corrugated metal alternative, the interior can be painted instead.

5.2 Ramp Retaining Walls

Besides serving as retaining walls, the treatment of the ramp retaining walls can also enhance the aesthetic appeal of the grade separation structure. For example, the ends of the walls can be rounded or set on a radius and/or the tangent sections of the walls can be offset/stepped so as to provide a terrace. Further coordination and details will be provided as the design continues.

6.0 COST COMPARISON AND ESTIMATE

The following table itemizes the cost comparison and estimate for the three alternatives under consideration.

Unit prices to the structural materials are from projects in the ADOT Highways Division *Construction Costs 1995* manual. Contingencies are estimated at 10% of the sum of Total Structure Estimate.

In ascending order of cost per foot, and rounded to the nearest dollar, the estimates are:

Alternative	Estimated Cost	Cost Differential
Cast-in-place Concrete Box Culvert	$1331	N.A.
Cast-in-place Concrete Box Culvert with an Arch Roof	$1488	11.8%
Corrugated Metal Plate Arch Culvert	$1500	12.7%

7.0 CONCLUSIONS AND RECOMMENDATIONS

The two preferred/recommended alternatives for the Pima Road Three Basins Project are the cast-in-place concrete box culvert with a level roof slab and the cast-in-place concrete box culvert with an arch roof. Reasons for recommending these two alternatives for further consideration are:

1. Cost - The cost of both of these two alternatives was less than the corrugated metal plate arch alternative.
2. Aesthetics - The appeal of using a formliner to simulate a fractured stone surface was more desirable than painting a corrugated metal surface.
3. Maintenance - Only the corrugated metal plate arch alternative would require upkeep, namely repainting. The painted surface would likely be expected to fade, peel or rust while the stone surface would merely take on a weathered appearance over time

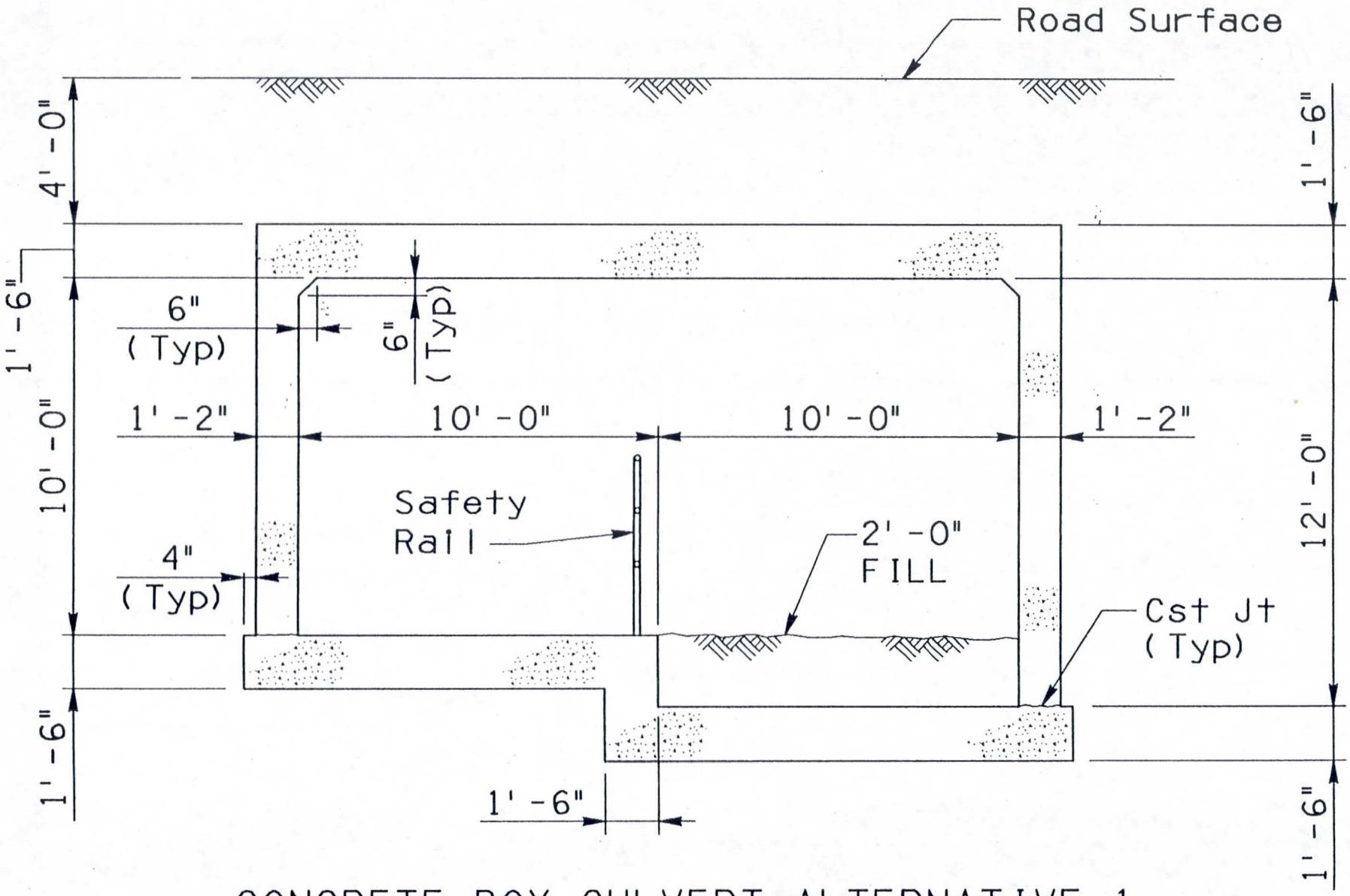

CONCRETE BOX CULVERT-ALTERNATIVE 1

Scale: 1/4" = 1' -0"

Figure 1

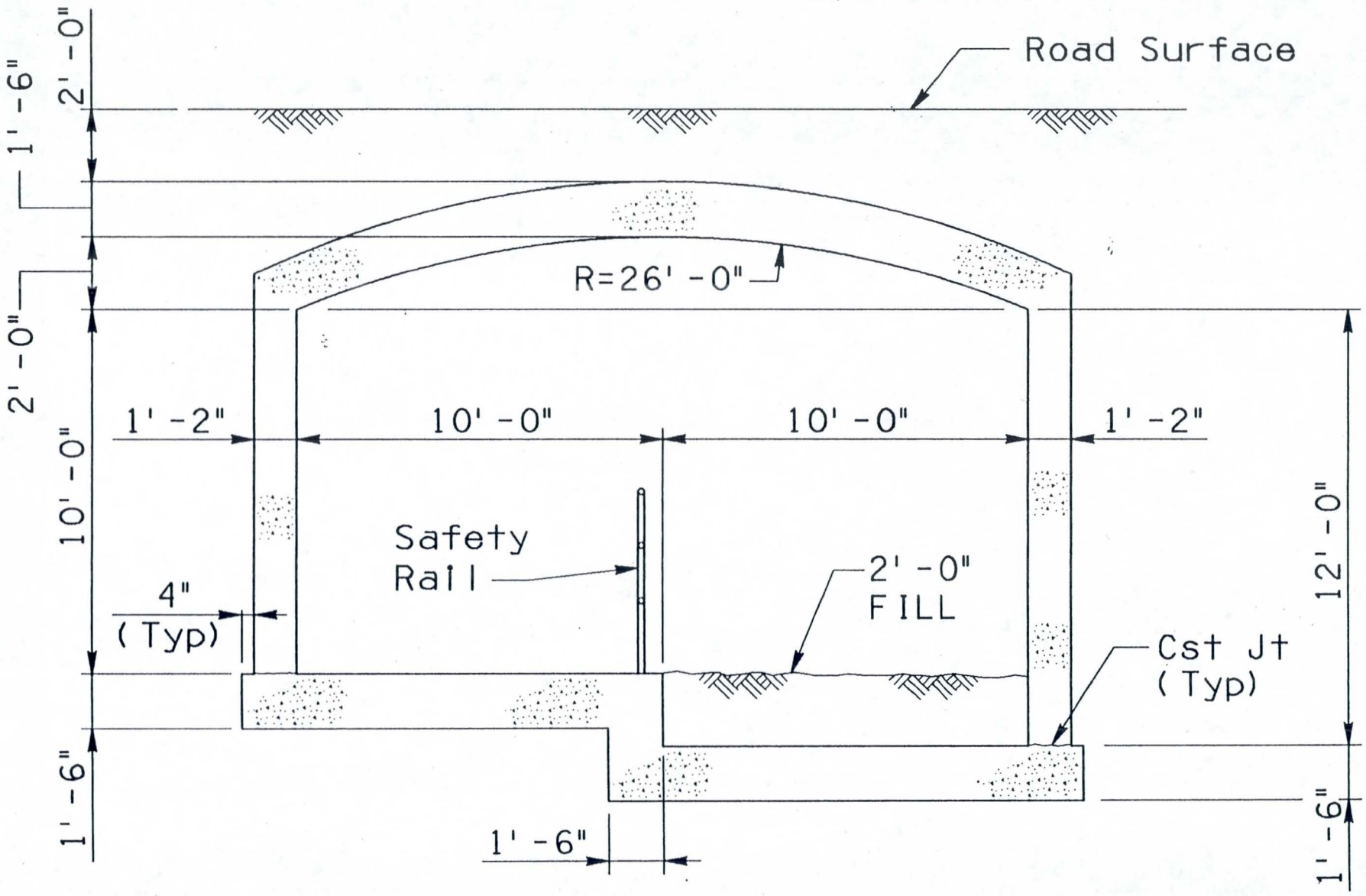

CONCRETE BOX CULVERT WITH ARCH ROOF-ALTERNATIVE 2

Scale: 1/4" = 1'-0"

Figure 2

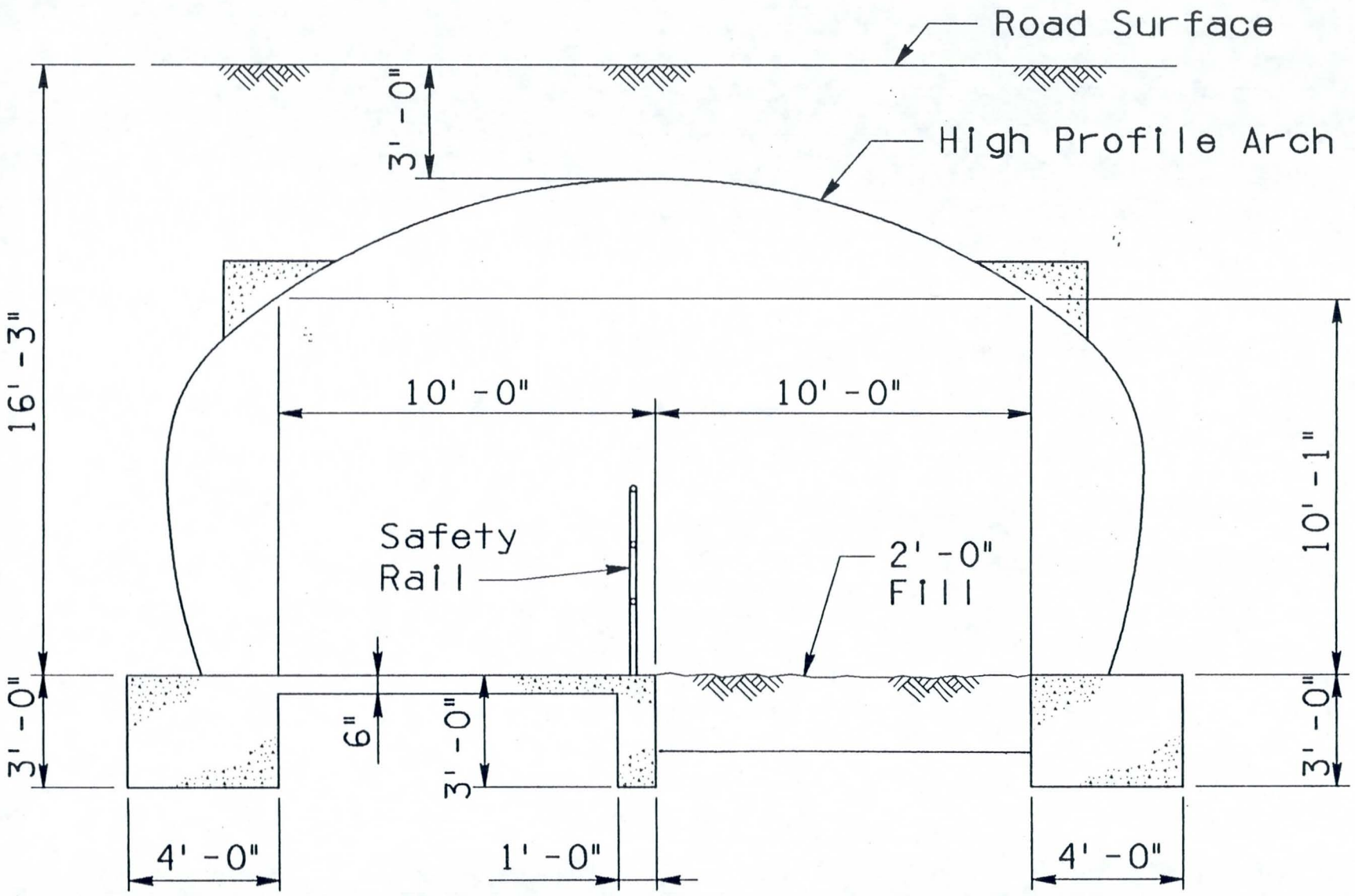

CORRUGATED METAL PLATE ARCH-ALTERNATIVE 3

Scale: ¼" = 1' -0"

Figure 3

APPENDIX

Quantities

COST ESTIMATE: (per Foot Length)

Grade Separation		C.B.C. Flat Top Option			C.B.C. Arch Top Option			Steel Arch Option		
Description	Unit Price	Quantity	Units	Total Cost	Quantity	Units	Total Cost	Quantity	Units	Total Cost
Corrugated Steel	$ 620.00							1	L.S.	$ 620.00
Concrete (f'c=3000 psi)	$ 180.00	3.59	CY	$ 646.20				1.60	CY	$ 288.00
Concrete (f'c=4000 psi)	$ 200.00				3.61	CY	$ 722.00			
Reinforcement	$ 0.40	701	Lbs.	$ 280.40	706	Lbs.	$ 282.40	141	Lbs.	$ 56.40
Structural Excavation	$ 8.00	18	CY	$ 144.00	18	CY	$ 144.00	22	CY	$ 176.00
Structure Backfill	$ 20.00	13	CY	$ 260.00	17	CY	$ 340.00	18	CY	$ 360.00
Total (per foot length)				**$ 1,330.60**			**$ 1,488.40**			**$ 1,500.40**

Retaining Wall		6' Wall			8' Wall			10' Wall		
Description	Unit Price	Quantity	Units	Total Cost	Quantity	Units	Total Cost	Quantity	Units	Total Cost
Concrete (f'c=3000 psi)	$ 180.00	0.421	CY	$ 75.78	0.561	CY	$ 100.98	0.725	CY	$ 130.50
Reinforcement	$ 0.40	35	Lbs.	$ 14.00	50	Lbs.	$ 20.00	65	Lbs.	$ 26.00
Structural Excavation	$ 8.00	1.44	CY	$ 11.52	2.14	CY	$ 17.12	2.94	CY	$ 23.52
Structure Backfill	$ 20.00	0.87	CY	$ 17.40	1.36	CY	$ 27.20	1.93	CY	$ 38.60
Total (per foot length)				**$ 118.70**			**$ 165.30**			**$ 218.62**

Retaining Wall		12' Wall			14' Wall		
Description	Unit Price	Quantity	Units	Total Cost	Quantity	Units	Total Cost
Concrete (f'c=3000 psi)	$ 180.00	0.884	CY	$ 159.12	1.048	CY	$ 188.64
Reinforcement	$ 0.40	75	Lbs.	$ 30.00	105	Lbs.	$ 42.00
Structural Excavation	$ 8.00	3.78	CY	$ 30.24	4.87	CY	$ 38.96
Structure Backfill	$ 20.00	2.62	CY	$ 52.40	3.36	CY	$ 67.20
Total (per foot length)				**$ 271.76**			**$ 336.80**

T·Y·LIN INTERNATIONAL

Projects:	3-Basins Project	Job No.	117700	Sheet:	of
Item:	Quantities	Designer:	CLM	Date:	10-1-97
		Checker:		Date:	
	Concrete Box Culvert			Grid: 1.8"	

Concrete:

Flat Top slab: $\left[\left(\frac{14''}{12}\right)(2) + 20'\right](1.5') = 33.5\ ft^2/ft$

Fillet: $\frac{(0.5)^2}{2}(2) = 0.25$

Wall: $\left(\frac{14''}{12}\right)(12' + 10') = 25.67$

Bottom slab: $(1.5)\left[\left(\frac{14+4}{12}\right)(2) + 20' + 2'\right] = 37.5$

$\Sigma = 96.92\ ft^2/ft$

$= 3.59\ cy/ft$

Arch Top slab: $(33.5)(1.025) = 34.34$

Wall: $= 25.67$

Bottom slab: $= 37.5$

$\Sigma = 97.51\ ft^2/ft$

$= 3.61\ cy/ft$

T·Y·LIN INTERNATIONAL

Projects:	3 Basms	Job No. 117701	Sheet: of
Item:		Designer: CLM	Date: 10-1-97
		Checker:	Date:
			Grid: 1.5"

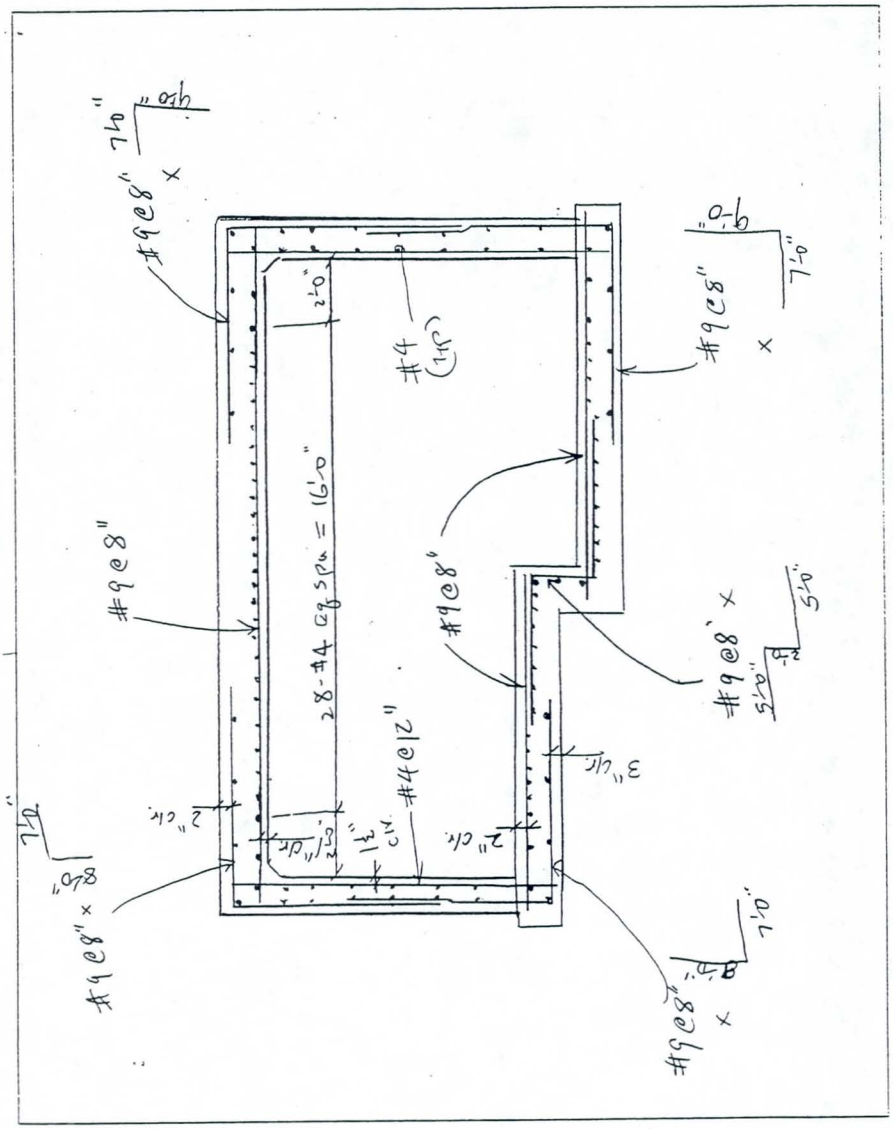

T.Y. LIN INTERNATIONAL

Project:	PIMA RD 3 BASINS	Job No.	1177.00	Sheet:	of
Item:	PEDESTRIAN PASS	Designer:	CLM	Date:	Oct-97
	Quantity - 10% Submittal	Checker:		Date:	

FLAT TOP	BAR NO	UNIT WT (#/FT)	LENGTH (FT)	NO.OF BARS	WT (LBS)
TOP	9	3.400	22.00	1.5	112.2
BOTTOM	9	3.400	11.17	1.5	57.0
BOTTOM	9	3.400	12.67	1.5	64.6
BOTTOM LAP	9	3.400	12.00	1.5	61.2
CORNER	9	3.400	15.00	3	153.0
CORNER	9	3.400	16.00	3	163.2
WALL VERT	4	0.668	12.58	1	8.4
WALL VERT	4	0.668	14.58	1	9.7
WALL LONGIT	4	0.668	1.00	26	17.4
TOP SLAB LONGIT	4	0.668	1.00	40	26.7
BOTTOM LONGIT	4	0.668	1.00	42	28.1
				SUM	701 Lbs/ft

ARCH TOP	BAR NO	UNIT WT (#/FT)	LENGTH (FT)	NO.OF BARS	WT (LBS)
TOP	9	3.400	22.60	1.5	115.3
BOTTOM	9	3.400	11.17	1.5	57.0
BOTTOM	9	3.400	12.67	1.5	64.6
BOTTOM LAP	9	3.400	12.00	1.5	61.2
CORNER	9	3.400	15.00	3	153.0
CORNER	9	3.400	16.00	3	163.2
WALL VERT	4	0.668	12.58	1	8.4
WALL VERT	4	0.668	14.58	1	9.7
WALL LONGIT	4	0.668	1.00	26	17.4
TOP SLAB LONGIT	4	0.668	1.00	42	28.1
BOTTOM LONGIT	4	0.668	1.00	42	28.1
				SUM	706 Lbs/ft

T.Y. LIN INTERNATIONAL

Project:	PIMA RD 3 BASINS	Job No.	1177.00	Sheet:	of
Item:	PEDESTRIAN PASS	Designer:	CLM	Date:	Nov-97
	Quantity - 10% Submittal	Checker:		Date:	

STEEL ARCH	BAR NO	UNIT WT (#/FT)	LENGTH (FT)	NO.OF BARS	WT (LBS)
TOP LONGIT	7	2.044	1.00	8	16.4
TOP TRANSV	7	2.044	3.50	2	14.3
BOTTOM LONGIT	7	2.044	1.00	8	16.4
BOTTOM TRANSV	9	3.400	3.50	4	47.6
SLAB LONGIT	5	1.043	1.00	5	5.2
SLAB TRANSV	5	1.043	7.00	1	7.3
STIFFENER	9	3.400	1.00	10	34.0
				SUM	141 Lbs/ft

T·Y·LIN INTERNATIONAL

Project: Pima Rd 3 Basins | Job No: 117702 | Sheet: of
Item: Quantities C.B.C. Pedestrian Pass | Designer: CM | Date: 10/07
Checker: | Date:
Grid: 1.8"

Structural Excavation:

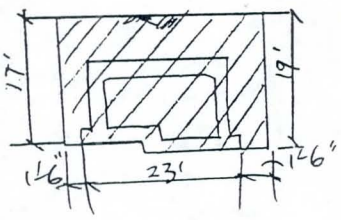

$A = (23 + 1.5 \times 2)(19') - 10' \times 2' = 474\ ft^2$

$V = 474 \times 1 = 474\ ft^3/ft = 18\ cy/ft$

Structure Backfill.

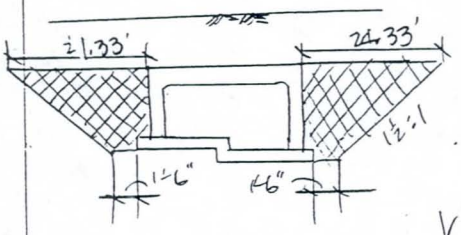

$A = \left[\left(\frac{1.5+21}{2}\right)(13) + (0.33)(11.5)\right] + \left(\frac{1.5+24}{2}\right)(15) + (0.33)(13.5')$

$= 345.8\ ft^2/ft$

$V = (345.8)(1) = 345.8\ ft^3/ft = 12.8\ cy/ft$

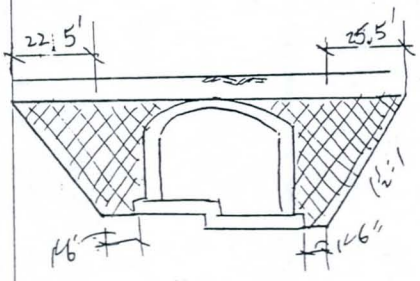

$A = \frac{22.5 \times 15}{2} + 1.833 \times 15' + \frac{25.5 \times 17}{2} + 1.833 \times 17' + 16.8$

$= 461\ ft^2/ft$

$V = (461)(1) = 461\ ft^3/ft = 17.1\ cy/ft$

T·Y·LIN INTERNATIONAL

Projects: Pima Rd 3 BG SITES	Job No. 1177.00	Sheet:	of
Item:	Designer: CWM	Date: 11-97	
Quantities	Checker:	Date:	
Steel Arch Alternative		Grid: 1:8"	

Structural Excavation:

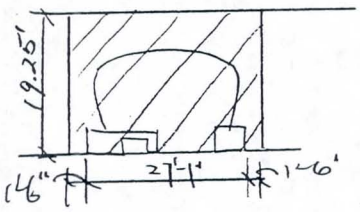

$A = (30.08')(19.25') = 579\ ft^2$

$V = 579 \times 1 = 579\ ft^3/ft = 21.4\ CY/ft$

Structure Backfill:

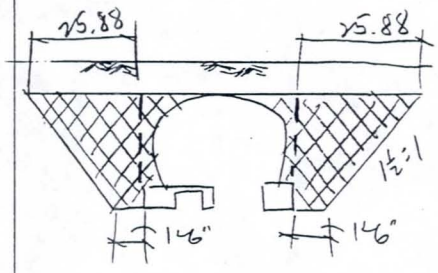

$A = (2)\left[\left(\frac{25.88 + 1.5}{2}\right)(16.25') + 21\right] = 487\ ft^2$

$V = 487 \times 1' = 487\ ft^3/ft = 18.0\ CY/ft$

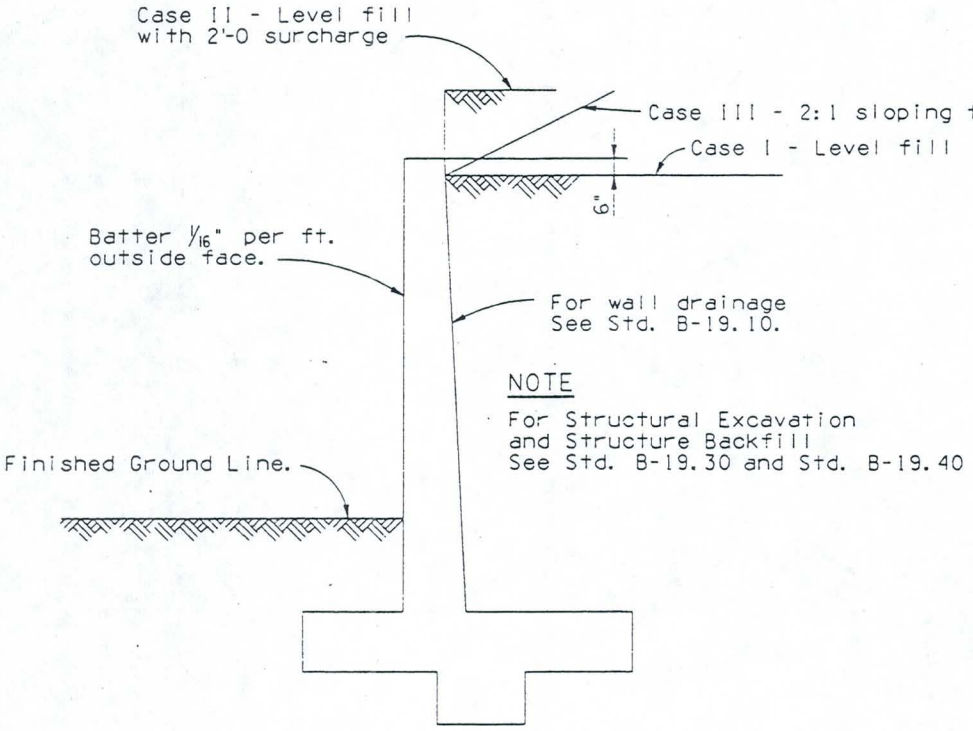

NOTE

For Structural Excavation
and Structure Backfill
See Std. B-19.30 and Std. B-19.40

TYPICAL SECTION

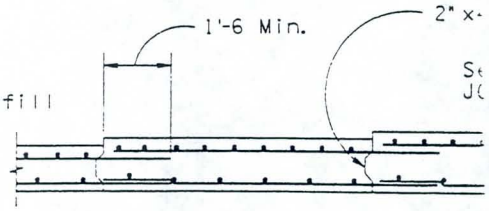

SECTION A-A

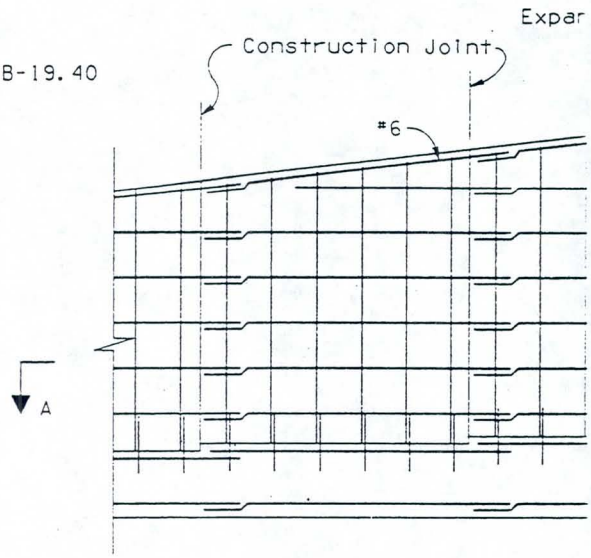

TYPICAL ELEVATI

Outside Face Reinfor

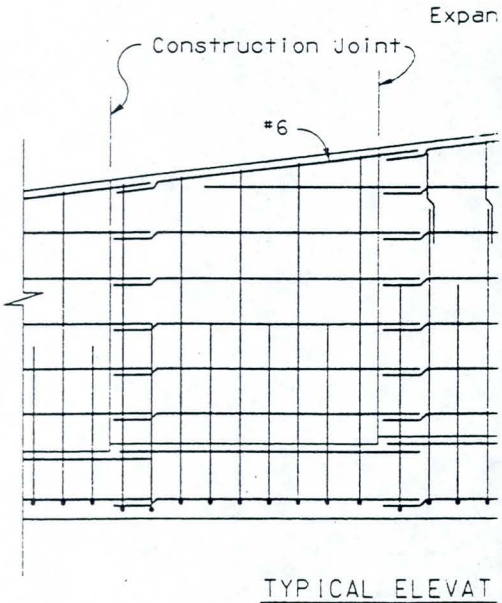

TYPICAL ELEVAT

Inside Face Reinfo

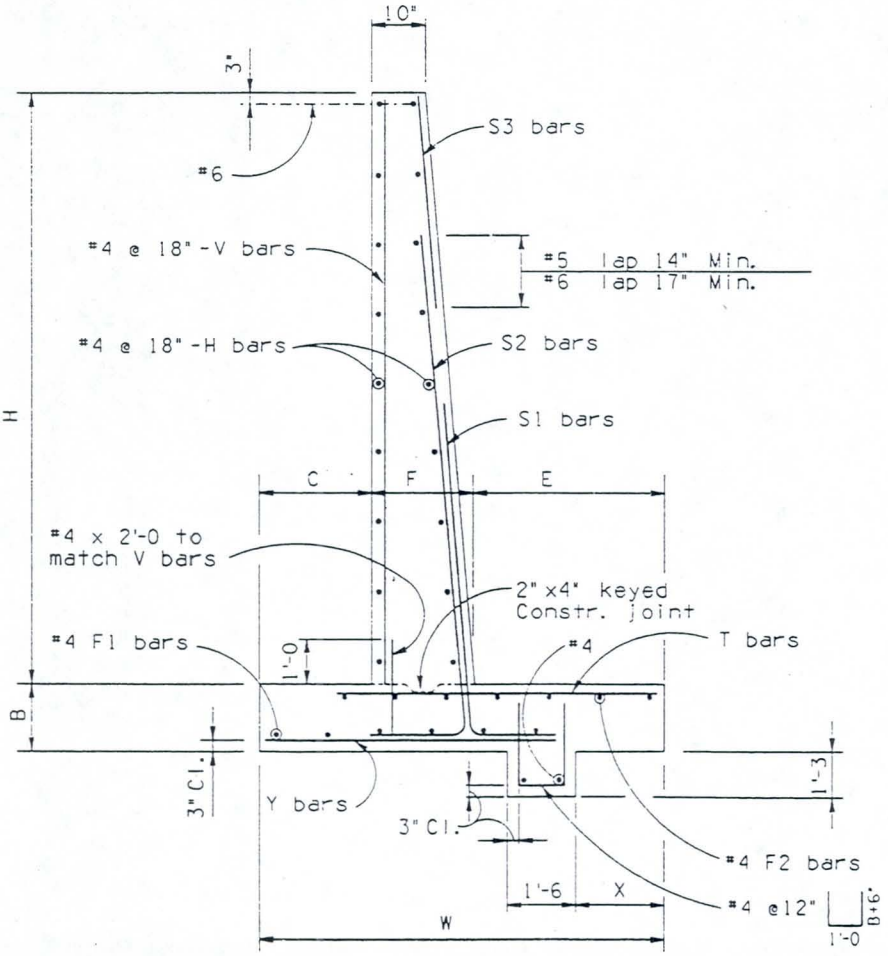

TYPICAL WALL DETAILS

Case I, II & III

NO	DESCRIPTION OF REVISIONS	MADE BY	DATE
1			
2			
3			
4			

DESIGN 4-92
DRAWN 4-92
CHECKED 4-92

ZF1K@S1820JSB1810.DGN11 VIEW NAME:
08-MAY-1992 15:04

CASE II-LEVEL FILL WITH 2' SURCHARGE

Lbs./Sq.Ft.	Dimensions							Steel List																				Max. Toe Press. Lbs./Sq.Ft.
								S1			S2			S3			H	V	Y			F1	T				F2	
	H	W	B	C	F	E	X	Bar Size	Spacing	Length	Bar Size	Spacing	Length	Bar Size	Spacing	Length	Number Φ	Length	Bar Size	Spacing	Length	Number Φ	Bar Size	Spacing	Length	Number Φ	
750	4'	3'-6	1'-0	1'-0	10"	1'-8	1'-0	5	12"	5'-6							4	3'-9	5	12"	2'-6	2	5	12"	2'-6	3	1030
390	5'	4'-0	1'-0	1'-2	10"	2'-0	1'-0	5	12"	6'-6							6	4'-9	5	12"	3'-0	2	5	12"	2'-9	3	1200
030	6'	4'-6	1'-0	1'-4	10"	2'-4	1'-2	5	12"	7'-6							6	5'-9	5	12"	3'-3	3	5	12"	3'-3	3	1370
170	7'	5'-1	1'-2	1'-6	10"	2'-9	1'-4	6	12"	8'-9							8	6'-9	5	12"	3'-9	3	5	12"	3'-6	3	1590
590	8'	5'-8	1'-2	1'-8	10"	3'-2	1'-6	6	9"	9'-9							10	7'-9	5	12"	4'-3	3	5	12"	4'-0	3	1710
500	9'	6'-3	1'-2	1'-10	1'-0	3'-5	1'-8	6	9"	10'-9							10	8'-9	5	12"	4'-6	3	5	12"	4'-6	4	1840
720	10'	6'-10	1'-3	2'-0	1'-0	3'-10	1'-9	7	12"	12'-0							12	10'-9	5	12"	5'-0	4	6	12"	5'-0	4	2100
820	11'	7'-6	1'-3	2'-3	1'-0	4'-3	1'-10	6	12"	4'-9	6	12"	12'-9				14	11'-9	5	12"	5'-9	4	7	12"	5'-6	5	2060
090	12'	8'-0	1'-3	2'-6	1'-2	4'-7	2'-0	6	12"	5'-0	6	12"	13'-9				14	12'-9	5	12"	6'-0	4	7	12"	6'-9	5	2290
190	13'	8'-6	1'-3	2'-6	1'-3	4'-9	2'-2	7	12"	7'-6	5	12"	14'-9				16	13'-9	6	12"	6'-0	4	7	12"	7'-0	5	2400
420	14'	9'-0	1'-3	2'-6	1'-4	5'-2	2'-4	7	12"	7'-3	6	12"	15'-9				18	14'-9	6	12"	6'-9	5	8	12"	8'-3	6	2630
520	15'	9'-6	1'-4	2'-9	1'-5	5'-4	2'-6	8	12"	8'-9	6	12"	17'-0				18	15'-9	6	9"	7'-0	5	8	12"	8'-3	6	2780
900	16'	10'-0	1'-5	2'-9	1'-6	5'-9	2'-8	7	12"	7'-0	7	12"	9'-0	6	12"	10'-9	20	16'-9	6	8"	7'-3	5	7	8"	8'-0	6	3050
900	17'	10'-6	1'-6	3'-0	1'-7	5'-11	2'-10	8	12"	8'-0	7	12"	9'-0	6	12"	10'-9	22	17'-9	6	8"	7'-9	5	7	8"	8'-3	6	3210
80	18'	11'-0	1'-7	3'-0	1'-8	6'-4	3'-0	7	10"	7'-6	7	10"	10'-0	6	10"	11'-9	22	18'-9	7	12"	8'-0	6	9	10"	10'-0	7	3480
520	19'	11'-6	1'-8	3'-3	1'-9	6'-6	3'-2	8	12"	8'-0	8	12"	12'-6	6	12"	10'-9	24	19'-9	7	12"	8'-3	6	8	8"	9'-6	7	3640
560	20'	12'-0	1'-9	3'-3	1'-10	6'-11	3'-4	9	12"	9'-6	8	12"	13'-3	6	12"	11'-0	26	20'-9	7	12"	8'-9	6	9	9"	10'-9	7	3920
700	21'	12'-6	1'-10	3'-6	1'-11	7'-1	3'-6	8	10"	9'-0	8	10"	14'-3	6	10"	11'-3	26	21'-9	7	10"	9'-0	6	10	10"	11'-9	7	4300
980	22'	13'-0	1'-11	3'-6	2'-0	7'-6	3'-8	9	12"	10'-0	9	12"	15'-9	6	12"	11'-0	28	22'-9	8	12"	9'-3	6	8	6"	10'-6	7	4350
30	23'	13'-6	2'-0	3'-9	2'-2	7'-7	3'-10	10	12"	12'-9	8	12"	16'-3	6	12"	11'-3	30	23'-9	8	12"	9'-9	7	8	6"	10'-6	7	4510
120	24'	14'-0	2'-2	3'-9	2'-4	7'-11	4'-0	10	12"	11'-6	9	12"	17'-9	6	12"	11'-3	30	24'-9	8	12"	10'-0	7	8	6"	11'-0	8	4840
310	25'	14'-6	2'-4	4'-0	2'-6	8'-0	4'-2	10	12"	12'-6	9	12"	19'-0	6	12"	11'-3	32	25'-9	8	12"	10'-3	7	8	6"	11'-0	8	5040
500	26'	15'-0	2'-6	4'-0	2'-8	8'-4	4'-4	9	10"	11'-6	9	10"	18'-6	6	10"	13'-0	34	26'-9	8	12"	10'-9	7	10	9"	13'-0	9	5380
240	27'	15'-6	2'-9	4'-3	2'-10	8'-5	4'-6	10	12"	12'-3	10	12"	21'-3	6	12"	11'-9	34	27'-9	8	12"	11'-0	8	10	9"	13'-3	9	5630
530	28'	16'-0	3'-0	4'-3	3'-0	8'-9	4'-8	10	12"	13'-3	10	12"	22'-0	6	12"	12'-3	36	28'-9	8	12"	11'-3	8	10	9"	13'-6	9	6020
580	29'	16'-6	3'-3	4'-6	3'-3	8'-9	4'-10	11	12"	16'-3	9	12"	23'-0	6	12"	12'-3	38	29'-9	8	12"	11'-9	8	10	9"	13'-6	9	6120
280	30'	17'-0	3'-6	4'-6	3'-6	9'-0	5'-0	11	12"	15'-9	10	12"	24'-0	6	12"	12'-9	38	30'-9	8	12"	12'-0	8	10	9"	13'-9	10	6670

NOTE:

For General Notes, Typical Elevations and Joint details see B-18.10.
For Quantities see B-18.30.

	DESIGN APPROVED	ARIZONA DEPARTMENT OF TRANSPORTATION HIGHWAYS DIVISION STANDARD DRAWINGS	REVISION 4-92
	APPROVED FOR DISTRIBUTION	CANTILEVER RETAINING WALLS ON SPREAD FOOTING	STANDARD NO. B-18.20

Length	F2 Number ◆	Max. Toe Press. Lbs./Sq.Ft.
2'-3	3	660
2'-9	3	1010
3'-3	3	1210
4'-0	4	1440
4'-9	4	1590
5'-3	5	1800
7'-0	5	1920
8'-6	6	2130
9'-0	7	2230
9'-6	8	2470
9'-3	8	2700
10'-9	9	2940
11'-0	9	3180
12'-3	9	3580
12'-9	10	3870
13'-0	10	4300
14'-6	11	4610
14'-6	11	4930
15'-0	11	5370
15'-3	12	5750
16'-9	12	6130
17'-0	12	6500
17'-3	[illegible]	6950
[illegible]	[illegible]	7400
17'-[illegible]	13	7720
17'-6	13	8050
17'-9	13	8370

QUANTITIES

H	CASE I		CASE II		CASE III	
	Concrete C.Y./Ln.Ft.	Steel Lbs./Ln.Ft.	Concrete C.Y./Ln.Ft.	Steel Lbs./Ln.Ft.	Concrete C.Y./Ln.Ft.	Steel Lbs./Ln.Ft.
4'	.304	25	.323	25	.304	25
5'	.353	30	.372	30	.353	30
6'	.403	30	.421	35	.409	35
7'	.452	35	.505	40	.502	40
8'	.532	40	.561	50	.565	50
9'	.613	45	.645	55	.676	55
10'	.668	50	.725	65	.745	70
11'	.724	55	.790	70	.884	85
12'	.801	65	.884	75	.958	90
13'	.858	75	.964	85	1.133	105
14'	.958	85	1.048	105	1.279	125
15'	1.042	90	1.163	120	1.435	140
16'	1.156	110	1.285	125	1.650	155
17'	1.247	120	1.413	135	1.807	180
18'	1.372	130	1.548	160	1.971	215
19'	1.503	150	1.688	170	2.199	230
20'	1.607	170	1.835	195	2.440	255
21'	1.748	185	1.988	220	2.693	290
22'	1.897	200	2.147	230	2.958	310
23'	2.086	230	2.347	245	3.352	325
24'	2.285	235	2.600	265	3.769	360
25'	2.535	245	2.866	275	4.247	405
26'	2.841	265	3.125	305	4.724	420
27'	3.162	280	3.481	325	5.222	430
28'	3.498	295	3.835	335	5.773	455
29'	3.850	315	4.248	360	6.349	470
30'	4.218	330	4.681	380	6.952	485

NOTE:
Quantities are for one L.F. of wall.
Steel quantities for horizontal splices shall be added to those shown in table.

NOTE:

For General Notes, Typical Elevations and Joint details see B-18.10.

	DESIGN APPROVED	ARIZONA DEPARTMENT OF TRANSPORTATION HIGHWAYS DIVISION STANDARD DRAWINGS	REVISION 4-82
	APPROVED FOR DISTRIBUTION	CANTILEVER RETAINING WALLS ON SPREAD FOOTING	STANDARD NO. B-18.30

TY·LIN INTERNATIONAL

Projects: Pima Rd 3 Basins	Job No. 1177.00	Sheet:	of
Item:	Designer:	Date: 11-3-97	
Retaining Wall Unit Cost 6' wall	Checker:	Date:	
		Grid: 1.8"	

ADOT Std Case II – Level Fill w/ 2' Surcharge

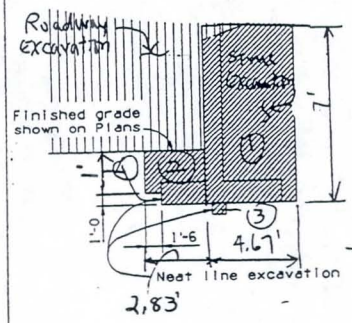

① (4.67')(7') = 32.69 ft³/ft

② (2.83')(2') = 5.66

③ (1.5')(1.25') = 1.88

④ (1.5')(1.0') = −1.50

Σ = 38.73 ft³/ft

= 1.44 cy/ft

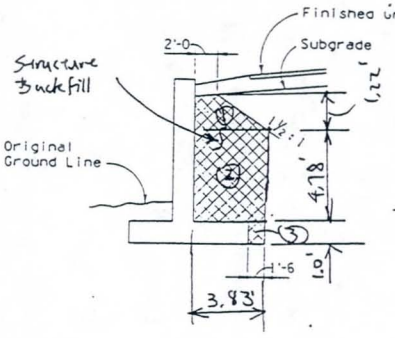

① $\left(\frac{2'+3.83'}{2}\right)(1.22') = 3.56$ ft³/ft

② (3.83')(4.78') = 18.31

③ (1.5')(1.0') = 1.50

Σ = 23.37 ft³/ft

= 0.87 cy/ft

TY·LIN INTERNATIONAL

Projects: PIMN Rd 3 Basins	Job No. 1177.00	Sheet:	of
Item: Retaining Wall Unit Cost 8' wall	Designer: CMM	Date: 11-3-97	
	Checker:	Date:	
		Grid: 1/8"	

ADOT Std Case II – Level Fill w/ 2' Surcharge

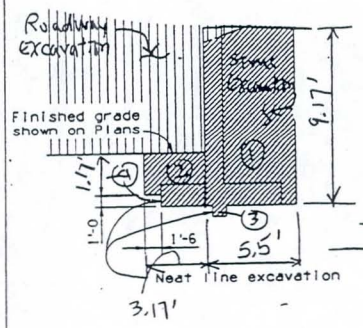

① (5.5')(9.17') = 50.44 ft³/ft

② (3.17')(2.17') = 6.88

③ (1.5')(1.25') = 1.88

−④ (1.5')(1.0') = −1.50

Σ = 57.70 ft³/ft

= 2.14 CY/ft

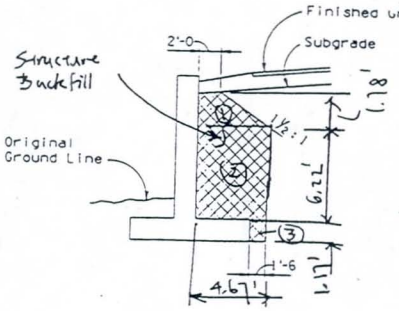

① $\left(\frac{2' + 4.67'}{2}\right)(1.78') = 5.94$ ft³/ft

② (4.67')(6.22') = 29.05

③ (1.5')(1.17') = 1.76

Σ = 36.75 ft³/ft

= 1.36 CY/ft

T·Y·LIN INTERNATIONAL

Projects: PMN Rd 3 Basins	Job No. 1177.00	Sheet:	of
Item:	Designer: CAM	Date: 11-3-97	
Retaining Wall Unit Cost	Checker:	Date:	
10' Wall		Grid: 1.8"	

ADOT Std Case II – Level Fill w/ 2' Surcharge

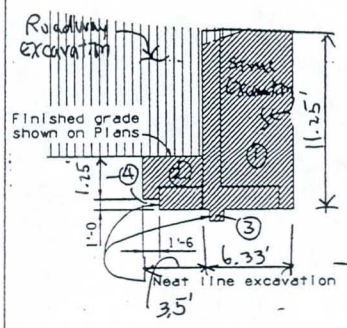

① (6.33')(11.25') = 71.21 ft³/ft

② (3.5')(2.25') = 7.88

③ (1.5')(1.25') = 1.88

−④ (1.5')(1.0') = −1.50

Σ = 79.47 ft³/ft

= 2.94 CY/ft

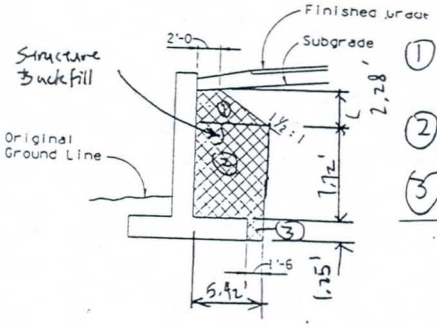

① $\left(\frac{2' + 5.42'}{2}\right)(2.28') = 8.46$ ft³/ft

② (5.42')(7.72') = 41.84

③ (1.5')(1.25') = 1.88

Σ = 52.18 ft³/ft

= 1.93 CY/ft

T·Y·LIN INTERNATIONAL

Projects: PMN Rd 3 Basins	Job No. 1177.00	Sheet:	of
Item: Retaining Wall Unit Cost 12' Wall	Designer: CMM	Date: 11-3-97	
	Checker:	Date:	
		Grid: 1/8"	

ADOT Std Case II – Level Fill w/ 2' Surcharge

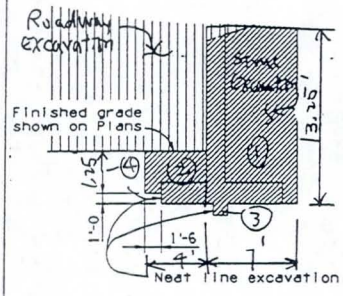

① (.7') (13.25') = 9.275 ft³/ft

② (4') (2.25') = 9.0

③ (1.5') (1.25') = 1.88

−④ (1.5') (1.0') = −1.50

Σ = 10.13 ft³/ft

= 3.78 cy/ft

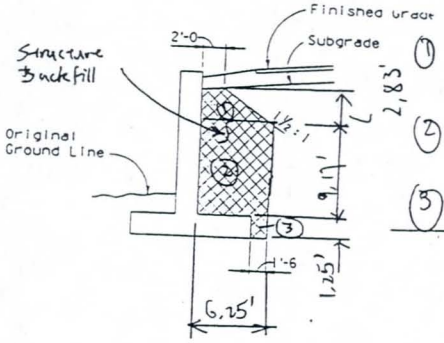

① $\left(\frac{2'+6.25'}{2}\right)(2.83') = 11.67$ ft³/ft

② (6.25')(9.17') = 57.31

③ (1.5')(1.25') = 1.88

Σ = 70.86 ft³/ft

= 2.62 cy/ft

T·Y·LIN INTERNATIONAL

Projects: PIMN Rd 3 Basins | Job No. 1177.00 | Sheet: of

Item: Retaining Wall Unit Cost 14' Wall | Designer: CAM | Date: 11-3-97

Checker: | Date:

Grid: 1:8"

A-DOT Std Case II – Level Fill w/ 2' Surcharge

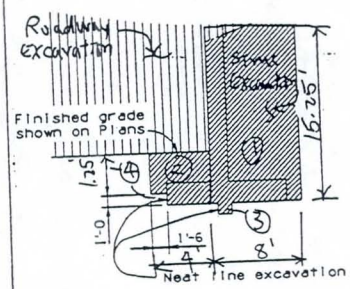

① (8')(15.25') = 122.0 ft³/ft

② (4')(2.25') = 9.0

③ (1.5')(1.25') = 1.88

−④ (1.5')(1.0') = −1.50

Σ = 131.38 ft³/ft

= 4.87 cy/ft

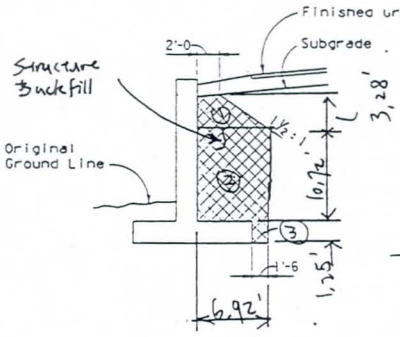

① $\left(\frac{2' + 6.92'}{2}\right)(3.28') = 14.63$ ft³/ft

② (6.92')(10.72') = 74.18

③ (1.5')(1.25') = 1.88

Σ = 90.69 ft³/ft

= 3.36 cy/ft

APPENDIX C

Hydraulic Grade Line Calculations and Output from StormCAD

Table C-1-node

Happy Valley Detention Basin outlet conduit node report

Node	Discharge (cfs)	Rim Elev (ft)	Sump Elev (ft)	HGL In (ft)	HGL Out (ft)	Description
I-1	142	2,095.00	2,065.00	2,088.95	2,087.26	HVDB Inlet
J-1	142	2,074.00	2,063.90	2,073.18	2,071.48	Manhole
Outlet	142	2,071.80	2,063.50	2,067.00	2,067.00	Outlet to channel

Check the Starting WSEL from HEC-1 model.

Table C-1-pipe

Happy Valley Detention Basin outlet conduit pipe report

Pipe	Upstream Node	Downstream Node	Discharge (cfs)	Length (ft)	Shape	Size	Roughness	Upstream Ground Elevation (ft)	Upstream Invert Elevation (ft)	Upstream HGL (ft)	Downstream Ground Elevation (ft)	Downstream Invert Elevation (ft)	Downstream HGL (ft)
P-1	I-1	J-1	142.00	531	Circular	42 inch	0.015	2,095.00	2,065.00	2,087.26	2,074.00	2,063.93	2,073.18
P-2	J-1	Outlet	142	169	Circular	42 inch	0.015	2,074.00	2,063.93	2,071.48	2,071.80	2,063.50	2,067.00

Table C-2-node

Deer Valley Detention Basin to TPP outlet conduit node report

Node	Discharge (cfs)	Rim Elev (ft)	Sump Elev (ft)	HGL In (ft)	HGL Out (ft)	Description
I-1	261	1,885.00	1,855.00	1,878.01	1,877.17	DVDB Inlet
MH-13	261	1,875.00	1,853.18	1,869.20	1,867.57	Manhole
MH-10	261	1,865.50	1,851.95	1,862.19	1,857.83	Manhole
MH-9	261	1,856.40	1,846.00	1,851.03	1,850.82	Manhole
MH-8	261	1,840.80	1,830.00	1,835.34	1,835.13	Manhole
MH-7	261	1,825.00	1,815.01	1,819.65	1,819.50	Manhole
Outlet	261	1,812.00	1,800.48	1,803.77	1,803.77	DC Ranch Junction

Table C-2-pipe

Deer Valley Detention Basin to TPP outlet conduit pipe report

Pipe	Upstream Node	Downstream Node	Discharge (cfs)	Length (ft)	Shape	Size	Roughness	Upstream Ground Elevation (ft)	Upstream Invert Elevation (ft)	Upstream HGL (ft)	Downstream Ground Elevation (ft)	Downstream Invert Elevation (ft)	Downstream HGL (ft)
P-13	I-1	MH-13	261.00	340.00	Circular	54 inch	0.015	1,885.00	1,855.00	1,877.17	1,875.00	1,853.18	1,869.20
P-12	MH-13	MH-10	261	229.36	Circular	54 inch	0.015	1,875.00	1,853.18	1,867.57	1,865.50	1,851.95	1,862.19
P-11	MH-10	MH-9	261	290	Circular	54 inch	0.015	1,865.50	1,851.95	1,857.83	1,856.40	1,846.00	1,851.03
P-10	MH-9	MH-8	261	660	Circular	54 inch	0.015	1,856.40	1,846.00	1,850.82	1,840.80	1,830.00	1,835.34
P-9	MH-8	MH-7	261	660	Circular	54 inch	0.015	1,840.80	1,830.00	1,835.13	1,825.00	1,815.01	1,819.65
P-8	MH-7	Outlet	261	642	Circular	60 inch	0.015	1,825.00	1,815.01	1,819.50	1,812.00	1,800.48	1,803.77

Table C-3-node

TPP to Sierra Pinta outlet conduit node report

Node	Discharge (cfs)	Rim Elev (ft)	Sump Elev (ft)	HGL In (ft)	HGL Out (ft)	Description
I-1	356	1,811.70	1,800.62	1,809.45	1,805.67	DC Ranch Junction
J-1	356	1,811.30	1,799.92	1,805.16	1,804.97	Manhole
J-2	356	1,803.00	1,791.40	1,796.64	1,796.45	Manhole
J-3	356	1,793.50	1,781.50	1,786.74	1,786.55	Manhole
J-4	356	1,778.00	1,767.00	1,772.24	1,772.05	Manhole
J-5	356	1,762.80	1,752.48	1,757.72	1,757.53	Manhole
J-6	356	1,749.00	1,737.79	1,742.75	1,741.90	Manhole
Outlet	356	1,745.00	1,736.00	1,740.11	1,740.11	Sierra Pinta Outlet

Table C-3-pipe

TPP to Sierra Pinta outlet conduit pipe report

Pipe	Upstream Node	Downstream Node	Discharge (cfs)	Length (ft)	Shape	Size	Roughness	Upstream Ground Elevation (ft)	Upstream Invert Elevation (ft)	Upstream HGL (ft)	Downstream Ground Elevation (ft)	Downstream Invert Elevation (ft)	Downstream HGL (ft)
P-1	I-1	J-1	356.00	28.16	Circular	66 inch	0.015	1,811.70	1,800.62	1,805.67	1,811.30	1,799.92	1,805.16
P-2	J-1	J-2	356	349.84	Circular	66 inch	0.015	1,811.30	1,799.92	1,804.97	1,803.00	1,791.40	1,796.64
P-3	J-2	J-3	356	450	Circular	66 inch	0.015	1,803.00	1,791.40	1,796.45	1,793.50	1,781.50	1,786.74
P-4	J-3	J-4	356	660	Circular	66 inch	0.015	1,793.50	1,781.50	1,786.55	1,778.00	1,767.00	1,772.24
P-5	J-4	J-5	356	660	Circular	66 inch	0.015	1,778.00	1,767.00	1,772.05	1,762.80	1,752.48	1,757.72
P-6	J-5	J-6	356	667.23	Circular	66 inch	0.015	1,762.80	1,752.48	1,757.53	1,749.00	1,737.79	1,741.60
P-7	J-6	Outlet	356	127	Horiz Ellipse	53x83 inch	0.015	1,749.00	1,737.79	1,741.90	1,745.00	1,736.00	1,740.11

Table C-4-node

UHDB to TPC Outlet Conduit node report
Union Hills hydrograph control

Node	Discharge (cfs)	Rim Elev (ft)	Sump Elev (ft)	HGL In (ft)	HGL Out (ft)	Description
I-1	814	1,614.00	1,585.00	1,609.61	1,608.80	UHDB headworks
MH14	814	1,610.00	1,583.26	1,607.23	1,607.02	Manhole
MH13	814	1,605.50	1,579.98	1,600.06	1,599.85	Manhole
MH12	814	1,600.50	1,576.67	1,592.85	1,592.65	Manhole
MH11	814	1,595.30	1,573.38	1,585.65	1,585.45	Manhole
I-2	829	1,591.60	1,571.35	1,581.15	1,579.46	Pima Road TI Jnctn
MH9	829	1,587.00	1,567.50	1,575.79	1,575.61	Manhole
MH8	829	1,583.00	1,564.00	1,573.65	1,572.11	Manhole
MH7	829	1,572.20	1,553.50	1,562.64	1,561.61	Manhole
MH6	829	1,564.00	1,548.50	1,556.79	1,556.61	Manhole
MH5	829	1,556.50	1,538.50	1,546.89	1,546.61	Manhole
MH4	829	1,547.80	1,529.00	1,538.96	1,538.08	Manhole
MH3	829	1,546.00	1,527.70	1,537.43	1,535.81	Manhole
MH2	829	1,538.50	1,524.15	1,532.44	1,532.26	Manhole
C1	829	1,537.00	1,521.00	1,529.11	1,529.11	Pipe Curve
MH-1	829	1,537.00	1,519.00	1,528.07	1,527.11	Deflection
Outlet	829	1,531.00	1,513.00	1,522.00	1,522.00	TPC Outlet Structure

Table C-4-pipe

UHDB to TPC Outlet Conduit pipe report
Union Hills hydrograph control

Pipe	Upstream Node	Downstream Node	Discharge (cfs)	Length (ft)	Shape	Size	Roughness	Upstream Ground Elevation (ft)	Upstream Invert Elevation (ft)	Upstream HGL (ft)	Downstream Ground Elevation (ft)	Downstream Invert Elevation (ft)	Downstream HGL (ft)
P-16	I-1	MH14	814	148	Circular	96 inch	0.015	1,614.00	1,585.00	1,608.80	1,610.00	1,584.26	1,607.23
P-15	MH14	MH13	814	657	Circular	96 inch	0.015	1,610.00	1,584.26	1,607.02	1,605.50	1,580.98	1,600.06
P-14	MH13	MH12	814	660	Circular	96 inch	0.015	1,605.50	1,580.98	1,599.85	1,600.50	1,577.67	1,592.85
P-13	MH12	MH11	814	660	Circular	96 inch	0.015	1,600.50	1,577.67	1,592.65	1,595.30	1,574.38	1,585.65
P-12	MH11	I-2	814	405	Circular	96 inch	0.015	1,595.30	1,574.38	1,585.45	1,591.60	1,572.35	1,581.15
P-11	I-2	MH9	829	415	Circular	108 inch	0.015	1,591.60	1,572.35	1,579.46	1,587.00	1,568.50	1,575.79
P-10	MH9	MH8	829	425	Circular	108 inch	0.015	1,587.00	1,568.50	1,575.61	1,583.00	1,565.00	1,573.65
P-9	MH8	MH7	829	763	Circular	108 inch	0.015	1,583.00	1,565.00	1,572.11	1,572.20	1,554.50	1,562.64
P-8	MH7	MH6	829	562	Circular	108 inch	0.015	1,572.20	1,554.50	1,561.61	1,564.00	1,549.50	1,556.79
P-7	MH6	MH5	829	526	Circular	108 inch	0.015	1,564.00	1,549.50	1,556.61	1,556.50	1,539.50	1,546.89
P-6	MH5	MH4	829	621	Circular	108 inch	0.015	1,556.50	1,539.50	1,546.61	1,547.80	1,530.00	1,538.96
P-5	MH4	MH3	829	178	Circular	108 inch	0.015	1,547.80	1,530.00	1,538.08	1,546.00	1,528.70	1,537.43
P-4	MH3	MH2	829	475	Circular	108 inch	0.015	1,546.00	1,528.70	1,535.81	1,538.50	1,525.15	1,532.44
P-3	MH2	C1	829	420	Circular	108 inch	0.015	1,538.50	1,525.15	1,532.26	1,537.00	1,522.00	1,529.11
P-2	C1	MH-1	829	47	Circular	108 inch	0.015	1,537.00	1,522.00	1,529.11	1,537.00	1,520.00	1,528.07
P-1	MH-1	Outlet	829	153	Circular	108 inch	0.015	1,537.00	1,520.00	1,527.11	1,531.00	1,513.00	1,522.00

Table C-5-node

UHDB to TPC Outlet Conduit node report
Concentration point C1A hydrograph control

Node	Discharge (cfs)	Rim Elev (ft)	Sump Elev (ft)	HGL In (ft)	HGL Out (ft)	Description
I-1	215	1,614.00	1,585.00	1,588.96	1,588.68	UHDB headworks
MH14	215	1,610.00	1,583.26	1,588.01	1,587.94	Manhole
MH13	215	1,605.50	1,579.98	1,585.52	1,585.47	Manhole
MH12	215	1,600.50	1,576.67	1,585.36	1,585.35	Manhole
MH11	215	1,595.30	1,573.38	1,584.87	1,584.86	Manhole
I-2	1,032	1,591.60	1,571.35	1,584.56	1,582.68	Pima Road TI Jnctn
MH9	1,032	1,587.00	1,567.50	1,578.90	1,578.70	Manhole
MH8	1,032	1,583.00	1,564.00	1,574.83	1,572.81	Manhole
MH7	1,032	1,572.20	1,553.50	1,563.66	1,562.31	Manhole
MH6	1,032	1,564.00	1,548.50	1,557.55	1,557.31	Manhole
MH5	1,032	1,556.50	1,538.50	1,548.74	1,548.44	Manhole
MH4	1,032	1,547.80	1,529.00	1,542.80	1,541.57	Manhole
MH3	1,032	1,546.00	1,527.70	1,539.95	1,538.15	Manhole
MH2	1,032	1,538.50	1,524.15	1,533.92	1,533.71	Manhole
C1	1,032	1,537.00	1,521.00	1,529.81	1,529.81	Pipe Curve
MH-1	1,032	1,537.00	1,519.00	1,529.06	1,527.81	Deflection
Outlet	1,032	1,531.00	1,513.00	1,522.00	1,522.00	TPC Outlet Structure

Table C-5-pipe

UHDB to TPC Outlet Conduit pipe report
Concentration point C1A hydrograph control

Pipe	Upstream Node	Downstream Node	Discharge (cfs)	Length (ft)	Shape	Size	Roughness	Upstream Ground Elevation (ft)	Upstream Invert Elevation (ft)	Upstream HGL (ft)	Downstream Ground Elevation (ft)	Downstream Invert Elevation (ft)	Downstream HGL (ft)
P-16	I-1	MH14	215	148	Circular	96 inch	0.015	1,614.00	1,585.00	1,588.68	1,610.00	1,584.26	1,588.01
P-15	MH14	MH13	215	657	Circular	96 inch	0.015	1,610.00	1,584.26	1,587.94	1,605.50	1,580.98	1,585.52
P-14	MH13	MH12	215	660	Circular	96 inch	0.015	1,605.50	1,580.98	1,585.47	1,600.50	1,577.67	1,585.36
P-13	MH12	MH11	215	660	Circular	96 inch	0.015	1,600.50	1,577.67	1,585.35	1,595.30	1,574.38	1,584.87
P-12	MH11	I-2	215	405	Circular	96 inch	0.015	1,595.30	1,574.38	1,584.86	1,591.60	1,572.35	1,584.56
P-11	I-2	MH9	1,032	415	Circular	108 inch	0.015	1,591.60	1,572.35	1,582.68	1,587.00	1,568.50	1,578.90
P-10	MH9	MH8	1,032	425	Circular	108 inch	0.015	1,587.00	1,568.50	1,578.70	1,583.00	1,565.00	1,574.83
P-9	MH8	MH7	1,032	763	Circular	108 inch	0.015	1,583.00	1,565.00	1,572.81	1,572.20	1,554.50	1,563.66
P-8	MH7	MH6	1,032	562	Circular	108 inch	0.015	1,572.20	1,554.50	1,562.31	1,564.00	1,549.50	1,557.55
P-7	MH6	MH5	1,032	526	Circular	108 inch	0.015	1,564.00	1,549.50	1,557.31	1,556.50	1,539.50	1,548.74
P-6	MH5	MH4	1,032	621	Circular	108 inch	0.015	1,556.50	1,539.50	1,548.44	1,547.80	1,530.00	1,542.80
P-5	MH4	MH3	1,032	178	Circular	108 inch	0.015	1,547.80	1,530.00	1,541.57	1,546.00	1,528.70	1,539.95
P-4	MH3	MH2	1,032	475	Circular	108 inch	0.015	1,546.00	1,528.70	1,538.15	1,538.50	1,525.15	1,533.92
P-3	MH2	C1	1,032	420	Circular	108 inch	0.015	1,538.50	1,525.15	1,533.71	1,537.00	1,522.00	1,529.81
P-2	C1	MH-1	1,032	47	Circular	108 inch	0.015	1,537.00	1,522.00	1,529.81	1,537.00	1,520.00	1,529.06
P-1	MH-1	Outlet	1,032	153	Circular	108 inch	0.015	1,537.00	1,520.00	1,527.81	1,531.00	1,513.00	1,522.00

APPENDIX D

Pima Road Channel Hydraulic Calculations from FlowMaster

Section A-A Opt 1, Segment D, Sta 189+00
Worksheet for Irregular Channel

Project Description	
Project File	p:\28900051\flow master\10%dsrpt.fm2
Worksheet	A-A Option 1
Flow Element	Irregular Channel
Method	Manning's Formula
Solve For	Water Elevation

Input Data					
Channel Slope	0.010000 ft/ft				
Elevation range: 3.00 ft to 10.00 ft.					
Station (ft)	Elevation (ft)		Start Station	End Station	Roughness
100.00	10.00		100.00	178.00	0.022
124.00	4.00				
139.00	3.00				
154.00	4.00				
178.00	10.00				
Discharge	2,860.00	cfs			

Results		
Wtd. Mannings Coefficient	0.022	
Water Surface Elevation	7.97	ft
Flow Area	197.41	ft^2
Wetted Perimeter	62.84	ft
Top Width	61.79	ft
Height	4.97	ft
Critical Depth	8.93	ft
Critical Slope	0.004652	ft/ft
Velocity	14.49	ft/s
Velocity Head	3.26	ft
Specific Energy	11.24	ft
Froude Number	1.43	
Flow is supercritical.		

Section A-A Opt 2, Segment D, Sta 189+00
Worksheet for Irregular Channel

Project Description	
Project File	p:\28900051\flow master\10%dsrpt.fm2
Worksheet	A-A Option 2
Flow Element	Irregular Channel
Method	Manning's Formula
Solve For	Water Elevation

Input Data					
Channel Slope	0.010000 ft/ft				
Elevation range: 3.00 ft to 10.00 ft.					
Station (ft)	Elevation (ft)		Start Station	End Station	Roughness
100.00	10.00		100.00	164.00	0.022
112.00	4.00				
132.00	3.00				
152.00	4.00				
164.00	10.00				
Discharge	2,860.00	cfs			

Results		
Wtd. Mannings Coefficient	0.022	
Water Surface Elevation	7.58	ft
Flow Area	188.57	ft^2
Wetted Perimeter	56.04	ft
Top Width	54.30	ft
Height	4.58	ft
Critical Depth	8.59	ft
Critical Slope	0.004590	ft/ft
Velocity	15.17	ft/s
Velocity Head	3.57	ft
Specific Energy	11.15	ft
Froude Number	1.43	
Flow is supercritical.		

Section A-A Opt 1, Segment D, Sta 242+00
Worksheet for Irregular Channel

Project Description	
Project File	p:\28900051\flow master\10%dsrpt.fm2
Worksheet	A-A Option 1
Flow Element	Irregular Channel
Method	Manning's Formula
Solve For	Water Elevation

Input Data					
Channel Slope	0.010000 ft/ft				
Elevation range: 3.00 ft to 10.00 ft.					
Station (ft)	Elevation (ft)		Start Station	End Station	Roughness
100.00	10.00		100.00	178.00	0.022
124.00	4.00				
139.00	3.00				
154.00	4.00				
178.00	10.00				
Discharge	2,250.00	cfs			

Results		
Wtd. Mannings Coefficient	0.022	
Water Surface Elevation	7.45	ft
Flow Area	166.15	ft^2
Wetted Perimeter	58.52	ft
Top Width	57.61	ft
Height	4.45	ft
Critical Depth	8.27	ft
Critical Slope	0.004815	ft/ft
Velocity	13.54	ft/s
Velocity Head	2.85	ft
Specific Energy	10.30	ft
Froude Number	1.41	
Flow is supercritical.		

Section A-A Opt 2, Segment D, Sta 242+00
Worksheet for Irregular Channel

Project Description	
Project File	p:\28900051\flow master\10%dsrpt.fm2
Worksheet	A-A Option 2
Flow Element	Irregular Channel
Method	Manning's Formula
Solve For	Water Elevation

Input Data					
Channel Slope	0.010000 ft/ft				
Elevation range: 3.00 ft to 10.00 ft.					
Station (ft)	Elevation (ft)		Start Station	End Station	Roughness
100.00	10.00		100.00	164.00	0.022
112.00	4.00				
132.00	3.00				
152.00	4.00				
164.00	10.00				
Discharge	2,250.00	cfs			

Results		
Wtd. Mannings Coefficient	0.022	
Water Surface Elevation	7.05	ft
Flow Area	160.51	ft^2
Wetted Perimeter	53.68	ft
Top Width	52.19	ft
Height	4.05	ft
Critical Depth	7.89	ft
Critical Slope	0.004765	ft/ft
Velocity	14.02	ft/s
Velocity Head	3.05	ft
Specific Energy	10.10	ft
Froude Number	1.41	
Flow is supercritical.		

Section B-B, Segment F, Sta 1007+00
Worksheet for Irregular Channel

Project Description	
Project File	p:\28900051\flow master\10%dsrpt.fm2
Worksheet	B-B Opt 1
Flow Element	Irregular Channel
Method	Manning's Formula
Solve For	Water Elevation

Input Data					
Channel Slope	0.010000 ft/ft				
Elevation range: 3.00 ft to 10.00 ft.					
Station (ft)	Elevation (ft)		Start Station	End Station	Roughness
100.00	10.00		100.00	168.00	0.022
124.00	4.00				
134.00	3.00				
144.00	4.00				
168.00	10.00				
Discharge	2,020.00	cfs			

Results		
Wtd. Mannings Coefficient	0.022	
Water Surface Elevation	7.90	ft
Flow Area	148.85	ft^2
Wetted Perimeter	52.26	ft
Top Width	51.20	ft
Height	4.90	ft
Critical Depth	8.73	ft
Critical Slope	0.004848	ft/ft
Velocity	13.57	ft/s
Velocity Head	2.86	ft
Specific Energy	10.76	ft
Froude Number	1.40	
Flow is supercritical.		

Section B-B Opt 2, Segment F, Sta1007+00
Worksheet for Irregular Channel

Project Description	
Project File	p:\28900051\flow master\10%dsrpt.fm2
Worksheet	B-B Opt 2
Flow Element	Irregular Channel
Method	Manning's Formula
Solve For	Water Elevation

Input Data		
Channel Slope	0.010000	ft/ft
Elevation range: 3.00 ft to 10.00 ft.		

Station (ft)	Elevation (ft)	Start Station	End Station	Roughness
100.00	10.00	100.00	154.00	0.022
112.00	4.00			
127.00	3.00			
142.00	4.00			
154.00	10.00			

Discharge	2,020.00	cfs

Results		
Wtd. Mannings Coefficient	0.022	
Water Surface Elevation	7.41	ft
Flow Area	140.60	ft^2
Wetted Perimeter	45.32	ft
Top Width	43.64	ft
Height	4.41	ft
Critical Depth	8.31	ft
Critical Slope	0.004772	ft/ft
Velocity	14.37	ft/s
Velocity Head	3.21	ft
Specific Energy	10.62	ft
Froude Number	1.41	
Flow is supercritical.		

Section B-B, Segment F, Sta 1038+00
Worksheet for Irregular Channel

Project Description	
Project File	p:\28900051\flow master\10%dsrpt.fm2
Worksheet	B-B Opt 1
Flow Element	Irregular Channel
Method	Manning's Formula
Solve For	Water Elevation

Input Data					
Channel Slope	0.010000 ft/ft				
Elevation range: 3.00 ft to 10.00 ft.					
Station (ft)	Elevation (ft)		Start Station	End Station	Roughness
100.00	10.00		100.00	168.00	0.022
124.00	4.00				
134.00	3.00				
144.00	4.00				
168.00	10.00				
Discharge	1,810.00	cfs			

Results		
Wtd. Mannings Coefficient	0.022	
Water Surface Elevation	7.67	ft
Flow Area	137.32	ft^2
Wetted Perimeter	50.37	ft
Top Width	49.37	ft
Height	4.67	ft
Critical Depth	8.45	ft
Critical Slope	0.004921	ft/ft
Velocity	13.18	ft/s
Velocity Head	2.70	ft
Specific Energy	10.37	ft
Froude Number	1.39	
Flow is supercritical.		

Section B-B Opt 2, Segment F, Sta1038+00
Worksheet for Irregular Channel

Project Description	
Project File	p:\28900051\flow master\10%dsrpt.fm2
Worksheet	B-B Opt 2
Flow Element	Irregular Channel
Method	Manning's Formula
Solve For	Water Elevation

Input Data					
Channel Slope	0.010000 ft/ft				
Elevation range: 3.00 ft to 10.00 ft.					
Station (ft)	Elevation (ft)		Start Station	End Station	Roughness
100.00	10.00		100.00	154.00	0.022
112.00	4.00				
127.00	3.00				
142.00	4.00				
154.00	10.00				
Discharge	1,810.00	cfs			

Results		
Wtd. Mannings Coefficient	0.022	
Water Surface Elevation	7.17	ft
Flow Area	130.40	ft^2
Wetted Perimeter	44.26	ft
Top Width	42.70	ft
Height	4.17	ft
Critical Depth	8.01	ft
Critical Slope	0.004849	ft/ft
Velocity	13.88	ft/s
Velocity Head	2.99	ft
Specific Energy	10.17	ft
Froude Number	1.40	
Flow is supercritical.		

Section C-C Opt 1, Segment F, Sta1052+00
Worksheet for Trapezoidal Channel

Project Description	
Project File	p:\28900051\flow master\10%dsrpt.fm2
Worksheet	C-C and D-D Opt 1
Flow Element	Trapezoidal Channel
Method	Manning's Formula
Solve For	Channel Depth

Input Data		
Mannings Coefficient	0.022	
Channel Slope	0.010000	ft/ft
Left Side Slope	4.000000	H : V
Right Side Slope	4.000000	H : V
Bottom Width	8.00	ft
Discharge	1,240.00	cfs

Results		
Depth	4.15	ft
Flow Area	101.96	ft^2
Wetted Perimeter	42.20	ft
Top Width	41.17	ft
Critical Depth	4.80	ft
Critical Slope	0.005167	ft/ft
Velocity	12.16	ft/s
Velocity Head	2.30	ft
Specific Energy	6.45	ft
Froude Number	1.36	
Flow is supercritical.		

Section C-C Opt 2, Segment F, Sta1052+00
Worksheet for Trapezoidal Channel

Project Description	
Project File	p:\28900051\flow master\10%dsrpt.fm2
Worksheet	C-C and D-D Opt 2
Flow Element	Trapezoidal Channel
Method	Manning's Formula
Solve For	Channel Depth

Input Data		
Mannings Coefficient	0.022	
Channel Slope	0.010000	ft/ft
Left Side Slope	2.000000	H : V
Right Side Slope	2.000000	H : V
Bottom Width	15.00	ft
Discharge	1,240.00	cfs

Results		
Depth	4.01	ft
Flow Area	92.34	ft²
Wetted Perimeter	32.94	ft
Top Width	31.04	ft
Critical Depth	4.79	ft
Critical Slope	0.005086	ft/ft
Velocity	13.43	ft/s
Velocity Head	2.80	ft
Specific Energy	6.81	ft
Froude Number	1.37	
Flow is supercritical.		

Section D-D Opt 1, Segment F, Sta1094+00
Worksheet for Trapezoidal Channel

Project Description	
Project File	p:\28900051\flow master\10%dsrpt.fm2
Worksheet	C-C and D-D Opt 1
Flow Element	Trapezoidal Channel
Method	Manning's Formula
Solve For	Channel Depth

Input Data		
Mannings Coefficient	0.022	
Channel Slope	0.010000	ft/ft
Left Side Slope	4.000000	H : V
Right Side Slope	4.000000	H : V
Bottom Width	8.00	ft
Discharge	140.00	cfs

Results		
Depth	1.47	ft
Flow Area	20.50	ft^2
Wetted Perimeter	20.16	ft
Top Width	19.80	ft
Critical Depth	1.62	ft
Critical Slope	0.006971	ft/ft
Velocity	6.83	ft/s
Velocity Head	0.72	ft
Specific Energy	2.20	ft
Froude Number	1.18	
Flow is supercritical.		

Section D-D Opt 2, Segment F, Sta1094+00
Worksheet for Trapezoidal Channel

Project Description	
Project File	p:\28900051\flow master\10%dsrpt.fm2
Worksheet	C-C and D-D Opt 2
Flow Element	Trapezoidal Channel
Method	Manning's Formula
Solve For	Channel Depth

Input Data		
Mannings Coefficient	0.022	
Channel Slope	0.010000	ft/ft
Left Side Slope	2.000000	H : V
Right Side Slope	2.000000	H : V
Bottom Width	15.00	ft
Discharge	140.00	cfs

Results		
Depth	1.18	ft
Flow Area	20.55	ft^2
Wetted Perimeter	20.29	ft
Top Width	19.73	ft
Critical Depth	1.31	ft
Critical Slope	0.007025	ft/ft
Velocity	6.81	ft/s
Velocity Head	0.72	ft
Specific Energy	1.90	ft
Froude Number	1.18	
Flow is supercritical.		

Section C-C Opt 1, Segment F, Sta1074+00
Worksheet for Trapezoidal Channel

Project Description	
Project File	p:\28900051\flow master\10%dsrpt.fm2
Worksheet	C-C and D-D Opt 1
Flow Element	Trapezoidal Channel
Method	Manning's Formula
Solve For	Channel Depth

Input Data		
Mannings Coefficient	0.022	
Channel Slope	0.010000	ft/ft
Left Side Slope	4.000000	H : V
Right Side Slope	4.000000	H : V
Bottom Width	8.00	ft
Discharge	250.00	cfs

Results		
Depth	1.97	ft
Flow Area	31.24	ft²
Wetted Perimeter	24.23	ft
Top Width	23.75	ft
Critical Depth	2.19	ft
Critical Slope	0.006424	ft/ft
Velocity	8.00	ft/s
Velocity Head	0.99	ft
Specific Energy	2.96	ft
Froude Number	1.23	
Flow is supercritical.		

Section C-C Opt 2, Segment F, Sta1074+00
Worksheet for Trapezoidal Channel

Project Description	
Project File	p:\28900051\flow master\10%dsrpt.fm2
Worksheet	C-C and D-D Opt 2
Flow Element	Trapezoidal Channel
Method	Manning's Formula
Solve For	Channel Depth

Input Data		
Mannings Coefficient	0.022	
Channel Slope	0.010000	ft/ft
Left Side Slope	2.000000	H : V
Right Side Slope	2.000000	H : V
Bottom Width	15.00	ft
Discharge	250.00	cfs

Results		
Depth	1.65	ft
Flow Area	30.28	ft^2
Wetted Perimeter	22.40	ft
Top Width	21.61	ft
Critical Depth	1.88	ft
Critical Slope	0.006396	ft/ft
Velocity	8.26	ft/s
Velocity Head	1.06	ft
Specific Energy	2.71	ft
Froude Number	1.23	
Flow is supercritical.		

Section B-B, Segment G, Sta 1008+00
Worksheet for Irregular Channel

Project Description	
Project File	p:\28900051\flow master\10%dsrpt.fm2
Worksheet	B-B Opt 1
Flow Element	Irregular Channel
Method	Manning's Formula
Solve For	Water Elevation

Input Data					
Channel Slope	0.010000 ft/ft				
Elevation range: 3.00 ft to 10.00 ft.					
Station (ft)	Elevation (ft)		Start Station	End Station	Roughness
100.00	10.00		100.00	168.00	0.022
124.00	4.00				
134.00	3.00				
144.00	4.00				
168.00	10.00				
Discharge	2,200.00	cfs			

Results		
Wtd. Mannings Coefficient	0.022	
Water Surface Elevation	8.09	ft
Flow Area	158.49	ft^2
Wetted Perimeter	53.79	ft
Top Width	52.69	ft
Height	5.09	ft
Critical Depth	8.96	ft
Critical Slope	0.004791	ft/ft
Velocity	13.88	ft/s
Velocity Head	2.99	ft
Specific Energy	11.08	ft
Froude Number	1.41	
Flow is supercritical.		

Section B-B Opt 2, Segment G, Sta1008+00
Worksheet for Irregular Channel

Project Description	
Project File	p:\28900051\flow master\10%dsrpt.fm2
Worksheet	B-B Opt 2
Flow Element	Irregular Channel
Method	Manning's Formula
Solve For	Water Elevation

Input Data		
Channel Slope	0.010000 ft/ft	
Elevation range: 3.00 ft to 10.00 ft.		

Station (ft)	Elevation (ft)	Start Station	End Station	Roughness
100.00	10.00	100.00	154.00	0.022
112.00	4.00			
127.00	3.00			
142.00	4.00			
154.00	10.00			

Discharge	2,200.00	cfs

Results		
Wtd. Mannings Coefficient	0.022	
Water Surface Elevation	7.60	ft
Flow Area	149.11	ft^2
Wetted Perimeter	46.19	ft
Top Width	44.42	ft
Height	4.60	ft
Critical Depth	8.57	ft
Critical Slope	0.004713	ft/ft
Velocity	14.75	ft/s
Velocity Head	3.38	ft
Specific Energy	10.99	ft
Froude Number	1.42	
Flow is supercritical.		

Section C-C Opt 1, Segment G, Sta1023+00
Worksheet for Trapezoidal Channel

Project Description	
Project File	p:\28900051\flow master\10%dsrpt.fm2
Worksheet	C-C and D-D Opt 1
Flow Element	Trapezoidal Channel
Method	Manning's Formula
Solve For	Channel Depth

Input Data		
Mannings Coefficient	0.022	
Channel Slope	0.010000	ft/ft
Left Side Slope	4.000000	H : V
Right Side Slope	4.000000	H : V
Bottom Width	8.00	ft
Discharge	1,510.00	cfs

Results		
Depth	4.52	ft
Flow Area	118.06	ft^2
Wetted Perimeter	45.31	ft
Top Width	44.19	ft
Critical Depth	5.25	ft
Critical Slope	0.005033	ft/ft
Velocity	12.79	ft/s
Velocity Head	2.54	ft
Specific Energy	7.07	ft
Froude Number	1.38	
Flow is supercritical.		

Section C-C Opt 2, Segment G, Sta1023+00
Worksheet for Trapezoidal Channel

Project Description	
Project File	p:\28900051\flow master\10%dsrpt.fm2
Worksheet	C-C and D-D Opt 2
Flow Element	Trapezoidal Channel
Method	Manning's Formula
Solve For	Channel Depth

Input Data		
Mannings Coefficient	0.022	
Channel Slope	0.010000	ft/ft
Left Side Slope	2.000000	H : V
Right Side Slope	2.000000	H : V
Bottom Width	15.00	ft
Discharge	1,510.00	cfs

Results		
Depth	4.45	ft
Flow Area	106.36	ft^2
Wetted Perimeter	34.90	ft
Top Width	32.80	ft
Critical Depth	5.34	ft
Critical Slope	0.004955	ft/ft
Velocity	14.20	ft/s
Velocity Head	3.13	ft
Specific Energy	7.58	ft
Froude Number	1.39	
Flow is supercritical.		

Section C-C Opt 1, Segment G, Sta1053+00
Worksheet for Trapezoidal Channel

Project Description	
Project File	p:\28900051\flow master\10%dsrpt.fm2
Worksheet	C-C and D-D Opt 1
Flow Element	Trapezoidal Channel
Method	Manning's Formula
Solve For	Channel Depth

Input Data		
Mannings Coefficient	0.022	
Channel Slope	0.010000	ft/ft
Left Side Slope	4.000000	H : V
Right Side Slope	4.000000	H : V
Bottom Width	8.00	ft
Discharge	1,230.00	cfs

Results		
Depth	4.13	ft
Flow Area	101.34	ft^2
Wetted Perimeter	42.07	ft
Top Width	41.05	ft
Critical Depth	4.78	ft
Critical Slope	0.005173	ft/ft
Velocity	12.14	ft/s
Velocity Head	2.29	ft
Specific Energy	6.42	ft
Froude Number	1.36	
Flow is supercritical.		

Section C-C Opt 2, Segment G, Sta1053+00
Worksheet for Trapezoidal Channel

Project Description	
Project File	p:\28900051\flow master\10%dsrpt.fm2
Worksheet	C-C and D-D Opt 2
Flow Element	Trapezoidal Channel
Method	Manning's Formula
Solve For	Channel Depth

Input Data		
Mannings Coefficient	0.022	
Channel Slope	0.010000	ft/ft
Left Side Slope	2.000000	H : V
Right Side Slope	2.000000	H : V
Bottom Width	15.00	ft
Discharge	1,230.00	cfs

Results		
Depth	3.99	ft
Flow Area	91.81	ft^2
Wetted Perimeter	32.86	ft
Top Width	30.97	ft
Critical Depth	4.77	ft
Critical Slope	0.005091	ft/ft
Velocity	13.40	ft/s
Velocity Head	2.79	ft
Specific Energy	6.78	ft
Froude Number	1.37	
Flow is supercritical.		

APPENDIX E

Collector Channels Hydraulic Calculations from FlowMaster

Collector Segment A
Worksheet for Trapezoidal Channel

Project Description	
Project File	p:\28900051\flow master\10 perce.fm2
Worksheet	Pima Freeway Channel to UH Basin
Flow Element	Trapezoidal Channel
Method	Manning's Formula
Solve For	Channel Depth

Input Data		
Mannings Coefficient	0.022	
Channel Slope	0.002500	ft/ft
Left Side Slope	2.000000	H : V
Right Side Slope	2.000000	H : V
Bottom Width	8.00	ft
Discharge	776.00	cfs

Results		
Depth	5.53	ft
Flow Area	105.38	ft^2
Wetted Perimeter	32.73	ft
Top Width	30.12	ft
Critical Depth	4.60	ft
Critical Slope	0.005436	ft/ft
Velocity	7.36	ft/s
Velocity Head	0.84	ft
Specific Energy	6.37	ft
Froude Number	0.69	
Flow is subcritical.		

Collector Segment B
Worksheet for Trapezoidal Channel

Project Description	
Project File	p:\28900051\flow master\10 perce.fm2
Worksheet	Pima Freeway channel to Pima Road
Flow Element	Trapezoidal Channel
Method	Manning's Formula
Solve For	Channel Depth

Input Data		
Mannings Coefficient	0.022	
Channel Slope	0.007500	ft/ft
Left Side Slope	2.000000	H : V
Right Side Slope	2.000000	H : V
Bottom Width	8.00	ft
Discharge	309.00	cfs

Results		
Depth	2.68	ft
Flow Area	35.81	ft²
Wetted Perimeter	19.99	ft
Top Width	18.72	ft
Critical Depth	2.82	ft
Critical Slope	0.006122	ft/ft
Velocity	8.63	ft/s
Velocity Head	1.16	ft
Specific Energy	3.84	ft
Froude Number	1.10	
Flow is supercritical.		

Collector Segment C
Worksheet for Trapezoidal Channel

Project Description	
Project File	p:\28900051\flow master\10 perce.fm2
Worksheet	Pima Freeway channel to Pima Road
Flow Element	Trapezoidal Channel
Method	Manning's Formula
Solve For	Channel Depth

Input Data		
Mannings Coefficient	0.022	
Channel Slope	0.010000	ft/ft
Left Side Slope	2.000000	H : V
Right Side Slope	2.000000	H : V
Bottom Width	8.00	ft
Discharge	196.00	cfs

Results		
Depth	1.96	ft
Flow Area	23.29	ft^2
Wetted Perimeter	16.74	ft
Top Width	15.82	ft
Critical Depth	2.19	ft
Critical Slope	0.006505	ft/ft
Velocity	8.42	ft/s
Velocity Head	1.10	ft
Specific Energy	3.06	ft
Froude Number	1.22	
Flow is supercritical.		

Collector Segment E
Worksheet for Trapezoidal Channel

Project Description	
Project File	p:\28900051\flow master\10 perce.fm2
Worksheet	Union Hills channel to UH Basin (trap)
Flow Element	Trapezoidal Channel
Method	Manning's Formula
Solve For	Channel Depth

Input Data		
Mannings Coefficient	0.022	
Channel Slope	0.008500	ft/ft
Left Side Slope	2.000000	H : V
Right Side Slope	2.000000	H : V
Bottom Width	10.00	ft
Discharge	446.00	cfs

Results		
Depth	2.88	ft
Flow Area	45.37	ft^2
Wetted Perimeter	22.88	ft
Top Width	21.52	ft
Critical Depth	3.18	ft
Critical Slope	0.005828	ft/ft
Velocity	9.83	ft/s
Velocity Head	1.50	ft
Specific Energy	4.38	ft
Froude Number	1.19	
Flow is supercritical.		

APPENDIX F

TPC Outlet Structure Hydraulic Calculations

Stantech Consulting

Project: Project Number:

Notes: Scale:

Page of Page(s)

Computed By: Date: Checked By: Date:

108"

$\Rightarrow$ Pipe @ $\approx$ 0.0413'/ft slope

depth = diam/2 = 4.5'

$Q = 1{,}100$ cfs

$D_o = 108''$
$Y_o = 4.5'$
$A = 31.81\ ft^2$

$V_o = 34.58$ fps

$$Y_e = \left(\frac{A}{2}\right)^{0.5} = \left(\frac{31.81}{2}\right)^{0.5} = 3.99'$$

$$Fr^2 = V_o^2 / g y_e = (34.58)^2 / (32.2)(3.99) = 9.31$$

$W = 2D = 2(9) = 18'$

• Assume $\frac{L_2}{h_2} = 3.5$ From VIII-A-2 @ $Fr^2 = 9.31$

$$\Rightarrow \frac{h_2}{y_e} = 2.0 \ (2.4)$$

$h_2 = 2(3.99) = 8.0'$

$L_2 = 3.5(8) = 28'$

From Fig VIII-A-3 @ $L_2 = 28'$, $L_2/h_2 = 3.5$

$\Rightarrow L_3 = 46'$

From Fig VIII-A-4 @ $h_2 = 8.0$, $L_2/h_2 = 3.5$

$\Rightarrow y_2 = 16.5'$

$h_3 = 0.09(y_2) = 1.5'$

ARIZONA
7776 Pointe Parkway West., Suite 290
Phoenix, AZ 85044
Voice (602) 438-2200
Fax (602) 431-9562

NEVADA
1100 Grier Drive
Las Vegas, NV 89119
(702) 361-9050
Fax (702) 361-0659

950 Industrial Way
Sparks, NV 89431
(702) 358-6931
Fax (702) 358-6954

VIII-A. CONTRA COSTA ENERGY DISSIPATOR

INTRODUCTION

The Contra Costa energy dissipator (VIII-A-1) was developed at the University of California, Berkeley, in conjunction with Contra Costa County, California. The dissipator was developed to meet the following conditions: (1) to reestablish natural channel flow conditions downstream from the culvert outlet; (2) to have self-cleaning and minimum maintenance properties; (3) to drain by gravity when not in operation; (4) to be easily and economically constructed; and (5) to be applicable for a wide range of culvert sizes and operating conditions.

Field experience with this dissipator has been very limited. Its use should not be extended beyond the range of the model tests.

The dissipator is best suited to small and medium size culverts of any cross section where the depth of flow at the outlet is less than the culvert height. It is applicable for medium and high velocity effluents. The dissipator design is such that the flow leaving the structure will be at minimum energy when operating without tailwater. When tailwater is present, the performance will improve. A sketch of the dissipator arrangement is shown in Figure VIII-A-1.

DESIGN DISCUSSION

The initial step is to determine the equivalent depth of flow (y_e) at the culvert outfall: For box culverts $y_e=y_n$ or y brink. For oval, elliptical, circular, or other shapes, convert the areas of flow at the culvert outfall to an equivalent rectangular cross section with a width equal to twice the depth of flow $y_e= (A/2)^{1/2}$. In so doing, the design information is applicable to oval, elliptical, and circular culverts.

The Froude number is computed by using y_e rather than the actual depth of flow at the culvert outfall, $Fr=V/\sqrt{gy_e}$. By entering Figure VIII-A-2 with Fr^2, and an assumed value of L_2/h_2, a trial height of the second baffle, h_2, can be determined. The equation of the lines in figure VIII-A-2 has been changed slightly from that presented in the original

paper to compensate for replacing the depth of flow in a circular pipe (y_o) by the equivalent rectangular flow depth, y_e. The original equation

$$L_2/h_2Fr^2 = 1.2(h_2/y_o)^{1.8}$$

has been revised to

$$L_2/h_2Fr^2 = 1.35(h_2/y_e)^{1.8} \quad \ldots\ldots\ldots \text{VIII-A-1}$$

The remaining two equations, used for determining other dimensions of the dissipator, remain unchanged; these are given below and plotted on figures VIII-A-3 and 4.

$$L_3/L_2 = 3.75(h_2/L_2)^{0.68} \quad \ldots\ldots\ldots\ldots \text{VIII-A-2}$$

$$y_2/h_2 = 1.3(L_2/h_2)^{0.36} \quad \ldots\ldots\ldots\ldots \text{VIII-A-3}$$

The three equations may be used for proportioning the dissipator but figures VIII-A-2, 3, and 4 are more convenient and practical to use for design purposes.

The value of L_2/h_2 varied from 2.5 to 7.0 in the experiments and a value of 3.5 is recommended for best performance wherever economically feasible. The value of h_2/y_e should always be greater than unity. After determining values of h_2 and L_2 from figure VIII-A-2, the dimension L_3 can be obtained by entering figure VIII-A-3 with L_2 and the assumed value of L_2/h_2. Should the dimensional proportioning thus obtained be uneconomical or fail to properly fit the site, a second value of L_2/h_2 is assumed and the process repeated.

From figure VIII-A-1, the height h_1 of the first baffle is half the height of the second baffle h_2, and the position of the first baffle is half way between the culvert outlet and the second baffle or $L_2/2$. Side slopes of the trapezoidal basin for all experimental runs were 1:1. The width of basin (W) may vary from one to three times the width of the culvert. The floor of the basin should be essentially level. The height of the end sill may vary from $0.06(y_3)$ to $0.10(y_3)$. After obtaining satisfactory basin dimensions, the approximate maximum water surface depth, y_2, without tailwater, can be obtained from figure VIII-A-4.

DESIGN PROCEDURE

The dissipator design should only be applied within the design limitations:

$2.5 < L_2/h_2 < 7.0$
$D < W < 3D$
$y_o < D/3$
and side slopes of 1:1

The following steps outline the procedure for the design of the Contra Costa energy dissipator:

1. Analyze flow conditions that are expected to occur at the outfall of culvert for the design discharge.

   If the depth of flow at the outlet is one half culvert diameter or less, the Contra Costa dissipator is applicable.

2. Compute y_e:
   $y_e = y_o$; for rectangular
   $y_e = (A/2)^{1/2}$; for other shapes

3. Compute the parameter $Fr^2 = V_o^2/gy_e$

4. The width of the basin floor is selected to conform to the natural channel. If there is no defined channel, the width is set at a maximum of three times the culvert width.

5. Assume a value of L_2/h_2 between 2.5 and 7 and with the aid of figures VIII-A-2 and 3, determine h_2, L_2 and L_3: Give due consideration to the optimum value of $L_2/h_2 = 3.5$ as well as to the engineering and economic requirements of the particular situation. Repeat the procedure, if necessary, until a dissipator is defined which optimizes the design requirements. The first baffle height (h_1) is $0.5h_2$.

6. The approximate maximum water surface depth without tailwater can be obtained for the final arrangement from figure VIII-A-4.

7. Riprap may be necessary downstream especially for the low tailwater cases. See chapter II for design recommendations. Freeboard and a cutoff wall also should be considered to prevent overtopping and undermining of the basin.

<u>Example Problem</u>

Given: Diameter of culvert 4.0 feet
$Q = 300$ c.f.s.
$y_o = 2.3$ ft.
$V_o = 40$ f.p.s.
$A = 7.50$ sq. ft.

Find: A Contra Costa energy dissipator dimensions

Solution:

1. y_o=2.3 ft.≈D/2, OK

2. $y_e=(7.5/2)^{1/2}$=1.94 ft.

3. $Fr^2=V_o^2/g(y_e)=40^2/32.2x1.94=25.6$

4. W=2D=8 ft.

5. By assuming L_2/h_2=3.5 and entering figure VIII-A-2 with Fr^2=25.6, a value of 3.50 is obtained for h_2/y_e. Therefore,

   h_2= 3.50(1.94) = 6.8 ft. and

   h_1= .5(6.8) = 3.4 ft.

   L_2= 3.5(6.8) = 23.8 ft.

   Entering figure VIII-A-3 with L_2 = 23.8 feet and L_2/h_2 = 3.5, L_3 is found to be 38 feet. If the maximum rise in water surface, without tailwater, is desired, this can be obtained from figure VIII-A-4. Strictly speaking, the value of y_2 from this chart applies for a bottom width W/D = 2 and 1:1 side slopes. For the problem at hand, these values are essentially correct.

6. Entering figure VIII-A-4 with h_2 = 6.8 ft. and L_2/h_2 = 3.5, gives y_2 = 13.9 feet. If the height of end sill is based on this value,

   h_3 = 0.09(y_2)=0.09(13.9)=1.25 ft.

   If the above proportioning proves compatible with the topography at the site and the dissipator is economically satisfactory, the above dimensions are final; if not, a different value of L_2/h_2 is selected and the design procedure repeated. Assuming the first computation is acceptable, the various dimensions of the dissipator are:

Dimensions in Feet and Inches

	W	First Baffle	Second Baffle	End Sill
Hor. Distance	8-0	12-0	24-0	62-0
Height	-	3-6	7-0	1-3
Length (baffle)	-	8-0	8-0	10-6

VIII-A-1. Keim, R. S., THE CONTRA COSTA ENERGY DISSIPATOR. Journal of Hydraulics Division, A.S.C.E. paper 3077, March 1962, p. 109.

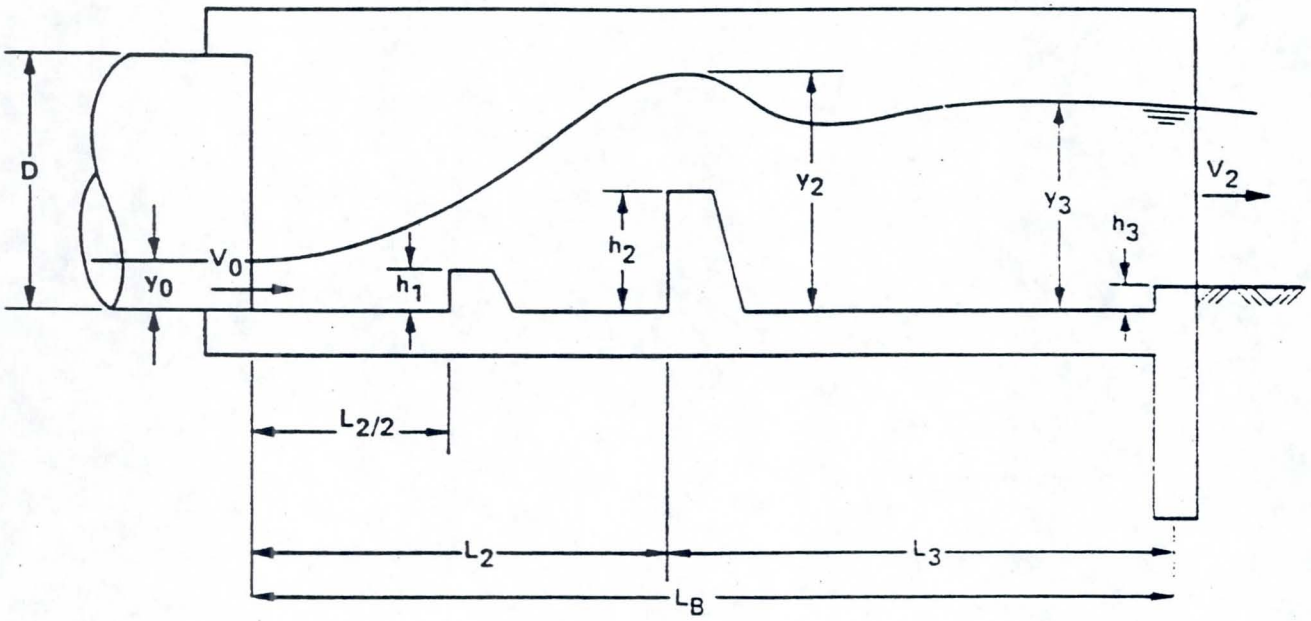

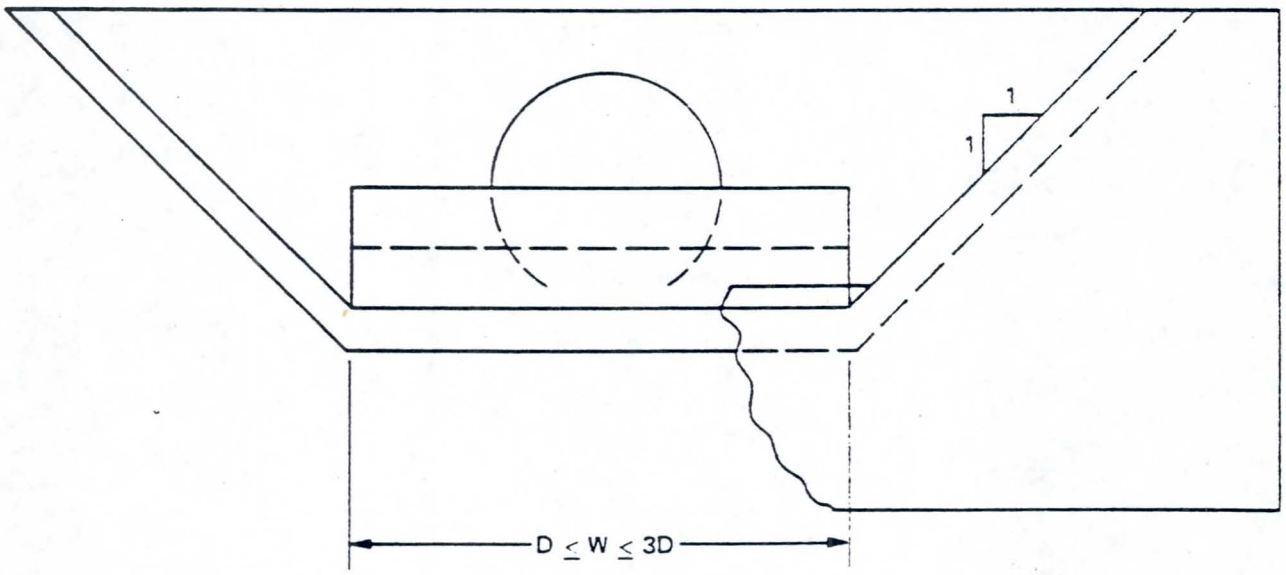

FIGURE VIII–A–1. CONTRA COSTA ENERGY DISSIPATOR

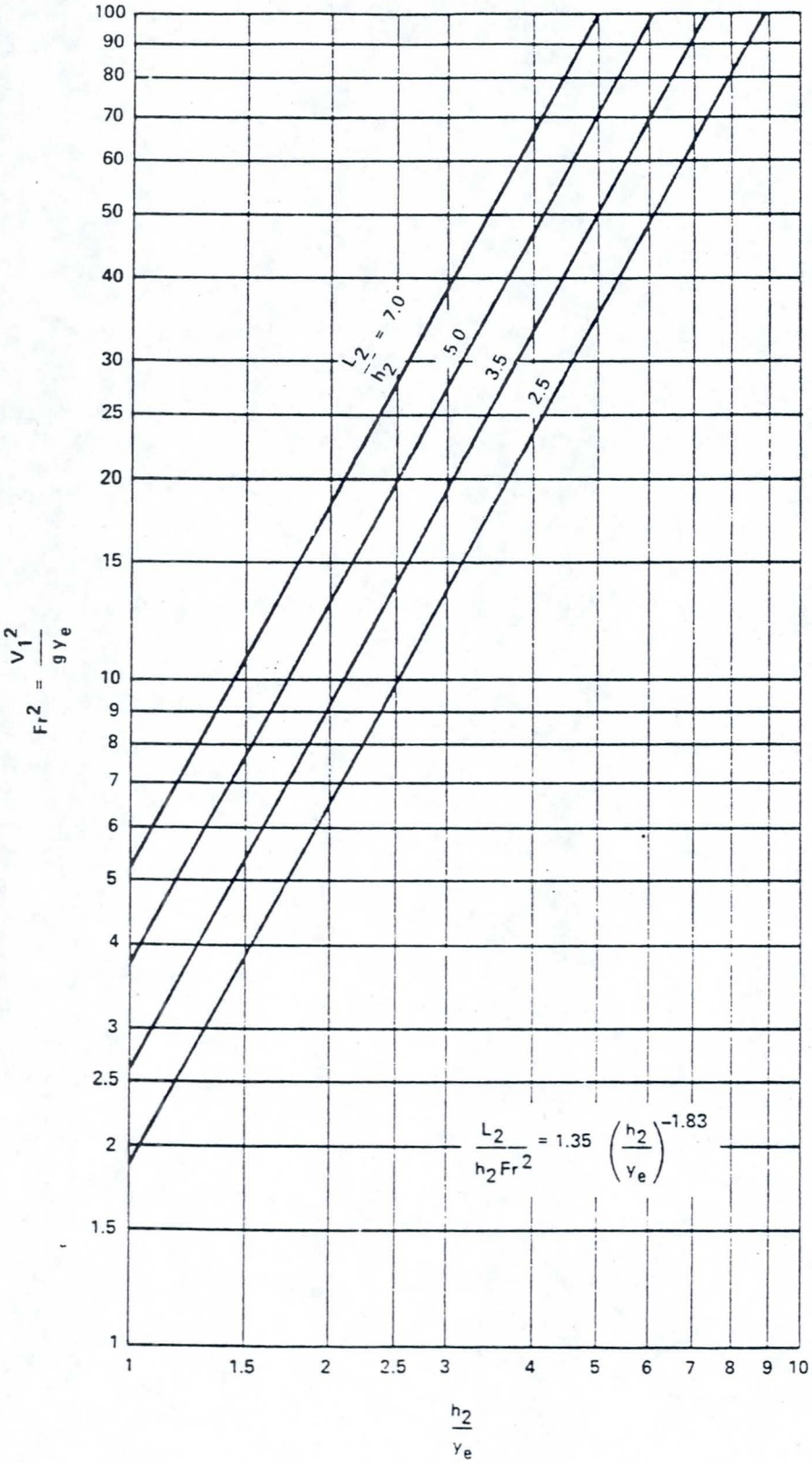

FIGURE VIII–A–2. BAFFLE HEIGHT, CONTRA COSTA ENERGY DISSIPATOR

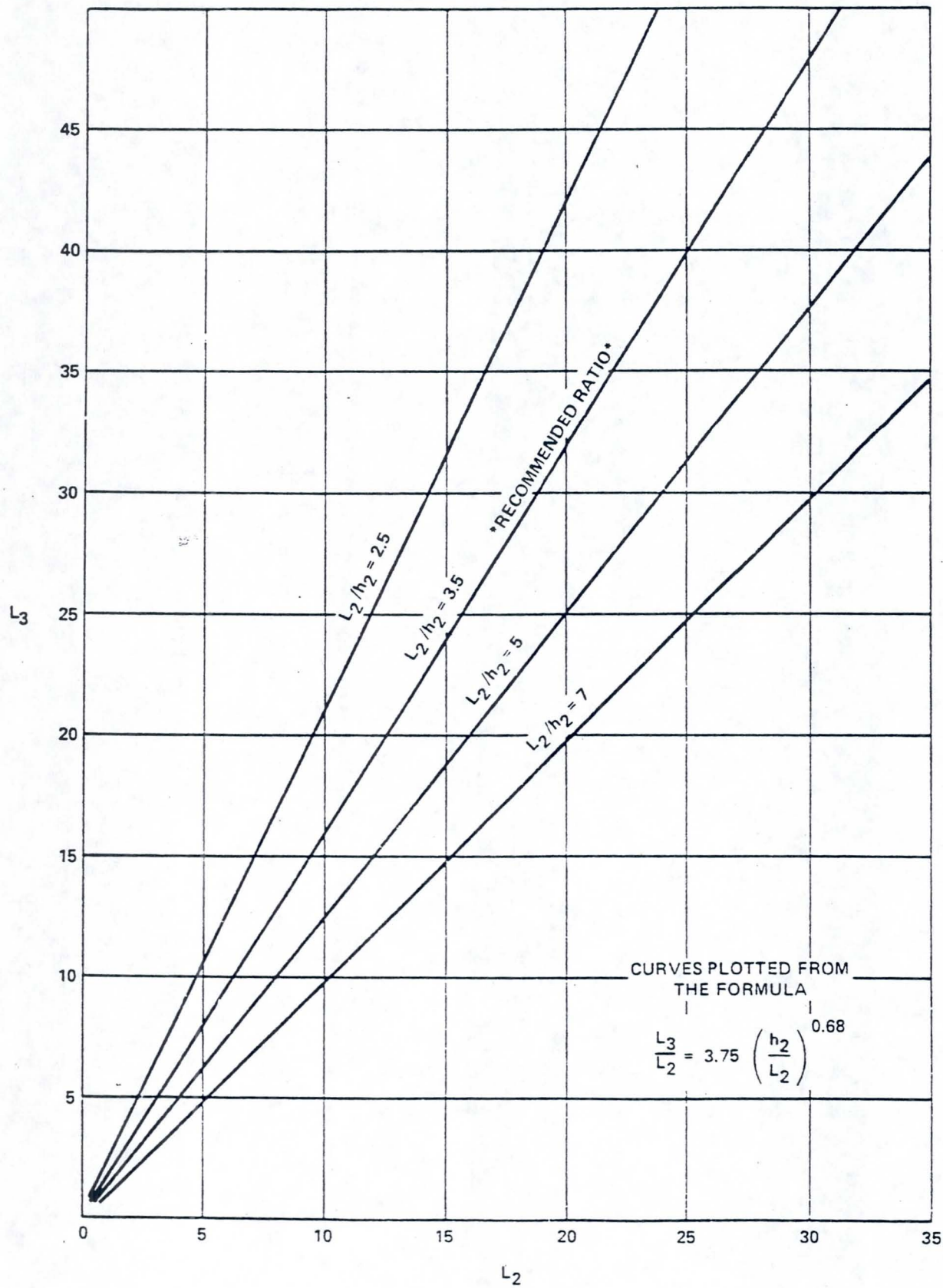

FIGURE VIII--A–3. LENGTH OF CONTRA COSTA ENERGY DISSIPATOR

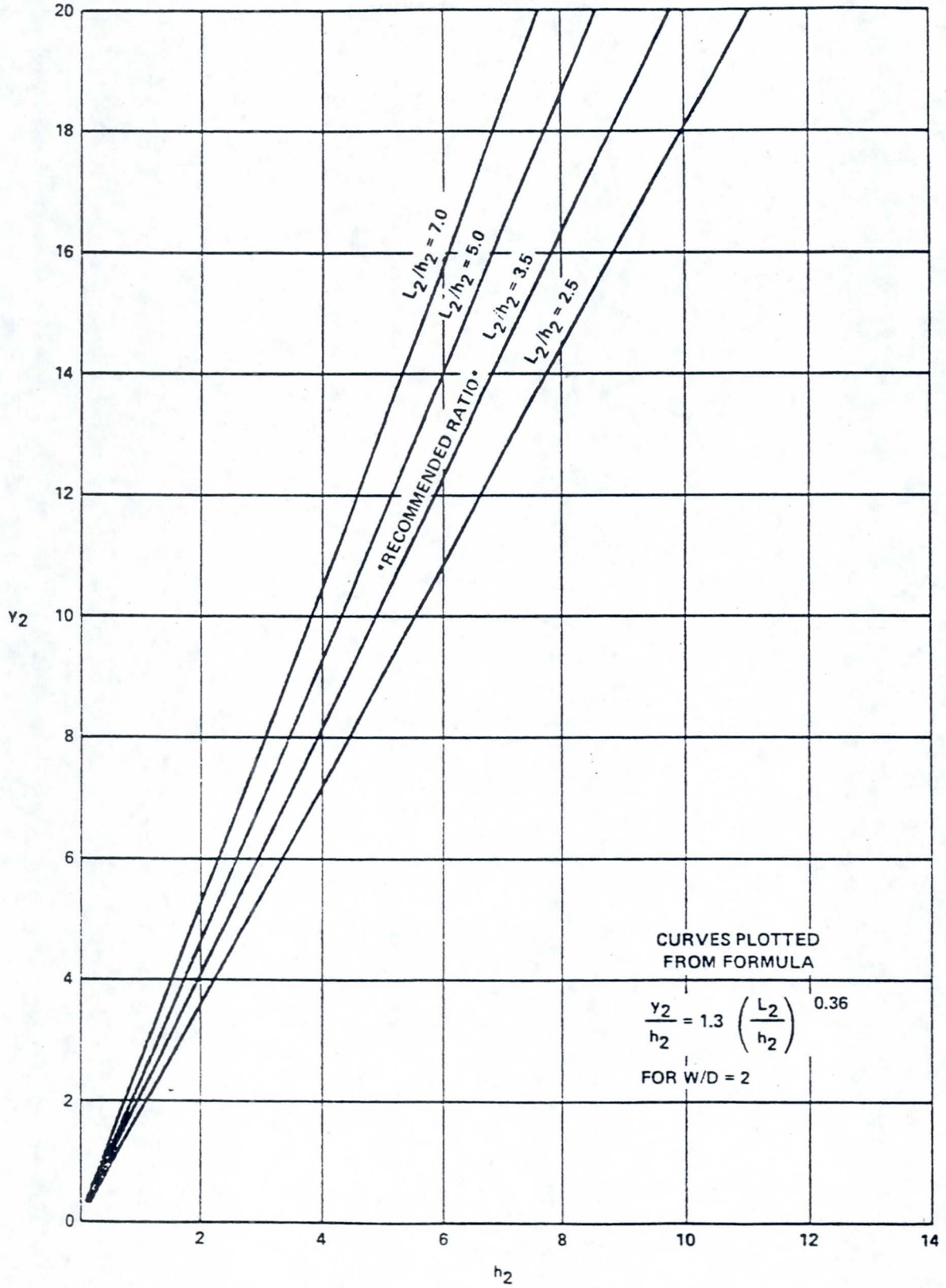

FIGURE VIII–A–4. DEPTH OVER BAFFLE–CONTRA COSTA ENERGY DISSIPATOR

APPENDIX G

Culvert Hydraulic Analyses from HY-8

CURRENT DATE: 11-26-1997 FILE DATE: 11-26-1997
CURRENT TIME: 10:59:00 FILE NAME: WTRCMPS

****
********** FHWA CULVERT ANALYSIS **********
********** HY-8, VERSION 6.0 **********
****

WATER CAMPUS ACCESS RD.
PIMA ROAD CHANNEL
STA. 192+83

CULV NO.	SITE DATA: INLET ELEV. (ft)	OUTLET ELEV. (ft)	CULVERT LENGTH (ft)	CULVERT SHAPE, MATERIAL, INLET: BARRELS SHAPE MATERIAL	SPAN (ft)	RISE (ft)	MANNING n	INLET TYPE
1	100.00	99.50	50.00	4 RCB	12.00	8.00	.015	CONVENTIONAL
2								
3								
4								
5								
6								

****

SUMMARY OF CULVERT FLOWS (cfs) FILE: WTRCMPS DATE: 11-26-1997

ELEV (ft)	TOTAL	1	2	3	4	5	6	ROADWAY	ITR
100.00	0.0	0.0	0.0	0.0	0.0	0.0	0.0	0.00	1
103.97	240.0	240.0	0.0	0.0	0.0	0.0	0.0	0.00	1
104.27	480.0	480.0	0.0	0.0	0.0	0.0	0.0	0.00	1
104.54	720.0	720.0	0.0	0.0	0.0	0.0	0.0	0.00	1
104.81	960.0	960.0	0.0	0.0	0.0	0.0	0.0	0.00	1
105.07	1200.0	1200.0	0.0	0.0	0.0	0.0	0.0	0.00	1
105.35	1440.0	1440.0	0.0	0.0	0.0	0.0	0.0	0.00	1
105.63	1680.0	1680.0	0.0	0.0	0.0	0.0	0.0	0.00	1
105.93	1920.0	1920.0	0.0	0.0	0.0	0.0	0.0	0.00	1
106.23	2160.0	2160.0	0.0	0.0	0.0	0.0	0.0	0.00	1
106.56	2400.0	2400.0	0.0	0.0	0.0	0.0	0.0	0.00	1
110.00	4182.3	4182.3	0.0	0.0	0.0	0.0	0.0	OVERTOPPING	

****

SUMMARY OF ITERATIVE SOLUTION ERRORS FILE: WTRCMPS DATE: 11-26-1997

HEAD ELEV (ft)	HEAD ERROR (ft)	TOTAL FLOW (cfs)	FLOW ERROR (cfs)	% FLOW ERROR
100.00	0.000	0.00	0.00	0.00
103.97	0.000	240.00	0.00	0.00
104.27	0.000	480.00	0.00	0.00
104.54	0.000	720.00	0.00	0.00
104.81	0.000	960.00	0.00	0.00
105.07	0.000	1200.00	0.00	0.00
105.35	0.000	1440.00	0.00	0.00
105.63	0.000	1680.00	0.00	0.00
105.93	0.000	1920.00	0.00	0.00
106.23	0.000	2160.00	0.00	0.00
106.56	0.000	2400.00	0.00	0.00

****

<1> TOLERANCE (ft) = 0.010 <2> TOLERANCE (%) = 1.000

****

CURRENT DATE: 11-26-1997 FILE DATE: 11-26-1997
CURRENT TIME: 10:59:00 FILE NAME: WTRCMPS

****

PERFORMANCE CURVE FOR CULVERT 1 - 4(12.00 (ft) BY 8.00 (ft)) RCB

****

DIS-CHARGE FLOW (cfs)	HEAD-WATER ELEV. (ft)	INLET CONTROL DEPTH (ft)	OUTLET CONTROL DEPTH (ft)	FLOW TYPE <F4>	NORMAL DEPTH (ft)	CRIT. DEPTH (ft)	OUTLET DEPTH (ft)	TW DEPTH (ft)	OUTLET VEL. (fps)	TW VEL. (fps)
0.00	100.00	0.00	-0.50	0-NF	0.00	0.00	0.00	0.00	0.00	0.00
240.00	103.97	1.40	3.97	1-S2n	0.64	0.92	0.64	1.07	7.87	6.51
480.00	104.27	2.22	4.27	1-S2n	1.04	1.46	1.13	1.60	8.82	8.24
720.00	104.54	2.91	4.54	1-S2n	1.37	1.92	1.51	2.01	9.95	9.41
960.00	104.81	3.53	4.81	1-S2n	1.67	2.32	1.85	2.36	10.79	10.30
1200.00	105.07	4.10	5.07	1-S2n	1.93	2.69	2.17	2.67	11.50	11.04
1440.00	105.35	4.64	5.35	1-S2n	2.19	3.04	2.48	2.95	12.10	11.67
1680.00	105.63	5.16	5.63	1-S2n	2.44	3.37	2.77	3.21	12.64	12.23
1920.00	105.93	5.64	5.93	1-S2n	2.66	3.68	3.05	3.45	13.11	12.72
2160.00	106.23	6.11	6.23	1-S2n	2.89	3.99	3.32	3.67	13.55	13.17
2400.00	106.56	6.56	6.55	1-S2n	3.12	4.28	3.58	3.88	13.99	13.58

****

El. inlet face invert 100.00 ft El. outlet invert 99.50 ft
El. inlet throat invert 0.00 ft El. inlet crest 0.00 ft

****

***** SITE DATA ***** CULVERT INVERT **********

INLET STATION	0.00 ft
INLET ELEVATION	100.00 ft
OUTLET STATION	50.00 ft
OUTLET ELEVATION	99.50 ft
NUMBER OF BARRELS	4
SLOPE (V/H)	0.0100
CULVERT LENGTH ALONG SLOPE	50.00 ft

***** CULVERT DATA SUMMARY **********

BARREL SHAPE	BOX
BARREL SPAN	12.00 ft
BARREL RISE	8.00 ft
BARREL MATERIAL	CONCRETE
BARREL MANNING'S n	0.015
INLET TYPE	CONVENTIONAL
INLET EDGE AND WALL	SQUARE EDGE (30-75 DEG. FLARE)
INLET DEPRESSION	NONE

****

CURRENT DATE: 11-26-1997 FILE DATE: 11-26-1997
CURRENT TIME: 10:59:00 FILE NAME: WTRCMPS

****
********** TAILWATER **********
****

******* REGULAR CHANNEL CROSS SECTION **********

BOTTOM WIDTH	30.00 ft
SIDE SLOPE H/V (X:1)	4.0
CHANNEL SLOPE V/H (ft/ft)	0.010
MANNING'S n (.01-0.1)	0.022
CHANNEL INVERT ELEVATION	99.50 ft
CULVERT NO.1 OUTLET INVERT ELEVATION	99.50 ft

******* UNIFORM FLOW RATING CURVE FOR DOWNSTREAM CHANNEL

FLOW (cfs)	W.S.E. (ft)	FROUDE NUMBER	DEPTH (ft)	VEL. (f/s)	SHEAR (psf)
0.00	99.50	0.000	0.00	0.00	0.00
240.00	100.57	1.108	1.07	6.51	0.67
480.00	101.10	1.149	1.60	8.24	1.00
720.00	101.51	1.169	2.01	9.41	1.25
960.00	101.86	1.181	2.36	10.30	1.47
1200.00	102.17	1.190	2.67	11.04	1.67
1440.00	102.45	1.197	2.95	11.67	1.84
1680.00	102.71	1.203	3.21	12.23	2.00
1920.00	102.95	1.207	3.45	12.72	2.15
2160.00	103.17	1.211	3.67	13.17	2.29
2400.00	103.38	1.215	3.88	13.58	2.42

****
********** ROADWAY OVERTOPPING DATA **********
****

ROADWAY SURFACE	PAVED
EMBANKMENT TOP WIDTH	45.00 ft
CREST LENGTH	1.00 ft
OVERTOPPING CREST ELEVATION	110.00 ft

****

CURRENT DATE: 11-26-1997 FILE DATE: 11-26-1997
CURRENT TIME: 11:43:22 FILE NAME: S53A

****
********** FHWA CULVERT ANALYSIS **********
********** HY-8, VERSION 6.0 **********
****

C U L V NO.	SITE DATA: INLET ELEV. (ft)	OUTLET ELEV. (ft)	CULVERT LENGTH (ft)	CULVERT SHAPE, MATERIAL, INLET: BARRELS SHAPE MATERIAL	SPAN (ft)	RISE (ft)	MANNING n	INLET TYPE
1	1663.00	1652.00	390.16	2 CSP	4.00	4.00	.024	CONVENTIONAL
2								
3								
4								
5								
6								

INFLOW LOCATION, RUNOFF FROM SUBBASIN 53A
PIMA RD. CHANNEL STA. 208+40

****

SUMMARY OF CULVERT FLOWS (cfs) FILE: S53A DATE: 11-26-1997

ELEV (ft)	TOTAL	1	2	3	4	5	6	ROADWAY	ITR
1663.00	0.0	0.0	0.0	0.0	0.0	0.0	0.0	0.00	1
1664.37	25.0	25.0	0.0	0.0	0.0	0.0	0.0	0.00	1
1665.00	50.0	50.0	0.0	0.0	0.0	0.0	0.0	0.00	1
1665.55	75.0	75.0	0.0	0.0	0.0	0.0	0.0	0.00	1
1666.04	100.0	100.0	0.0	0.0	0.0	0.0	0.0	0.00	1
1666.52	125.0	125.0	0.0	0.0	0.0	0.0	0.0	0.00	1
1667.02	150.0	150.0	0.0	0.0	0.0	0.0	0.0	0.00	1
1667.54	175.0	175.0	0.0	0.0	0.0	0.0	0.0	0.00	1
1668.12	200.0	200.0	0.0	0.0	0.0	0.0	0.0	0.00	1
1668.76	225.0	225.0	0.0	0.0	0.0	0.0	0.0	0.00	1
1669.46	250.0	250.0	0.0	0.0	0.0	0.0	0.0	0.00	1
1670.00	267.0	267.0	0.0	0.0	0.0	0.0	0.0	OVERTOPPING	

****

SUMMARY OF ITERATIVE SOLUTION ERRORS FILE: S53A DATE: 11-26-1997

HEAD ELEV (ft)	HEAD ERROR (ft)	TOTAL FLOW (cfs)	FLOW ERROR (cfs)	% FLOW ERROR
1663.00	0.000	0.00	0.00	0.00
1664.37	0.000	25.00	0.00	0.00
1665.00	0.000	50.00	0.00	0.00
1665.55	0.000	75.00	0.00	0.00
1666.04	0.000	100.00	0.00	0.00
1666.52	0.000	125.00	0.00	0.00
1667.02	0.000	150.00	0.00	0.00
1667.54	0.000	175.00	0.00	0.00
1668.12	0.000	200.00	0.00	0.00
1668.76	0.000	225.00	0.00	0.00
1669.46	0.000	250.00	0.00	0.00

****

<1> TOLERANCE (ft) = 0.010 <2> TOLERANCE (%) = 1.000

****

CURRENT DATE: 11-26-1997 FILE DATE: 11-26-1997
CURRENT TIME: 11:43:22 FILE NAME: S53A

****

PERFORMANCE CURVE FOR CULVERT 1 - 2(4.00 (ft) BY 4.00 (ft)) CSP

****

DIS-CHARGE FLOW (cfs)	HEAD-WATER ELEV. (ft)	INLET CONTROL DEPTH (ft)	OUTLET CONTROL DEPTH (ft)	FLOW TYPE <F4>	NORMAL DEPTH (ft)	CRIT. DEPTH (ft)	OUTLET DEPTH (ft)	TW DEPTH (ft)	OUTLET VEL. (fps)	TW VEL. (fps)
0.00	1663.00	0.00	-11.00	0-NF	0.00	0.00	0.00	0.00	0.00	0.00
25.00	1664.37	1.37	-8.37	1-S2n	0.83	1.01	0.71	0.28	8.08	2.84
50.00	1665.00	2.00	-7.77	1-S2n	1.18	1.47	1.07	0.43	9.23	3.69
75.00	1665.54	2.54	-6.98	1-S2n	1.46	1.81	1.45	0.54	9.05	4.29
100.00	1666.04	3.04	-5.97	1-S2n	1.71	2.11	1.61	0.64	10.53	4.77
125.00	1666.52	3.52	-4.73	1-S2n	1.94	2.38	1.88	0.73	10.75	5.17
150.00	1667.01	4.01	-3.26	1-S2n	2.17	2.61	2.11	0.82	11.15	5.52
175.00	1667.54	4.54	-1.55	1-S2n	2.39	2.83	2.33	0.89	11.51	5.83
200.00	1668.12	5.12	0.39	1-S2n	2.62	3.02	2.52	0.97	12.02	6.11
225.00	1668.75	5.75	2.58	1-S2n	2.86	3.20	2.80	1.04	11.96	6.37
250.00	1669.46	6.46	4.98	5-S2n	3.14	3.33	3.03	1.10	12.25	6.61

****

El. inlet face invert 1663.00 ft El. outlet invert 1652.00 ft
El. inlet throat invert 0.00 ft El. inlet crest 0.00 ft

****

***** SITE DATA ***** CULVERT INVERT **********

INLET STATION	0.00 ft
INLET ELEVATION	1663.00 ft
OUTLET STATION	390.00 ft
OUTLET ELEVATION	1652.00 ft
NUMBER OF BARRELS	2
SLOPE (V/H)	0.0282
CULVERT LENGTH ALONG SLOPE	390.16 ft

***** CULVERT DATA SUMMARY **********

BARREL SHAPE	CIRCULAR
BARREL DIAMETER	4.00 ft
BARREL MATERIAL	CORRUGATED STEEL
BARREL MANNING'S n	0.024
INLET TYPE	CONVENTIONAL
INLET EDGE AND WALL	SQUARE EDGE WITH HEADWALL
INLET DEPRESSION	NONE

****

CURRENT DATE: 11-26-1997 FILE DATE: 11-26-1997
CURRENT TIME: 11:43:22 FILE NAME: S53A

****
********** TAILWATER **********
****

******* REGULAR CHANNEL CROSS SECTION **********

BOTTOM WIDTH	30.00 ft
SIDE SLOPE H/V (X:1)	4.0
CHANNEL SLOPE V/H (ft/ft)	0.010
MANNING'S n (.01-0.1)	0.022
CHANNEL INVERT ELEVATION	1652.00 ft
CULVERT NO.1 OUTLET INVERT ELEVATION	1652.00 ft

******* UNIFORM FLOW RATING CURVE FOR DOWNSTREAM CHANNEL

FLOW (cfs)	W.S.E. (ft)	FROUDE NUMBER	DEPTH (ft)	VEL. (f/s)	SHEAR (psf)
0.00	1652.00	0.000	0.00	0.00	0.00
25.00	1652.28	0.940	0.28	2.84	0.18
50.00	1652.43	0.995	0.43	3.69	0.27
75.00	1652.54	1.026	0.54	4.29	0.34
100.00	1652.64	1.048	0.64	4.77	0.40
125.00	1652.73	1.064	0.73	5.17	0.46
150.00	1652.82	1.077	0.82	5.52	0.51
175.00	1652.89	1.087	0.89	5.83	0.56
200.00	1652.97	1.096	0.97	6.11	0.60
225.00	1653.04	1.104	1.04	6.37	0.65
250.00	1653.10	1.110	1.10	6.61	0.69

****
********** ROADWAY OVERTOPPING DATA **********
****

ROADWAY SURFACE	GRAVEL
EMBANKMENT TOP WIDTH	1.00 ft
CREST LENGTH	1.00 ft
OVERTOPPING CREST ELEVATION	1670.00 ft

****

CURRENT DATE: 11-26-1997 FILE DATE: 11-26-1997
CURRENT TIME: 11:47:32 FILE NAME: HUALAPAI

****
********** FHWA CULVERT ANALYSIS **********
********** HY-8, VERSION 6.0 **********
****

HUALAPAI ROAD
PIMA RD. CHNL.
STA. 223+43

C U L V NO.	SITE DATA: INLET ELEV. (ft)	OUTLET ELEV. (ft)	CULVERT LENGTH (ft)	CULVERT SHAPE, MATERIAL, INLET: BARRELS SHAPE MATERIAL	SPAN (ft)	RISE (ft)	MANNING n	INLET TYPE
1	100.00	99.00	100.00	4 RCB	12.00	8.00	.015	CONVENTIONAL
2								
3								
4								
5								
6								

****

SUMMARY OF CULVERT FLOWS (cfs) FILE: HUALAPAI DATE: 11-26-1997

ELEV (ft)	TOTAL	1	2	3	4	5	6	ROADWAY	ITR
100.00	0.0	0.0	0.0	0.0	0.0	0.0	0.0	0.00	1
103.47	240.0	240.0	0.0	0.0	0.0	0.0	0.0	0.00	1
103.77	480.0	480.0	0.0	0.0	0.0	0.0	0.0	0.00	1
104.05	720.0	720.0	0.0	0.0	0.0	0.0	0.0	0.00	1
104.32	960.0	960.0	0.0	0.0	0.0	0.0	0.0	0.00	1
104.59	1200.0	1200.0	0.0	0.0	0.0	0.0	0.0	0.00	1
104.87	1440.0	1440.0	0.0	0.0	0.0	0.0	0.0	0.00	1
105.16	1680.0	1680.0	0.0	0.0	0.0	0.0	0.0	0.00	1
105.64	1920.0	1920.0	0.0	0.0	0.0	0.0	0.0	0.00	1
106.11	2160.0	2160.0	0.0	0.0	0.0	0.0	0.0	0.00	1
106.56	2400.0	2400.0	0.0	0.0	0.0	0.0	0.0	0.00	1
110.00	4182.3	4182.3	0.0	0.0	0.0	0.0	0.0	OVERTOPPING	

****

SUMMARY OF ITERATIVE SOLUTION ERRORS FILE: HUALAPAI DATE: 11-26-1997

HEAD ELEV (ft)	HEAD ERROR (ft)	TOTAL FLOW (cfs)	FLOW ERROR (cfs)	% FLOW ERROR
100.00	0.000	0.00	0.00	0.00
103.47	0.000	240.00	0.00	0.00
103.77	0.000	480.00	0.00	0.00
104.05	0.000	720.00	0.00	0.00
104.32	0.000	960.00	0.00	0.00
104.59	0.000	1200.00	0.00	0.00
104.87	0.000	1440.00	0.00	0.00
105.16	0.000	1680.00	0.00	0.00
105.64	0.000	1920.00	0.00	0.00
106.11	0.000	2160.00	0.00	0.00
106.56	0.000	2400.00	0.00	0.00

****

<1> TOLERANCE (ft) = 0.010 <2> TOLERANCE (%) = 1.000

****

CURRENT DATE: 11-26-1997 FILE DATE: 11-26-1997
CURRENT TIME: 11:47:32 FILE NAME: HUALAPAI

****

PERFORMANCE CURVE FOR CULVERT 1 - 4(12.00 (ft) BY 8.00 (ft)) RCB

****

DIS-CHARGE FLOW (cfs)	HEAD-WATER ELEV. (ft)	INLET CONTROL DEPTH (ft)	OUTLET CONTROL DEPTH (ft)	FLOW TYPE <F4>	NORMAL DEPTH (ft)	CRIT. DEPTH (ft)	OUTLET DEPTH (ft)	TW DEPTH (ft)	OUTLET VEL. (fps)	TW VEL. (fps)
0.00	100.00	0.00	-1.00	0-NF	0.00	0.00	0.00	0.00	0.00	0.00
240.00	103.47	1.40	3.47	1-S2n	0.64	0.92	0.64	1.07	7.87	6.51
480.00	103.77	2.22	3.77	1-S2n	1.04	1.46	1.09	1.60	9.14	8.24
720.00	104.05	2.91	4.05	1-S2n	1.37	1.92	1.44	2.01	10.39	9.41
960.00	104.32	3.53	4.32	1-S2n	1.67	2.32	1.77	2.36	11.33	10.30
1200.00	104.59	4.10	4.59	1-S2n	1.93	2.69	2.07	2.67	12.09	11.04
1440.00	104.87	4.64	4.87	1-S2n	2.19	3.04	2.36	2.95	12.72	11.67
1680.00	105.16	5.16	5.16	1-S2n	2.44	3.37	2.63	3.21	13.28	12.23
1920.00	105.64	5.64	5.46	1-S2n	2.66	3.68	2.90	3.45	13.77	12.72
2160.00	106.11	6.11	5.78	1-S2n	2.89	3.99	3.17	3.67	14.22	13.17
2400.00	106.56	6.56	6.11	1-S2n	3.12	4.28	3.43	3.88	14.60	13.58

****

El. inlet face invert 100.00 ft El. outlet invert 99.00 ft
El. inlet throat invert 0.00 ft El. inlet crest 0.00 ft

****

***** SITE DATA ***** CULVERT INVERT **********

INLET STATION	0.00 ft
INLET ELEVATION	100.00 ft
OUTLET STATION	100.00 ft
OUTLET ELEVATION	99.00 ft
NUMBER OF BARRELS	4
SLOPE (V/H)	0.0100
CULVERT LENGTH ALONG SLOPE	100.00 ft

***** CULVERT DATA SUMMARY **********

BARREL SHAPE	BOX
BARREL SPAN	12.00 ft
BARREL RISE	8.00 ft
BARREL MATERIAL	CONCRETE
BARREL MANNING'S n	0.015
INLET TYPE	CONVENTIONAL
INLET EDGE AND WALL	SQUARE EDGE (30-75 DEG. FLARE)
INLET DEPRESSION	NONE

****

CURRENT DATE: 11-26-1997 FILE DATE: 11-26-1997
CURRENT TIME: 11:47:32 FILE NAME: HUALAPAI

****
********** TAILWATER **********
****

******* REGULAR CHANNEL CROSS SECTION **********

BOTTOM WIDTH	30.00 ft
SIDE SLOPE H/V (X:1)	4.0
CHANNEL SLOPE V/H (ft/ft)	0.010
MANNING'S n (.01-0.1)	0.022
CHANNEL INVERT ELEVATION	99.00 ft
CULVERT NO.1 OUTLET INVERT ELEVATION	99.00 ft

******* UNIFORM FLOW RATING CURVE FOR DOWNSTREAM CHANNEL

FLOW (cfs)	W.S.E. (ft)	FROUDE NUMBER	DEPTH (ft)	VEL. (f/s)	SHEAR (psf)
0.00	99.00	0.000	0.00	0.00	0.00
240.00	100.07	1.108	1.07	6.51	0.67
480.00	100.60	1.149	1.60	8.24	1.00
720.00	101.01	1.169	2.01	9.41	1.25
960.00	101.36	1.181	2.36	10.30	1.47
1200.00	101.67	1.190	2.67	11.04	1.67
1440.00	101.95	1.197	2.95	11.67	1.84
1680.00	102.21	1.203	3.21	12.23	2.00
1920.00	102.45	1.207	3.45	12.72	2.15
2160.00	102.67	1.211	3.67	13.17	2.29
2400.00	102.88	1.215	3.88	13.58	2.42

****
********** ROADWAY OVERTOPPING DATA **********
****

ROADWAY SURFACE	PAVED
EMBANKMENT TOP WIDTH	80.00 ft
CREST LENGTH	1.00 ft
OVERTOPPING CREST ELEVATION	110.00 ft

****

CURRENT DATE: 11-26-1997 FILE DATE: 11-26-1997
CURRENT TIME: 11:58:02 FILE NAME: LOSGATOS

****
********** FHWA CULVERT ANALYSIS **********
********** HY-8, VERSION 6.0 **********
****

C U L V NO.	SITE DATA: INLET ELEV. (ft)	OUTLET ELEV. (ft)	CULVERT LENGTH (ft)	CULVERT SHAPE, MATERIAL, INLET: BARRELS SHAPE MATERIAL	SPAN (ft)	RISE (ft)	MANNING n	INLET TYPE
1	100.00	99.00	100.00	4 RCB	10.00	8.00	.015	CONVENTIONAL
2								
3								
4								
5								
6								

LOS GATOS DRIVE
PIMA RD. CHNL.
STA. 1006+74

****

SUMMARY OF CULVERT FLOWS (cfs) FILE: LOSGATOS DATE: 11-26-1997

ELEV (ft)	TOTAL	1	2	3	4	5	6	ROADWAY	ITR
100.00	0.0	0.0	0.0	0.0	0.0	0.0	0.0	0.00	1
103.49	210.0	210.0	0.0	0.0	0.0	0.0	0.0	0.00	1
103.80	420.0	420.0	0.0	0.0	0.0	0.0	0.0	0.00	1
104.09	630.0	630.0	0.0	0.0	0.0	0.0	0.0	0.00	1
104.37	840.0	840.0	0.0	0.0	0.0	0.0	0.0	0.00	1
104.66	1050.0	1050.0	0.0	0.0	0.0	0.0	0.0	0.00	1
104.96	1260.0	1260.0	0.0	0.0	0.0	0.0	0.0	0.00	1
105.33	1470.0	1470.0	0.0	0.0	0.0	0.0	0.0	0.00	1
105.83	1680.0	1680.0	0.0	0.0	0.0	0.0	0.0	0.00	1
106.31	1890.0	1890.0	0.0	0.0	0.0	0.0	0.0	0.00	1
106.78	2100.0	2100.0	0.0	0.0	0.0	0.0	0.0	0.00	1
110.00	3486.4	3486.4	0.0	0.0	0.0	0.0	0.0	OVERTOPPING	

****

SUMMARY OF ITERATIVE SOLUTION ERRORS FILE: LOSGATOS DATE: 11-26-1997

HEAD ELEV (ft)	HEAD ERROR (ft)	TOTAL FLOW (cfs)	FLOW ERROR (cfs)	% FLOW ERROR
100.00	0.000	0.00	0.00	0.00
103.49	0.000	210.00	0.00	0.00
103.80	0.000	420.00	0.00	0.00
104.09	0.000	630.00	0.00	0.00
104.37	0.000	840.00	0.00	0.00
104.66	0.000	1050.00	0.00	0.00
104.96	0.000	1260.00	0.00	0.00
105.33	0.000	1470.00	0.00	0.00
105.83	0.000	1680.00	0.00	0.00
106.31	0.000	1890.00	0.00	0.00
106.78	0.000	2100.00	0.00	0.00

****

<1> TOLERANCE (ft) = 0.010 <2> TOLERANCE (%) = 1.000

****

CURRENT DATE: 11-26-1997 FILE DATE: 11-26-1997
CURRENT TIME: 11:58:02 FILE NAME: LOSGATOS

****

PERFORMANCE CURVE FOR CULVERT 1 - 4(10.00 (ft) BY 8.00 (ft)) RCB

****

DIS-CHARGE FLOW (cfs)	HEAD-WATER ELEV. (ft)	INLET CONTROL DEPTH (ft)	OUTLET CONTROL DEPTH (ft)	FLOW TYPE <F4>	NORMAL DEPTH (ft)	CRIT. DEPTH (ft)	OUTLET DEPTH (ft)	TW DEPTH (ft)	OUTLET VEL. (fps)	TW VEL. (fps)
0.00	100.00	0.00	-1.00	0-NF	0.00	0.00	0.00	0.00	0.00	0.00
210.00	103.49	1.45	3.49	1-S2n	0.68	0.95	0.68	1.23	7.75	6.84
420.00	103.80	2.30	3.80	1-S2n	1.09	1.51	1.14	1.81	9.19	8.51
630.00	104.09	3.01	4.09	1-S2n	1.44	1.98	1.51	2.26	10.42	9.61
840.00	104.37	3.64	4.37	1-S2n	1.76	2.40	1.85	2.63	11.35	10.46
1050.00	104.66	4.24	4.66	1-S2n	2.04	2.78	2.17	2.96	12.10	11.15
1260.00	104.96	4.80	4.96	1-S2n	2.33	3.14	2.48	3.25	12.73	11.74
1470.00	105.33	5.33	5.27	1-S2n	2.59	3.48	2.77	3.52	13.26	12.26
1680.00	105.83	5.83	5.60	1-S2n	2.84	3.81	3.06	3.76	13.74	12.73
1890.00	106.31	6.31	5.94	1-S2n	3.09	4.12	3.32	4.00	14.24	13.14
2100.00	106.78	6.78	6.29	1-S2n	3.33	4.42	3.60	4.21	14.60	13.53

****

El. inlet face invert 100.00 ft El. outlet invert 99.00 ft
El. inlet throat invert 0.00 ft El. inlet crest 0.00 ft

****

***** SITE DATA ***** CULVERT INVERT **********

INLET STATION	0.00 ft
INLET ELEVATION	100.00 ft
OUTLET STATION	100.00 ft
OUTLET ELEVATION	99.00 ft
NUMBER OF BARRELS	4
SLOPE (V/H)	0.0100
CULVERT LENGTH ALONG SLOPE	100.00 ft

***** CULVERT DATA SUMMARY **********

BARREL SHAPE	BOX
BARREL SPAN	10.00 ft
BARREL RISE	8.00 ft
BARREL MATERIAL	CONCRETE
BARREL MANNING'S n	0.015
INLET TYPE	CONVENTIONAL
INLET EDGE AND WALL	SQUARE EDGE (30-75 DEG. FLARE)
INLET DEPRESSION	NONE

****

CURRENT DATE: 11-26-1997 FILE DATE: 11-26-1997
CURRENT TIME: 11:58:02 FILE NAME: LOSGATOS

****
********** TAILWATER **********
****

******* REGULAR CHANNEL CROSS SECTION **********

BOTTOM WIDTH	20.00 ft
SIDE SLOPE H/V (X:1)	4.0
CHANNEL SLOPE V/H (ft/ft)	0.010
MANNING'S n (.01-0.1)	0.022
CHANNEL INVERT ELEVATION	99.00 ft
CULVERT NO.1 OUTLET INVERT ELEVATION	99.00 ft

******* UNIFORM FLOW RATING CURVE FOR DOWNSTREAM CHANNEL

FLOW (cfs)	W.S.E. (ft)	FROUDE NUMBER	DEPTH (ft)	VEL. (f/s)	SHEAR (psf)
0.00	99.00	0.000	0.00	0.00	0.00
210.00	100.23	1.085	1.23	6.84	0.77
420.00	100.81	1.114	1.81	8.51	1.13
630.00	101.26	1.127	2.26	9.61	1.41
840.00	101.63	1.136	2.63	10.46	1.64
1050.00	101.96	1.143	2.96	11.15	1.85
1260.00	102.25	1.148	3.25	11.74	2.03
1470.00	102.52	1.152	3.52	12.26	2.19
1680.00	102.76	1.156	3.76	12.73	2.35
1890.00	103.00	1.159	4.00	13.14	2.49
2100.00	103.21	1.162	4.21	13.53	2.63

****
********** ROADWAY OVERTOPPING DATA **********
****

ROADWAY SURFACE	PAVED
EMBANKMENT TOP WIDTH	90.00 ft
CREST LENGTH	1.00 ft
OVERTOPPING CREST ELEVATION	110.00 ft

****

CURRENT DATE: 11-26-1997 FILE DATE: 11-26-1997
CURRENT TIME: 12:02:23 FILE NAME: PARAISO

****
********** FHWA CULVERT ANALYSIS **********
********** HY-8, VERSION 6.0 **********
****

C U L V NO.	SITE DATA INLET ELEV. (ft)	OUTLET ELEV. (ft)	CULVERT LENGTH (ft)	CULVERT SHAPE, MATERIAL, INLET BARRELS SHAPE MATERIAL	SPAN (ft)	RISE (ft)	MANNING n	INLET TYPE
1	100.00	99.30	70.00	4 RCB	10.00	6.00	.015	CONVENTIONAL
2								
3								
4								
5								
6								

PARAISO DRIVE
PIMA RD. CHNL.
STA. 1027+70

****

SUMMARY OF CULVERT FLOWS (cfs) FILE: PARAISO DATE: 11-26-1997

ELEV (ft)	TOTAL	1	2	3	4	5	6	ROADWAY	ITR
100.00	0.0	0.0	0.0	0.0	0.0	0.0	0.0	0.00	1
102.76	190.0	190.0	0.0	0.0	0.0	0.0	0.0	0.00	1
103.07	380.0	380.0	0.0	0.0	0.0	0.0	0.0	0.00	1
103.37	570.0	570.0	0.0	0.0	0.0	0.0	0.0	0.00	1
103.67	760.0	760.0	0.0	0.0	0.0	0.0	0.0	0.00	1
103.99	950.0	950.0	0.0	0.0	0.0	0.0	0.0	0.00	1
104.50	1140.0	1140.0	0.0	0.0	0.0	0.0	0.0	0.00	1
105.00	1330.0	1330.0	0.0	0.0	0.0	0.0	0.0	0.00	1
105.49	1520.0	1520.0	0.0	0.0	0.0	0.0	0.0	0.00	1
105.97	1710.0	1710.0	0.0	0.0	0.0	0.0	0.0	0.00	1
106.47	1900.0	1900.0	0.0	0.0	0.0	0.0	0.0	0.00	1
108.00	2428.1	2428.1	0.0	0.0	0.0	0.0	0.0	OVERTOPPING	

****

SUMMARY OF ITERATIVE SOLUTION ERRORS FILE: PARAISO DATE: 11-26-1997

HEAD ELEV (ft)	HEAD ERROR (ft)	TOTAL FLOW (cfs)	FLOW ERROR (cfs)	% FLOW ERROR
100.00	0.000	0.00	0.00	0.00
102.76	0.000	190.00	0.00	0.00
103.07	0.000	380.00	0.00	0.00
103.37	0.000	570.00	0.00	0.00
103.67	0.000	760.00	0.00	0.00
103.99	0.000	950.00	0.00	0.00
104.50	0.000	1140.00	0.00	0.00
105.00	0.000	1330.00	0.00	0.00
105.49	0.000	1520.00	0.00	0.00
105.97	0.000	1710.00	0.00	0.00
106.47	0.000	1900.00	0.00	0.00

****

<1> TOLERANCE (ft) = 0.010 <2> TOLERANCE (%) = 1.000

****

CURRENT DATE: 11-26-1997 FILE DATE: 11-26-1997
CURRENT TIME: 12:02:23 FILE NAME: PARAISO

****

PERFORMANCE CURVE FOR CULVERT 1 - 4(10.00 (ft) BY 6.00 (ft)) RCB

****

DIS-CHARGE FLOW (cfs)	HEAD-WATER ELEV. (ft)	INLET CONTROL DEPTH (ft)	OUTLET CONTROL DEPTH (ft)	FLOW TYPE <F4>	NORMAL DEPTH (ft)	CRIT. DEPTH (ft)	OUTLET DEPTH (ft)	TW DEPTH (ft)	OUTLET VEL. (fps)	TW VEL. (fps)
0.00	100.00	0.00	-0.70	0-NF	0.00	0.00	0.00	0.00	0.00	0.00
190.00	102.76	1.35	2.76	1-S2n	0.66	0.89	0.66	1.16	7.16	6.62
380.00	103.07	2.15	3.07	1-S2n	1.03	1.41	1.08	1.71	8.78	8.25
570.00	103.37	2.81	3.37	1-S2n	1.36	1.85	1.43	2.14	9.94	9.33
760.00	103.67	3.42	3.67	1-S2n	1.65	2.24	1.76	2.49	10.79	10.16
950.00	103.99	3.98	3.99	1-S2n	1.92	2.60	2.07	2.81	11.50	10.84
1140.00	104.50	4.50	4.33	1-S2n	2.17	2.94	2.36	3.09	12.08	11.42
1330.00	105.00	5.00	4.69	1-S2n	2.42	3.26	2.64	3.34	12.61	11.92
1520.00	105.49	5.49	5.08	1-S2n	2.65	3.56	2.91	3.58	13.06	12.38
1710.00	105.97	5.97	5.48	1-S2n	2.88	3.85	3.17	3.80	13.48	12.79
1900.00	106.47	6.47	5.92	1-S2n	3.10	4.13	3.42	4.01	13.88	13.16

****

El. inlet face invert 100.00 ft El. outlet invert 99.30 ft
El. inlet throat invert 0.00 ft El. inlet crest 0.00 ft

****

***** SITE DATA ***** CULVERT INVERT **********

INLET STATION	0.00 ft
INLET ELEVATION	100.00 ft
OUTLET STATION	70.00 ft
OUTLET ELEVATION	99.30 ft
NUMBER OF BARRELS	4
SLOPE (V/H)	0.0100
CULVERT LENGTH ALONG SLOPE	70.00 ft

***** CULVERT DATA SUMMARY **********

BARREL SHAPE	BOX
BARREL SPAN	10.00 ft
BARREL RISE	6.00 ft
BARREL MATERIAL	CONCRETE
BARREL MANNING'S n	0.015
INLET TYPE	CONVENTIONAL
INLET EDGE AND WALL	SQUARE EDGE (30-75 DEG. FLARE)
INLET DEPRESSION	NONE

****

RENT DATE: 11-26-1997 FILE DATE: 11-26-1997
RENT TIME: 12:02:23 FILE NAME: PARAISO

****
********** TAILWATER **********
****

******* REGULAR CHANNEL CROSS SECTION **********

BOTTOM WIDTH	20.00 ft
SIDE SLOPE H/V (X:1)	4.0
CHANNEL SLOPE V/H (ft/ft)	0.010
MANNING'S n (.01-0.1)	0.022
CHANNEL INVERT ELEVATION	99.30 ft
CULVERT NO.1 OUTLET INVERT ELEVATION	99.30 ft

******* UNIFORM FLOW RATING CURVE FOR DOWNSTREAM CHANNEL

FLOW (cfs)	W.S.E. (ft)	FROUDE NUMBER	DEPTH (ft)	VEL. (f/s)	SHEAR (psf)
0.00	99.30	0.000	0.00	0.00	0.00
190.00	100.46	1.081	1.16	6.62	0.73
380.00	101.01	1.110	1.71	8.25	1.07
570.00	101.44	1.124	2.14	9.33	1.34
760.00	101.79	1.133	2.49	10.16	1.56
950.00	102.11	1.140	2.81	10.84	1.75
1140.00	102.39	1.145	3.09	11.42	1.93
1330.00	102.64	1.149	3.34	11.92	2.09
1520.00	102.88	1.153	3.58	12.38	2.23
1710.00	103.10	1.156	3.80	12.79	2.37
1900.00	103.31	1.159	4.01	13.16	2.50

****
********** ROADWAY OVERTOPPING DATA **********
****

ROADWAY SURFACE	PAVED
EMBANKMENT TOP WIDTH	60.00 ft
CREST LENGTH	1.00 ft
OVERTOPPING CREST ELEVATION	108.00 ft

****

CURRENT DATE: 11-26-1997 FILE DATE: 11-26-1997
CURRENT TIME: 12:06:33 FILE NAME: PD1-3

****
********** FHWA CULVERT ANALYSIS **********
********** HY-8, VERSION 6.0 **********
****

PRIVATE DRIVES (3)
SOUTH OF PINNACLE PEAK RD.
PIMA RD. CHANNEL
STA. 1036+79
1039+91
1043+66

CULV NO.	SITE DATA: INLET ELEV. (ft)	OUTLET ELEV. (ft)	CULVERT LENGTH (ft)	CULVERT SHAPE, MATERIAL, INLET: BARRELS / SHAPE / MATERIAL	SPAN (ft)	RISE (ft)	MANNING n	INLET TYPE
1	100.00	99.00	100.00	4 RCB	10.00	6.00	.015	CONVENTIONAL
2								
3								
4								
5								
6								

****

SUMMARY OF CULVERT FLOWS (cfs) FILE: PD1-3 DATE: 11-26-1997

ELEV (ft)	TOTAL	1	2	3	4	5	6	ROADWAY	ITR
100.00	0.0	0.0	0.0	0.0	0.0	0.0	0.0	0.00	1
102.46	190.0	190.0	0.0	0.0	0.0	0.0	0.0	0.00	1
102.77	380.0	380.0	0.0	0.0	0.0	0.0	0.0	0.00	1
103.07	570.0	570.0	0.0	0.0	0.0	0.0	0.0	0.00	1
103.42	760.0	760.0	0.0	0.0	0.0	0.0	0.0	0.00	1
103.98	950.0	950.0	0.0	0.0	0.0	0.0	0.0	0.00	1
104.50	1140.0	1140.0	0.0	0.0	0.0	0.0	0.0	0.00	1
105.00	1330.0	1330.0	0.0	0.0	0.0	0.0	0.0	0.00	1
105.49	1520.0	1520.0	0.0	0.0	0.0	0.0	0.0	0.00	1
105.97	1710.0	1710.0	0.0	0.0	0.0	0.0	0.0	0.00	1
106.47	1900.0	1900.0	0.0	0.0	0.0	0.0	0.0	0.00	1
108.00	2428.1	2428.1	0.0	0.0	0.0	0.0	0.0	OVERTOPPING	

****

SUMMARY OF ITERATIVE SOLUTION ERRORS FILE: PD1-3 DATE: 11-26-1997

HEAD ELEV (ft)	HEAD ERROR (ft)	TOTAL FLOW (cfs)	FLOW ERROR (cfs)	% FLOW ERROR
100.00	0.000	0.00	0.00	0.00
102.46	0.000	190.00	0.00	0.00
102.77	0.000	380.00	0.00	0.00
103.07	0.000	570.00	0.00	0.00
103.42	0.000	760.00	0.00	0.00
103.98	0.000	950.00	0.00	0.00
104.50	0.000	1140.00	0.00	0.00
105.00	0.000	1330.00	0.00	0.00
105.49	0.000	1520.00	0.00	0.00
105.97	0.000	1710.00	0.00	0.00
106.47	0.000	1900.00	0.00	0.00

****

<1> TOLERANCE (ft) = 0.010 <2> TOLERANCE (%) = 1.000

****

CURRENT DATE: 11-26-1997 FILE DATE: 11-26-1997
CURRENT TIME: 12:06:33 FILE NAME: PD1-3

****

PERFORMANCE CURVE FOR CULVERT 1 - 4(10.00 (ft) BY 6.00 (ft)) RCB

****

DIS-CHARGE FLOW (cfs)	HEAD-WATER ELEV. (ft)	INLET CONTROL DEPTH (ft)	OUTLET CONTROL DEPTH (ft)	FLOW TYPE <F4>	NORMAL DEPTH (ft)	CRIT. DEPTH (ft)	OUTLET DEPTH (ft)	TW DEPTH (ft)	OUTLET VEL. (fps)	TW VEL. (fps)
0.00	100.00	0.00	-1.00	0-NF	0.00	0.00	0.00	0.00	0.00	0.00
190.00	102.46	1.35	2.46	1-S2n	0.66	0.89	0.66	1.16	7.16	6.62
380.00	102.77	2.15	2.77	1-S2n	1.03	1.41	1.07	1.71	8.90	8.25
570.00	103.07	2.81	3.07	1-S2n	1.36	1.85	1.41	2.14	10.12	9.33
760.00	103.42	3.42	3.38	1-S2n	1.65	2.24	1.72	2.50	11.03	10.16
950.00	103.98	3.98	3.71	1-S2n	1.92	2.60	2.02	2.81	11.74	10.84
1140.00	104.50	4.50	4.06	1-S2n	2.17	2.94	2.31	3.09	12.34	11.42
1330.00	105.00	5.00	4.43	1-S2n	2.42	3.26	2.58	3.34	12.90	11.92
1520.00	105.49	5.49	4.83	1-S2n	2.65	3.56	2.84	3.58	13.38	12.38
1710.00	105.97	5.97	5.25	1-S2n	2.88	3.85	3.10	3.80	13.78	12.79
1900.00	106.47	6.47	5.70	1-S2n	3.10	4.13	3.33	4.01	14.26	13.16

****

El. inlet face invert 100.00 ft El. outlet invert 99.00 ft
El. inlet throat invert 0.00 ft El. inlet crest 0.00 ft

****

***** SITE DATA ***** CULVERT INVERT **********

INLET STATION	0.00 ft
INLET ELEVATION	100.00 ft
OUTLET STATION	100.00 ft
OUTLET ELEVATION	99.00 ft
NUMBER OF BARRELS	4
SLOPE (V/H)	0.0100
CULVERT LENGTH ALONG SLOPE	100.00 ft

***** CULVERT DATA SUMMARY **********

BARREL SHAPE	BOX
BARREL SPAN	10.00 ft
BARREL RISE	6.00 ft
BARREL MATERIAL	CONCRETE
BARREL MANNING'S n	0.015
INLET TYPE	CONVENTIONAL
INLET EDGE AND WALL	SQUARE EDGE (30-75 DEG. FLARE)
INLET DEPRESSION	NONE

****

CURRENT DATE: 11-26-1997 FILE DATE: 11-26-1997
CURRENT TIME: 12:06:33 FILE NAME: PD1-3

****
********** TAILWATER **********
****

******** REGULAR CHANNEL CROSS SECTION **********

BOTTOM WIDTH	20.00 ft
SIDE SLOPE H/V (X:1)	4.0
CHANNEL SLOPE V/H (ft/ft)	0.010
MANNING'S n (.01-0.1)	0.022
CHANNEL INVERT ELEVATION	99.00 ft
CULVERT NO.1 OUTLET INVERT ELEVATION	99.00 ft

******** UNIFORM FLOW RATING CURVE FOR DOWNSTREAM CHANNEL

FLOW (cfs)	W.S.E. (ft)	FROUDE NUMBER	DEPTH (ft)	VEL. (f/s)	SHEAR (psf)
0.00	99.00	0.000	0.00	0.00	0.00
190.00	100.16	1.081	1.16	6.62	0.73
380.00	100.71	1.110	1.71	8.25	1.07
570.00	101.14	1.124	2.14	9.33	1.34
760.00	101.50	1.133	2.50	10.16	1.56
950.00	101.81	1.140	2.81	10.84	1.75
1140.00	102.09	1.145	3.09	11.42	1.93
1330.00	102.34	1.149	3.34	11.92	2.09
1520.00	102.58	1.153	3.58	12.38	2.23
1710.00	102.80	1.156	3.80	12.79	2.37
1900.00	103.01	1.159	4.01	13.16	2.50

****
********** ROADWAY OVERTOPPING DATA **********
****

ROADWAY SURFACE	PAVED
EMBANKMENT TOP WIDTH	90.00 ft
CREST LENGTH	1.00 ft
OVERTOPPING CREST ELEVATION	108.00 ft

****

CURRENT DATE: 11-26-1997 FILE DATE: 11-26-1997
CURRENT TIME: 12:09:13 FILE NAME: PINNACLE

****
********** FHWA CULVERT ANALYSIS **********
********** HY-8, VERSION 6.0 **********
****

PINNACLE PEAK RD.
PIMA RD. CHNL.
STA. 1046+79

C U L V NO.	SITE DATA INLET ELEV. (ft)	OUTLET ELEV. (ft)	CULVERT LENGTH (ft)	CULVERT SHAPE, MATERIAL, INLET BARRELS SHAPE MATERIAL	SPAN (ft)	RISE (ft)	MANNING n	INLET TYPE
1	100.00	98.95	105.01	4 RCB	10.00	6.00	.015	CONVENTIONAL
2								
3								
4								
5								
6								

****

SUMMARY OF CULVERT FLOWS (cfs) FILE: PINNACLE DATE: 11-26-1997

ELEV (ft)	TOTAL	1	2	3	4	5	6	ROADWAY	ITR
100.00	0.0	0.0	0.0	0.0	0.0	0.0	0.0	0.00	1
102.41	190.0	190.0	0.0	0.0	0.0	0.0	0.0	0.00	1
102.72	380.0	380.0	0.0	0.0	0.0	0.0	0.0	0.00	1
103.02	570.0	570.0	0.0	0.0	0.0	0.0	0.0	0.00	1
103.42	760.0	760.0	0.0	0.0	0.0	0.0	0.0	0.00	1
103.98	950.0	950.0	0.0	0.0	0.0	0.0	0.0	0.00	1
104.50	1140.0	1140.0	0.0	0.0	0.0	0.0	0.0	0.00	1
105.00	1330.0	1330.0	0.0	0.0	0.0	0.0	0.0	0.00	1
105.49	1520.0	1520.0	0.0	0.0	0.0	0.0	0.0	0.00	1
105.97	1710.0	1710.0	0.0	0.0	0.0	0.0	0.0	0.00	1
106.47	1900.0	1900.0	0.0	0.0	0.0	0.0	0.0	0.00	1
108.00	2428.1	2428.1	0.0	0.0	0.0	0.0	0.0	OVERTOPPING	

****

SUMMARY OF ITERATIVE SOLUTION ERRORS FILE: PINNACLE DATE: 11-26-1997

HEAD ELEV (ft)	HEAD ERROR (ft)	TOTAL FLOW (cfs)	FLOW ERROR (cfs)	% FLOW ERROR
100.00	0.000	0.00	0.00	0.00
102.41	0.000	190.00	0.00	0.00
102.72	0.000	380.00	0.00	0.00
103.02	0.000	570.00	0.00	0.00
103.42	0.000	760.00	0.00	0.00
103.98	0.000	950.00	0.00	0.00
104.50	0.000	1140.00	0.00	0.00
105.00	0.000	1330.00	0.00	0.00
105.49	0.000	1520.00	0.00	0.00
105.97	0.000	1710.00	0.00	0.00
106.47	0.000	1900.00	0.00	0.00

****

<1> TOLERANCE (ft) = 0.010 <2> TOLERANCE (%) = 1.000

****

CURRENT DATE: 11-26-1997 FILE DATE: 11-26-1997
CURRENT TIME: 12:09:13 FILE NAME: PINNACLE

****

PERFORMANCE CURVE FOR CULVERT 1 - 4(10.00 (ft) BY 6.00 (ft)) RCB

****

DIS-CHARGE FLOW (cfs)	HEAD-WATER ELEV. (ft)	INLET CONTROL DEPTH (ft)	OUTLET CONTROL DEPTH (ft)	FLOW TYPE <F4>	NORMAL DEPTH (ft)	CRIT. DEPTH (ft)	OUTLET DEPTH (ft)	TW DEPTH (ft)	OUTLET VEL. (fps)	TW VEL. (fps)
0.00	100.00	0.00	-1.05	0-NF	0.00	0.00	0.00	0.00	0.00	0.00
190.00	102.41	1.35	2.41	1-S2n	0.66	0.89	0.66	1.16	7.16	6.62
380.00	102.72	2.15	2.72	1-S2n	1.03	1.41	1.07	1.72	8.91	8.25
570.00	103.02	2.81	3.02	1-S2n	1.36	1.85	1.40	2.14	10.14	9.33
760.00	103.42	3.42	3.34	1-S2n	1.65	2.24	1.72	2.50	11.04	10.16
950.00	103.98	3.98	3.66	1-S2n	1.92	2.60	2.01	2.81	11.80	10.84
1140.00	104.50	4.50	4.01	1-S2n	2.17	2.94	2.30	3.09	12.40	11.42
1330.00	105.00	5.00	4.39	1-S2n	2.42	3.26	2.56	3.34	13.00	11.92
1520.00	105.49	5.49	4.79	1-S2n	2.65	3.56	2.83	3.58	13.43	12.38
1710.00	105.97	5.97	5.21	1-S2n	2.88	3.85	3.09	3.80	13.83	12.79
1900.00	106.47	6.47	5.67	1-S2n	3.10	4.13	3.33	4.01	14.26	13.16

****

El. inlet face invert 100.00 ft El. outlet invert 98.95 ft
El. inlet throat invert 0.00 ft El. inlet crest 0.00 ft

****

***** SITE DATA ***** CULVERT INVERT **********

INLET STATION	0.00 ft
INLET ELEVATION	100.00 ft
OUTLET STATION	105.00 ft
OUTLET ELEVATION	98.95 ft
NUMBER OF BARRELS	4
SLOPE (V/H)	0.0100
CULVERT LENGTH ALONG SLOPE	105.01 ft

***** CULVERT DATA SUMMARY **********

BARREL SHAPE	BOX
BARREL SPAN	10.00 ft
BARREL RISE	6.00 ft
BARREL MATERIAL	CONCRETE
BARREL MANNING'S n	0.015
INLET TYPE	CONVENTIONAL
INLET EDGE AND WALL	SQUARE EDGE (30-75 DEG. FLARE)
INLET DEPRESSION	NONE

****

CURRENT DATE: 11-26-1997 FILE DATE: 11-26-1997
CURRENT TIME: 12:09:13 FILE NAME: PINNACLE

****
********** TAILWATER **********
****

******* REGULAR CHANNEL CROSS SECTION **********

BOTTOM WIDTH	20.00 ft
SIDE SLOPE H/V (X:1)	4.0
CHANNEL SLOPE V/H (ft/ft)	0.010
MANNING'S n (.01-0.1)	0.022
CHANNEL INVERT ELEVATION	98.95 ft
CULVERT NO.1 OUTLET INVERT ELEVATION	98.95 ft

******* UNIFORM FLOW RATING CURVE FOR DOWNSTREAM CHANNEL

FLOW (cfs)	W.S.E. (ft)	FROUDE NUMBER	DEPTH (ft)	VEL. (f/s)	SHEAR (psf)
0.00	98.95	0.000	0.00	0.00	0.00
190.00	100.11	1.081	1.16	6.62	0.73
380.00	100.67	1.110	1.72	8.25	1.07
570.00	101.09	1.124	2.14	9.33	1.34
760.00	101.44	1.133	2.50	10.16	1.56
950.00	101.76	1.140	2.81	10.84	1.75
1140.00	102.04	1.145	3.09	11.42	1.93
1330.00	102.29	1.149	3.34	11.92	2.09
1520.00	102.53	1.153	3.58	12.38	2.23
1710.00	102.75	1.156	3.80	12.79	2.37
1900.00	102.96	1.159	4.01	13.16	2.50

****
********** ROADWAY OVERTOPPING DATA **********
****

ROADWAY SURFACE	PAVED
EMBANKMENT TOP WIDTH	95.00 ft
CREST LENGTH	1.00 ft
OVERTOPPING CREST ELEVATION	108.00 ft

****

CURRENT DATE: 11-26-1997 FILE DATE: 11-26-1997
CURRENT TIME: 12:11:12 FILE NAME: PD4-6

****
********** FHWA CULVERT ANALYSIS **********
********** HY-8, VERSION 6.0 **********
****

C U L V NO.	SITE DATA INLET ELEV. (ft)	OUTLET ELEV. (ft)	CULVERT LENGTH (ft)	CULVERT SHAPE, MATERIAL, INLET BARRELS SHAPE MATERIAL	SPAN (ft)	RISE (ft)	MANNING n	INLET TYPE
1	100.00	99.50	50.00	3 RCB	8.00	6.00	.015	CONVENTIONAL
2								
3								
4								
5								
6								

PRIVATE DRIVES (3)
NORTH OF PINNACLE PEAK RD.
PIMA RD. CHANNEL
STA. 1050+08
1053+40
1056+65

****

SUMMARY OF CULVERT FLOWS (cfs) FILE: PD4-6 DATE: 11-26-1997

ELEV (ft)	TOTAL	1	2	3	4	5	6	ROADWAY	ITR
100.00	0.0	0.0	0.0	0.0	0.0	0.0	0.0	0.00	1
103.01	130.0	130.0	0.0	0.0	0.0	0.0	0.0	0.00	1
103.35	260.0	260.0	0.0	0.0	0.0	0.0	0.0	0.00	1
103.69	390.0	390.0	0.0	0.0	0.0	0.0	0.0	0.00	1
104.04	520.0	520.0	0.0	0.0	0.0	0.0	0.0	0.00	1
104.41	650.0	650.0	0.0	0.0	0.0	0.0	0.0	0.00	1
104.92	780.0	780.0	0.0	0.0	0.0	0.0	0.0	0.00	1
105.48	910.0	910.0	0.0	0.0	0.0	0.0	0.0	0.00	1
106.03	1040.0	1040.0	0.0	0.0	0.0	0.0	0.0	0.00	1
106.61	1170.0	1170.0	0.0	0.0	0.0	0.0	0.0	0.00	1
107.21	1300.0	1300.0	0.0	0.0	0.0	0.0	0.0	0.00	1
108.00	1456.9	1456.9	0.0	0.0	0.0	0.0	0.0	OVERTOPPING	

****

SUMMARY OF ITERATIVE SOLUTION ERRORS FILE: PD4-6 DATE: 11-26-1997

HEAD ELEV (ft)	HEAD ERROR (ft)	TOTAL FLOW (cfs)	FLOW ERROR (cfs)	% FLOW ERROR
100.00	0.000	0.00	0.00	0.00
103.01	0.000	130.00	0.00	0.00
103.35	0.000	260.00	0.00	0.00
103.69	0.000	390.00	0.00	0.00
104.04	0.000	520.00	0.00	0.00
104.41	0.000	650.00	0.00	0.00
104.92	0.000	780.00	0.00	0.00
105.48	0.000	910.00	0.00	0.00
106.03	0.000	1040.00	0.00	0.00
106.61	0.000	1170.00	0.00	0.00
107.21	0.000	1300.00	0.00	0.00

****

<1> TOLERANCE (ft) = 0.010 <2> TOLERANCE (%) = 1.000

****

CURRENT DATE: 11-26-1997 FILE DATE: 11-26-1997
CURRENT TIME: 12:11:12 FILE NAME: PD4-6

****

PERFORMANCE CURVE FOR CULVERT 1 - 3(8.00 (ft) BY 6.00 (ft)) RCB

****

DIS-CHARGE FLOW (cfs)	HEAD-WATER ELEV. (ft)	INLET CONTROL DEPTH (ft)	OUTLET CONTROL DEPTH (ft)	FLOW TYPE <F4>	NORMAL DEPTH (ft)	CRIT. DEPTH (ft)	OUTLET DEPTH (ft)	TW DEPTH (ft)	OUTLET VEL. (fps)	TW VEL. (fps)
0.00	100.00	0.00	-0.50	0-NF	0.00	0.00	0.00	0.00	0.00	0.00
130.00	103.01	1.48	3.01	1-S2n	0.73	0.97	0.73	1.42	7.46	6.69
260.00	103.35	2.34	3.35	1-S2n	1.16	1.54	1.22	2.01	8.87	8.09
390.00	103.69	3.07	3.69	1-S2n	1.52	2.02	1.63	2.44	9.95	9.01
520.00	104.04	3.74	4.04	1-S2n	1.86	2.45	2.01	2.79	10.80	9.72
650.00	104.41	4.35	4.41	1-S2n	2.17	2.84	2.36	3.10	11.49	10.30
780.00	104.92	4.92	4.81	1-S2n	2.47	3.21	2.69	3.37	12.09	10.80
910.00	105.48	5.48	5.24	1-S2n	2.75	3.56	3.02	3.61	12.58	11.23
1040.00	106.03	6.03	5.71	1-S2n	3.03	3.89	3.32	3.83	13.07	11.63
1170.00	106.61	6.61	6.20	5-S2n	3.30	4.20	3.61	4.04	13.49	11.98
1300.00	107.21	7.21	6.73	5-S2n	3.57	4.51	3.91	4.23	13.86	12.31

****

El. inlet face invert 100.00 ft El. outlet invert 99.50 ft
El. inlet throat invert 0.00 ft El. inlet crest 0.00 ft

****

***** SITE DATA ***** CULVERT INVERT **********

INLET STATION	0.00 ft
INLET ELEVATION	100.00 ft
OUTLET STATION	50.00 ft
OUTLET ELEVATION	99.50 ft
NUMBER OF BARRELS	3
SLOPE (V/H)	0.0100
CULVERT LENGTH ALONG SLOPE	50.00 ft

***** CULVERT DATA SUMMARY **********

BARREL SHAPE	BOX
BARREL SPAN	8.00 ft
BARREL RISE	6.00 ft
BARREL MATERIAL	CONCRETE
BARREL MANNING'S n	0.015
INLET TYPE	CONVENTIONAL
INLET EDGE AND WALL	SQUARE EDGE (30-75 DEG. FLARE)
INLET DEPRESSION	NONE

****

CURRENT DATE: 11-26-1997 FILE DATE: 11-26-1997
CURRENT TIME: 12:11:12 FILE NAME: PD4-6

****
********** TAILWATER **********
****

******* REGULAR CHANNEL CROSS SECTION **********

BOTTOM WIDTH	8.00 ft
SIDE SLOPE H/V (X:1)	4.0
CHANNEL SLOPE V/H (ft/ft)	0.010
MANNING'S n (.01-0.1)	0.022
CHANNEL INVERT ELEVATION	99.50 ft
CULVERT NO.1 OUTLET INVERT ELEVATION	99.50 ft

******* UNIFORM FLOW RATING CURVE FOR DOWNSTREAM CHANNEL

FLOW (cfs)	W.S.E. (ft)	FROUDE NUMBER	DEPTH (ft)	VEL. (f/s)	SHEAR (psf)
0.00	99.50	0.000	0.00	0.00	0.00
130.00	100.92	0.989	1.42	6.69	0.89
260.00	101.51	1.006	2.01	8.09	1.25
390.00	101.94	1.017	2.44	9.01	1.52
520.00	102.29	1.025	2.79	9.72	1.74
650.00	102.60	1.031	3.10	10.30	1.93
780.00	102.87	1.037	3.37	10.80	2.10
910.00	103.11	1.042	3.61	11.23	2.25
1040.00	103.33	1.047	3.83	11.63	2.39
1170.00	103.54	1.051	4.04	11.98	2.52
1300.00	103.73	1.054	4.23	12.31	2.64

****
********** ROADWAY OVERTOPPING DATA **********
****

ROADWAY SURFACE	PAVED
EMBANKMENT TOP WIDTH	40.00 ft
CREST LENGTH	1.00 ft
OVERTOPPING CREST ELEVATION	108.00 ft

****

CURRENT DATE: 11-26-1997 FILE DATE: 11-26-1997
CURRENT TIME: 12:13:11 FILE NAME: DSRTHGLD

****
********** FHWA CULVERT ANALYSIS **********
********** HY-8, VERSION 6.0 **********
****

DESERT HIGHLANDS DR.
PIMA ROAD CHNL.
STA. 1016+50

C U L V NO.	SITE DATA INLET ELEV. (ft)	OUTLET ELEV. (ft)	CULVERT LENGTH (ft)	CULVERT SHAPE, MATERIAL, INLET BARRELS SHAPE MATERIAL	SPAN (ft)	RISE (ft)	MANNING n	INLET TYPE
1	100.00	98.70	130.01	4 RCB	10.00	8.00	.015	CONVENTIONAL
2								
3								
4								
5								
6								

****

SUMMARY OF CULVERT FLOWS (cfs) FILE: DSRTHGLD DATE: 11-26-1997

ELEV (ft)	TOTAL	1	2	3	4	5	6	ROADWAY	ITR
100.00	0.0	0.0	0.0	0.0	0.0	0.0	0.0	0.00	1
103.10	160.0	160.0	0.0	0.0	0.0	0.0	0.0	0.00	1
103.36	320.0	320.0	0.0	0.0	0.0	0.0	0.0	0.00	1
103.58	480.0	480.0	0.0	0.0	0.0	0.0	0.0	0.00	1
103.81	640.0	640.0	0.0	0.0	0.0	0.0	0.0	0.00	1
104.02	800.0	800.0	0.0	0.0	0.0	0.0	0.0	0.00	1
104.25	960.0	960.0	0.0	0.0	0.0	0.0	0.0	0.00	1
104.47	1120.0	1120.0	0.0	0.0	0.0	0.0	0.0	0.00	1
104.85	1280.0	1280.0	0.0	0.0	0.0	0.0	0.0	0.00	1
105.26	1440.0	1440.0	0.0	0.0	0.0	0.0	0.0	0.00	1
105.64	1600.0	1600.0	0.0	0.0	0.0	0.0	0.0	0.00	1
110.00	3485.7	3485.7	0.0	0.0	0.0	0.0	0.0	OVERTOPPING	

****

SUMMARY OF ITERATIVE SOLUTION ERRORS FILE: DSRTHGLD DATE: 11-26-1997

HEAD ELEV (ft)	HEAD ERROR (ft)	TOTAL FLOW (cfs)	FLOW ERROR (cfs)	% FLOW ERROR
100.00	0.000	0.00	0.00	0.00
103.10	0.000	160.00	0.00	0.00
103.36	0.000	320.00	0.00	0.00
103.58	0.000	480.00	0.00	0.00
103.81	0.000	640.00	0.00	0.00
104.02	0.000	800.00	0.00	0.00
104.25	0.000	960.00	0.00	0.00
104.47	0.000	1120.00	0.00	0.00
104.85	0.000	1280.00	0.00	0.00
105.26	0.000	1440.00	0.00	0.00
105.64	0.000	1600.00	0.00	0.00

****

<1> TOLERANCE (ft) = 0.010 <2> TOLERANCE (%) = 1.000

****

CURRENT DATE: 11-26-1997 FILE DATE: 11-26-1997
CURRENT TIME: 12:13:11 FILE NAME: DSRTHGLD

****

PERFORMANCE CURVE FOR CULVERT 1 - 4(10.00 (ft) BY 8.00 (ft)) RCB

****

DIS-CHARGE FLOW (cfs)	HEAD-WATER ELEV. (ft)	INLET CONTROL DEPTH (ft)	OUTLET CONTROL DEPTH (ft)	FLOW TYPE <F4>	NORMAL DEPTH (ft)	CRIT. DEPTH (ft)	OUTLET DEPTH (ft)	TW DEPTH (ft)	OUTLET VEL. (fps)	TW VEL. (fps)
0.00	100.00	0.00	-1.30	0-NF	0.00	0.00	0.00	0.00	0.00	0.00
160.00	103.10	1.21	3.10	1-S2n	0.52	0.79	0.52	1.06	7.75	6.25
320.00	103.36	1.92	3.36	1-S2n	0.92	1.26	0.92	1.56	8.68	7.82
480.00	103.58	2.51	3.58	1-S2n	1.19	1.65	1.19	1.95	10.07	8.86
640.00	103.81	3.04	3.81	1-S2n	1.46	2.00	1.50	2.28	10.67	9.66
800.00	104.02	3.53	4.02	1-S2n	1.70	2.32	1.76	2.56	11.35	10.31
960.00	104.25	3.98	4.25	1-S2n	1.92	2.62	2.00	2.82	11.98	10.87
1120.00	104.47	4.43	4.47	1-S2n	2.14	2.90	2.24	3.06	12.51	11.36
1280.00	104.85	4.85	4.71	1-S2n	2.35	3.18	2.47	3.28	12.98	11.80
1440.00	105.26	5.26	4.95	1-S2n	2.55	3.43	2.68	3.48	13.41	12.19
1600.00	105.64	5.64	5.20	1-S2n	2.74	3.68	2.90	3.67	13.77	12.55

****

El. inlet face invert 100.00 ft El. outlet invert 98.70 ft
El. inlet throat invert 0.00 ft El. inlet crest 0.00 ft

****

***** SITE DATA ***** CULVERT INVERT **********

INLET STATION	0.00 ft
INLET ELEVATION	100.00 ft
OUTLET STATION	130.00 ft
OUTLET ELEVATION	98.70 ft
NUMBER OF BARRELS	4
SLOPE (V/H)	0.0100
CULVERT LENGTH ALONG SLOPE	130.01 ft

***** CULVERT DATA SUMMARY **********

BARREL SHAPE	BOX
BARREL SPAN	10.00 ft
BARREL RISE	8.00 ft
BARREL MATERIAL	CONCRETE
BARREL MANNING'S n	0.015
INLET TYPE	CONVENTIONAL
INLET EDGE AND WALL	SQUARE EDGE (30-75 DEG. FLARE)
INLET DEPRESSION	NONE

****

CURRENT DATE: 11-26-1997 FILE DATE: 11-26-1997
CURRENT TIME: 12:13:11 FILE NAME: DSRTHGLD

****
********** TAILWATER **********
****

******* REGULAR CHANNEL CROSS SECTION **********

BOTTOM WIDTH	20.00 ft
SIDE SLOPE H/V (X:1)	4.0
CHANNEL SLOPE V/H (ft/ft)	0.010
MANNING'S n (.01-0.1)	0.022
CHANNEL INVERT ELEVATION	98.70 ft
CULVERT NO.1 OUTLET INVERT ELEVATION	98.70 ft

******* UNIFORM FLOW RATING CURVE FOR DOWNSTREAM CHANNEL

FLOW (cfs)	W.S.E. (ft)	FROUDE NUMBER	DEPTH (ft)	VEL. (f/s)	SHEAR (psf)
0.00	98.70	0.000	0.00	0.00	0.00
160.00	99.76	1.073	1.06	6.25	0.66
320.00	100.26	1.103	1.56	7.82	0.97
480.00	100.65	1.118	1.95	8.86	1.22
640.00	100.98	1.128	2.28	9.66	1.42
800.00	101.26	1.135	2.56	10.31	1.60
960.00	101.52	1.140	2.82	10.87	1.76
1120.00	101.76	1.145	3.06	11.36	1.91
1280.00	101.98	1.148	3.28	11.80	2.05
1440.00	102.18	1.151	3.48	12.19	2.17
1600.00	102.37	1.154	3.67	12.55	2.29

****
********** ROADWAY OVERTOPPING DATA **********
****

ROADWAY SURFACE	PAVED
EMBANKMENT TOP WIDTH	120.00 ft
CREST LENGTH	1.00 ft
OVERTOPPING CREST ELEVATION	110.00 ft

****

CURRENT DATE: 11-26-1997 FILE DATE: 11-26-1997
CURRENT TIME: 12:14:36 FILE NAME: JOMAX

JOMAX RD.
PIMA RD. CHNL.
STA. 1041+42

****
********** FHWA CULVERT ANALYSIS **********
********** HY-8, VERSION 6.0 **********

C U L V NO.	SITE DATA: INLET ELEV. (ft)	OUTLET ELEV. (ft)	CULVERT LENGTH (ft)	CULVERT SHAPE, MATERIAL, INLET: BARRELS SHAPE MATERIAL	SPAN (ft)	RISE (ft)	MANNING n	INLET TYPE
1	100.00	99.28	72.00	3 RCB	8.00	6.00	.015	CONVENTIONAL
2								
3								
4								
5								
6								

****

SUMMARY OF CULVERT FLOWS (cfs) FILE: JOMAX DATE: 11-26-1997

ELEV (ft)	TOTAL	1	2	3	4	5	6	ROADWAY	ITR
100.00	0.0	0.0	0.0	0.0	0.0	0.0	0.0	0.00	1
102.79	130.0	130.0	0.0	0.0	0.0	0.0	0.0	0.00	1
103.13	260.0	260.0	0.0	0.0	0.0	0.0	0.0	0.00	1
103.48	390.0	390.0	0.0	0.0	0.0	0.0	0.0	0.00	1
103.83	520.0	520.0	0.0	0.0	0.0	0.0	0.0	0.00	1
104.35	650.0	650.0	0.0	0.0	0.0	0.0	0.0	0.00	1
104.92	780.0	780.0	0.0	0.0	0.0	0.0	0.0	0.00	1
105.48	910.0	910.0	0.0	0.0	0.0	0.0	0.0	0.00	1
106.03	1040.0	1040.0	0.0	0.0	0.0	0.0	0.0	0.00	1
106.61	1170.0	1170.0	0.0	0.0	0.0	0.0	0.0	0.00	1
107.21	1300.0	1300.0	0.0	0.0	0.0	0.0	0.0	0.00	1
108.00	1456.9	1456.9	0.0	0.0	0.0	0.0	0.0	OVERTOPPING	

****

SUMMARY OF ITERATIVE SOLUTION ERRORS FILE: JOMAX DATE: 11-26-1997

HEAD ELEV (ft)	HEAD ERROR (ft)	TOTAL FLOW (cfs)	FLOW ERROR (cfs)	% FLOW ERROR
100.00	0.000	0.00	0.00	0.00
102.79	0.000	130.00	0.00	0.00
103.13	0.000	260.00	0.00	0.00
103.48	0.000	390.00	0.00	0.00
103.83	0.000	520.00	0.00	0.00
104.35	0.000	650.00	0.00	0.00
104.92	0.000	780.00	0.00	0.00
105.48	0.000	910.00	0.00	0.00
106.03	0.000	1040.00	0.00	0.00
106.61	0.000	1170.00	0.00	0.00
107.21	0.000	1300.00	0.00	0.00

****

<1> TOLERANCE (ft) = 0.010 <2> TOLERANCE (%) = 1.000

****

CURRENT DATE: 11-26-1997 FILE DATE: 11-26-1997
CURRENT TIME: 12:14:36 FILE NAME: JOMAX

****

PERFORMANCE CURVE FOR CULVERT 1 - 3(8.00 (ft) BY 6.00 (ft)) RCB

****

DIS-CHARGE FLOW (cfs)	HEAD-WATER ELEV. (ft)	INLET CONTROL DEPTH (ft)	OUTLET CONTROL DEPTH (ft)	FLOW TYPE <F4>	NORMAL DEPTH (ft)	CRIT. DEPTH (ft)	OUTLET DEPTH (ft)	TW DEPTH (ft)	OUTLET VEL. (fps)	TW VEL. (fps)
0.00	100.00	0.00	-0.72	0-NF	0.00	0.00	0.00	0.00	0.00	0.00
130.00	102.79	1.48	2.79	1-S2n	0.73	0.97	0.73	1.42	7.46	6.69
260.00	103.13	2.34	3.13	1-S2n	1.16	1.54	1.20	2.01	9.02	8.09
390.00	103.48	3.07	3.48	1-S2n	1.52	2.02	1.60	2.44	10.18	9.01
520.00	103.83	3.74	3.83	1-S2n	1.86	2.45	1.96	2.79	11.03	9.72
650.00	104.35	4.35	4.22	1-S2n	2.17	2.84	2.31	3.10	11.72	10.30
780.00	104.92	4.92	4.63	1-S2n	2.47	3.21	2.64	3.37	12.32	10.80
910.00	105.48	5.48	5.07	1-S2n	2.75	3.56	2.96	3.61	12.83	11.23
1040.00	106.03	6.03	5.54	1-S2n	3.03	3.89	3.26	3.83	13.31	11.63
1170.00	106.61	6.61	6.05	5-S2n	3.30	4.20	3.55	4.04	13.72	11.98
1300.00	107.21	7.21	6.60	5-S2n	3.57	4.51	3.84	4.23	14.11	12.31

****

El. inlet face invert 100.00 ft El. outlet invert 99.28 ft
El. inlet throat invert 0.00 ft El. inlet crest 0.00 ft

****

***** SITE DATA ***** CULVERT INVERT **********

INLET STATION	0.00 ft
INLET ELEVATION	100.00 ft
OUTLET STATION	72.00 ft
OUTLET ELEVATION	99.28 ft
NUMBER OF BARRELS	3
SLOPE (V/H)	0.0100
CULVERT LENGTH ALONG SLOPE	72.00 ft

***** CULVERT DATA SUMMARY **********

BARREL SHAPE	BOX
BARREL SPAN	8.00 ft
BARREL RISE	6.00 ft
BARREL MATERIAL	CONCRETE
BARREL MANNING'S n	0.015
INLET TYPE	CONVENTIONAL
INLET EDGE AND WALL	SQUARE EDGE (30-75 DEG. FLARE)
INLET DEPRESSION	NONE

****

CURRENT DATE: 11-26-1997 FILE DATE: 11-26-1997
CURRENT TIME: 12:14:36 FILE NAME: JOMAX

****
********** TAILWATER **********
****

******** REGULAR CHANNEL CROSS SECTION **********

BOTTOM WIDTH	8.00 ft
SIDE SLOPE H/V (X:1)	4.0
CHANNEL SLOPE V/H (ft/ft)	0.010
MANNING'S n (.01-0.1)	0.022
CHANNEL INVERT ELEVATION	99.28 ft
CULVERT NO.1 OUTLET INVERT ELEVATION	99.28 ft

******** UNIFORM FLOW RATING CURVE FOR DOWNSTREAM CHANNEL

FLOW (cfs)	W.S.E. (ft)	FROUDE NUMBER	DEPTH (ft)	VEL. (f/s)	SHEAR (psf)
0.00	99.28	0.000	0.00	0.00	0.00
130.00	100.70	0.989	1.42	6.69	0.89
260.00	101.29	1.006	2.01	8.09	1.25
390.00	101.72	1.017	2.44	9.01	1.52
520.00	102.07	1.025	2.79	9.72	1.74
650.00	102.38	1.031	3.10	10.30	1.93
780.00	102.65	1.037	3.37	10.80	2.10
910.00	102.89	1.042	3.61	11.23	2.25
1040.00	103.11	1.047	3.83	11.63	2.39
1170.00	103.32	1.051	4.04	11.98	2.52
1300.00	103.51	1.054	4.23	12.31	2.64

****
********** ROADWAY OVERTOPPING DATA **********
****

ROADWAY SURFACE	PAVED
EMBANKMENT TOP WIDTH	62.00 ft
CREST LENGTH	1.00 ft
OVERTOPPING CREST ELEVATION	108.00 ft

****

CURRENT DATE: 11-26-1997 FILE DATE: 11-26-1997
CURRENT TIME: 12:41:20 FILE NAME: SCN6A

****
********** FHWA CULVERT ANALYSIS **********
********** HY-8, VERSION 6.0 **********
****

CULV NO.	SITE DATA: INLET ELEV. (ft)	OUTLET ELEV. (ft)	CULVERT LENGTH (ft)	CULVERT SHAPE, MATERIAL, INLET: BARRELS	SHAPE MATERIAL	SPAN (ft)	RISE (ft)	MANNING n	INLET TYPE
1	1583.00	1572.35	110.51	1	RCP	7.00	7.00	.015	CONVENTIONAL
2									
3									
4									
5									
6									

CONNECTOR PIPE TO UNION HILLS OUTLET CONDUIT AT CONCENTRATION POINT CIA

****

SUMMARY OF CULVERT FLOWS (cfs) FILE: SCN6A DATE: 11-26-1997

ELEV (ft)	TOTAL	1	2	3	4	5	6	ROADWAY	ITR
1583.00	0.0	0.0	0.0	0.0	0.0	0.0	0.0	0.00	1
1584.96	50.5	50.5	0.0	0.0	0.0	0.0	0.0	0.00	1
1586.26	101.0	101.0	0.0	0.0	0.0	0.0	0.0	0.00	1
1587.30	151.5	151.5	0.0	0.0	0.0	0.0	0.0	0.00	1
1588.19	202.0	202.0	0.0	0.0	0.0	0.0	0.0	0.00	1
1588.97	250.0	250.0	0.0	0.0	0.0	0.0	0.0	0.00	1
1589.85	303.0	303.0	0.0	0.0	0.0	0.0	0.0	0.00	1
1590.75	353.5	353.5	0.0	0.0	0.0	0.0	0.0	0.00	1
1591.75	404.0	404.0	0.0	0.0	0.0	0.0	0.0	0.00	1
1592.87	454.5	454.5	0.0	0.0	0.0	0.0	0.0	0.00	1
1594.14	505.0	505.0	0.0	0.0	0.0	0.0	0.0	0.00	1
1594.50	518.0	518.0	0.0	0.0	0.0	0.0	0.0	OVERTOPPING	

****

SUMMARY OF ITERATIVE SOLUTION ERRORS FILE: SCN6A DATE: 11-26-1997

HEAD ELEV (ft)	HEAD ERROR (ft)	TOTAL FLOW (cfs)	FLOW ERROR (cfs)	% FLOW ERROR
1583.00	0.000	0.00	0.00	0.00
1584.96	0.000	50.50	0.00	0.00
1586.26	0.000	101.00	0.00	0.00
1587.30	0.000	151.50	0.00	0.00
1588.19	0.000	202.00	0.00	0.00
1588.97	0.000	250.00	0.00	0.00
1589.85	0.000	303.00	0.00	0.00
1590.75	0.000	353.50	0.00	0.00
1591.75	0.000	404.00	0.00	0.00
1592.87	0.000	454.50	0.00	0.00
1594.14	0.000	505.00	0.00	0.00

****

<1> TOLERANCE (ft) = 0.010 <2> TOLERANCE (%) = 1.000

****

CURRENT DATE: 11-26-1997 FILE DATE: 11-26-1997
CURRENT TIME: 12:41:20 FILE NAME: SCN6A

****

PERFORMANCE CURVE FOR CULVERT 1 - 1(7.00 (ft) BY 7.00 (ft)) RCP

****

DIS-CHARGE FLOW (cfs)	HEAD-WATER ELEV. (ft)	INLET CONTROL DEPTH (ft)	OUTLET CONTROL DEPTH (ft)	FLOW TYPE <F4>	NORMAL DEPTH (ft)	CRIT. DEPTH (ft)	OUTLET DEPTH (ft)	TW DEPTH (ft)	OUTLET VEL. (fps)	TW VEL. (fps)
0.00	1583.00	0.00	-8.00	0-NF	0.00	0.00	0.00	2.65	0.00	0.00
50.50	1584.96	1.96	-6.21	1-S2n	0.79	1.77	0.83	2.65	19.02	0.00
101.00	1586.26	3.25	-5.67	1-S2n	1.10	2.56	1.21	2.65	22.22	0.00
151.50	1587.29	4.29	-5.12	1-S2n	1.40	3.17	1.53	2.65	24.15	0.00
202.00	1588.18	5.18	-4.51	1-S2n	1.59	3.69	1.82	2.65	25.11	0.00
250.00	1588.97	5.97	-3.87	1-S2n	1.77	4.14	2.08	2.65	26.08	0.00
303.00	1589.85	6.85	-3.09	1-S2n	1.97	4.56	2.33	2.65	26.88	0.00
353.50	1590.75	7.75	-2.26	1-S2n	2.14	4.95	2.55	2.65	27.82	0.00
404.00	1591.75	8.75	-1.36	1-S2n	2.29	5.27	2.77	2.65	28.44	0.00
454.50	1592.87	9.87	-0.36	1-S2n	2.43	5.60	3.00	2.65	28.84	0.00
505.00	1594.14	11.14	0.69	1-S2n	2.58	5.83	3.22	2.65	29.24	0.00

****

El. inlet face invert 1583.00 ft El. outlet invert 1572.35 ft
El. inlet throat invert 0.00 ft El. inlet crest 0.00 ft

****

***** SITE DATA ***** CULVERT INVERT **********

INLET STATION	0.00 ft
INLET ELEVATION	1583.00 ft
OUTLET STATION	110.00 ft
OUTLET ELEVATION	1572.35 ft
NUMBER OF BARRELS	1
SLOPE (V/H)	0.0968
CULVERT LENGTH ALONG SLOPE	110.51 ft

***** CULVERT DATA SUMMARY **********

BARREL SHAPE	CIRCULAR
BARREL DIAMETER	7.00 ft
BARREL MATERIAL	CONCRETE
BARREL MANNING'S n	0.015
INLET TYPE	CONVENTIONAL
INLET EDGE AND WALL	SQUARE EDGE WITH HEADWALL
INLET DEPRESSION	NONE

****

CURRENT DATE: 11-26-1997 FILE DATE: 11-26-1997
CURRENT TIME: 12:41:20 FILE NAME: SCN6A

****
********** TAILWATER **********
****
****

CONSTANT WATER SURFACE ELEVATION
1575.00

****
********** ROADWAY OVERTOPPING DATA **********
****

ROADWAY SURFACE	PAVED
EMBANKMENT TOP WIDTH	100.00 ft
CREST LENGTH	1.00 ft
OVERTOPPING CREST ELEVATION	1594.50 ft

****

DESERT GREENBELT
REATA PASS WASH
PROJECT NO. F2711

BID SCHEDULE (DRAFT - DECEMBER 1997)

ITEM NO.	ITEM	UNIT	ESTIMATED QUANTITY	UNIT PRICE	ITEM TOTAL
104150	PROJECT SIGNS	EA	4	$1,500	$6,000
105801	CONSTRUCTION SURVEYING AND AS-BUILTS	LS			
105802	CONSTRUCTION BOUNDARY DELINEATION	LS			
105803	TEMPORARY FENCING	LF			
107701	PARTNERING ALLOWANCE	LS		$10,000	$10,000
107801	PUBLIC INFORMATION AND NOTIFICATION ALLOWANCE	LS		$10,000	$10,000
202801	MOBILIZATION	LS			
211001	FILL CONSTRUCTION	CY			
215001	CHANNEL / DRAINAGE EXCAVATION	CY			
220401	PLAIN RIPRAP THICKNESS = 12"	CY			
220402	PLAIN RIPRAP THICKNESS = 36"	CY			
220801	CEMENT	TON			
220802	SOIL-CEMENT	CY			
220805	CONCRETE BLOCK MATS (ARMORFLEX)	SY			
301201	SUBGRADE PREPARATION	SF			
310106	SIX-INCH AGGREGATE BASE COURSE	SY			
311001	SIX-INCH DECOMPOSED GRANITE	SY			
321202	TWO-INCH ASPHALT CONCRETE, C-3/4	SY			
336001	SAWCUT PAVEMENT	LF			
340021	CONCRETE RIBBON CURB, MAG 220 TYPE "B" MODIFIED	LF			
340041	CONCRETE ROLL CURB AND GUTTER, MAG 200 TYPE "C"	LF			
340301	CONCRETE VALLEY GUTTER, MAG 240	SF			
350001	REMOVE AC PAVEMENT	SY			

DESERT GREENBELT
REATA PASS WASH
PROJECT NO. F2711

BID SCHEDULE (DRAFT - DECEMBER 1997)

350221	REMOVE PIPE (24" - 48")	LF			
350801	MISCELLANEOUS REMOVALS	LS			
401001	TRAFFIC CONTROL	LS			
401801	FOOTHILLS DRIVE DETOUR	LS			
405101	SURVEY MONUMENTS, MAG 120, TYPE "B"	EA			
430801	HORSE TRAIL	LF			
430631	RELOCATE OTHER TREES	EA			
430804	CONCRETE MULTI-PURPOSE PATH	LF			
440000	SPRINKLER IRRIGATION SYSTEM INSTALLATION	LS			
505501	8' X 3' CONCRETE BOX CULVERT	LF			
505502	10' X 5' CONCRETE BOX CULVERT	LF			
505611	GIRDER BRIDGE - CONCRETE	CY			
505612	GIRDER BRIDGE – REINFORCING STEEL	LBS			
505801	CONCRETE CHANNEL, INVERT, AND SIDESLOPES	CY			
505802	CONCRETE WALL	CY			
505803	CONCRETE PROTECTION FOR 24-INCH SEWER LINE	LS			
505804	CONCRETE PROTECTION FOR 8-INCH SEWER LINE	LS			
505903	ARTIFICIAL DESERT VARNISH	SF			
506800	PRECAST (PRESTRESSED) GIRDER	EA			
515801	REMOVABLE BOLLARDS	EA			
520001	STEEL HANDRAIL	LF			
525001	SIX-INCH SHOTECRETE	SF			
610006	SIX-INCH WATER LINE RELOCATION	LS			
618018	18" STORM DRAIN PIPE	LF			
618030	30" STORM DRAIN PIPE	LF			

DESERT GREENBELT
REATA PASS WASH
PROJECT NO. F2711

BID SCHEDULE (DRAFT - DECEMBER 1997)

618036	36" STORM DRAIN PIPE	LF			
621036	36" CORRUGATED METAL PIPE (CMP)	LF			
621048	48" CORRUGATED METAL PIPE (CMP)	LF			
782800	CONCRETE PILES (DRILLED SHAFTS)	LF			

Reata Pass Wash Channel
Proposed FCD and Scottsdale Cost-Shares

Item	Unit	Quantity	Unit Price	Design Estimate	FCD Share	Scottsdale Share
Flood Control Measures:						
Partnering Allowance	LS	1	$10,000.00	$10,000	$10,000	$0
Mobilization	LS	1	$400,000.00	$400,000	$400,000	$0
Channel/Drainage Excavation	CY	858,186	$2.50	$2,145,465	$2,145,465	$0
Concrete	CY	5,008	$300.00	$1,502,400	$1,502,400	$0
Articulated Blocks	SF	79,200	$13.00	$1,029,600	$1,029,600	$0
Soil Cement 750 psi	CY	312,278	$27.00	$8,431,506	$8,431,506	$0
Soil Cement 1000 psi	CY	152,499	$30.00	$4,574,970	$4,574,970	$0
Soil Cement 1500 psi	CY	5,405	$35.00	$189,175	$189,175	$0
Levee - toedown excavation	CY	102,424	$2.50	$256,060	$256,060	$0
Levee - toedown compacted backfill	CY	102,424	$3.00	$307,272	$307,272	$0
Levee - Structural compacted fill	CY	69,136	$3.00	$207,408	$207,408	$0
Structural Backfill (behind banks, low areas)	CY	42,510	$3.00	$127,530	$127,530	$0
Compacted Backfill (cover bank toedown)	SY	75,433	$3.00	$226,299	$226,299	$0
Rip-Rap Protection	CY	23,110	$40.00	$924,400	$924,400	$0
Geo-Fabric	SF	72,000	$0.19	$13,680	$13,680	$0
Surface Area (desert varnish)	SF	0	$0.00	$0	$0	$0
Remove Existing High Ground	CY	2,074	$2.50	$5,185	$5,185	$0
Surface Grading	SY	19,834	$1.50	$29,751	$29,751	$0
Excavate Bedrock	CY	976	$50.00	$48,800	$48,800	$0
Local Drainage	LS	1	$765,000.00	$765,000.00	$765,000	$0
Remove and Dispose of Planter Boxes	LS	1	$35,000.00	$35,000	$35,000	$0
Subgrade Preparation	SY	2,809	$2.00	$5,618	$5,618	$0
6" Aggregate Base Course	SY	2,160	$3.00	$6,480	$6,480	$0
6" Decomposed Granite	SY	512	$3.00	$1,536	$1,536	$0
2" AC C-3/4	SY	2,158	$3.50	$7,553	$7,553	$0
Sawcut Pavement	LF	84	$1.00	$84	$84	$0
Ribbon Curb, MAG 220 Type "B" Modified	LF	10	$8.00	$80	$80	$0
Roll Curb & Gutter, MAG 220 Type "C"	LF	946	$7.00	$6,622	$6,622	$0
Concrete Valley Gutter, MAG 240	SF	108	$3.00	$324	$324	$0
Remove AC Pavement	SY	2,995	$1.00	$2,995	$2,995	$0
Remove Pipe (24" to 48")	LF	120	$15.00	$1,800	$1,800	$0
Miscellaneous Removals	LS	1	$4,000.00	$4,000	$4,000	$0
Traffic Control	LS	1	$2,000.00	$2,000	$2,000	$0
Off Duty Officer - Contingency	HR	100	$25.00	$2,500	$2,500	$0
Foothills Drive Detour	LS	1	$35,000.00	$35,000	$35,000	$0
Survey Monument, MAG 120, Type 'B'	EA	3	$250.00	$750	$750	$0
8' x 3' Box Culvert	LF	120	$150.00	$18,000	$18,000	$0
Girder Bridge - Concrete	CY	278	$210.00	$58,380	$58,380	$0
Girder Bridge - Reinforcing Steel	LBS	54,520	$0.40	$21,808	$21,808	$0
Bearing Pads	EA	80	$40.00	$3,200	$3,200	$0
Deck Joint Assembly	LF	82	$80.00	$6,560	$6,560	$0

as of 8/11/97

Reata Pass Wash Channel
Proposed FCD and Scottsdale Cost-Shares

Concrete Protection for 24" Sewer Line	LS	1	$35,000.00	$35,000	$35,000	$0
Precast Girders	EA	20	$6,400.00	$128,000	$128,000	$0
Removable Bollards	EA	22	$150.00	$3,300	$3,300	$0
6" Water Line Relocation	LS	1	$14,500.00	$14,500	$14,500	$0
18" Corrugated Metal Pipe	LF	60	$25.00	$1,500	$1,500	$0
36" Corrugated Metal Pipe	LF	98	$50.00	$4,900	$4,900	$0
48" Corrugated Metal Pipe w/Flap Gate	LF	80	$75.00	$6,000	$6,000	$0
Drilled Shafts	LF	337	$190.00	$64,030	$64,030	$0
Contingency @ 10%	PCT	10	$2,167,202.10	$2,167,202	$2,167,202	$0
Subtotal				***$23,839,223***	***$23,839,223***	***$0***
Item	**Unit**	**Quantity**	**Unit Price**	**Design Estimate**	**FCD Share**	**Scottsdale Share**
Public Inv./Landscaping/Trails/Paths/Aesthetics:						
Public Information & Notification Allowance	LS	1	$20,000.00	$20,000	$0	$20,000
Salvage	LS	1	$800,000.00	$800,000	$0	$800,000
Revegetation w/Irrigation	LS	1	$2,073,340.00	$2,073,340	$0	$2,073,340
Hydroseed	SF	1,434,400	$0.05	$71,720	$0	$71,720
Horse Trail	LF	28,503	$0.25	$7,126	$0	$7,126
Concrete Multi-Use Path	LF	35,093	$30.00	$1,052,790	$0	$1,052,790
6" Sub-Base	LF	28,535	$4.00	$114,140	$0	$114,140
3-Rail Railing	LF	9,990	$35.00	$349,650	$0	$349,650
Aesthetic Treatment	LS	1	$932,800.00	$932,800	$0	$932,800
Articulated Blocks	SF	62,400	$3.00	$187,200	$0	$187,200
Signage	LS	1	$40,000.00	$40,000	$0	$40,000
Contingency @ 10%	PCT	10	$564,876.58	$564,877	$0	$564,877
Subtotal				***$6,213,642***	***$0***	***$6,213,642***
Construction Management Credit (1/2 of 6%)	PCT	6	$1,755,171.93	***N/A***	***($877,586)***	***$877,586***
(less completed Salvage)						
Rights-of-Way	LS	1		***$5,034,480***	***$2,517,240***	***$2,517,240***
Engineering	LS	1		***$3,724,097***	***$387,500***	***$3,336,597***
Pinnacle Peak Rd. Apex Structure	LS	1		***$1,725,000***	***$658,458***	***$1,066,542***
Bell Road Bridge	LS	1		***$100,000***	***$0***	***$100,000***
Total for FCD Cost Share				***$40,636,442***	***$26,524,835***	***$14,111,607***
(Percentage)					65.3%	34.7%
ID Incidentals	LS	1	$2,055,171.93	***$2,055,172***	***$0***	***$2,055,172***
Grand Total				***$42,691,614***	***$26,524,835***	***$16,166,779***

as of 8/11/97

Reata Pass Wash Channel
Proposed FCD and Scottsdale Cost-Shares

DC Ranch Golf Course - Station 191+00 to Station 215+00, includes channel and (1) G.C.S.						
Item	**Unit**	**Quantity**	**Unit Price**	**Design Estimate**	**FCD Share**	**Scottsdale Share**
Channel Lining and Earth Works Quantities						
Channel/Drainage Excavation	CY	98,701	$2.50	$246,753	$246,753	$0
Channel - Concrete	CY	355	$300.00	$106,500	$106,500	$0
Channel - Articulated Blocks	SF	12,000	$7.00	$84,000	$84,000	$0
Channel - Soil Cement 750 psi	CY	30,195	$27.00	$815,265	$815,265	$0
Channel - Soil Cement 1000 psi	CY	47,812	$30.00	$1,434,360	$1,434,360	$0
Channel - Soil Cement 1500 psi	CY	0	$35.00	$0	$0	$0
Levee - toedown excavation	CY	0	$2.50	$0	$0	$0
Levee - toedown compacted backfill	CY	0	$3.00	$0	$0	$0
Levee - compacted fill	SY	0	$3.00	$0	$0	$0
Rip-Rap Protection	CY	1,810	$40.00	$72,400	$72,400	$0
Structural Backfill (behind banks, low areas)	SY	2,811	$3.00	$8,433	$8,433	$0
Compacted Backfill (cover bank toedown)	SY	11,182	$3.00	$33,546	$33,546	$0
Remove Existing High Ground	CY	0	$2.50	$0	$0	$0
Additional Grading	SY	0	$1.50	$0	$0	$0
Surface Area	SF		$0.00	$0	$0	$0
Subtotal				***$2,801,257***	***$2,801,257***	***$0***

as of 8/11/97

DC Ranch Share

Reata Pass Wash Channel
Proposed FCD and Scottsdale Cost-Shares

DC Ranch Back Fill Area - Station 154+06 to Station 191+00, includes CE-1, CW-1 & (2) G.C.S.						
Item	Unit	Quantity	Unit Price	Design Estimate	FCD Share	Scottsdale Share
Flood Control Measures:						
Mobilization	LS	1	$50,000.00	$50,000	$0	$50,000
Channel - Soil Cement 750 psi	CY	30,195	$27.00	$815,265	$815,265	$0
Channel - Soil Cement 1000 psi	CY	8,368	$30.00	$251,040	$251,040	$0
Channel - Soil Cement 1500 psi	CY	0	$35.00	$0	$0	$0
Bank - Toedown Excavation	CY	80,891	$2.50	$202,228	$0	$202,228
Bank - Toedown Compacted Backfill	CY	80,891	$2.50	$202,228	$0	$202,228
Bank- Structural Compacted Fill	CY	20,190	$3.00	$60,570	$0	$60,570
Grade Control- Soil Cement	CY	8,369	$25.00	$209,225	$0	$209,225
Grade Control Excavation	CY	23,120	$2.50	$57,800	$0	$57,800
Grade Control- Compacted Backfill	CY	23,120	$2.50	$57,800	$0	$57,800
Rip Rap Protection	CY	8,865	$40.00	$354,600	$0	$354,600
Remove High Ground	CY	7,194	$2.50	$17,985	$0	$17,985
Grading and Local Drainage	LS	1	$155,000.00	$155,000	$0	$155,000
Subtotal				*$2,433,740*	*$0*	*$1,367,435*
Item	Unit	Quantity	Unit Price	Design Estimate	FCD Share	Scottsdale Share
Public Inv./Landscaping/Trails/Paths/Aesthetics:						
Salvage	LS	1	$82,280.00	$82,280	$0	$82,280
Revegetation w/Irrigation	LS	1	$93,280.00	$93,280	$0	$93,280
Hydroseed	SF	71,280	$0.05	$3,564	$0	$3,564
Horse Trail	LF	4,500	$0.25	$1,125	$0	$1,125
Concrete Multi-Use Path	LF	4,500	$15.00	$67,500	$0	$67,500
Aesthetic Treatment	LS	1	$280,000.00	$280,000	$0	$280,000
Contingency @ 10%	PCT	10	$52,774.90	$52,775	$0	$52,775
Subtotal				*$580,524*	*$0*	*$580,524*
Construction Management Credit (1/2 of 6%)	PCT	6	$175,919.03	*N/A*	*($87,960)*	*$87,960*
(less completed Salvage)						
Engineering	LS	1		*$541,715*	*$0*	*$541,715*
Natural Containment Area	LS	1	$3,091,840.00	*$3,091,840*	*$0*	*$3,091,840*
Contingency @ 10%	PCT	10	$309,184.00	*$309,184*	*$0*	*$309,184*
(Const. Mgmt. Credit @ 6%)	PCT	6	$204,061.44	*N/A*	*($204,061)*	*$204,061*
Total for FCD Cost Share				*$6,957,003*	*($292,021)*	*$6,182,719*
(Percentage)					-4.2%	88.9%
ID Incidentals	LS	1	$475,919.03	*$475,919*	*$0*	*$475,919*
Grand Total				*$7,432,922*	*($292,021)*	*$6,658,638*

as of 8/11/97

Reata Pass Wash Channel
Proposed FCD and Scottsdale Cost-Shares

North Beardsley Levee - Station 125+40 to Station 157+25						
Item	Unit	Quantity	Unit Price	Design Estimate	FCD Share	Scottsdale Share
Channel Lining and Earth Works Quantities						
Channel/Drainage Excavation	CY	0	$2.50	$0	$0	$0
Channel - Concrete	CY	0	$300.00	$0	$0	$0
Channel - Articulated Blocks	SF	0	$7.00	$0	$0	$0
Channel - Soil Cement 750 psi	CY	19,702	$27.00	$531,954	$531,954	$0
Channel - Soil Cement 1000 psi	CY	0	$30.00	$0	$0	$0
Channel - Soil Cement 1500 psi	CY	0	$35.00	$0	$0	$0
Levee - toedown excavation	CY	45,605	$2.50	$114,013	$114,013	$0
Levee - toedown compacted backfill	CY	45,605	$3.00	$136,815	$136,815	$0
Levee - compacted fill	CY	20,397	$3.00	$61,191	$61,191	$0
Rip-Rap Protection	CY	7,435	$40.00	$297,400	$297,400	$0
Structural Backfill (behind banks, low areas)	SY	0	$3.00	$0	$0	$0
Compacted Backfill (cover bank toedown)	SY	0	$3.00	$0	$0	$0
Remove Existing High Ground	CY	0	$2.50	$0	$0	$0
Additional Grading	SY	18,056	$1.50	$27,084	$27,084	$0
Surface Area	SF		$0.00	$0	$0	$0
Subtotal				***$1,168,457***	***$1,168,457***	***$0***

as of 8/11/97

Reata Pass Wash Channel
Proposed FCD and Scottsdale Cost-Shares

Union Hill to Downstream of North Beardsley Levee - Station 100+00 to Station 125+40						
Item	**Unit**	**Quantity**	**Unit Price**	**Design Estimate**	**FCD Share**	**Scottsdale Share**
Channel Lining and Earth Works Quantities						
Channel/Drainage Excavation	CY	161,709	$2.50	$404,273	$404,273	$0
Channel - Concrete	CY	0	$300.00	$0	$0	$0
Channel - Articulated Blocks	SF	0	$7.00	$0	$0	$0
Channel - Soil Cement 750 psi	CY	55,916	$27.00	$1,509,732	$1,509,732	$0
Channel - Soil Cement 1000 psi	CY	5,549	$30.00	$166,470	$166,470	$0
Channel - Soil Cement 1500 psi	CY	0	$35.00	$0	$0	$0
Levee - toedown excavation	CY	0	$2.50	$0	$0	$0
Levee - toedown compacted backfill	CY	0	$3.00	$0	$0	$0
Levee - compacted fill	CY	0	$3.00	$0	$0	$0
Rip-Rap Protection	CY	0	$40.00	$0	$0	$0
Structural Backfill (behind banks, low areas)	SY	12,949	$3.00	$38,847	$38,847	$0
Compacted Backfill (cover bank toedown)	SY	22,383	$3.00	$67,149	$67,149	$0
Remove Existing High Ground	CY	0	$2.50	$0	$0	$0
Additional Grading	SY	0	$1.50	$0	$0	$0
Surface Area	SF		$0.00	$0	$0	$0
Subtotal				***$2,186,471***	***$2,186,471***	***$0***

as of 8/11/97

Reata Pass Wash Channel
Proposed FCD and Scottsdale Cost-Shares

Bell Road to Union Hill - Station 48+00 - Station 100+00						
Item	Unit	Quantity	Unit Price	Design Estimate	FCD Share	Scottsdale Share
Channel Lining and Earth Works Quantities						
Channel/Drainage Excavation	CY	356,891	$2.50	$892,228	$892,228	$0
Channel - Concrete	CY	0	$300.00	$0	$0	$0
Channel - Articulated Blocks	SF	0	$7.00	$0	$0	$0
Channel - Soil Cement 750 psi	CY	117,942	$27.00	$3,184,434	$3,184,434	$0
Channel - Soil Cement 1000 psi	CY	14,817	$30.00	$444,510	$444,510	$0
Channel - Soil Cement 1500 psi	CY	0	$35.00	$0	$0	$0
Levee - toedown excavation	CY	0	$2.50	$0	$0	$0
Levee - toedown compacted backfill	CY	0	$2.50	$0	$0	$0
Levee - compacted fill	CY	0	$2.50	$0	$0	$0
Rip-Rap Protection	CY	0	$40.00	$0	$0	$0
Structural Backfill (behind banks, low areas)	SY	7,483	$3.00	$22,449	$22,449	$0
Compacted Backfill (cover bank toedown)	SY	41,868	$3.00	$125,604	$125,604	$0
Remove Existing High Ground	CY	0	$2.50	$0	$0	$0
Additional Grading	SY	0	$1.50	$0	$0	$0
Surface Area	SF		$0.00	$0	$0	$0
Subtotal				***$4,669,225***	***$4,669,225***	***$0***

as of 8/11/97

Reata Pass Wash Channel
Proposed FCD and Scottsdale Cost-Shares

Downstream of Bell Road - Station 15+00 to Station 48+00						
Item	**Unit**	**Quantity**	**Unit Price**	**Design Estimate**	**FCD Share**	**Scottsdale Share**
Channel Lining and Earth Works Quantities						
Channel/Drainage Excavation	CY	56,139	$2.50	$140,348	$140,348	$0
Channel - Concrete	CY	600	$300.00	$180,000	$180,000	$0
Channel - Articulated Blocks	SF	0	$7.00	$0	$0	$0
Channel - Soil Cement 750 psi	CY	56,345	$27.00	$1,521,315	$1,521,315	$0
Channel - Soil Cement 1000 psi	CY	10,125	$30.00	$303,750	$303,750	$0
Channel - Soil Cement 1500 psi	CY	0	$35.00	$0	$0	$0
Levee - toedown excavation	CY	55,545	$2.50	$138,863	$138,863	$0
Levee - toedown compacted backfill	CY	55,545	$3.00	$166,635	$166,635	$0
Levee - compacted fill	CY	46,839	$3.00	$140,517	$140,517	$0
Rip-Rap Protection	CY	5,375	$40.00	$215,000	$215,000	$0
Structural Backfill (behind banks, low areas)	SY	12,083	$3.00	$36,249	$36,249	$0
Compacted Backfill (cover bank toedown)	SY	0	$3.00	$0	$0	$0
Remove Existing High Ground	CY	2,074	$2.50	$5,185	$5,185	$0
Additional Grading	SY	1,778	$1.50	$2,667	$2,667	$0
Surface Area	SF		$0.00	$0	$0	$0
Subtotal				***$2,850,528***	***$2,850,528***	***$0***

as of 8/11/97

Reata Pass Wash Channel
Proposed FCD and Scottsdale Cost-Shares

West World - Station 0+00 to Station 15+00						
Item	Unit	Quantity	Unit Price	Design Estimate	FCD Share	Scottsdale Share
Channel Lining and Earth Works Quantities						
Channel/Drainage Excavation	CY	0	$2.50	$0	$0	$0
Channel - Concrete	CY	159	$300.00	$47,700	$47,700	$0
Channel - Articulated Blocks	SF	0	$7.00	$0	$0	$0
Channel - Soil Cement 750 psi	CY	16,556	$27.00	$447,012	$447,012	$0
Channel - Soil Cement 1000 psi	CY	1,548	$30.00	$46,440	$46,440	$0
Channel - Soil Cement 1500 psi	CY	0	$35.00	$0	$0	$0
Levee - toedown excavation	CY	0	$2.50	$0	$0	$0
Levee - toedown compacted backfill	CY	0	$3.00	$0	$0	$0
Levee - compacted fill	CY	0	$3.00	$0	$0	$0
Rip-Rap Protection	CY	1,450	$40.00	$58,000	$58,000	$0
Structural Backfill (behind banks, low areas)	SY	0	$3.00	$0	$0	$0
Compacted Backfill (cover bank toedown)	SY	0	$3.00	$0	$0	$0
Remove Existing High Ground	CY	0	$2.50	$0	$0	$0
Additional Grading	SY	0	$1.50	$0	$0	$0
Surface Area	SF		$0.00	$0	$0	$0
Subtotal				***$599,152***	***$599,152***	***$0***

as of 8/11/97

Reata Pass Wash Channel
Proposed FCD and Scottsdale Cost-Shares

Upper Reata - Station 215+00 to Station 271+95, includes DW-1 levee						
Item	Unit	Quantity	Unit Price	Design Estimate	FCD Share	Scottsdale Share
Channel Lining and Earth Works Quantities						
Channel/Drainage Excavation	CY	184,746	$2.50	$461,865	$461,865	$0
Channel - Concrete	CY	3,894	$300.00	$1,168,200	$1,168,200	$0
Channel - Articulated Blocks	SF	67,200	$7.00	$470,400	$470,400	$0
Channel - Soil Cement 750 psi	CY	15,622	$27.00	$421,794	$421,794	$0
Channel - Soil Cement 1000 psi	CY	72,648	$30.00	$2,179,440	$2,179,440	$0
Channel - Soil Cement 1500 psi	CY	5,405	$35.00	$189,175	$189,175	$0
Levee - toedown excavation	CY	1,274	$2.50	$3,185	$3,185	$0
Levee - toedown compacted backfill	CY	1,274	$3.00	$3,822	$3,822	$0
Levee - compacted fill	SY	1,900	$3.00	$5,700	$5,700	$0
Rip-Rap Protection	CY	7,040	$40.00	$281,600	$281,600	$0
Structural Backfill (behind banks, low areas)	SY	7,184	$3.00	$21,552	$21,552	$0
Compacted Backfill (cover bank toedown)	SY	0	$3.00	$0	$0	$0
Remove Existing High Ground	CY	0	$2.50	$0	$0	$0
Additional Grading	SY	0	$1.50	$0	$0	$0
Surface Area	SF		$0.00	$0	$0	$0
Subtotal				***$5,206,733***	***$5,206,733***	***$0***

as of 8/11/97

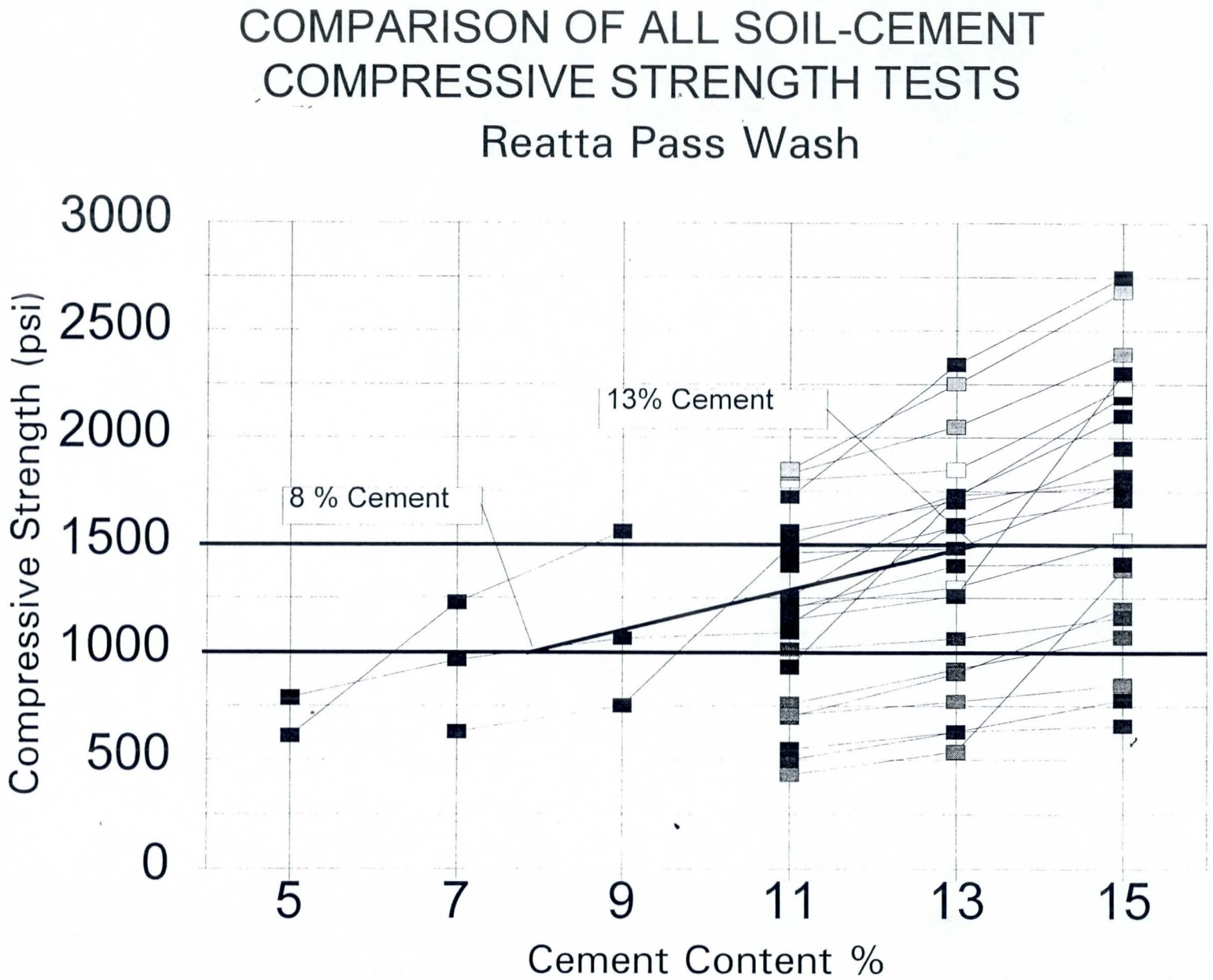
COMPARISON OF ALL SOIL-CEMENT
COMPRESSIVE STRENGTH TESTS
Reatta Pass Wash
Compressive Strength (psi)
3000
2500
2000
1500
1000
500
0
13% Cement
8 % Cement
5
7
9
11
13
15
Cement Content %

Figure 1

AREA 1 SOIL-CEMENT COMPRESSIVE STRENGTH TESTS

(Sta. 18+00 to 80+00)

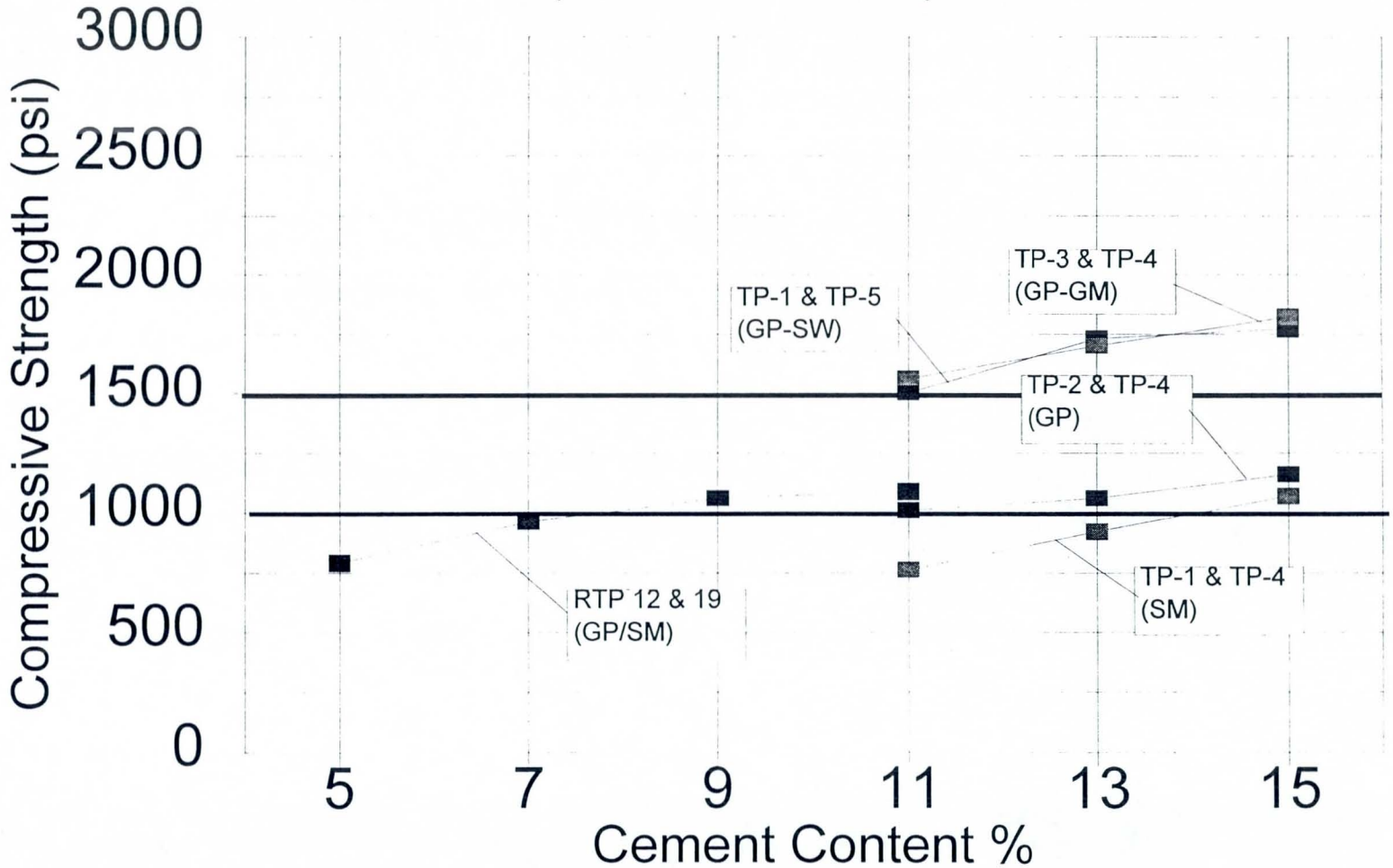

Figure 2

AREA 2 SOIL-CEMENT COMPRESSIVE STRENGTH TESTS

(Sta. 80+00 to 162+00)

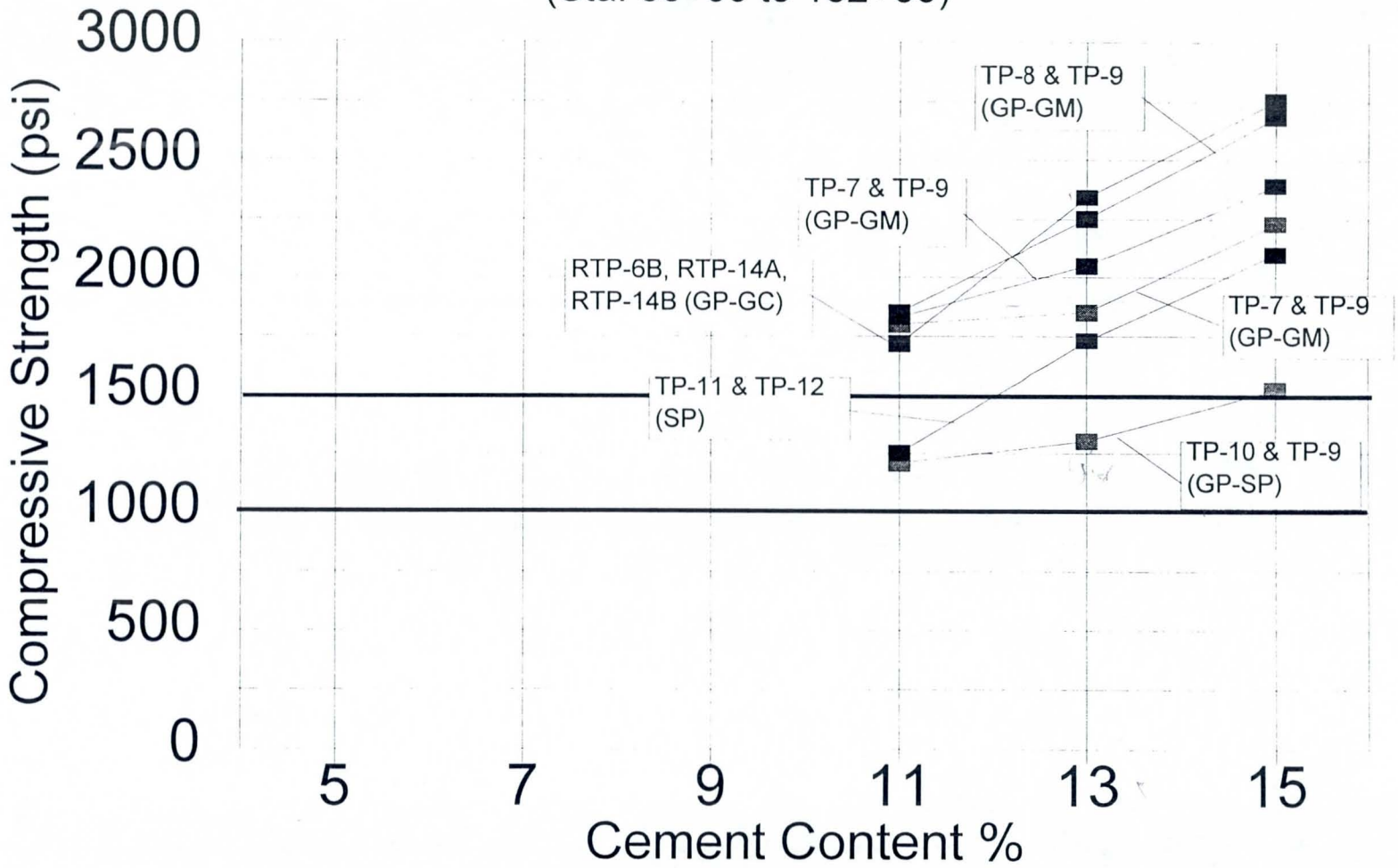

Figure 3

AREA 3 SOIL-CEMENT COMPRESSIVE STRENGTH TESTS

(Sta. 162+00 to 230+00)

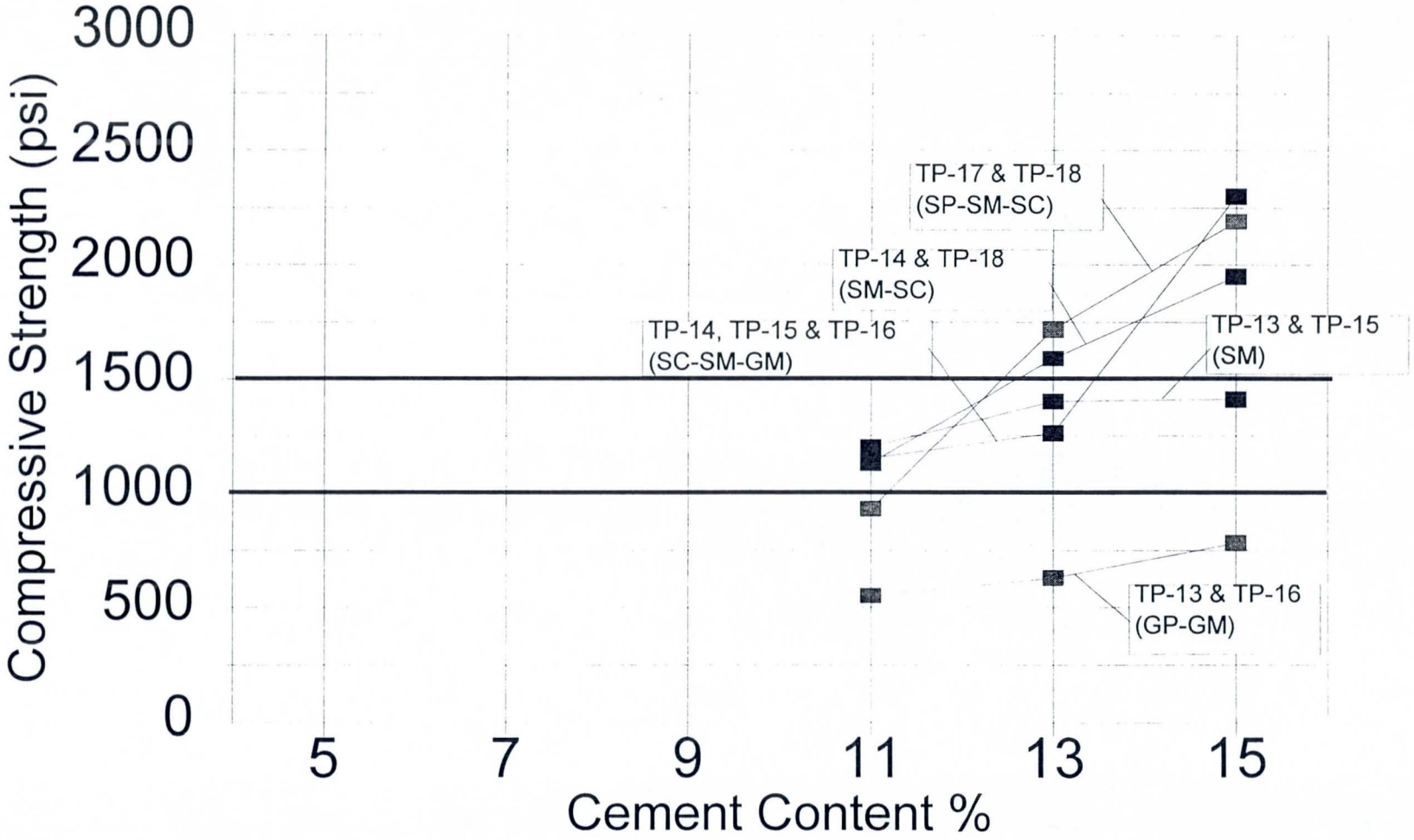

Figure 4

AREA 4 SOIL-CEMENT COMPRESSIVE STRENGTH TESTS

(Sta. 230+00 to 270+00)

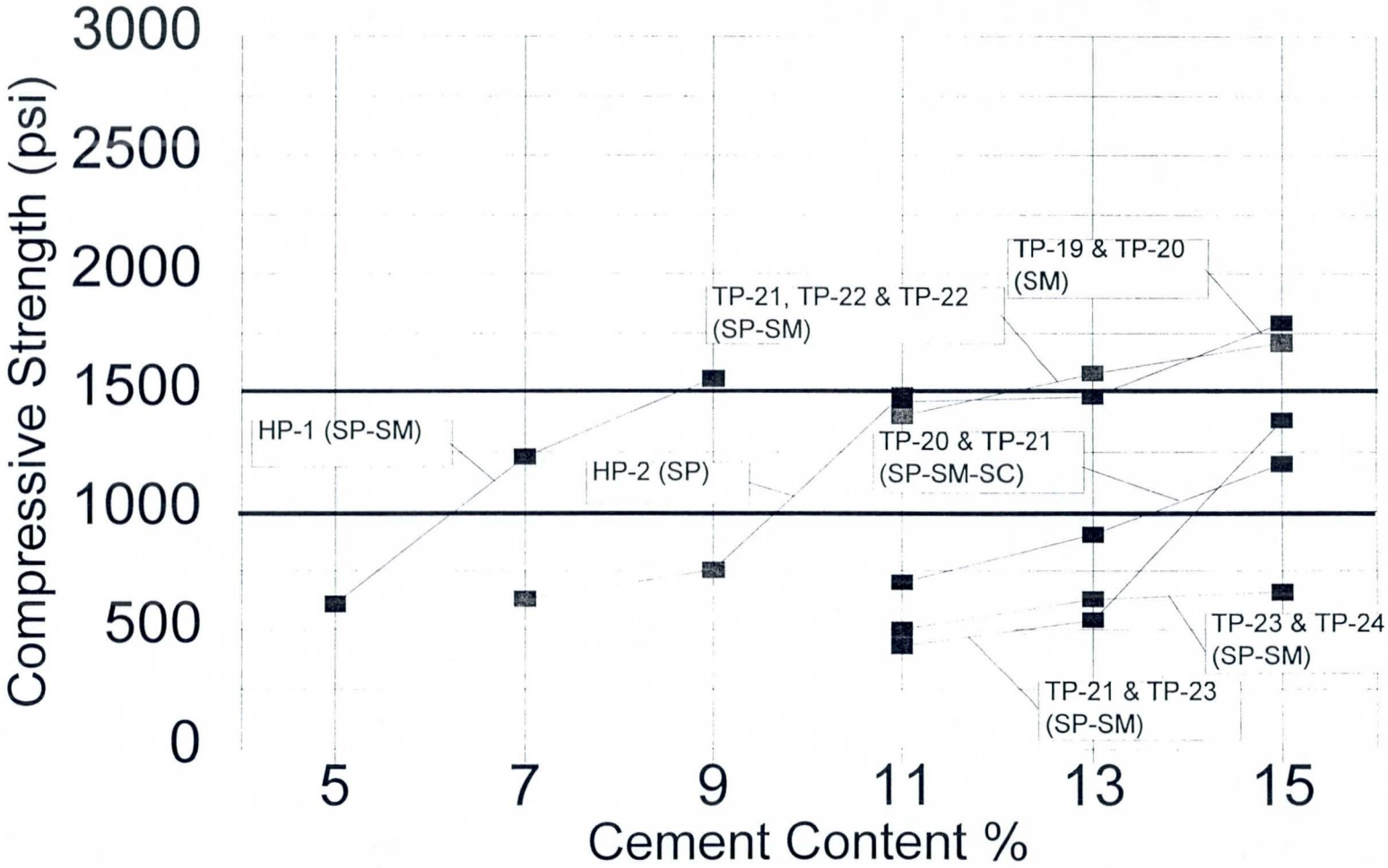

Figure 5

AVERAGE COMPRESSIVE STRENGTHS OF SAMPLES FROM THE FOUR AREAS

(Sta. 18+00 to 270+00)

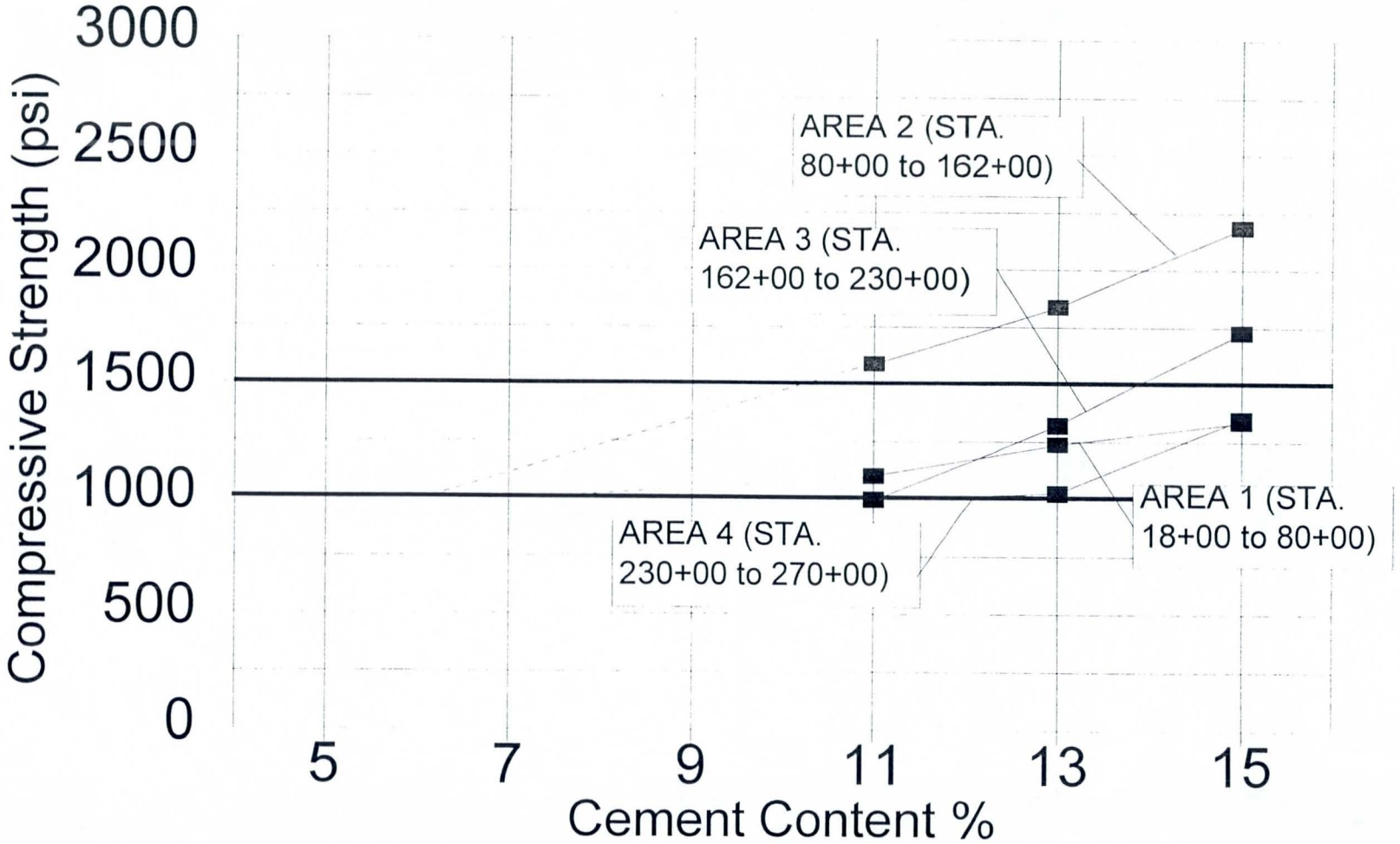

Figure 6

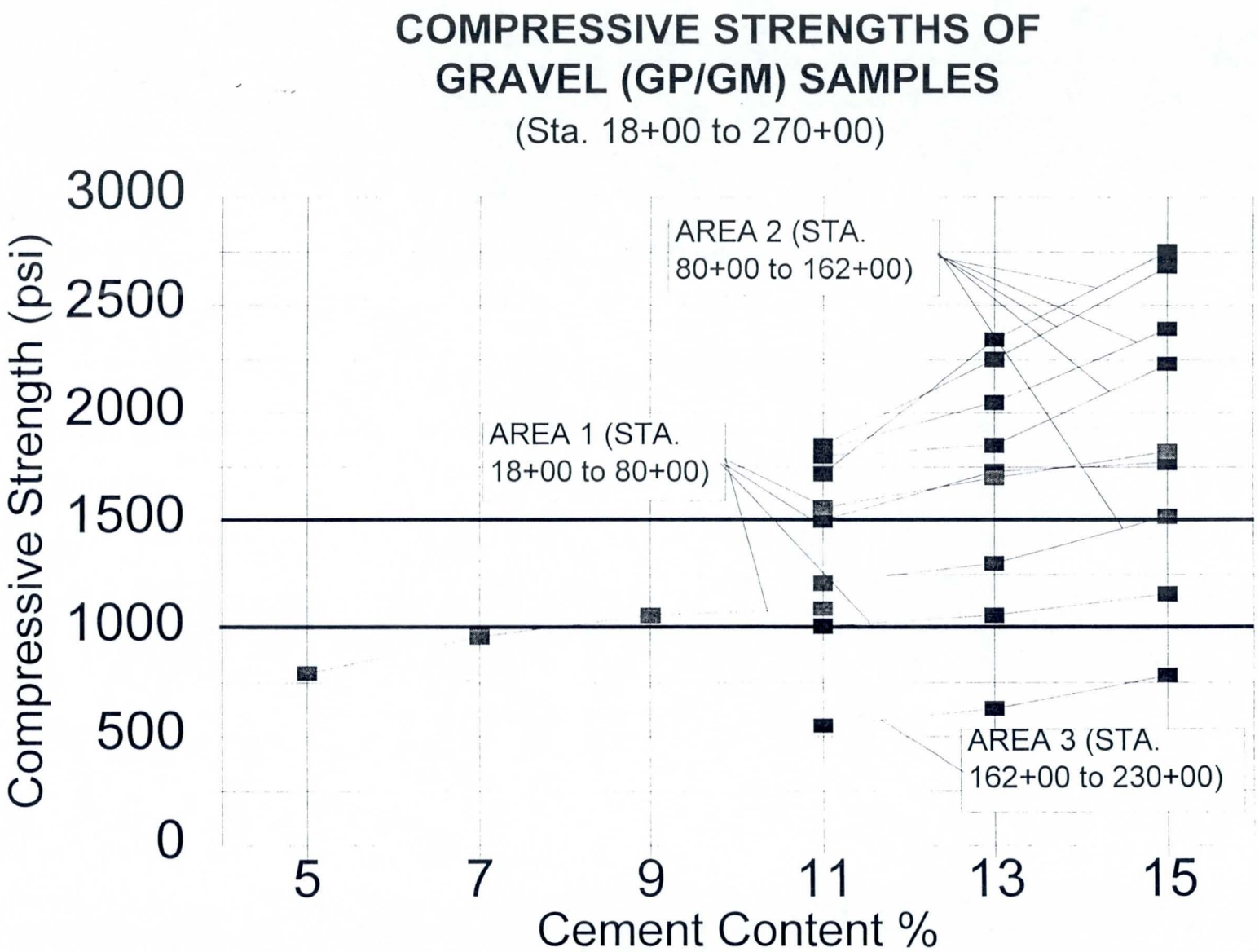
COMPRESSIVE STRENGTHS OF
GRAVEL (GP/GM) SAMPLES
(Sta. 18+00 to 270+00)
Compressive Strength (psi)
3000
2500
2000
1500
1000
500
0
5
7
9
11
13
15
Cement Content %
AREA 1 (STA.
18+00 to 80+00)
AREA 2 (STA.
80+00 to 162+00)
AREA 3 (STA.
162+00 to 230+00)

Figure 7

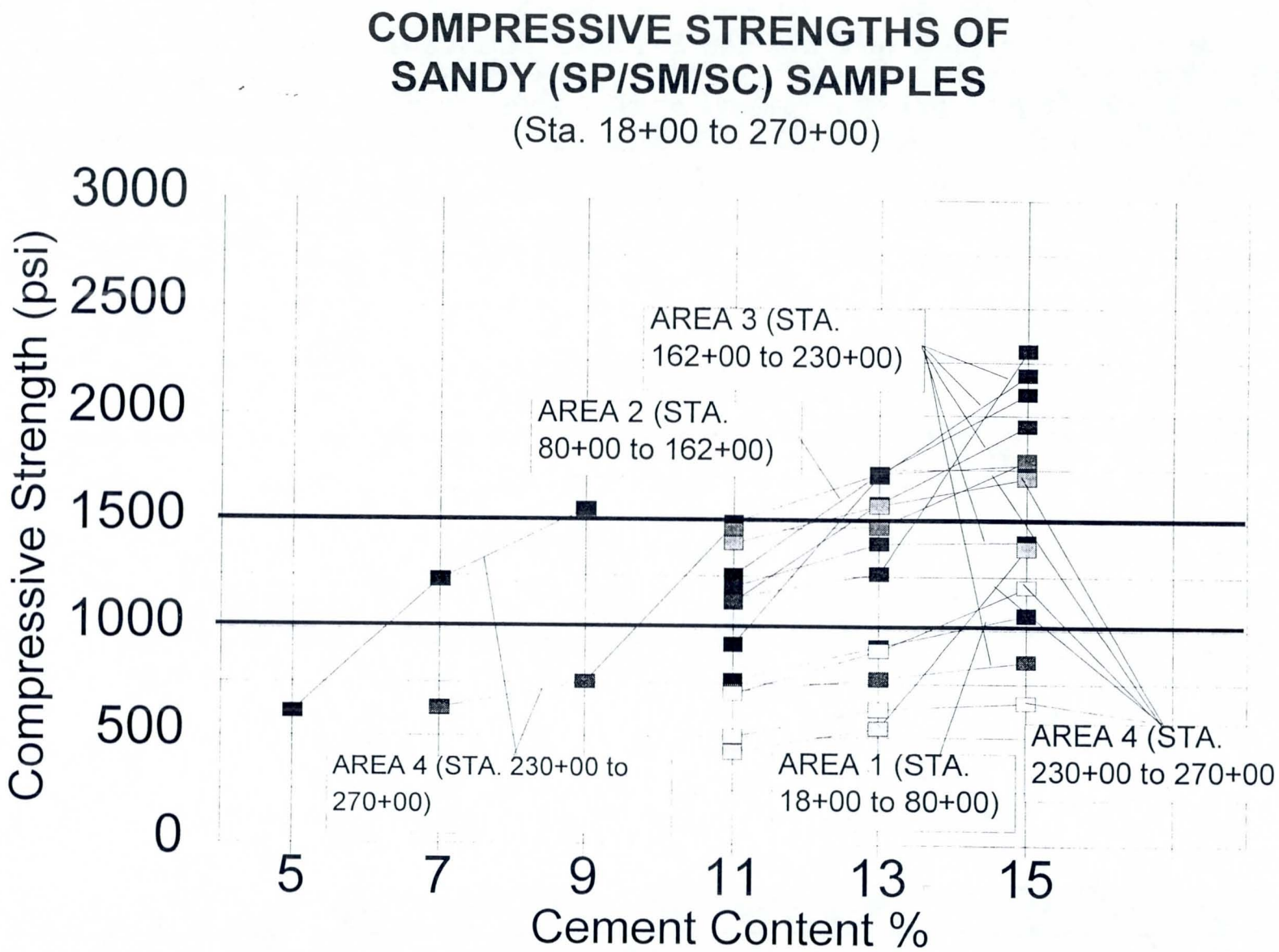
COMPRESSIVE STRENGTHS OF
SANDY (SP/SM/SC) SAMPLES
(Sta. 18+00 to 270+00)
Compressive Strength (psi)
3000
2500
2000
1500
1000
500
0
5
7
9
11
13
15
Cement Content %
AREA 3 (STA.
162+00 to 230+00)
AREA 2 (STA.
80+00 to 162+00)
AREA 4 (STA. 230+00 to
270+00)
AREA 1 (STA.
18+00 to 80+00)
AREA 4 (STA.
230+00 to 270+00

Figure 8