ENG COPY
Property of
Flood Control District of MC Library
Please Return to
2801 W. Durango
Phoenix, AZ 85009

OLD CROSS CUT CANAL RECONSTRUCTION

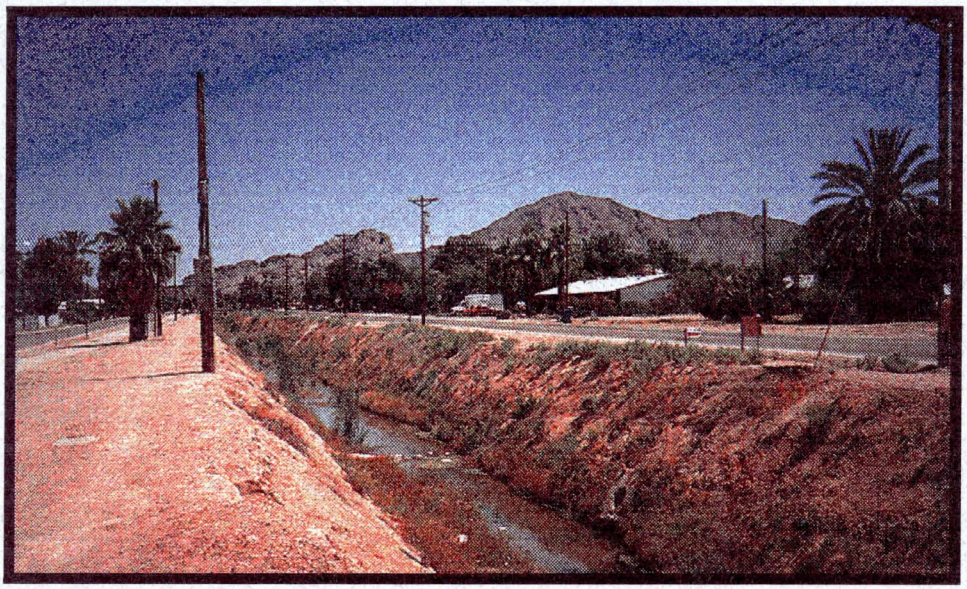

BACKUP SPILLWAY CALCULATIONS

FLOOD CONTROL DISTRICT
RECEIVED
JUL 25 1994

	CH ENG		P & PM
	DEP		HYDRO
	ADMIN		LMGT
	FINANCE		FILE
	C & O		
	ENGR		

REMARKS

VOLUME 1

FCDMC PROJECT NO. 94-24
GREINER PROJECT NO. E002102

JULY 1994

PROCEDURES AND GENERAL CALCS

Spillways

#	Side St	℄ Sta. Road	℄ Sta. Box	Width Curb open	Width Spillway	Outlet Length
1	Holly	216+41	27+17	20'	132'	49'-8"
2	S. Cemetary	222+82	33+57	27'	48'	59'
3	Oak	226+37	37+10	96'	96'	— Grated Inlet
4	N. Cemetary	229+82	40+57	38'	108'	51'
5	Virgnia	239+51	50+25	75'	149'	69'-8"
6	Windsor	246+00	59+86	18'	67'	40'-3"
7	Thomas (S)	251+83	62+53	49'	40'	— Grated Inlet
8	Thomas (N)	253+77	64+53	44'	44'	— Grated Inlet
9	Pinchot	260+62	71+37	6'	105'	26'-6"
10	Earll	265+89	76+64	96'	96'	— Grated Inlet
11	Richardson	272+49	83+24	8'	65'	— Grated Inlet
12	Osborn (S)	278+51	89+25	51'	51'	— Grated Inlet
13	Osborn (N)	280+14	90+88	53'	53'	— Grated Inlet

Spillway Analysis Procedure

1. Use "local" storm flows for spillway and curb opening design.

2. Determine locations where flow is no longer confined within roadway corridor and apply 4:1 expansion towards the Old Cross Cut Canal to determine spread of flow and corresponding width of concrete spillway needed at the curb line and on into the surface feature (CHIMP).

3. Establish a base cross-section location in the roadway corridor where flow is confined in order to compare flooding elevation for the existing and proposed conditions.

4. Perform a backwater analysis (Standard Step Method) for existing conditions to determine base flood elevation at base cross-section location.

5. Determine 10-year curb opening applying Pima County ratios to the local storm Q and use mannings equation at the curb line.

6. Perform a backwater analysis (Standard Step Method) for this 10-year opening with proposed roadway configurations.

   A. If the proposed condition flood elevation at base location is less than or equal to the existing flood elevation, use 10-year curb opening.
   B. If the proposed condition flood elevation at base location is higher than existing by 0.1 feet or more, widen curb opening and reanalyze until existing flood elevation is not worsened.

7. Once curb opening and concrete spillway widths have been determined, calculate velocities at toe of spillway for use in scour analysis.

8. Perform scour analysis (HEC 14) to determine the extent of the concrete spillway into the CHIMP to the west. Geosynthetic mat to be placed on the remaining area of the CHIMP beyond the concrete spillway to the west.

PROJECT NAME: OLD CROSS CUT CANAL
PROJECT NO.: E002102

SPILLWAY & CURB OPENING PARAMETERS

LOCAL STORM:
CONVERSION FACTOR TO Q10 FROM Q100: 0.45 (HIGHLY URBANIZED)

MANNING'S "n": 0.016 (ASPHALT)

DESIGN BY: RHF
DATE: 7-21-84

CHECKED BY: JUG
DATE: 7-21/84

use 4 grates.

STREET NAME	LOCAL STORM (cfs)	10-YR STORM (cfs)	SPILLWAY BY 4:1 (ft)	LENGTH OF OPENING (ft)	WETTED AREA (sq. ft.)	WETTED PERIMETER (ft)	SLOPE (ft/ft)	MANNING'S "n"	COMPUTED DISCHARGE (cfs)
HOLLEY	142 72	64	132	21	10.2905	21.5809	0.012	0.016	64
S. CEMETARY ENTRY	229 159	103	48	27	13.4514	27.9027	0.018	0.016	103
OAK	X550	248	–	79	39.6065	80.2130	0.0116	0.016	248
N. CEMETARY ENTRY	239 129	108	64	37	18.7083	38.4166	0.01	0.016	108
VIRGINIA	547	246	149	234	117.0174	235.0348	0.0013	0.016	246
WINDSOR	108	49	67	17	8.6246	18.2493	0.01	0.016	49
S. OF THOMAS			49	49	24.5000	50.0000		0.016	
N. OF THOMAS			44	44					
PINCHOT	38	17	105	6	3.1890	7.3780	0.0102	0.016	17
EARLL	1509	679	96	96					
RICHARDSON	66	30	65	8	3.8907	8.7815	0.02	0.016	30
S. OF OSBORN			51	51					
N. OF OSBORN			53	53					

2 grates.

6 grates

75 ?

NOT SHOWN ON THE PLANS

How? By trial & Error?

NO CURB OPENING PROVIDED ON PLANS!!

PROJECT NAME: OLD CROSS CUT CANAL
PROJECT NO.: E002102

SPILLWAY OUTLET LENGTH

SCOUR LENGTH CALCULATIONS FOR SPILLWAYS:

DESIGN BY: BHF
DATE: 7-21-94

CKED BY: JUG
DATE: 7-21-94

STREET NAME	STATION	V@toe DISCHARGE		AREA	Ye	D.I.	Ls/Ye	Ls	DIST. OF END OF CONC. SPILLWAY FROM BOX CNTRLINE.	WIDTH OF GEOGRID FROM END OF SPILLWAY TO TOP OF BANK	TOTAL HORZ. WIDTH OF PROTECTION CONCRETE AND GEOGRID
HOLLY	27+17.00	17.4	142	8.1444	2.02	4.33	24.60	49.64	16' WEST	38'	88'
S. CEMETARY DR.	33+57.34	18.5	229	12.4128	2.49	4.12	23.76	*59.20	29' WEST	22'	51'
OAK	37+10								*	*	*
N. CEMETARY DR.	40+57.36	14.3	239	16.7316	2.89	2.96	18.79	*54.35	21' WEST	33'	54'
VIRGINIA	50+24.83	12.2	570	46.786	4.84	1.95	13.98	67.64	37' WEST	17'	85'
WINDSOR	56+95.72	12.7	108	8.4889	2.06	3.12	19.52	40.22	1' WEST	38'	79'
THOMAS S.	62+53	14.2							25' EAST	50'	50'
THOMAS N.	64+53								22' EAST	43'	43'
PINCHOT	71+37.34	10.3	38	3.6972	1.36	3.11	19.45	26.44	9' WEST	17'	44'
EARLL	76+64	20.4	1509	74.1984	6.09	2.90	18.54	112.92	0'	58' WEST OF CL.	**
RICHARDSON	83+20	14.9	66	4.42	1.49	4.32	24.56	36.51	7' WEST	10'	**
OSBORN S.	89+25								1' EAST	80'	**
OSBORN N.	90+87.8								6' EAST	47' WEST OF CL.	**

* NO CONCRETE REQUIRED BEYOND THE INLET.
** NO CHIMP.

DEPARTMENT OF TRANSPORTATION
PIMA COUNTY
FLOOD CONTROL DISTRICT

HYDROLOGY MANUAL FOR ENGINEERING DESIGN AND FLOOD PLAIN MANAGEMENT WITHIN PIMA COUNTY, ARIZONA

SEPTEMBER, 1979

APPROXIMATE RATIOS OF LESSER MAGNITUDE FLOODS TO THE 100-YEAR FLOOD

In an attempt to both simplify and reduce the computational procedures and time involved in estimating peak discharge values for floods of lesser magnitude than the 100-year flood, the following procedure may be employed if the user so desires:

First, the predicted value for the peak discharge of the 100-year flood which would occur upon the watershed under investigation should be determined using the procedures as outlined within this Manual.

Next, peak discharge values for floods of lesser magnitude than the 100-year flood may be calculated approximately by multiplying the previously determined 100-year flood value for the watershed under investigation by the factors shown within the table below:

	RECURRENCE INTERVAL			
WATERSHED DEVELOPMENT	2-Yr.	10-Yr.	25-Yr.	50-Yr.
Rural	0.10	0.35	0.55	0.75
Suburban	0.15	0.40	0.60	0.80
Moderately Urban	0.20	0.45	0.65	0.85
Highly Urban	0.25	0.50	0.70	0.85

Where

Rural = Watersheds which will remain in a natural condition (undeveloped), or where the anticipated future development will be negligible.

Suburban = Watersheds which contain two (2) houses per acre, or less, with drainage improvements being relatively few or nonexistent.

*Moderately Urban = Watersheds which contain from two (2) to five (5) houses per acre (detached), with moderate to extensive drainage improvements present.

Highly Urban = Watersheds which contain more than five (5) houses per acre (including multiple dwellings, commercial and industrial development), with extensive drainage improvements present.

It is to be noted that the above factors are only applicable under typically "average" watershed conditions upon generally homogeneous drainage basins. For atypical or nonhomogeneous watersheds, all flood peaks, whatever their recurrence intervals, should be determined in a complete and detailed manner as outlined within this Manual; otherwise, serious errors might easily arise as a consequence of choosing expediency over good engineering judgement.

Greiner

Job No. E002102 Project Old Cross Cut Canal Sheet 1 of 2

Subject Example Calculation for Concrete Spillway Length for Standard Spillways

By RHF Date 7-21-94 Checked By JUG Date 7/21/94

To determine the length of concrete spillway from CHIMP toe out into the CHIMP, FHWA HEC-14 Chapter V procedure was used to estimate the length of unprotected scour hole. The velocity and depth of flow at the toe of the CHIMP was calculated using the energy equation. The total width of concrete spillway multiplied by the depth of flow at the spillway toe computed the area of flow. Using the procedure outlined in HEC-14 Chapter V the area was converted to equivalent depth (Y_e). This value was used to calculate the length of scour hole. The concrete was ended at this distance and the geosynthetic mat was used to extend to the top of opposite bank, the west bank.

Is this approp procedure

Example: Holley

Curb opening = 20'

Width of Spillway = 132'

$Q = 142$ cfs

Depth = 0.0617 ft. & flow.

Width = 132 ft.

Area = 8.1444

$V = \frac{Q}{A} = \frac{142}{8.14} = 17.44$ ft/sec

Depth at toe of CHIMP

Full Width of Concrete Spillway (Depth * Width)

SHOW CALCS?

$Y_e = (A/2)^{0.5} = 2.0180$

$$D.I. = \frac{Q}{\sqrt{g}\, Y_e^{5/2}} = 4.3257$$

$$L_s/Y_e = \alpha_e (DI)^{\beta} \left(\frac{t}{t_o}\right)^{\theta}$$

$t = 30$ Min estimated

$t_o = 316$ Min.

$\alpha_e = 11.75$

$\beta = 0.71$

$\theta = 0.125$

$L_s/Y_e = 24.60$

$L_s = 49.64'$ use 50'

Assumption: Uniform Sand

$\alpha = 1$

GRANADA ROAD

Greiner

Job No. E002102 Project Old Cross Cut Canal Sheet 1 of 1

Subject Spillway Analysis

By RHF Date 5-18-94 Checked By JVG Date 5-24-94

Roadway: Granada Road

From flow split analysis provided in this section, it was determined that flow does not enter the CHIMP by crossing the intersection of Granada and 48th st. Under existing conditions, the flow is directed south at the intersection due to the ℄ of 48th street having an elevation high enough to stop the flow. There is a swale running parallel to 48th st. south of the intersection with sufficient capacity to convey the 100-yr flow, both local and general. From the plan view, a 4:1 was extended from the west existing high point toward the south. It was determined that the last x-section that can contribute flow into the CHIMP would be at box station 18+50 ±. Any x-sections taken south of this x-section will have their flow directed south toward McDowell. From the analysis, it was determined that 122 cfs would get into the CHIMP and 23 cfs be conveyed south. It was decided that a catch basin would be designed to intercept 122 cfs of the local storm and 57 cfs of the general storm. From Pima County hydrology, it was determined that 122 cfs is about the 50-yr storm and 57 cfs is between the 2- and 10-yr storms.

Local

Q_{100} = 145 cfs

Q_{50} = 123 cfs

Q_{25} = 101 cfs

Q_{10} = 73 cfs

Q_5 = 36 cfs

Greiner

Job No. E002102 Project OLD CROSS CUT CANAL Sheet ____ of ____

Subject SPILLWAY DETERMINATION AT GRANADA (STA. 20+00)

By JEB Date 5/11/94 Checked By JVG Date 5/24/94

- CHECK HEC-2 FOR WATER SURFACE ELEVATION BASED ON GENERAL STORM AT CROSS SECTION 20+00. COMPUTE THE WATER SURFACE ELEVATION AT CROSS SECTION 20+00 FOR THE LOCAL STORM W/O BACKWATER ANALYSIS.

- STREET ELEVATION AT WEST CURB (1203.32)

- GENERAL STORM CONDITION - (950 CFS) - TAKEN FROM HEC-2 CHIMP FILE: CMPMDL21.DAT

  WSEL - (STA. 20+00) = 1200.37

- LOCAL STORM CONDITION - (145) - W/ NOTHING IN CHIMP - W/O BACKWATER ANAL. USED SESCAL FOR IRREGULAR SHAPE.

  WSEL - (STA. 20+00) = (LOW PT. CHANNEL + y_n) = (1197.9 + 0.91) = 1198.91
  SEE SESCAL OUTPUT FOR y_N.

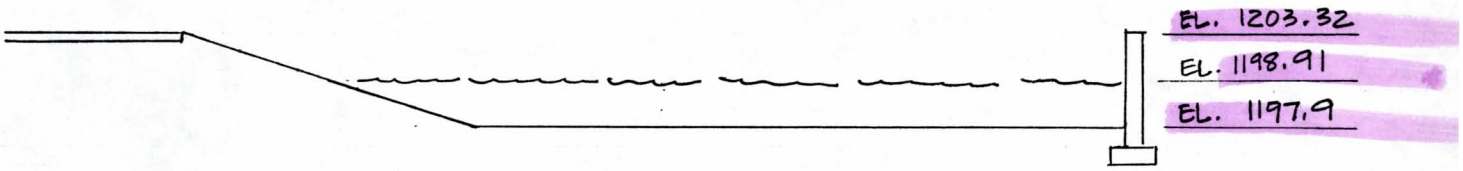

DETERMINATION - ROADWAY IS NOT SUBMERGED, THEREFORE SPILLWAY IS NEEDED. FURTHER ANALYSIS WILL NEED TO BE PERFORMED FOR SPILLWAY DESIGN.

HOLLY STREET

Greiner

Job No. E002102 Project OLD CROSS CUT. CANAL Sheet 1 of 1

Subject Holly Curb opening ANALYSIS

By JEB Date 6/1/94 Checked By JVG Date 6/3/94

Q = 142 cfs local storm
= 64 cfs 10-year storm

HOLLY -

AT HOLLY I WAS DIRECTED TO ANALYZE THE BACKWATER EFFECT FOR A 10 YEAR STORM CURB OPENING. 19.5' WAS THE CALCULATED LENGTH OF THE OPENING, USING MANNINGS. WE WILL USE 20' FOR EASE OF CONSTRUCTION. 10' EACH SIDE OF HOLLY CENTERLINE.

WE WILL PROVIDE CONC. BANK PROTECTION TO THE EXTENTS OF THE 4:1 EXPANSION FROM THE CONSTRAINTS. THE LENGTH OF BANK PROTECTION WILL BE APPROX. 132'.

Based on the backwater analysis and flood depths not being increased → use the 10-YR opening length which is 21'. Concrete to be installed for the full 4:1 length of 132'.

The length of scour was calculated based on the velocity and depth of flow at the bottom of the spillway to determine length of concrete spillway beyond the toe of the CHIMP out into the CHIMP. Geosynthetic mat is to be installed from the end of concrete west to the top of the west bank of the CHIMP, 38'.

WS EL. Existi = 1204.96

WS EL. 21' opening = 1204.93 O.K
(19.5')

Greiner

Job No. E002102 Project OLD CROSS CUT CANAL Sheet 1 of 1

Subject SPILLWAY DETERMINATION AT HOLLY (STA. 27+00)

By JEB Date 5/15/94 Checked By JVG Date 6/3/94

HOLLY (STA 27+00)

- WSEL = 1203.24 (BASED ON GENERAL STORM FROM HEC-2) OUTPUT. CMPMDL21.DAT

PAVEMENT ELEVATION (48TH ST.) AT WEST CURB = 1203.13

LOCAL STORM CONDITION: (142 CFS)

COMPARE WSEL IN THE CHIMP (LOCAL STORM) W/O BACKWATER TO WSEL OF LOCAL STORM OVER 48TH ST. TO DETERMINE IF ROADWAY IS SUBMERGED AT THIS LOCATION. IF NOT, SPILLWAY IS REQUIRED.

CHIMP: 142 CFS W/O BACKWATER
CALCULATED WSEL = 1200.49

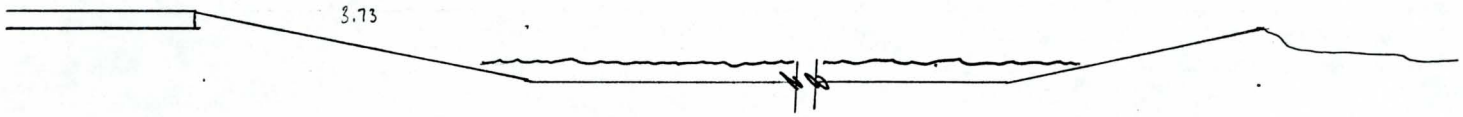

DETERMINATION- ROADWAY IS NOT SUBMERGED, THEREFORE AN INITIAL ASSUMPTION WOULD BE TO PROVIDE A SPILLWAY. FURTHER ANALYSIS WILL NEED TO BE PERFORMED TO DETERMINE WHETHER A SPILLWAY WILL WORK @ THIS LOCATION.

Greiner

Job OCCC | Project No. E002102 | Date 6/6/94
Description Spillway Velocities @ toe of slope in CHIMP | Computed By JVG | Date 6/6/94
Checked By SFS | Sheet 1 of 1

Holly

Curb Opening (C.O.)

Local Storm → Q = 142 CFS
C.O. = 20'

From SESCAL Run : 6/1/94 – E002102 – Holly 19.5
Curbopening w/ Backwater (upstream control)

Section #3 Froude = 1.32 (Super)
y_0 = 0.74'
V = 3.94 fps
Top Width = 131.21
use 132

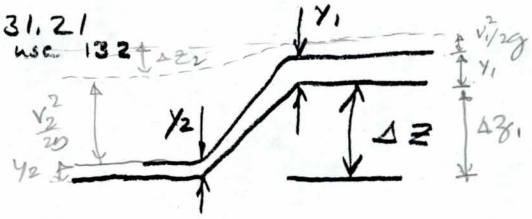

Energy equation

$$y_1 + \frac{V_1^2}{2g} + \Delta z = y_2 + \frac{\left(\frac{Q}{A_2}\right)^2}{2g}$$

$A_2 = (y_2 \times b)$ $\Delta z = 3.8'$
$b = 132'$
$Q = 142$ CFS

$$y_1 + \frac{V_1^2}{2g} + \Delta z = 0.74 + \frac{(3.94)^2}{64.4} + 3.8 = 4.78$$

$$4.78 = y_2 + \frac{\left(\frac{142}{y_2 \times 132}\right)^2}{64.4}$$

$$y_2 = 0.0617$$

$$V_2 = \frac{142}{0.0617 \times 132} = \underline{\underline{17.44 \text{ fps}}}$$ ✓

HYDRAULIC CALCULATOR

Holly - (LOCAL)

'A FOR SUBCRITICAL/SUPERCRITICAL FLOW

$Q = VA$, $A = 132 * .74 = 97.68$

$V = \frac{142}{97.68} =$

DISCHARGE : 142
BASE WIDTH : 132
UPSTREAM DEPTH : .74
UPSTREAM VELOCITY: 3.94
CHANNEL BOTTOM DATUM DIFFERENCE: 3.8

UTPUT FOR SUBCRITICAL FLOW

DOWNSTREAM DEPTH (SUBCRITICAL) = 4.778306 > 1.09 (No Hydraulic Jump)
OWNSTREAM VELOCITY = .2251336

UTPUT FOR SUPERCRITICAL FLOW

DOWNSTREAM DEPTH (SUPERCRITICAL) = 6.164544E-02
NSTREAM VELOCITY = 17.45072 ✓

This calculation uses the energy equation to determine the downstream velocity @ bottom of spillway.

1 17:38:18 31-MAY-94

```
SSSSS EEEEE SSSSS  CCCC   A   L
S     E     S     C      A A  L          10-79
SSSSS EEEEE SSSSS C     A   A L
    S E         S C     AAAAA L        REVISED
SSSSS EEEEE SSSSS  CCCC A   A LLLLL      11-86
```

COMPUTATIONAL HYDRAULIC DESIGN

USER : SHI-EN SHIAU

****

The following conditions regulate the use of computer programs SESCAL developed by Shi-En Shiau.

The computer programs are furnished by the author and are accepted and used by the recipient individual or group entity with the express understanding that the author makes no warranties, express or implied concerning the accurary, completeness, reliability,usability, or suitability for any particular purpose of the information or data contained in the programs, or furnished in connection therewith, and the author shall be under no liability whatsoever to any such individual or group entity by reason of any use made thereof.

The program belong to Shi-En Shiau. Therefore, the recipient agree not to assert any proprietary rights thereto nor to represent the programs to any one as other than the author programs

The plotting program is furnished by Dr. Long-Cheng Huang.

****

17:38:18 31-MAY-94

SESCALSESCALSESCALSESCALSESCALSESCALSESCALSESCALSESCALSESCALSESCALSESCALSESCALSESCALSESCAL

USER : SHI-EN SHIAU

****

E002102 - HOLLY 132' CURB OPENING W/ BACKWATER

****

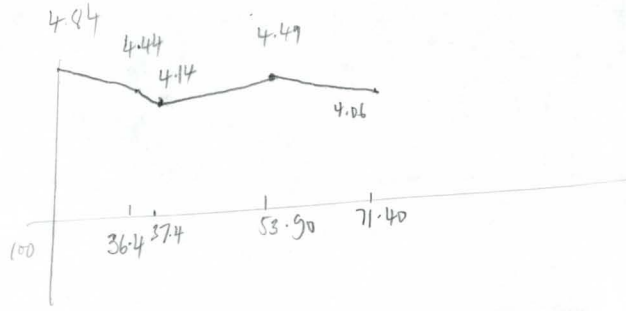

IRREGULAR CROSS SECTION

STA.	100.00	136.40	137.40	153.90	171.40	172.40	202.60
El	1204.84	1204.44	1204.14	1204.49	1204.06	1204.39	1205.39
N	0.035	0.016	0.016	0.016	0.016	0.035	0.035

1

Q (cfs)

ELEVATION (feet)

1.51	4.29	0.01350	142.00	0.01600	0.53	3.26

BACKWATER COMPUTATION

WSEL	YO	TOP WIDTH	AREA	CONTRACTION	EXPANSION	PERIMETER
[illegible].42	0.43	132.00	30.37	0.10	0.30	132.46

FROUDE #	VELOCITY	FRIC. SLOPE	EG	N VALUE	FLOW LINE	LENGTH
1.72	4.68	0.01797	1203.76	0.01600	1202.99	-92.00

SUMMARY OF BACKWATER ANALYSIS

SECTION	STATION FEET	REACH LENGTH FEET	DISCHARGE CFS	FLOW LINE FEET	WATER SURFACE FEET
1	0.00	0.00	142.00	1204.06	1204.96
2	-20.50	-20.50	142.00	1204.00	1204.77
3	-112.50	-92.00	142.00	1202.99	1203.42

```
SSSSS EEEEE SSSSS  CCCC   A   L
S     E     S     C      A A  L          10-79
SSSSS EEEEE SSSSS C     A   A L
    S E         S C     AAAAA L        REVISED
SSSSS EEEEE SSSSS  CCCC A   A LLLLL      11-86
```

COMPUTATIONAL HYDRAULIC DESIGN

USER : SHI-EN SHIAU

****

The following conditions regulate the use of computer programs SESCAL developed by Shi-En Shiau.

The computer programs are furnished by the author and are accepted and used by the recipient individual or group entity with the express understanding that the author makes no warranties, express or implied concerning the accurary, completeness, reliability,usability, or suitability for any particular purpose of the information or data contained in the programs, or furnished in connection therewith, and the author shall be under no liability whatsoever to any such individual or group entity by reason of any use made thereof.

The program belong to Shi-En Shiau. Therefore, the recipient agree not to assert any proprietary rights thereto nor to represent the programs to any one as other than the author programs

The plotting program is furnished by Dr. Long-Cheng Huang.

****

1

13:42:55 1-JUN-94

SESCALSESCALSESCALSESCALSESCALSESCALSESCALSESCALSESCALSESCALSESCALSESCALSESCALSESCALSESCAL

USER : SHI-EN SHIAU

****

E002102 - HOLLY 19.5 CURB OPENING W/ BACKWATER (UPSTREAM CONTROL)

****

IRREGULAR CROSS SECTION

STA.	100.00	136.40	137.40	153.90	171.40	172.40	202.60
ELEV.	1204.84	1204.44	1204.14	1204.49	1204.06	1204.39	1205.39
N	0.035	0.016	0.016	0.016	0.016	0.035	0.035

Q (cfs)

ELEVATION (feet)

1205.390+.....G

OK

~~PROVIDE SAMPLE OF HAND CALCS.~~

1.51	4.42	0.01550	142.00	0.01600	0.79	3.26

BACKWATER COMPUTATION

WSEL	YO	TOP WIDTH	AREA	CONTRACTION	EXPANSION	PERIMETER
1203.89	0.74	131.21	36.07	0.10	0.30	132.60

NODE #	VELOCITY	FRIC. SLOPE	EG	N VALUE	FLOW LINE	LENGTH
1.32	3.94	0.01014	1204.13	0.01600	1203.15	-92.00

1

OK

PROVIDE SAMPLE OF HAND CALCS!!!

SUMMARY OF BACKWATER ANALYSIS

SECTION	STATION FEET	REACH LENGTH FEET	DISCHARGE CFS	FLOW LINE FEET	WATER SURFACE FEET
1	0.00	0.00	142.00	1204.06	1204.93
2	-20.50	-20.50	142.00	1204.00	1204.77
3	-112.50	-92.00	142.00	1203.15	1203.89

OAK STREET

Greiner

Job No. 6002102 Project Old Cross Cut Canal Sheet 1 of

Subject Oak Spillway

By RHF Date 5-17-94 Checked By JVG Date 5/24/94

Oak: After computing the flow split at Oak it was determined that of the 1540 cfs generated in this drainage area only 550 cfs will remain in Oak. The spillway will be designed for this discharge. Note that the CWSEL at the north cuvs return is 1207.73.

LOCAL FLOW SPLIT:

The Proposed Spillway = 70' Wide

Q_{Road} = 550 cfs after flow split.

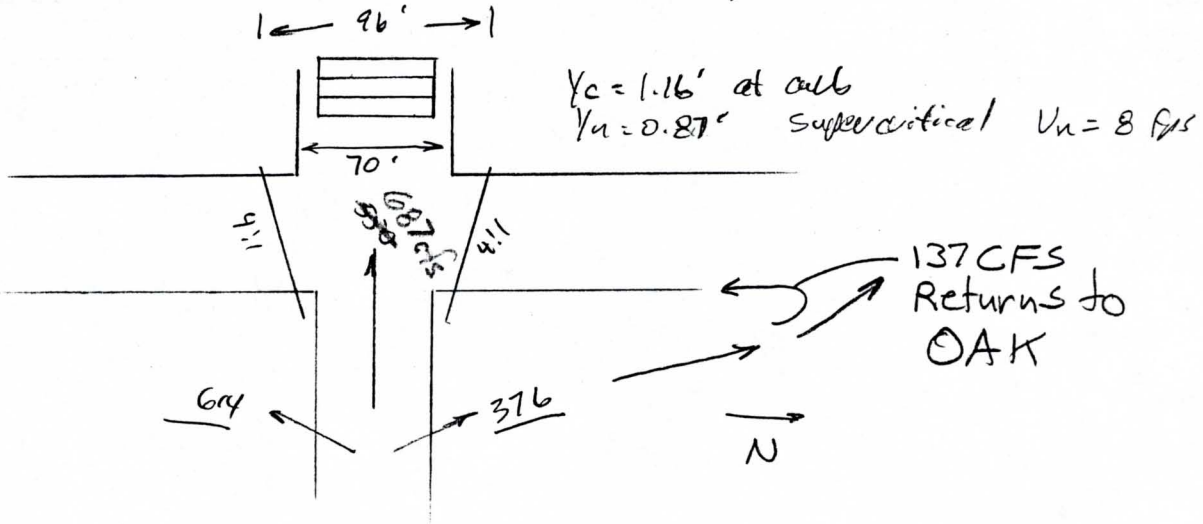

Note that because of the flow split occurring at the N. Cemetary drive, additional flow is directed south. The Total contributing flow is 687 cfs for the Local and 449 cfs for the general storm. The large inlet located in the side slope will collect 100% of this flow. No spillway is required beyond this inlet.

Greiner

Job No. E002102 Project Old Cross Cut Canal Sheet 1 of

Subject Flow Split Analysis

By RHF Date 6-20-94 Checked By JUG Date 6/21/94

Oak.: Sta. 37+12, 39' Rt.

- Local: 1540 cfs from the east.
  376 cfs weirs North into the N. Cemetary.
  614 cfs weirs South into the S. Cemetary
- 550 cfs continues West in Oak.
- Of the 376 cfs weiring north into the N. Cemetary, 137 cfs Turns South toward Oak.
- Total flow to the Oak inlet = 550 + 137 = 687 cfs

- General: 806 cfs from the east.
  146 cfs weirs north into N. Cemetary
  281 cfs weirs south into S. Cemetary
  380 cfs continues west in Oak
- Of the 146 cfs weiring north into the N. Cemetary, 69 cfs Turns South toward Oak.
- Total flow to the Oak Inlet = 380 cfs + 69 = 449 cfs

Note: Design Inlet to intercept Local Storm then check size for pressure flow w/ General Storm.

29 grates w/ 6'x8' CBC 12.5° junction Angle.
h = 2.5' Orifice flow conditions.
Grate El. = 1200.68

(NEED HYD. CALCS.?
WHY 29 GRATES NOT 28?
02 27)

PROJECT: Old Cross Cut Canal
JOB NO.: E002102

FLOW SPLIT ANALYSIS FOR SPILLWAY AND INLET DESIGN

ROADWAY RATING: Oak Street

LOCAL STORM DISCHARGE: 1540
GENERAL STORM DISCHARGE: 806

Elevation	North Weir Capacity	South Weir Capacity	Roadway Capacity	Total Raodway Capacity
1206.29	4.42	31.86	136.05	172.33
1206.46	13.90	56.44	176.82	247.16
1206.66	33.74	97.58	228.56	359.88
1206.88	68.95	156.80	287.06	512.81
1207.10	117.43	235.04	350.51	702.98
1207.32	183.51	342.92	418.75	945.18
1207.55	275.63	485.56	491.36	1252.55
1207.78	407.60	654.17	568.24	1630.01

Elevation	North Weir Discharge	South Weir Discharge	Roadway Discharge	Total Discharge	
1207.73	376.1	614.0	549.9	1540.0	← LOCAL STORM
1207.19	145.6	280.9	379.5	806.0	← GENERAL STORM

Same as Roadway length

$Q = CLH^{3/2}$
$= 4_{2.8}$

OK

PROVIDE SAMPLE OF HAND CALCS

PROJECT: Old Cross Cut Canal
JOB NO.: E002102

FLOW SPLIT ANALYSIS FOR SPILLWAY AND INLET DESIGN

LOCAL STORM DISCHARGE: 1540
GENERAL STORM DISCHARGE: 806

ROADWAY RATING: Oak Street

Elevation	North Weir Capacity	South Weir Capacity	Roadway Capacity	Total Raodway Capacity
1206.29	4.42	31.86	136.05	172.33
1206.46	13.90	56.44	176.82	247.16
1206.66	33.74	97.58	228.56	359.88
1206.88	68.95	156.80	287.06	512.81
1207.10	117.43	235.04	350.51	702.98
1207.32	183.51	342.92	418.75	945.18
1207.55	275.63	485.56	491.36	1252.55
1207.78	407.60	654.17	568.24	1630.01

SAME TABLE AS PREVIOUS

Elevation	North Weir Discharge	South Weir Discharge	Roadway Discharge	Total Discharge
1207.73	376.1	614.0	549.9	1540.0
1207.19	145.6	280.9	379.5	806.0

S. CEMETARY DR.

Greiner

Job No. E002102 Project Old Cross Cut Canal Sheet 1 of

Subject Spillway Calculations

By RHF Date 6-19-94 Checked By JVG Date 6/20/94

S. Cemetary Entry (Roadway Sta. 222 + 82 = Box Sta. 33+57)

Flow discharging through this roadway originates in Oak. From a flow split analysis, it was determined that 614 cfs, Local storm, will weir into the cemetary property to the south of Oak. The WSEL is 1207.73.

The elevation at the Southern Entry is 1205.4. This elevation is higher than the adjacent ground. Flow exiting by this drive is weir flow. The roadway width is 23'. Discharge through this drive for the Local Storm elevation is 229 cfs. The 10-year discharge for the local storm is 115 cfs and the 10-YR opening width is 27'. Full spillway width based on the 4:1 expansion is 48'.

Spill way Toe : depth = 0.26'
Velocity = 18.45 fps

The length of concrete spillway extending west into the CHIMP from the East toe of CHIMP is 59'. Geosynthetic mat shall be installed from the end of concrete, west to the top of west bank of the CHIMP, 22'.

Greiner

Job No. E002102 Project Old Cross Cut Canal Sheet 1 of

Subject Spillways - Weir Flow - LOCAL STORM

By RHF Date 6-19-94 Checked By JUG Date 6/20/94

S. Cemetary outlet.

Local Storm WSEL from Flow Split = 1207.73.
Drive Elevation = 1205.4.

$Q = CLh^{3/2}$

C = discharge coefficient = 2.8
L = length of weir = 23' (for Drive)
h = head over weir crest = 1207.73 - 1205.40 = 2.33'

$Q = (2.8)(23)(2.33)^{3/2} = 229$ cfs ✓

~~General Storm WSEL from Flow Split = 1207.19.~~
~~Drive Elevation = 1205.4~~
~~h = 1207.19 - 1205.4 = 1.79'~~
~~$Q = 2.8(23)(1.79)^{3/2}$~~
~~Q = 154 cfs~~

Do not use for spillway design: Use for CHIMP & Box Calcs.

Greiner

Job No. E002102 Project Old Cross Cut Canal Sheet ____ of ____

Subject Spillways - 10-YR flow and Curb Opening width

By RHF Date 6-19-94 Checked By JVG Date 6/21/94

S. Cemetery Drive:

Local Storm outflow by Weir analysis = 229 cfs ✓

10-YR Discharge using Pima Co. Procedure = 115 cfs. ✓

Roadway slope = 1.80% ✓

10-YR Curb Opening = 30' ✓

Full opening width at 4:1 expansion = 48' ✓

WS EL. Exist. = 1206.20

WS EL. 30' opening = 1206.20 OK ✓

How did you get this?

Greiner

Job No. E002102 Project Old Cross Cut Canal Sheet 1 of

Subject Spillways: Velocity @ Toe of Slope in CHIMP

By RHF Date 6-20-94 Checked By JVG Date 6/21/94

S. Cemetary Dr.:

Local Storm: 229 cfs C.O. = 27'

From SESCAL Run: 6-20-94 - E002102 - S. Cemetary Dr. curb opening Backwater (upstream CHIMP)

Sec 2 Froude = 2.5 (Supercritical flow)

$Y_1 = Y_0 = 0.71$ ft

$V_1 = V_0 = 9.96$ fps

Top Width = 48'

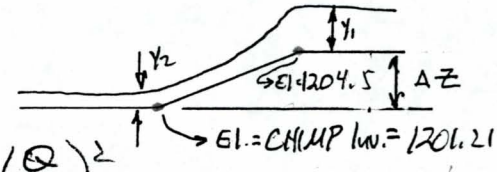

Energy EQ $= Y_1 + \frac{V_1^2}{2g} + \Delta Z = Y_2 + \frac{\left(\frac{Q}{A_2}\right)^2}{2g}$

$A_2 = (Y_2 * b)$

$b = 48'$

$\Delta Z = 1204.5 - 1201.21 = 3.29'$

Box Sta = 33+57

$Y_1 + \frac{V_1^2}{2g} + \Delta Z = 0.71 + \frac{(9.96)^2}{64.4} + 3.29 = 5.5404$

$\therefore 5.5404 = Y_2 + \frac{\left(\frac{Q}{(Y_2 * 48')}\right)^2}{2g}$

$\boxed{Y_2 = 0.2586 \text{ ft.} \quad V_2 = 18.45 \text{ fps} \checkmark}$

OK

Hydraulic Analysis

Y	EG
0.1	35.4429
0.5	1.9137
0.4	2.6089
0.3	4.2270
0.2	9.0357
0.25	5.9049
0.26	5.4882
0.261	5.4493
0.259	5.5217
0.258	5.5676
0.2585	5.5476
0.2586	5.5436

HYDRAULIC CALCULATOR

DATA FOR SUBCRITICAL SUPERCRITICAL FLOW

DISCHARGE	: 229
BASE WIDTH	: 48
UPSTREAM DEPTH	: .71
UPSTREAM VELOCITY	: 9.96
CHANNEL BOTTOM DATUM DIFFERENCE	: 3.29

OUTPUT FOR SUBCRITICAL FLOW

DOWNSTREAM DEPTH (SUBCRITICAL)	: 5.52744
DOWNSTREAM VELOCITY	: .8631181

OUTPUT FOR SUPERCRITICAL FLOW

DOWNSTREAM DEPTH (SUPERCRITICAL)	: .2585519
DOWNSTREAM VELOCITY	: 18.45213 ✓

Note: Flow in the CHIMP for the general storm at this location will be substantially greater that the 229 cfs for this inlet. The general storm depth of flow in the CHIMP is 3.33 ft. Conj. depth = 5.53. A hydraulic jump will not occure.

PROJECT: Old Cross Cut Canal
JOB NO.: E002102

FLOW SPLIT ANALYSIS FOR SPILLWAY AND INLET DESIGN

ROADWAY RATING: S. Cemetary Oak Street

LOCAL STORM DISCHARGE: 1540
GENERAL STORM DISCHARGE: 806

Elevation	North Weir Capacity	South Weir Capacity	Roadway Capacity	Total Raodway Capacity
1206.29	4.42	31.86	136.05	172.33
1206.46	13.90	56.44	176.82	247.16
1206.66	33.74	97.58	228.56	359.88
1206.88	68.95	156.80	287.06	512.81
1207.10	117.43	235.04	350.51	702.98
1207.32	183.51	342.92	418.75	945.18
1207.55	275.63	485.56	491.36	1252.55
1207.78	407.60	654.17	568.24	1630.01

Elevation	North Weir Discharge	South Weir Discharge	Roadway Discharge	Total Discharge
1207.73	376.1	614.0	549.9	1540.0
1207.19	145.6	280.9	379.5	806.0

Roadway opening width = 23'

Local WSEL = 1207.73
Weir Crest El. = 1205.40
h_{Local} = 2.33'

$Q = CLh^{3/2}$
C = 2.8
L = 23'

$Q = 2.8\ (23')\ (h)^{3/2}$

2.33 ft

Q_L = 229 cfs ✓

SOUTH

General WSEL = 1207.19
Weir Crest El = 1205.40
$h_{general}$ = 1.79'

Q_G = 154 cfs

229
154
383

```
10:05:32   20-JUN-94
                    SSSSS EEEEE SSSSS  CCCC   A   L
                    S     E     S     C      A A  L          10-79
                    SSSSS EEEEE SSSSS C     A   A L
                        S E         S C     AAAAA L        REVISED
                    SSSSS EEEEE SSSSS  CCCC A   A LLLLL      11-86
```

COMPUTATIONAL HYDRAULIC DESIGN

USER : SHI-EN SHIAU

****

The following conditions regulate the use of computer programs SESCAL developed by Shi-En Shiau.

The computer programs are furnished by the author and are accepted and used by the recipient individual or group entity with the express understanding that the author makes no warranties, express or implied concerning the accurary, completeness, reliability,usability, or suitability for any particular purpose of the information or data contained in the programs, or furnished in connection therewith, and the author shall be under no liability whatsoever to any such individual or group entity by reason of any use made thereof.

The program belong to Shi-En Shiau. Therefore, the recipient agree not to assert any proprietary rights thereto nor to represent the programs to any one as other than the author programs

The plotting program is furnished by Dr. Long-Cheng Huang.

****

10:05:32 20-JUN-94

SESCALSESCALSESCALSESCALSESCALSESCALSESCALSESCALSESCALSESCALSESCALSESCALSESCAL

USER : SHI-EN SHIAU

****

E002102 - OLD CROSS CUT CANAL: S. CEMETARY DR. - LOCAL STORM: Q = 229 cfs
BACKWATER ANALYSIS TO DETERMINE EFFECTS OF CURB OPENING NARROWING
CONSTRICTED WIDTH = 30'; UPSTREAM CONTROL

****

IRREGULAR CROSS SECTION

STA.	100.00	100.00	111.50	123.00	123.00
ELEV.	1206.20	1205.20	1205.40	1205.20	1206.20
N	0.016	0.016	0.016	0.016	0.016

```
          1          .          .          .          .          .
          1          .          .          .          .          .
          1          .          .          .          .          .
          1          .          .          .          .          .
          1          .          .          .          .          .
          1          .          .          .          .          .
          1          .          .          .          .          .
1204.620+..........................................................
          1          .          .          .          .          .
          1         G.          .          .          .          .
          1          .          .          .          .          .
          1          .          .          .          .          .
          1          .          .          .          .          .
          1          .          .          .          .          .
          1          .          .          .          .          .
          1          .          .          .          .          .
          1          .          .          .          .          .
1204.500+----------+----------+-----G-----+----------G----------+
     100.00      109.60      119.20      128.80      138.40      148.00
                         STATION (feet)
```

G : CROSS SECTION GROUND POINT

1

SECTION # 2 STATION -50.00

NORMAL FLOW COMPUTATION

BW	YN	TOP WIDTH	AREA	L.B. SLOPE	R.B. SLOPE	PERIMETER
0.00	0.80	48.00	27.30	0.0:1	0.0:1	49.40

FROUDE #	VELOCITY	SLOPE	DISCHARGE	N VALUE	YC	VC
1.96	8.39	0.01800	229.00	0.01600	1.12	5.36

BACKWATER COMPUTATION

WSEL	YO	TOP WIDTH	AREA	CONTRACTION	EXPANSION	PERIMETER
1205.21	0.71	48.00	22.98	0.10	0.30	49.22

FROUDE #	VELOCITY	FRIC. SLOPE	EG	N VALUE	FLOW LINE	LENGTH
2.54	9.96	0.03160	1206.75	0.01600	1204.50	-50.00

1

SUMMARY OF BACKWATER ANALYSIS

SECTION	STATION FEET	REACH LENGTH FEET	DISCHARGE CFS	FLOW LINE FEET	WATER SURFACE FEET
1	0.00	0.00	229.00	1205.20	1206.20
2	-50.00	-50.00	229.00	1204.50	1205.21

1

```
SSSSS EEEEE SSSSS  CCCC   A   L
S     E     S     C      A A  L          10-79
SSSSS EEEEE SSSSS C     A   A L
    S E         S C     AAAAA L        REVISED
SSSSS EEEEE SSSSS  CCCC A   A LLLLL      11-86
```

COMPUTATIONAL HYDRAULIC DESIGN

USER : SHI-EN SHIAU

****

The following conditions regulate the use of computer programs SESCAL developed by Shi-En Shiau.

The computer programs are furnished by the author and are accepted and used by the recipient individual or group entity with the express understanding that the author makes no warranties, express or implied concerning the accurary, completeness, reliability,usability, or suitability for any particular purpose of the information or data contained in the programs, or furnished in connection therewith, and the author shall be under no liability whatsoever to any such individual or group entity by reason of any use made thereof.

The program belong to Shi-En Shiau. Therefore, the recipient agree not to assert any proprietary rights thereto nor to represent the programs to any one as other than the author programs

The plotting program is furnished by Dr. Long-Cheng Huang.

****

09:23:31 20-JUN-94

SESCALSESCALSESCALSESCALSESCALSESCALSESCALSESCALSESCALSESCALSESCALSESCALSESCAL

USER : SHI-EN SHIAU

****

E002102 - OLD CROSS CUT CANAL: S. CEMETARY DR. - LOCAL STORM: Q = 229 cfs
BACKWATER ANALYSIS TO DETERMINE EFFECTS OF CURB OPENING NARROWING
FULL WIDTH = 48'; UPSTREAM CONTROL

****

IRREGULAR CROSS SECTION

.	100.00	100.00	111.50	123.00	123.00
ELEV.	1206.20	1205.20	1205.40	1205.20	1206.20
N	0.016	0.016	0.016	0.016	0.016

Q (cfs)

```
          l          .          .          .          .          .
          l          .          .          .          .          .
          l          .          .          .          .          .
          l          .          .          .          .          .
          l          .          .          .          .          .
1204.620+..........................................................
          l          .          .          .          .          .
          G          .          .          .          .          G
          l          .          .          .          .          .
          l          .          .          .          .          .
          l          .          .          .          .          .
          l          .          .          .          .          .
          l          .          .          .          .          .
          l          .          .          .          .          .
          l          .          .          .          .          .
1204.500+----------+----------+-----G-----+----------+----------+
      100.00     109.60     119.20     128.80     138.40     148.00
                          STATION (feet)
```

G : CROSS SECTION GROUND POINT

1

SECTION # 2 STATION -50.00

NORMAL FLOW COMPUTATION

BW	YN	TOP WIDTH	AREA	L.B. SLOPE	R.B. SLOPE	PERIMETER
0.00	0.62	48.39	27.29	0.0:1	0.0:1	49.41

FROUDE #	VELOCITY	SLOPE	DISCHARGE	N VALUE	YC	VC
1.97	8.39	0.01800	229.00	0.01600	0.96	5.10

BACKWATER COMPUTATION

WSEL	YO	TOP WIDTH	AREA	CONTRACTION	EXPANSION	PERIMETER
1205.46	0.96	55.55	44.89	0.10	0.30	56.91

FROUDE #	VELOCITY	FRIC. SLOPE	EG	N VALUE	FLOW LINE	LENGTH
1.00	5.10	0.00412	1205.86	0.01600	1204.50	-50.00

1

SUMMARY OF BACKWATER ANALYSIS

SECTION	STATION FEET	REACH LENGTH FEET	DISCHARGE CFS	FLOW LINE FEET	WATER SURFACE FEET
1	0.00	0.00	229.00	1205.20	1206.20
2	-50.00	-50.00	229.00	1204.50	1205.46

1

N. CEMETARY DR.

Greiner

Job OLD CROSS CUT CANAL Project No. E002102 Sheet ____ of ____
Description N. CEMETARY ENTRANCE Computed By JEB Date 6/18/94
N. of OAK st. Along 48th st. Checked By JVG Date 6/21/94

- NORTH CEMETARY ENTRANCE
NORTH OF OAK st.

Wier Rating Results

- EXISTING CONDITIONS

LOCAL STORM - 120 CFS WEIRS OVER INTO CANAL ✓
376 256 CFS GO South to OAK ✓

GENERAL STORM - 42 CFS WEIRS OVER INTO CANAL ✓
146 104 CFS GOES South to OAK ✓

- Proposed CONDITIONS -

LOCAL STORM - 239 CFS WEIRS OVER INTO CANAL ✓
476 137 CFS GOES south to OAK ✓

GENERAL STORM - 77 CFS WEIRS OVER INTO CANAL ✓
146 69 CFS goes South to OAK ✓

- 10 YR CURB OPENING FOR LOCAL STORM DISCHARGE
(THE DISCHARGE that WEIRS OVER INTO CANAL)

- 239 CFS X 0.45 (10 YR STORM COEFFICIENT) = 107.55 ⇒ 108 CFS ✓

- 108 CFS = 10 YR. STORM DISCHARGE FOR SPILLWAY ✓

- 37' CURB OPENING FOR 10 YR. STORM. ✓

- 64' Spread for 4:1 ✓

WS EL. Exist = 1205.92
WS EL. 37' opening = 1205.92 OK

HYDRAULIC CALCULATOR

E002102 - N. CEMETARY SPILLWAY (Box Sta. 40+57±)

DATA FOR SUBCRITICAL SUPERCRITICAL FLOW

super crit. from "SESCAL"

DISCHARGE	:	239
BASE WIDTH	:	64
UPSTREAM DEPTH	:	.79
UPSTREAM VELOCITY	:	6.88
CHANNEL BOTTOM DATUM DIFFERENCE	:	1.9

$F\#_2 = \frac{V}{\sqrt{gy}} = \frac{(6.88)}{\sqrt{32.2 * .79}} = 1.36$

OUTPUT FOR SUBCRITICAL FLOW

DOWNSTREAM DEPTH (SUBCRITICAL)	:	3.405642 > 3.14
DOWNSTREAM VELOCITY	:	1.096526

(No Hydraulic Jump occurs)

Chimp Depth

OUTPUT FOR SUPERCRITICAL FLOW

DOWNSTREAM DEPTH (SUPERCRITICAL)	:	.2614131
DOWNSTREAM VELOCITY	:	14.28534

1 13:20:36 18-JUN-94

```
SSSSS EEEEE SSSSS  CCCC   A   L
S     E     S     C      A A  L          10-79
SSSSS EEEEE SSSSS C     A   A L
    S E         S C     AAAAA L        REVISED
SSSSS EEEEE SSSSS  CCCC A   A LLLLL      11-86
```

COMPUTATIONAL HYDRAULIC DESIGN

USER : SHI-EN SHIAU

****
*

The following conditions regulate the use of computer programs SESCAL developed by Shi-En Shiau.

The computer programs are furnished by the author and are accepted and used by the recipient individual or group entity with the express understanding that the author makes no warranties, express or implied concerning the accurary, completeness, reliability,usability, or suitability for any particular purpose of the information or data contained in the programs, or furnished in connection therewith, and the author shall be under no liability whatsoever to any such individual or group entity by reason of any use made thereof.

The program belong to Shi-En Shiau. Therefore, the recipient agree not to assert any proprietary rights thereto nor to represent the programs to any one as other than the author programs

The plotting program is furnished by Dr. Long-Cheng Huang.

****
*
1

13:20:36 18-JUN-94

SESCALSESCALSESCALSESCALSESCALSESCALSESCALSESCALSESCALSESCALSESCALSESCALSESCAL

Spillway is Provided for 108'!!! see table on 63-1

USER : SHI-EN SHIAU

****
E002102 - N. CEMETARY ENTRANCE - 64' CURB OPENING (4:1 EXPANSION)
W/ BACKWATER USING UPSTREAM CONTROL ON DISCHARGE FROM LOCAL
STORM WEIRING OVER 48TH STREET PROPOSED CONDITIONS.

****

IRREGULAR CROSS SECTION

STA.	100.00	124.00	148.00
ELEV.	1205.22	1205.16	1205.22
N	0.016	0.016	0.016

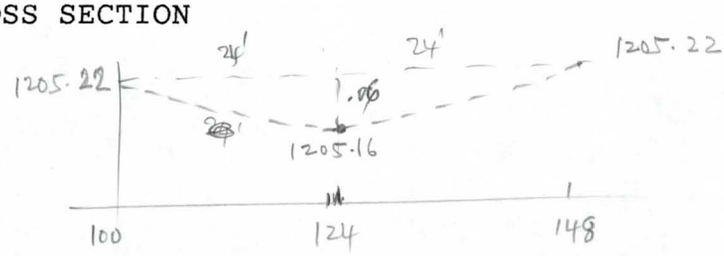

1

```
          1          .          .          .          .          .
          1          .          .          .          .          .
          1          .          .          .          .          .
          1          .          .          .          .          .
          1          .          .          .          .          .
          1          .          .          .          .          .
          1          .          .          .          .          .
1204.906+..........................................................
          1          .          .          .          .          .
          1          .          .          .          .          .
          1          .          .          .          .          .
          1          .          .          .          .          .
          1          .          .          .          .          .
          1          G          .          .          G.          .
          1          .          .          .          .          .
          1          .          .          .          .          .
          1          .          .          .          .          .
1204.790+-----------+-----------+-----G-----+-----------+-----------+
       100.0       112.8       125.6       138.4       151.2       164.0
                          STATION (feet)
```

G : CROSS SECTION GROUND POINT

SECTION # 2 STATION -31.00

NORMAL FLOW COMPUTATION

BW	YN	TOP WIDTH	AREA	L.B. SLOPE	R.B. SLOPE	PERIMETER
0.00	0.83	64.00	37.41	0.0:1	0.0:1	65.50

FROUDE #	VELOCITY	SLOPE	DISCHARGE	N VALUE	YC	VC
1.47	6.39	0.01000	239.00	0.01600	1.00	4.94

$\rightarrow 239/37.41 = 64$ ft/sec

BACKWATER COMPUTATION

WSEL	YO	TOP WIDTH	AREA	CONTRACTION	EXPANSION	PERIMETER
1205.58	0.79	64.00	34.73	0.10	0.30	65.41

$F = \frac{V}{\sqrt{gy}} = \frac{6.88}{\sqrt{32.2 + 0.79}} = 1.36$

FROUDE #	VELOCITY	FRIC. SLOPE	EG	N VALUE	FLOW LINE	LENGTH
1.65	6.88	0.01270	1206.31	0.01600	1204.79	-31.00

$\frac{239}{34.73} = 6.88$ ft/sec

$Y_o = 0.79'$

5.92
5.16
0.76' Depth

SUMMARY OF BACKWATER ANALYSIS

SECTION	STATION FEET	REACH LENGTH FEET	DISCHARGE CFS	FLOW LINE FEET	WATER SURFACE FEET
1	0.00	0.00	239.00	1205.16	1205.92
2	-31.00	-31.00	239.00	1204.79	1205.58

$S = .012$ ft/ft.

```
SSSSS EEEEE SSSSS  CCCC   A   L
S     E     S     C      A A  L          10-79
SSSSS EEEEE SSSSS C     A   A L
    S E         S C     AAAAA L        REVISED
SSSSS EEEEE SSSSS  CCCC A   A LLLLL      11-86
```

COMPUTATIONAL HYDRAULIC DESIGN

USER : SHI-EN SHIAU

****
*

The following conditions regulate the use of computer programs SESCAL developed by Shi-En Shiau.

The computer programs are furnished by the author and are accepted and used by the recipient individual or group entity with the express understanding that the author makes no warranties, express or implied concerning the accurary, completeness, reliability,usability, or suitability for any particular purpose of the information or data contained in the programs, or furnished in connection therewith, and the author shall be under no liability whatsoever to any such individual or group entity by reason of any use made thereof.

The program belong to Shi-En Shiau. Therefore, the recipient agree not to assert any proprietary rights thereto nor to represent the programs to any one as other than the author programs

The plotting program is furnished by Dr. Long-Cheng Huang.

****
*
1

13:08:29 18-JUN-94

SESCALSESCALSESCALSESCALSESCALSESCALSESCALSESCALSESCALSESCALSESCALSESCALSESCAL

USER : SHI-EN SHIAU

****
E002102 - N. CEMETARY ENTRANCE - 38' CURB OPENING W/ BACKWATER
USING UPSTREAM CONTROL BASED ON DISCHARGE FROM LOCAL STORM WEIRING
OVER 48TH STREET PROPOSED CONDITIONS.

****

IRREGULAR CROSS SECTION

STA.	100.00	124.00	148.00
ELEV.	1205.22	1205.16	1205.22
N	0.016	0.016	0.016

```
          l            .            .            .            .            .
          l            .            .            .            .            .
          l            .            .            .            .            .
          l            .            .            .            .            .
          l            .            .            .            .            .
          l            .            .            .            .            .
  1204.906+.............................................................
          l            .            .            .            .            .
          l            .            .            .            .            .
          l            .            .            .            .            .
          G            .            .            .            .            G
          l            .            .            .            .            .
          l            .            .            .            .            .
          l            .            .            .            .            .
          l            .            .            .            .            .
          l            .            .            .            .            .
  1204.790+------------+------------+-----G------+------------+------------+
        100.0        112.8        125.6        138.4        151.2        164.0
                                STATION (feet)

          G : CROSS SECTION GROUND POINT
```

1

SECTION # 2 STATION -31.00

NORMAL FLOW COMPUTATION

BW	YN	TOP WIDTH	AREA	L.B. SLOPE	R.B. SLOPE	PERIMETER
0.00	0.62	64.00	37.33	0.0:1	0.0:1	65.09

FROUDE #	VELOCITY	SLOPE	DISCHARGE	N VALUE	YC	VC
1.48	6.40	0.01000	239.00	0.01600	0.80	4.94

BACKWATER COMPUTATION

WSEL	YO	TOP WIDTH	AREA	CONTRACTION	EXPANSION	PERIMETER
1205.32	0.53	64.00	31.39	0.10	0.30	64.90

FROUDE #	VELOCITY	FRIC. SLOPE	EG	N VALUE	FLOW LINE	LENGTH
1.92	7.61	0.01760	1206.22	0.01600	1204.79	-31.00

1

SUMMARY OF BACKWATER ANALYSIS

SECTION	STATION FEET	REACH LENGTH FEET	DISCHARGE CFS	FLOW LINE FEET	WATER SURFACE FEET
1	0.00	0.00	239.00	1205.16	1205.92 Cntrl EL
2	-31.00	-31.00	239.00	1204.79	1205.32

1

VIRGINIA AVENUE

Greiner

Job No. E002102 Project OLD CROSS CUT CANAL Sheet 1 of 1

Subject VIRGINIA CURB OPENING RESULTS

By JEB Date 5/17/94 Checked By JUG Date 5/24/94

VIRGINIA -

AFTER RUNNING CALCULATIONS ON VARIOUS CURB OPENING WIDTHS TO SEE HOW THEY AFFECT THE BACKWATER WE HAVE DETERMINED THAT A 75' OPENING AFFECTS THE BACKWATER IN AN ACCEPTABLE RANGE. (0.1' DIFFERENCE FROM TOTAL WIDTH WSEC)

Q = 570 CFS (LOCAL STORM)

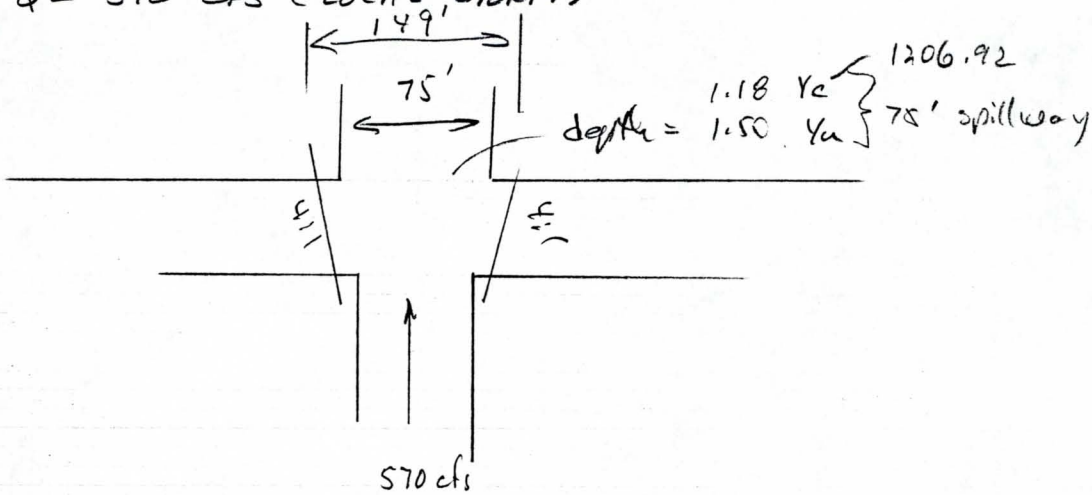

Curb opening width = 75' ✓

Full width of spread = 149' ✓

Spillway Length toe of CHIMP to west end = 67' - 8".

Length of geosynthetic from west end of spillway to west Bank = 17'.

Velocity at bottom of spillway = 12.20 fps ✓

Depth at bottom of spillway = 0.31 ft. ✓

Exist W.S. EL. = 1207.26

WS EL 75' opening = 1207.34

.08' < 0.1 OK

HYDRAULIC CALCULATOR

Virginia (LOCAL STORM)

DATA FOR SUBCRITICAL/SUPERCRITICAL FLOW

DISCHARGE : 570
BASE WIDTH : 149
UPSTREAM DEPTH : 1.14
UPSTREAM VELOCITY: 4.96
CHANNEL BOTTOM DATUM DIFFERENCE: 1.1

OUTPUT FOR SUBCRITICAL FLOW

DOWNSTREAM DEPTH (SUBCRITICAL) = 2.587311 < 2.66 (Hydraulic Jump Occurs)
DOWNSTREAM VELOCITY = 1.478564

OUTPUT FOR SUPERCRITICAL FLOW

DOWNSTREAM DEPTH (SUPERCRITICAL) = .3136228
DOWNSTREAM VELOCITY = 12.19778

1 14:18:23 10-JUN-94

```
SSSSS EEEEE SSSSS  CCCC   A   L
S     E     S     C      A A  L          10-79
SSSSS EEEEE SSSSS C     A   A L
    S E         S C     AAAAA L        REVISED
SSSSS EEEEE SSSSS  CCCC A   A LLLLL      11-86
```

COMPUTATIONAL HYDRAULIC DESIGN

USER : SHI-EN SHIAU

****
*

The following conditions regulate the use of computer programs SESCAL developed by Shi-En Shiau.

The computer programs are furnished by the author and are accepted and used by the recipient individual or group entity with the express understanding that the author makes no warranties, express or implied concerning the accurary, completeness, reliability,usability, or suitability for any particular purpose of the information or data contained in the programs, or furnished in connection therewith, and the author shall be under no liability whatsoever to any such individual or group entity by reason of any use made thereof.

The program belong to Shi-En Shiau. Therefore, the recipient agree not to assert any proprietary rights thereto nor to represent the programs to any one as other than the author programs

The plotting program is furnished by Dr. Long-Cheng Huang.

****
*
1

14:18:23 10-JUN-94

SESCALSESCALSESCALSESCALSESCALSESCALSESCALSESCALSESCALSESCALSESCALSESCALSESCAL

USER : SHI-EN SHIAU

****
E002102 - VIRGINIA, 149', LOCAL, DOWNSTREAM CONTROL

****

IRREGULAR CROSS SECTION

D.	100.00	100.00	249.00	249.00
ELEV.	1206.28	1205.78	1206.23	1206.73
N	0.016	0.016	0.016	0.016

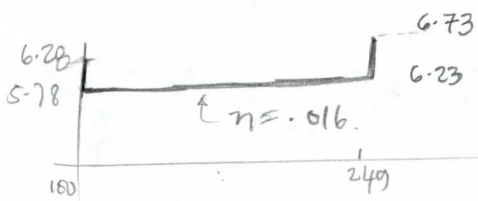

1

1	0.00	0.00	570.00	1205.78	1207.09
2	14.00	14.00	570.00	1205.90	1206.99
3	26.00	12.00	570.00	1205.73	1207.26
4	54.00	28.00	570.00	1205.74	1207.26

1

Q (cfs)

ELEVATION (feet)

```
1207.263+.......................................................
        l          .          .   W      .          .          .
        l          .          .          .          .          .
        l          .          .          .          .          .
        l          .          .          .          .          .
        l          .          .          .          .          .
        l          .          .          .          .          .
        l          .          .          .          .          .
        l          .          .          .          .          .
        l          .          .          .          .          .
1206.966+.......................................................
        l          .          .          .          .          .
        l          .          .          .          .          .
        l          .          .          .          .          .
        l          .          .          .          .          .
        l          .          .          .          .          .
        l          .          .          .          .          .
        l          .          .          .          .          .
        l          .          .          .          .          .
        l          .          .          .          .          .
1206.670+.......................................................
        l          .          .          .          .          .
        l          .          .          .          .          .
        l          .          .          .          .          .
        l          .          .          .          .          .
        l          .          .          .          .          .
        l          .          .          .          .          .
        l          .          .          .          .          .
        l          .          .          .          .          .
        l          .          .          .          .          .
1206.373+.......................................................
        l          .          .          .          .          .
        l          .          .          .          .          .
        l          .          .          .          .          .
        l          .          .          .          .          .
        l          .          .          .          .          .
        l          .          .          .          .          .
        l          .          .          .          .          .
        l          .          .          .          .          .
        l          .          .          .          .          .
1206.077+.......................................................
        l          .          .          .          .          .
        l          .          .          .          .          .
        l          .          .          .          .          .
        l          .          .          .          .          .
        l          .          .          .          .          .
        l          .  G       .          .          .          .
        l          .          .          .          .          .
```

1 14:25:17 10-JUN-94

```
SSSSS EEEEE SSSSS  CCCC   A   L
S     E     S     C      A A  L          10-79
SSSSS EEEEE SSSSS C     A   A L
    S E         S C     AAAAA L        REVISED
SSSSS EEEEE SSSSS  CCCC A   A LLLLL      11-86
```

COMPUTATIONAL HYDRAULIC DESIGN

USER : SHI-EN SHIAU

****
*

The following conditions regulate the use of computer programs SESCAL developed by Shi-En Shiau.

The computer programs are furnished by the author and are accepted and used by the recipient individual or group entity with the express understanding that the author makes no warranties, express or implied concerning the accurary, completeness, reliability,usability, or suitability for any particular purpose of the information or data contained in the programs, or furnished in connection therewith, and the author shall be under no liability whatsoever to any such individual or group entity by reason of any use made thereof.

The program belong to Shi-En Shiau. Therefore, the recipient agree not to assert any proprietary rights thereto nor to represent the programs to any one as other than the author programs

The plotting program is furnished by Dr. Long-Cheng Huang.

****
*
1

14:25:17 10-JUN-94

SESCALSESCALSESCALSESCALSESCALSESCALSESCALSESCALSESCALSESCALSESCALSESCALSESCAL

USER : SHI-EN SHIAU

****
E002102 - VIRGINIA, 75' , LOCAL STORM, DOWNSTREAM CONTROL

****

149' wide Road
Min. ele. 1205.88
Max. ele. 1206.73
0.85'

IRREGULAR CROSS SECTION

DA.	100.00	136.50	136.50	211.50	211.50	249.00
ELEV.	1206.28	1206.39	1205.88	1206.11	1206.61	1206.73
N	0.016	0.016	0.016	0.016	0.016	0.016

1

Q (cfs)

3	26.00	12.00	570.00	1205.73	1207.41
4	54.00	28.00	570.00	1205.74	1207.34

.08' higher
<0.1 OK

1

Q (cfs)

ELEVATION (feet)

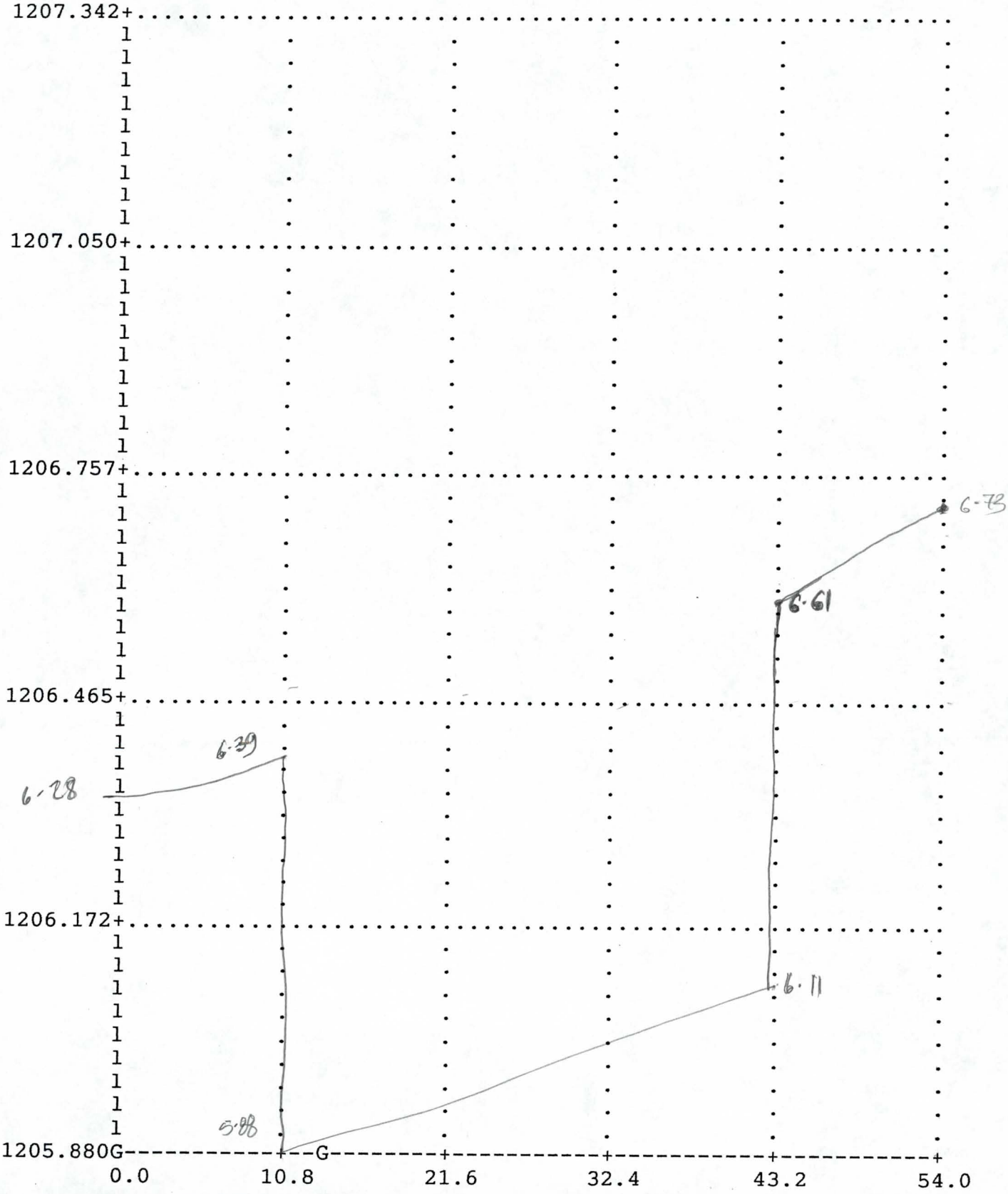

CAMBRIDGE

Greiner

Job No. E002102 Project Old Cross Cut Canal Sheet 1 of 1

Subject Spillway Analysis

By RHF Date 7-20-94 Checked By _____ Date _____

Roadway: Cambridge

After evaluating existing flow conditions from the topo, it was determined flow from Cambridge does not enter the canal under existing conditions. Flow ponds in the R/W to the north and south of the road. Catch basins will be designed to the north and south to collect nuisance flows, and prevent ponding after the storm events.

No spillway provided.