Property of
Flood Control District of MC Library
Please Return to
2801 W. Durango
Phoenix, AZ 85009

FLOOD CONTROL DISTRICT
RECEIVED
NOV 04 1994

	CHENG		P & PM
	DEF		HYDRO
	ADMIN		LMGT
	FINANCE		FILE
	C & O		
	ENGR		

REMARKS

STRUCTURAL CALCULATIONS

for

MISCELLANEOUS ITEMS

Old Cross Cut Canal

Drainage Improvements

Indian School Road to McDowell Road

FCD Contract No. 94-24

November, 1994

Registered Professional Engineer (Civil)
CERTIFICATE NO.
10217
WILLIAM STEPHEN
KANTOR, JR.
Date Signed 11/3/94
ARIZONA, U.S.A.

ENTRANCO

A103.807

ENTRANCO

SHEET NO 1 OF 1
PROJECT NO

PROJECT OLD X-CUT CANAL
SUBJECT
MADE BY WSK DATE 10/94 CHECKED BY DATE
REVISED BY DATE RECHECKED BY DATE

CONTENTS

1. EQUALIZER OPENING – MIDDLE WALL BEAM REINFORCEMENT
2. CHECK 2' FILL CONDITION ON 2-18'x10' CBC
3. MANHOLE OPENING FOR 2-18'x10' CBC ADDITIONAL REINFORCEMENT

Registered Professional Engineer (Civil)
CERTIFICATE NO.
10217
WILLIAM STEPHEN
KANTOR, JR.
Date Signed 11/3/94
ARIZONA, U.S.A.

ENTRANCO

SHEET NO 1 OF 5
PROJECT NO

PROJECT OLD X-CUT CANAL
SUBJECT EQUALIZING OPENING
MADE BY WSK DATE 10/94 CHECKED BY VA DATE 10/94
REVISED BY DATE RECHECKED BY DATE

MIDDLE WALL FORCES

Scan "Member End Forces" for Shear-Y @ Mid. Wall
This is Member 4 in all CBCs

2-18x10

Reaction @ Top of Wall: Rt end mem. 1 plus Lt end mem 2

mem. 1 V-y = 10.61^K @ Jt 2 max @ Load 115 p 48
mem. 2 V-y = 10.61^K @ Jt 2 " " " " p 49
R = 2x10.61^K = 21.22^K ≡ Axial @ Jt 2 @ Load 115 p 53

Reaction @ Bot of Wall
R = 22.63$^{K/1}$ ≡ to Axial Load @ Jt 14 @ LOAD 115 p 53

2-12x10

R@TOP = 35.90$^{K/1}$ ≡ Axial load @ Jt 2 max @ Load 115 p 35
R@BOT = 37.34$^{K/1}$ ≡ " " " Jt 9 " " " " p 35

CONTROLS

2-10x10

R@Top = 29.82$^{K/1}$ ≡ Axial load @ Jt 2 max @ Load 115 p 35
R@Bot = 31.24$^{K/1}$ ≡ " " @ Jt 9 " " " " "

∴ USE UNIFORM LOAD OF 37.34$^{K/1}$ from connecting spans

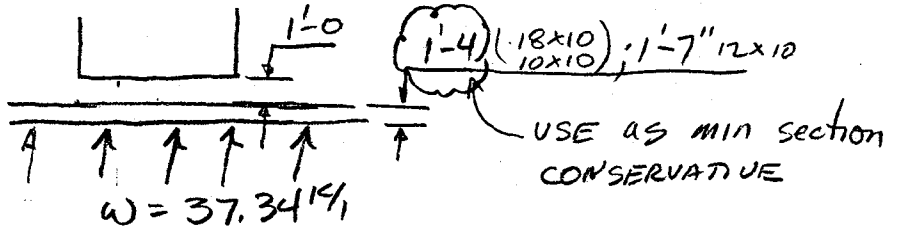

ENTRANCO

SHEET NO 2 OF 5
PROJECT NO

PROJECT OLD X-CUT CANAL
SUBJECT EQUALIZING OPENING
MADE BY WSK DATE 10/94 CHECKED BY VA DATE 10/94
REVISED BY DATE RECHECKED BY DATE

MIDDLE WALL REINFORCING

BOTTOM WALL BEAM

STAAD MEMBER END FORCES

12x10 CBC CONTROLS – See previous sheet

Reaction @ Mid. Wall @ Bottom Slab @ Joint #9

(#): Joint [#] member

R = 2 x V @ Member [10] & [11] @ Jt (9)

R = 37.34^k See previous page Load 115

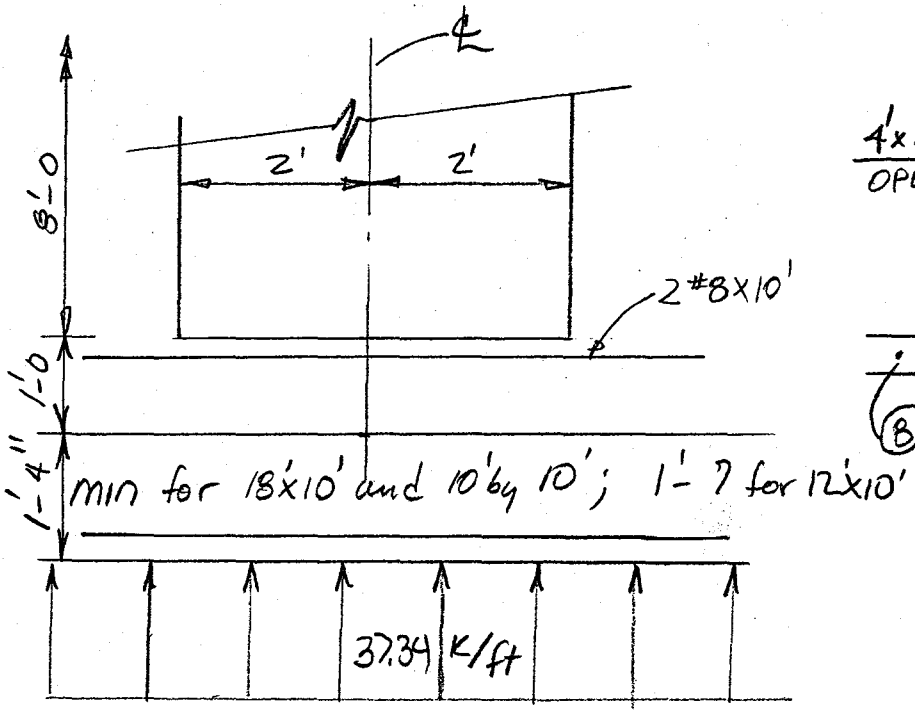

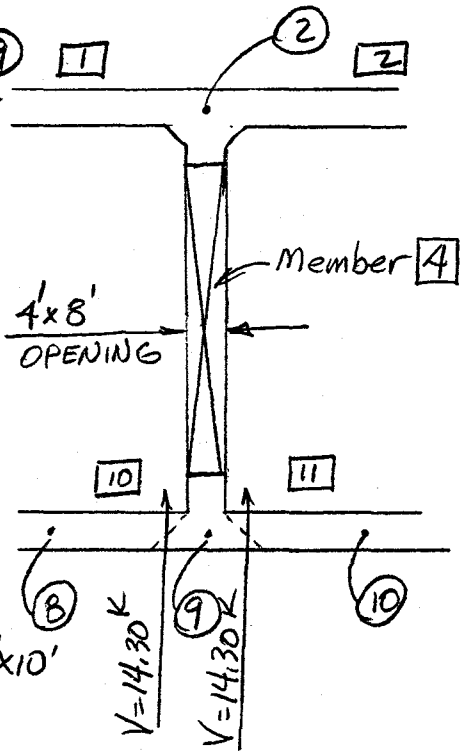

Moment @ ℄ = $w\ell^2/24$ = $(37.34^k)(4^2)/24$ = $\underline{\underline{24.89^{'-k}}}$ Ref: AISC BM Formula #15 (Bm Fixed B.E.)

V(Shear) @ ℄ = $\underline{\underline{0}}$

Moment @ Ends = $w\ell^2/12$ = $\underline{\underline{49.79^{'-k}}}$

V(Shear) @ Ends = $w\ell/2$ = $37.34 \times 4/2$ = $\underline{\underline{74.7^k}}$

ENTRANCO

SHEET NO 3 OF 5
PROJECT NO

PROJECT OLD XCUT
SUBJECT
MADE BY WSK DATE 10/94 CHECKED BY VA DATE 10/94
REVISED BY DATE RECHECKED BY DATE

DESIGN REINFORCING @ ℄ OPENING

For Simplicity Assume Beam is only 10" (Neglect "T" possible)
Depth = 2'-4" = 2.33' = 28" b = 10"

USE Working stress Design

$f'_c = 4000$ psi $f_y = 60{,}000$ psi $f_s = 24{,}000$ psi
$f_c = 1600$ psi $n = 8$ $d = 28" - 2"$ Clr $- \frac{1}{2}"(\frac{1}{2}\#8) =$
$d = 25.5"$

Find $\bar{A}_s = M^{1-k} \times (12000"/ft\ \#/k)/f_s J d$ Trial $J = .9$

$\bar{A}_s$ @ ℄ $= (24.89'^k)(12000)/(24{,}000)(.9)(25.5) = .54\ \square"$

TRY 2-#8 bars : $A_s = 1.58\ \square"$ $p = 1.58/10 \times 25.5 = .0062$
$\therefore$ $K = .269$ $j = .910$

Check Stresses

$f_s = 24.89'^k \times 12{,}000 / .910 \times 25.5 \times 1.58 = 8{,}146$ psi < 24 ksi OK
$f_c = 2M/KJbd^2 = 375 \ll 1600$ OK

DESIGN REINFORCING @ FACE OF OPENING

$D = 28"$ $d = 28 - 3 - \frac{1}{2}" = 24.5"$ $b = 10"$
$\bar{A}_s = 49.79^{1-k} \times 12^k / 24^k \times .9 \times 24.5 = 1.13\ \square"$ 2-#8 : $1.58\ \square"$ Try
$p = 1.58/10 \times 24.5 = .0064$ $\therefore K = .273$ $J = .909$

Check Stresses

$f_s = 49.79 \times 12^k / 24.5 \times .909 \times 1.58 = 16{,}980$ ksi < 24.0 OK
$f_c = 802$ psi < 1600 OK

$\therefore$ USE 2-#8 bars Bot and Top (

ENTRANCO

SHEET NO 4 OF 5
PROJECT NO

PROJECT OLD XCUT
SUBJECT
MADE BY WSK DATE 10/94 CHECKED BY VA DATE 10/94
REVISED BY DATE RECHECKED BY DATE

Check Shear @ Face of Opening

Since d = 24.5", The Critical section for shear is at the ℄ of opening where V = 0
so Shear reinforcement is not required.
USE #5 U @ 6" to provide support for #8 bars

See attached reduced plan sheet C8.2

Also provide 3 pairs of additional "bb" bars between Typical "bb" bars next to opening. There is little to no bending in center wall but these bar are added to harden the opening against damage from any large debris that may enter the box

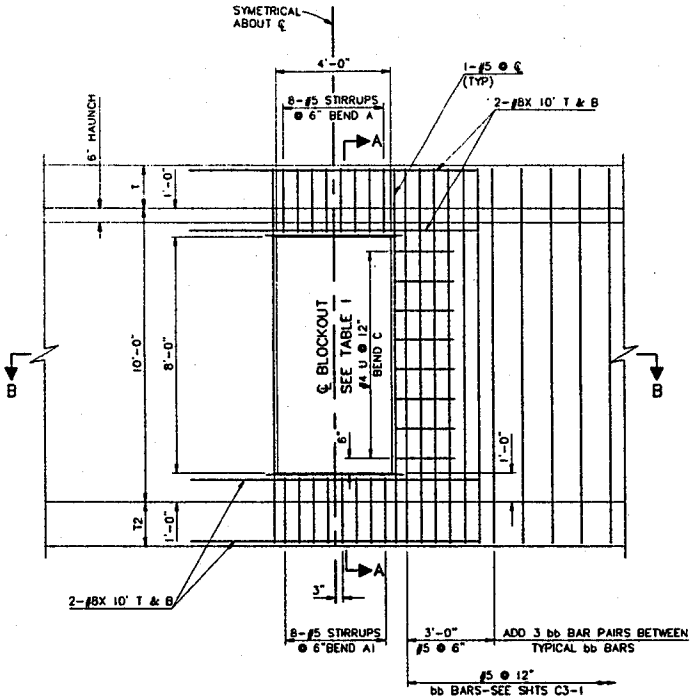

ELEVATION – MIDDLE WALL FLOW EQUALIZING OPENING
SCALE: 1/2"= 1'-0"

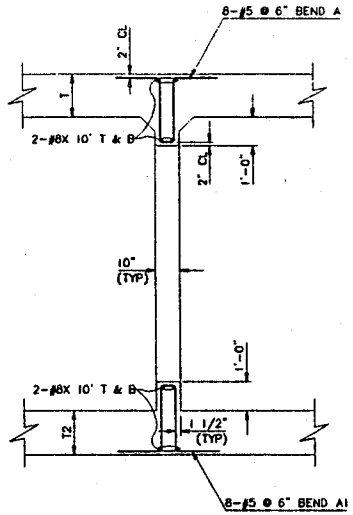

SECTION A – A
SCALE: 1/2"= 1'-0"

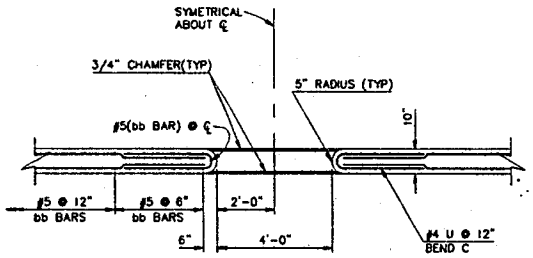

SECTION B – B
SCALE: 1/2"= 1'-0"

TABLE I					
BEGIN STA	END STA	INTERVAL	SECTION	T	T2
62+20	62+20	SINGLE	18x10 CBC	1'-3"	1'-4"
63+65	63+65	SINGLE	18x10 CBC	1'-3"	1'-4"

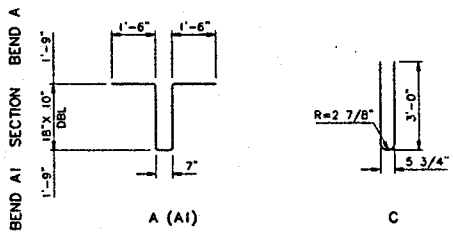

BENDS

FLOOD CONTROL DISTRICT OF MARICOPA COUNTY ENGINEERING DIVISION			
OLD CROSS CUT CANAL McDOWELL RD TO THOMAS RD PROJECT NO. FCD 94-24			
PRELIMINARY NOT FOR CONSTRUCTION		BY	DATE
	DESIGNED	VA/WSK	11/01/94
	DRAWN	TST	11/01/94
	CHECKED	WSK	11/01/94
ENTRANCO			
MIDDLE WALL DETAILS FLOW EQUALIZATION OPENING			SHEET OF C8.2

PLOT DATE: 11/01/94 CADD NAME/SHEET4.DWG
SCALE: 1/2"=1'-0"

585

ENTRANCO

SHEET NO 1 OF 1
PROJECT NO

PROJECT OLD X-CUT CANAL
SUBJECT 2-18×10 CBC – 2' FILL CONDITION
MADE BY WSK DATE 10/94 CHECKED BY VA DATE 10/94
REVISED BY DATE RECHECKED BY DATE

Check for 2' of fill Condition in "Chimp" near McDowell Rd

See 2-10'×10' CBC Calcs Sheet 3 and 4

Controlling load is 2 Lanes $w_L = 0.26^K/ft^2$
where there is 4' of fill

w_L (Revised 2' fill) – See LL calc for 10×10 pages 3 & 4

$a = 16' + 1.75 \times 2' = 19.5'$

$\therefore w_L = 8 \times 16^K / [(19.5)(21.92)] = 0.30^K/ft^2$

$\Delta w_L = 0.30 - 0.26 = +0.04^K/ft^2$

$\Delta w_{earth\ dry} = 4' \times 0.11^K/ft^2 - 2' \times 0.11^K/ft^2 = -0.22^K/ft^2$

$\Delta w_{earth\ wet} = 2' - 0.14^K/ft^2 = .028^K/ft^2$

$\therefore$ Since $\Delta w_L + \Delta w_e = +0.04^K/ft^2 - 0.22^K/ft^2_{min} = -0.18^K/ft^2_{min}$

Since Max Stresses occur when these loading are combined The design with 4' of fill has a larger load than the 2' fill

$\therefore$ The 4' fill design controlls

ENTRANCO

SHEET NO 1 OF 5
PROJECT NO

PROJECT OLD X-CUT CANAL
SUBJECT MANHOLE ADJUSTED TOP SLAB REINF. @ 2-18-10
MADE BY WSK DATE 10/94 CHECKED BY VA DATE 10/94
REVISED BY DATE RECHECKED BY DATE

TOP SLAB ADDN'L Reinforcement for 2-18'x10' CBC

Since MH disrupts dd_1 & ee_1 & hh_1 bars add addn'l bars to strip = to ½ of 5'ϕ opening : 2'-6".

Bottom Reinforcement (Pos. Mom)

See 2-18x10 CBC p. 8 of 11 Mid-Span Top Slab

$M/ft = 20.9^{'k}/ft$ $d = 13.5"$

Assume All Forces Transfer to 2.5' Strip next to opening this will be conservative since plate Analysis not considered

$\therefore M = 2 \times 20.9 = 41.8^{'k}/ft$

As: Typ Reinf = #5 at 12" = .31 in²
#8 @ 12" = .79
Added Reinf = 2#8@6" = 1.58

Total Reinf/ft As = 2.68

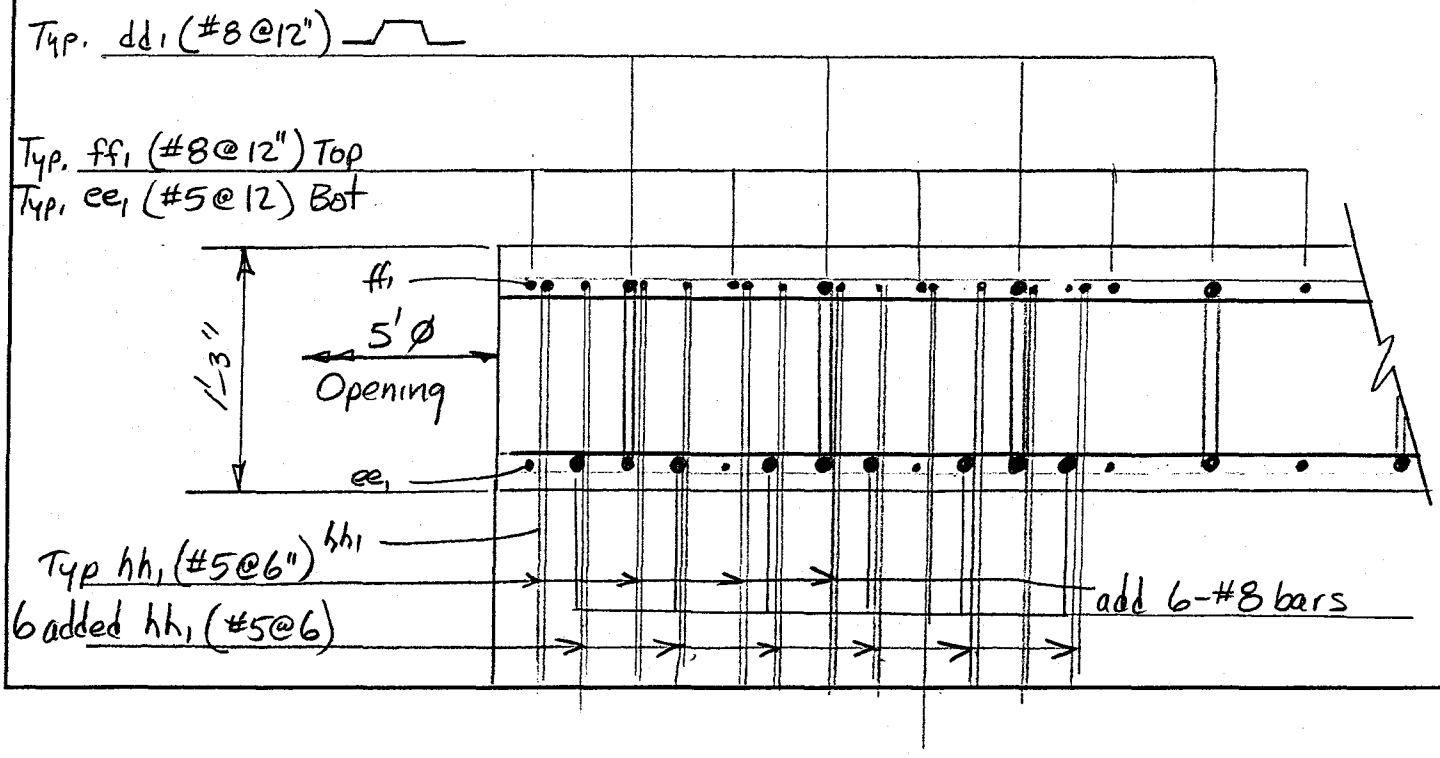

ENTRANCO

SHEET NO 2 OF 5
PROJECT NO

PROJECT OLD X-CUT
SUBJECT MH
MADE BY WSK DATE 10/94 CHECKED BY VA DATE 10/94
REVISED BY DATE RECHECKED BY DATE

Check Stresses $M = 41.8^{1-k}/ft$ $d = 13.5^{\pm}$

$\rho = 2.68/12 \times 13.5 = .0165$

$\therefore$ $K = .398$ $J = .867$

Then $f_s = 41.8^{1-k} \times 12000 / 2.68 \times .867 \times 13.5 = 15{,}991 < 24^{KSI}$ OK

$f_c = 1329 < 1600$ OK

In fact, stresses will probably be lower if plate analysis is done

Check Serviceability Cover = 1"

$\bar{f}_s = Z/(d_c A)^{1/3}$ $Z = 98$ $d_c = 1.5''$ $A = 1.5 \times 12' = 18$

$\bar{f}_s = 98/(1.5 \times 18)^{1/3} = 32.67^{KSI} \leq 36^{KSI}$ OK

$\therefore$ $f_s = 15{,}991 < 32{,}670$ OK

$\therefore$ add 6 #8 between dd1 & ee1 bars

ENTRANCO

SHEET NO 3 OF 5
PROJECT NO

PROJECT OLD X-CUT
SUBJECT MH
MADE BY WSK DATE 10/94 CHECKED BY VA DATE 10/94
REVISED BY DATE RECHECKED BY DATE

Top Reinforcement

Similar to pos. mom area add Reinf between hh1 bars in 2-6" strip next to Manhole.

See 2-18x10 CBC Sht 7 of 11

Typical $-M = 9.5^{1K}$ $d = 12.6''$

$\therefore M = 2 \times 9.5^{1K} = 19^{1K}$

Typical Reinforcement is #5 hh1 bars@6" $\therefore A = .62 in^2$
added " #5 hh1 bars @ 6" $A = .62 in^2$

Total $A_s = 1.24 in^2$

$\rho = 1.24/12 \times 12.6 = .0082$ Then $K = .303$ $J = .899$

Check Stresses

$f_s = 19^{1K} \times 12^K / 1.24 \times .899 \times 12.6 = 16,232 < 24 ksi$ OK
$f_c = 879 < 1600$ OK

Serviceability OK by Inspection

$\therefore$ add 6 hh1 bars between Typ. hh1 bars
i.e. hh1 bars @ 3" for 2'-6"

also add 5# 8 bars between qq bars To distribute loads to strips along side MH opening and #5 diagonal bars above lower qq bars.

TABLE A

CBC	STA	RIM ELEV	A	B	C	H
2-18'x10'	64+75.0	1208.2	12"	13'-0"	12'-0" 4sp@3'	4'±

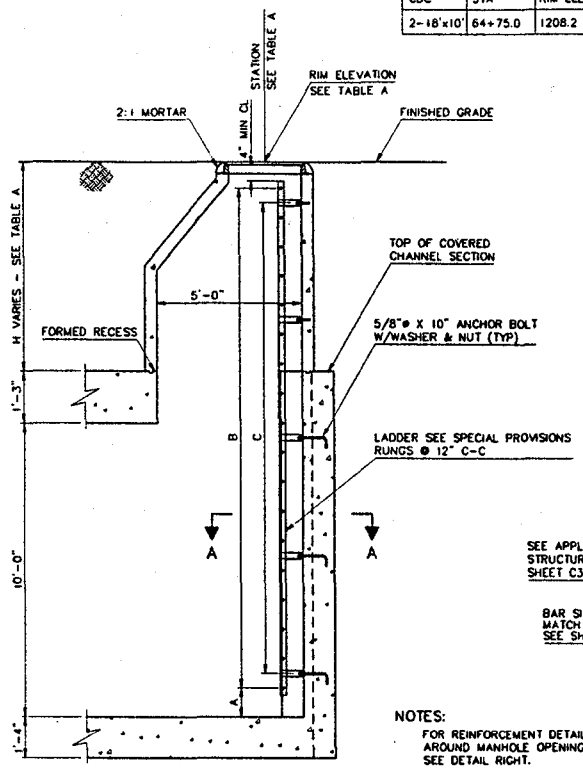

TYP SECTION WITH MANHOLE EXTENSION
SCALE 1/2"=1'-0"

NOTES:

FOR REINFORCEMENT DETAILS AROUND MANHOLE OPENING, SEE DETAIL RIGHT.

5' DIAMETER MANHOLE SHAFT AND CONE PER MAG STD 420 AND 30" WATERTIGHT RIM AND COVER PER MAG STD DET 423 AND 424

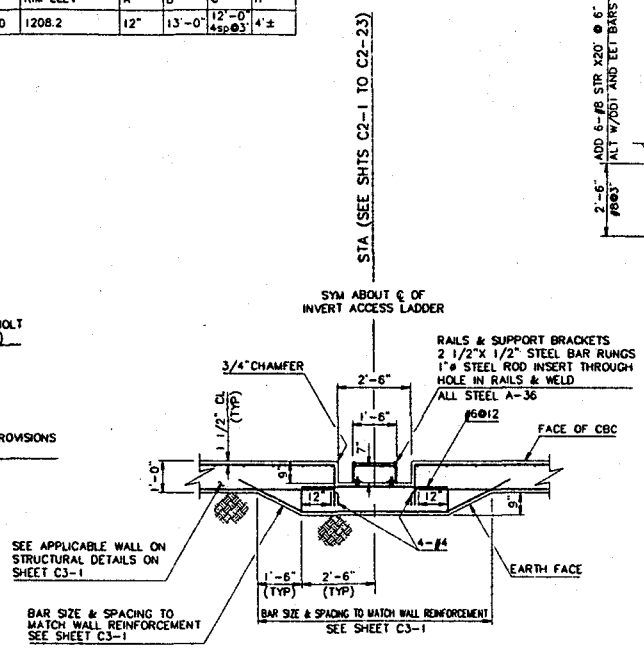

SECTION A - A
SCALE 1/2"=1'-0"

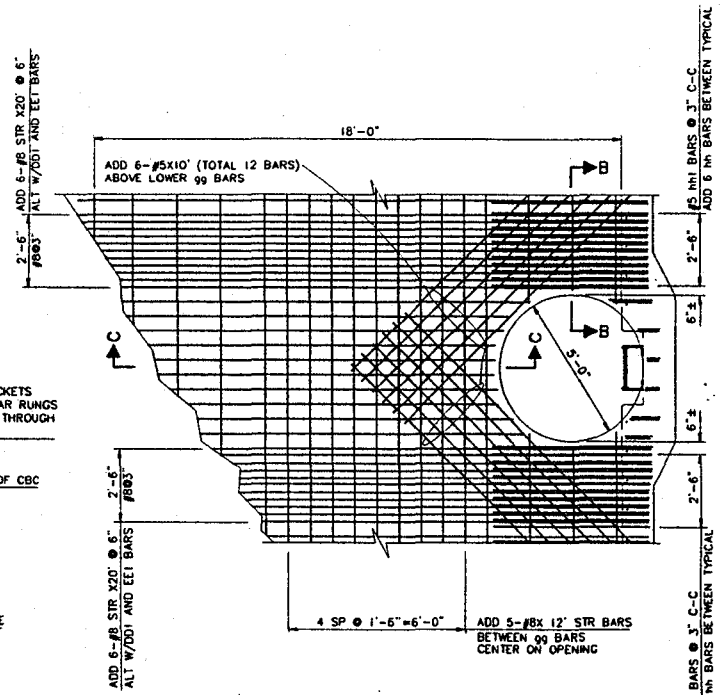

TOP SLAB PLAN
SCALE 1/2"=1'-0"

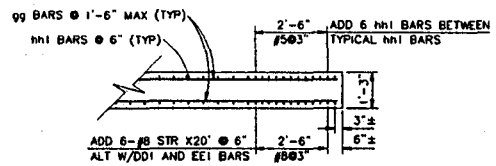

SECTION B - B
SCALE 1/2"=1'-0"

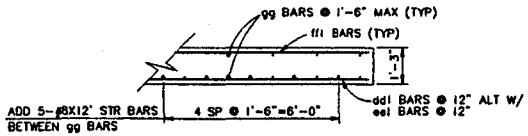

SECTION C - C
SCALE 1/2"=1'-0"

FLOOD CONTROL DISTRICT OF MARICOPA COUNTY ENGINEERING DIVISION			
OLD CROSS CUT CANAL McDOWELL RD TO THOMAS RD PROJECT NO. FCD 94-24			
PRELIMINARY NOT FOR CONSTRUCTION		BY	DATE
	DESIGNED	VA/WSK	11/01/94
	DRAWN	TS1	11/01/94
	CHECKED	WSK	11/01/94
	ENTRANCO		
DETAILS BOX CULVERT MANHOLES			SHEET OF C8.3

PLOT DATE: 11/01/94 CADD NAME: SHEET8.DWG
SCALE: 1/2"=1'-0"

4 of 5

SPAN "S"	HEIGHT "H"	QUANTITIES CONCRETE CY/LF	QUANTITIES REINF. STEEL LBS/LF	TOP SLAB "T"	BOT SLAB "T2"	aa BAR SIZE	aa SPACING	aa LENGTH	bb BAR SIZE	bb SPACING	bb LENGTH	cc NUMBER *
18'	10'	4.82	800	1'-3"	1'-4"	5	12"	12'-2"	5	12"	15'-2"	42

dd1 TOP BAR SIZE	SPACING	LENGTH	A	B	C	ee1 TOP BAR SIZE	SPACING	LENGTH	ff1 BAR SIZE	SPACING	LENGTH	gg NUMBER **
8	12"	39'-4"	13'-9"	9'-0"	1'-0"	5	12"	38'-6"	8	12"	38'-6"	112

hh1 BAR SIZE	SPACING	LENGTH	D1
5	6"	16'-6"	11'-0"

dd2 BOT BAR SIZE	SPACING	LENGTH	A	B	C	ee2 BOT BAR SIZE	SPACING	LENGTH	ff2 BAR SIZE	SPACING	LENGTH
7	12"	39'-9"	14'-1"	9'-0"	11"	5	12"	39'-0"	7	12"	39'-0"

hh2 BAR SIZE	SPACING	LENGTH	D2
6	6"	13'-0"	7'-6"

* TOTAL NUMBER OF #4(CONT.) BARS IN WALLS
** TOTAL NUMBER OF #4(CONT.) BARS IN TOP/BOT SLABS

GENERAL NOTES:

All construction shall conform to the latest MAG Uniform Standard Specifications with applicable Maricopa County and City of Phoenix supplements, and to appropriate Arizona Department of Transportation Standard Specifications for Road and Bridge Construction as required by these plans and the Special Provisions.

Design–AASHTO Standard Specifications for Highway Bridges, 1993 fifteenth Edition.

Loading Class–HS 20–44 and Interstate Alternate Loading.

Internal Pressure: 20' of H_2O.

See Thomas–Hartig & Associates, Inc. Geotechnical Report No. 90–0863 dated February 12, 1991 for Soil Data.

All concrete shall be Class"AA" f'c=4,000 psi.

Reinforcing steel shall conform to ASTM Specification A615, Grade 60, fs=24,000 psi.

All bend dimensions for reinforcing steel shall be out to out of bars. All placement dimensions for reinforcing steel shall be to center of bars except as noted.

All reinforcing steel shall have 2" clear cover unless noted otherwise.

JOINT NOTE:

Construction joint spacing in the walls and top slab shall not exceed 38'–6", and in the bottom slab shall not exceed 50', with reinforcing steel projecting 1'–6" through all the joints. Joints in the slab shall be perpendicular to the culvert centerline.

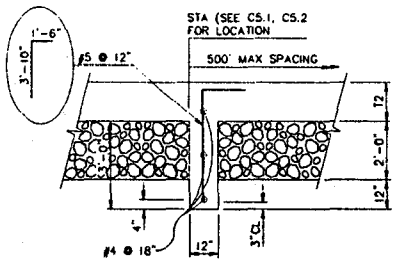

SECTION A – A (CUT-OFF WALL)
SCALE: 1/2"= 1'-0"

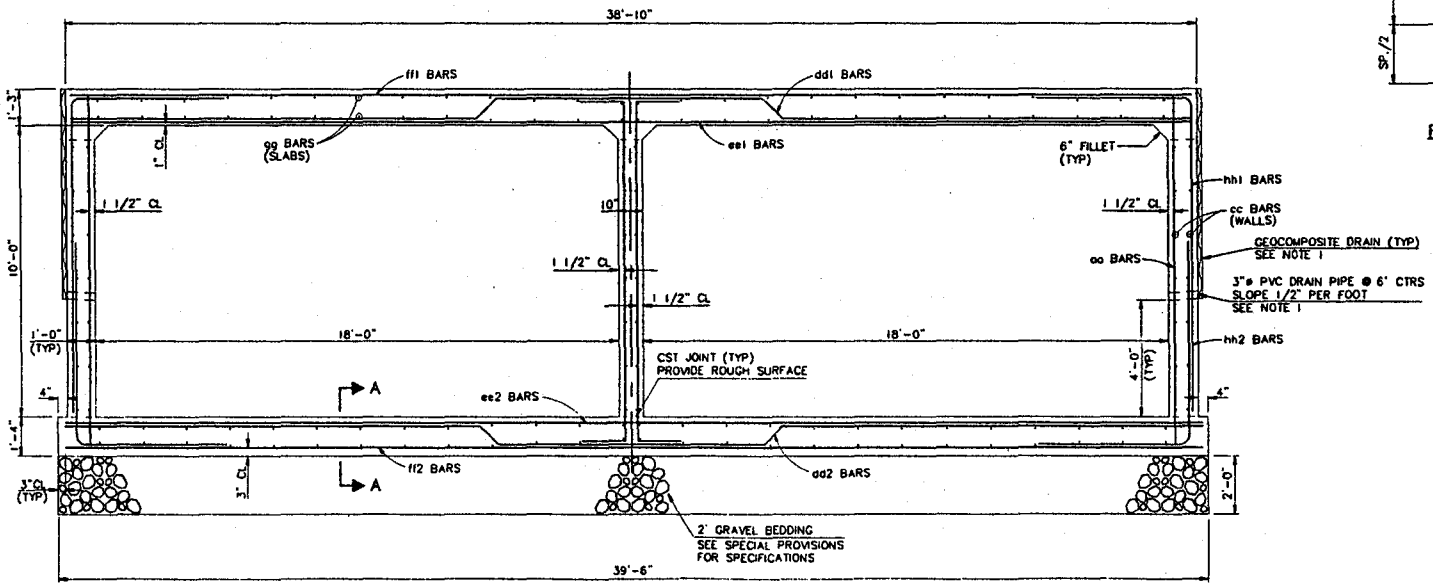

TYPICAL SECTION
SCALE: 1/2"= 1'-0"

NOTE 1: SEE ADOT STD NO. B-19.10 WALL DRAINAGE DETAIL AND SPECIAL PROVISIONS

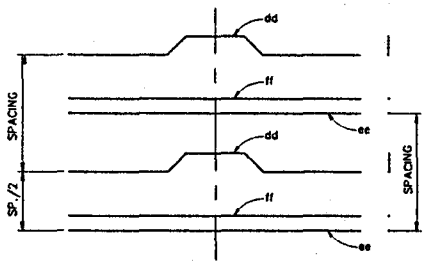

REINFORCING BAR PLACING DIAGRAM

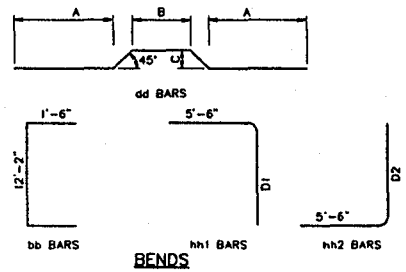

BENDS

FLOOD CONTROL DISTRICT OF MARICOPA COUNTY ENGINEERING DIVISION			
OLD CROSS CUT CANAL McDOWELL RD TO THOMAS RD PROJECT NO. FCD 94-24			
PRELIMINARY NOT FOR CONSTRUCTION		BY	DATE
	DESIGNED	VA/WSK	11/01/94
	DRAWN	TST	11/01/94
	CHECKED	WSK	11/01/94
	ENTRANCO		
TYPICAL SECTION 18'X 10' DOUBLE BARREL BOX CULVERT			SHEET OF C8.1

PLOT DATE: 11/01/94 CADD NAME: 18X10BOX.DWG
SCALE: 1/2"=1'-0"

5 of 5