2004P018

Final Drainage Report
August 2001
Revised: October 2001

LAVEEN MEADOWS-PHASE I

Prepared for:

Elliott Homes
1400 E. Southern Avenue
Building H, Suite 725
Tempe, AZ 85285
(480) 831-9200

Prepared by:

Kimley-Horn and Associates, Inc.
7600 N. 15th Street, Suite 250
Phoenix, AZ 85020
(602) 944-5500

© Kimley-Horn and Associates, Inc
June, 2005.
H:\PROJECT\-Civil\91397008\REPORTS\Final Drainage Report.doc

Kimley-Horn
and Associates, Inc.

Final Drainage Report
August 2001
Revised: October 2001

LAVEEN MEADOWS-PHASE I

Prepared for:

Elliott Homes
1400 E. Southern Avenue
Building H, Suite 725
Tempe, AZ 85285
(480) 831-9200

Registered Professional Engineer (Civil)
CERTIFICATE NO.
32582
THOMAS G.
COPPIN
Date Signed 10/30/01
ARIZONA, U.S.A.

Prepared by:

Kimley-Horn and Associates, Inc.
7600 N. 15th Street, Suite 250
Phoenix, AZ 85020
(602) 944-5500

© Kimley-Horn and Associates, Inc
October, 2001.
K:\-Civil\91397008\REPORTS\Final Drainage Report.doc

TABLE OF CONTENTS

1.0 INTRODUCTION 1

1.1 General Description 1
1.2 Scope of Final Drainage Report 1
1.3 Project Location 1

2.0 DESCRIPTION OF STUDY AREA 3

2.1 Existing Conditions 3
2.2 Proposed Development 3

3.0 EXISTING REPORTS 4

3.1 Laveen Area Conveyance Channel 4
3.2 Laveen Meadows Master Planned Community Drainage Master Plan 4

4.0 OFF-SITE FLOWS 5

4.1 General 5
4.2 Baseline Road 5
4.3 Commercial Parcel 6

5.0 ON-SITE FLOWS 7

5.1 General 7
5.2 Flows Calculated 7
5.3 Street Drainage 8
5.4 Culverts 9
5.5 Channels 9
5.6 Curb Openings/Catch Basins and Spillways 10
5.7 Retention 11
5.8 Time to Drain 12
5.9 Finished Floor Elevations 13

6.0 REFERENCES 14

LIST OF APPENDICES

APPENDIX A – RATIONAL METHOD CALCULATIONS

APPENDIX B - SCUPPER CALCULATIONS

APPENDIX C - CULVERT CALCULATIONS

APPENDIX D – UNDEVELOPED COMMERCIAL PARCEL CALCULATIONS

APPENDIX E - FUTURE COMMERCIAL PARCEL CALCULATIONS

APPENDIX F - CHANNEL CALCULATIONS

APPENDIX G - CATCH BASIN CALCULATIONS

APPENDIX H - DEPRESSED CURB OPENINGS AND SPILLWAY CALCULATIONS

APPENDIX I – RETENTION BASIN VOLUME CALCULATIONS

APPENDIX J – CURB AND RIGHT-OF-WAY CAPACITY CALCULATIONS AND STREET CROSS-SECTIONS

APPENDIX K – TIME TO DRAIN CALCULATIONS

APPENDIX L – DRAINAGE MAP

1.0 INTRODUCTION

1.1 General Description

The Laveen Meadows Master Planned Community consists of 397 acres in the incorporated area of Laveen in southwest Phoenix. The project includes a mixture of residential parcels, a commercial site, a public park, a school site as well as open space areas. The Laveen Meadows area plan was approved by the City of Phoenix as zoning case number 115-99-7. Phase I consists of three single-family residential parcels, consisting of 96.26 gross acres.

1.2 Scope of Final Drainage Report

This Final Drainage Report presents the proposed drainage system for managing stormwater runoff for Phase I of the Laveen Meadows Master Planned Community.

1.3 Project Location

Phase I is located within a portion of the northeast Quarter of Section 1 of Township 1 South, Range 1 East and a portion of the northwest Quarter of Section 6 of Township 1 South, Range 2 East, of the Gila and Salt River Base and Meridian, Maricopa County, Arizona.

Phase I is bounded by Baseline Road on the north, the 65th Avenue alignment on the east, the Maricopa Drain on the south, and irrigated farmland on the west. (See Vicinity Map - Figure 1)

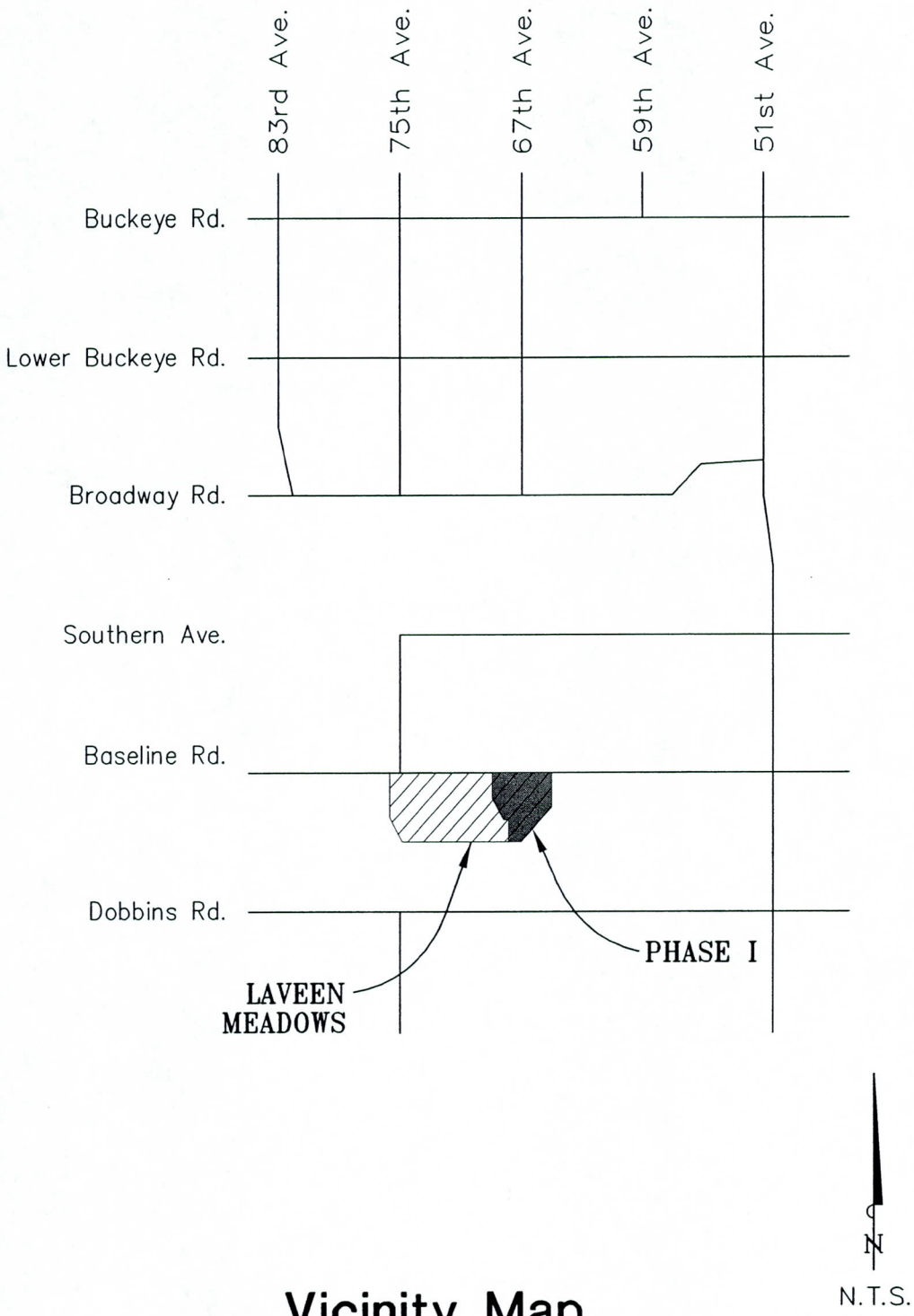

Vicinity Map
Figure 1

2.0 DESCRIPTION OF STUDY AREA

2.1 Existing Conditions

Currently the entire property is irrigated farmland under cultivation. Adjacent properties to the north are irrigated farmlands and lots, to the east and west are irrigated farmlands, and the adjacent property to the south is a dairy. Currently, Baseline Road to the north is a two-lane asphalt roadway with no curb.

Phase I slopes gradually to the west in a series of two tiered fields separated by an irrigation delivery ditch and an access road, located in the middle of Phase I. The low point of Phase I is located at the southwest corner of the development, which drains to the Maricopa Drain.

The property is located within Zones "X" and "B" as shown on FIRM map numbers 04013C2115 E, dated September 4, 1991 and 04013C2580 D, dated April 15, 1988, respectively. Both Zones "X" and "B" are described as areas outside the limits of 100-year flooding or subject to flooding depths of less than one foot.

2.2 Proposed Development

Phase I of the Laveen Meadows Master Planned Community consists of three Parcels (Parcels 7, 10, and 12) of single-family residential lots. The south side of Baseline Road will be improved with additional paving and 6" curb and gutter along the frontage of Phase I. A collector road (Meadows Loop East) will be developed south from Baseline Road through the center of the development.

3.0 EXISTING REPORTS

3.1 Laveen Area Conveyance Channel

The Flood Control District of Maricopa County (MCFCD) is currently in the process of designing the Laveen Area Conveyance Channel (LACC), which will enter Phase I at the southeast corner of the site and proceed west along the south boundary. This channel is designed to provide a regional flood control solution with an ultimate outfall to the Salt River. The LACC flows west along the southern boundary of Phase I and acts as the ultimate outfall for the Laveen Meadows development. The LACC will be constructed by MCFCD.

3.2 Laveen Meadows Master Planned Community Drainage Master Plan

The City of Phoenix has approved the Drainage Master Plan for the Laveen Meadows Master Planned Community, which includes HEC-1 hydrologic and HEC-RAS hydraulic models. This Final Drainage Report is in conformance with the approved Drainage Master Plan and utilizes the hydrologic and hydraulic models included in the *Laveen Meadows Master Planned Community Drainage Master Plan*, prepared by KHA, June 27, 2001.

4.0 OFF-SITE FLOWS

4.1 General

Off-site drainage affecting Laveen Meadows is contributed by a watershed, which covers approximately 39 square miles. The watershed extends from the crest of the South Mountains, north to the Salt River and from approximately Central Avenue, west to the Gila River Indian Reservation.

In general, the topographic low point of this watershed coincides with the location of the Maricopa Drain. Due to its location, the Drain intercepts and conveys a combination of agricultural tail water and minor amounts of stormwater runoff to the Salt River. Additional runoff, in excess of the Drain's capacity, is conveyed along the same alignment within the Drain's over banks. The Maricopa Drain Alignment follows Baseline Road west to the northeast corner of Phase I of Laveen Meadows, where it turns south and flows along the eastern edge of Phase I to the southeast corner of the site. From this point, the alignment proceeds west along the southern boundary of Phase I.

The most significant off-site flows affecting the Laveen Meadows development are conveyed along the Maricopa Drain alignment. These flows currently enter the property at the northeast corner of the site where the Maricopa Drain enters the property. Due to the proposed construction and alignment of the LACC, these flows will enter the property at the southeast corner in the future.

Off-site runoff from small frequency storm events is prevented from entering the site from the north due to the Baseline Road improvements and local irrigation ditches. Sheet flow from the north, resulting from the 100-year storm event (98cfs) may overtop Baseline Road and enter this site. This flow would be collected in the gutter along the south side of Baseline Road and would be conveyed to Tract A via Scuppers A and B. The flow would then be conveyed in Tract A to Valencia Drive where it would flow through the two proposed culverts or overtop the curb and flow to a combination scupper and grated catch basin inlet (Catch Basin C) on the south side of Valencia Drive. Catch Basin C has been sized to accept the total off-site and on-site, 100-year flow contributing to this point. From this location, runoff would be conveyed to Basin 5 (Tract G) via the open channel located within Tracts L and M. Offsite flows from north of Baseline Road will not spread west along the south side of Baseline Road.

Entrance of runoff from the south is prevented due to the Maricopa Drain and the future LACC, and from the east due to existing farm roads and irrigation improvements. These flows have been calculated in the *60% Design Report* prepared by the FCDMC. These contributing flows and their locations are shown on the Drainage Map (See Appendix L).

4.2 Baseline Road

Off-site flows from Baseline Road will be conveyed to three low points (see Drainage Map-Appendix L) via 6" vertical curb and gutter. Scuppers will be located at each of these low points and are designed to convey the 100-year peak flows south to the

landscape areas within Tract A. The runoff from Scuppers A and B will be conveyed west in an open channel in Tract A, which is adjacent to Baseline Road, to Meadows Loop East, where 2-18" culverts convey the runoff under the roadway. The stormwater is conveyed south via an open channel in Tracts M and L to Basin 5 (Tract G).

Runoff to Scupper C enters Basin 1 in Tract N, which is connected to Tract O via 3-24" culverts. Basin 1 will ultimately be extended west becoming a drainage channel as illustrated in the Drainage Master Plan for the Laveen Meadows development. Following construction of Phase I, Basin 1 will be left as a retention basin. Flows in excess of the 100-year event will cause Basin 1 to overtop at the west end. This runoff will sheet flow southwesterly to the LACC through the existing farm fields. The HY8 Computer Program was utilized to size these culverts. Scupper calculations are included in Appendix B. Culvert calculations and HY8 program output is included in Appendix C. The following table summarizes the 100-year peak flows as well as sizes of each scupper along Baseline Road.

Table 1: Baseline Scuppers

Scupper Description	100-Year Peak Flow (cfs)	Scupper Width (feet)
A	3.24	4
B	4.44	4
C	9.14	8

4.3 Commercial Parcel

The Commercial Parcel, Parcel 11, will be developed in a future phase. An irrigation ditch and access road, located on the east side of this parcel, will be removed during the grading of Phase I. Runoff generated within the Commercial Parcel will flow west to the property line of Phase I, as it has historically. The lots adjacent to the Commercial Parcel will be elevated above the natural ground. Runoff will pond along the south and west side of the Commercial Parcel and will spill into Basin 1 at the northwest corner. See Appendix D for the 100-year peak flow calculations from the Commercial Parcel. Appendix E provides the anticipated 100-year peak flow calculations for the Commercial Parcel following its development. Culvert 1 has been designed to convey this future peak flow.

Basin 6 is located within the Commercial Parcel and provides 5-year, 2-hour retention for the portion of Meadows Loop East fronting the Commercial Parcel. This basin will be removed when the Commercial Parcel is developed. An equal volume of retention will need to be provided as part of the onsite improvements to the Commercial Parcel at that time (see Appendix I for calculations).

5.0 ON-SITE FLOWS

5.1 General

The calculations utilized in this Final Drainage Report are in conformance with the *City of Phoenix Storm Drain Design Manual, Subdivision Drainage Design* and the *Laveen Meadows Master Planned Community Master Drainage Plan.*

5.2 Flows Calculated

The Rational Method was utilized for calculating on-site flows and off-site flows generated from the Baseline Road improvements. Calculations of these flows are located in Appendix A. A summary of the 10-year and 100-year flows at each concentration point is provided in the following table:

Table 2: Peak Flows at Concentration Points

Concentration Point	10-year Peak Flow (cfs)	100-year Peak Flow (cfs)
1	2.24	3.24
2	3.53	5.11
3	3.07	4.44
4	8.04	11.64
5	6.32	9.14
6	29.81	43.35
7	40.54	59.62
8	7.88	11.59
9	18.02	26.25
10	16.44	23.91
11	6.40	9.31
12	10.82	15.73
13	5.47	7.98
14	2.71	3.93
15	2.42	3.50
16	2.35	3.40

5.3 Street Drainage

The 10-year runoff will be conveyed within the curbs and the 100-year runoff will be conveyed within the right-of-way. Vertical curb and gutter will be utilized where the 10-year runoff cannot be conveyed within the 4" rolled curb street section. The Flowmaster computer program was utilized to calculate curb and right-of-way capacities (see Appendix J for Flowmaster rating tables). Appendix A includes drainage calculations for street flows at Concentration Points throughout Phase I. It also includes the locations of 4" rolled curb and 6" vertical curb and gutter.

All onsite development will be designed to drain via surface/street flow to open channels proposed within the landscape and open space corridors. These channels will be sized to convey both the off-site and on-site 100-year storm water flows collected within the development. These channels will discharge into the on-site retention basins, which will ultimately outfall to the LACC at the south and southwest boundaries of the site.

Runoff from Areas 9-13, as shown on the Drainage Map, will be conveyed to Concentration Point 6 at Tract I via street flows. A catch basin (Catch Basin F) and two 24" dia culverts will convey this flow under Tract I to the channel in Tract H. This channel will convey the runoff east to Meadows Loop East, through a box culvert to Basin 5 within Tract G.

Runoff from Areas 14-20 will be conveyed to Concentration Point 7 via street flows. A combination catch basin and grate inlet (Catch Basin C) will convey the runoff to the channel in Tract M. This runoff and the offsite flows from Baseline Road (Concentration Point 4) and offsite flows north of Baseline Road (98 cfs) will be conveyed via the open channel to Kelsie Drive. An 8'x4' box culvert will convey the flow under Kelsie Drive to the open channel in Tract L. This channel empties into Basin 5 in Tract G.

Runoff from Areas 30-34 will be conveyed to Curb Openings 4 and 5 via street flow. The stormwater will enter Basin 5 via open channels.

As runoff enters Basin 5, the basin will fill and backup into Tract H through the 8'x4' box culvert (Culvert 4). In future phases, the open channel in Tract H will be extended west to the LACC, providing an outfall for Basin 5. The ultimate design of this channel is presented in the *Laveen Meadows Master Planned Community, Drainage MasterPlan*. In the meantime, should Basin 5 be completely filled, excess flow would spill along the southwest edge of the basin and sheet flow to the LACC. Basin 5 is currently designed to provide retention volume in excess of the 5-year, 2-hour retention requirement in place for the Laveen Meadows development.

Runoff from Areas 21-29 will be conveyed to Curb Openings 1-3 via street flow. This stormwater will flow to Basins 2-4. Basin 2 will spill to 66th Lane when its capacity is exceeded. Basins 3 and 4 will spill directly to the LACC.

5.4 Culverts

Pipe and/or box culverts are proposed for all roadway crossings within Phase I to convey the 100-year runoff without overtopping the roadways. The HY8 computer program was utilized to size the pipe culverts under 68th Drive and Valencia Drive West. The output files are located in Appendix C. The US Army Corp of Engineers HEC-1 hydrologic computer model and the US Army Corp of Engineers HEC-RAS hydraulic computer program were utilized to size the box culverts under Kelsie Drive and Meadows Loop East as part of the master-planning phase. These models are included in Appendix E of the *Laveen Meadows Master Planned Community, Drainage Master Plan* prepared by Kimley-Horn and Associates, Inc. and dated May 30, 2001. A summary of the on-site culverts and the 100-year peak discharges at these culverts is provided in the following table:

Table 3: Culvert Summary

Culvert No.	Location	Culvert Size	Computer Program Utilized	100-year Peak Flow (cfs)
1	68th Drive	3-24" Pipes	Rational and HY8	*47.80
2	Valencia Drive West	2-18" Pipes	Rational and HY8	11.64
3	Kelsie Drive	8'x4' Box	HEC-1 and HEC-RAS	155
4	Meadows East Loop	8'x4' Box	HEC-1 and HEC-RAS	155

*Includes runoff from Areas 7 and 8 and the Commercial Parcel (see Appendix E for 100-year peak flow calculations anticipated from the Commercial Parcel).

5.5 Channels

The Flowmaster computer program was utilized to design the open channel in Tract A. See Appendix F for the channel capacities. The US Army Corp of Engineers HEC-RAS hydraulic computer program was utilized to design the open channels in Tracts L, M, and H as part of the master-planning phase. These models are included in Appendix E of the *Laveen Meadows Master Planned Community, Drainage Master Plan.*

5.6 Curb Openings/Catch Basins and Spillways

Catch Basins will be utilized along Meadows Loop East to convey the 100-year peak flows from the right-of-way (Areas 36-39) to open channel and retention areas. Catch Basins A and B will convey runoff from Meadows Loop East into the open channel in Tracts L and M. Catch Basins D and E will convey runoff from Meadows Loop East directly into the 8'x4' box culvert (Culvert 4) under the roadway. The box culvert will convey the stormwater to Basin 5 in Tract G. A combination catch basin and grated inlet (Catch Basin C) will convey runoff from Areas 14-20 to the open channel in Tracts L and M (See Appendix G for catch basin calculations). And Catch Basin F will convey runoff from Areas 9-13 to the channel in Tract H. The following table provides the sizes of these catch basins as well as the 100-year peak flow contributing to each catch basin:

Table 4: Catch Basins

Catch Basin Description	100-Year Peak Flow (cfs)	Catch Basin Width (feet)
A	7.98	9
B	3.93	6
C	59.62	16
D	3.50	12
E	3.50	12
F	43.35	33

Depressed curb openings and spillways are utilized to convey the 100-year peak flow from the remaining on-site development to the retention basins (see Appendix H for depressed curb opening and spillway calculations). The following table provides the lengths of these depressed curb openings:

Table 5: Depressed Curb Openings

Curb Opening Description	100-Year Peak Flow (cfs)	Curb Opening Length (feet)
1	11.59	11
2	26.25	25
3	23.91	25
4	9.31	10
5	15.73	15

5.7 Retention

Since the Laveen Area Conveyance Channel provides a direct outlet to the Salt River, the City of Phoenix has reduced the retention requirement for the entire Laveen Meadows development to the 5-year, 2-hour storm event. Five retention basins will be located within Phase I, as shown on the Drainage Map included in Appendix L. Basin 1 will be temporary and will become an open channel in a future phase that drains west to the LACC. The temporary basin will spill to the west. Basin 2 will have excess capacity that will allow the 100-year, 2-hour runoff to be stored within the basin. Basins 3 and 4 will spill directly to the LACC. Basin 5 will have excess capacity to store the 100-year, 2-hour runoff. When the open channel west of Tract H is completed, Basin 5 will drain west to the LACC through this channel. Basin 6 is temporary and will spill to the west and pond along the western boundary of the Commercial Parcel. The retention volume will be included with the on-site retention for the Commercial Parcel when the parcel is developed. The calculations for these basins are located in Appendix I.

The City of Phoenix uses the following formula for retention volume calculation:

$$\mathbf{V_r = 7{,}200 \times C \times i \times A}$$

Where: **C** is the composite runoff coefficient for each land use

i is the 5-year, 2-hour intensity value obtained from the City of Phoenix

I-D-F curve = 0.66 in/hr

A is the area in acres

$\mathbf{V_r}$ is the required volume in cubic feet

The following table summarizes the required and provided retention basin volumes for Phase I:

Table 6: Retention Volumes

Basin No.	Volume Required (cf) (5-yr, 2-hr)	Volume Provided (cf)
1	7,900	13,958
2	14,689	40,569
3	26,067	29,264
4	27,693	37,247
5	174,010	357,141

5.8 Time to Drain

The City of Phoenix requirement to drain retention basins within 36 hours is accommodated within Phase I by the use of percolation through the retention basin bottoms. The percolation rate (25min/in) for these basins was obtained from the soils report prepared for this project by Western Technologies, Inc. See Appendix K for time to drain calculations. A summary of the time to drain for each basin is provided in the following table:

Table 7: Time To Drain

Basin No.	Time to Drain (hrs)
1	12.2
2	7.0
3	20.7
4	14.2
5	8.9

5.9 Finished Floor Elevations

The following criteria was utilized to establish the minimum finished floor elevations throughout Phase I:

- Finished Floors shall be a minimum of 6" above high curb or 14 inches above the low curb of the lot, whichever is greater.
- Finished floors shall be 1 foot above the adjoining base flood level (100-year storm).

All lots will be graded to drain to the street at the front of each lot.

6.0 REFERENCES

Laveen Meadows Master Planned Community Drainage Master Plan, Kimley-Horn and Associates, Inc., June 27, 2001.

Laveen Area Conveyance Channel Improvements 60% Design Report, Flood Control District of Maricopa County, June 2001.

City of Phoenix Storm Drainage Design Manual, Subdivision Drainage Design, City of Phoenix, July 1988.

Geotechnical Evaluation for Proposed Laveen Meadows Development, Western Technologies, Inc. January 9, 2001.

Appendix A – Rational Method Calculations

LAVEEN MEADOWS-PHASE I
DRAINAGE CALCULATIONS
City of Phoenix Rational Method

Conc. Point	Subbasin	Area (ac.)	Total Area (ac.)	Slope (ft/ft)	Street Length (ft)	Velocity (ft/sc)	Travel Time (min.)	Time of Conc (lot) (min.)	Total Time of Conc (min.)	Weighted C factor	$i_{10\ year}$ (in/hr)	$i_{100\ year}$ (in/hr)	$Q_{10\ year}$ (cfs)	$Q_{100\ year}$ (cfs)	Curb Height
	1	0.32	0.32	0.002	225	1.5	2.5	10	10	0.95	3.8	5.5	1.2	1.7	6
	2	0.3	0.3	0.0026	205	1.5	2.4	10	10	0.95	3.8	5.5	1.1	1.6	6
1	1+2	-	0.62	0.0026	205	1.8	1.9	10	10	0.95	3.8	5.5	2.2	3.2	6
										Enters Tract A Drainage Channel Via Scupper A					
2	1+2+3	0.5	1.12	0.002	430	1.9	3.9	10	10	0.83	3.8	5.5	3.5	5.1	6
										Tract A Drainage Channel					
	4	0.49	0.49	0.003	250	1.8	2.3	10	10	0.95	3.8	5.5	1.8	2.6	6
	5	0.36	0.36	0.002	250	1.5	2.9	10	10	0.95	3.8	5.5	1.3	1.9	6
3	4+5	-	0.85	0.003	250	1.8	2.3	10	10	0.95	3.8	5.5	3.1	4.4	6
										Enters Tract A Drainage Channel Via Scupper B					
4	1+2+3+4+5+6	0.58	2.55	0.002	930	2.4	6.5	10	10	0.83	3.8	5.5	8.0	11.6	6
										Tract A Drainage Channel					
	7	1.08	1.08	0.0024	800	2.1	6.3	10	10	0.95	3.8	5.5	3.9	5.6	6
	8	0.67	0.67	0.002	230	1.7	2.3	10	10	0.95	3.8	5.5	2.4	3.5	6
5	7+8	-	1.75	0.0024	800	2.4	5.6	10	10	0.95	3.8	5.5	6.3	9.1	6
										Enters Tract N (Basin 1) Via Scupper C					
	9	3.19	3.19	0.0039	440	2.4	3.1	10	13	0.69	3.5	5.1	7.7	11.2	4
	9+10	4.31	7.5	0.0022	500	2.8	3.0	-	16	0.69	3.15	4.65	16.3	24.1	6
	11	2.46	2.46	0.005	300	3.1	1.6	10	12	0.69	3.6	5.25	6.1	8.9	4
	12	1.4	1.4	0.005	300	2.7	1.9	10	12	0.69	3.6	5.25	3.5	5.1	4
	11+12	-	3.86	0.005	300	3.4	1.5	10	11	0.69	3.6	5.25	9.6	14.0	4
	11+12+13	1.73	5.59	0.005	650	3.8	2.9	10	13	0.69	3.5	5.1	13.5	19.7	6
6	9+10+11+12+13	13.09	13.09	0.0031	1070	3.8	4.8	10	15	0.69	3.3	4.8	29.8	43.4	6
										Enters Tract I Drainage Channel Via Curb Opening 6					
	14	3.15	3.15	0.003	625	2.7	3.9	10	14	0.69	3.4	5	7.4	10.9	4
	14+15	2.9	6.05	0.003	1050	3.2	5.5	10	15	0.69	3.2	4.7	13.4	19.6	6
	16	2.77	2.77	0.003	625	2.7	3.9	10	14	0.69	3.4	5	6.5	9.6	4
	16+17	2.21	4.98	0.003	925	2.9	5.3	10	15	0.69	3.2	4.7	11.0	16.2	6
	18	3.04	3.04	0.0032	430	2.7	2.7	10	13	0.69	3.5	5.1	7.3	10.7	4
	18+19	2.53	5.57	0.0032	900	3.1	4.8	10	15	0.69	3.3	4.8	12.7	18.4	6
	14+15+16+17+18+19		16.6	0.0032	900	4.1	3.7	10	14	0.69	3.4	5	38.9	57.3	6
	20	0.68	0.68	0.0122	245	3.7	1.1	10	11	0.95	3.7	5.4	2.4	3.5	6
7	14+15+16+17+18+19+20		17.28	0.0032	900	4.2	3.6	10	14	0.69	3.4	5	40.5	59.6	6
										Enters Tract M Drainage Channel Via Catch Basin C					
	21	2.4	2.4	0.002	360	2.2	2.7	10	13	0.69	3.5	5.1	5.8	8.4	4
8	21+22	0.96	3.36	0.002	480	2.3	3.5	10	13	0.69	3.4	5	7.9	11.6	6
										Enters Tract B (Basin 2) Via Curb Opening 1					
	23	3.67	3.67	0.0065	695	3.7	3.1	10	13	0.69	3.5	5.1	8.9	12.9	4
	24	2.4	2.4	0.0025	425	2.3	3.1	10	13	0.69	3.5	5.1	5.8	8.4	4
	23+24+25	0.43	6.5	0.0065	770	4.2	3.1	10	13	0.69	3.5	5.1	15.7	22.9	6
	26	0.96	0.96	0.0025	100	1.8	0.9	10	11	0.69	3.7	5.4	2.5	3.6	4
9	23+24+25+26	-	7.46	0.0065	770	4.4	2.9	10	13	0.69	3.5	5.1	18.0	26.3	6
										Enters Tract C (Basin 3) Via Curb Opening 2					

LAVEEN MEADOWS-PHASE I
DRAINAGE CALCULATIONS
City of Phoenix Rational Method

Conc. Point	Subbasin	Area (ac.)	Total Area (ac.)	Slope (ft/ft)	Street Length (ft)	Velocity (ft/sc)	Travel Time (min.)	Time of Conc (lot) (min.)	Total Time of Conc (min.)	Weighted C factor	$i_{10\ year}$ (in/hr)	$i_{100\ year}$ (in/hr)	$Q_{10\ year}$ (cfs)	$Q_{100\ year}$ (cfs)	Curb Height
	27	2.54	2.54	0.003	370	2.5	2.5	10	12	0.69	3.5	5.1	6.1	8.9	4
	27+28	3.97	6.51	0.003	930	3.2	4.8	10	15	0.69	3.3	4.8	14.8	21.6	6
	29	0.71	0.71	0.0025	150	1.7	1.5	10	11	0.69	3.7	5.4	1.8	2.6	4
10	**27+28+29**	-	7.22	0.003	930	3.2	4.8	10	15	0.69	3.3	4.8	16.4	23.9	6
										Enters Tract F (Basin 4) Via Curb Opening 3					
	30	2.81	2.81	0.003	400	2.6	2.6	10	13	0.69	3.5	5.1	6.8	9.9	4
	30+31	5.5	8.31	0.003	1050	3.4	5.1	10	15	0.69	3.3	4.8	18.9	27.5	6
	32	0.58	0.58	0.0122	150	2.9	0.9	10	11	0.69	3.7	5.4	1.5	2.2	4
11	**30+31+32**	-	2.81	0.003	930	3.4	4.6	10	15	0.69	3.3	4.8	6.4	9.3	6
										Enters Tract G (Basin 5) Via Curb Opening 4					
	33	2.89	2.89	0.003	325	2.6	2.1	10	12	0.69	3.5	5.1	7.0	10.2	4
12	**33+34**	1.86	4.75	0.003	555	2.9	3.2	10	13	0.69	3.3	4.8	10.8	15.7	6
										Enters Tract G (Basin 5) Via Curb Opening 5					
	35	1.35	1.35	0.01	300	3.4	1.5	10	11	0.69	3.7	5.4	3.4	5.0	4
13	**35+36**	0.57	1.92	0.01	300	3.9	1.3	10	11	0.77	3.7	5.4	5.5	8.0	6
										Enters Tract M Drainage Channel Via Catch Basin A					
14	**37**	0.83	0.83	0.0025	400	1.9	3.5	10	10	0.86	3.8	5.5	2.7	3.9	6
										Enters Tract M Drainage Channel Via Catch Basin B					
15	**38**	0.67	0.67	0.0025	775	1.8	7.2	10	10	0.95	3.8	5.5	2.4	3.5	6
										Enters Tract M Drainage Channel Via Catch Basin D					
16	**39**	0.65	0.65	0.0025	800	1.9	7.0	10	10	0.95	3.8	5.5	2.3	3.4	6
										Enters Tract M Drainage Channel Via Catch Basin E					

Appendix B - Scupper Calculations

SCUPPER (STA. 28+25) (SCUPPER A)

$Q_{100} = 3.24$ cfs

ORIFICE EQ: $Q_{100} = 0.6A\sqrt{2GH}$

ASSUME $H = 0.28'$ (1 DRY 12' LANE)

$$A = \frac{Q}{0.6\sqrt{2GH}}$$

$$= \frac{3.24}{0.6\sqrt{2(32.2)(0.28')}} = 1.27 \text{ ft}^2$$

$A = BH$

$$B = \frac{A}{H} = \frac{1.27 \text{ ft}^2}{0.5'} = 2.54' \rightarrow \underline{4'}$$

SCUPPER (STA. 23+50) (SCUPPER B)

$Q_{100} = 4.44$ cfs

$Q_{100} = 0.6A\sqrt{2GH}$

ASSUME $H = 0.28'$ (1 DRY 12' LANE)

$$A = \frac{Q}{0.6\sqrt{2GH}} = \frac{4.44}{0.6\sqrt{2(32.2)(0.28)}} = 1.74 \text{ ft}^2$$

$A = BH$

$$B = \frac{A}{H} = \frac{1.74 \text{ ft}^2}{0.5'} = 3.49' \rightarrow \underline{4'}$$

Kimley-Horn and Associates, Inc.

Sheet No. 2 of 2

Job LAVEEN MEADOWS Subject BASELINE SCUPPERS Job No. 091397008

Designed by JMM Date 6/15/01 Checked by _____ Date _____

SCUPPER (STA. 12+90)
(SCUPPER C)

$Q_{100} = 9.14$ cfs

$Q_{100} = 0.6 A \sqrt{2GH}$

ASSUME $H = 0.28'$ (1 DRY 12' LANE)

$$A = \frac{Q}{0.6\sqrt{2GH}} = \frac{9.14}{0.6\sqrt{2(32.2)(0.28')}} = 3.59 \text{ ft}^2$$

$A = BH$

$$B = \frac{A}{H} = \frac{3.59 \text{ ft}^2}{0.5'} = 7.17' \rightarrow \underline{8'}$$

Appendix C - Culvert Calculations

CURRENT DATE: 09-20-2001
CURRENT TIME: 16:52:20

FILE DATE: 09-20-2001
FILE NAME: CULVERT1

FHWA CULVERT ANALYSIS
HY-8, VERSION 6.0

CULV NO.	SITE DATA: INLET ELEV. (ft)	OUTLET ELEV. (ft)	CULVERT LENGTH (ft)	CULVERT SHAPE, MATERIAL, INLET: BARRELS SHAPE MATERIAL	SPAN (ft)	RISE (ft)	MANNING n	INLET TYPE
1	90.00	89.88	60.00	3 RCP	2.00	2.00	.012	CONVENTIONAL
2								
3								
4								
5								
6								

SUMMARY OF CULVERT FLOWS (cfs) FILE: CULVERT1 DATE: 09-20-2001

ELEV (ft)	TOTAL	1	2	3	4	5	6	ROADWAY	ITR
90.00	0.0	0.0	0.0	0.0	0.0	0.0	0.0	0.00	0
90.66	4.8	0.0	0.0	0.0	0.0	0.0	0.0	0.00	0
90.95	9.6	0.0	0.0	0.0	0.0	0.0	0.0	0.00	0
91.18	14.3	0.0	0.0	0.0	0.0	0.0	0.0	0.00	0
91.39	19.1	0.0	0.0	0.0	0.0	0.0	0.0	0.00	0
91.58	23.9	0.0	0.0	0.0	0.0	0.0	0.0	0.00	0
91.76	28.7	0.0	0.0	0.0	0.0	0.0	0.0	0.00	0
91.93	33.5	0.0	0.0	0.0	0.0	0.0	0.0	0.00	0
92.11	38.2	0.0	0.0	0.0	0.0	0.0	0.0	0.00	0
92.28	43.0	0.0	0.0	0.0	0.0	0.0	0.0	0.00	0
92.46	47.8	0.0	0.0	0.0	0.0	0.0	0.0	0.00	0
0.00	0.0	0.0	0.0	0.0	0.0	0.0	0.0	OVERTOPPING	

SUMMARY OF ITERATIVE SOLUTION ERRORS FILE: CULVERT1 DATE: 09-20-2001

HEAD ELEV (ft)	HEAD ERROR (ft)	TOTAL FLOW (cfs)	FLOW ERROR (cfs)	% FLOW ERROR
90.00	0.000	0.00	0.00	0.00
90.66	0.000	4.78	0.00	0.00
90.95	0.000	9.56	0.00	0.00
91.18	0.000	14.34	0.00	0.00
91.39	0.000	19.12	0.00	0.00
91.58	0.000	23.90	0.00	0.00
91.76	0.000	28.68	0.00	0.00
91.93	0.000	33.46	0.00	0.00
92.11	0.000	38.24	0.00	0.00
92.28	0.000	43.02	0.00	0.00
92.46	0.000	47.80	0.00	0.00

<1> TOLERANCE (ft) = 0.010 <2> TOLERANCE (%) = 1.000

CURRENT DATE: 09-20-2001
CURRENT TIME: 16:52:20

FILE DATE: 09-20-2001
FILE NAME: CULVERT1

PERFORMANCE CURVE FOR CULVERT 1 - 3(2.00 (ft) BY 2.00 (ft)) RCP

DIS-CHARGE FLOW (cfs)	HEAD-WATER ELEV. (ft)	INLET CONTROL DEPTH (ft)	OUTLET CONTROL DEPTH (ft)	FLOW TYPE <F4>	NORMAL DEPTH (ft)	CRIT. DEPTH (ft)	OUTLET DEPTH (ft)	TW DEPTH (ft)	OUTLET VEL. (fps)	TW VEL. (fps)
0.00	90.00	0.00	-0.12	0-NF	0.00	0.00	0.00	-89.88	0.00	0.00
4.78	90.66	0.53	0.66	2-M2c	0.51	0.43	0.43	-89.88	3.24	0.00
9.56	90.95	0.83	0.95	2-M2c	0.73	0.62	0.62	-89.88	3.85	0.00
14.34	91.18	1.08	1.18	2-M2c	0.92	0.77	0.77	-89.88	4.31	0.00
19.12	91.39	1.29	1.39	2-M2c	1.09	0.89	0.89	-89.88	4.72	0.00
23.90	91.58	1.48	1.58	2-M2c	1.26	1.00	1.00	-89.88	5.05	0.00
28.68	91.76	1.66	1.76	2-M2c	1.45	1.10	1.10	-89.88	5.40	0.00
33.46	91.93	1.83	1.93	2-M2c	1.69	1.20	1.20	-89.88	5.68	0.00
38.24	92.11	2.00	2.11	2-M2c	2.00	1.28	1.28	-89.88	6.01	0.00
43.02	92.28	2.18	2.28	2-M2c	2.00	1.36	1.36	-89.88	6.30	0.00
47.80	92.46	2.37	2.46	2-M2c	2.00	1.44	1.44	-89.88	6.59	0.00

El. inlet face invert 90.00 ft El. outlet invert 89.88 ft
El. inlet throat invert 0.00 ft El. inlet crest 0.00 ft

***** SITE DATA ***** CULVERT INVERT **********

INLET STATION	0.00 ft
INLET ELEVATION	90.00 ft
OUTLET STATION	60.00 ft
OUTLET ELEVATION	89.88 ft
NUMBER OF BARRELS	3
SLOPE (V/H)	0.0020
CULVERT LENGTH ALONG SLOPE	60.00 ft

***** CULVERT DATA SUMMARY **********

BARREL SHAPE	CIRCULAR
BARREL DIAMETER	2.00 ft
BARREL MATERIAL	CONCRETE
BARREL MANNING'S n	0.012
INLET TYPE	CONVENTIONAL
INLET EDGE AND WALL	SQUARE EDGE WITH HEADWALL
INLET DEPRESSION	NONE

CURRENT DATE: 09-20-2001 FILE DATE: 09-20-2001
CURRENT TIME: 16:52:20 FILE NAME: CULVERT1

TAILWATER

******* REGULAR CHANNEL CROSS SECTION ****************

BOTTOM WIDTH	0.00 ft
SIDE SLOPE H/V (X:1)	0.0
CHANNEL SLOPE V/H (ft/ft)	0.000
MANNING'S n (.01-0.1)	0.000
CHANNEL INVERT ELEVATION	0.00 ft
CULVERT NO.1 OUTLET INVERT ELEVATION	89.88 ft

******* UNIFORM FLOW RATING CURVE FOR DOWNSTREAM CHANNEL

FLOW (cfs)	W.S.E. (ft)	FROUDE NUMBER	DEPTH (ft)	VEL. (f/s)	SHEAR (psf)
0.00	0.00	0.000	0.00	0.00	0.00
4.78	0.00	0.000	0.00	0.00	0.00
9.56	0.00	0.000	0.00	0.00	0.00
14.34	0.00	0.000	0.00	0.00	0.00
19.12	0.00	0.000	0.00	0.00	0.00
23.90	0.00	0.000	0.00	0.00	0.00
28.68	0.00	0.000	0.00	0.00	0.00
33.46	0.00	0.000	0.00	0.00	0.00
38.24	0.00	0.000	0.00	0.00	0.00
43.02	0.00	0.000	0.00	0.00	0.00
47.80	0.00	0.000	0.00	0.00	0.00

ROADWAY OVERTOPPING DATA

WEIR COEFFICIENT	0.00
EMBANKMENT TOP WIDTH	0.00 ft

***** USER DEFINED ROADWAY PROFILE

CROSS-SECTION COORD. NO.	X ft	Y ft

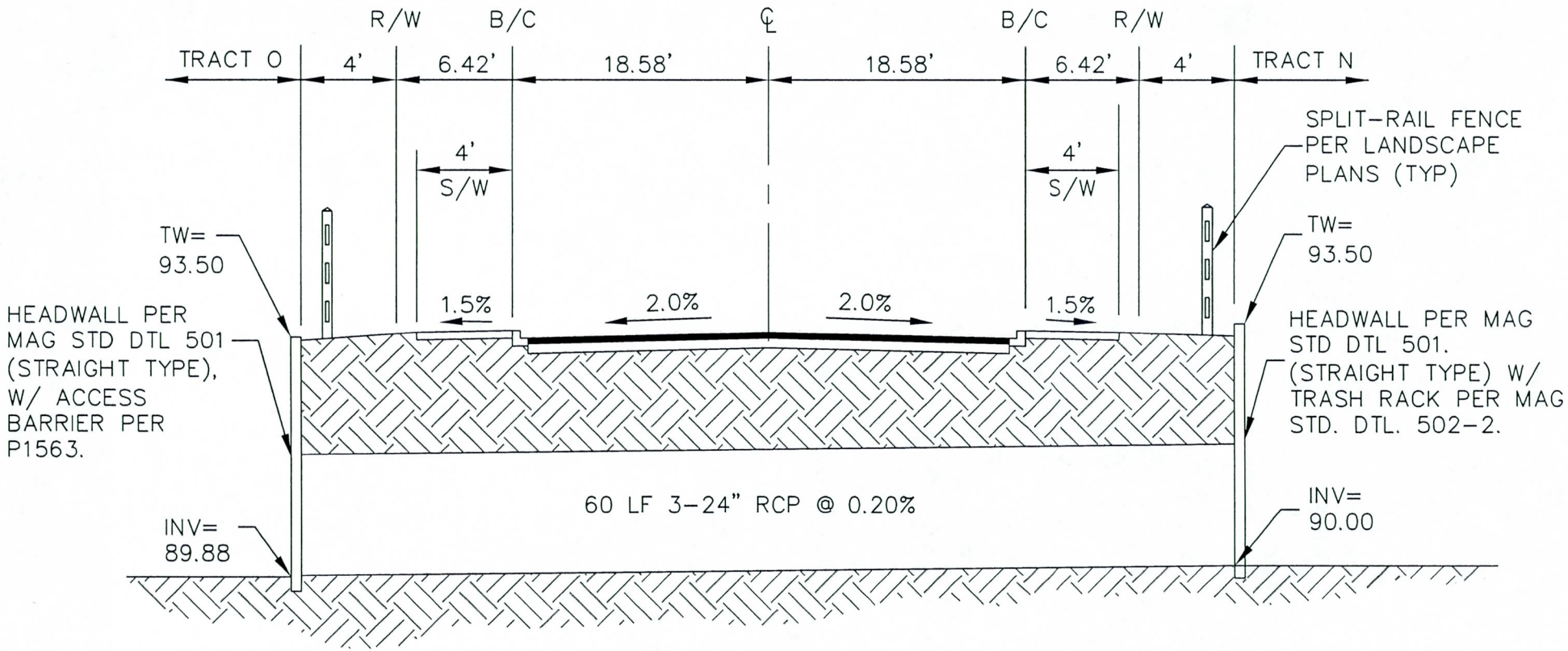

CULVERT 1

N.T.S.

CURRENT DATE: 09-20-2001
CURRENT TIME: 16:50:07

FILE DATE: 09-20-2001
FILE NAME: CULVERT2

FHWA CULVERT ANALYSIS
HY-8, VERSION 6.0

CULV NO.	SITE DATA: INLET ELEV. (ft)	OUTLET ELEV. (ft)	CULVERT LENGTH (ft)	CULVERT SHAPE, MATERIAL, INLET: BARRELS SHAPE MATERIAL	SPAN (ft)	RISE (ft)	MANNING n	INLET TYPE
1	987.70	987.50	80.00	2 RCP	1.50	1.50	.012	CONVENTIONAL
2								
3								
4								
5								
6								

SUMMARY OF CULVERT FLOWS (cfs) FILE: CULVERT2 DATE: 09-20-2001

ELEV (ft)	TOTAL	1	2	3	4	5	6	ROADWAY	ITR
987.70	0.0	0.0	0.0	0.0	0.0	0.0	0.0	0.00	0
988.14	1.2	0.0	0.0	0.0	0.0	0.0	0.0	0.00	0
988.32	2.4	0.0	0.0	0.0	0.0	0.0	0.0	0.00	0
988.47	3.6	0.0	0.0	0.0	0.0	0.0	0.0	0.00	0
988.60	4.8	0.0	0.0	0.0	0.0	0.0	0.0	0.00	0
988.72	6.0	0.0	0.0	0.0	0.0	0.0	0.0	0.00	0
988.83	7.2	0.0	0.0	0.0	0.0	0.0	0.0	0.00	0
988.94	8.4	0.0	0.0	0.0	0.0	0.0	0.0	0.00	0
989.05	9.6	0.0	0.0	0.0	0.0	0.0	0.0	0.00	0
989.15	10.8	0.0	0.0	0.0	0.0	0.0	0.0	0.00	0
989.26	12.0	0.0	0.0	0.0	0.0	0.0	0.0	0.00	0
0.00	0.0	0.0	0.0	0.0	0.0	0.0	0.0	OVERTOPPING	

SUMMARY OF ITERATIVE SOLUTION ERRORS FILE: CULVERT2 DATE: 09-20-2001

HEAD ELEV (ft)	HEAD ERROR (ft)	TOTAL FLOW (cfs)	FLOW ERROR (cfs)	% FLOW ERROR
987.70	0.000	0.00	0.00	0.00
988.14	0.000	1.20	0.00	0.00
988.32	0.000	2.40	0.00	0.00
988.47	0.000	3.60	0.00	0.00
988.60	0.000	4.80	0.00	0.00
988.72	0.000	6.00	0.00	0.00
988.83	0.000	7.20	0.00	0.00
988.94	0.000	8.40	0.00	0.00
989.05	0.000	9.60	0.00	0.00
989.15	0.000	10.80	0.00	0.00
989.26	0.000	12.00	0.00	0.00

<1> TOLERANCE (ft) = 0.010 <2> TOLERANCE (%) = 1.000

CURRENT DATE: 09-20-2001
CURRENT TIME: 16:50:07

FILE DATE: 09-20-2001
FILE NAME: CULVERT2

PERFORMANCE CURVE FOR CULVERT 1 - 2(1.50 (ft) BY 1.50 (ft)) RCP

DIS-CHARGE FLOW (cfs)	HEAD-WATER ELEV. (ft)	INLET CONTROL DEPTH (ft)	OUTLET CONTROL DEPTH (ft)	FLOW TYPE <F4>	NORMAL DEPTH (ft)	CRIT. DEPTH (ft)	OUTLET DEPTH (ft)	TW DEPTH (ft)	OUTLET VEL. (fps)	TW VEL. (fps)
0.00	987.70	0.00	-0.20	0-NF	0.00	0.00	0.00	0.00	0.00	0.00
1.20	988.14	0.34	0.44	2-M2c	0.32	0.28	0.28	0.11	2.56	0.51
2.40	988.32	0.53	0.62	2-M2c	0.47	0.40	0.40	0.17	3.11	0.67
3.60	988.47	0.69	0.77	2-M2c	0.58	0.50	0.50	0.22	3.48	0.78
4.80	988.60	0.82	0.90	2-M2c	0.68	0.58	0.58	0.26	3.76	0.87
6.00	988.72	0.95	1.02	2-M2c	0.77	0.65	0.65	0.30	4.04	0.95
7.20	988.83	1.06	1.13	2-M2c	0.86	0.72	0.72	0.33	4.27	1.02
8.40	988.94	1.17	1.24	2-M2c	0.96	0.78	0.78	0.36	4.50	1.08
9.60	989.05	1.27	1.35	2-M2c	1.05	0.84	0.84	0.39	4.72	1.13
10.80	989.15	1.36	1.45	2-M2c	1.17	0.90	0.90	0.42	4.91	1.18
12.00	989.26	1.46	1.56	2-M2c	1.33	0.94	0.94	0.45	5.12	1.23

El. inlet face invert 987.70 ft El. outlet invert 987.50 ft
El. inlet throat invert 0.00 ft El. inlet crest 0.00 ft

***** SITE DATA ***** EMBANKMENT TOE **********

UPSTREAM STATION	0.00 ft
UPSTREAM ELEVATION	987.70 ft
UPSTREAM EMBANKMENT SLOPE (X:1)	0.00
DOWMSTREAM STATION	80.00 ft
DOWNSTREAM ELEVATION	987.50 ft
DOWNSTREAM EMBANKMENT SLOPE (X:1)	0.00

***** CULVERT DATA SUMMARY **********

BARREL SHAPE	CIRCULAR
BARREL DIAMETER	1.50 ft
BARREL MATERIAL	CONCRETE
BARREL MANNING'S n	0.012
INLET TYPE	CONVENTIONAL
INLET EDGE AND WALL	SQUARE EDGE WITH HEADWALL
INLET DEPRESSION	NONE

CURRENT DATE: 09-20-2001
CURRENT TIME: 16:50:07

FILE DATE: 09-20-2001
FILE NAME: CULVERT2

TAILWATER

******* REGULAR CHANNEL CROSS SECTION ****************

BOTTOM WIDTH	20.00 ft
SIDE SLOPE H/V (X:1)	4.0
CHANNEL SLOPE V/H (ft/ft)	0.002
MANNING'S n (.01-0.1)	0.030
CHANNEL INVERT ELEVATION	987.50 ft
CULVERT NO.1 OUTLET INVERT ELEVATION	987.50 ft

******* UNIFORM FLOW RATING CURVE FOR DOWNSTREAM CHANNEL

FLOW (cfs)	W.S.E. (ft)	FROUDE NUMBER	DEPTH (ft)	VEL. (f/s)	SHEAR (psf)
0.00	987.50	0.000	0.00	0.00	0.00
1.20	987.61	0.268	0.11	0.51	0.01
2.40	987.67	0.284	0.17	0.67	0.02
3.60	987.72	0.294	0.22	0.78	0.03
4.80	987.76	0.301	0.26	0.87	0.03
6.00	987.80	0.307	0.30	0.95	0.04
7.20	987.83	0.311	0.33	1.02	0.04
8.40	987.86	0.315	0.36	1.08	0.05
9.60	987.89	0.318	0.39	1.13	0.05
10.80	987.92	0.320	0.42	1.18	0.05
12.00	987.95	0.323	0.45	1.23	0.06

ROADWAY OVERTOPPING DATA

ROADWAY SURFACE	PAVED
EMBANKMENT TOP WIDTH	40.00 ft

***** USER DEFINED ROADWAY PROFILE

CROSS-SECTION COORD. NO.	X ft	Y ft
1	0.00	990.63
2	0.00	990.13
3	33.00	989.47

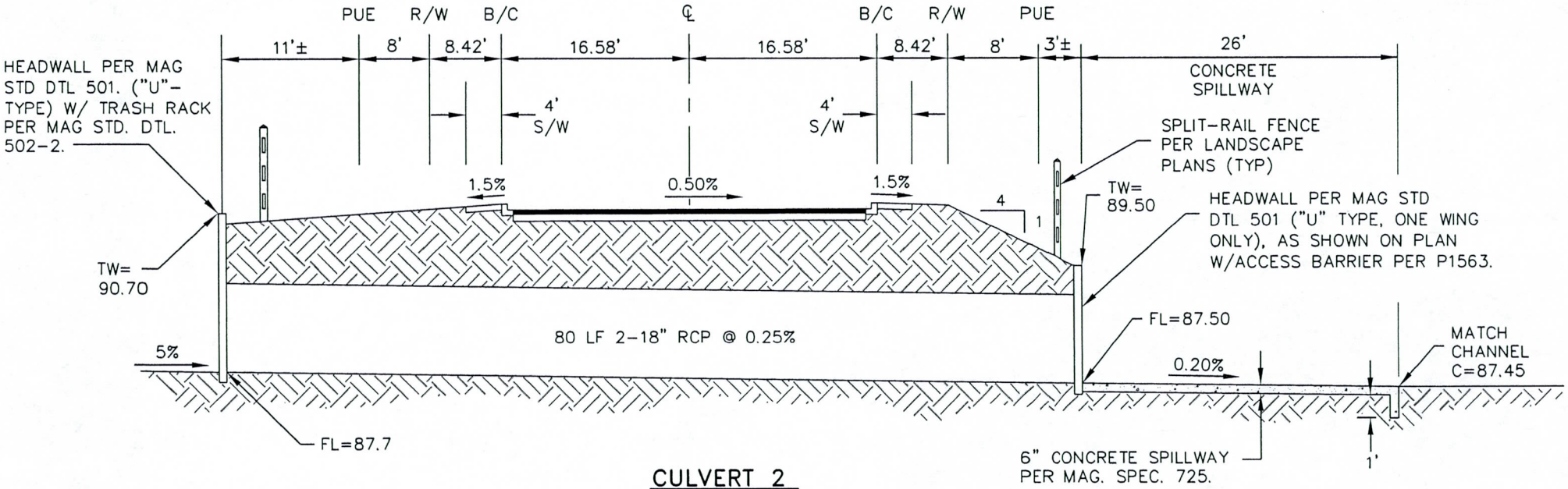

CULVERT 2

N.T.S.

CURRENT DATE: 09-20-2001
CURRENT TIME: 16:47:45

FILE DATE: 09-20-2001
FILE NAME: CULVERT3

FHWA CULVERT ANALYSIS
HY-8, VERSION 6.0

CULV NO.	SITE DATA: INLET ELEV. (ft)	OUTLET ELEV. (ft)	CULVERT LENGTH (ft)	CULVERT SHAPE, MATERIAL, INLET: BARRELS SHAPE MATERIAL	SPAN (ft)	RISE (ft)	MANNING n	INLET TYPE
1	86.35	86.05	123.00	1 RCB	8.00	4.00	.012	CONVENTIONAL
2								
3								
4								
5								
6								

SUMMARY OF CULVERT FLOWS (cfs) FILE: CULVERT3 DATE: 09-20-2001

ELEV (ft)	TOTAL	1	2	3	4	5	6	ROADWAY	ITR
987.50	0.0	0.0	0.0	0.0	0.0	0.0	0.0	0.00	0
988.03	15.5	0.0	0.0	0.0	0.0	0.0	0.0	0.00	0
988.31	31.0	0.0	0.0	0.0	0.0	0.0	0.0	0.00	0
988.55	46.5	0.0	0.0	0.0	0.0	0.0	0.0	0.00	0
988.77	62.0	0.0	0.0	0.0	0.0	0.0	0.0	0.00	0
988.99	77.5	0.0	0.0	0.0	0.0	0.0	0.0	0.00	0
989.21	93.0	0.0	0.0	0.0	0.0	0.0	0.0	0.00	0
989.42	108.5	0.0	0.0	0.0	0.0	0.0	0.0	0.00	0
989.65	124.0	0.0	0.0	0.0	0.0	0.0	0.0	0.00	0
989.88	139.5	0.0	0.0	0.0	0.0	0.0	0.0	0.00	0
990.11	155.0	0.0	0.0	0.0	0.0	0.0	0.0	0.00	0
0.00	0.0	0.0	0.0	0.0	0.0	0.0	0.0	OVERTOPPING	

SUMMARY OF ITERATIVE SOLUTION ERRORS FILE: CULVERT3 DATE: 09-20-2001

HEAD ELEV (ft)	HEAD ERROR (ft)	TOTAL FLOW (cfs)	FLOW ERROR (cfs)	% FLOW ERROR
987.50	0.000	0.00	0.00	0.00
988.03	0.000	15.50	0.00	0.00
988.31	0.000	31.00	0.00	0.00
988.55	0.000	46.50	0.00	0.00
988.77	0.000	62.00	0.00	0.00
988.99	0.000	77.50	0.00	0.00
989.21	0.000	93.00	0.00	0.00
989.42	0.000	108.50	0.00	0.00
989.65	0.000	124.00	0.00	0.00
989.88	0.000	139.50	0.00	0.00
990.11	0.000	155.00	0.00	0.00

<1> TOLERANCE (ft) = 0.010 <2> TOLERANCE (%) = 1.000

CURRENT DATE: 09-20-2001 FILE DATE: 09-20-2001
CURRENT TIME: 16:47:45 FILE NAME: CULVERT3

PERFORMANCE CURVE FOR CULVERT 1 - 1(8.00 (ft) BY 4.00 (ft)) RCB

DIS-CHARGE FLOW (cfs)	HEAD-WATER ELEV. (ft)	INLET CONTROL DEPTH (ft)	OUTLET CONTROL DEPTH (ft)	FLOW TYPE <F4>	NORMAL DEPTH (ft)	CRIT. DEPTH (ft)	OUTLET DEPTH (ft)	TW DEPTH (ft)	OUTLET VEL. (fps)	TW VEL. (fps)
0.00	987.50	0.00	901.15	0-NF	0.00	0.00	0.00	901.45	0.00	0.00
15.50	988.03	0.84	901.68	4-FFt	0.51	0.49	4.00	901.97	0.48	1.35
31.00	988.31	1.33	901.96	4-FFt	0.82	0.78	4.00	902.23	0.97	1.72
46.50	988.55	1.75	902.20	4-FFt	1.06	1.02	4.00	902.44	1.45	1.97
62.00	988.77	2.11	902.42	4-FFt	1.29	1.23	4.00	902.61	1.94	2.17
77.50	988.99	2.43	902.64	4-FFt	1.50	1.43	4.00	902.77	2.42	2.33
93.00	989.21	2.74	902.86	4-FFt	1.70	1.62	4.00	902.91	2.91	2.47
108.50	989.42	3.02	903.07	4-FFt	1.89	1.79	4.00	903.04	3.39	2.59
124.00	989.65	3.30	903.30	4-FFt	2.07	1.96	4.00	903.16	3.88	2.70
139.50	989.88	3.57	903.53	4-FFt	2.25	2.12	4.00	903.28	4.36	2.80
155.00	990.11	3.84	903.76	4-FFt	2.42	2.27	4.00	903.38	4.84	2.89

El. inlet face invert 86.35 ft El. outlet invert 86.05 ft
El. inlet throat invert 0.00 ft El. inlet crest 0.00 ft

***** SITE DATA ***** EMBANKMENT TOE **********

UPSTREAM STATION	0.00 ft
UPSTREAM ELEVATION	86.35 ft
UPSTREAM EMBANKMENT SLOPE (X:1)	0.00
DOWMSTREAM STATION	123.00 ft
DOWNSTREAM ELEVATION	86.05 ft
DOWNSTREAM EMBANKMENT SLOPE (X:1)	0.00

***** CULVERT DATA SUMMARY **********

BARREL SHAPE	BOX
BARREL SPAN	8.00 ft
BARREL RISE	4.00 ft
BARREL MATERIAL	CONCRETE
BARREL MANNING'S n	0.012
INLET TYPE	CONVENTIONAL
INLET EDGE AND WALL	SQUARE EDGE (90-45 DEG.)
INLET DEPRESSION	NONE

CURRENT DATE: 09-20-2001
CURRENT TIME: 16:47:45

FILE DATE: 09-20-2001
FILE NAME: CULVERT3

TAILWATER

******* REGULAR CHANNEL CROSS SECTION ****************

BOTTOM WIDTH	20.00 ft
SIDE SLOPE H/V (X:1)	4.0
CHANNEL SLOPE V/H (ft/ft)	0.002
MANNING'S n (.01-0.1)	0.030
CHANNEL INVERT ELEVATION	987.50 ft
CULVERT NO.1 OUTLET INVERT ELEVATION	86.05 ft

******* UNIFORM FLOW RATING CURVE FOR DOWNSTREAM CHANNEL

FLOW (cfs)	W.S.E. (ft)	FROUDE NUMBER	DEPTH (ft)	VEL. (f/s)	SHEAR (psf)
0.00	987.50	0.000	0.00	0.00	0.00
15.50	988.02	0.328	0.52	1.35	0.06
31.00	988.28	0.342	0.78	1.72	0.10
46.50	988.49	0.350	0.99	1.97	0.12
62.00	988.66	0.354	1.16	2.17	0.14
77.50	988.82	0.358	1.32	2.33	0.16
93.00	988.96	0.360	1.46	2.47	0.18
108.50	989.09	0.362	1.59	2.59	0.20
124.00	989.21	0.364	1.71	2.70	0.21
139.50	989.33	0.365	1.83	2.80	0.23
155.00	989.43	0.367	1.93	2.89	0.24

ROADWAY OVERTOPPING DATA

ROADWAY SURFACE	PAVED
EMBANKMENT TOP WIDTH	40.00 ft

***** USER DEFINED ROADWAY PROFILE

CROSS-SECTION COORD. NO.	X ft	Y ft
1	0.00	990.63
2	0.00	990.13
3	33.00	989.47

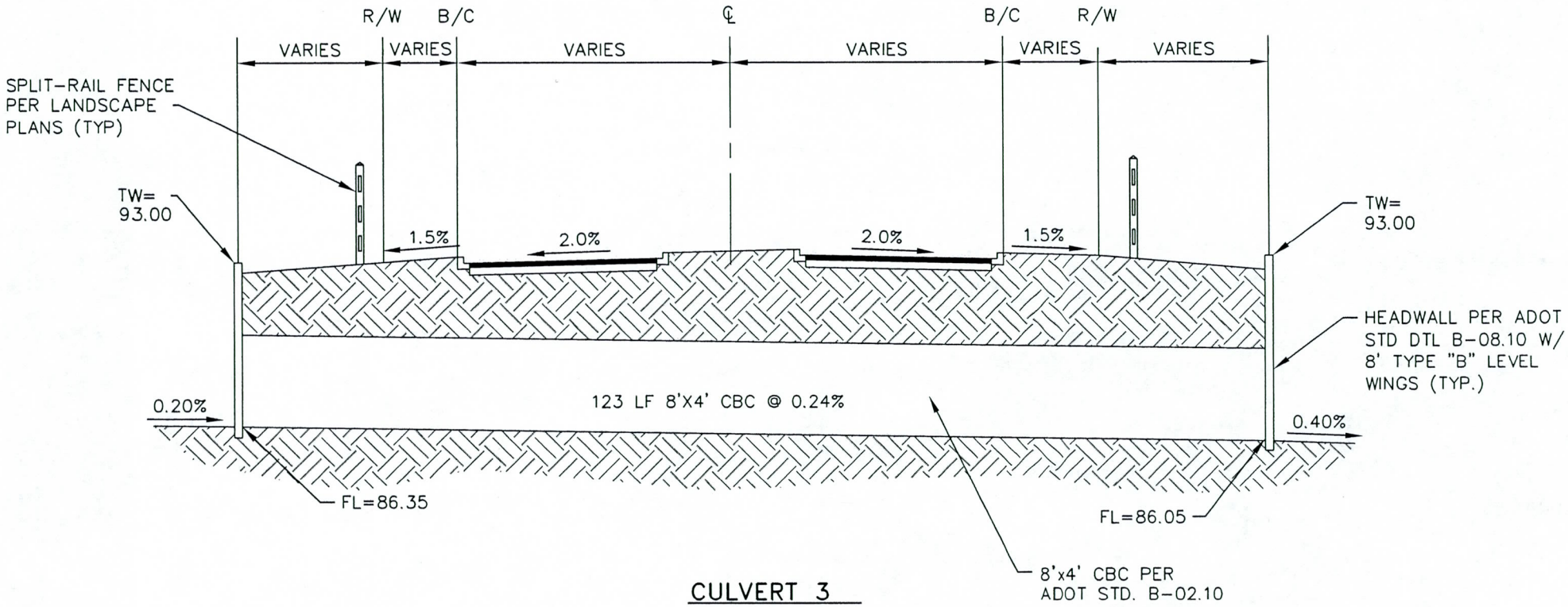

CULVERT 3

N.T.S.

CURRENT DATE: 09-20-2001
CURRENT TIME: 16:56:31

FILE DATE: 09-20-2001
FILE NAME: CULVERT4

FHWA CULVERT ANALYSIS
HY-8, VERSION 6.0

CULV NO.	SITE DATA: INLET ELEV. (ft)	OUTLET ELEV. (ft)	CULVERT LENGTH (ft)	CULVERT SHAPE, MATERIAL, INLET: BARRELS SHAPE MATERIAL	SPAN (ft)	RISE (ft)	MANNING n	INLET TYPE
1	85.45	85.00	90.00	1 RCB	8.00	4.00	.012	CONVENTIONAL
2								
3								
4								
5								
6								

SUMMARY OF CULVERT FLOWS (cfs) FILE: CULVERT4 DATE: 09-20-2001

ELEV (ft)	TOTAL	1	2	3	4	5	6	ROADWAY	ITR
987.50	0.0	0.0	0.0	0.0	0.0	0.0	0.0	0.00	0
988.03	15.5	0.0	0.0	0.0	0.0	0.0	0.0	0.00	0
988.31	31.0	0.0	0.0	0.0	0.0	0.0	0.0	0.00	0
988.54	46.5	0.0	0.0	0.0	0.0	0.0	0.0	0.00	0
988.76	62.0	0.0	0.0	0.0	0.0	0.0	0.0	0.00	0
988.98	77.5	0.0	0.0	0.0	0.0	0.0	0.0	0.00	0
989.19	93.0	0.0	0.0	0.0	0.0	0.0	0.0	0.00	0
989.40	108.5	0.0	0.0	0.0	0.0	0.0	0.0	0.00	0
989.62	124.0	0.0	0.0	0.0	0.0	0.0	0.0	0.00	0
989.84	139.5	0.0	0.0	0.0	0.0	0.0	0.0	0.00	0
990.07	155.0	0.0	0.0	0.0	0.0	0.0	0.0	0.00	0
0.00	0.0	0.0	0.0	0.0	0.0	0.0	0.0	OVERTOPPING	

SUMMARY OF ITERATIVE SOLUTION ERRORS FILE: CULVERT4 DATE: 09-20-2001

HEAD ELEV (ft)	HEAD ERROR (ft)	TOTAL FLOW (cfs)	FLOW ERROR (cfs)	% FLOW ERROR
987.50	0.000	0.00	0.00	0.00
988.03	0.000	15.50	0.00	0.00
988.31	0.000	31.00	0.00	0.00
988.54	0.000	46.50	0.00	0.00
988.76	0.000	62.00	0.00	0.00
988.98	0.000	77.50	0.00	0.00
989.19	0.000	93.00	0.00	0.00
989.40	0.000	108.50	0.00	0.00
989.62	0.000	124.00	0.00	0.00
989.84	0.000	139.50	0.00	0.00
990.07	0.000	155.00	0.00	0.00

<1> TOLERANCE (ft) = 0.010 <2> TOLERANCE (%) = 1.000

CURRENT DATE: 09-20-2001 FILE DATE: 09-20-2001
CURRENT TIME: 16:56:31 FILE NAME: CULVERT4

PERFORMANCE CURVE FOR CULVERT 1 - 1(8.00 (ft) BY 4.00 (ft)) RCB

DIS-CHARGE FLOW (cfs)	HEAD-WATER ELEV. (ft)	INLET CONTROL DEPTH (ft)	OUTLET CONTROL DEPTH (ft)	FLOW TYPE <F4>	NORMAL DEPTH (ft)	CRIT. DEPTH (ft)	OUTLET DEPTH (ft)	TW DEPTH (ft)	OUTLET VEL. (fps)	TW VEL. (fps)
0.00	987.50	0.00	902.05	0-NF	0.00	0.00	0.00	902.50	0.00	0.00
15.50	988.03	0.84	902.58	4-FFt	0.42	0.49	4.00	903.02	0.48	1.35
31.00	988.31	1.33	902.86	4-FFt	0.63	0.78	4.00	903.28	0.97	1.72
46.50	988.54	1.74	903.09	4-FFt	0.84	1.02	4.00	903.49	1.45	1.97
62.00	988.76	2.10	903.31	4-FFt	1.01	1.23	4.00	903.66	1.94	2.17
77.50	988.98	2.43	903.53	4-FFt	1.17	1.43	4.00	903.82	2.42	2.33
93.00	989.19	2.73	903.74	4-FFt	1.32	1.62	4.00	903.96	2.91	2.47
108.50	989.40	3.02	903.95	4-FFt	1.47	1.79	4.00	904.09	3.39	2.59
124.00	989.62	3.30	904.17	4-FFt	1.61	1.96	4.00	904.21	3.88	2.70
139.50	989.84	3.57	904.39	4-FFt	1.74	2.12	4.00	904.33	4.36	2.80
155.00	990.07	3.83	904.62	4-FFt	1.87	2.27	4.00	904.43	4.84	2.89

El. inlet face invert 85.45 ft El. outlet invert 85.00 ft
El. inlet throat invert 0.00 ft El. inlet crest 0.00 ft

***** SITE DATA ***** EMBANKMENT TOE **********

UPSTREAM STATION	0.00 ft
UPSTREAM ELEVATION	85.45 ft
UPSTREAM EMBANKMENT SLOPE (X:1)	0.00
DOWMSTREAM STATION	90.00 ft
DOWNSTREAM ELEVATION	85.00 ft
DOWNSTREAM EMBANKMENT SLOPE (X:1)	0.00

***** CULVERT DATA SUMMARY **********

BARREL SHAPE	BOX
BARREL SPAN	8.00 ft
BARREL RISE	4.00 ft
BARREL MATERIAL	CONCRETE
BARREL MANNING'S n	0.012
INLET TYPE	CONVENTIONAL
INLET EDGE AND WALL	SQUARE EDGE (90-45 DEG.)
INLET DEPRESSION	NONE

CURRENT DATE: 09-20-2001
CURRENT TIME: 16:56:31

FILE DATE: 09-20-2001
FILE NAME: CULVERT4

TAILWATER

******* REGULAR CHANNEL CROSS SECTION ****************

BOTTOM WIDTH	20.00 ft
SIDE SLOPE H/V (X:1)	4.0
CHANNEL SLOPE V/H (ft/ft)	0.002
MANNING'S n (.01-0.1)	0.030
CHANNEL INVERT ELEVATION	987.50 ft
CULVERT NO.1 OUTLET INVERT ELEVATION	85.00 ft

******* UNIFORM FLOW RATING CURVE FOR DOWNSTREAM CHANNEL

FLOW (cfs)	W.S.E. (ft)	FROUDE NUMBER	DEPTH (ft)	VEL. (f/s)	SHEAR (psf)
0.00	987.50	0.000	0.00	0.00	0.00
15.50	988.02	0.328	0.52	1.35	0.06
31.00	988.28	0.342	0.78	1.72	0.10
46.50	988.49	0.350	0.99	1.97	0.12
62.00	988.66	0.354	1.16	2.17	0.14
77.50	988.82	0.358	1.32	2.33	0.16
93.00	988.96	0.360	1.46	2.47	0.18
108.50	989.09	0.362	1.59	2.59	0.20
124.00	989.21	0.364	1.71	2.70	0.21
139.50	989.33	0.365	1.83	2.80	0.23
155.00	989.43	0.367	1.93	2.89	0.24

ROADWAY OVERTOPPING DATA

ROADWAY SURFACE	PAVED
EMBANKMENT TOP WIDTH	40.00 ft

***** USER DEFINED ROADWAY PROFILE

CROSS-SECTION COORD. NO.	X ft	Y ft
1	0.00	990.63
2	0.00	990.13
3	33.00	989.47

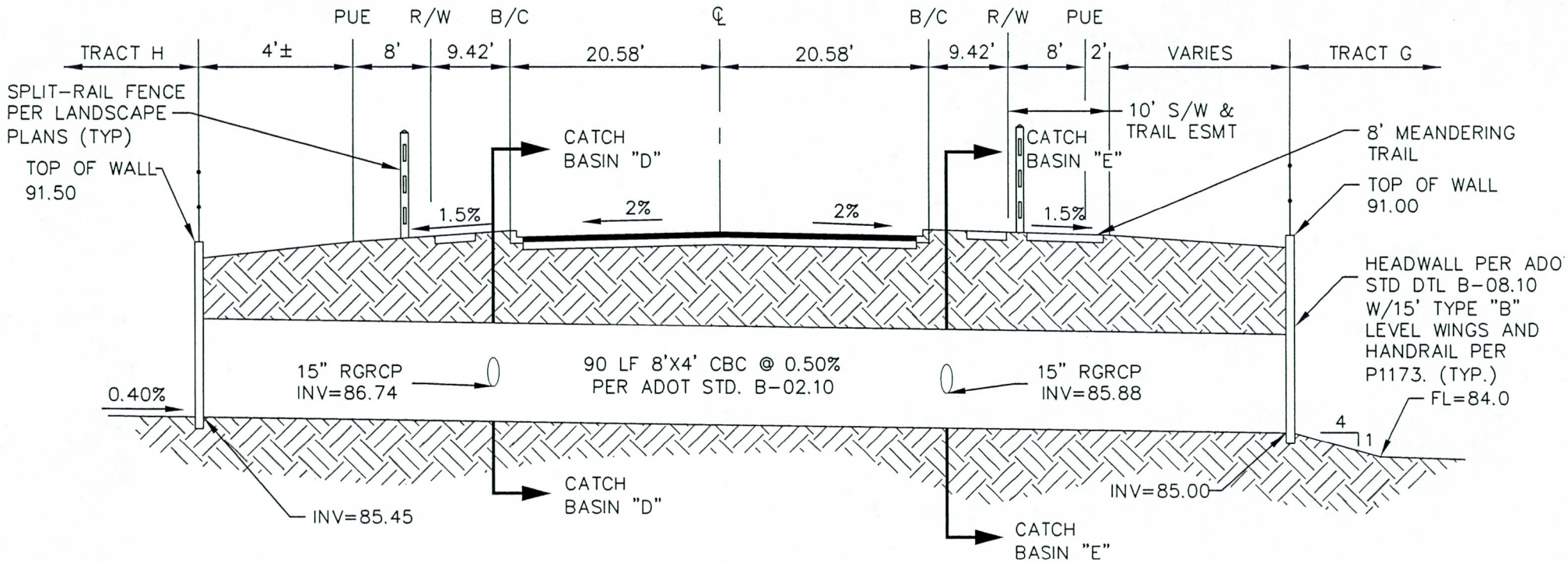

CULVERT 4

N.T.S.

Appendix D – Undeveloped Commercial Parcel Calculations

Kimley-Horn and Associates, Inc.

Sheet No. 1 of 1

Job LAVEEN MEADOWS Subject COMMERCIAL DITCH Job No. 091397008

Designed by JMM Date 9/21/01 Checked by _____ Date _____

$Q = CIA$

$A = 8.27$ AC

$C = 0.35$

$I = 5.5$ IN/HR $\quad (T_{c\,INITIAL} = 10$ MIN.$)$

$Q = (0.35)(5.5 \text{ IN/HR})(8.27 \text{ AC}) = 15.92$ CFS

VEL = 1.95 FT/S

$T_c = \frac{L}{60V} = \frac{940'}{60(1.95 \text{ FT/S})} = 8.03$ MIN OK USE 10 MIN.

Appendix E - Future Commercial Parcel Calculations

Kimley-Horn and Associates, Inc.

Sheet No. 1 of 1

Job LAUEEN MEADOWS Subject CULVERT 1 Job No. 091397008

Designed by JMM Date 9/21/01 Checked by _____ Date _____

TOTAL Q ENTERING CULVERT 1 = BASELINE ROAD + COMMERCIAL LOT

BASELINE ROAD

Q_{100} = 9.14 CFS (CONC. PT. 5 FROM APP. A)

COMMERCIAL LOT

$Q_{100} = CIA$

A = 8.27 AC
C = 0.90
I = 5.5 IN/HR (T_c = 10 MIN)

$Q_{100} = (0.9)(5.5\ IN/HR)(8.27\ AC) = 40.94\ CFS$

TOTAL Q ENTERING CULVERT 1 = 9.14 CFS + 40.94 CFS

= 50.1 CFS

Appendix F - Channel Calculations

Tract A (Concentration Point 1 to 2)
Worksheet for Triangular Channel

Project Description	
Worksheet	Baseline Channel
Flow Element	Triangular Channe
Method	Manning's Formul
Solve For	Channel Depth

Input Data		
Mannings Coeffic	0.035	
Slope	300000	ft/ft
Left Side Slope	4.00	H : V
Right Side Slope	4.00	H : V
Discharge	3.20	cfs

Results		
Depth	0.34	ft
Flow Area	0.5	ft²
Wetted Perim	2.79	ft
Top Width	2.71	ft
Critical Depth	0.52	ft
Critical Slope	0.029034	ft/ft
Velocity	6.98	ft/s
Velocity Head	0.76	ft
Specific Energ	1.09	ft
Froude Numb	2.99	
Flow Type	Supercritical	

Tract A (Concentration Point 1 to 2)
Cross Section for Triangular Channel

Project Description	
Worksheet	Baseline Channel
Flow Element	Triangular Channe
Method	Manning's Formul
Solve For	Channel Depth

Section Data		
Mannings Coeffic	0.035	
Slope	300000	ft/ft
Depth	0.34	ft
Left Side Slope	4.00	H : V
Right Side Slope	4.00	H : V
Discharge	3.20	cfs

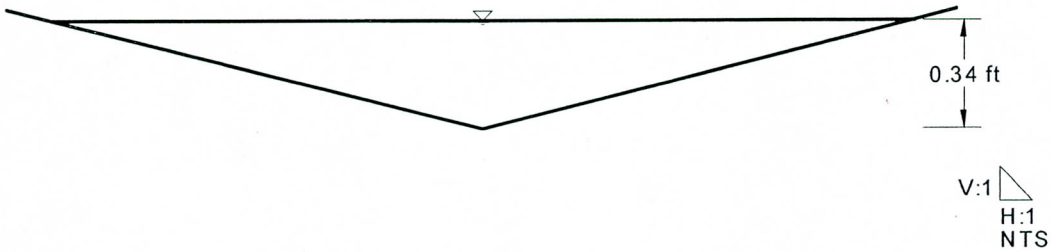

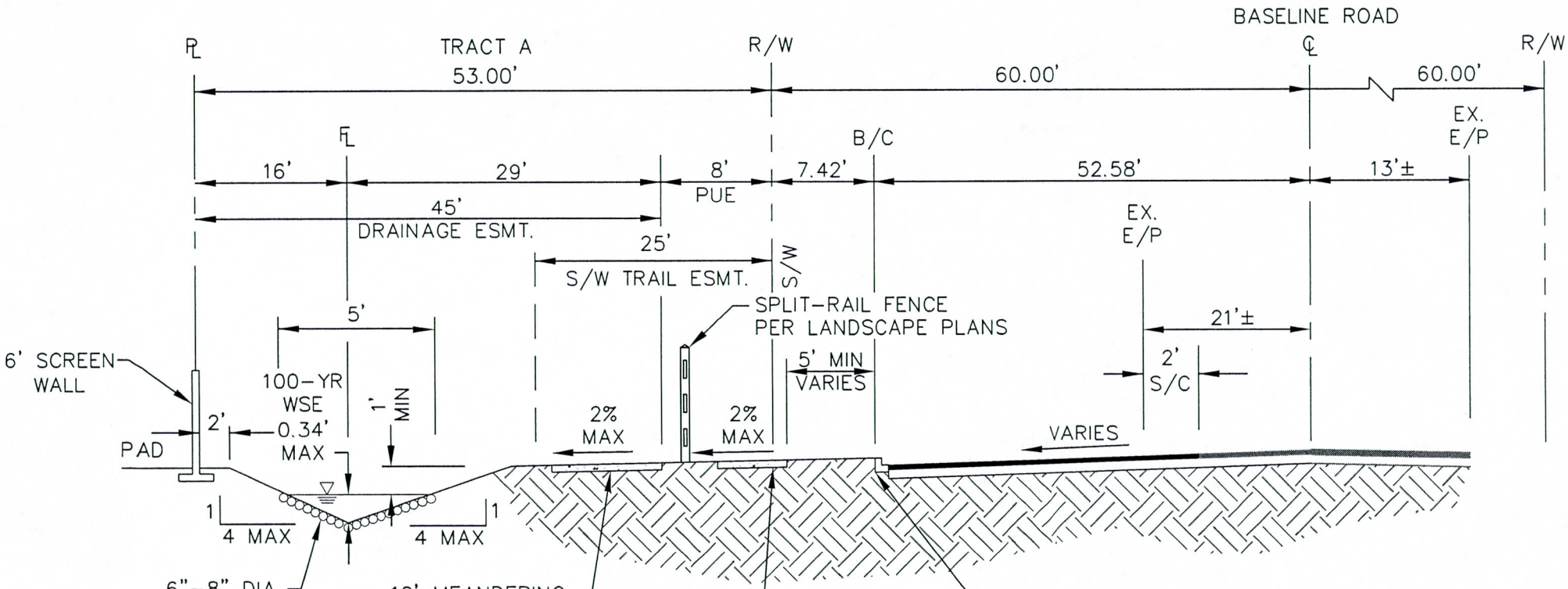

SECTION A-A

N.T.S.

Tract A (Concentration Point 2 to 7)
Worksheet for Triangular Channel

Project Description	
Worksheet	Baseline Channel
Flow Element	Triangular Channe
Method	Manning's Formul
Solve For	Channel Depth

Input Data		
Mannings Coeffic	0.035	
Slope	300000	ft/ft
Left Side Slope	4.00	H : V
Right Side Slope	4.00	H : V
Discharge	11.60	cfs

Results		
Depth	0.55	ft
Flow Area	1.2	ft²
Wetted Perim	4.53	ft
Top Width	4.39	ft
Critical Depth	0.88	ft
Critical Slope	0.024453	ft/ft
Velocity	9.62	ft/s
Velocity Head	1.44	ft
Specific Energ	1.99	ft
Froude Numb	3.24	
Flow Type	Supercritical	

Tract A (Concentration Point 2 to 7)
Cross Section for Triangular Channel

Project Description	
Worksheet	Baseline Channel
Flow Element	Triangular Channe
Method	Manning's Formul
Solve For	Channel Depth

Section Data		
Mannings Coeffic	0.035	
Slope	300000	ft/ft
Depth	0.55	ft
Left Side Slope	4.00	H : V
Right Side Slope	4.00	H : V
Discharge	11.60	cfs

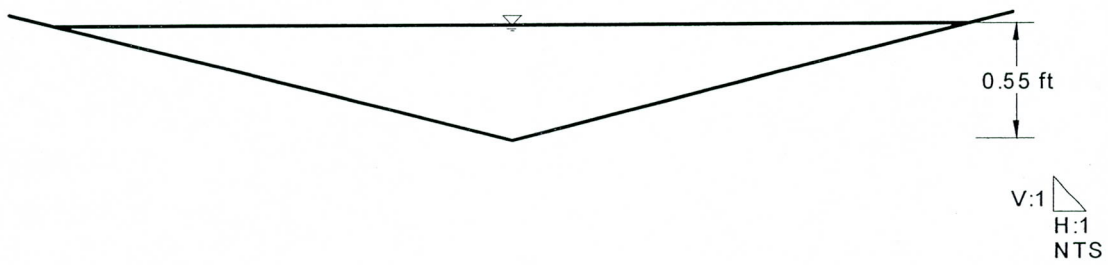

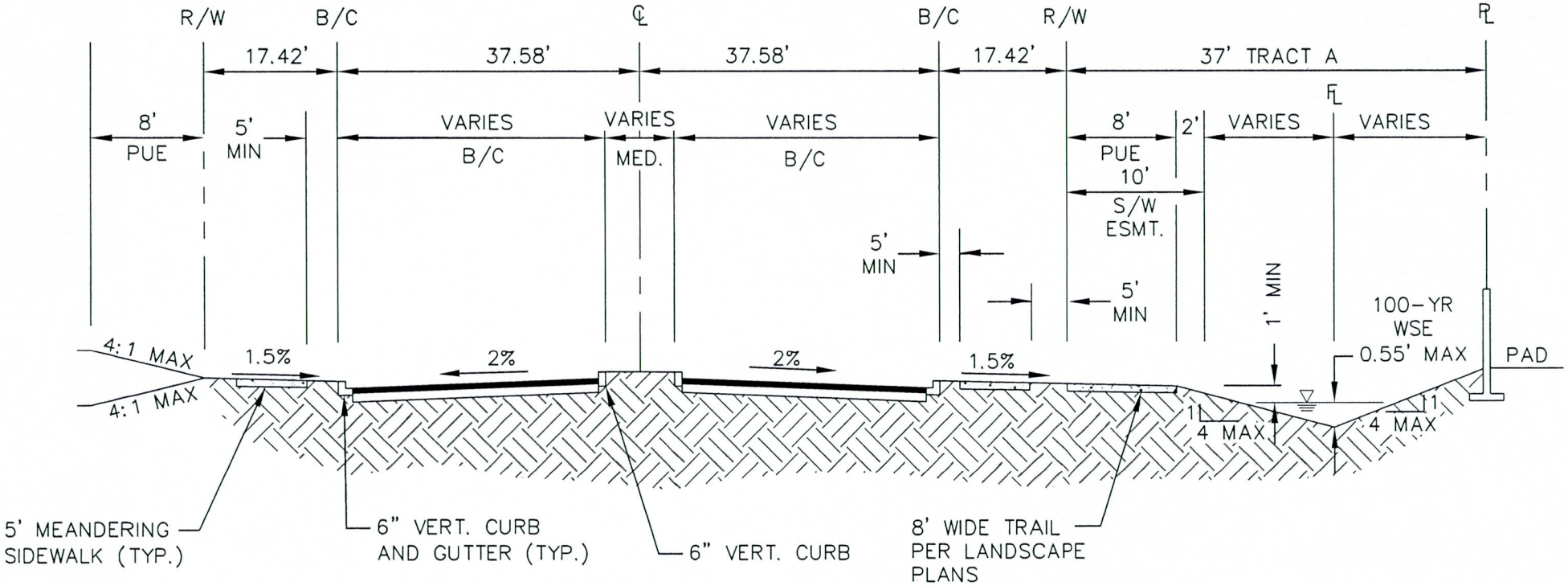

SECTION D-D

N.T.S.

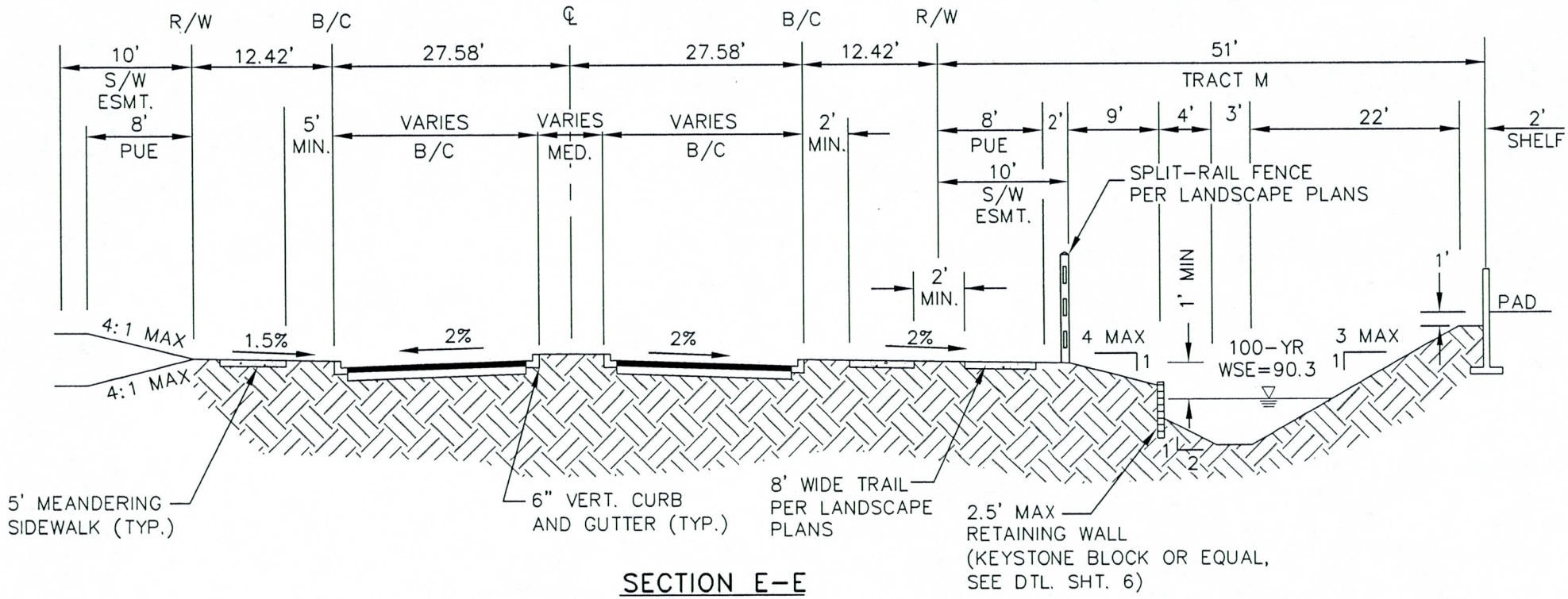

SECTION E-E

N.T.S.

Tract M Channel (Valencia Dr. to Kelsie Dr.)
Worksheet for Irregular Channel

Project Description	
Worksheet	Narrow Sectior
Flow Element	Irregular Chani
Method	Manning's Forr
Solve For	Discharge

Input Data		
Slope	002000	ft/ft
Water Surface Elev	90.30	ft

Options	
Current Roughness Methc	ved Lotter's Method
Open Channel Weighting	ved Lotter's Method
Closed Channel Weightin	Horton's Method

Results		
Mannings Coeffic	0.030	
Elevation Range	.67 to 96.00	
Discharge	73.48	cfs
Flow Area	24.8	ft²
Wetted Perimeter	16.42	ft
Top Width	14.89	ft
Actual Depth	2.63	ft
Critical Elevation	89.38	ft
Critical Slope	0.013349	ft/ft
Velocity	2.96	ft/s
Velocity Head	0.14	ft
Specific Energy	90.44	ft
Froude Number	0.41	
Flow Type	Subcritical	

Roughness Segments

Start Station	End Station	Mannings Coefficient
-0+05	0+00	0.030
0+00	0+00	0.015
0+00	0+31	0.030
0+31	0+31	0.015
0+31	0+50	0.030

Natural Channel Points

Station (ft)	Elevation (ft)
-0+05	96.00
0+00	96.00
0+00	95.00
0+02	95.00
0+24	87.67
0+27	87.67
0+31	89.67
0+31	92.17
0+40	94.42

Tract M Channel (Valencia Dr. to Kelsie Dr.)
Worksheet for Irregular Channel

Natural Channel Points	
Station (ft)	Elevation (ft)
0+50	95.00

Tract M (Valencia Dr. to Kelsie Drive)
Cross Section for Irregular Channel

Project Description	
Worksheet	Narrow Sectior
Flow Element	Irregular Chani
Method	Manning's Forr
Solve For	Discharge

Section Data		
Mannings Coefficie	0.030	
Slope	0.002000	ft/ft
Water Surface Elev	90.30	ft
Elevation Range	'.67 to 96.00	
Discharge	73.48	cfs

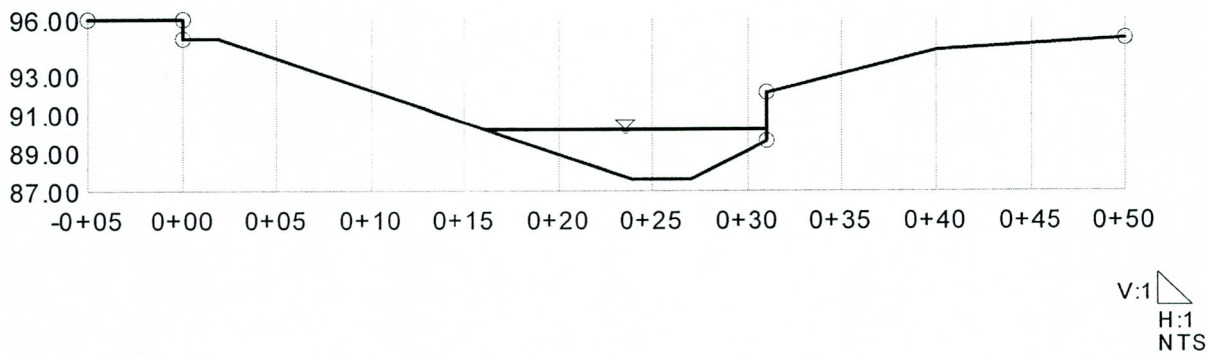

Tract L (Kelsie Dr. to Tract G)
Worksheet for Irregular Channel

Project Description	
Worksheet	Wider Section
Flow Element	Irregular Chan
Method	Manning's For
Solve For	Discharge

Input Data		
Slope	002000	ft/ft
Water Surface Elev	90.00	ft

Options	
Current Roughness Meth	ved Lotter's Method
Open Channel Weighting	ved Lotter's Method
Closed Channel Weightin	Horton's Method

Results		
Mannings Coeffic	0.030	
Elevation Range	.00 to 96.50	
Discharge	77.06	cfs
Flow Area	29.0	ft²
Wetted Perimete	22.07	ft
Top Width	21.50	ft
Actual Depth	2.00	ft
Critical Elevation	89.22	ft
Critical Slope	0.014003	ft/ft
Velocity	2.66	ft/s
Velocity Head	0.11	ft
Specific Energy	90.11	ft
Froude Number	0.40	
Flow Type	Subcritical	

Roughness Segments

Start Station	End Station	Mannings Coefficient
-0+05	0+00	0.030
0+00	0+00	0.015
0+00	0+59	0.030

Natural Channel Points

Station (ft)	Elevation (ft)
-0+05	96.50
0+00	96.50
0+00	95.50
0+23	88.00
0+30	88.00
0+49	92.75
0+59	93.00

Tract L (Kelsie Dr. to Tract G)
Cross Section for Irregular Channel

Project Description	
Worksheet	Wider Section
Flow Element	Irregular Chan
Method	Manning's For
Solve For	Discharge

Section Data		
Mannings Coefficie	0.030	
Slope	0.002000	ft/ft
Water Surface Elev	90.00	ft
Elevation Range	.00 to 96.50	
Discharge	77.06	cfs

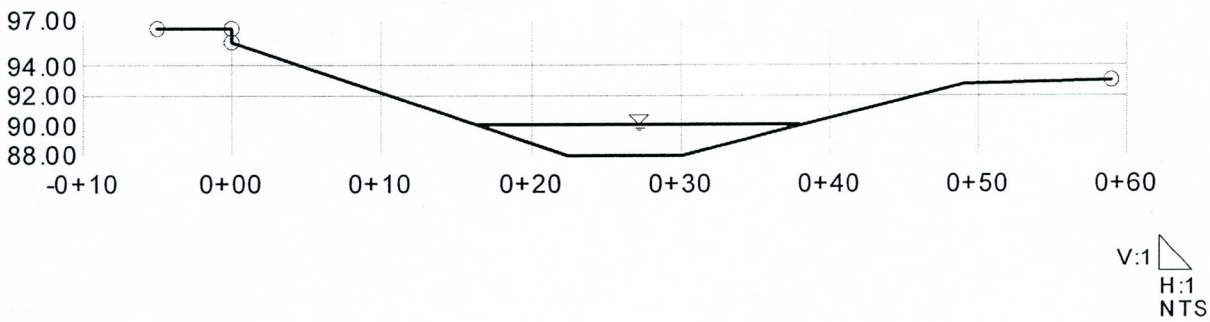

Appendix G - Catch Basin Calculations

Kimley-Horn and Associates, Inc.

Job LAVEEN MEADOWS Subject COLLECTOR INLETS Sheet No. 1 of ____ Job No. 091397008

Designed by JMM Date 6/21/01 Checked by ____ Date ____

COLLECTOR (WEST SIDE STA: 52+65.69)
(CATCH BASIN A)

ORIFICE EQUATION: $Q = 0.6A\sqrt{2GH}$

$Q_{100} = 7.98$ CFS (SEE APPENDIX A, CONCENTRATION POINT 13)

$H = 0.30$ ft (USED 6" U.C.+G SECTION WITHIN FLOWMASTER, S = 0.25%)

$$A = \frac{Q}{0.6\sqrt{2GH}} = \frac{7.98 \text{ cfs}}{0.6\sqrt{2(32.2)(0.30 \text{ ft})}} = 3.03 \text{ SF}$$

$$A = BH$$

$$B = \frac{A}{H} = \frac{3.03 \text{ ft}^2}{0.42 \text{ ft}} = 7.20 \text{ ft}$$

USE COP STD DTL P1569-1 CATCH BASIN - TYPE M-1
9' OPENING.

Kimley-Horn and Associates, Inc.

Sheet No. 2 of ____

Job LAUREN MEADOWS Subject COLLECTOR INLETS Job No. 091397008

Designed by JMM Date 6/22/01 Checked by ____ Date ____

COLLECTOR (EAST SIDE STA: 52+59.28)
(CATCH BASIN B)

$Q = 0.6 A \sqrt{2GH}$

$Q = 3.93$ cfs (SEE APPENDIX A, CONCENTRATION POINT 14)
$H = 0.26'$ (USED 6" U.C.+G SECTION WITHIN FLOWMASTER, S = 0.25%)

$$A = \frac{Q}{0.6\sqrt{2GH}} = \frac{3.93 \text{ cfs}}{0.6\sqrt{2(32.2)(0.26)}} = 1.60 \text{ ft}^2$$

$A = BH$

$$B = \frac{A}{H} = \frac{1.60 \text{ ft}^2}{0.5'} = 3.20'$$

USE COP STD DTL P1569-1 CATCH BASIN - TYPE M-1
6' OPENING

Kimley-Horn and Associates, Inc.

Sheet No. ____ of ____

Job LAVEEN MEADOWS Subject COLLECTOR INLET PIPES Job No. 091397008

Designed by JMM Date 6/28/01 Checked by ____ Date ____

COLLECTOR ROAD INLET PIPE (STA. 52+65.69 WEST SIDE)

ORIFICE EQ.: $Q_{100} = 0.6 A \sqrt{2GH}$

$$A = \frac{Q}{0.6\sqrt{2GH}} = \frac{7.98 \text{ cfs}}{0.6\sqrt{2(32.2)(2.5')}} = 1.05 \text{ ft}^2$$

$$A = \pi r^2$$

$$r = \sqrt{\frac{A}{\pi}} = \sqrt{\frac{1.05 \text{ ft}^2}{\pi}} = 0.58' = 6.93''$$

OR 13.86" DIA.

USE 15" DIA RCP

COLLECTOR ROAD INLET PIPE (STA 52+59.28 EAST SIDE)

$$A = \frac{Q}{0.6\sqrt{2GH}} = \frac{(3.93 + 7.98)}{0.6\sqrt{2(32.2)(2.5')}} = 1.56 \text{ ft}^2$$

$$A = \pi r^2$$

$$r = \sqrt{\frac{A}{\pi}} = \sqrt{\frac{1.56 \text{ ft}^2}{\pi}} = 0.71' = 8.47''$$

OR 16.94" DIA.

USE 18" DIA. RCP

(CATCH BASIN C)

CAPACITY OF BOX STRUCTURE

ORIFICE EQUATION: $Q = 0.6A\sqrt{2GH}$

$$A = \frac{Q_{100}}{0.6\sqrt{2GH}} = \frac{59.62 \text{ cfs}}{0.6\sqrt{2(32.2)(0.67')}} = 15.1'$$

$$BH = A = 16 \text{ ft}^2$$

$$B = \frac{15.1 \text{ ft}^2}{H} = \frac{15.1 \text{ ft}^2}{1 \text{ ft}} = 15.1 \text{ ft} \approx \underline{16 \text{ ft}}$$

$$Q = 0.6(16 \text{ ft}^2)\sqrt{2(32.2)(0.67')} = 63.1 \text{ cfs}$$

BOX IS 16" DEEP, MEASURED FROM THE TOP OF THE SIDEWALK.

CAPACITY OF GRATE

$$Q = 0.6A\sqrt{2GH}$$

$$A = WL = (16 \text{ ft})(2 \text{ ft}) = 32 \text{ ft}^2$$

ASSUME 50% FOR GRATE + CLOGGING

$$A = \frac{32 \text{ ft}^2}{2} = 16 \text{ ft}^2$$

$H = 0.33'$ (ASSUME FULL CAPACITY OF CURB W/ 2" DEPRESSION)

$$Q = 0.6(16 \text{ ft}^2)\sqrt{2(32.2)(0.33')} = 44.26 \text{ cfs}$$

CAPACITY OF CATCH BASIN

WEIR EQUATION: $Q = 3BH^{3/2}$

SINCE THE WEIR IS TRIANGULAR, THE AVERAGE DEPTH WAS CALCULATED.

$$H = \frac{0.67' + 0.55' + 0.47'}{3} = 0.56'$$

$$Q = 3BH^{3/2} = 3(16 \text{ ft})(0.56')^{3/2} = 20.2 \text{ cfs}$$

Kimley-Horn and Associates, Inc.

Sheet No. 2 of 2

Job LAVEEN MEADOWS Subject VALENCIA CATCH BASIN Job No. 091397008

Designed by JHM Date 7/10/01 Checked by Date

TOTAL Q_{100} = 59.62 cfs

Q_{TOT} OF STRUCTURE = Q_{GRATE} + Q_{CB}

= 44.3 cfs + 20.2 cfs = 64.5 cfs > 59.6 cfs

CONCLUSION:

16' LONG SCUPPER AND A 16' LONG x 2' WIDE GRATE WILL CONVEY THE 100-YEAR STORM EVENT. THE BOX IS 16" DEEP, MEASURED FROM THE TOP OF THE SIDEWALK.

Catch Basins D and E
Worksheet for Curb Inlet On Grade

Project Description	
Worksheet	Meadows Loop Eas
Type	Curb Inlet On Grade
Solve For	Length

Input Data		
Discharge	3.50	cfs
Efficiency	1.00	
Slope	002500	ft/ft
Gutter Width	1.50	ft
Gutter Cross Slope	056000	ft/ft
Road Cross Slope	020000	ft/ft
Mannings Coefficie	0.016	
Local Depression	2.0	in
Local Depression \	1.50	ft

Results		
Curb Opening Lengtl	10.92	ft
Intercepted Flow	3.50	cfs
Bypass Flow	0.00	cfs
Spread	14.75	ft
Depth	0.35	ft
Flow Area	2.2	ft^2
Gutter Depression	0.6	in
Total Depression	2.6	in
Velocity	1.58	ft/s
Equivalent Cross Slo	059085	ft/ft
Length Factor	0.99	
Total Interception Ler	10.98	ft

Catch Basins D and E
Cross Section for Curb Inlet On Grade

Project Description	
Worksheet	Meadows Loop Eas
Type	Curb Inlet On Grade
Solve For	Length

Section Data		
Discharge	3.50	cfs
Efficiency	1.00	
Slope	002500	ft/ft
Gutter Width	1.50	ft
Gutter Cross Slope	056000	ft/ft
Road Cross Slope	020000	ft/ft
Mannings Coefficie	0.016	
Curb Opening Len	10.92	ft
Local Depression	2.0	in
Local Depression \	1.50	ft

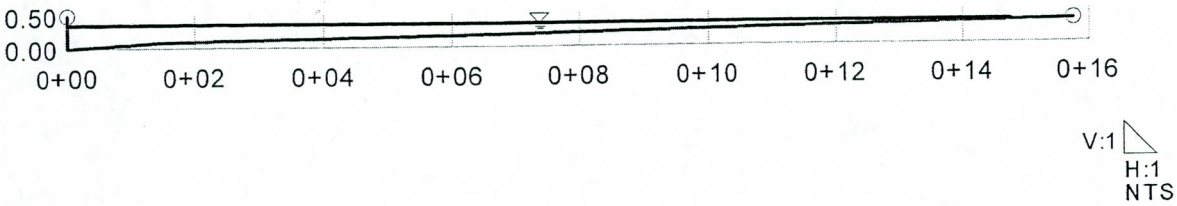

Kimley-Horn and Associates, Inc.

Sheet No. ____ of ____

Job LAUREEN MEADOWS Subject COLLECTOR INLET PIPES Job No. 091397008

Designed by JMM Date 6/28/01 Checked by ____ Date ____

DISCHARGE PIPE CALCULATIONS

ORIFICE EQ: $Q = 0.6A\sqrt{2GH}$

$$A = \frac{Q}{0.6\sqrt{2GH}} = \frac{3.50\ cfs}{0.6\sqrt{2(32.2)(3.4')}} = 0.39\ ft^2$$

$$A = \pi r^2$$

$$r = \sqrt{\frac{A}{\pi}} = \sqrt{\frac{0.39\ ft^2}{\pi}} = 0.35\ ft$$

DIA = 0.71' OR 8.50"

USE 15" DIA HOLE

Kimley-Horn and Associates, Inc.

Sheet No. ____ of ____

Job ____ Subject ____ Job No. ____

Designed by ____ Date ____ Checked by ____ Date ____

(CATCH BASIN F)

Q_{100} @ PT 6 = 43.4 cfs

ASSUME TYPE M-2 CATCH BASIN (L_1 = 10' L_2 = 17')

$Q = .6 A \sqrt{2GH}$

$Q = .6 (30 ft \times .5 ft) \sqrt{64.4 (.42 ft)}$

$Q = 46.8$ cfs > 43.4 cfs ok

PIPE SIZING:

ASSUME 2 - 24" PIPES (V = 4')

INLET CAPACITY:

$Q = \left[.6 \left(\frac{\pi 2^2}{4} \right) \sqrt{64.4 (2.5)} \right] \left[2 \right]$

$Q = 47.8$ cfs > 43.4 cfs ok

- USE TYPE M-2 CATCH BASIN w/ L_1 = 10' L_2 = 17'. USE 2 - 24" OUTLET PIPES w/ U = 3.5'.

Kimley-Horn and Associates, Inc.

Sheet No. 1 of

Job LAVEEN MEADOWS Subject COLLECTOR INLETS Job No. 091397008

Designed by JMM Date 6/21/01 Checked by Date

COLLECTOR (WEST SIDE STA: 52+65.69)
(CATCH BASIN A)

ORIFICE EQUATION: $Q = 0.6A\sqrt{2GH}$

$Q_{100} = 7.98$ CFS (SEE APPENDIX A, CONCENTRATION POINT 13)

$H = 0.30$ ft (USED 6" U.C.+G SECTION WITHIN FLOWMASTER, S = 0.25%)

$$A = \frac{Q}{0.6\sqrt{2GH}} = \frac{7.98 \text{ cfs}}{0.6\sqrt{2(32.2)(0.30 \text{ ft})}} = 3.03 \text{ SF}$$

$$A = BH$$

$$B = \frac{A}{H} = \frac{3.03 \text{ ft}^2}{0.42 \text{ ft}} = 7.20 \text{ ft}$$

USE COP STD DTL P1569-1 CATCH BASIN - TYPE M-1
9' OPENING.

Appendix H - Depressed Curb Openings and Spillway Calculations

TRACT B CURB OPENING 1

$Q_{100} = 11.59$ cfs

ASSUME $H = 0.5'$

$Q_{100} = 3BH^{3/2}$

$$B = \frac{Q}{3H^{3/2}} = \frac{11.59}{3(0.5')^{3/2}} = 10.93' \rightarrow \underline{11'}$$

TRACT C CURB OPENING 2

$Q_{100} = 26.25$ cfs

ASSUME $H = 0.5'$

$Q_{100} = 3BH^{3/2}$

$$B = \frac{Q}{3H^{3/2}} = \frac{26.25}{3(0.5')^{3/2}} = 24.75' \rightarrow \underline{25'}$$

TRACT F (DESERT LN.) (CURB OPENING 3)

$Q_{100} = 23.91$ cfs

ASSUME $H = 0.5'$

$Q_{100} = 3BH^{3/2}$

$$B = \frac{Q}{3H^{3/2}} = \frac{23.91}{3(0.5')^{3/2}} = 22.54' \rightarrow \underline{25'}$$

TRACT G (GARY WAY) (CURB OPENING 4)

$Q_{100} = 9.31$ cfs

ASSUME $H = 0.5'$

$Q_{100} = 3BH^{3/2}$

$$B = \frac{Q}{3H^{3/2}} = \frac{9.31}{3(0.5')^{3/2}} = 8.78' \rightarrow \underline{10'}$$

Kimley-Horn and Associates, Inc.

Sheet No. 4 of 4

Job LAUEEN MEADOWS Subject CURB OPENINGS Job No. 091397008

Designed by JMM Date 6/15/01 Checked by _____ Date _____

TRACT G (BEVERLY RD.) (CURB OPENINGS)

$Q_{100} = 15.73$ cfs

ASSUME $H = 0.5'$

$Q_{100} = 3BH^{3/2}$

$$B = \frac{Q}{3H^{3/2}} = \frac{15.73}{3(0.5')^{3/2}} = 14.83' \rightarrow \underline{15'}$$

Spillway for Curb Opening 1
Worksheet for Rectangular Channel

Project Description	
Worksheet	Spillway for Curb Oper
Flow Element	Rectangular Channel
Method	Manning's Formula
Solve For	Channel Depth

Input Data		
Mannings Coeffic	0.013	
Slope	200000	ft/ft
Bottom Width	5.00	ft
Discharge	11.59	cfs

Results		
Depth	0.16	ft
Flow Area	0.8	ft²
Wetted Perim	5.32	ft
Top Width	5.00	ft
Critical Depth	0.55	ft
Critical Slope	0.003918	ft/ft
Velocity	14.47	ft/s
Velocity Head	3.25	ft
Specific Energ	3.41	ft
Froude Numb	6.37	
Flow Type	Supercritical	

Spillway for Curb Opening 1
Cross Section for Rectangular Channel

Project Description	
Worksheet	Spillway for Curb Oper
Flow Element	Rectangular Channel
Method	Manning's Formula
Solve For	Channel Depth

Section Data		
Mannings Coeffic	0.013	
Slope	200000	ft/ft
Depth	0.16	ft
Bottom Width	5.00	ft
Discharge	11.59	cfs

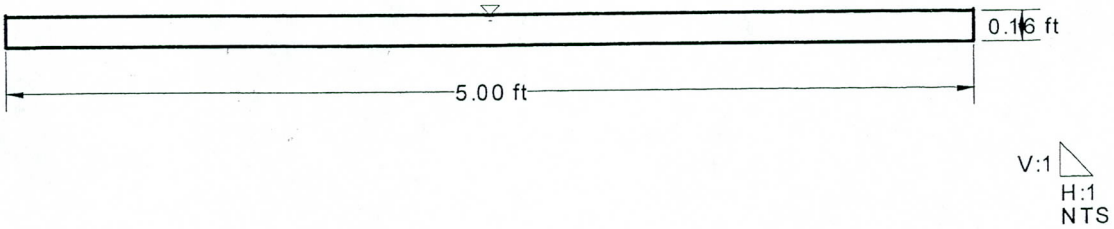

Spillway for Curb Opening 2
Worksheet for Trapezoidal Channel

Project Description	
Worksheet	Tract C Outlet Cha
Flow Element	Trapezoidal Chanr
Method	Manning's Formula
Solve For	Channel Depth

Input Data		
Mannings Coeffic	0.013	
Slope	021700	ft/ft
Left Side Slope	4.00	H : V
Right Side Slope	4.00	H : V
Bottom Width	12.00	ft
Discharge	26.25	cfs

Results		
Depth	0.29	ft
Flow Area	3.8	ft²
Wetted Perim	14.38	ft
Top Width	14.31	ft
Critical Depth	0.50	ft
Critical Slope	0.003278	ft/ft
Velocity	6.92	ft/s
Velocity Head	0.75	ft
Specific Energ	1.03	ft
Froude Numb	2.37	
Flow Type	Supercritical	

Spillway for Curb Opening 2
Cross Section for Trapezoidal Channel

Project Description	
Worksheet	Tract C Outlet Cha
Flow Element	Trapezoidal Chanr
Method	Manning's Formula
Solve For	Channel Depth

Section Data		
Mannings Coeffic	0.013	
Slope	021700	ft/ft
Depth	0.29	ft
Left Side Slope	4.00	H : V
Right Side Slope	4.00	H : V
Bottom Width	12.00	ft
Discharge	26.25	cfs

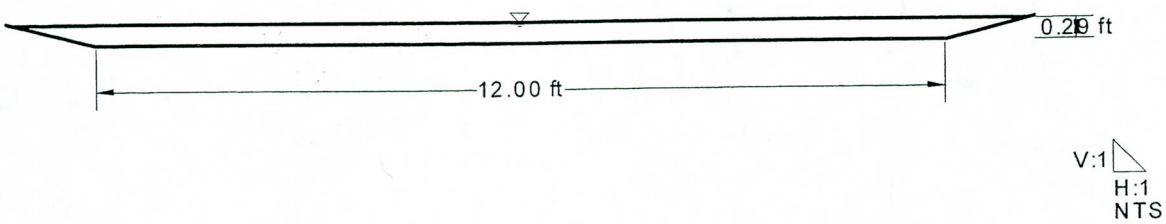

Spillway for Curb Opening 3
Worksheet for Trapezoidal Channel

Project Description	
Worksheet	Spillway for Curb Oper
Flow Element	Trapezoidal Channel
Method	Manning's Formula
Solve For	Channel Depth

Input Data		
Mannings Coeffic	0.013	
Slope	013000	ft/ft
Left Side Slope	4.00	H : V
Right Side Slope	4.00	H : V
Bottom Width	12.00	ft
Discharge	22.54	cfs

Results		
Depth	0.31	ft
Flow Area	4.1	ft²
Wetted Perim	14.53	ft
Top Width	14.45	ft
Critical Depth	0.45	ft
Critical Slope	0.003371	ft/ft
Velocity	5.56	ft/s
Velocity Head	0.48	ft
Specific Energ	0.79	ft
Froude Numb	1.85	
Flow Type	Supercritical	

Spillway for Curb Opening 3
Cross Section for Trapezoidal Channel

Project Description	
Worksheet	Spillway for Curb Oper
Flow Element	Trapezoidal Channel
Method	Manning's Formula
Solve For	Channel Depth

Section Data		
Mannings Coeffic	0.013	
Slope	013000	ft/ft
Depth	0.31	ft
Left Side Slope	4.00	H : V
Right Side Slope	4.00	H : V
Bottom Width	12.00	ft
Discharge	22.54	cfs

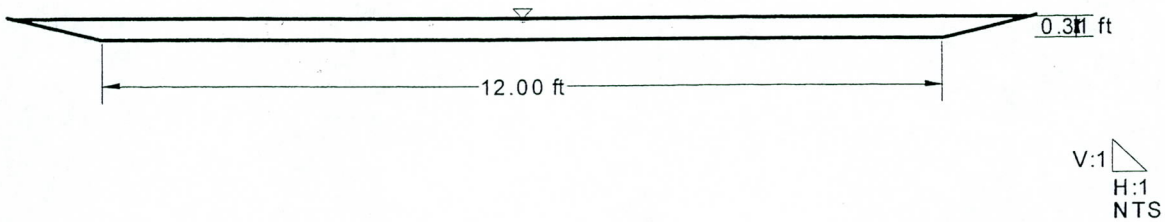

Spillway for Curb Opening 4
Worksheet for Rectangular Channel

Project Description	
Worksheet	Spillway for Curb Oper
Flow Element	Rectangular Channel
Method	Manning's Formula
Solve For	Channel Depth

Input Data		
Mannings Coeffic	0.013	
Slope	100000	ft/ft
Bottom Width	5.00	ft
Discharge	9.31	cfs

Results		
Depth	0.17	ft
Flow Area	0.9	ft²
Wetted Perim	5.35	ft
Top Width	5.00	ft
Critical Depth	0.48	ft
Critical Slope	0.003979	ft/ft
Velocity	10.74	ft/s
Velocity Head	1.79	ft
Specific Energ	1.97	ft
Froude Numb	4.55	
Flow Type	Supercritical	

Spillway for Curb Opening 4
Cross Section for Rectangular Channel

Project Description	
Worksheet	Spillway for Curb Oper
Flow Element	Rectangular Channel
Method	Manning's Formula
Solve For	Channel Depth

Section Data		
Mannings Coeffic	0.013	
Slope	100000	ft/ft
Depth	0.17	ft
Bottom Width	5.00	ft
Discharge	9.31	cfs

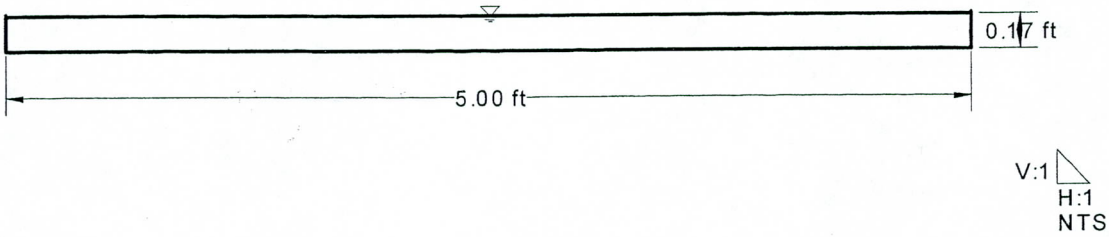

Spillway for Curb Opening 5
Worksheet for Rectangular Channel

Project Description	
Worksheet	Spillway for Curb Oper
Flow Element	Rectangular Channel
Method	Manning's Formula
Solve For	Channel Depth

Input Data		
Mannings Coeffic	0.013	
Slope	100000	ft/ft
Bottom Width	5.00	ft
Discharge	15.73	cfs

Results		
Depth	0.24	ft
Flow Area	1.2	ft²
Wetted Perim	5.48	ft
Top Width	5.00	ft
Critical Depth	0.68	ft
Critical Slope	0.003861	ft/ft
Velocity	13.12	ft/s
Velocity Head	2.68	ft
Specific Energ	2.92	ft
Froude Numb	4.73	
Flow Type	Supercritical	

Spillway for Curb Opening 5
Cross Section for Rectangular Channel

Project Description	
Worksheet	Spillway for Curb Oper
Flow Element	Rectangular Channel
Method	Manning's Formula
Solve For	Channel Depth

Section Data		
Mannings Coeffic	0.013	
Slope	100000	ft/ft
Depth	0.24	ft
Bottom Width	5.00	ft
Discharge	15.73	cfs

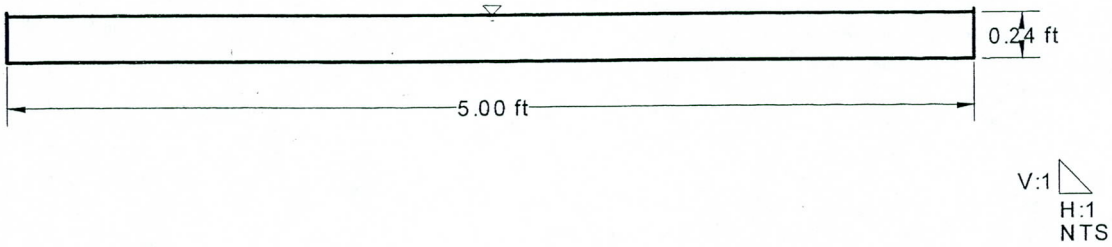

Appendix I – Retention Basin Volume Calculations

Kimley-Horn and Associates, Inc.

Sheet No. 1 of 2

Job LAUREN MEADOWS Subject PH1 RETENTION Job No. 091397008

Designed by JMM Date 6/17/01 Checked by _____ Date _____

$V_{REQ'D}$ = 7,200 CIA

5-YR, 2-HR INTENSITY FROM COP IDF CURVE = 0.66 in/hr

RETENTION TRACT B (BASIN 2)

$V_{REQ'D}$ = 7200 CIA

= 7200 (0.69)(0.66 in/hr)(4.48 AC) = 14,689 CF

$V_{PROV'D} = \left(\frac{10{,}405\ ft^2 + 16{,}641\ ft^2}{2}\right)(3\ ft) = 40{,}569$ CF

RETENTION TRACT C (BASIN 3)

$V_{REQ'D}$ = 7200 CIA

= 7200 (0.69)(0.66 in/hr)(7.95 AC) = 26,067 CF

$V_{PROV'D} = \left(\frac{4{,}738\ ft^2 + 8{,}955\ ft^2}{2}\right)(3\ ft) + \left(\frac{1{,}583\ ft^2 + 4{,}233\ ft^2}{2}\right)(3\ ft)$

= 20,540 CF + 8,724 CF = 29,264 CF

RETENTION TRACT N/O (BASIN 1)

$V_{REQ'D}$ = 7200 CIA

= 7200 (0.95)(0.66 in/hr)(1.75 AC) = 7,900 CF

$V_{PROV'D} = \left(\frac{1{,}519\ ft^2 + 3{,}823\ ft^2 + 1{,}740\ ft^2 + 4{,}084\ ft^2}{2}\right)(2.5\ ft)$

= 13,958 CF

RETENTION TRACT F (BASIN 4)

$V_{REQ'D} = 7200\ CIA$

$= 7200\ (0.69)(0.66\ in/hr)(8.45\ AC) = 27,693\ CF$

$V_{PROV'D} = \frac{(9,788\ ft^2 + 15,043\ ft^2)(3\ ft)}{2} = 37,247\ CF$

RETENTION TRACT G (BASIN 5)

$V_{REQ'D} = 7200\ CIA$

$= 7200\ (0.69)(0.66\ in/hr)(53.07\ AC) = 174,010\ CF$

$V_{PROV'D} = \frac{(97,770\ ft^2 + 140,324\ ft^2)(3\ ft)}{2\ ft}$

$= 357,141\ CF$

RETENTION COMMERCIAL SITE (BASIN 6)

$V_{REQ'D} = 7200\ CIA$

$= 7200\ (0.95)(0.66\ in/hr)(0.34\ AC) = 1,535\ CF$

$V_{PROV'D} = \frac{(1,451\ ft^2 + 2,175\ ft^2)(1\ ft)}{2} = 1,813\ CF$

Appendix J – Curb and Right-of-way Capacity Calculations and Street Cross-Sections

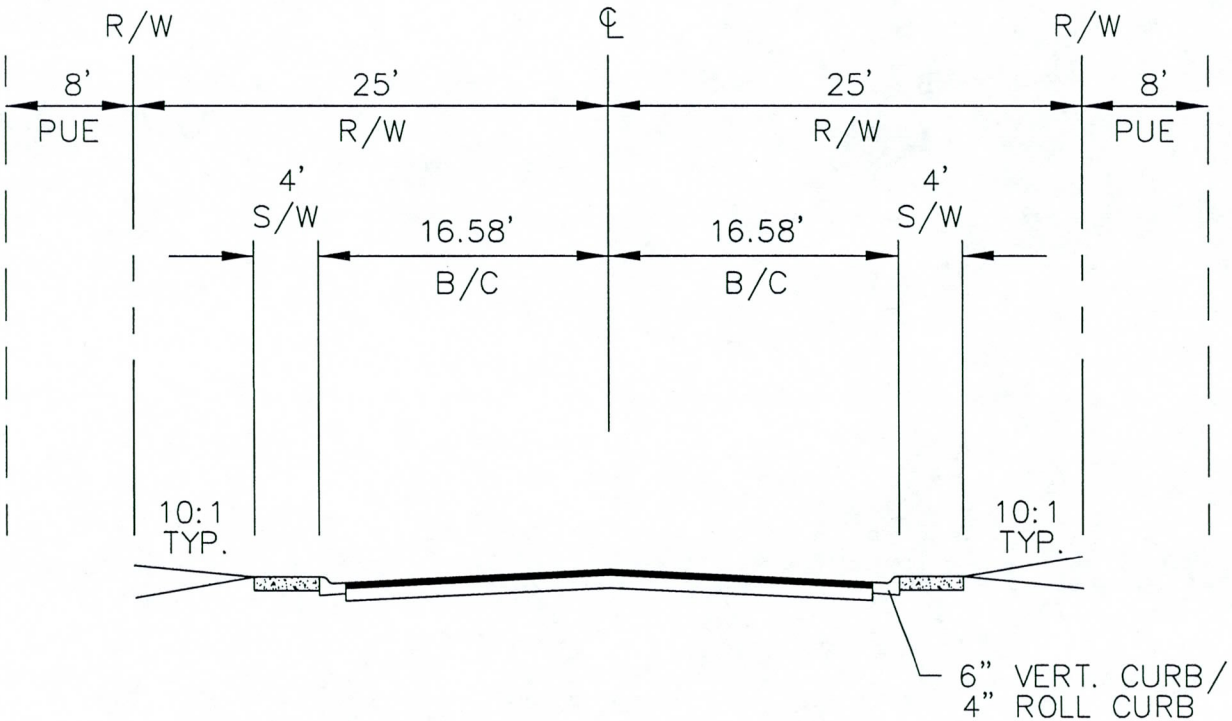

RESIDENTIAL STREET SECTION

N.T.S.

K:\-Civil\91397008\DWG\7008SP03.dwg, 09/21/2001 09:46:10 AM, jeremy.mcarthur

LOCAL STREET CAPACITY TABLE - ROLL CURB
Rating Table for Irregular Channel

Project Description	
Worksheet	LOCAL ROLL
Flow Element	Irregular Chan
Method	Manning's Forr
Solve For	Discharge

Input Data	
Water Surface Elev	0.00 ft

Options	
Current Roughness Meth	ved Lotter's Method
Open Channel Weighting	ved Lotter's Method
Closed Channel Weightin	Horton's Method

Attribute	Minimum	Maximum	Increment
Slope (ft/ft)	0.002000	0.030000	0.000500

Slope (ft/ft)	Discharge (cfs)	Velocity (ft/s)	Flow Area (ft²)	Wetted Perimeter (ft)	Top Width (ft)
0.002000	6.06	1.25	4.8	32.27	32.16
0.002500	6.78	1.40	4.8	32.27	32.16
0.003000	7.43	1.53	4.8	32.27	32.16
0.003500	8.02	1.66	4.8	32.27	32.16
0.004000	8.58	1.77	4.8	32.27	32.16
0.004500	9.10	1.88	4.8	32.27	32.16
0.005000	9.59	1.98	4.8	32.27	32.16
0.005500	10.06	2.08	4.8	32.27	32.16
0.006000	10.50	2.17	4.8	32.27	32.16
0.006500	10.93	2.26	4.8	32.27	32.16
0.007000	11.34	2.34	4.8	32.27	32.16
0.007500	11.74	2.42	4.8	32.27	32.16
0.008000	12.13	2.50	4.8	32.27	32.16
0.008500	12.50	2.58	4.8	32.27	32.16
0.009000	12.86	2.65	4.8	32.27	32.16
0.009500	13.22	2.73	4.8	32.27	32.16
0.010000	13.56	2.80	4.8	32.27	32.16
0.010500	13.89	2.87	4.8	32.27	32.16
0.011000	14.22	2.94	4.8	32.27	32.16
0.011500	14.54	3.00	4.8	32.27	32.16
0.012000	14.85	3.07	4.8	32.27	32.16
0.012500	15.16	3.13	4.8	32.27	32.16
0.013000	15.46	3.19	4.8	32.27	32.16
0.013500	15.75	3.25	4.8	32.27	32.16
0.014000	16.04	3.31	4.8	32.27	32.16
0.014500	16.33	3.37	4.8	32.27	32.16
0.015000	16.61	3.43	4.8	32.27	32.16
0.015500	16.88	3.48	4.8	32.27	32.16
0.016000	17.15	3.54	4.8	32.27	32.16
0.016500	17.42	3.59	4.8	32.27	32.16
0.017000	17.68	3.65	4.8	32.27	32.16
0.017500	17.94	3.70	4.8	32.27	32.16
0.018000	18.19	3.75	4.8	32.27	32.16
0.018500	18.44	3.81	4.8	32.27	32.16

LOCAL STREET CAPACITY TABLE - VERTICAL CURB

Rating Table for Irregular Channel

Slope (ft/ft)	Discharge (cfs)	Velocity (ft/s)	Flow Area (ft^2)	Wetted Perimeter (ft)	Top Width (ft)
0.019000	55.20	5.89	9.4	33.02	32.16
0.019500	55.92	5.97	9.4	33.02	32.16
0.020000	56.64	6.05	9.4	33.02	32.16
0.020500	57.34	6.12	9.4	33.02	32.16
0.021000	58.03	6.20	9.4	33.02	32.16
0.021500	58.72	6.27	9.4	33.02	32.16
0.022000	59.40	6.34	9.4	33.02	32.16
0.022500	60.07	6.41	9.4	33.02	32.16
0.023000	60.73	6.48	9.4	33.02	32.16
0.023500	61.39	6.56	9.4	33.02	32.16
0.024000	62.04	6.62	9.4	33.02	32.16
0.024500	62.68	6.69	9.4	33.02	32.16
0.025000	63.32	6.76	9.4	33.02	32.16
0.025500	63.95	6.83	9.4	33.02	32.16
0.026000	64.57	6.89	9.4	33.02	32.16
0.026500	65.19	6.96	9.4	33.02	32.16
0.027000	65.80	7.03	9.4	33.02	32.16
0.027500	66.41	7.09	9.4	33.02	32.16
0.028000	67.01	7.16	9.4	33.02	32.16
0.028500	67.61	7.22	9.4	33.02	32.16
0.029000	68.20	7.28	9.4	33.02	32.16
0.029500	68.78	7.34	9.4	33.02	32.16
0.030000	69.36	7.41	9.4	33.02	32.16

LOCAL STREET CAPACITY TABLE - ROLL CURB

Rating Table for Irregular Channel

Slope (ft/ft)	Discharge (cfs)	Velocity (ft/s)	Flow Area (ft^2)	Wetted Perimeter (ft)	Top Width (ft)
0.019000	18.69	3.86	4.8	32.27	32.16
0.019500	18.93	3.91	4.8	32.27	32.16
0.020000	19.17	3.96	4.8	32.27	32.16
0.020500	19.41	4.01	4.8	32.27	32.16
0.021000	19.65	4.06	4.8	32.27	32.16
0.021500	19.88	4.10	4.8	32.27	32.16
0.022000	20.11	4.15	4.8	32.27	32.16
0.022500	20.34	4.20	4.8	32.27	32.16
0.023000	20.56	4.24	4.8	32.27	32.16
0.023500	20.78	4.29	4.8	32.27	32.16
0.024000	21.00	4.34	4.8	32.27	32.16
0.024500	21.22	4.38	4.8	32.27	32.16
0.025000	21.44	4.42	4.8	32.27	32.16
0.025500	21.65	4.47	4.8	32.27	32.16
0.026000	21.86	4.51	4.8	32.27	32.16
0.026500	22.07	4.56	4.8	32.27	32.16
0.027000	22.28	4.60	4.8	32.27	32.16
0.027500	22.48	4.64	4.8	32.27	32.16
0.028000	22.69	4.68	4.8	32.27	32.16
0.028500	22.89	4.72	4.8	32.27	32.16
0.029000	23.09	4.77	4.8	32.27	32.16
0.029500	23.29	4.81	4.8	32.27	32.16
0.030000	23.48	4.85	4.8	32.27	32.16

LOCAL R/W CAPACITY TABLE - VERTICAL CURB

Rating Table for Irregular Channel

Project Description	
Worksheet	LOCAL VERT.
Flow Element	Irregular Chan
Method	Manning's For
Solve For	Discharge

Input Data	
Water Surface Elev	0.17 ft

Options	
Current Roughness Meth	ved Lotter's Method
Open Channel Weighting	ved Lotter's Method
Closed Channel Weightin	Horton's Method

Attribute	Minimum	Maximum	Increment
Slope (ft/ft)	0.002000	0.030000	0.000500

Slope (ft/ft)	Discharge (cfs)	Velocity (ft/s)	Flow Area (ft²)	Wetted Perimeter (ft)	Top Width (ft)
0.002000	40.53	2.40	16.9	51.00	50.00
0.002500	45.31	2.68	16.9	51.00	50.00
0.003000	49.64	2.93	16.9	51.00	50.00
0.003500	53.61	3.17	16.9	51.00	50.00
0.004000	57.31	3.39	16.9	51.00	50.00
0.004500	60.79	3.59	16.9	51.00	50.00
0.005000	64.08	3.79	16.9	51.00	50.00
0.005500	67.21	3.97	16.9	51.00	50.00
0.006000	70.20	4.15	16.9	51.00	50.00
0.006500	73.06	4.32	16.9	51.00	50.00
0.007000	75.82	4.48	16.9	51.00	50.00
0.007500	78.48	4.64	16.9	51.00	50.00
0.008000	81.05	4.79	16.9	51.00	50.00
0.008500	83.55	4.94	16.9	51.00	50.00
0.009000	85.97	5.08	16.9	51.00	50.00
0.009500	88.33	5.22	16.9	51.00	50.00
0.010000	90.62	5.36	16.9	51.00	50.00
0.010500	92.86	5.49	16.9	51.00	50.00
0.011000	95.04	5.62	16.9	51.00	50.00
0.011500	97.18	5.74	16.9	51.00	50.00
0.012000	99.27	5.87	16.9	51.00	50.00
0.012500	101.32	5.99	16.9	51.00	50.00
0.013000	103.32	6.11	16.9	51.00	50.00
0.013500	105.29	6.22	16.9	51.00	50.00
0.014000	107.22	6.34	16.9	51.00	50.00
0.014500	109.12	6.45	16.9	51.00	50.00
0.015000	110.99	6.56	16.9	51.00	50.00
0.015500	112.82	6.67	16.9	51.00	50.00
0.016000	114.63	6.78	16.9	51.00	50.00
0.016500	116.41	6.88	16.9	51.00	50.00
0.017000	118.16	6.98	16.9	51.00	50.00
0.017500	119.88	7.09	16.9	51.00	50.00
0.018000	121.58	7.19	16.9	51.00	50.00
0.018500	123.26	7.29	16.9	51.00	50.00

LOCAL R/W CAPACITY TABLE - VERTICAL CURB

Rating Table for Irregular Channel

Slope (ft/ft)	Discharge (cfs)	Velocity (ft/s)	Flow Area (ft^2)	Wetted Perimeter (ft)	Top Width (ft)
0.019000	124.91	7.38	16.9	51.00	50.00
0.019500	126.55	7.48	16.9	51.00	50.00
0.020000	128.16	7.58	16.9	51.00	50.00
0.020500	129.75	7.67	16.9	51.00	50.00
0.021000	131.32	7.76	16.9	51.00	50.00
0.021500	132.88	7.85	16.9	51.00	50.00
0.022000	134.41	7.94	16.9	51.00	50.00
0.022500	135.93	8.03	16.9	51.00	50.00
0.023000	137.43	8.12	16.9	51.00	50.00
0.023500	138.92	8.21	16.9	51.00	50.00
0.024000	140.39	8.30	16.9	51.00	50.00
0.024500	141.84	8.38	16.9	51.00	50.00
0.025000	143.29	8.47	16.9	51.00	50.00
0.025500	144.71	8.55	16.9	51.00	50.00
0.026000	146.12	8.64	16.9	51.00	50.00
0.026500	147.52	8.72	16.9	51.00	50.00
0.027000	148.91	8.80	16.9	51.00	50.00
0.027500	150.28	8.88	16.9	51.00	50.00
0.028000	151.64	8.96	16.9	51.00	50.00
0.028500	152.99	9.04	16.9	51.00	50.00
0.029000	154.32	9.12	16.9	51.00	50.00
0.029500	155.65	9.20	16.9	51.00	50.00
0.030000	156.96	9.28	16.9	51.00	50.00

LOCAL R/W CAPACITY TABLE - ROLL CURB
Rating Table for Irregular Channel

Project Description	
Worksheet	LOCAL ROLL
Flow Element	Irregular Chan
Method	Manning's For
Solve For	Discharge

Input Data	
Water Surface Elev	0.34 ft

Options	
Current Roughness Meth	ved Lotter's Method
Open Channel Weighting	ved Lotter's Method
Closed Channel Weightin	Horton's Method

Attribute	Minimum	Maximum	Increment
Slope (ft/ft)	0.002000	0.030000	0.000500

Slope (ft/ft)	Discharge (cfs)	Velocity (ft/s)	Flow Area (ft²)	Wetted Perimeter (ft)	Top Width (ft)
0.002000	52.35	2.50	20.9	50.59	50.00
0.002500	58.52	2.80	20.9	50.59	50.00
0.003000	64.11	3.07	20.9	50.59	50.00
0.003500	69.25	3.31	20.9	50.59	50.00
0.004000	74.03	3.54	20.9	50.59	50.00
0.004500	78.52	3.76	20.9	50.59	50.00
0.005000	82.77	3.96	20.9	50.59	50.00
0.005500	86.81	4.15	20.9	50.59	50.00
0.006000	90.67	4.34	20.9	50.59	50.00
0.006500	94.37	4.52	20.9	50.59	50.00
0.007000	97.93	4.69	20.9	50.59	50.00
0.007500	101.37	4.85	20.9	50.59	50.00
0.008000	104.69	5.01	20.9	50.59	50.00
0.008500	107.91	5.16	20.9	50.59	50.00
0.009000	111.04	5.31	20.9	50.59	50.00
0.009500	114.08	5.46	20.9	50.59	50.00
0.010000	117.05	5.60	20.9	50.59	50.00
0.010500	119.94	5.74	20.9	50.59	50.00
0.011000	122.76	5.87	20.9	50.59	50.00
0.011500	125.52	6.01	20.9	50.59	50.00
0.012000	128.22	6.14	20.9	50.59	50.00
0.012500	130.86	6.26	20.9	50.59	50.00
0.013000	133.46	6.39	20.9	50.59	50.00
0.013500	136.00	6.51	20.9	50.59	50.00
0.014000	138.49	6.63	20.9	50.59	50.00
0.014500	140.95	6.74	20.9	50.59	50.00
0.015000	143.35	6.86	20.9	50.59	50.00
0.015500	145.72	6.97	20.9	50.59	50.00
0.016000	148.06	7.08	20.9	50.59	50.00
0.016500	150.35	7.19	20.9	50.59	50.00
0.017000	152.61	7.30	20.9	50.59	50.00
0.017500	154.84	7.41	20.9	50.59	50.00
0.018000	157.04	7.51	20.9	50.59	50.00
0.018500	159.20	7.62	20.9	50.59	50.00

LOCAL R/W CAPACITY TABLE - ROLL CURB

Rating Table for Irregular Channel

Slope (ft/ft)	Discharge (cfs)	Velocity (ft/s)	Flow Area (ft^2)	Wetted Perimeter (ft)	Top Width (ft)
0.019000	161.34	7.72	20.9	50.59	50.00
0.019500	163.45	7.82	20.9	50.59	50.00
0.020000	165.53	7.92	20.9	50.59	50.00
0.020500	167.59	8.02	20.9	50.59	50.00
0.021000	169.62	8.12	20.9	50.59	50.00
0.021500	171.63	8.21	20.9	50.59	50.00
0.022000	173.61	8.31	20.9	50.59	50.00
0.022500	175.57	8.40	20.9	50.59	50.00
0.023000	177.51	8.49	20.9	50.59	50.00
0.023500	179.43	8.59	20.9	50.59	50.00
0.024000	181.33	8.68	20.9	50.59	50.00
0.024500	183.21	8.77	20.9	50.59	50.00
0.025000	185.07	8.86	20.9	50.59	50.00
0.025500	186.91	8.94	20.9	50.59	50.00
0.026000	188.74	9.03	20.9	50.59	50.00
0.026500	190.54	9.12	20.9	50.59	50.00
0.027000	192.33	9.20	20.9	50.59	50.00
0.027500	194.10	9.29	20.9	50.59	50.00
0.028000	195.86	9.37	20.9	50.59	50.00
0.028500	197.60	9.46	20.9	50.59	50.00
0.029000	199.33	9.54	20.9	50.59	50.00
0.029500	201.04	9.62	20.9	50.59	50.00
0.030000	202.73	9.70	20.9	50.59	50.00

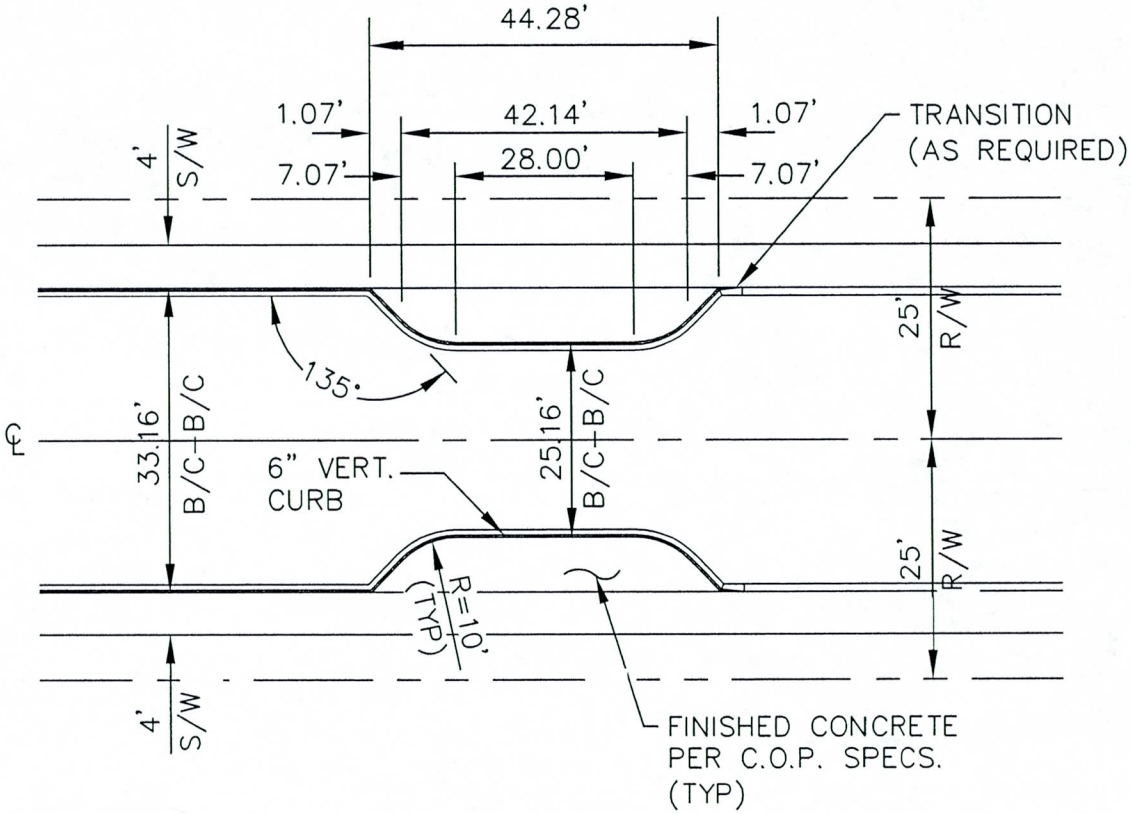

CHOKER DETAIL

N.T.S.

LOCAL STREET CAPACITY W/ CHOKER TABLE - VERTICAL CURB

Rating Table for Irregular Channel

Project Description	
Worksheet	CHOKER VER
Flow Element	Irregular Chan
Method	Manning's Forr
Solve For	Discharge

Input Data	
Water Surface Elev	0.00 ft

Options	
Current Roughness Meth	ved Lotter's Method
Open Channel Weighting	ved Lotter's Method
Closed Channel Weightin	Horton's Method

Attribute	Minimum	Maximum	Increment
Slope (ft/ft)	0.002000	0.030000	0.000500

Slope (ft/ft)	Discharge (cfs)	Velocity (ft/s)	Flow Area (ft²)	Wetted Perimeter (ft)	Top Width (ft)
0.002000	16.61	2.07	8.0	25.02	24.16
0.002500	18.57	2.32	8.0	25.02	24.16
0.003000	20.35	2.54	8.0	25.02	24.16
0.003500	21.98	2.74	8.0	25.02	24.16
0.004000	23.49	2.93	8.0	25.02	24.16
0.004500	24.92	3.11	8.0	25.02	24.16
0.005000	26.27	3.28	8.0	25.02	24.16
0.005500	27.55	3.44	8.0	25.02	24.16
0.006000	28.77	3.59	8.0	25.02	24.16
0.006500	29.95	3.74	8.0	25.02	24.16
0.007000	31.08	3.88	8.0	25.02	24.16
0.007500	32.17	4.02	8.0	25.02	24.16
0.008000	33.22	4.15	8.0	25.02	24.16
0.008500	34.25	4.27	8.0	25.02	24.16
0.009000	35.24	4.40	8.0	25.02	24.16
0.009500	36.21	4.52	8.0	25.02	24.16
0.010000	37.15	4.64	8.0	25.02	24.16
0.010500	38.06	4.75	8.0	25.02	24.16
0.011000	38.96	4.86	8.0	25.02	24.16
0.011500	39.83	4.97	8.0	25.02	24.16
0.012000	40.69	5.08	8.0	25.02	24.16
0.012500	41.53	5.18	8.0	25.02	24.16
0.013000	42.35	5.29	8.0	25.02	24.16
0.013500	43.16	5.39	8.0	25.02	24.16
0.014000	43.95	5.49	8.0	25.02	24.16
0.014500	44.73	5.58	8.0	25.02	24.16
0.015000	45.49	5.68	8.0	25.02	24.16
0.015500	46.25	5.77	8.0	25.02	24.16
0.016000	46.99	5.86	8.0	25.02	24.16
0.016500	47.72	5.96	8.0	25.02	24.16
0.017000	48.43	6.05	8.0	25.02	24.16
0.017500	49.14	6.13	8.0	25.02	24.16
0.018000	49.84	6.22	8.0	25.02	24.16
0.018500	50.52	6.31	8.0	25.02	24.16

LOCAL STREET CAPACITY W/ CHOKER TABLE - VERTICAL CURB

Rating Table for Irregular Channel

Slope (ft/ft)	Discharge (cfs)	Velocity (ft/s)	Flow Area (ft^2)	Wetted Perimeter (ft)	Top Width (ft)
0.019000	51.20	6.39	8.0	25.02	24.16
0.019500	51.87	6.47	8.0	25.02	24.16
0.020000	52.53	6.56	8.0	25.02	24.16
0.020500	53.19	6.64	8.0	25.02	24.16
0.021000	53.83	6.72	8.0	25.02	24.16
0.021500	54.47	6.80	8.0	25.02	24.16
0.022000	55.10	6.88	8.0	25.02	24.16
0.022500	55.72	6.95	8.0	25.02	24.16
0.023000	56.33	7.03	8.0	25.02	24.16
0.023500	56.94	7.11	8.0	25.02	24.16
0.024000	57.55	7.18	8.0	25.02	24.16
0.024500	58.14	7.26	8.0	25.02	24.16
0.025000	58.73	7.33	8.0	25.02	24.16
0.025500	59.32	7.40	8.0	25.02	24.16
0.026000	59.90	7.48	8.0	25.02	24.16
0.026500	60.47	7.55	8.0	25.02	24.16
0.027000	61.04	7.62	8.0	25.02	24.16
0.027500	61.60	7.69	8.0	25.02	24.16
0.028000	62.16	7.76	8.0	25.02	24.16
0.028500	62.71	7.83	8.0	25.02	24.16
0.029000	63.26	7.90	8.0	25.02	24.16
0.029500	63.80	7.96	8.0	25.02	24.16
0.030000	64.34	8.03	8.0	25.02	24.16

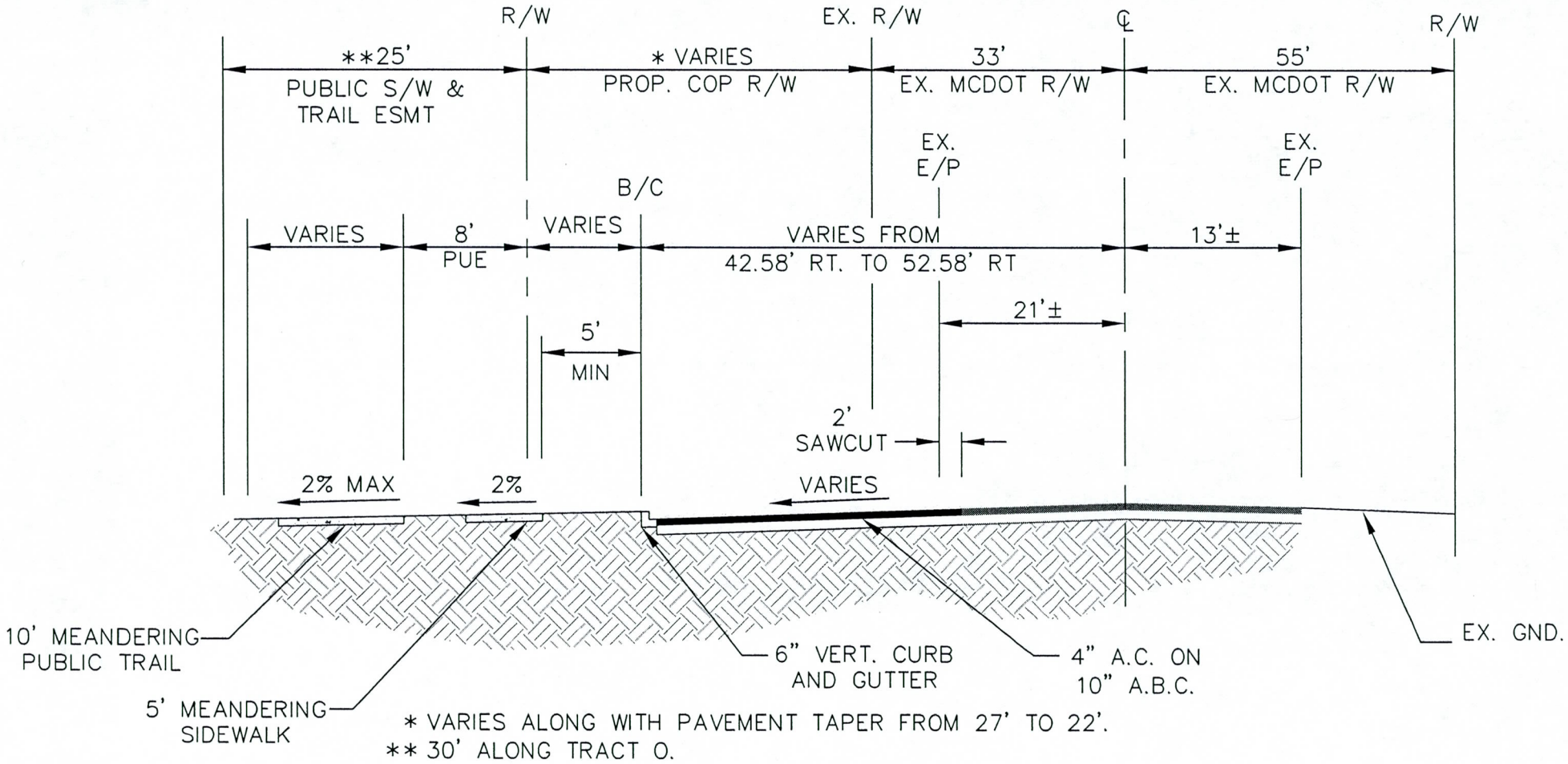

* VARIES ALONG WITH PAVEMENT TAPER FROM 27' TO 22'.
** 30' ALONG TRACT O.

BASELINE ROAD

STA: 10+00 TO STA: 30+32.27

N.T.S.

BASELINE ROAD CAPACITY TABLE - VERTICAL CURB

Rating Table for Irregular Channel

Project Description	
Worksheet	BASELINE ROAD VEF
Flow Element	Irregular Channel
Method	Manning's Formula
Solve For	Discharge

Input Data	
Water Surface Elev	0.00 ft

Options	
Current Roughness Metho	ved Lotter's Method
Open Channel Weighting	ved Lotter's Method
Closed Channel Weightin	Horton's Method

Attribute	Minimum	Maximum	Increment
Slope (ft/ft)	0.002000	0.030000	0.000500

Slope (ft/ft)	Discharge (cfs)	Velocity (ft/s)	Flow Area (ft²)	Wetted Perimeter (ft)	Top Width (ft)
0.002000	9.53	1.87	5.1	22.97	22.53
0.002500	10.65	2.09	5.1	22.97	22.53
0.003000	11.67	2.29	5.1	22.97	22.53
0.003500	12.61	2.48	5.1	22.97	22.53
0.004000	13.48	2.65	5.1	22.97	22.53
0.004500	14.29	2.81	5.1	22.97	22.53
0.005000	15.07	2.96	5.1	22.97	22.53
0.005500	15.80	3.10	5.1	22.97	22.53
0.006000	16.51	3.24	5.1	22.97	22.53
0.006500	17.18	3.37	5.1	22.97	22.53
0.007000	17.83	3.50	5.1	22.97	22.53
0.007500	18.45	3.63	5.1	22.97	22.53
0.008000	19.06	3.74	5.1	22.97	22.53
0.008500	19.65	3.86	5.1	22.97	22.53
0.009000	20.21	3.97	5.1	22.97	22.53
0.009500	20.77	4.08	5.1	22.97	22.53
0.010000	21.31	4.19	5.1	22.97	22.53
0.010500	21.83	4.29	5.1	22.97	22.53
0.011000	22.35	4.39	5.1	22.97	22.53
0.011500	22.85	4.49	5.1	22.97	22.53
0.012000	23.34	4.59	5.1	22.97	22.53
0.012500	23.82	4.68	5.1	22.97	22.53
0.013000	24.29	4.77	5.1	22.97	22.53
0.013500	24.76	4.86	5.1	22.97	22.53
0.014000	25.21	4.95	5.1	22.97	22.53
0.014500	25.66	5.04	5.1	22.97	22.53
0.015000	26.10	5.13	5.1	22.97	22.53
0.015500	26.53	5.21	5.1	22.97	22.53
0.016000	26.95	5.30	5.1	22.97	22.53
0.016500	27.37	5.38	5.1	22.97	22.53
0.017000	27.78	5.46	5.1	22.97	22.53
0.017500	28.19	5.54	5.1	22.97	22.53
0.018000	28.59	5.62	5.1	22.97	22.53
0.018500	28.98	5.69	5.1	22.97	22.53

BASELINE ROAD CAPACITY TABLE - VERTICAL CURB

Rating Table for Irregular Channel

Slope (ft/ft)	Discharge (cfs)	Velocity (ft/s)	Flow Area (ft^2)	Wetted Perimeter (ft)	Top Width (ft)
0.019000	29.37	5.77	5.1	22.97	22.53
0.019500	29.76	5.85	5.1	22.97	22.53
0.020000	30.13	5.92	5.1	22.97	22.53
0.020500	30.51	5.99	5.1	22.97	22.53
0.021000	30.88	6.07	5.1	22.97	22.53
0.021500	31.24	6.14	5.1	22.97	22.53
0.022000	31.60	6.21	5.1	22.97	22.53
0.022500	31.96	6.28	5.1	22.97	22.53
0.023000	32.32	6.35	5.1	22.97	22.53
0.023500	32.66	6.42	5.1	22.97	22.53
0.024000	33.01	6.49	5.1	22.97	22.53
0.024500	33.35	6.55	5.1	22.97	22.53
0.025000	33.69	6.62	5.1	22.97	22.53
0.025500	34.03	6.68	5.1	22.97	22.53
0.026000	34.36	6.75	5.1	22.97	22.53
0.026500	34.69	6.81	5.1	22.97	22.53
0.027000	35.01	6.88	5.1	22.97	22.53
0.027500	35.34	6.94	5.1	22.97	22.53
0.028000	35.66	7.00	5.1	22.97	22.53
0.028500	35.97	7.07	5.1	22.97	22.53
0.029000	36.29	7.13	5.1	22.97	22.53
0.029500	36.60	7.19	5.1	22.97	22.53
0.030000	36.91	7.25	5.1	22.97	22.53

BASELINE ROAD CAPACITY TABLE - VERTICAL CURB
Worksheet for Irregular Channel

Project Description	
Worksheet	BASELINE ROAD VEF
Flow Element	Irregular Channel
Method	Manning's Formula
Solve For	Discharge

Input Data		
Slope	002000	ft/ft
Water Surface Elev	0.00	ft

Options	
Current Roughness Methc	ved Lotter's Method
Open Channel Weighting	ved Lotter's Method
Closed Channel Weightin	Horton's Method

Results		
Mannings Coeffic	0.013	
Elevation Range	0.50 to 0.60	
Discharge	9.53	cfs
Flow Area	5.1	ft²
Wetted Perimeter	22.97	ft
Top Width	22.53	ft
Actual Depth	0.50	ft
Critical Elevation	-0.06	ft
Critical Slope	0.004354	ft/ft
Velocity	1.87	ft/s
Velocity Head	0.05	ft
Specific Energy	0.05	ft
Froude Number	0.69	
Flow Type	Subcritical	

Calculation Messages:
Water elevation exceeds lowest end station by 0.0 ft.

Roughness Segments

Start Station	End Station	Mannings Coefficient
0+08.92	0+74.50	0.013

Natural Channel Points

Station (ft)	Elevation (ft)
0+08.92	0.00
0+09.00	-0.50
0+10.42	-0.42
0+61.50	0.60
0+74.50	0.34

BASELINE ROAD CAPACITY TABLE-VERTICAL CURB

Cross Section for Irregular Channel

Project Description	
Worksheet	BASELINE ROAD VEF
Flow Element	Irregular Channel
Method	Manning's Formula
Solve For	Discharge

Section Data		
Mannings Coefficie	0.013	
Slope	0.002000	ft/ft
Water Surface Elev	0.00	ft
Elevation Range	).50 to 0.60	
Discharge	9.53	cfs

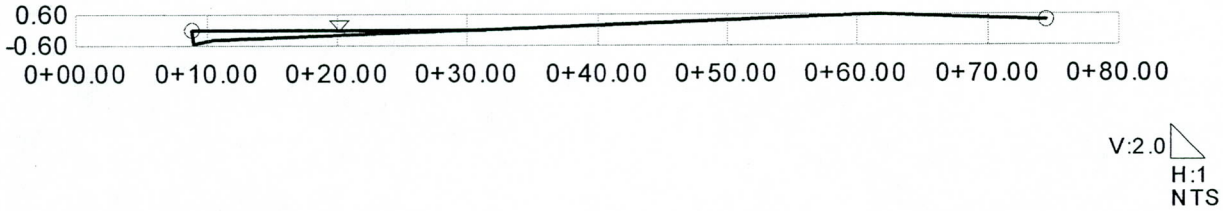

BASELINE ROAD CAPACITY TABLE - R/W
Rating Table for Irregular Channel

Project Description	
Worksheet	BASELINE RO
Flow Element	Irregular Chan
Method	Manning's Forr
Solve For	Discharge

Input Data	
Water Surface Elev	0.20 ft

Options	
Current Roughness Meth	ved Lotter's Method
Open Channel Weighting	ved Lotter's Method
Closed Channel Weightin	Horton's Method

Attribute	Minimum	Maximum	Increment
Slope (ft/ft)	0.002000	0.030000	0.000500

Slope (ft/ft)	Discharge (cfs)	Velocity (ft/s)	Flow Area (ft²)	Wetted Perimeter (ft)	Top Width (ft)
0.002000	25.28	2.39	10.6	33.18	32.55
0.002500	28.27	2.67	10.6	33.18	32.55
0.003000	30.96	2.92	10.6	33.18	32.55
0.003500	33.45	3.16	10.6	33.18	32.55
0.004000	35.75	3.38	10.6	33.18	32.55
0.004500	37.92	3.58	10.6	33.18	32.55
0.005000	39.97	3.77	10.6	33.18	32.55
0.005500	41.93	3.96	10.6	33.18	32.55
0.006000	43.79	4.13	10.6	33.18	32.55
0.006500	45.58	4.30	10.6	33.18	32.55
0.007000	47.30	4.47	10.6	33.18	32.55
0.007500	48.96	4.62	10.6	33.18	32.55
0.008000	50.56	4.77	10.6	33.18	32.55
0.008500	52.12	4.92	10.6	33.18	32.55
0.009000	53.63	5.06	10.6	33.18	32.55
0.009500	55.10	5.20	10.6	33.18	32.55
0.010000	56.53	5.34	10.6	33.18	32.55
0.010500	57.93	5.47	10.6	33.18	32.55
0.011000	59.29	5.60	10.6	33.18	32.55
0.011500	60.62	5.72	10.6	33.18	32.55
0.012000	61.93	5.85	10.6	33.18	32.55
0.012500	63.21	5.97	10.6	33.18	32.55
0.013000	64.46	6.09	10.6	33.18	32.55
0.013500	65.68	6.20	10.6	33.18	32.55
0.014000	66.89	6.32	10.6	33.18	32.55
0.014500	68.07	6.43	10.6	33.18	32.55
0.015000	69.24	6.54	10.6	33.18	32.55
0.015500	70.38	6.65	10.6	33.18	32.55
0.016000	71.51	6.75	10.6	33.18	32.55
0.016500	72.62	6.86	10.6	33.18	32.55
0.017000	73.71	6.96	10.6	33.18	32.55
0.017500	74.79	7.06	10.6	33.18	32.55
0.018000	75.85	7.16	10.6	33.18	32.55
0.018500	76.89	7.26	10.6	33.18	32.55

BASELINE ROAD CAPACITY TABLE - R/W

Rating Table for Irregular Channel

Slope (ft/ft)	Discharge (cfs)	Velocity (ft/s)	Flow Area (ft²)	Wetted Perimeter (ft)	Top Width (ft)
0.019000	77.92	7.36	10.6	33.18	32.55
0.019500	78.94	7.45	10.6	33.18	32.55
0.020000	79.95	7.55	10.6	33.18	32.55
0.020500	80.94	7.64	10.6	33.18	32.55
0.021000	81.92	7.74	10.6	33.18	32.55
0.021500	82.89	7.83	10.6	33.18	32.55
0.022000	83.85	7.92	10.6	33.18	32.55
0.022500	84.80	8.01	10.6	33.18	32.55
0.023000	85.74	8.10	10.6	33.18	32.55
0.023500	86.66	8.18	10.6	33.18	32.55
0.024000	87.58	8.27	10.6	33.18	32.55
0.024500	88.49	8.36	10.6	33.18	32.55
0.025000	89.39	8.44	10.6	33.18	32.55
0.025500	90.28	8.52	10.6	33.18	32.55
0.026000	91.16	8.61	10.6	33.18	32.55
0.026500	92.03	8.69	10.6	33.18	32.55
0.027000	92.89	8.77	10.6	33.18	32.55
0.027500	93.75	8.85	10.6	33.18	32.55
0.028000	94.60	8.93	10.6	33.18	32.55
0.028500	95.44	9.01	10.6	33.18	32.55
0.029000	96.27	9.09	10.6	33.18	32.55
0.029500	97.10	9.17	10.6	33.18	32.55
0.030000	97.92	9.25	10.6	33.18	32.55

BASELINE ROAD CAPACITY TABLE - R/W
Worksheet for Irregular Channel

Project Description	
Worksheet	BASELINE RO
Flow Element	Irregular Chan
Method	Manning's Forr
Solve For	Discharge

Input Data		
Slope	002000	ft/ft
Water Surface Elev	0.20	ft

Options	
Current Roughness Meth	ved Lotter's Method
Open Channel Weighting	ved Lotter's Method
Closed Channel Weightin	Horton's Method

Results		
Mannings Coeffic	0.013	
Elevation Range	0.50 to 0.60	
Discharge	25.28	cfs
Flow Area	10.6	ft²
Wetted Perimete	33.18	ft
Top Width	32.55	ft
Actual Depth	0.70	ft
Critical Elevation	0.13	ft
Critical Slope	0.003826	ft/ft
Velocity	2.39	ft/s
Velocity Head	0.09	ft
Specific Energy	0.29	ft
Froude Number	0.74	
Flow Type	Subcritical	

Calculation Messages:
Water elevation exceeds lowest end station by 0.0 ft.

Roughness Segments

Start Station	End Station	Mannings Coefficient
0+08.92	0+74.50	0.013

Natural Channel Points

Station (ft)	Elevation (ft)
0+08.92	0.20
0+09.00	-0.50
0+10.42	-0.42
0+61.50	0.60
0+74.50	0.34

BASELINE ROAD CAPACITY TABLE - R/W
Cross Section for Irregular Channel

Project Description	
Worksheet	BASELINE RO
Flow Element	Irregular Chan
Method	Manning's Forr
Solve For	Discharge

Section Data		
Mannings Coefficie	0.013	
Slope	0.002000	ft/ft
Water Surface Elev	0.20	ft
Elevation Range	).50 to 0.60	
Discharge	25.28	cfs

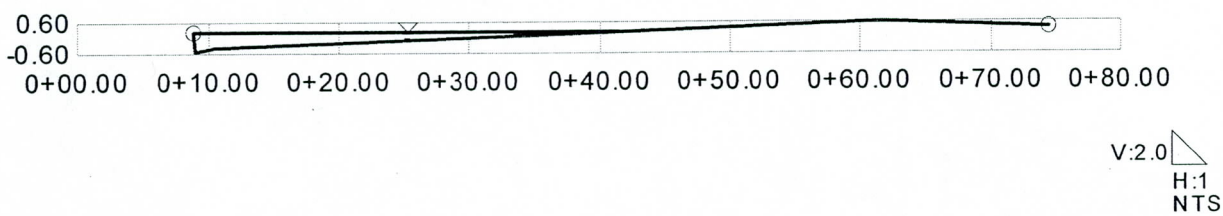

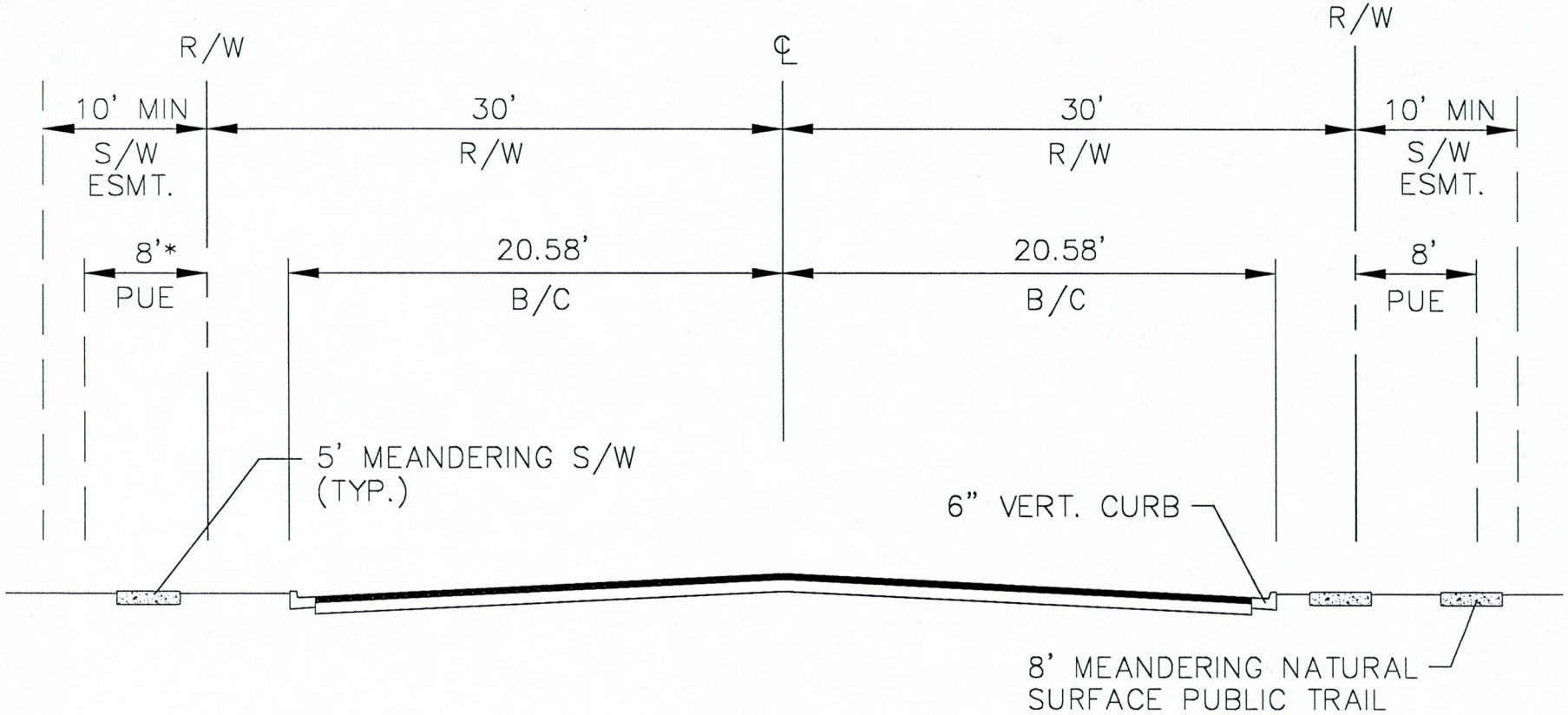

COLLECTOR ROAD SECTION

(LOOKING NORTH) N.T.S.

COLLECTOR ROAD CAPACITY TABLE - VERTICAL CURB

Rating Table for Irregular Channel

Project Description	
Worksheet	COLLECTOR VER
Flow Element	Irregular Channel
Method	Manning's Formula
Solve For	Discharge

Input Data	
Water Surface Elev	0.00 ft

Options	
Current Roughness Meth	ved Lotter's Method
Open Channel Weighting	ved Lotter's Method
Closed Channel Weightin	Horton's Method

Attribute	Minimum	Maximum	Increment
Slope (ft/ft)	0.002000	0.030000	0.000500

Slope (ft/ft)	Discharge (cfs)	Velocity (ft/s)	Flow Area (ft²)	Wetted Perimeter (ft)	Top Width (ft)
0.002000	20.64	2.00	10.3	42.02	41.13
0.002500	23.08	2.24	10.3	42.02	41.13
0.003000	25.28	2.45	10.3	42.02	41.13
0.003500	27.31	2.65	10.3	42.02	41.13
0.004000	29.19	2.83	10.3	42.02	41.13
0.004500	30.96	3.00	10.3	42.02	41.13
0.005000	32.64	3.17	10.3	42.02	41.13
0.005500	34.23	3.32	10.3	42.02	41.13
0.006000	35.76	3.47	10.3	42.02	41.13
0.006500	37.22	3.61	10.3	42.02	41.13
0.007000	38.62	3.75	10.3	42.02	41.13
0.007500	39.98	3.88	10.3	42.02	41.13
0.008000	41.29	4.01	10.3	42.02	41.13
0.008500	42.56	4.13	10.3	42.02	41.13
0.009000	43.79	4.25	10.3	42.02	41.13
0.009500	44.99	4.37	10.3	42.02	41.13
0.010000	46.16	4.48	10.3	42.02	41.13
0.010500	47.30	4.59	10.3	42.02	41.13
0.011000	48.41	4.70	10.3	42.02	41.13
0.011500	49.50	4.80	10.3	42.02	41.13
0.012000	50.57	4.91	10.3	42.02	41.13
0.012500	51.61	5.01	10.3	42.02	41.13
0.013000	52.63	5.11	10.3	42.02	41.13
0.013500	53.63	5.20	10.3	42.02	41.13
0.014000	54.62	5.30	10.3	42.02	41.13
0.014500	55.58	5.39	10.3	42.02	41.13
0.015000	56.53	5.49	10.3	42.02	41.13
0.015500	57.47	5.58	10.3	42.02	41.13
0.016000	58.39	5.67	10.3	42.02	41.13
0.016500	59.29	5.75	10.3	42.02	41.13
0.017000	60.18	5.84	10.3	42.02	41.13
0.017500	61.06	5.92	10.3	42.02	41.13
0.018000	61.93	6.01	10.3	42.02	41.13
0.018500	62.78	6.09	10.3	42.02	41.13

COLLECTOR ROAD CAPACITY TABLE - VERTICAL CURB

Rating Table for Irregular Channel

Slope (ft/ft)	Discharge (cfs)	Velocity (ft/s)	Flow Area (ft^2)	Wetted Perimeter (ft)	Top Width (ft)
0.019000	63.63	6.17	10.3	42.02	41.13
0.019500	64.46	6.25	10.3	42.02	41.13
0.020000	65.28	6.33	10.3	42.02	41.13
0.020500	66.09	6.41	10.3	42.02	41.13
0.021000	66.89	6.49	10.3	42.02	41.13
0.021500	67.68	6.57	10.3	42.02	41.13
0.022000	68.47	6.64	10.3	42.02	41.13
0.022500	69.24	6.72	10.3	42.02	41.13
0.023000	70.00	6.79	10.3	42.02	41.13
0.023500	70.76	6.87	10.3	42.02	41.13
0.024000	71.51	6.94	10.3	42.02	41.13
0.024500	72.25	7.01	10.3	42.02	41.13
0.025000	72.98	7.08	10.3	42.02	41.13
0.025500	73.71	7.15	10.3	42.02	41.13
0.026000	74.43	7.22	10.3	42.02	41.13
0.026500	75.14	7.29	10.3	42.02	41.13
0.027000	75.85	7.36	10.3	42.02	41.13
0.027500	76.55	7.43	10.3	42.02	41.13
0.028000	77.24	7.49	10.3	42.02	41.13
0.028500	77.93	7.56	10.3	42.02	41.13
0.029000	78.61	7.63	10.3	42.02	41.13
0.029500	79.28	7.69	10.3	42.02	41.13
0.030000	79.95	7.76	10.3	42.02	41.13

COLLECTOR ROAD CAPACITY TABLE - VERTICAL CURB
Worksheet for Irregular Channel

Project Description	
Worksheet	COLLECTOR VER
Flow Element	Irregular Channel
Method	Manning's Formula
Solve For	Discharge

Input Data		
Slope	002000	ft/ft
Water Surface Elev	0.00	ft

Options	
Current Roughness Metho	ved Lotter's Method
Open Channel Weighting	ved Lotter's Method
Closed Channel Weightin	Horton's Method

Results		
Mannings Coeffic	0.013	
Elevation Range	0.50 to 0.00	
Discharge	20.64	cfs
Flow Area	10.3	ft²
Wetted Perimeter	42.02	ft
Top Width	41.13	ft
Actual Depth	0.50	ft
Critical Elevation	-0.05	ft
Critical Slope	0.004325	ft/ft
Velocity	2.00	ft/s
Velocity Head	0.06	ft
Specific Energy	0.06	ft
Froude Number	0.71	
Flow Type	Subcritical	

Calculation Messages:
Water elevation exceeds lowest end station by 0.0 ft.

Roughness Segments

Start Station	End Station	Mannings Coefficient
0+08.92	0+50.05	0.013

Natural Channel Points

Station (ft)	Elevation (ft)
0+08.92	0.00
0+09.00	-0.50
0+10.42	-0.42
0+29.50	-0.05
0+48.58	-0.42
0+50.00	-0.50
0+50.05	0.00

COLLECTOR ROAD CAPACITY TABLE - VERTICAL CURB

Cross Section for Irregular Channel

Project Description	
Worksheet	COLLECTOR VER
Flow Element	Irregular Channel
Method	Manning's Formula
Solve For	Discharge

Section Data		
Mannings Coefficie	0.013	
Slope	0.002000	ft/ft
Water Surface Elev	0.00	ft
Elevation Range	0.50 to 0.00	
Discharge	20.64	cfs

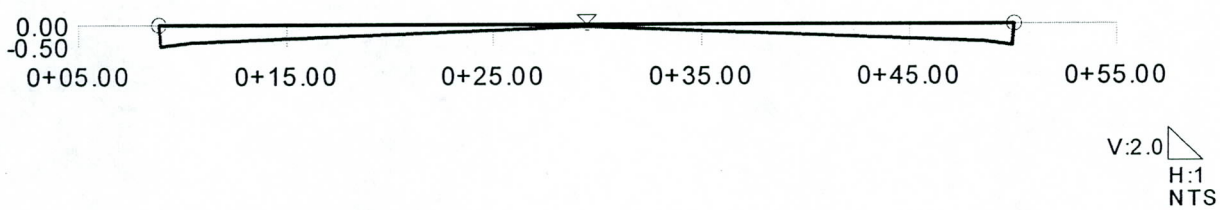

COLLECTOR ROAD CAPACITY TABLE - R/W

Worksheet for Irregular Channel

Project Description	
Worksheet	COLLECTOR I
Flow Element	Irregular Chan
Method	Manning's For
Solve For	Discharge

Input Data		
Slope	002000	ft/ft
Water Surface Elev	0.20	ft

Options	
Current Roughness Meth	ved Lotter's Method
Open Channel Weighting	ved Lotter's Method
Closed Channel Weightin	Horton's Method

Results		
Mannings Coeffic	0.013	
Elevation Range	0.50 to 0.20	
Discharge	54.48	cfs
Flow Area	18.5	ft²
Wetted Perimete	42.42	ft
Top Width	41.13	ft
Actual Depth	0.70	ft
Critical Elevation	0.13	ft
Critical Slope	0.003530	ft/ft
Velocity	2.94	ft/s
Velocity Head	0.13	ft
Specific Energy	0.33	ft
Froude Number	0.77	
Flow Type	Subcritical	

Calculation Messages:
Water elevation exceeds lowest end station by 0.0 ft.

Roughness Segments

Start Station	End Station	Mannings Coefficient
0+08.92	0+50.05	0.013

Natural Channel Points

Station (ft)	Elevation (ft)
0+08.92	0.20
0+09.00	-0.50
0+10.42	-0.42
0+29.50	-0.05
0+48.58	-0.42
0+50.00	-0.50
0+50.05	0.20

COLLECTOR ROAD CAPACITY TABLE - R/W
Rating Table for Irregular Channel

Project Description	
Worksheet	COLLECTOR I
Flow Element	Irregular Chan
Method	Manning's Forr
Solve For	Discharge

Input Data	
Water Surface Elev	0.20 ft

Options	
Current Roughness Meth	ved Lotter's Method
Open Channel Weighting	ved Lotter's Method
Closed Channel Weightin	Horton's Method

Attribute	Minimum	Maximum	Increment
Slope (ft/ft)	0.002000	0.030000	0.000500

Slope (ft/ft)	Discharge (cfs)	Velocity (ft/s)	Flow Area (ft²)	Wetted Perimeter (ft)	Top Width (ft)
0.002000	54.48	2.94	18.5	42.42	41.13
0.002500	60.91	3.29	18.5	42.42	41.13
0.003000	66.73	3.60	18.5	42.42	41.13
0.003500	72.07	3.89	18.5	42.42	41.13
0.004000	77.05	4.16	18.5	42.42	41.13
0.004500	81.72	4.41	18.5	42.42	41.13
0.005000	86.14	4.65	18.5	42.42	41.13
0.005500	90.35	4.88	18.5	42.42	41.13
0.006000	94.36	5.10	18.5	42.42	41.13
0.006500	98.22	5.30	18.5	42.42	41.13
0.007000	101.93	5.50	18.5	42.42	41.13
0.007500	105.50	5.70	18.5	42.42	41.13
0.008000	108.96	5.88	18.5	42.42	41.13
0.008500	112.32	6.06	18.5	42.42	41.13
0.009000	115.57	6.24	18.5	42.42	41.13
0.009500	118.74	6.41	18.5	42.42	41.13
0.010000	121.82	6.58	18.5	42.42	41.13
0.010500	124.83	6.74	18.5	42.42	41.13
0.011000	127.77	6.90	18.5	42.42	41.13
0.011500	130.64	7.05	18.5	42.42	41.13
0.012000	133.45	7.21	18.5	42.42	41.13
0.012500	136.20	7.35	18.5	42.42	41.13
0.013000	138.90	7.50	18.5	42.42	41.13
0.013500	141.55	7.64	18.5	42.42	41.13
0.014000	144.14	7.78	18.5	42.42	41.13
0.014500	146.70	7.92	18.5	42.42	41.13
0.015000	149.20	8.06	18.5	42.42	41.13
0.015500	151.67	8.19	18.5	42.42	41.13
0.016000	154.10	8.32	18.5	42.42	41.13
0.016500	156.49	8.45	18.5	42.42	41.13
0.017000	158.84	8.58	18.5	42.42	41.13
0.017500	161.16	8.70	18.5	42.42	41.13
0.018000	163.44	8.83	18.5	42.42	41.13
0.018500	165.70	8.95	18.5	42.42	41.13

COLLECTOR ROAD CAPACITY TABLE - R/W

Rating Table for Irregular Channel

Slope (ft/ft)	Discharge (cfs)	Velocity (ft/s)	Flow Area (ft²)	Wetted Perimeter (ft)	Top Width (ft)
0.019000	167.92	9.07	18.5	42.42	41.13
0.019500	170.12	9.19	18.5	42.42	41.13
0.020000	172.29	9.30	18.5	42.42	41.13
0.020500	174.43	9.42	18.5	42.42	41.13
0.021000	176.54	9.53	18.5	42.42	41.13
0.021500	178.63	9.65	18.5	42.42	41.13
0.022000	180.69	9.76	18.5	42.42	41.13
0.022500	182.74	9.87	18.5	42.42	41.13
0.023000	184.76	9.98	18.5	42.42	41.13
0.023500	186.75	10.08	18.5	42.42	41.13
0.024000	188.73	10.19	18.5	42.42	41.13
0.024500	190.69	10.30	18.5	42.42	41.13
0.025000	192.62	10.40	18.5	42.42	41.13
0.025500	194.54	10.50	18.5	42.42	41.13
0.026000	196.44	10.61	18.5	42.42	41.13
0.026500	198.32	10.71	18.5	42.42	41.13
0.027000	200.18	10.81	18.5	42.42	41.13
0.027500	202.02	10.91	18.5	42.42	41.13
0.028000	203.85	11.01	18.5	42.42	41.13
0.028500	205.66	11.11	18.5	42.42	41.13
0.029000	207.46	11.20	18.5	42.42	41.13
0.029500	209.24	11.30	18.5	42.42	41.13
0.030000	211.01	11.39	18.5	42.42	41.13

COLLECTOR ROAD CAPACITY TABLE - R/W
Cross Section for Irregular Channel

Project Description	
Worksheet	COLLECTOR I
Flow Element	Irregular Chan
Method	Manning's Forr
Solve For	Discharge

Section Data		
Mannings Coefficie	0.013	
Slope	0.002000	ft/ft
Water Surface Elev	0.20	ft
Elevation Range	).50 to 0.20	
Discharge	54.48	cfs

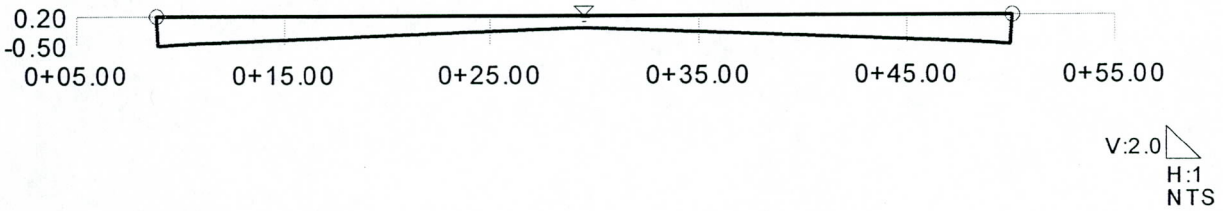

LOCAL STREET CAPACITY TABLE - VERTICAL CURB

Rating Table for Irregular Channel

Project Description	
Worksheet	LOCAL VERT.
Flow Element	Irregular Chan
Method	Manning's Forr
Solve For	Discharge

Input Data	
Water Surface Elev	0.00 ft

Options	
Current Roughness Meth	ved Lotter's Method
Open Channel Weighting	ved Lotter's Method
Closed Channel Weightin	Horton's Method

Attribute	Minimum	Maximum	Increment
Slope (ft/ft)	0.002000	0.030000	0.000500

Slope (ft/ft)	Discharge (cfs)	Velocity (ft/s)	Flow Area (ft²)	Wetted Perimeter (ft)	Top Width (ft)
0.002000	17.91	1.91	9.4	33.02	32.16
0.002500	20.02	2.14	9.4	33.02	32.16
0.003000	21.93	2.34	9.4	33.02	32.16
0.003500	23.69	2.53	9.4	33.02	32.16
0.004000	25.33	2.70	9.4	33.02	32.16
0.004500	26.86	2.87	9.4	33.02	32.16
0.005000	28.32	3.02	9.4	33.02	32.16
0.005500	29.70	3.17	9.4	33.02	32.16
0.006000	31.02	3.31	9.4	33.02	32.16
0.006500	32.29	3.45	9.4	33.02	32.16
0.007000	33.51	3.58	9.4	33.02	32.16
0.007500	34.68	3.70	9.4	33.02	32.16
0.008000	35.82	3.82	9.4	33.02	32.16
0.008500	36.92	3.94	9.4	33.02	32.16
0.009000	37.99	4.06	9.4	33.02	32.16
0.009500	39.03	4.17	9.4	33.02	32.16
0.010000	40.05	4.28	9.4	33.02	32.16
0.010500	41.04	4.38	9.4	33.02	32.16
0.011000	42.00	4.48	9.4	33.02	32.16
0.011500	42.95	4.59	9.4	33.02	32.16
0.012000	43.87	4.68	9.4	33.02	32.16
0.012500	44.77	4.78	9.4	33.02	32.16
0.013000	45.66	4.88	9.4	33.02	32.16
0.013500	46.53	4.97	9.4	33.02	32.16
0.014000	47.38	5.06	9.4	33.02	32.16
0.014500	48.22	5.15	9.4	33.02	32.16
0.015000	49.05	5.24	9.4	33.02	32.16
0.015500	49.86	5.32	9.4	33.02	32.16
0.016000	50.66	5.41	9.4	33.02	32.16
0.016500	51.44	5.49	9.4	33.02	32.16
0.017000	52.21	5.58	9.4	33.02	32.16
0.017500	52.98	5.66	9.4	33.02	32.16
0.018000	53.73	5.74	9.4	33.02	32.16
0.018500	54.47	5.82	9.4	33.02	32.16

Appendix K – Time to Drain Calculations

Kimley-Horn and Associates, Inc.

Sheet No. 1 of 2

Job LAUREEN MEADOWS Subject TIME TO DRAIN Job No. 091397008

Designed by JMM Date 7/16/01 Checked by Date

TRACT G (BASIN 5)

PERC. RATE FROM GEOTECH REPORT = 25 min/in

$$\text{CAPACITY OF BASIN} = \frac{1''}{25\,\text{min}}\left(\frac{\text{ft}}{12\,\text{in}}\right)\left(97{,}770\,\text{SF}\right)\left(\frac{\text{min}}{60\,\text{sec}}\right) = 5.43\ \text{CFS}$$

$$\text{TIME TO DRAIN} = \frac{174{,}010\ \text{CF}}{5.43\ \text{CFS}}\left(\frac{\text{hr}}{3600\,\text{s}}\right) = \underline{8.9\ \text{hrs}}$$

TRACT B (BASIN 2)

$$\text{CAPACITY OF BASIN} = \frac{1''}{25\,\text{min}}\left(\frac{\text{ft}}{12\,\text{in}}\right)\left(10{,}405\,\text{SF}\right)\left(\frac{\text{min}}{60\,\text{sec}}\right) = 0.58\ \text{CFS}$$

$$\text{TIME TO DRAIN} = \frac{14{,}689\ \text{CF}}{0.58\ \text{CFS}}\left(\frac{\text{hr}}{3600\,\text{s}}\right) = \underline{7.0\ \text{hrs}}$$

TRACT N & O (BASIN 1)

$$\text{CAPACITY OF BASIN} = \frac{1''}{25\,\text{min}}\left(\frac{\text{ft}}{12\,\text{in}}\right)\left(3{,}259\,\text{SF}\right)\left(\frac{\text{min}}{60\,\text{s}}\right) = 0.18\ \text{CFS}$$

$$\text{TIME TO DRAIN} = \frac{7{,}900\ \text{CF}}{0.18\ \text{CFS}}\left(\frac{\text{hr}}{3600\,\text{s}}\right) = 12.2\ \text{hrs}$$

Kimley-Horn and Associates, Inc.

Sheet No. 2 of 2

Job LAUREN MEADOWS Subject TIME TO DRAIN Job No. 091397008

Designed by JMM Date 7/16/01 Checked by _____ Date _____

TRACT C (BASIN 3)

$$\text{CAPACITY OF BASIN} = \frac{1''}{25\,\text{min}}\left(\frac{\text{ft}}{12\,\text{in}}\right)\left(6{,}321\ \text{SF}\right)\left(\frac{\text{min}}{60\,\text{S}}\right) = 0.35\ \text{CFS}$$

$$\text{TIME TO DRAIN} = \frac{26{,}067\ \text{CF}}{0.35\ \text{CFS}}\left(\frac{\text{hr}}{3600\,\text{S}}\right) = 20.7\ \text{hrs}$$

TRACT F (BASIN 4)

$$\text{CAPACITY OF BASIN} = \frac{1''}{25\,\text{min}}\left(\frac{\text{ft}}{12\,\text{in}}\right)\left(9{,}788\ \text{SF}\right)\left(\frac{\text{min}}{60\,\text{S}}\right) = 0.54\ \text{CFS}$$

$$\text{TIME TO DRAIN} = \frac{27{,}693\ \text{CF}}{0.54\ \text{CFS}}\left(\frac{\text{hr}}{3600\,\text{S}}\right) = 14.2\ \text{hrs}$$

Appendix L – Drainage Map

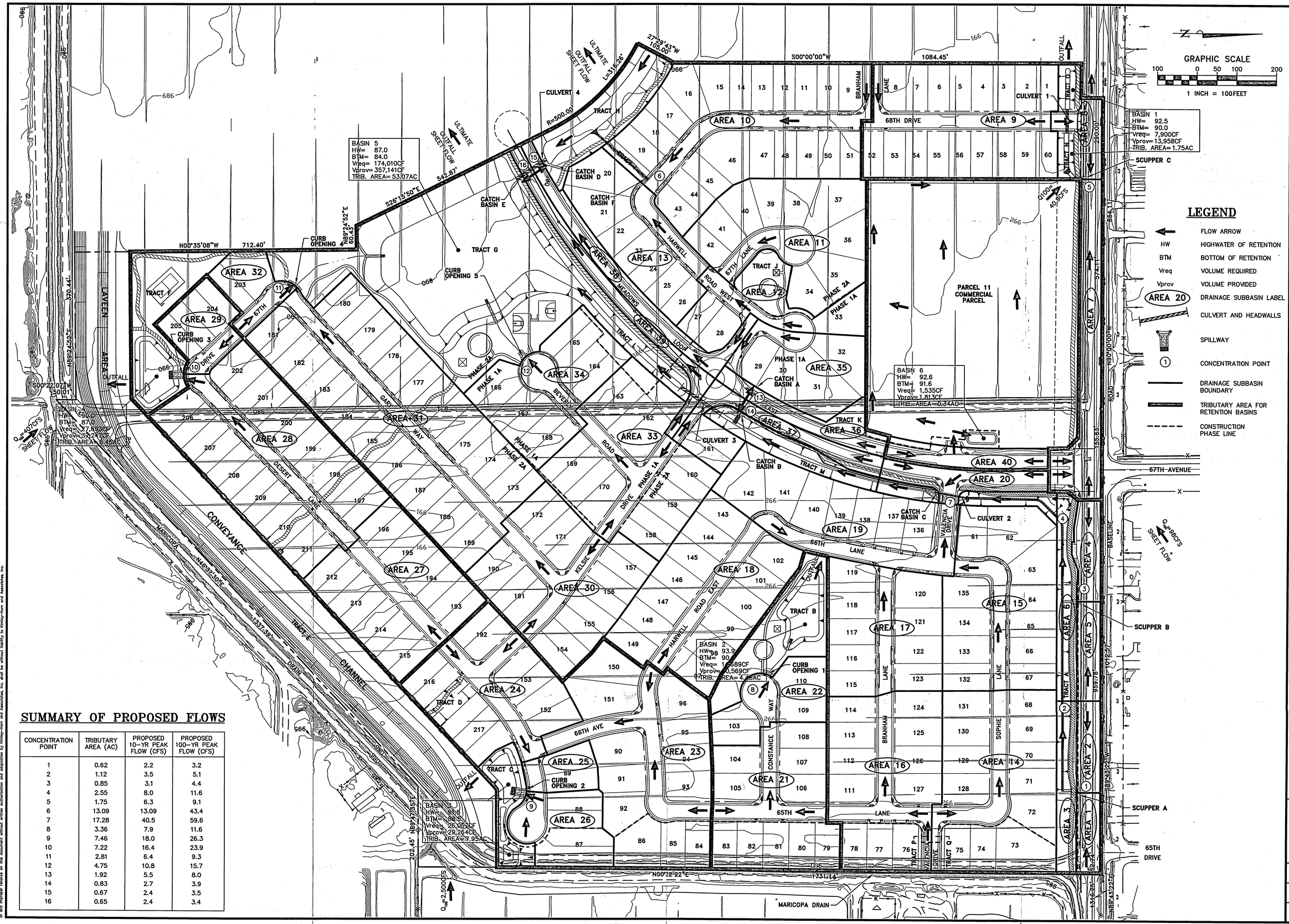

SUMMARY OF PROPOSED FLOWS

CONCENTRATION POINT	TRIBUTARY AREA (AC)	PROPOSED 10-YR PEAK FLOW (CFS)	PROPOSED 100-YR PEAK FLOW (CFS)
1	0.62	2.2	3.2
2	1.12	3.5	5.1
3	0.85	3.1	4.4
4	2.55	8.0	11.6
5	1.75	6.3	9.1
6	13.09	13.09	43.4
7	17.28	40.5	59.6
8	3.36	7.9	11.6
9	7.46	18.0	26.3
10	7.22	16.4	23.9
11	2.81	6.4	9.3
12	4.75	10.8	15.7
13	1.92	5.5	8.0
14	0.83	2.7	3.9
15	0.67	2.4	3.5
16	0.65	2.4	3.4

NO.	REVISION	BY	DATE	APPR.

Kimley-Horn and Associates, Inc.
© 2001 KIMLEY-HORN AND ASSOCIATES, INC.
Engineering, Planning, and Environmental Consultants
7600 North 15th Street, Suite 250
Phoenix, Arizona 85020 (602) 944-5500

SCALE (H): 1"=100'
SCALE (V): NONE
DESIGNED BY: JMM
DRAWN BY: JMM
CHECKED BY: TGC
DATE: 09/2001

LAVEEN MEADOWS–PHASE 1

DRAINAGE MAP

PHOENIX, ARIZONA

PROJECT NO. 091397008

DRAWING NAME 7008DMAP

1 OF 1

XREF: N/A
This document, together with the concepts and designs presented herein, as an instrument of service, is intended only for the specific purpose and client for which it was prepared. Reuse of and improper reliance on this document without written authorization and adaptation by Kimley-Horn and Associates, Inc. shall be without liability to Kimley-Horn and Associates, Inc.