Flood Control District of Maricopa County

Pump Station for 43rd Avenue Storm Drain

Design Basis Report

September, 1998

FCD Project No. 117013

A117.603

Property of
Flood Control District of MC Library
Please Return to
2801 W. Durango
Phoenix, AZ 85009

carollo
engineers

Flood Control District of Maricopa County

Pump Station for 43rd Avenue Storm Drain

Design Basis Report

September, 1998

FCD Project No. 117013

P:\4628a10\Rpt\cover.wpd
3877 NORTH SEVENTH STREET, SUITE 400 • PHOENIX, ARIZONA 85014 • (602) 263-9500 • FAX (602) 265-1422

FLOOD CONTROL DISTRICT OF MARICOPA COUNTY

PUMP STATION FOR 43RD AVENUE STORM DRAIN
DESIGN BASIS REPORT

TABLE OF CONTENTS

Page

1.0 INTRODUCTION 1

2.0 PURPOSE 2

3.0 ALTERNATIVES 3
3.1 - ALTERNATE NO. 1 - CONTINUOUS PUMPING OVER 72 HOUR PERIOD 9
3.1.1 - Description of Alternate 9
3.1.2 - Capital Cost of Alternate No. 1 9
3.1.3 - Operating Cost 9

3.2 - ALTERNATE NO. 2 - PUMPING UTILIZING OFF-PEAK POWER COST 10
3.2.1 - Description of Alternate 10
3.2.2 - Capital Cost of Alternate No. 2 10
3.2.3 - Operating Cost 11

3.3 - RECOMMENDATION 11

4.0 DESIGN CRITERIA 11
4.1 - Existing Pump Station 4-1
4.2 - Recommended Pump Station 4-2
4.3 - Effluent Discharge Line 4-3
4.4 - Summary of Recommendations 4-4
4.5 - Estimated Cost 4-5

APPENDICES

FIGURES

1 - Vicinity Map 2
2 - System Schematic Profile 4
3 - Pump Station Site Plan 5
4 - Section Pump Station/Connection Pipe 6
5 - Pump Station Floor Plan 7
6 - Section AA - Pump Station 8

1.0 INTRODUCTION

The Flood Control District of Maricopa County (District) is designing a major storm drain project for collection and conveyance of storm water in an area bounded by 7th Avenue, 43rd Avenue, the Salt River and South Mountain. The project on 43rd Avenue consists of a 72-inch and 114-inch storm drain trunk line extending from Baseline Road to the Salt River. A storm water retention basin at Southern Avenue is also in the project. The outlet at the Salt River is elevated, making the trunk line flow full rather than as a gravity drain. After flows are completed, a pump station located at the Salt River is required to dewater the pipeline and retention basin. Figure 1 is a Vicinity Map showing the location of the project and its elements.

District staff is designing the trunk line, retention basin and outlet to Salt River. Carollo Engineers has been retained to design the pump station portion of the project. A single set of bidding documents will be prepared for the entire project consisting of storm drain trunk lines, retention basin, Salt River discharge pipe and pump station.

The storm drain system will be operated and maintained by the City of Phoenix after construction is complete.

2.0 PURPOSE

The purpose of this Design Basis Report is to develop and evaluate feasible alternatives for, and recommend sizing of, the pump station to dewater the storm drain trunk line and retention basin. Evaluation parameters are to include operation and maintenance costs as well as capital costs. The District is interested in an assessment of debris and grit accumulation effects on pump station operation.

In addition, this report is to tabulate design criteria for the recommended alternative, including land requirements on the designated site on property parcel on the east side of 43rd Avenue between Wier Avenue and Broadway Road.

3.0 ALTERNATIVES

Based upon discussions with the District and other agencies, including the City of Phoenix and Arizona Department of Transportation, and review of available reference documents (See Appendix) on storm drain pumping station design, the critical parameter for sizing a pump station is time to dewater the stored volumes in pipeline and retention basin after inflows from a storm event have concluded. The District recommended that dewatering be completed within 72 hours of the storm event.

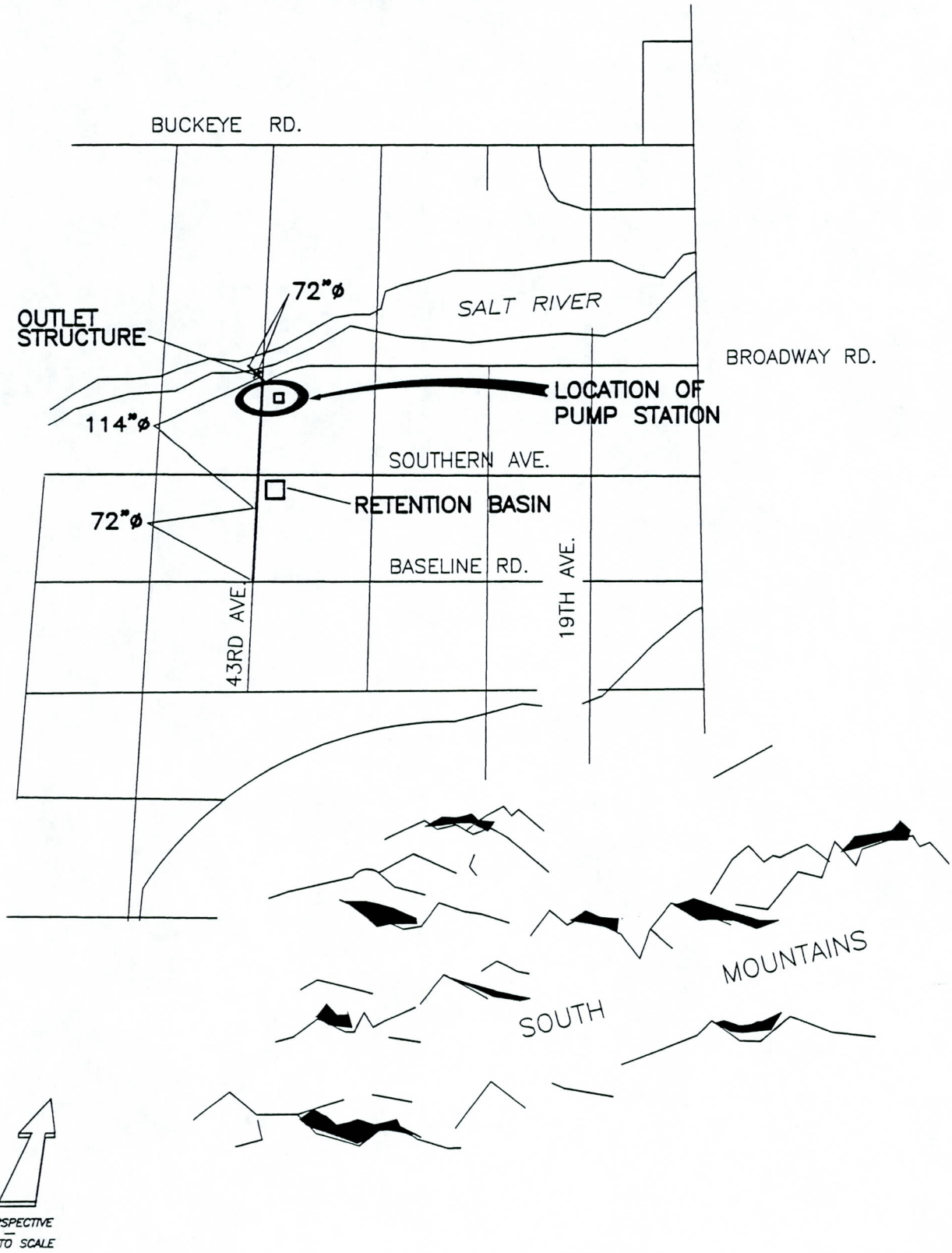

VICINITY MAP

carollo engineers

FLOOD CONTROL DISTRICT OF MARICOPA COUNTY
PUMP STATION FOR 43rd AVENUE OUTFALL
FCD PROJECT NO. 11701
FIGURE 1

Q:\FCDMC\4628A10\FIGURE\FCDMCHF.DWG

This time is consistent with experience of ADOT in dewatering the tunnels that drain the I-10 Freeway at the Inner Loop in Central Phoenix. In that project, criteria to establish time to dewater included considerations such as potential for biological activity in stored water and accumulated debris generating unacceptable odors.

The calculated volume of water stored within the system is approximately 19.8 million gallons that must be removed within 72 hours. See attached System Schematic Profile Diagram at Figure 2.

Based upon considerations of electric power costs from Salt River Project rate schedules, there are two obvious approaches to sizing pumps. One is to use the rate schedule for normal, full-time service, and the second is to utilize off-peak service. Off-peak power rates require utilization per a time schedule that is approximately available 12 hours/day (Seasonal differences exist in winter and summer periods. The current rate schedule is included in the Appendix).

For both alternatives considered in this report, components consist of a junction structure on the storm drain trunk line, an inlet suction pipeline, the pump station with submersible pumps, and an outlet pipeline that discharges into an outfall to the Salt River. Location of the junction structure will be established when limits of parcel for pump station is defined between Wier and Broadway Road. See Figure 3 for proposed site location.

The junction structure on the 114 inch diameter storm drain is planned to be a box structure, with the suction pipeline extending to the east. Suction pipeline inlet will include a fixed bar screen to exclude trash. See Figure 4. The pump station will consist of submersible pumps in a wet well. See Figures 5 and 6.

Outlet pipeline fromt he pump station is presumed to discharge into the 72 inch outlet to Salt River, just beyond the storm water outlet box. It may be possible to discharge into an existing storm water pipe located in 43rd Avenue.

The following conditions are assumed in the development and evaluation of alternatives.

- Ten storm events occur per year requiring activation of the pump station.
- Electric power rates and customer charges are per Salt River Project Time-of-Use Plan (E-32).
- Normal operation is based on one site visit per month by operator (4 hours/month). Labor rate is $50/hour.
- Normal maintenance is based on 80 hours/year at $50/hour.
- Pump lifetime is assumed at 20 years for calculation of equipment replacement fund. (Use same lifetime based on larger pump with half the hours of operation of smaller pump, but having three times the number of starting cycles).
- Station life is estimated at 40 years.
- Rate of return on investment is 8% with inflation rate of 3%, resulting in an effective interest rate of 4.85% (round to 5%).

Q:\FCDMC\4628A10\FIGURE\FIG2.DWG

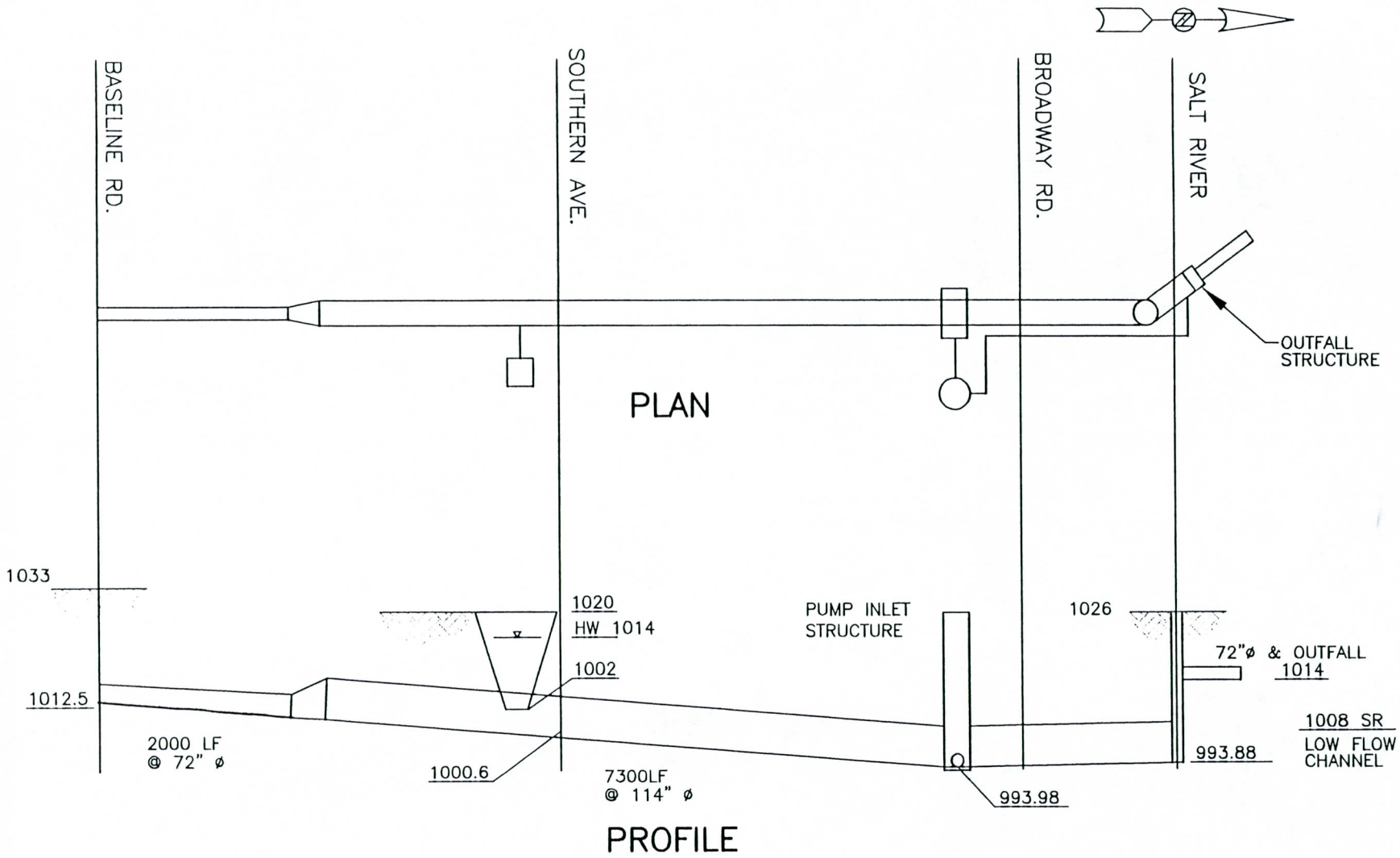

SYSTEM SCHEMATIC PROFILE

carollo engineers

FLOOD CONTROL DISTRICT OF MARICOPA COUNTY
PUMP STATION FOR 43rd AVENUE OUTFALL
FCD PROJECT NO. 11701
FIGURE 2

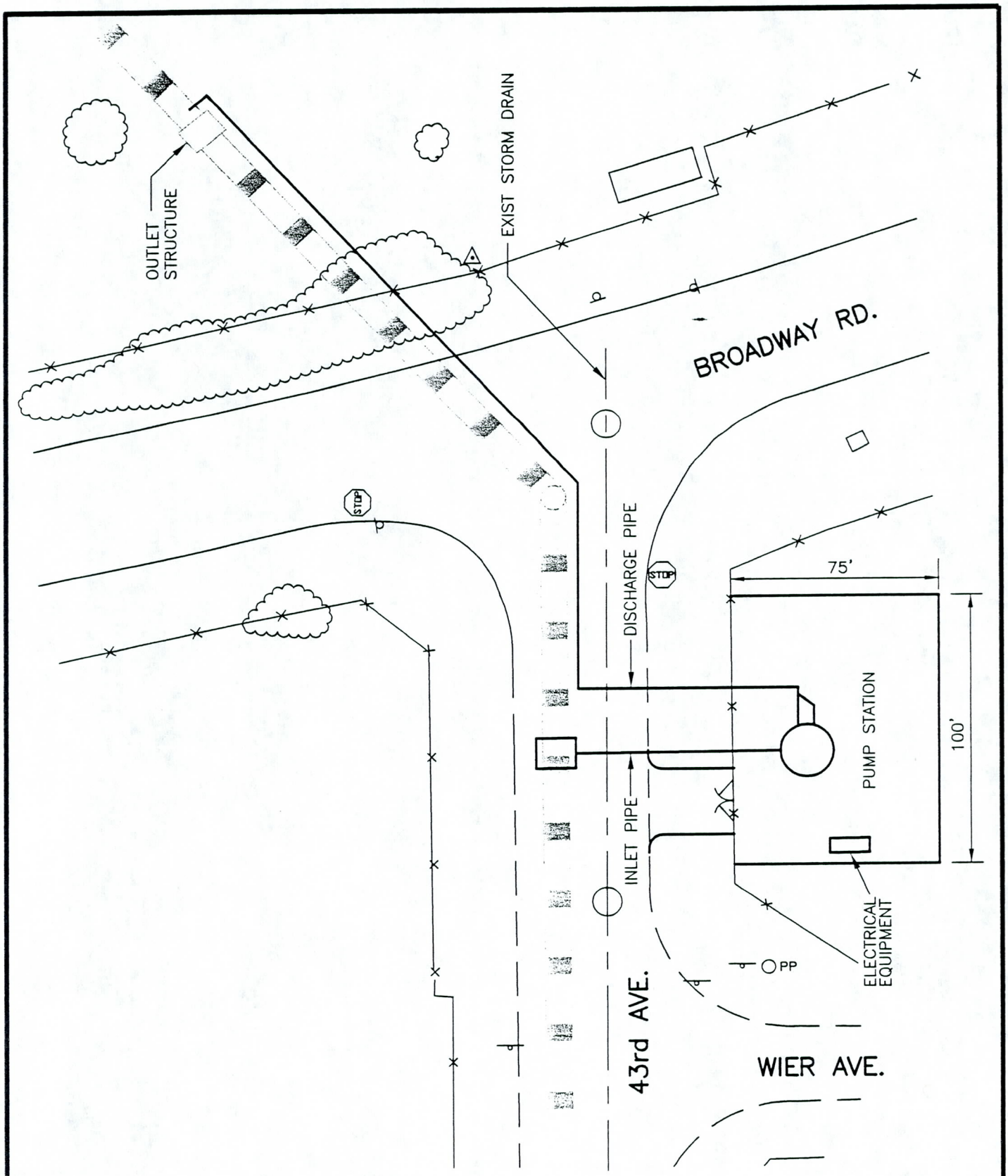

PUMP STATION SITE PLAN

carollo engineers

FLOOD CONTROL DISTRICT OF MARICOPA COUNTY
PUMP STATION FOR 43rd AVENUE OUTFALL
FCD PROJECT NO. 11701
FIGURE 3

Q:\FCDMC\162BA10\FIGURE\FIG4.DWG

Q:\FCDMC\4628A10\FIGURE\FIG4.DWG

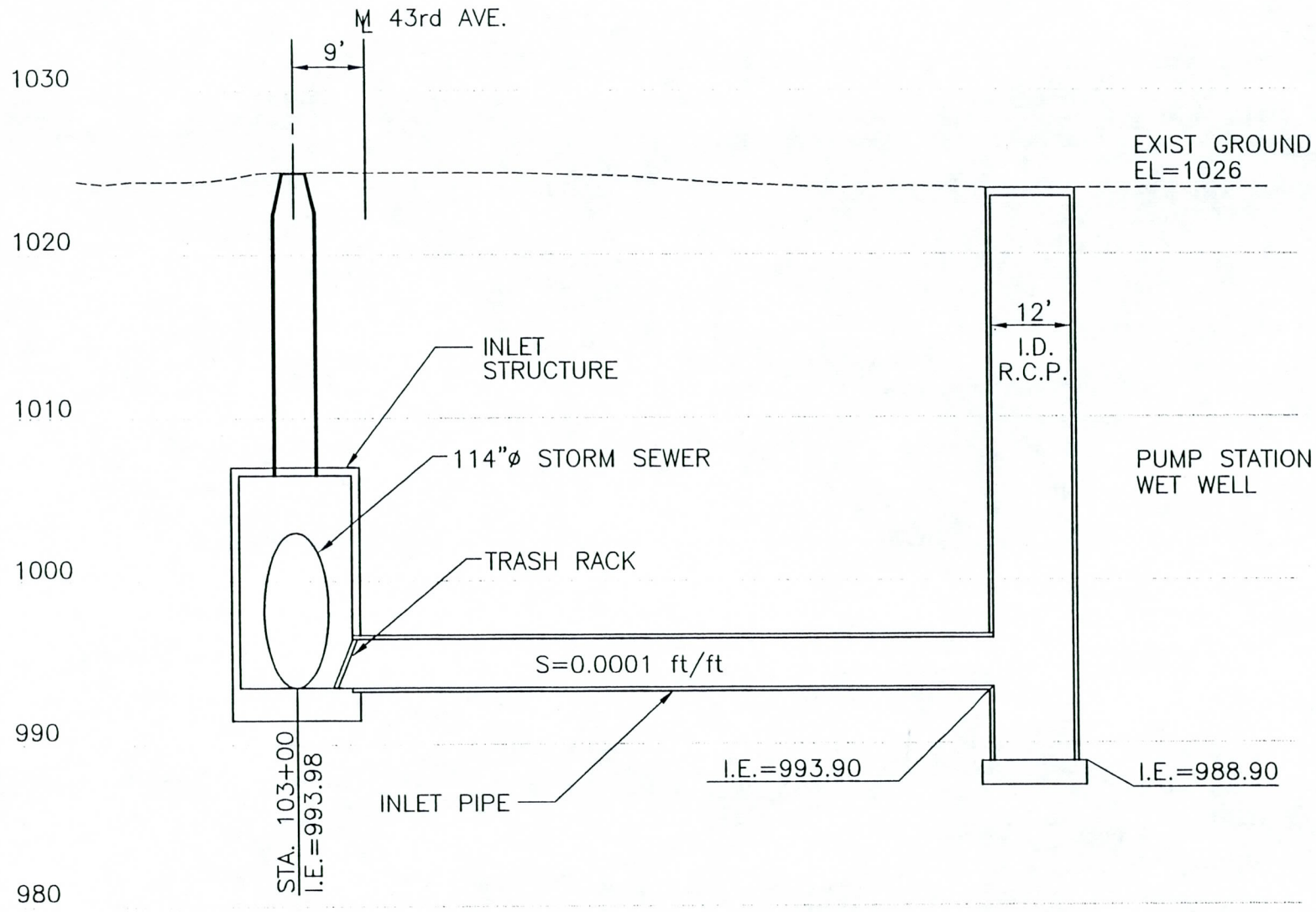

SECTION PUMP STATION/CONNECTION PIPE

carollo engineers

FLOOD CONTROL DISTRICT OF MARICOPA COUNTY
PUMP STATION FOR 43rd AVENUE OUTFALL
FCD PROJECT NO. 11701
FIGURE 4

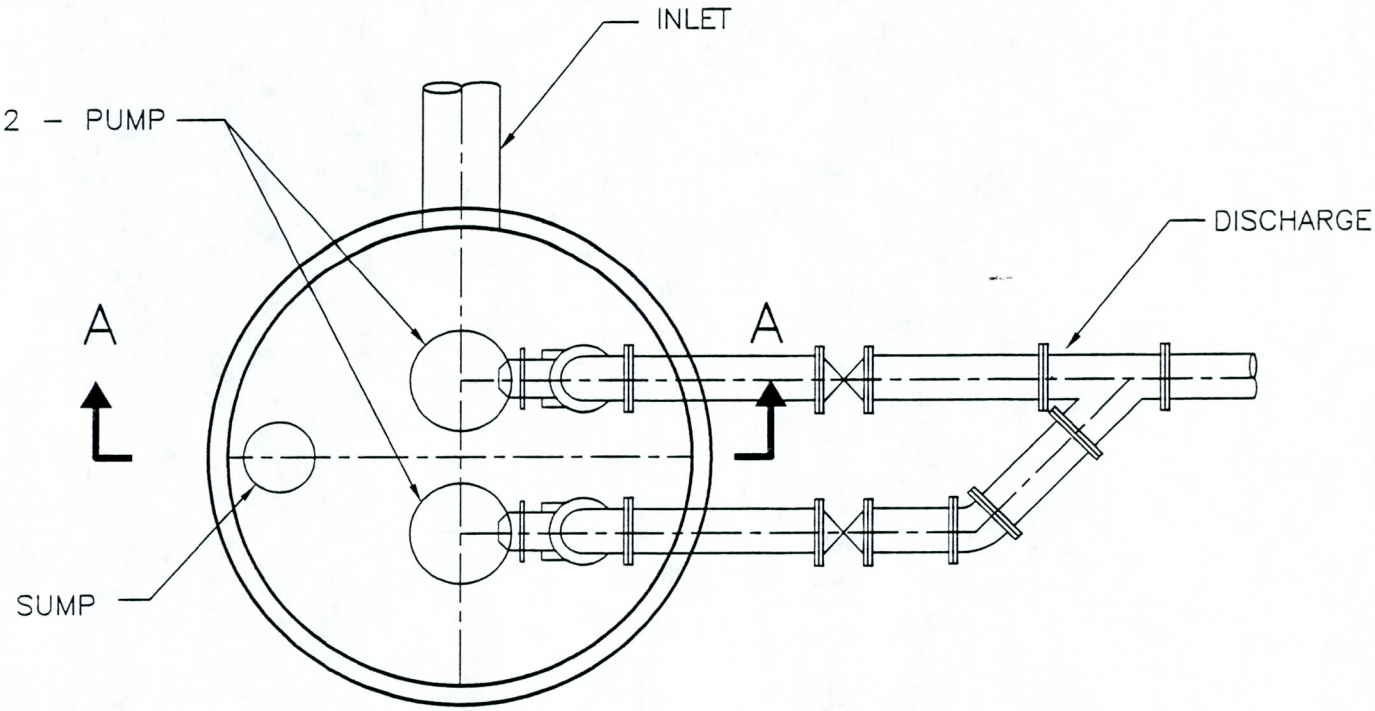

PUMP STATION FLOOR PLAN

carollo engineers

FLOOD CONTROL DISTRICT OF MARICOPA COUNTY
PUMP STATION FOR 43rd AVENUE OUTFALL
FCD PROJECT NO. 11701
FIGURE 5

Q:\FCDMC\1628A10\FIGURE\FCDMCHF.DWG

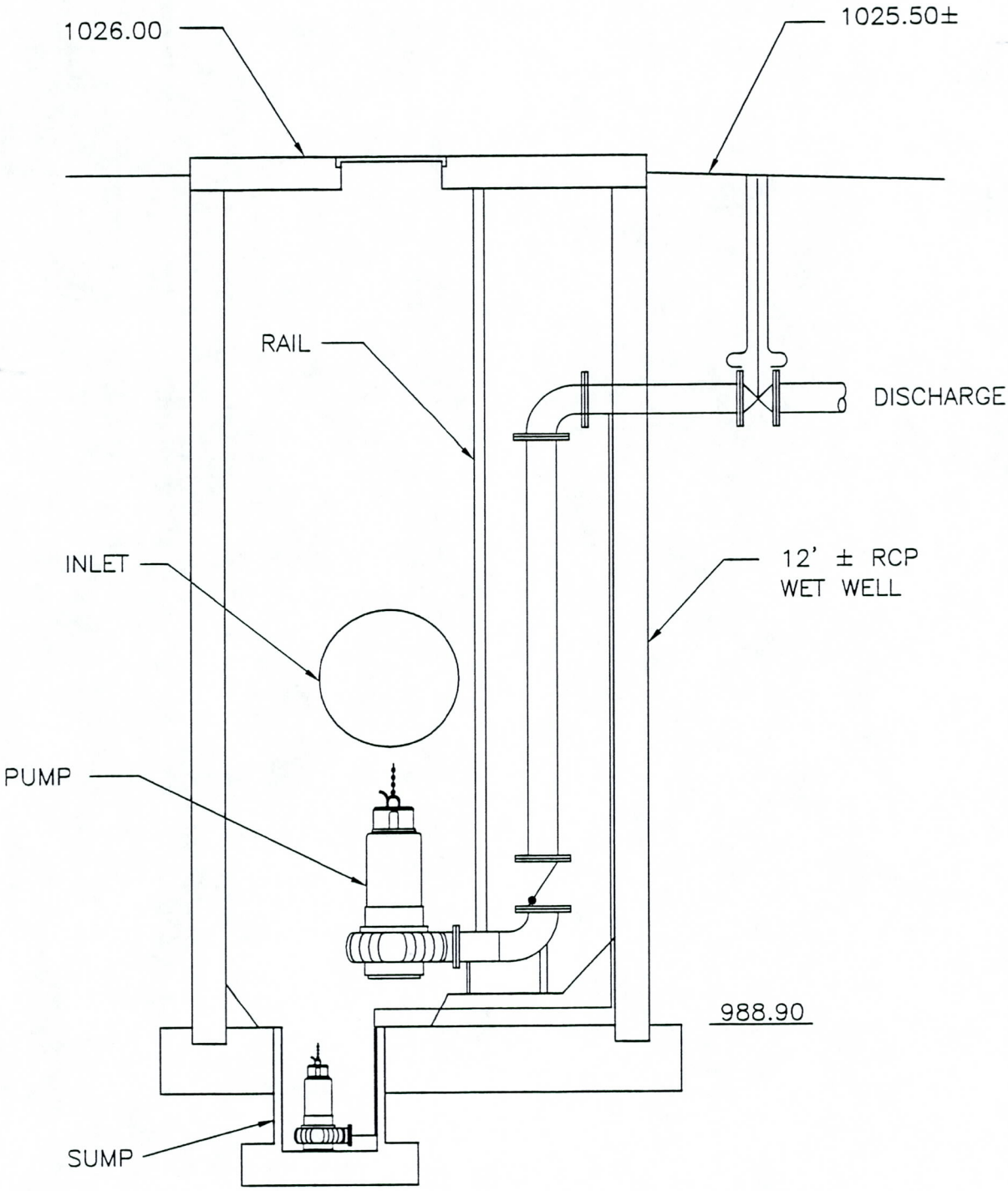

SECTION AA – PUMP STATION

carollo engineers

FLOOD CONTROL DISTRICT OF MARICOPA COUNTY
PUMP STATION FOR 43rd AVENUE OUTFALL
FCD PROJECT NO. 11701
FIGURE 6

Q:\FCDMC\462BA10\FIGURE\FCDMCHF.DWG

3.1 ALTERNATE NO. 1 - CONTINUOUS PUMPING OVER 72 HOUR PERIOD

3.1.1 Description of Alternate

Alternate No. 1 is based upon the ability to pump continuously over a 72 hour period after a storm even. Pumping cycle begins after the storm has passed, and the storm drain system (Pipe and Retention Basin) has achieved equilibrium at Elevation 1014 (outfall structure invert elevation). A bubbler system sensing water level installed in the wet well structure will initiate pump starts. To verify the storm water level has reached equilibrium, an adjustable set time period elapses before the storm water pumps are started. Normal operation is first pump starts, and after an adjustable time period, the second pump starts. The pump stop sequence is controlled by the bubbler system that senses low water level in the wet well and storm drain system. (Level below which pumps cannot operate.)

The pump station consists of two pumps mounted in a 12 foot inside diameter concrete wet well. The wet well and pumps are arranged as shown on the plan view in Figure 3. Each pump is sized to have a capacity of 3,000 gallons per minute (total pump station capacity of 6,000 gallons per minute) to drain the storm drain system within 72 hours.

After completion of the pump cycle, the wet well will still contain some storm water, that amount being the volume from the floor of the wet well to the "stop" setpoint of the pumps. A small sump pump in the wet well is used to drain the wet well of excess water below main pump stop point.

The pump station suction line is a 30 inch reinforced concrete, rubber gasketed pipe. The discharge line to the outfall is a 24 inch ductile iron pipe. Each pump includes a gate valve and a check valve, as defined in the wet well configuration and the proposed site plan.

3.1.2 Capital Cost of Alternate No. 1

The estimated cost of this alternative is $489,250 (does not include land costs for the pumps station site). The detailed estimated capital cost of this alternative is included in the Appendix of the report.

3.1.3 Operating Cost

Annual operating costs consist of electric power charges and normal operating and maintenance labor. In addition, a replacement fund is accrued for mechanical equipment.

These costs are as follows:

	Annual Cost
SRP Energy Charges	$1,980
SRP Customer Charges	407
Labor-Operation/Maintenance	6,000
Replacements	8,100
Total Annual Operation Costs	$16,487
Present Value of Annual Operating Cost (17.159)	$282,900

3.2 ALTERNATE NO. 2 - PUMPING UTILIZING OFF-PEAK POWER COST

3.2.1 Description of Alternate

Alternate No. 2 utilizes much the same configuration as Alternate No. 1, with the exception that the actual hours of pumping the storm drain system will be curtailed to those hours as defined by Salt River Project, Electric Division (SRP) as off-peak power consumption hours. See Appendix for current rate schedule.

The storm drain system hydraulics are the same as Alternate No. 1, with the outfall structure invert elevation at Elevation 1014.00. The pump start control system is the same (bubbler system), however, an adjustable time (time of day clock) is added to control system. The timer is used to allow the pumps to run only during the pre-set hours corresponding to the off-peak hours as defined by SRP. Pump stop circuitry is by a bubbler level control system and timer.

The pump station consists of two pumps to be mounted in a 12 foot inside diameter concrete wet well. The overall configuration is the same as Alternate No. 1, other than larger pumps, larger suction (inlet) piping, and larger discharge piping are required due to the increase in flows. Each pump has a capacity of 6,000 gallons per minute (total pump station capacity of 12,000 gallons per minute) to drain the storm drain system within the 72 hours total time, and 36 hour s of pumping time. A small sump pump is required to totally dewater the wet well. The pump suction pipe is a 48 inch reinforced concrete pipe. The pump station discharge pipe is a 30 inch ductile iron pipe. Each pump includes a check and gate valve, as defined in the wet well configuration and the proposed site plan.

3.2.2 Capital Cost of Alternate No. 2

The estimated cost for this alternative is $542,300. This cost does not include the cost for acquisition of the pump station site. A detailed estimated capital cost of this alternative is included in the Appendix.

3.2.3 Operating Cost

Annual operating costs consist of electric power charges and normal operating and maintenance labor. In addition, a replacement fund is accrued for mechanical equipment. These costs are as follows:

	Annual Cost
SRP Energy Charges	$1,200
SRP Customer Charges	407
Labor-Operation/Maintenance	6,000
Replacements	12,040
Total Annual Operation Costs	$19,647
Present Value of Annual Operating Cost (17.159)	$337,100

3.3 RECOMMENDATION

The following table compares the two alternatives considering Capital Cost and Operating Costs.

	Alternative No. 1 Continuous Pumping	Alternative No. 2 Off-Peak Pumping
Capital Cost	$ 489,250	$ 542,300
Present Worth of Operating/ Maintenance/Replacement Cost	$ 282,900	$ 337,100
Total	$ 772,150	$ 879,400

Based upon the above, the recommended alternative is Alternate No. 1, for continuous pumping over the 72 hour period. The lower energy cost of off-peak pumping does not offset its higher capital cost and higher replacement cost of larger pump units.

there are no other significant differences between the two alternatives and either configuration satisfies requirements of the project.

4.0 DESIGN CRITERIA

Design criteria established as follows is based on assumptions included in the alternatives evaluation in Section 3.0 and on standards and recommendations for storm water pumping in various references (see Appendix for listing of reference documents reviewed and utilized in developing design criteria). In addition, we researched requirements of the District and the operating agency, City of Phoenix, in developing criteria. This criteria is based on the recommended alternative for continuous pumping to dewater the storm drain system in 72 hours.

Pump Station Design Criteria

Item	Criteria
Total pumping capacity	6,000 gallons per minute (gpm) at Total Displaced Head (TDH) of 29.5 feet
Type of pump units	Submersible, sewage
Number of Pumps	2
Standby pumps	0
Sump Pump	1
Pump design point	3,000 gpm at a TDH of 29.5 feet
Pump motor horsepower	30 Hp
Wet well volume	12,774 gallons (12 foot diameter - 15.1 feet depth)
Inlet pipe diameter	30 inch RGRCP
Discharge pipe diameter	14 inch for each pump - 24 inch main line
Operational concept	Full time (72 hours continuous after storm event)
Pump Control	Conductance Probe and Transmitter for Pump Start Bubbler Differential Pressure Level Measuring System
Electric power service	Salt River Project, Electric Division. 400 amp Service for 480 volt, 3 phase, 60 hertz power

Catalog data on the recommended pumping units are included in the Appendix.

Site Requirements

The minimum requirements for maintaining the storm water pumping station is a parcel of approximate dimensions of 75 feet deep by 100 feet width. The proposed site dimensions are defined on the preliminary site plan. (See Figure 4)

Grit/Debris Accumulation

Accumulation of grit and debris in a storm sewer is a major maintenance problem. For this particular system, we assume that small storm events will generally introduce grit and debris that has a tendency to settle within the storm drain due to lower pipeline velocities. Location of depositions are probably close to entry points, and migration of deposits downstream is nominal. Large storm events introduce grit and debris, and with higher velocities in pipeline, this material tends to settle less and moves downstream. In addition, previous depositions from small storm events may also be transported downstream, and possibly washed out of system into the Salt River. Materials probably tend to accumulate near the outlet location, which will act as a sedimentation basin for those deposits that cannot be placed into suspension and washed out of the outfall structure. Manual clean out of the lower portion of the outfall structure is expected to be required periodically.

Design of intake pipeline to pump station must consider the probable location of sediment and debris accumulation at the end of the storm drain. Location of inlet junction box

should be set to avoid locations where pipeline velocities are low and deposits are likely to occur in the storm drain.

The parcel for the location for the 43rd Avenue Storm Water Pump Station was set by the Flood control District, which establishes the location of the Storm Drain Junction Structure for the Pump Station Inlet. This location is upstream from the storm drain outlet where maximum trash and grit accumulation is likely to occur.

The Pump Station inlet pipe is designed to develop velocities of at least 2 feet per second, that velocity of which is considered minimum to prevent sedimentation of grit and sand particles. Additionally, the pumps are designed to handle solids up to 3 inches in diameter, without clogging the pump. The junction structure is designed to contain a trash rack covering the inlet to the pump station to prevent large particles from entering the inlet pipeline and pump station wet well; however, clean out of the trash rack will be required periodically.

draft

APPENDICES

Pump Station Design References

SRP Electric Power Rate Schedule

Cost Estimate
- Alternate No. 1
- Alternate No. 2

Pump Catalog Cuts

draft

REFERENCES

Manual for Highway Storm Water Pumping Stations, Vol. I and Vol. II, U.S. Department of Transportation, Report No. FHWA-IP-82-17, Final Report, October 1982.

Design of Wastewater and Stormwater Pumping Stations, Manual of Practice FD-4, Water Environment Federation, 1993.

Pumping Station Design, Second Edition, Editor-in-Chief - Robert L. Sanks, Ph.D.; Co-Editors - George Tchobanoglous, Ph.D., P.E.; Bayard E. Bosserman II, P.E.; Garr M. Jones, P.E.; 1998.

General Description of Commercial Rates

here are four electric-rate schedules available to General Service or commercial customers. The Time-of Use Plan (E-32) nd Stable Use Plan (E-33) are time-of-use rates with three different levels of prices most days of the week. The Stable se Plan (E-33) increases the fixed monthly charge through a facilities charge while reducing the cost of energy. The eneral Use Plan (E-35) and Extended Use Plan (E-36) rates have level prices within summer and winter seasons without gard to time of use. The Extended Use Plan (E-36) rate provides additional reductions of energy costs through a third icing energy block. Customers with relatively constant energy consumption at higher volumes of energy might find the xtended Use Plan (E-36) rate the most beneficial.

ime-of-Use Plan (E-32)

he Time-of Use Plan (E-32) is a three-period time-of-use (TOU) rate with reduced prices for energy in the off-peak eriod in excess of 30,000 kWh. Customers with small loads and moderate-to-high-ability to shift load from the on-peak eriod might find this rate beneficial.

Summer Hours (May-Oct)

On-Peak
2 p.m. to 7 p.m.
Shoulder-Peak
11 a.m. to 2 p.m.
7 p.m. to 11 p.m.
Off-Peak
All Remaining Hours

Winter Hours (Nov-Apr)

On-Peak
5 a.m. to 9 a.m.
Shoulder-Peak
5 p.m. to 9 p.m.

Off-Peak
All Remaining Hours
Winter weekends are off-peak.

Time-of-Use Rate Schedule (E-32)

	Summer	Winter
Customer Charge:	$33.88	$33.88
Energy (kWh):		
On-Peak	$0.1025 per kWh	$0.0924 per kWh
Shoulder Peak	$0.0740 per kWh	$0.0699 per kWh
Off Peak (1st 30,000 kWh	$0.0370 per kWh	$0.0370 per kWh
Off Peak (remaining)	$0.0325 per kWh	$0.0325 per kWh
Demand (kW)		
On Peak	$ 4.73 per kW	$ 3.38 per kW
Shoulder	$ 0.46 per kW	$ 0.26 per kW
Off-Peak	No charge	No charge

table Use Plan (E-33)

ıe Stable Use Plan (E-33) is a three-period time-of-use (TOU) rate with reduced prices for energy in the off-peak period excess of 30,000 kWh. This rate differs from the Time-of Use Plan (E-32) rate by having unbundled facilities and mand costs from the energy components of the rate. This creates higher monthly fixed charges while decreasing energy sts. Customers with high load factors (24-hour operation) and average to below average usage in the on-peak period ight find this rate beneficial.

Summer (May-Oct)

On-Peak
2 p.m. to 7 p.m.
Shoulder-Peak
11 a.m. to 2 p.m.
7 p.m. to 11 p.m.
Off-Peak
All Remaining Hours

Winter (Nov-Apr)

On-Peak
5 a.m. to 9 a.m.
Shoulder-Peak
5 p.m. to 9 p.m.

Off-Peak
All Remaining Hours
Winter weekends are off-peak.

Stable Use Rate Schedule (E33)

Summer		Winter	
ıstomer Charge:	$25.00	Customer Charge:	$25.00
icilities ($ per kW)	$ 2.48 per kW	Facilities ($ per kW)	$ 2.48 per kW
ıergy (kWh):		Energy (kWh):	
On-Peak	$0.065 per kWh	*On-Peak*	$0.056 per kWh
Shoulder Peak	$0.055 per kWh	*Shoulder Peak*	$0.049 per kWh
Off Peak (1st 30,000 kWh	$0.035 per kWh	*Off Peak (1st 30,000 kWh)*	$0.035 per kWh
Off Peak (remaining)	$0.030 per kWh	*Off Peak (remaining)*	$0.030 per kWh
emand (kW)		Demand (kW)	
On Peak	$10.00 per kW	*On Peak*	$3.50 per kW
Shoulder	$ 2.75 per kW	*Shoulder*	$1.00 per kW
Off-Peak	No charge	*Off-Peak*	No charge

Commercial Rate Description

General Use Plan (E-35)

The General Use Plan (E-35) provides level winter and summer prices for all hours within each season. Customers with limited hours of operations and higher energy usage in the on-peak periods might find this rate beneficial. Generally, if you can isolate your usage into off-peak periods, even with limited consumption, you would have reduced electric bills on one of the TOU rates.

General Use Rate Schedule (E35)

Summer		Winter	
Customer Charge:	$10.00	Customer Charge:	$10.00
Energy (kWh):		Energy (kWh):	
First 2000 kWh	$0.0856 per kWh	*First 2000 kWh*	$0.0657 per kWh
Next 200 kWh/kW	$0.0778 per kWh	*Next 200 kWh/kW*	$0.0589 per kWh
All additional	$0.0560 per kWh	*All additional*	$0.0486 per kWh
Demand (kW)		Demand (kW)	
Demand kW > 5	$ 3.53 per kW	*Demand kW > 5*	$ 1.81 per kW

Extended Use Plan (E-36)

The Extended Use Plan (E-36) provides level winter and summer prices for all hours within each season. This rate differs from the General Use Plan (E-35) rate by having a fourth energy block which reduces prices. Customers consuming large amounts of power with limited ability to shift energy use to shoulder or off-peak hours might find this rate beneficial.

Extended Use Rate Schedule (E36)

Summer		Winter	
Customer Charge:	$60.00	Customer Charge:	$60.00
Energy (kWh):		Energy (kWh):	
First 150 kWh per kW	$0.078 per kWh	*First 150 kWh per kW*	$0.058 per kWh
Next 150 kWh per kW	$0.062 per kWh	*Next 150 kWh per kW*	$0.052 per kWh
Next 20,000 kWh	$0.050 per kWh	*Next 20,000 kWh*	$0.045 per kWh
All additional	$0.042 per kWh	*All additional*	$0.033 per kWh
Demand (kW)		Demand (kW)	
Demand kW	$ 3.75 per kW	*Demand kW*	$ 2.00 per kW

Demand Rider

The General Use Plan (E-35) and Extended Use Plan (E-36) rates have an optional demand rider that isolates demand costs to the on-and shoulder-peak hours. Energy rates remain the same. There is a slight increase in the customer charge to recover increased meter costs. Demand charges under the rider include all billable demand. Customers who can isolate operation to the off-peak hours might find this rate beneficial. This rider provides an excellent opportunity for testing equipment in off-peak periods when seasonal operations have shut down production for long periods of time.

FLOOD CONTROL DISTRICT OF MARICOPA COUNTY

43RD AVENUE/BROADWAY STORM WATER PUMP STATION

PRELIMINARY PROBABLE COST OF CONSTRUCTION

ALTERNATE NO. 1 - FULL TIME PUMPING

Item No.	Description	Quantity	Units	Unit Price	Total Cost
1	Junction Structure/Pump Station Inlet	1	L.S.	$91,650	$91,650
2	30 inch suction line (RGRCP)	85	Feet	$450	$38,250
3	144 inch inner diameter RGRCP Wet Well with Reinf. Conc Base	1	L.S.	$54,800	$54,800
4	Wet Well Excavation, backfilling And De-watering	1	L.S.	$73,500	$73,500
5	3.000 GPM Pump & Wet Well Appurtenances including Electrical/Instrument Panels	2	EA	$28,000	$56,000
6	500 GPM Sump Pump Including Electrical/Instrument Panel	1	EA	$6,000	$6,000
7	Pump Station Discharge (14")	72	L.F.	$300	$21,600
8	24 Inch Discharge Main Line	305	L.F.	$130	$39,650
9	Outfall Inlet	1	L.S.	$5,000	$5,000
10	Install Electrical Conduits, Panels, Controls	1	L.S.	$15,000	$15,000
11	Site Grading	1	L.S.	$10,000	$10,000
12	Site Fencing & Gate	350	L.F.	$40	$14,000
	Subtotal Estimated Probable Cost				$425,450
	15% Contingency				$63,800
	Estimated Probable Cost				**$489,250**

FLOOD CONTROL DISTRICT OF MARICOPA COUNTY

43RD AVENUE/BROADWAY STORM WATER PUMP STATION

PRELIMINARY PROBABLE COST OF CONSTRUCTION

ALTERNATE NO. 2 - PUMPING @ OFF-PEAK ELECTRIC HOURS

Item No.	Description	Quantity	Units	Unit Price	Total Cost
1	Junction Structure/Pump Station Inlet(includes excavation backfilling, dewatering)	1	L.S.	$91,650	$91,650
2	30 inch suction line (RGRCP)	85	Feet	$510	$43,350
3	144 inch inner diameter RGRCP Wet Well with Reinf. Conc Base	1	L.S.	$54,800	$54,800
4	Wet Well excavation, backfilling and Dewatering	1	L.S.	$73,500	$73,500
5	3,000 gpm Pump and Wet Well Appurtenances including electrical/instrument panels	2	Ea	$40,000	$80,000
6	500 gpm sump pump including electrical/instrument panels	1	Ea	$6,000	$6,000
7	Pump Station Discharge (18")	72	L.F.	$340	$24,480
8	30 inch Discharge Main Line	305	L.F.	$160	$48,800
9	Outfall Inlet	1	L.S.	$5,000	$5,000
10	Install Electrical Conduits, Panels, Controls	1	L.S.	$20,000	$20,000
11	Site Grading	1	L.S.	$10,000	$10,000
12	Site Fencing and Gate	350	L.F.	$40.00	$14,000
	Subtotal Estimated Probable Cost				$471,580
	15% Contingency				$70,720
	Estimated Probable Cost				**$542,300**

JCH James, Cooke & Hobson, Inc.
4632 S. 36TH STREET
PHOENIX, AZ 85040
Phone: (602) 243-0585 Fax: (602) 276-5402

FAXED

August 23, 1998

FAX MEMO

TO: KEN KENNEDY
CAROLLO ENGINEERS

FROM: BRUCE P. LORING, P.E.

SUBJECT: 43RD AVE & BROADWAY P.S.

I RAN THE SELECTIONS ON THE COMPUTER WHICH OF COURSE GAVE DIFFERENT SELECTIONS. LOOK AT THESE AND LET TALK.

AFTER WE REVIEW/DISCUSS THE SELECTIONS WHICH WILL BEST SUIT YOUR PROJECT NEEDS, I CAN GIVE PRICING, DIMENSIONS, LAYOUT, ETC.

BPL BPL

7 *PAGES*

BRUCE P. LORING, P.E. JCH/JAMES, COOKE & HOBSON 98-08-24

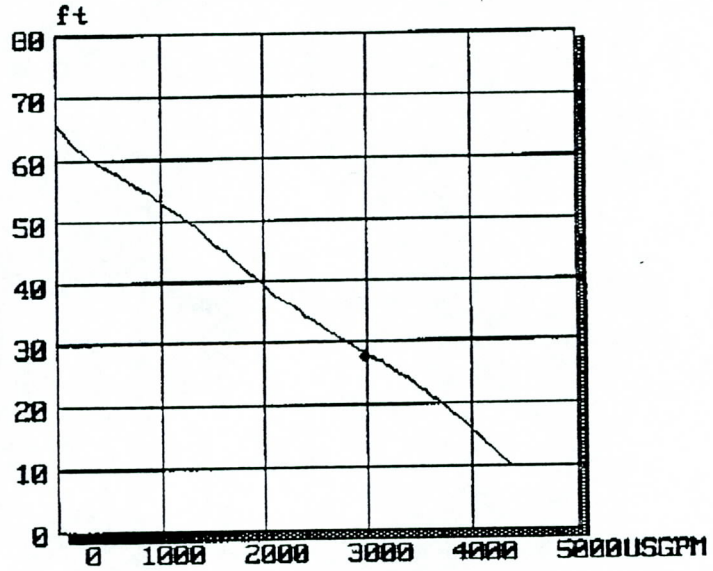

PUMP DATA

Pump:CP 3300 MT
Curve:63- 648 0 mm

Rated Power 60 Hp
Rated Current: 73.0 A
3*460 V, 6 Pole
Throughlet:2* 4 inch
In/outlet: —/10 inch
Weight: 2416.2 lbs

DUTY DATA

Flow	3020.8 USGPM	Head	27.9 ft	✦	
Input Power	29.9 kW	Shaft Power	34.7 Hp	Flow	3000.0 USGPM
Overall Eff.	53.2 %	Pump Eff.	61.4 %	Head	27.5 ft

98-08-24PROJECT NAME: 43RD AVE BROADWAY P.S. ALT#1

PERFORMANCE CURVE

PRODUCT	CP3300.181
TYPE	MT
DATE	98-08-24
PROJECT	43RD AVE BROADWAY P.S. ALT#1
CURVE NO	63-648-00-3730
ISSUE	1

	1/1-LOAD	3/4-LOAD	1/2-LOAD
MOTOR COS FI	0.89	0.87	0.81
MOTOR EFFICIENCY	87.0 %	87.3 %	85.8 %
GEAR EFFICIENCY	---	---	---

COMMENTS

OUTLET 10 INCH

IMP. THROUGHLET 4 INCH

MOTOR SHAFT POWER	60	HP
STARTING CURRENT ...	440.	A
RATED CURRENT ...	73.0	A
RATED SPEED	1170	RPM
TOT.MOM.OF INERTIA ...	32.9	LBF*FT²
NO. OF BLADES	2	

IMPELLER DIAMETER --- MM

MOTORTYPE	STATOR	REV
35-24-6AA	38D	10

FREQ	PHASES	VOLTAGE	POLES
60 HZ	3	460 V	6

GEARTYPE	RATIO
---	---

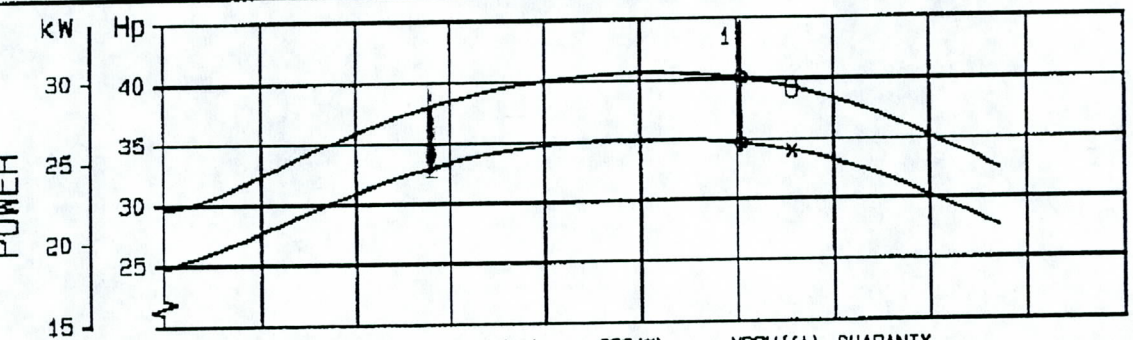

DUTY-POINTS:

	FLOW (USGPM)	HEAD (ft)	POWER (Hp)	EFF (%)	NPSH (ft)	GUARANTY
BEP:	3308	25.0	39.2 (33.9)	53.5 (61.8)	25.0	---
1	3021	27.9	40.1 (34.7)	53.2 (61.4)	22.6	---

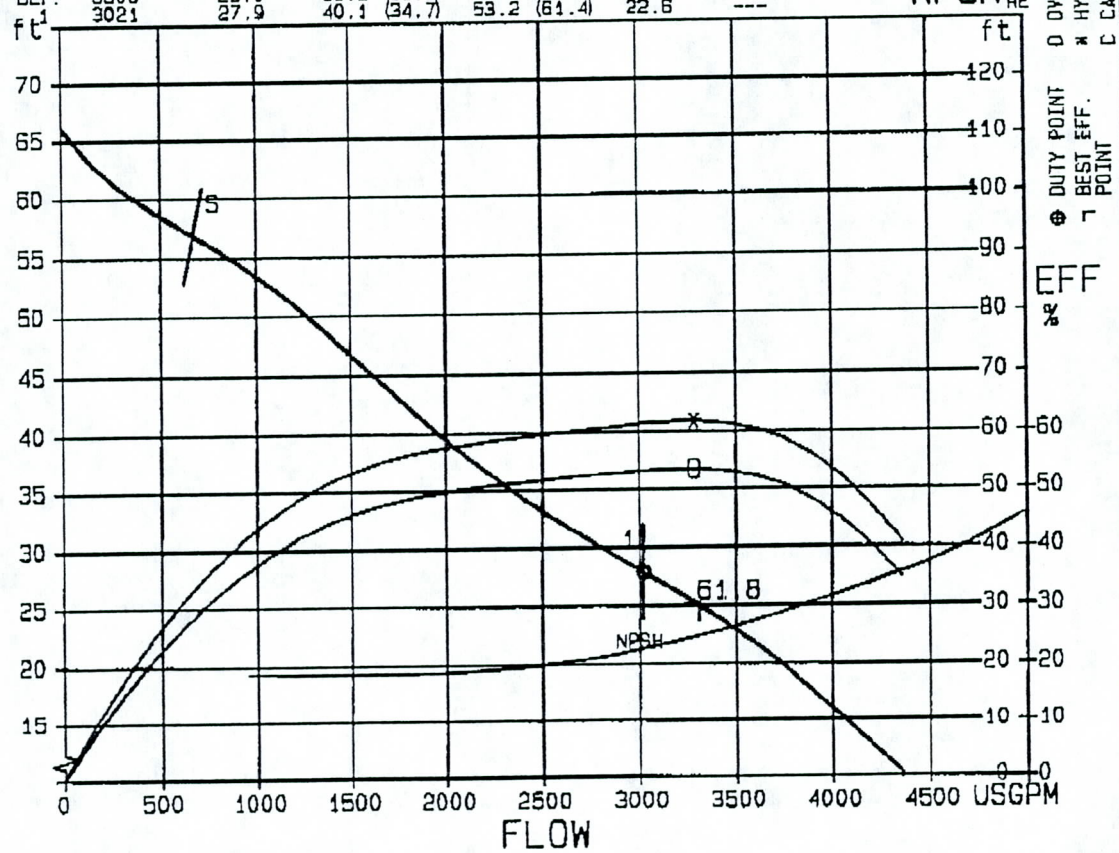

S: RISK FOR SEDIMENTATION AT VELOCITY BELOW 0.6 M/S
(STANDARD DIAM. 12 INCH)

CURVES SHOW PERFORMANCE WITH CLEAR WATER

BRUCE P. LORING, P.E. JCH/JAMES, COOKE & HOBSON

FLYPS 1.2

BRUCE P. LORING, P.E. JCH/JAMES, COOKE & HOBSON 98-08-24

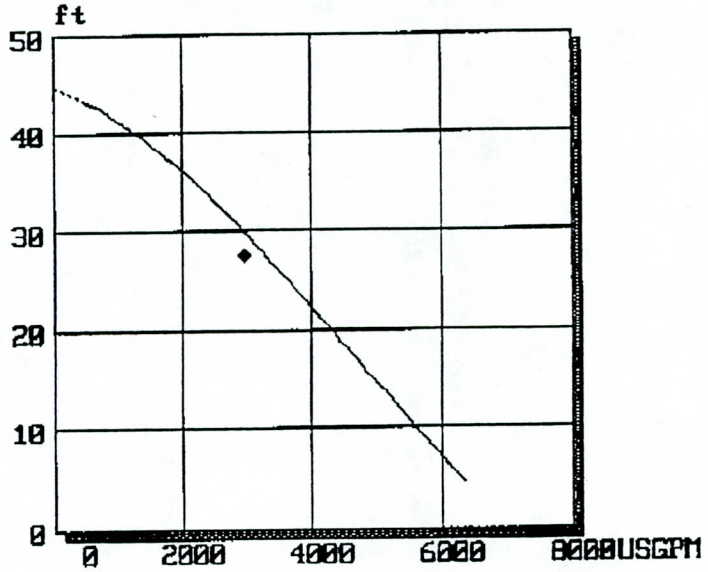

PUMP DATA

Pump:CP 3201 LT
Curve:63- 821 0 mm

Rated Power 30 Hp
Rated Current: 41.0 A
3*460 V, 8 Pole
Throughlet:3* 4 inch
In/outlet: —/12 inch
Weight: 1415.4 lbs

DUTY DATA

Flow	3089.2 USGPM	Head	29.2 ft	◆	
Input Power	24.3 kW	Shaft Power	28.1 Hp	Flow	3000.0 USGPM
Overall Eff.	69.9 %	Pump Eff.	81.0 %	Head	27.5 ft

98-08-24PROJECT NAME: 43RD AVE BROADWAY P.S. ALT#1

PERFORMANCE CURVE

PRODUCT	TYPE
CP3201.180	LT

DATE	PROJECT	CURVE NO	ISSUE
98-08-24	43RD AVE BROADWAY P.S. ALT#1	63-821-00-8320	4

	1/1-LOAD	3/4-LOAD	1/2-LOAD
MOTOR COS FI	0.80	0.74	0.63
MOTOR EFFICIENCY	86.1 %	86.8 %	85.7 %
GEAR EFFICIENCY	---	---	---

MOTOR SHAFT POWER	30	HP
STARTING CURRENT ...	172.	A
RATED CURRENT ...	41.0	A
RATED SPEED	860	RPM
TOT.MOM.OF INERTIA ...	5.36	LBF*FT²
NO. OF BLADES	3	

IMPELLER DIAMETER: --- MM

MOTORTYPE	STATOR	REV
27-26-8AA	380	10

FREQ	PHASES	VOLTAGE	POLES
60 HZ	3	460 V	8

GEARTYPE	RATIO
---	---

COMMENTS

OUTLET	IMP. THROUGHLET
12 INCH	5 INCH

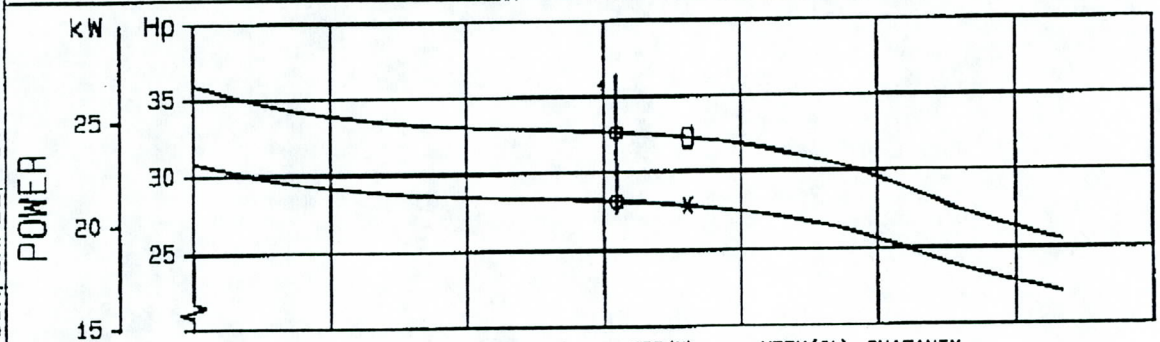

DUTY-POINTS:	FLOW (USGPM)	HEAD (ft)	POWER (Hp)	EFF (%)	NPSH (ft)	GUARANTY
BEP:	3643	25.2	32.2 (27.8)	72.1 (83.5)	11.9	---
1	3089	29.2	32.6 (28.1)	69.9 (81.0)	9.7	---

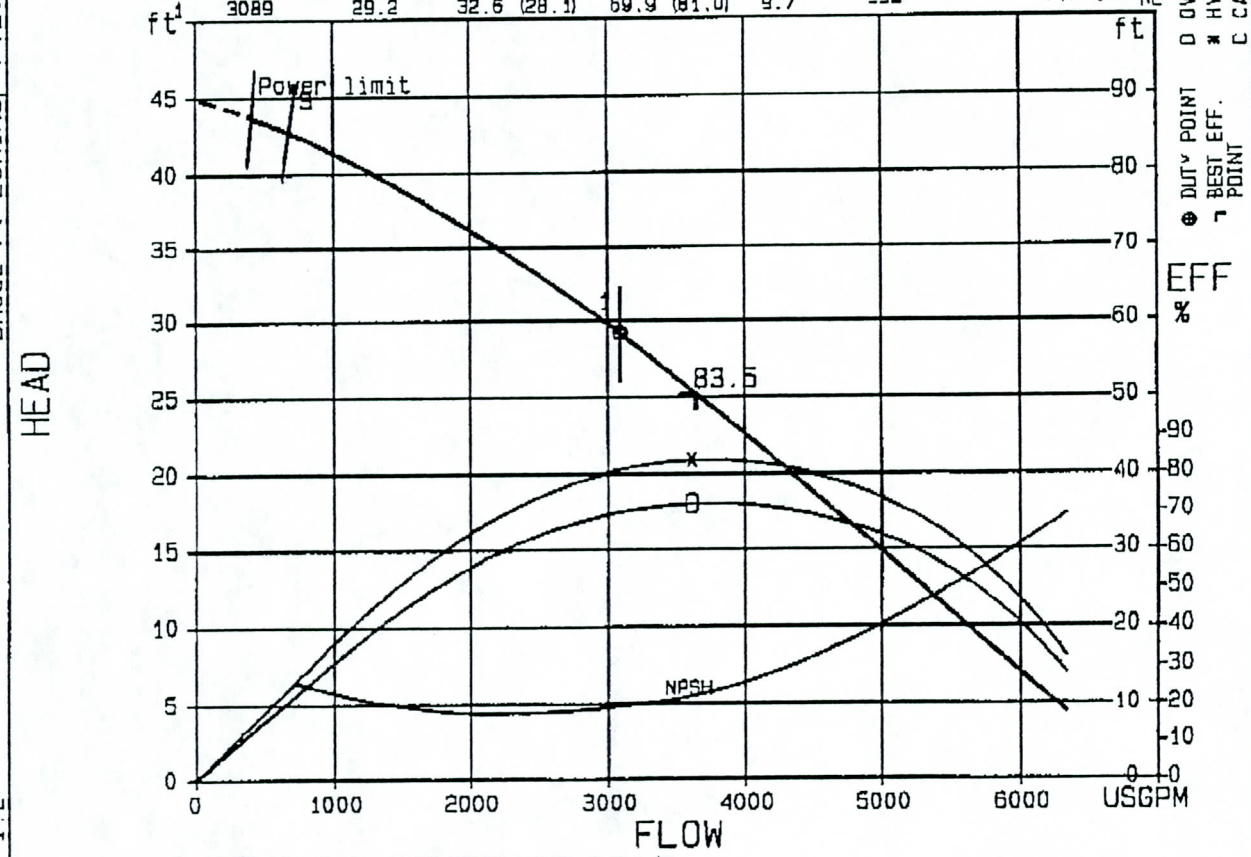

S: RISK FOR SEDIMENTATION AT VELOCITY BELOW 0.6 M/S
(STANDARD DIAM. 12 INCH)

CURVES SHOW PERFORMANCE WITH CLEAR WATER

BRUCE P. LORING, P.E. JCH/JAMES, COOKE & HOBSON

FLYPS 1.2

BRUCE P. LORING, P.E. JCH/JAMES, COOKE & HOBSON 98-08-24

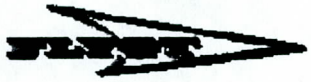

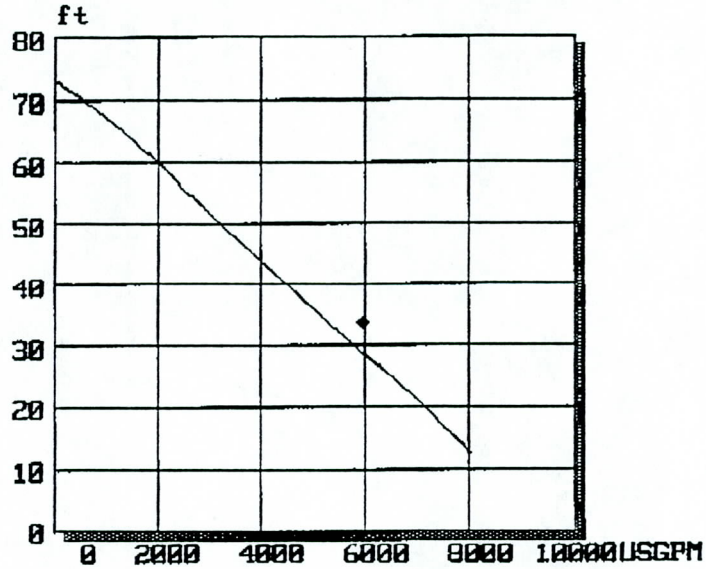

PUMP DATA

Pump:CP 3300 LT
Curve:63- 804 0 mm

Rated Power 60 Hp
Rated Current: 80.0 A
3*460 V, 8 Pole
Throughlet:3* 4 inch
In/outlet: —/12 inch
Weight: 2200.2 lbs

DUTY DATA

Flow	5732.3 USGPM	Head	30.6 ft	◆	
Input Power	49.9 kW	Shaft Power	57.8 Hp	Flow	6000.0 USGPM
Overall Eff.	66.3 %	Pump Eff.	76.7 %	Head	33.5 ft

98-08-24PROJECT NAME: 43RD AVE BROADWAY P.S. ALT#2_

PERFORMANCE CURVE

PRODUCT	CP3300.181
TYPE	LT
DATE	98-08-24
PROJECT	43RD AVE BROADWAY P.S. ALT#2
CURVE NO	63-804-00-8010
ISSUE	3

	1/1-LOAD	3/4-LOAD	1/2-LOAD
MOTOR COS FI	0.82	0.79	0.71
MOTOR EFFICIENCY	86.3 %	86.6 %	85.0 %
GEAR EFFICIENCY	---	---	---

MOTOR SHAFT POWER	60	HP
STARTING CURRENT ...	360.	A
RATED CURRENT ...	80.0	A
RATED SPEED	875	RPM
TOT.MOM.OF INERTIA ...	18.1	LBF*FT²
NO. OF BLADES	3	

IMPELLER DIAMETER: --- MM

MOTORTYPE	STATOR	REV
35-28-8AA	380	10

FREQ	PHASES	VOLTAGE	POLES
60 HZ	3	460 V	8

GEARTYPE	RATIO
---	---

COMMENTS

OUTLET: 12 INCH

IMP. THROUGHLET: 5 INCH

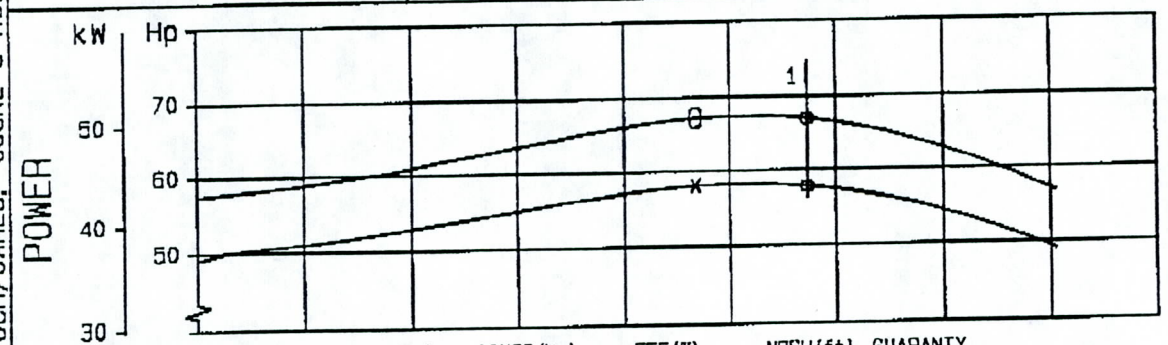

DUTY-POINTS:

	FLOW (USGPM)	HEAD (ft)	POWER (Hp)	EFF (%)	NPSH (ft)	GUARANTY
BEP:	4719	38.2	67.2 (58.1)	68.0 (78.6)	12.5	---
1	5732	30.6	66.9 (57.8)	66.3 (76.7)	14.1	---

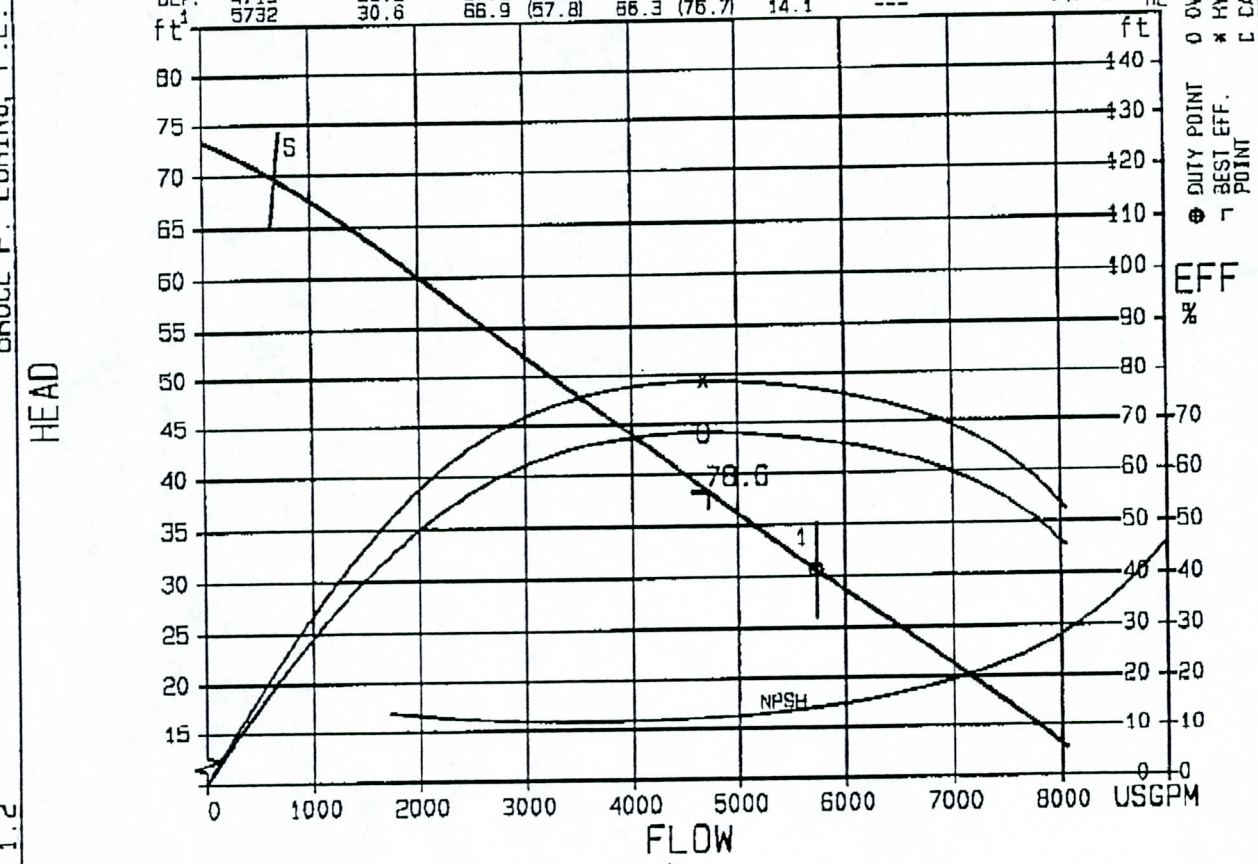

S: RISK FOR SEDIMENTATION AT VELOCITY BELOW 0.6 M/S
(STANDARD DIAM. 12 INCH)

CURVES SHOW PERFORMANCE WITH CLEAR WATER

BRUCE P. LORING, P.E. JCH/JAMES, COOKE & HOBSON

FLYPS 1.2

CP-3300 680 Drive Unit

SECTION	PAGE
4	1
SUPERSEDES	ISSUED
6/90	12/91

Outline Dimensions

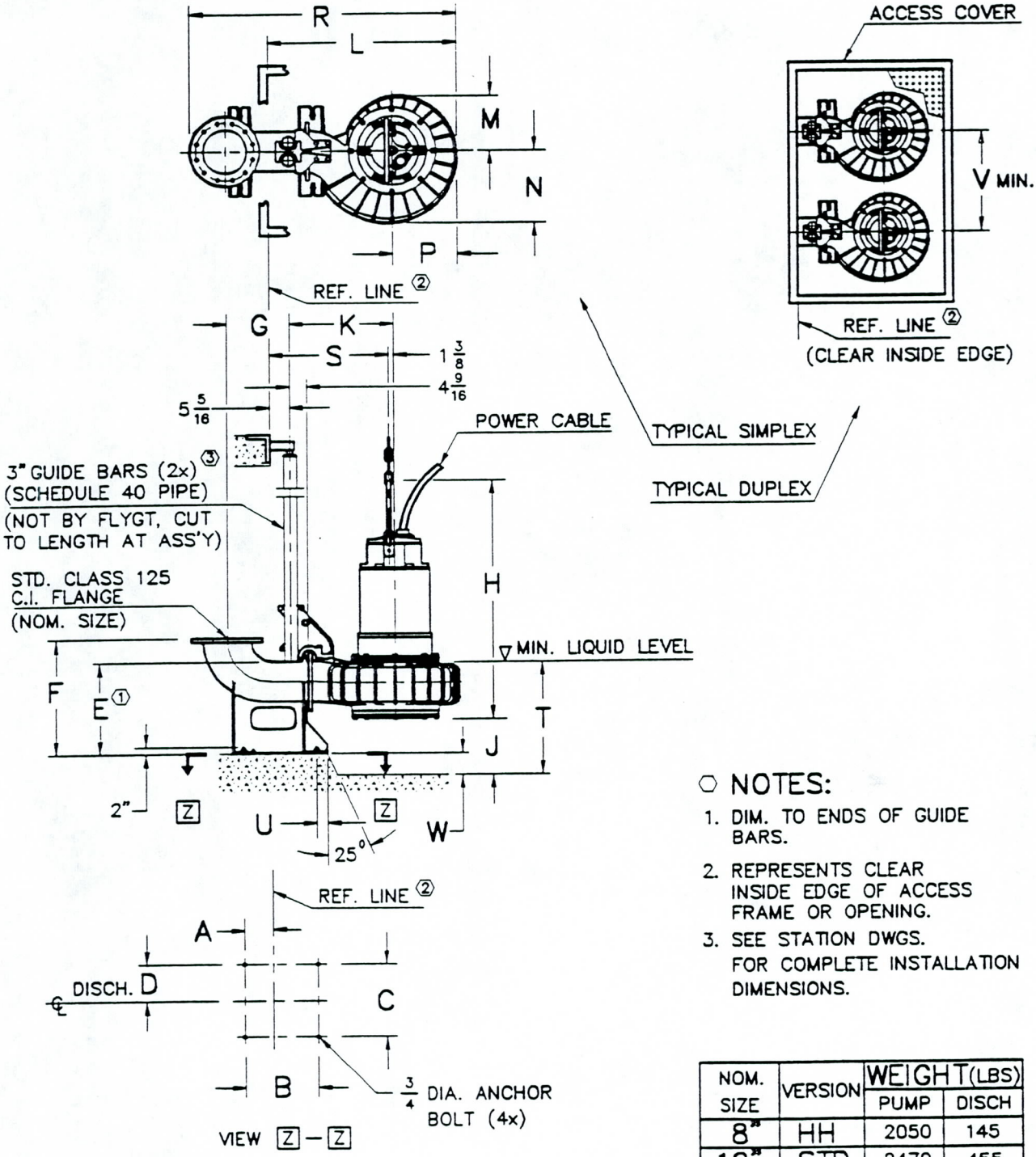

NOTES:

1. DIM. TO ENDS OF GUIDE BARS.
2. REPRESENTS CLEAR INSIDE EDGE OF ACCESS FRAME OR OPENING.
3. SEE STATION DWGS. FOR COMPLETE INSTALLATION DIMENSIONS.

NOM. SIZE	VERSION	WEIGHT (LBS)	
		PUMP	DISCH
8"	HH	2050	145
12"	STD	2470	455
14"	HV	2410	465

ALL DIMENSIONS IN INCHES

DIMENSIONAL CHART

NOM. SIZE	VERSION	A	B	C	D	E	F	G	H	J	K	L	M	N	P	R	S	T	U	V	W
8"	HH	3 1/2	11	9 1/2	4 3/4	13 5/8	17 3/4	12 1/8	61 3/4	10 3/4	24 1/4	42 1/4	12	13 1/2	12 5/8	55 3/4	28 5/8	23	2 1/4	33 1/2	4
12"	STD	7 5/8	19 11/16	20 3/4	10 3/8	25 1/4	31 1/2	17 1/8	65 1/4	15 1/2	28 1/4	51	15	19 3/4	17 3/8	72 1/8	32 1/8	31	3	58 1/2	6
14"	HV	7 5/8	19 11/16	20 3/4	10 3/8	26 1/4	33 1/2	18 1/8	73 1/4	16 1/4	28 1/4	48 1/2	12 1/4	17 3/4	15	71 3/4	32 1/8	32	3	58 1/2	6

SECTION	MODEL
3	3300
SUPERSEDES	ISSUED
6/90	12/91

C-3300

IMPELLER/MOTOR - NOM. SIZES

PUMP MODEL	IMPELLER CODE	HP RATING			VAC	RPM	D1	D2	D3	D4
		CP	CT	CS						
3300 3Ø	454 HH	88	--	--	460,575	1770	8"	6"	--	--
	**461 HH **462 HH **463 HH 464 HH 465 HH 466 HH 467 HH 468 HH		88	88					6" or 8"	8"
	636 STD	77	--	77		1150	12"	10"	8"	--
	638 STD 640 STD	60 60	-- --	60 60						
	642 STD 644 STD	77 77	77 77	77 77						12"
	646 STD 648 STD	60	60	60						
	804 HV 805 HV 806 HV 807 HV 808 HV 809 HV					875	14"	12"	10"	16"

**88 or 120 HP (721 motor) may be used - refer to curve.

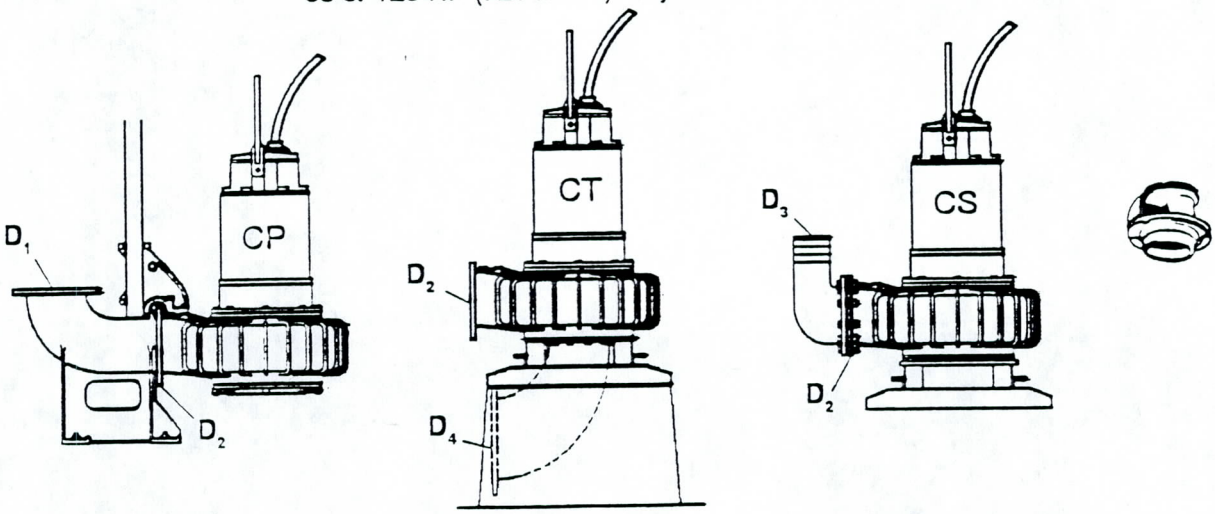

SECTION	MODEL
6	3300
SUPERSEDES	ISSUED
5/91	12/91

C-3300

Electrical Data

MOTOR DATA

RATED OUTPUT POWER HP (KW)	MOTOR DRIVE UNIT (Motor no.)	Ø	VOLTS NOM.	FULL LOAD AMPS	LOCKED ROTOR AMPS	LOCKED ROTOR KVA	LOCKED ROTOR CODE LETTER KVA/HP	RATED INPUT POWER KW	POLES/RPM
32 (24)	—	3	460 575	42.0 34.0	281.0 225.0	223.0	F	27	8/875
45 (34)	—	3	460 575	60.0 48.0	280.0 225.0	223.0	F	39	8/875
(6 pole) 60 (45)	—	3	460 575	72.0 58.0	441.0 353.0	351.0	E	51	6/1165
(8 Pole) 60 (45)	—	3	460 575	80.0 65.0	363.0 290.0	289.0	E	52	8/875
75 (56)	—	3	460 575	91.0 73.0	538.0 430.0	428.0	F	64	6/1170

Pump Motor HP	EFFICIENCY			POWER FACTOR		
	100% LOAD	75% LOAD	50% LOAD	100% LOAD	75% LOAD	50% LOAD
32	87.5	86.9	84.2	0.82	0.78	0.70
45	86.0	86.0	84.0	0.82	0.79	0.71
60 (6 Pole)	88.5	88.5	86.8	0.89	0.87	0.82
60 (8 Pole)	86.0	86.5	85.0	0.82	0.79	0.71
75	87.7	87.5	86.8	0.89	0.87	0.82

CABLE DATA

HP	VOLTS	MAX. LENGTH FT.	CABLE SIZE	NOMINAL DIA.	CONDUCTORS (IN ONE CABLE)
32	460 575	630 970	#4/3-2-1-GC	33.8 mm (1.33")	(3) #4AWG (PWR) (2) #10AWG (CTRL) (1) #6AWG (GND) (1) #10AWG (GC)
45	460 575	500 780			
60	460 575	240 340			
75	460 575	560 840	#1/3-2-1-GC	41.7mm (1.64")	(3) #1AWG (PWR) (2) #10AWG (CTRL) (1) #4AWG (GND) (1) #8AWG (GC)
120	Pilot Cable		(1) 7 G 1.5	16mm (0.63")	(6) 1.5 (CNTRL) (1) 1.5 (GND)

SECTION	MODEL
5	3300
SUPERSEDES	ISSUED
6/90	12/91

CP-3300 680 Drive Unit

Lift Station Dimensions

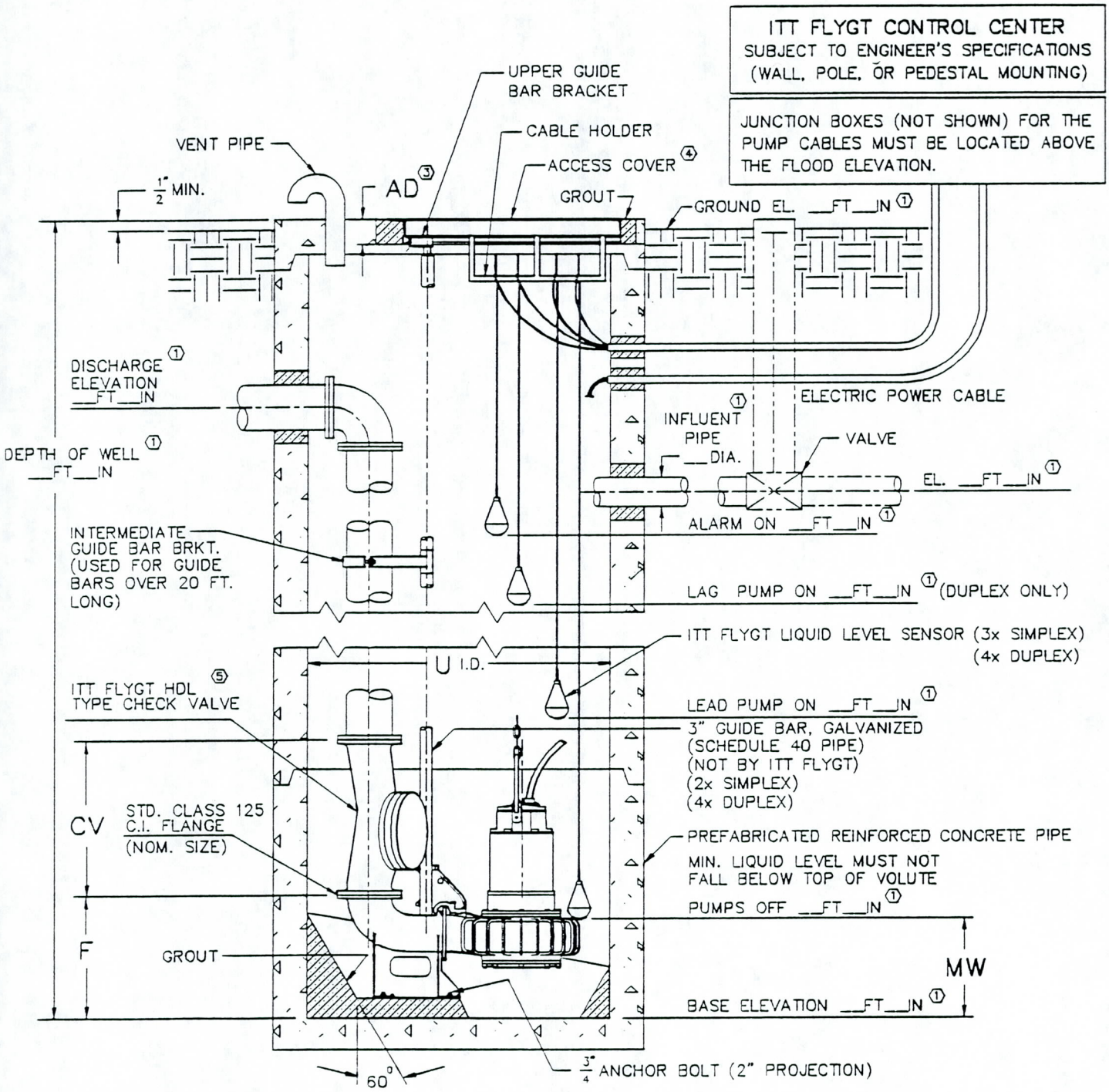

⬡ NOTES:

1. INDICATES INFORMATION TO BE DETERMINED BY OTHERS.
2. LOCATE ANCHOR BOLTS USING CLEAR INSIDE EDGE OF ACCESS FRAME AND CENTER LINE OF PUMP AS REFERENCE POINT. BOLT LOCATIONS MUST BE HELD TO MAINTAIN EXACT POSITION OF PUMP RELATIVE TO ACCESS FRAME.
3. GROUT OPENING FOR ACCESS FRAME.
4. HEAVY DUTY ACCESS COVER AVAILABLE FROM ITT FLYGT. (CONSULT ITT FLYGT CORP. FOR COVER DIMENSIONS)
5. CONFIGURATION AND DIMENSIONS SHOWN ARE MINIMUM REQUIREMENTS ONLY. ALL DETAILS, INCLUDING SIZING OF PIT, TYPE, LOCATION AND ARRANGEMENTS OF VALVES AND PIPING, ETC. ARE TO BE SPECIFIED BY THE CONSULTING ENGINEER AND ARE SUBJECT TO HIS APPROVAL.

SECTION	MODEL
5	3300
SUPERSEDES	ISSUED
6/90	12/91

680 Drive Unit

Simplex

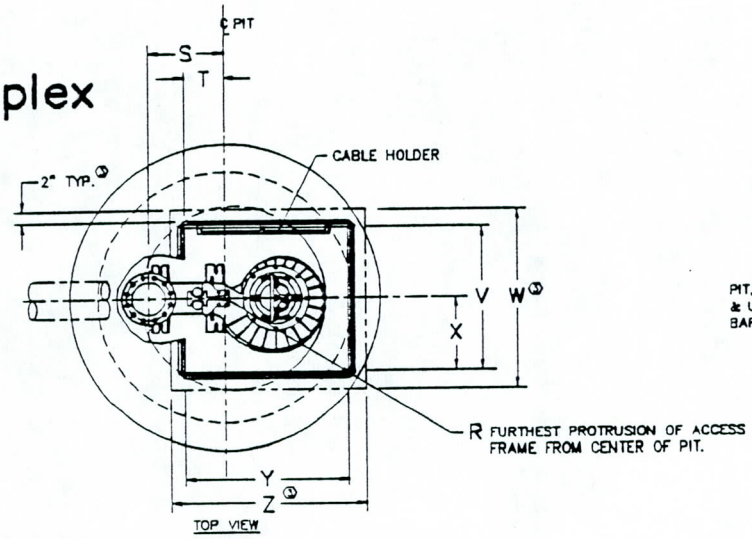

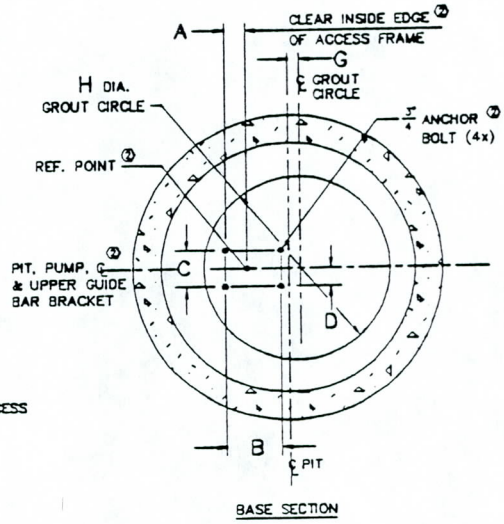

ALL DIMENSIONS IN INCHES

DIMENSIONAL CHART																						
NOM. SIZE	VERSION	STATION													COVER							
		A	B	C	D	F	G	H	R	S	T	U	CV	MW	SIZE	V	W	X	Y	Z	AD
8"	HH	3 1/4	11	9 1/4	4 3/4	17 3/4	2	54	41	21 1/2	14 3/4	72	19 1/2	23	C	30	40	16	48	58	4 5/8
12"	STD	7 5/8	19 11/16	20 3/4	10 3/8	31 1/2	1	68	50	29	17 1/4	96	47 1/4	31	G	48	60 1/2	26 1/2	54	66 1/2	5 1/8
14"	HV	7 5/8	19 11/16	20 3/4	10 3/8	33 1/2	2	66	53	26	13 1/2	96	55 1/4	32	G	48	60 1/2	26 3/4	54	66 1/2	5 1/8

Duplex

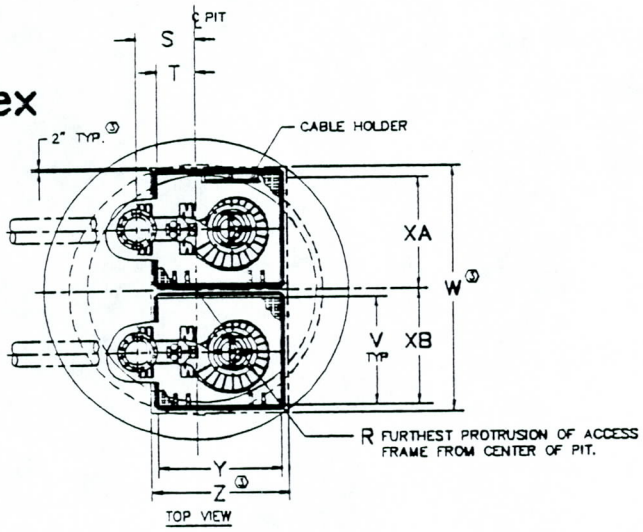

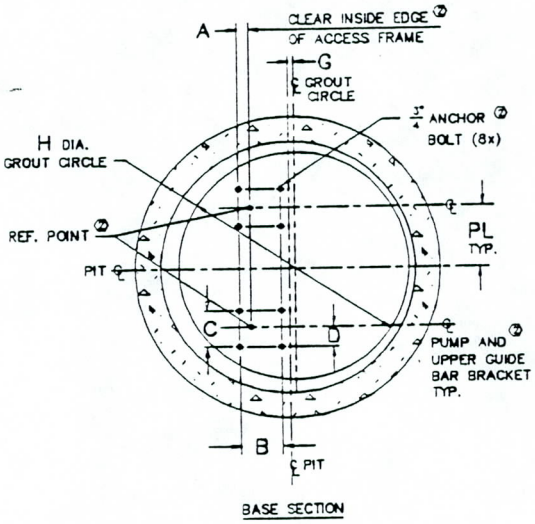

ALL DIMENSIONS IN INCHES

DIMENSIONAL CHART																								
NOM. SIZE	VERSION	STATION														COVER								
		A	B	C	D	F	G	H	R	S	T	U	CV	MW	PL	SIZE	V	W	XA	XB	Y	Z	AD
8"	HH	3 1/4	11	9 1/4	4 3/4	17 3/4	3 1/4	74	53	21	14 1/8	96	19 1/2	23	19	C(2)	30	78	33 1/8	34 7/8	48	58	4 5/8
12"	STD	7 5/8	19 11/16	20 3/4	10 3/8	31 1/2	1	105	70	28	16 1/4	120	47 1/4	31	29 1/4	G(2)	48	119	53 1/4	53 1/4	54	66 1/2	5 1/8
14"	HV	7 5/8	19 11/16	20 3/4	10 3/8	33 1/2	3 1/2	106	72	25 1/4	12 1/2	120	55 1/4	32	29 1/4	G(2)	48	119	53 1/4	53 1/4	54	66 1/2	5 1/8

C-3300

SECTION	MODEL
3	3300
SUPERSEDES	ISSUED
6/90	12/91

FAMILY OF PERFORMANCE CURVES

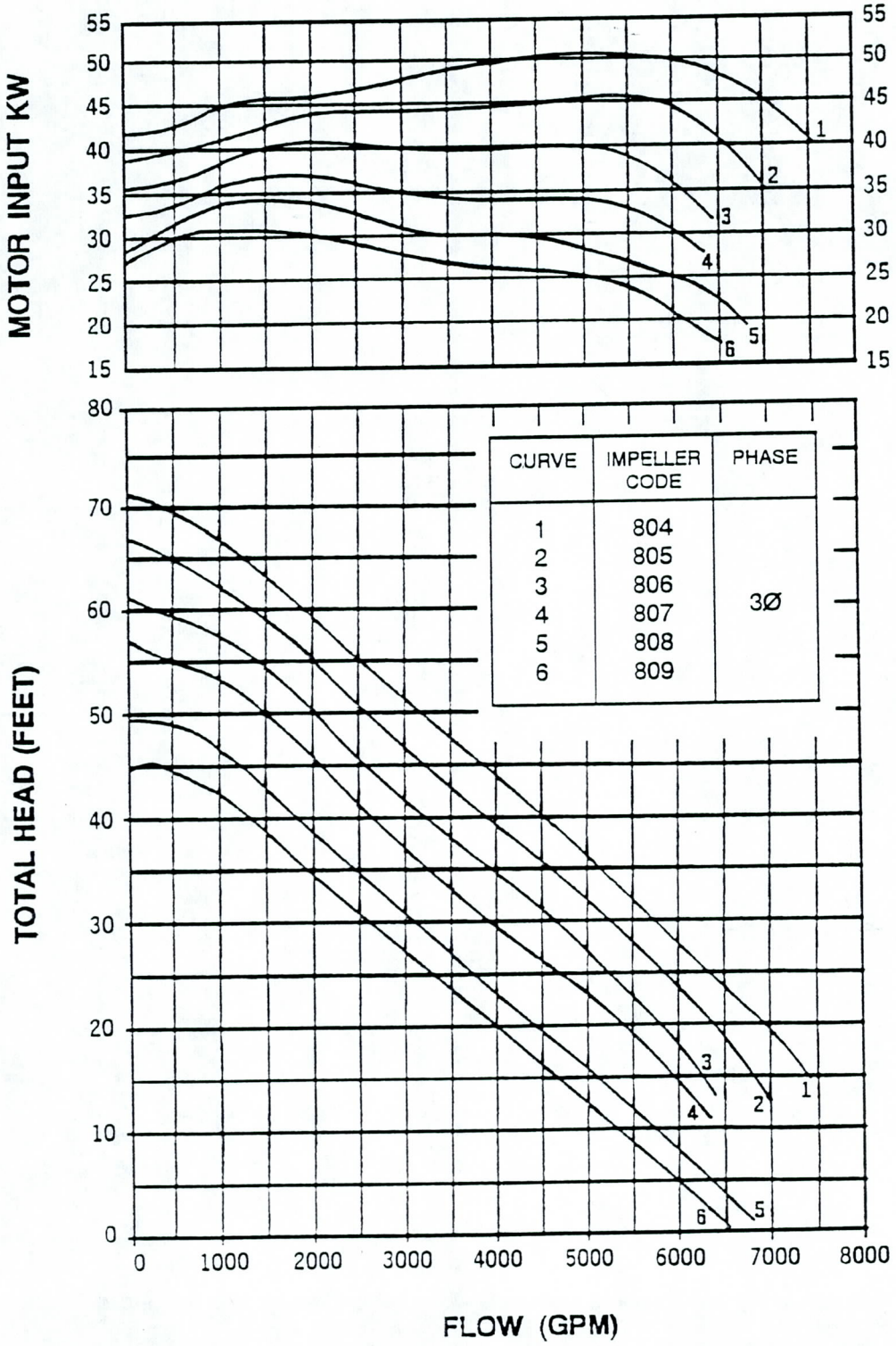

CURVE	IMPELLER CODE	PHASE
1	804	3Ø
2	805	
3	806	
4	807	
5	808	
6	809	

NOTE:
FAMILY OF PERFORMANCE CURVES ARE FOR PRE-SELECTION ONLY.
SEE INDIVIDUAL CURVES IN THIS SECTION FOR FINAL SELECTION.

Overall Performance Range

ITT Flygt Submersible Municipal and Industrial Pumps

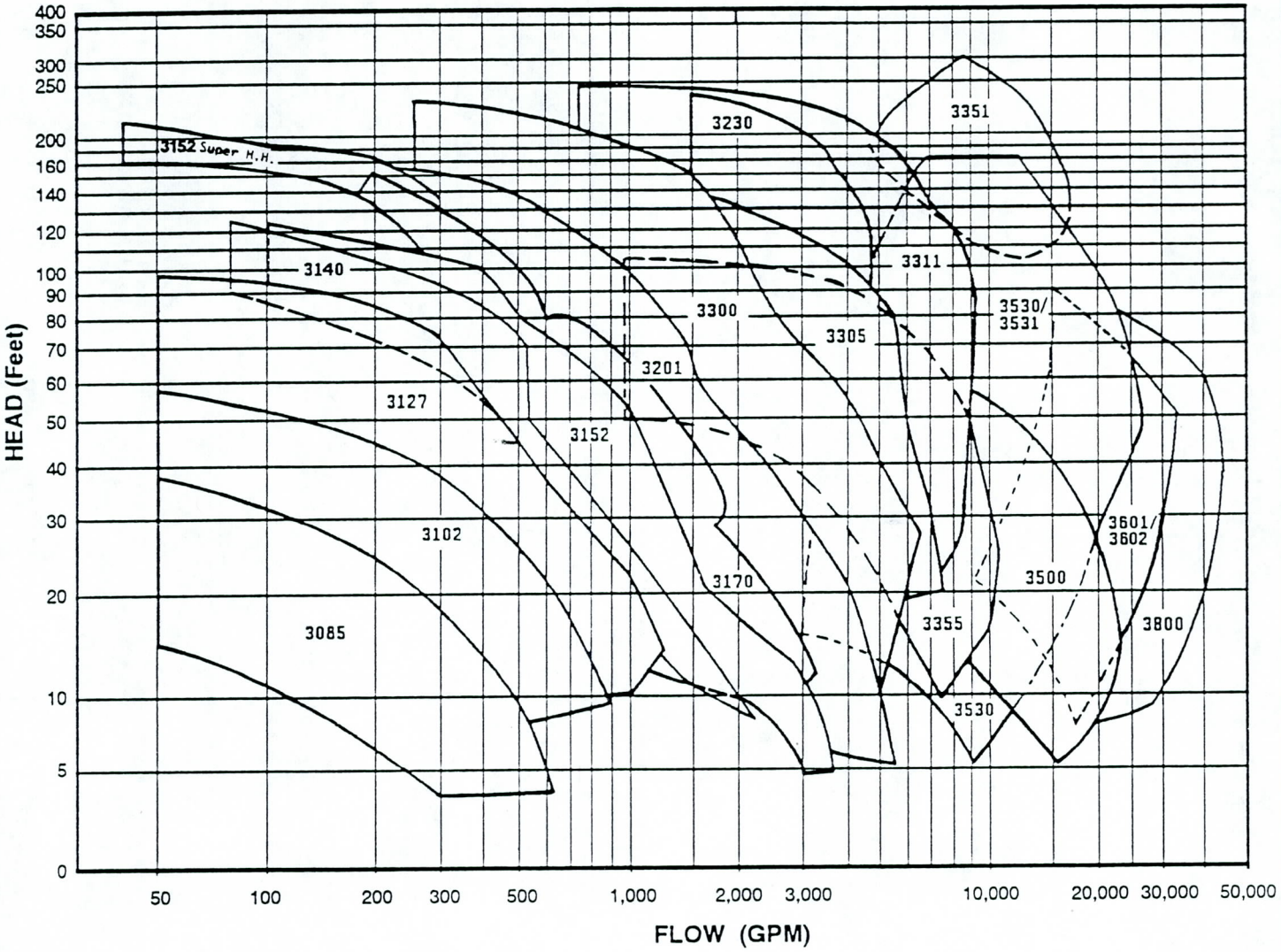

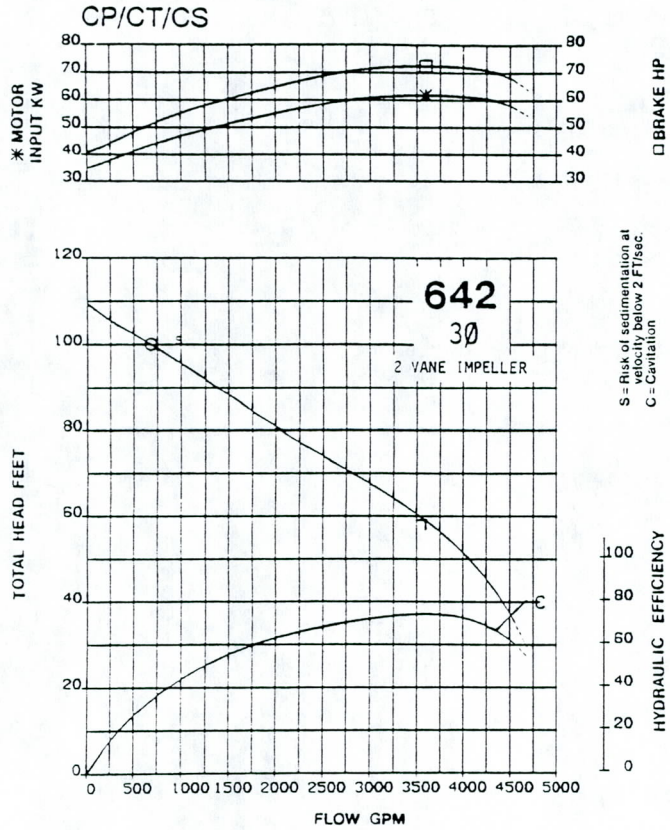
CP/CT/CS
✱ MOTOR INPUT KW
□ BRAKE HP
642
3Ø
2 VANE IMPELLER
S = Risk of sedimentation at velocity below 2 FT/sec.
C = Cavitation
TOTAL HEAD FEET
HYDRAULIC EFFICIENCY
FLOW GPM

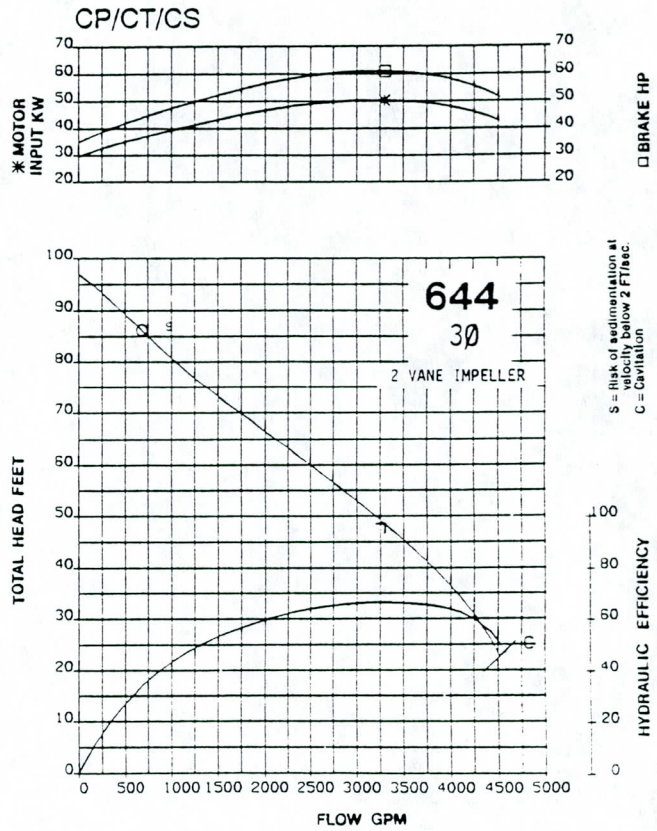
CP/CT/CS
✱ MOTOR INPUT KW
□ BRAKE HP
644
3Ø
2 VANE IMPELLER
S = Risk of sedimentation at velocity below 2 FT/sec.
C = Cavitation
TOTAL HEAD FEET
HYDRAULIC EFFICIENCY
FLOW GPM

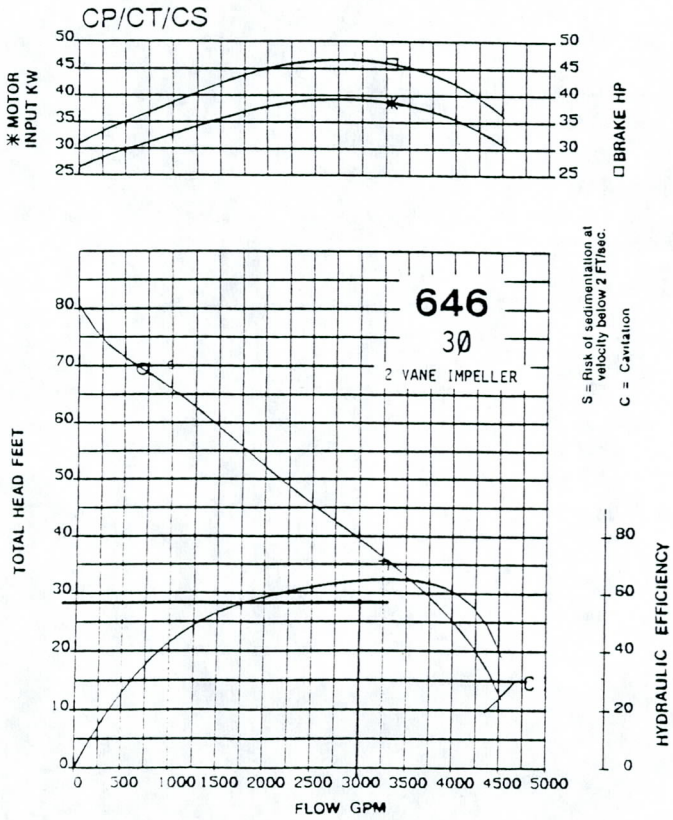
CP/CT/CS
✱ MOTOR INPUT KW
□ BRAKE HP
646
3Ø
2 VANE IMPELLER
S = Risk of sedimentation at velocity below 2 FT/sec.
C = Cavitation
TOTAL HEAD FEET
HYDRAULIC EFFICIENCY
FLOW GPM

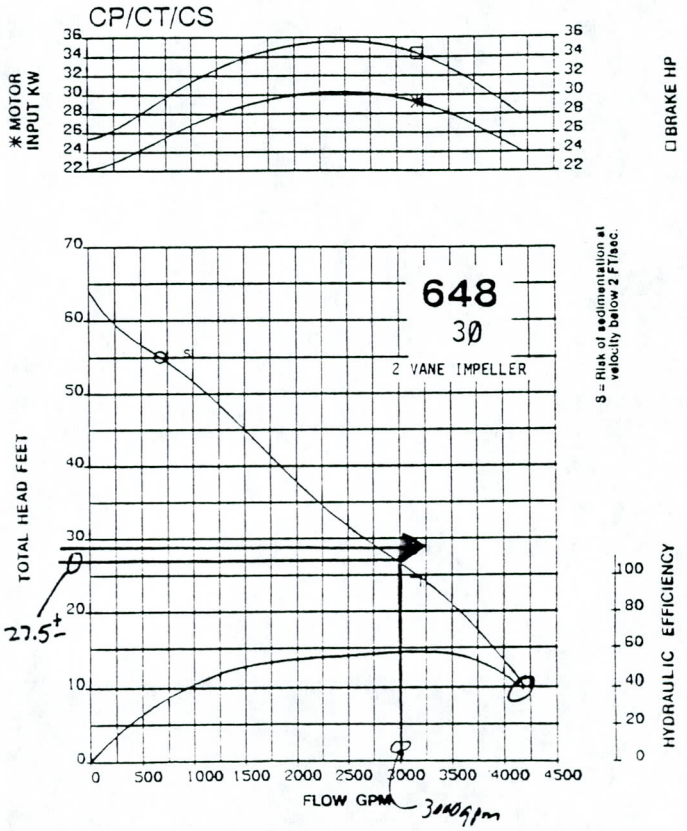
CP/CT/CS
✱ MOTOR INPUT KW
□ BRAKE HP
648
3Ø
2 VANE IMPELLER
S = Risk of sedimentation at velocity below 2 FT/sec.
TOTAL HEAD FEET
27.5±
HYDRAULIC EFFICIENCY
FLOW GPM
3000gpm