43rd AVENUE STORM DRAIN

FINAL
DESIGN REPORT

May, 1999

Prepared For:
Flood Control District of Maricopa County
Chief Engineer & General Manager

Prepared by:
Engineering Division
Flood Control District of Maricopa County

FCD Project No. 1170230

43rd AVENUE DETENTION BASIN
FCD PROJECT NO. 1170230
FINAL DESIGN REPORT

TABLE OF CONTENTS

Section	Page
COVER	1
TABLE OF CONTENTS	2
FIGURES AND TABLES	3
1.0 PROJECT DESCRIPTION	4
1.1 Purpose	4
1.2 Location	4
1.3 Rights-of-Way	4
1.4 Utilities	4
2.0 EVALUATE STORM DRAIN ALTERNATIVES	5
2.1 Storm Drain Alternative 1	5
2.2 Storm Drain Alternative 2	5
2.3 Storm Drain Alternative 3	5
2.4 Selected Alternative	5
3.0 EVALUATE STORM DRAIN OUTLET ALTERNATIVES	6
3.1 Storm Drain Outlet Alternative 1	6
3.2 Storm Drain Outlet Alternative 2	6
3.3 Storm Drain Outlet Alternative 3	6
3.4 Selected Alternative	7
4.0 LOCAL DRAINAGE IMPROVEMENTS	7
5.0 HYDRAULIC ANALYSIS	7
6.0 HYDROLOGIC ANALYSIS	7
7.0 PUMP DESIGN	7
8.0 GEOTECHNICAL INVESTIGATION	8
9.0 CONSTRUCTION COST ESTIMATE	8
10.0 CONSTRUCTION SPECIAL PROVISIONS	8
11.0 SUPPLEMENTARY GENERAL CONDITIONS	8
12.0 CONSTRUCTION COST ESTIMATE	8

LIST OF APPENDICES

1. HYDRAULIC ANALYSIS
2. HYDROLOGIC ANALYSIS
3. PUMP DESIGN REPORT
4. GEOTECHNICAL REPORT
5. CONSTRUCTION COST ESTIMATE
6. CONSTRUCTION SPECIAL PROVISIONS
7. SUPPLEMENTARY GENERAL CONDITIONS
8. CONSTRUCTION PLANS

1.0 PROJECT DESCRIPTION

1.1 Purpose

The purpose of this project is to develop final construction drawings for the 43rd Avenue Storm Drain between Baseline Road and the Salt River. The South Phoenix/Laveen Drainage Improvement Project (Project), dated July 1997 prepared by HDR Engineering, Inc. of Phoenix developed a solution which consisted of a number of detention basins and storm drains to capture, collect, attenuate, and convey storm water runoff to the Salt River. The 43rd Avenue Storm Drain provides an outlet for the Project.

The District entered into an Intergovernmental Agreement (IGA FCD – 97012) with the City of Phoenix, and agreed to fund the design of this storm drain. The storm drain is being designed in-house to help expedite the construction of the Project's outfall. This phase of the Project consists of providing construction drawings for the most downstream portion of the storm drain located on 43rd Avenue. The District is also preparing a design in-house for the basin located at the Southeast Corner of 43rd Avenue and Southern Avenue.

1.2 Location

The project is located in an area know as Laveen. The area has been incorporated into the limits of the City of Phoenix since the South Phoenix/Laveen Drainage Improvement Project began. The drainage area is bounded on the south by the South Mountains, on the east by the 7th Avenue, on the north by the Salt River, and finally on the west by 43rd Avenue. The drainage area encompasses 26 square miles of the southwest portion of the City of Phoenix.

This Project is located on 43rd Avenue between Baseline Road and the Salt River. There is a Detention Basin to be located on the southeast quadrant of the intersection of 43rd Avenue and Southern Avenue. The Basin outlets to this Storm Drain.

The area between Baseline Road and Southern Avenue is farmland with some residential development at the Southeast Corner of 43rd Avenue and Southern Avenue. North of Southern Avenue to the Salt River the land use is a mixture of industrial development, farmland, and single family homes.

1.3 Rights-of-Way

Additional rights-of-way are necessary for the pump house at 43rd Avenue and Wier Avenue and at the Salt River for an outlet structure and pilot channel. A temporary construction easement is required at the Salt River for access purposes.

1.4 Utilities

The storm drain in 43rd Avenue crosses several utilities lines including sanitary sewer, water, irrigation, telephone, fiber optic cable, gas, and irrigation. The two utility crossings that are key to this Project are a 66" sanitary sewer line in Southern Avenue and a 30" sanitary sewer in Weir Avenue.

It is necessary to construct the storm drain under these sanitary sewers with no interruption of flow in the sewers. This can be done by constructing the storm sewer deep enough to be below these sewers, by a dip section, or by a constricted structure under the sewers. These are examined as alternatives in the next section of this report. All of these alternatives require the storm drain pipe to be bored and jacked under the sanitary sewers.

2.0 EVALUATE STORM DRAIN ALTERNATIVES

Three storm drain alternatives were developed to meet the 100-year future flow of 295 CFS. These alternatives were designed to meet the following criteria:

1. The pipe is deep enough to avoid conflicts with future utilities in 43rd Avenue and cross streets.
2. The pipe is deep enough to drain the retention basin at 43rd Avenue and Southern Avenue without pumping.
3. The pipe is deep enough to drain the retention basin at 43rd Avenue and Baseline Road without pumping.

2.1 Storm Drain Alternative 1

Storm Drain Alternative 1 consists of a 72" diameter concrete pipe beginning at the retention basin located at 43rd Avenue and Baseline Road. It increases to 114" diameter concrete pipe approximately 2,200 feet north of Baseline Road, remains this size to north of Broadway Road, and then becomes a 10' by 5' concrete box culvert to the Salt River.

The pipe is deep enough from Southern Avenue north to the Salt River to be constructed without siphons under existing sanitary sewers.

2.2 Storm Drain Alternative 2

Storm Drain Alternative 2 consists of constructing a siphon under the 66" sanitary sewer in Southern Avenue. The pipe sizes are the same as for Alternative 1 above.

2.3 Storm Drain Alternative 3

Storm Drain Alternative 3 consists of constructing a constricted section without a siphon under the 66" sanitary sewer in Southern Avenue.

2.4 Selected Alternative

A modified version of Alternative No.2 is the recommended alternative. The modification consists of raising the reach of storm drain north of the sewer crossing in Southern Avenue as much as possible yet still providing a positive outfall to the proposed basin at the corner of 43rd and Southern Avenues. This would raise the storm drain grades north of Southern Avenue approximately 8 feet from Alternative No. 1 that was recommended in the Preliminary Design Report.

The siphon at 43rd Avenue and Southern Avenue will be drained by relocating the pump at 43rd Avenue and Alta Vista to 43rd Avenue and Southern. No water will be left standing in the pipe.

The reason for this modification is due to the high cost of shoring. Since the Preliminary Design Report was prepared, additional borings were taken and a report was prepared by Speedie & Associates dated October 16, 1998 that recommended that the trench "should be braced and/or shored" because of loose material encountered in the borings. Information obtained from

Speedie & Associates and other local contractors estimate that the cost of shoring will range from $30 - $40 per square foot of trench wall. This significantly increases the costs estimates submitted in the Preliminary Design Report.

Every foot that the storm drain can be raised results in a cost saving of $60 - $80 per linear foot of pipe. The resultant savings in the cost of shoring from raising the storm drain ranges from $2 to $3 million.

3.0 EVALUATE STORM DRAIN OUTLET ALTERNATIVES

Three storm drain outlet alternatives were developed to present to the Corp of Engineers as part of the 404 Permit process.

3.1 Storm Drain Outlet Alternative No. 1

Storm Drain Outlet Alternative No. 1 consists of outletting the 43rd Avenue storm drain to an area approximately 100 feet north of Broadway Road. The invert elevation for the outlet would be 1014.00.

The advantage is that this disturbs the least river area and will make the Corp 404 Permit easier and quicker to obtain.

The disadvantage is that the outlet invert will be above the river invert by approximately 6 feet.

3.2 Storm Drain Outlet Alternative No. 2

Storm Drain Outlet Alternative No. 2 consists of outletting the 43rd Avenue storm drain to an area approximately 100 feet north of Broadway Road. The invert elevation for the outlet would be 1014.00. A smaller pipe extending to the Salt River invert of 1008.00 would then drain this area.

The advantage is that a good positive outfall is provided to the main channel of the Salt River.

The disadvantage is that this disturbs more river area and will make the Corp 404 Permit more difficult and more time consuming to obtain. In addition, the pipe could be washed out and any maintenance in the Salt River will require a Corp permit.

3.3 Storm Drain Outlet Alternative No. 3

Storm Drain Outlet Alternative No. 3 consists of outletting the 43rd Avenue storm drain to an area approximately 100 feet north of Broadway Road the invert elevation for the outlet would be 1008.50. This area would then be drained by construction of a channel extending to the main channel of the Salt River.

The advantage is that the storm drain is outletted at the lowest possible elevation and has a good positive outfall provided to the main channel of the Salt River.

The disadvantage is that this disturbs the most river area and will make the Corp 404 Permit more difficult and more time consuming to obtain. In addition, the outlet channel could be filled in by flows in the Salt River will require a Corp permit to repair or maintain.

3.4 Selected Alternative

Storm Drain Outlet Alternative No. 1 is the selected alternative. The advantage is that the Corp 404 Permit will be easiest and fastest to obtain. In addition, this alternative requires the least maintenance requiring a Corp permit.

4.0 LOCAL DRAINAGE IMPROVEMENTS

Local storm drain and catch basin improvements that will drain to the retention basin at the southeast corner of 43rd Avenue and Southern Avenue have been added to this project since the Preliminary Design Report was prepared. These improvements are located in the vicinity of 43rd Avenue and the Alta Vista Drive area and 42nd Avenue and Huntington Road.

These improvements have been added to provide immediate relief to local drainage problems. When the basin is constructed in the future, these areas will also be rerouted to drain there as proposed in the HDR Report for the Laveen area.

5.0 HYDRAULIC ANALYSIS

Pipes were sized and hydraulic grade lines were calculated using Stormcad. Analyses for the 43rd Avenue storm drain and for the local drainage improvements are shown in Appendix 1. The local drainage improvements were designed for the future condition when they drain to the retention basin at 43rd Avenue and Southern Avenue. The local drainage improvements were checked for the existing condition where they are connected directly to the 43rd Avenue storm drain.

6.0 HYDOLOGIC ANALYSIS

The hydrology developed for the South Phoenix/Laveen Drainage Improvement Project was modified and a retention basin was added at the northeast corner of 43rd Avenue and Baseline Road. The addition of this on-line basin reduced the peak flow in the 43rd Avenue storm drain from 851 CFS to 264 CFS and allowed FCD to change the proposed 3 barrel 10' by 7' concrete box culvert to a 114" pipe.

The advantages to this change are cost savings of approximately $5 million, much easier construction, and fewer utility conflicts.

The HEC 1 output is shown in Appendix 2.

7.0 PUMP DESIGN

A pump station is will be constructed at the southeast corner of 43rd Avenue and Broadway Road. This pump drains the water that cannot gravity drain to the Salt River. The plans were prepared by Carollo Engineers and are included with this project. The Design Report is shown in Appendix 3.

An additional pump station will be constructed at the southeast corner of 43rd Avenue and Southern Avenue. This pump will only drain the sag under the 66" sanitary sewer. This pump will be constructed later and not as part of this project.

8.0 GEOTECHNICAL INVESTIGATION

Speedie and Associates performed Geotechnical investigations for this project. A copy of this report is shown in Appendix 4.

9.0 CONSTRUCTION COST ESTIMATE

The Construction Cost Estimate for the project is $9.3 million and is shown in Appendix 5.

10.0 CONSTRUCTION SPECIAL PROVISIONS

The Construction Special Provisions for the project is shown in Appendix 6.

11.0 SUPPLEMENTARY GENERAL CONDITIONS

The Supplementary General Conditions for the project is shown in Appendix 7.

12.0 CONSTRUCTION PLANS

The Construction Plans for the project is shown in Appendix 8.

Scenario: Base

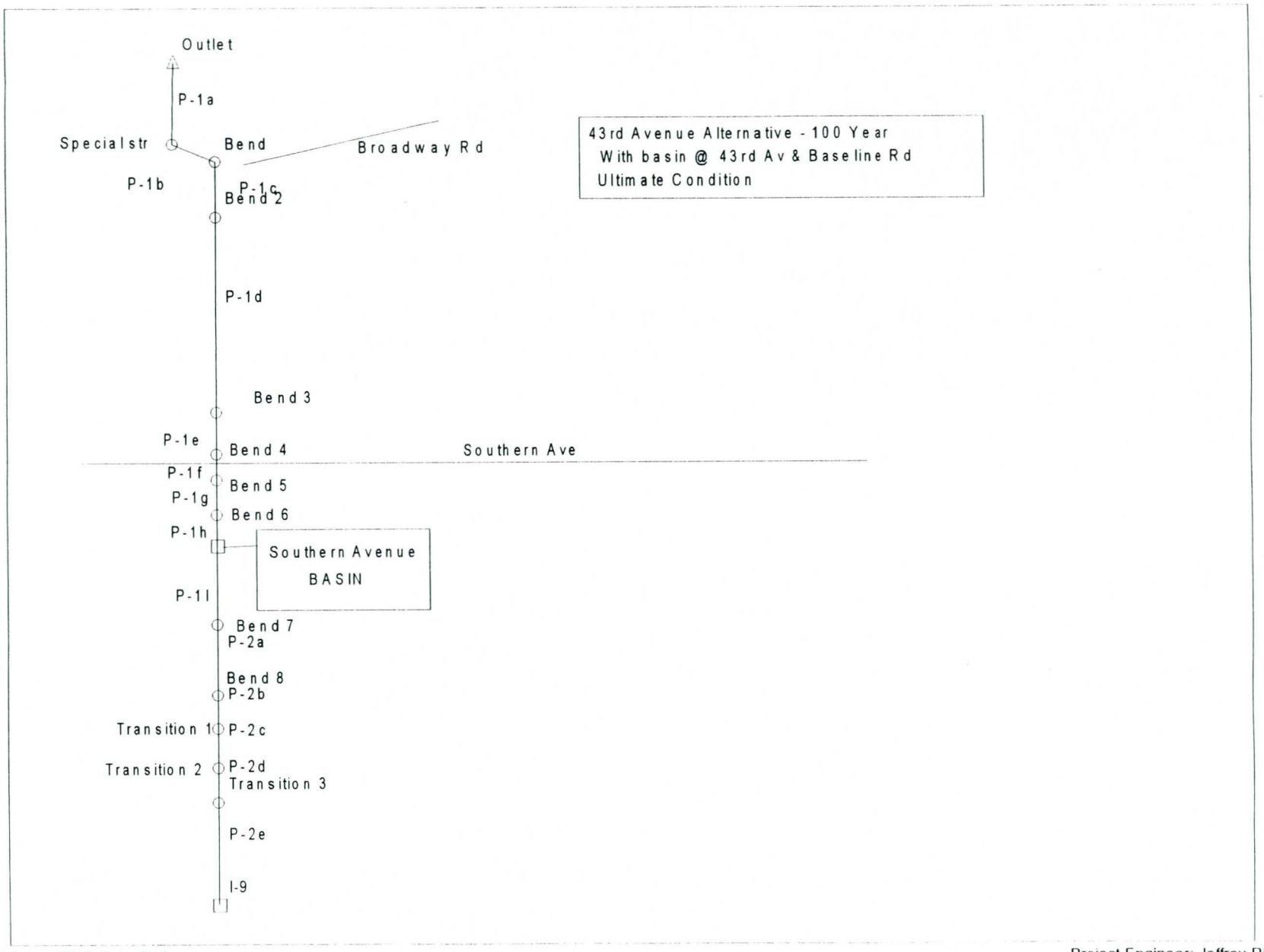

Scenario: Base

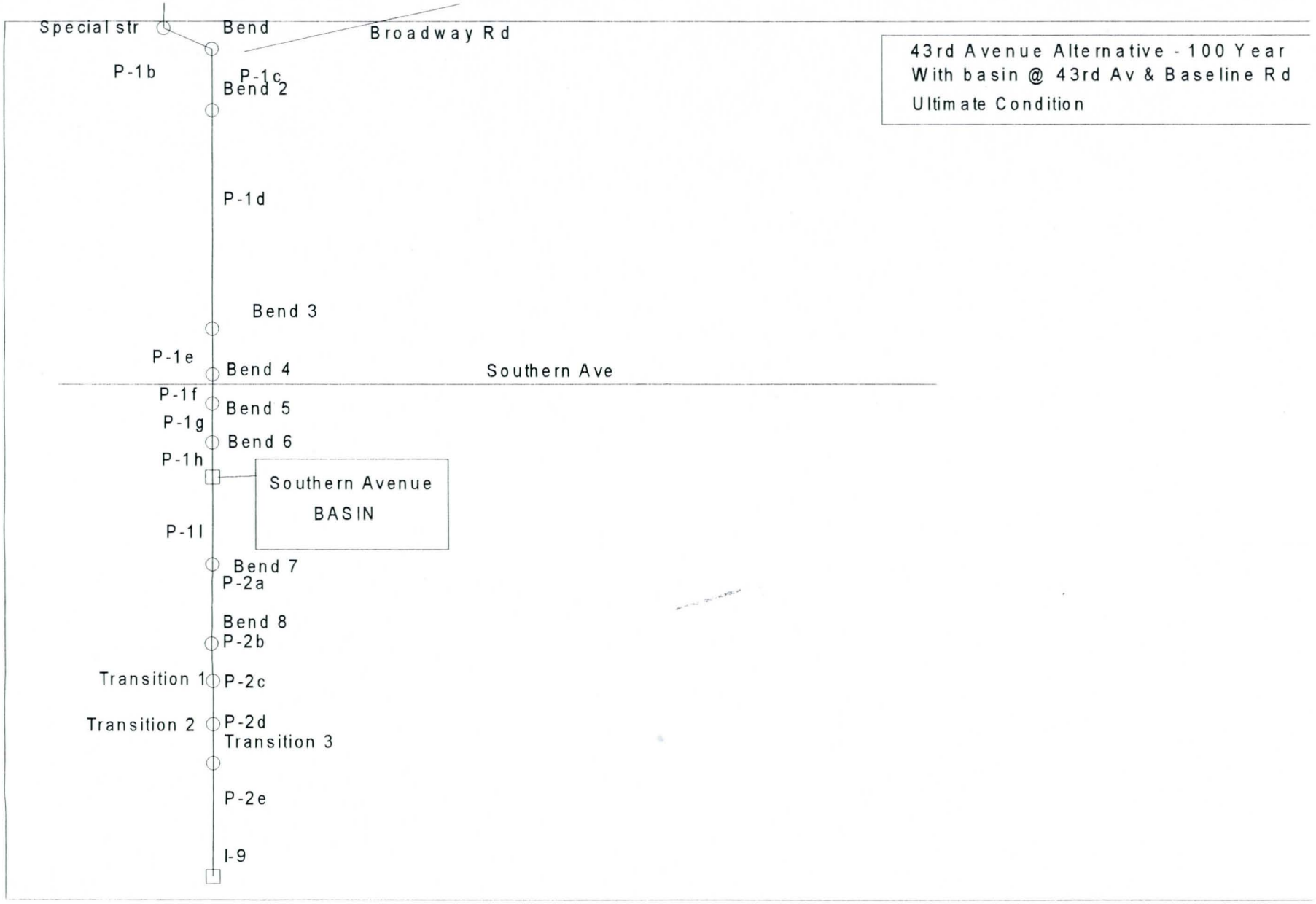

Scenario: Base

43rd Pipe Report

Label	Total System Flow (cfs)	Average Velocity (ft/s)	Upstream Node	Downstream Node	Section Size	Length (ft)	Hydraulic Grade In (ft)	Upstream Ground Elevation (ft)	Upstream Invert Elevation (ft)	Hydraulic Grade Out (ft)	Downstream Ground Elevation (ft)	Downstream Invert Elevation (ft)
P-3	123.00	5.18	I-3	I-4	66 inch	540.00	1,022.22	1,023.00	1,011.14	1,021.49	1,021.50	1,010.60
P-4	123.00	5.18	I-4	I-5	66 inch	660.00	1,021.24	1,021.50	1,010.60	1,020.36	1,021.00	1,009.80
P-5	123.00	5.18	I-5	MH 4	66 inch	198.00	1,020.03	1,021.00	1,009.80	1,019.76	1,022.60	1,009.06
P-6	123.00	12.53	MH 4	MH 5	30 inch	120.00	1,017.32	1,022.60	1,001.94	1,014.62	1,021.00	1,001.82
P-7	123.00	5.18	MH 5	MH 6	66 inch	623.00	1,014.21	1,021.00	1,001.82	1,013.37	1,021.00	1,001.30
P-8	123.00	5.18	MH 6	Outlet	66 inch	90.00	1,013.12	1,021.00	1,001.30	1,013.00	1,023.10	1,001.20

Scenario: Base

Pipe Report

Label	Up. Node	Dn. Node	System Q (cfs)	Length (ft)	S (ft/ft)	Size	n	Up Invert (ft)	Dn Invert (ft)	Up Gr Elev (ft)	HGL In (ft)	Dn Gr Elev (ft)	EGL In (ft)	Calc H-loss (ft)	EGL Out (ft)	HGL Out (ft)	Up Cover (ft)	Avg Vel (ft/s)
P-1a	Special str	Outlet	294	90	0.002222	10 x 5 ft	0.013	1,014.20	1,014.00	1,023.00	1,018.08	1,022.00	,018.97	0.08	1,018.84	1,018.00	3.80	7.46
P-1b	Bend	Special str	294	82	0.097561	114 inch	0.013	1,000.00	1,008.00	1,024.00	1,018.56	1,023.00	,018.83	0.03	1,018.80	1,018.53	14.50	4.15
P-1c	Bend 2	Bend	294	80	0.013125	114 inch	0.013	998.95	1,000.00	1,026.00	1,018.68	1,024.00	,018.94	0.03	1,018.91	1,018.64	17.55	4.15
P-1d	Bend 3	Bend 2	294	4,010	0.000511	114 inch	0.013	1,001.00	998.95	1,021.00	1,020.40	1,026.00	,020.66	1.67	1,019.00	1,018.73	10.50	4.15
P-1e	Bend 4	Bend 3	294	14	0.567857	114 inch	0.013	993.05	1,001.00	1,021.00	1,020.49	1,021.00	,020.76	0.01	1,020.76	1,020.49	18.45	4.15
P-1f	Bend 5	Bend 4	294	206	0.000146	114 inch	0.013	993.02	993.05	1,021.00	1,020.67	1,021.00	,020.94	0.09	1,020.86	1,020.59	18.48	4.15
P-1g	Bend 6	Bend 5	294	120	0.057333	114 inch	0.013	999.90	993.02	1,022.00	1,020.82	1,021.00	,021.08	0.05	1,021.03	1,020.77	12.60	4.15
P-1h	BASIN	Bend 6	294	370	0.001622	114 inch	0.013	1,000.50	999.90	1,021.00	1,021.06	1,022.00	,021.33	0.15	1,021.18	1,020.91	11.00	4.15
P-1I	Bend 7	BASIN	264	430	0.001628	114 inch	0.013	1,001.20	1,000.50	1,021.50	1,021.14	1,021.00	,021.36	0.14	1,021.22	1,021.00	10.80	3.72
P-2a	Bend 8	Bend 7	264	1,000	0.002800	114 inch	0.013	1,004.00	1,001.20	1,022.00	1,021.55	1,021.50	,021.77	0.34	1,021.44	1,021.22	8.50	3.72
P-2b	Transition 1	Bend 8	264	950	0.002000	114 inch	0.013	1,005.90	1,004.00	1,024.00	1,021.93	1,022.00	,022.14	0.32	1,021.82	1,021.61	8.60	3.72
P-2c	Transition 2	Transition 1	264	60	0.001667	96 inch	0.013	1,007.52	1,007.42	1,021.50	1,022.00	1,024.00	,022.43	0.05	1,022.38	1,021.95	5.98	5.25
P-2d	Transition 3	Transition 2	264	60	0.001667	84 inch	0.013	1,008.64	1,008.54	1,024.00	1,021.60	1,021.50	,022.33	0.10	1,022.23	1,021.50	8.36	6.86
P-2e	I-9	Transition 3	264	930	0.001742	72 inch	0.013	1,011.28	1,009.66	1,027.00	1,025.44	1,024.00	,026.79	3.61	1,023.18	1,021.82	9.72	9.34

Scenario: Base

PHASE I - 43rd Ave & Huntington Drive Interim SD

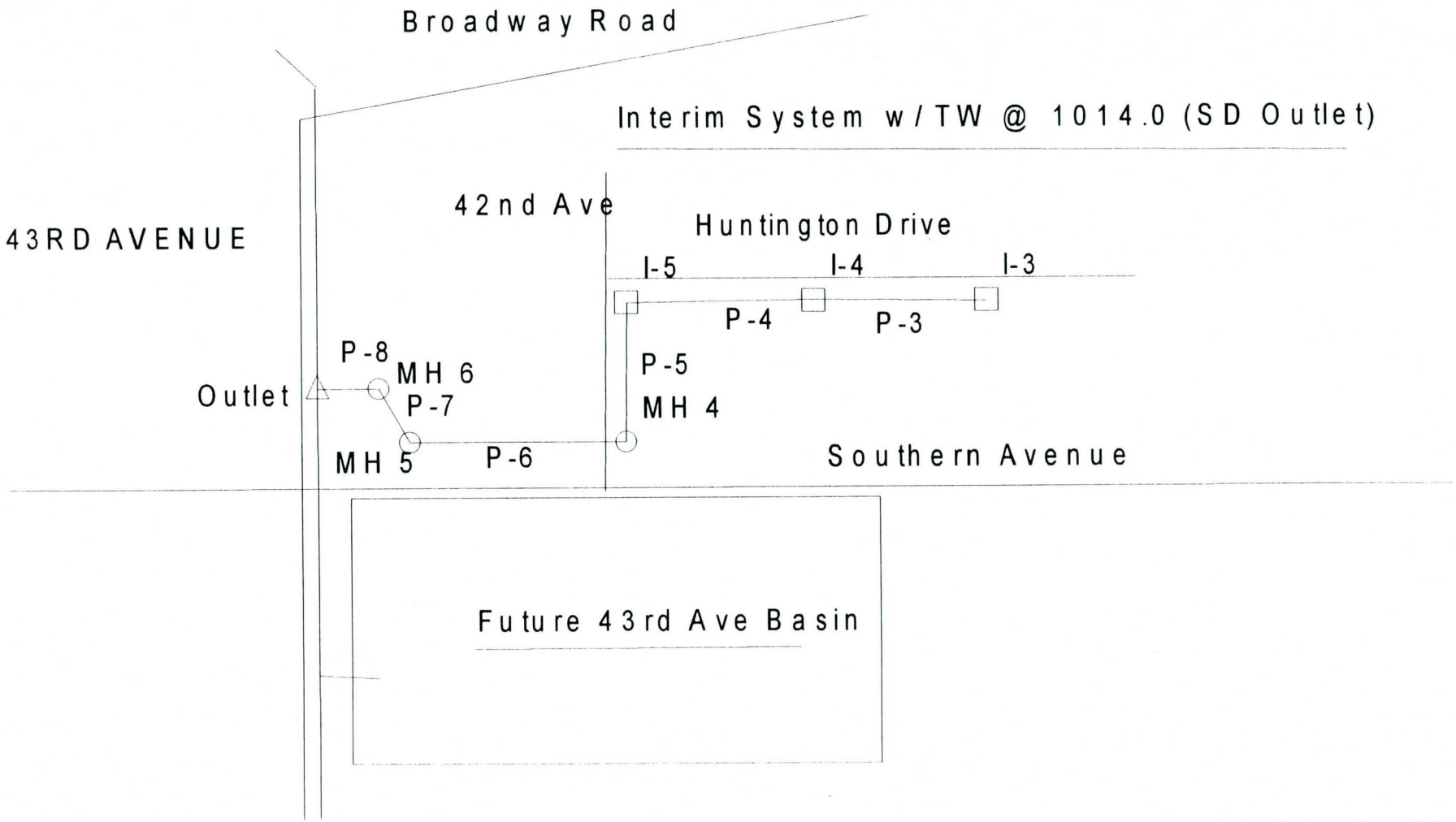

Title: huntingdon SD
s:\eng\43rd ave\hydraulics\hntng10i.stm
05/06/99 09:26:18 AM

Maricopa County Flood Control
© Haestad Methods, Inc. 37 Brookside Road Waterbury, CT 06708 USA (203) 755-1666

Project Engineer: Michael A. Lopez
StormCAD v3.0 [319]
Page 1 of 1

Scenario: Base

PHASE III - 43rd Ave & Huntington Drive SD Exists

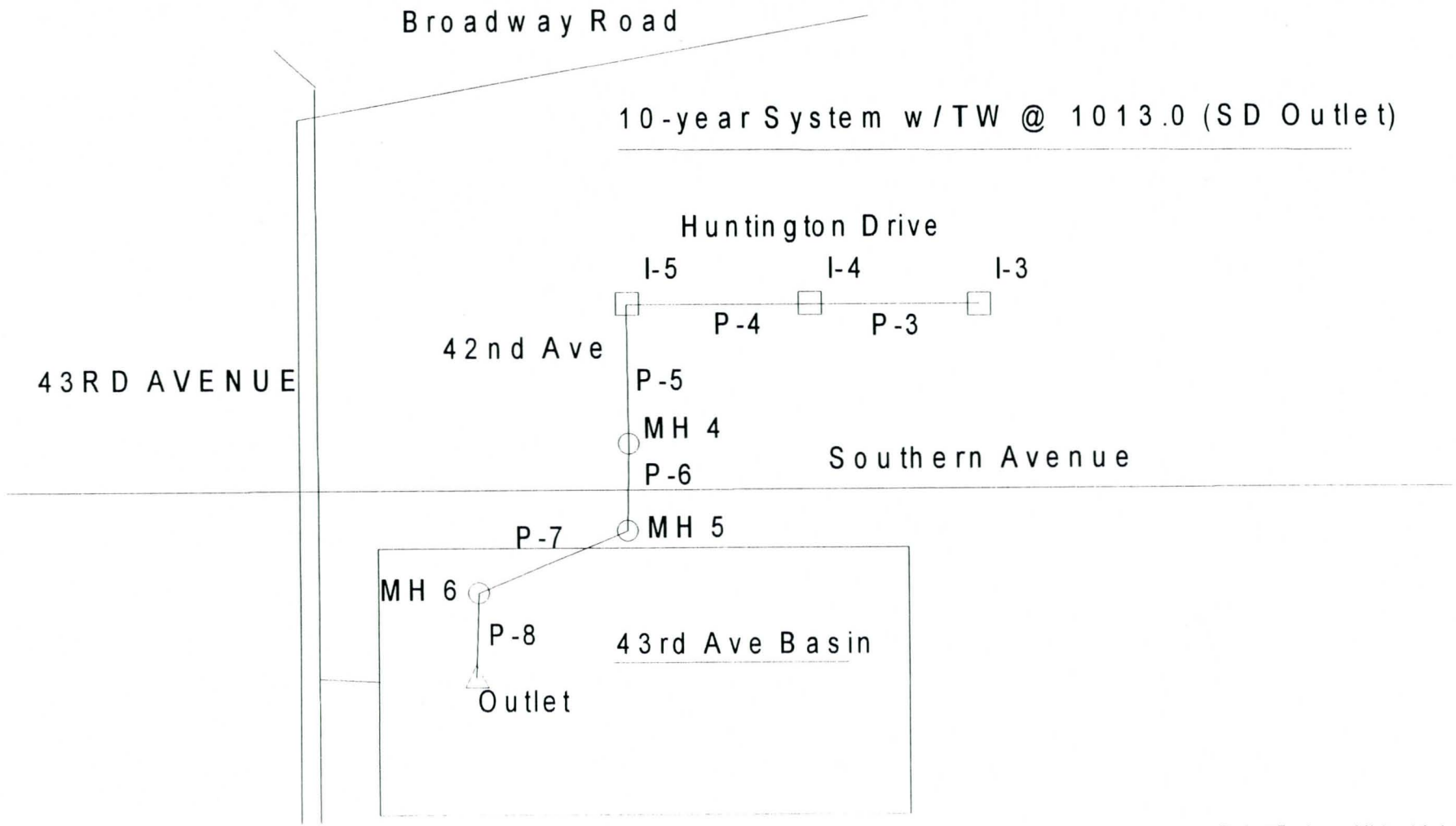

Title: huntingdon SD
s:\eng\43rd ave\hydraulics\hntng10n.stm
05/06/99 09:28:36 AM

Maricopa County Flood Control
© Haestad Methods, Inc. 37 Brookside Road Waterbury, CT 06708 USA (203) 755-1666

Project Engineer: Michael A. Lopez
StormCAD v3.0 [319]
Page 1 of 1

Scenario: Base

Junction Report

Label	Ground Elevation (ft)	Rim Elevation (ft)	Sump Elevation (ft)	Structure Diameter (ft)	Element Type	Headloss Coefficient	Headloss Method	Hydraulic Grade In (ft)	Hydraulic Grade Out (ft)	Calculated Headloss (ft)	Energy Grade In (ft)	Energy Grade Out (ft)
Special str	1,023.00	1,023.00	1,010.40	3	Junction	0.50	Standard	1,018.53	1,018.08	0.45	1,018.53	1,018.97
Bend	1,024.00	1,024.00	1,000.00	3	Junction		AASHTO	1,018.64	1,018.56	0.08	1,018.64	1,018.83
Bend 2	1,026.00	1,026.00	995.00	3	Junction	0.20	Standard	1,018.73	1,018.68	0.05	1,018.73	1,018.94
Bend 3	1,021.00	1,021.00	998.98	3	Junction	0.35	Standard	1,020.49	1,020.40	0.09	1,020.49	1,020.66
Bend 4	1,021.00	1,021.00	1,003.07	3	Junction	0.35	Standard	1,020.59	1,020.49	0.09	1,020.59	1,020.76
Bend 5	1,021.00	1,021.00	993.05	3	Junction	0.35	Standard	1,020.77	1,020.67	0.09	1,020.77	1,020.94
Bend 6	1,022.00	1,022.00	993.02	3	Junction	0.35	Standard	1,020.91	1,020.82	0.09	1,020.91	1,021.08
Bend 7	1,021.50	1,021.50	1,001.20	3	Junction	0.35	Standard	1,021.22	1,021.14	0.08	1,021.22	1,021.36
Transition	1,021.50	1,021.50	1,007.52	3	Junction	0.10	Standard	1,021.50	1,021.50	0.04	1,021.50	1,021.93
Bend 8	1,022.00	1,022.00	1,004.00	3	Junction	0.25	Standard	1,021.61	1,021.55	0.05	1,021.61	1,021.77
Transition	1,024.00	1,024.00	1,008.84	3	Junction	0.30	Standard	1,021.82	1,021.60	0.22	1,021.82	1,022.33
Transition	1,024.00	1,024.00	1,005.90	3	Junction	0.10	Standard	1,021.95	1,021.93	0.02	1,021.95	1,022.14

Scenario: Base

43rd Pipe Report

Label	Total System Flow (cfs)	Average Velocity (ft/s)	Upstream Node	Downstream Node	Section Size	Length (ft)	Hydraulic Grade In (ft)	Upstream Ground Elevation (ft)	Upstream Invert Elevation (ft)	Hydraulic Grade Out (ft)	Downstream Ground Elevation (ft)	Downstream Invert Elevation (ft)
P-3	123.00	5.18	I-3	I-4	66 inch	540.00	1,018.61	1,023.00	1,011.14	1,017.88	1,021.50	1,010.60
P-4	123.00	5.18	I-4	I-5	66 inch	660.00	1,017.63	1,021.50	1,010.60	1,016.75	1,021.00	1,009.80
P-5	123.00	5.18	I-5	MH 4	66 inch	253.00	1,016.41	1,021.00	1,009.80	1,016.07	1,022.00	1,009.06
P-6	123.00	5.18	MH 4	MH 5	66 inch	625.00	1,015.66	1,022.00	1,009.60	1,014.82	1,021.30	1,006.51
P-7	123.00	5.18	MH 5	MH 6	66 inch	95.00	1,014.40	1,021.30	1,006.51	1,014.27	1,021.50	1,006.12
P-8	123.00	5.18	MH 6	Outlet	66 inch	18.00	1,014.02	1,021.50	1,006.12	1,014.00	1,023.10	1,006.00

Scenario: Base

43rd Pipe Report

Label	Total System Flow (cfs)	Average Velocity (ft/s)	Upstream Node	Downstream Node	Section Size	Length (ft)	Hydraulic Grade In (ft)	Upstream Ground Elevation (ft)	Upstream Invert Elevation (ft)	Hydraulic Grade Out (ft)	Downstream Ground Elevation (ft)	Downstream Invert Elevation (ft)
P-1a	294.00	7.46	Special str	Outlet	10 x 5 ft	90.00	1,018.08	1,023.00	1,014.20	1,018.00	1,022.00	1,014.00
P-1b	294.00	4.15	Bend	Special str	114 inch	82.00	1,018.56	1,024.00	1,000.00	1,018.53	1,023.00	1,008.00
P-1c	294.00	4.15	Bend 2	Bend	114 inch	80.00	1,018.68	1,026.00	998.95	1,018.64	1,024.00	1,000.00
P-1d	294.00	4.15	Bend 3	Bend 2	114 inch	4,010.00	1,020.40	1,021.00	1,001.00	1,018.73	1,026.00	998.95
P-1e	294.00	4.15	Bend 4	Bend 3	114 inch	14.00	1,020.49	1,021.00	993.05	1,020.49	1,021.00	1,001.00
P-1f	294.00	4.15	Bend 5	Bend 4	114 inch	206.00	1,020.67	1,021.00	993.02	1,020.59	1,021.00	993.05
P-1g	294.00	4.15	Bend 6	Bend 5	114 inch	120.00	1,020.82	1,022.00	999.90	1,020.77	1,021.00	993.02
P-1h	294.00	4.15	BASIN	Bend 6	114 inch	370.00	1,021.06	1,021.00	1,000.50	1,020.91	1,022.00	999.90
P-1I	264.00	3.72	Bend 7	BASIN	114 inch	430.00	1,021.14	1,021.50	1,001.20	1,021.00	1,021.00	1,000.50
P-2a	264.00	3.72	Bend 8	Bend 7	114 inch	1,000.00	1,021.55	1,022.00	1,004.00	1,021.22	1,021.50	1,001.20
P-2b	264.00	3.72	Transition 1	Bend 8	114 inch	950.00	1,021.93	1,024.00	1,005.90	1,021.61	1,022.00	1,004.00
P-2c	264.00	5.25	Transition 2	Transition 1	96 inch	60.00	1,022.00	1,021.50	1,007.52	1,021.95	1,024.00	1,007.42
P-2d	264.00	6.86	Transition 3	Transition 2	84 inch	60.00	1,021.60	1,024.00	1,008.64	1,021.50	1,021.50	1,008.54
P-2e	264.00	9.34	I-9	Transition 3	72 inch	930.00	1,025.44	1,027.00	1,011.28	1,021.82	1,024.00	1,009.66

Scenario: Base

43rd Ave Mainline

Label	Upstream Node	Downstream Node	Total System Flow (cfs)	Length (ft)	Average Velocity (ft/s)	Constructed Slope (ft/ft)	Energy Slope (ft/ft)	Section Size	Section Shape	Mannings n	Calculated Headloss (ft)	Velocity Head In (ft)	Depth In (ft)	Velocity Head Out (ft)	Depth Out (ft)	Upstream Invert Elevation (ft)	Downstream Invert Elevation (ft)	Upstream Ground Elevation (ft)	Downstream Ground Elevation (ft)	Upstream Cover (ft)	Downstream Cover (ft)	Hydraulic Grade In (ft)	Hydraulic Grade Out (ft)
P-1a	Special str	Outlet	294	90	7.46	0.0022	0.0015	10 x 5 ft	Box	0.013	0.08	0.89	3.88	0.84	4.00	1,014.20	1,014.00	1,023.00	1,022.00	3.80	3.00	1,018.08	1,018.00
P-1b	Bend	Special str	294	82	4.15	-0.0976	0.0004	114 inch	Circular	0.013	0.03	0.27	18.56	0.27	10.53	1,000.00	1,008.00	1,024.00	1,023.00	14.50	5.50	1,018.56	1,018.53
P-1c	Bend 2	Bend	294	80	4.15	-0.0131	0.0004	114 inch	Circular	0.013	0.03	0.27	19.73	0.27	18.64	998.95	1,000.00	1,026.00	1,024.00	17.55	14.50	1,018.68	1,018.64
P-1d	Bend 3	Bend 2	294	4,010	4.15	0.0005	0.0004	114 inch	Circular	0.013	1.67	0.27	19.40	0.27	19.78	1,001.00	998.95	1,021.00	1,026.00	10.50	17.55	1,020.40	1,018.73
P-1e	Bend 4	Bend 3	294	14	4.15	-0.5679	0.0004	114 inch	Circular	0.013	0.01	0.27	27.44	0.27	19.49	993.05	1,001.00	1,021.00	1,021.00	18.45	10.50	1,020.49	1,020.49
P-1f	Bend 5	Bend 4	294	206	4.15	-0.0001	0.0004	114 inch	Circular	0.013	0.09	0.27	27.65	0.27	27.54	993.02	993.05	1,021.00	1,021.00	18.48	18.45	1,020.67	1,020.59
P-1g	Bend 6	Bend 5	294	120	4.15	0.0573	0.0004	114 inch	Circular	0.013	0.05	0.27	20.92	0.27	27.75	999.90	993.02	1,022.00	1,021.00	12.60	18.48	1,020.82	1,020.77
P-1h	BASIN	Bend 6	294	370	4.15	0.0016	0.0004	114 inch	Circular	0.013	0.15	0.27	20.56	0.27	21.01	1,000.50	999.90	1,021.00	1,022.00	11.00	12.60	1,021.06	1,020.91
P-1I	Bend 7	BASIN	264	430	3.72	0.0016	0.0003	114 inch	Circular	0.013	0.14	0.22	19.94	0.22	20.50	1,001.20	1,000.50	1,021.50	1,021.00	10.80	11.00	1,021.14	1,021.00
P-2a	Bend 8	Bend 7	264	1,000	3.72	0.0028	0.0003	114 inch	Circular	0.013	0.34	0.22	17.55	0.22	20.02	1,004.00	1,001.20	1,022.00	1,021.50	8.50	10.80	1,021.55	1,021.22
P-2b	Transition 1	Bend 8	264	950	3.72	0.0020	0.0003	114 inch	Circular	0.013	0.32	0.22	16.03	0.22	17.61	1,005.90	1,004.00	1,024.00	1,022.00	8.60	8.50	1,021.93	1,021.61
P-2c	Transition 2	Transition 1	264	60	5.25	0.0017	0.0008	96 inch	Circular	0.013	0.05	0.43	14.48	0.43	14.53	1,007.52	1,007.42	1,021.50	1,024.00	5.98	8.58	1,022.00	1,021.95
P-2d	Transition 3	Transition 2	264	60	6.86	0.0017	0.0017	84 inch	Circular	0.013	0.10	0.73	12.96	0.73	12.96	1,008.64	1,008.54	1,024.00	1,021.50	8.36	5.96	1,021.60	1,021.50
P-2e	I-9	Transition 3	264	930	9.34	0.0017	0.0039	72 inch	Circular	0.013	3.61	1.35	14.16	1.35	12.16	1,011.28	1,009.66	1,027.00	1,024.00	9.72	8.34	1,025.44	1,021.82

© Haestad Methods, Inc. 37 Brookside Road Waterbury, CT 06708 USA (203) 755-1666

Scenario: Base

Huntington Final Report

Label	Upstream Node	Downstream Node	Total System Flow (cfs)	Length (ft)	Average Velocity (ft/s)	Constructed Slope (ft/ft)	Energy Slope (ft/ft)	Section Size	Section Shape	Mannings n	Calculated Headloss (ft)	Velocity Head In (ft)	Depth In (ft)	Velocity Head Out (ft)	Depth Out (ft)	Upstream Invert Elevation (ft)	Downstream Invert Elevation (ft)	Upstream Ground Elevation (ft)	Downstream Ground Elevation (ft)	Upstream Cover (ft)	Downstream Cover (ft)	Hydraulic Grade In (ft)	Hydraulic Grade Out (ft)
P-3	I-3	I-4	123.00	540.00	5.18	0.001000	0.001342	66 inch	Circular	0.013	0.72	0.42	11.08	0.42	10.89	1,011.14	1,010.60	1,023.00	1,021.50	6.36	5.40	1,022.22	1,021.49
P-4	I-4	I-5	123.00	660.00	5.18	0.001212	0.001342	66 inch	Circular	0.013	0.89	0.42	10.64	0.42	10.56	1,010.60	1,009.80	1,021.50	1,021.00	5.40	5.70	1,021.24	1,020.36
P-5	I-5	MH 4	123.00	198.00	5.18	0.003737	0.001342	66 inch	Circular	0.013	0.27	0.42	10.23	0.42	10.70	1,009.80	1,009.06	1,021.00	1,022.60	5.70	8.04	1,020.03	1,019.76
P-6	MH 4	MH 5	123.00	120.00	12.53	0.001000	0.022484	30 inch	Circular	0.013	2.70	2.44	15.38	2.44	12.80	1,001.94	1,001.82	1,022.60	1,021.00	18.16	16.68	1,017.32	1,014.62
P-7	MH 5	MH 6	123.00	623.00	5.18	0.000835	0.001342	66 inch	Circular	0.013	0.84	0.42	12.39	0.42	12.07	1,001.82	1,001.30	1,021.00	1,021.00	13.68	14.20	1,014.21	1,013.37
P-8	MH 6	Outlet	123.00	90.00	5.18	0.001111	0.001342	66 inch	Circular	0.013	0.12	0.42	11.82	0.42	11.80	1,001.30	1,001.20	1,021.00	1,023.10	14.20	16.40	1,013.12	1,013.00

Scenario: Base

Huntington Interim Report

Label	Upstream Node	Downstream Node	Total System Flow (cfs)	Length (ft)	Average Velocity (ft/s)	Constructed Slope (ft/ft)	Energy Slope (ft/ft)	Section Size	Section Shape	Mannings n	Calculated Headloss (ft)	Velocity Head In (ft)	Depth In (ft)	Velocity Head Out (ft)	Depth Out (ft)	Upstream Invert Elevation (ft)	Downstream Invert Elevation (ft)	Upstream Ground Elevation (ft)	Downstream Ground Elevation (ft)	Upstream Cover (ft)	Downstream Cover (ft)	Hydraulic Grade In (ft)
P-3	I-3	I-4	123.00	540.00	5.18	0.001000	0.001342	66 inch	Circular	0.013	0.72	0.42	7.47	0.42	7.28	1,011.14	1,010.60	1,023.00	1,021.50	6.36	5.40	1,018.61
P-4	I-4	I-5	123.00	660.00	5.18	0.001212	0.001342	66 inch	Circular	0.013	0.89	0.42	7.03	0.42	6.95	1,010.60	1,009.80	1,021.50	1,021.00	5.40	5.70	1,017.63
P-5	I-5	MH 4	123.00	253.00	5.18	0.002925	0.001342	66 inch	Circular	0.013	0.34	0.42	6.61	0.42	7.01	1,009.80	1,009.06	1,021.00	1,022.00	5.70	7.44	1,016.41
P-6	MH 4	MH 5	123.00	625.00	5.18	0.004944	0.001342	66 inch	Circular	0.013	0.84	0.42	6.06	0.42	8.31	1,009.60	1,006.51	1,022.00	1,021.30	6.90	9.29	1,015.66
P-7	MH 5	MH 6	123.00	95.00	5.18	0.004105	0.001342	66 inch	Circular	0.013	0.13	0.42	7.89	0.42	8.15	1,006.51	1,006.12	1,021.30	1,021.50	9.29	9.88	1,014.40
P-8	MH 6	Outlet	123.00	18.00	5.18	0.006667	0.001342	66 inch	Circular	0.013	0.02	0.42	7.90	0.42	8.00	1,006.12	1,006.00	1,021.50	1,023.10	9.88	11.60	1,014.02

Profile
Scenario: Base

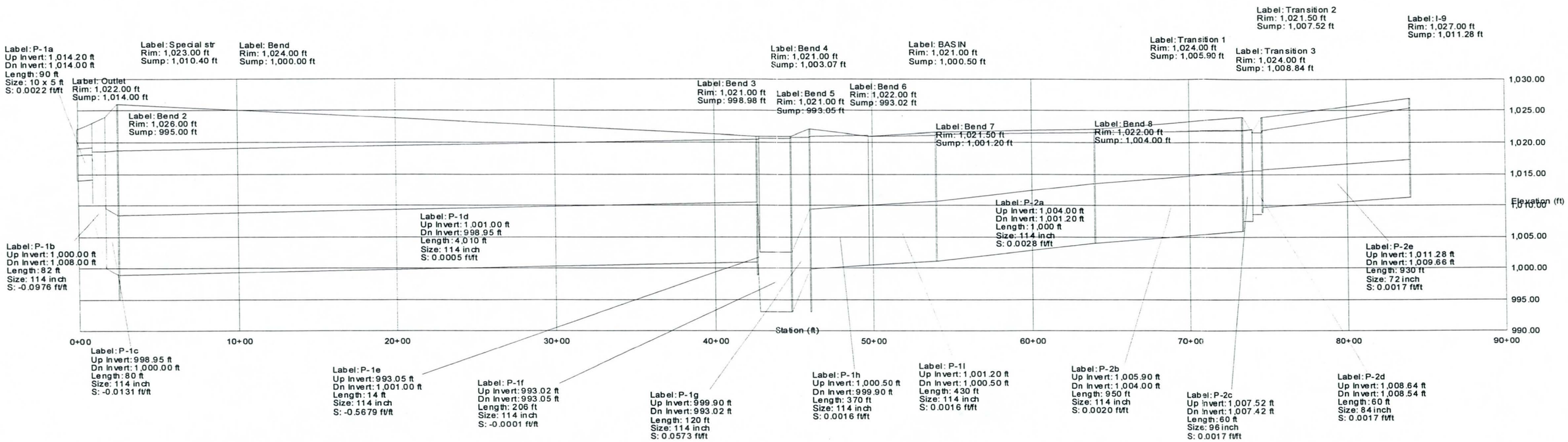

HEC-1 SUBAREA BOUNDARY MAP

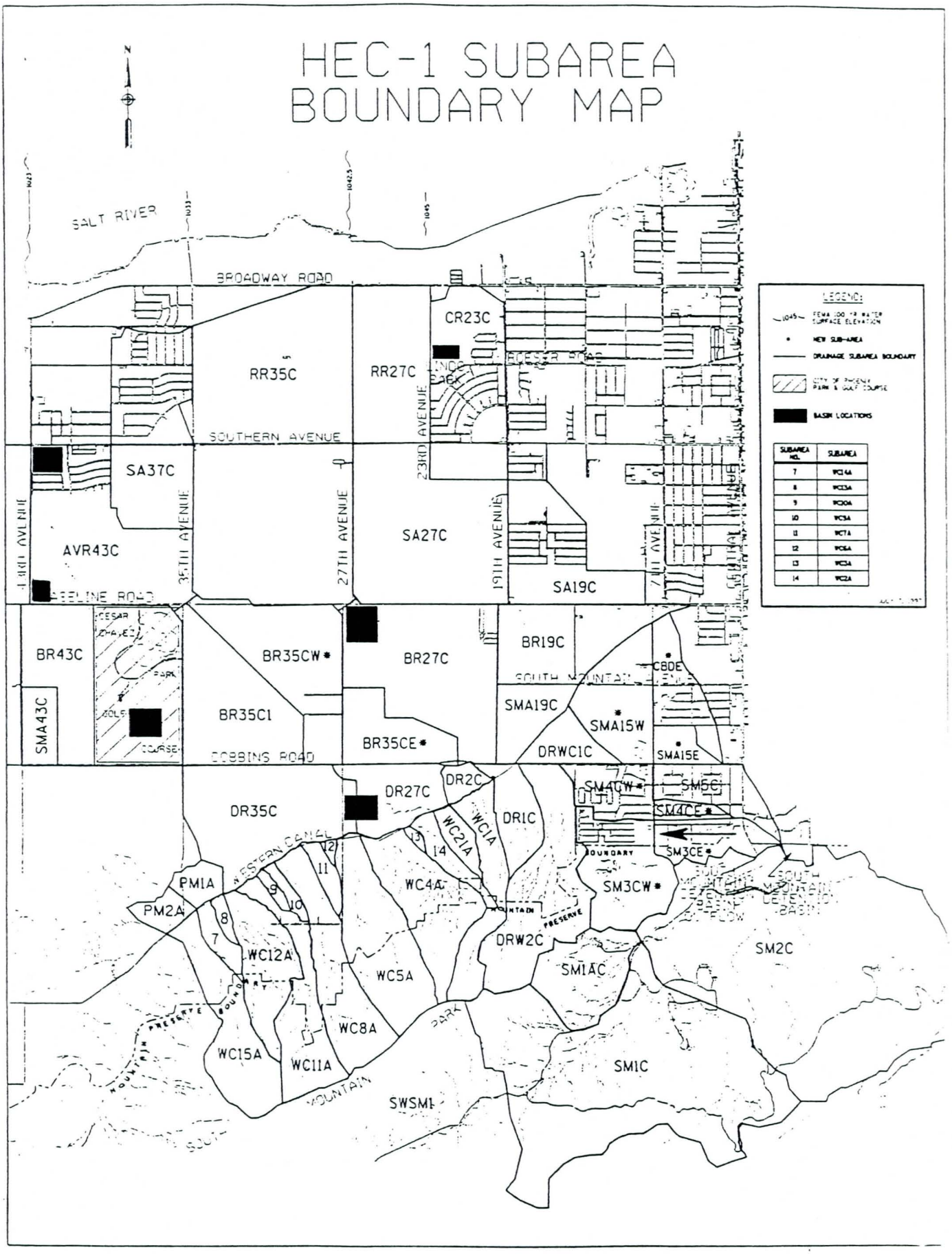

```
*************************************
*                                   *
*   FLOOD HYDROGRAPH PACKAGE (HEC-1)*
*             JUL  1997             *
*           VERSION 4.1             *
*                                   *
*  RUN DATE  26MAY98  TIME  10:25:22*
*                                   *
*************************************
```

```
*********************************
*                               *
*   U.S. ARMY CORPS OF ENGINEERS*
*   HYDROLOGIC ENGINEERING CENTER*
*         609 SECOND STREET     *
*      DAVIS, CALIFORNIA 95616  *
*          (916) 756-1104       *
*                               *
*********************************
```

```
X     X  XXXXXXX   XXXXX          X
X     X  X        X     X        XX
X     X  X        X               X
XXXXXXX  XXXX     X        XXXXX  X
X     X  X        X               X
X     X  X        X     X         X
X     X  XXXXXXX   XXXXX         XXX
```

THIS PROGRAM REPLACES ALL PREVIOUS VERSIONS OF HEC-1 KNOWN AS HEC1 (JAN 73), HEC1GS, HEC1DB, AND HEC1KW.

THE DEFINITIONS OF VARIABLES -RTIMP- AND -RTIOR- HAVE CHANGED FROM THOSE USED WITH THE 1973-STYLE INPUT STRUCTURE.
THE DEFINITION OF -AMSKK- ON RM-CARD WAS CHANGED WITH REVISIONS DATED 28 SEP 81. THIS IS THE FORTRAN77 VERSION
NEW OPTIONS: DAMBREAK OUTFLOW SUBMERGENCE , SINGLE EVENT DAMAGE CALCULATION, DSS:WRITE STAGE FREQUENCY,
DSS:READ TIME SERIES AT DESIRED CALCULATION INTERVAL LOSS RATE:GREEN AND AMPT INFILTRATION
KINEMATIC WAVE: NEW FINITE DIFFERENCE ALGORITHM

```
1                                          HEC-1 INPUT                                                    PAGE  1

  LINE          ID.......1.......2.......3.......4.......5.......6.......7.......8.......9......10

    1           ID    LAVEEN ADMP INVESTIGATION BY HDR ENGINEERING
    2           ID    MODIFICATIONS IN MAY 1998 BY FCD
    3           ID    LAVEEN ADMS (FINAL HEC-1) 100-,25-,10-YR FUTURE 24-HR STORM         CBA FILE
    4           ID    HIDDEN VALLEY WATERSHED/CHAMPION DRAIN WATERSHED
    5           ID    INPUT FILE NAME  43FutP2M.DAT
    6           ID    3 BASIN ALTERNATIVE, FUTURE   DEVELOPMENT
    7           ID    BASIN AT NW COR 43RD AVE & BASELINE RD
    8           ID    24-HOUR SCS TYPE II RAINFALL - 100, 25, 10-yr frequency
                *DIAGRAM
    9           IT       5                    1000
   10           IO       5
                *
   11           JR    PREC   .6296   .7857    1.00

   12           KK    SM1C
   13           KM   SUB-BASIN SM1C-LAND USE- NATURAL DESERT(MOUNTAIN)
   14           KM   24-HOUR TYPE II RAINFALL WAS USED TO FIND TC & R FOR THIS BASIN
   15           KM   THIS BASIN USED RAINFALL REDUCTION FACTOR OF .90
   16           IN      30
   17           BA   1.840
   18           PB    3.78
   19           KM   RAINFALL DEPTH OF 4.20 WAS SPACIALLY REDUCED AS SHOWN BY THE PB RECORD
   20           PC    .000    .005    .011    .016    .022    .028    .035    .041    .048    .056
   21           PC    .068    .071    .080    .089    .098    .109    .120    .133    .147    .163
   22           PC    .181    .204    .235    .283    .663    .735    .772    .799    .820    .838
   23           PC    .854    .868    .880    .891    .902    .912    .921    .929    .937    .945
   24           PC    .952    .959    .965    .972    .978    .984    .989    .995   1.000
   25           KM   THE FOLLOWING PC RECORD USED A 24-HOUR SCS TYPE II STORM
   26           LG    .150    .346   3.800    .623  50.000
   27           UC    .450    .220
   28           UA       0       3       5       8      12      20      43      75      90      96
   29           UA     100
                *

   30           KK   SM1AC
   31           KM   SUB-BASIN SM1AC-LAND USE- NATURAL DESERT(MOUNTAIN)
   32           KM   24-HOUR TYPE II RAINFALL WAS USED TO FIND TC & R FOR THIS BASIN
   33           KM   THIS BASIN USED RAINFALL REDUCTION FACTOR OF .90
   34           BA    .280
   35           LG    .150    .343   4.050    .528  10.000
   36           UC    .367    .288
   37           UA       0       3       5       8      12      20      43      75      90      96
   38           UA     100
                *

   39           KK    CSM1
   40           KM   COMBINE FLOW FROM SUB-BASIN SM1C WITH SM1AC AT COMPUTATOIN
   41           KM   POINT CSM1
   42           HC       2
                *
1                                          HEC-1 INPUT                                                    PAGE  2

  LINE          ID.......1.......2.......3.......4.......5.......6.......7.......8.......9......10

   43           KK    RSM1
   44           KM   ROUTE FLOW FROM COMPUTATION POINT CSM1  TO COMPUTATION POINT CSM2
```

```
 45          RS       2    ELEV  1375.5
 46          RC   0.035   0.035   0.035    4300   0.017
 47          RX       0      90     160     230     310     380     490     590
 48          RY    1390    1380    1377  1375.5    1377    1380    1383    1390
             *

 49          KK    SM2C
 50          KM   SUB-BASIN SM2C-LAND USE- NATURAL DESERT(MOUNTAIN)
 51          KM   24-HOUR TYPE II RAINFALL WAS USED TO FIND TC & R FOR THIS BASIN
 52          KM   THIS BASIN USED RAINFALL REDUCTION FACTOR OF .90
             *      1       2
 53          BA   2.190
 54          LG    .150    .350   3.310    .820  86.000
 55          UC    .383    .134
 56          UA       0       3       5       8      12      20      43      75      90      96
 57          UA     100
             *

 58          KK    CSM2
 59          KM   COMBINE RUNOFF FROM SUB-BASIN SM2C TO ROUTED FLOW FROM COMPUTATION
 60          KM   POINT CSM1
 61          HC       2
             *

 62          KK   RDENT
 63          KM   ROUTE INFLOW HYDROGRAPH THROUGH SOUTH MOUNTAIN DETENTION BASIN
 64          RS       1    ELEV    1292
 65          SA    2.30    7.80   15.91   19.96   24.08   28.27   30.45   31.91
 66          SE    1292    1294    1300    1305    1310    1315    1318    1320
 67          SL    1298    7.06    0.58     0.5
 68          SS    1318     200     2.7     1.5
             *

 69          KK    RSM2
 70          KM   ROUTE FLOW FROM COMPUTATOIN POINT CSM2 TO COMPUTATOIN POINT CSM3
 71          RS      12    ELEV    1226
 72          RC   0.040   0.040   0.040    6600   0.019    1228
 73          RX       0      70     100     140     160     190     240     320
 74          RY    1228  1227.5    1227    1226    1228  1228.5    1229    1230
             *
             *  REVISIONS DUE TO PROPOSED IMPROVEMENTS.

 75          KK   SM3CE
 76          KM   24-HOUR SCS TYPE II RAINFALL WAS USED TO FIND TC & R FOR THIS BASIN
 77          BA     .17
 78          LG     .16    .348    3.85    .607     1.5
 79          UC   0.227   0.158
 80          UA       0       3       5       8      12      20      43      75      90      96
 81          UA     100
             *
```



```
LINE         ID.......1.......2.......3.......4.......5.......6.......7.......8.......9......10

 82          KK    C3CE
 83          KM   COMBINE HYDROGRAPHS
 84          HC       2
             *

 85          KK  RSM3CE
 86          KM   ROUTE RUNOFF FROM SM3CE TO 7th AVE & DOBBINS
 87          RD    1980  0.0066   0.014            CIRC     4.5
             *

 88          KK   SM4CE
 89          KM   24-HOUR SCS TYPE II RAINFALL WAS USED TO FIND TC & R FOR THIS BASIN
 90          BA     .05
 91          LG    0.26    0.35     4.6    .592    14.4
 92          UC   0.087   0.081
 93          UA       0       5      16      30      65      77      84      90      94      97
 94          UA     100
             *

 95          KK    SM5C
 96          KM   SUB-BASIN SM5C-LAND USE-URBAN
 97          KM   24-HOUR TYPE II RAINFALL WAS USED TO FIND TC & R FOR THIS BASIN
 98          KM   THIS BASIN USED RAINFALL REDUCTION FACTOR OF .90
 99          BA    .200
100          LG    .200    .349   4.300    .555  18.000
101          UC    .383    .355
102          UA       0       5      16      30      65      77      84      90      94      97
103          UA     100
             *

104          KK   CSM5C
105          KM   COMBINE HYDROGRAPHS FROM SM3CE, SM4CE, & SM5C
106          HC       3
             *

107          KK  DIVM5C
108          KM        Divert flow in excess of 250 cfs - Storm Drain Capacity
109          DT  DCSM5C
110          DI       0     250     500
111          DQ       0       0     250
```

```
                 *
                 * FLOW FROM SM5C ROUTED THROUGH PIPE NORTH ALONG 7th AVE.

 112             KK  RCSM5C
 113             KM   ROUTE FLOW THROUGH PIPE TO BOTTOM OF SMA15E
 114             RD    1200   .0066    .014            CIRC       6
                 *

 115             KK  SMA15E
 116             KM   24-HOUR TYPE II RAINFALL WAS USED TO FIND TC & R FOR THIS BASIN
 117             BA     .07
 118             LG      .3     .25    4.35     0.4        5
 119             UC    .081   0.057
 120             UA       0       3       9      18      28      42      59      73      87      92
1                                                HEC-1 INPUT                                                    PAGE  4

LINE             ID.......1.......2.......3.......4.......5.......6.......7.......8.......9......10

 121             UA     100
                 *

 122             KK    C15E
 123             KM   COMBINE HYDROGRAPHS FROM SMA15E & RCSM5C
 124             HC       2
                 *

 125             KK  DIV15E
 126             KM        Divert flow in excess of 270 cfs  - Storm Drain Capacity
 127             DT   DC15E
 128             DI       0     270     540
 129             DQ       0       0     270
                 *
                 * SMA15C SPLIT INTO SMA15E & SMA15W DUE TO PROPOSED IMPROVEMENTS

 130             KK   RC15E
 131             KM   ROUTE HYDROGRAPH FROM C15E TO BOTTOM OF CBDE
 132             RD    4710   .0055    .014            CIRC       7
                 *

 133             KK    CBDE
 134             KM   BASIN EAST OF CENTRAL 7th AVE FROM BASELINE TO NORTH OF DOBBINS
 135             BA    0.17
 136             LG     .35     .25     4.3     .33        9
 137             UC     .65     .65
 138             UA       0       3       9      18      28      42      59      73      87      92
 139             UA     100
                 *

 140             KK   CCBDE
 141             KM   COMBINE HYDROGRAPHS
 142             HC       2
                 *

 143             KK  DIVbde
 144             KM        Divert flow in excerss of 300 cfs - Storm Drain Capacity
 145             DT  DCCBDE
 146             DI       0     300     900
 147             DQ       0       0     600
                 *

 148             KK  RCCBDE
 149             KM   ROUTE HYDROGRAPH THROUGH PIPE TO BOTTOM OF BR19C
 150             RD    5750   .0032    .014            CIRC       8
                 *

 151             KK  RETCBD
 152             KM        Retrieve Diverted Hydrograph DCCBDE
 153             DR  DCCBDE
                 *
1                                                HEC-1 INPUT                                                    PAGE  5

LINE             ID.......1.......2.......3.......4.......5.......6.......7.......8.......9......10

 154             KK   RCDIV
 155             KM        Route combined divertee hydrographs to BR19C
 156             RD    5200   0.008   0.030            TRAP    10.0    20.0
                 *

 157             KK   BR19C
 158             KM   SUB-BASIN BR19C-LAND USE - 180 SCRES OF FUTURE DEVELOPMENT
 159             KM   24-HOUR TYPE II RAINFALL WAS USED TO FIND TC & R FOR THIS BASIN
 160             KM   THIS BASIN USED RAINFALL REDUCTION FACTOR OF .90
 161             BA    .390
 162             LG      .3     .25     4.4     .39        5
 163             UC      .5      .3
 164             UA       0       5      16      30      65      77      84      90      94      97
 165             UA     100
                 *

 166             KK  RETAIN
 167             KM   RETAIN 100-YR 2-HR VOLUME FROM BASIN BR19C
 168             DT  RETAIN      20
 169             DI       0     500    3000
 170             DQ       0     500    3000
```

```
                 *
171              KK  CBR19C
172              KM   COMBINE HYDROGRAPHS FROM BR19C & ROUTED FLOW
173              HC       3
                 *
174              KK  RBR19C
175              KM   ROUTE HYDROGRAPH THROUGH PIPE TO DETENTION BASIN @ 27th & BASELINE
176              KM   USE DIVERT ROUTINE TO PASS 156 CFS TO CPB27C
177              RD    4800   .0032    .014            CIRC      10
                 *
178              KK  DIV19C
179              KM   DIVERT 156 CFS TO CPB27C
180              DT   D1927              156
181              DI       0     156    5000
182              DQ       0     156     156
                 *
183              KK  RETM5C
184              KM        Retrieve Diverted Hydrgraph DCSM5C
185              DR  DCSM5C
                 *
186              KK  RET15E
187              KM        Retrieve Diverted Hydrgraph DC15E
188              DR   DC15E
                 *
1                                          HEC-1 INPUT                                                    PAGE  6

LINE             ID.......1.......2.......3.......4.......5.......6.......7.......8.......9......10

189              KK  COMDIV
190              KM        Combine diverted hydrographs north of Dobbins and 7th Ave.
191              HC       2
                 *
192              KK   RCDIV
193              KM        Route combined diverted hydrographs to SMA15W
194              RD    3600   0.015   0.030            TRAP    10.0    20.0
                 *
195              KK  SMA15W
196              KM   24-HOUR TYPE II RAINFALL WAS USED TO FIND TC & R FOR THIS BASIN
197              BA    0.29
198              LG      .3      .25    4.65      .33        5
199              UC     .31      .15
200              UA       0        5      16       30       65       77       84       90       94       97
201              UA     100
                 *
202              KK  RETAIN
203              KM   RETAIN 100-YR 2-HR VOLUME FROM BASIN SMA15W
204              DT  RETAIN        6
205              DI       0     500    3000
206              DQ       0     500    3000
                 *
207              KK  CSMA15W
208              KM        Combine flows at SMA15W
209              HC       2
                 *
210              KK  RSM19C
211              KM   ROUTE FLOW FROM SUB-BASIN SA15C TO COMPUTATION POINT CPS19C
212              RS       4    ELEV  1139.2
213              RC   0.070   0.070   0.070    2030    0.01  1140.5
214              RX      50     150     210     260     310     360     450     580
215              RY  1140.5  1139.5  1139.2  1139.2  1139.2  1139.2  1139.5  1140.5
                 *
216              KK  SMA19C
217              KM   SUB-BASIN SMA19C-LAND USE - ENTIRE BASIN FULLEY DEVELOPED
218              KM   24-HOUR TYPE II RAINFALL WAS USED TO FIND TC & R FOR THIS BASIN
219              KM   THIS BASIN USED RAINFALL REDUCTION FACTOR OF .90
220              BA    .156
221              LG      .3      .25    4.15      .45        5
222              UC     .83     1.21
223              UA       0        5      16       30       65       77       84       90       94       97
224              UA     100
                 *
1                                          HEC-1 INPUT                                                    PAGE  7

LINE             ID.......1.......2.......3.......4.......5.......6.......7.......8.......9......10

225              KK  RETAIN
226              KM   RETAIN 100-YR 2-HR VOLUME FROM BASIN SMA19C
227              DT  RETAIN        7
228              DI       0     500    3000
229              DQ       0     500    3000
                 *
```

```
230          KK  CPS19C
231          KM   COMBINE ROUTED FLOW FROM SUB-BASIN SMA15C TO RUNOFF FROM SUB-BASIN SMA19C
232          HC       2
             *

233          KK  RRB27C
234          KM   ROUTE FLOW FROM COMPUTATION POINT CPS19C TO COMPUTATION POINT CPB27C
235          RS      22     ELEV  1107.8
236          RC   0.070   0.070   0.070    7400  0.0090    1110
237          RX       0     260     550     770     920    1170    1320    1500
238          RY    1110    1109    1109    1108    1108  1107.8    1108    1110
             *
             * SM3C SPLIT INTO SM3CE & SM3CW DUE TO PROPOSED IMPROVEMENTS

239          KK   SM3CW
240          BA     .31
241          LG     .16   0.348    3.85   0.607     1.5
242          UC   0.415   0.289
243          UA       0       3       5       8      12      20      43      75      90      96
244          UA     100
             *

245          KK    RSM3
246          KM   ROUTE FLOW FROM COMPUTATION POINT CSM3 TO COMPUTATION POINT CSM4
247          RS       4     ELEV    1176
248          RC   0.040   0.040   0.040    3000  0.0095
249          RX       0     120     190     270     330     400     470     530
250          RY    1178  1177.5    1177    1176    1176    1177  1177.5    1178
             *
             * SM4C SPLIT INTO SM4CE & SM4CW DUE TO PROPOSED IMPROVEMENTS

251          KK   SM4CW
252          KM   24-HOUR TYPE II RAINFALL WAS USED TO FIND TC & R FOR THIS BASIN
253          BA     .19
254          LG     .26     .35    3.85   0.592    14.4
255          UC     .33    .306
256          UA       0       5      16      30      65      77      84      90      94      97
257          UA     100
             *

258          KK    RSM4
259          KM   ROUTE FLOW FROM SUB-BASIN SM4C TO COMPUTATION POINT CSM4
260          RS       2     ELEV    1168
261          RC   0.035   0.035   0.035    1200   0.012
262          RX       0      50      80     110     130     160     180     200
263          RY    1170  1169.5    1169  1168.5    1168  1168.5    1169    1170
             *
```



```
LINE         ID.......1.......2.......3.......4.......5.......6.......7.......8.......9......10

264          KK   DRW2C
265          KM   SUB-BASIN DRW2C-LAND USE- NATURAL DESERT(HILLSLOPE,MOUNTAIN)
266          KM   24-HOUR TYPE II RAINFALL WAS USED TO FIND TC & R FOR THIS BASIN
267          KM   THIS BASIN USED RAINFALL REDUCTION FACTOR OF .90
268          BA    .530
269          LG    .150    .340   3.250    .859  30.000
270          UC    .517    .377
271          UA       0       3       5       8      12      20      43      75      90      96
272          UA     100
             *

273          KK  DRWC1C
274          KM   SUB-BASIN DRWC1C-LAND USE-ENTIRE BASIN FULLY DEVELOPED
275          KM   24-HOUR TYPE II RAINFALL WAS USED TO FIND TC & R FOR THIS BASIN
276          KM   THIS BASIN USED RAINFALL REDUCTION FACTOR OF .90
277          BA   .120
278          LG      .3     .25       4     .48       0
279          UC      .6     .73
280          UA       0       5      16      30      65      77      84      90      94      97
281          UA     100
             *

282          KK  RETAIN
283          KM   RETAIN 100-YR 2-HR VOLUME FROM BASIN DRWC1C
284          DT  RETAIN     4.5
285          DI       0     500    3000
286          DQ       0     500    3000
             *

287          KK    CSM4
288          KM   COMBINE RUNOFF FROM SUB-BASINS DRW2C AND DRWC1C WITH ROUTED FLOW FROM SM4C
289          KM   AND COMPUTATION POINT CSM3
290          HC       4
             *

291          KK    RSM5
292          KM   ROUTE FLOW FROM COMPUTATION POINT CSM4 TO COMPUTATION POINT CSM5
293          RS       1     ELEV    1156
294          RC   0.045   0.045   0.045    1800  0.0078
295          RX       0      80     130     160     180     190     220     260
296          RY    1160    1159  1158.5    1158    1156    1156    1158    1160
             *
```

```
 297          KK    DR1C
 298          KM   SUB-BASIN DR1C-LAND USE-NATURAL DESERT(HILLSLOPE)
 299          KM   24-HOUR TYPE II RAINFALL WAS USED TO FIND TC & R FOR THIS BASIN
 300          KM   THIS BASIN USED RAINFALL REDUCTION FACTOR OF .90
 301          BA    .160
 302          LG    .150    .265   5.300    .198    .000
 303          UC    .417    .442
 304          UA       0       3       5       8      12      20      43      75      90      96
 305          UA     100
              *
1                                          HEC-1 INPUT                                          PAGE  9

LINE          ID.......1.......2.......3.......4.......5.......6.......7.......8.......9......10


 306          KK    WC1A
 307          KM   SUB-BASIN WC1A-LAND USE- NATURAL DESERT(HILLSLOPE)
 308          KM   24-HOUR TYPE II RAINFALL WAS USED TO FIND TC & R FOR THIS BASIN
 309          KM   THIS BASIN USED RAINFALL REDUCTION FACTOR OF .90
 310          BA    .250
 311          LG    .150    .264   4.680    .217    40.0
 312          UC    .400    .404
 313          UA       0       3       5       8      12      20      43      75      90      96
 314          UA     100
              *

 315          KK    RSM6
 316          KM   ROUTE FLOW FROM SUB-BASIN WC1A TO COMPUTATION POINT CPDR2C
 317          RS       1    ELEV    1146
 318          RC   0.045   0.045   0.045    1150   0.012    1150
 319          RX       0      30      50      70      90     110     130     170
 320          RY    1152    1151    1150    1148    1146    1146    1148    1150
              *

 321          KK    DR2C
 322          KM   SUB-BASIN DR2C-LAND USE- NATURAL DESERT(HILLSLOPE),AGRICULTURAL
 323          KM   24-HOUR TYPE II RAINFALL WAS USED TO FIND TC & R FOR THIS BASIN
 324          KM   THIS BASIN USED RAINFALL REDUCTION FACTOR OF .90
 325          BA    .050
 326          LG    .150    .325   4.255    .423    .000
 327          UC    .350    .318
 328          UA       0       3       5       8      12      20      43      75      90      96
 329          UA     100
              *

 330          KK  CPDR2C
 331          KM   COMBINE FLOW FROM SUB-BASINS DR2C AND DR1C TO ROUTED FLOW FROM SUB-BASIN WC1A
 332          KM   AND COMPUTATION POINT CSM4
 333          HC       4
              *

 334          KK  RRB27C
 335          KM   ROUTE FLOW FROM COMPUTATION POINT CPDR2C TO COMPUTATION POINT CPB27C
 336          RS      15    ELEV  1107.8
 337          RC   0.070   0.070   0.070    7400   0.009    1110
 338          RX       0     260     550     770     920    1170    1320    1500
 339          RY    1110    1109    1109    1108    1108  1107.8    1108    1110
              *

 340          KK   BR27C
 341          KM   SUB-BASIN BR27C-LAND USE - ENTIRE BASIN FULLY DEVELOPED
 342          KM   24-HOUR TYPE II RAINFALL WAS USED TO FIND TC & R FOR THIS BASIN
 343          KM   THIS BASIN USED RAINFALL REDUCTION FACTOR OF .90
 344          BA    .780
 345          LG      .3     .25     4.1     .46       5
 346          UC     .75     .59
 347          UA       0       5      16      30      65      77      84      90      94      97
 348          UA     100
              *
1                                          HEC-1 INPUT                                          PAGE 10

LINE          ID.......1.......2.......3.......4.......5.......6.......7.......8.......9......10


 349          KK  RETAIN
 350          KM   RETAIN 100-YR 2-HR VOLUME FROM BASIN BR27C
 351          DT  RETAIN      34
 352          DI       0     500    3000
 353          DQ       0     500    3000
              *

 354          KK    C27C
 355          KM   COMBINE HYDROGRAPHS FLOWING INTO DETENTION BASIN
 356          HC       4
              *

 357          KK    WC2A
 358          KM   SUB-BASIN WC2A -LAND USE- NATURAL DESERT HILLSLOPES; MINOR DEVELOPMENT
 359          KM   24-HOUR TYPE II RAINFALL WAS USED TO FIND TC & R FOR THIS BASIN
 360          KM   THIS BASIN USED RAINFALL REDUCTION FACTOR OF .90
 361          BA    .080
 362          LG    .150    .251   8.600    .070    .000
 363          UC    .383    .530
 364          UA       0       3       5       8      12      20      43      75      90      96
 365          UA     100
```

```
                 *
 366             KK  RD27.1
 367             KM   ROUTE FLOW FROM SUB-BASIN WC2A  TO COMPUTATION POINT CD27.1
 368             RS       1    ELEV    1147
 369             RC   0.035   0.035   0.035     960   0.016    1150
 370             RX       0      30      40      55      70      85     105     130
 371             RY    1150    1150    1148    1147    1148    1149    1150    1151
                 *

 372             KK  WC2.1A
 373             KM   SUB-BASIN WC2.1A-LAND USE- NATURAL DESERT HILLSLOPES; MINOR DEVELOPMENT
 374             KM   24-HOUR TYPE II RAINFALL WAS USED TO FIND TC & R FOR THIS BASIN
 375             KM   THIS BASIN USED RAINFALL REDUCTION FACTOR OF .90
 376             BA    .080
 377             LG    .150    .290   4.000    .520    .000
 378             UC    .350    .310
 379             UA       0       3       5       8      12      20      43      75      90      96
 380             UA     100
                 *

 381             KK  RD27.2
 382             KM   ROUTE FLOW FROM SUB-BASIN WC2.1A TO COMPUTATION POINT CD27.1
 383             RS       1    ELEV    1148
 384             RC   0.035   0.035   0.035    1000   0.015    1153
 385             RX       0      35      75     100     135     145     165     195
 386             RY    1153    1152    1150    1149    1148    1150    1152    1154
                 *
1                                                HEC-1 INPUT                                                PAGE 11

LINE             ID.......1.......2.......3.......4.......5.......6.......7.......8.......9......10

 387             KK  CD27.1
 388             KM   COMBINE ROUTED FLOW FROM SUB-BASINS WC2A AND WC2.1A
 389             HC       2
                 *

 390             KK  RD27.3
 391             KM   ROUTE FLOW FROM COMPUTATION POINT CP27.1 TO COMPUTATION POINT CP27.2
 392             RS       1    ELEV    1141
 393             RC   0.035   0.035   0.035     450   0.011    1144
 394             RX       0      50     115     125     140     150     160     180
 395             RY    1144    1143    1142    1141    1142    1144    1146    1148
                 *

 396             KK    WC3A
 397             KM   SUB-BASIN WC3A--LAND USE- NATURAL DESERT HILLSLOPES; MINOR DEVELOPMENT
 398             KM   24-HOUR TYPE II RAINFALL WAS USED TO FIND TC & R FOR THIS BASIN
 399             KM   THIS BASIN USED RAINFALL REDUCTION FACTOR OF .90
 400             BA    .014
 401             LG    .150    .250   8.600    .066    .000
 402             UC    .300    .467
 403             UA       0       3       5       8      12      20      43      75      90      96
 404             UA     100
                 *

 405             KK  RD27.4
 406             KM   ROUTE FLOW FROM SUB-BASIN WC3A TO COMPUTATION POINT CD27.2
 407             RS       1    ELEV  1141.8
 408             RC   0.035   0.040   0.035     640   0.022
 409             RX       0      40      80     100     110     120     150     200
 410             RY    1145    1144    1143    1142  1141.8    1142    1144    1145
                 *

 411             KK  CD27.2
 412             KM   COMBINE ROUTED FLOWS FROM SUB-BASIN WC3A AND COMPUTATION POINT CD27.1
 413             HC       2
                 *

 414             KK  RD27.5
 415             KM   ROUTE FLOW FROM COMPUTATION POINT CD27.2 TO COMPUTATION POINT CD27.3
 416             RS       1    ELEV    1121
 417             RC   0.035   0.035   0.035    1400   0.014
 418             RX       0      40     100     160     175     190     240     260
 419             RY    1126    1124    1123    1122    1121    1122    1124    1126
                 *

 420             KK    WC4A
 421             KM   SUB-BASIN WC4A -LAND USE- DESERT MOUNTAIN, DESERT HILLS;  MINOR DEVELOPMENT
 422             KM   24-HOUR TYPE II RAINFALL WAS USED TO FIND TC & R FOR THIS BASIN
 423             KM   THIS BASIN USED RAINFALL REDUCTION FACTOR OF .90
 424             BA    .360
 425             LG    .150    .297   3.950    .546  25.000
 426             UC    .383    .273
 427             UA       0       3       5       8      12      20      43      75      90      96
 428             UA     100
                 *
1                                                HEC-1 INPUT                                                PAGE 12

LINE             ID.......1.......2.......3.......4.......5.......6.......7.......8.......9......10

 429             KK  RD27.6
 430             KM   ROUTE FLOW FROM SUB-BASIN WC4A TO COMPUTATION POINT CD27.3
```

```
431          RS       3    ELEV    1140
432          RC   0.035   0.035   0.035    2200   0.016
433          RX       0      60     100     180     225     300     435     500
434          RY    1142    1141  1140.5    1140    1140  1140.5    1141    1142
             *

435          KK  CD27.3
436          KM   COMBINE ROUTED FLOWS FROM COMPUTATION POINT CD27.2 AND SUB-BASIN WC4A
437          HC       2
             *

438          KK  RD27.7
439          KM   ROUTE FLOW FROM COMPUTATION POINT CD27.3 TO COMPUTATION POINT CD27.4
440          RS       2    ELEV    1115
441          RC   0.040   0.050   0.035     950   0.006
442          RX       0      20     135     170     220     280     400     460
443          RY  1116.5    1116  1115.5    1115  1115.5  1115.8    1116  1116.5
             *

444          KK   DR27C
445          KM   SUB-BASIN DR27C-LAND USE- AGRICULTURE, DESERT HILLS; MINOR DEVELOMENT
446          KM   24-HOUR TYPE II RAINFALL WAS USED TO FIND TC & R FOR THIS BASIN
447          KM   THIS BASIN USED RAINFALL REDUCTION FACTOR OF .90
448          BA    .230
449          LG    .210    .345   3.996    .609    .000
450          UC    .467    .352
451          UA       0       3       5       8      12      20      43      75      90      96
452          UA     100
             *

453          KK    WC5A
454          KM   SUB-BASIN WC5A -LAND USE- DESERT HILLS; MINOR DEVELOMENT
455          KM   24-HOUR TYPE II RAINFALL WAS USED TO FIND TC & R FOR THIS BASIN
456          KM   THIS BASIN USED RAINFALL REDUCTION FACTOR OF .90
             *      1       2
457          BA    .420
458          LG    .150    .346   2.880   1.050  28.000
459          UC    .500    .359
460          UA       0       3       5       8      12      20      43      75      90      96
461          UA     100
             *

462          KK  CD27.4
463          KM   COMBINE RUNOFF FROM SUB-BASIN DR27C WITH ROUTED FLOW FROM COMPUTATION POINT
464          KM   CD27.3 & WC5A
465          HC       3
             *
             * PROPOSED DETENTION BASIN
1                                        HEC-1 INPUT                                          PAGE 13

LINE         ID.......1.......2.......3.......4.......5.......6.......7.......8.......9......10

466          KK  ST27.4
467          KM   PROPOSED DETENTION BASIN AT 27th & DOBBINS, 36" RCP OUTLET
468          RS       1    STOR
469          SV       0    56.6   115.4
470          SQ       0      38      80
471          SE       0       3       6
             *

472          KK  RST274
473          KM   ROUTE DISCHARGE FROM DETENTION BASIN TO BR35CE
474          RD    2520   .0051    .012            CIRC       3
             *
             *  BASIN BR35C2 SPLIT DUE TO PROPOSED IMPROVEMENT

475          KK  BR35CE
476          KM   ENTIRE BASIN FULLY DEVELOPED
477          KM   24-HOUR SCS TYPE II RAINFALL WAS USED TO FIND TC & R FO RTHIS BASIN
478          BA     .23
479          LG      .3     .25    4.15     .45       5
480          UC      .5     .36
481          UA       0       5      16      30      65      77      84      90      94      97
482          UA     100
             *

483          KK  RETAIN
484          KM   RETAIN 100-YR 2-HR VOLUME FROM BASIN BR35CE
485          DT  RETAIN      11
486          DI       0     500    3000
487          DQ       0     500    3000
             *

488          KK   C35CE
489          KM   COMBINE HYDROGRAPHS FROM C35CE & ST27C
490          HC       2
             *

491          KK   R35CE
492          KM   ROUTE HYDROGRAPH THROUGH PIPE TO CPB27C (27th & BASELINE)
493          RD    2450  0.0051    .014            CIRC     4.5
             *

494          KK   D35CE
```

```
495          KM   DIVERT 43 CFS TO 27th & BASELINE, REST INTO BASIN
496          DT   D35CE              156
497          DI       0       43    5000
498          DQ       0       43      43
             *

499          KK  C27BAS
500          KM   COMBINE HYDROGRAPH FOR ROUTING THROUGH DETENTION BASIN @ 27th & BASELINE
501          HC       2
             *  PROPOSED DETENTION BASE @ 27th & BASELINE
1                                          HEC-1 INPUT                                                    PAGE 14

LINE         ID.......1.......2.......3.......4.......5.......6.......7.......8.......9......10

502          KK   ST27C
503          KM   DETENTION BASIN 27th & BASELINE W/ 36" RCP OUTLET
504          RS       1    STOR
505          SV       0   116.3   274.9
506          SQ       0      38      90
507          SE       0       3       7
             *

508          KK   D1927
509          KM   RETREIVE 156 CFS FROM DIV1927
510          DR   D1927
             *

511          KK   D35CE
512          KM   RETREIVE 43 CFS FROM D35CE
513          DR   D35CE
             *

514          KK  CPB27C
515          KM   COMBINE HYDROGRAPHS FOR ROUTING TO 35TH & BASELINE
516          HC       3
             *

517          KK  RPB27C
518          KM   ROUTE HYDROGRAPH FROM 27th & BASELINE THROUGH PIPE TO 35TH & BASELINE
519          RD    5280  0.0049   0.012            CIRC     5.5
             *

520          KK  BR35CW
521          KM   75 ACRES OF FUTURE DEVELOPMENT
522          KM   24-HOUR TYPE II RAINFALL WAS USED TO FIND TC & R FOR THIS BASIN
523          BA      .5
524          LG     .28     .25    4.55     .42      22
525          UC     .67     .47
526          UA       0       5      16      30      65      77      84      90      94      97
527          UA     100
             *

528          KK  RETAIN
529          KM   RETAIN 100-YR 2-HR VOLUME FROM BASIN BR35CW
530          DT  RETAIN      10
531          DI       0     500    3000
532          DQ       0     500    3000
             *

533          KK  BR35C1
534          KM    SUB-BASIN BR35C1-LAND USE- 200 ACRES OF FUTURE DEVELOPMENT
535          KM   24-HOUR TYPE II RAINFALL WAS USED TO FIND TC & R FOR THIS BASIN
536          KM   THIS BASIN USED RAINFALL REDUCTION FACTOR OF .90
537          BA    .550
538          LG     .23     .25     4.5     .44       0
539          UC    0.81     .57
540          UA       0       5      16      30      65      77      84      90      94      97
541          UA     100
             *
1                                          HEC-1 INPUT                                                    PAGE 15

LINE         ID.......1.......2.......3.......4.......5.......6.......7.......8.......9......10

542          KK  RETAIN
543          KM   RETAIN 100-YR 2-HR VOLUME FROM BASIN BR35C1
544          DT  RETAIN      21
545          DI       0     500    3000
546          DQ       0     500    3000
             *

547          KK  CPB352
548          KM    COMBINE RUNOFF FROM RPB27C, BR35CW, BR35C1
549          HC       3
             *

550          KK  RPB352
551          KM   ROUTE COMBINED HYDROGRAPH TO 39TH & BASELINE
552          RD    2640   .0049    .012            CIRC       9
             *

553          KK    WC6A
554          KM   SUB-BASIN WC6A -LAND USE- NATURAL DESERT HILLSLOPES; MINOR DEVELOPMENT
555          KM   24-HOUR TYPE II RAINFALL WAS USED TO FIND TC & R FOR THIS BASIN
```

```
556          KM   THIS BASIN USED RAINFALL REDUCTION FACTOR OF .90
557          BA    .014
558          LG    .150    .270   3.750    .293    .000
559          UC    .233    .259
560          UA       0       3       5       8      12      20      43      75      90      96
561          UA     100
             *

562          KK  RD35.2
563          KM   ROUTE RUNOFF FROM SUB-BASIN WC6A TO COMPUTATION POINT CD35.1
564          RS      13    ELEV  1117.8
565          RC   0.070   0.070   0.070    3800   0.015
566          RX       0     130     240     280     340     440     530     655
567          RY    1122    1120    1118  1117.8    1118    1119    1120    1122
             * CD35.1
             *  COMBINE ROUTED FLOW FROM SUB-BASINS WC5A AND WC6A
             *      2

568          KK  RD35.3
569          KM   ROUTE FLOW FROM COMPUTATION POINT CD35.1 TO COMPUTATION POINT CD35.2
570          RS       6    ELEV  1089.6
571          RC   0.035   0.035   0.035    2480   0.005  1090.5
572          RX       0     100     200     350     435     480     500     525
573          RY    1092    1091    1090  1089.8  1089.7  1089.6    1090  1090.5
             *

574          KK    WC7A
575          KM   SUB-BASIN WC7A -LAND USE- NATURAL DESERT HILLSLOPES; MINOR DEVELOPMENT
576          KM   24-HOUR TYPE II RAINFALL WAS USED TO FIND TC & R FOR THIS BASIN
577          KM   THIS BASIN USED RAINFALL REDUCTION FACTOR OF .90
578          BA    .050
579          LG    .150    .270   7.000    .141    .000
580          UC    .317    .332
581          UA       0       3       5       8      12      20      43      75      90      96
```



```
LINE         ID.......1.......2.......3.......4.......5.......6.......7.......8.......9......10

582          UA     100
             *

583          KK  RD35.4
584          KM   ROUTE RUNOFF FROM SUB-BASIN WC7A TO COMPUTATION POINT CD35.3
585          RS       4    ELEV  1125.8
586          RC   0.035   0.035   0.035    2800   0.018  1128.5
587          RX       0     100     170     240     250     260     330     360
588          RY    1129    1128    1127    1126  1125.8    1126    1128  1128.5
             *

589          KK    WC8A
590          KM   SUB-BASIN WC8A -LAND USE- DESERT MOUNTAIN, DESERT HILLS; MINOR DEVELOMENT
591          KM   24-HOUR TYPE II RAINFALL WAS USED TO FIND TC & R FOR THIS BASIN
592          KM   THIS BASIN USED RAINFALL REDUCTION FACTOR OF .90
593          BA    .350
594          LG    .150    .321   3.700    .651  30.000
595          UC    .433    .366
596          UA       0       3       5       8      12      20      43      75      90      96
597          UA     100
             *

598          KK  RD35.5
599          KM   ROUTE FLOW FROM SUB-BASIN WC8A TO COMPUTATION POINT CD35.3
600          RS       2    ELEV    1137
601          RC   0.030   0.030   0.030    2200   0.022    1139
602          RX       0      50     125     190     240     370     400     450
603          RY    1139    1138  1137.5    1137  1137.5    1138    1140    1141
             *

604          KK  CD35.3
605          KM   COMBINE ROUTED FLOW FROM SUB-BASINS WC7A AND WC8A
606          HC       2
             *

607          KK  RD35.6
608          KM   ROUTE FLOW FROM COMPUTATION POINT CD35.3 TO COMPUTATION POINT CD35.4
609          RS       1    ELEV    1101
610          RC   0.030   0.035   0.035     700   0.011
611          RX       0      30      60     110     140     180     240     350
612          RY    1103  1101.8  1101.6  1101.4    1101  1101.4  1101.7    1103
             *

613          KK    WC9A
614          KM   SUB-BASIN WC9A -LAND USE- NATURAL DESERT HILLSLOPES; MINOR DEVELOPMENT
615          KM   24-HOUR TYPE II RAINFALL WAS USED TO FIND TC & R FOR THIS BASIN
616          KM   THIS BASIN USED RAINFALL REDUCTION FACTOR OF .90
617          BA    .025
618          LG    .150    .250   8.600    .066    .000
619          UC    .300    .420
620          UA       0       3       5       8      12      20      43      75      90      96
621          UA     100
             *
```



```
LINE         ID.......1.......2.......3.......4.......5.......6.......7.......8.......9......10
```

```
622          KK  RD35.7
623          KM   ROUTE RUNOFF FROM SUB-BASIN WC9A TO COMPUTATION POINT CD35.5
624          RS       1    ELEV    1128
625          RC   0.035   0.035   0.035    1000   0.025    1130
626          RX       0      30      40      60      70      90     120     140
627          RY    1130    1130    1129    1128  1128.5    1129    1130  1130.5
             *

628          KK   WC10A
629          KM   SUB-BASIN WC10A -LAND USE- NATURAL DESERT HILLSLOPES; MINOR DEVELOPMENT
630          KM   24-HOUR TYPE II RAINFALL WAS USED TO FIND TC & R FOR THIS BASIN
631          KM   THIS BASIN USED RAINFALL REDUCTION FACTOR OF .90
632          BA    .020
633          LG    .150    .260   5.800    .059    .000
634          UC    .233    .289
635          UA       0       3       5       8      12      20      43      75      90      96
636          UA     100
             *

637          KK  RD35.8
638          KM   ROUTE RUNOFF FROM SUB-BASIN WC10A TO COMPUTATION POINT CD35.5
639          RS       1    ELEV    1132
640          RC   0.035   0.035   0.035    1000   0.025
641          RX       0      30      50      70     100     140     210     260
642          RY    1134    1134    1133    1132    1132    1133  1133.5    1134
             *

643          KK  CD35.5
644          KM   COMBINE ROUTED FLOW FROM SUB-BASINS WC9A AND WC10A
645          HC       2
             *

646          KK  RD35.9
647          KM   ROUTE FLOW FROM COMPUTATION POINT CD35.5 TO COMPUTATION POINT CD35.6
648          RS       2    ELEV  1114.8
649          RC   0.030   0.030   0.030    1200   0.015
650          RX       0      60     110     170     210     240     330     370
651          RY    1116  1115.8  1115.5    1115  1114.8    1115  1115.8    1116
             *

652          KK   WC11A
653          KM   SUB-BASIN WC11A -LAND USE- DESERT MOUNTAINS, DESERT HILLS; MINOR DEVELOPMENT
654          KM   24-HOUR TYPE II RAINFALL WAS USED TO FIND TC & R FOR THIS BASIN
655          KM   THIS BASIN USED RAINFALL REDUCTION FACTOR OF .90
656          BA    .290
657          LG    .150    .335   3.600    .703  53.000
658          UC    .367    .357
659          UA       0       3       5       8      12      20      43      75      90      96
660          UA     100
             *
```



```
LINE         ID.......1.......2.......3.......4.......5.......6.......7.......8.......9......10

661          KK  RD3510
662          KM   ROUTE RUNOFF FROM SUB-BASIN WC11A TO COMPUTATION POINT CD35.7
663          RS       1    ELEV    1131
664          RC   0.050   0.050   0.050    1100   0.024
665          RX       0      50     170     180     225     260     380     460
666          RY    1132  1131.8  1131.6  1131.5    1131  1131.5  1131.8    1132
             *

667          KK   WC12A
668          KM   SUB-BASIN WC12A -LAND USE- DESERT MOUNTAIN, DESERT HILLS; MINOR DEVELOPMENT
669          KM   24-HOUR TYPE II RAINFALL WAS USED TO FIND TC & R FOR THIS BASIN
670          KM   THIS BASIN USED RAINFALL REDUCTION FACTOR OF .90
671          BA    .260
672          LG    .150    .320   3.800    .632  28.000
673          UC    .333    .217
674          UA       0       3       5       8      12      20      43      75      90      96
675          UA     100
             *

676          KK  RD3511
677          KM   ROUTE RUNOFF FROM SUB-BASIN WC12A TO COMPUTATION POINT CD35.7
678          RS       1    ELEV    1143
679          RC   0.040   0.040   0.040    1200   0.022    1144
680          RX       0      10      25      45      70     120     235     290
681          RY  1144.5    1144  1143.5    1143  1143.5  1143.7  1143.8    1144
             *

682          KK  CD35.7
683          KM   COMBINE ROUTED FLOWS FROM SUB-BASINS WC11A AND WC12A
684          HC       2
             *

685          KK  RD3512
686          KM   ROUTE FLOW FROM COMPUTATION POINT CD35.7 TO COMPUTATION POINT CD35.6
687          RS       2    ELEV  1120.5
688          RC   0.055   0.055   0.055    1080   0.006
689          RX       0      20      50      70     130     180     400     460
690          RY  1122.5    1122    1121  1120.5    1121  1121.5    1122  1122.5
             *
```

```
691          KK  CD35.6
692          KM   COMBINE ROUTED FLOW FROM COMPUTATION POINTS CD35.5 AND CD35.7
693          HC       2

694          KK  RD3513
695          KM   ROUTE FLOW FROM COMPUTATION POINT CD35.6 TO COMPUTATION POINT CD35.4
696          RS       1    ELEV    1101
697          RC   0.040   0.035   0.030    1000   0.012
698          RX       0      40     130     210     280     340     570     615
699          RY  1102.5    1102  1101.8  1101.5    1101  1101.5    1102  1102.5
             *
1                                          HEC-1 INPUT                                                    PAGE 19

LINE         ID.......1.......2.......3.......4.......5.......6.......7.......8.......9......10

700          KK  CD35.4
701          KM   COMBINE ROUTED FLOW FROM COMPUTATION POINTS CD35.3 AND CD35.6
702          HC       2
             *

703          KK  RD3514
704          KM   ROUTE FLOW FROM COMPUTATION POINT CD35.4 TO COMPUTATION POINT CD35.2
705          RS       3    ELEV  1192.5
706          RC   0.070   0.070   0.070    1400   0.006    1194
707          RX       0     120     200     300     400     470     560     660
708          RY    1194  1193.0  1192.8  1192.5  1192.5  1192.8    1193    1194
             *

709          KK   WC15A
710          KM   SUB-BASIN WC15A -LAND USE- DESERT MOUNTAIN, DESERT HILLS; MINOR DEVELOMENT
711          KM   24-HOUR TYPE II RAINFALL WAS USED TO FIND TC & R FOR THIS BASIN
712          KM   THIS BASIN USED RAINFALL REDUCTION FACTOR OF .90
             *      1       2
713          BA    .360
714          LG    .150    .320   3.350    .784  50.000
715          UC    .317    .245
716          UA       0       3       5       8      12      20      43      75      90      96
717          UA     100
             *

718          KK  RD3515
719          KM   ROUTE RUNOFF FROM SUB-BASIN WC15A TO COMPUTATION POINT CD35.8
720          RS       1    ELEV    1132
721          RC   0.030   0.035   0.030    1250   0.014    1136
722          RX       0      30      50      70      85     100     140     200
723          RY    1140    1138    1136    1134    1132    1134    1135    1136
             *

724          KK    PM2A
725          KM   SUB-BASIN PM2A -LAND USE- DESERT MOUNTAIN, DESERT HILLS; MINOR DEVELOMENT
726          KM   24-HOUR TYPE II RAINFALL WAS USED TO FIND TC & R FOR THIS BASIN
727          KM   THIS BASIN USED RAINFALL REDUCTION FACTOR OF .90
728          BA    .070
729          LG    .150    .332   4.100    .502  15.000
730          UC    .300    .282
731          UA       0       3       5       8      12      20      43      75      90      96
732          UA     100
             *

733          KK  CD35.8
734          KM   COMBINE ROUTED FLOW FROM SUB-BASIN WC15A TO SUB-BASIN PM2A
735          HC       2
             *
1                                          HEC-1 INPUT                                                    PAGE 20

LINE         ID.......1.......2.......3.......4.......5.......6.......7.......8.......9......10

736          KK  RD3516
737          KM   ROUTE FLOW FROM COMPUTATION POINT CD35.8 TO COMPUTATION POINT CD35.9
738          RS       1    ELEV    1122
739          RC   0.035   0.040   0.030    1400   0.008    1126
740          RX       0      25      35      50     130     150     200     260
741          RY    1130    1126    1124    1122    1122    1124    1125    1126
             *

742          KK   WC13A
743          KM   SUB-BASIN WC13A -LAND USE- NATURAL DESERT HILLSLOPES; MINOR DEVELOPMENT
744          KM   24-HOUR TYPE II RAINFALL WAS USED TO FIND TC & R FOR THIS BASIN
745          KM   THIS BASIN USED RAINFALL REDUCTION FACTOR OF .90
746          BA    .013
747          LG    .150    .250   8.600    .066    .000
748          UC    .250    .341
749          UA       0       3       5       8      12      20      43      75      90      96
750          UA     100
             *

751          KK  RD3517
752          KM   ROUTE RUNOFF FROM SUB-BASIN WC13A TO COMPUTATION POINT CD35.9
753          RS       3    ELEV    1131
754          RC   0.035   0.035   0.035    1280   0.023
755          RX       0     115     180     225     270     350     435     530
756          RY    1132  1131.5  1131.2    1131  1131.2  1131.5  1131.8    1132
```

```
                *
 757            KK   WC14A
 758            KM   SUB-BASIN WC14A -LAND USE- NATURAL DESERT HILLSLOPES; MINOR DEVELOPMENT
 759            KM   24-HOUR TYPE II RAINFALL WAS USED TO FIND TC & R FOR THIS BASIN
 760            KM   THIS BASIN USED RAINFALL REDUCTION FACTOR OF .90
 761            BA    .050
 762            LG    .150    .290   4.000    .520    .000
 763            UC    .367    .427
 764            UA       0       3       5       8      12      20      43      75      90      96
 765            UA     100
                *

 766            KK  RD3518
 767            KM   ROUTE RUNOFF FROM SUB-BASIN WC14A TO COMPUTATION POINT CD35.9
 768            RS       6    ELEV  1133.4
 769            RC   0.040   0.045   0.040    2000   0.013
 770            RX       0      60     150     220     250     280     310     360
 771            RY    1134  1133.9  1133.7  1133.4  1133.7  1133.8  1133.9    1134
                *

 772            KK    PM1A
 773            KM   SUB-BASIN PM1A -LAND USE- AGRICULTURE, DESERT HILLS; MINOR DEVELOPMENT
 774            KM   24-HOUR TYPE II RAINFALL WAS USED TO FIND TC & R FOR THIS BASIN
 775            KM   THIS BASIN USED RAINFALL REDUCTION FACTOR OF .90
 776            BA    .070
 777            LG    .380    .097   4.210    .697    2.00
 778            UC    .383    .279
 779            UA       0       3       5       8      12      20      43      75      90      96
1                                                HEC-1 INPUT                                          PAGE 21

LINE            ID.......1.......2.......3.......4.......5.......6.......7.......8.......9......10

 780            UA     100
                *

 781            KK  CD35.9
 782            KM   COMBINE ROUTED FLOWS FROM SUB-BASINS WC13A AND WC14A, COMPUTATION POINT
 783            KM   CD35.8 WITH RUNOFF FROM SUB-BASIN PM1A
 784            HC       4
                *

 785            KK  RD3519
 786            KM   ROUTE FLOW FROM COMPUTATION POINT CD35.9 TO COMPUTATION POINT CD35.2
 787            RS       1    ELEV    1101
 788            RC   0.040   0.045   0.040    3360   0.012
 789            RX       0      80     190     270     310     335     440     480
 790            RY  1102.5    1102  1101.7  1101.5    1101  1101.5    1102  1102.5
                *

 791            KK   DR35C
 792            KM   SUB-BASIN DR35C -LAND USE- AGRICULTURE; MINOR DEVELOPMENT
 793            KM   24-HOUR TYPE II RAINFALL WAS USED TO FIND TC & R FOR THIS BASIN
 794            KM   THIS BASIN USED RAINFALL REDUCTION FATOR OF .90
 795            BA    .600
 796            LG    .360    .221   4.200    .454    .000
 797            UC    .717    .443
 798            UA       0       3       5       8      12      20      43      75      90      96
 799            UA     100
                *

 800            KK  CD35.2
 801            KM   COMBINE ROUTED FLOWS FROM COMPUTATION POINTS CD35.1, CD35.4 AND CD35.9 WITH
 802            KM   RUNOFF FROM SUB-BASIN DR35C
 803            HC       4
                *
                *  DUMMY BASIN TO SIMULATE FUTURE GOLF COURSE STORAGE

 804            KK     STG
 805            KM   DUMMY BASIN SIMULATING FUTURE GOLF COURSE
 806            RS       1    STOR
 807            SV       0     100    5000
 808            SQ       0      50      50
                *

 809            KK  RSTG39
 810            KM   ROUTE DISCHARGE FROM STG TO 39TH & BASELINE
 811            RD    7920   0.004    .014            CIRC       5
                *

 812            KK    CG39
 813            KM   COMBINE HYDROGRAPHS FROM GOLF COURSE & RPB352
 814            HC       2
                *
1                                                HEC-1 INPUT                                          PAGE 22

LINE            ID.......1.......2.......3.......4.......5.......6.......7.......8.......9......10

 815            KK  RSTG43
 816            KM   ROUTE COMBINED HYDRGRAPH TO 43RD & BASELINE
 817            RD    2640   0.028    .012            CIRC      10
                *

 818            KK  SMA43C
```

```
 819          KM   SUB-BASIN SMA43C-LAND USE - ENTIRE BASIN FULLY DEVELOPED
 820          KM   24-HOUR TYPE II RAINFALL WAS USED TO FIND TC & R FOR THIS BASIN
 821          KM   THIS BASIN USED RAINFALL REDUCTION FACTOR OF .90
 822          BA    .130
 823          LG      .3      .25      4.2      .52       15
 824          UC     .42      .27
 825          UA       0        5       16       30       65       77       84       90       94       97
 826          UA     100
              *

 827          KK  RETAIN
 828          KM   RETAIN 100-YR 2-HR VOLUME FROM BASIN SMA43C
 829          DT  RETAIN        7
 830          DI       0      500     3000
 831          DQ       0      500     3000
              *

 832          KK  RB43C2
 833          KM   ROUTE RUNOFF FROM SUB-BASIN SMA43C TO CBR43C
 834          RS       3     ELEV  1043.3
 835          RC    0.02     0.07     0.07     2600    0.003  1044.2
 836          RX       0        1       55       56       65       70       90      120
 837          RY  1044.2  1043.2  1043.2  1044.1  1043.5  1043.7  1043.8  1044.2
              *
              * BR43C Modified May 1998

 838          KK   BR43C
 839          KM   SUB-BASIN BR43C-LAND USE - ENTIRE BASIN FULLE DEVELOPED
 840          KM   24-HOUR TYPE II RAINFALL WAS USED TO FIND TC & R FOR THIS BASIN
 841          KM   THIS BASIN USED RAINFALL REDUCTION FACTOR OF .90
 842          BA     .35
 843          LG     .24      .25      4.6      .43       28
 844          UC   0.967    0.985
 845          UA       0        5       16       30       65       77       84       90       94       97
 846          UA     100
              *
              * RETAIN MODIFIED MAY 1998

 847          KK  RETAIN
 848          KM   RETAIN 75% of 100-YR 24-HR VOLUME FROM BASIN BR43C
 849          DT  RETAIN       25
 850          DI       0      500     3000
 851          DQ       0      500     3000
              *
```



```
LINE          ID.......1.......2.......3.......4.......5.......6.......7.......8.......9......10

 852          KK  CBR43C
 853          KM   COMBINE ROUTED FLOWS AT 43RD & BASELINE
 854          HC       3
              *
              *
              * PROPOSED DETENTION BASIN @ BASELINE & 43RD AVE

 855          KK   STR43M
 856          KM   PROPOSED BASIN AT THE NW CORNER OF 43RD AVE AND BASELINE
 857          KM   DATA REFLECTS INLET CONTROL OUTFALL - 54" PIPE
 858          KO       3
 859          RS       1     STOR
 860          SQ       0       26       80      115      175      210      240      265
 861          SV       0       12     25.2     39.6     55.3     72.3     90.6    110.4
 862          SE    1022     1024     1026     1028     1030     1032     1034     1036
              *

 863          KK  RBR43C
 864          KM   ROUTE HYDROGRAPH FROM CBR43C TO 43RD & SOUTHERN
 865          RD    5280    .0028     .012             CIRC       15
              *

 866          KK   RR35C
 867          KM   SUB-BASIN RR35C-LAND USE - 770 ACRES OF FUTURE DEVELOPMENT
 868          KM   24-HOUR TYPE II RAINFALL WAS USED TO FIND TC & R FOR THIS BASIN
 869          KM   THIS BASIN USED RAINFALL REDUCTION FACTOR OF .90
 870          BA   1.890
 871          LG     .27      .25      5.4      .27       24
 872          UC     .75      .23
 873          UA       0        5       16       30       65       77       84       90       94       97
 874          UA     100
              *

 875          KK  RETAIN
 876          KM   RETAIN 100-YR 2-HR VOLUME FROM BASIN RR35C
 877          DT  RETAIN      110
 878          DI       0      500     3000
 879          DQ       0      500     3000
              *

 880          KK  RRS37C
 881          KM   ROUTE FLOW FROM COMPUTATION POINT CPR35C TO COMPUTATION POINT CPS37C
 882          RS       8     ELEV     1025
 883          RC    0.10     0.10     0.10     2400  0.0025
 884          RX       0      280      470      630      700      840     1390     1860
 885          RY    1028     1026     1026     1025     1025     1025     1026     1028
```

```
                    *
 886                KK   SA37C
 887                KM   SUB-BASIN SA37C-LAND USE- 156 ACRES OF FUTURE DEVELOPMENT
 888                KM   24-HOUR TYPE II RAINFALL WAS USED TO FIND TC & R FOR THIS BASIN
 889                KM   THIS BASIN USED RAINFALL REDUCTION FACTOR OF .90
 890                BA    .590
 891                LG     .29      .19      6.6      .17       17
1                                          HEC-1 INPUT                                                    PAGE 24

LINE                ID.......1.......2.......3.......4.......5.......6.......7.......8.......9......10

 892                UC     .71      .32
 893                UA       0        5       16       30       65       77       84       90       94       97
 894                UA     100
                    *
                    .
 895                KK  RETAIN
 896                KM   RETAIN 100-YR 2-HR VOLUME FROM BASIN SA37C
 897                DT  RETAIN       23
 898                DI       0      500     3000
 899                DQ       0      500     3000
                    *

 900                KK  CPS37C
 901                KM    COMBINE ROUTED FLOW FROM COMPUTATION POINT CPS37C WITH RUNOFF FROM SUB-
 902                KM    BASIN SA37C
 903                HC       2
                    *

 904                KK  RAV431
 905                KM   ROUTE FLOW FROM COMPUTATION POINT CPS37C TO COMPUTATION POINT CAV43C
 906                RS      15    ELEV  1020.6
 907                RC    0.10     0.10     0.10     3200  0.0012
 908                RX       0      380      620      980     1320     1560     1700     2200
 909                RY  1022.8     1021   1020.6   1020.9   1021.4   1021.6   1021.8   1022.8
                    *

 910                KK  AVR43C
 911                KM   SUB-BASIN AVR43C -LAND USE- 240 ACRES OF FUTURE DEVELOPMENT
 912                KM   24-HOUR TYPE II RAINFALL WAS USED TO FIND TC & R FOR THIS BASIN
 913                KM   THIS BASIN USED RAINFALL REDUCTION FACTOR OF .90
 914                BA   1.030
 915                LG     .29      .25      5.4      .27       17
 916                UC     .67       .3
 917                UA       0        5       16       30       65       77       84       90       94       97
 918                UA     100
                    *

 919                KK  RETAIN
 920                KM   RETAIN 100-YR 2-HR VOLUME FROM BASIN AVR43C
 921                DT  RETAIN       32
 922                DI       0      500     3000
 923                DQ       0      500     3000
                    *

 924                KK  CAV43C
 925                KM   COMBINE ROUTED FLOW FROM COMPUTATION POINT CPS37C, AVR43C
 926                HC       2
                    *
                    * PROPOSED DETENTION BASIN
1                                          HEC-1 INPUT                                                    PAGE 25

LINE                ID.......1.......2.......3.......4.......5.......6.......7.......8.......9......10

 927                KK  STOR43
 928                KM   PROPOSED BASIN AT THE CORNER OF 43RD AVE AND SOUTHERN
 929                KM   DATA REFLECTS TW @ 1018 3-36" OPENINGS
 930                KO       3
 931                RS       1     STOR
 932                SV       0      0.1     12.1     45.6     65.6     88.4    111.1    133.9    146.5
 933                SQ       0        0        0        0        0        0        0     56.3      340
 934                SE    1002     1003     1006     1012     1014     1016     1018     1020     1021
                    *

 935                KK   CST43
 936                KM   COMBINE OUTFLOW OF DETENTION BASIN (STOR43) & PIPE FLOW (RBR43C
 937                HC       2
                    *

 938                KK  RAV43B
 939                KM   ROUTE COMBINED DISCHARGE TO SALT RIVER
 940                RD    5400  0.0028     .012            CIRC       15
                    *
 941                ZZ
1

 855       STR43
               V
               V
 863      RBR43C
               .
               .
 866            .        RRJ5C
```

```
                .          .
                .          .
877             .          .-------> RETAIN
875             .     RETAIN
                .          V
                .          V
880             .     RRS37C
                .          .
                .          .
886             .          .      SA37C
                .          .          .
                .          .          .
897             .          .          .-------> RETAIN
895             .          .     RETAIN
                .          .          .
                .          .          .
900             .     CPS37C............
                .          V
                .          V
904             .     RAV431
                .          .
                .          .
910             .          .     AVR43C
                .          .          .
                .          .          .
921             .          .          .-------> RETAIN
919             .          .     RETAIN
                .          .          .
                .          .          .
924             .     CAV43C............
                .          V
                .          V
927             .     STOR43
                .          .
                .          .
935          CST43............
                V
                V
938        RAV43B
```

(***) RUNOFF ALSO COMPUTED AT THIS LOCATION

```
1*************************************
*                                   *
*   FLOOD HYDROGRAPH PACKAGE  (HEC-1)*
*              JUL   1997           *
*           VERSION 4.1             *
*                                   *
*  RUN DATE   26MAY98  TIME  10:25:22*
*                                   *
*************************************
```

```
*************************************
*                                   *
*    U.S. ARMY CORPS OF ENGINEERS   *
*    HYDROLOGIC ENGINEERING CENTER  *
*          609 SECOND STREET        *
*       DAVIS, CALIFORNIA 95616     *
*           (916) 756-1104          *
*                                   *
*************************************
```

```
                    LAVEEN ADMP INVESTIGATION BY HDR ENGINEERING
                    MODIFICATIONS IN MAY 1998 BY FCD
                    LAVEEN ADMS (FINAL HEC-1) 100-,25-,10-YR FUTURE 24-HR STORM        CBA FILE
                    HIDDEN VALLEY WATERSHED/CHAMPION DRAIN WATERSHED
                    INPUT FILE NAME  43FutP2M.DAT
                    3 BASIN ALTERNATIVE, FUTURE   DEVELOPMENT
                    BASIN AT NW COR 43RD AVE & BASELINE RD
                    24-HOUR SCS TYPE II RAINFALL - 100, 25, 10-yr frequency

 10 IO        OUTPUT CONTROL VARIABLES
                    IPRNT          5  PRINT CONTROL
                    IPLOT          0  PLOT CONTROL
                    QSCAL         0.  HYDROGRAPH PLOT SCALE

    IT        HYDROGRAPH TIME DATA
                     NMIN          5  MINUTES IN COMPUTATION INTERVAL
                    IDATE      1   0  STARTING DATE
                    ITIME       0000  STARTING TIME
                       NQ       1000  NUMBER OF HYDROGRAPH ORDINATES
                   NDDATE      4   0  ENDING DATE
                   NDTIME       1115  ENDING TIME
                    ICENT         19  CENTURY MARK

                COMPUTATION INTERVAL     .08 HOURS
                     TOTAL TIME BASE   83.25 HOURS

          ENGLISH UNITS
               DRAINAGE AREA          SQUARE MILES
               PRECIPITATION DEPTH    INCHES
               LENGTH, ELEVATION      FEET
               FLOW                   CUBIC FEET PER SECOND
               STORAGE VOLUME         ACRE-FEET
               SURFACE AREA           ACRES
               TEMPERATURE            DEGREES FAHRENHEIT

    JP         MULTI-PLAN OPTION
                    NPLAN          1  NUMBER OF PLANS

    JR         MULTI-RATIO OPTION
                  RATIOS OF PRECIPITATION
```

```
                    .63        .79       1.00

*** *** *** *** *** *** *** *** *** *** *** *** *** *** *** *** *** *** *** *** *** *** *** *** *** *** *** *** *** *** *** *** *** *** *** *** ***

            *************
            *           *
855 KK      *     STR43 *     M
            *           *
            *************

858 KO          OUTPUT CONTROL VARIABLES
                      IPRNT          3  PRINT CONTROL
                      IPLOT          0  PLOT CONTROL
                      QSCAL         0.  HYDROGRAPH PLOT SCALE

              HYDROGRAPH ROUTING DATA

859 RS          STORAGE ROUTING
                      NSTPS          1  NUMBER OF SUBREACHES
                       ITYP       STOR  TYPE OF INITIAL CONDITION
                     RSVRIC        .00  INITIAL CONDITION
                          X        .00 WORKING R AND D COEFFICIENT

861 SV            STORAGE          .0       12.0       25.2       39.6       55.3       72.3       90.6      110.4

862 SE          ELEVATION     1022.00    1024.00    1026.00    1028.00    1030.00    1032.00    1034.00    1036.00

860 SQ          DISCHARGE          0.        26.        80.       115.       175.       210.       240.       265.
                                                                   ***

     ***            ***            ***            ***            ***

                        HYDROGRAPH AT STATION    STR43
                          FOR PLAN 1, RATIO =  .63

 PEAK FLOW     TIME                          MAXIMUM AVERAGE FLOW
                                     6-HR       24-HR       72-HR     83.25-HR
+  (CFS)       (HR)
                            (CFS)
+    169.     23.00                 168.        150.         84.         73.
                         (INCHES)   .117        .419        .707        .710
                          (AC-FT)    83.        298.        502.        504.

PEAK STORAGE   TIME                         MAXIMUM AVERAGE STORAGE
                                     6-HR       24-HR       72-HR     83.25-HR
+ (AC-FT)      (HR)
      54.     22.92                  53.         49.         29.         25.

 PEAK STAGE    TIME                          MAXIMUM AVERAGE STAGE
                                     6-HR       24-HR       72-HR     83.25-HR
+  (FEET)      (HR)
  1029.81     23.00               1029.77     1029.17     1026.33     1025.76

                        CUMULATIVE AREA =   13.31 SQ MI

     ***            ***            ***            ***            ***

                        HYDROGRAPH AT STATION    STR43
                          FOR PLAN 1, RATIO =  .79

 PEAK FLOW     TIME                          MAXIMUM AVERAGE FLOW
                                     6-HR       24-HR       72-HR     83.25-HR
+  (CFS)       (HR)
                            (CFS)
+    212.     24.33                 210.        196.        119.        103.
                         (INCHES)   .147        .548        .999       1.002
                          (AC-FT)   104.        389.        709.        712.

PEAK STORAGE   TIME                         MAXIMUM AVERAGE STORAGE
                                     6-HR       24-HR       72-HR     83.25-HR
+ (AC-FT)      (HR)
      73.     24.33                  73.         66.         40.         35.

 PEAK STAGE    TIME                          MAXIMUM AVERAGE STAGE
                                     6-HR       24-HR       72-HR     83.25-HR
+  (FEET)      (HR)
  1032.10     24.33               1032.04     1031.21     1027.91     1027.13

                        CUMULATIVE AREA =   13.31 SQ MI

     ***            ***            ***            ***            ***

                        HYDROGRAPH AT STATION    STR43
                          FOR PLAN 1, RATIO = 1.00

 PEAK FLOW     TIME                          MAXIMUM AVERAGE FLOW
                                     6-HR       24-HR       72-HR     83.25-HR
+  (CFS)       (HR)
                            (CFS)
```

```
+     264.      25.42                    264.        253.        172.        149.
                          (INCHES)      .184        .707       1.441       1.446
                          (AC-FT)       131.        502.       1023.       1027.

 PEAK STORAGE   TIME                          MAXIMUM AVERAGE STORAGE
                                        6-HR       24-HR       72-HR     83.25-HR
+  (AC-FT)       (HR)
      109.      25.33                    109.        101.         63.         55.

  PEAK STAGE    TIME                          MAXIMUM AVERAGE STAGE
                                        6-HR       24-HR       72-HR     83.25-HR
+   (FEET)      (HR)
   1035.95     25.33                 1035.88     1035.06     1030.67     1029.53

                          CUMULATIVE AREA =   13.31 SQ MI


... ... ... ... ... ... ... ... ... ... ... ... ... ... ... ... ... ... ... ... ... ... ... ... ... ... ... ... ... ... ... ... ... ... ...


            ............
            .          .
 927 KK     .   STOR43 .
            .          .
            ............

 930 KO          OUTPUT CONTROL VARIABLES
                      IPRNT          3  PRINT CONTROL
                      IPLOT          0  PLOT CONTROL
                      QSCAL         0.  HYDROGRAPH PLOT SCALE

               HYDROGRAPH ROUTING DATA

 931 RS          STORAGE ROUTING
                      NSTPS          1  NUMBER OF SUBREACHES
                       ITYP       STOR  TYPE OF INITIAL CONDITION
                     RSVRIC        .00  INITIAL CONDITION
                          X        .00 WORKING R AND D COEFFICIENT

 932 SV            STORAGE        .0        .1       12.1       45.6       65.6       88.4      111.1      133.9      146.5

 933 SQ          DISCHARGE        0.         0.         0.         0.         0.         0.         0.        56.       340.

 934 SE          ELEVATION     1002.00    1003.00    1006.00    1012.00    1014.00    1016.00    1018.00    1020.00    1021.00
                                                                                 ...

      ...             ...             ...             ...             ...

                          HYDROGRAPH AT STATION   STOR43
                            FOR PLAN 1, RATIO =  .63

 PEAK FLOW      TIME                          MAXIMUM AVERAGE FLOW
                                        6-HR       24-HR       72-HR     83.25-HR
+   (CFS)        (HR)
                          (CFS)
+       0.        .00                     0.          0.          0.          0.
                          (INCHES)      .000        .000        .000        .000
                          (AC-FT)         0.          0.          0.          0.

 PEAK STORAGE   TIME                          MAXIMUM AVERAGE STORAGE
                                        6-HR       24-HR       72-HR     83.25-HR
+  (AC-FT)       (HR)
       17.      46.08                     17.         17.         15.         13.

  PEAK STAGE    TIME                          MAXIMUM AVERAGE STAGE
                                        6-HR       24-HR       72-HR     83.25-HR
+   (FEET)      (HR)
   1006.85     49.92                 1006.85     1006.84     1006.54     1005.92

                          CUMULATIVE AREA =    3.51 SQ MI

      ...             ...             ...             ...             ...

                          HYDROGRAPH AT STATION   STOR43
                            FOR PLAN 1, RATIO =  .79

 PEAK FLOW      TIME                          MAXIMUM AVERAGE FLOW
                                        6-HR       24-HR       72-HR     83.25-HR
+   (CFS)        (HR)
                          (CFS)
+       0.        .00                     0.          0.          0.          0.
                          (INCHES)      .000        .000        .000        .000
                          (AC-FT)         0.          0.          0.          0.

 PEAK STORAGE   TIME                          MAXIMUM AVERAGE STORAGE
                                        6-HR       24-HR       72-HR     83.25-HR
+  (AC-FT)       (HR)
       64.      52.17                     64.         64.         58.         50.

  PEAK STAGE    TIME                          MAXIMUM AVERAGE STAGE
                                        6-HR       24-HR       72-HR     83.25-HR
```

```
+    FEET        HR)
   1013.88     52.17                1013.88     1013.87     1013.07      1011.57

                          CUMULATIVE AREA =     3.51 SQ MI

      ...             ***             ***             ***             ***

                          HYDROGRAPH AT STATION   STOR43
                            FOR PLAN 1, RATIO = 1.00

  PEAK FLOW      TIME                          MAXIMUM AVERAGE FLOW
                                      6-HR        24-HR        72-HR      83.25-HR
+   (CFS)        (HR)
                                   (CFS)
+      32.      22.50                 31.          19.           7.           6.
                             (INCHES)       .082        .202         .212         .212
                             (AC-FT)         15.         38.          40.          40.

 PEAK STORAGE   TIME                         MAXIMUM AVERAGE STORAGE
                                      6-HR        24-HR        72-HR      83.25-HR
+  (AC-FT)      (HR)
     124.      22.50                 124.         119.         109.          94.

  PEAK STAGE    TIME                          MAXIMUM AVERAGE STAGE
                                      6-HR        24-HR        72-HR      83.25-HR
+   (FEET)      (HR)
   1019.15     22.50               1019.10     1018.68     1017.72      1015.59

                          CUMULATIVE AREA =     3.51 SQ MI

1

              PEAK FLOW AND STAGE (END-OF-PERIOD) SUMMARY FOR MULTIPLE PLAN-RATIO ECONOMIC COMPUTATIONS
                                FLOWS IN CUBIC FEET PER SECOND,  AREA IN SQUARE MILES
                                          TIME TO PEAK IN HOURS

                                                                  RATIOS APPLIED TO PRECIPITATION
 OPERATION        STATION     AREA    PLAN                 RATIO 1  RATIO 2  RATIO 3
                                                                .63      .79     1.00

 HYDROGRAPH AT
+                   SM1C      1.84     1    FLOW            1046.    1519.    2160.
                                              TIME           12.25    12.25    12.25

 HYDROGRAPH AT
+                  SM1AC       .28     1    FLOW              82.     156.     253.
                                              TIME           12.17    12.17    12.17

  2 COMBINED AT
+                   CSM1      2.12     1    FLOW            1127.    1669.    2401.
                                              TIME           12.25    12.25    12.17

 ROUTED TO
+                   RSM1      2.12     1    FLOW            1057.    1584.    2321.
                                              TIME           12.33    12.33    12.33

                                        ** PEAK STAGES IN FEET **
                                        1    STAGE        1377.37  1377.72  1378.07
                                              TIME           12.33    12.33    12.33

 HYDROGRAPH AT
+                   SM2C      2.19     1    FLOW            2040.    2635.    3451.
                                              TIME           12.17    12.17    12.17

  2 COMBINED AT
+                   CSM2      4.31     1    FLOW            2865.    3954.    5481.
                                              TIME           12.17    12.17    12.17

 ROUTED TO
+                  RDENT      4.31     1    FLOW             114.     128.     146.
                                              TIME           16.00    16.42    17.33

                                        ** PEAK STAGES IN FEET **
                                        1    STAGE        1309.99  1313.39  1317.80
                                              TIME           16.00    16.42    17.42

 ROUTED TO
+                   RSM2      4.31     1    FLOW             114.     128.     146.
                                              TIME           16.33    16.75    17.67

                                        ** PEAK STAGES IN FEET **
                                        1    STAGE        1227.12  1227.16  1227.21
                                              TIME           16.25    16.42    17.25

 HYDROGRAPH AT
+                  SM3CE       .17     1    FLOW              41.      95.     168.
                                              TIME           12.08    12.08    12.08

  2 COMBINED AT
+                   C3CE      4.48     1    FLOW             114.     157.     242.
                                              TIME           16.33    12.08    12.08

 ROUTED TO
```

+	RSM3CE	4.48	1	FLOW	114.	152.	237.
				TIME	16.33	12.08	12.08
HYDROGRAPH AT							
+	SM4CE	.05	1	FLOW	17.	34.	57.
				TIME	12.00	12.00	12.00
HYDROGRAPH AT							
+	SM5C	.20	1	FLOW	53.	100.	164.
				TIME	12.17	12.08	12.08
3 COMBINED AT							
+	CSM5C	4.73	1	FLOW	150.	276.	440.
				TIME	12.08	12.08	12.08
DIVERSION TO							
+	DCSM5C	4.73	1	FLOW	0.	26.	190.
				TIME	.00	12.08	12.08
HYDROGRAPH AT							
+	DIVM5C	4.73	1	FLOW	150.	250.	250.
				TIME	12.08	12.00	11.83
ROUTED TO							
+	RCSM5C	4.73	1	FLOW	149.	250.	250.
				TIME	12.17	12.08	12.00
HYDROGRAPH AT							
+	SMA15E	.07	1	FLOW	42.	65.	96.
				TIME	12.00	12.00	12.00
2 COMBINED AT							
+	C15E	4.80	1	FLOW	171.	308.	346.
				TIME	12.08	12.00	12.00
DIVERSION TO							
+	DC15E	4.80	1	FLOW	0.	38.	76.
				TIME	.00	12.00	12.00
HYDROGRAPH AT							
+	DIV15E	4.80	1	FLOW	171.	270.	270.
				TIME	12.08	11.92	11.75
ROUTED TO							
+	RC15E	4.80	1	FLOW	173.	274.	274.
				TIME	12.17	12.08	11.92
HYDROGRAPH AT							
+	CBDE	.17	1	FLOW	46.	73.	108.
				TIME	12.42	12.42	12.42
2 COMBINED AT							
+	CCBDE	4.97	1	FLOW	208.	325.	361.
				TIME	12.17	12.25	12.25
DIVERSION TO							
+	DCCBDE	4.97	1	FLOW	0.	25.	61.
				TIME	.00	12.25	12.25
HYDROGRAPH AT							
+	DIVbde	4.97	1	FLOW	208.	300.	300.
				TIME	12.17	12.00	11.92
ROUTED TO							
+	RCCBDE	4.97	1	FLOW	205.	302.	302.
				TIME	12.33	12.25	12.08
HYDROGRAPH AT							
+	RETCBD	.00	1	FLOW	0.	25.	61.
				TIME	.00	12.25	12.25
ROUTED TO							
+	RCDIV	.00	1	FLOW	0.	21.	60.
				TIME	.00	12.75	12.67
HYDROGRAPH AT							
+	BR19C	.39	1	FLOW	146.	243.	370.
				TIME	12.17	12.17	12.17
DIVERSION TO							
+	RETAIN	.39	1	FLOW	146.	243.	370.
				TIME	12.17	12.17	12.17
HYDROGRAPH AT							
+	RETAIN	.39	1	FLOW	0.	0.	101.
				TIME	.00	.00	12.67
3 COMBINED AT							
+	CBR19C	5.36	1	FLOW	205.	302.	460.
				TIME	12.33	12.25	12.67
ROUTED TO							
+	RBR19C	5.36	1	FLOW	204.	304.	439.
				TIME	12.42	12.33	12.83

```
DIVERSION TO
+                D1927      5.36    1   FLOW        156.     156.     156.
                                       TIME       12.25    12.08    12.00

HYDROGRAPH AT
+                DIV19C     5.36    1   FLOW         48.     148.     283.
                                       TIME       12.42    12.33    12.83

HYDROGRAPH AT
+                RETM5C      .00    1   FLOW          0.      26.     190.
                                       TIME        .00    12.08    12.08

HYDROGRAPH AT
+                RET15E      .00    1   FLOW          0.      38.      76.
                                       TIME        .00    12.00    12.00

 2 COMBINED AT
+                COMDIV      .00    1   FLOW          0.      50.     253.
                                       TIME        .00    12.00    12.00

ROUTED TO
+                RCDIV       .00    1   FLOW          0.      59.     249.
                                       TIME        .00    12.25    12.17

HYDROGRAPH AT
+                SMA15W      .29    1   FLOW        161.     250.     372.
                                       TIME       12.08    12.08    12.00

DIVERSION TO
+                RETAIN      .29    1   FLOW        161.     226.     289.
                                       TIME       12.08    11.92    11.83

HYDROGRAPH AT
+                RETAIN      .29    1   FLOW         87.     250.     372.
                                       TIME       12.25    12.08    12.00

 2 COMBINED AT
+                CSMA15      .29    1   FLOW         87.     250.     577.
                                       TIME       12.25    12.08    12.08

ROUTED TO
+                RSM19C      .29    1   FLOW         17.     125.     426.
                                       TIME       13.00    12.58    12.42

                                     ** PEAK STAGES IN FEET **
                                     1   STAGE    1139.35  1139.65  1140.04
                                         TIME       13.00    12.58    12.42

HYDROGRAPH AT
+                SMA19C      .16    1   FLOW         21.      37.      58.
                                       TIME       12.42    12.42    12.42

DIVERSION TO
+                RETAIN      .16    1   FLOW         21.      37.      58.
                                       TIME       12.42    12.42    12.42

HYDROGRAPH AT
+                RETAIN      .16    1   FLOW          0.       0.      19.
                                       TIME        .00      .00    14.00

 2 COMBINED AT
+                CPS19C      .45    1   FLOW         17.     125.     426.
                                       TIME       13.00    12.58    12.42

ROUTED TO
+                RRB27C      .45    1   FLOW          5.      29.     151.
                                       TIME       18.42    15.67    14.25

                                     ** PEAK STAGES IN FEET **
                                     1   STAGE    1107.92  1108.04  1108.23
                                         TIME       18.42    15.67    14.25

HYDROGRAPH AT
+                SM3CW       .31    1   FLOW         55.     134.     240.
                                       TIME       12.25    12.25    12.25

ROUTED TO
+                RSM3        .31    1   FLOW         35.     107.     209.
                                       TIME       12.75    12.50    12.50

                                     ** PEAK STAGES IN FEET **
                                     1   STAGE    1176.30  1176.55  1176.76
                                         TIME       12.75    12.50    12.50

HYDROGRAPH AT
+                SM4CW       .19    1   FLOW         47.      96.     162.
                                       TIME       12.08    12.08    12.08

ROUTED TO
+                RSM4        .19    1   FLOW         44.      91.     158.
                                       TIME       12.25    12.17    12.17

                                     ** PEAK STAGES IN FEET **
                                     1   STAGE    1168.63  1168.82  1169.01
                                         TIME       12.25    12.17    12.17
```

```
HYDROGRAPH AT
+                DRW2C      .53    1   FLOW        140.     246.     401.
                                       TIME       12.33    12.33    12.33

HYDROGRAPH AT
+                DRWC1C     .12    1   FLOW         20.      39.      63.
                                       TIME       12.25    12.25    12.25

DIVERSION TO
+                RETAIN     .12    1   FLOW         20.      39.      63.
                                       TIME       12.25    12.25    12.25

HYDROGRAPH AT
+                RETAIN     .12    1   FLOW          0.       0.      24.
                                       TIME        .00      .00    13.08

 4 COMBINED AT
+                 CSM4     1.15    1   FLOW        186.     394.     702.
                                       TIME       12.33    12.33    12.33

ROUTED TO
+                 RSM5     1.15    1   FLOW        174.     359.     653.
                                       TIME       12.42    12.50    12.42

                                   ** PEAK STAGES IN FEET **
                                   1   STAGE    1157.77  1158.53  1159.03
                                       TIME       12.42    12.50    12.42

HYDROGRAPH AT
+                 DR1C      .16    1   FLOW         76.     109.     152.
                                       TIME       12.25    12.25    12.25

HYDROGRAPH AT
+                 WC1A      .25    1   FLOW        153.     205.     274.
                                       TIME       12.25    12.25    12.25

ROUTED TO
+                 RSM6      .25    1   FLOW        148.     199.     268.
                                       TIME       12.25    12.25    12.25

                                   ** PEAK STAGES IN FEET **
                                   1   STAGE    1147.28  1147.49  1147.73
                                       TIME       12.25    12.25    12.25

HYDROGRAPH AT
+                 DR2C      .05    1   FLOW         16.      29.      46.
                                       TIME       12.17    12.17    12.17

 4 COMBINED AT
+                CPDR2C    1.61    1   FLOW        395.     638.    1054.
                                       TIME       12.33    12.33    12.33

ROUTED TO
+                RRB27C    1.61    1   FLOW        262.     481.     825.
                                       TIME       13.83    13.58    13.33

                                   ** PEAK STAGES IN FEET **
                                   1   STAGE    1108.34  1108.52  1108.74
                                       TIME       13.83    13.58    13.33

HYDROGRAPH AT
+                 BR27C      .78    1   FLOW        165.     296.     466.
                                       TIME       12.33    12.33    12.25

DIVERSION TO
+                RETAIN      .78    1   FLOW        165.     296.     466.
                                       TIME       12.33    12.33    12.25

HYDROGRAPH AT
+                RETAIN      .78    1   FLOW          0.       0.     190.
                                       TIME        .00      .00    13.00

 4 COMBINED AT
+                 C27C      8.20    1   FLOW        262.     482.    1015.
                                       TIME       13.83    13.58    13.33

HYDROGRAPH AT
+                 WC2A      .08    1   FLOW         43.      57.      78.
                                       TIME       12.25    12.25    12.25

ROUTED TO
+                RD27.1      .08    1   FLOW         41.      56.      76.
                                       TIME       12.33    12.25    12.25

                                   ** PEAK STAGES IN FEET **
                                   1   STAGE    1147.92  1148.02  1148.15
                                       TIME       12.33    12.25    12.25

HYDROGRAPH AT
+                WC2.1A      .08    1   FLOW         22.      43.      70.
                                       TIME       12.17    12.17    12.17

ROUTED TO
+                RD27.2      .08    1   FLOW         21.      41.      67.
```

```
                                        TIME          12.25     12.25     12.25

                                    ** PEAK STAGES IN FEET **
                                    1   STAGE      1148.63   1148.83   1149.00
                                        TIME          12.25     12.25     12.25

 2 COMBINED AT
+                  CD27.1       .16   1   FLOW           62.       97.      143.
                                        TIME          12.25     12.25     12.25

 ROUTED TO
+                  RD27.3       .16   1   FLOW           62.       95.      141.
                                        TIME          12.33     12.33     12.25

                                    ** PEAK STAGES IN FEET **
                                    1   STAGE      1142.19   1142.38   1142.56
                                        TIME          12.33     12.33     12.25

 HYDROGRAPH AT
+                    WC3A       .01   1   FLOW            8.       11.       15.
                                        TIME          12.17     12.17     12.17

 ROUTED TO
+                  RD27.4       .01   1   FLOW            8.       11.       15.
                                        TIME          12.25     12.25     12.25

                                    ** PEAK STAGES IN FEET **
                                    1   STAGE      1142.10   1142.14   1142.19
                                        TIME          12.25     12.25     12.25

 2 COMBINED AT
+                  CD27.2       .17   1   FLOW           69.      105.      155.
                                        TIME          12.33     12.25     12.25

 ROUTED TO
+                  RD27.5       .17   1   FLOW           64.       99.      146.
                                        TIME          12.42     12.42     12.33

                                    ** PEAK STAGES IN FEET **
                                    1   STAGE      1122.12   1122.33   1122.49
                                        TIME          12.42     12.42     12.33

 HYDROGRAPH AT
+                    WC4A       .36   1   FLOW          152.      245.      369.
                                        TIME          12.17     12.17     12.17

 ROUTED TO
+                  RD27.6       .36   1   FLOW          139.      233.      351.
                                        TIME          12.42     12.33     12.33

                                    ** PEAK STAGES IN FEET **
                                    1   STAGE      1140.48   1140.59   1140.69
                                        TIME          12.42     12.33     12.33

 2 COMBINED AT
+                  CD27.3       .53   1   FLOW          203.      329.      498.
                                        TIME          12.42     12.33     12.33

 ROUTED TO
+                  RD27.7       .53   1   FLOW          188.      312.      484.
                                        TIME          12.50     12.50     12.42

                                    ** PEAK STAGES IN FEET **
                                    1   STAGE      1116.01   1116.15   1116.30
                                        TIME          12.50     12.50     12.42

 HYDROGRAPH AT
+                   DR27C       .23   1   FLOW           28.       82.      157.
                                        TIME          12.33     12.25     12.25

 HYDROGRAPH AT
+                    WC5A       .42   1   FLOW           96.      164.      290.
                                        TIME          12.25     12.33     12.25

 3 COMBINED AT
+                  CD27.4      1.18   1   FLOW          282.      525.      891.
                                        TIME          12.50     12.42     12.33

 ROUTED TO
+                  ST27.4      1.18   1   FLOW           18.       29.       45.
                                        TIME          14.50     14.25     14.08

                                    ** PEAK STAGES IN FEET **
                                    1   STAGE          1.42      2.25      3.50
                                        TIME          14.50     14.25     14.08

 ROUTED TO
+                  RST274      1.18   1   FLOW           18.       29.       45.
                                        TIME          14.58     14.33     14.17

 HYDROGRAPH AT
+                  BR35CE       .23   1   FLOW           71.      125.      194.
                                        TIME          12.17     12.17     12.17

 DIVERSION TO
```

```
+                    RETAIN       .23     1   FLOW          71.     125.     194.
                                             TIME        12.17    12.17    12.17

 HYDROGRAPH AT
+                    RETAIN       .23     1   FLOW           0.       0.      54.
                                             TIME         .00      .00    12.75

  2 COMBINED AT
+                    C35CE       1.41     1   FLOW          18.      29.      87.
                                             TIME        14.58    14.33    12.75

 ROUTED TO
+                    R35CE       1.41     1   FLOW          18.      29.      85.
                                             TIME        14.67    14.42    12.83

 DIVERSION TO
+                    D35CE       1.41     1   FLOW          18.      29.      43.
                                             TIME        14.67    14.42    12.75

 HYDROGRAPH AT
+                    D35CE       1.41     1   FLOW           0.       0.      42.
                                             TIME         .00      .00    12.83

  2 COMBINED AT
+                    C27BAS      9.61     1   FLOW         262.     482.    1028.
                                             TIME        13.83    13.58    13.33

 ROUTED TO
+                    ST27C       9.61     1   FLOW          13.      24.      45.
                                             TIME        21.33    19.58    18.25

                                         ** PEAK STAGES IN FEET **
                                         1   STAGE        1.06     1.88     3.55
                                             TIME        21.50    19.67    18.33

 HYDROGRAPH AT
+                    D1927        .00     1   FLOW         156.     156.     156.
                                             TIME        12.25    12.08    12.00

 HYDROGRAPH AT
+                    D35CE        .00     1   FLOW          18.      29.      43.
                                             TIME        14.67    14.42    12.75

  3 COMBINED AT
+                    CPB27C      9.61     1   FLOW         168.     192.     239.
                                             TIME        12.75    13.58    15.42

 ROUTED TO
+                    RPB27C      9.61     1   FLOW         168.     192.     239.
                                             TIME        12.83    13.67    15.50

 HYDROGRAPH AT
+                    BR35CW       .50     1   FLOW         170.     265.     391.
                                             TIME        12.25    12.25    12.25

 DIVERSION TO
+                    RETAIN       .50     1   FLOW         170.     227.     222.
                                             TIME        12.25    12.08    12.00

 HYDROGRAPH AT
+                    RETAIN       .50     1   FLOW         135.     265.     391.
                                             TIME        12.50    12.25    12.25

 HYDROGRAPH AT
+                    BR35C1       .55     1   FLOW         113.     205.     324.
                                             TIME        12.33    12.33    12.33

 DIVERSION TO
+                    RETAIN       .55     1   FLOW         113.     205.     324.
                                             TIME        12.33    12.33    12.33

 HYDROGRAPH AT
+                    RETAIN       .55     1   FLOW           0.       0.     151.
                                             TIME         .00      .00    12.92

  3 COMBINED AT
+                    CPB352     10.66     1   FLOW         298.     432.     554.
                                             TIME        12.50    12.25    12.25

 ROUTED TO
+                    RPB352     10.66     1   FLOW         290.     425.     553.
                                             TIME        12.50    12.33    12.25

 HYDROGRAPH AT
+                     WC6A        .01     1   FLOW           8.      12.      17.
                                             TIME        12.08    12.08    12.08

 ROUTED TO
+                    RD35.2       .01     1   FLOW           4.       5.       7.
                                             TIME        13.67    13.67    13.42

                                         ** PEAK STAGES IN FEET **
                                         1   STAGE     1117.91  1117.96  1118.01
                                             TIME        13.67    13.67    13.42
```

```
ROUTED TO
+                RD35.3      .01    1   FLOW          3.       4.       0.
                                        TIME       14.92    14.75    14.58

                                    ** PEAK STAGES IN FEET **
                                    1   STAGE    1089.74  1089.76  1089.79
                                        TIME       14.92    14.75    14.58

HYDROGRAPH AT
+                 WC7A      .05    1   FLOW         29.      41.      57.
                                        TIME       12.17    12.17    12.17

ROUTED TO
+                RD35.4      .05    1   FLOW         25.      36.      51.
                                        TIME       12.42    12.42    12.42

                                    ** PEAK STAGES IN FEET **
                                    1   STAGE    1126.27  1126.34  1126.41
                                        TIME       12.42    12.42    12.42

HYDROGRAPH AT
+                 WC8A      .35    1   FLOW        122.     201.     307.
                                        TIME       12.25    12.25    12.25

ROUTED TO
+                RD35.5      .35    1   FLOW        112.     185.     287.
                                        TIME       12.42    12.42    12.33

                                    ** PEAK STAGES IN FEET **
                                    1   STAGE    1137.55  1137.67  1137.78
                                        TIME       12.42    12.42    12.33

 2 COMBINED AT
+                CD35.3      .40    1   FLOW        137.     222.     338.
                                        TIME       12.42    12.42    12.33

ROUTED TO
+                RD35.6      .40    1   FLOW        133.     217.     336.
                                        TIME       12.50    12.42    12.42

                                    ** PEAK STAGES IN FEET **
                                    1   STAGE    1101.73  1101.84  1101.97
                                        TIME       12.50    12.42    12.42

HYDROGRAPH AT
+                 WC9A      .03    1   FLOW         16.      21.      28.
                                        TIME       12.17    12.17    12.17

ROUTED TO
+                RD35.7      .03    1   FLOW         15.      20.      27.
                                        TIME       12.25    12.25    12.25

                                    ** PEAK STAGES IN FEET **
                                    1   STAGE    1128.52  1128.58  1128.65
                                        TIME       12.25    12.25    12.25

HYDROGRAPH AT
+                WC10A      .02    1   FLOW         16.      21.      28.
                                        TIME       12.08    12.08    12.08

ROUTED TO
+                RD35.8      .02    1   FLOW         15.      20.      26.
                                        TIME       12.17    12.17    12.17

                                    ** PEAK STAGES IN FEET **
                                    1   STAGE    1132.20  1132.23  1132.27
                                        TIME       12.17    12.17    12.17

 2 COMBINED AT
+                CD35.5      .05    1   FLOW         29.      39.      52.
                                        TIME       12.25    12.17    12.17

ROUTED TO
+                RD35.9      .05    1   FLOW         27.      37.      50.
                                        TIME       12.33    12.33    12.33

                                    ** PEAK STAGES IN FEET **
                                    1   STAGE    1115.09  1115.13  1115.17
                                        TIME       12.33    12.33    12.33

HYDROGRAPH AT
+                WC11A      .29    1   FLOW        143.     207.     295.
                                        TIME       12.17    12.17    12.17

ROUTED TO
+                RD3510      .29    1   FLOW        131.     190.     274.
                                        TIME       12.33    12.33    12.25

                                    ** PEAK STAGES IN FEET **
                                    1   STAGE    1131.74  1131.82  1131.90
                                        TIME       12.33    12.33    12.25

HYDROGRAPH AT
+                WC12A      .26    1   FLOW        111.     183.     280.
                                        TIME       12.17    12.17    12.17
```

```
 ROUTED TO
+                RD3511        .26     1   FLOW          100.      169.      262.
                                           TIME        12.25     12.25     12.25

                                       ** PEAK STAGES IN FEET **
                                       1   STAGE     1143.79   1143.89   1143.99
                                           TIME        12.25     12.25     12.25

  2 COMBINED AT
+                CD35.7        .55     1   FLOW          229.      358.      536.
                                           TIME        12.25     12.25     12.25

 ROUTED TO
+                RD3512        .55     1   FLOW          214.      332.      499.
                                           TIME        12.42     12.42     12.33

                                       ** PEAK STAGES IN FEET **
                                       1   STAGE     1121.76   1121.95   1122.15
                                           TIME        12.42     12.42     12.33

  2 COMBINED AT
+                CD35.6        .59     1   FLOW          241.      368.      549.
                                           TIME        12.42     12.42     12.33

 ROUTED TO
+                RD3513        .59     1   FLOW          228.      354.      530.
                                           TIME        12.50     12.50     12.42

                                       ** PEAK STAGES IN FEET **
                                       1   STAGE     1101.78   1101.88   1101.99
                                           TIME        12.50     12.50     12.42

  2 COMBINED AT
+                CD35.4       1.00     1   FLOW          361.      569.      867.
                                           TIME        12.50     12.50     12.42

 ROUTED TO
+                RD3514       1.00     1   FLOW          330.      530.      808.
                                           TIME        12.75     12.67     12.67

                                       ** PEAK STAGES IN FEET **
                                       1   STAGE     1193.32   1193.52   1193.75
                                           TIME        12.75     12.67     12.67

 HYDROGRAPH AT
+                 WC15A        .36     1   FLOW          193.      285.      411.
                                           TIME        12.17     12.17     12.17

 ROUTED TO
+                RD3515        .36     1   FLOW          187.      277.      403.
                                           TIME        12.17     12.17     12.17

                                       ** PEAK STAGES IN FEET **
                                       1   STAGE     1134.15   1134.46   1134.77
                                           TIME        12.17     12.17     12.17

 HYDROGRAPH AT
+                  PM2A        .07     1   FLOW           26.       44.       68.
                                           TIME        12.17     12.17     12.17

  2 COMBINED AT
+                CD35.8        .43     1   FLOW          212.      321.      471.
                                           TIME        12.17     12.17     12.17

 ROUTED TO
+                RD3516        .43     1   FLOW          199.      307.      455.
                                           TIME        12.25     12.25     12.25

                                       ** PEAK STAGES IN FEET **
                                       1   STAGE     1122.82   1123.06   1123.33
                                           TIME        12.25     12.25     12.25

 HYDROGRAPH AT
+                 WC13A        .01     1   FLOW            9.       12.       16.
                                           TIME        12.08     12.08     12.08

 ROUTED TO
+                RD3517        .01     1   FLOW            8.       11.       15.
                                           TIME        12.33     12.33     12.33

                                       ** PEAK STAGES IN FEET **
                                       1   STAGE     1131.17   1131.19   1131.21
                                           TIME        12.33     12.33     12.33

 HYDROGRAPH AT
+                 WC14A        .05     1   FLOW           12.       22.       37.
                                           TIME        12.25     12.25     12.17

 ROUTED TO
+                RD3518        .05     1   FLOW            9.       19.       32.
                                           TIME        12.75     12.58     12.58

                                       ** PEAK STAGES IN FEET **
                                       1   STAGE     1133.64   1133.72   1133.78
```

```
                                        TIME          12.75     12.58     12.58

 HYDROGRAPH AT
+                  PM1A       .07    1  FLOW           22.       41.       64.
                                       TIME          12.17     12.17     12.17

  4 COMBINED AT
+                 CD35.9      .56    1  FLOW          230.      361.      542.
                                       TIME          12.25     12.25     12.25

 ROUTED TO
+                 RD3519      .56    1  FLOW          150.      246.      387.
                                       TIME          12.58     12.50     12.50

                                     ** PEAK STAGES IN FEET **
                                     1  STAGE      1101.87   1101.98   1102.11
                                       TIME          12.58     12.50     12.50

 HYDROGRAPH AT
+                  DR35C       .60    1  FLOW          146.      273.      435.
                                       TIME          12.42     12.42     12.42

  4 COMBINED AT
+                 CD35.2      2.17    1  FLOW          573.      976.     1551.
                                       TIME          12.67     12.58     12.58

 ROUTED TO
+                    STG      2.17    1  FLOW           33.       50.       50.
                                       TIME          15.83     15.42     12.92

 ROUTED TO
+                 RSTG39      2.17    1  FLOW           33.       50.       50.
                                       TIME          16.08     15.67     13.25

  2 COMBINED AT
+                   CG39     12.83    1  FLOW          297.      432.      562.
                                       TIME          12.58     12.33     12.25

 ROUTED TO
+                 RSTG43     12.83    1  FLOW          297.      419.      559.
                                       TIME          12.58     12.33     12.25

 HYDROGRAPH AT
+                 SMA43C       .13    1  FLOW           46.       81.      127.
                                       TIME          12.08     12.08     12.08

 DIVERSION TO
+                 RETAIN       .13    1  FLOW           46.       81.      127.
                                       TIME          12.08     12.08     12.08

 HYDROGRAPH AT
+                 RETAIN       .13    1  FLOW            0.        0.       37.
                                       TIME            .00       .00     12.58

 ROUTED TO
+                 RB43C2       .13    1  FLOW            7.        7.       20.
                                       TIME            .08       .08     12.92

                                     ** PEAK STAGES IN FEET **
                                     1  STAGE      1043.33   1043.33   1043.44
                                       TIME            .08       .08     12.92

 HYDROGRAPH AT
+                  BR43C       .35    1  FLOW           79.      119.      171.
                                       TIME          12.42     12.42     12.42

 DIVERSION TO
+                 RETAIN       .35    1  FLOW           79.      119.      171.
                                       TIME          12.42     12.42     12.42

 HYDROGRAPH AT
+                 RETAIN       .35    1  FLOW            0.        0.       48.
                                       TIME            .00       .00     14.17

  3 COMBINED AT
+                 CBR43C     13.31    1  FLOW          297.      419.      559.
                                       TIME          12.58     12.33     12.25

 ROUTED TO
+                  STR43     13.31    1  FLOW          169.      212.      264.
                                       TIME          23.00     24.33     25.42

                                     ** PEAK STAGES IN FEET **
                                     1  STAGE      1029.81   1032.10   1035.95
                                       TIME          23.00     24.33     25.33

 ROUTED TO
+                 RBR43C     13.31    1  FLOW          169.      212.      264.
                                       TIME          23.08     24.42     25.50

 HYDROGRAPH AT
+                  RR35C      1.89    1  FLOW         1015.     1465.     2063.
                                       TIME          12.25     12.17     12.17

 DIVERSION TO
```

Q @ Baseline + 43rd,

```
+                RETAIN      1.89     1   FLOW        1015.    1465.    2063.
                                          TIME        12.25    12.17    12.17

HYDROGRAPH AT
+                RETAIN      1.89     1   FLOW           0.     103.     124.
                                          TIME         .00    13.25    12.50

ROUTED TO
+                RRS37C      1.89     1   FLOW           0.      39.     506.
                                          TIME         .00    15.42    13.42

                                     ** PEAK STAGES IN FEET **
                                     1   STAGE     1025.00  1025.35  1026.21
                                          TIME         .00    15.42    13.42

HYDROGRAPH AT
+                 SA37C       .59     1   FLOW         328.     454.     624.
                                          TIME        12.25    12.25    12.25

DIVERSION TO
+                RETAIN       .59     1   FLOW         328.     454.     614.
                                          TIME        12.25    12.25    12.17

HYDROGRAPH AT
+                RETAIN       .59     1   FLOW          78.     308.     580.
                                          TIME        12.92    12.50    12.33

 2 COMBINED AT
+                CPS37C      2.48     1   FLOW          78.     308.     580.
                                          TIME        12.92    12.50    12.33

ROUTED TO
+                RAV431      2.48     1   FLOW          11.      62.     396.
                                          TIME        18.00    15.50    14.92

                                     ** PEAK STAGES IN FEET **
                                     1   STAGE     1020.88  1021.15  1021.78
                                          TIME        18.00    15.50    14.92

HYDROGRAPH AT
+                AVR43C      1.03     1   FLOW         485.     726.    1038.
                                          TIME        12.17    12.17    12.17

DIVERSION TO
+                RETAIN      1.03     1   FLOW         485.     726.     953.
                                          TIME        12.17    12.17    12.08

HYDROGRAPH AT
+                RETAIN      1.03     1   FLOW         164.     600.    1022.
                                          TIME        12.75    12.33    12.25

 2 COMBINED AT
+                CAV43C      3.51     1   FLOW         164.     600.    1022.
                                          TIME        12.75    12.33    12.25

ROUTED TO
+                STOR43      3.51     1   FLOW           0.       0.      32.
                                          TIME         .00      .00    22.50

                                     ** PEAK STAGES IN FEET **
                                     1   STAGE     1006.85  1013.88  1019.15
                                          TIME        49.92    52.17    22.50

 2 COMBINED AT
+                 CST43     16.82     1   FLOW         169.     212.     295.
                                          TIME        23.08    24.42    24.25
```

⟸ @ Southern Av + 43rd Av

```
ROUTED TO
+                RAV43B     16.82     1   FLOW         169.     212.     295.
                                          TIME        23.17    24.50    24.33
1
                                     SUMMARY OF KINEMATIC WAVE - MUSKINGUM-CUNGE ROUTING
                                         (FLOW IS DIRECT RUNOFF WITHOUT BASE FLOW)
                                                                          INTERPOLATED TO
                                                                       COMPUTATION INTERVAL
          ISTAQ    ELEMENT       DT       PEAK    TIME TO      VOLUME      DT      PEAK    TIME TO      VOLUME
                                                    PEAK                                     PEAK

                                (MIN)     (CFS)     (MIN)      (IN)     (MIN)    (CFS)     (MIN)        (IN)

        FOR PLAN = 1  RATIO=  .00
          RSMJCE  MANE          2.81    113.79    982.76      1.34      5.00   113.79    980.00        1.34

CONTINUITY SUMMARY (AC-FT) - INFLOW= .3195E+03 EXCESS= .0000E+00 OUTFLOW= .3195E+03 BASIN STORAGE= .5535E-02 PERCENT ERROR=    .0

        FOR PLAN = 1  RATIO=  .00
          RSMJCE  MANE          2.63    154.36    727.09      1.81      5.00   151.68    725.00        1.81

CONTINUITY SUMMARY (AC-FT) - INFLOW= .4313E+03 EXCESS= .0000E+00 OUTFLOW= .4313E+03 BASIN STORAGE= .1686E-01 PERCENT ERROR=    .0

        FOR PLAN = 1  RATIO=  .00
```

FLOOD CONTROL DISTRICT OF MARICOPA COUNTY

PUMP STATION FOR 43RD AVENUE STORM DRAIN
DESIGN BASIS REPORT

TABLE OF CONTENTS

Page

1.0 INTRODUCTION 1

2.0 PURPOSE 1

3.0 ALTERNATIVES 1
- 3.1 ALTERNATE NO. 1 - CONTINUOUS PUMPING OVER 72 HOUR PERIOD . . . 9
  - 3.1.1 Description of Alternate 9
  - 3.1.2 Capital Cost 9
  - 3.1.3 Operating Cost 9
  - 3.1.4 Replacement Cost 10
- 3.2 ALTERNATE NO. 2 - PUMPING UTILIZING OFF-PEAK POWER COST 10
  - 3.2.1 Description of Alternate 10
  - 3.2.2 Capital Cost of Alternate No. 2 11
  - 3.2.3 Operating Cost 11
  - 3.2.4 Replacement Cost 11
- 3.3 RECOMMENDATION 11

4.0 DESIGN CRITERIA 12

APPENDICES

FIGURES

No.	Title	Page
1	Vicinity Map	2
2	System Schematic Profile	4
3	Pump Station Site Plan	5
4	Section Pump Station/Connection Pipe	6
5	Pump Station Floor Plan	7
6	Section AA - Pump Station	8

Registered Professional Engineer (Civil) CERTIFICATE NO. 16988 KENDALL R. KENNEDY Date Signed 10/26/98 ARIZONA, U.S.A.

Registered Professional Engineer (Civil) CERTIFICATE NO. 8449 GEORGE E. SHIRLEY Date Signed 10/21/98 ARIZONA U.S.A.

1.0 INTRODUCTION

The Flood Control District of Maricopa County (District) is designing a major storm drain project for collection and conveyance of storm water in an area bounded by 7th Avenue, 43rd Avenue, the Salt River and South Mountain. The project on 43rd Avenue consists of a 72-inch and 114-inch storm drain trunk line extending from Baseline Road to the Salt River. A storm water retention basin at Southern Avenue is also in the project. The outlet at the Salt River is elevated, making the trunk line flow full rather than as a gravity drain. After flows are completed, a pump station located at the Salt River is required to dewater the pipeline and retention basin. Figure 1 is a Vicinity Map showing the location of the project and its elements.

District staff is designing the trunk line, retention basin and outlet to Salt River. Carollo Engineers has been retained to design the pump station portion of the project. A single set of bidding documents will be prepared for the entire project consisting of storm drain trunk lines, retention basin, Salt River discharge pipe and pump station.

The storm drain system will be operated and maintained by the City of Phoenix after construction is complete.

2.0 PURPOSE

The purpose of this Design Basis Report is to develop and evaluate feasible alternatives for, and recommend sizing of, the pump station to dewater the storm drain trunk line and retention basin. Evaluation parameters are to include operation and maintenance costs as well as capital costs. The District is interested in an assessment of debris and grit accumulation effects on pump station operation.

In addition, this report is to tabulate design criteria for the recommended alternative, including land requirements on the designated site on property parcel on the east side of 43rd Avenue between Wier Avenue and Broadway Road.

3.0 ALTERNATIVES

Based upon discussions with the District and other agencies, including the City of Phoenix and Arizona Department of Transportation, and review of available reference documents (See Appendix) on storm drain pumping station design, the critical parameter for sizing a pump station is time to dewater the stored volumes in pipeline and retention basin after inflows from a storm event have concluded. The District recommended that dewatering be completed within 72 hours of the storm event.

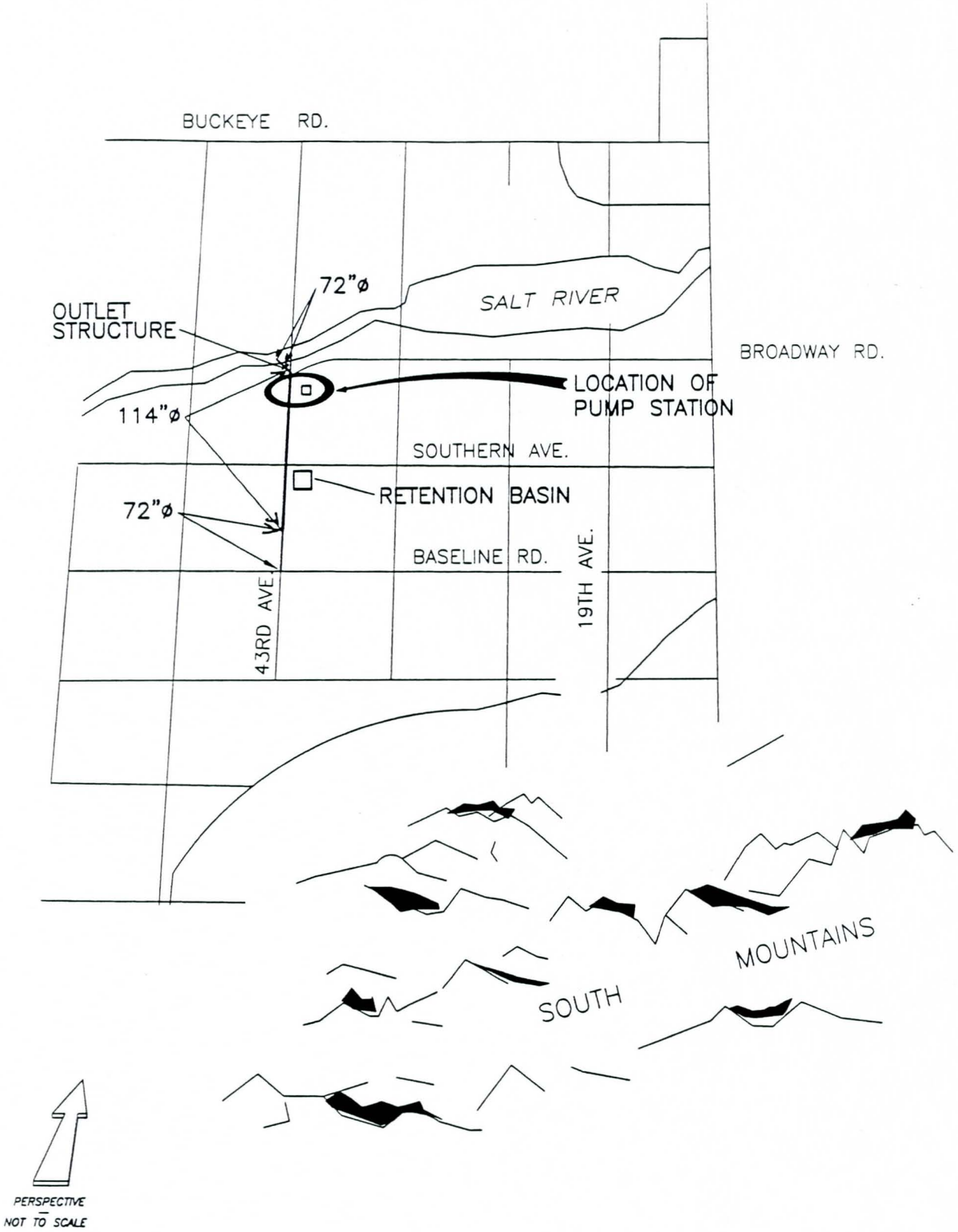

VICINITY MAP

carollo engineers

FLOOD CONTROL DISTRICT OF MARICOPA COUNTY
PUMP STATION FOR 43rd AVENUE OUTFALL
FCD PROJECT NO. 117020
FIGURE 1

Q:\FCDMC\FIGURE\ Fig1.dwg 10/19/98 10:45 ltrainor

This time is consistent with experience of ADOT in dewatering the tunnels that drain the I-10 Freeway at the Inner Loop in Central Phoenix. In that project, criteria to establish time to dewater included considerations such as potential for biological activity in stored water and accumulated debris generating unacceptable odors.

The calculated volume of water stored within the system is approximately 19.8 million gallons that must be removed within 72 hours. See attached System Schematic Profile Diagram at Figure 2.

Based upon considerations of electric power costs from Salt River Project rate schedules, there are two obvious approaches to sizing pumps. One is to use the rate schedule for normal, full-time service, and the second is to utilize off-peak service. Off-peak power rates require utilization per a time schedule that is approximately available 12 hours/day (Seasonal differences exist in winter and summer periods. The current rate schedule is included in the Appendix).

For both alternatives considered in this report, components consist of a junction structure on the storm drain trunk line, an inlet suction pipeline, the pump station with submersible pumps, and an outlet pipeline that discharges into an outfall to the Salt River. Location of the junction structure will be established when limits of parcel for pump station is defined between Wier and Broadway Road. See Figure 3 for proposed site location.

The junction structure on the 114-inch diameter storm drain is planned to be a box structure, with the suction pipeline extending to the east. Suction pipeline inlet will include a fixed bar screen to exclude trash. See Figure 4. The pump station will consist of submersible pumps in a wet well. See Figures 5 and 6.

Outlet pipeline from the pump station will discharge into an existing 48-inch storm water pipe located in 43rd Avenue at Broadway Road.

The following conditions are assumed in the development and evaluation of alternatives.

- Ten storm events occur per year requiring activation of the pump station.
- Electric power rates and customer charges are per Salt River Project Time-of-Use Plan (E-32).
- Normal operation is based on one site visit per month by operator (4 hours/month). Labor rate is $50/hour.
- Normal maintenance is based on 80 hours/year at $50/hour.
- Pump lifetime is assumed at 20 years for calculation of equipment replacement fund. (Use same lifetime based on larger pump with half the hours of operation of smaller pump, but having three times the number of starting cycles).
- Station life is estimated at 40 years.
- Rate of return on investment is 8% with inflation rate of 3%, resulting in an effective interest rate of 4.85% (round to 5%).

Q:\FCDMC\FIGURE\ Fig2.dwg 10/19/98 10:48 ttrainor

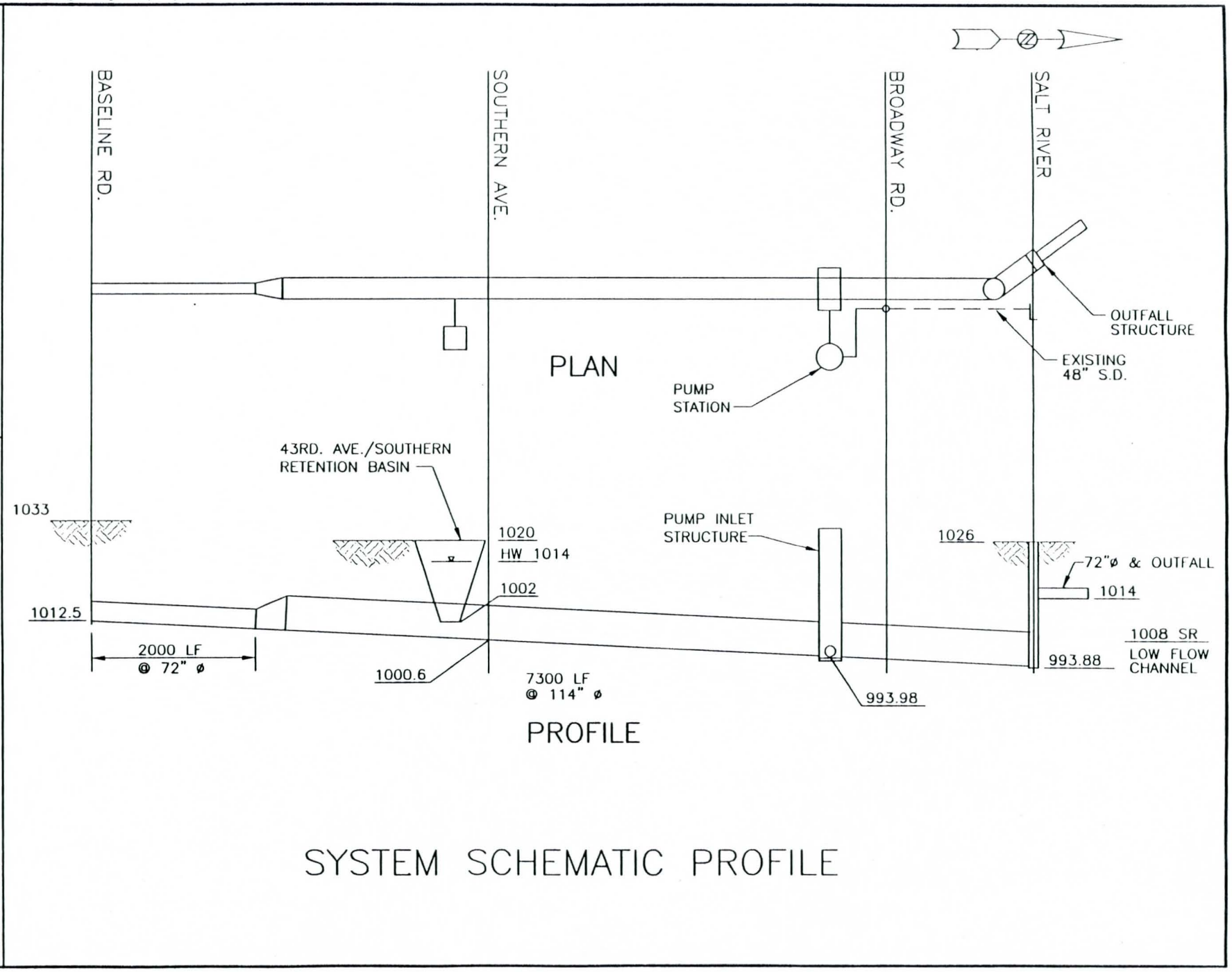

SYSTEM SCHEMATIC PROFILE

carollo engineers

FLOOD CONTROL DISTRICT OF MARICOPA COUNTY
PUMP STATION FOR 43rd AVENUE OUTFALL
FCD PROJECT NO. 117020
FIGURE 2

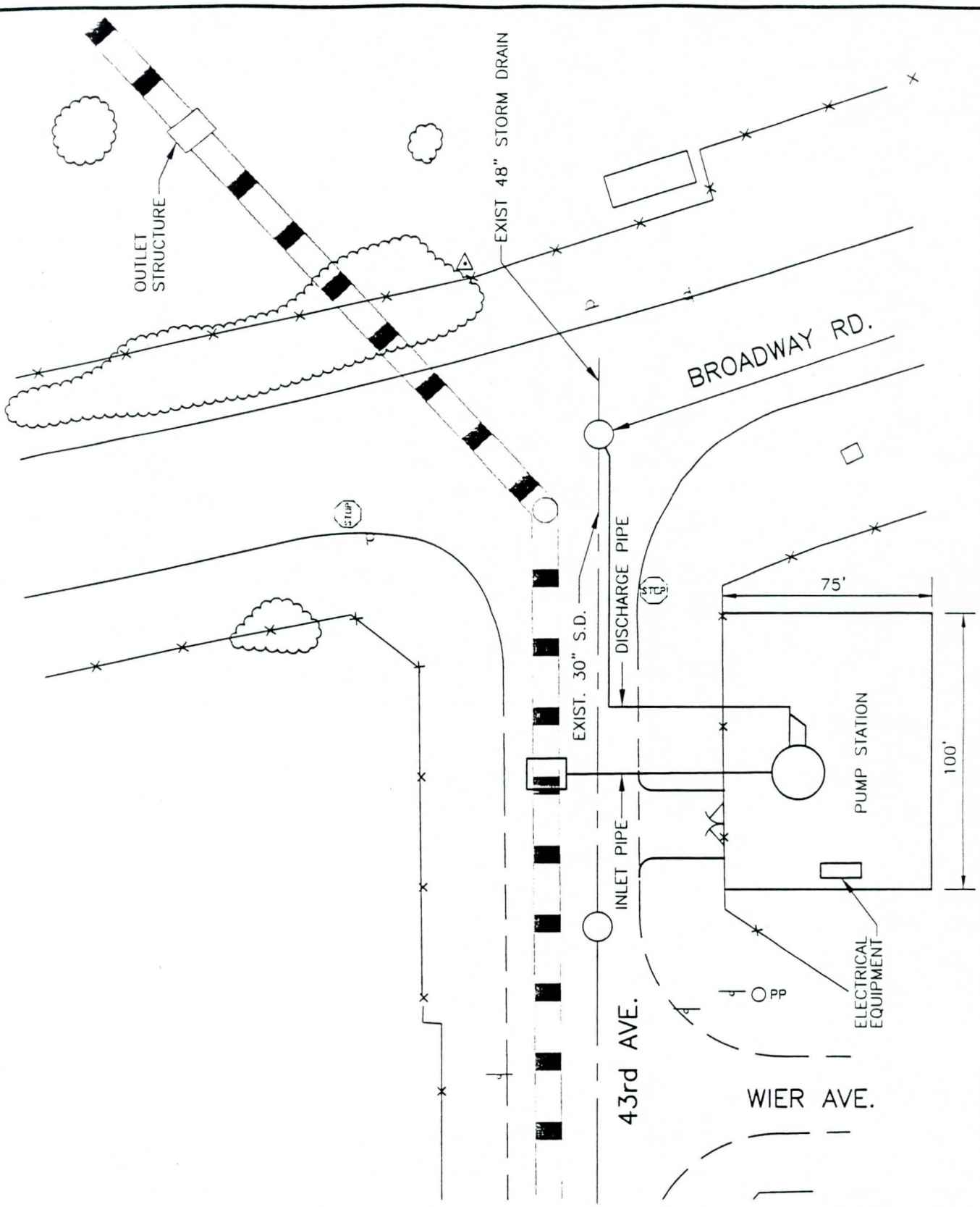

PUMP STATION SITE PLAN

carollo engineers

FLOOD CONTROL DISTRICT OF MARICOPA COUNTY
PUMP STATION FOR 43rd AVENUE OUTFALL
FCD PROJECT NO. 117020
FIGURE 3

Q:\FCDMC\FIGURE\ Fig3.dwg 10/19/98 10:59 ltrainor

Q:\FCDMC\FIGURE\ Fig4.dwg 10/19/98 11:35 ttrainor

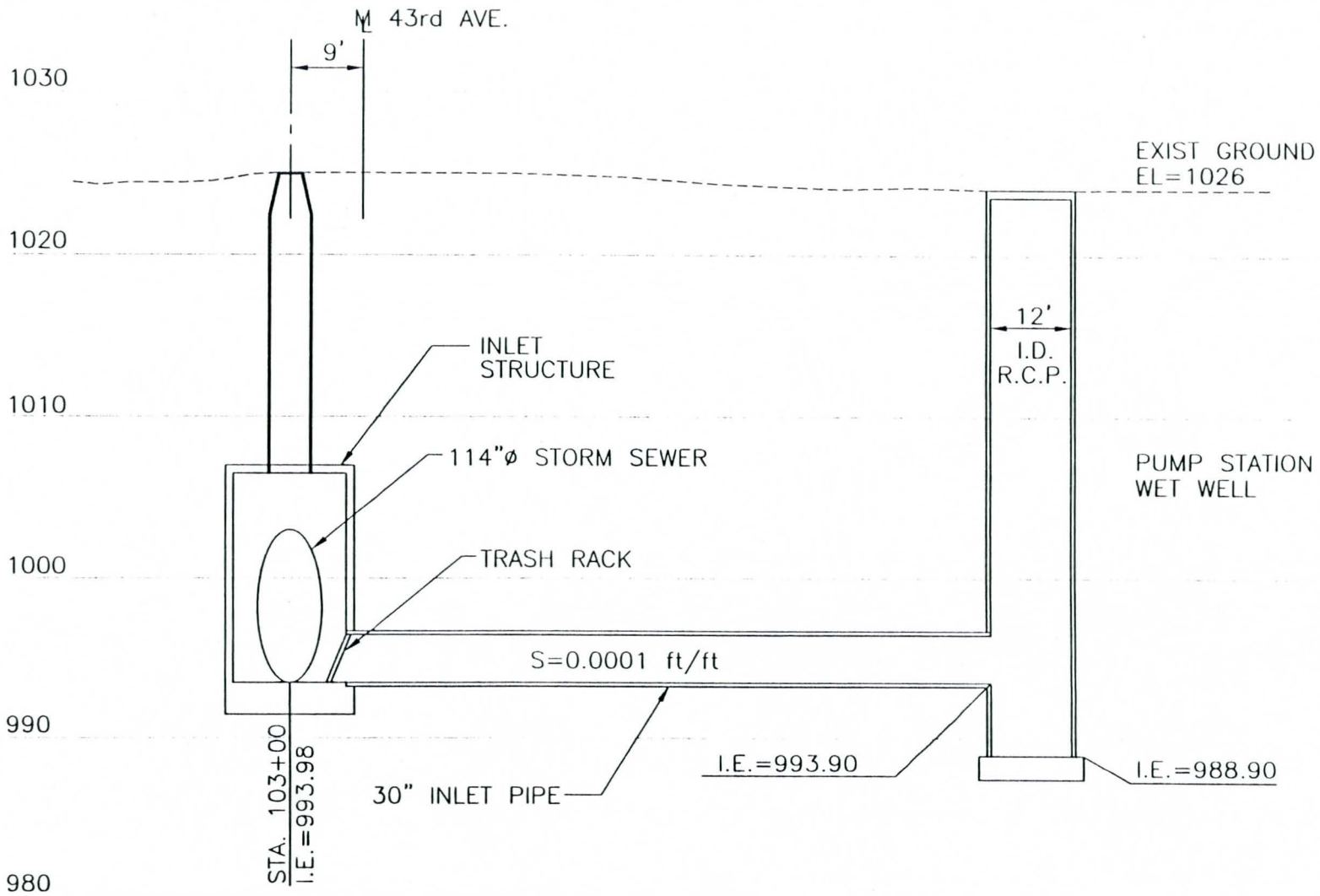

SECTION PUMP STATION/CONNECTION PIPE

carollo engineers

FLOOD CONTROL DISTRICT OF MARICOPA COUNTY
PUMP STATION FOR 43rd AVENUE OUTFALL
FCD PROJECT NO. 117020
FIGURE 4

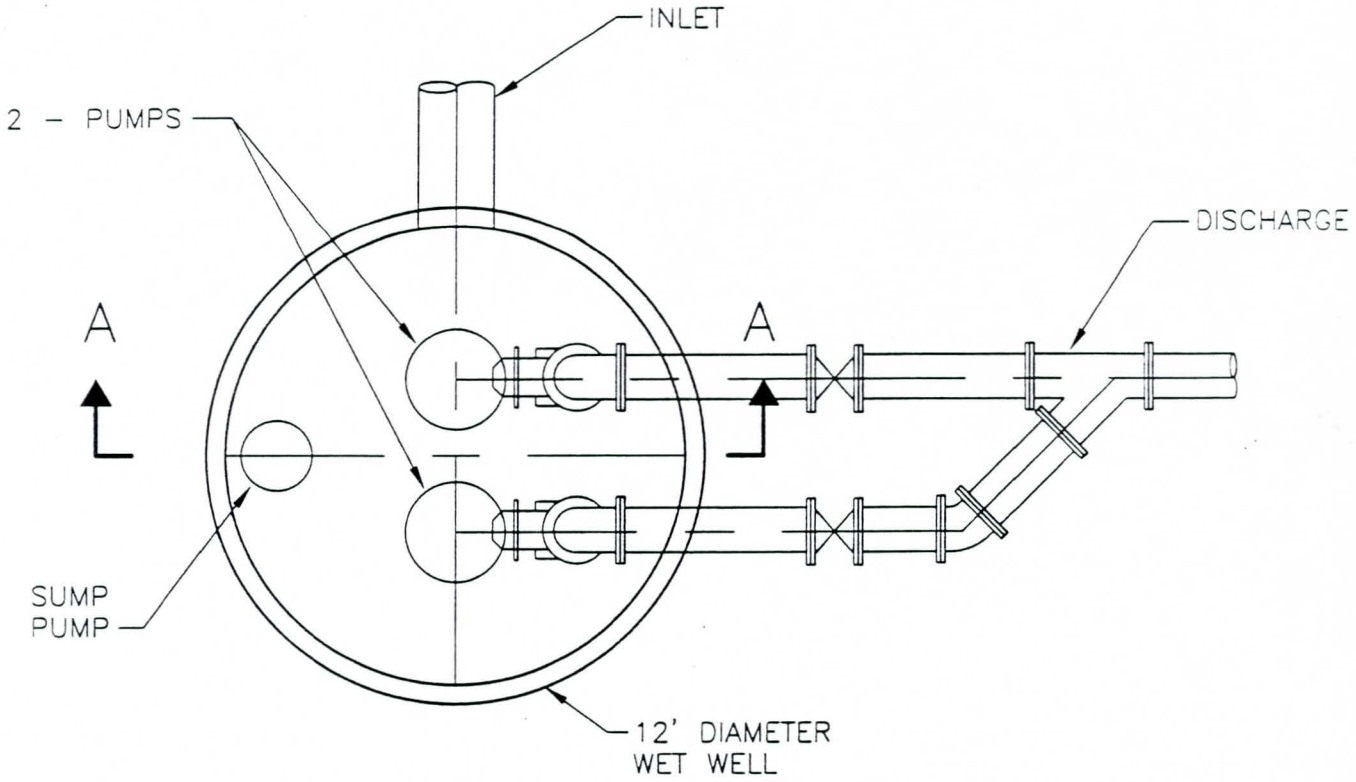

PUMP STATION FLOOR PLAN

Q:\FCDMC\FIGURE\ Fig5.dwg 10/19/98 11:39 ttrainor

carollo engineers

FLOOD CONTROL DISTRICT OF MARICOPA COUNTY
PUMP STATION FOR 43rd AVENUE OUTFALL
FCD PROJECT NO. 117020
FIGURE 5

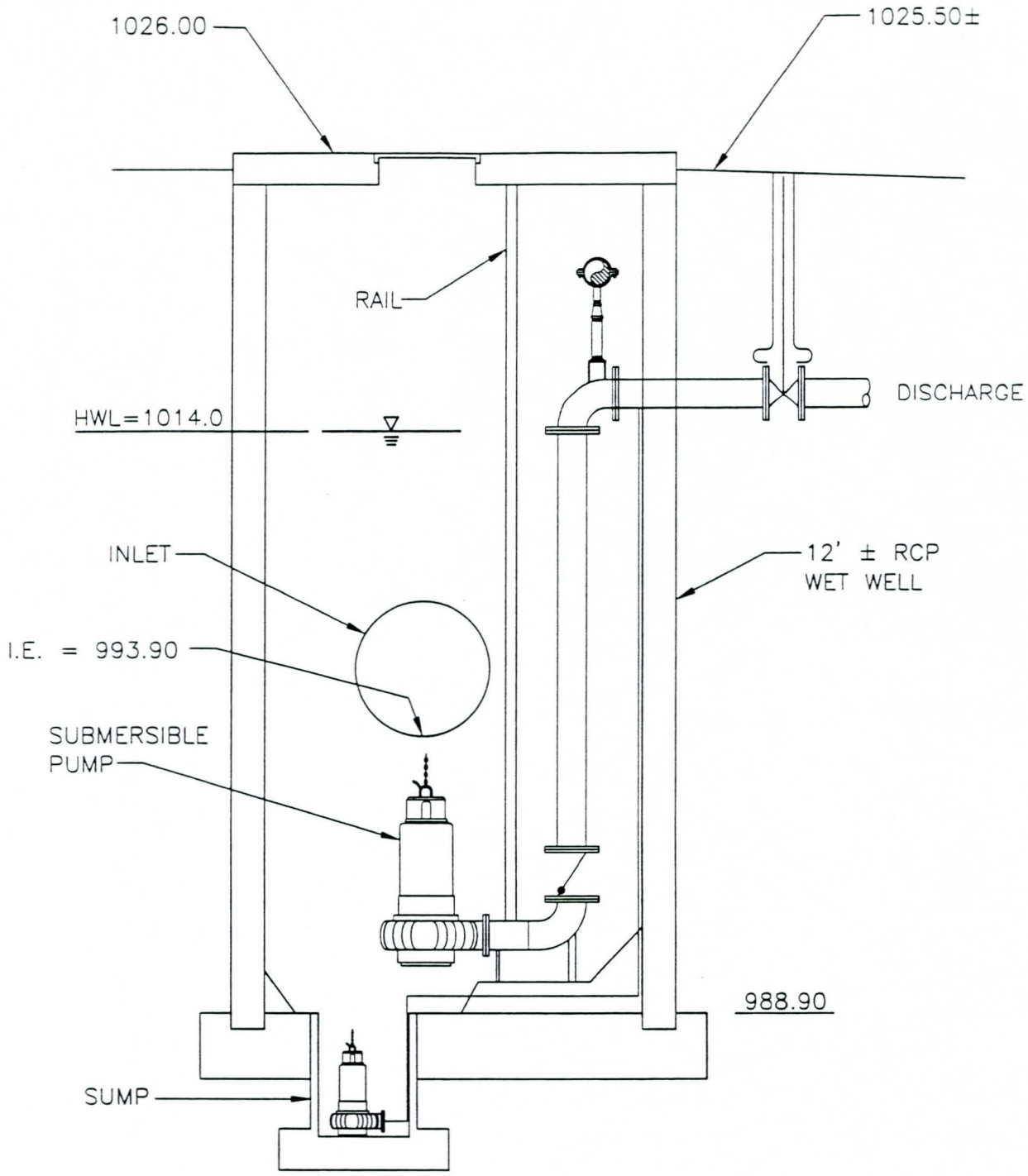

SECTION AA – PUMP STATION

carollo engineers

FLOOD CONTROL DISTRICT OF MARICOPA COUNTY
PUMP STATION FOR 43rd AVENUE OUTFALL
FCD PROJECT NO. 117020
FIGURE 6

Q:\FCDMC\FIGURE\ Fig6.dwg 10/19/98 11:50 ttrainor

3.1 ALTERNATE NO. 1 - CONTINUOUS PUMPING OVER 72 HOUR PERIOD

3.1.1 Description of Alternate

Alternate No. 1 is based upon the ability to pump continuously over a 72 hour period after a storm event. Pumping cycle begins after the storm has passed, and the storm drain system (Pipe and Retention Basin) has achieved equilibrium at Elevation 1014 (outfall structure invert elevation). A bubbler system sensing water level installed in the wet well structure will initiate pump starts. To verify the storm water level has reached equilibrium, an adjustable set time period elapses before the storm water pumps are started. Normal operation is first pump starts, and after an adjustable time period, the second pump starts. The pump stop sequence is controlled by the bubbler system that senses low water level in the wet well and storm drain system. (Level below which pumps cannot operate.)

The pump station consists of two pumps mounted in a 12 foot inside diameter concrete wet well. The wet well and pumps are arranged as shown on the plan view in Figure 3. Each pump is sized to have a capacity of 3,000 gallons per minute (6.68 cfs) (total pump station capacity of 6,000 gallons per minute) (13.37 cfs) to drain the storm drain system within 72 hours.

After completion of the pump cycle, the wet well will still contain some storm water, that amount being the volume from the floor of the wet well to the "stop" setpoint of the pumps. A small sump pump in the wet well is used to drain the wet well of excess water below main pump stop point.

The pump station suction line is a 30-inch reinforced concrete, rubber gasketed pipe. The discharge line to the outfall is a 24-inch ductile iron pipe. Each pump includes a gate valve and a check valve, as defined in the wet well configuration and the proposed site plan.

3.1.2 Capital Cost

The estimated cost of this alternative is $489,250 (does not include land costs for the pumps station site). The detailed estimated capital cost of this alternative is included in the Appendix of the report.

3.1.3 Operating Cost

Annual operating costs consist of electric power charges and normal operating and maintenance labor. In addition, a replacement fund is accrued for mechanical equipment.

These costs are as follows:

	Annual Cost
SRP Energy Charges	$ 1,980
SRP Customer Charges	407
Labor-Operation/Maintenance	6,000
Total Annual Operation Costs	$ 8,387
Present Value of Annual Operating Cost (17.159)	$ 143,912

3.1.4 Replacement Cost

The life of the mechanical equipment (pump and motor) is estimated at 20 years. Therefore, it is necessary to consider costs for equipment replacement when considering station life of 40 years.

Initial Capital Cost (2 pumps at $50,500)	$ 101,000
Present Worth of Future Replacement (20 years, 5%, 0.3768)	$ 38,057

3.2 ALTERNATE NO. 2 - PUMPING UTILIZING OFF-PEAK POWER COST

3.2.1 Description of Alternate

Alternate No. 2 utilizes much the same configuration as Alternate No. 1, with the exception that the actual hours of pumping the storm drain system will be curtailed to those hours as defined by Salt River Project, Electric Division (SRP) as off-peak power consumption hours. See Appendix for current rate schedule.

The storm drain system hydraulics are the same as Alternate No. 1, with the outfall structure invert elevation at Elevation 1014.00. The pump start control system is the same (bubbler system), however, an adjustable time (time of day clock) is added to control system. The timer is used to allow the pumps to run only during the pre-set hours corresponding to the off-peak hours as defined by SRP. Pump stop circuitry is by a bubbler level control system and timer.

The pump station consists of two pumps to be mounted in a 12 foot inside diameter concrete wet well. The overall configuration is the same as Alternate No. 1, other than larger pumps, larger suction (inlet) piping, and larger discharge piping are required due to the increase in flows. Each pump has a capacity of 6,000 gallons per minute (13.37 cfs) (total pump station capacity of 12,000 gallons per minute) (26.7 cfs) to drain the storm

	Alternative No. 1 Continuous Pumping	Alternative No. 2 Off-Peak Pumping
Capital Cost	$489,250	$542,300
Present Worth of Operating and Maintenance Cost	$130,528	$143,912
Present Worth of Replacement Cost	$ 38,057	$ 55,992
Total	$657,835	$742,204

Based upon the above, the recommended alternative is Alternate No. 1, for continuous pumping over the 72 hour period. The lower energy cost of off-peak pumping does not offset its higher capital cost and higher replacement cost of larger pump units.

There are no other significant differences between the two alternatives and either configuration satisfies requirements of the project.

4.0 DESIGN CRITERIA

Design criteria established as follows is based on assumptions included in the alternatives evaluation in Section 3.0 and on standards and recommendations for storm water pumping in various references (see Appendix for listing of reference documents reviewed and utilized in developing design criteria). In addition, we researched requirements of the District and the operating agency, City of Phoenix, in developing criteria. This criteria is based on the recommended alternative for continuous pumping to dewater the storm drain system in 72 hours.

Pump Station Design Criteria

Item	Criteria
Total pumping capacity	6,000 gallons per minute (gpm) at Total Displaced Head (TDH) of 29.5 feet
Type of pump units	Submersible, sewage
Number of Pumps	2
Standby pumps	0
Sump Pump	1
Pump design point	3,000 gpm at a TDH of 29.5 feet
Pump motor horsepower	30 Hp
Wet well volume	12,774 gallons (12 foot diameter - 15.1 feet depth)
Inlet pipe diameter	30-inch RGRCP
Discharge pipe diameter	14-inch for each pump - 24-inch main line
Operational concept	Full time (72 hours continuous after storm event)
Pump Control	Conductance Probe and Transmitter for Pump Start Bubbler Differential Pressure Level Measuring System
Electric power service	Salt River Project, Electric Division. 400 amp Service for 480 volt, 3 phase, 60 hertz power

Catalog data on the recommended pumping units are included in the Appendix.

Site Requirements

The minimum requirements for maintaining the storm water pumping station is a parcel of approximate dimensions of 75 feet deep by 100 feet width. The proposed site dimensions are defined on the preliminary site plan. (See Figure 4)

Grit/Debris Accumulation

Accumulation of grit and debris in a storm sewer is a major maintenance problem. For this particular system, we assume that small storm events will generally introduce grit and debris that has a tendency to settle within the storm drain due to lower pipeline velocities. Location of depositions are probably close to entry points, and migration of deposits downstream is nominal. Large storm events introduce grit and debris, and with higher velocities in pipeline, this material tends to settle less and moves downstream. In addition, previous depositions from small storm events may also be transported downstream, and possibly washed out of system into the Salt River. Materials probably tend to accumulate near the outlet location, which will act as a sedimentation basin for those deposits that cannot be placed into suspension and washed out of the outfall structure. Manual clean out of the lower portion of the outfall structure is expected to be required periodically.

Design of intake pipeline to pump station must consider the probable location of sediment and debris accumulation at the end of the storm drain. Location of inlet junction box should be set to avoid locations where pipeline velocities are low and deposits are likely to occur in the storm drain.

The parcel for the location for the 43rd Avenue Storm Water Pump Station was set by the Flood control District, which establishes the location of the Storm Drain Junction Structure for the Pump Station Inlet. This location is upstream from the storm drain outlet where maximum trash and grit accumulation is likely to occur.

The Pump Station inlet pipe is designed to develop velocities of at least 2 feet per second, that velocity of which is considered minimum to prevent sedimentation of grit and sand particles. Additionally, the pumps are designed to handle solids up to 3 inches in diameter, without clogging the pump. The junction structure is designed to contain a trash rack covering the inlet to the pump station to prevent large particles from entering the inlet pipeline and pump station wet well; however, clean out of the trash rack will be required periodically.

APPENDICES

Pump Station Design References

SRP Electric Power Rate Schedule

Cost Estimate

- Alternate No. 1
- Alternate No. 2

Pump Catalog Cuts

REFERENCES

Manual for Highway Storm Water Pumping Stations, Vol. I and Vol. II, U.S. Department of Transportation, Report No. FHWA-IP-82-17, Final Report, October 1982.

Design of Wastewater and Stormwater Pumping Stations, Manual of Practice FD-4, Water Environment Federation, 1993.

Pumping Station Design, Second Edition, Editor-in-Chief - Robert L. Sanks, Ph.D.; Co-Editors - George Tchobanoglous, Ph.D., P.E.; Bayard E. Bosserman II, P.E.; Garr M. Jones, P.E.; 1998.

General Description of Commercial Rates

There are four electric-rate schedules available to General Service or commercial customers. The Time-of Use Plan (E-32) and Stable Use Plan (E-33) are time-of-use rates with three different levels of prices most days of the week. The Stable Use Plan (E-33) increases the fixed monthly charge through a facilities charge while reducing the cost of energy. The General Use Plan (E-35) and Extended Use Plan (E-36) rates have level prices within summer and winter seasons without regard to time of use. The Extended Use Plan (E-36) rate provides additional reductions of energy costs through a third pricing energy block. Customers with relatively constant energy consumption at higher volumes of energy might find the Extended Use Plan (E-36) rate the most beneficial.

Time-of-Use Plan (E-32)

The Time-of Use Plan (E-32) is a three-period time-of-use (TOU) rate with reduced prices for energy in the off-peak period in excess of 30,000 kWh. Customers with small loads and moderate-to-high-ability to shift load from the on-peak period might find this rate beneficial.

Summer Hours (May-Oct)

On-Peak
2 p.m. to 7 p.m.
Shoulder-Peak
11 a.m. to 2 p.m.
7 p.m. to 11 p.m.
Off-Peak
All Remaining Hours

Winter Hours (Nov-Apr)

On-Peak
5 a.m. to 9 a.m.
Shoulder-Peak
5 p.m. to 9 p.m.

Off-Peak
All Remaining Hours
Winter weekends are off-peak.

Time-of-Use Rate Schedule (E-32)

Summer		Winter	
Customer Charge:	$33.88	Customer Charge:	$33.88
Energy (kWh):		Energy (kWh):	
On-Peak	$0.1025 per kWh	*On-Peak*	$0.0924 per kWh
Shoulder Peak	$0.0740 per kWh	*Shoulder Peak*	$0.0699 per kWh
Off Peak (1st 30,000 kWh	$0.0370 per kWh	*Off Peak (1st 30,000 kWh)*	$0.0370 per kWh
Off Peak (remaining)	$0.0325 per kWh	*Off Peak (remaining)*	$0.0325 per kWh
Demand (kW)		Demand (kW)	
On Peak	$ 4.73 per kW	*On Peak*	$ 3.38 per kW
Shoulder	$ 0.46 per kW	*Shoulder*	$ 0.26 per kW
Off-Peak	No charge	*Off-Peak*	No charge

:able Use Plan (E-33)

ıe Stable Use Plan (E-33) is a three-period time-of-use (TOU) rate with reduced prices for energy in the off-peak period excess of 30,000 kWh. This rate differs from the Time-of Use Plan (E-32) rate by having unbundled facilities and mand costs from the energy components of the rate. This creates higher monthly fixed charges while decreasing energy sts. Customers with high load factors (24-hour operation) and average to below average usage in the on-peak period ight find this rate beneficial.

Summer (May-Oct)

On-Peak
2 p.m. to 7 p.m.
Shoulder-Peak
11 a.m. to 2 p.m.
7 p.m. to 11 p.m.
Off-Peak
All Remaining Hours

Winter (Nov-Apr)

On-Peak
5 a.m. to 9 a.m.
Shoulder-Peak
5 p.m. to 9 p.m.

Off-Peak
All Remaining Hours
Winter weekends are off-peak.

Stable Use Rate Schedule (E33)

Summer		Winter	
ustomer Charge:	$25.00	Customer Charge:	$25.00
ıcilities ($ per kW)	$ 2.48 per kW	Facilities ($ per kW)	$ 2.48 per kW
ıergy (kWh):		Energy (kWh):	
On-Peak	$0.065 per kWh	*On-Peak*	$0.056 per kWh
Shoulder Peak	$0.055 per kWh	*Shoulder Peak*	$0.049 per kWh
Off Peak (1st 30,000 kWh	$0.035 per kWh	*Off Peak (1st 30,000 kWh)*	$0.035 per kWh
Off Peak (remaining)	$0.030 per kWh	*Off Peak (remaining)*	$0.030 per kWh
emand (kW)		Demand (kW)	
On Peak	$10.00 per kW	*On Peak*	$3.50 per kW
Shoulder	$ 2.75 per kW	*Shoulder*	$1.00 per kW
Off-Peak	No charge	*Off-Peak*	No charge

General Use Plan (E-35)

The General Use Plan (E-35) provides level winter and summer prices for all hours within each season. Customers with limited hours of operations and higher energy usage in the on-peak periods might find this rate beneficial. Generally, if you can isolate your usage into off-peak periods, even with limited consumption, you would have reduced electric bills on one of the TOU rates.

General Use Rate Schedule (E35)

Summer		Winter	
Customer Charge:	$10.00	Customer Charge:	$10.00
Energy (kWh):		Energy (kWh):	
First 2000 kWh	$0.0856 per kWh	*First 2000 kWh*	$0.0657 per kWh
Next 200 kWh/kW	$0.0778 per kWh	*Next 200 kWh/kW*	$0.0589 per kWh
All additional	$0.0560 per kWh	*All additional*	$0.0486 per kWh
Demand (kW)		Demand (kW)	
Demand kW > 5	$ 3.53 per kW	*Demand kW > 5*	$ 1.81 per kW

Extended Use Plan (E-36)

The Extended Use Plan (E-36) provides level winter and summer prices for all hours within each season. This rate differs from the General Use Plan (E-35) rate by having a fourth energy block which reduces prices. Customers consuming large amounts of power with limited ability to shift energy use to shoulder or off-peak hours might find this rate beneficial.

Extended Use Rate Schedule (E36)

Summer		Winter	
Customer Charge:	$60.00	Customer Charge:	$60.00
Energy (kWh):		Energy (kWh):	
First 150 kWh per kW	$0.078 per kWh	*First 150 kWh per kW*	$0.058 per kWh
Next 150 kWh per kW	$0.062 per kWh	*Next 150 kWh per kW*	$0.052 per kWh
Next 20,000 kWh	$0.050 per kWh	*Next 20,000 kWh*	$0.045 per kWh
All additional	$0.042 per kWh	*All additional*	$0.033 per kWh
Demand (kW)		Demand (kW)	
Demand kW	$ 3.75 per kW	*Demand kW*	$ 2.00 per kW

Demand Rider

The General Use Plan (E-35) and Extended Use Plan (E-36) rates have an optional demand rider that isolates demand costs to the on-and shoulder-peak hours. Energy rates remain the same. There is a slight increase in the customer charge to recover increased meter costs. Demand charges under the rider include all billable demand. Customers who can isolate operation to the off-peak hours might find this rate beneficial. This rider provides an excellent opportunity for testing equipment in off-peak periods when seasonal operations have shut down production for long periods of time.

FLOOD CONTROL DISTRICT OF MARICOPA COUNTY

43RD AVENUE/BROADWAY STORM WATER PUMP STATION

PRELIMINARY PROBABLE COST OF CONSTRUCTION

ALTERNATE NO. 1 - FULL TIME PUMPING

Item No.	Description	Quantity	Units	Unit Price	Total Cost
1	Junction Structure/Pump Station Inlet	1	L.S.	$91,650	$91,650
2	30 inch suction line (RGRCP)	85	Feet	$450	$38,250
3	144 inch inner diameter RGRCP Wet Well with Reinf. Conc Base	1	L.S.	$54,800	$54,800
4	Wet Well Excavation, backfilling And De-watering	1	L.S.	$73,500	$73,500
5	3.000 GPM Pump & Wet Well Appurtenances including Electrical/Instrument Panels	2	EA	$28,000	$56,000
6	500 GPM Sump Pump Including Electrical/Instrument Panel	1	EA	$6,000	$6,000
7	Pump Station Discharge (14")	72	L.F.	$300	$21,600
8	24 Inch Discharge Main Line	305	L.F.	$130	$39,650
9	Outfall Inlet	1	L.S.	$5,000	$5,000
10	Install Electrical Conduits, Panels, Controls	1	L.S.	$15,000	$15,000
11	Site Grading	1	L.S.	$10,000	$10,000
12	Site Fencing & Gate	350	L.F.	$40	$14,000
	Subtotal Estimated Probable Cost				$425,450
	15% Contingency				$63,800
	Estimated Probable Cost				**$489,250**

FLOOD CONTROL DISTRICT OF MARICOPA COUNTY

43RD AVENUE/BROADWAY STORM WATER PUMP STATION

PRELIMINARY PROBABLE COST OF CONSTRUCTION

ALTERNATE NO. 2 - PUMPING @ OFF-PEAK ELECTRIC HOURS

Item No.	Description	Quantity	Units	Unit Price	Total Cost
1	Junction Structure/Pump Station Inlet(includes excavation backfilling, dewatering)	1	L.S.	$91,650	$91,650
2	30 inch suction line (RGRCP)	85	Feet	$510	$43,350
3	144 inch inner diameter RGRCP Wet Well with Reinf. Conc Base	1	L.S.	$54,800	$54,800
4	Wet Well excavation, backfilling and Dewatering	1	L.S.	$73,500	$73,500
5	3,000 gpm Pump and Wet Well Appurtenances including electrical/instrument panels	2	Ea	$40,000	$80,000
6	500 gpm sump pump including electrical/instrument panels	1	Ea	$6,000	$6,000
7	Pump Station Discharge (18")	72	L.F.	$340	$24,480
8	30 inch Discharge Main Line	305	L.F.	$160	$48,800
9	Outfall Inlet	1	L.S.	$5,000	$5,000
10	Install Electrical Conduits, Panels, Controls	1	L.S.	$20,000	$20,000
11	Site Grading	1	L.S.	$10,000	$10,000
12	Site Fencing and Gate	350	L.F.	$40.00	$14,000
	Subtotal Estimated Probable Cost				$471,580
	15% Contingency				$70,720
	Estimated Probable Cost				**$542,300**

JCH James, Cooke & Hobson, Inc.
4632 S. 36TH STREET
PHOENIX, AZ 85040
Phone: (602) 243-0585 Fax: (602) 276-5402

FAXED

August 23, 1998

FAX MEMO

TO: KEN KENNEDY
CAROLLO ENGINEERS

FROM: BRUCE P. LORING, P.E.

SUBJECT: 43RD AVE & BROADWAY P.S.

I RAN THE SELECTIONS ON THE COMPUTER WHICH OF COURSE GAVE DIFFERENT SELECTIONS. LOOK AT THESE AND LET TALK.

AFTER WE REVIEW/DISCUSS THE SELECTIONS WHICH WILL BEST SUIT YOUR PROJECT NEEDS, I CAN GIVE PRICING, DIMENSIONS, LAYOUT, ETC.

BPL BPL

7 *PAGES*

PERFORMANCE CURVE

PRODUCT	TYPE
CP3300.181	MT

DATE	PROJECT	CURVE NO	ISSUE
98-08-24	43RD AVE BROADWAY P.S. ALT#1	63-648-00-3730	1

	1/1-LOAD	3/4-LOAD	1/2-LOAD
MOTOR COS FI	0.89	0.87	0.81
MOTOR EFFICIENCY	87.0 %	87.3 %	85.8 %
GEAR EFFICIENCY	---	---	---

MOTOR SHAFT		
POWER	60	HP
STARTING CURRENT ...	440.	A
RATED CURRENT ...	73.0	A
RATED SPEED	1170	RPM
TOT.MOM.OF INERTIA ...	32.9	LBF*FT²
NO. OF BLADES	2	

IMPELLER DIAMETER: --- MM

MOTORTYPE	STATOR	REV
35-24-6AA	38D	10

FREQ	PHASES	VOLTAGE	POLES
60 HZ	3	460 V	6

GEARTYPE	RATIO
---	---

COMMENTS

OUTLET	IMP. THROUGHLET
10 INCH	4 INCH

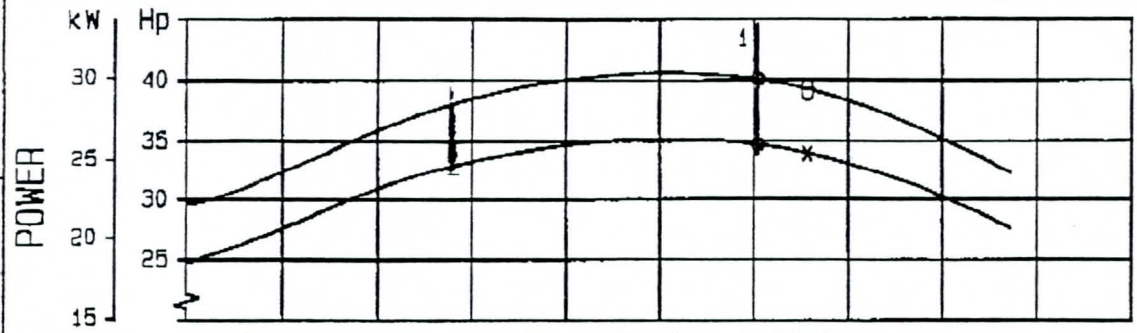

DUTY-POINTS:	FLOW (USGPM)	HEAD (ft)	POWER (Hp)	EFF (%)	NPSH (ft)	GUARANTY
BEP:	3308	25.0	39.2 (33.9)	53.5 (61.8)	25.0	---
1	3021	27.9	40.1 (34.7)	53.2 (61.4)	22.6	---

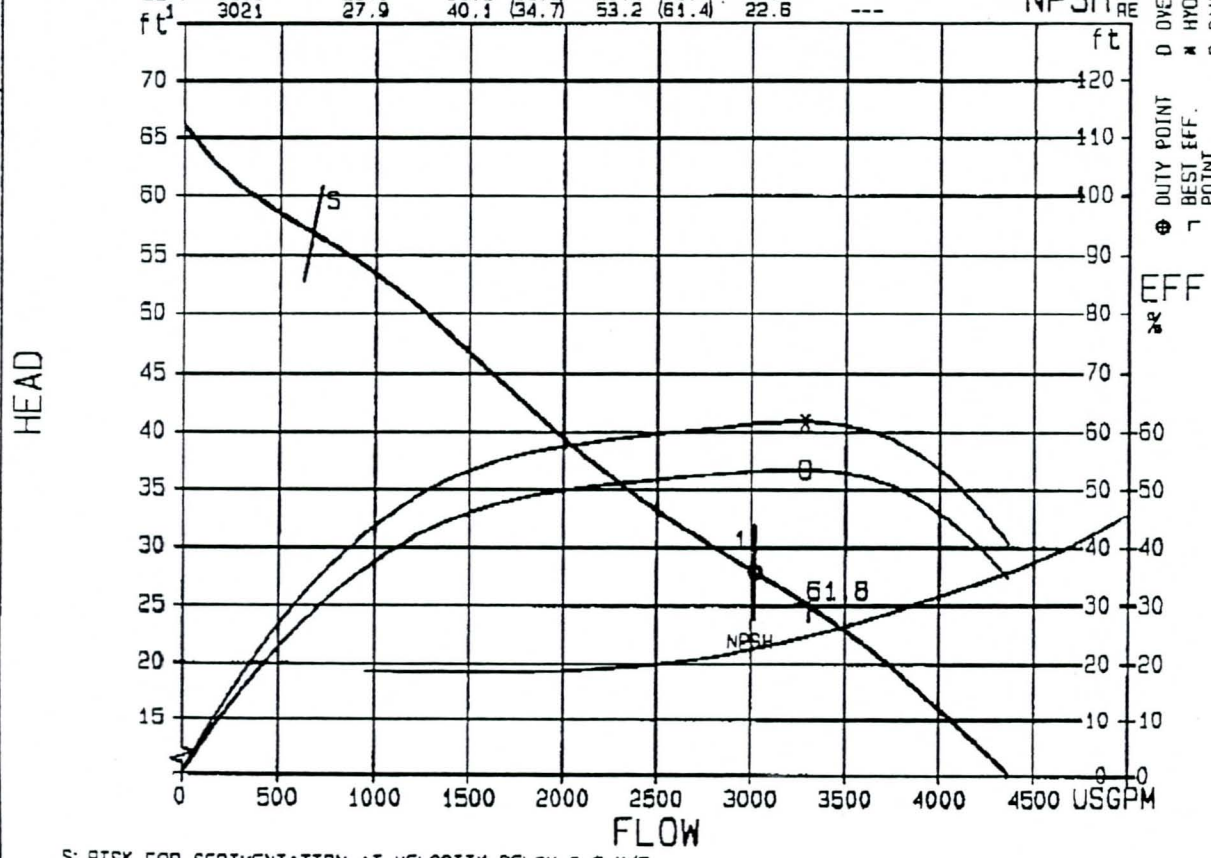

O INPUT POWER
X INP. SHAFT POWER
D OVERALL EFF.
X HYDRAULIC EFF.
C CAVITATION
⊕ DUTY POINT
1 BEST EFF. POINT

S: RISK FOR SEDIMENTATION AT VELOCITY BELOW 0.6 M/S
(STANDARD DIAM. 12 INCH)

CURVES SHOW PERFORMANCE WITH CLEAR WATER

BRUCE P. LORING, P.E. JCH/JAMES, COOKE & HOBSON

FLYPS 1.2

BRUCE P. LORING, P.E. JCH/JAMES, COOKE & HOBSON 98-08-24

FLOWT

PUMP DATA

Pump:CP 3201 LT
Curve:63- 821 0 mm

Rated Power 30 Hp
Rated Current: 41.0 A
3*460 V, 8 Pole
Throughlet:3* 4 inch
In/outlet: —/12 inch
Weight: 1415.4 lbs

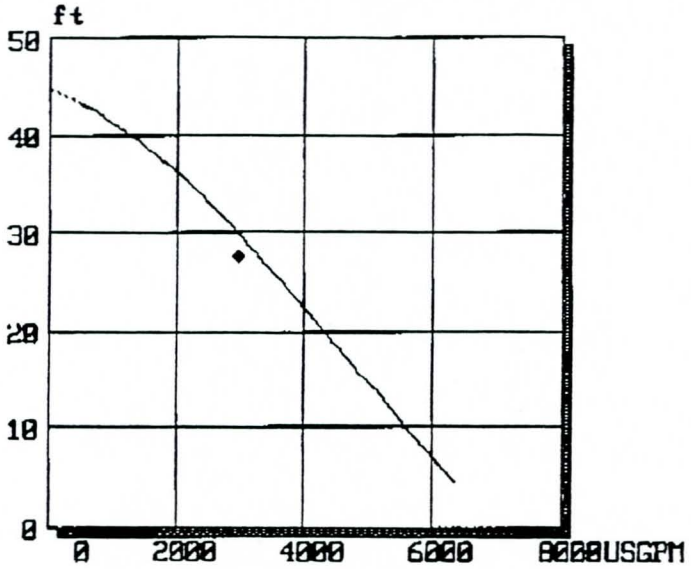

DUTY DATA

Flow	3089.2 USGPM	Head	29.2 ft	◆	
Input Power	24.3 kW	Shaft Power	28.1 Hp	Flow	3000.0 USGPM
Overall Eff.	69.9 %	Pump Eff.	81.0 %	Head	27.5 ft

98-08-24PROJECT NAME: 43RD AVE BROADWAY P.S. ALT#1

PERFORMANCE CURVE

PRODUCT	CP3201.180
TYPE	LT
DATE	98-08-24
PROJECT	43RD AVE BROADWAY P.S. ALT#1
CURVE NO	63-821-00-8320
ISSUE	4

	1/1-LOAD	3/4-LOAD	1/2-LOAD
MOTOR COS FI	0.80	0.74	0.63
MOTOR EFFICIENCY	86.1 %	86.8 %	85.7 %
GEAR EFFICIENCY	—	---	---

MOTOR SHAFT POWER	30 HP
STARTING CURRENT ...	172. A
RATED CURRENT ...	41.0 A
RATED SPEED	860 RPM
TOT.MOM.OF INERTIA ...	5.36 LBF*FT²
NO. OF BLADES	3

IMPELLER DIAMETER	--- MM
MOTORTYPE	27-26-8AA
STATOR REV	380 / 10
FREQ	60 HZ
PHASES	3
VOLTAGE	460 V
POLES	8
GEARTYPE	---
RATIO	---

COMMENTS

OUTLET	12 INCH
INP. THROUGHLET	5 INCH

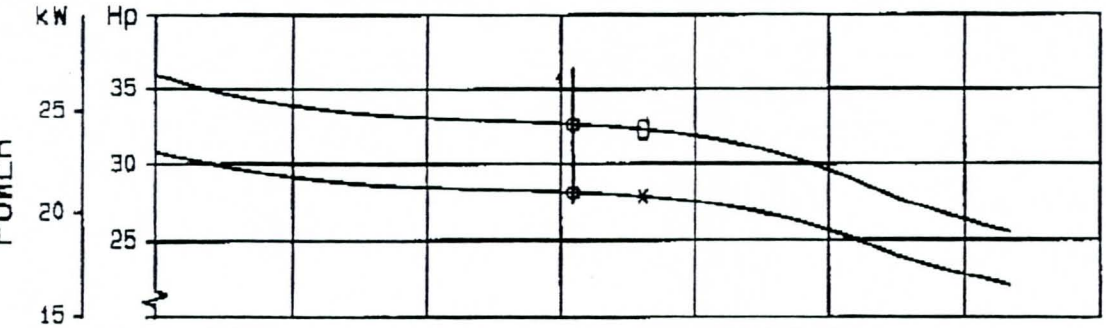

DUTY-POINTS:	FLOW (USGPM)	HEAD (ft)	POWER (Hp)	EFF (%)	NPSH (ft)	GUARANTY
BEP:	3643	25.2	32.2 (27.8)	72.1 (83.5)	11.9	---
1	3089	29.2	32.6 (28.1)	69.9 (81.0)	9.7	---

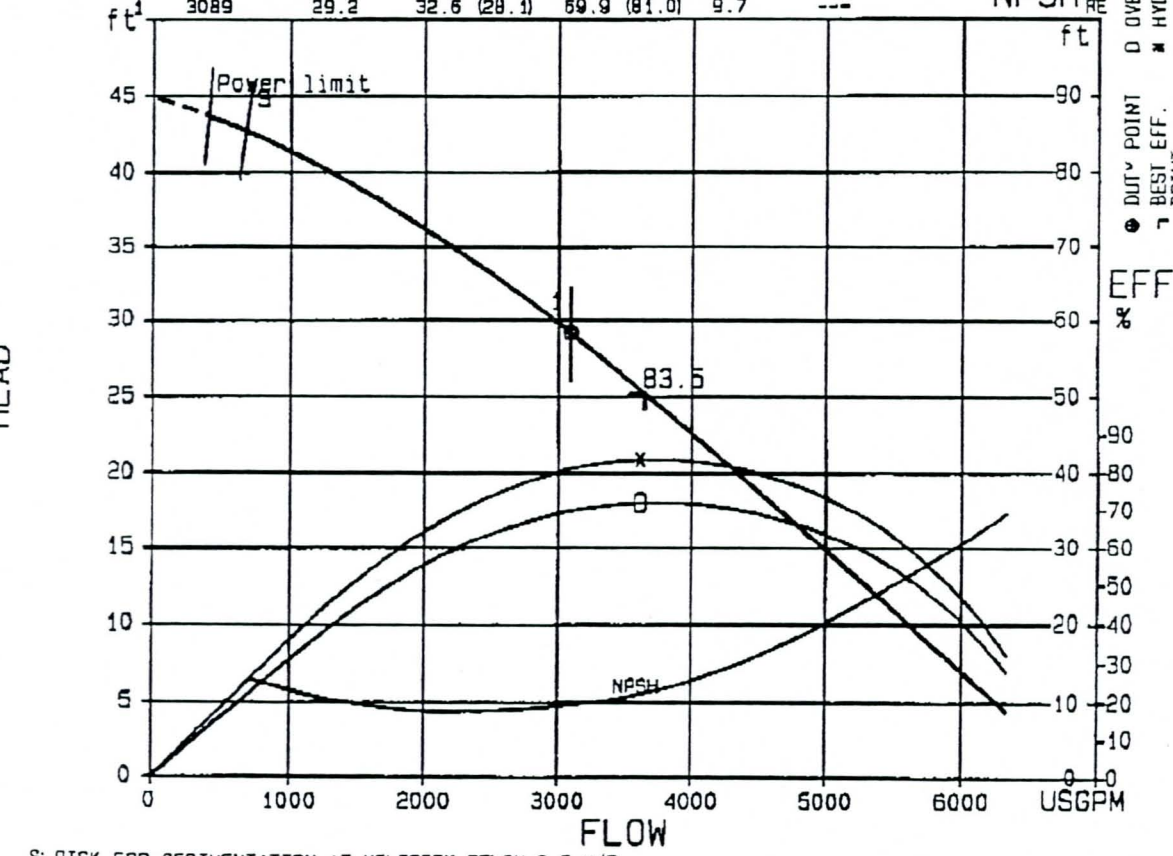

S: RISK FOR SEDIMENTATION AT VELOCITY BELOW 0.6 M/S
(STANDARD DIAM. 12 INCH)

CURVES SHOW PERFORMANCE WITH CLEAR WATER

BRUCE P. LORING, P.E. JCH/JAMES, COOKE & HOBSON

FLYPS 1.2

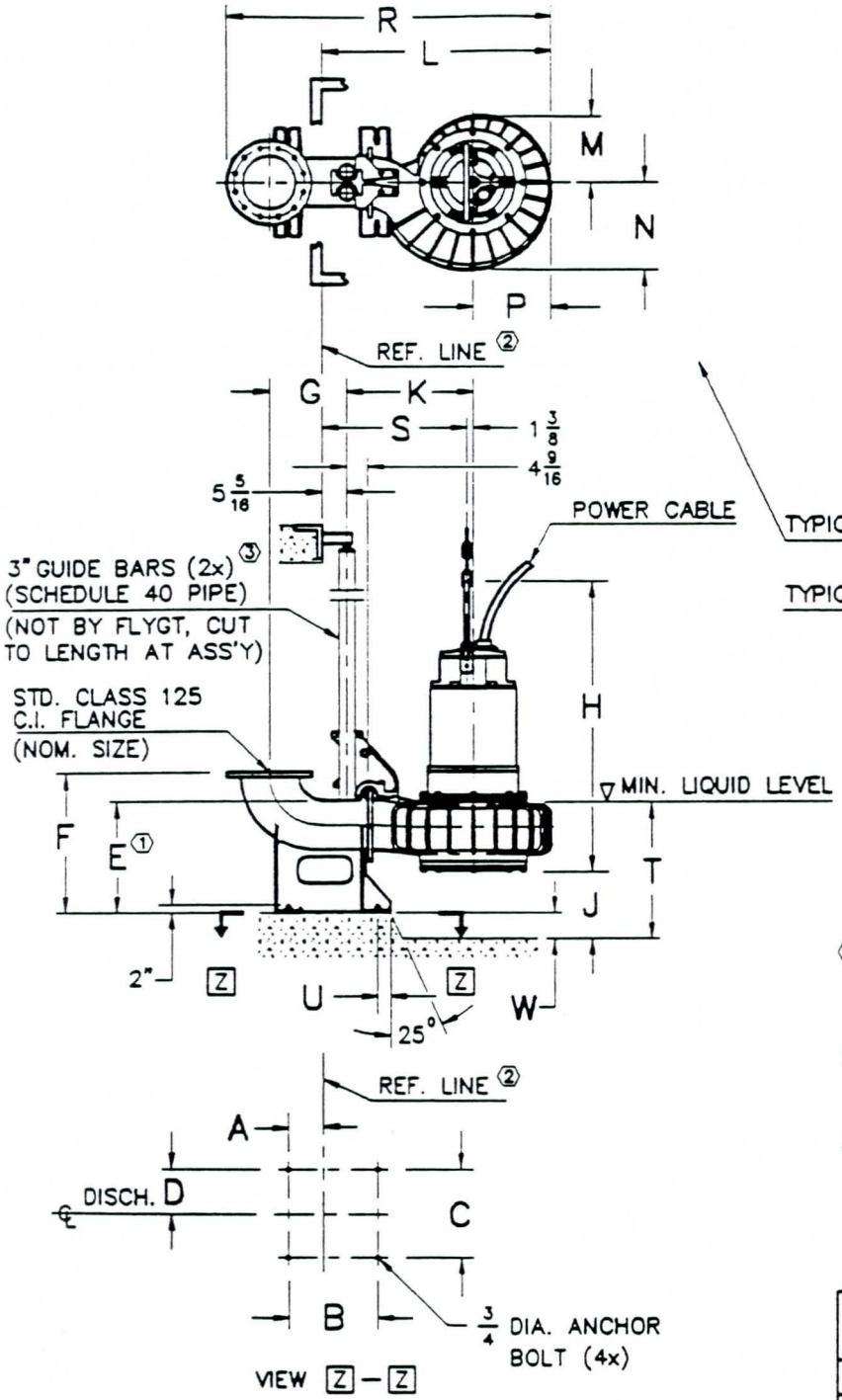

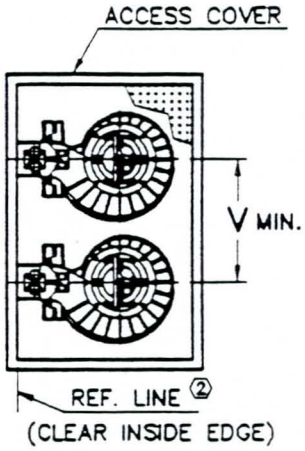

NOTES:

1. DIM. TO ENDS OF GUIDE BARS.
2. REPRESENTS CLEAR INSIDE EDGE OF ACCESS FRAME OR OPENING.
3. SEE STATION DWGS. FOR COMPLETE INSTALLATION DIMENSIONS.

NOM. SIZE	VERSION	WEIGHT (LBS)	
		PUMP	DISCH
8"	HH	2050	145
12"	STD	2470	455
14"	HV	2410	465

ALL DIMENSIONS IN INCHES

DIMENSIONAL CHART

NOM. SIZE	VERSION	A	B	C	D	E	F	G	H	J	K	L	M	N	P	R	S	T	U	V	W
8"	HH	3 1/2	11	9 1/2	4 3/4	13 5/8	17 3/4	12 1/8	61 3/4	10 3/4	24 1/4	42 1/4	12	13 1/2	12 5/8	55 3/4	28 5/8	23	2 1/4	33 1/2	4
12"	STD	7 5/8	19 11/16	20 3/4	10 3/8	25 1/4	31 1/2	17 1/8	65 1/4	15 1/2	28 1/4	51	15	19 3/4	17 3/8	72 1/8	32 1/8	31	3	58 1/2	6
14"	HV	7 5/8	19 11/16	20 3/4	10 3/8	26 1/4	33 1/2	18 1/8	73 1/4	16 1/4	28 1/4	48 1/2	12 1/4	17 3/4	15	71 3/4	32 1/8	32	3	58 1/2	6

SECTION	MODEL
3	3300
SUPERSEDES	ISSUED
6/90	12/91

C-3300

IMPELLER/MOTOR - NOM. SIZES

PUMP MODEL	IMPELLER CODE	HP RATING CP	HP RATING CT	HP RATING CS	VAC	RPM	D1	D2	D3	D4
3300 3Ø	454 HH		- -	- -	460,575	1770	8"	6"	- -	- -
	**461 HH **462 HH **463 HH 464 HH 465 HH 466 HH 467 HH 468 HH	88	88	88					6" or 8"	8"
	636 STD	77	- -	77		1150	12"	10"	8"	- -
	638 STD 640 STD	60 60	- - - -	60 60						
	642 STD 644 STD	77 77	77 77	77 77						12"
	646 STD 648 STD	60	60	60						
	804 HV 805 HV 806 HV 807 HV 808 HV 809 HV					875	14"	12"	10"	16"

**88 or 120 HP (721 motor) may be used - refer to curve.

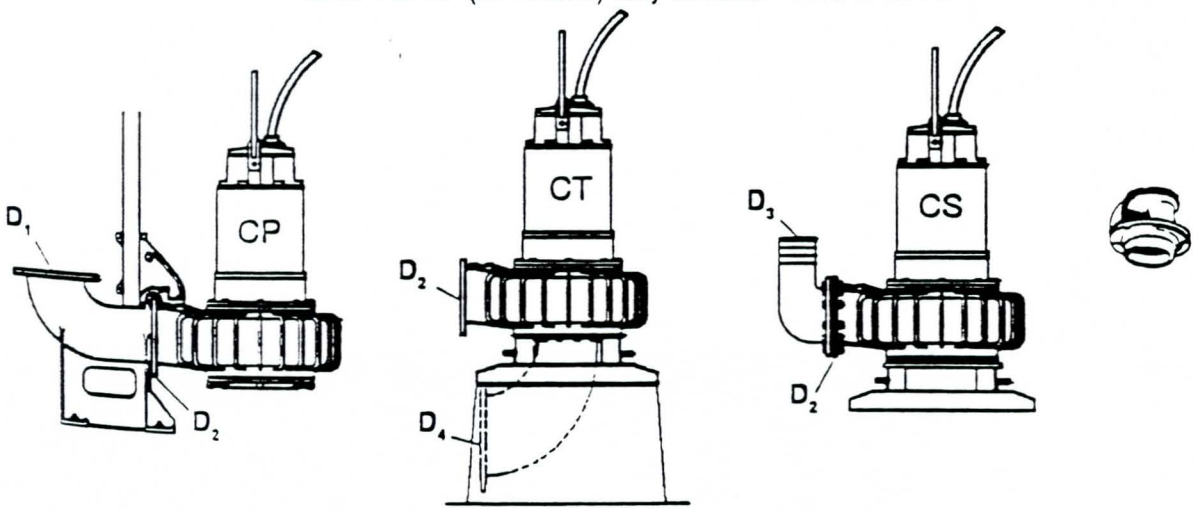

C-3300

Electrical Data

MOTOR DATA

RATED OUTPUT POWER HP (KW)	MOTOR DRIVE UNIT (Motor no.)	Ø	VOLTS NOM.	FULL LOAD AMPS	LOCKED ROTOR AMPS	LOCKED ROTOR KVA	LOCKED ROTOR CODE LETTER KVA/HP	RATED INPUT POWER KW	POLES/RPM
32 (24)	—	3	460 575	42.0 34.0	281.0 225.0	223.0	F	27	8/875
45 (34)	—	3	460 575	60.0 48.0	280.0 225.0	223.0	F	39	8/875
(6 pole) 60 (45)	—	3	460 575	72.0 58.0	441.0 353.0	351.0	E	51	6/1165
(8 Pole) 60 (45)	—	3	460 575	80.0 65.0	363.0 290.0	289.0	E	52	8/875
75 (56)	—	3	460 575	91.0 73.0	538.0 430.0	428.0	F	64	6/1170

Pump Motor HP	EFFICIENCY			POWER FACTOR		
	100% LOAD	75% LOAD	50% LOAD	100% LOAD	75% LOAD	50% LOAD
32	87.5	86.9	84.2	0.82	0.78	0.70
45	86.0	86.0	84.0	0.82	0.79	0.71
60 (6 Pole)	88.5	88.5	86.8	0.89	0.87	0.82
60 (8 Pole)	86.0	86.5	85.0	0.82	0.79	0.71
75	87.7	87.5	86.8	0.89	0.87	0.82

CABLE DATA

HP	VOLTS	MAX. LENGTH FT.	CABLE SIZE	NOMINAL DIA.	CONDUCTORS (IN ONE CABLE)
32	460 575	630 970	#4/3-2-1-GC	33.8 mm (1.33")	(3) #4AWG (PWR) (2) #10AWG (CTRL) (1) #6AWG (GND) (1) #10AWG (GC)
45	460 575	500 780			
60	460 575	240 340			
75	460 575	560 840	#1/3-2-1-GC	41.7mm (1.64")	(3) #1AWG (PWR) (2) #10AWG (CTRL) (1) #4AWG (GND) (1) #8AWG (GC)
120	Pilot Cable		(1) 7 G 1.5	16mm (0.63")	(6) 1.5 (CNTRL) (1) 1.5 (GND)

SECTION	MODEL
5	3300
SUPERSEDES	ISSUED
6/90	12/91

CP-3300 680 Drive Unit

Lift Station Dimensions

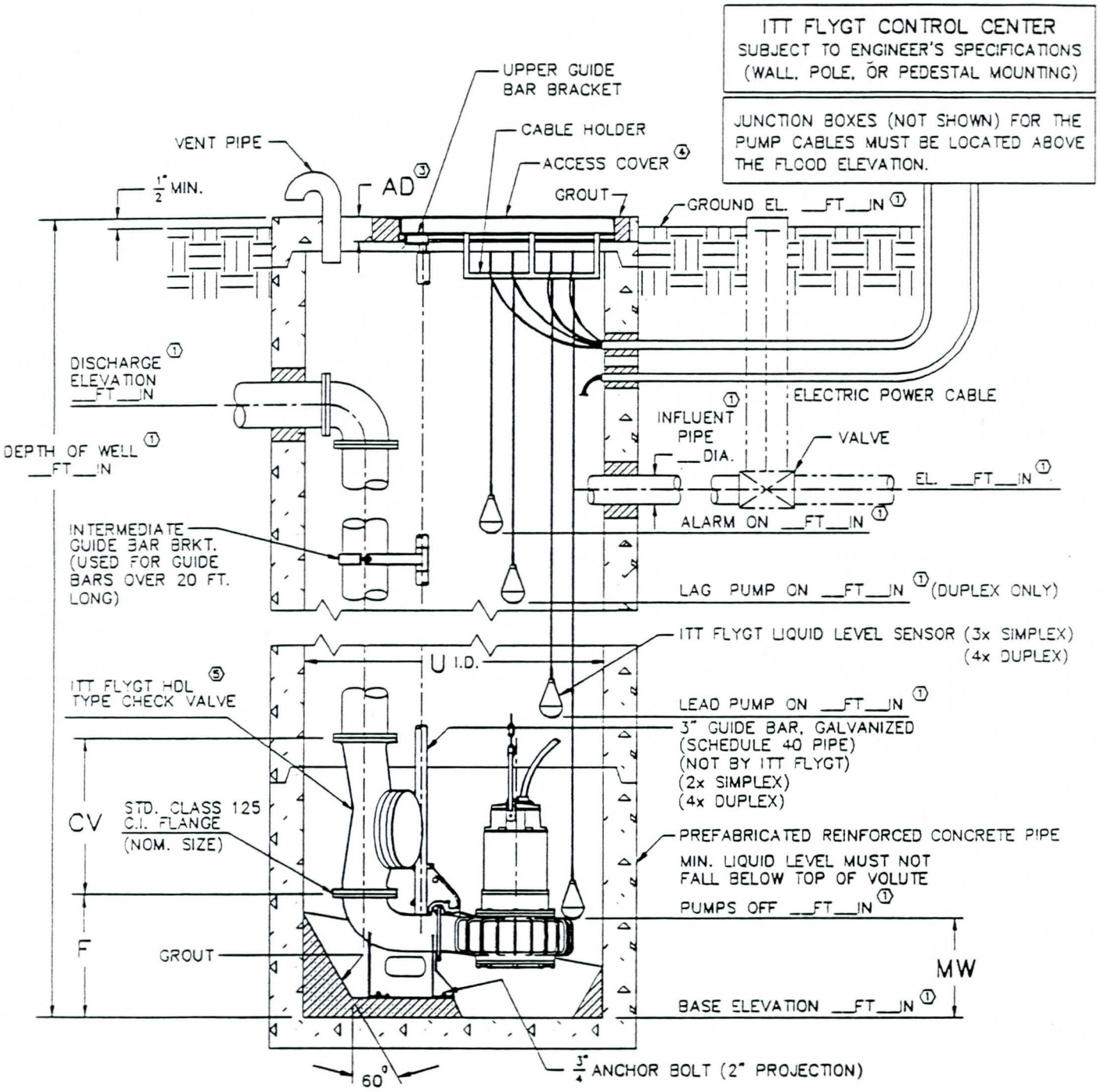

NOTES:

1. INDICATES INFORMATION TO BE DETERMINED BY OTHERS.
2. LOCATE ANCHOR BOLTS USING CLEAR INSIDE EDGE OF ACCESS FRAME AND CENTER LINE OF PUMP AS REFERENCE POINT. BOLT LOCATIONS MUST BE HELD TO MAINTAIN EXACT POSITION OF PUMP RELATIVE TO ACCESS FRAME.
3. GROUT OPENING FOR ACCESS FRAME.
4. HEAVY DUTY ACCESS COVER AVAILABLE FROM ITT FLYGT. (CONSULT ITT FLYGT CORP. FOR COVER DIMENSIONS)
5. CONFIGURATION AND DIMENSIONS SHOWN ARE MINIMUM REQUIREMENTS ONLY. ALL DETAILS, INCLUDING SIZING OF PIT, TYPE, LOCATION AND ARRANGEMENTS OF VALVES AND PIPING, ETC. ARE TO BE SPECIFIED BY THE CONSULTING ENGINEER AND ARE SUBJECT TO HIS APPROVAL.

SECTION	MODEL
5	3300
SUPERSEDES	ISSUED
6/90	12/91

680 Drive Unit

Simplex

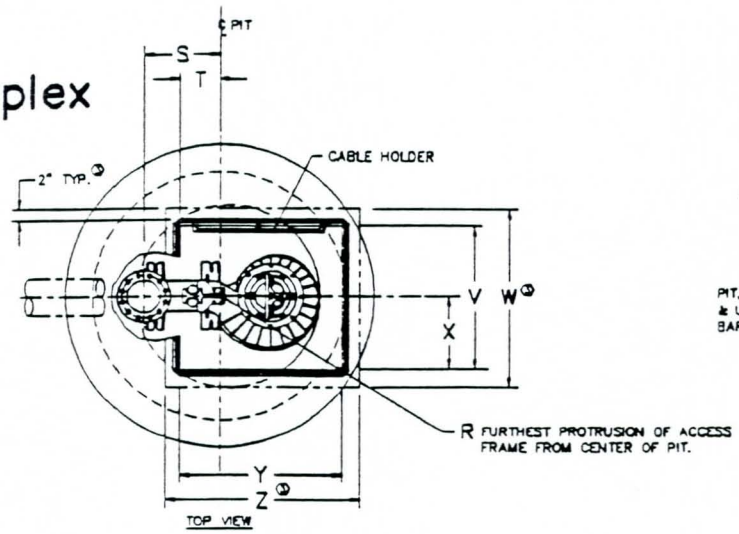

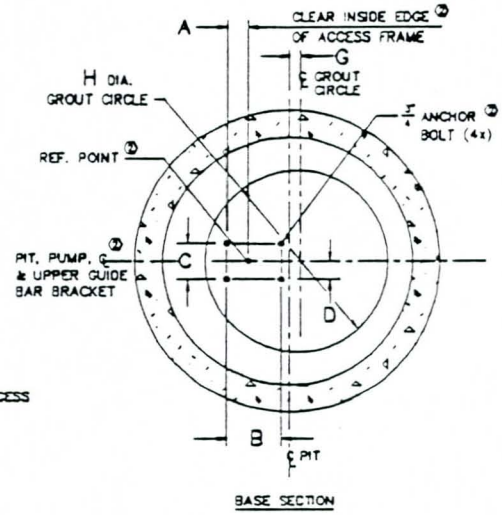

ALL DIMENSIONS IN INCHES

DIMENSIONAL CHART																						
NOM. SIZE	VERSION	STATION													COVER							
		A	B	C	D	F	G	H	R	S	T	U	CV	MW	SIZE	V	W	X	Y	Z	AD
8"	HH	3 1/2	11	9 1/2	4 3/4	17 3/4	2	54	41	21 1/2	14 3/4	72	19 1/2	23	C	30	40	16	48	58	4 5/8
12"	STD	7 5/8	19 11/16	20 3/4	10 3/8	31 1/2	1	68	50	29	17 1/4	96	47 1/4	31	G	48	60 1/2	26 1/2	54	66 1/2	5 1/8
14"	HV	7 5/8	19 11/16	20 3/4	10 3/8	33 1/2	2	66	53	26	13 1/2	96	55 1/4	32	G	48	60 1/2	26 3/4	54	66 1/2	5 1/8

Duplex

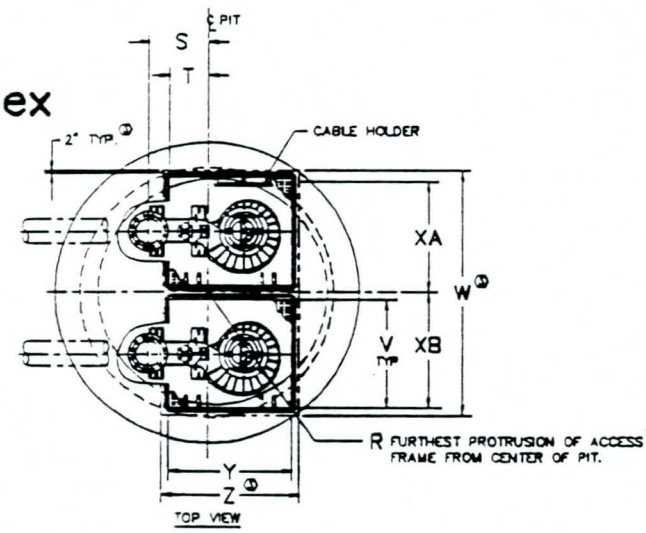

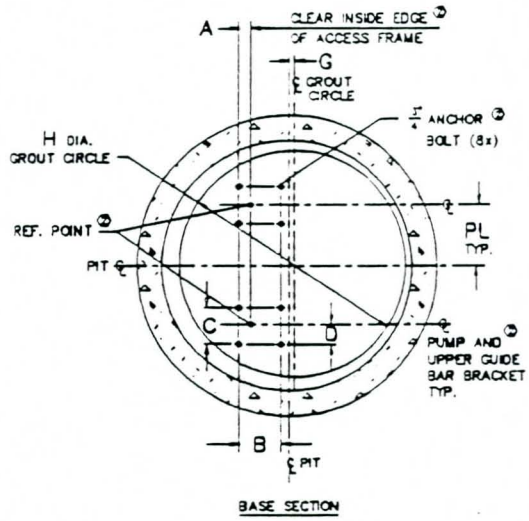

ALL DIMENSIONS IN INCHES

DIMENSIONAL CHART																							
NOM. SIZE	VERSION	STATION														COVER							
		A	B	C	D	F	G	H	R	S	T	U	CV	MW	PL	SIZE	V	W	XA	XB	Y	Z	AD
8"	HH	3 1/2	11	9 1/2	4 3/4	17 3/4	3 1/4	74	53	21	14 1/8	96	19 1/2	23	19	C(2)	30	78	33 1/8	34 7/8	48	58	4 5/8
12"	STD	7 5/8	19 11/16	20 3/4	10 3/8	31 1/2	1	105	70	28	16 1/4	120	47 1/4	31	29 1/4	G(2)	48	119	53 1/4	53 1/4	54	66 1/2	5 1/8
14"	HV	7 5/8	19 11/16	20 3/4	10 3/8	33 1/2	3 1/2	106	72	25 1/4	12 1/2	120	55 1/4	32	29 1/4	G(2)	48	119	53 1/4	53 1/4	54	66 1/2	5 1/8

C-3300

SECTION	MODEL
3	3300
SUPERSEDES	ISSUED
6/90	12/91

FAMILY OF PERFORMANCE CURVES

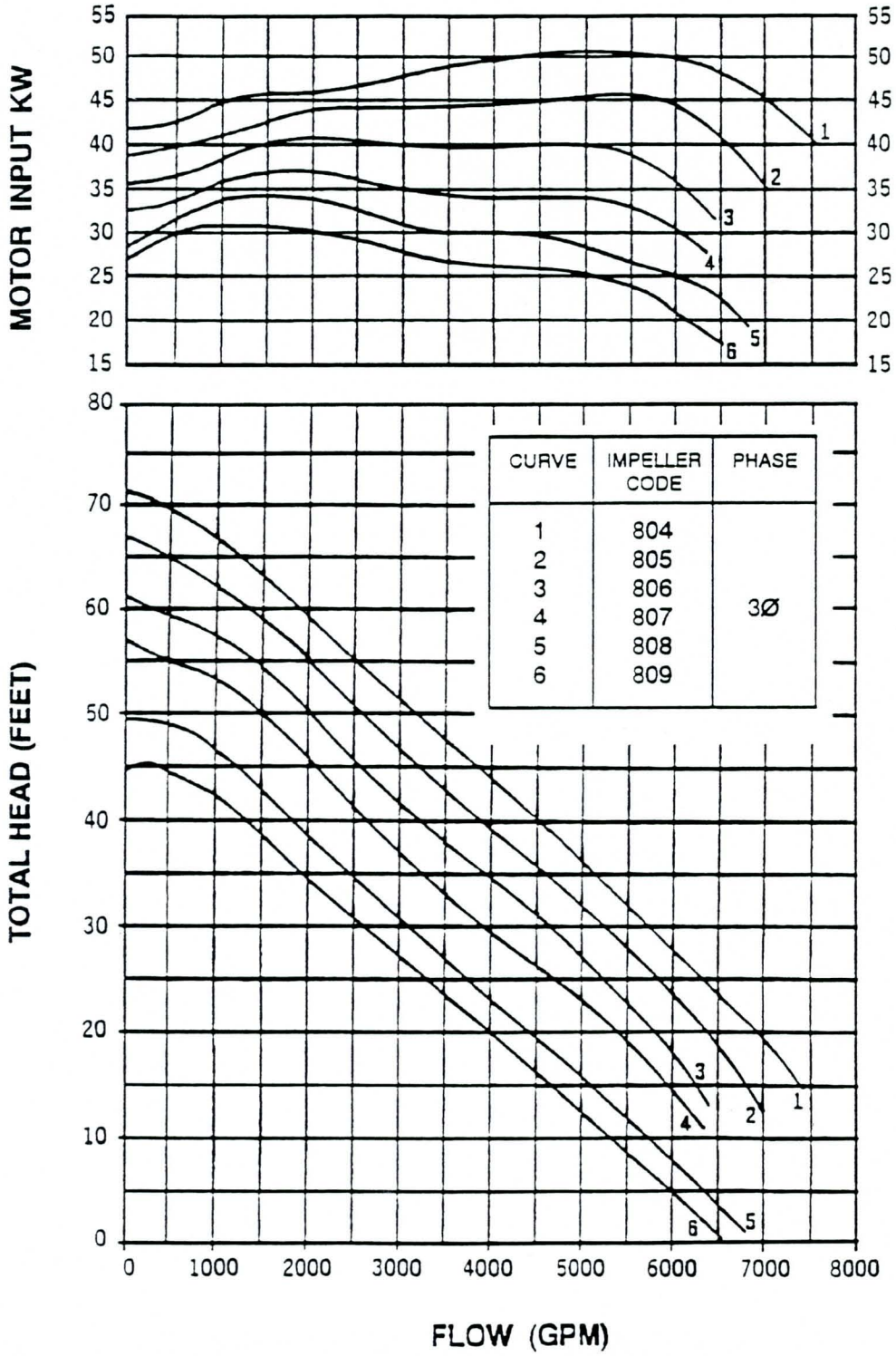

CURVE	IMPELLER CODE	PHASE
1	804	3Ø
2	805	
3	806	
4	807	
5	808	
6	809	

NOTE:
FAMILY OF PERFORMANCE CURVES ARE FOR PRE-SELECTION ONLY.
SEE INDIVIDUAL CURVES IN THIS SECTION FOR FINAL SELECTION.

BRUCE P. LORING, P.E. JCH/JAMES, COOKE & HOBSON 98-08-24

PUMP DATA

Pump:CP 3300 MT
Curve:63- 648 0 mm

Rated Power 60 Hp
Rated Current: 73.0 A
3*460 V, 6 Pole
Throughlet:2* 4 inch
In/outlet: —/10 inch
Weight: 2416.2 lbs

DUTY DATA

Flow	3020.8 USGPM	Head	27.9 ft	◆	
Input Power	29.9 kW	Shaft Power	34.7 Hp	Flow	3000.0 USGPM
Overall Eff.	53.2 %	Pump Eff.	61.4 %	Head	27.5 ft

98-08-24PROJECT NAME: 43RD AVE BROADWAY P.S. ALT#1

BRUCE P. LORING, P.E. JCH/JAMES, COOKE & HOBSON 98-08-24

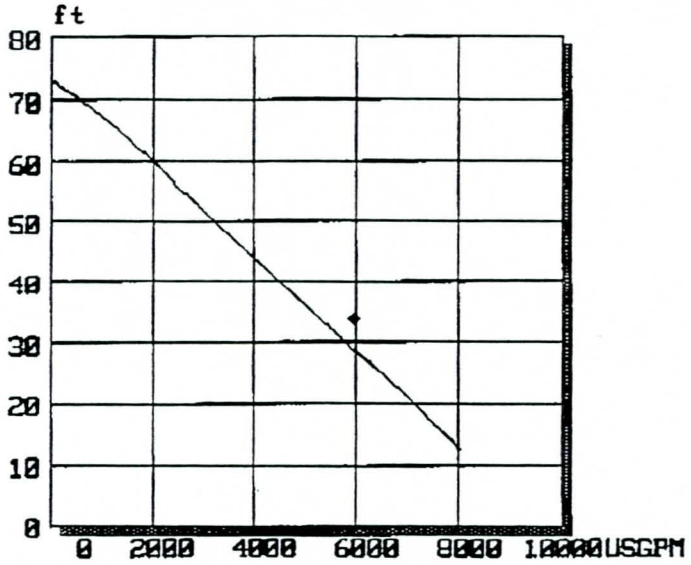

PUMP DATA

Pump:CP 3300 LT
Curve:63- 804 0 mm

Rated Power 60 Hp
Rated Current: 80.0 A
3*460 V, 8 Pole
Throughlet:3* 4 inch
In/outlet: —/12 inch
Weight: 2200.2 lbs

DUTY DATA

Flow	5732.3 USGPM	Head	30.6 ft	◆	
Input Power	49.9 kW	Shaft Power	57.8 Hp	Flow	6000.0 USGPM
Overall Eff.	66.3 %	Pump Eff.	76.7 %	Head	33.5 ft

98-08-24PROJECT NAME: 43RD AVE BROADWAY P.S. ALT#2_

PERFORMANCE CURVE

PRODUCT	CP3300.181
TYPE	LT
DATE	98-08-24
PROJECT	43RD AVE BROADWAY P.S. ALT#2
CURVE NO	63-804-00-8010
ISSUE	3

	1/1-LOAD	3/4-LOAD	1/2-LOAD
MOTOR COS FI	0.82	0.79	0.71
MOTOR EFFICIENCY	86.3 %	86.6 %	85.0 %
GEAR EFFICIENCY	---	---	---

MOTOR SHAFT POWER	60	HP
STARTING CURRENT ...	360.	A
RATED CURRENT ...	80.0	A
RATED SPEED	875	RPM
TOT.MOM.OF INERTIA ...	18.1	LBF*FT²
NO. OF BLADES	3	

IMPELLER DIAMETER	--- MM
MOTORTYPE	35-28-8AA
STATOR	380
REV	10
FREQ	60 HZ
PHASES	3
VOLTAGE	460 V
POLES	8
GEARTYPE	---
RATIO	---

COMMENTS

OUTLET	12 INCH
IMP. THROUGHLET	5 INCH

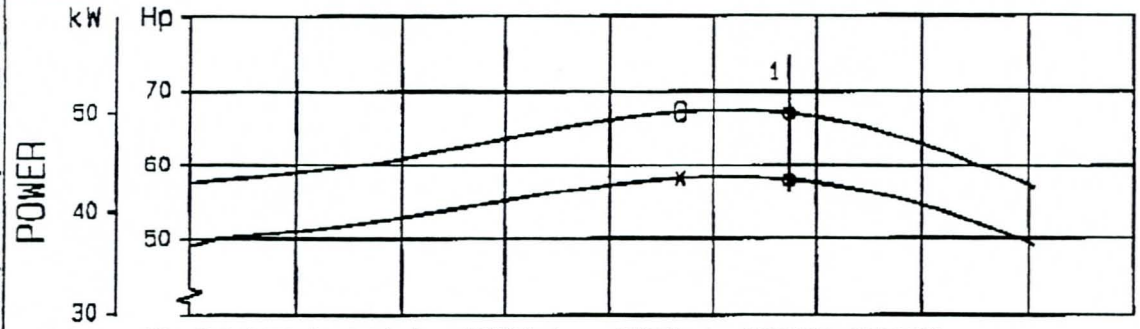

DUTY-POINTS:	FLOW (USGPM)	HEAD (ft)	POWER (Hp)	EFF (%)	NPSH (ft)	GUARANTY
BEP:	4719	38.2	67.2 (58.1)	68.0 (78.6)	12.5	---
1	5732	30.6	66.9 (57.8)	66.3 (76.7)	14.1	---

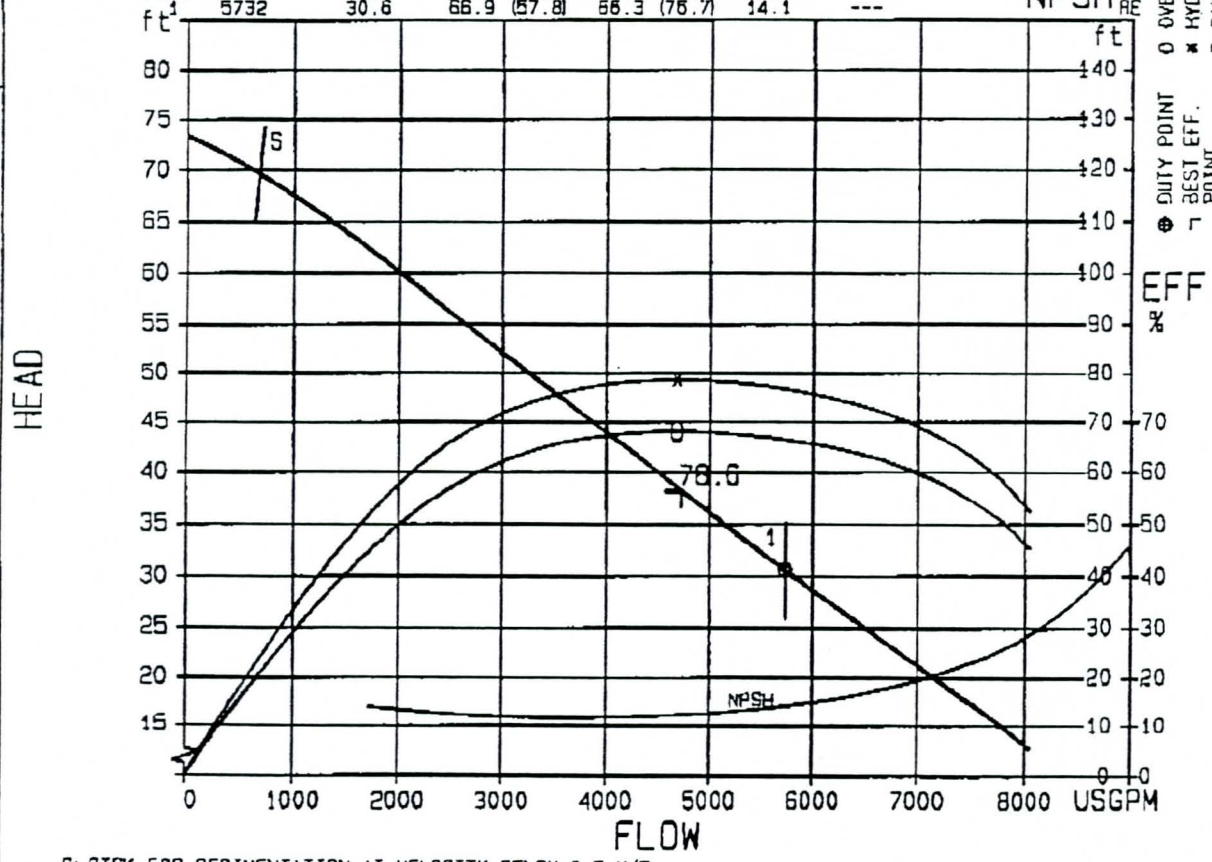

O INPUT POWER
x IMP. SHAFT POWER
O OVERALL EFF.
x HYDRAULIC EFF.
C CAVITATION
⊕ DUTY POINT
⊓ BEST EFF. POINT

S: RISK FOR SEDIMENTATION AT VELOCITY BELOW 0.6 M/S
(STANDARD DIAM. 12 INCH)

CURVES SHOW PERFORMANCE WITH CLEAR WATER

JCH/JAMES, COOKE & HOBSON

BRUCE P. LORING, P.E.

FLYPS 1.2

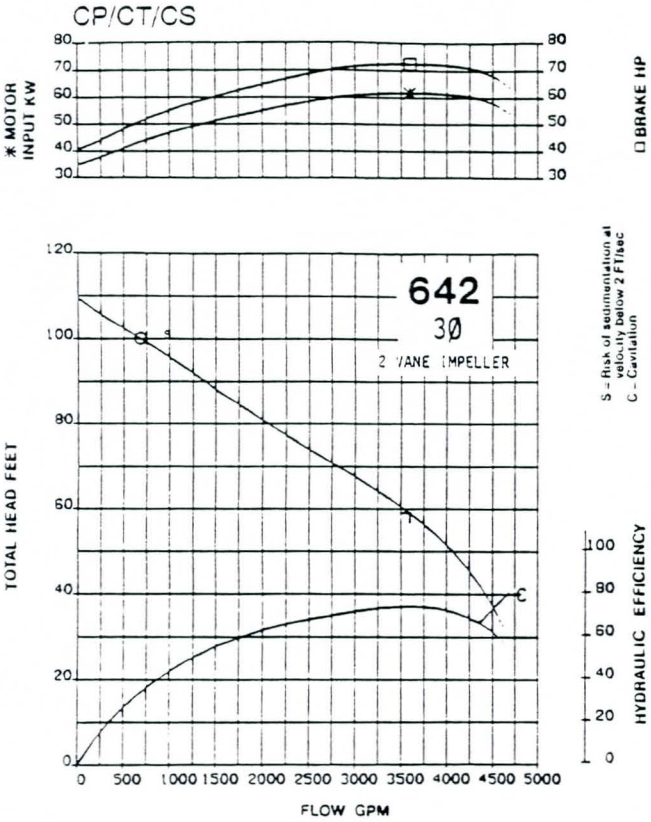
CP/CT/CS
✱ MOTOR INPUT KW
□ BRAKE HP
642
3Ø
2 VANE IMPELLER
S = Risk of sedimentation at velocity below 2 FT/sec
C = Cavitation
TOTAL HEAD FEET
HYDRAULIC EFFICIENCY
FLOW GPM

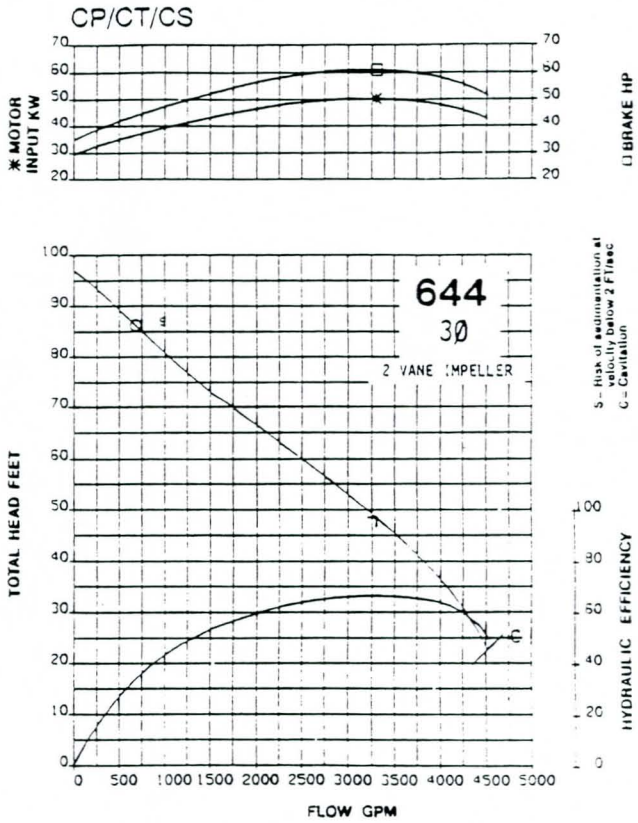
CP/CT/CS
✱ MOTOR INPUT KW
□ BRAKE HP
644
3Ø
2 VANE IMPELLER
S = Risk of sedimentation at velocity below 2 FT/sec
C = Cavitation
TOTAL HEAD FEET
HYDRAULIC EFFICIENCY
FLOW GPM

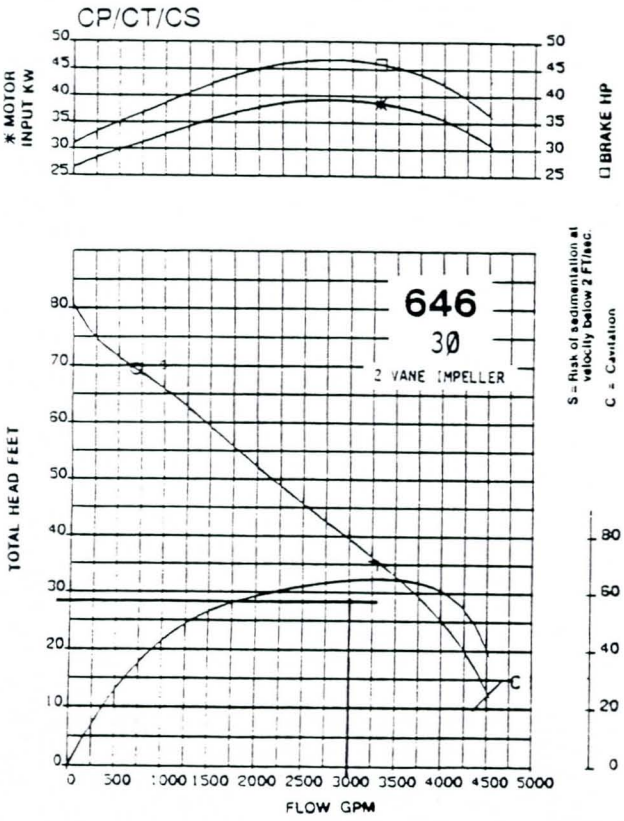
CP/CT/CS
✱ MOTOR INPUT KW
□ BRAKE HP
646
3Ø
2 VANE IMPELLER
S = Risk of sedimentation at velocity below 2 FT/sec
C = Cavitation
TOTAL HEAD FEET
HYDRAULIC EFFICIENCY
FLOW GPM

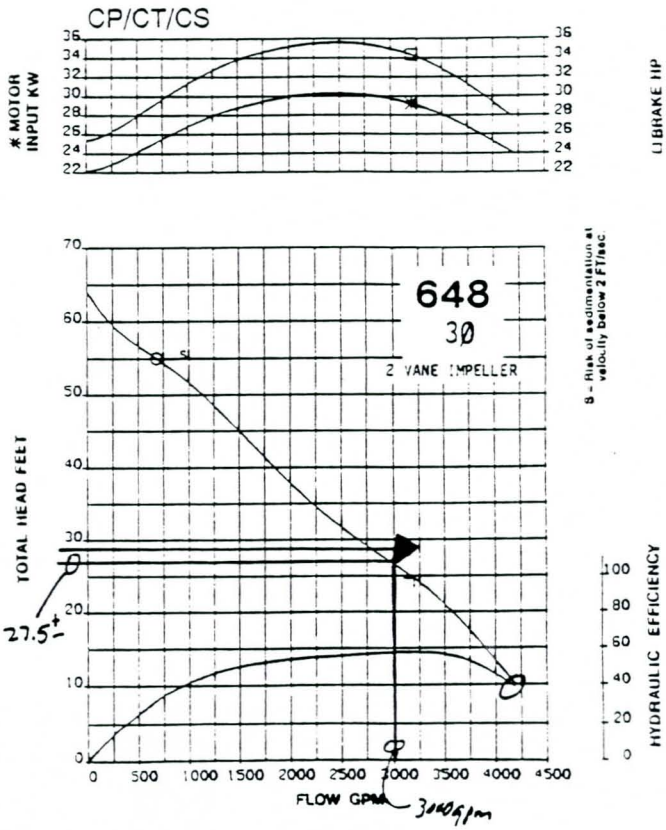
CP/CT/CS
✱ MOTOR INPUT KW
□ BRAKE HP
648
3Ø
2 VANE IMPELLER
S = Risk of sedimentation at velocity below 2 FT/sec
TOTAL HEAD FEET
27.5±
HYDRAULIC EFFICIENCY
FLOW GPM
3000 gpm

Overall Performance Range

ITT Flygt Submersible Municipal and Industrial Pumps

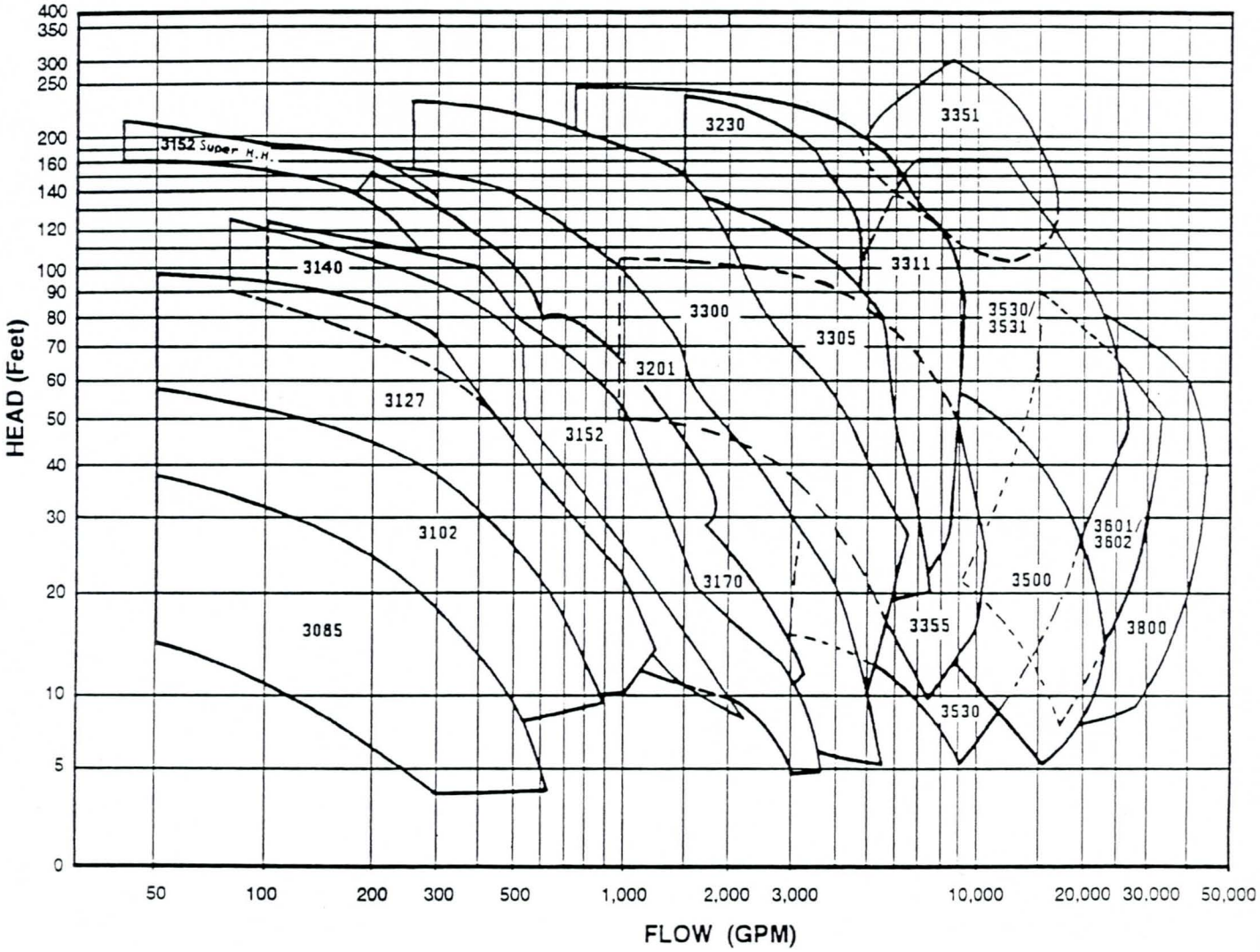

SPEEDIE AND ASSOCIATES
GEOTECHNICAL / ENVIRONMENTAL / MATERIALS ENGINEERS
11029 N. 24th AVE., SUITE 805 • PHOENIX, ARIZONA 85029 • (602) 997-6391 • FAX (602) 943-5508

HENRIETTA SPEEDIE, C.E.O.
JAMES A. SPEEDIE, P.E.
GREGG A. CREASER, P.E.
BRETT P. CREASER, P.E.
DONALD L. CORNELISON, P.E.
STEVEN A. GRIESS, P.E.
PRABHAKAR (PETER) RUPAL, P.E.

REPORT ON GEOTECHNICAL INVESTIGATION

Registered Professional Engineer (Civil)
CERTIFICATE NO.
14388
GREGG ALAN
CREASER
Date Signed 10-16-98
ARIZONA U.S.A.

DESIGNATION: 43rd Avenue Channel
Flood Control Basin

LOCATION: 43rd Avenue & Southern
Phoenix, Arizona

CLIENT: Maricopa Flood Control District

PROJECT NO: 980172SA

DATE: October 16, 1998

TABLE OF CONTENTS

	PAGE
INTRODUCTION	1
GENERAL SITE AND SOIL CONDITIONS	1
Site Conditions	1
General Subsurface Conditions	1
ANALYSIS AND RECOMMENDATIONS	3
General	3
PIPELINE ANALYSIS	3
Soil Corrosion	3
Excavation	3
PUMP STATION ANALYSIS	4
Analysis	4
Site Preparation	5
Foundation Design	5
Lateral Pressure	7
Fill & Backfill	7
Utilities Installation	9
Slab-On-Grade	9
GENERAL	10
APPENDIX	

Registered Professional Engineer (Civil)
CERTIFICATE NO.
14388
GREGG ALAN
CREASEROX
Date Signed 10-16-
ARIZONA U.S.A.

SPEEDIE
AND ASSOCIATES
GEOTECHNICAL / ENVIRONMENTAL / MATERIAL ENGINEERS
11029 N. 24th AVE., SUITE 805 • PHOENIX, ARIZONA 85029

INTRODUCTION

This report presents the results of a subsoil investigation carried out for the Flood Control District of Maricopa County 43rd Avenue Channel, FCD Project No. 117010. The project includes a Flood Control Detention Basin to be located at the southeast corner of 43rd Avenue and Southern Avenue, and a storm drain to be located in 43rd Avenue from Baseline Road to an outfall north of Broadway Road at the Salt River in Phoenix, Arizona.

Preliminary information calls for the construction of a 20± acre storm water detention basin and about 2 miles of storm sewer pipeline along 43rd Avenue. The basin will be as deep as 25 to 30 feet. Improvements will include a pump station and possible small park area. The pipeline will be located within the 43rd Avenue right of way, flowing north from Baseline Road to the Salt River. It is assumed that the pipeline will be no deeper than 20 feet deep on the southern end to 35 feet deep on the north end. It is assumed that the pump station will be supported in a slab on grade building located outside of the detention basin.

At the time this report was issued, a new pump station was being planned for the area of the northeast corner of 43rd Avenue and Weir. This site will be drilled, and a monitoring well installed when permits are received. An addendum will be issued with the new data and any revisions that may be required to the foundation recommendations for the pump house.

GENERAL SITE AND SOIL CONDITIONS

Site Conditions - The retention basin/pump station is located in a vacant lot area bounded on the north by Southern Avenue, on the south and east by residential property and the west by 43rd Avenue. At the time of the investigation, the site was covered with grasses, weeds and small trees. A small dry wash was noted in the south central portion of the site. There was no indications of previous foundations visible on the surface. The proposed storm drain is located along the 43rd Avenue alignment. The roadway is paved with asphaltic concrete of various widths. The adjacent development includes a mixture of vacant, agricultural, commercial and residential development.

General Subsurface Conditions - Subsoil conditions at the retention basin/pump station site at 43rd Avenue consists of fine sandy to silty clay and fine sandy silt to depths of 7 to 13 feet below grade where it grades into silty sand of various gradations including gravel with some clay lenses noted. At about 16 feet, the gradation turned into sand, gravel and cobbles (SGC) where auger refusal was encountered. A monitoring

well installed in this area using a Becker Hammer rig indicated that the SGC materials extend to at least 35 feet, the termination point of the boring. Standard penetration resistance (SPT) values range from 10 to 50+ blows per foot of penetration.

Subsoils at the boring locations along the pipe line alignment are comprise of fine grained interbedded sandy clays, sandy silts, clayey sands, silty sands, silty and clayey gravels overlying sands, gravels and cobbles of various gradations. The depth to the contact with the cobbly soil is on the order of 15 to 18 feet on the southern end, becoming shallower to the north, generally at a depth greater than 10 feet. All of the pipeline borings were drilled with a Becker Hammer Drill (AP1100) due to the concern about advancing the borings to the prescribed depth in cobbles. The recorded penetration resistance (casing pile driver) values range from 5 to 100+ blows per foot of penetration.

No pipeline borings were advanced to groundwater during this investigation due to the lack of the required ADWR permits. Borings B-9 to B-12 were terminated at the recorded depths of 31 to 34 feet deep at the point were the soils became very moist indicating that the boring was approaching the groundwater surface. The water table was originally encountered at a depth of 35±feet during the drilling of the monitoring well site. A second reading of the monitoring well 6 days after completion indicated a stable water table depth of 27 feet. Based on the ADWR well records reviewed and attached in the appendix of this report, the regional water table is reported to be 35 to 50 feet deep south of Southern Avenue and 30 to 40 feet north of Southern. These reported depths are consistent with the indications in the pipeline borings where the soils become very moist at the level the boring was terminated. This level will likely fluctuate depending on time of year, flows in the Salt River and the effects of draw down on the adjacent wells.

Laboratory testing along the pipeline alignment revealed plasticity indices ranging from "non-plastic" to 12 percent. The fraction finer than the No. 200 sieve ranges from 6 to 93 percent. Laboratory resistivity tests indicated results ranging from 1330 to 4670 ohm-cm in the saturated state and pH values of 8.4 to 9.0. Sulfate contents ranged from 0.11 percent for the surface fine grained soils at the pump station to 0.0037 for the deeper sandy soils The upper clayey subsoils in the retention basin area exhibit a potential for volume increase due to wetting on the order of 3.2 percent when compacted to moistures and densities normally expected during construction. When subjected to an axial pressure of 2,200 lbs/ft^2, an undisturbed sample exhibited additional strain on the order of 2.5 percent when inundated.

ANALYSIS AND RECOMMENDATIONS

General

The shallow groundwater will be a factor that needs to be addressed in the design and construction of the basin and pipeline. For preliminary analysis, it is recommended that a current static level of 27 to 30 feet below grade be used. As the well data indicates, it appears that this water table may be under a slight pressure as the table rose after penetrating the water surface. This may result in unstable excavations as they approach the water table. The water table will likely fluctuate over time and may rise above the current levels as the area is developed and the amount of groundwater pumping is reduced. Flows in the Salt River may also have an impact on water levels, especially along the pipeline close to the outfall. Depending on the depth of the pipeline north of Southern Avenue, groundwater may be encountered. It may be possible to control the water in trenches and/or excavations by simple pumping and/or allowing it to drain through the pipe and/or trench back to the River (assuming that the flowline is above the current River water level). A detailed ground water hydrology study would be required to estimate what those future water levels may be and quantities of water that may be generated during construction.

PIPELINE ANALYSIS

Soil Corrosion - Laboratory resistivity tests indicated results ranging from 1330 to 4670 ohm-cm in the saturated state and pH values of 8.4 to 9.0. Sulfate contents ranged from 0.11 percent for the surface fine grained soils at the pump station to 0.0037 for the deeper sandy soils This reflects a moderate to severe degree of corrosiveness in a saturated state. Accordingly, suitable pipe wall thickness and corrosion protection should be selected per the trench/traffic load and lifetime requirements of the project. Type II cement will be adequate for concrete in contact with the ground.

Excavation - The presence of non and or low cohesive soils and cobbles at the depths encountered will result in unstable trench concerns. This in-ability to hold a vertical cut and proper bottom shape were these materials are encountered will make cast-in-place concrete pipe not feasible. These cobbles may also result in the need to require bedding under the pipe to prevent cobbles from inflicting point loads and injury to the pipe. Bedding should be selected per the requirements of the pipe materials used and the trench loading conditions.

All excavations should be braced and/or shored in accordance with all current governmental guidelines. Each section should be addressed by the responsible general and/or excavating contractor for

establishing safe cut slopes in accordance with current OSHA guidelines. Based on the types of soils encountered in the borings, the upper fine grained soils (Type B) would need to be sloped at 1:1 and the lower granular soils (Type C) would need to be sloped at 1½:1. Cuts deeper than 20 feet and/or bracing would have to be designed by a professional engineer. The fact that a boring was advanced to a particular depth should not lead to the assumption that it is necessarily excavatable by conventional means. Very dense and/or cemented conditions may require more aggressive removal techniques. The presence of very dense conditions and cobbles (and possible small boulders) may impede progress and the ability to cut neat trenches.

The non-cohesive soils will likely not be suitable for temporary support systems such as Soil Nailing. Other systems such as a braced soldier beam and lagging system may be better suited for these conditions. This system consists of drilled shaft caissons with steel I- beam grouted into place with wood lagging installed as the excavation continues.

PUMP STATION ANALYSIS

Analysis - While the exact configuration of the structure is unknown at this time, it is assumed that the structure will be a slab on grade, masonry wall building. An alternate recommendation is provided in the event that there is a below grade wet well vault supporting a structure above. Analysis of the field and laboratory data indicates that the shallow subsoils at the pump station site are generally favorable for the support of the proposed structure subject to remedial earthwork. Test results indicate that the shallow soils are sensitive to moisture increases which could result in excessive settlement should the bearing soils become wet. Accordingly, recommendations are made to over-excavate and re-compact the bearing soils to a depth of 2+ feet below the proposed bottom of footing elevation or existing grade, whichever is deeper. Any screen walls or other minor structure not connected to the pump house may be founded on the shallow soils at reduced bearing capacity with increased risk for settlement.

Excavation for a wet well structure would likely extend to depths greater than 20 feet below grade which will terminate within the very dense silty sand and/or gravely soil. It was not possible to auger drill to the prescribed depth. In order to advance the well to the prescribed depth, it was necessary to use special drilling equipment. This granular zone typically continues as heavy granular material of various gradations with some thin fine grained deposits possible. It is not expected to have any substantial clay deposits that would have a negative impact on the type of structure proposed. The excavation should be examined during construction to ensure the exposed soils are as assumed for the recommendations presented herein.

The clayey surface soils exhibit a swell potential. The potential is usually strong enough to cause differential movements of any surface slabs-on-grade such as floors and sidewalks but not enough to cause damage to structures. Accordingly, attention must be paid to provide proper drainage to limit the potential for water infiltrating under slabs. A minimum slope of at least 5 percent for a distance of 10 feet is recommended for unpaved landscaped areas. Typical recommendations to reduce the swell potential include reducing the compaction requirements and requiring higher moisture contents during pad preparation and/or requiring at least one foot of non-expansive material to be placed directly beneath the building slabs and slabs contiguous to the structure such as sidewalks. The site-available low and non-plastic soils that will be generated during excavation of the retention basin can be used in this regard.

For exterior slabs on grade, frequent jointing is recommended to control cracking and reduce tripping hazards should differential movement occur. It is also recommended to pin the landing slab to the building floor/stem wall. This will reduce the potential for the exterior slab lifting and blocking the operation of outswinging doors. Pinning typically consists of 24 inch long No. 4 reinforcing steel dowels placed at 12 inch centers.

Site Preparation - The entire area to be occupied by the proposed construction should be stripped of all vegetation, debris, rubble and obviously loose surface soils. Additional material should be removed to provide space for the required 12 inches of non-expansive under slab fill.

If grading plans require placing structural fill below footing bottom elevation, the exposed grade should be scarified to a depth of 8 inches, moisture-conditioned to optimum (± 2 percent) and compacted to at least 95 percent of maximum dry density as determined by ASTM D-698.

All cut areas and areas above footing bottom elevation that are to receive only floor slab fill should be scarified 8 inches, moisture-conditioned to optimum and uniformly compacted to 95 percent of maximum dry density as determined by ASTM D-698. Areas that expose clayey soils (CL or SC classification should be scarified 8 inches, moisture-conditioned to at least optimum to 3 percent above optimum and lightly but uniformly compacted to at least 90 but not more than 95 percent of maximum dry density.

Foundation Design - It is recommended that the pump station wet well structure be founded on a pad/mat foundation bearing on undisturbed native dense granular soil at 20+ feet below existing grade. The surface pump station building not supported by the wet well may be supported on shallow spread foundations bearing on at least 30 inches (24 inches of fill and $6\pm$ inches pre-compacted subgrade) at minimum depth

below lowest adjacent grade. Screen walls and/or any other minor surface structures may be founded on the native soils at reduced bearing capacity. The following allowable bearing capacities are available for design:

Recommended Allowable Bearing Capacities

Location	Bearing Medium	Bearing Depth, ft	Bearing Capacity, psf
Pump Station Wet Well	Very Dense Silty Gravel	2.0(1)	6,000
Pump Station	2.5 ft. Engineered Fill	1.5(2)	2,500
Minor Structures	Native Sandy Silt/Clay	1.5(3)	1,500

Notes:

1. Bearing Depth refers to depth below pump station base slab level at 20+ feet below grade
2. Bearing Depth refers to depth below lowest adjacent grade within 5 feet of foundation element bearing on at least 2.5 feet (2.0 ft. fill + 6 in. compacted subgrade) of engineered fill.
3. Bearing Depth refers to depth below lowest adjacent grade within 5 feet of foundation element bearing on undisturbed native soil.

These bearing capacities refer to the total of all loads, dead and live, and are net pressures. They may be increased one-third for wind, seismic or other loads of short duration. All footing excavations should be level and cleaned of all loose or disturbed materials. Positive drainage away from the proposed structure **must** be maintained at all times.

Estimated settlements under design loads are on the order of ½ to ¾-inch, virtually all of which will occur during construction. Post-construction differential settlements will be negligible, under existing and compacted moisture contents. Additional localized settlements of the same magnitude (or greater for footings bearing on fine grained native soils) could occur if native supporting soils were to experience a significant increase in moisture content. Positive drainage away from structures, and controlled routing of roof runoff **must** be provided to prevent ponding adjacent to perimeter walls. Planters requiring heavy watering should be considered with caution. Care should be taken in design and construction to insure that domestic and interior storm drain water is contained to prevent seepage.

Continuous footings and stem walls should be reinforced to distribute stresses arising from small differential movements, and long walls should be provided with control joints to accommodate these

movements. Reinforcement and frequent control joints are suggested to allow slight movement and prevent minor floor slab cracking.

Lateral Pressures - The following lateral pressure values may be utilized for the proposed construction:

Active Pressure	
Unrestrained Walls	35 pcf
Restrained Walls	60 pcf
Passive Pressure	
Continuous Footings	350 pcf
Spread Footings or Drilled Piers	400 pcf
Coefficient of Friction (With Passive Pressure)	0.35
Coefficient of Friction (Without Passive Pressure)	0.45

All backfill must be compacted to not less than 95 percent (ASTM D-698) to mobilize these passive values at low strain. Expansive native soils should not be used as wall backfill, except as a surface seal to limit infiltration of storm/irrigation water. The expansive pressures could greatly increase active pressures.

Fill And Backfill - Clayey native soils (with Unified Soil Classification of CL or SC) are considered suitable for use in general grading fills but should **not** be used in the top foot of pad fill (in the case of slabs-on-grade for surface structures) or as wall backfill. The top foot should be completed with an approved low or non-expansive soil, either selectively used on-site soils or import. Import can be common borrow (as specified below) or select granular soil. If select is used, the 4 inches of under slab A.B.C. may be included as part of the 12 inches. Otherwise, a full 12 inches of common borrow should be used in addition to the normal 4 inches of A.B.C.

Well graded granular soils are recommended for wall backfill in the saturated zone. If native soils are to be used for wall backfill (as opposed to importing granular soil) above that level, low to non-plastic soils such as the silty sands and gravels should be selectively stockpiled for use in this regard. Maximum particle size should not exceed 3 inches. The upper 24 inches of wall backfill may consist of the clayey soils act as a barrier to surface water infiltration.

Successful backfill of sub-surface walls is difficult to achieve given the tight access. The cleaner sandy soils located in the intermediate zone or well graded granular import should be specified for all below- grade wall backfill. Placement and compaction must be carefully controlled in order to minimize the potential for post construction settlement should the backfill zone be subjected to water infiltration. Even the most well controlled fills could experience additional settlement on the order of 1 inch if subjected to significant moisture increases. Accordingly, consideration should be given to constructing a structural slab over the backfill zone in the most critical areas or reinforce and pin the landing/entry slabs to the building stem wall to span over the backfill zone. This will reduce the potential for the exterior slab dropping and creating a tripping hazard.

If imported common fill for use in site grading is required, it should be examined by a Soils Engineer to ensure that it is of low swell potential and free of organic or otherwise deleterious material. In general, the fill should have 100 percent passing the 3-inch sieve and no more than 60 percent passing the 200 sieve. For the fine fraction (passing the 40 sieve), the liquid limit and plasticity index should not exceed 30 percent and 10 percent, respectively. It should exhibit less than 1.5 percent swell potential when compacted to 95 percent of maximum dry density (ASTM D-698) at a moisture content of 2 percent below optimum, confined under a 100 psf surcharge, and inundated.

Fill should be placed on subgrade which has been properly prepared and approved by a Soils Engineer. Fill must be wetted and thoroughly mixed to achieve optimum moisture content, ± 2 percent (optimum to $+3$ percent for underslab fill). Fill should be placed in horizontal lifts of 8-inch thickness (or as dictated by compaction equipment) and compacted to the percent of maximum dry density per ASTM D-698 set forth as follows:

A.	Building Areas		
	1.	Below footing level	95
	2.	Below slabs-on-grade (non-expansive soils)	95
	3.	Below slabs-on-grade (expansive native soils)	90 - 95 (max)
B.	Utility Trench Backfill		
	1.	More than 2.0' below finish S/G	90
	2.	Within 2.0' of finish S/G	95
C.	Aggregate Base Course		
	1.	Below floor slabs	95

D. Landscape Areas

1.	Miscellaneous fill	90
2.	Utility trench - more than 1.0' below F/G	85
3.	Utility trench - within 1.0' of F/G	90

Utilities Installation - Trench excavations for shallow utilities can be accomplished by conventional trenching equipment although very dense soils and cobbles (and possibly boulders) may impede progress and could require the use of heavier equipment. Trench walls may stand near-vertical for the short periods of time required to install utilities although some sloughing may occur in looser and/or sandy soils necessitating laying back of side slopes and/or shoring (see above). Adequate precautions must be taken to protect workmen in accordance with all current governmental regulations.

Backfill of trenches may be carried out with native excavated material (<3 inches in size). This material should be moisture-conditioned, placed in 8-inch lifts and mechanically compacted. Water settling is not recommended. Compaction requirements are summarized in the "Fill And Backfill" section of this report.

Slabs-On-Grade - To facilitate fine grading operations and aid in concrete curing, a 4-inch thick layer of granular material conforming to the gradation for Aggregate Base Course (A.B.C.) as per M.A.G. Specification Section 702 should be utilized beneath slabs-on-grade near the surface. Dried subgrade soils **must** be re-moistened prior to placing the A.B.C. if allowed to dry out.

A Modulus of Subgrade Reaction, k, of 250 pci. may be used for design of the pump station base slab.

GENERAL

The scope of this investigation and report does not include regional considerations such as seismic activity and ground fissures resulting from subsidence due to groundwater withdrawal, nor any considerations of hazardous releases or toxic contamination of any type.

Our analysis of data presented herein are based on the assumption that soil conditions do not vary significantly from those found at specific sample locations. Our work has been performed in accordance with generally accepted engineering principles and practice; this warranty is in lieu of all other warranties expressed or implied.

We recommend that a Soils Engineer monitor the earthwork and foundation portions of this project to ensure compliance to project specifications and the field applicability of subsurface conditions which are the basis of the recommendations presented in this report. If any significant changes are made in the scope of work or type of construction that was assumed in this report, we must review such revised conditions to confirm our findings if the conclusions and recommendations presented herein are to apply.

Respectfully submitted,

SPEEDIE & ASSOCIATES, INC.

Registered Professional Engineer (Civil)
CERTIFICATE NO
14388
GREGG ALAN
CREASER
Date Signed 10-16-98
ARIZONA, U.S.A.

Gregg A. Creaser, P.E.

APPENDIX

FIELD AND LABORATORY INVESTIGATION

SOIL BORING LOCATION PLAN

SOIL LOG LEGEND

LOG OF TEST BORINGS

TABULATION OF TEST DATA

CONSOLIDATION TEST DATA

MOISTURE-DENSITY RELATIONS

SWELL TEST DATA

pH & RESISTIVITY TEST DATA

SOIL CHEMISTRY DATA

WELL DATA

FIELD AND LABORATORY INVESTIGATION

On March 12, 1998, a total of three soil test borings were drilled at the approximate locations shown on the attached Soil Boring Location Plan. All exploration work was carried out under the full-time supervision of our soils technician, who recorded subsurface conditions and obtained samples for laboratory testing. The soil borings were advanced with a truck-mounted CME-55 drill rig utilizing 7-inch diameter hollow stem flight augers. On March 25, 1998, we returned to the site to attempt to deepen the borings with a truck-mounted CME-75HD drill rig utilizing 7-inch diameter hollow stem flight augers. Auger refusal was again met at shallow depth. On May 11 and 12, 1998, a total of nine soil test borings were drilled in 43rd Avenue and the well site with a truck-mounted AP1100 Becker Hammer drill using air to return cutting to the surface. Detailed information regarding the borings and samples obtained can be found on an individual Log of Test Boring prepared for each drilling location.

Laboratory testing consisted of moisture content, dry density, grain-size distribution and plasticity (Atterberg Limits) tests for classification and design parameters. Compression tests were performed on a selected ring sample in order to estimate settlements and determine effects of inundation. Remolded swell tests were performed on samples compacted to densities and moisture contents expected during construction. Laboratory resistivity, pH and sulfate tests were also conducted for corrosivity analysis. All field and laboratory data are presented in this appendix.

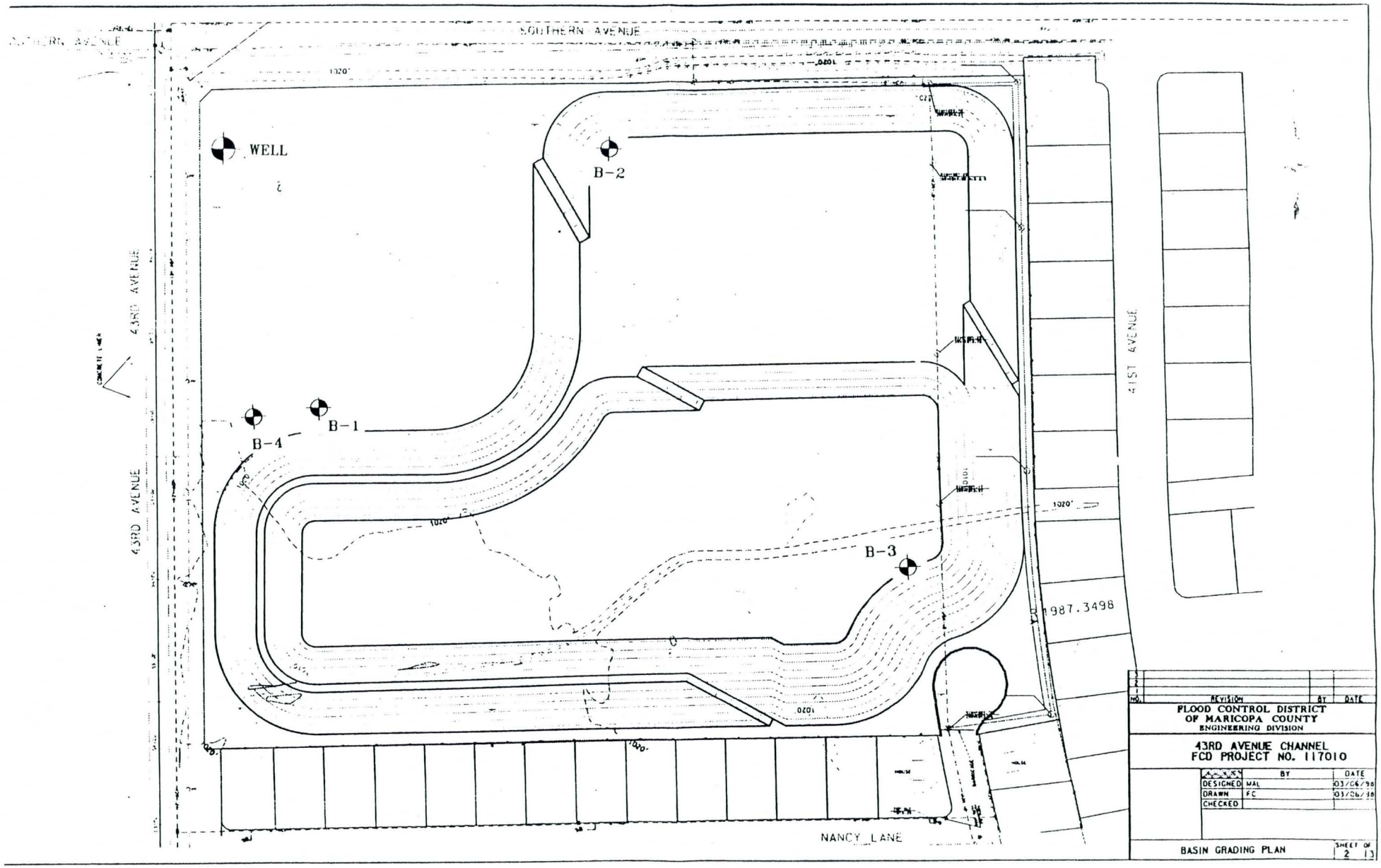

SOIL BORING LOCATION PLAN

Flood Detention Basin
SEC 43rd Ave. & Southern Ave.
Phoenix, Arizona

SPEEDIE AND ASSOCIATES
GEOTECHNICAL/ENVIRONMENTAL/MATERIALS ENGINEERS
11029 N. 24th AVE., SUITE 805 PHOENIX, ARIZONA 85029 (602) 997-6391

⊕ – Approximate Soil Boring Locations

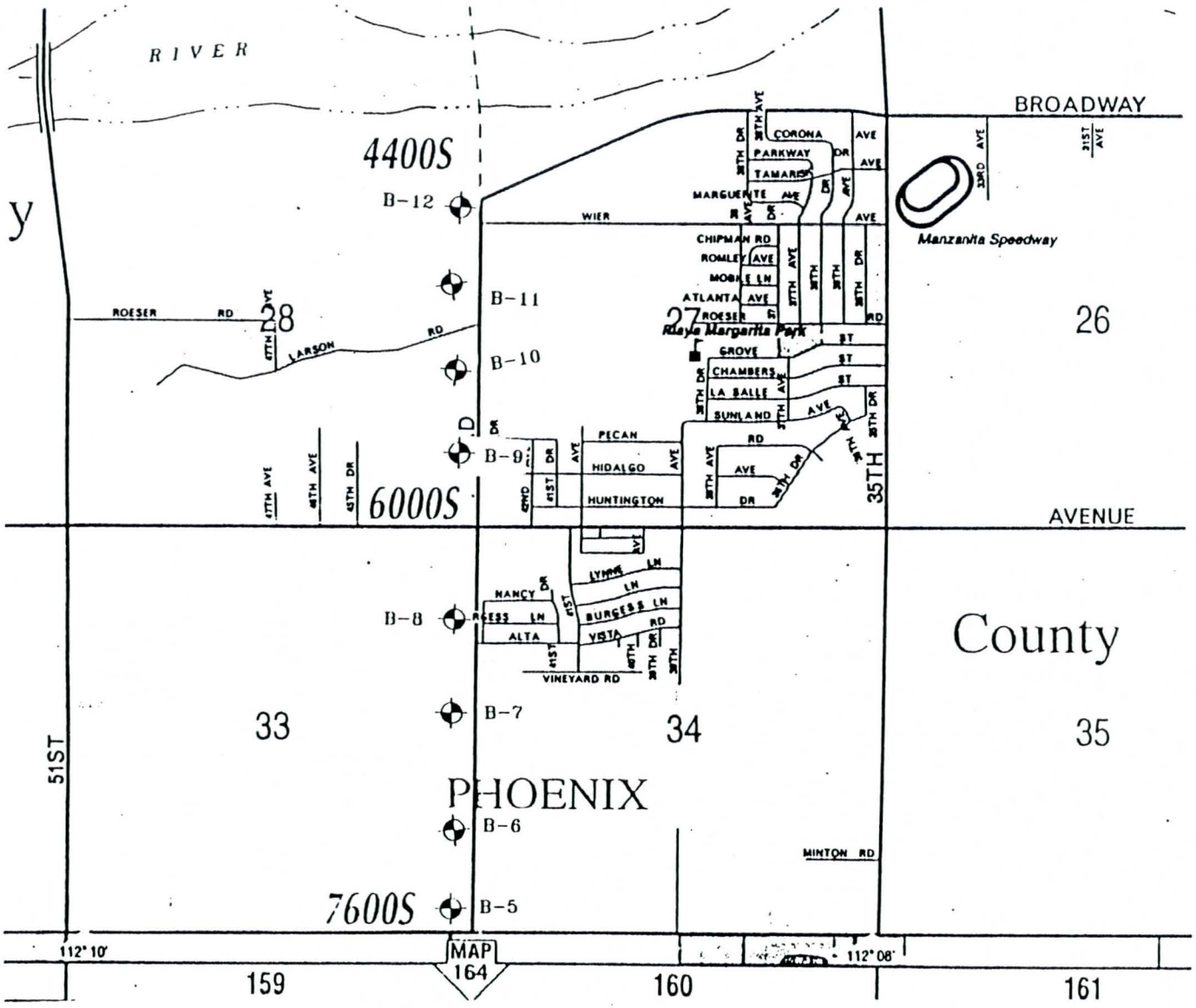

SOIL BORING LOCATION PLAN

43th Ave. Storm Drain
43rd Ave. Baseline to Broadway
Phoenix, Arizona

SPEEDIE AND ASSOCIATES
GEOTECHNICAL/ENVIRONMENTAL/MATERIALS ENGINEERS
11029 N. 24th AVE., SUITE 805 PHOENIX, ARIZONA 85029 (602) 867-6181

Project No. 98017SSA

⊕ – Approximate Soil Boring Locations

Rig Type: CME-55
Boring Type: Hollow Stem Auger
Surface Elevation: N/A

Depth (feet)	Visual Classification	Sample Number	Depth of Sample	Natural Water Content (%)	In-place Dry Density (P.C.F.)	Penetration Resistance Blows per Foot
0	Very Stiff to Stiff Brown SANDY SILT (ML-Moist)	RS-1	2.0	9.4	101.7	
5	Weak Calcareous Cementation	S-2	6.0	--	--	
10		S-3	11.0	--	--	
12.5	Very Dense Brown WELL GRADED SAND (SW-Moist) with Little Gravel	S-4	15.5	--	--	65/12"
15						
17.0	Auger Refusal on Cobbles					
20						
25						
30						
35						

Penetration Resistance scale: 0 25 5

Boring Date: 3-12-98
Field Engineer/Technician: K.Gravel
Driller: B. Freeman
Contractor: Heber Mining

Water Level

Depth	Hour	Date
Dry		

SPEEDIE AND ASSOCIATES

Log of Test Boring Number: B- 1

Storm Water Detention Basin

43th Ave. & Southern SEC

Arizona, Phoenix

Project No.: 980172SA

Rig Type: CME-55
Boring Type: Hollow Stem Auger
Surface Elevation: N/A

Depth (feet)	Visual Classification	Sample Number	Depth of Sample	Natural Water Content (%)	In-place Dry Density (P.C.F.)	Penetration Resistance Blows per Foot (0 – 25 – 50)
0	Very Stiff Brown SANDY CLAY (CL-Moist) with Weak Calcareous Cementation	RS-1	2.0	12.9	85.7	
3.0	Stiff Brown SANDY SILT (ML-Moist) with Weak Calcareous Cementation	BS-2	4.5	--	--	
5		S-3	6.0	--	--	
10		S-4	11.0	--	--	
11.5	Very Dense Brown SILTY SAND (SM-Moist) With Little Gravel	S-5	15.0	--	--	50/6"
15						
16.0	Auger Refusal on Cobbles					
20						
25						
30						
35						

Boring Date: 3-12-98
Field Engineer/Technician: K.Gravel
Driller: B. Freeman
Contractor: Heber Mining

Water Level

Depth	Hour	Date
Dry		

SPEEDIE AND ASSOCIATES

Log of Test Boring Number: B- 2

Storm Water Detention Basin

43th Ave. & Southern SEC

Arizona, Phoenix

Project No.: 980172SA

Rig Type: CME-55
Boring Type: Hollow Stem Auger
Surface Elevation: N/A

Depth (feet)	Visual Classification	Sample Number	Depth of Sample	Natural Water Content (%)	In-place Dry Density (P.C.F.)	Penetration Resistance Blows per Foot (0 – 25)
0	Very Stiff Brown SANDY CLAY SILTY CLAY (ML/CL-Moist) with Weak Calcareous Cementation	S-1	2.5	--	--	
		BS-2	4.5	--	--	
5		RS-3	5.5	--	--	
7.0	Medium Dense Brown SILTY SAND (SM-Moist) with Fine Layers of Clay					
10		S-4	11.0	--	--	
	with Little Gravel					
15		S-5	16.0	--	--	
17.0	Auger Refusal on Cobbles					
20						
25						
30						
35						

Boring Date: 3-12-98
Field Engineer/Technician: K.Gravel
Driller: B. Freeman
Contractor: Heber Mining

Water Level

Depth	Hour	Date
Dry		

SPEEDIE AND ASSOCIATES

Log of Test Boring Number: B- 3

Storm Water Detention Basin

43th Ave. & Southern SEC

Arizona, Phoenix

Project No.: 980172SA

Rig Type: CME-75
Boring Type: Hollow Stem Auger
Surface Elevation: N/A

Depth (feet)	Graphic Log	Visual Classification	Sample Number	Depth of Sample	Natural Water Content (%)	In-place Dry Density (P.C.F.)	Penetration Resistance Blows per Foot (0 – 25 – 50)
0		Brown SILTY SAND (SM-Dry)					
5							
10							
15		15.0					
		Brown WELL GRADED SAND (SW-Dry) with Trace Cobbles					
20							
		21.9					
		Auger Refusal on Cobbles					
25							
30							
35							

Boring Date: 3-25-98
Field Engineer/Technician: K. Gravel
Driller: J. Carter
Contractor: Heber Mining

Water Level

Depth	Hour	Date
Dry		

SPEEDIE AND ASSOCIATES

Log of Test Boring Number: B- 4

Storm Water Detention Basin

43th Ave. & Southern SEC

Arizona, Phoenix

Project No.: 980172SA

Rig Type: Becker AP1100
Boring Type: Air Compressed
Surface Elevation: N/A
Station: 12+50 L 20

Depth (feet)	Visual Classification	Sample Number	Depth of Sample	Natural Water Content (%)	In-place Dry Density (P.C.F.)	Penetration Resistance Blows per Foot (0 – 25 – 50)
0	Firm Brown SANDY SILTY CLAY (CL/ML-Dry)		2.0	--	--	
			4.0	--	--	
5	5.0		6.0	--	--	
	Medium Dense to Very Dense Brown SILTY SAND (SM-Dry)		8.0	--	--	
10	Trace Gravel		10.0	--	--	59/12"
			12.0	--	--	
			14.0	--	--	
15	Layer of Silty Sand		16.0	--	--	
	Strong Calcareous Cementation		18.0	--	--	
	18.5					
20	Very Dense Brown SILTY SAND (SM-Moist) with Little Gravel and Cobbles size Calcareous Cementation Nodules		20.0	--	--	
			22.0	--	--	
			24.0	--	--	
25	25.0	BS-1	25.0	--	--	
	End of Boring					
30						
35						

Boring Date: 5-12-98
Field Engineer/Technician: K. Gravel
Driller: B. Mouis
Contractor: Layne Enviro.

Water Level

Depth	Hour	Date
Dry		

SPEEDIE AND ASSOCIATES

Log of Test Boring Number: B- 5

Storm Water Detention Basin

43th Ave. & Southern SEC

Arizona, Phoenix

Project No.: 980172SA

Rig Type: Becker AP1100
Boring Type: Air Compressed
Surface Elevation: N/A
Station: 24+00 L 20

Depth (feet)	Visual Classification	Sample Number	Depth of Sample	Natural Water Content (%)	In-place Dry Density (P.C.F.)	Penetration Resistance Blows per Foot (0–25–50)
0	Firm Brown SANDY SILT (ML-Dry)		2.0	--	--	
			4.0	--	--	
5			6.0	--	--	
6.5	Medium Dense Brown SILTY SAND (SM-Dry) with Little Gravel		8.0	--	--	
9.0	Medium to Very Dense Brown SILTY GRAVEL (GM-Dry) with Little Sand & Trace Cobbles		10.0	--	--	
10			12.0	--	--	
	Little Cobbles		14.0	--	--	
15			16.0	--	--	
	Some Cobbles		18.0	--	--	
20			20.0	--	--	80/12"
			22.0	--	--	
			24.0	--	--	
25.0	End of Boring	BS-1	25.0	--	--	
30						
35						

Boring Date: 5-12-98
Field Engineer/Technician: K. Gravel
Driller: B. Mouis
Contractor: Layne Enviro.

Water Level

Depth	Hour	Date
Dry		

SPEEDIE AND ASSOCIATES

Log of Test Boring Number: B- 6

Storm Water Detention Basin

43th Ave. & Southern SEC

Arizona, Phoenix

Project No.: 980172SA

Rig Type: Becker AP1100
Boring Type: Air Compressed
Surface Elevation: N/A
Station: 35+00 L 20

Depth (feet)	Visual Classification	Sample Number	Depth of Sample	Natural Water Content (%)	In-place Dry Density (P.C.F.)	Penetration Resistance Blows per Foot (0 – 25 – 50)
0	Stiff Brown SANDY CLAY (CL-Dry)		2.0	--	--	
			4.0	--	--	
5	Very Stiff Brown SANDY SILT (ML-Dry) with Trace Gravel (5.0)		6.0	--	--	
			8.0	--	--	
10			10.0	--	--	
			12.0	--	--	
15	Medium Dense Brown SILTY FINE SAND (SP-Moist) with Trace Gravel and Trace Cobbles (12.0)		14.0	--	--	
			16.0	--	--	
			18.0	--	--	
20			20.0	--	--	
	Dense to Very Dense Brown SILTY GRAVEL (GM-Dry) with Trace Cobbles (20.5)		22.0	--	--	102/12"
			24.0	--	--	54/12"
25	End of Boring (25.0)	BS-1	25.0	--	--	
30						
35						

Boring Date: 5-12-98
Field Engineer/Technician: K. Gravel
Driller: B. Mouis
Contractor: Layne Enviro.

Water Level

Depth	Hour	Date
Dry		

SPEEDIE AND ASSOCIATES

Log of Test Boring Number: B- 7

Storm Water Detention Basin

43th Ave. & Southern SEC

Arizona, Phoenix

Project No.: 980172SA

Rig Type: Becker AP1100
Boring Type: Air Compressed
Surface Elevation: N/A
Station: 51 + 50 L 20

Depth (feet)	Visual Classification	Sample Number	Depth of Sample	Natural Water Content (%)	In-place Dry Density (P.C.F.)	Penetration Resistance Blows per Foot (0 – 25 – 50)
0	Firm Brown SANDY SILT (ML-Dry)		2.0	--	--	
			4.0	--	--	
5			6.0	--	--	
6.5	Medium Dense Brown SILTY SAND (SM-Dry) with Trace Gravel		8.0	--	--	
10			10.0	--	--	
	with Little Gravel		12.0	--	--	
14.0			14.0	--	--	
15	Medium Dense to Dense Brown SILTY GRAVEL (GM-Dry) with Little Sand & Trace Cobbles		16.0	--	--	
			18.0	--	--	
20			20.0	--	--	
	Medium Dense Brown SILTY FINE SAND (SM-Dry) with Little Gravel & Trace Cobbles		22.0	--	--	
			24.0	--	--	
25	End of Boring	BS-1	25.0	--	--	
30						
35						

Boring Date: 5-12-98
Field Engineer/Technician: K. Gravel
Driller: B. Mouis
Contractor: Layne Enviro.

Water Level

Depth	Hour	Date
Dry		

SPEEDIE AND ASSOCIATES

Log of Test Boring Number: B- 8

Storm Water Detention Basin

43th Ave. & Southern SEC

Arizona, Phoenix

Project No.: 980172SA

Rig Type: Becker AP1100
Boring Type: Air Compressed
Surface Elevation: N/A
Station: 71+00 L 20

Depth (feet)	Visual Classification	Sample Number	Depth of Sample	Natural Water Content (%)	In-place Dry Density (P.C.F.)	Penetration Resistance Blows per Foot (0–25)
0	Very Stiff Brown SANDY SILT (ML-Dry) with Trace Gravel		2.0	--	--	
			4.0	--	--	
5			6.0	--	--	
6.0	Dense Brown SILTY FINE SAND (SP-Dry) with Some Gravel		8.0	--	--	
10.0			10.0	--	--	
10	Dense to Very Dense Brown SANDY SILTY GRAVEL (GM-Dry) with Trace Cobbles		12.0	--	--	
13.0	Medium Dense Brown SILTY FINE SAND (SM-Dry) with Little Gravel		14.0	--	--	
15			16.0	--	--	
18.0			18.0	--	--	
20	Medium to Very Dense Brown Interbedded SILTY GRAVEL/SILTY SAND (GM/SM-Dry to Moist)		20.0	--	--	
			22.0	--	--	
			24.0	--	--	
25			26.0	--	--	
	with Little Cobbles		28.0	--	--	78/12"
30			30.0	--	--	
31.0	End of Boring	BS-1	31.0	--	--	
35						

Boring Date: 5-12-98
Field Engineer/Technician: K. Gravel
Driller: B. Mouis
Contractor: Layne Enviro.

Water Level

Depth	Hour	Date
Dry		

SPEEDIE AND ASSOCIATES

Log of Test Boring Number: B- 9

Storm Water Detention Basin

43th Ave. & Southern SEC

Arizona, Phoenix

Project No.: 980172SA

Rig Type: Becker AP1100
Boring Type: Air Compressed
Surface Elevation: N/A
Station: 80 + 70 L20

Depth (feet)	Visual Classification	Sample Number	Depth of Sample	Natural Water Content (%)	In-place Dry Density (P.C.F.)	Penetration Resistance Blows per Foot (0 – 25 – 50)
0	Firm to Hard Brown SANDY SILT (ML-Dry) with Little Gravel		2.0	--	--	
			4.0	--	--	
5			6.0	--	--	
			8.0	--	--	
10		BS-1	10.0	--	--	
	12.0		12.0	--	--	
	Dense to Very Dense Brown SILTY GRAVEL (GM-Dry) with Little Sand & Cobbles		14.0	--	--	77/12"
15			16.0	--	--	52/12"
			18.0	--	--	53/12"
20			20.0	--	--	
	22.0		22.0	--	--	
	Medium to Very Dense Brown WELL GRADED GRAVEL (GW-Moist)		24.0	--	--	
25			26.0	--	--	59/12"
	27.0		28.0	--	--	
	Very Dense Brown SILTY GRAVEL (GM-Moist) with Little Cobbles		30.0	--	--	
30			32.0	--	--	92/12"
	34.0	BS-2	34.0	--	--	68/12"
35	End of Boring					

Boring Date: 5-12-98
Field Engineer/Technician: K. Gravel
Driller: B. Mouis
Contractor: Layne Enviro.

Water Level

Depth	Hour	Date
Dry		

SPEEDIE AND ASSOCIATES

Log of Test Boring Number: B-10

Storm Water Detention Basin

43th Ave. & Southern SEC

Arizona, Phoenix

Project No.: 980172SA

Rig Type: Becker AP1100
Boring Type: Air Compressed
Surface Elevation: N/A
Station: 92+00 L 24

Visual Classification		Sample Number	Depth of Sample	Natural Water Content (%)	In-place Dry Density (P.C.F.)	Penetration Resistance Blows per Foot (0–25–50)
Firm to Hard Brown SANDY LEAN CLAY (CL-Dry) with Little Gravel			2.0	--	--	
			4.0	--	--	
			6.0	--	--	
			8.0	--	--	
		BS-1	10.0	--	--	
	12.0		12.0	--	--	
Medium Dense Brown SILTY SAND (SM-Dry) with Little Gravel & Trace Cobbles			14.0	--	--	
			16.0	--	--	
			18.0	--	--	
	20.0		20.0	--	--	
Dense Brown SILTY GRAVEL (GM-Dry)			22.0	--	--	
	23.0					
Medium Dense Brown SILTY SAND (SM-Dry) with Little Gravel & Trace Cobbles			24.0	--	--	
			26.0	--	--	
	27.0					
Dense Brown SILTY GRAVEL (GM-Moist) with Little Cobbles			28.0	--	--	
			30.0	--	--	
	32.0	BS-2	32.0	--	--	
End of Boring						

Depth (feet): 0, 5, 10, 15, 20, 25, 30, 35

Boring Date: 5-12-98
Field Engineer/Technician: K. Gravel
Driller: B. Mouis
Contractor: Layne Enviro.

Water Level

Depth	Hour	Date
Dry		

SPEEDIE AND ASSOCIATES

Log of Test Boring Number: B-11

Storm Water Detention Basin

43th Ave. & Southern SEC

Arizona, Phoenix

Project No.: 980172SA

Rig Type: Becker AP1100
Boring Type: Air Compressed
Surface Elevation: N/A
Station: 102+50 L 18

Depth (feet)	Visual Classification	Sample Number	Depth of Sample	Natural Water Content (%)	In-place Dry Density (P.C.F.)
0	Medium Dense Brown SILTY FINE SAND (SP-Dry) with Trace Gravel		2.0	--	--
			4.0	--	--
5			6.0	--	--
			8.0	--	--
9.0					
10	Medium Dense Brown SILTY SAND (SM-Dry)	BS-1	10.0	--	--
			12.0	--	--
13.0					
	Medium Dense Brown SANDY SILTY GRAVEL (GM-Dry)		14.0	--	--
15			16.0	--	--
			18.0	--	--
	Trace Cobbles				
20		BS-2	20.0	--	--
22.0			22.0	--	--
	Dense Brown SANDY COARSE GRAVEL (GW-Moist) with Trace to Little Cobbles		24.0	--	--
25			26.0	--	--
			28.0	--	--
30			30.0	--	--
32.0		BS-3	32.0	--	--
	End of Boring				
35					

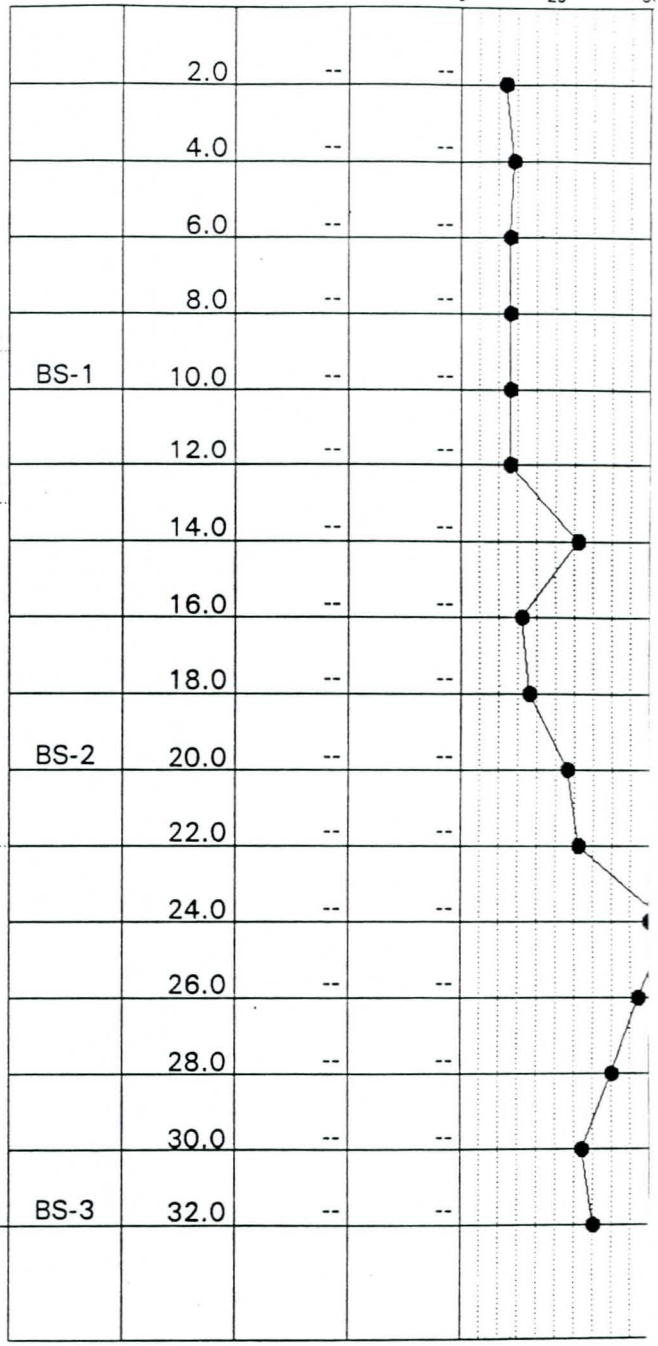

Boring Date: 5-12-98
Field Engineer/Technician: K. Gravel
Driller: B. Mouis
Contractor: Layne Enviro.

Water Level

Depth	Hour	Date
Dry		

SPEEDIE AND ASSOCIATES

Log of Test Boring Number: B-12

Storm Water Detention Basin

43th Ave. & Southern SEC

Arizona, Phoenix

Project No.: 980172SA

Rig Type: Becker AP1100
Boring Type: Air Compressed
Surface Elevation: N/A
Station: 61 + 40, R 50

Depth (feet)	Visual Classification	Sample Number	Depth of Sample	Natural Water Content (%)	In-place Dry Density (P.C.F.)	Penetration Resistance Blows per Foot (0 – 25 – 50)
0	Brown SILTY FINE SAND (SM-Dry) with Trace Gravel		2.0	--	--	
			4.0	--	--	
5			6.0	--	--	
			8.0	--	--	
10			10.0	--	--	
			12.0	--	--	
			14.0	--	--	
15	Trace Cobbles 15.0					
	Brown SANDY SILTY GRAVEL (GM-Dry) with Little Cobbles		16.0	--	--	64/12"
			18.0	--	--	
20			20.0	--	--	
			22.0	--	--	
			24.0	--	--	82/12"
25			26.0	--	--	88/12"
			28.0	--	--	70/12"
30	29.5		30.0	--	--	
	Brown SILTY GRAVEL (GM-Moist to Wet) with Little Sand		32.0	--	--	
			34.0	--	--	57/12"
35	35.0					

Boring Date: 5-12-98
Field Engineer/Technician: K. Gravel
Driller: B. Mouis
Contractor: Layne Enviro.

Water Level

Depth	Hour	Date
35'	10:00 am	5-12-98
27'	2:30 pm	5-18-98

SPEEDIE AND ASSOCIATES

Log of Test Boring Number: WELL

Storm Water Detention Basin

43th Ave. & Southern SEC

Arizona, Phoenix

Project No.: 980172SA

Depth (feet)	Graphic Log	Visual Classification	Sample Number	Depth of Sample	Natural Water Content (%)	In-place Dry Density (P.C.F.)	Penetration Resistance Blows per Foot (0 – 25 – 5)
35		End of Boring					
40							
45							
50							
55							
60							
65							
70							

Rig Type: Becker AP1100
Boring Type: Air Compressed
Surface Elevation: N/A
Station: 61 + 40, R 50

Boring Date: 5-12-98
Field Engineer/Technician: K. Gravel
Driller: B. Mouis
Contractor: Layne Enviro.

Water Level

Depth	Hour	Date
35'	10:00 am	5-12-98
27'	2:30 pm	5-18-98

SPEEDIE AND ASSOCIATES

Log of Test Boring Number: WELL

Storm Water Detention Basin

43th Ave. & Southern SEC

Arizona, Phoenix

Project No.: 980172SA

TABULATION OF TEST DATA

SOIL BORING or TEST PIT NUMBER	SAMPLE NUMBER	SAMPLE TYPE	DEPTH OF SAMPLE TIP	NATURAL WATER CONTENT (Percent of Dry Weight)	IN-PLACE DRY DENSITY (Pounds Per Cubic Foot)	PARTICLE SIZE DISTRIBUTION (Percent Finer)					ATTERBERG LIMITS			UNIFIED SOIL CLASSIFICATION	SPECIMEN DESCRIPTION
						#200 SIEVE	#40 SIEVE	#10 SIEVE	#4 SIEVE	3" SIEVE	LIQUID LIMIT	PLASTIC LIMIT	PLASTICITY INDEX		
B- 1	RS-1	RS	2.0	9.4	101.7	85.9	99	100	100	100	23	23	NP	ML	SILT
B- 2	RS-1	RS	2.0	12.9	85.7	93.3	100	100	100	100	33	21	12	CL	LEAN CLAY
B- 3	BS-2	BULK	4.5	--	--	69.2	94	98	99	100	24	20	4	CL-ML	SANDY SILTY CLAY
B- 3	S-5	SPT	16.0	--	--	30.3	56	64	70	100	22	20	2	SM	SILTY SAND with GRAVEL
B- 5	BS-1	BULK	25.0	--	--	45.4	68	77	80	100	26	25	1	SM	SILTY SAND with GRAVEL
B- 6	BS-1	BULK	25.0	--	--	8.1	31	55	61	100	NP	NP	NP	SP-SM	POORLY GRADED SAND with SILT and GRAVEL
B- 7	BS-1	BULK	25.0	--	--	30.1	60	77	80	100	NP	NP	NP	SM	SILTY SAND with GRAVEL
B- 8	BS-1	BULK	25.0	--	--	5.7	28	53	55	100	NP	NP	NP	SP-SM	POORLY GRADED SAND with SILT and GRAVEL
B- 9	BS-1	BULK	31.0	--	--	12.4	43	74	77	100	NP	NP	NP	SP-SM	POORLY GRADED SAND with SILT and GRAVEL
B-10	BS-1	BULK	10.0	--	--	63.2	96	97	98	100	21	21	NP	ML	SANDY SILT
B-11	BS-1	BULK	10.0	--	--	51.7	82	91	93	100	27	19	8	CL	SANDY LEAN CLAY
B-12	BS-1	BULK	10.0	--	--	19.2	95	100	100	100	NP	NP	NP	SM	SILTY SAND

Sieve analysis results do not include material greater than 3". Refer to the actual boring logs for the possibility of cobble and boulder sized materials.

Storm Water Detention Basin
43th Ave. & Southern SEC
Arizona, Phoenix
Project No. 980172SA

SPEEDIE AND ASSOCIATES

CONSOLIDATION TEST

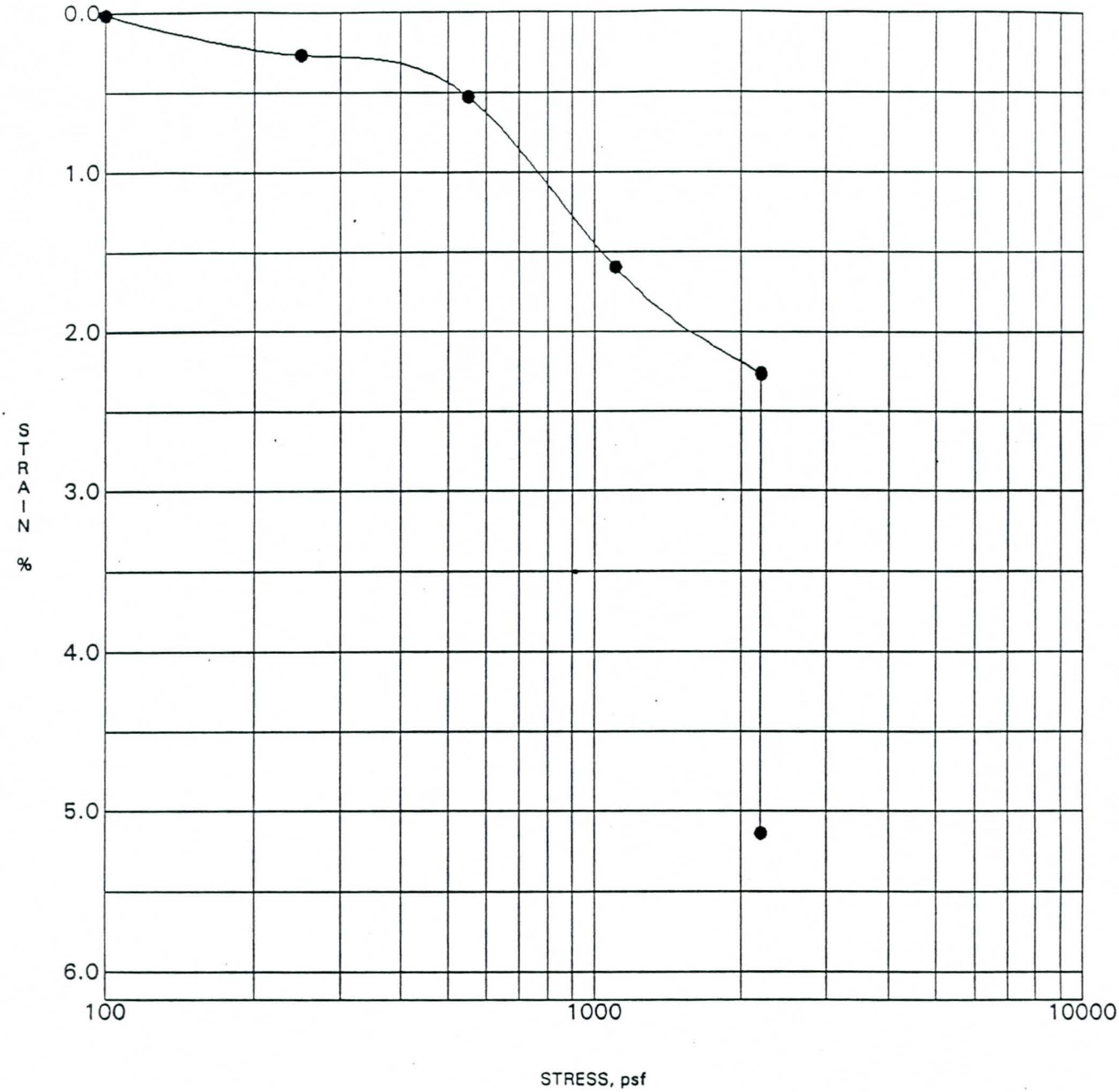

BORING B- 2

SAMPLE No. RS-1

Sample inundated at end of test at 2200 psf

PROJECT	Flood Detention Basin - 43rd Ave & Southern SEC	JOB NO.	980172SA
		DATE	3/12/98

SPEEDIE AND ASSOCIATES

MOISTURE-DENSITY RELATIONS

PROJECT: Flood Detention Basin PROJECT NO.: 980172SA

LOCATION: 43rd Ave & Southern SEC DATE: 3/12/98

BORING NO.: B- 3 SAMPLE NO.: BS-2 SAMPLE DEPTH: 4.50

METHOD OF COMPACTION: ASTM D698A

LIQUID LIMIT: 24 PLASTIC LIMIT: 20 PLASTICITY INDEX: 4

CLASSIFICATION: CL-ML ASTM SOIL DESCRIPTION: SANDY SILTY CLAY

MAXIMUM DRY DENSITY: 114.5 PCF OPTIMUM MOISTURE CONTENT: 13.4 %

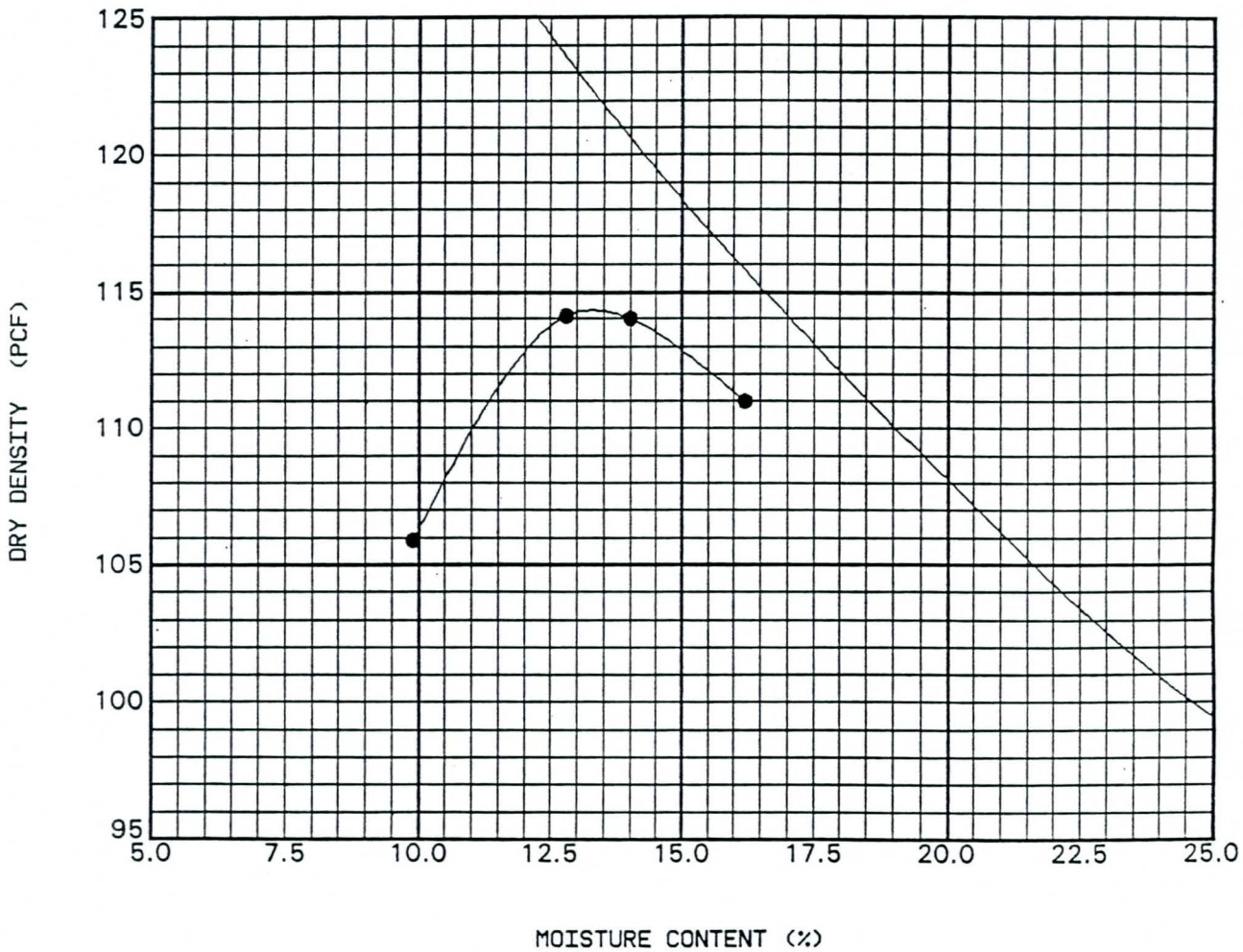

SPEEDIE AND ASSOCIATES

SWELL TEST DATA

BORING or TEST PIT No.	SAMPLE DEPTH, ft	REMOLDED DRY DENSITY (pcf)	INITIAL MOISTURE (%)	PERCENT COMPACTION	INITIAL DEGREE of SATURATION (%)	FINAL DEGREE of SATURATION (%)	TOTAL SWELL (%)
B- 3 BS-2	4.5	108.7	12.0	94.9	61.2	97.0	3.2

PERCENT COMPACTION BASED ON A MAXIMUM DRY DENSITY OF 114.5 pcf @ 13.4 % MOISTURE

Flood Detention Basin
43rd Ave & Southern SEC
Phoenix, Arizona
Project No. 980172SA

SPEEDIE AND ASSOCIATES

Project: 43rd Avenue Channel
Flood Control Basin
Phoenix, Arizona

Project No.: 980172SA

pH & Resistivity Results

Location/Depth	pH	Lab Resistivity (ohm-cm)
B-2/4.5	8.5	1330
B-5/25	8.6	1400
B-6/25	8.9	2000
B-7/25	9.0	4670
B-8/25	8.4	2,335
B-9/31	8.7	1800
B-10/10	8.5	2401

Laboratory Consultants, Ltd.

Speedie & Associates
Mr. Mike Whitman
11029 North 24th Avenue
Phoenix, Az 85029

Sample Number: 980511-01
Date Reported: 3/18/98
Date Received: 3/13/98 13:59
Project Number: 980172SA

Requested Analysis

Client Sample ID	Analysis	Method	Result	Units	Date Analyzed
#13314	pH	ADOT237	8.5	S.U.	3/18/98
#13314	SULFATE	ADOT733	0.11	%	3/18/98

B-2 @4.5'

Approved By: Gadang

947 South 48th Street, Suite 127 Tempe, Arizona 85281 Phone (602) 858-1841 Fax (602) 858-0752

MEMBER ACIL

Laboratory Consultants, Ltd.

Speedie & Associates
Mr. Mike Whitman
11029 North 24th Avenue
Phoenix, Az 85029

Sample Number: 980874-01
Date Reported: 5/27/98
Date Received: 5/20/98 15:19
Project Number: 980172SA

Requested Analysis

	Client Sample ID	Analysis	Method	Result	Units	Date Analyzed
B-10	16516	pH	ADOT237	8.7	S.U.	5/27/98
@ 25'	16516	SULFATE	ADOT733	0.0086	%	5/27/98

Approved By: Dadang

Laboratory Consultants, Ltd.

Speedie & Associates
Mr. Mike Whitman
11029 North 24th Avenue
Phoenix, Az 85029

Sample Number: 980874-02
Date Reported: 5/27/98
Date Received: 5/20/98 15:19
Project Number: 980172SA

Requested Analysis

	Client Sample ID	Analysis	Method	Result	Units	Date Analyzed
B-11	16517	pH	ADOT237	8.9	S.U.	5/27/98
@ 25'	16517	SULFATE	ADOT733	0.0037	%	5/27/98

Approved By: D. Gadang

947 South 48th Street, Suite 127 Tempe, Arizona 85281 Phone (602) 858-1841 Fax (602) 858-0752

MEMBER ACIL

Laboratory Consultants, Ltd.

Speedie & Associates
Mr. Mike Whitman
11029 North 24th Avenue
Phoenix, Az 85029

Sample Number: 980874-03
Date Reported: 5/27/98
Date Received: 5/20/98 15:19
Project Number: 980172SA

Requested Analysis

Client Sample ID	Analysis	Method	Result	Units	Date Analyzed
16518	pH	ADOT237	8.9	S.U.	5/27/98
16518	SULFATE	ADOT733	0.028	%	5/27/98

B-12
e 25'

Approved By: D. Gadang

947 South 48th Street, Suite 127 Tempe, Arizona 85281 Phone (602) 858-1841 Fax (602) 858-0752

MEMBER ACIL

Laboratory Consultants, Ltd.

Speedie & Associates
Mr. Mike Whitman
11029 North 24th Avenue
Phoenix, Az 85029

Sample Number: 980874-04
Date Reported: 5/27/98
Date Received: 5/20/98 15:19
Project Number: 980172SA

Requested Analysis

	Client Sample ID	Analysis	Method	Result	Units	Date Analyzed
B-13	16519	pH	ADOT237	8.5	S.U.	5/27/98
@ 25'	16519	SULFATE	ADOT733	0.0081	%	5/27/98

Approved By: Gadang

947 South 48th Street, Suite 127 Tempe, Arizona 85281 Phone (602) 858-1841 Fax (602) 858-0752

MEMBER ACIL

Laboratory Consultants, Ltd.

Speedie & Associates
Mr. Mike Whitman
11029 North 24th Avenue
Phoenix, Az 85029

Sample Number: 980874-05
Date Reported: 5/27/98
Date Received: 5/20/98 15:19
Project Number: 980172SA

Requested Analysis

	Client Sample ID	Analysis	Method	Result	Units	Date Analyzed
B-14, C 31	16520	pH	ADOT237	8.7	S.U.	5/27/98
	16520	SULFATE	ADOT733	0.0051	%	5/27/98

Approved By: Gadang

947 South 48th Street, Suite 127 Tempe, Arizona 85281 Phone (602) 858-1841 Fax (602) 858-0752

MEMBER ACIL

Laboratory Consultants, Ltd.

Speedie & Associates
Mr. Mike Whitman
11029 North 24th Avenue
Phoenix, Az 85029

Sample Number: 980874-06
Date Reported: 5/27/98
Date Received: 5/20/98 15:19
Project Number: 980172SA

Requested Analysis

Client Sample ID	Analysis	Method	Result	Units	Date Analyzed
B-15, @ 34' 16522	pH	ADOT237	8.5	S.U.	5/27/98
16522	SULFATE	ADOT733	0.0053	%	5/27/98

Approved By: Gadang

947 South 48th Street, Suite 127 Tempe, Arizona 85281 Phone (602) 858-1841 Fax (602) 858-0752

MEMBER ACIL

CODES AND DEFINITIONS

Water Uses

A	Irrigation
B	Utility (Water Co.)
C	Commercial
D	Domestic
E	Municipal
F	Industrial
G	Recreational
H	Subdivision
I	Mining
J	Stock
K	Other - Exploration
L	Drainage
M	Monitoring
N	None
O	Other - Non-Production
R	Recharge
T	Test

Legal Description

A	Northeast
B	Northwest
C	Southwest
D	Southeast
Q	Quadrant
T	Township
R	Range
S	Section
Q1	Quarter of Section (160 Acres)
Q2	Quarter Quarter of Section (40 Acres)
Q3	Quarter Quarter Quarter of Section (10 acres)
M	Month
D	Day
YR	Year well was established
REG #	Well Registration Number

Q	T	R	S	Q1	Q2	Q3	NAME	WELLDEPTH	WATERLEVEL	WATERUSE	MMISS	DDISS	YRISS	REGNO
A	01	02	21				MARICOPA COUNTY DOT			N	07	28	1997	564115
A	01	02	21				SWIFT	225	100	D	08	16	1983	800927
A	01	02	21	A	A	A	TNT BESTWAY	104	48	M	02	17	1989	523578
A	01	02	21	A	A	A	TNT BESTWAY	99	57	M	02	17	1989	523580
A	01	02	21	A	A	A	TNT BESTWAY INC	98	57	M	02	17	1989	523579
A	01	02	21	A	A	D	PETERSON, WALDA			N	08	22	1992	536461
A	01	02	21	A	D	D	PETERSON	316	63	DJ	02	16	1982	602890
A	01	02	21	A	D	D	PETERSON	115	61	AD	02	16	1982	602889
A	01	02	21	B	B		ROSEMAN			D	02	17	1983	504807
A	01	02	21	B	B	A	SCHER, LULA	205	105	D	06	14	1982	634833
A	01	02	21	B	C	A	STEPSTONE INC	310	75	FD	11	26	1984	509789
A	01	02	21	B	C	B	JACKSON			D	06	14	1982	636948
A	01	02	21	B	C	D	MYERS CROSS DEVELCO			D	11	13	1984	509633
A	01	02	21	B	C	D	MYERS CROSS DEVELPMT	520	62	AD	09	21	1990	528898
A	01	02	21	B	C	D	PRATTE CONSTRUCTION	213	50	D	09	04	1984	509075
A	01	02	22				ANTON	270	67	JD	07	26	1983	800825
A	01	02	22	A	A		DAYTON			ADJ	03	24	1982	631454
A	01	02	22	A	C	B	FISKE, JOHN HENRY	200	44	D	01	09	1992	534115
A	01	02	22	A	D	C	MARICOPA BY-PRODUCTS	52	40	N	03	07	1997	561527
A	01	02	22	B			NIX TRUST EL AL			AD	06	17	1982	629210
A	01	02	22	B	B		NIX	140	75	D	06	11	1982	636758
A	01	02	22	B	B	B	STANTON INDUSTRIES			N	08	22	1992	536430
A	01	02	22	B	B	B	TNT BESTWAY TRANS	90	50	M	08	18	1995	551026
A	01	02	22	B	B	B	TNT BESTWAY TRANSP.	100	65	M	07	31	1989	525441
A	01	02	22	B	B	B	TNT BESTWAY TRANSPRT	70	70	N	06	16	1992	535717
A	01	02	22	B	B	B	TNT BESTWAY TRANSPT.	83		T	03	01	1993	538071
A	01	02	22	B	B	C	MASTER WINDOW	81	64	M	08	15	1996	559582

Q	T	R	S	Q1	Q2	Q3	NAME	WELLDEPTH	WATERLEVEL	WATERUSE	MMISS	DDISS	YRISS	REGNO
A	01	02	22	B	B	C	MASTER WINDOW	81	64	M	08	15	1996	559581
A	01	02	22	B	B	C	MASTERVIEW WINDOW			M	08	15	1996	559586
A	01	02	22	B	B	C	MASTERVIEW WINDOW	81	64	M	08	15	1996	559580
A	01	02	22	B	B	C	MASTERVIEW WINDOW	81	64	M	08	15	1996	559585
A	01	02	22	B	B	C	MASTERVIEW WINDOW	81	64	M	08	15	1996	559584
A	01	02	22	B	B	C	MASTERVIEW WINDOW	81	65	M	07	11	1991	532390
A	01	02	22	B	B	C	MASTERVIW WINDOW	81	64	M	08	15	1996	559583
A	01	02	22	B	B	C	TNT BESTWAY	98	48	M	08	26	1988	522185
A	01	02	22	B	B	C	TNT BESTWAY	99	48	M	08	26	1988	522186
A	01	02	22	B	B	C	TNT BESTWAY			M	07	26	1988	521897
A	01	02	22	B	B	C	TNT BESTWAY	100	57	M	08	26	1988	522183
A	01	02	22	B	B	C	TNT BESTWAY	100	55	M	08	26	1988	522184
A	01	02	22	B	B	C	TNT BESTWAY TRAN			N	08	22	1992	536455
A	01	02	22	B	B	C	TNT BESTWAY TRANS IC			M	08	11	1989	525505
A	01	02	22	B	B	C	TNT BESTWAY TRANS IC	88	55	F	07	26	1988	521879
A	01	02	22	B	B	C	TNT BESTWAY TRANSP.			M	12	13	1988	523066
A	01	02	22	B	B	C	TNT BESTWAY TRANSPRT	120	60	F	08	25	1989	525597
A	01	02	22	B	B	C	TNT BESTWAY TRANSPRT			N	06	26	1996	558573
A	01	02	22	B	B	C	TNT BESTWAY TRANSPRT			T	09	11	1995	551699
A	01	02	22	B	B	C	TNT BESTWAY TRANSPRT			T	09	11	1995	551700
A	01	02	22	B	C		MILLER, G.A.	123	82	D	01	13	1987	804293
A	01	02	22	B	D		WEINBERGER	150	75	DF	03	05	1982	629867
A	01	02	22	B	D	A	FIKSE			FDA	12	23	1981	623000
A	01	02	22	B	D	D	SEHNAL, JOE	70	48	M	07	06	1994	544393
A	01	02	22	B	D	D	SHENAL PAUL & HARDIN	150	80	ADF	06	14	1982	626050
A	01	02	22	C	B	A	VALENTE	10		L	06	07	1982	612846
A	01	02	22	C	B	A	VALENTE	300	120	F	06	07	1982	612845

Q	T	R	S	Q1	Q2	Q3	NAME	WELLDEPTH	WATERLEVEL	WATERUSE	MMISS	DDISS	YRISS	REGNO
A	01	02	22	D	A	A	MALLIN BROTHERS IRON	186	43	F	07	11	1983	800684
A	01	02	27				CALMAT CO			N	10	26	1990	529781
A	01	02	27				CALMAT OF ARIZONA	150		N	05	20	1996	557824
A	01	02	27				MCKELVEY	80	40	D	06	16	1982	639898
A	01	02	27				SHUMWAY	100	40	D	06	11	1982	636097
A	01	02	27	A	B		CALLAWAY			J	02	22	1982	630205
A	01	02	27	B	B	C	RACETTE, GUY			AJD	06	14	1982	625207
A	01	02	27	B	B	D	FIRST INTERSTATE BK	0	0	D	06	10	1982	619327
A	01	02	27	B	C	C	CALMAT CO	250	45	A	03	09	1990	527384
A	01	02	27	C	C	B	HOOVER	305	185	D	01	21	1985	510104
A	01	02	28				CALMAT CO			N	10	26	1990	529780
A	01	02	28				CALMAT OF ARIZONA	120		N	05	20	1996	557825
A	01	02	28				SMITH	0	0	D	02	11	1982	624503
A	01	02	28				YUROCHKO, ESTATE OF	0	0		09	29	1981	606970
A	01	02	28	A	D	A	AZ SAND & ROCK	0	0	A	06	04	1982	611453
A	01	02	28	A	D	D	STANLEY STRUCTURES	165	30	F	05	03	1982	609588
A	01	02	28	B			GODMAN	50	40	D	06	18	1982	640209
A	01	02	28	B			PETERSON	350		JD	06	01	1982	634268
A	01	02	28	B			VALENZUELA, JOSE		45	D	12	24	1986	804204
A	01	02	28	B	D	B	CALMAT CO	250	40	L	06	14	1982	628465
A	01	02	28	B	D	D	SANTA FE PACIFICE	500		N	10	28	1996	560007
A	01	02	28	C	A	A	MERCER			D	01	02	1981	86690
A	01	02	28	C	A	B	CALMAT CO		35	DA	01	28	1987	804433
A	01	02	28	C	A	B	GIBSON			JD	06	14	1982	635057
A	01	02	28	C	A	D	COPLEN ET AL	140	43	A	06	14	1982	628466
A	01	02	28	C	B	C	MCREYNOLDS	150		DJ	06	14	1982	629585
A	01	02	28	D	A	A	WILDMAN	125	60	D	04	30	1982	610885

Q	T	R	S	Q1	Q2	Q3	NAME	WELLDERTH	WATERLEVEL	WATERUSE	MMISS	DDISS	YRISS	REGNO
A	01	02	28	D	B	D	BACON, BERTHA	150	40	DJ	06	14	1982	629589
A	01	02	28	D	D	A	MCCONNELL	0	0	D	12	17	1981	600331
A	01	02	29	A	A		CORONADO ENGINEERING			N	02	23	1993	538244
A	01	02	29	A	A		TEX-STRUCT INC	65	7	L	05	30	1984	507729
A	01	02	29	A	B	A	FYM UNLIMITED, INC	240	100	JD	06	09	1982	625907
A	01	02	29	B	B	C	PIONEER CONCRETE OF	302	44	I	08	20	1986	511382
A	01	02	29	D	A	C	LINCOLN	372	60	JD	12	10	1981	600469
A	01	02	29	D	B	C	HAYES, TOM	160	26	DJ	07	17	1996	559030
A	01	02	29	D	D	A	JDL & CO LLC	201	60	A	12	10	1981	600468
A	01	02	30	A	A	D	UNION ROCK & MAT COR	265	67	FDA	02	24	1982	604166
A	01	02	30	B	B		KING			D	06	10	1982	636003
A	01	02	30	B	B		KING			D	06	10	1982	636004
A	01	02	30	B	B	B	SHREVE, FAYE			D	06	14	1982	636829
A	01	02	30	B	B	C	SHREVE, FAYE			D	06	14	1982	636828
A	01	02	30	B	C	C	SALT RIVER PROJECT	38	13	M	03	06	1987	517073
A	01	02	30	B	C	C	SALT RIVER PROJECT	34	11	M	03	06	1987	517071
A	01	02	30	B	C	D	SALT RIVER PROJECT	34	14	M	03	06	1987	517072
A	01	02	30	B	C	D	SALT RIVER PROJECT	27	6	M	03	06	1987	517074
A	01	02	30	B	C	D	SALT RIVER PROJECT	33	14	M	03	06	1987	517070
A	01	02	30	C	C	C	GIFFORD-HILL CEMENT	400	25	F	03	02	1987	804529
A	01	02	30	D	D	C	PENINSULA-HOROWITZ	400	20	A	06	14	1982	626268
A	01	02	30	D	D	D	BARNHART, DANIEL	181	35	D	04	02	1986	513867
A	01	02	31	A	A	A	PENINSULA-HOROWITZ	400	20	A	06	14	1982	626269
A	01	02	31	A	A	A	SALT RIVER PROJECT	600	89	BA	05	18	1982	607697
A	01	02	31	B	A	C	FRIEDENSTAB, ALVIN			DJ	09	11	1996	556212
A	01	02	31	B	D	A	RICHARDS, SHARON	625	62	D	08	08	1988	521999
A	01	02	31	B	D	B	JOHNSON, NORMAN			D	01	23	1987	516579

Q	T	R	S	Q1	Q2	Q3	NAME	WELLDEPTH	WATERLEVEL	WATERUSE	MMISS	DDISS	YRISS	REGNO
A	01	02	31	B	D	B	THOMPSON, DALE	600	16	D	12	17	1986	516215
A	01	02	31	B	D	B	THOMPSON, DALE			D	10	30	1986	515962
A	01	02	31	B	D	B	TIETJE, RUDOLPH			D	06	30	1997	563601
A	01	02	31	C	B	B	MORRIS, KEITH	505	0	D	06	11	1982	623534
A	01	02	31	D	A	D	HOLT	145	45	D	10	07	1982	504097
A	01	02	31	D	B	B	MORRIS, KEITH	0	0	D	06	11	1982	623535
A	01	02	31	D	B	B	PENINSULA	1470	0	D	06	11	1982	623537
A	01	02	31	D	B	C	RANDALL, GAIL	370	60	D	09	24	1987	519133
A	01	02	31	D	C		CHICKASHA COTTON OIL			L	07	22	1985	511234
A	01	02	31	D	C		CHICKASHA COTTON OIL			L	05	29	1985	511235
A	01	02	32	A	A	A	PENINSULA-HOROWITZ	400	20	A	06	14	1982	626271
A	01	02	32	A	A	A	SALT RIVER PROJECT	500	48	AB	04	29	1992	607696
A	01	02	32	B	A	A	PENINSULA-HOROWITZ	400	20	A	06	14	1982	626270
A	01	02	32	B	B	B	POHLCAT MOUNTAINVIEW		35	D	10	09	1986	804007
A	01	02	32	C	C	D	POHLCAT MOUNTAINVIEW	400	30	D	06	11	1982	624173
A	01	02	32	D	D	D	VALLEY NATIONAL BANK			A	10	09	1986	804008
A	01	02	33				MENDOZA			D	06	14	1982	651073
A	01	02	33	A	D	D	BASELINE & 51ST AVE	250	35	A	06	14	1982	625399
A	01	02	33	B			RAMPEY, LULA			A	05	20	1985	802293
A	01	02	33	B	A		STRAKER	120	35	AJD	07	15	1982	640378
A	01	02	33	B	A	B	TRYON		50	D	06	14	1982	636286
A	01	02	33	B	A	B	TRYON	202	50	AJ	02	16	1982	603876
A	01	02	33	B	B	B	WEST	90	28	D	03	23	1982	502420
A	01	02	33	B	B	D	ANDERSON-CLAYTON CO			DJ	06	14	1982	626786
A	01	02	33	B	C	A	SOUTH MTN GIN	470	70	D	06	12	1982	635904
A	01	02	33	B	D	A	WILLIAMS, CHET	200	40	A	06	14	1982	625400
A	01	02	33	C	B		HITCHENS	200	40	DA	06	14	1982	636348

Q	T	R	S	Q1	Q2	Q3	NAME	WELLDEPTH	WATERLEVEL	WATERUSE	MMISS	DDISS	YRISS	REGNO
A	01	02	33	C	B	C	TUMBLEWEED SVC			M	02	06	1995	547458
A	01	02	33	C	B	C	TUMBLEWEED SVC			M	02	06	1995	547459
A	01	02	33	C	B	C	TUMBLEWEED SVC			M	02	06	1995	547460
A	01	02	33	C	B	D	BENNETT	138	40	D	04	14	1982	638691
A	01	02	33	C	C		TEMPE ASSOCIATES	0	22	A	06	14	1982	625439
A	01	02	33	C	D		TEMPE ASSOCIATES			DJA	06	04	1987	804668
A	01	02	33	D	D		HALEY, BILL	110	50	D	06	09	1982	635270
A	01	02	34	A	B		JENKINS & LUECKE			DJ	06	14	1982	628389
A	01	02	34	A	B		JENKINS & LUECKE			ADJ	06	14	1982	628388
A	01	02	34	A	C	C	BURNETT	137	30	DJ	06	14	1982	636838
A	01	02	34	A	C	C	RAWLINGS, DONALD ROE	151	50	JAD	02	03	1986	803485
A	01	02	34	A	D		CLARK	159	60	AJD	06	14	1982	634830
A	01	02	34	A	D		SHAULIS	162	42	D	06	01	1982	634421
A	01	02	34	A	D	A	GARCIA	635	40	D	01	24	1983	504673
A	01	02	34	A	D	A	HOM, SAM			D	03	27	1986	803613
A	01	02	34	A	D	A	HONG			D	05	20	1982	633958
A	01	02	34	B	D	D	BLR ASSOCIATES	234	70	A	04	28	1982	606385
A	01	02	34	C	C	C	RAWLINGS, DAVID	365	36	AJD	09	02	1983	800916
A	01	02	34	D	A		MEADOWS	100		DJ	03	04	1982	629834
A	01	02	34	D	A		REDSTOM, THOMAS	0	0	DJ	05	27	1982	617345
A	01	02	34	D	D		ONEY	150	80	DJ	05	28	1982	642017
A	01	02	34	D	D	A	CIRCLE K STORES	111	87	M	11	06	1995	552921
A	01	02	34	D	D	A	CIRCLE K STORES	105	80	M	11	06	1995	552922
A	01	02	34	D	D	A	CIRCLE K STORES	110	85	M	11	06	1995	552923
A	01	02	34	D	D	A	CIRCLE K STORES	111	87	M	11	06	1995	552920
A	01	02	34	D	D	A	CIRCLE K STORES	110	87	M	11	06	1995	552919
A	01	02	34	D	D	A	FULLER	160	72	D	06	14	1982	636824
A	01	02	34	D	D	A	HILL	100		DJ	06	10	1982	633518
A	01	02	34	D	D	D	COPPOCK	100		D	06	09	1982	635495

BIDDING SCHEDULE

PRELIMINARY ESTIMATE

PROJECT: 43RD AVENUE STORM DRAIN
SOUTHERN AVENUE TO SALT RIVER

PROJECT 1170230

ITEM NO.	DESCRIPTION	UNIT	APPROX. QUANTITY	UNIT COST NUMBERS	EXTENDED AMOUNT
105 - 1	Partnering	LS	1	$ 10,000.00	$ 10,000.00
107 - 1	NPDES / SWPPP Permits	LS	1	$ 10,000.00	$ 10,000.00
107 - 2	Public Information and Notification Allowance	LS	1	$ 15,000.00	$ 15,000.00
107 - 3	Project Signs Allowance	LS	1	$ 5,000.00	$ 5,000.00
202 - 1	Mobilization	LS	1	$ 154,070.67	$ 154,070.67
336 - 1	Pavement Replacement (4"AC/8"ABC)	SY	0	$ 18.73	$ -
336 - 2	Pavement Replacement (4"AC/10"ABC)	SY	19251	$ 19.00	$ 365,769.00
340 - 1	Curb and Gutter, MAG DET 220, Type A	LF	0	$ 5.00	$ -
340 - 2	Sidewalk, MAG DET 230	SF	0	$ 2.50	$ -
345 - 1	Adjust Manhole Frame and Cover	EA	4	$ 1,000.00	$ 4,000.00
345 - 2	Adjust Water Valve Box and Cover, Type A	EA	5	$ 1,000.00	$ 5,000.00
350 - 1	Removal of Existing Improvements	LS	1	$ 5,000.00	$ 5,000.00
401 - 1	Traffic Control	LS	1	$ 50,000.00	$ 50,000.00
405 - 1	Survey Monument MAG DET 120-1, Type A	EA	3	$ 350.00	$ 1,050.00
405 - 2	Survey Monument MAG DET 120-1, Type B	EA	3	$ 200.00	$ 600.00
420 - 1	24' Chain Link Fence Gate	EA	1	$ 500.00	$ 500.00
505 - 1	Special Junction Structure	EA	1	$ 25,000.00	$ 25,000.00
505 - 2	Concrete Headwall	EA	1	$ 4,000.00	$ 4,000.00
505 - 3	Concrete Box Culvert, ADOT Det B 02.10	LF	90	$ 600.00	$ 54,000.00
505 - 4	Concrete Catch Basin COP Det P 1569-1, M-1, L=10	EA	2	$ 2,500.00	$ 5,000.00
505 - 5	Concrete Catch Basin COP Det P 1569-1, M-1, L=17	EA	2	$ 2,800.00	$ 5,600.00
505 - 6	Concrete Catch Basin COP Det P 1569-1, M-2, L=6	EA	4	$ 3,000.00	$ 12,000.00
505 - 7	Concrete Catch Basin COP Det P 1569-1, M-2, L=10	EA	5	$ 3,500.00	$ 17,500.00
505 - 8	Concrete Catch Basin COP Det P 1569-1, M-2, L=17	EA	2	$ 4,500.00	$ 9,000.00
505 - 9	Concrete Catch Basin COP Det P 1570, N-Double	EA	0	$ 3,000.00	$ -
515 - 1	10' x 5' Flap Gate	EA	1	$ 15,000.00	$ 15,000.00
601 - 1	Permanent Pipe Supports, MAG Det 403-3	EA	2	$ 1,000.00	$ 2,000.00
610 - 1	12" Ductile Iron Water Pipe and Fittings	LF	66	$ 45.00	$ 2,970.00
610 - 2	Replace Water Service Pipe	LF	0	$ 5.00	$ -
610 - 3	Relocate Water Meter	EA	0	$ 200.00	$ -
618 - 1	114 Inch Pipe, Class III RGRCP OR 621-1, 114 Inch CLCMP 10 Gauge	LF	1660	$ 625.00	$ 1,037,500.00
618 - 2	114 Inch Pipe, Class IV RGRCP OR 621-1, 114 Inch CLCMP 10 Gauge	LF	2482	$ 625.00	$ 1,551,250.00
618 - 3	96 Inch Pipe, Class III RGRCP OR 621-2, 96 Inch CLCMP 10 Gauge	LF	0	$ 600.00	$ -
618 - 4	84 Inch Pipe, Class III RGRCP OR 621-3, 84 Inch CLCMP 10 Gauge	LF	0	$ 575.00	$ -
618 - 5	72 Inch Pipe, Class III RGRCP OR 621-4, 72 Inch CLCMP 10 Gauge	LF	0	$ 300.00	$ -
618 - 6	72 Inch Pipe, Class IV RGRCP OR 621-4, 72 Inch CLCMP 10 Gauge	LF	0	$ 300.00	$ -
618 - 7	66 Inch Pipe, Class III RGRCP OR 621-5, 66 Inch CLCMP 12 Gauge	LF	2193	$ 280.00	$ 614,040.00
618 - 8	54 Inch Pipe, Class III RGRCP OR 621-6, 54 Inch CLCMP 14 Gauge	LF	73	$ 180.00	$ 13,140.00
618 - 9	Bore & Jack 114 Inch Pipe	LF	170	$ 4,000.00	$ 680,000.00
618 - 10	Pipe Plug, MAG Det 427, 72 INCH	EA	0	$ 2,400.00	$ -
618 - 11	Pipe Plug, MAG Det 427, 66 INCH	EA	2	$ 2,400.00	$ 4,800.00
618 - 12	Pipe Plug, MAG Det 427, 54 INCH	EA	1	$ 1,500.00	$ 1,500.00
618 - 13	Pipe Plug, MAG Det 427, 24 INCH	EA	0	$ 1,500.00	$ -
618 - 14	15 Inch Catch Basin Connector Pipe, Class III	LF	78	$ 70.00	$ 5,460.00
618 - 15	15 Inch Catch Basin Connector Pipe, Class IV	LF	0	$ 70.00	$ -
618 - 16	18 Inch Catch Basin Connector Pipe, Class III	LF	45	$ 80.00	$ 3,600.00
618 - 17	18 Inch Catch Basin Connector Pipe, Class IV	LF	0	$ 80.00	$ -
618 - 18	24 Inch Catch Basin Connector Pipe, Class III	LF	103	$ 110.00	$ 11,330.00
618 - 19	24 Inch Catch Basin Connector Pipe, Class IV	LF	0	$ 110.00	$ -
618 - 20	24 Inch Catch Basin Connector Pipe, Class V	LF	0	$ 110.00	$ -
618 - 21	30 Inch Catch Basin Connector Pipe, Class III	LF	20	$ 120.00	$ 2,400.00
618 - 22	30 Inch Catch Basin Connector Pipe, Class IV	LF	0	$ 120.00	$ -
618 - 23	30 Inch Catch Basin Connector Pipe, Class V	LF	59	$ 120.00	$ 7,080.00
618 - 24	72 Inch Catch Basin Connector Pipe, Class IV	LF	0	$ 120.00	$ -
618 - 25	72 Inch To 84 Inch Pipe Transition	EA	0	$ 10,000.00	$ -
618 - 26	84 Inch To 96 Inch Pipe Transition	EA	0	$ 10,000.00	$ -
618 - 27	96 Inch To 114 Inch Pipe Transition	EA	0	$ 10,000.00	$ -
618 - 28	114 Inch x 15 Inch Prefab Tee	EA	0	$ 1,000.00	$ -
618 - 29	114 Inch x 18 Inch Prefab Tee	EA	0	$ 1,000.00	$ -
618 - 30	114 Inch x 24 Inch Prefab Tee	EA	0	$ 1,000.00	$ -
618 - 31	114 Inch x 24 Inch Prefab Tangent Tee	EA	0	$ 1,000.00	$ -
618 - 32	114 Inch x 30 Inch Prefab Tee	EA	1	$ 1,000.00	$ 1,000.00
618 - 33	114 Inch x 30 Inch Prefab Tangent Tee with trash rack	EA	1	$ 2,000.00	$ 2,000.00
618 - 34	114 Inch x 66 Inch Prefab Tee	EA	1	$ 1,000.00	$ 1,000.00
618 - 35	114 Inch x 72 Inch Prefab Tangent Tee	EA	0	$ 1,000.00	$ -
618 - 36	66 Inch x 15 Inch Tee	EA	6	$ 1,000.00	$ 6,000.00
618 - 37	66 Inch x 18 Inch Tee	EA	2	$ 1,000.00	$ 2,000.00
618 - 38	66 Inch x 24 Inch Tee	EA	4	$ 1,000.00	$ 4,000.00
618 - 39	66 Inch x 30 Inch Tee	EA	1	$ 1,000.00	$ 1,000.00
618 - 40	Concrete Pipe Collar, MAG DET 505 (24" & Larger)	EA	0	$ 1,000.00	$ -
618 - 41	Prefab 30 Degree Bend, 114 Inch Pipe	EA	2	$ 1,200.00	$ 2,400.00
618 - 42	Prefab 45 Degree Bend, 114 Inch Pipe	EA	1	$ 1,200.00	$ 1,200.00
618 - 43	Pump Station and Controls	EA	1	$ 500,000.00	$ 500,000.00
621 - 7	Storm Drain Hydrostatic Test	EA	1		$ -
625 - 1	Storm Drain Manhole MAG DET 521, 522 & 523	EA	7	$ 5,000.00	$ 35,000.00
625 - 2	Storm Drain Manhole MAG DET 522, 523 & Detail A	EA	4	$ 6,000.00	$ 24,000.00
	Contingency	Job	15%	$ 5,289,759.67	$ 793,463.95

Prepared By: Jeffrey Riddle 3/3/99

Total = $ 6,083,223.62

BIDDING SCHEDULE

PRELIMINARY ESTIMATE

PROJECT: 43RD AVENUE STORM DRAIN
BASELINE ROAD TO SOUTHERN AVENUE

PROJECT 1170230

ITEM NO.	DESCRIPTION	UNIT	APPROX. QUANTITY	UNIT COST NUMBERS	EXTENDED AMOUNT
105 - 1	Partnering	LS	1	$ 5,000.00	$ 5,000.00
107 - 1	NPDES / SWPPP Permits	LS	1	$ 10,000.00	$ 10,000.00
107 - 2	Public Information and Notification Allowance	LS	1	$ 10,000.00	$ 10,000.00
107 - 3	Project Signs Allowance	LS	1	$ 5,000.00	$ 5,000.00
202 - 1	Mobilization	LS	1	$ 82,105.53	$ 82,105.53
336 - 1	Pavement Replacement (4"AC/8"ABC)	SY	13145	$ 18.73	$ 246,205.85
336 - 2	Pavement Replacement (4"AC/10"ABC)	SY	0	$ 19.00	$ -
340 - 1	Curb and Gutter, MAG DET 220, Type A	LF	242	$ 5.00	$ 1,210.00
340 - 2	Sidewalk, MAG DET 230	SF	902	$ 2.50	$ 2,255.00
345 - 1	Adjust Manhole Frame and Cover	EA	9	$ 1,000.00	$ 9,000.00
345 - 2	Adjust Water Valve Box and Cover, Type A	EA	1	$ 1,000.00	$ 1,000.00
350 - 1	Removal of Existing Improvements	LS	1	$ 5,000.00	$ 5,000.00
401 - 1	Traffic Control	LS	1	$ 50,000.00	$ 50,000.00
405 - 1	Survey Monument MAG DET 120-1, Type A	EA	1	$ 350.00	$ 350.00
405 - 2	Survey Monument MAG DET 120-1, Type B	EA	3	$ 200.00	$ 600.00
420 - 1	24' Chain Link Fence Gate	EA	0	$ 500.00	$ -
505 - 1	Special Junction Structure	EA	0	$ 25,000.00	$ -
505 - 2	Concrete Headwall	EA	0	$ 4,000.00	$ -
505 - 3	Concrete Box Culvert, ADOT Det B 02.10	LF	0	$ 600.00	$ -
505 - 4	Concrete Catch Basin COP Det P 1569-1, M-1, L=10	EA	0	$ 2,500.00	$ -
505 - 5	Concrete Catch Basin COP Det P 1569-1, M-1, L=17	EA	0	$ 2,800.00	$ -
505 - 6	Concrete Catch Basin COP Det P 1569-1, M-2, L=6	EA	1	$ 3,000.00	$ 3,000.00
505 - 7	Concrete Catch Basin COP Det P 1569-1, M-2, L=10	EA	1	$ 3,500.00	$ 3,500.00
505 - 8	Concrete Catch Basin COP Det P 1569-1, M-2, L=17	EA	7	$ 4,500.00	$ 31,500.00
505 - 9	Concrete Catch Basin COP Det P 1570, N-Double	EA	1	$ 3,000.00	$ 3,000.00
515 - 1	10' x 5' Flap Gate	EA	0	$ 15,000.00	$ -
601 - 1	Permanent Pipe Supports, MAG Det 403-3	EA	1	$ 1,000.00	$ 1,000.00
610 - 1	12" Ductile Iron Water Pipe and Fittings	LF	22	$ 45.00	$ 990.00
610 - 2	Replace Water Service Pipe	LF	60	$ 5.00	$ 300.00
610 - 3	Relocate Water Meter	EA	1	$ 200.00	$ 200.00
618 - 1	114 Inch Pipe, Class III RGRCP OR 621-1, 114 Inch CLCMP 10 Gauge	LF	2760	$ 625.00	$ 1,725,000.00
618 - 2	114 Inch Pipe, Class IV RGRCP OR 621-1, 114 Inch CLCMP 10 Gauge	LF	200	$ 625.00	$ 125,000.00
618 - 3	96 Inch Pipe, Class III RGRCP OR 621-2, 96 Inch CLCMP 10 Gauge	LF	60	$ 600.00	$ 36,000.00
618 - 4	84 Inch Pipe, Class III RGRCP OR 621-3, 84 Inch CLCMP 10 Gauge	LF	60	$ 575.00	$ 34,500.00
618 - 5	72 Inch Pipe, Class III RGRCP OR 621-4, 72 Inch CLCMP 10 Gauge	LF	720	$ 300.00	$ 216,000.00
618 - 6	72 Inch Pipe, Class IV RGRCP OR 621-4, 72 Inch CLCMP 10 Gauge	LF	200	$ 300.00	$ 60,000.00
618 - 7	66 Inch Pipe, Class III RGRCP OR 621-5, 66 Inch CLCMP 12 Gauge	LF	0	$ 280.00	$ -
618 - 8	54 Inch Pipe, Class III RGRCP OR 621-6, 54 Inch CLCMP 14 Gauge	LF	0	$ 180.00	$ -
618 - 9	Bore & Jack 114 Inch Pipe	LF	0	$ 4,000.00	$ -
618 - 10	Pipe Plug, MAG Det 427, 72 INCH	EA	2	$ 2,400.00	$ 4,800.00
618 - 11	Pipe Plug, MAG Det 427, 66 INCH	EA	0	$ 2,400.00	$ -
618 - 12	Pipe Plug, MAG Det 427, 54 INCH	EA	0	$ 1,500.00	$ -
618 - 13	Pipe Plug, MAG Det 427, 24 INCH	EA	2	$ 1,500.00	$ 3,000.00
618 - 14	15 Inch Catch Basin Connector Pipe, Class III	LF	0	$ 70.00	$ -
618 - 15	15 Inch Catch Basin Connector Pipe, Class IV	LF	188	$ 70.00	$ 13,160.00
618 - 16	18 Inch Catch Basin Connector Pipe, Class III	LF	0	$ 80.00	$ -
618 - 17	18 Inch Catch Basin Connector Pipe, Class IV	LF	126	$ 80.00	$ 10,080.00
618 - 18	24 Inch Catch Basin Connector Pipe, Class III	LF	0	$ 110.00	$ -
618 - 19	24 Inch Catch Basin Connector Pipe, Class IV	LF	264	$ 110.00	$ 29,040.00
618 - 20	24 Inch Catch Basin Connector Pipe, Class V	LF	64	$ 110.00	$ 7,040.00
618 - 21	30 Inch Catch Basin Connector Pipe, Class III	LF	0	$ 120.00	$ -
618 - 22	30 Inch Catch Basin Connector Pipe, Class IV	LF	62	$ 120.00	$ 7,440.00
618 - 23	30 Inch Catch Basin Connector Pipe, Class V	LF	0	$ 120.00	$ -
618 - 24	72 Inch Catch Basin Connector Pipe, Class IV	LF	64	$ 120.00	$ 7,680.00
618 - 25	72 Inch To 84 Inch Pipe Transition	EA	1	$ 10,000.00	$ 10,000.00
618 - 26	84 Inch To 96 Inch Pipe Transition	EA	1	$ 10,000.00	$ 10,000.00
618 - 27	96 Inch To 114 Inch Pipe Transition	EA	1	$ 10,000.00	$ 10,000.00
618 - 28	114 Inch x 15 Inch Prefab Tee	EA	1	$ 1,000.00	$ 1,000.00
618 - 29	114 Inch x 18 Inch Prefab Tee	EA	1	$ 1,000.00	$ 1,000.00
618 - 30	114 Inch x 24 Inch Prefab Tee	EA	4	$ 1,000.00	$ 4,000.00
618 - 31	114 Inch x 24 Inch Prefab Tangent Tee	EA	1	$ 1,000.00	$ 1,000.00
618 - 32	114 Inch x 30 Inch Prefab Tee	EA	1	$ 1,000.00	$ 1,000.00
618 - 33	114 Inch x 30 Inch Prefab Tangent Tee with trash rack	EA	0	$ 2,000.00	$ -
618 - 34	114 Inch x 66 Inch Prefab Tee	EA	0	$ 1,000.00	$ -
618 - 35	114 Inch x 72 Inch Prefab Tangent Tee	EA	1	$ 1,000.00	$ 1,000.00
618 - 36	66 Inch x 15 Inch Tee	EA	0	$ 1,000.00	$ -
618 - 37	66 Inch x 18 Inch Tee	EA	0	$ 1,000.00	$ -
618 - 38	66 Inch x 24 Inch Tee	EA	0	$ 1,000.00	$ -
618 - 39	66 Inch x 30 Inch Tee	EA	0	$ 1,000.00	$ -
618 - 40	Concrete Pipe Collar, MAG DET 505 (24" & Larger)	EA	1	$ 1,000.00	$ 1,000.00
618 - 41	Prefab 30 Degree Bend, 114 Inch Pipe	EA	0	$ 1,200.00	$ -
618 - 42	Prefab 45 Degree Bend, 114 Inch Pipe	EA	0	$ 1,200.00	$ -
618 - 43	Pump Station and Controls (43rd Avenue & Broadway)	EA	0	$ 500,000.00	$ -
621 - 7	Storm Drain Hydrostatic Test	EA	0		$ -
625 - 1	Storm Drain Manhole MAG DET 521, 522 & 523	EA	1	$ 5,000.00	$ 5,000.00
625 - 2	Storm Drain Manhole MAG DET 522, 523 & Detail A	EA	4	$ 6,000.00	$ 24,000.00
	Contingency	Job	15%	$ 2,818,956.38	$ 422,843.46

Prepared By: Jeffrey Riddle 3/3/99

Total = $ 3,241,799.83

BIDDING SCHEDULE

PRELIMINARY ESTIMATE

PROJECT: 43RD AVENUE STORM DRAIN
BASELINE ROAD TO SALT RIVER

PROJECT 1170230

ITEM NO.	DESCRIPTION	UNIT	PHASE 1 QUANTITY	PHASE 2 QUANTITY	PROJECT QUANTITY	UNIT COST NUMBERS	EXTENDED AMOUNT
105 - 1	Partnering	LS	N/A	N/A	1	$ 15,000.00	$ 15,000.00
107 - 1	NPDES / SWPPP Permits	LS	N/A	N/A	1	$ 20,000.00	$ 20,000.00
107 - 2	Public Information and Notification Allowance	LS	N/A	N/A	1	$ 25,000.00	$ 25,000.00
107 - 3	Project Signs Allowance	LS	N/A	N/A	1	$ 10,000.00	$ 10,000.00
202 - 1	Mobilization	LS	N/A	N/A	1	$ 236,176.20	$ 236,176.20
336 - 1	Pavement Replacement (4"AC/8"ABC)	SY	0	13145	13145	$ 18.73	$ 246,205.85
336 - 2	Pavement Replacement (4"AC/10"ABC)	SY	19251	0	19251	$ 19.00	$ 365,769.00
340 - 1	Curb and Gutter, MAG DET 220, Type A	LF	0	242	242	$ 5.00	$ 1,210.00
340 - 2	Sidewalk, MAG DET 230	SF	0	902	902	$ 2.50	$ 2,255.00
345 - 1	Adjust Manhole Frame and Cover	EA	4	9	13	$ 1,000.00	$ 13,000.00
345 - 2	Adjust Water Valve Box and Cover, Type A	EA	5	1	6	$ 1,000.00	$ 6,000.00
350 - 1	Removal of Existing Improvements	LS	1	1	1	$ 10,000.00	$ 10,000.00
401 - 1	Traffic Control	LS	N/A	N/A	1	$ 100,000.00	$ 100,000.00
405 - 1	Survey Monument MAG DET 120-1, Type A	EA	3	1	4	$ 350.00	$ 1,400.00
405 - 2	Survey Monument MAG DET 120-1, Type B	EA	3	3	6	$ 200.00	$ 1,200.00
420 - 1	24' Chain Link Fence Gate	EA	1	0	1	$ 500.00	$ 500.00
505 - 1	Special Junction Structure	EA	1	0	1	$ 25,000.00	$ 25,000.00
505 - 2	Concrete Headwall	EA	1	0	1	$ 4,000.00	$ 4,000.00
505 - 3	Concrete Box Culvert, ADOT Det B 02.10	LF	90	0	90	$ 600.00	$ 54,000.00
505 - 4	Concrete Catch Basin COP Det P 1569-1, M-1, L=10	EA	2	0	2	$ 2,500.00	$ 5,000.00
505 - 5	Concrete Catch Basin COP Det P 1569-1, M-1, L=17	EA	2	0	2	$ 2,800.00	$ 5,600.00
505 - 6	Concrete Catch Basin COP Det P 1569-1, M-2, L=6	EA	4	1	5	$ 3,000.00	$ 15,000.00
505 - 7	Concrete Catch Basin COP Det P 1569-1, M-2, L=10	EA	5	1	6	$ 3,500.00	$ 21,000.00
505 - 8	Concrete Catch Basin COP Det P 1569-1, M-2, L=17	EA	2	7	9	$ 4,500.00	$ 40,500.00
505 - 9	Concrete Catch Basin COP Det P 1570, N-Double	EA	0	1	1	$ 3,000.00	$ 3,000.00
515 - 1	10' x 5' Flap Gate	EA	1	0	1	$ 15,000.00	$ 15,000.00
601 - 1	Permanent Pipe Supports, MAG Det 403-3	EA	2	1	3	$ 1,000.00	$ 3,000.00
610 - 1	12" Ductile Iron Water Pipe and Fittings	LF	66	22	88	$ 45.00	$ 3,960.00
610 - 2	Replace Water Service Pipe	LF	0	60	60	$ 5.00	$ 300.00
610 - 3	Relocate Water Meter	EA	0	1	1	$ 200.00	$ 200.00
618 - 1	114 Inch Pipe, Class III RGRCP OR 621-1, 114 Inch CLCMP 10 Gauge	LF	1660	2760	4420	$ 625.00	$ 2,762,500.00
618 - 2	114 Inch Pipe, Class IV RGRCP OR 621-1, 114 Inch CLCMP 10 Gauge	LF	2482	200	2682	$ 625.00	$ 1,676,250.00
618 - 3	96 Inch Pipe, Class III RGRCP OR 621-2, 96 Inch CLCMP 10 Gauge	LF	0	60	60	$ 600.00	$ 36,000.00
618 - 4	84 Inch Pipe, Class III RGRCP OR 621-3, 84 Inch CLCMP 10 Gauge	LF	0	60	60	$ 575.00	$ 34,500.00
618 - 5	72 Inch Pipe, Class III RGRCP OR 621-4, 72 Inch CLCMP 10 Gauge	LF	0	720	720	$ 300.00	$ 216,000.00
618 - 6	72 Inch Pipe, Class IV RGRCP OR 621-4, 72 Inch CLCMP 10 Gauge	LF	0	200	200	$ 300.00	$ 60,000.00
618 - 7	66 Inch Pipe, Class III RGRCP OR 621-5, 66 Inch CLCMP 12 Gauge	LF	2193	0	2193	$ 280.00	$ 614,040.00
618 - 8	54 Inch Pipe, Class III RGRCP OR 621-6, 54 Inch CLCMP 14 Gauge	LF	73	0	73	$ 180.00	$ 13,140.00
618 - 9	Bore & Jack 114 Inch Pipe	LF	170	0	170	$ 4,000.00	$ 680,000.00
618 - 10	Pipe Plug, MAG Det 427, 72 INCH	EA	0	2	2	$ 2,400.00	$ 4,800.00
618 - 11	Pipe Plug, MAG Det 427, 66 INCH	EA	2	0	2	$ 2,400.00	$ 4,800.00
618 - 12	Pipe Plug, MAG Det 427, 54 INCH	EA	1	0	1	$ 1,500.00	$ 1,500.00
618 - 13	Pipe Plug, MAG Det 427, 24 INCH	EA	0	2	2	$ 1,500.00	$ 3,000.00
618 - 14	15 Inch Catch Basin Connector Pipe, Class III	LF	78	0	78	$ 70.00	$ 5,460.00
618 - 15	15 Inch Catch Basin Connector Pipe, Class IV	LF	0	188	188	$ 70.00	$ 13,160.00
618 - 16	18 Inch Catch Basin Connector Pipe, Class III	LF	45	0	45	$ 80.00	$ 3,600.00
618 - 17	18 Inch Catch Basin Connector Pipe, Class IV	LF	0	126	126	$ 80.00	$ 10,080.00
618 - 18	24 Inch Catch Basin Connector Pipe, Class III	LF	103	0	103	$ 110.00	$ 11,330.00
618 - 19	24 Inch Catch Basin Connector Pipe, Class IV	LF	0	264	264	$ 110.00	$ 29,040.00
618 - 20	24 Inch Catch Basin Connector Pipe, Class V	LF	0	64	64	$ 110.00	$ 7,040.00
618 - 21	30 Inch Catch Basin Connector Pipe, Class III	LF	20	0	20	$ 120.00	$ 2,400.00
618 - 22	30 Inch Catch Basin Connector Pipe, Class IV	LF	0	62	62	$ 120.00	$ 7,440.00
618 - 23	30 Inch Catch Basin Connector Pipe, Class V	LF	59	0	59	$ 120.00	$ 7,080.00
618 - 24	72 Inch Catch Basin Connector Pipe, Class IV	LF	0	64	64	$ 120.00	$ 7,680.00
618 - 25	72 Inch To 84 Inch Pipe Transition	EA	0	1	1	$ 10,000.00	$ 10,000.00
618 - 26	84 Inch To 96 Inch Pipe Transition	EA	0	1	1	$ 10,000.00	$ 10,000.00
618 - 27	96 Inch To 114 Inch Pipe Transition	EA	0	1	1	$ 10,000.00	$ 10,000.00
618 - 28	114 Inch x 15 Inch Prefab Tee	EA	0	1	1	$ 1,000.00	$ 1,000.00
618 - 29	114 Inch x 18 Inch Prefab Tee	EA	0	1	1	$ 1,000.00	$ 1,000.00
618 - 30	114 Inch x 24 Inch Prefab Tee	EA	0	4	4	$ 1,000.00	$ 4,000.00
618 - 31	114 Inch x 24 Inch Prefab Tangent Tee	EA	0	1	1	$ 1,000.00	$ 1,000.00
618 - 32	114 Inch x 30 Inch Prefab Tee	EA	1	1	2	$ 1,000.00	$ 2,000.00
618 - 33	114 Inch x 30 Inch Prefab Tangent Tee with trash rack	EA	1	0	1	$ 2,000.00	$ 2,000.00
618 - 34	114 Inch x 66 Inch Prefab Tee	EA	1	0	1	$ 1,000.00	$ 1,000.00
618 - 35	114 Inch x 72 Inch Prefab Tangent Tee	EA	0	1	1	$ 1,000.00	$ 1,000.00
618 - 36	66 Inch x 15 Inch Tee	EA	6	0	6	$ 1,000.00	$ 6,000.00
618 - 37	66 Inch x 18 Inch Tee	EA	2	0	2	$ 1,000.00	$ 2,000.00
618 - 38	66 Inch x 24 Inch Tee	EA	4	0	4	$ 1,000.00	$ 4,000.00
618 - 39	66 Inch x 30 Inch Tee	EA	1	0	1	$ 1,000.00	$ 1,000.00
618 - 40	Concrete Pipe Collar, MAG DET 505 (24" & Larger)	EA	0	1	1	$ 1,000.00	$ 1,000.00
618 - 41	Prefab 30 Degree Bend, 114 Inch Pipe	EA	2	0	2	$ 1,200.00	$ 2,400.00
618 - 42	Prefab 45 Degree Bend, 114 Inch Pipe	EA	1	0	1	$ 1,200.00	$ 1,200.00
618 - 43	Pump Station and Controls (43rd Avenue & Broadway)	EA	1	0	1	$ 500,000.00	$ 500,000.00
621 - 7	Storm Drain Hydrostatic Test	EA	1	0	1		$ -
625 - 1	Storm Drain Manhole MAG DET 521, 522 & 523	EA	7	1	8	$ 5,000.00	$ 40,000.00
625 - 2	Storm Drain Manhole MAG DET 522, 523 & Detail A	EA	4	4	8	$ 6,000.00	$ 48,000.00
	Contingency	Job	N/A	N/A	15%	$ 8,108,716.05	$ 1,216,307.41

Prepared By: Jeffrey Riddle 3/3/99

Total = $ 9,325,023.45

FLOOD CONTROL DISTRICT OF MARICOPA COUNTY
43RD AVENUE STORM DRAIN, BASELINE ROAD TO SALT RIVER
CONTRACT NO. FCD 99-04
PROJECT NO. 1170230

SPECIAL PROVISIONS

SECTION 202 – MOBILIZATION
Add this section in its entirety.

Subsection 202.1 – Description
Add the following:
The work under this section shall consist of preparatory work and operations, including but not limited to, the movement of personnel, equipment, supplies and incidentals to the project site; the establishment of all offices, buildings and other facilities necessary for work on the project, and for all other work and operations that must be performed and costs incurred prior to beginning work on items on the project site.

Field Office:
This work shall consist of providing and maintaining a furnished Field Office for the exclusive use of and occupancy by the Engineer and the Engineer's staff.

The office shall be a building or mobile trailer erected on the District's property on the southeast corner of the intersection of 43rd Avenue and Southern Avenue or at a location convenient to the project. The office shall not be in the same building or mobile trailer as office space of the contractor.

The Contractor shall obtain written approval from the property owner upon site selection of the field office.

The Contractor may furnish equivalent facilities in an existing building provided such facilities and building are located to provide convenient service.

The field office shall be an approved and weatherproof building or mobile trailer providing a minimum of 500 square feet of clear floor space. Not including the toilet area. The structure shall have a minimum ceiling height of seven (7) feet and shall be provided with weatherproof doors equipped with adequate locking devices. Windows shall also be provided with adequate locking devices. The Contractor shall also provide the following:

a. Lighting – Electric Light, non-glare type luminaries to provide a minimum illumination level at desk level.

b. Heating & Cooling – Adequate electrically powered equipment to maintain an ambient air temperature of 72 degrees F plus or minus 8 degrees.

c. Telephone, answering, FAX machine, and copy machine – A telephone with an outside line for exclusive use of the Engineer. The Contractor will pay for the cost of the line and local calling charges. The District will pay for long distance charges made on this line.

d. Toilet - A commode and wash sink in a separately enclosed room with the building or mobile trailer, properly ventilated and complying with applicable sanitary codes. Contractor shall provide water service.

e. Maintenance – The Contractor shall maintain all facilities and furnished equipment in good working order.

f. Fire Extinguisher – Two non-toxic, dry chemical, fire extinguishers meeting Underwriters Laboratories, Inc. approval for Class A, Class B, and Class C fires with a minimum rating of 2A: 2B: 10C.

g. Electricity – Contractor shall provide electric power and pay for all electric service.

h. Furnishings – Two office desks with drawers, two office chairs (padded, swivel type), one drafting table (adjustable height 3 feet by 6 feet), one 8 foot conference table, eight folding chairs, one draftsman's stool, and a four drawer legal file cabinet.

i. First Aid Kit – Contractor shall provide a first aid kit.

j. Potable Water Supply – Contractor shall provide a potable water supply and pay for all water service.

The office shall be fully equipped and made available for the Engineer's use and occupancy prior to the start of any Contract work and not later than ten (10) days after the notice to proceed. The Engineer will notify the Contractor in writing, of the acceptability of the Field Office provided. The Contractor shall maintain the field office in operating condition until seven (7) days after acceptance of the Contract work.

All facilities shall be maintained in good operating condition and appearance by the Contractor for the designated period, after which all portable buildings or trailers, fencing, surfacing, and utilities shall be removed from the site, the areas cleaned and seeded if required and left in a neat and acceptable condition.

Subsection 202.2 – Payment
Replace this subsection with the following:
Payment shall be made on the basis of the lump sum price bid and shall be full compensation for supplying and furnishing all materials, facilities, and services and performing all work involved as specified herein. The lump sum price bid shall not exceed three (3) percent of the total project bid amount exclusive of mobilization. No additional payment will be made for occupancy and services during periods of contract extension of time due to engineering changes.
ITEM 202-1 – MOBILIZATION

SECTION 225 – WATERING
Watering shall conform to Section 225 of the MAG Uniform Standard Specifications except as modified herein.

Subsection 225.1 Description
Add the Following:
The work under this section shall consist of furnishing and applying all water required for control of dust, for the safety and convenience of the traveling public, and for the reduction of the dust nuisance to adjacent properties.

The Contractor shall obtain the necessary permits under the County Air Pollution Statutes. It shall be the responsibility of the Contractor to keep the construction site moistened to prevent dust pollution to the air and adjacent properties.

Subsection 225.5 – Payment
Replace this subsection with the following:
No payment shall be made for the cost of watering. The cost of watering shall be included in the price bid for the construction operation to which such watering is incidental or appurtenant.

SECTION 301 – SUBGRADE PREPARATION

Subgrade preparation shall conform to Section 301 of the MAG Uniform Standard Specifications except as modified herein.

Subsection 301.7 – Measurement
Replace this subsection with the following:
No separate measurement will be made for this item.

Subsection 301.8 – Payment
Replace this subsection with the following:
No separate payment shall be made for this item. The cost thereof shall be included in the cost of pavement replacement.

SECTION 310 – UNTREATED BASE

Untreated base shall conform to Section 310 of the MAG Uniform Standard Specifications except as modified herein.

Subsection 310.4 – Payment
Replace this subsection with the following:
No separate measurement or payment will be made for this item. The cost thereof shall be included in the cost of pavement replacement.

SECTION 329 – TACK COAT

Construction shall conform to Section 329 of the MAG Uniform Standard Specifications except as modified herein.

Subsection 329.3 – Application
Add the following:
Tack coat shall be applied at the rate of 0.05 to 0.10 gallons per square yard.

Subsection 329.6 – Measurement
Replace this subsection with the following:
No separate measurement shall be made for this item.

Subsection 329.7 – Payment
Replace this subsection with the following:
No separate payment will be made for tack coat. The cost thereof shall be included in cost of pavement replacement.

SECTION 334 – PRESERVATIVE SEAL FOR ALPHALT CONCRETE

Construction shall conform to Section 334 of the MAG Uniform Standard Specifications except as modified herein.

Subsection 334.3 – Construction Method
Add the following:
Preservative seal coat shall be applied at the rate of 0.05 to 0.10 gallons per square yard.

Subsection 334.4 – Measurement
Replace this subsection with the following:
No separate measurement will be made for this item.

Subsection 334.5 – Payment
Replace this subsection with the following:
No separate payment will be made for preservative seal coats. The cost thereof shall be included in the price bid for the construction of pavement replacement.

SECTION 336 – PERMANENT PAVEMENT REPLACEMENT

Construction shall conform to Section 336 of the MAG Uniform Standard Specifications except as modified herein.

Subsection 336.2.2 – Pavement to be Removed
Add the following:
The entire width of pavement within 43rd Avenue beginning at Station 21+75 shall be removed. Applicable trench widths listed in Table 601-1 of the MAG Uniform Standard Specifications for all other storm drains installed will determine pavement pay line.

Subsection 336.2.4 – Materials and Construction Methods
Add the following:
All asphaltic concrete pavement shall be placed using appropriate lay down equipment, which has been specifically designed for that purpose. The temperature of the asphaltic concrete shall be a minimum of 200 degrees Fahrenheit while being rolled.

From Station 21+75 to Station 62+52.44, the pavement replacement shall consist of two layers of asphaltic pavement over 8 inches of aggregate base course. All other pavement replacement shall consist of two layers of asphalt pavement over 10 inches of aggregate base course. The base course of the asphalt shall be 2-1/2 inches of C-3/4 and the surface course shall be 1-1/2 inch of D-1/2.

Subsection 336.4 - Measurement
Replace this subsection with the following:
Measurement for payment will be by the square yard.

In computing the pay quantities for replacements for the 43rd Avenue main drain, the pay width will be measured to the outside limits of the new road within the limits of the Stations listed in Subsection 336.2.2 or as directed by the Engineer.

In computing the pay quantities for pavement replacements for the Southern Avenue collector system and connector pipes, the pay width will be measured to the outside of the trench not to exceed the maximum trench widths as listed in Table 601-1 of the MAG Standard Specifications. Any pavement replacement in excess of this amount shall be considered incidental and included in the cost of the bid item for such that the work is incidental or appurtenant.

Subsection 336.5 - Payment
Replace this subsection with the following:
Payment for pavement matching and surfacing replacement shall be made on the basis of the price bid per square yard, including all materials, sawcutting, subgrade preparation, untreated base, tack coats, asphalt concrete, preservative seal coat and other work that is considered incidental.
ITEM 336-1 - PAVEMENT REPLACEMENT (4" AC / 8 ABC)
ITEM 336-2 - PAVEMENT REPLACEMENT (4" AC / 10 ABC)

SECTION 340 – CONCRETE CURB, GUTTER, AND SIDEWALK

Construction shall conform to Section 340 of the MAG Uniform Standard Specifications except as modified herein.

Subsection 340.5 – Payment
Replace this subsection with the following:
Payment for curb and gutter shall include the cost of labor, materials, and all other work not specifically covered that is incidental and shall be made on the basis of the unit price bid per lineal foot. Payment for sidewalk shall include the cost of labor, materials, and all other work not specifically covered that is incidental and shall be made on the basis of the unit price bid per square foot.
ITEM 340-1 – CURB AND GUTTER, MAG DET 220, TYPE A
ITEM 340-2 – SIDEWALK, MAG DET 230

SECTION 345 – ADJUSTING FRAMES AND COVERS

Construction shall conform to Section 345 of the MAG Uniform Standard Specifications except as modified herein.

Subsection 345.3 – Adjusting Valve Boxes
Add the following:

The Contractor shall install a debris cap with a locator coil in each existing water valve box adjusted to grade. The debris cap shall be in accordance with City of Phoenix Supplement to MAG Detail P-1165 and shall include a locator coil. Prior to installation, the valve riser shall be thoroughly clean, with a fully exposed operating nut.

Subsection 345.5 – Payment
Replace this subsection with the following:
Payment for adjustments including removal, furnishing and installing the materials complete in place, including the cost of labor, and all other work not specifically covered that is incidental shall be made on the basis of the price bid for each. No penalty shall be incurred for any increase or reduction in the number of manhole or water valve adjustments as determined by the Engineer.
ITEM 345-1 – ADJUST MANHOLE FRAME AND COVER
ITEM 345-2 – ADJUST WATER VALVE, BOX, AND COVER, TYPE "A"

SECTION 350 - REMOVAL OF EXISTING IMPROVEMENTS
Removal of existing improvements shall conform to Section 350 of the MAG Uniform Standard Specifications and COP Supplement except as modified herein.

Subsection 350.1 - Description
Add the following:
The work includes the removal and disposal of existing manholes, pipes, concrete curbs, sidewalks and other obstacles to construction unless it is specifically called out on the plans to be removed and salvaged or protected in place. Holes, cavities and trenches resulting from the removal of structures shall be backfilled if necessary in accordance with Sections 206 and 211. The disposal of all waste material removed under this item shall be the responsibility of the Contractor. The disposal site shall be approved by the Engineer.

If a Maricopa County landfill is selected for the disposal of waste materials and/or debris, a Maricopa County Landfill Use Permit will be required. Application for permit can be made at the Maricopa County Landfill Office, located at 2801 West Durango Street, Phoenix, Arizona 85009 (telephone (602) 506-7060). Charges will be levied on a volume basis for each load delivered to the landfill in accordance with the current fee schedule.

Subsection 350.4 - Payment
Add the following:
No payment shall be made for the removal of trees or for the removal and disposal of existing AC pavement as such; the cost thereof shall be considered incidental to pavement replacement or the work that such removal is incidental or appurtenant.

Payment for removal and disposal of existing concrete curb and gutter and other items not specifically called out that are necessary for the construction of the storm drain and appurtenances shall be made on the basis of the lump sum price bid. Payment shall be full compensation for furnishing all labor, materials, tools and equipment, sawcutting, removal, hauling, disposal and all other items necessary to accomplish the work.
ITEM 350-1 – REMOVAL OF EXISTING IMPROVEMENTS

SECTION 401 – TRAFFIC CONTROL

Traffic Control shall conform to Section 401 of the MAG Uniform Standard Specifications except as modified herein.

Subsection 401.1 – Description

Add the following:

All traffic control shall conform to the Construction Specifications for this project, Part IV of the "Manual On Uniform Traffic Control Devices For Streets And Highways" (U.S. Department of Transportation, Federal Highway Division) and all revisions thereto, and the request of the Engineer. In addition, all traffic control within the City of Phoenix shall conform to the City of Phoenix Traffic Barricade Manual 1998 Edition.

It shall be the Contractor's responsibility to provide, erect and maintain, and remove after completion of the work all necessary signs, barricades, barriers, berms, lights, high level warning devices, delineators, and any other required devices, uniformed officers, and flagmen necessary to properly mark and control the construction area for safe and efficient movement of traffic.

Temporary traffic control devices shall be installed as required prior to the start of work. The approval of Contractor's traffic control method shall not relieve Contractor of his responsibility to protect the work, Contractor's personnel, or the general public.

Subsection 401.5 – General Traffic Regulations

Add the following:

Both the City of Phoenix and the Maricopa County Department of Transportation have authorized a street closure on 43rd Avenue (to all but local traffic).

Channelization, including "KEEP RIGHT" signs, shall be provided whenever traffic is moved across the street centerline, the existing center line is removed or opposing traffic is maintained in other than the normal traffic lanes.

All temporary traffic control devices shall be ballasted with sandbags or other approved ballast.

For construction diversions that require movement of traffic from the normal through lanes, temporary bypasses shall be utilized only during daylight hours and the normal traffic shall be restored during nighttime hours. Exceptions may be authorized by the Engineer under unusual conditions.

Access to all adjacent properties shall be maintained. When access cannot be maintained, Contractor shall notify the adjacent residents at least 48 hours in advance of the access closure. In no case shall the access be closed for more that four (4) hours. Access for fire stations, hospitals, police stations, and schools shall be maintained at all times. The Contractor shall notify the City of Phoenix police, fire departments, and transit authority of any road closures at least two (2) days in advance of the closure.

The Contractor shall not prevent or unreasonably impede access to the Calmat plant and facility located at 43rd Avenue and Broadway Road at any time.

Contractor shall maintain or relocate all existing signal indications, warning signs, STOP, YIELD, and street name signs erect, clean and in full view of the intended traffic at all times. Portable signs should be used to supplement blocked or removed signs. In the event the

Contractor removes any permanent signing which will not be reinstalled immediately, the Contractor shall store permanent signs in a secure location at the project site and request removal by City or County forces. Contractor will reset all permanent signing removed or relocated during construction at Contractor's expense. The Contractor is responsible for all costs incurred in replacing lost or damaged traffic control devices.

Rope, flagging, fencing, and woven plastic tape may be used between barricades and channeling devices to provide additional safely.

Contractor shall install deceleration sand berms in the blocked traffic path or at other hazardous sites in order to prevent vehicles from entering the construction and/or hazard areas. The deceleration sand berms shall be constructed of washed sand and shall be approximately five (5) feet high.

Advance Project Notification Signing shall be installed at least 14 days prior to the start of construction. The location for Advance Notification Signing shall be determined at the time of the Pre-Construction meeting. Signing shall be updated as restrictions change.

Construction shall not commence or proceed without an approved Traffic Control Plan. At the pre-construction conference, the Contractor shall submit for review his plan for the sequence of construction, any planned lane closures, signing for construction, and the traffic flow. A Traffic Control Plan (TCP) covering the signing and staging shall be submitted and approved prior to the start of each stage of construction. The Traffic Control Plans shall address all construction staging and special provision requirements, including any flagging to be used on the project.

At the time of the Pre-Construction conference, the Contractor shall designate an employee, other than the Project Superintendent, who is well qualified and experienced in construction traffic control and safety, to be available on the project site during all periods of construction to set up, maintain and coordinate safe barricading whenever construction restricts traffic. This individual shall be authorized to receive and fulfill instructions from the Engineer and shall supervise and direct the work. Instructions and information given by the Engineer to this individual shall be considered as having been given to the Contractor.

The final signing and lane striping of the project streets within the City of Phoenix shall be done by the City, and within unincorporated County shall be done by MCDOT, and shall not be commenced or installed until pavement has been accepted and all shoulders have been dressed to cover the edge of pavement drop off with the road segment signed with appropriate speed limit signs. The Contractor shall provide and maintain all necessary signs and barricades until the road is striped.

The Contractor, through the Engineer, shall notify the City of Phoenix Street Transportation Department, Traffic Operations Division (262-6456), at least thirty (30) days prior to desired completion of final roadway signing and lane striping. This will allow adequate time for City crews to schedule and complete the task on time.

The Contractor shall give MCDOT a minimum of two (2) weeks notice as to when the signing and striping can be done.

Subsection 401.7 – Payment
Add the following:

Payment for traffic control, including all mobilization, placing, flagging personnel, storing, removal and maintenance incidental to the approved traffic control plan, and uniformed police officer shall be made on the basis of the lump sum price bid.

ITEM 401-1 – TRAFFIC CONTROL

SECTION 405 – SURVEY MONUMENTS

Construction of survey monuments shall conform to Section 405 of the MAG Uniform Standard Specifications except as modified herein.

Subsection 405.3 – Construction

Add the following:

Prior to removal of any existing survey monument, the Contractor shall ensure that appropriate survey ties have been made and recorded by a Registered Land Surveyor for re-establishing the survey monuments after construction has been completed.

Subsection 405.5 – Payment

Replace this subsection with the following:

Payment for survey monuments including removal, furnishing and installing the monuments, complete in place, including the cost of labor, Registered Land Surveyor, and all other work not specifically covered that is incidental shall be made on the basis of the unit price bid per each item. No penalty shall be incurred for any increase or reduction in the number of monuments as determined by the Engineer.

ITEM 405-1 – SURVEY MONUMENT, MAG DET 120-1, TYPE "A"
ITEM 405-2 – SURVEY MONUMENT, MAG DET 120-1, TYPE "B"

SECTION 420 – CHAIN LINK FENCE

Chain link fence shall conform to Section 420 of the MAG Uniform Standard Specifications except as modified herein.

Subsection 420.1 – Description

Add the following:

The work under this section shall consist of furnishing all labor, materials, and equipment and constructing chain link fence gate at the location and in accordance with the details shown on the plans. Fence shall be of the type and size shown on the plans and shall be constructed in accordance with the requirements of these specifications.

Subsection 421.5 – Payment

Replace this subsection with the following:

Payment for gates shall be made at the contract price bid per each. Price shall include all labor, materials, and equipment to install gate including all incidental gate installation costs.

ITEM 420-1 – 24' FENCE GATE

SECTION 505 – CONCRETE STRUCTURES

Construction of all concrete structures shall be in accordance with MAG Standard Specification 505, except as noted herein.

Subsection 505.1 - Description

Add the following to this subsection:

The work under this section shall consist of furnishing all labor, materials and equipment for the construction of all cast-in-place and other concrete structures including a concrete box culvert, a junction structure, catch basins, and the storm drain outlet structure as located and indicated on the plans.

Special Structures

The Contractor shall construct a special structure on the storm drain in accordance with the plans at Station 105+16 and a headwall at Station 106+10.

Concrete shall conform to the requirements of Section 725 of the MAG Uniform Standard Specifications, and mix designs shall additionally meet the requirements of Chapter 5, Section 5.3 of ACI STANDARD 318-89. The Contractor shall submit mix designs and certifications of conformance with the above requirements for the written approval of the Engineer.

Class "A" Concrete, f'c = 3,000 psi, shall be used for all concrete structures.

The use of Class F fly ash will be permitted in all concrete mixes, subject to approval of mix design by Engineer.

Transit Concrete mixers used on the project must carry current certification from ADOT or Arizona Rock Products Association.

The reinforcing steel shall conform to Section 727, Grade 60, of the MAG Uniform Standard Specifications.

Shop Drawings shall be submitted for the following:

- Product Data: Admixtures and patching materials.
- Placement Drawings:
  a. Concrete, identifying location of each type of construction joint.
  b. Reinforcing steel.

Do not backfill against walls until concrete has obtained 28-day compressive strength. Place backfill simultaneously on both sides of wall, where required, to prevent differential pressures.

Catch Basins

The Contractor shall construct catch basins at the stations shown on the plans to the size and dimensions shown on the plans.

Catch basins shall have a minimum horizontal clearance of six (6) inches between all other facilities and the nearest surface to the catch basin. If the clearance cannot be maintained, the Contractor shall install expanded polystyrene form material of a minimum of two- (2) inches thickness between the pipe and the catch basin.

Curbs, gutters and sidewalks shall be removed as necessary to construct the catch basins. The contractor has the option of saw cutting the existing curbs, gutters and sidewalks for the removal or removing them to the closest existing joint within four (4) feet (preferred). Removal and replacement of existing curbs, gutters and sidewalks is incidental to the construction of the catch basins. No separate measurement or payment shall be made to modify the catch basin dimensions in the field to avoid conflicting utilities, or for the removal and replacement of existing sidewalks.

Measurement for the catch basins shall be made at the contract unit price for each of the completed bid items in place within the limits shown on the plans.

Subsection 505.10 – Payment

Replace this subsection with the following:

Payment for the special junction structure and concrete headwall shall be made at the contract unit price. Such payment shall be full compensation for furnishing and installing item complete in place including all fittings, reinforcing steel, concrete, cost of labor, excavation, removal of obstructions, shoring, bracing, bedding, backfilling, compaction, pavement removal and replacement, testing, and all other work not specifically covered is incidental.

ITEM 505-1 - SPECIAL JUNCTION STRUCTURE
ITEM 505-2 - CONCRETE HEADWALL

Payment for the concrete box culvert shall be made at the contract unit price per linear foot measured from the inside face of the junction structure to the downstream face of the exterior wall of the culvert. Such payment shall be full compensation for constructing the item complete in place including all fittings except the flap gate, concrete aprons and grade to drain grader ditches, if applicable, reinforcing steel, concrete, cost of labor, excavation, removal of obstructions, shoring, bracing, bedding, backfilling, compaction, testing, and all other work not specifically covered that is incidental.

ITEM 505-3 - 10' x 5' CONCRETE BOX CULVERT, ADOT DET B 02.10

Payment for the catch basins shall be made at the contract unit price per each item. Such payment shall be full compensation for removing and replacing existing curbs, gutters and sidewalks, constructing the item complete in place including all fittings, reinforcing steel, concrete, cost of labor, excavation, removal of obstructions, shoring, bracing, bedding, backfilling, compaction, pavement removal and replacement, testing, and all other work not specifically covered that is incidental.

ITEM 505-4 - CONCRETE CATCH BASIN COP DET P 1569, M-1, L=10
ITEM 505-5 - CONCRETE CATCH BASIN COP DET P 1569, M-1, L=17
ITEM 505-6 - CONCRETE CATCH BASIN COP DET P 1569, M-2, L=6
ITEM 505-7 - CONCRETE CATCH BASIN COP DET P 1569, M-2, L=10
ITEM 505-8 - CONCRETE CATCH BASIN COP DET P 1569, M-2, L=17
ITEM 505-9 - CONCRETE CATCH BASIN COP DET P 1570, N-DOUBLE

No penalty shall be incurred for the reduction of the number of each of this item described above as determined by the Engineer.

SECTION 515 – STEEL STRUCTURES

The work under this section shall conform to Section 515 of the MAG Uniform Standard Specifications except as modified herein.

Subsection 515.1 – Description

Add the following:

The work under this section shall consist of supplying and installing Waterman Model **xxx** or approved equivalent flapgates and the inlet grates and access barriers and associated embedments for the outlet structure according to the plans and these Special Provisions.

All material for the grates and access barrier shall be A36 steel. Grates, access barriers and associated embedments shall be galvanized in accordance with MAG Section 771.

Subsection 515.7 – Payment
Replace this subsection with the following:
No payment will be made for access barriers, or grates and associated embedment angles as such, the cost thereof shall be included in cost of the item for which it is appurtenant.

Payment for flap gates shall be made on the basis of the unit price bid per each. Payment shall be full compensation for all labor, materials, equipment, and all other items necessary to complete the work in place according to the plans and these Special Provisions.
ITEM 515-1 – 10' x 5' FLAP GATE

SECTION 601 – TRENCH EXCAVATION, BACKFILLING AND COMPACTION

The work under this section shall conform to Section 601 of the MAG Uniform Standard Specifications except as modified herein.

Subsection 601.1 – Description
Add the following:
This work shall include the placement of cement-treated slurry bedding as specified on the plans and in these Special Provisions.

Subsection 601.3.4 – Permanent Pipe Supports
Add the following:
Pipe Support Option
Where sanitary sewer lines (vitrified clay pipe 12-inches or smaller) cross the mainline construction, the Contractor has the option of permanently supporting the sanitary sewer line per MAG Detail 403-1, 403-2 or 403-3. Where DIP sewer option is used, it shall be lined per the following specification:
Lining for Ductile Iron Sewer Pipe and Fittings
All ductile iron pipe for conveying sewerage shall be in accordance with AWWA C-150:
- 14" inside diameter and smaller shall be pressure Class 350
- 16" inside diameter through 24" inside diameter shall be pressure Class 250
- 30" inside diameter and larger shall be pressure Class 150

Ductile iron pipe with a minimum wall thickness of Class 50 may be substituted in lieu of the above.

The lining shall cover, at a minimum, the inner surfaces of the pipe and the fitting from the plain end or beveled spigot end to the rear of the gasket socket. If flanged fittings and pipe are included in the project, the lining must not be used on the face of the flange, however full face gaskets must be used to protect the ends of the pipe. At the ends of the pipe and fittings, the lining thickness shall taper for a distance of 4 inches to a minimum thickness of 10 mils.

All ductile iron sewer pipe shall have a protective lining with a nominal thickness of 40 mils and a minimum thickness of 35 mils of **Protecto 401 (ceramic epoxy), Polythane (polyurethane), SewerCoat (calcium aluminate)**, or approved equal throughout the barrel area of the pipe. However, the lining in the bell area shall transition to a minimum thickness of 10 mils at the edge of the gasket socket. The 10-mil lining shall extend into the gasket socket area to a point where the gasket would overlap the lining when it is compressed due to pipe assembly during construction. The 10 mil lining shall also continue from inside the barrel area, around the spigot end of the pipe and along the outside of the pipe to a point where the center of the gasket of the next pipe section

would contact the edge of the lining on the spigot end of the previous pipe section. The thickness of the linings shall be determined by using a dry film thickness magnetic gauge at four quadrants.

Each section of pipe and each fitting shall be tested and shall have an absence of holidays when tested by a suitable holiday detector. In all cases, the barrel area of the pipe shall be tested using a voltage of 7,500 volts and a dry conductive probe.

Holiday testing shall conform to ASTM G 62-87 and NACE Standards RP0274-74 and RP0188-90 (latest revision).

The pipe manufacturer shall be solely responsible for the quality of the lining and shall supply a certification as to compliance to the specification. The certification shall state specifically the following items:

1. All ductile sewer pipe and fittings have a protective lining of 40 mils (35 mils min.) in the barrel area, 10 mils in the bell area, and 10 mils minimum on the exterior of the spigot end.

2. Each section of pipe and each fitting have been tested for holidays utilizing a test voltage of 7,000 volts with a dry conductive probe in the barrel area and a test voltage of 67.5 volts with a wet sponge in both the bell area and the exterior of the spigot end, and no holidays were found.

3. The lining material used meets the current specifications and that the material was applied as required by the specification.

If the contractor makes a field cut of the lined ductile pipe, the contractor shall comply with the recommendations of the pipe manufacturer in applying a field coating to the end of the pipe ends. In all cases, as a minimum, a 10 mils coating shall be applied to the pipe end and shall overlap the lining by four inches and extend around the pipe end and along the outside of the pipe a minimum of ten inches. The coating shall be allowed to dry before assembly. In addition, the overlapped surface of the lining shall be roughed up to produce a 3 to 5 mil profile over the entire surface. The end result of this process is to secure proper adhesion of the field coating.

Repair of Lining

Repair of the damaged sections of the lining shall be in accordance with the lining manufacturer's recommendation or as specified above so that the repair is equal to the undamaged lined area in all respects. All damaged lined areas and holidays shall be repaired immediately after discovery.

Holiday testing may be required by the Engineer before pipe assembly when deemed appropriate. The testing and repair requirements shall follow the procedure called for in this specification and all costs for such repairs will be the responsibility of the contractor.

There will be no other provisions for repair of the lining of DIP.

Protective Collar

In order to protect the exterior spigot end against abrasion and damage during shipping and handling, the manufacturer shall install temporary collars on the exterior of each spigot end of each pipe section. The manufacturer shall secure the collars to the pipe to prevent accidental removal during shipping and normal handling by the contractor. The collars are not to be removed from the pipe until right before the pipe section is to be installed or field cut.

Subsection 601.4.2 – Bedding
Replace this subsection with the following:
Bedding material shall be cement-treated slurry and shall conform to the gradation specified for bedding material and to the requirements set forth in MAG Section 728. Cement-treated bedding material shall have a slump of 7 inches ± 1 inch and have a minimum of 50-psi compressive strength and a maximum of 150 psi based on a 28-day test.

Cement treated slurry bedding material shall be placed in a uniform manner that will prevent voids in, or segregation of, the bedding material, and will not float or shift the pipe. Cement-treated slurry bedding material shall be placed from bottom of pipe to pipe springline.

Bedding material above the springline of the pipe for RGRCP shall be granular material containing no pieces larger than 1-½ inches and free of broken concrete, broken pavement, wood or other deleterious material and for CLCMP shall be cement treated slurry. No backfilling above the cement-treated slurry shall be commenced until 24 hours after the cement-treated slurry has been placed.

No water consolidation will be permitted.

Where mechanical compaction is used, the moisture content shall be such that the specified compaction can be obtained. Bedding lifts shall not exceed 12 inches loose and extreme care will be taken to prevent damage to or movement of the conduit by the compaction equipment.

The Contractor may opt to use cement-treated slurry from the bottom of the pipe to one foot above the top of the pipe for RGRCP.

Subsection 601.4.3 – Backfill
Add the following:
Water consolidation is not permitted.

The Contractor may opt to use cement-treated slurry aggregate base course in place of native backfill. The backfill begins from the one (1) foot above the top of the pipe to one (1) foot below the top of the trench.

Cement-treated slurry backfill material if used shall conform to the gradation specified for bedding material in the COP Supplements Subsection 601.4.2 and to the requirements of MAG Section 728. Cement-treated slurry shall have a slump of 7 inches ± 1 inch and have a minimum of 50-psi compressive strength and a maximum of 150 psi based on a 28-day test.

Cement-treated slurry pipe backfill shall be placed in a uniform manner that will prevent voids in, or segregation of the backfill. No backfilling above the cement-treated slurry pipe backfill shall be commenced until 24 hours after the cement-treated slurry has been placed.

Connector pipes shall be backfilled full depth with aggregate base course.

Subsection 601.6 – Payment
Replace this subsection with the following:
No separate measurement or payment shall be made for excavation, falsework, backfilling, shoring, compacting of the storm drain and connector pipes, and protecting utilities in place. The

cost thereof shall be included in the price bid for construction or installation of the storm drain and connector pipes to which such work is incidental or appurtenant.

Payment for permanent pipe supports shall be per the unit price bid per each support.
ITEM 601-1 – PERMANENT PIPE SUPPORTS

SECTION 610 – WATER LINE CONSTRUCTION

The work under this section shall conform to Section 610 of the MAG Uniform Standard Specifications except as modified herein.

Subsection 610.1 – Description
Add the following:
Except where noted otherwise, the Contractor is responsible to protect all water lines in place and to maintain all water lines in service for the duration of the project. If the Contractor elects to temporarily shut down a water main for a period of time that exceeds eight hours, the Contractor shall provide a temporary by-pass water line at no additional cost that is approved by the City of Phoenix.

Subsection 610.18 – Payment
Add the following:
Payment for ductile iron water pipe shall be made at the contract unit price bid per lineal foot. Such payment shall be full compensation for furnishing and installing the pipe complete in place, as specified, including labor, excavation, backfilling, compaction, removal of obstructions, shoring, bracing, bedding, testing, and all other work not specifically covered that is incidental.
ITEM 610-1 - 12-INCH DUCTILE IRON WATER PIPE AND FITTINGS

Payment for replacing water service pipe shall be made at the contract unit price bid per lineal foot and payment for relocating water meters shall be at the unit price bid per each. Such payment shall be full compensation for furnishing and installing the pipe complete in place, as specified, including labor, excavation, backfilling, compaction, removal of obstructions, shoring, bracing, bedding, testing, and all other work not specifically covered that is incidental. No penalty shall be incurred for any increase or reduction in the length of water service pipe or in the number of water meter relocations as determined by the Engineer.
ITEM 610-2 - REPLACE WATER SERVICE PIPE (CONTINGENT ITEM)
ITEM 610-3 - RELOCATE WATER METER (CONTINGENT ITEM)

SECTION 618 – STORM DRAIN CONSTRUCTION

The work under this section shall conform to Section 618 of the MAG Uniform Standard Specifications except as modified herein.

Subsection 618.1 – Description
Add the following:
The work under this section shall consist of furnishing and installing Rubber Gasketed Reinforced Concrete Pipe (RGRCP) or Concrete Lined Corrugated Metal Pipe (CLCMP) and boring and jacking at the locations and to the grades and slopes indicated on the plans.

This section shall also consist of constructing a storm water pump station, Rubber Gasket Reinforced Concrete pump station inlet piping and Ductile Iron discharge piping.

Subsection 618.2 – Materials
Add the following:
Concrete pipe, joints, gaskets, and testing shall be according to MAG Section 735 and as specified below.

Pump Station inlet pipe shall be rubber gasket reinforced concrete pipe, with D-Load of 3,000 minimum. Pipe shall be in accordance Section 735 of MAG Uniform Standard Specifications for Public Works Construction.

Pump Station discharge pipe shall be Ductile Iron pipe in accordance with Section 750 of MAG Uniform Standard Specifications for Public Works Construction. Four- (4) inch and twelve- (12) inch pipe shall be Pressure Class 350. Twenty-four (24) inch pipe shall be Pressure Class 200. All pipe joints shall be restrained either utilizing flange connections, manufacturer's supplied restraining system such as TR-Flex, or mechanical joints with a mechanical lug type restraining system such as EBBA Iron Series 1100 Mega-Lug. Pipe shall be cement lined, with standard asphalt varnish coating, and shall be installed with polyethylene tubing conforming to Section 610.5 of MAG Uniform Standard Specifications for Public Works Construction. Gate valves and valve boxes and covers shall conform to Section 610.6 of MAG Uniform Standard Specifications for Public Works Construction. Valve box covers shall be cast with the words "STORM WATER" imprinted.

Pump Station wet well shall be reinforced concrete pipe with standard flush bell joints. Pipe shall be Wall "C" as manufactured by Ameron International, or equal. Pipe shall comply with the requirements of Section 735 of MAG Uniform Standard Specifications for Public Works Construction.

Pumps and accessories shall comply with Section 798 of these Specifications.

Subsection 618.4 – Jacking Pipe
Add the following to this subsection:
Pipeline installations should be accomplished by dry boring, tunneling, jacking, or other approved methods.

The following requirements shall apply to these construction methods:

1. The use of water under pressure (jetting) or puddling will not be permitted to facilitate boring, pushing or jacking operations. Some boring may require water to lubricate cutter and pipe and under such conditions, is considered dry boring.
2. Where unstable soil conditions exist, boring or tunneling operations shall be conducted in such a manner as not to be detrimental to the utilities being crossed.
3. If excessive voids or too large a bored hole is produced during pipeline installations, or if it is necessary to abandon a bored or tunneled hole, prompt remedial action should be taken by the Contractor.
4. All voids or abandoned holes caused by boring or jacking are to be filled by pressure grouting. The grout material should be a sand cement slurry with a minimum of two (2) sacks of cement per cubic yard and a minimum of water to assure satisfactory placement.
5. The hole diameter resulting from bored or tunneled installations shall not exceed the outside diameter of the pipe by more than two (2) inches on pipes with an inside diameter greater than twelve (12) inches.

Subsection 618.5 – Measurement
Replace Paragraph C with the following:
Jacked Pipe
Measurement for the tunneled and/or jacked RGRCP shall be the number of horizontal linear feet of surface undisturbed by the cut and cover construction on the ends of the tunneling and/or jacking operation except for any amount that exceeds the limits as shown on the plans; any amount that is tunneled and/or jacked beyond the limits as shown on the plans shall be measured as trenched installation.

Subsection 618.6 – Payment
Replace this subsection with the following:
Payment for storm drain construction shall be made at the unit price bid per linear foot. Payment for pipe plugs shall be made at the unit price bid per each. This shall be full compensation for furnishing and installing the pipe and fittings complete in place, as specified, including excavation, boring and jacking, backfilling, compaction, shoring, sheeting and bracing, testing and all incidental work not specifically covered in other pay items.
ITEM 618-1 - 114 INCH PIPE, CLASS III
ITEM 618-2 - 114 INCH PIPE, CLASS IV
ITEM 618-3 - 96 INCH PIPE, CLASS III
ITEM 618-4 - 84 INCH PIPE, CLASS III
ITEM 618-5 - 72 INCH PIPE, CLASS III
ITEM 618-6 - 72 INCH PIPE, CLASS IV
ITEM 618-7 - 66 INCH PIPE, CLASS III
ITEM 618-8 - 54 INCH PIPE, CLASS III
ITEM 618-9 - BORE AND JACK 114 INCH PIPE
ITEM 618-10 - INSTALL PIPE PLUG, 72 INCH
ITEM 618-11 - INSTALL PIPE PLUG, 66 INCH
ITEM 618-12 - INSTALL PIPE PLUG, 54 INCH
ITEM 618-13 - INSTALL PIPE PLUG, 24 INCH
ITEM 618-14 - 15 INCH CATCH BASIN CONNECTOR PIPE, CLASS III
ITEM 618-15 - 15 INCH CATCH BASIN CONNECTOR PIPE, CLASS IV
ITEM 618-16 - 18 INCH CATCH BASIN CONNECTOR PIPE, CLASS III
ITEM 618-17 - 18 INCH CATCH BASIN CONNECTOR PIPE, CLASS IV
ITEM 618-18 - 24 INCH CATCH BASIN CONNECTOR PIPE, CLASS III
ITEM 618-19 - 24 INCH CATCH BASIN CONNECTOR PIPE, CLASS IV
ITEM 618-20 - 24 INCH CATCH BASIN CONNECTOR PIPE, CLASS V
ITEM 618-21 - 30 INCH CATCH BASIN CONNECTOR PIPE, CLASS III
ITEM 618-22 - 30 INCH CATCH BASIN CONNECTOR PIPE, CLASS IV
ITEM 618-23 - 30 INCH CATCH BASIN CONNECTOR PIPE, CLASS V
ITEM 618-24 - 72 INCH CATCH BASIN CONNECTOR PIPE, CLASS IV

Payment for prefabricated tees, bends, and crosses shall for the cost of the fabrication only. The cost of installation shall be included in the cost of the item that the tee and/or cross is appurtenant. Payment for concrete pipe collars 24 inches and larger shall be made at the unit price bid per each.

ITEM 618-25 - 72 INCH TO 84 INCH PIPE TRANSITION
ITEM 618-26 - 84 INCH TO 96 INCH PIPE TRANSITION
ITEM 618-27 - 96 INCH TO 114 INCH PIPE TRANSITION
ITEM 618-28 - 114 INCH x 15 INCH TEE
ITEM 618-29 - 114 INCH x 18 INCH TEE
ITEM 618-30 - 114 INCH x 24 INCH TEE
ITEM 618-31 - 114 INCH x 24 INCH TANGENT TEE
ITEM 618-32 - 114 INCH x 30 INCH TEE
ITEM 618-33 - 114 INCH x 30 INCH TANGENT TEE WITH TRASH RACK
ITEM 618-34 - 114 INCH x 66 INCH TEE
ITEM 618-35 - 114 INCH x 72 INCH TANGENT TEE
ITEM 618-36 - 66 INCH x 15 INCH TEE
ITEM 618-37 - 66 INCH x 18-INCH TEE
ITEM 618-38 - 66 INCH x 24-INCH TEE
ITEM 618-39 - 66 INCH x 30 INCH TEE
ITEM 618-40 - CONCRETE PIPE COLLAR, 24 INCHES AND LARGER
ITEM 618-41 - PREFAB 30 DEGREE BEND, 114 INCH
ITEM 618-42 - PREFAB 45 DEGREE BEND, 114 INCH

Payment for storm drain pump station and controls construction shall be made at the unit price bid per each. This shall be full compensation for furnishing and installing the pump station complete in place, as specified, including excavation, pipes, controls, electric service, backfilling, compaction, shoring, sheeting and bracing, testing and all incidental work not specifically covered in other pay items.
ITEM 618-43 – PUMP STATION AND CONTROLS

SECTION 621 - CORRUGATED METAL PIPE AND ARCHES

Concrete Lined Corrugated Metal Pipe: Shall conform to Section 621 of the MAG Uniform Standard Specifications except as modified herein.

Subsection 621.1 - Description
Add the following:
Concrete lined corrugated metal pipe (CLCMP) conforming to the following is an accepted alternate material for use on this project for storm drainage.

Subsection 621.2 - Materials
Add the following:
Aluminized Type II CMP: Corrugated metal pipe, coupling bands and fittings for concrete-lined pipe shall conform to the requirements of AASHTO M-36 and ASTM A-849 for the specified sectional dimensions and metallic coatings. Aluminized Steel Type 2 coating shall conform to AASHTO M-274.

Pipe shall be full circle and shall be fabricated with helical corrugations.

Pipe thickness shall not be less than that listed in the Alternate Pipe Table.

Concrete Lining: Shall be in conformance with ASTM A-849 except as modified herein.

Composition: Concrete for the lining shall be composed of cement, fine aggregate and water that are well mixed and of such consistency as to produce a dense, homogeneous, non-segregating lining.

Cement: Portland cement shall be in accordance with MAG Section 725.

Aggregate: Aggregates shall conform to AASHTO M6, except that the requirements for gradation and uniformity of gradation shall not apply.

Mixture: The aggregates shall be sized, graded, proportioned and thoroughly mixed with such proportions of cement and water as will produce a homogeneous concrete mixture of such quality that the pipe will conform to the design requirements of this specifications. In no case, however, shall the proportions of Portland cement plus pozzolanic admixture be less than 470 pounds per cubic yard of concrete.

Lining: The lining shall have a minimum thickness of 3/8 inch above the crest of the corrugations and shall be applied by a machine traveling through a stationary pipe. The rate of travel of the machine and the rate of concrete placement shall be mechanically regulated so as to produce a homogeneous non-segregated lining throughout. The lining shall be applied in a two course application, and shall be mechanically troweled by the lining machine as the unit moves through the pipe. The trowel attachment shall be such that the pressure applied to the lining will be uniform and shall produce a lining that has a uniform thickness and a consistent troweled finish. The vertical diameter anywhere inside the pipe must meet the acceptable tolerances as stated in AASHTO M36. Pipe not meeting these tolerances will be rejected.

Experience: The manufacturer shall certify in writing that it has successfully manufactured and furnished corrugated steel pipe with a concrete lining per these specifications on a minimum of ten (10) previous projects of a storm drain nature.

Subsection 621.3 - Installation

Add the following:

Experience: The manufacturer shall certify in writing that he has successfully manufactured and furnished corrugated metal pipe with a concrete lining per these specifications on a minimum of ten (10) previous projects of a storm drain nature. The Contractor shall certify in writing that he has successfully installed corrugated metal pipe with a concrete lining on a minimum of three (3) previous projects of a storm drain nature. If the Contractor cannot meet the previous requirement, he must make provision for the manufacturer to be present at the beginning of the project to verify that the pipe is being handled and installed correctly.

Each pipe and end shall be fabricated with a minimum of two annular rerolled corrugations for purposes of joining pipes together with band couplers.

Pipe shall be joined with rerolled bands made from the same material as the pipe. The bands shall be a minimum of 16 gage (0.064"). Bands shall be two or three pieces for pipe greater than forty-eight (48) inches in diameter.

Coupling bands shall be a minimum of ten and one half (10-1/2) inches wide, formed with two (2) corrugations that are spaced to provide nesting in the second corrugation of each pipe end and shall be drawn together by a minimum of two (2) one half (1/2) inch diameter galvanized bolts through the use of a par and strap suitably welded to the band.

Watertight joints with "O"-ring gaskets shall be per ASTM C-361 Section 5.9 and shall be placed in the first corrugation of each pipe end and shall be compressed by tightening the coupling band, in accordance with the manufacturers installation instructions.

Joints: All internal joints shall be mortared to a smooth trowel finish around the entire pipe. Mortar for joints shall conform to Section 776 of the MAG Standard Specifications.

Subsection 621.3.1 - Joints
Add the following:
Each pipe and end shall be fabricated with a minimum of two annular re-rolled corrugations for purposes of joining pipes together with band couplers.

Pipe shall be joined with re-rolled bands made from the same material as the pipe. The bands shall be a minimum of 16 gage (0.064"). Bands shall be two piece for greater than forty-eight (48) inches in diameter.

Coupling bands shall be of a hugger type and a minimum of ten and one half (10-1/2) inches wide, formed with two (2) corrugations that are spaced to provide nesting in the second corrugation of each pipe end and shall be drawn together by a minimum of two (2) one half (1/2) inch diameter galvanized bolts through the use of a bar and strap suitably welded to the band.

Watertight joints with "O"-ring gaskets shall be per ASTM C-361 Section 6.9 and shall be placed in the first corrugation of each pipe end and shall be compressed by tightening the coupling band, in accordance with the manufacturer's installation instructions.

Joints: All internal joints shall be mortared to a smooth trowel finish around the entire pipe. Mortar for joints shall conform to Section 776 of the MAG Standard Specifications.

Subsection 621.4 - Test Specimens
Add the following:
The Engineer, solely at his discretion, may require additional leakage testing of the storm drainage facilities. The testing shall be performed after backfilling has been completed but prior to the placement of the pavement replacement. At a minimum, three joints of main line pipe shall be tested. The testing shall be done on pipe segments between manhole sections or lengths not to exceed 100 feet. A minimum of one pipe segment will be tested.

The test shall consist of sealing all the storm drain open ends and filling the manholes with water to a level 4' above the crown of the pipe at the high end. A period of at least two hours will be allowed for the absorption time before conducting the test. Once the test commences, the water level at the manhole shall be maintained at 4' above the crown of the pipe for a period of at least one hour and any water loss shall be measured and recorded by a method approved by the Engineer.

The allowable water loss for the storm drain facility shall not exceed 1.0 gallon per hour per inch of internal diameter per 100 feet of pipe tested.

The Contractor shall furnish all the labor, equipment and materials necessary to conduct the test. The cost of any repairs or corrections necessary to conform to the testing requirements herein shall be borne by the Contractor alone, as well as the cost of re-testing the storm drainage facilities as many times as necessary to conform to the requirements herein.

Subsection 621.6 – Payment

Replace this subsection with the following:

Payment for CLCMP construction shall be made at the unit price bid per linear foot. This shall be full compensation for furnishing and installing the pipe and fittings complete in place, as specified, including excavation, backfilling, compaction, shoring, sheeting and bracing, compaction, testing and all incidental work not specifically covered in other pay items. No additional payment will be made for any connections, transitions, collars, etc. that would not be required if the concrete pipe alternative were selected, the cost thereof is considered incidental and shall be included in the unit price of CLCMP.

ITEM 621-1 - 114 INCH CLCMP, 10 GAUGE
ITEM 621-2 - 96 INCH CLCMP, 10 GAUGE
ITEM 621-3 - 84 INCH CLCMP, 10 GAUGE
ITEM 621-4 - 72 INCH CLCMP, 10 GAUGE
ITEM 621-5 - 66 INCH CLCMP, 12 GAUGE
ITEM 621-6 - 54 INCH CLCMP, 14 GAUGE

Payment for testing shall be made at the unit price for each STORM DRAIN HYDROSTATIC TEST performed. No penalty shall be incurred for any increase or reduction in the number of tests performed as determined by the Engineer.

ITEM 621-7 - STORM DRAIN HYDROSTATIC TEST (CONTINGENT ITEM)

SECTION 625 – MANHOLE CONSTRUCTION

The work under this section shall conform to Section 625 of the MAG Uniform Standard Specifications except as modified herein.

Subsection 625.4 – Measurement

Add the following:

Measurement for manholes shall be for each bid item completed in place within the limits shown on the plans.

Subsection 625.5 – Payment

Payment for manholes shall be made at the contract unit price bid per each. Such payment shall be for furnishing and installing the item complete in place including the cost of all prefabricated tees, labor, excavation, removal of obstructions, shoring, bracing, bedding, backfilling, compaction, testing, and all other work not specifically covered that is incidental.

ITEM 625-1 – MANHOLE, MAG DET 521, 522, AND 523

ITEM 625-2 – MANHOLE, MAG DET 522, 523, AND DETAIL A

SECTION 725 – PORTLAND CEMENT CONCRETE

Portland Cement Concrete shall conform to Section 725 of MAG Uniform Standard Specifications except as modified herein.

Revise the requirements for Class AA concrete as follows:

1. Slump shall be 3 inches plus or minus 1 inch.
2. Air entraining admixture is not allowed.
3. Water reducing admixture:
   a. May be used at Contractor's option
   b. Conform to ASTM C 494 Type A or Type D.
   c. Not contain air-entraining agents.
   d. Liquid form before adding to concrete mix.
   e. No decrease in cement is permitted as result of use of water reducing admixture.
4. Superplasticizers: Are not to be used unless accepted by the Engineer.
5. Maximum net water to cement ratio shall be 0.50.

SECTION 732 - HYDROPHILIC WATERSTOPS

Add this section in its entirety.

Subsection 732.1 – General

Add the following.

A. Hydrophilic waterstops shall be provided at all construction joints in the wet well as shown on the Construction Drawings.

B. References:

1. American Society for Testing and Materials (ASTM):
   a. D 412 - Test Methods for Vulcanized Rubber and Thermoplastic Rubbers and Thermoplastic Elastomers - Tension.
   b. D 792 - Test Methods for Density and Specific Gravity (Relative Density) of Plastics by Displacement.
   c. D 2240 - Test Method for Rubber Property - Durometer Hardness.

C. Submittals:
1. Product Data.
2. Samples.
3. Manufacturer's Installation Instruction.

Subsection 732.2 - Products
Add the following.

A. Shall be composed of modified chloroprene rubber as the hydrophilic agent, capable of multiple repeated wet/dry expansion cycles without losing performance standards and returning to the original dimensions when dried. Shall have a stainless steel wire mesh embedded in waterstop to direct and control expansion. Shall meet the following performance requirements:

Property	**Test Method**	
Hardness Hs	ASTM D 2240	*Not Less than 55 +/- 5
Tensile Strength	ASTM D 412	*Not Less than 300 psi
Elongation	ASTM D 412	* Not less than 600%
Specific Gravity	ASTM D 792	1.35
Expansion Coefficient (Vol.)	In House	Not Less than 3:1
*Based on pressed sheet of compound.		

B. Manufacturers: One of the following or equal:
1. Greenstreak Hydrotite CJ 1020-2K.

C Adhesive:
1. Greenstreak 7300 two-component epoxy gel, or equivalent.

D. Sealant:
1. Greenstreak Leakmaster LV-1 or equivalent.

Subsection 732.3 - Installation
Add the following.

A. Install products in accordance with manufacturer's instructions.

B. Fill all voids and rough areas under hydrophilic rubber waterstop with sealant.

C. Miter and butt join with cyanacrylate adhesive (super glue) per manufacturer's instructions.

SECTION 798 - SUBMERSIBLE PUMPS AND ACCESSORIES

Add this section in its entirety.

Subsection 798.1 - General

Add the following.

A. Section includes packaged submersible pumps for storm water application, accessories including but not limited to guide bars, brackets, check valves, electric starter and control panels, and control devices.

B. References:

1. American Society for Testing and Materials (ASTM):
   a. A 48 - Standard Specification for Gray Iron Castings.
   b. A 108 - Standard Specification for Steel Bars, Carbon, Cold-Finished, Standard Quality.
   c. A 276 - Standard Specification for Stainless and Heat Resisting Steel Bars and Shapes.
   d. A 278 - Specification for Gray Iron Casting for Pressure-Containing Parts for Temperatures Up to 650 degrees Fahrenheit.
   e. A 743 - Standard Specification for Castings, Iron-Chromium, Iron-Nickel, Corrosion Resistant, for General Application.
   f. E 10 - Test Method for Brinell Hardness of Metallic Materials.

2. Antifriction Bearing Manufacturers Association (AFBMA):
   a. 9 - Load Ratings and Fatigue Life for Ball Bearings.
   b. 11 - Load Ratings and Fatigue Life for Roller Bearings.

3. American Society of Mechanical Engineers (ASME):
   a. B 16.1 - Cast Iron Pipe Flanges and Flanged Fittings, Class 25, 125, 250, and 800.
   b. B 16.5 - Pipe Flanges and Flanged Fittings.

4. American National Standards Institute and Hydraulic Institute (ANSI/HI):
   a. 1.1 - 1.5 - Centrifugal Pumps - Nomenclature, Definitions, Application and Operation.
   b. 1.6 - Centrifugal Pump Tests.
   c. 9.1 - 9.5 - Pumps - General Guidelines for Types, Definitions, Application and Sound Measurement.

5. National Electrical Manufacturers Association (NEMA).

C. Definitions:

1. Pump Head (Total Dynamic Head), Flow Capacity, Pump Efficiency, Net Positive Suction Head Available, and Net Positive Suction Head Required: As defined in ANSI/HI 1.1 - 1.5, and 9.1 - 9.5.
2. Suction Head: Gauge pressure available at pump volute in feet of fluid above atmospheric.
3. Tolerances: As stipulated in ANSI/HI 1.6.

D. Pump Performance Characteristics:

1. Storm Water Pumps
   a. Furnish and install two (2) submersible non-clog storm water pumps. Each pump shall be equipped with a 30 horsepower submersible electric motor connected for operation on 460 volts, 3 phase, 60 hertz wire service, with 50 feet of submersible cable suitable for submersible pump applications. Motor speed shall be 860 revolutions per minute. The power cable shall be sized according to N.E.C. and ICEA standards and also meet with P-MSHA Approval. Each pump shall be supplied with a mating cast iron 12 inch discharge connection and be capable of delivering 3000 Gallons Per Minute (GPM) at 28.5 feet Total Displaced Head (TDH). An additional point on the same curve shall be 4,250 GPM at 20 feet TDH.

2. Sump Pump
   a. Furnish and install one (1) submersible non-clog sump pump suitable for use in storm water applications. Provide one additional complete pump without base, as a spare. The pump shall be equipped with 5 horsepower submersible electric motor connected for operation on 460 volts, 3 phase, 60 hertz wire service with 50 feet of submersible cable suitable for submersible pump applications. Motor speed shall be 1700 revolutions per minute. Power cable shall be sized as indicated in 1a, above. The pump shall be supplied with a mating cast iron 4 inch discharge connection and be capable of delivering 375 GPM at 29.5 feet TDH. And additional point on the same curve shall be 500 GPM at 22.5 feet TDH.

3. Lifting System
   a. Each pump shall be fitted with 37 feet of stainless steel lifting chain. The working load of the lifting system shall be 50% greater than the pump unit weight. Lifting shall be Flygt Lifting system or equal.

4. Provide mix flush valve with sump pumps (Flygt 4901 or equal).

E. Submittals:

1. Shop Drawings: As specified in Section 105.2 of MAG Uniform Standard Specifications for Public Works Construction, except that six (6) copies shall be submitted. Include Project specific Certified head-capacity, efficiency, Net Positive Suction Head and horsepower curves for each pump.

2. Product Data: Include manufacturers product data sheets. Include manufacturer's dimensional drawings for installation of pumps and pump bases, guide rails, brackets, hatches, concrete grout fill, etc. for Contractor's use in installing equipment in accordance with Manufacturer's requirements.

3. References: Minimum 2 names, locations, and phone numbers of installations of similar use.

4. Manufacturer's Operation and Maintenance Manuals, installation instructions, and Check-out procedures.

F. Quality Assurance:

1. Manufacturer Qualifications: Manufacturer with minimum 2 installations currently having operated same model pump as proposed operating under similar conditions of flow, head, and speed for at least 2 years.

2. Design Coordination: Pump manufacturer shall furnish and coordinate drive, lifting rails, and devices and other pump components.

3. Single Source Responsibility: Pumps specified in this Section shall be by one manufacturer.

G. Delivery, Storage and Handling:

1. Pumps and accessories shall be packed in boxes, crates, or otherwise protected from damage, moisture, dust, or dirt during shipment, handling and storage. Spare parts shall be delivered in boxes labeled with contents, equipment to which spare parts belong, and name of Contractor. Protect painted surfaces against impact, abrasion discoloration and other damage.

H. Project Conditions:

1. Equipment shall be suitable for performance for an outdoor environment in the City of Phoenix, Arizona and under the following conditions:
   a. Ambient temperatures: 20 to 125° Fahrenheit.
   b. Relative Humidity: 5 to 100 %.
   c. Site Elevation: 1,000 feet above mean sea level.
   d. Other: Extreme desert heat/cooling cycles.

I. Warranty:

1. As specified in Section 108.8 of MAG Uniform Standard Specification for Public Works Construction. In addition to the standard warranty, pump manufacturer shall furnish Owner with a written warranty to cover the pumps and motors against defects in workmanship and material for a period of 5 years or 10,000 hours of operation under normal use and service.

J. Maintenance:

1. Special tools: Deliver one (1) set of special tools required for complete assembly or disassembly of pump system components for each type or size of pump specified.

K. Start-up Services:

1. The equipment manufacturer shall furnish the services of a qualified factory trained field service engineer for two (2) 8 hour working days at the sit to inspect the installation and instruct the owner's personnel on the operation and maintenance of the pumping units. The pump manufacturer shall also perform the following as a minimum:
   a. Megger stator and power cables.
   b. Check seal lubrication.
   c. Check for proper rotation
   d. Check power supply voltage.
   e. Measure motor operating load and no-load current.
   f. Check level control operation and sequence.

Subsection 798.2 - Products
Add the following.

A. Manufacturers: Storm water and sump pumps: Packaged system consisting of pumps, motors, and components including base elbows, guide rails, and lifting devices, sump hatch covers, electrical devices and cabling, level floats and level probe transmitters and probe rods and control components, local control panels.

1. Storm Water Pumps shall be Flygt Model CP-3201 with 821 phase impeller, or equal. Pump configuration in the wet well shown on the Plans is based upon the Flygt pump specified.

2. Sump pump shall be Flygt Model CP-3102 with 432 3 phase impeller or equal. Pump configuration in the wet well shown on the Plans is based upon the Flygt pump.

B. Pump Design:

1. The pumps shall be automatically and firmly connected to the discharge connection, guided by no less than two guide bars extending from the top of the station to the discharge connection. There shall be no need for personnel to enter the wet well. Sealing of the pumping unit to the discharge connection shall be accomplished by a machined metal to metal watertight contact. Sealing of the discharge interface with a diaphragm, O-ring or profile gasket will not be acceptable. No portion of the pump shall bear directly on the wet well, or sump floor.

C. Pump Construction:

1. Major pump components shall be of gray cast iron, ASTM A-48, Class 30, with smooth surfaces devoid of blowholes or other irregularities. All exposed nuts or bolts shall be AISI type 304 stainless steel. All metal surfaces coming

into contact with the pumpage, other than stainless steel or brass, shall be protected by a factory-applied spray coating alkyd primer with a chlorinated rubber pain finish on the exterior of the pump.

2. Seal design shall incorporate metal-to-metal contact between machined surfaces. Critical mating surfaces where watertight sealing is required shall be machined and fitted with Nitrile or Viton rubber O-rings. Fittings will be the result of controlled compression of rubber O-rings in two planes and O-ring contact of four sides without the requirement of a specific torque limit. Rectangular cross sectioned gaskets requiring specific torque limits to achieve compression shall not be considered as adequate or equal. No secondary sealing compounds, elliptical O-rings, grease or other devices shall be used.

D. Cooling System:

1. Each unit shall be provided with an adequately designed cooling system. The 30 H.P. units shall have a water jacket that shall encircle the stator housing, providing heat dissipation for the motor regardless of the type of installation. Impeller back vanes shall provide the necessary circulation of the cooling liquid through the water jacket. The cooling media channels and ports shall be non-clogging by virtue of their dimensions. Provision for external cooling and seal flushing shall also be provided. The cooling system shall provide for continuous pump operation in liquid temperature of up to 104 degrees F. Restrictions below this temperature are not acceptable.

E. Cable Entry Seal:

1. The cable entry seal design shall preclude specific torque requirements to insure a watertight and submersible seal. The cable entry shall consist of a single cylindrical elastomer grommet, flanked by washer, all have a close tolerance fit against the cable outside diameter and the entry inside diameter and compressed by the body containing a strain relief function, separate from the function of sealing the cable. The assembly shall provide ease of changing the cable when necessary using the same entry seal. The cable entry junction chamber and motor shall be separated by terminal board, which shall isolate the interior from foreign material gaining access through the pump top. Epoxies, silicones, or other secondary sealing systems shall not be considered acceptable.

F. Motor:

1. The pump motor shall be induction type with a squirrel cage rotor, shell type design, housed in an air filled, watertight chamber, NEMA B type. The stator windings and stator leads shall be insulated with moisture resistant Class F insulation rated for 155° C (311° F). The stator shall be dipped and baked three times in Class F varnish and shall be heat-shrink fitted into the stator housing. Use of bolts, pins, or other fastening devices requiring penetration of the stator housing is not acceptable. The motor shall be designed for continuous duty handling pumped media of 40° C (104° F) and capable of up to 15 evenly spaced start per hour. The rotor bars and shout circuit rings shall

be made of cast aluminum. Thermal switches set to open at 125° C (260° F) shall be embedded in the stator lead coils to monitor the temperature of each phase winding. These thermal switches shall be used in conjunction with and supplemental to external motor overload protection and shall be connected to the control panel. The junction chamber containing the terminal board shall be hermetically sealed from the motor by an elastomer O-ring seal. Connection between the cable conductors and stator leads shall be made with threaded compression type binding posts permanently affixed to a terminal board. Wire nuts or crimping type connection devices are not acceptable. The motor and pump shall be designed and assembled by the same manufacturer.

2. The combined service factor (combined effect of voltage, frequency and specific gravity) shall be a minimum of 1.15. The motor shall have a voltage tolerance of plus or minus 10%. The motor shall be designed for operation up to 40° C ambient and with a temperature rise not to exceed 80° C. A performance chart shall be provided showing curves for torque, current, power factor, input/output kW and efficiency. This chart shall also include data on starting current and torque.

3. The power cable shall be sized according to the NEC and ICEA standards and shall be of sufficient length to reach the junction box without the need of any splices. The outer jacket of the cable shall be oil resistant chloroprene rubber. The motor and cable shall be capable of continuous submergence underwater without loss of watertight integrity to a depth of 65 feet.
The motor horsepower shall be adequate so that the pump is non-overloading throughout the entire pump performance curve from shut-off through run-out.

G. Bearings:

1. The pump shaft shall rotate on two bearings. Motor bearings shall be permanently grease lubricated. The upper bearing shall be a single roller bearing. The lower bearing shall be a two row angular contact bearing to compensate for axial thrust and radial forces. Single row lower bearings are not acceptable. Bearing life shall be minimum 100,000 hours for the 30 H.P. units and minimum 40,000 hours for the 5 H.P. units in accordance with AFBMA L_{10} at rated design point or minimum 24,000 hours at bearing design load imposed by pump shutoff with maximum sized impeller at rated speed.

H. Mechanical Seal:

1. Each pump shall be provided with a tandem mechanical shaft seal system consisting of two totally independent seal assemblies. The seals shall operate in an oil reservoir that hydrodynamically lubricated the lapped seal faces at a constant rate. The lower, primary seal unit, located between the pump and the oil chamber shall contain one stationary and one positively driven rotating tungsten-carbide ring. The upper, secondary seal unit, located between the oil chamber and the motor housing, shall contain one stationary tungsten-carbide seal ring and one positively driven rotating carbon seal ring. Each seal interface shall be held in contact by it own spring system. The seals shall

require neither maintenance nor adjustment nor depend on direction of rotation for sealing.

2. The following seal types shall not be considered acceptable nor equal to the dual independent seal specified: shaft seals without positively driven rotating members, or conventional double mechanical seals containing either a common single or double spring acting between the upper and lower seal faces. Cartridge type systems will not be acceptable. No system requiring a pressure differential to offset pressure and to effect sealing shall be used.

3. Each pump shall be provided with an oil chamber for the shaft sealing system. The oil chamber shall be designed to prevent overfilling and to provide oil expansion capacity. The drain and inspection plug, with positive anti-leak seal shall be easily accessible from the outside. The seal system shall not rely upon the pumped media for lubrication. The motor shall be able to operate dry without damage while pumping under load.

I. Pump Shaft:

1. Pump and motor shaft shall be the same unit. The pump shaft is an extension of the motor shaft. Couplings shall not be acceptable. The pump shaft for the 30 H.P. units shall be of carbon steel C-1035 and shall be completely isolated from the pumped liquid. The shaft for the 5 H.P. units shall be stainless steel.

J. Impeller:

1. Impellers shall be gray cast iron, Class 30, dynamically balanced, double shrouded non-clogging design having a long throughlet without acute turns. Impellers shall be capable of handling solids, fibrous materials, heady sludge and other matter found in storm water. Whenever possible, a full vaned, not vortex, impeller shall be used for maximum hydraulic efficiency, thus reducing operating costs. Mass moment of inertia calculations shall be provided by the pump manufacturer. Impellers shall be keyed to the shaft, retained with an Allen head bold and shall be capable of passing a minimum 4 inch diameter solid for the storm water pumps and a minimum 3 inch diameter solid for the sump pump. Impellers shall be coated with alkyd resin primer.

K. Wear Rings:

1. A wear ring system shall be used to provide efficient sealing between the volute and suction inlet of the impeller. Each pump shall be equipped with a brass, or nitrile rubber coated steel ring insert that is drive fitted to the volute inlet. Pumps shall also have a stainless steel impeller wear ring heat-shrink fitted onto the suction inlet of the impeller.

L. Volute:

1. Pump volutes shall be single piece gray cast iron, Class 30, non-concentric design with smooth passages large enough to pass any solids that may enter the impeller. Minimum inlet and discharge size shall be as specified.

M. Protection:

1. All stators shall incorporate thermal switches in series to monitor the temperature of each phase winding. At 125° C. the thermal switches shall open, stop the motor and activate an alarm. A leakage sensor shall be available to detect water in the stator chamber. The Float Leakage Sensor (FLS) is a small float switch used to detect the presence of water in the stator chamber. When activated, the FLS will stop the motor and send an alarm both local and/or remote. Use of voltage sensitive solid state sensors and trip temperature above 125° C shall not be allowed.

N. Discharge Bases:

1. Material shall be same as pump casing.

2. Shall be structurally capable of firmly supporting guide rails, discharge piping and pumping unit under operating conditions and shall have one or more integral support legs or pads with bolting to wet well floor provisions. Discharge bases shall incorporate 90 degree flanged elbow that receives horizontal flow from pump and discharges flow vertically.

O. Guide Rails, Brackets, Fasteners, Lifting Chain and Anchor Bolts:

1. Material shall be Type 316 Stainless Steel with the following features:
   a. Rails that extend from the discharge base to upper bracket.
   b. Rail wall thickness sufficient to suspend pump unit between brackets plus minimum 50% safety factor.
   c. Sized to fit discharge base and sliding bracket of pump.
   d. Integral, self-aligning, guide rail-sliding rackets that seal pump to discharge base under operating conditions.
   e. Intermediate guide rail brackets at maximum 20 feet on centers.
   f. Upper guide rail brackets.
   g. Lifting chain of sufficient strength and length to permit safe removal of pump unit from wet well.

2. Access Hatch Covers for Wet Well: Type 5086 marine grade aluminum construction with Type 316 stainless steel hardware and following features.
   a. Door design utilizing structural shapes and reinforced checkered plate.
   b. Minimum metal thickness: 1/4 inch for structural shapes and plates.
   c. Torsion bar or other device to assist opening.
   d. Automatic hold-open arm.
   e. Retractable handle.
   f. Padlock hasp.
   g. Lifting chain hook and upper bracket mounting support.

P. Control Panels:

1. Enclosures: Outdoor NEMA 4X.

2. Electrical Components: UL approved for use in enclosures and control panels, UL labeled.

3. Motor Starters: Manufacturer's standard.

4. Circuit Breaker Handle: Type that operates through front of panel for each pump.

5. Control Power Transformer: Suitable for 120-volt controls.

6. Pump start and Stop Switches: Manufacturer's standard.

7. Manual and Automatic Switches: Type that functions as follows:
   a. When in manual position, allows control of pumps by each pump's start and stop switch.
   b. When in automatic position, allows control of pumps in response to level probe start/stop signals.
   c. When in either position, pumps shut down normally without alarm when falling water level causes all low level set points to activate.

8. Abnormal Condition Indicators: Type with field adjustable set points that indicate the following pump stopping conditions:
   a. Pump motor overload (high amperage).
   b. Moisture detection in pump motor.
   c. High temperature in pump motor.

9. Pump on-off status indicators: Manufacturer's standard.

10. Level Switch Status Indicators: Type that indicates activated or inactivated status.

11. Reset Button: Type that extinguishes alarm lights upon removal of associated alarm condition.

Q. Level Sensors:

1. Conductance electrodes - Warrick Controls, Inc. electrode fitting; Model No. 3F4D with Series 3W electrodes or equal.

Subsection 798.3 - Execution
Add the following.

A. Install system components in accordance with Manufacturer's detailed installation instructions, and in accordance with Construction Drawings.

B. Secure Manufacturer's field representation to inspect and check out installation prior to start up of the pumps and control system.

C. Provide start up and debugging services as specified in Section 798.1(K).

D. Provide training to operations personnel as specified in Section 798.1(K).

SECTION 800 - ELECTRICAL WORK (NEW SECTION)

Add this section in its entirety.

Subsection 800.1 - General

Subsection 800.1.1 - System Description:

Add the following.

A Furnish and install a tested and working electrical system, substantially as indicated on the Drawings and as hereinafter specified. System includes all items not specifically mentioned in these Specifications, but which are obviously necessary to make a complete working installation, and shall be deemed to be included herein.

B. Notify Engineer of discrepancies within the Contract Documents and discrepancies between the Contract Documents and actual field conditions.

C. The Specifications and Drawings indicate or specify minimum sizes of equipment, electric devices, and other components of electrical system, but the Specifications and Drawings do not indicate every offset and fitting, or every structural or mechanical difficulty that may be encountered during the execution of the work.

D. Install equipment at locations indicated on the Drawings as closely as field conditions permit. Obtain accepted equipment submittal dimensions prior to installing pads and conduit.

E. Make minor variations to alignment of equipment and/or installation of raceway systems to avoid conflict with other portions of the Work.

F. Single line diagrams indicate wire size and conduit sizes, circuit protection rating, and other pertinent data. Use single line diagrams to resolve conflicts. When not indicated on the Drawings, provide grounding in accordance with NEC Article 250.

Subsection 800.1.2 - Performance Requirements:

Add the following.

A. Branch Circuit Conductor Current Carrying Capacity: Minimum 125 percent of the full load current rating of the equipment.

Subsection 800.1.3 - Submittals:

Add the following.

A. Shop drawings, catalog cuts, wiring diagrams, panel diagrams, and other descriptive literature for materials incorporated into the work shall be submitted to the Owner's

Representative in accordance with Section 105.2 of MAG Uniform Standard Specifications for Public Works Construction, except six (6) copies shall be submitted. Engineering data covering all equipment and fabricated materials that will become a permanent part of the Work under the Contract, shall be submitted.

B. Project Record Documents: Include drawings of wire terminations at electrical equipment including, but not limited to, terminal/junction boxes, revised Shop Drawings reflecting modifications made during progress of the Work including testing, and revised Specifications and Drawings with conductors identified identically as on the Drawings and in the Specifications and accepted Shop Drawings.

Subsection 800.2 - Products

Subsection 800.2.1 - Equipment:
Add the following.

A. Support Channels: Steel, hot-dipped galvanized with G90 coating in accordance with ASTM A 525, or stainless steel. Manufacturers: One of the following or equal:
   1. Unistrut.
   2. Superstrut.
   3. Globe Strut.

B. Support Channel Bolts, Nuts, and Washers: Stainless Steel.

C. Nameplates:
   1. Type: Black lamicoid with white letters.
   2. Fasteners: Round head stainless steel screws.

D. Driven Ground Rods:
   1. Copper-covered Steel.
   2. 5/8 inch diameter.
   3. 10 feet long minimum.

E. Ground Conductor: Bare copper.
   1. Conductors: ASTM B8, soft drawn copper, maximum 12 months old, minimum 97 percent conductivity, American Wire Gauge sizes as indicated on the Drawings, Class B or C stranded.
   2. Conductor Sizes. As indicated on the Drawings.

F. 600-Volt Class Cable:
   1. Power and Control Wire and Cable - Pumps: Manufacturers: Shall be supplied by the pump manufacturer as specified in Section 798.2(F) of these Specifications.
   2. Control Wire and Cable - Level Probes: Shall be 600-Volt class, Type XHHW, and one of the following manufacturers or equal:
      a. Okonite Cable Company.

b. Rome Cable Company.

G. Conduit:

1. Galvanized Rigid Steel Conduit: Domestic raw steel, made smooth, clean and free of burrs and rough spots to enhance wire pulling; interior and exterior surfaces coated with solid, unbroken layer of zinc; threads hot dip galvanized after cutting; entire surface finish coated with secondary bichromate treatment applied over galvanizing able to extend surface protection and prevent oxidation; threads protected by color coded end caps to provide quick trade size identification. Manufacturers: One of the following or equal:
   a. LTV Steel Tubular Products Company, Galvite.
   b. Triangle PWC, Inc.
   c. Allied Tube and Conduit Corporation.
   d. OCAL, Inc.

2. Flexible Conduit: Grounding type, weatherproof, watertight, maximum 60-inch lengths. Manufacturers: One of the following or equal:
   a. American Brass Company.
   b. General Electric.
3. Rigid Nonmetallic Polyvinyl Chloride Conduit: High density, Schedule 40, 90 degree Celsius, heavy-duty polyvinyl chloride, made from virgin polyvinyl chloride compound; maximum 6 grams per 100 grams smoke emission. Manufacturers: One of the following or equal:
   a. Carlon.
   b. Triangle Conduit and Cable.
4. Couplings, Connectors, and Fittings:
   a. Threaded.
   b. Manufactured with same materials and process as corresponding conduit.
5. Condulet Fittings: With wedge nut covers, weathertight when located outdoors or in wet or corrosive locations indicated on the Drawings, matching type for corresponding conduit systems. Manufacturers: One of the following or equal:
   a. Crouse-Hinds.
   b. Appleton.

H. Device Boxes and Junction Boxes:

1. Heavy-duty rigid steel or rigid copper free aluminum, compatible with the location and conduit system being used, unless otherwise specified or as indicated on the Drawings.
2. Furnish cast FD type device boxes.
3. Cover Plates:
   a. Indoor: Provide lighting switch and receptacle boxes Type 302 stainless steel cover plates with cover gaskets, except where otherwise specified or indicated on the Drawings. Provide other boxes with Type 304 stainless steel cover screws and with cover gaskets.
   b. Outdoor and Corrosion Resistant: Provide lighting switch and receptacle boxes, weatherproof with yellow fiberglass lift cover plates with cover gaskets.

I. Panelboards:

1. Minimum interrupting Capacity of Device: Equal to available short circuit current at line terminals but not less than 10,000 amperes.
2. Provide main bus rating of panelboards, number of poles, and provisions for number of circuits as indicated on the Drawings.
3. Bus: Size main bus bars in accordance with UL standards to limit temperature rise on any current carrying part to a maximum of 50 degrees Centigrade above specified ambient maximum.
   a. Furnish no plating on bus bars, except at joints.
4. Install protective devices such that they can be replaced without disturbing adjacent units.
5. Number branch circuits and spares as indicated on the Drawings and furnish complete typed circuit schedule in directory cardholder affixed to panel under a transparent cover.
6. Phase busing shall be full size and height without reduction. Include full size neutral bars with suitable lugs for the maximum number of circuits that can be connected to the panel.
7. Spare circuit breakers and spaces for future circuit breakers in the panel indicated on the Drawings.
8. Provide panels with copper ground bus separate from neutral bars. Ground bus to have suitable lug for each circuit breaker installed including future circuits.
9. Furnish lock and minimum 2 keys for each panelboard.
10. Enclosure type shall be NEMA 4X.
11. Mounting shall be as indicated on the Drawings.
12. Finish panelboards with a primer, rust resistant phosphate undercoat and 2 coats of oven-baked enamel with finish color ANSI 61 gray.
13. Shall include a utility meter socket that meets Salt River Project Electric Division requirements.

J. Molded-Case Circuit Breakers:
1. Molded-case Circuit Breakers: Ambient compensating which provides inverse time delay overload and instantaneous shout circuit protection by means of a thermal magnetic element. Accomplish compensation by a secondary bimetal that will allow the breaker to carry rated current between 25 degrees Centigrade and 50 degrees Centigrade with tripping characteristics which are approximately the same throughout this temperature range.
2. Operated by a handle and provided with a quick-make, quick-break switching mechanism that is mechanically trip free from the handle so that the contacts cannot be held closed against short circuits and abnormal currents.
3. Clearly indicate tripping by the handle automatically assuming a position between the manual ON and OFF positions.
4. Latch surfaces shall be grounded and polished.
5. Poles: Constructed so that they all open, close and trip simultaneously.
6. Conform to the applicable requirements of NEMA Standard No. AB1
7. Breakers: Completely enclosed with a molded case with ampere rating clearly visible.
8. Minimum Interrupting Ratings: 10,000 RMS amperes in 240/120-volt circuits, and 22,000 RMS amperes for 480/277-volt circuits.

K. Full Voltage Magnetic Starters:
1. Suitable for the horsepower ratings specified, and in accordance with NEC Article 430.

2. Verify motor ratings and coordinate starter and overload trip ratings with actual horsepower and nameplate current ratings of motors installed.
3. Magnetic Contactors: Factory adjusted and chatter free.
4. Overload Relays: Install bimetallic type overload relays in each line conductor.
5. Across-the-line full voltage magnetic starters for up to 600 volts shall have electrical characteristics indicated on the Drawings.

L. Service Entrance Section:
1. Metering and main circuit breaker section shall be NEMA 3R type freestanding outdoor enclosure. The assembly shall bear a UL label.
2. Utility Metering: Furnish a separate barriered-off Utility Metering Compartment, complete with hinged sealable door. Bus work shall include provisions for mounting utility company current transformers and potential transformers or potential taps as required by Salt River Project. Provide Service Entrance Label and provide necessary applicable service entrance features per NEC and local code requirements.
3. Service Entrance shall be suitable for use as service entrance equipment and be labeled in accordance with UL requirements.

M. 600 Volt Motor Control Centers:
1. References:
   a. National Electrical Manufacturer's Association (NEMA):
      (1) ICS-2 - Industrial Control Devices, Controllers, and Assemblies.
   b. Underwriters Laboratories (UL):
      (1) UL 845 - Motor Control Centers.
   c. National Electrical Code (NEC):
      (1) Article 430 - Motors, Motor Circuits, and Controllers.
2. Submittals:
   a. Shop Drawings:
      (1) Plan, front and side view drawings, including overall dimensions of each motor control center. Identify shipping slips and show conduit stub-up area locations.
      (2) Internal schematic and point-to-point wiring diagrams of each plug-in unit that are part of the motor control center. Wiring diagrams shall include wire identification and terminal numbers.
      (3) Nameplate schedule for each motor control center.
3. Provide UL label, where applicable, on each vertical section and individual unit as an evidence of compliance with UL 845.
4. Furnish a NEMA Type 3R non-walk-in enclosure with minimum 12 gauge, cold-rolled steel.
5. Provide positive action linkage with disconnect operating mechanism. Design mechanism so that it can be locked in the OFF position with 1 to 3 padlocks. When handle is not padlocked, door to open by release of door interlock with small tool.
6. When door is closed, operating mechanism shall indicate ON or OFF position, and door interlock shall automatically become effective. Design disconnect operating mechanism against inadvertent operation when door is open.
7. Provide each plug-in unit door with nameplate, specified elsewhere, that indicates circuit number, load name and tag number. Attach nameplate to door with stainless steel screws.

8. Size each vertical section to accommodate up to six NEMA Size 1 units in 1 vertical section.
9. Control Wiring Within Each Unit and Interconnection Wiring Between Units: Copper, MTW, 90 degrees Celsius, 600 volt, Number 14 AWG minimum.
10. Provide continuous horizontal wiring troughs at both top and bottom of each section. The troughs shall line up to form a continuous wireway for full length of center and a large continuous, full height vertical wiring trough in the right side of each section.
11. Horizontal Bus Bars: Tin-plated insulated copper of 600-ampere ampacity. Unit bus bar stabs shall insure high contact pressure.
12. Vertical Bus Bars: Tin-plated copper effectively isolated from accidental contact by plastic insulating medium in units, including spaces.
13. Bus Structure: Capable of withstanding not less than 22,000 RMS ampere short circuit current in accordance with NEMA standards.
14. Provide tin-plated copper horizontal ground bus continuous across full length of MCC. Provide copper vertical ground bus, which is solidly connected to the horizontal ground bus, in each vertical section containing starter or feeder units. Provide vertical ground bus with provisions for connecting the equipment-grounding conductor at the associated unit location.
15. Finish metal surfaces and structural parts with a phosphatizing, or equal, treatment prior to painting. Paint control centers with gray undercoat equal to zinc chromate. Finish interior surfaces including bus support angles, control unit back plates, and top and bottom unit barrier plates with baked white enamel. Finish exterior of enclosure with ANSI 61 Gray, or in a color selected by Engineer.
16. Provide spaces and spares for future combination starter and other units in the motor control centers. Furnish spaces with hardware to accommodate future plug-in control unit without modification of vertical sections. Provide number of spaces and spares required for future control units as indicated on the Drawings.
17. Each component, as well as the complete assembly, shall be constructed and tested in accordance with latest NEMA Standards for Industrial Control, publication ICS-2.
18. Install motor control center as a package attached to the service entrance section.

FLOOD CONTROL DISTRICT OF MARICOPA COUNTY
CONTRACT FCD 99-04
43RD AVENUE STORM DRAIN

SUPPLEMENTARY GENERAL CONDITIONS

SPECIFICATIONS

Except as otherwise amended in these Supplementary General Conditions and the Construction Special Provisions, construction of this project shall be in accordance with all applicable Maricopa Association of Governments (MAG) Uniform Standard Specifications and Uniform Standard Details, dated 1998, together with the Maricopa County Department of Transportation (MCDOT) Supplements to the Uniform Standard Details, dated 1993, and, for the portion of the work south of Southern Avenue, to the City of Phoenix Traffic Barricade Manual, dated 1998.

PRECEDENCE OF CONTRACT DOCUMENTS

This Contract and its designated documents, whether taken separately or together, are to be interpreted according to full intent, meaning, and spirit, and shall be deemed to mutually explain each other and to be descriptive of any materials to be furnished and the work to be performed under this Contract. In cases of any difference or discrepancy between the Contract documents, the order of precedence shall be (a) Addendum to the Invitation for Bids, (b) the Contract form, (c) Supplementary General Conditions, (d) Construction Special Provisions, (e) Project Plans, (f) MCDOT Supplements to the Uniform Standard Details, (g) City of Phoenix Traffic Barricade Manual, and (h) MAG Uniform Standard Specifications and Uniform Standard Details.

Subsection 101.2 - Definitions and Terms:

(1) Change the definition of the phrase "Board of Supervisors" to being the Board of Directors acting under the authority of the laws of the State of Arizona and in their capacity of the Board of Directors of the Flood Control District of Maricopa County.

(2) Change the definition of the phrase "Budget Project" to being a project financed by funds set aside in the annual budget or otherwise approved by the Flood Control District of Maricopa County Board of Directors.

(3) Add to the definition of the phrase "Contract Documents," the phrase "Supplementary General Conditions."

(4) Change the definition of the term "Engineer" to being the person appointed by the Flood Control District of Maricopa County Board of Directors to the office of Chief Engineer and General Manager of the Flood Control District of Maricopa County acting directly or through its authorized representative, the Chief of the Flood Control District of Maricopa County Planning and Project Management Division.

(5) Change the definition for the phrase "Notice of Award" to a letter from the Flood Control District of Maricopa County advising Contractor that it is the successful bidder and the Flood Control District of Maricopa County has accepted its proposal.

(6) Change the definition of the term "Owner" to the Flood Control District of Maricopa County, acting through it's legally constituted officials, officers, or employees.

(7) Add the definition for Maricopa County Minority Business Office (MBO), the office responsible for administering the Maricopa County Minority and Women Owned Business Enterprise Program.

(8) Add the definition for the Maricopa County Minority and Women Owned Business Enterprise Program as being the Program adopted by the Board of Supervisors effective January 1, 1992.

Subsection 102.4 - Examination of the Plans, Special Provisions, and Site Work: Add the following:
The soil borings logs and geotechnical report, including ground water conditions, are available for review at the Owner's office, and Contractors are encouraged to do so. Existing moisture conditions shall be no basis for claim for additional monies or time extensions. The Contractor shall manipulate the existing soil as required to achieve stable soil conditions and the required densities, as well as safe and stable side slopes during construction activities.

Subsection 102.5 - Preparation of Bid: Add the following:
Bids, including the Bidding Schedule, must be legibly written in ink or typed, with all prices given in numerals. In case of a conflict between the unit bid price and the extension, the unit bid price shall govern.

Alternate Pipe Materials. RGRCP and Concrete Lined CMP are considered acceptable pipe materials for portions of the storm drain to be constructed. The bidders shall provide a unit bid price for **either** RGRCP **or** Concrete Lined CMP for each applicable storm drain pay item. The Contractor shall indicate at the pre-construction meeting, which pipe material each pay item is based on.

It shall be the responsibility of prospective bidders to determine, prior to submission of a bid, if any addenda have been issued by the Flood Control District. This may be accomplished by calling 602-506-1501. Any addendum issued, if not already bound into the Special Provisions, **shall be attached and included as part of the Specifications** and any quantities on the Bidding Schedule requiring change shall be adjusted to the new figure by pen and ink. **Bids which do not have appropriate addenda attached, show appropriate changes to the Bidding Schedule, and acknowledge receipt of addenda in the Proposal may be invalid.**

The bidder's Arizona State Contractor's License number and the classification under which it proposes to perform the work shall be shown on the proposal. An **A - General Engineering** License is required for this contract. The two lowest bidders may be required to provide certification of prior satisfactory completion for similar construction and to furnish a copy of their license and the renewal certificate.

Subsection 102.6 - Subcontractors' List: Add the following:
A list of subcontractors and suppliers (including any M/WBE participation) intended to be used on the project shall be submitted with the bid, on the form provided in the Proposal. Although this list will not be considered as final commitment on the part of the successful proposer, any subcontractor changes from those listed must have Owners written approval prior to work performed on site by a subcontractor.

Subsection 102.7 - Irregular Proposals: Add the following:

(F) If the Maricopa County Minority and Women-Owned Business Enterprises Assurances Affidavit is not completed and submitted.

(G) If any addenda are not acknowledged and attached.

(H) If the Owner's bond forms are not utilized.

(I) If the entire specifications document is not returned.

(J) If the statement from bidder's insurance carrier as required by Subsection 103.6 is not included.

Subsection 103.6 - Contractor's Insurance: Add the following:
A statement from bidder's insurance carrier shall be included in the proposal certifying that it will furnish the specified kind and amounts of insurance to the bidder if it is awarded the contract. As required by law, the statement will be from an insurance carrier or carriers authorized to do business in the State of Arizona, or

countersigned by an agent of the carrier authorized to do business in the State of Arizona. Concurrently with the execution of the contract, Contractor shall furnish a Certificate of Insurance using the included Certificate, that names the additional insureds as set out in the Certificate. The Certificate shall also name the additional insureds as Certificate Holders. The types of insurance and the limits of liability shall be as indicated on the included form.

Subsection 103.6.1(D) - Contractor's Insurance: Add the following:
Include additional insureds as indicated on the included Certificate of Insurance.

Subsection 103.6.2 - Indemnification of the Contracting Agency Against Liability: Add the following:
Additionally, Contractor shall execute the Indemnification found in the Contract Documents.

Subsection 104.1 - Work to be Done: Add the following sentence to 104.1.1:
All water for construction purposes, drinking water, lighting, temporary electric power, heat, and telephone service shall be arranged and provided for as per requirements of the work by Contractor at his expense.

Add the following to 104.1.2:

Principal construction features for the project include installation of a storm drain along 43rd Avenue from approximately 1300 feet north of Baseline Road to the Salt River, including storm drain laterals, catch basins, and other drainage appurtenances.

The Contractor shall notify the adjacent property owners and residents of the proposed construction at least 7 calendar days in advance of any construction activities.

The Contractor shall notify MCDOT at least 7 days in advance of any work activities to be done within MCDOT rights-of-way, and shall notify the City of Phoenix at least 7 days in advance of any work activities to be done within Phoenix rights-of-way.

The Contractor shall maintain access to adjacent property owners and residents during construction.

Subsection 104.2.3 - Changes:
The Owner may at any time, by written order, and without notice to the sureties, if any, make changes within the general scope of this contract in any one or more of the following:

(A) Drawings, designs, or specifications;

(B) Method or manner of performance of the work;

(C) Owner-furnished facilities, equipment, materials, services, or site;

(D) Directing acceleration in the performance of the work.

Any other written or oral order from the Owner that causes a change shall be treated as a change order under this section provided that the Contractor gives the Owner written notification within two work days after receipt of such direction stating:

(A) The date, nature, and circumstances of the conduct regarded as a change;

(B) The particular elements of the contract performance for which the Contractor is seeking an equitable adjustment under this section, including any price or schedule adjustments;

(C) The Contractor's estimate of the time by which the Owner must respond to the Contractor's notice to minimize cost, delay, or disruption of performance.

The Contractor shall diligently continue performance of this contract to the maximum extent possible in accordance with its provisions. Except as provided in this section, no order, statement, or conduct of the Owner shall be treated as a change or entitle the Contractor to an equitable adjustment. If any change under this section causes an increase or decrease in the Contractor's cost of, or the time required for, the performance of any part of the work under this contract, the Owner shall make an equitable adjustment and modify the contract in writing.

The equitable adjustment shall not include increased costs or time extensions for delay resulting from the Contractor's failure to provide notice or to diligently continue performance. No proposal for the Contractor for an equitable adjustment shall be allowed if asserted after final payment under this contract.

Subsection 104.2.4 - Cost Estimates or Price Proposals:

The Contractor and any lower-tier subcontractors shall submit itemized cost estimates or price proposals for any owner-directed change order or Contractor-initiated claim.

Cost estimates or pricing proposals shall be itemized to include direct labor by man-hours, individual craft, hourly wage rate and verifiable labor burden. Other direct costs shall include rental and operator rates for rented or owned equipment, material trucking expenses and other costs clearly identified and directly allocable to contract performance. Material costs shall be itemized by item description, quantity(s) for each item, unit price per item, including applicable sales tax markup, and extended total price per item. The Contractor shall provide copies of material supplier quote sheets, invoices or purchase orders, as appropriate.

Lump sum cost estimates or price proposals shall be rejected and returned to the Contractor for itemization as described above. Failure of the Contractor to submit properly itemized cost estimates or price proposals shall not constitute an excusable delay and result in a change order being unilaterally priced as the Owner's fair estimated price.

Subsection 104.2.6 - Value Engineering:

(A) ***General.*** The Contractor is encouraged to voluntarily develop, prepare, and submit value engineering change proposals (VECPs). The Contractor shall share in any instant contract savings realized from accepted VECPs, in accordance with paragraph (f) below. The Owner reserves the right to make alterations to the contract, in accordance with procedures elsewhere within this contract. Such alterations will not be eligible for inclusion in any VECP.

RGRCP and Concrete Lined CMP are considered the only acceptable pipe materials for the main line storm drain. VECPs will not be considered for alternate pipe materials for the main line storm drain.

(B) ***Definitions.***

Contractor's development and implementation costs means those costs the Contractor incurs on a VECP in developing, testing, preparing, and submitting the VECP as well as those costs incurred by the Contractor to make the changes required by the Owner's acceptance of the VECP.

Owner costs means those owner costs that result directly from developing and implementing the VECP, such as any net increases in the cost of testing, operations, maintenance, and logistical support. The term does not include the normal administrative costs of processing the VECP.

Instant contract savings means the estimated reduction in Contract cost of performance resulting from acceptance of the VECP, minus the allowable Contractor's development and implementation costs, minus subcontractors' development and implementation costs (see paragraph (g) below).

Value engineering change proposal (VECP) means a proposal that (1) requires a change to the contract; (2) results in reducing the contract price or estimated cost without impairing essential

functions or characteristics; and (3) does not involve a change in deliverable end item quantities, schedule, or a change to the contract type.

(C) ***VECP Preparation***. As a minimum, the Contractor shall include in each VECP the information described in subparagraphs (1) through (7) below. If the proposed change affects contractually required schedule and cost reporting, it shall be revised to incorporate proposed VECP modifications. The VECP shall include the following:

(1) A description of the difference between the existing contract requirement and that proposed, the comparative advantages and disadvantages of each, a justification when an item's function or characteristics are being altered, and the effects of the change on the end item's performance. All design changes must be submitted on 24"x 36" standard drawing sheets along with supporting calculations. Each drawing sheet and at least the content sheet of the calculations shall be sealed by an Engineer registered in the State of Arizona.

(2) A list and analysis of the contract requirements that must be changed if the VECP is accepted, including any suggested specification revision.

(3) A separate, detailed cost estimate for the affected portions of the existing contract requirements and the VECP. The cost reduction associated with the VECP shall take into account the Contractor's allowable development and implementation costs, including any amount attributable to subcontracts under paragraph (g) below.

(4) A description and estimate of costs the Owner may incur implementing the VECP, such as test and evaluation and operating and support costs. This is an estimate based only on the Contractor's understanding of additional efforts to be expended by the Owner, should the VECP be accepted. The final cost will be determined by the Owner.

(5) A prediction of any effects the proposed change would have on collateral costs to the agency, i.e., costs of operation or maintenance.

(6) A statement of the time by which a contract modification accepting the VECP must be issued in order to achieve the maximum cost reduction, noting any effect on the contract completion time or delivery schedule.

(7) Identification of any previous submissions of the VECP, including the dates submitted, the agencies and contract numbers involved and previous Owner actions, if known.

(D) ***Submission***. The Contractor shall submit VECPs to the Owner's Engineer.

(E) ***Owner Action***.

(1) The Owner shall notify the Contractor of the status of the VECP within 15 calendar days after receipt from the Contractor. If additional time is required, the Owner shall notify the Contractor within the 15-day period and provide the reason for the delay and the expected date of the decision. The Owner will process VECPs expeditiously; however, it shall not be liable for any delay in acting upon a VECP.

(2) If the VECP is not accepted, the Owner shall notify the Contractor in writing, explaining the reasons for rejection.

(3) The Contractor may withdraw any VECP, in whole or in part, at any time before it is accepted by the Owner.

(4) Any VECP may be accepted, in whole or in part, by the Owner's award of a change order to this contract, citing this subsection. The Owner may accept the VECP, even though an agreement on price reduction has not been reached, by issuing the Contractor a notice to proceed with the change. Until a notice to proceed is issued or a change order incorporates a VECP to this contract, the Contractor shall perform in accordance with the existing contract. The Owner's decision to accept or reject all or any part of any VECP shall be final and not subject to disputes or otherwise subject to litigation.

(F) *Cost Sharing*.

(1) **Rates**. The Owner's share of savings is determined by subtracting the Owner's costs from instant contract savings and multiplying the result by 50 percent. The Contractor's share shall be the remaining 50 percent.

(2) **Payment**. Payment of any share due the Contractor for use of a VECP on this contract shall be authorized by a change order to this contract to accept the VECP, reduce the contract price or estimated cost by the amount of instant contract savings, and provide the Contractor's share of savings by adding the amount calculated to the contract price.

(G) ***Subcontracts***. The Contractor may include an appropriate value engineering clause in any subcontract. In computing any adjustment in this contract's price under paragraph (f) above, the Contractor's allowable development and implementation costs shall include any subcontractor's allowable development and implementation costs clearly resulting from a VECP accepted by the Owner under this contract, but shall exclude any value engineering incentive payments; provided that these payments shall not reduce the Owner's share of the savings resulting from the VECP.

Subsection 105.1 - Authority of Engineer: Add the following:

105.1.1 - Engineer's Evaluation: Engineer will be allowed a reasonable time within which to evaluate each proposal or submittal made pursuant to subsections 105.2.1, 105.3.1 and 106.4, but such time shall not exceed 20 calendar days. Engineer will be the sole judge of acceptability. No "or-equal" or substitute will be ordered, installed or utilized without Engineer's prior written acceptance which will be evidenced by either a Change Order or an approved Shop Drawing. Owner may require Contractor to furnish at Contractor's expense a special performance guarantee or other surety with respect to any "or-equal" or substitute. Engineer will record time required by Engineer and Engineer's Consultants in evaluating substitutes proposed or submitted by Contractor pursuant to subparagraphs 105.3.1 and 106.4(B) and in making changes in the Contract Documents (or in the provisions of any other direct contract with Owner for work on the project) occasioned thereby. Whether or not Engineer accepts a substitute item so proposed or submitted by Contractor, Contractor shall reimburse Owner for the charges of Engineer and Engineer's Consultants for evaluating each such proposed substitute item.

Subsection 105.2.1 – Plans and Shop Drawings: Add the following:

A) Shop drawings means drawings, submitted to the Engineer by the Contractor pursuant to the contract, showing in detail (i) the proposed fabrication and assembly of structural elements and (ii) the installation (i.e., form, fit and attachment details) of materials or equipment. It includes drawings, diagrams, layouts, schematics, descriptive literature, illustrations, schedules, performance and test data, and similar materials furnished by the Contractor to explain in detail specific portions of the work required by the contract.

B) Product Data is information on manufactured items, either stock or modified, and includes descriptive literature, operating data, performance curves, certified dimensional drawings, wiring or schematic control diagrams, piping, instrumentation, parts lists, and operating, maintenance and lubrication manuals.

Subsection 105.3 - Conformity with Plans and Specifications: Add the following:

105.3.1 - Substitute Construction Methods or Procedures: If a specific means, method, technique, sequence or procedure of construction is shown or indicated and expressly required by the Contract Documents,

Contractor may furnish or utilize a substitute means, method, technique, sequence or procedure of construction acceptable to Engineer. Contractor shall submit sufficient information to allow Engineer, in Engineer's sole discretion, to determine that the substitute proposed is equivalent to that expressly called for by the Contract Documents. The procedure for review by Engineer will be similar to that provided in subparagraph 106.4(B).

Subsection 105.5 - Cooperation of Contractor: Add the following:

105.5.1 - Partnering

The Owner intends to encourage the foundation of a partnering relationship with the Contractor and its subcontractors. This partnering relationship will be structured to draw on the strength of each organization to identify and achieve reciprocal goals. The objectives are effective and efficient contract performance intended to achieve completion within budget, on schedule, and in accordance with plans and specifications.

This partnering relationship will be bilateral in makeup. Any cost associated with effectuating partnering will be covered by the bid item. The initial partnering workshop shall be scheduled after award of the contract, and prior to the Notice to Proceed, and shall be facilitated by a third party competent in the fundamentals of partnering, and mutually acceptable to Contractor and Owner. The Contractor shall be responsible for scheduling, coordinating, and hiring the third party facilitator, and planning all of the partnering meetings in consultation with the Engineer. The Owner will be responsible to notify and coordinate attendance at the partnering meetings by other agencies. To achieve the desired partnering relationships, the Contractor will need to encourage attendance by its major subcontractors on the project. Follow-up workshops will be held periodically throughout the duration of the contract as agreed to by the Contractor and Owner.

An integral aspect of partnering is the resolution of disputes in a timely, professional, and non-adversarial manner. Alternative dispute resolution (ADR) methodologies will be encouraged in place of the more formal dispute resolution procedures. ADR will assist in promoting and maintaining an amicable working relationship to preserve the partnering relationship. ADR in this context is intended to be a voluntary, non-binding procedure available for use by the parties to this contract to resolve any dispute that may arise during performance.

Payment for Partnering will be made on the basis of invoices of actual costs, and will be for a total amount not to exceed the amount shown in the bid schedule for the item.

ITEM 105-1 - PARTNERING

Subsection 105.5.2 – Pre-Construction Meeting:

After award of the contract and prior to the commencement of the work or mobilization, a pre-construction meeting shall be scheduled at a location and time to be agreed upon between the Owner and the Contractor. The Contractor shall make all necessary arrangements to have key personnel of his company and of his principal subcontractors present at the meeting. Each representative shall have authority to make commitments and act for his firm. The purpose of the pre-construction meeting is to discuss any specific concerns or potential problems that the Contractor is aware of, to provide general information appropriate to the contract, to identify responsible individuals for various functions within each organization, and to develop tentative dates for the start of construction. The Contractor shall submit to the Engineer during the pre-construction meeting the following documents:

1) Mix design composition
2) Manufacturer's certification for all materials
3) Material data safety sheets
4) Preliminary work schedule
5) Preliminary traffic control plan
6) Shop drawings
7) Emergency telephone numbers
8) Signing authority letter
9) Name and telephone number of the certified safety professional
10) The pipe material to be used for each bid item for which an alternate is allowed.

The pre-construction meeting will cover topics such as critical elements of the work schedule, payment application and processing of invoices. Additionally, a scheduled start date for the work will be determined.

The Contractor shall be responsible to take minutes of the pre-construction meeting and distribute copies to all meeting participants. The meeting minutes shall be distributed within 48 hours of the meeting. At the subsequent construction progress meeting, the minutes will be attested or revised, as appropriate. The cost for attendance at the pre-construction meeting, and preparation and distribution of meeting minutes shall be incidental to the project and no extra payment will be made.

Subsection 105.5.3 –Construction Progress Meetings:
Construction progress meetings shall be scheduled weekly, or as considered necessary by the Owner. The Contractor shall make all arrangements to have key personnel of his company and of his principal subcontractors present at all progress meetings; representatives shall have authority to make commitments and act for their firms. The Contractor shall assume full responsibility to act for and commit any subcontractor employed by the Contractor, whether or not such subcontractor is represented at the meeting.

During the construction progress meeting the Owner's representative will act as chairman and will advise the Contractor of any administrative matters connected with the contract. The Contractor shall submit for review his two-week rolling schedule. The Contractor's representative at these meetings shall be prepared to discuss and resolve construction problems and concerns, material delivery and vendor data submittals status, construction progress as measured against the Contractor's approved construction schedule and the Contractor's short range construction activities as provided on his two-week rolling schedule. The Contractor shall not be relieved of his responsibility to fulfill all of the terms of the contract as a result of any inferences drawn or suggestions made available at these meetings.

The Contractor shall be responsible to take minutes of the construction progress meetings and distribute copies to all meeting participants. The meeting minutes shall be distributed within 48 hours of the meeting. At the subsequent construction progress meeting, the minutes will be attested or revised, as appropriate. The cost for attendance at meetings, and preparation and distribution of meeting minutes shall be incidental to the project and no extra payment will be made.

Subsection 105.6 - Cooperation with Utilities: Add the following:
An attempt has been made to determine the location of all underground utilities, drainage pipes, and structures; however, it shall be the Contractor's responsibility to cooperate with the pertinent utility companies so that any obstructing utility installation(s) may be adjusted. The location of the underground and overhead utilities as shown on the plans is based on the best available information. The Contractor shall not assume that this represents an exact location of the line. No guarantee is made to the accuracy of the location shown on the plans. The Contractor shall determine for himself the exact location of all utilities. Should Contractor's operations result in damage to any utility the location of which has been brought to its attention, he shall assume full responsibility for such damage. There also exists the strong likelihood that other abandoned older and undocumented underground utility and irrigation lines exist within the project area. Contractor shall contact Arizona Blue Stake (telephone number 263-1100) a minimum of two (2) working days before beginning any underground work. In addition, Blue Stake notification(s) shall be maintained on a current basis.

The following phone numbers should put the Contractor in contact with the proper personnel:

Cox Communications
Angie Hardesty Phone: (602) 352-5860 Ext. 179

El Paso Natural Gas
John McNeely Phone: (915) 496-5562

Salt River Project (Water Engineering)
Robert Maurer Phone: (602) 236-2962

Salt River Project (Transmission)
William Phillips Phone: (602) 236-8092

Salt River Project (Distribution)
Tami Hass Phone: (602) 236-0690

Southwest Gas
Robert Sprague Phone: (602) 484-5343

U.S. West Communications (US West)
John Aker Phone: (602) 630-0496

City of Phoenix (Water Services Department)
Gerald Arakaki Phone: (602) 261-8229

City of Phoenix (Traffic Signals Section)
Monica Beeman Phone: (602) 262-4693

Santa Fe Pacific Pipelines – Kinder Morgan
Daniel Tarango Phone: (602) 278-2320

City of Phoenix Sewer:
The City of Phoenix maintains a 66" RCP sewer line within and parallel to Southern Avenue. The sewer typically runs mostly full. The City of Phoenix also maintains a 30" sewer line that crosses 43rd Avenue at a diagonal near Weir Avenue, which also runs mostly full. There is no means for redirecting flows within these facilities. The contractor shall use extreme caution to avoid damage to these facilities.

SRP Facilities:
The Salt River Project maintains irrigation facilities within and perpendicular to 43rd Avenue. The District has obtained a License from SRP to install facilities (storm drain) with the right-of-way of the Salt River Project. The Contractor shall conform to the Special and General Conditions included in the permit. The permit is available for review upon request to the Owner.

Subsection 105.8 - Construction Stakes, Lines, and Grades: Add the following:

A. The Engineer will furnish a Benchmark which the Contractor will use to set line and grade for all construction. All other surveying required for the project shall be the Contractor's responsibility. The Engineer will not set any construction stakes.

B. Before any construction work is started, the Engineer shall perform all base surveys and cross sections of existing conditions that may be required as a basis for quantity determination.

C. The Contractor shall submit original construction surveyor's notes duly signed by a Registered Land Surveyor to the Engineer at the end of the project. Copies of the survey notes shall be submitted to the Engineer at the first weekly meeting after being generated.

D. As-built plans sealed by an Engineer registered in the State of Arizona shall be provided by the Contractor to the Owner prior to project close out.

Subsection 106.1 - Source of Materials and Quality: Add the following:

Select Material, Aggregate Base, Mineral Aggregate, concrete, steel products and pipe shall be obtained from commercial sources. Contractor shall pay all royalties, or any other charges or expenses, incurred in connection with the securing and hauling of the material. Contractor will be required to furnish Engineer with a list of its proposed commercial sources prior to use, and shall present certificates stating that the material produced from any commercial sources is in accordance with the Uniform Standard Specifications and these Supplementary General Conditions.

Subsection 106.4 - Trade Names and Substitutions: Replace with the following:
Whenever an item of material or equipment is specified or described in the Contract Documents by using the name of a proprietary item or the name of a particular Supplier, the specification or description is intended to establish the type, function and quantity required. Unless the specification or description contains or is followed by words reading that no like, equivalent or "or-equal" item or no substitution is permitted, other items of material or equipment of other Suppliers may be accepted by Engineer under the following circumstances:

(A) "Or-Equal": If in the Engineer's sole discretion an item of material or equipment proposed by Contractor is functionally equal to that named and sufficiently similar so that no change in related Work will be required, it may be considered by Engineer as an "or-equal" item, in which case review and approval of the proposed item may, in Engineer's sole discretion, be accomplished without compliance with some or all of the requirements for acceptance of proposed substitute items.

(B) Substitute Items: If in Engineer's sole discretion an item does not qualify as an "or-equal" item under subparagraph 106.4 (A), it will be considered a proposed substitute item. Contractor shall submit sufficient information as provided below to allow Engineer to determine that the item of material or equipment proposed is essentially equivalent to that named and an acceptable substitute therefor. The procedure for review by Engineer will include the following and may be supplemented in the Special Provisions and as Engineer may decide is appropriate under the circumstances. Requests for review of proposed substitute items of material or equipment will not be accepted by Engineer from anyone other than Contractor. If Contractor wishes to furnish or use a substitute item of material or equipment, Contractor shall first make written application to Engineer for acceptance thereof, certifying that the proposed substitute will perform adequately the functions and achieve the results called for by the general design, be similar in substance to that specified and be suited to the same use as that specified. The application will state the extent, if any, to which the evaluation and acceptance of the proposed substitute will prejudice Contractor's achievement of completion on time, whether or not acceptance of the substitute for use in the Work will require a change in any of the Contract Documents (or in the provisions of any other direct contract with Owner for work on the project) to adapt the design to the proposed substitute and whether or not incorporation or use of the substitute in connection with the Work is subject to payment of any license fee or royalty. All variations of the proposed substitute from that specified will be identified in the application and available maintenance, repair and replacement service will be indicated. The application will also contain an itemized estimate of all costs or credits that will result directly or indirectly from acceptance of such substitute, including costs of redesign and claims of other Contractors affected by the resulting change, all of which will be considered by Engineer in evaluating the proposed substitute. Engineer may require Contractor to furnish additional data about the proposed substitute.

(C) Contractor's Expense: All data to be provided by Contractor in support of any proposed "or-equal" or substitute item will be at Contractor's expense.

Subsection 106.5 - Contractors Marshaling Yards: Add the following:
The Contractor shall obtain approval of the Engineer when using vacant property to park and service equipment and store materials for use. The Contractor will obtain prior written approval of the property owner for such use and submit a copy of the approval to the Engineer prior to use of the property.

The Contractor shall grade all construction yards, easements and limits of construction which are disturbed by construction or construction related activities to the lines and grades shown on the plans; or as a minimum, where no line or grade is shown, to a condition similar to or better than the pre-existing condition.

Subsection 107.2 - Permits: Replace with the following:
Contractor shall obtain all permits and licenses, including but not limited to those required by the City of Phoenix and Maricopa County; pay all charges, fees, taxes, and provide all notices necessary and incidental to the due and lawful prosecution of the work. Permits for earth moving may be obtained from Air Pollution Control, Maricopa County Department of Environmental Management, 2406 South 24th Street, Suite E-214, Phoenix, Arizona 85034, telephone number 506-6700. The cost for the earth moving dust control permit is $80 plus $8 per acre. The above permit costs are subject to change. It is the responsibility of the Contractor to verify these costs.

Dewatering Permit

The District has obtained a Dewatering Permit from the Arizona Department of Water Resources (ADWR). This permit is required for the pumping of ground water which may be required as part of construction. The permit will be provided to the contractor at the pre-construction meeting.

The Contractor shall monitor and maintain a record of the total amount of ground water pumped on a daily basis, and provide a copy of this record to the Engineer on a weekly basis. The Contractor shall provide the necessary gages and/or meters to quantify the amount of water pumped in gallons per day. The cost of the monitoring will be incidental to other related activities for which compensation is provided.

The dewatering permit has been approved for 4,000 acre feet per annum to be withdrawn by utilizing five (5) sump pumps. In the event that the Contractor decides to drill Dewatering wells, the Contractor must contact ADWR and obtain the proper authorization.

Stormwater Management Permit

Subsection 107.2.1 - NPDES Permit Requirements: Add the following:

A. This project is subject to the National Pollutant Discharge Elimination System (NPDES) Storm water requirements for construction sites under the Environmental Protection Agency (EPA) General Permit for Arizona. Under provisions of that permit, the Contractor shall be designated as permitee, and shall take all necessary measures to assure compliance with the NPDES General Permit for Arizona as well as all other applicable Federal, State and local laws, ordinances, statutes, rules and regulations pertaining to Storm water discharge. As the permittee, the Contractor is responsible for preparing, in a manner acceptable to the EPA, all documents required by this regulation, including but not necessarily limited to:

    1. Storm water Pollution Prevention Plan (SWPPP) for the project, including certification of compliance form. Contractor shall be required to develop, implement, update and revise the SWPPP, as necessary, in order to assure compliance with the EPA permit requirements. The SWPPP shall be retained on the project site at all times during construction.

    2. Notice of Intent (NOI) to assure compliance with the NPDES General Permit for Arizona, including certification of signatures.

    3. Notice of Termination (NOT) of coverage under NPDES General Permit for Arizona.

B. Preliminary copies of the NOI and the SWPPP shall be submitted to Owner during the preconstruction meeting and shall be subject to review by Owner prior to implementation.

C. Contractor shall submit the completed and duly signed NOI forms no later than forty-eight (48) hours prior to the initial start of construction on the project to the following agencies:

EPA Storm Water Notice of Intent
P.O. Box 1215
Newington, VA 22122

A copy of the completed NOI form shall be submitted to the following:

Storm water Coordinator
Arizona Department of Environmental Quality
P.O. Box 600
Phoenix, AZ 85001-0600
(602) 207-4574

Maricopa County, Current Planning
Planning and Development Division
301 West Jefferson, Third Floor
Phoenix, AZ 85003
(602) 506-3301

A copy of the completed NOI form and SWPPP shall be submitted to the following:

City of Phoenix
Development Services Department
200 West Washington, 2nd Floor
Phoenix, AZ 85003
(602) 495-5411

Failure by the Contractor (or Subcontractors of any tier) to submit NOI's within the mandated time frame shall result in delay of the construction start date, and no claim for extension of time will be granted for such delay. A copy of the completed NOI shall be posted at the construction site.

D. Portions of this project are within the City of Phoenix are subject to the requirements of the City of Phoenix Stormwater Management Permit. Under provisions of the permit, the Contractor shall be designated as permittee, and shall take all necessary measures to ensure compliance with the Stormwater Management Permit as well as all other applicable local laws, ordinances, statutes, rules, and regulations pertaining to stormwater discharges. For more information, the Contractor should contact:

City of Phoenix
Development Services Department
200 West Washington, 2nd Floor
Phoenix, AZ 85003
(602) 495-5411

E. Inspections of all Storm water pollution control devices on the project shall be performed by Contractor on a monthly basis and following each rainfall of 0.50 inches or more in a 24-hour period at the project site as required under provisions of the NPDES General Permit for Arizona. Contractor shall prepare reports on such inspections and retain the reports for a period of three years following the completion of the project. Inspection reports shall be submitted monthly to Owner along with progress payment requests. Additionally, Contractor shall maintain all Storm water pollution control devices on the project in proper working order, which shall include cleaning and/or repair during the duration of the project.

F. Contractor warrants that its employees and Subcontractors of any tier and their employees shall at all times comply with all applicable laws, ordinances, statutes, rules and regulations set forth by all federal, state and local governments and the Environmental Protection Agency in connection with NPDES Permitting requirements and laws and regulations pertaining to air, groundwater and surface water quality.

Fines and penalties imposed by the EPA against Owner or the Contractor for Contractor's failure to comply with any of the requirements of NPDES General Permit of Arizona shall be borne by the Contractor.

G. Upon project completion, acceptance and demobilization, Contractor shall submit its completed, duly executed NOT form to the EPA, with a copy to the Arizona Department of Environmental Quality (and the appropriate municipality), at the address listed in Section (C) above, thereby terminating all NPDES permit coverage for the project. Contractor shall then surrender to Owner copies of the SWPPP, inspection information and all other documents prepared and maintained by the Contractor in compliance of the NPDES General Permit. Contractor shall retain the originals of such documents for a period of three (3) years following the completion of the project.

H. The Lump Sum price for the SWPPP shall include all material, labor, and all other costs relating to the preparation, installation and maintenance of the SWPPP during project construction, including assuring proper operation of the pollution control devices installed, and all maintenance, cleaning, and disposal costs associated with clean-up and repair following storm events, runoff or releases on the project. The Lump Sum price for the SWPPP shall be inclusive of all costs, and no additional claims shall be made by Contractor under any other specification provision of these documents, including Changed Conditions. Payment for this bid item shall be upon final completion and acceptance of the project, as per Section 109.1.

I. Copies of all required forms and guidance for preparing the SWPPP are available in the "Drainage Design Manual for Maricopa County, Volume III Erosion Control." The manual is available at the Flood Control District, 2801 West Durango Street, Phoenix, Arizona 85009.

Payment for NPDES/SWPPP permit requirements shall be made on the basis of lump sum for all work described in Subsection 107.2 .1 for:
ITEM 107-1 NPDES/SWPPP PERMITS

Subsection 107.4 - Archeological Reports: Add the following:
Any cultural and/or paleontological resource (historic or prehistoric site or object) discovered by the Contractor, or any person working on his behalf, shall be immediately reported to the Engineer. The Contractor shall suspend all operations in the immediate area of such discovery until written authorization to proceed is issued by the Engineer. An evaluation of the discovery will be made by authorized personnel and the Engineer to determine appropriate actions to prevent the loss of significant cultural or scientific resources.

Preliminary research has identified seven (7) potential pre-historic and historic canal locations within the project area. The District intends to retain an archeologist to review these locations during construction to determine whether cultural and/or paleontological resources are present. The Contractor shall allow the archaeologist to review the work during construction.

Subsection 107.5: Add the following:
The entire construction site shall be considered a "Hard Hat Area" and all personnel in the area will be required to wear a hard hat.

Subsection 107.5.2 - Compliance with the Arizona Communication Standard: Add the following:

Owner will provide Contractor with Material Safety Data Sheets (MSDS) for any products known to exist on the site that are deemed health hazards. Contractor will provide a copy of Owner-provided MSDS to all Subcontractors.

Contractor will provide Owner and all Subcontractors with MSDS for any products that have or are deemed health hazards that will be brought onto the site or created on the site by either Contractor or by any Subcontractors.

Contractor will provide Owner with a statement certifying that all personnel (Contractor and Subcontractor) employed by Contractor or by a Subcontractor on the job site have received the required Hazard Communication Standard training.

Subsection 107.6.3 Public Information and Notification: Add the following:
The Contractor shall employ a specialty public information service as a subcontractor to provide the community relations program for the project as described herein. The name and address of the public information subcontractor shall be submitted with the bid as specified in subsection 102.6 of the Supplementary General Conditions. Contractor shall work closely with his subcontractor in developing and carrying out the community relations program, but shall not expect to actually perform the work of providing the public information services. Contractor shall submit a history of the subcontractor's qualifications and experience in public information services at the pre-construction conference for acceptance by the Engineer. The community relations program shall be designed to run the full length of calendar days in the contract for this project. The program will include but not be limited to:

1. Distributing a preconstruction information letter to all residents, business, schools, farm operations, etc. Property owners within the area bounded by Broadway Road on the north, Baseline Road on the south, 35th Avenue on the east, and 51st Avenue on the west shall be included on the distribution list for the preconstruction information letter. Approximately 1600 parcels are within this area.

2. Printing and distribution of public notices and/or newsletters.

The Contractor will use these or other means to inform the local citizens of necessary operations which create high noise levels, street closures, limited access, detour locations, haul route and material delivery routes, hours of construction and disruption of bus, trash, school bus and other delivery/pick-up routes.

The Contractor will be required to furnish a private line telephone to be used solely for receiving incoming calls from local citizens with questions or complaints concerning construction operations or procedures. The Contractor shall publish this phone number and maintain a 24-hour answering service. The answering service shall be operated by Contractor personnel during all hours that work is being performed on the job site. The Contractor shall maintain a log of incoming calls, responses, and action taken which shall be submitted to the Engineer weekly and/or upon request.

Prior to the start of work, the Contractor shall notify, by letter, all affected businesses and residents of construction plans and schedules within the geographic area identified above. In addition, all schools and emergency services which serve the geographic area will also be notified even though they may be located outside the geographic area described above. The letter shall contain, as a minimum, the following information:

1. Name of Contractor
2. 24-hour telephone complaint number
3. Brief description of the project
4. Name of Contractor project Superintendent
5. Name of Engineer
6. Name of area supervisor
7. Construction schedule including anticipated work hours

8. Traffic regulations including lane restrictions

The Contractor shall submit a Public Information and Notification Plan to the Engineer at the pre-construction meeting. No payments shall be made for this item until the Engineer approves the plan.

The plan and work which is eligible for reimbursement shall include: meetings with impacted businesses, schools, emergency services, residents, etc.; scheduling; preparation and distribution of newsletter as directed by the Engineer; and maintaining a 24-hour telephone hot line for complaints.

The Contractor shall submit a final report/evaluation of the Public Information and Notification process performed for this project. This report shall be submitted before the Contractor receives final payment.

Payment will be based on invoices, and will be for a total amount not to exceed the amount shown in the bid schedule for the item, "PUBLIC INFORMATION AND NOTIFICATION ALLOWANCE", for work performed in notifying and coordinating with the local population impacted by this project. To cover the cost for administration and supervision, the General Contractor may add an amount equal to not more than 5 percent of the accumulated total invoiced billing for actual public information services provided by a Subcontractor. This cost for administration and supervision will be considered included in the "PUBLIC INFORMATION AND NOTIFICATION ALLOWANCE".

ITEM 107-2 - PUBLIC INFORMATION AND NOTIFICATION ALLOWANCE

Subsection 107.6.4 - Project Signs:
Contractor shall provide and install four (4) project information signs before beginning construction. The signs will inform the public of the forthcoming project and construction dates. Project signs shall include the names of all agencies participating in the project. Signs shall be constructed in accordance with the Project Sign Information drawing to be provided to the Contractor at the pre-construction meeting. The signs shall be installed at the location(s) approved by the Engineer. The Contractor shall maintain the signs as necessary, and update the information as requested by the Engineer. Payment shall be made according to the allowance in the Bidding Schedule in installments of 50% upon installation, and the remaining 50% upon final payment for the work.

ITEM 107-3 PROJECT SIGNS ALLOWANCE

Subsection 107.8 - Use of Explosives: Add the following:
Because of the proximity to adjacent businesses, residences and major utilities, the use of explosives will NOT be permitted for any construction activities on the project.

Subsection 107.9 - Protection and Restoration of Property: Add the following:
The Contractor shall protect-in-place all existing structures and other features as identified on the plans. This includes, but is not limited to, all existing utilities.

The Contractor shall limit all construction activities to the areas shown in the plans and shall not disturb any areas other than as required for construction as shown on the plans.

The Contractor will grade all Temporary Construction and Permanent Easement areas, and project areas which are disturbed during construction to the lines and grades shown on the plans, or as a minimum, where no lines and grades are shown, to a condition similar to or better than the pre-existing condition.

Subsection 107.10 - Contractor's Responsibility for Work: Add the following:

A. The project will include the construction of the drainage facilities and replacement of surface features disturbed during construction.

B. The Contractor shall protect-in-place at all times the underground and overhead utilities.

C. Contractor shall be aware that a potential exists for seepage from the existing irrigation facilities.

D. No payment will be made for providing excavation protective works for such things as dewatering or for the temporary bypass construction of irrigation facilities that may be determined necessary by the Contractor. The cost thereof shall be included in the bid price for the construction or installation of items to which said excavation protective works or temporary bypass facilities are incidental or appurtenant.

E. Storm water runoff in the area generally flows to the west. The Contractor shall take all necessary precautions to protect his work and the streets from damage that may be caused by such runoff and ponding.

F. The Contractor shall take all necessary action to protect the public from the construction work area.

G. The Contractor shall take all necessary action to ensure that all construction materials are stored in such a manner that storm runoff from the storage area does not reach the following locations: Salt River, Maricopa Drain, Irrigation Ditches, Cultivated Fields.

Subsection 108.1 - Notice to Proceed: Delete Paragraph (A) and replace with the following:

(A) Contractor shall complete all work within three hundred and thirty five (335) calendar days beginning the day following the effective date specified in the Notice to Proceed. No site access will be available, no site work may be completed, and no items of work will be paid during the first forty-five (45) calendar days following the effective date specified in the Notice to Proceed. Contractor shall commence work on site, including establishing a field office as defined by Special Provisions Section 202, beginning forty-five calendar days after the effective date of the Notice to Proceed. The first forty-five days of the performance period is given to provide lead time for materials procurement.

Subsection 108.2 - Subletting of Contract: Add the following:

For this project, Contractor shall perform, with its own organization, work amounting to 50 percent or more of the total contract cost.

Subsection 108.4 - Contractor's Construction Schedule: Delete in its entirety and replace with the following:

Contractor shall submit a proposed work schedule to Engineer at the pre-construction meeting for review before starting work using the Primavera or other similar software program that is acceptable to the Engineer. Weekly updates shall be submitted to Engineer at the weekly coordination meeting.

Contractor shall be solely responsible for the planning, scheduling and execution of the work to assure timely completion of the project.

Subsection 108.4.1 - Contractor's Billing Schedule: The Contractor shall furnish the Engineer an Estimated Billing Schedule which shall include the estimated amount of each billing for the total project at the preconstruction conference, and be updated thereafter at monthly intervals as agreed to between the Contractor and Engineer.

Subsection 108.5 - Limitation of Operations: Add the following:

Should Contractor elect to perform any work after regular working hours, on weekends, or legal holidays, with or without written approval of Engineer, any charges incurred by Owner for inspection of the work, surveys or tests of materials will be deducted from monies due or to become due to Contractor.

Subsection 108.9 - Failure to Complete on Time: Add the following:

The actual cost per calendar day incurred by the District for Administrative and Inspection Services on this project will be added to the daily charges as indicated by TABLE 108, LIQUIDATED DAMAGES, and will be deducted from monies due or to become due to the Contractor for each and every calendar day that work shall remain incomplete after the time specified for the completion of the work in the proposal, or as adjusted

by the Engineer. Nothing contained in this provision shall prohibit the Owner from deducting from monies due or to become due to the Contractor for any other costs incurred by the Owner directly attributable to the delay in completing this contract.

Subsection 109.2 – Scope of Payment: Add the following:
In addition to the contained provisions, the work under this section shall consist of preparatory work and operations, including but not limited to, the movement of personnel, equipment, supplies and incidentals to the project site; the establishment of all offices, buildings and other facilities necessary for work on the project, and for all other work operations that must be performed and costs incurred prior to beginning work on the various items on the project site.

The "complete-in-place" rate shall include but not necessarily be limited to all labor, material and equipment costs for preparation, installation, construction, modification, alteration or adjustment of the items, which shall include all costs for salaries and wages, all payroll additives to cover employee benefits, allowances for vacation and sick leave, company portion of employee insurance, social and retirement benefits, all payroll taxes, contributions and benefits imposed by any applicable law or regulation and any other direct or indirect payroll-related costs. The rate shall also include but not necessarily be limited to all costs for indirect charges or overhead, mileage, travel time, subsistence, materials, freight charges for material to Contractor's facility or project site, equipment rental, consumables, tools, insurance to the levels specified in Section 103.6, CONTRACTOR'S INSURANCE, all applicable taxes, as well as Contractor's fee and profit. This rate shall further include all site clean-up costs and hauling of construction debris to disposal sites designated by the Engineer.

Payment will be made for only those items listed in the proposal and will not be made in accordance with the measurement and payment provisions of the MAG Standard Specifications where this differs from the items listed in the proposal. All materials and work necessary for completion of this project are included in proposal items. Any work or materials not specifically referred to in these items are considered incidental to the item and are included in the unit price.

Payment shall not be made for unused materials.

It is the responsibility of the bidders to contact all municipalities in the area to determine if they will charge Contractor sales taxes or any other fees for work on this project. Any such taxes or fees shall be paid by Contractor.

Subsection 109.7 - Payment for Bond Issue and Budget Projects:

(A) To third paragraph, add:
Payment or release of retained funds shall be made to the Contractor within thirty (30) days following final payment to the Contractor [reference (B) following], and Contractor furnishing to Engineer satisfactory receipts for all labor and material billed and waivers of liens from any and all persons and Subcontractors holding claims against the work. Additionally, Contractor shall furnish a completed Certificate of Performance to Engineer evidencing it has satisfactorily discharged all its duties in connection with the work to be performed under this Contract. The form of Certificate of Performance shall be provided to Contractor by the Engineer.

(B) Delete second and third paragraphs and replace with the following:
The final payment will be made to Contractor by Owner within thirty (30) days following receipt of Engineer's final estimate and receipt by Owner of Consent of Contractor's Surety to said final payment. If payment will be longer than thirty (30) days as aforesaid, Owner will provide Contractor specific written findings for reasons justifying the delay in payment.

(C) The Contractor's monthly pay estimates will be initially processed by the Engineer during the last week of the month covered.

FLOOD CONTROL DISTRICT OF MARICOPA COUNTY

IN COOPERATION WITH MCDOT AND THE CITY OF PHOENIX

PLANS FOR THE CONSTRUCTION OF

43RD AVENUE STORM DRAIN, PHASE 1 & 2

BASELINE ROAD TO SALT RIVER

FCD PROJECT NO. 1170230

FCD CONTRACT NO. 99-04

N

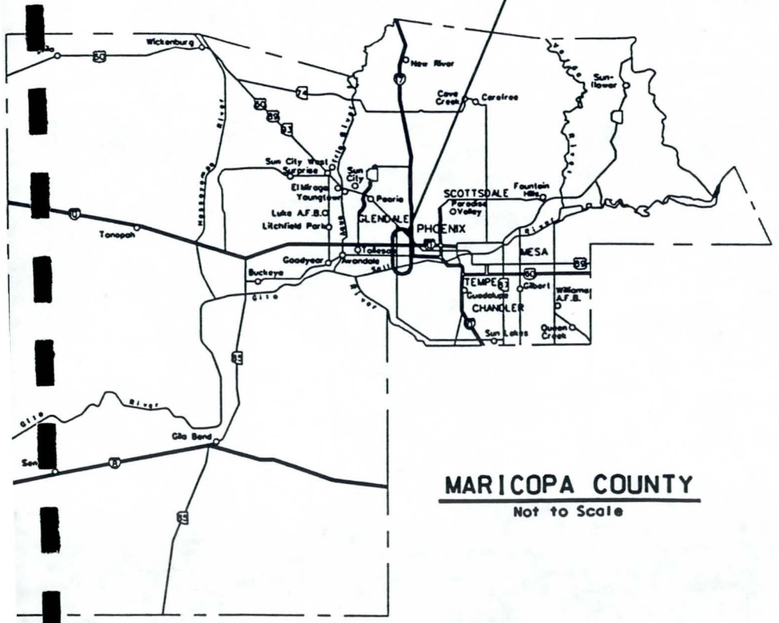

MARICOPA COUNTY

Not to Scale

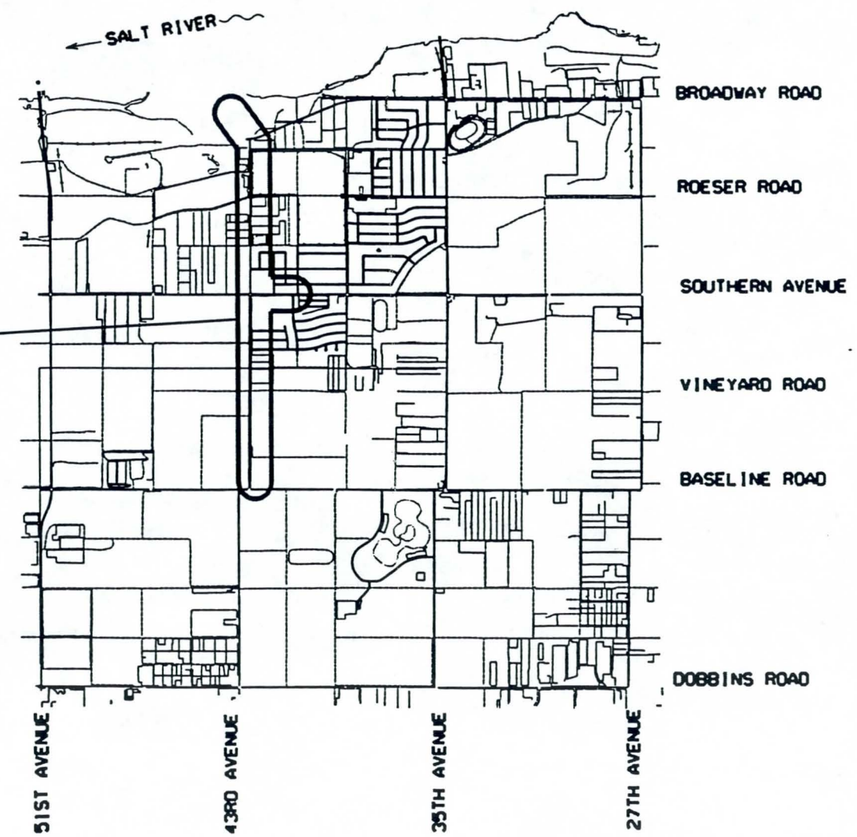

VICINITY MAP

Not to Scale

APPROVALS:

CITY OF PHOENIX DATE
STREET TRANSPORTATION DEPARTMENT

MCDOT DATE

FLOOD CONTROL DISTRICT OF MARICOPA COUNTY

ISSUED FOR PUBLIC BIDDING BY:

CHIEF ENGINEER AND
GENERAL MANAGER

BOARD OF DIRECTORS OF
THE FLOOD CONTROL DISTRICT

FULTON BROCK - CHAIRMAN

DISTRICT 1	FULTON BROCK
DISTRICT 2	DON STAPLEY
DISTRICT 3	ANDY KUNASEK
DISTRICT 4	JAN BREWER
DISTRICT 5	MARY ROSE WILCOX

Registered Professional Engineer (Civil)
CERTIFICATE NO.
15608
JEFFREY R.
RIDDLE
Date Signed
ARIZONA, U.S.A.

phase2\covcomb.dgn Apr. 28, 1999 12:55:03

QUANTITY SUMMARY
43RD AVENUE STORM DRAIN
BASELINE ROAD TO SALT RIVER

ITEM NO.	ITEM DESCRIPTION	UNIT	PHASE 1	PHASE 2	TOTAL QUANTITY
336-1	PAVEMENT REPLACEMENT (4" AC/8"ABC)	SY	0	13145	13145
336-2	PAVEMENT REPLACEMENT (4" AC/10"ABC)	SY	19251	0	19251
340-1	CURB AND GUTTER. MAG STD DET 220. TYPE A	LF	0	242	242
340-2	SIDEWALK. MAG STD DET 230	SF	0	902	902
345-1	ADJUST MANHOLE FRAME AND COVER	EA	4	9	13
345-2	ADJUST WATER VALVE BOX AND COVER. TYPE A	EA	4	1	5
350-1	REMOVAL OF EXISTING IMPROVEMENTS	LS	N/A	N/A	1
401-1	TRAFFIC CONTROL	LS	N/A	N/A	1
405-1	SURVEY MONUMENT. MAG STD DET 120-1. TYPE A	EA	2	1	3
405-2	SURVEY MONUMENT. MAG STD DET 120-1. TYPE B	EA	4	3	7
420-1	24' CHAIN LINK FENCE GATE	EA	1	0	1
505-1	SPECIAL JUNCTION STRUCTURE	EA	1	0	1
505-2	CONCRETE HEAD WALL	EA	1	0	1
505-3	CONCRETE BOX CULVERT. ADOT DET B-02.10	LF	90	0	90
505-4	CONCRETE CATCH BASIN. M-1.L=10	EA	2	0	2
505-5	CONCRETE CATCH BASIN. M-1.L=17	EA	2	0	2
505-6	CONCRETE CATCH BASIN. M-2. L=6	EA	4	1	5
505-7	CONCRETE CATCH BASIN. M-2. L=10	EA	5	1	6
505-8	CONCRETE CATCH BASIN. M-2. L=17	EA	2	7	9
505-9	CONCRETE CATCH BASIN. N-DOUBLE	EA	0	1	1
515-1	10'X5' FLAP GATE	EA	1	0	1
601-1	PERMANENT PIPE SUPPORT. MAG STD DET 403-3	EA	2	1	3
610-1	12 INCH DUCTILE IRON WATER PIPE AND FITTING	LF	66	22	88
610-2	REPLACE WATER SERVICE PIPE (CONTINGENT ITEM)	LF	N/A	N/A	60
610-3	RELOCATE WATER METER (CONTINGENT ITEM)	EA	N/A	N/A	1
618-1	114 INCH CLASS III RGRCP OR 621-1 114 INCH CLCMP.10 GAUGE	LF	1660	2760	4420
618-2	114 INCH CLASS IV RGRCP OR 621-1 114 INCH CLCMP. 10 GAUGE	LF	2482	200	2682
618-3	96 INCH CLASS III RGRCP OR 621-2 96 INCH CLCMP. 10 GAUGE	LF	0	60	60
618-4	84 INCH CLASS III RGRCP OR 621-3 84 INCH CLCMP. 10 GAUGE	LF	0	60	60
618-5	72 INCH CLASS III RGRCP OR 621-4 72 INCH CLCMP. 10 GAUGE	LF	0	720	720
618-6	72 INCH CLASS IV RGRCP OR 621-4 72 INCH CLCMP. 10 GAUGE	LF	0	200	200
618-7	66 INCH CLASS III RGRCP OR 621-5 66 INCH CLCMP. 12 GAUGE	LF	2193	0	2193
618-8	54 INCH CLASS III RGRCP OR 621-6 54 INCH CLCMP. 14 GAUGE	LF	73	0	73
618-9	BORE AND JACK 114 INCH PIPE	LF	170	0	170
618-10	PIPE PLUG. MAG STD DET 427. 72 INCH	EA	0	2	2
618-11	PIPE PLUG. MAG STD DET 427. 66 INCH	EA	2	0	2
618-12	PIPE PLUG. MAG STD DET 427. 54 INCH	EA	1	0	1
618-13	PIPE PLUG. MAG STD DET 427. 24 INCH	EA	0	2	2
618-14	15 INCH CONNECTOR PIPE. CLASS III	LF	78	0	78
618-15	15 INCH CONNECTOR PIPE. CLASS IV	LF	0	188	188
618-16	18 INCH CONNECTOR PIPE. CLASS III	LF	10	0	10
618-17	18 INCH CONNECTOR PIPE. CLASS IV	LF	0	126	126
618-18	24 INCH CONNECTOR PIPE. CLASS III	LF	103	0	103
618-19	24 INCH CONNECTOR PIPE. CLASS IV	LF	0	264	264
618-20	24 INCH CONNECTOR PIPE. CLASS V	LF	0	64	64
618-21	30 INCH CONNECTOR PIPE. CLASS III	LF	20	0	20
618-22	30 INCH CONNECTOR PIPE. CLASS IV	LF	0	62	62
618-23	30 INCH CONNECTOR PIPE. CLASS V	LF	59	0	59
618-24	72 INCH CONNECTOR PIPE. CLASS IV	LF	0	64	64
618-25	72 INCH TO 84 INCH PIPE TRANSITION	EA	0	1	1
618-26	84 INCH TO 96 INCH PIPE TRANSITION	EA	0	1	1
618-27	96 INCH TO 114 INCH PIPE TRANSITION	EA	0	1	1
618-28	PREFAB TEE. 114 INCH X 15 INCH	EA	0	1	1
618-29	PREFAB TEE. 114 INCH X 18 INCH	EA	0	1	1
618-30	PREFAB TEE. 114 INCH X 24 INCH	EA	0	4	4
618-31	PREFAB TANGENT TEE. 114 INCH X 24 INCH	EA	0	1	1
618-32	PREFAB TEE. 114 INCH X 30 INCH	EA	0	1	1
618-33	114 INCH X 30 INCH PREFAB TANGENT TEE WITH TRASH RACK	EA	1	0	1
618-34	PREFAB TEE. 114 INCH X 66 INCH	EA	1	0	1
618-35	PREFAB TANGENT TEE. 114 INCH X 72 INCH	EA	0	1	1
618-36	66 INCH X 15 INCH TEE	EA	6	0	6
618-37	66 INCH X 18 INCH TEE	EA	2	0	2
618-38	66 INCH X 24 INCH TEE	EA	4	0	4
618-39	66 INCH X 30 INCH TEE	EA	1	0	1
618-40	CONCRETE PIPE COLLAR. MAG STD DET 505 (24 INCH AND LARGER)	EA	0	1	1
618-41	PREFAB 30 DEGREES BEND. 114 INCH PIPE	EA	2	0	2
618-42	PREFAB 45 DEGREES BEND. 114 INCH PIPE	EA	1	0	1
618-43	PUMP STATION AND CONTROLS	EA	1	0	1
621-7	STORM DRAIN HYDROSTATIC TEST (CONTINGENT ITEM)	EA	N/A	N/A	1
625-1	STORM DRAIN MANHOLE. MAG STD DET 521. 522. & 523	EA	7	1	8
625-2	STORM DRAIN MANHOLE. MAG STD DET 522. 523 & DETAIL A	EA	4	4	8

NO.	REVISION	BY	DATE
3			
2			
1			

FLOOD CONTROL DISTRICT OF MARICOPA COUNTY
ENGINEERING DIVISION

43RD AVENUE STORM DRAIN
BASELINE ROAD TO SALT RIVER
FCD PROJECT NO. 1170230

	BY	DATE
DESIGNED	JRR	02/02/99
DRAWN	MMM	02/02/99
CHECKED	MAL	04/10/99

Registered Professional Engineer (Civil) CERTIFICATE NO. 15608 JEFFREY R. RIDDLE Date Signed 04/10/99 Arizona, U.S.A.

SUMMARY QUANTITY SHEET

SHEET 2 OF 2

FLOOD CONTROL DISTRICT OF MARICOPA COUNTY

IN COOPERATION WITH MCDOT AND THE CITY OF PHOENIX

PLANS FOR THE CONSTRUCTION OF

43RD AVENUE STORM DRAIN, PHASE I

SOUTHERN AVENUE TO SALT RIVER

FCD PROJECT NO. 1170230

FCD CONTRACT NO. 99-04

N

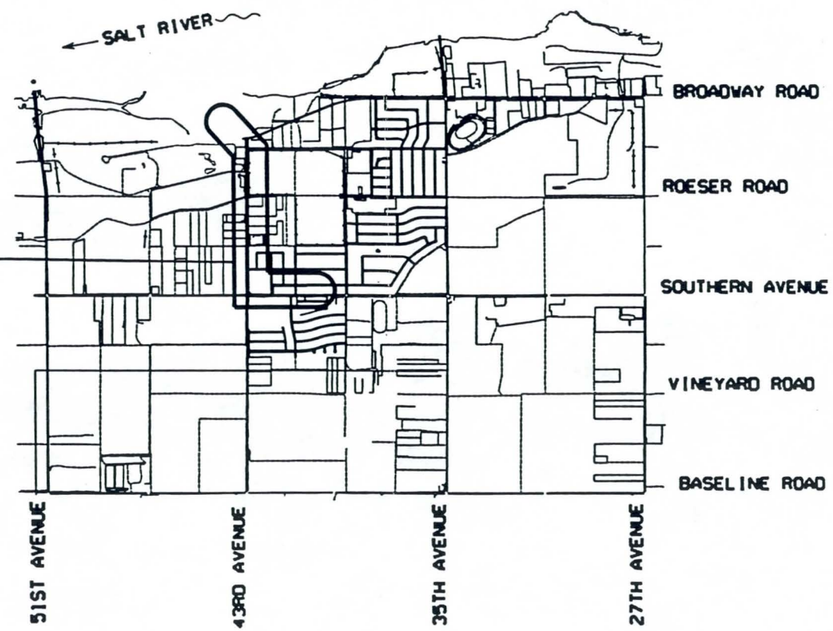

VICINITY MAP

Not to Scale

PROJECT LOCATION

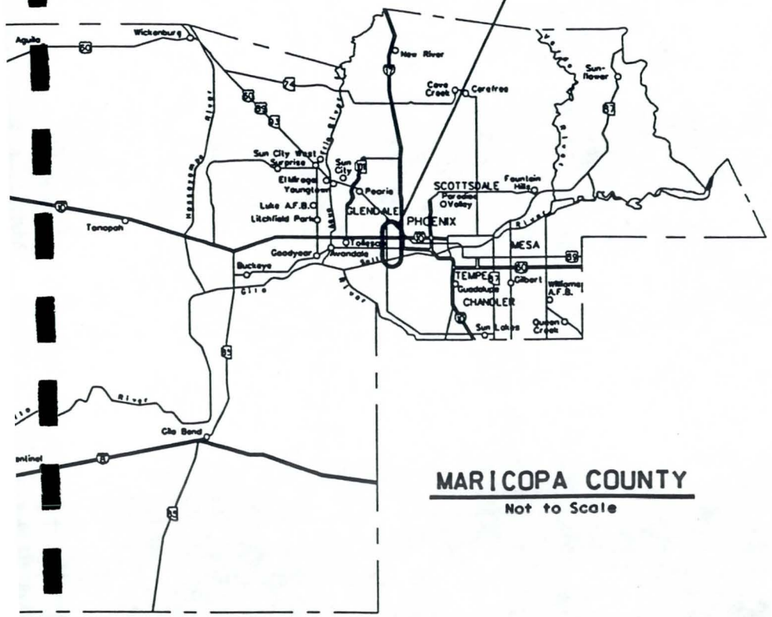

MARICOPA COUNTY

Not to Scale

FLOOD CONTROL DISTRICT OF MARICOPA COUNTY	
ISSUED FOR PUBLIC BIDDING BY:	
CHIEF ENGINEER AND GENERAL MANAGER	
BOARD OF DIRECTORS OF THE FLOOD CONTROL DISTRICT	
FULTON BROCK - CHAIRMAN	
DISTRICT 1	FULTON BROCK
DISTRICT 2	DON STAPLEY
DISTRICT 3	ANDY KUNASEK
DISTRICT 4	JAN BREWER
DISTRICT 5	MARY ROSE WILCOX

Registered Professional Engineer (Civil) CERTIFICATE NO. 15608 JEFFREY R. RIDDLE Date Signed ____ ARIZONA, U.S.A.

\phase1\43P1COV.DGN May. 03, 1999 12:53:24

LEGEND

- BENCHMARK
- EXIST. SURVEY MONUMENT - BC FLUSH
- EXIST. SURVEY MONUMENT - BC IN HH
- EXIST. & PROPOSED COMBINED CURB & GUTTER - MAG DET. 220 TYPE "A"
- EXIST. CONCRETE SIDEWALK - COP STD. DET. P-1230
- EXISTING DITCH
- IRR — EXISTING IRRIGATION LINE (NOTE - PRIVATE, SALT RIVER OR R.I.D.)
- EXISTING IRRIGATION STRUCTURE
- EXISTING IRRIGATION STANDPIPE
- 12" W — EXISTING WATER LINE / SIZE
- EXISTING WATER METER & BOX
- EXISTING FIRE HYDRANT
- NEW OR RELOCATED FIRE HYDRANT BY CONTRACTOR
- EXISTING WATER VALVE OPERATING NUT ELEVATION
- 24" S — EXISTING SEWER LINE / SIZE
- EXISTING MANHOLE
- NEW MANHOLE
- CATCH BASIN, GUTTER INLET (LENGTH TO SCALE)
- CATCH BASIN, CURB INLET (LENGTH TO SCALE)
- CATCH BASIN, CURB & GUTTER INLET (LENGTH TO SCALE)
- 78" SD — EXISTING STORM DRAIN / SIZE
- NEW PIPE FOR STORM DRAIN OR IRRIGATION LINE
- CATV — EXISTING UNDERGROUND CABLE TELEVISION
- UGE — EXISTING UNDERGROUND ELECTRIC
- 4D — EXISTING UNDERGROUND TELEPHONE DUCTS (SPECIFY NUMBER)
- 2" G — EXISTING GAS LINE / SIZE
- UGT — EXISTING UNDERGROUND TELEPHONE CABLE
- EXISTING STREET SIGN
- EXISTING TRAFFIC SIGN
- PP — EXISTING UTILITY POLE
- EXISTING WIRE FENCE
- EXISTING WOOD FENCE
- EXISTING CHAIN LINK FENCE
- MAIL BOX
- DOWN ANCHOR
- STREET LIGHT
- EASEMENT LINE
- EXISTING OR NEW R/W LINE
- PAVEMENT CENTER LINE AND OR MOUNUMENT LINE (℄ AND / OR ⅊)
- 2 — BORING HOLE / NUMBER (SEE SPECIAL PROVISIONS)
- TELEPHONE RISER
- WSB — WATER SERVICE BOX
- MST — MID SPAN TAP (OH UTILITIES)
- WV — WATER VALVE
- D — STORM MANHOLE
- T — TRAFFIC SIGNAL BOX
- TREE
- STOP — STOP SIGN
- P — MAILBOX
- GATE W/POSTS
- SM — SAWCUT & MATCH

ABREVIATIONS

CSTR	CONSTRUCTION
DESC	DESCRIPTION
EQ	EQUAL
FOC	FIBRE OPTIC CABLE
G	GUTTER ELEVATION
OHE	OVERHEAD ELECTRIC
P	PAVEMENT ELEVATION
PG	PAGE
P/L	PROPERTY LINE
PRV	PRIVATE
SPG	SPACING
UGT	UNDERGROUND TELE CABLE
TBM	TEMPORARY BENCHMARK
TC	TOP OF CURB ELEVATION
TW	TOP OF WALL

STRUCTURAL NOTES:

1. ALL CONSTRUCTION SHALL CONFORM TO MAG STANDARD DETAILS, AND SPECIFICATIONS, DATED 1998, INCLUDING ALL REVISIONS THRU 1998.
2. DESIGN IS IN ACCORDANCE WITH AASHTO STANDARD SPECIFICATIONS FOR HIGHWAY BRIDGES, DIVISION 1, 16TH EDITION, 1996.
3. REINFORCING STEEL SHALL CONFORM TO ASTM SPECIFICATION A615, GRADE 60.
4. STRESSES - fs = 24,000 PSI - GRADE 60 REINFORCING STEEL.
5. ALL REINFORCING STEEL PLACEMENT DIMENSIONS SHALL BE TO CENTER OF BARS UNLESS OTHERWISE NOTED.
6. ALL REINFORCING STEEL SHALL HAVE 2" CLEAR COVER UNLESS OTHERWISE NOTED.
7. STRUCTURAL STEEL SHALL CONFORM TO ASTM SPECIFICATION A36.
8. ALL WELDING SHALL CONFORM TO THE REQUIREMENTS OF THE AMERICAN WELDING SOCIETY, STRUCTURAL WELDING CODE, REVISED 1996.
9. DIMENSIONS SHALL NOT BE SCALED FROM DRAWINGS.
10. CHAMFER ALL EXPOSED CORNERS 3/4" UNLESS OTHERWISE NOTED.
11. CONCRETE COMPRESSIVE STRENGTH SHALL BE 3,000 PSI MAG. CLASS A.

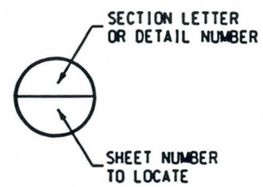

INDEX OF SHEETS

SHEET NO.	TITLE
1	COVER SHEET, & VICINITY MAP
2	GENERAL NOTES & INDEX OF SHEETS
3	QUANTITY SUMMARY
4	KEY MAP
5	TYPICAL SECTION
6-18	PLAN & PROFILE
19	STORM DRAIN MANHOLE BASE, DETAIL A
20	JUNCTION STRUCTURE DETAIL
21-24	CONNECTOR PIPE PROFILES
25	ALTERNATE PIPE CHART
26-30	PUMP STATION PLANS

UTILITY NOTIFICATION

COMPANY	CONTACT NAME	PHONE NUMBER
CITY OF PHOENIX (WATER)	GERALD ARAKAKI	261-8229
CITY OF PHOENIX (SEWER)	GERALD ARAKAKI	261-8229
SOUTHWEST GAS	ROBERT SPRAGUE	484-5343
SRP (POWER)	WILLIAM G. PHILLIPS	236-8092
SRP (IRRIGATION)	ROBERT MAURER	236-2962
U.S. WEST	ROBERT FRIESS	630-5473

GENERAL NOTES:

1. ALL CONSTRUCTION TO BE PERFORMED ACCORDING TO APPLICABLE MAG STANDARD DETAILS AND MAG SPECIFICATIONS, DATED 1998 , INCLUDING ALL REVISIONS THROUGH 1998 AND THE CITY OF PHOENIX ADDITIONS AND DELETIONS THROUGH 1996.
2. FACILITIES WHICH ARE NOT SPECIFICALLY LOCATED WITH ACTUAL HORIZONTAL AND VERTICAL CONTROLS ARE APPROXIMATE AND TO THE BEST AVAILABLE INFORMATION.
3. EXISTING UTILITIES AND OTHER FACILITIES HAVE BEEN PLACED ON THE PLANS FROM FIELD SURVEYS, EXISTING MAPS AND OTHER CURRENT PLANS WITHIN THE AREA OF THIS PROJECT. THE CONTRACTOR WILL DETERMINE THE EXACT LOCATION AND/OR ELEVATION OF EXISTING UTILITIES WHICH PERTAIN TO AND AFFECT THE CONSTRUCTION OF THIS PROJECT.
4. TWO (2) WORKING DAYS PRIOR TO EXCAVATING, THE CONTRACTOR SHALL CALL FOR BLUE STAKES AT THE BLUE STAKE CENTER (PHONE: 602-263-1100).
5. THE CONTRACTOR SHALL OBTAIN ALL NECESSARY PERMITS PRIOR TO CONSTRUCTION.
6. THE FLOOD CONTROL DISTRICT OR CITY OF PHOENIX IS NOT RESPONSIBLE FOR LIABILITY ACCRUED DUE TO DELAYS AND/OR DAMAGE TO UTILITIES IN CONJUNCTION WITH THIS CONSTRUCTION.
7. ANY WORK PERFORMED WITHOUT THE APPROVAL OF THE FLOOD CONTROL DISTRICT AND/OR THE ENGINEER AND ALL WORK AND MATERIALS NOT IN CONFORMANCE WITH THE SPECIFICATIONS IS SUBJECT TO REMOVAL AND REPLACEMENT AT THE CONTRACTOR'S EXPENSE.
8. THE ENGINEER WILL DETERMINE THE NUMBER AND LOCATION OF THE REQUIRED COMPACTION TESTS FOR STRUCTURE BACKFILL.
9. TRAFFIC CONTROL SHALL BE MAINTAINED IN ACCORDANCE WITH M.A.G. SPECIFICATION 401, PART VI OF THE MANUAL ON UNIFORM TRAFFIC CONTROL DEVICES (1988 EDITION INCLUDING REVISION 3 DATED SEPTEMBER 3, 1993).
10. EXACT POINT OF MATCHING TERMINATION AND OVERLAY WILL BE DETERMINED IN THE FIELD BY THE ENGINEER.
11. NO JOB WILL BE CONSIDERED COMPLETED UNTIL CURBS, PAVEMENT AND SIDEWALKS HAVE BEEN SWEPT CLEAN OF ALL DIRT AND DEBRIS.
12. PRIOR TO FINAL APPROVAL AND ACCEPTANCE OF THE WORK, THE CONTRACTOR WILL BE REQUIRED TO CLEAN ADJACENT (OFF-PROJECT) ROADWAYS USED DURING THE COURSE OF CONSTRUCTION.

43RD AVENUE DESIGN Q = 294 CFS
HUNTINGTON DRIVE Q = 100 CFS

PROJECT BENCHMARKS: (CITY OF PHOENIX DATUM)

43RD AVE & ROESER RD
FD MCHD BC IN HH
STA 89+01.07
EL 1026.51

43RD AVE & SOUTHERN AVE
FD MCHD BC IN HANDHOLE
STA 62+52.44
EL 1020.84

NO.	REVISION	BY	DATE
3			
2			
1			

FLOOD CONTROL DISTRICT OF MARICOPA COUNTY
ENGINEERING DIVISION

43RD AVENUE STORM DRAIN
SOUTHERN AVENUE TO SALT RIVER
FCD PROJECT NO. 1170230

	BY	DATE
DESIGNED	JRR	01/27/99
DRAWN	FC	01/27/99
CHECKED	MAL	03/11/99

Registered Professional Engineer (Civil) CERTIFICATE 15608 JEFFREY R. RIDDLE Date Signed ARIZONA, U.S.A.

GENERAL NOTES

SHEET 2 OF 30

QUANTITY SUMMARY
43RD AVENUE STORM DRAIN
SOUTHERN AVENUE TO SALT RIVER

ITEM NO.	ITEM DESCRIPTION	UNIT	SHEET NUMBERS 6	7	8	9	10	11	12	13	14	16	17	18	TOTAL QUANTITY
336-2	PAVEMENT REPLACEMENT(4" AC/10"ABC)	SY	797	1669	1556	1556	1942	1556	2342	2588	2970	1010	681	584	19251
3[redacted]-1	ADJUST MANHOLE FRAME AND COVER. MAG DET 422	EA	0	0	0	0	0	0	0	0	4	0	0	0	4
3[redacted]-2	ADJUST WATER VALVE BOX AND COVER. TYPE A	EA	1	0	0	0	1	0	0	0	2	0	0	0	4
350-1	REMOVAL OF EXISTING IMPROVEMENTS	LS	N/A	N/A	N/A	N/A	N/A	N/A	N/A	N/A	N/A	N/A	N/A	N/A	1
401-1	TRAFFIC CONTROL	LS	N/A	N/A	N/A	N/A	N/A	N/A	N/A	N/A	N/A	N/A	N/A	N/A	1
4[redacted]-1	SURVEY MONUMENT. MAG DET 120-1. TYPE A	EA	0	0	0	0	0	1	0	0	1	0	0	0	2
4[redacted]-2	SURVEY MONUMENT. MAG DET 120-1. TYPE B	EA	0	1	0	0	0	0	0	0	2	0	1	0	4
420-1	24' CHAIN LINK FENCE GATE	EA	0	0	0	0	0	0	0	0	1	0	0	0	1
505-1	SPECIAL JUNCTION STRUCTURE	EA	0	0	0	0	0	0	0	0	1	0	0	0	1
5[redacted]-2	CONCRETE HEADWALL	EA	0	0	0	0	0	0	0	0	1	0	0	0	1
5[redacted]-3	CONCRETE BOX CULVERT (10'X5'). ADOT DET B 02.10	LF	0	0	0	0	0	0	0	0	90	0	0	0	90
505-4	CONCRETE CATCH BASIN. M-1. L=10	EA	0	0	0	0	0	0	0	0	0	1	1	0	2
5[redacted]-5	CONCRETE CATCH BASIN. M-1. L=17	EA	0	0	0	0	0	0	0	0	0	2	0	0	2
5[redacted]-6	CONCRETE CATCH BASIN. M-2. L=6	EA	0	0	0	0	0	0	0	0	0	0	3	1	4
5[redacted]-7	CONCRETE CATCH BASIN. M-2. L=10	EA	0	0	0	0	0	0	0	0	0	1	1	3	5
505-8	CONCRETE CATCH BASIN. M-2. L=17	EA	0	0	0	0	0	0	0	0	0	0	2	0	2
51[redacted]-1	10'x5' FLAP GATE	EA	0	0	0	0	0	0	0	0	1	0	0	0	1
60[redacted]-1	PERMANENT PIPE SUPPORTS. MAG DET 403-3	EA	0	0	0	0	0	0	0	0	2	0	0	0	2
61[redacted]-1	12 INCH DUCTILE IRON WATER PIPE AND FITTINGS	LF	0	0	0	0	0	0	0	0	0	66	0	0	66
618-1	114 INCH CLASS III RGRCP OR 621-1 114 INCH CLCMP. 10 GAUGE	LF	160	500	500	500	0	0	0	0	0	0	0	0	1660
618-2	114 INCH CLASS IV RGRCP OR 621-1 114 INCH CLCMP. 10 GAUGE	LF	30	0	0	0	500	500	500	500	452	0	0	0	2482
61[redacted]-7	66 INCH CLASS III RGRCP OR 621-5 66 INCH CLCMP. 12 GAUGE	LF	0	0	0	0	0	0	0	0	0	940	753	500	2193
61[redacted]-8	54 INCH CLASS III RGRCP OR 621-6 54 INCH CLCMP. 14 GAUGE	LF	0	0	0	0	0	0	0	0	0	0	73	0	73
618-9	BORE & JACK. 114 INCH PIPE	LF	110	0	0	0	0	0	0	0	60	0	0	0	170
61[redacted]-11	INSTALL PIPE PLUG. MAG DET 427. 66 INCH	EA	0	0	0	0	0	0	0	0	0	1	0	1	2
61[redacted]-12	INSTALL PIPE PLUG. MAG DET 427. 54 INCH	EA	0	0	0	0	0	0	0	0	0	0	1	0	1
61[redacted]-14	15 INCH CONNECTOR PIPE.CLASS III	LF	0	0	0	0	0	0	0	0	0	5	73	0	78
618-16	18 INCH CONNECTOR PIPE.CLASS III	LF	0	0	0	0	0	0	0	0	0	0	0	10	10
61[redacted]-18	24 INCH CONNECTOR PIPE.CLASS III	LF	0	0	0	0	0	0	0	0	0	25	36	42	103
61[redacted]-21	30 INCH CONNECTOR PIPE.CLASS III	LF	0	0	0	0	0	0	0	0	0	20	0	0	20
61[redacted]-23	30 INCH CONNECTOR PIPE.CLASS V	LF	0	0	0	0	0	0	0	0	59	0	0	0	59
618-33	PREFAB TANGENTIAL TEE (114 INCH X 30 INCH). WITH TRASH RACK	EA	0	0	0	0	0	0	0	0	1	0	0	0	1
61[redacted]-34	PREFAB TEE (114 INCH X 66 INCH)	EA	1	0	0	0	0	0	0	0	1	0	0	0	2
61[redacted]-36	PREFAB TEE (66 INCH X 15 INCH)	EA	0	0	0	0	0	0	0	0	0	1	5	0	6
61[redacted]-37	PREFAB TEE (66 INCH X 18 INCH)	EA	0	0	0	0	0	0	0	0	0	0	0	2	2
618-38	PREFAB TEE (66 INCH X 24 INCH)	EA	0	0	0	0	0	0	0	0	0	2	0	2	4
61[redacted]-39	PREFAB TEE (66 INCH X 30 INCH)	EA	0	0	0	0	0	0	0	0	0	1	0	0	1
61[redacted]-41	PREFAB 30 DEGREE BEND (114 INCH PIPE)	EA	2	0	0	0	0	0	0	0	0	0	0	0	2
618-42	PREFAB 45 DEGREE BEND (114 INCH PIPE)	EA	0	0	0	0	0	0	0	0	1	0	0	0	1
618-43	PUMP STATION AND CONTROLS	EA	0	0	0	0	0	0	0	0	1	0	0	0	1
525-1	STORM DRAIN MANHOLE. MAG DET 521. 522.& 523	EA	0	0	0	0	0	0	0	0	0	3	3	1	7
525-2	STORM DRAIN MANHOLE. MAG DET 522 .523.& DETAIL A	EA	0	0	1	0	1	0	1	0	1	0	0	0	4

CATCH BASIN REINFORCING NOTES

T = 6" IF V = 4' OR LESS
REINFORCE WITH #4@12" EACH WAY
CENTERED ON THE WALLS & BASE SLAB

T = 8" IF V = 4' TO 8'
REINFORCE WITH #4@12" EACH WAY
CENTERED ON THE WALLS & BASE SLAB

T = 10" IF V = 8' TO 12'
REINFORCE WITH #4@12" EACH WAY WITH
2" CLEARANCE FROM THE INSIDE
FACE OF WALLS & BASE SLAB

NO.	REVISION	BY	DATE
3			
2			
1			

FLOOD CONTROL DISTRICT OF MARICOPA COUNTY
ENGINEERING DIVISION

43RD AVENUE STORM DRAIN
SOUTHERN AVENUE TO SALT RIVER
FCD PROJECT NO. 1170230

	BY	DATE
DESIGNED	JRR	02/09/99
DRAWN	FC	02/09/99
CHECKED	MAL	03/11/99

Registered Professional Engineer (Civil) CERTIFICATE NO. 13608 JEFFREY R. RIDDLE Date Signed ARIZONA, U.S.A.

QUANTITY SUMMARY

SHEET 3 OF 30

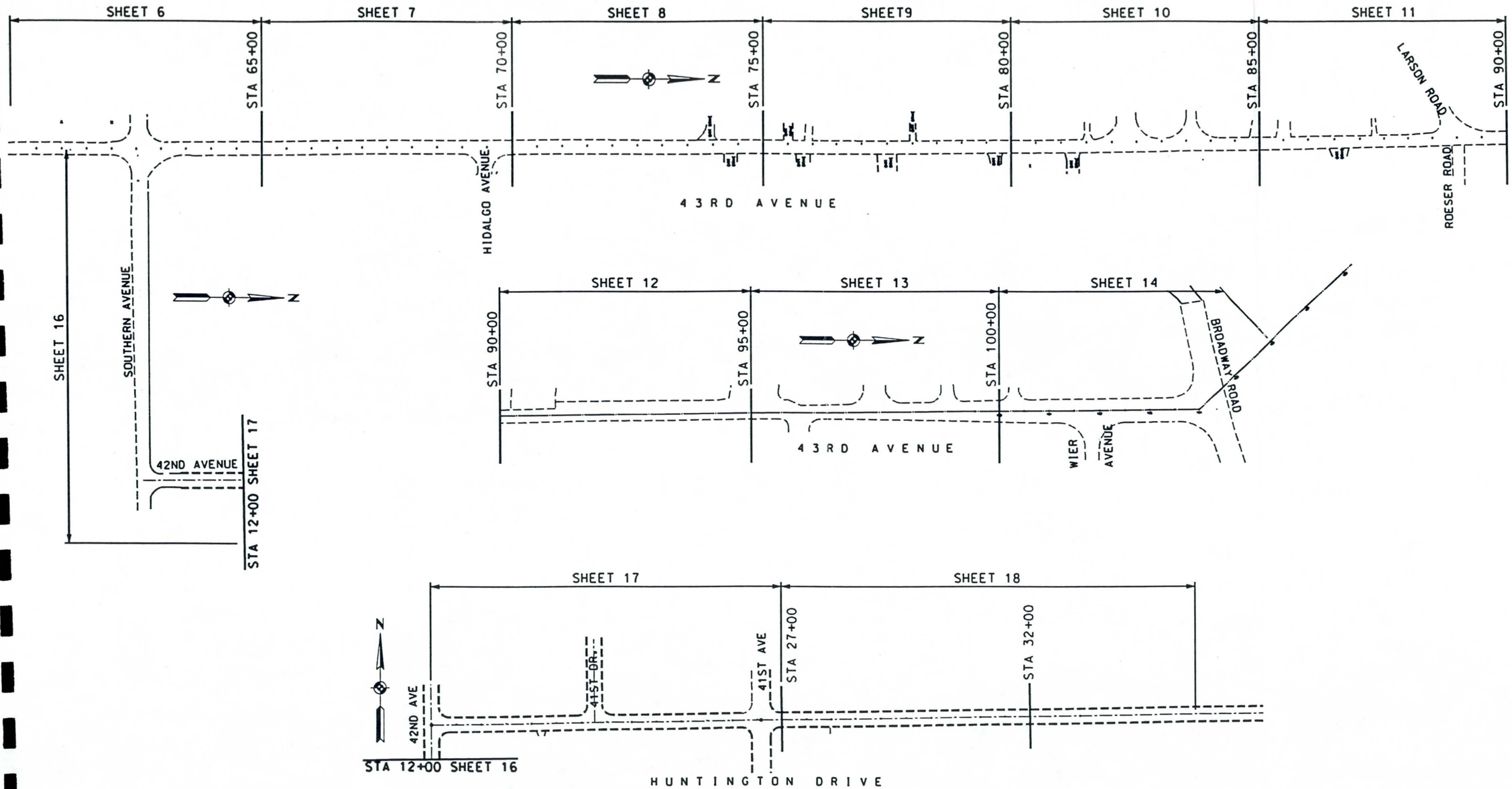

KEY MAP

TWO WORKING DAYS BEFORE YOU DIG CALL 263-1100 BLUE STAKE

NO.	REVISION	BY	DATE
3			
2			
1			

FLOOD CONTROL DISTRICT OF MARICOPA COUNTY
ENGINEERING DIVISION

43RD AVENUE STORM DRAIN
SOUTHERN AVENUE TO SALT RIVER
FCD PROJECT NO. 1170230

	BY	DATE
DESIGNED	JRR	01/11/98
DRAWN	FC	01/11/98
CHECKED	MAL	03/11/99

KEY MAP

SHEET 4 OF 30

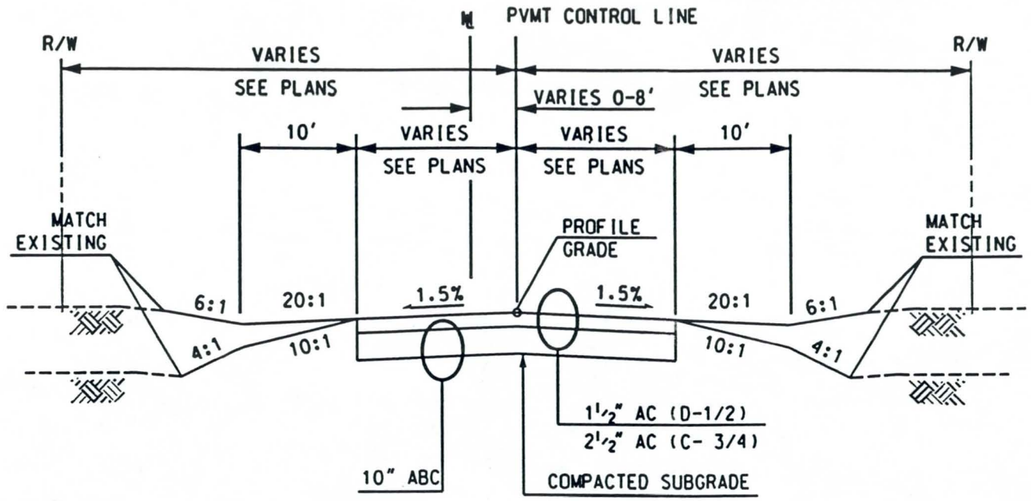

TYPICAL SECTION

STA 70+00 TO STA 91+00
43RD AVENUE

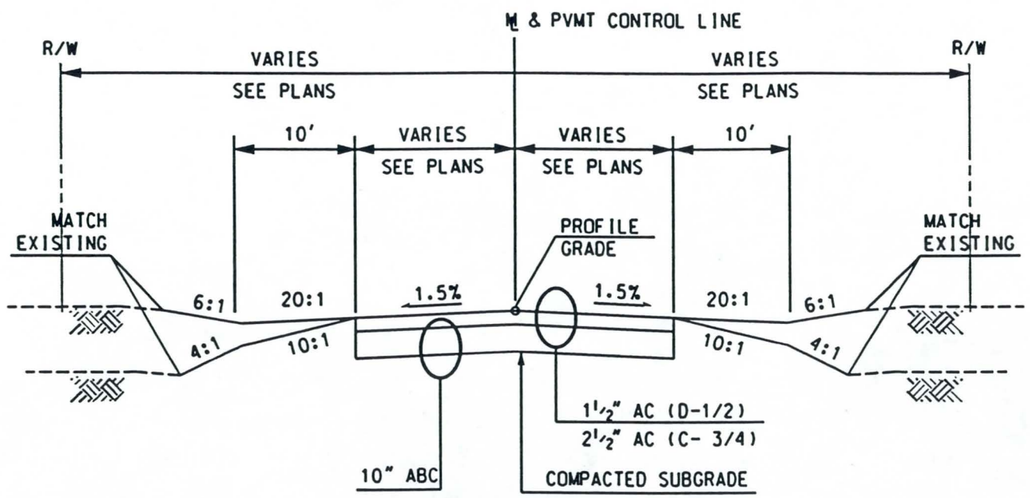

TYPICAL SECTION

STA 62+70 TO STA 70+00
STA 91+00 TO 104+60
43RD AVENUE

PAVEMENT GENERAL NOTES:

1. ALL CONSTRUCTION SHALL CONFORM TO THE 1998 EDITION MARICOPA COUNTY DEPARTMENT OF TRANSPORTATION (MCDOT) ROADWAY DESIGN MANUAL AND MAG SPECIFICATIONS AND MARICOPA COUNTY SPECIAL PROVISIONS FOR CONSTRUCTION OF STREET IMPROVEMENTS. ADOPT 11/03/1993.
2. CONTRACTOR TO OBTAIN NECESSARY MCDOT PERMITS PRIOR TO CONSTRUCTION WITHIN COUNTY RIGHT-OF-WAY.
3. CONTRACTOR SHALL NOTIFY MCDOT AT LEAST 24 HOURS IN ADVANCE OF ANY CONSTRUCTION.
4. CONTRACTOR PERFORMING EXCAVATING OPERATIONS IS RESPONSIBLE FOR LOCATING AND PROTECTING ALL UNDERGROUND UTILITIES.
5. ALL COMPACTION AND BACKFILL WITHIN COUNTY RIGHT-OF-WAY SHALL CONFORM TO THE SPECIAL PROVISIONS FOR CONSTRUCTION OF STREET IMPROVMENTS AND INSTALLATION OF UNDERGROUND UTILITIES. ADOPTED 11/03/1993.
6. ALL STRUCTURES, SUCH AS MANHOLES, VALVE BOX & COVERS, AND MONITORING WELLS MUST BE MARKED WITH AT LEAST TWO REFLECTORIZED YELLOW FLEX POST WHEN STRUCTURES ARE LOCATED OUTSIDE THE TRAVELED WAY AND WITHIN THE RIGHT-OF-WAY. (" APPLIES ONLY WHEN THERE IS NO CURB.")
7. ALL EXISTING PAVEMENT MARKING, TRAFFIC SIGNS AND SIGNAL EQUIPMENT THAT NEED TO BE REMOVED, REPLACED, RELOCATED OR REPAIRED BECAUSE OF CONTRACTOR'S WORK, WILL BE DONE BY THE CONTRACTOR AT HIS EXPENSE. ALL TRAFFIC SIGNS THAT ARE REMOVED SHALL BE STOCKPILED ON THE PROJECT SITE AND THE CONTRACTOR IS TO NOTIFY THE INSPECTOR WHEN ALL SIGNS HAVE BEEN REMOVED. ALL COUNTY SIGNS WILL BE INSTALLED BY MCDOT CREWS. ALL NEW STREET NAME SIGNS SHALL BE PROVIDED AND INSTALLED BY PERMITTEE.
8. PAVEMENT MARKING, SIGNING AND SIGNAL WORK WILL BE INSPECTED AND WILL HAVE TO MEET COUNTY STANDARDS BEFORE RELEASE OF BOND.

NO.	REVISION	BY	DATE
3			
2			
1			

FLOOD CONTROL DISTRICT OF MARICOPA COUNTY
ENGINEERING DIVISION

43RD AVENUE STORM DRAIN
SOUTHERN AVENUE TO SALT RIVER
FCD PROJECT NO. 1170230

	BY	DATE
DESIGNED	JRR	03/04/99
DRAWN	FC	03/04/99
CHECKED	MAL	03/12/99

Registered Professional Engineer (Civil) CERTIFICATE NO. 13608 JEFFREY R. RIDDLE Date Signed ARIZONA, U.S.A.

TYPICAL SECTION & PAVEMENT GENERAL NOTES

SHEET 5 OF 30

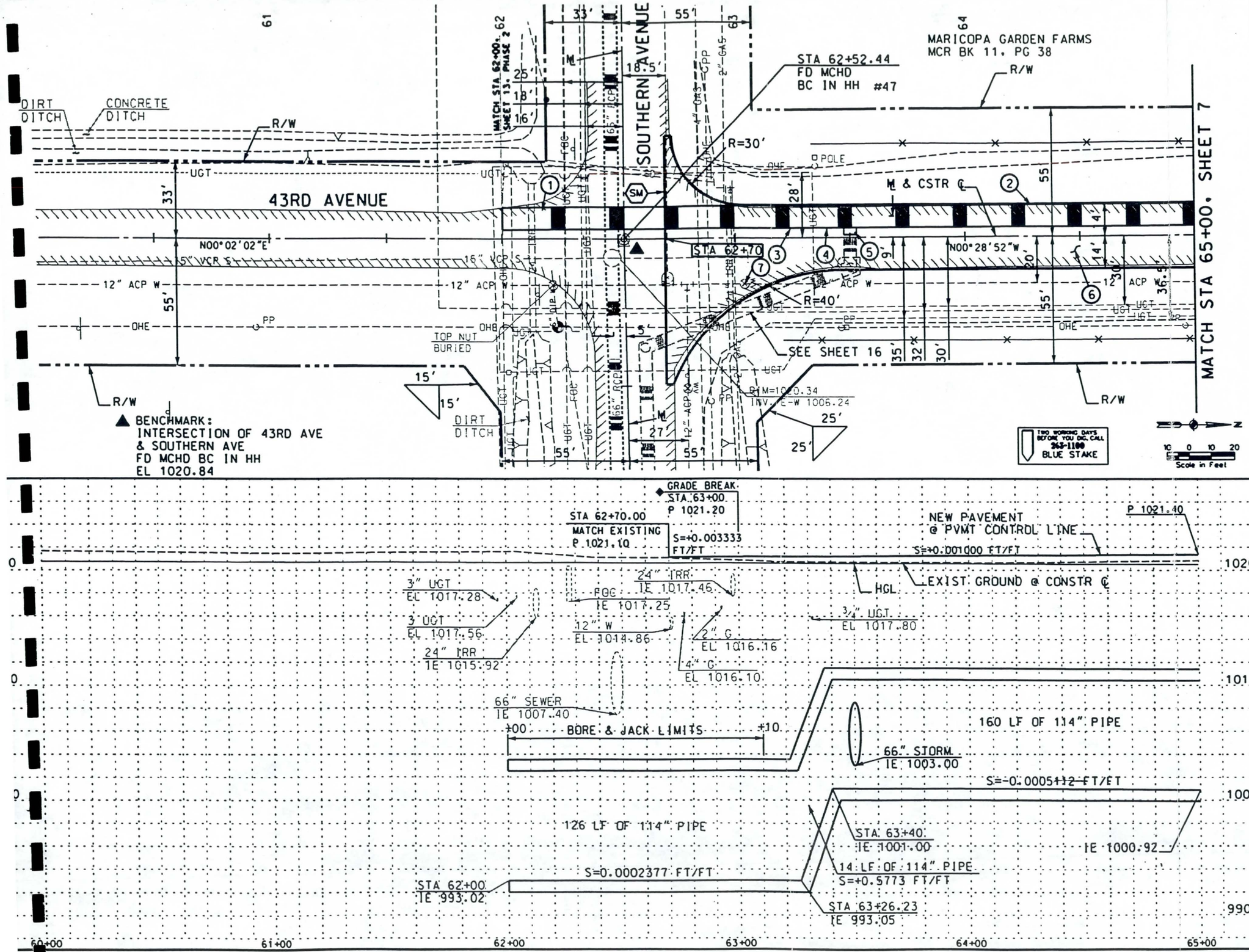

☐ REMOVE

○ CONSTRUCT ○

INSTALL NEW STORM DRAIN PIPE

NO.	STATION TO STATION	DIAMETER INCHES	LENGTH FEET
1	* 62+00 TO 63+10	114	110
2	63+10 TO 65+00	114	190

INSTALL PREFABRICATED BEND

NO.	STATION	DIAMETER INCHES	DEGREE BEND
3	63+26.23	114	30
4	63+40	114	30

INSTALL PREFABRICATED TEE

NO.	STATION TO STATION	TEE SIZE
5	63+50	114"x66"

PAVEMENT REPLACEMENT

NO.	STA TO STA	UNIT	QUANTITY
6	62+70 TO 65+00	SY	797

7 ADJUST WATER VALVE PER MAG DET 391-1, TYPE "A" — 1 EACH

* BORE AND JACK PIPE.

NO.	REVISION	BY	DATE

FLOOD CONTROL DISTRICT OF MARICOPA COUNTY
ENGINEERING DIVISION

43RD AVENUE STORM DRAIN
SOUTHERN AVENUE TO SALT RIVER
FCD PROJECT NO. 1170230

	BY	DATE
DESIGNED	JRR	03/04/99
DRAWN	FC	03/04/99
CHECKED	MAL	03/12/99

Registered Professional Engineer (Civil) CERTIFICATE NO. 15808 JEFFREY R. RIDDLE Date Signed ARIZONA, U.S.A.

PLAN AND PROFILE
STA 60+00.00 TO 65+00.00

SHEET 6 OF 30

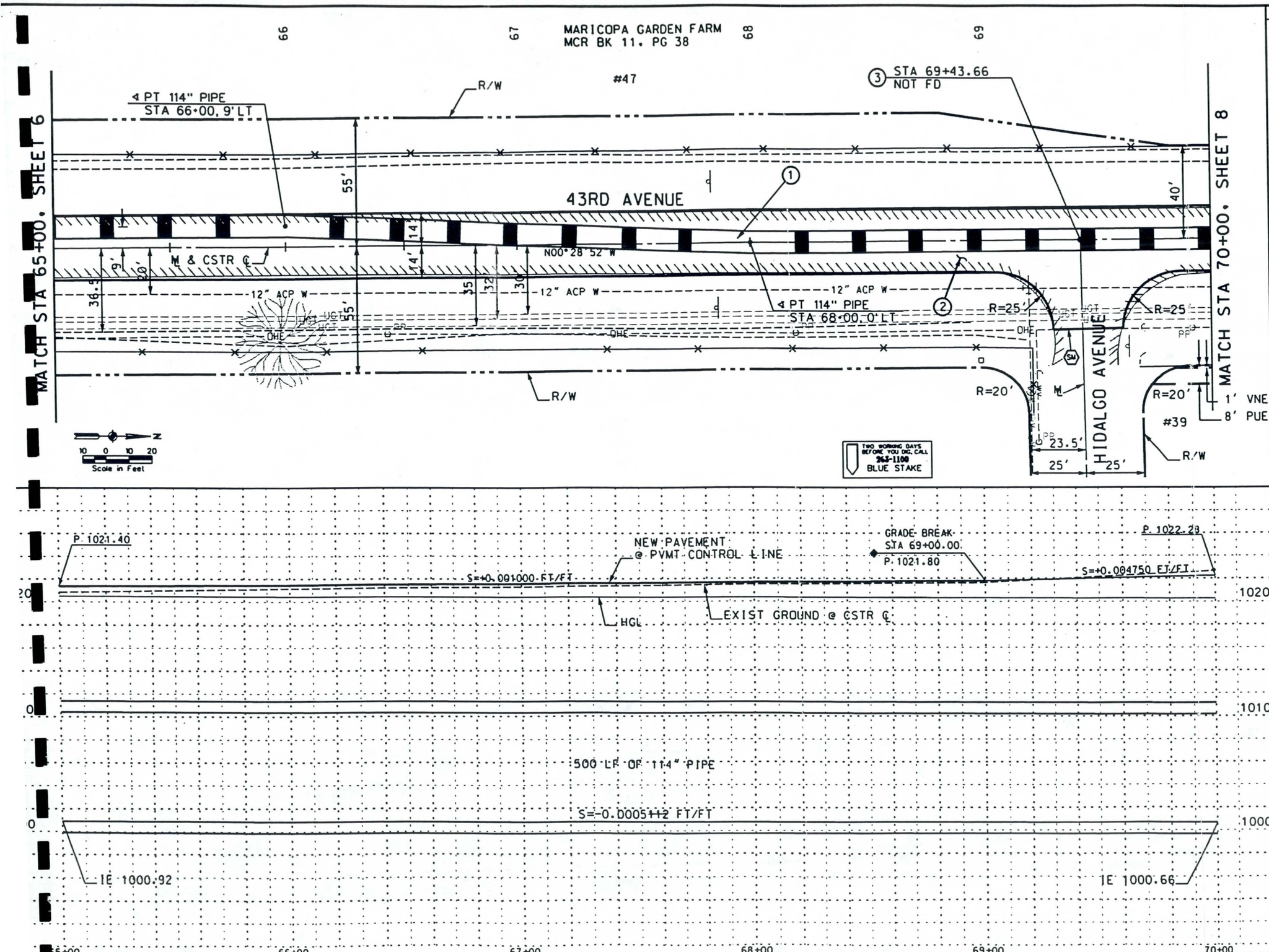

☐ REMOVE ☐

○ CONSTRUCT ○

INSTALL NEW STORM DRAIN PIPE

NO.	STATION TO STATION	DIAMETER INCHES	LENGTH FEET
1	65+00 TO 70+00	114	500

PAVEMENT REPLACEMENT

NO.	STA TO STA	UNIT	QUANTITY
2	65+00 TO 70+00	SY	1669

3 INSTALL SURVEY MONUMENT PER MAG DET 120-1, TYPE B. 1 EACH

NO.	REVISION	BY	DATE

FLOOD CONTROL DISTRICT OF MARICOPA COUNTY
ENGINEERING DIVISION

43RD AVENUE STORM DRAIN
SOUTHERN AVENUE TO SALT RIVER
FCD PROJECT NO. 1170230

	BY	DATE
DESIGNED	JRR	03/04/99
DRAWN	FC	03/04/99
CHECKED	MAL	03/12/99

PLAN AND PROFILE
STA 65+00.00 TO 70+00.00

SHEET 7 OF 30

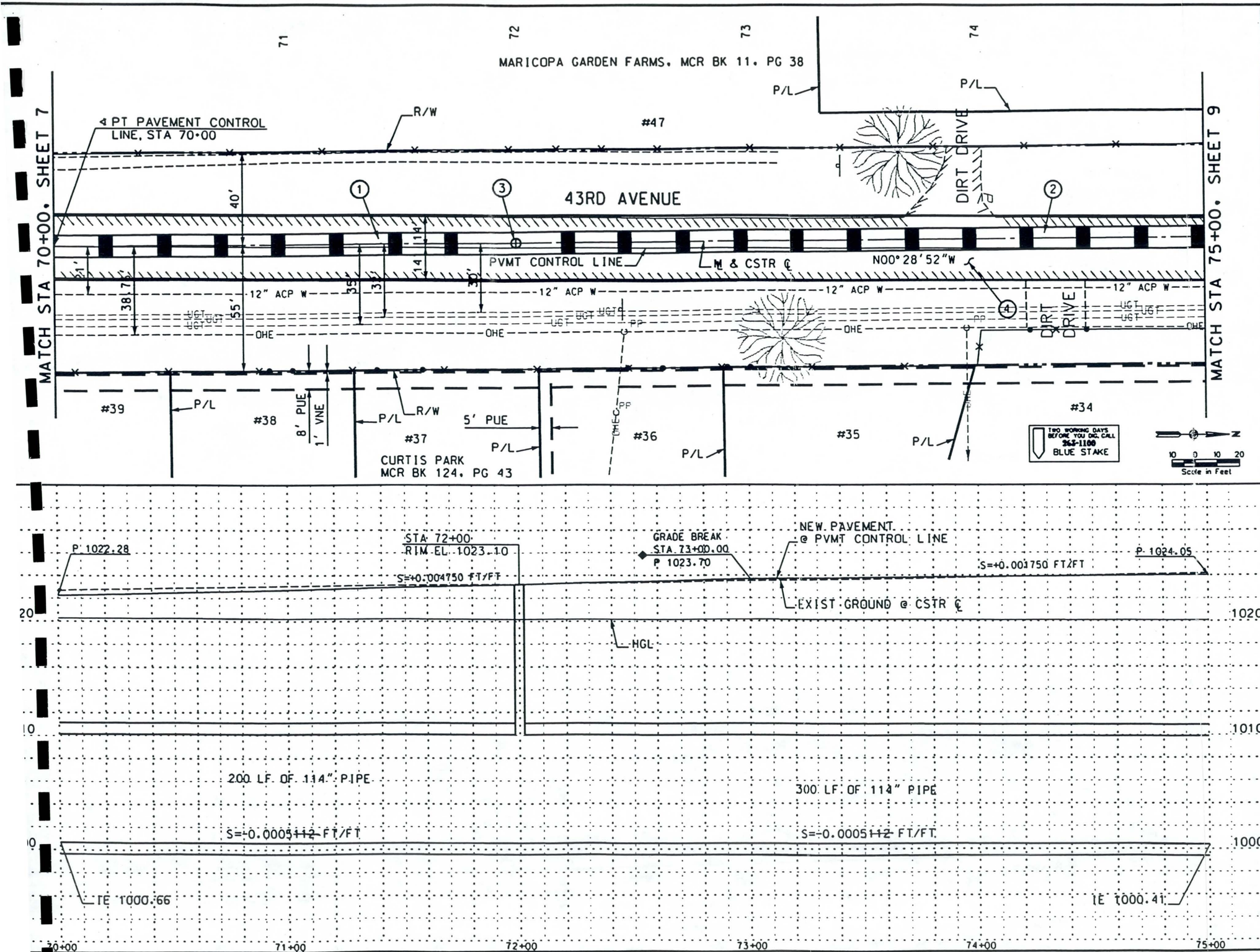

☐ REMOVE ☐

○ CONSTRUCT ○

INSTALL NEW STORM DRAIN PIPE

NO.	STATION TO STATION	DIAMETER INCHES	LENGTH FEET
1	70+00 TO 72+00	114	200
2	72+00 TO 75+00	114	300

INSTALL NEW STORM DRAIN MANHOLE

NO.	STATION	BASE DETAIL	SHAFT DETAIL	COVER DETAIL
3	72+00	DETAIL A	MAG 522	MAG 523

PAVEMENT REPLACEMENT

NO.	STA TO STA	UNIT	QUANTITY
4	70+00 TO 75+00	SY	1556

NO.	REVISION	BY	DATE

FLOOD CONTROL DISTRICT OF MARICOPA COUNTY
ENGINEERING DIVISION

43RD AVENUE STORM DRAIN
SOUTHERN AVENUE TO SALT RIVER
FCD PROJECT NO. 1170230

	BY	DATE
DESIGNED	JRR	03/04/99
DRAWN	FC	03/04/99
CHECKED	MAL	03/12/99

PLAN AND PROFILE
STA 70+00.00 TO 75+00.00

SHEET 8 OF 30

a:\dgn\phase1\pp70.dgn Apr. 22, 1999 14:34:03

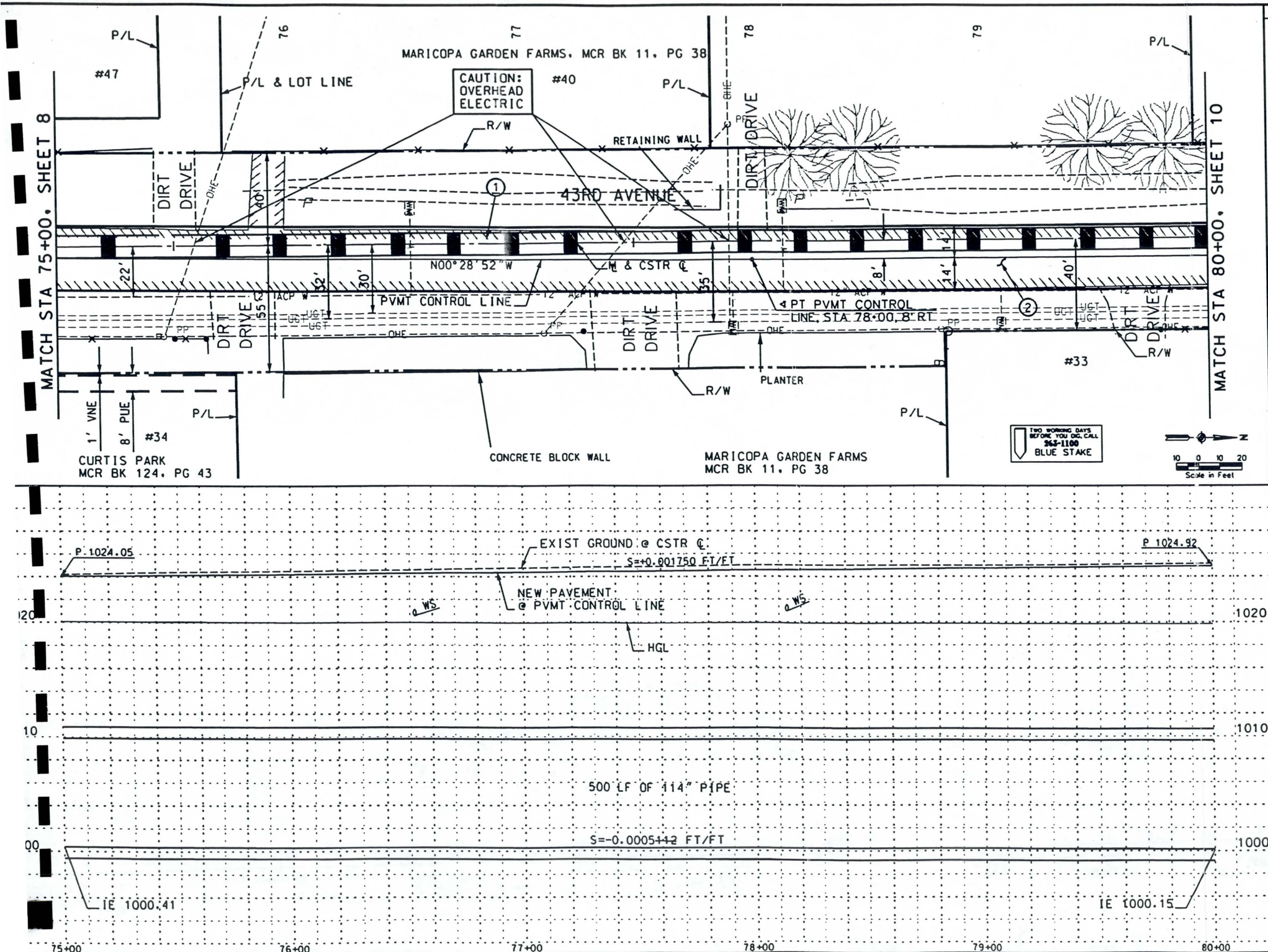

REMOVE

CONSTRUCT

INSTALL NEW STORM DRAIN PIPE

NO.	STATION TO STATION	DIAMETER INCHES	LENGTH FEET
1	75+00 TO 80+00	114	500

PAVEMENT REPLACEMENT

NO.	STA TO STA	UNIT	QUANTITY
2	75+00 TO 80+00	SY	1556

NO.	REVISION	BY	DATE

FLOOD CONTROL DISTRICT OF MARICOPA COUNTY
ENGINEERING DIVISION

43RD AVENUE STORM DRAIN
SOUTHERN AVENUE TO SALT RIVER
FCD PROJECT NO. 1170230

	BY	DATE
DESIGNED	JRR	03/04/99
DRAWN	FC	03/04/99
CHECKED	MAL	03/12/99

PLAN AND PROFILE
STA 75+00.00 TO 80+00.00

SHEET 9 OF 30

d a e\dgn\phase1\pp75.dgn Apr. 22, 1999 14:35:08

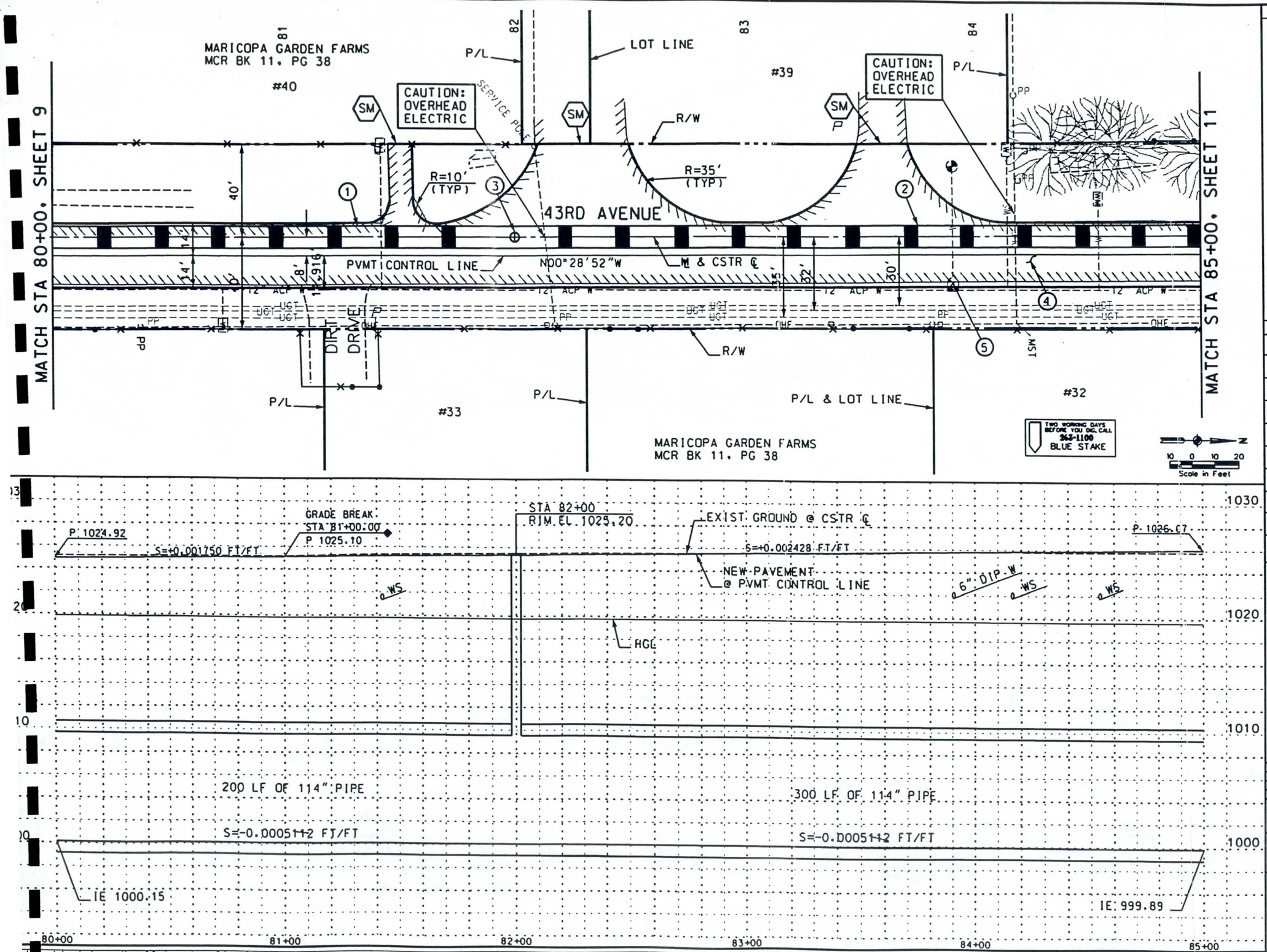

REMOVE

CONSTRUCT

INSTALL NEW STORM DRAIN PIPE

NO.	STATION TO STATION	DIAMETER INCHES	LENGTH FEET
1	80+00 TO 82+00	114	200
2	82+00 TO 85+00	114	300

INSTALL NEW STORM DRAIN MANHOLE

NO.	STATION	BASE DETAIL	SHAFT DETAIL	COVER DETAIL
3	82+00	DETAIL A	MAG 522	MAG 523

PAVEMENT REPLACEMENT

NO.	STA TO STA	UNIT	QUANTITY
4	80+00 TO 85+00	SY	1942

5 ADJUST WATER VALVE PER MAG DET 391-1, TYPE "A" — 1 EACH

NO.	REVISION	BY	DATE

FLOOD CONTROL DISTRICT OF MARICOPA COUNTY
ENGINEERING DIVISION

43RD AVENUE STORM DRAIN
SOUTHERN AVENUE TO SALT RIVER
FCD PROJECT NO. 1170230

	BY	DATE
DESIGNED	JRR	03/04/99
DRAWN	FC	03/04/99
CHECKED	MAL	03/12/99

PLAN AND PROFILE
STA 80+00.00 TO 85+00.00

SHEET 10 OF 30

d ve\dgn\phase1\pp80.dgn Apr. 22, 1999 14:36:15

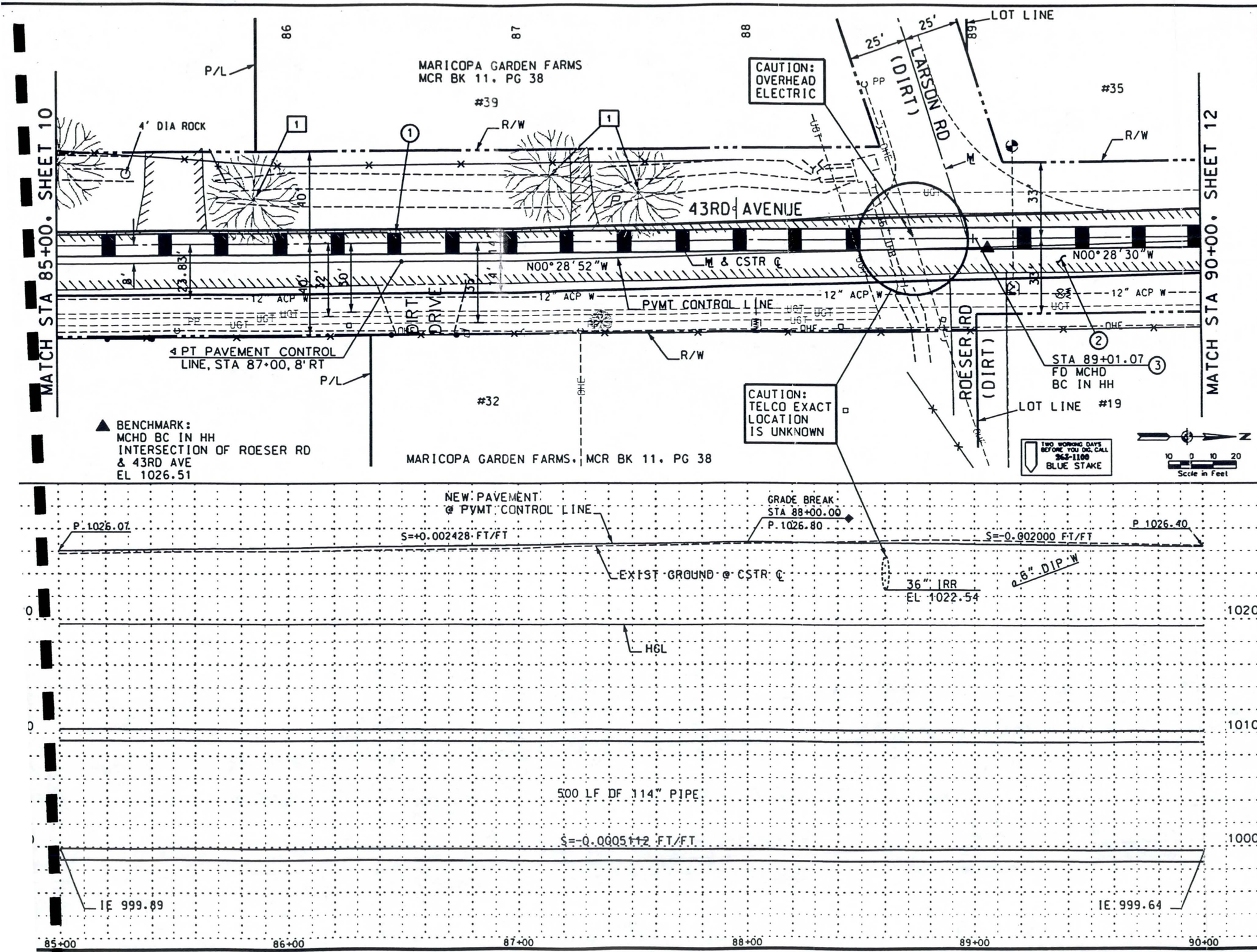

REMOVE

1 REMOVE TREE (NPI).

CONSTRUCT

INSTALL NEW STORM DRAIN PIPE

NO.	STATION TO STATION	DIAMETER INCHES	LENGTH FEET
1	85+00 TO 90+00	114	500

PAVEMENT REPLACEMENT

NO.	STA TO STA	UNIT	QUANTITY
2	85+00 TO 90+00	SY	1556

3 INSTALL SURVEY MONUMENT PER MAG DET 120-1, TYPE A. 1 EACH.

NO.	REVISION	BY	DATE

FLOOD CONTROL DISTRICT OF MARICOPA COUNTY
ENGINEERING DIVISION

43RD AVENUE STORM DRAIN
SOUTHERN AVENUE TO SALT RIVER
FCD PROJECT NO. 1170230

	BY	DATE
DESIGNED	JRR	03/04/99
DRAWN	FC	03/04/99
CHECKED	MAL	03/12/99

PLAN AND PROFILE
STA 85+00.00 TO 90+00.00

SHEET 11 OF 30

ave dgn\phase1\pp85.dgn Apr. 22, 1999 14:37:41

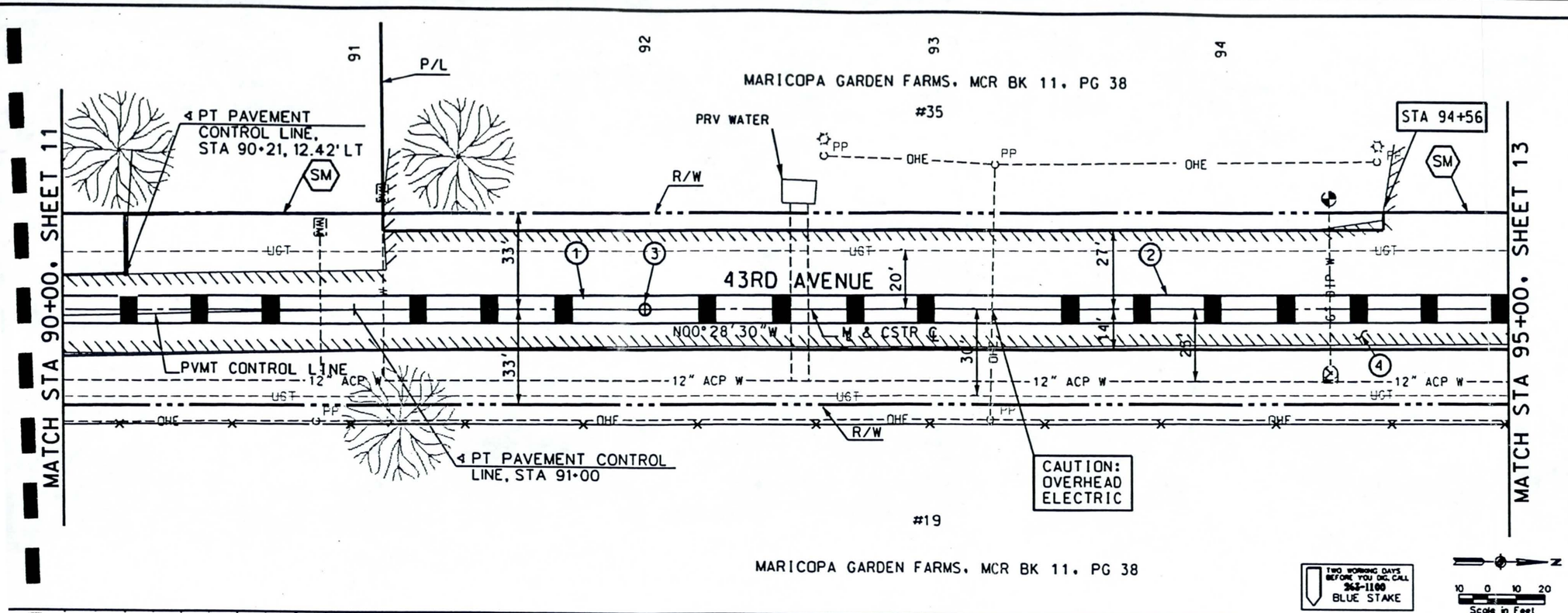

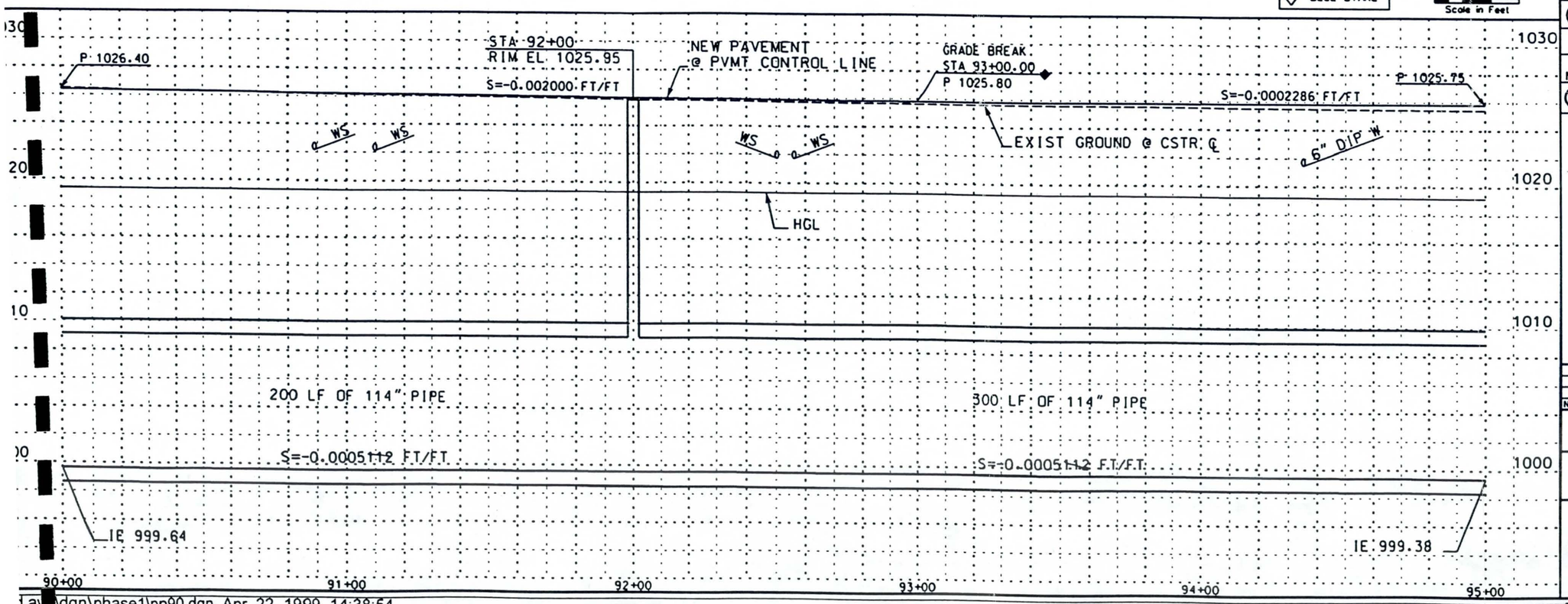

☐ REMOVE ☐

○ CONSTRUCT ○

INSTALL NEW STORM DRAIN PIPE

NO.	STATION TO STATION	DIAMETER INCHES	LENGTH FEET
1	90+00 TO 92+00	114	200
2	92+00 TO 95+00	114	300

INSTALL NEW STORM DRAIN MANHOLE

NO.	STATION	BASE DETAIL	SHAFT DETAIL	COVER DETAIL
3	92+00	DETAIL A	MAG 522	MAG 523

PAVEMENT REPLACEMENT

NO.	STA TO STA	UNIT	QUANTITY
4	90+00 TO 95+00	SY	2342

NO.	REVISION	BY	DATE

FLOOD CONTROL DISTRICT OF MARICOPA COUNTY
ENGINEERING DIVISION

43RD AVENUE STORM DRAIN
SOUTHERN AVENUE TO SALT RIVER
FCD PROJECT NO. 1170230

	BY	DATE
DESIGNED	JRR	03/04/99
DRAWN	FC	03/04/99
CHECKED	MAL	03/12/99

PLAN AND PROFILE
STA 90+00.00 TO 95+00.00

SHEET 12 OF 30

av\dgn\phase1\pp90.dgn Apr. 22, 1999 14:38:54

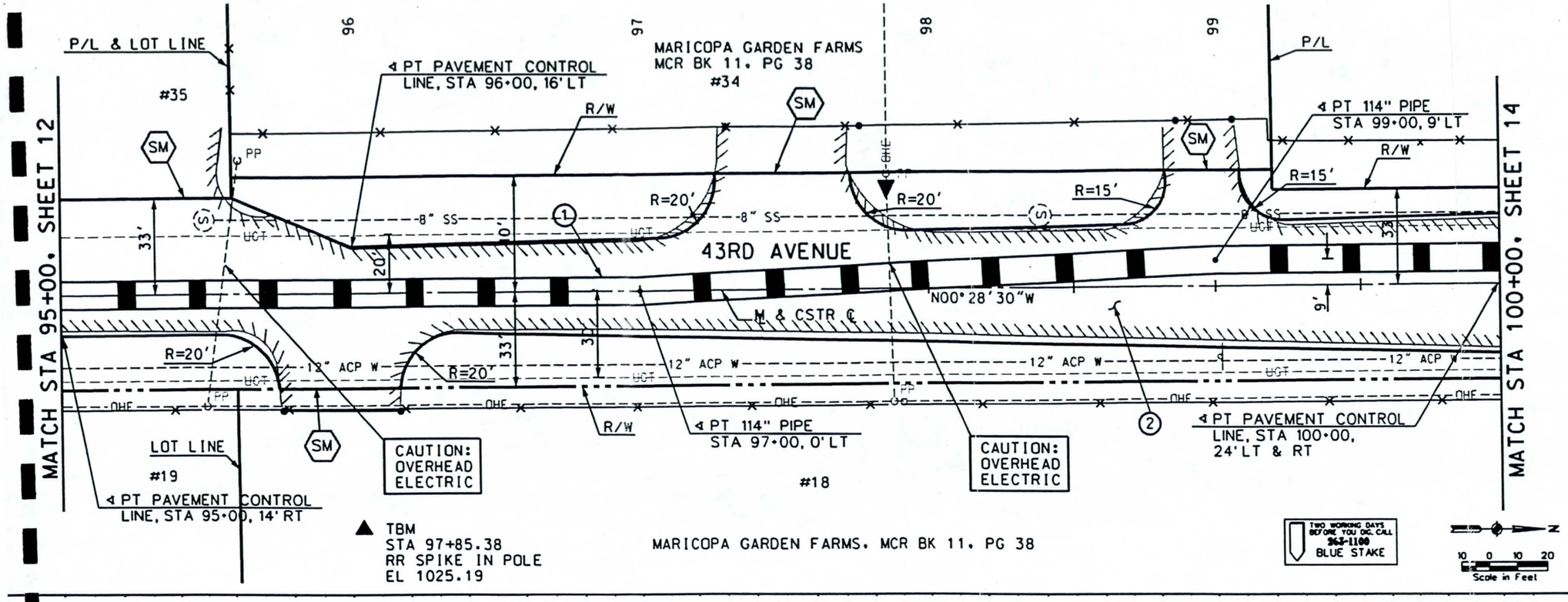

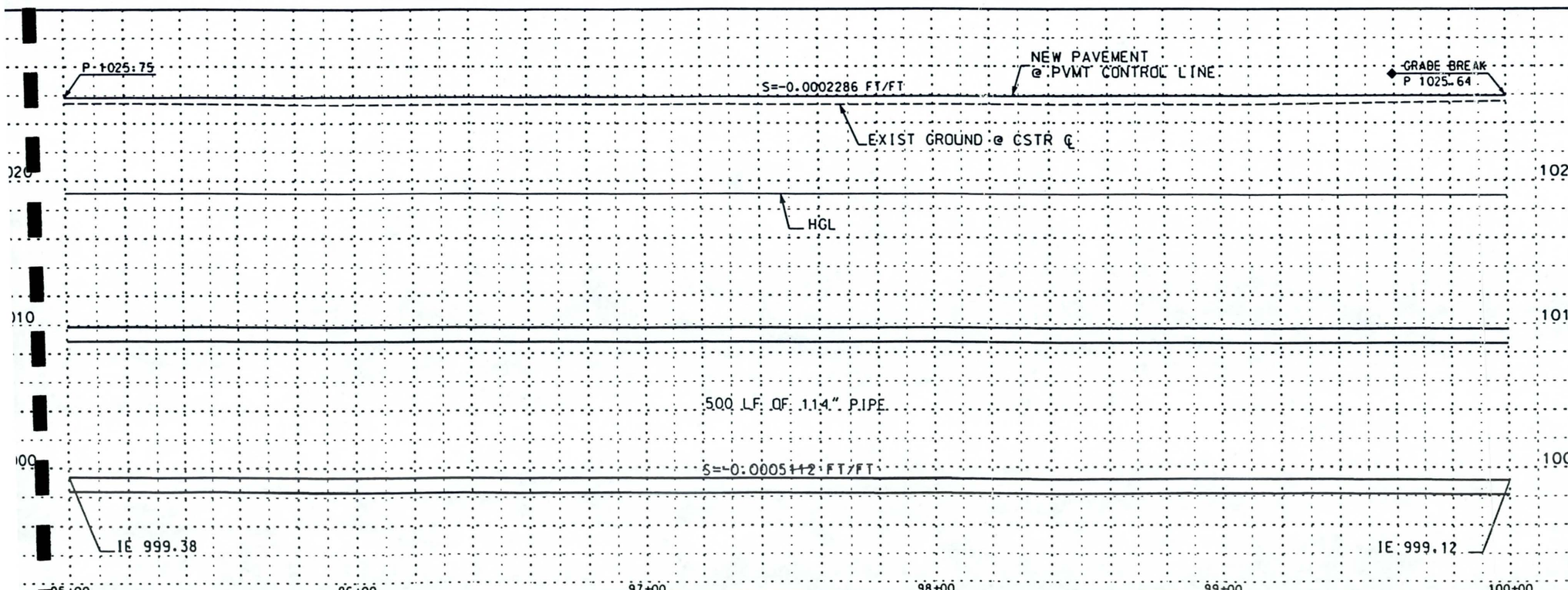

☐ REMOVE ☐

○ CONSTRUCT ○

INSTALL NEW STORM DRAIN PIPE

NO.	STATION TO STATION	DIAMETER INCHES	LENGTH FEET
1	95+00 TO 100+00	114	500

PAVEMENT REPLACEMENT

NO.	STA TO STA	UNIT	QUANTITY
2	95+00 TO 100+00	SY	2588

NO.	REVISION	BY	DATE

FLOOD CONTROL DISTRICT OF MARICOPA COUNTY
ENGINEERING DIVISION

43RD AVENUE STORM DRAIN
SOUTHERN AVENUE TO SALT RIVER
FCD PROJECT NO. 1170230

	BY	DATE
DESIGNED	JRR	03/04/99
DRAWN	FC	03/04/99
CHECKED	MAL	03/12/99

PLAN AND PROFILE
STA 95+00.00 TO 100+00.00

SHEET 13 OF 30

d a e\dgn\phase1\pp95.dgn Apr. 22, 1999 14:40:28

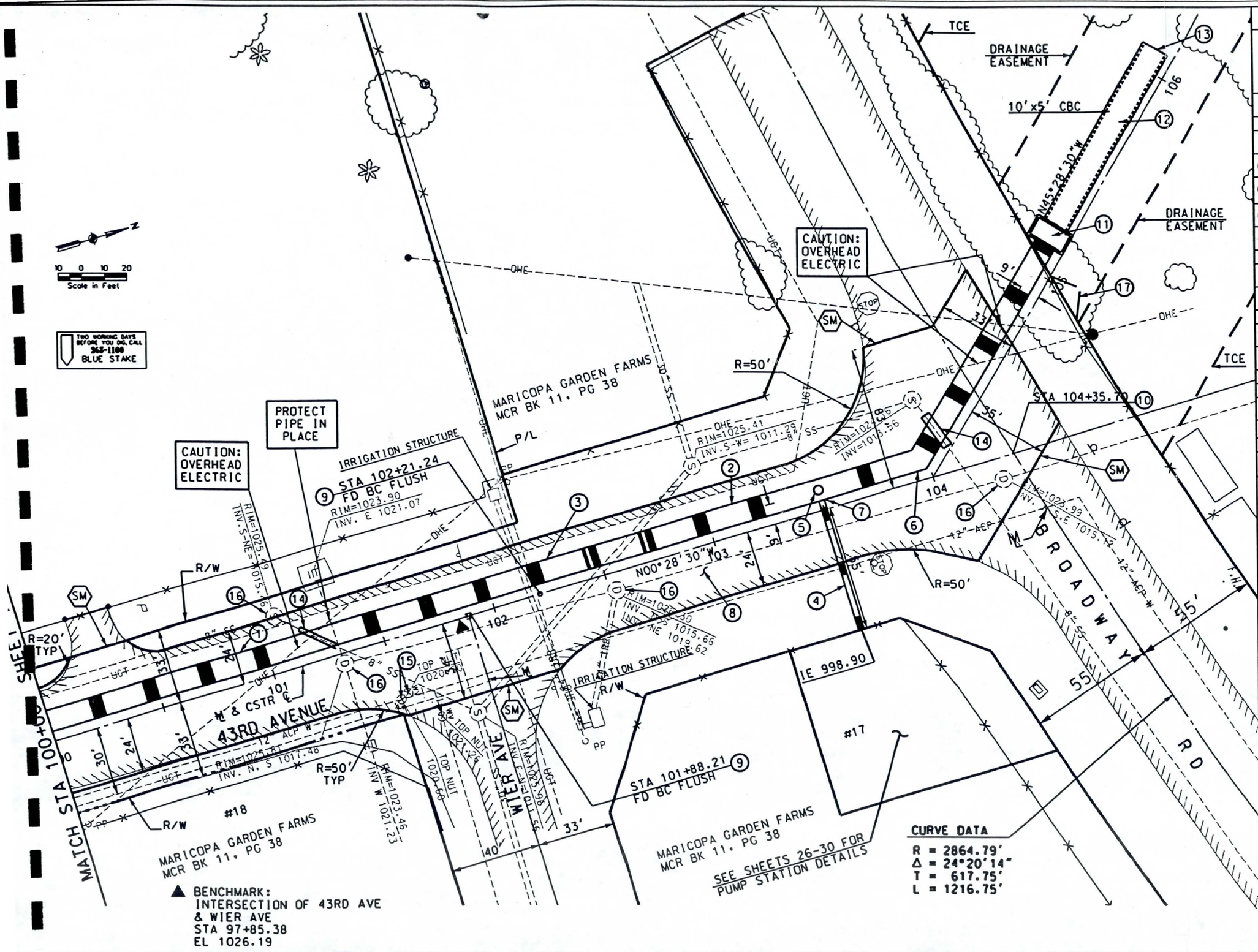

CURVE DATA

R = 2864.79'
Δ = 24°20'14"
T = 617.75'
L = 1216.75'

☐ REMOVE

○ CONSTRUCT

INSTALL NEW STORM DRAIN PIPE

NO.	STATION TO STATION	DIAMETER INCHES	LENGTH FEET
1	100+00 TO 102+30	114	230
2	102+90 TO 105+12	114	222
3	102+30 TO 102+90	114	60
4	* 103+50 RT	30	59

INSTALL NEW STORM DRAIN MANHOLE

NO.	STATION	BASE DETAIL	SHAFT DETAIL	SHAFT DETAIL
5	103+50	DETAIL A	MAG 522	MAG 523

INSTALL PREFAB BEND

NO.	STATION	DIAMETER INCHES	DEGREE BEND
6	103+96.27	114	45°

INSTALL PREFAB TANGENT TEE WITH TRASH RACK

NO.	STATION	SIZE
7	103+50 RT	114"x30"

PAVEMENT REPLACEMENT

NO.	STA TO STA	UNIT	QUANTITY
8	100+00 TO 104+70	SY	2970

9. INSTALL SURVEY MONUMENT PER MAG DET 120-1. TYPE B. 2 EACH.
10. INSTALL SURVEY MONUMENT PER MAG DET 120-1. TYPE A. 1 EACH.
11. STA 105+16 CONSTRUCT JUNCTION STRUCTURE PER SPECIAL DETAIL. SHEET 19. 1 EACH.
12. CONSTRUCT 10'x5' CBC. DET B-02.10. 90 LF
13. STA 106+10. INSTALL HEADWALL & 10'x5' FLAPGATE. 1 EACH
14. INSTALL 22 LF PIPE SUPPORT PER MAG DET 403-3. 2 EACH
15. ADJUST WATER VALVE PER MAG DET 391-1. TYPE A 2 EACH
16. ADJUST MANHOLE FRAME AND COVER PER MAG DET 422 4 EACH
17. INSTALL 24 FT CHAIN LINK FENCE GATE PER MAG DET 160. 1 EACH

** BORE & JACK PIPE
* CONNECTOR PIPE

NO.	REVISION	BY	DATE
3			
2			
1			

FLOOD CONTROL DISTRICT OF MARICOPA COUNTY
ENGINEERING DIVISION

43RD AVENUE STORM DRAIN
SOUTHERN AVENUE TO SALT RIVER
FCD PROJECT NO. 1170230

	BY	DATE
DESIGNED	JRR	03/04/99
DRAWN	FC	03/04/99
CHECKED	MAL	03/12/99

PLAN
STA 100+00.00 TO 106+10

SHEET 14 OF 30

d a e\dgn\phase1\pp100a.dgn May. 03, 1999 16:01:22

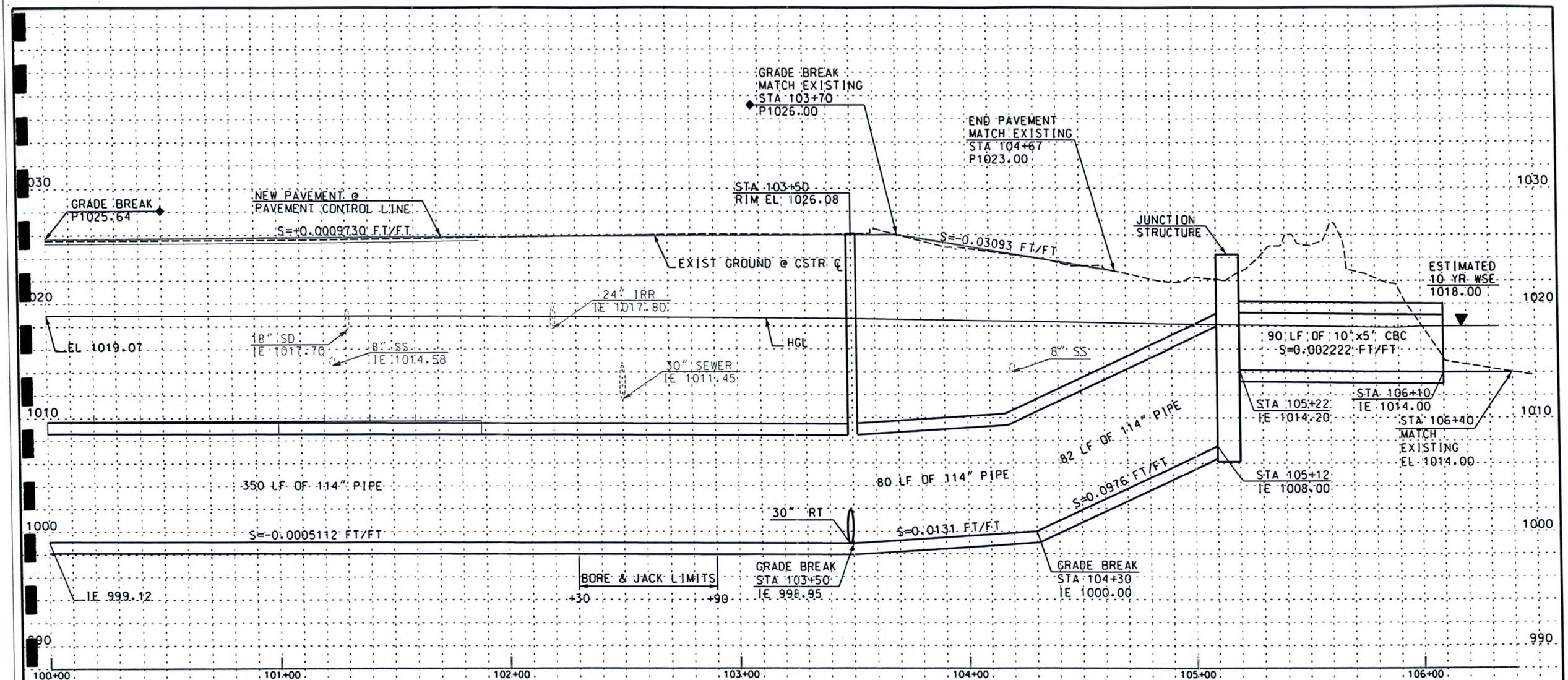

NO.	REVISION	BY	DATE
3			
2			
1			

FLOOD CONTROL DISTRICT OF MARICOPA COUNTY
ENGINEERING DIVISION

43RD AVENUE STORM DRAIN
SOUTHERN AVENUE TO SALT RIVER
FCD PROJECT NO. 1170230

	BY	DATE
DESIGNED	JRR	03/09/99
DRAWN	FC	03/09/99
CHECKED	MAL	03/12/99

Registered Professional Engineer (Civil) CERTIFICATE NO. 15608 JEFFREY R. RIDDLE Date Signed ARIZONA, U.S.A.

PROFILE
STA 100+00.00 TO 106+12.00

SHEET 15 OF 30

TRACE NO.

K:\ENGSHARE\PP.DGN 06/29/94 KEL

...\3rdave\dgn\phase1\pp100b.dgn May. 10, 1999 11:13:42

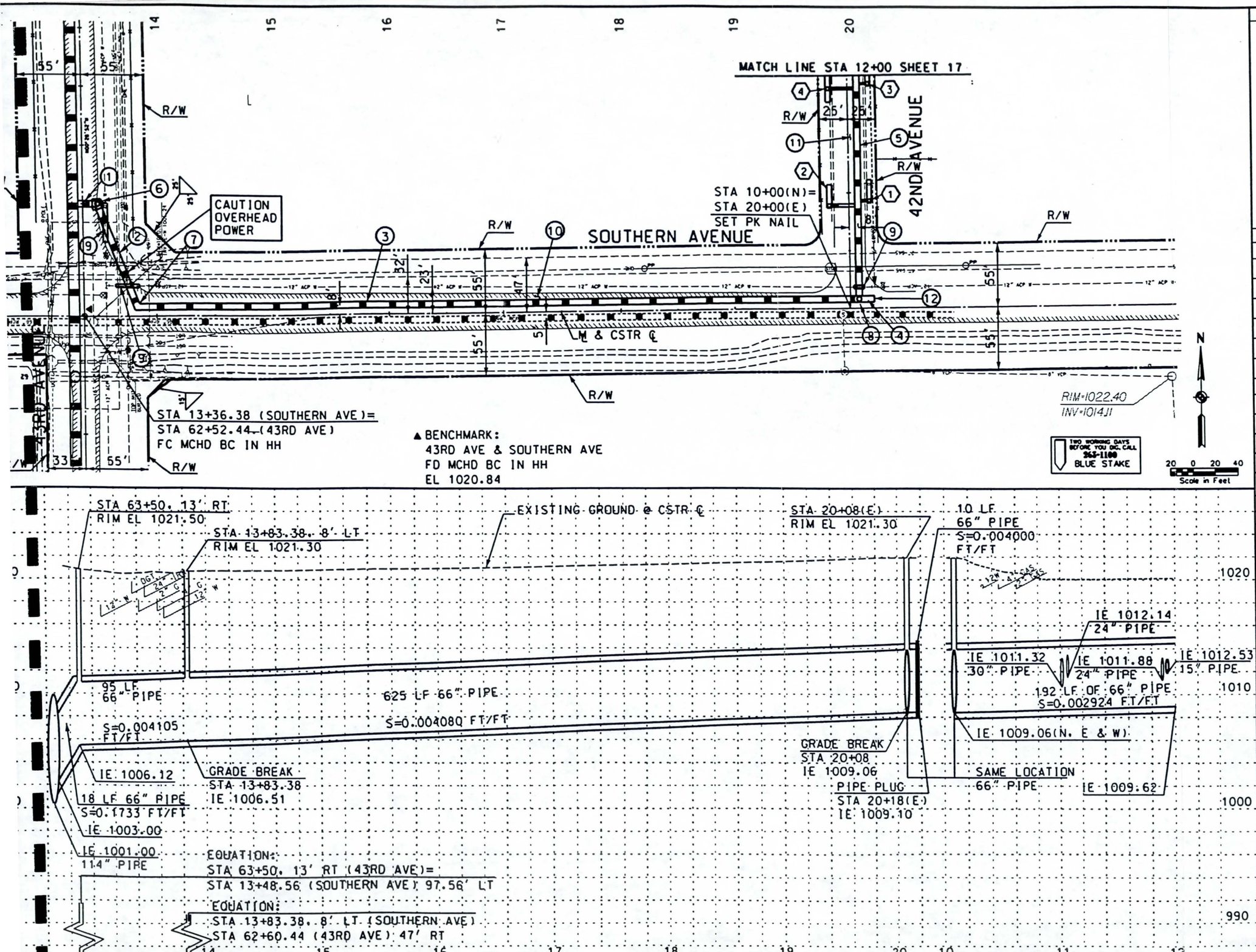

☐ REMOVE ☐

○ CONSTRUCT ○

INSTALL NEW STORM DRAIN PIPE

NO.	STATION TO STATION	DIAMETER INCHES	LENGTH FEET
1	13+31 TO 13+49	66	18
2	13+49 TO 13+83	66	95
3	13+83 TO 20+08	66	625
4	20+08 TO 20+18	66	10
5	10+08 TO 12+00	66	192

INSTALL NEW STORM DRAIN MANHOLE

NO.	STATION	BASE DETAIL	SHAFT DETAIL	COVER DETAIL
6	63+50. 13' RT	MAG 521	MAG 522	MAG 523
7	13+83.38. 8' LT	MAG 521	MAG 522	MAG 523
8	STA 10+08(N)	MAG 521	MAG 522	MAG 523

9 INSTALL 12" DIP PIPE & FITTINGS. 66 LF

PAVEMENT REPLACEMENT

NO.	STATION TO STATION	UNIT	QUANTITY
10	13+31 TO 20+18	SY	767
11	10+08 TO 12+00	SY	243

12 INSTALL 66" PIPE PLUG PER MAG DET 427. 1 EACH

NEW CATCH BASIN, CONNECTOR PIPE, AND FITTING

NO.	STATION	TYPE	SIZE & LENGTH	TEE
1	10+93 RT	M-1, L=17' P1569-1	24"x5'	66"x24"
2	10+89 LT	M-1, L=17' P1569-1	30"x20'	66"x30"
3	11+93 RT	M-1, L=10' P1569-1	15"x5'	66"x15"
4	11+89 LT	M-2, L=10' P1569-1	24"x20'	66"x24"

FOR CONNECTOR PIPE PROFILES SEE SHEET 21

NO.	REVISION	BY	DATE

FLOOD CONTROL DISTRICT OF MARICOPA COUNTY
ENGINEERING DIVISION

43RD AVENUE STORM DRAIN
SOUTHERN AVENUE TO SALT RIVER
FCD PROJECT NO. 1170230

	BY	DATE
DESIGNED	JRR	03/04/99
DRAWN	FC	03/04/99
CHECKED	MAL	03/12/99

PLAN AND PROFILE
STA 13+36.38 TO STA 20+18

SHEET 16 OF 30

d A e\dgn\phase1\sd5-0.dgn May. 03, 1999 13:52:02

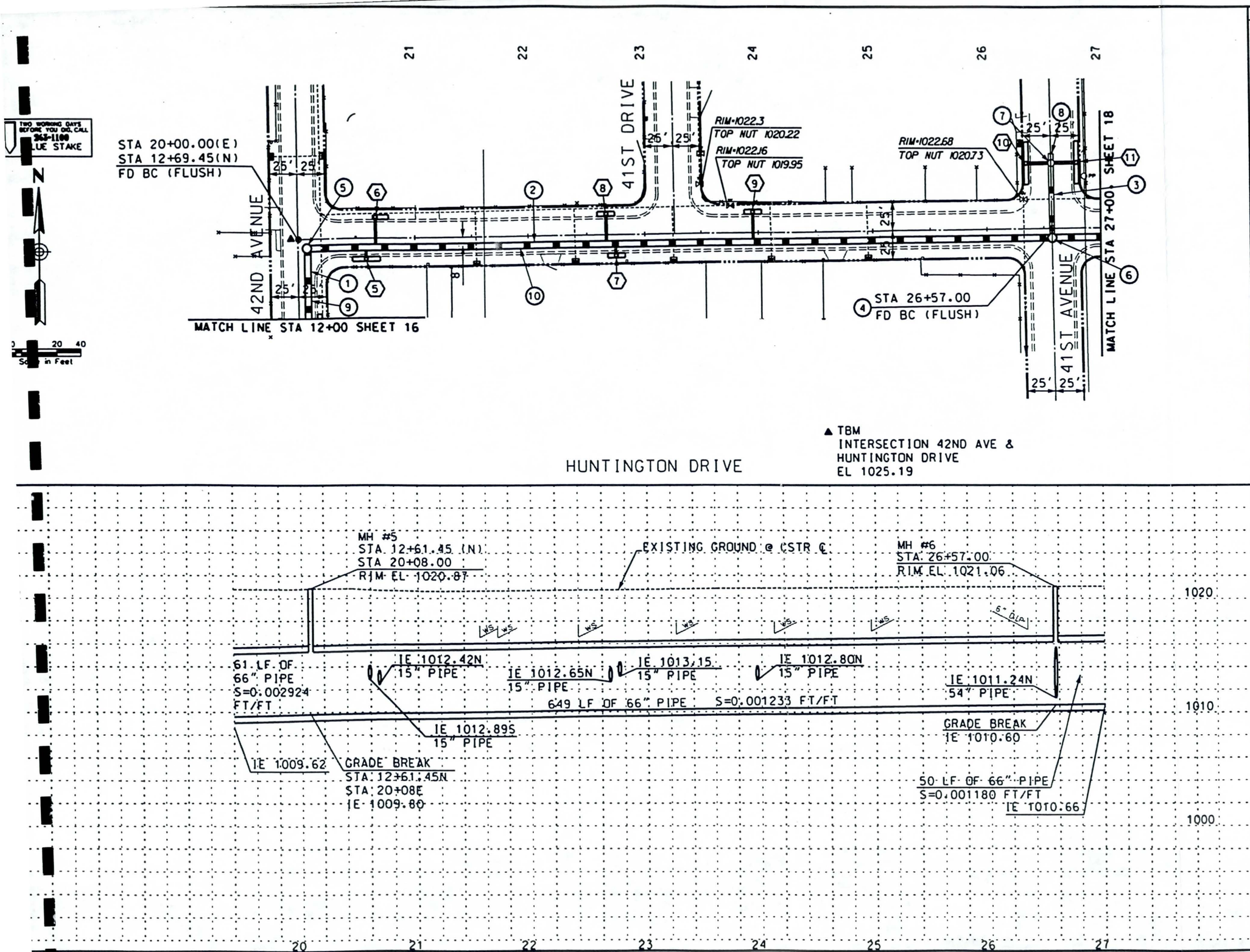

☐ REMOVE

○ CONSTRUCT ○

INSTALL NEW STORM DRAIN PIPE

NO.	STATION TO STATION	DIAMETER INCHES	LENGTH FEET
1	12+00 TO 12+61	66"	61
2	20+08 TO 27+00	66"	692
3	26+57 8' RT TO 65' LT	54"	73

4 INSTALL SURVEY MONUMENT PER MAG DET 120-1. TYPE B. 1 EACH

INSTALL NEW STORM DRAIN MANHOLE

NO.	STATION	BASE DETAIL	SHAFT DETAIL	COVER DETAIL
5	20+08. 8' RT	MAG 521	MAG 522	MAG 523
6	26+57. 8' RT	MAG 521	MAG 522	MAG 523
7	26+57. 57' LT	MAG 521	MAG 522	MAG 523

8 INSTALL 54" PIPE PLUG PER MAG DET 427. 1 EACH

PAVEMENT REPLACEMENT

NO.	STATION TO STATION	UNIT	QUANTITY
9	12+00 TO 12+61	SY	51
10	20+08 TO 27+00	SY	630

NEW CATCH BASIN. CONNECTOR PIPE. AND FITTING

NO.	STATION	TYPE	SIZE & LENGTH	TEE
5	20+59 RT	M-2. L=10' P1569-1	15"x5'	66"x15"
6	20+67 LT	M-1. L=10' P1569-1	15"x21'	66"x15"
7	22+75 RT	M-2. L=6' P1569-1	15"x5'	66"x15"
8	22+67 LT	M-2. L=6' P1569-1	15"x21'	66"x15"
9	23+96 LT	M-2. L=6' P1569-1	15"x21'	66"x15"
10	26+40 LT	M-2. L=17' P1569-1	24"x18'	MH
11	26+78 LT	M-2. L=17' P1569-1	24"x18'	MH

FOR CONNECTOR PIPE PROFILES SEE SHEET 23. 24

NO.	REVISION	BY	DATE

FLOOD CONTROL DISTRICT OF MARICOPA COUNTY
ENGINEERING DIVISION

43RD AVENUE STORM DRAIN
SOUTHERN AVENUE TO SALT RIVER
FCD PROJECT NO. 1170230

	BY	DATE
DESIGNED	JRR	03/04/99
DRAWN	FC	03/04/99
CHECKED	MAL	03/12/99

PLAN AND PROFILE
STA STA 20+00 TO 27+00 1.00

SHEET 17 OF 30

A:\dgn\phase1\sd5-1.dgn May. 03, 1999 13:59:27

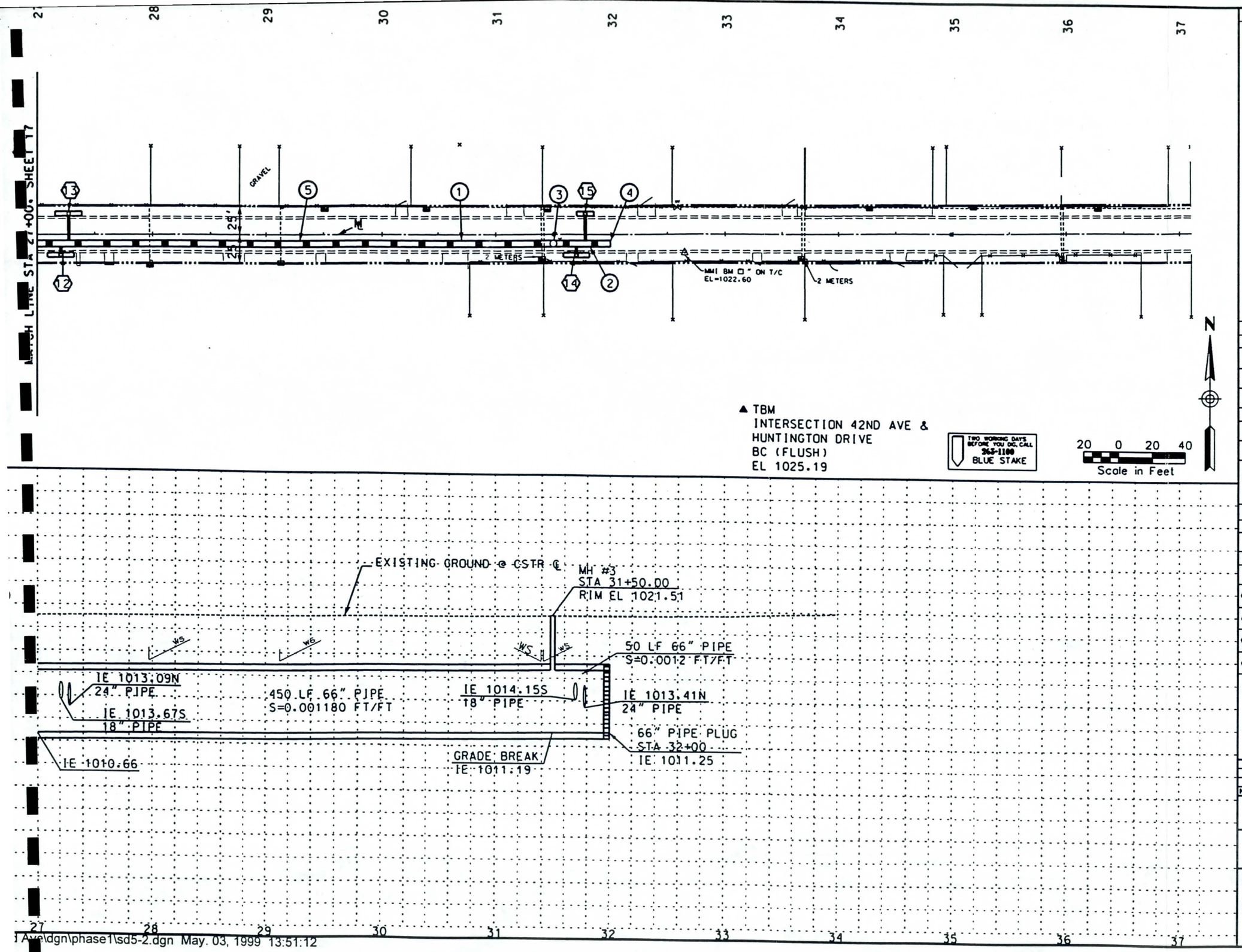

☐ REMOVE ☐

○ CONSTRUCT ○

INSTALL NEW STORM DRAIN PIPE

NO.	STATION TO STATION	DIAMETER INCHES	LENGTH FEET
1	27+00 TO 31+50	66"	450
2	31+50 TO 32+00	66	50

INSTALL NEW STORM DRAIN MANHOLE

NO.	STATION	BASE DETAIL	SHAFT DETAIL	COVER DETAIL
3	31+50	MAG 521	MAG 522	MAG 523

4 INSTALL 66" PIPE PLUG PER MAG DET 427. 1 EACH

PAVEMENT REPLACEMENT

NO.	STATION TO STATION	UNIT	QUANTITY
5	27+00 TO 32+00	SY	584

NEW CATCH BASIN, CONNECTOR PIPE, AND FITTING

NO.	STATION	TYPE	SIZE & LENGTH	TEE
12	27+21 RT	M-2, L=10' P1569-1	18"x5'	66"x18"
13	27+28 LT	M-2, L=10' P1569-1	24"x21'	66"x24"
14	31+70 RT	M-2, L=10' P1569-1	18"x5'	66"x18"
15	31+78 LT	M-2, L=6' P1569-1	24"x21'	66"x24"

FOR CONNECTOR PIPE PROFILES SEE SHEET 23 & 24.

NO.	REVISION	BY	DATE

FLOOD CONTROL DISTRICT OF MARICOPA COUNTY
ENGINEERING DIVISION

43RD AVENUE STORM DRAIN
SOUTHERN AVENUE TO SALT RIVER
FCD PROJECT NO. 1170230

	BY	DATE
DESIGNED	RPH/GHS	03/04/99
DRAWN	MMM	03/04/99
CHECKED	MAL	03/12/99

PLAN AND PROFILE
STA 27+00.00 TO STA 32+00.00

SHEET 18 OF 30

Ave\dgn\phase1\sd5-2.dgn May. 03, 1999 13:51:12

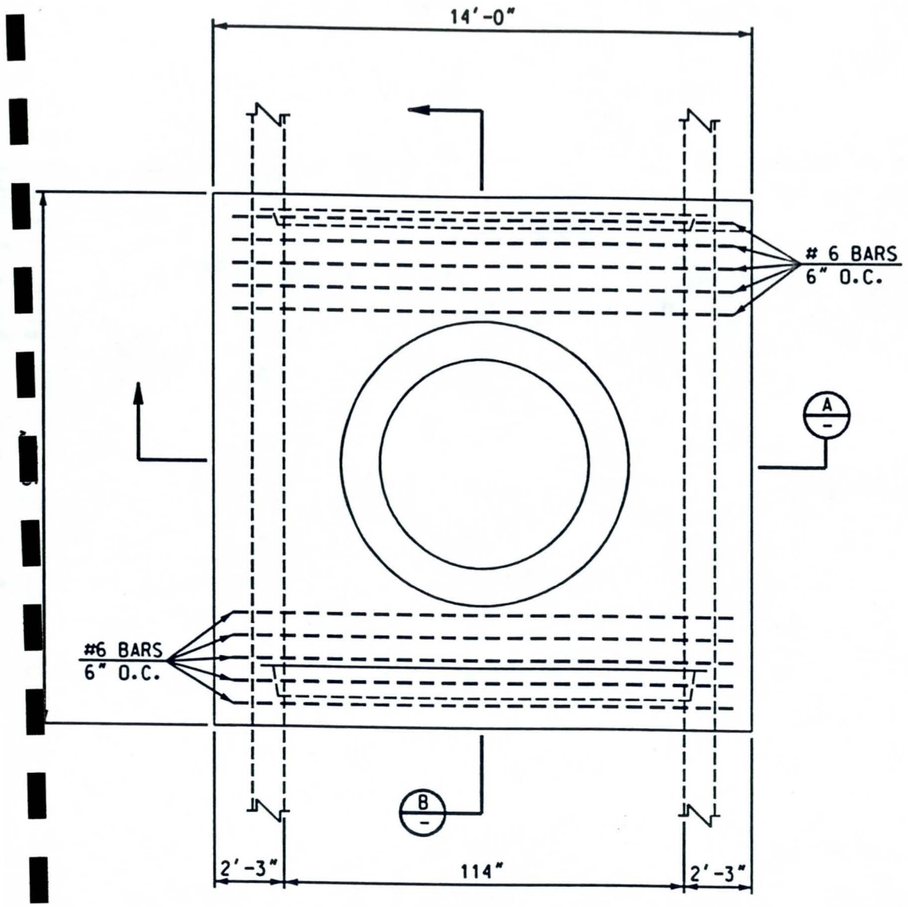

DETAIL 'A' PLAN
NTS

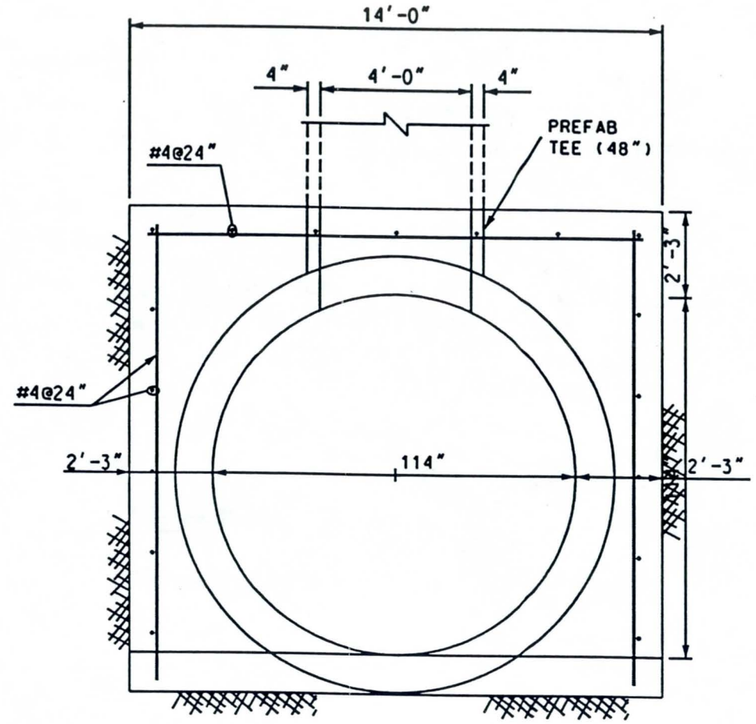

A SECTION
SCALE: 1/2" = 1'-0

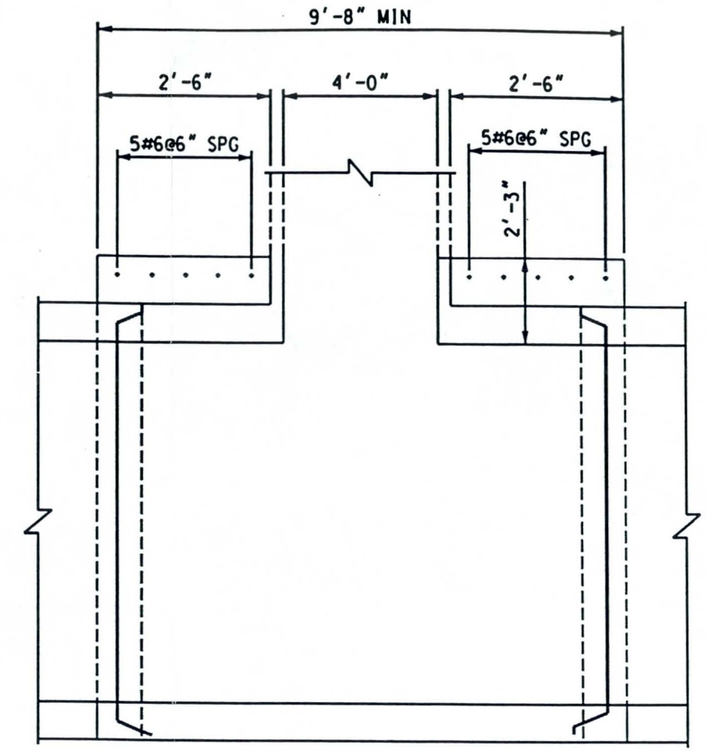

B SECTION
SCALE: 1/2" = 1'-0

DETAIL A

NOTES:

1. ~~LINE PIPE~~ & STUB MAY BE CAST MONOLITHICALLY OR STUB MAY BE CAST ON TO LINE PIPE SECTION PRIOR TO COMPLETE CURING.
2. ALL LINE PIPE REINFORCEMENT SHALL BE TURNED UP INTO STUB.
3. THE VERTICAL STUB TO BE A.S.T.M. C-76 CLASS II WALL 'A' AND THE HORIZONTAL PIPE TO BE EQUAL TO STRENGTH OF PIPE ENTERING MANHOLE.
4. ALL REINFORCING STEEL SHALL CLEAR FACE OF CONCRETE BY 1 1/2" UNLESS SHOWN OTHERWISE.
5. CONCRETE ENCASEMENT SHALL BE CLASS MAG 'A' CONCRETE PER SECT 725. 505.

NO.	REVISION	BY	DATE
3			
2			
1			

FLOOD CONTROL DISTRICT OF MARICOPA COUNTY
ENGINEERING DIVISION

43RD AVENUE STORM DRAIN
SOUTHERN AVENUE TO SALT RIVER
FCD PROJECT NO. 1170230

	BY	DATE
DESIGNED	KVH	08/27/98
DRAWN	FC	08/27/98
CHECKED	MAL	03/12/99

STORM DRAIN MANHOLE BASE, DETAIL A

SHEET 19 OF 30

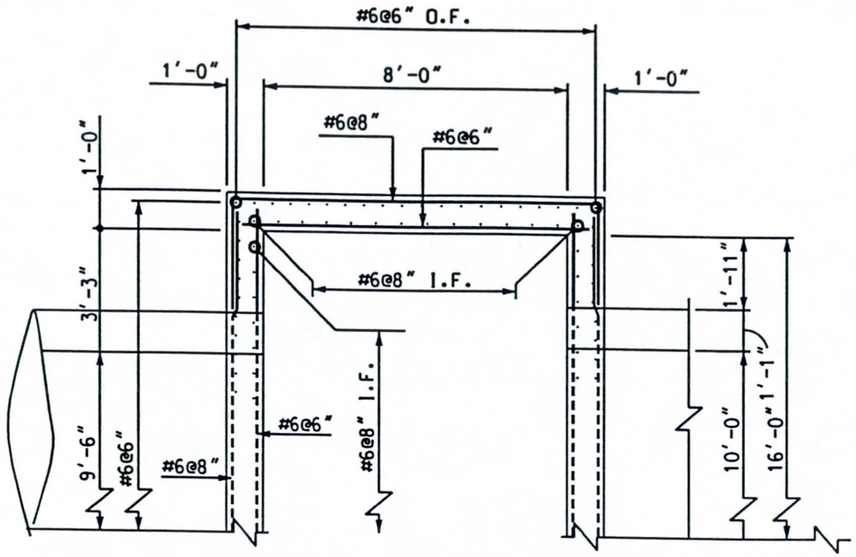

PART PLAN
SCALE: 1/2" = 1'-0

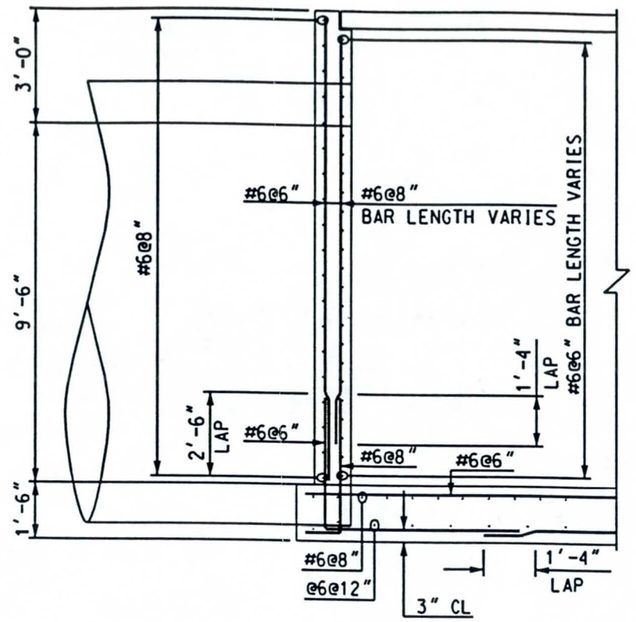

1 DETAIL
SCALE: 1/2" = 1'-0

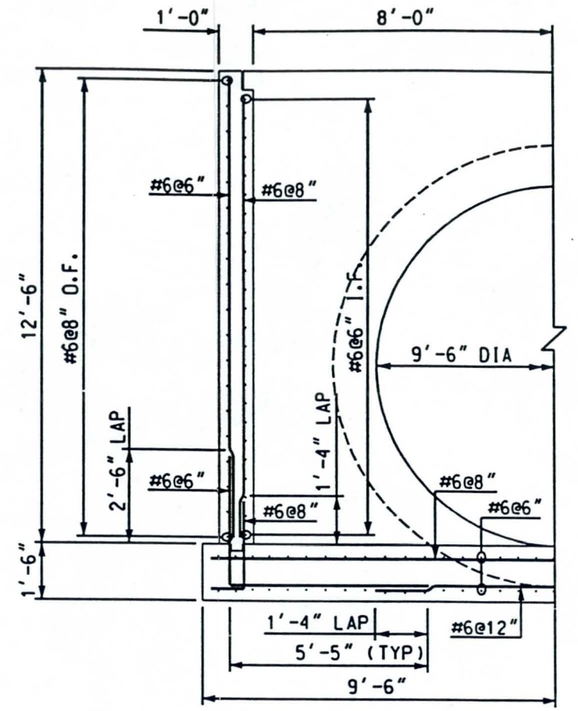

2 DETAIL
SCALE: 1/2" = 1'-0

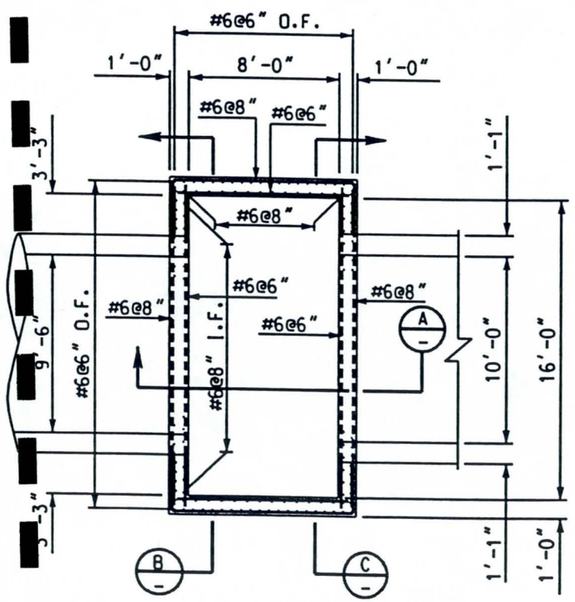

JUNCTION STRUCTURE PLAN
SCALE: 1/4" = 1'-0

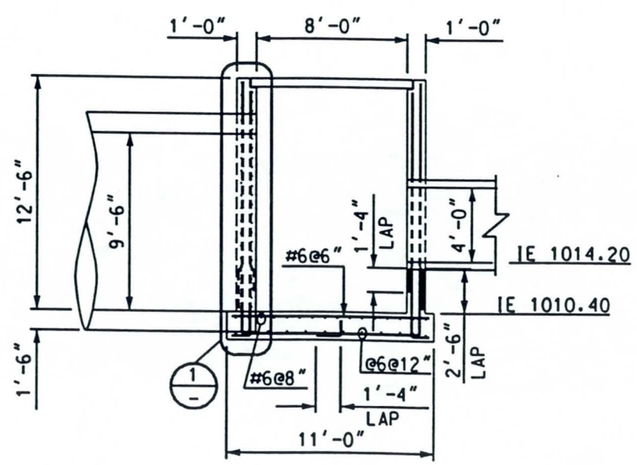

A SECTION
SCALE: 1/4" = 1'-0

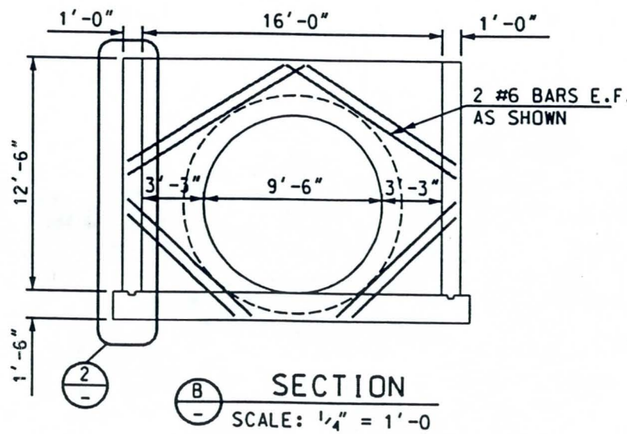

B SECTION
SCALE: 1/4" = 1'-0

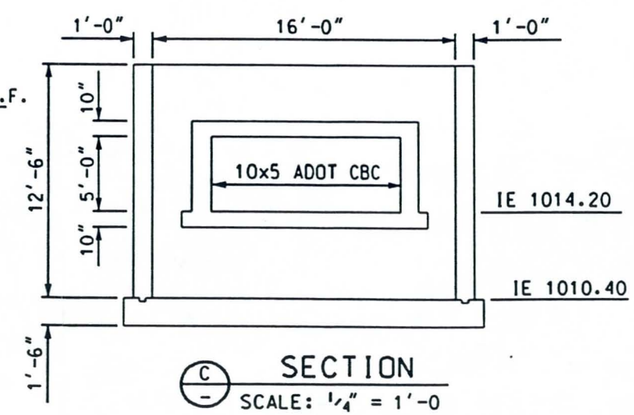

C SECTION
SCALE: 1/4" = 1'-0

NO.	REVISION	BY	DATE
3			
2			
1			

FLOOD CONTROL DISTRICT OF MARICOPA COUNTY
ENGINEERING DIVISION

43RD AVENUE STORM DRAIN
SOUTHERN AVENUE TO SALT RIVER
FCD PROJECT NO. 1170230

	BY	DATE
DESIGNED	KVH	12/09/98
DRAWN	FC	12/09/98
CHECKED	MAL	03/12/99

JUNCTION STRUCTURE DETAIL

SHEET 20 OF 30

\phase1\jstr-p1.dgn Apr. 22, 1999 14:26:32

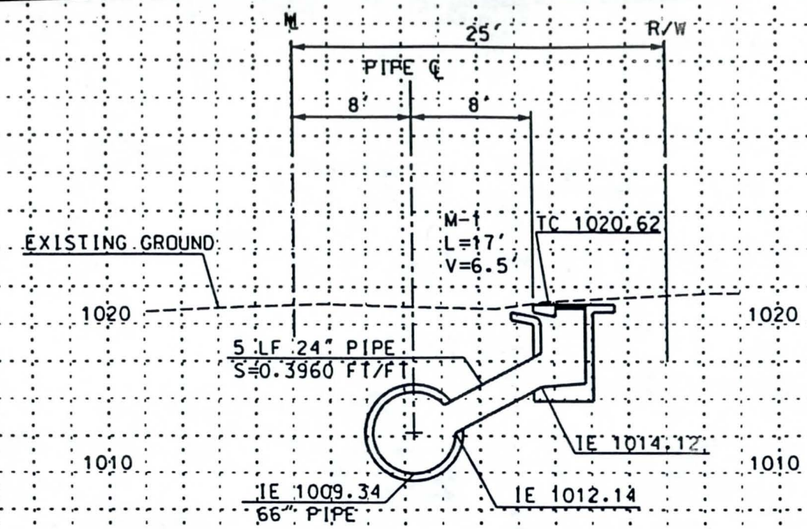

1 STA 10+93 RT
(42ND AVENUE)

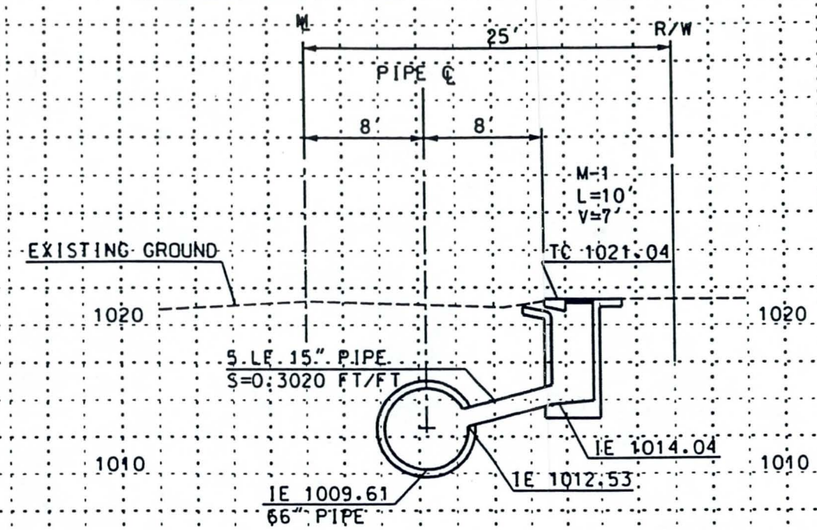

3 STA 11+93 RT
(42ND AVENUE)

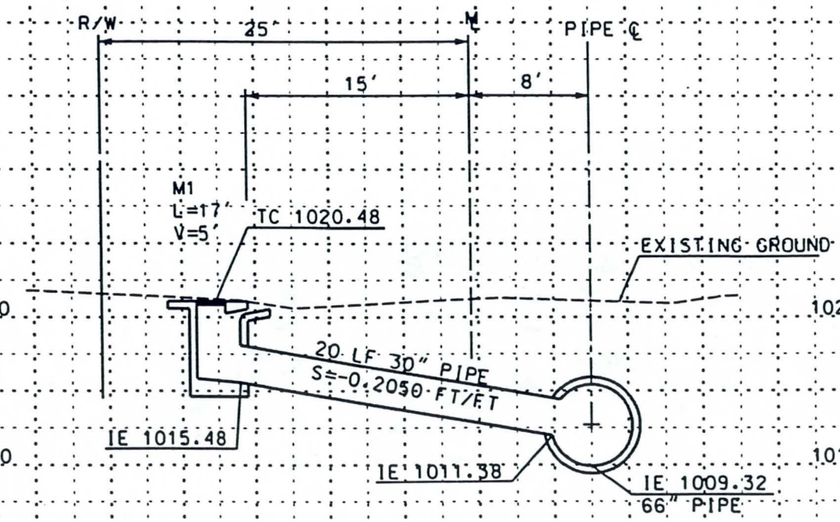

2 STA 10+89 LT
(42ND AVENUE)

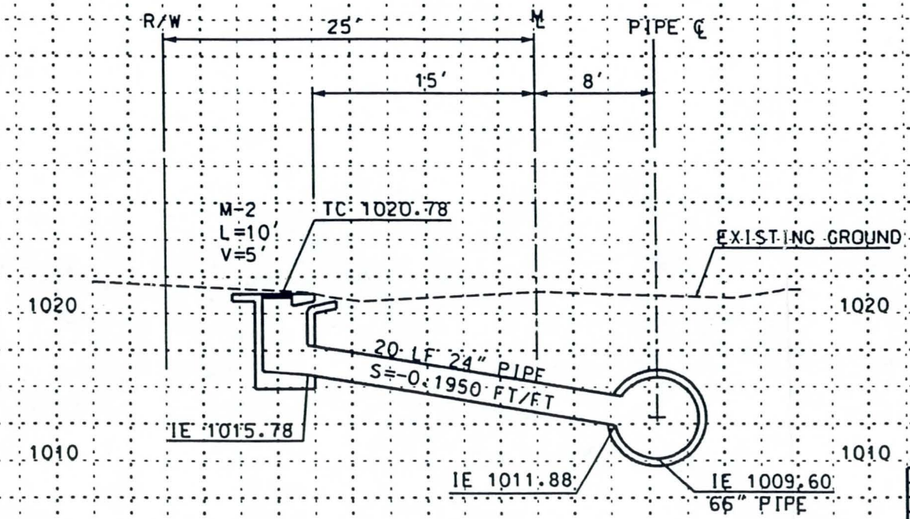

4 STA 11+89 LT
(42ND AVENUE)

NOTES:

SEE SHEET 5 FOR CATCH BASIN REINFORCING NOTES

NO.	REVISION	BY	DATE
3			
2			
1			

FLOOD CONTROL DISTRICT OF MARICOPA COUNTY
ENGINEERING DIVISION

43RD AVENUE STORM DRAIN
SOUTHERN AVENUE TO SALT RIVER
FCD PROJECT NO. 1170230

	BY	DATE
DESIGNED	JRR	02/24/99
DRAWN	FC	02/24/99
CHECKED	MAL	03/12/99

RECOMMENDED FOR CONSTRUCTION

CONNECTOR PIPE PROFILE

SHEET 21 OF 30

\phase1\xsht21-p1.dgn Apr. 27, 1999 10:16:50

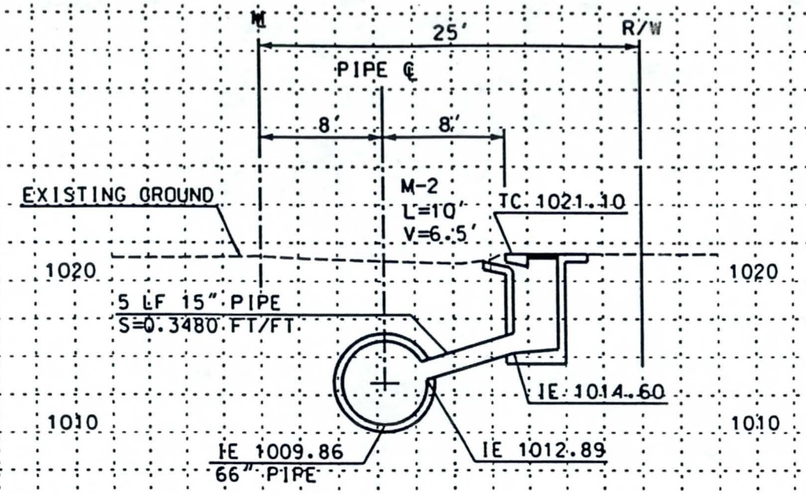

5 STA 20+59 RT
(HUNTINGTON DRIVE)

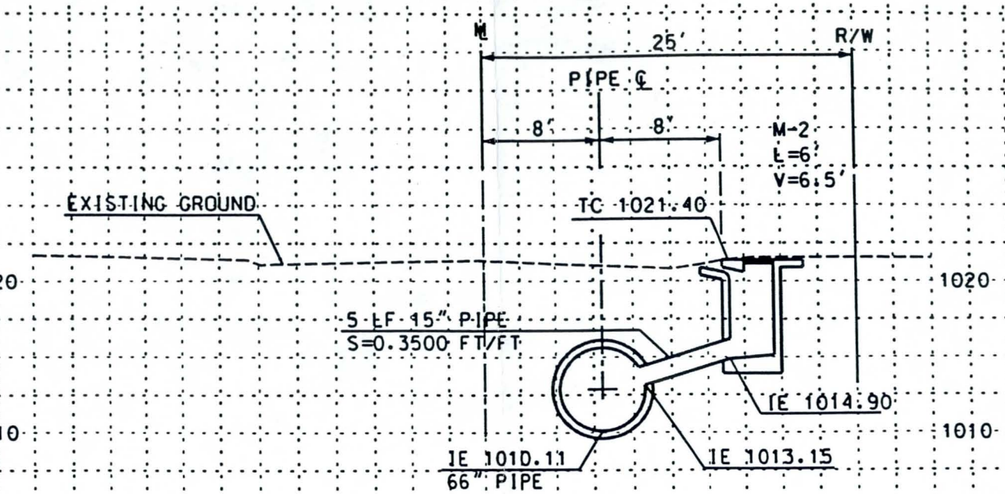

7 STA 22+75 RT
(HUNTINGTON DRIVE)

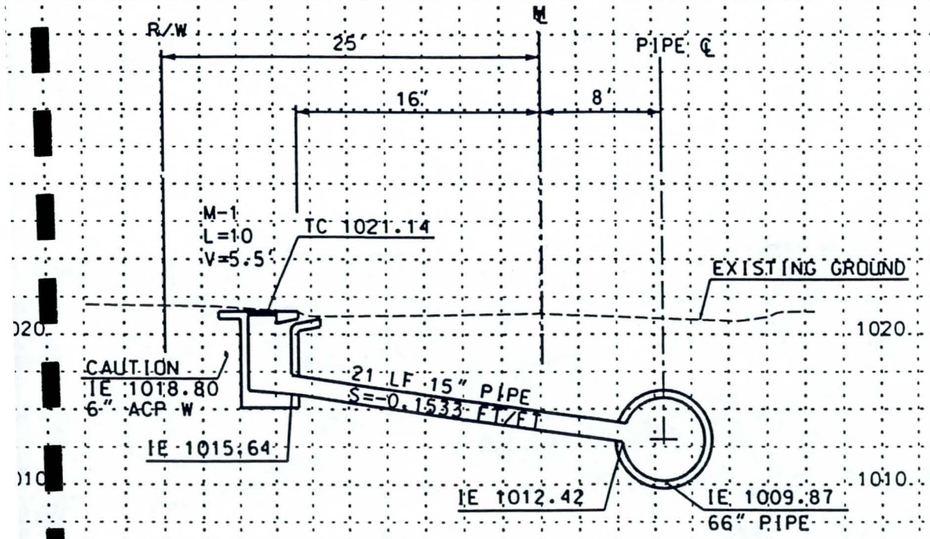

6 STA 20+67 LT
(HUNTINGTON DRIVE)

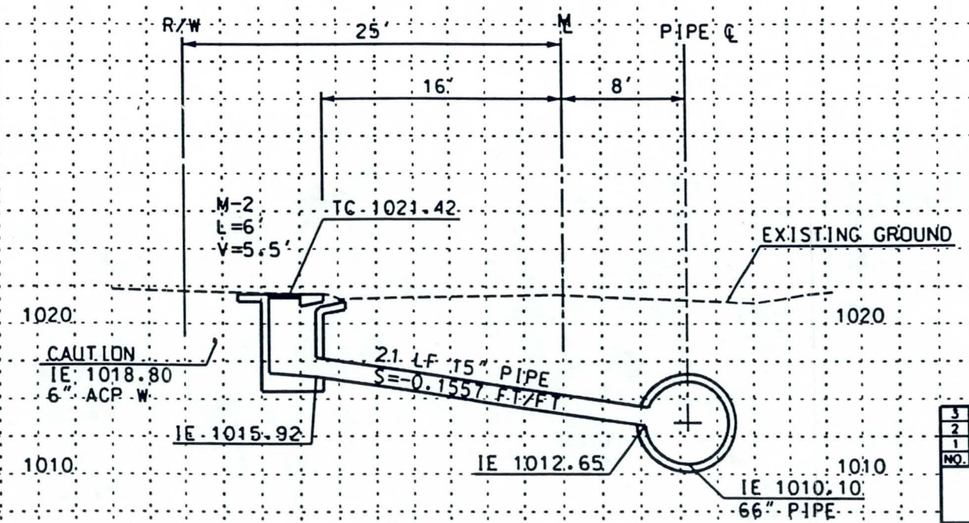

8 STA 22+67 LT
(HUNTINGTON DRIVE)

NOTES:

SEE SHEET 5 FOR CATCH BASIN REINFORCING NOTES

NO.	REVISION	BY	DATE
3			
2			
1			

FLOOD CONTROL DISTRICT OF MARICOPA COUNTY
ENGINEERING DIVISION

43RD AVENUE STORM DRAIN
SOUTHERN AVENUE TO SALT RIVER
FCD PROJECT NO. 1170230

	BY	DATE
DESIGNED	JRR	02/24/99
DRAWN	FC	02/24/99
CHECKED	MAL	02/24/99

Registered Professional Engineer (Civil) CERTIFICATE NO. 15608 JEFFREY R. RIDDLE Date Signed ARIZONA, U.S.A.

CONNECTOR PIPE PROFILE

SHEET 22 OF 30

\phase1\xsht22-p1.dgn Apr. 27, 1999 09:01:25

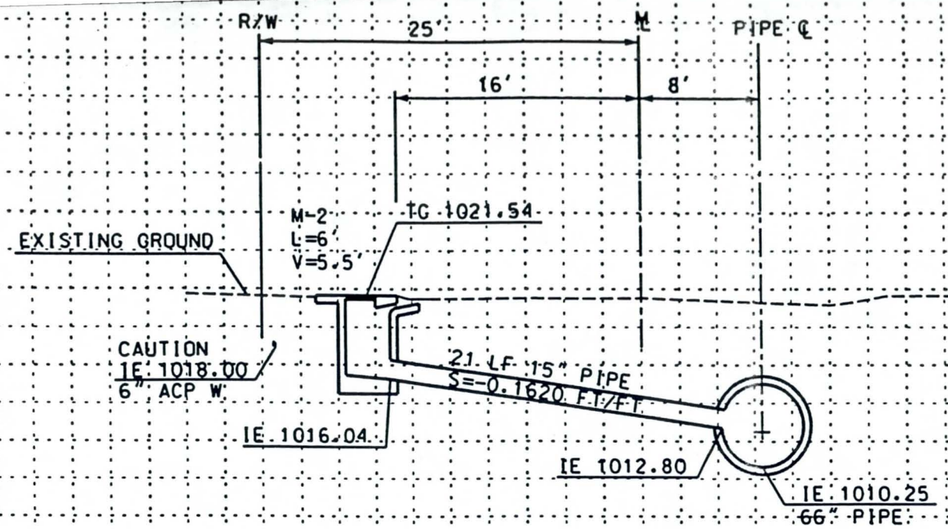

9 STA 23+96 LT
(HUNTINGTON DRIVE)

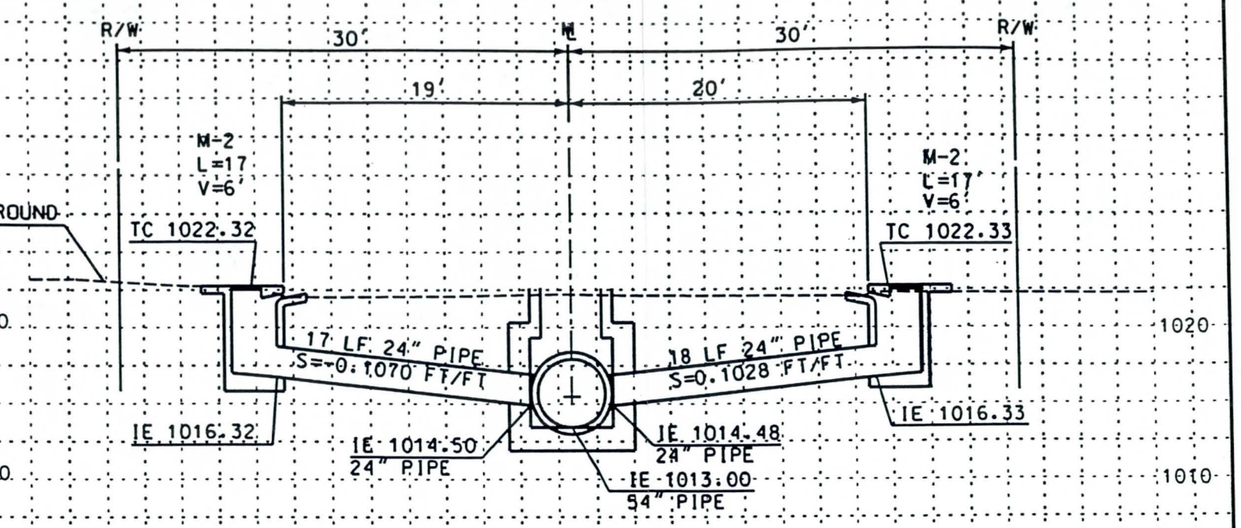

10 STA 26+40 LT STA 26+78 LT 11
(41ST AVENUE)

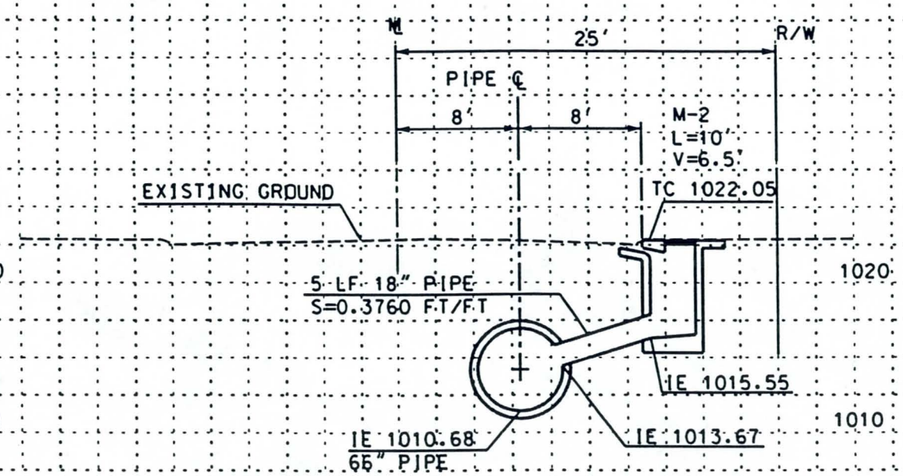

12 STA 27+21 RT
(HUNTINGTON DRIVE)

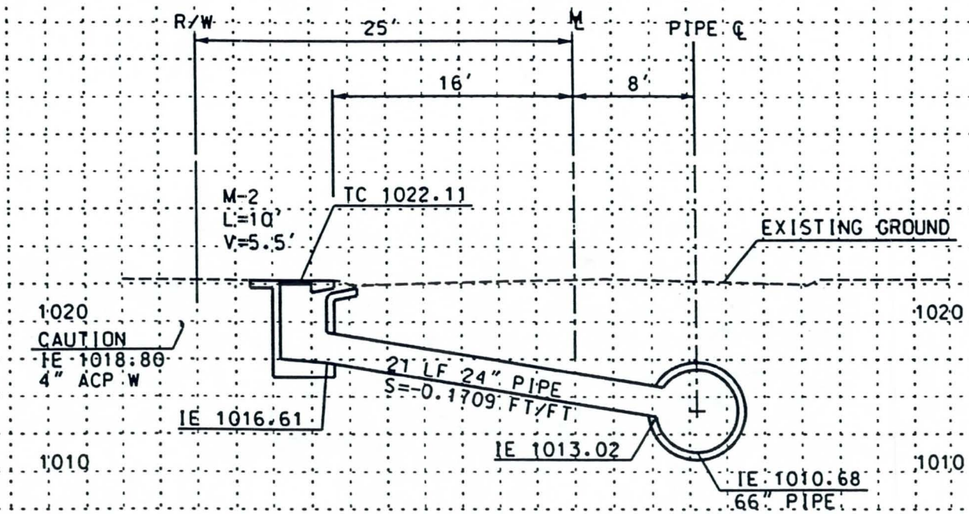

13 STA 27+28 LT
(HUNTINGTON DRIVE)

NOTES:

SEE SHEET 5 FOR CATCH BASIN REINFORCING NOTES

NO.	REVISION	BY	DATE
3			
2			
1			

FLOOD CONTROL DISTRICT
OF MARICOPA COUNTY
ENGINEERING DIVISION

43RD AVENUE STORM DRAIN
SOUTHERN AVENUE TO SALT RIVER
FCD PROJECT NO. 1170230

	BY	DATE
DESIGNED	JRR	02/24/99
DRAWN	FC	02/24/99
CHECKED	MAL	03/12/99

CONNECTOR PIPE PROFILE

SHEET 23 OF 30

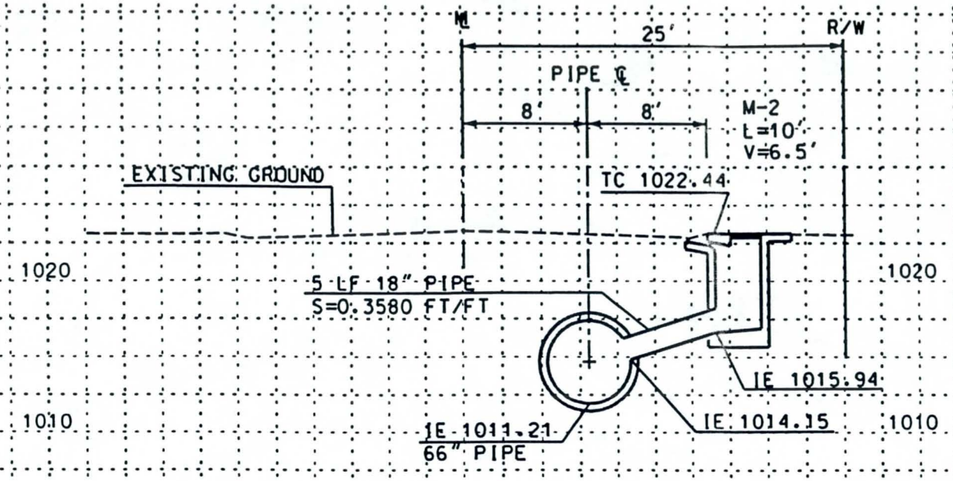

14 STA 31+70 RT (HUNTINGTON DRIVE)

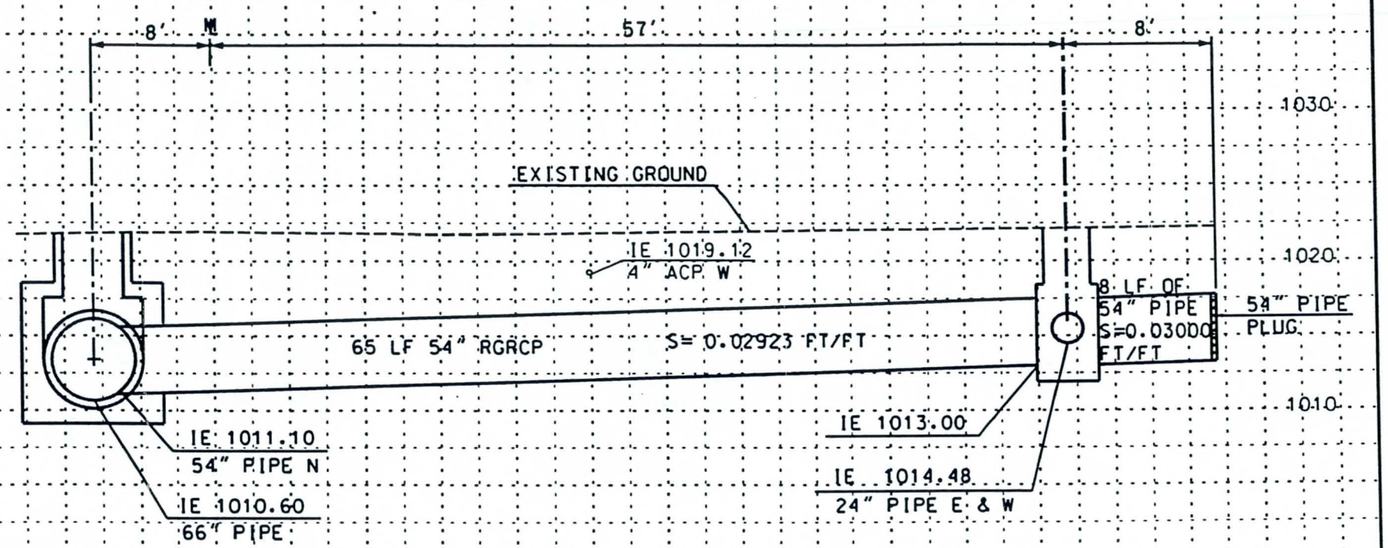

STA 26+57.38
8' RT TO 57' LT
(41ST AVENUE STUBOUT)

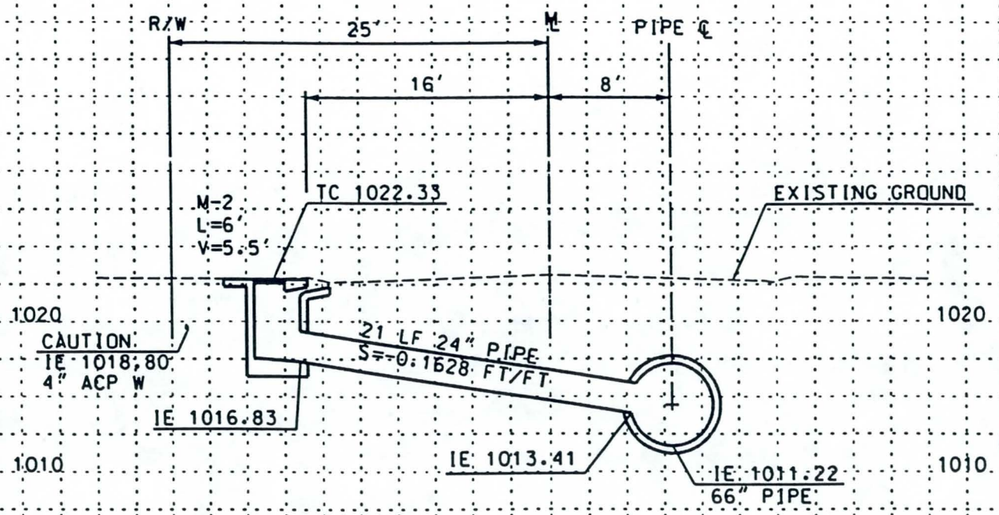

15 STA 31+78 LT (HUNTINGTON DRIVE)

NOTES:

SEE SHEET 5 FOR CATCH BASIN REINFORCING NOTES

NO.	REVISION	BY	DATE
3			
2			
1			

FLOOD CONTROL DISTRICT OF MARICOPA COUNTY
ENGINEERING DIVISION

43RD AVENUE STORM DRAIN
SOUTHERN AVENUE TO SALT RIVER
FCD PROJECT NO. 1170230

	BY	DATE
DESIGNED	JRR	02/24/99
DRAWN	FC	02/24/99
CHECKED	MAL	03/12/99

CONNECTOR PIPE PROFILE

SHEET 24 OF 30

ALTERNATE PIPE MATERIALS

MAIN LINE PIPE

STATION FROM	STATION TO	QUANTITY LF.	PIPE DIAMETER RCP (I.D.) IN.	PIPE DIAMETER CIP (I.D.) IN.	DEPTH TO TOP OF PIPE MIN. (FT.)	DEPTH TO TOP OF PIPE MAX. (FT.)	MAX TRENCH WIDTH AT TOP OF PIPE RCP FT.	REINFORCED CONCRETE PIPE CLASS*	N.R.C.P.* ASTM C14 CLASS	CAST-IN-PLACE CONCRETE PIPE MINIMUM WALL THICKNESS IN.	CONCRETE LINED CORRUGATED METAL PIPE: SLURRY BEDDING TO SPRING LINE: 2 2/3"X1/2" CORR. TYPE "F" MIN. GAGE	CONCRETE LINED CORRUGATED METAL PIPE: SLURRY BEDDING TO SPRING LINE: 3"X1" CORR. TYPE "F" MIN. GAGE	CONCRETE LINED CORRUGATED METAL PIPE: SLURRY BEDDING TO TOP OF PIPE: 2 2/3"X1/2" CORR. TYPE "F" MIN. GAGE	CONCRETE LINED CORRUGATED METAL PIPE: SLURRY BEDDING TO TOP OF PIPE: 3"X1" CORR. TYPE "F" MIN. GAGE
63+10.00	63+40.00	30	114	N/A	10	17	14.33	IV	N/A	N/A	N/A	N/A	N/A	10
63+40.00	80+00.00	1660	114	N/A	10	15	14.33	III	N/A	N/A	N/A	N/A	N/A	10
80+00.00	102+30.00	2230	114	N/A	25	17	14.33	IV	N/A	N/A	N/A	N/A	N/A	10
102+90.00	105+12.00	222	114	N/A	25	3	14.33	IV	N/A	N/A	N/A	N/A	N/A	10
13+31.00	13+49.00	18	66	N/A	9	12	9.67	III	N/A	N/A	N/A	N/A	N/A	12
13+49.00	20+18.00	730	66	N/A	7	9	9.67	III	N/A	N/A	N/A	N/A	N/A	12
10+08.00	12+61.00	253	66	N/A	4	7	9.67	III	N/A	N/A	N/A	N/A	N/A	12
20+08.00	32+00.00	1192	66	N/A	4	4	9.67	III	N/A	N/A	N/A	N/A	N/A	12
26+57.00	27+57.00	73	54	N/A	4	4	8.67	III	N/A	N/A	N/A	N/A	14	N/A

CONNECTOR PIPE

LOCATION STATION (LT. OR RT.)	QUANTITY LF.	DEPTH TO TOP OF PIPE MIN. (FT.)	DEPTH TO TOP OF PIPE MAX. (FT.)	PIPE DIAMETER NRCP RCP (I.D.) IN	RCP CLASS	PIPE DIAMETER CIP (I.D.) IN.	CMP 2 2/3"X1/2" CORR. TYPE "A" MIN. GAGE	NRCP * ASTM C-14 CLASS
10+93.00 RT	5	3	6	24	III	N/A	N/A	N/A
10+89.00 LT	20	2	7	30	III	N/A	N/A	N/A
11+93.00 RT	5	5	7	15	III	N/A	N/A	N/A
11+89.00 LT	20	3	7	24	III	N/A	N/A	N/A
20+59.00 RT	5	5	6	15	III	N/A	N/A	N/A
20+67.00 LT	21	3	7	15	III	N/A	N/A	N/A
22+75.00 RT	5	5	7	15	III	N/A	N/A	N/A
22+67.00 LT	21	3	7	15	III	N/A	N/A	N/A
23+96.00 LT	21	3	7	15	III	N/A	N/A	N/A
26+40.00 LT	18	3	5	24	III	N/A	N/A	N/A
26+78.00 LT	18	3	5	24	III	N/A	N/A	N/A
27+21.00 RT	5	5	7	18	III	N/A	N/A	N/A
27+28.00 LT	21	3	7	24	III	N/A	N/A	N/A
31+70.00 RT	5	4	6	18	III	N/A	N/A	N/A
31+78.00 LT	21	3	7	24	III	N/A	N/A	N/A
103+50.00 RT	59	24	25	30	V	N/A	N/A	N/A

MAIN LINE PIPE

1- ONLY PIPE MATERIAL SPECIFIED ON THIS SHEET ARE ACCEPTABLE FOR THIS PROJECT.

2- WHERE MAXIMUM TRENCH WIDTH IS NOTED AS "UNRESTRICTED" . PIPE STRENGTHS ARE SPECIFIED FOR A POSITIVE PROJECTING OR EMBANKMENT LOADING CONDITION. TRENCH WIDTH RESTRICTIONS FOR THE CAST IN PLACE CONCRETE OPERATION. SHALL COMPLY WITH SECTION 620.

* RUBBER GASKET PIPE IS REQUIRED

N/A NOT ACCEPTABLE

NO.	REVISION	BY	DATE
3			
2			
1	XXX	XXX	XXX

FLOOD CONTROL DISTRICT OF MARICOPA COUNTY
ENGINEERING DIVISION

43RD AVE STORM DRAIN
SOUTHERN AVE TO SALT RIVER.
PROJECT CONTROL NO. 1170230

	BY	DATE
DESIGNED	JRR	3/99
DRAWN	MMM	3/99
CHECKED	MAL	3/99

PIPE SUMMARY SHEET

SHEET 25 30

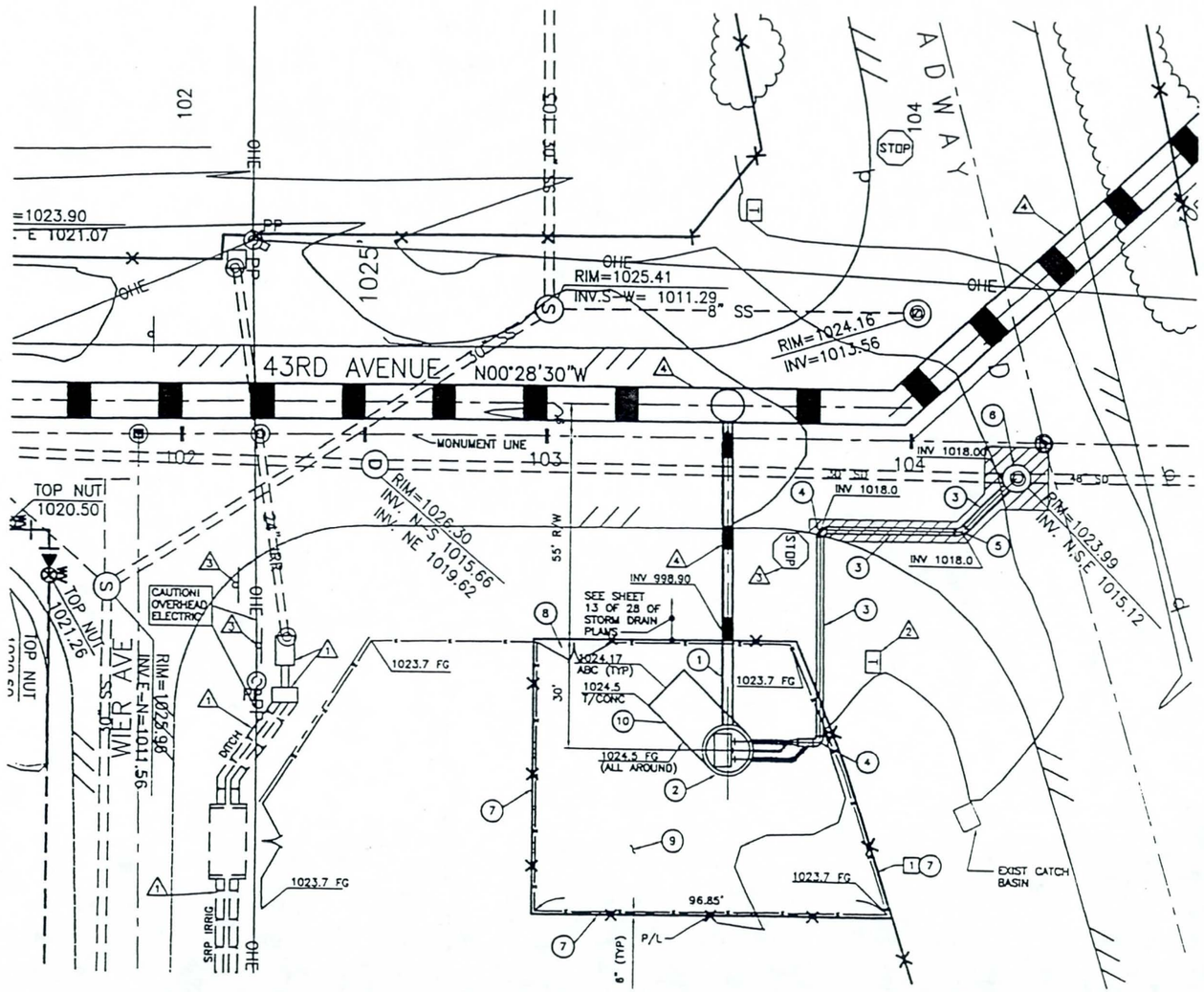

A SITE PLAN

0 10' 20' 40'

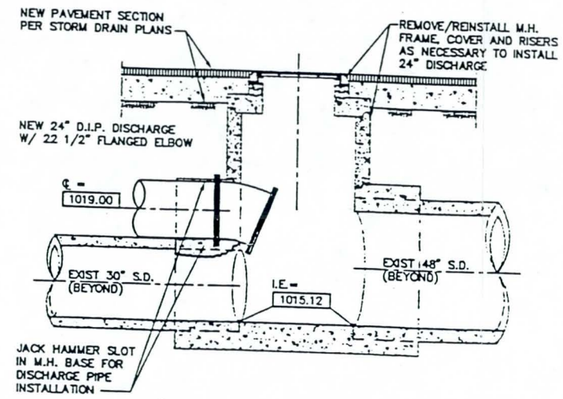

B DISCHARGE TIE – SECTION

PMMC105

0 1' 2' 3' 6'

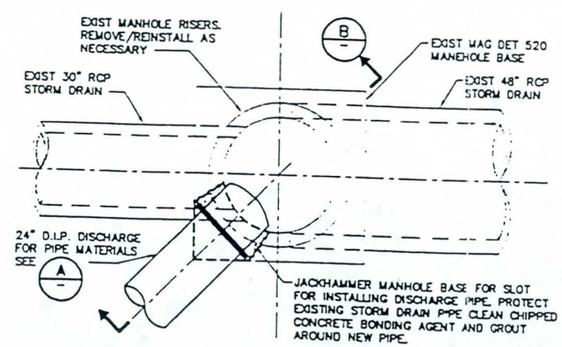

C DISCHARGE TIE – PLAN

PMMC104

0 1' 2' 3' 6'

REMOVE

1. REMOVE AND DISPOSE OF CORRUGATED METAL FENCE AND POSTS (150 LF)
2. REMOVE AND DISPOSE OF PAVEMENT AND BASE MATERIAL (55 SY)

CONSTRUCT

1. 30 INCH REINFORCED CONCRETE PIPE, RUBBER GASKETED (25 LF)
2. CONSTRUCT STORM DRAIN PUMP STATION WET WELL AND DISCHARGE PIPING. SEE SHEET 2 OF 5 FOR DETAILS AND QUANTITIES.
3. 24" PRESSURE CLASS 150 DUCTILE IRON PIPE, RESTRAINED JOINT (106 LF)
4. 24 INCH–90° ELBOWS, RESTRAINED (2 EA)
5. 24 INCH–45° ELBOWS , RESTRAINED (1 EA)
6. CONSTRUCT DISCHARGE INLET PER DETAILS, THIS SHEET
7. CONSTRUCT 6' CHAIN LINK FENCE W/REDWOOD SCREENING SLATS PER MAG STD DET 160 (302 LF)
8. CONSTRUCT 20' DOUBLE LEAF GATE, 6' HEIGHT, PER MAG STD DET 160, W/REDWOOD SLATS (20 LF)
9. CONSTRUCT 8" AGGREGATE BASE COURSE OVER ENTIRE SITE (700SY)
10. CONSTRUCT ELECTRICAL PAD PER SHEET 27 OF 28

MISCELLANEOUS CONSTRUCTION NOTES

1. PROTECT EXISTING SRP IRRIGATION FACILITIES. IF DAMAGED, REPLACE IN-KIND
2. PROTECT EXISTING TELEPHONE FACILITIES.
3. PROTECT EXISTING SIGN IN PLACE.
4. SEE SHEET 13 OF 28 OF STORM DRAIN PLANS FOR STORM DRAIN AND INLET PIPE CONSTRUCTION

NO	REVISION	BY	DATE
3			
2			
1			

FLOOD CONTROL DISTRICT
OF MARICOPA COUNTY
ENGINEERING DIVISION

carollo engineers

43RD AVENUE STORM DRAIN
SOUTHERN AVENUE TO SALT RIVER
FCD PROJECT NO. 117021

	BY	DATE
DESIGNED	KRK	12/22/98
DRAWN	WJD	12/22/98
CHECKED	GES	12/22/98

SITE PLAN

SHEET 26 OF 30

Registered Professional Engineer (Civil) CERTIFICATE NO. 16988 KENDALL R. KENNEDY Date Signed 3/12/99 ARIZONA, U.S.A.

Registered Professional Engineer (Civil) CERTIFICATE NO. 8449 GEORGE E. SHIRLEY Date Signed 3/12/99 ARIZONA, U.S.A.

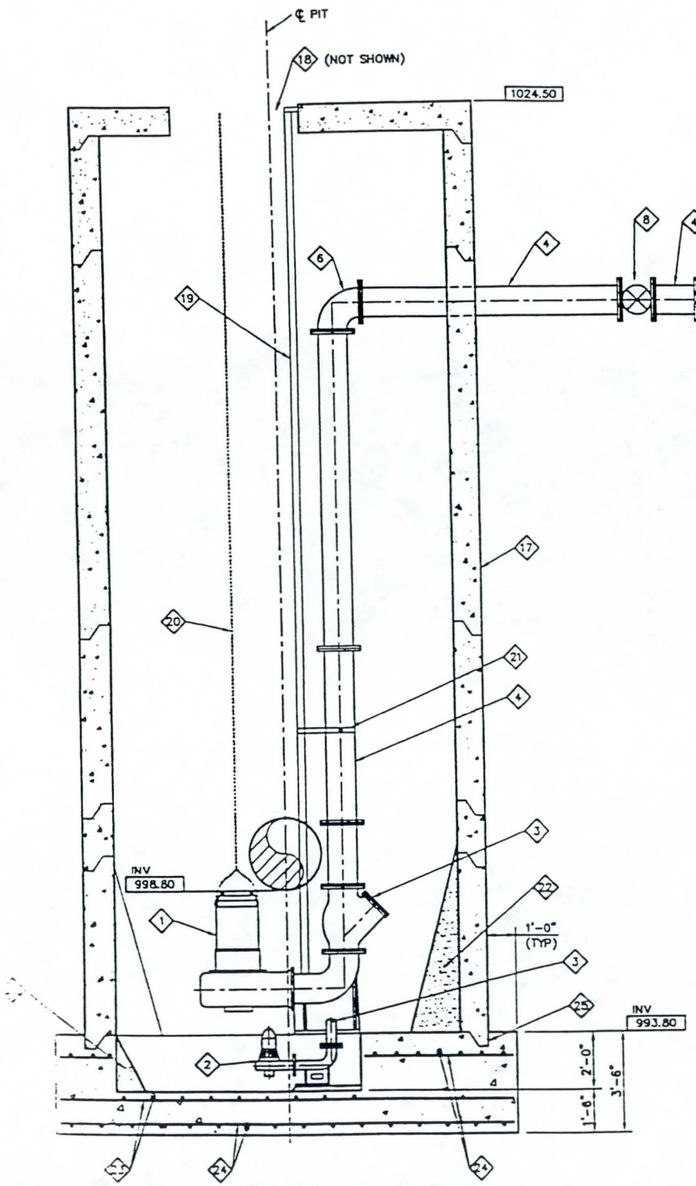

B SECTION
PMMC100
0 1' 2' 3' 6'

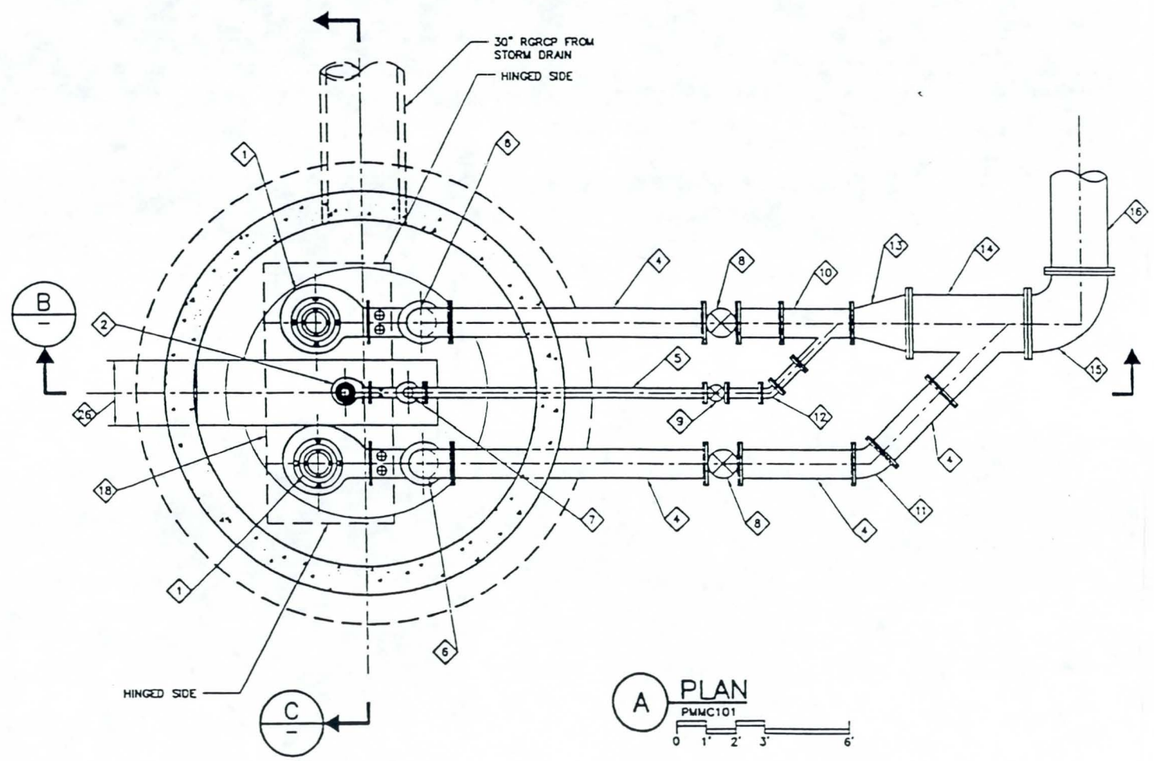

A PLAN
PMMC101
0 1' 2' 3' 6'

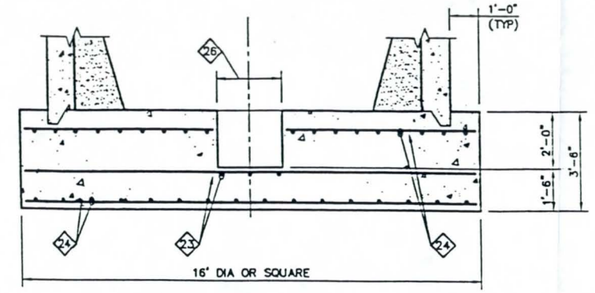

C SECTION
PMMC103
0 1' 2' 3' 6'

EQUIPMENT AND MATERIAL LIST

1. FLYGT MODEL CP-3201 SUBMERSIBLE PUMP W/821 IMPELLER OR EQUAL (TYP OF 2)
2. FLYGT MODEL CP-3102 SUBMERSIBLE PUMP W/432 IMPELLER AND MIX-FLUSH SYSTEM OR EQUAL (TYP OF 2). PROVIDE 1 COMPLETE UNIT WITHOUT BASE AS SPARE.
3. 12" FLYGT HDL BALL CHECK VALVE (TYP OF 2). 4" FLYGT BALL CHECK VALVE BEYOND (TYP OF 1).
4. 12" FLANGED DIP SPOOLS. 4" DIP PIPE SPOOLS BEYOND.
5. 4" FLANGED DIP PIPE SPOOLS.
6. 12" FLANGED DIP 90° ELBOWS
7. 4" FLANGED DIP 90° ELBOWS
8. 12" FLANGED RESILIENT WEDGE GATE VALVE W/VB&C
9. 4" FLANGED RESILIENT WEDGE GATE VALVE W/VB&C
10. 12"x4" FLANGED DIP WYE
11. 12" FLANGED DIP 45° ELBOW
12. 4" FLANGED DIP 45° ELBOW
13. 24"x12" DIP CONCENTRIC REDUCER
14. 24"x12" FLANGED DIP WYE
15. 24" FLANGED DIP 90° ELBOW
16. 24" DIP SPOOL – RESTRAINED JOINTS THROUGHOUT
17. 144" ID RCP WET WELL (WALL "C") W/PRECAST DECK. SEAL JOINTS WITH RAM-NECK JOINT SEALANT OR EQUAL
18. ALUMINUM HATCH – 108" X 54" DOUBLE LEAF, TORSION SPRING ASSISTED.
19. STAINLESS STEEL GUIDE RAILS (TYP)
20. STAINLESS STEEL LIFTING CHAIN (TYP)
21. INTERMEDIATE STAINLESS STEEL GUIDE BAR BRACKETS (TYP)
22. GROUT FILLET PER PUMP MANUFACTURER'S REQUIREMENTS
23. #9@12" EW. UNDER SUMP ONLY
24. #10@9" EW
25. LEAVE BLOCKOUT IN BASE FOR 144" ID RCP WET WELL INSTALLATION. GROUT WET WELL INTO BASE
26. COORDINATE SUMP WIDTH WITH PUMP MANUFACTURER

Registered Professional Engineer (Civil) CERTIFICATE NO. 16988 KENDALL R. KENNEDY Date Signed 3/12/99 ARIZONA, U.S.A.

Registered Professional Engineer (Civil) CERTIFICATE NO. 8449 GEORGE E. SHIRLEY Date Signed 3/12/99 ARIZONA, U.S.A.

NO	REVISION	BY	DATE
3			
2			
1			

FLOOD CONTROL DISTRICT
OF MARICOPA COUNTY
ENGINEERING DIVISION

carollo engineers

43RD AVENUE STORM DRAIN
SOUTHERN AVENUE TO SALT RIVER
FCD PROJECT NO. 117021

	BY	DATE
DESIGNED	KRK	9/26/98
DRAWN	WJD	10/27/98
CHECKED	GES	3/10/99

PUMP STATION
PLAN AND DETAILS

SHEET 27 OF 30

SYMBOLS

1500 KVA, 3ø, 60HZ 4160V DELTA – 480/277VAC WYE	TRANSFORMER WITH PRIMARY & SECONDARY VOLTAGE, PHASE CONNECTIONS, KVA RATING AS SHOWN
20A 3P	LOW VOLTAGE THERMAL MAGNETIC CIRCUIT BREAKER; 3 POLE, 20 AMPERE, BOLT-IN TYPE
25 MCP 3P 1	FULL VOLTAGE NON-REVERSING COMBINATION MAGNETIC MOTOR STARTER WITH NEMA SIZE AND 3 POLE MOTOR CIRCUIT PROTECTOR (FVNR)
*	INDICATES DEVICE LOCATED IN MCC
△	INDICATES DEVICE LOCATED AT OR NEAR LOAD
□ OR ■	INDICATES EXTERNAL TERMINATION POINT
	WIRE INTERSECTION POINT
	NORMALLY OPEN CONTACT
	NORMALLY CLOSED CONTACT
	FUSE – CURRENT LIMITING NOTED BY CL
	CONTROL POWER TRANSFORMER (CPT)
	GROUND ROD OR GROUND GRID CONNECTION
	GROUND ROD IN GROUND WELL
OR	INDICATING LIGHT–LETTER DENOTES COLOR: A=AMBER R=RED B=BLUE W=WHITE G=GREEN Y=YELLOW
OR	STOP LOCKOUT PUSH BUTTON (SLO)
OR	START PUSH BUTTON
OR	STOP PUSH BUTTON
OR	SELECTOR SWITCH
	OVERLOAD DEVICE
FLS OR	FLOAT TYPE LEVEL SWITCH (CLOSING ON RISING LEVEL)
FS OR	FLOAT TYPE LEVEL SWITCH (OPENING ON RISING LEVEL)
PS OR	PRESSURE SWITCH (I=INDICATING) (CLOSING ON RISING PRESSURE)
TS OR	TEMPERATURE SWITCH (CLOSING ON RISING TEMPERATURE)
	DUPLEX RECEPTACLE 120V, 20A GROUNDING TYPE
S	SINGLE POLE TOGGLE SWITCH
Swp	WEATHERPROOF SWITCH
PB	POWER PULLBOX, SIZE AS INDICATED
TB	TERMINAL BOX WITH TERMINAL STRIP
PC OR PC	PHOTOCELL
OR PR	LEVEL PROBE
JB	JUNCTION BOX
	FAN
A	LIGHTING FIXTURE. (REFER TO LETTER IN FIXTURE SCHEDULE)
(A)	FLUORESCENT FIXTURE. (REFER TO LETTER IN FIXTURE SCHEDULE) –LOWER CASE
CKT. S-5	HOME RUN–NUMBER DENOTES CIRCUIT NUMBER
5	MOTOR – NUMBER INDICATES H.P. – LETTER "M" INDICATES MOTOR
- - - - - - - -	CONDUITS IN SLAB OR CONCRETE
— - — - — - —	CONDUIT ENCASED IN DUCTBANK OR BELOW SLAB
—— G ——	GROUND CONDUCTOR ENCASED IN CONCRETE OR DIRECT BURIED

EXAMPLES:

1–1PR#16S OR 1PR	ONE SINGLE–PAIR, TWISTED, SHIELDED INSTRUMENT CABLE
1–1TR#16S OR 1TR	ONE TRIAD TWISTED, SHIELDED INSTRUMENT CABLE
2–4PR#16S	TWO FOUR–PAIR, INDIVIDUALLY SHIELDED PAIR & OVERALL SHIELDED INSTRUMENT CABLE
3–7/C#14, 3"C	THREE SEVEN–CONDUCTOR #14 MULTICONDUCTOR CABLES IN THREE (3) INCH CONDUIT
3/C#12WG, 1"C	THREE CONDUCTOR #12 CABLE INCLUDING INSULATED GREEN EQUIPMENT GROUNDING CONDUCTOR IN ONE (1) INCH CONDUIT

ABBREVIATIONS

AFF	ABOVE FINISHED FLOOR
C OR CDT.	CONDUIT
CPT	CONTROL POWER TRANSFORMER
CR	CONTROL RELAY
CS	CONTROL STATION
EC	EMPTY CONDUIT
F	FAST, FORWARD
Fu	FUSE
G or GND	GROUND (WIRE)
GFI	GROUND FAULT INTERRUPTING
HS	HAND SWITCH
HTR	HEATER
IC	INSTRUMENTATION CONDUIT
LLCO	LOW LEVEL CUT OFF
MCP	MOTOR CIRCUIT PROTECTION
MFR	MANUFACTURER
NTS	NOT TO SCALE
PC	PHOTOCELL
PNL	INSTRUMENT & CONTROL PANEL
R	REVERSE
SPC	SPARE CONDUIT
SES	SERVICE ENTRANCE SECTION
SST	SOLID STATE TRIP
TM	TIMER
TR	TIMING RELAY
WP	WEATHERPROOF
UG	UNDER GROUND
XFMR	TRANSFORMER

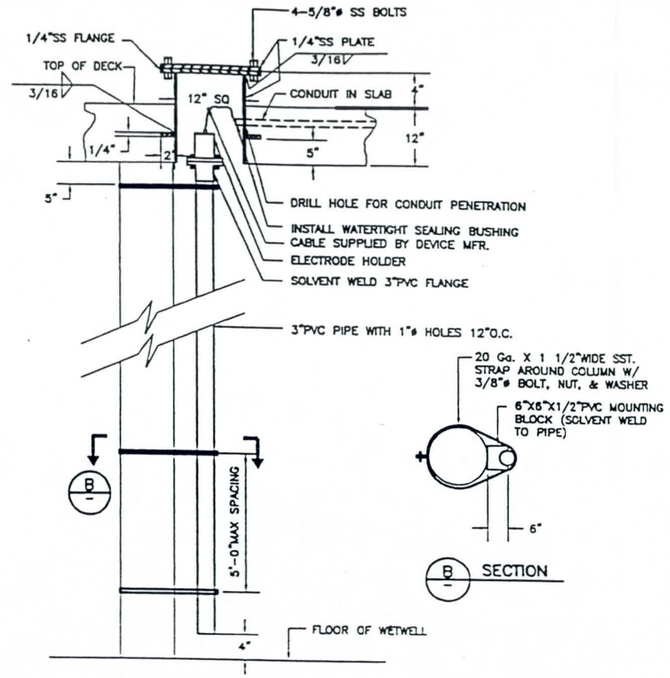

A LEVEL ELEMENT PROBE MOUNTING DETAIL

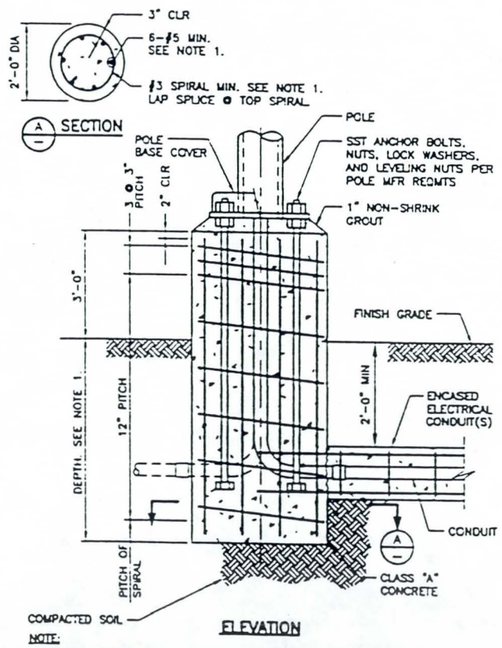

ELEVATION

NOTE:

1. IF NOT SPECIFIED OR INDICATED ON THE DRAWINGS, DEPTH AND REINFORCEMENT SHALL BE DETERMINED BY POLE MANUFACTURER.

E512 TYP AREA LIGHTING POLE MOUNTING
06-01-98

Registered Professional Engineer (Electrical) CERTIFICATE NO. 16264 JARED C. ROGERS Date Signed 3-12-99 ARIZONA, U.S.A.

Registered Professional Engineer (Civil) CERTIFICATE NO. 16988 KENDALL R. KENNEDY Date Signed 3/12/99 ARIZONA, U.S.A.

Registered Professional Engineer (Civil) CERTIFICATE NO. 8449 GEORGE E. SHIRLEY Date Signed 3/12/99 ARIZONA, U.S.A.

NO.	REVISION	BY	DATE
3			
2			
1			

FLOOD CONTROL DISTRICT OF MARICOPA COUNTY
ENGINEERING DIVISION

carollo engineers

43RD AVENUE STORM DRAIN
SOUTHERN AVENUE TO SALT RIVER
FCD PROJECT NO. 117021

	BY	DATE
DESIGNED	RSL	12/22/98
DRAWN	RSL	12/22/98
CHECKED	JCR	12/22/98

ELECTRICAL LEGEND

SHEET 28 OF 30

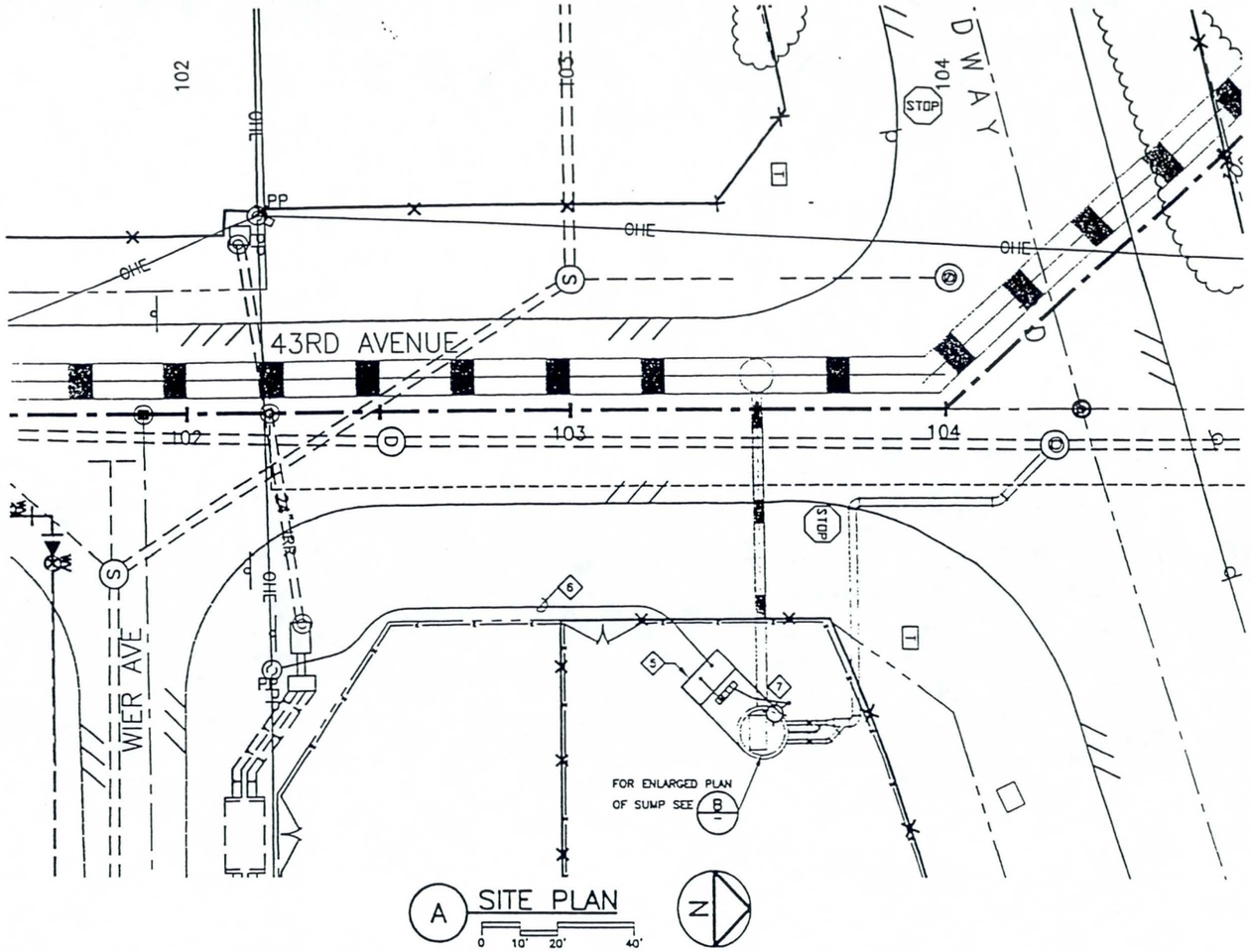

A SITE PLAN

0 10' 20' 40'

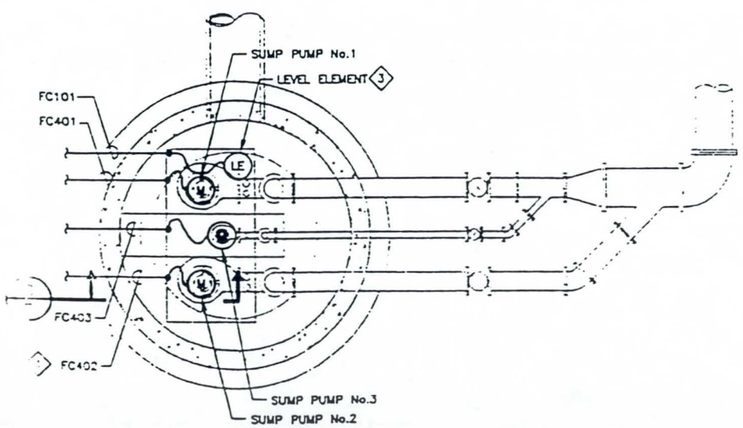

B ENLARGED PLAN – SUMP

PEMC101

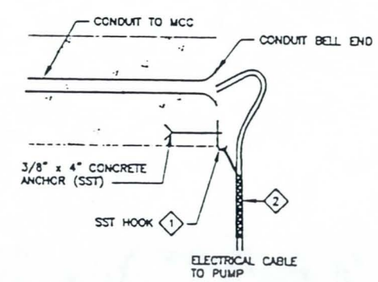

C CABLE SUPPORT DETAIL

NOT TO SCALE

PEMC104

KEY NOTES

1. INSTALL CONCRETE ANCHOR IN SEPARATE VERTICAL PLANE FROM CONDUIT.
2. SINGLE EYE, SINGLE WEAVE, TIN COATED BRONZE, CLOSED MESH SUPPORT GRIP; HUBBELL CAT. No. 022010XX. SIZE SUPPORT GRIP TO MATCH CABLE DIAMETER FURNISHED WITH PUMPS.
3. MOUNT LEVEL ELEMENT PER (A) ON SHT. 3 OF 5.
4. SUBMERSIBLE CABLE SHALL BE SUPPLIED WITH SUMP PUMP – TYPICAL 3 PLACES.
5. TRANSFORMER PAD PER SRP REQUIREMENTS. COORDINATE WITH SRP TO MAINTAIN SPACING BETWEEN TRANSFORMER AND MCC AS REQUIRED BY SRP.
6. 4"PVC UNDERGROUND CONDUIT PER SRP REQUIREMENTS. STUB CONDUIT UP ADJACENT TO POWER POLE 1' ABOVE GRADE.
7. 100W HPS LIGHT FIXTURE ON 14' STEEL POLE. POLE & FIXTURE FINISH SHALL BE BRONZE; HOLOPHANE CAT. No. SMST-100HP-12-BZ-PM W/ POLE CAT. No. CSZSQ14J/1 OR EQUAL. PROVIDE RECEPTACLE WITH WEATHERPROOF COVER AT 24" MAXIMUM ABOVE POLE BASE IN THE POLE.

Registered Professional Engineer (Electrical) CERTIFICATE NO. 16264 JARED C. ROGERS Date Signed 3-12-99 ARIZONA, U.S.A.

Registered Professional Engineer (Civil) CERTIFICATE NO. 16988 KENDALL R. KENNEDY Date Signed 3/12/99 ARIZONA, U.S.A.

Registered Professional Engineer (Civil) CERTIFICATE NO. 8449 GEORGE E. SHIRLEY Date Signed 3/12/99 ARIZONA, U.S.A.

NO	REVISION	BY	DATE
3			
2			
1			

FLOOD CONTROL DISTRICT
OF MARICOPA COUNTY
ENGINEERING DIVISION

carollo engineers

43RD AVENUE STORM DRAIN
SOUTHERN AVENUE TO SALT RIVER
FCD PROJECT NO. 117021

	BY	DATE
DESIGNED	RSL	12/22/98
DRAWN	RSL	12/22/98
CHECKED	JCR	12/22/98

ELECTRICAL SITE PLAN AND ENLARGED PLANS

SHEET OF 29 30

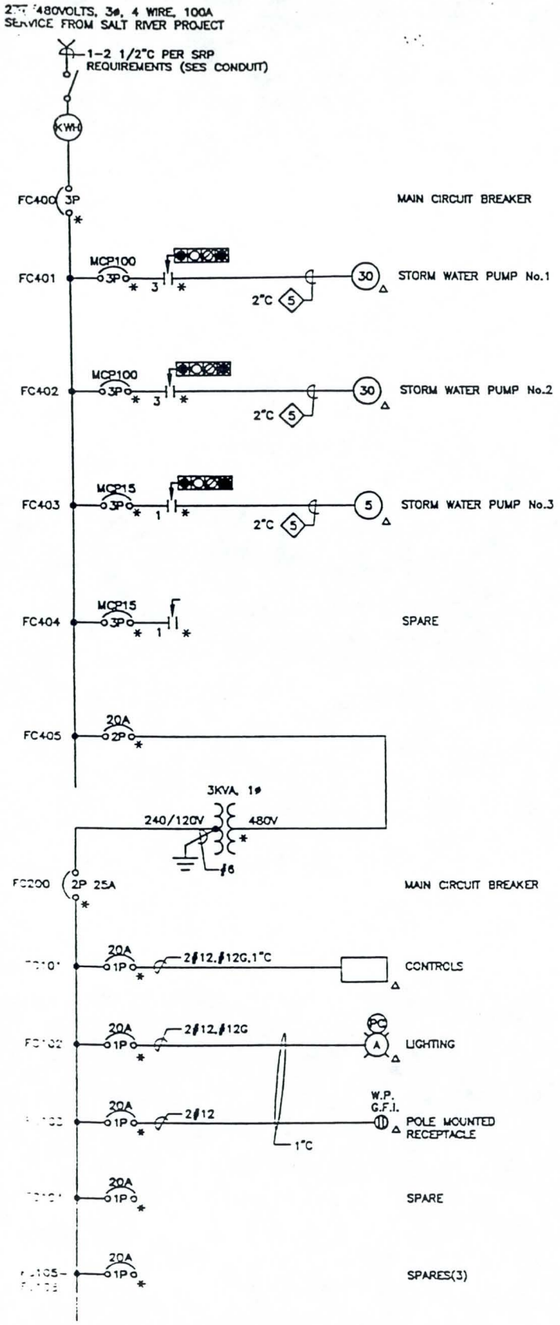

A SINGLE LINE DIAGRAMS

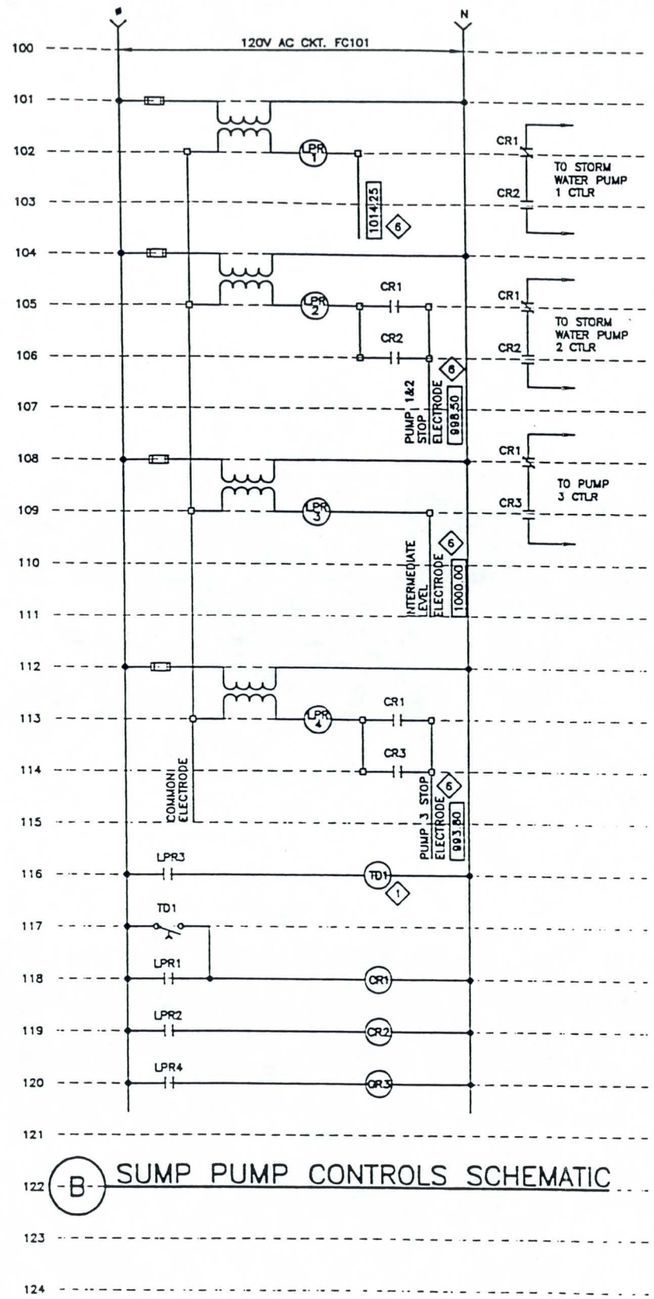

B SUMP PUMP CONTROLS SCHEMATIC

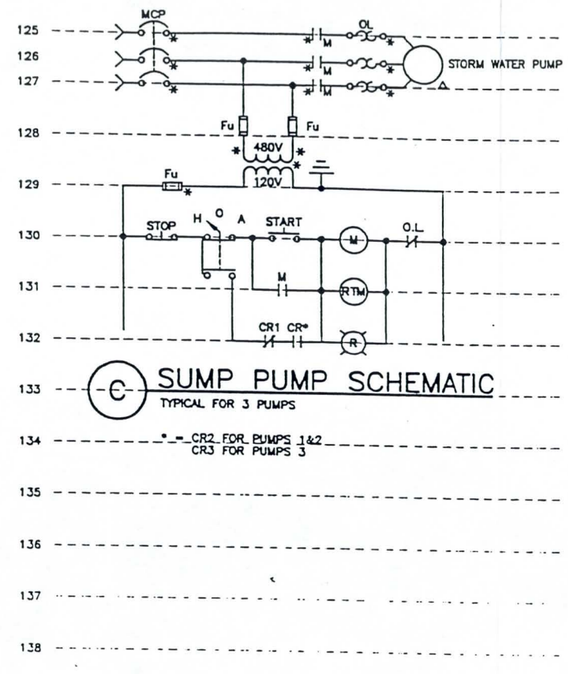

C SUMP PUMP SCHEMATIC
TYPICAL FOR 3 PUMPS

* = CR2 FOR PUMPS 1&2
CR3 FOR PUMPS 3

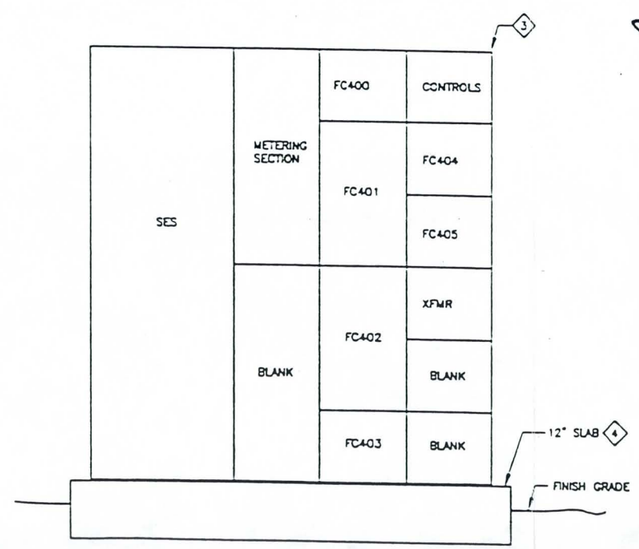

D ELEVATION – SERVICE ENTRANCE SECTION AND MCC – FC400
N.T.S.

KEY NOTES

1. TIMER TD1: DELAY TIMER ADJUSTABLE FROM 1 HOUR MINIMUM TO 30 HOURS MAXIMUM: EAGLE SIGNAL CONTROLS. CAT.No. 510 OR EQUAL.
2. NOT USED.
3. SES AND MCC SHALL BE NEMA 3R RATED.
4. PAD FOR ELECTRICAL EQUIPMENT SHALL BE CLASS A 3000# CONCRETE WITH #5 @ 12"EW T&B, PLACED ON 6" OF ABC MATERIAL COMPACTED TO 95% DENSITY; ABC MATERIAL SHALL BE PLACED ON COMPACTED FILL OR UNDISTURBED NATIVE SOIL. TOP EDGE OF PAD SHALL BE CHAMFERED ALL AROUND; PAD DIMENSIONS SHALL EXCEED EQUIPMENT DIMENSIONS BY A MINIMUM OF 6" ON THE BACK AND SIDES AND EXTEND TO THE WET WELL IN THE FRONT OF THE EQUIPMENT. MAINTAIN 6'-0" BETWEEN THE MCC AND THE NEAREST POINT OF THE WET WELL.
5. INSTALL PUMP SUPPLIED CABLE IN CONDUIT.
6. INDICATES ELEVATION OF TIP OF PROBE–TYPICAL.

Registered Professional Engineer (Electrical) CERTIFICATE NO. 16264 JARED C. ROGERS Date Signed 3-15-99 ARIZONA, U.S.A.

Registered Professional Engineer (Civil) CERTIFICATE NO. 16988 KENDALL R. KENNEDY Date Signed 3/12/99 ARIZONA, U.S.A.

Registered Professional Engineer (Civil) CERTIFICATE NO. 8449 GEORGE E. SHIRLEY Date Signed 3/12/99 ARIZONA, U.S.A.

NO	REVISION	BY	DATE
3			
2			
1			

FLOOD CONTROL DISTRICT
OF MARICOPA COUNTY
ENGINEERING DIVISION

carollo engineers

43RD AVENUE STORM DRAIN
SOUTHERN AVENUE TO SALT RIVER
FCD PROJECT NO. 117021

	BY	DATE
DESIGNED	RSL	12/22/98
DRAWN	RSL	12/22/98
CHECKED	JCR	12/22/98

SINGLE LINE DIAGRAM AND SCHEMATICS

SHEET 30 OF 30

FLOOD CONTROL DISTRICT OF MARICOPA COUNTY

IN COOPERATION WITH THE CITY OF PHOENIX

PLANS FOR THE CONSTRUCTION OF

43RD AVENUE STORM DRAIN, PHASE 2

BASELINE ROAD TO SOUTHERN AVENUE

FCD PROJECT NO. 1170230

FCD CONTRACT NO. 99-04

N

PROJECT LOCATION

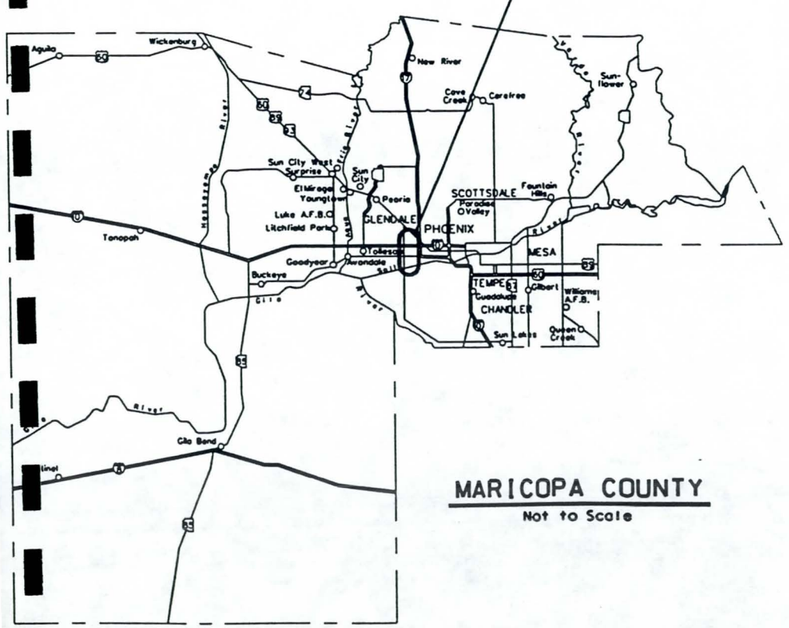

MARICOPA COUNTY

Not to Scale

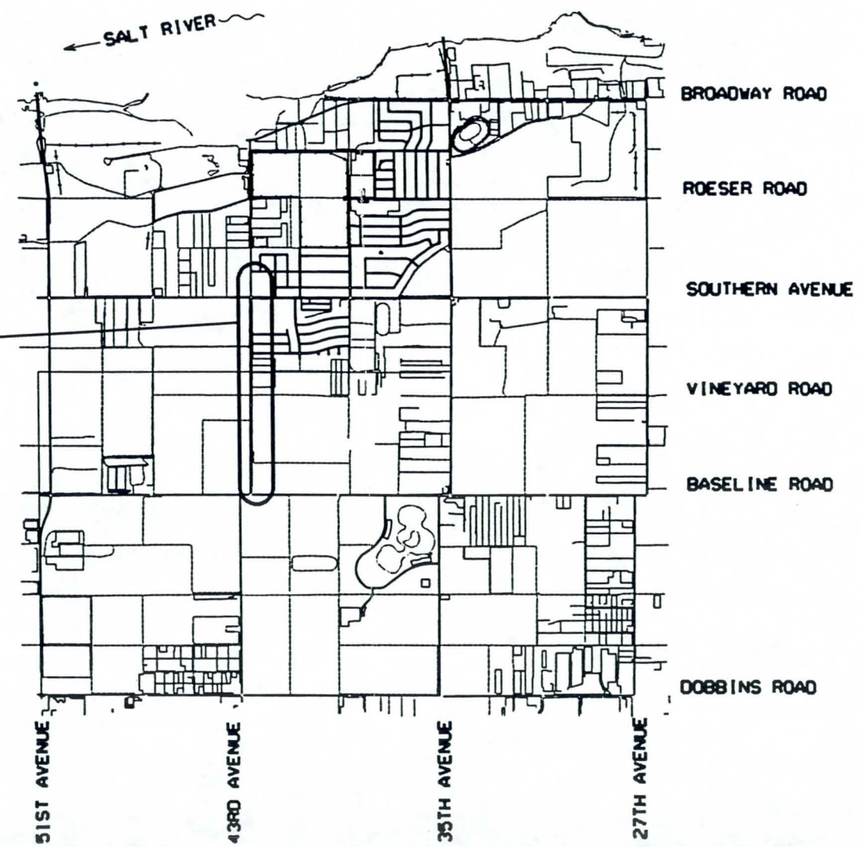

VICINITY MAP

Not to Scale

FLOOD CONTROL DISTRICT OF MARICOPA COUNTY

ISSUED FOR PUBLIC BIDDING BY:

CHIEF ENGINEER AND GENERAL MANAGER

BOARD OF DIRECTORS OF THE FLOOD CONTROL DISTRICT

FULTON BROCK - CHAIRMAN

DISTRICT 1	FULTON BROCK
DISTRICT 2	DON STAPLEY
DISTRICT 3	ANDY KUNASEK
DISTRICT 4	JAN BREWER
DISTRICT 5	MARY ROSE WILCOX

dgn phase2\43P2COV.DGN May. 03, 1999 14:08:44

LEGEND

- BENCHMARK
- EXIST. SURVEY MONUMENT
- EXIST. SURVEY MONUMENT
- EXIST. & PROPOSED COMBINED CURB & GUTTER - MAG DET. 220 TYPE "A"
- EXIST. CONCRETE SIDEWALK - COP STD. DET. P-1230
- EXISTING DITCH
- IRR — EXISTING IRRIGATION LINE (NOTE - PRIVATE, SALT RIVER OR R.I.D.)
- EXISTING IRRIGATION STRUCTURE
- EXISTING IRRIGATION STANDPIPE
- 12" W — EXISTING WATER LINE / SIZE
- EXISTING WATER METER & BOX
- EXISTING FIRE HYDRANT
- NEW OR RELOCATED FIRE HYDRANT BY CONTRACTOR
- EXISTING WATER VALVE OPERATING NUT ELEVATION
- 24" S — EXISTING SEWER LINE / SIZE
- EXISTING MANHOLE
- NEW MANHOLE
- CATCH BASIN, GUTTER INLET (LENGTH TO SCALE)
- CATCH BASIN, CURB INLET (LENGTH TO SCALE)
- CATCH BASIN, CURB & GUTTER INLET (LENGTH TO SCALE)
- 78" SD — EXISTING STORM DRAIN / SIZE
- NEW PIPE FOR STORM DRAIN OR IRRIGATION LINE
- CATV — EXISTING UNDERGROUND CABLE TELEVISION
- E — EXISTING UNDERGROUND ELECTRIC
- 4D — EXISTING UNDERGROUND TELEPHONE DUCTS (SPECIFY NUMBER)
- 2" G — EXISTING GAS LINE / SIZE
- T — EXISTING UNDERGROUND TELEPHONE CABLE
- EXISTING STREET SIGN
- EXISTING TRAFFIC SIGN
- EXISTING UTILITY POLE
- EXISTING WIRE FENCE
- EXISTING WOOD FENCE
- EXISTING CHAIN LINK FENCE
- MAIL BOX
- DOWN ANCHOR
- STREET LIGHT
- EASEMENT LINE
- EXISTING OR NEW R/W LINE
- PAVEMENT CENTER LINE AND OR MOUNUMENT LINE (℄ AND / OR ℳ)
- 2 — BORING HOLE / NUMBER (SEE SPECIAL PROVISIONS)
- TELEPHONE RISER
- WSB — WATER SERVICE BOX
- MST — MID SPAN TAP (OH UTILITIES)
- WV — WATER VAULT
- D — STORM MANHOLE
- T — TRAFFIC SIGNAL BOX
- TREE
- STOP — STOP SIGN
- P — MAILBOX
- GATE W/POSTS
- SM — SAWCUT & MATCH

ABREVIATIONS

CSTR	CONSTRUCTION
DESC	DESCRIPTION
EQ	EQUAL
FOC	FIBRE OPTIC CABLE
G	GUTTER ELEVATION
OHE	OVERHEAD ELECTRIC
P	PAVEMENT ELEVATION
PG	PAGE
P/L	PROPERTY LINE
℄	PLATE CENTERLINE
PRV	PRIVATE
SPG	SPACING
UGT	UNDERGROUND TELE CABLE
TBM	TEMPORARY BENCHMARK
TC	TOP OF CURB ELEVATION
TW	TOP OF WALL

STRUCTURAL NOTES:

1. ALL CONSTRUCTION SHALL CONFORM TO MAG STANDARDS DETAILS. SPECIFICATIONS. DATED 1992. INCLUDING ALL REVISIONS THRU 1996.
2. DESIGN IS IN ACCORDANCE WITH AASHTO STANDARD SPECIFICATIONS FOR HIGHWAY BRIDGES. DIVISION 1. 15TH EDITION. 1992.
3. REINFORCING STEEL SHALL CONFORM TO ASTM SPECIFICATION A615. GRADE 60.
4. STRESSES - fs = 24.000 PSI - GRADE 60 REINFORCING STEEL.
5. ALL REINFORCING STEEL PLACEMENT DIMENSIONS SHALL BE TO CENTER OF BARS UNLESS OTHERWISE NOTED.
6. ALL REINFORCING STEEL SHALL HAVE 2" CLEAR COVER UNLESS OTHERWISE NOTED.
7. STRUCTURAL STEEL SHALL CONFORM TO ASTM SPECIFICATION A36.
8. ALL WELDING SHALL CONFORM TO THE REQUIREMENTS OF THE AMERICAN WELDING SOCIETY. STRUCTURAL WELDING CODE. REVISED 1996.
9. DIMENSIONS SHALL NOT BE SCALED FROM DRAWINGS.
10. CHAMFER ALL EXPOSED CORNERS 3/4" UNLESS OTHERWISE NOTED.
11. CONCRETE COMPRESSIVE STRENGTH SHALL BE 3.000 PSI MAG. CLASS A.

SECTION LETTER OR DETAIL NUMBER

SHEET NUMBER TO LOCATE

INDEX OF SHEETS

SHEET NO.	TITLE
1	COVER SHEET. & VICINITY MAP
2	GENERAL NOTES & INDEX OF SHEETS
3	QUANTITY SUMMARY
4	KEY MAP & TYPICAL SECTION
5-13	PLAN & PROFILES
14	CATCH BASIN DETAILS
15	STORM DRAIN MANHOLE BASE. DETAIL A
16	ALTERNATE PIPE CHART
17-21	CONNECTOR PIPE PROFILES

UTILITY NOTIFICATION

COMPANY	CONTACT NAME	PHONE NUMBER
CITY OF PHOENIX (WATER)	GERALD ARAKAKI	261-8229
CITY OF PHOENIX (SEWER)	GERALD ARAKAKI	261-8229
SOUTHWEST GAS	ROBERT SPRAGUE	484-5343
SRP (POWER)	WILLIAM G. PHILLIPS	236-8092
SRP (IRRIGATION)	ROBERT MAURER	236-2962
U.S. WEST	ROBERT FRIESS	630-5473

GENERAL NOTES:

1. ALL CONSTRUCTION TO BE PERFORMED ACCORDING TO APPLICABLE MAG STANDARD DETAILS AND MAG SPECIFICATIONS. DATED 1998 . INCLUDING ALL REVISIONS THROUGH 1998 AND THE CITY OF PHOENIX ADDITIONS AND DELETIONS THROUGH 1996.
2. FACILITIES WHICH ARE NOT SPECIFICALLY LOCATED WITH ACTUAL HORIZONTAL AND VERTICAL CONTROLS ARE APPROXIMATE AND TO THE BEST AVAILABLE INFORMATION.
3. EXISTING UTILITIES AND OTHER FACILITIES HAVE BEEN PLACED ON THE PLANS FROM FIELD SURVEYS. EXISTING MAPS AND OTHER CURRENT PLANS WITHIN THE AREA OF THIS PROJECT. THE CONTRACTOR WILL DETERMINE THE EXACT LOCATION AND/OR ELEVATION OF EXISTING UTILITIES WHICH PERTAIN TO AND AFFECT THE CONSTRUCTION OF THIS PROJECT.
4. TWO (2) WORKING DAYS PRIOR TO EXCAVATING. THE CONTRACTOR SHALL CALL FOR BLUE STAKES AT THE BLUE STAKE CENTER (PHONE: 602-263-1100).
5. THE CONTRACTOR SHALL OBTAIN ALL NECESSARY PERMITS PRIOR TO CONSTRUCTION.
6. THE FLOOD CONTROL DISTRICT OR CITY OF PHOENIX IS NOT RESPONSIBLE FOR LIABILITY ACCRUED DUE TO DELAYS AND/OR DAMAGE TO UTILITIES IN CONJUNCTION WITH THIS CONSTRUCTION.
7. ANY WORK PERFORMED WITHOUT THE APPROVAL OF THE FLOOD CONTROL DISTRICT AND/OR THE ENGINEER AND ALL WORK AND MATERIALS NOT IN CONFORMANCE WITH THE SPECIFICATIONS IS SUBJECT TO REMOVAL AND REPLACEMENT AT THE CONTRACTOR'S EXPENSE.
8. THE ENGINEER WILL DETERMINE THE NUMBER AND LOCATION OF THE REQUIRED COMPACTION TESTS FOR STRUCTURE BACKFILL.
9. TRAFFIC CONTROL SHALL BE MAINTAINED IN ACCORDANCE WITH M.A.G. SPECIFICATION 401. PART VI OF THE MANUAL ON UNIFORM TRAFFIC CONTROL DEVICES (1988 EDITION INCLUDING REVISION 3 DATED SEPTEMBER 3. 1993).
10. EXACT POINT OF MATCHING TERMINATION AND OVERLAY WILL BE DETERMINED IN THE FIELD BY THE ENGINEER.
11. NO JOB WILL BE CONSIDERED COMPLETED UNTIL CURBS. PAVEMENT AND SIDEWALKS HAVE BEEN SWEPT CLEAN OF ALL DIRT AND DEBRIS.
12. PRIOR TO FINAL APPROVAL AND ACCEPTANCE OF THE WORK. THE CONTRACTOR WILL BE REQUIRED TO CLEAN ADJACENT (OFF-PROJECT) ROADWAYS USED DURING THE COURSE OF CONSTRUCTION.

DESIGN Q's

STA 22+00 TO STA 56+30 Q = 264 CFS
STA 56+30 TO STA 62+00 Q = 294 CFS

PROJECT BENCHMARKS

"X" ON S.E. CORNER HEADWALL
S.E. CORNER 43RD AVE & SOUTHERN AVE
EL 1021.65

43RD AVE & VINEYARD RD
MCHD BC IN HANDHOLE
STA 36+28.90
EL 1021.96

43RD AVE & SOUTHERN AVE
FD MCHD BC IN HANDHOLE
STA 62+52.44
EL 1020.84

NO.	REVISION	BY	DATE
3			
2			
1			

FLOOD CONTROL DISTRICT OF MARICOPA COUNTY
ENGINEERING DIVISION

43RD AVENUE STORM DRAIN
BASELINE ROAD TO SOUTHERN AVENUE
FCD PROJECT NO. 1170230

	BY	DATE
DESIGNED	JRR	03/01/99
DRAWN	FC	03/01/99
CHECKED	MAL	03/01/99

Registered Professional Engineer (Civil) CERTIFICATE NO. 15608 JEFFREY R. RIDDLE Date Signed 03/01/99 Arizona, U.S.A.

GENERAL NOTES

SHEET 2 OF 21

QUANTITY SUMMARY
43RD AVENUE STORM DRAIN
BASELINE ROAD TO SOUTHERN AVENUE

ITEM NO.	ITEM DESCRIPTION	UNIT	SHEET NUMBERS 5	6	7	8	9	10	11	12	13	14	TOTAL QUANTITY
336-1	PAVEMENT REPLACEMENT (4" AC/8"ABC)	SY	1011	1556	1556	1556	1556	1753	1556	1556	855	190	13145
340-1	CURB & GUTTER, MAG DET 220, TYPE A	LF	0	0	0	0	0	0	0	0	0	242	242
340-2	SIDEWALK, MAG DET 230	SF	0	0	0	0	0	0	0	0	0	902	902
345-1	ADJUST MANHOLE FRAME AND COVER	EA	1	1	1	1	1	1	2	1	0	0	9
345-2	ADJUST WATER VALVE BOX AND COVER, TYPE A	EA	0	0	0	0	0	0	0	0	1	0	1
350-1	REMOVAL OF EXISTING IMPROVEMENTS	LS	N/A	N/A	N/A	N/A	N/A	N/A	N/A	N/A	N/A	N/A	1
401-1	TRAFFIC CONTROL	LS	N/A	N/A	N/A	N/A	N/A	N/A	N/A	N/A	N/A	N/A	1
505-1	SURVEY MONUMENT, MAG DET 120-1, TYPE A	EA	0	0	0	1	0	0	0	0	0	0	1
505-2	SURVEY MONUMENT, MAG DET 120-1, TYPE B	EA	0	0	0	0	0	1	2	0	0	0	3
505-6	CONCRETE CATCH BASIN, M-2, L=6	EA	0	0	0	0	0	0	0	0	0	1	1
505-7	CONCRETE CATCH BASIN, M-2, L=10	EA	0	0	0	0	0	0	0	0	0	1	1
505-8	CONCRETE CATCH BASIN, M-2, L=17	EA	0	0	0	0	0	0	0	0	0	7	7
505-9	CONCRETE CATCH BASIN, N-DOUBLE	EA	0	0	0	0	0	0	0	0	0	1	1
601-1	PERMANENT PIPE SUPPORT, MAG DET 403-3	EA	0	0	0	0	0	0	0	1	0	0	1
610-1	12 INCH DUCTILE IRON WATER PIPES AND FITTING	LF	0	0	0	0	0	0	0	22	0	0	22
610-2	REPLACE WATER SERVICE PIPE (CONTINGENT ITEM)	LF	0	0	0	0	0	0	0	0	0	0	0
610-3	RELOCATE WATER METER (CONTINGENT ITEM)	EA	0	0	0	0	0	0	0	0	0	0	0
618-1	114 INCH CLASS III RGRCP OR 621-1 114 INCH CLCMP, 10 GAUGE	LF	0	0	260	500	500	500	500	500	0	0	2760
618-2	114 INCH CLASS IV RGRCP OR 621-1 114 INCH CLCMP, 10 GAUGE	LF	0	0	0	0	0	0	0	0	200	0	200
618-3	96 INCH CLASS III RGRCP OR 621-2 96 INCH CLCMP, 10 GAUGE	LF	0	0	60	0	0	0	0	0	0	0	60
618-4	84 INCH CLASS III RGRCP OR 621-3 84 INCH CLCMP, 10 GAUGE	LF	0	0	60	0	0	0	0	0	0	0	60
618-5	72 INCH CLASS III RGRCP OR 621-4 72 INCH CLCMP, 10 GAUGE	LF	100	500	120	0	0	0	0	0	0	0	720
618-6	72 INCH CLASS IV RGRCP OR 621-4 72 INCH CLCMP, 10 GAUGE	LF	200	0	0	0	0	0	0	0	0	0	200
618-10	INSTALL PIPE PLUG, MAG DET 427, 72 INCH	EA	1	0	0	0	0	0	0	1	0	0	2
618-13	INSTALL PIPE PLUG, MAG DET 427, 24 INCH	EA	0	0	0	0	0	0	0	0	1	1	2
618-15	15 INCH CONNECTOR PIPE, CLASS IV	LF	0	0	0	0	0	0	0	0	0	188	188
618-17	18 INCH CONNECTOR PIPE, CLASS IV	LF	0	0	0	0	0	0	0	0	0	126	126
618-19	24 INCH CONNECTOR PIPE, CLASS IV	LF	0	0	0	0	0	0	0	0	0	264	264
618-20	24 INCH CONNECTOR PIPE, CLASS V	LF	0	0	0	0	0	0	0	0	64	0	64
618-22	30 INCH CONNECTOR PIPE, CLASS IV	LF	0	0	0	0	0	0	0	0	0	62	62
618-24	72 INCH CONNECTOR PIPE, CLASS IV	LF	0	0	0	0	0	0	0	64	0	0	64
618-25	72 INCH TO 84 INCH PIPE TRANSITION	EA	0	0	1	0	0	0	0	0	0	0	1
618-26	84 INCH TO 96 INCH PIPE TRANSITION	EA	0	0	1	0	0	0	0	0	0	0	1
618-27	96 INCH TO 114 INCH PIPE TRANSITION	EA	0	0	1	0	0	0	0	0	0	0	1
618-28	PREFAB TEE, 114 INCH X 15 INCH	EA	0	0	0	0	0	0	0	0	0	1	1
618-29	PREFAB TEE, 114 INCH X 18 INCH	EA	0	0	0	0	0	0	0	0	0	1	1
618-30	PREFAB TEE, 114 INCH X 24 INCH	EA	0	0	0	0	0	0	0	0	0	4	4
618-31	PREFAB TANGENT TEE, 114 INCH X 24 INCH	EA	0	0	0	0	0	0	0	0	1	0	1
618-32	PREFAB TEE, 114 INCH X 30 INCH	EA	0	0	0	0	0	0	0	0	0	1	1
618-35	PREFAB TANGENT TEE, 114 INCH X 72 INCH	EA	0	0	0	0	0	0	0	1	0	0	1
618-40	CONCRETE PIPE COLLAR, MAG DET 505, (24 INCH AND LARGER)	EA	0	0	0	0	0	0	0	0	0	1	1
625-1	STORM DRAIN MANHOLE, MAG DET 521, 522 & 523	EA	1	0	0	0	0	0	0	0	0	0	1
625-2	STORM DRAIN MANHOLE, MAG DET 522, 523 & DETAIL A	EA	0	0	1	0	1	0	1	0	1	0	4

CATCH BASIN REINFORCING NOTES

T = 6" IF V = 4' OR LESS
REINFORCE WITH #4 @ 12" EACH WAY
CENTERED ON THE WALLS & BASE SLAB

T = 8" IF V = 4' TO 8'
REINFORCE WITH #4 @ 12" EACH WAY
CENTERED ON THE WALLS & BASE SLAB

T = 10" IF V = 8' TO 12'
REINFORCE WITH #4 @ 12" EACH WAY WITH
2" CLEARANCE FROM THE INSIDE
FACE OF WALLS & BASE SLAB

NO.	REVISION	BY	DATE
3			
2			
1			

FLOOD CONTROL DISTRICT OF MARICOPA COUNTY
ENGINEERING DIVISION

43RD AVENUE STORM DRAIN
BASELINE ROAD TO SOUTHERN AVENUE
FCD PROJECT NO. 1170230

	BY	DATE
DESIGNED	JRR	03/01/99
DRAWN	FC	03/01/99
CHECKED	MAL	04/08/99

QUANTITY SUMMARY

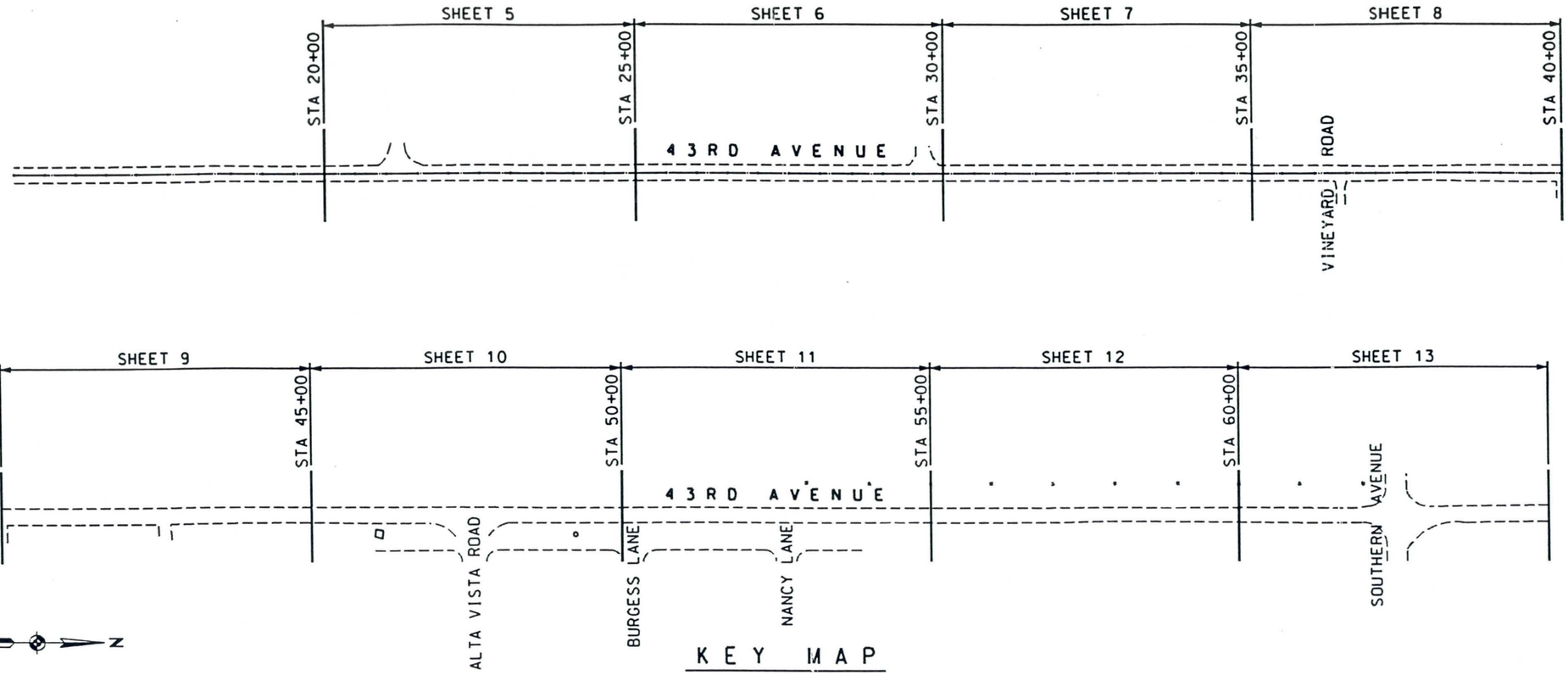

KEY MAP

TWO WORKING DAYS BEFORE YOU DIG, CALL 263-1100 BLUE STAKE

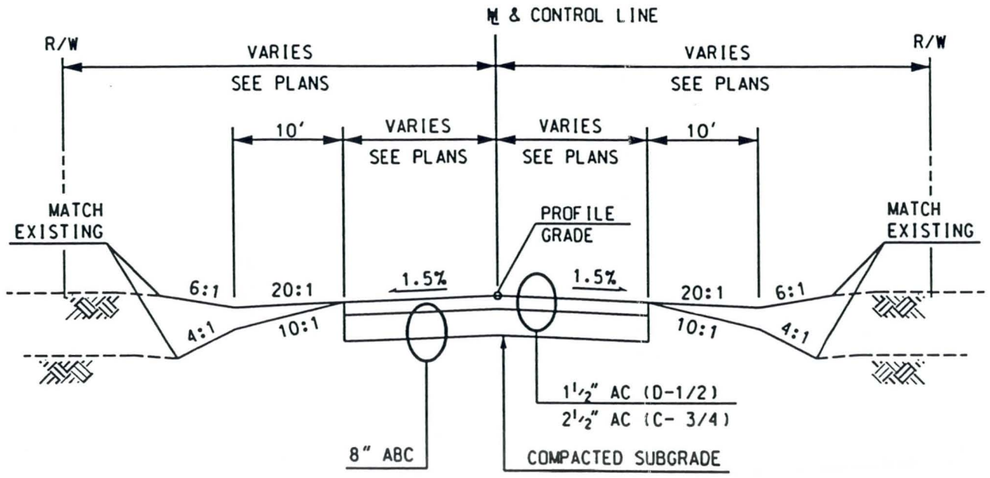

TYPICAL SECTION

NO.	REVISION	BY	DATE
3			
2			
1			

FLOOD CONTROL DISTRICT OF MARICOPA COUNTY
ENGINEERING DIVISION

43RD AVENUE STORM DRAIN
BASELINE ROAD TO SOUTHERN AVENUE
FCD PROJECT NO. 1170230

	BY	DATE
DESIGNED	JRR	01/11/99
DRAWN	FC	01/11/99
CHECKED	MAL	03/12/99

KEY MAP & TYPICAL SECTION

SHEET 4 OF 21

gn\phase2\sht4-p2.dgn Apr. 22, 1999 11:44:40

13

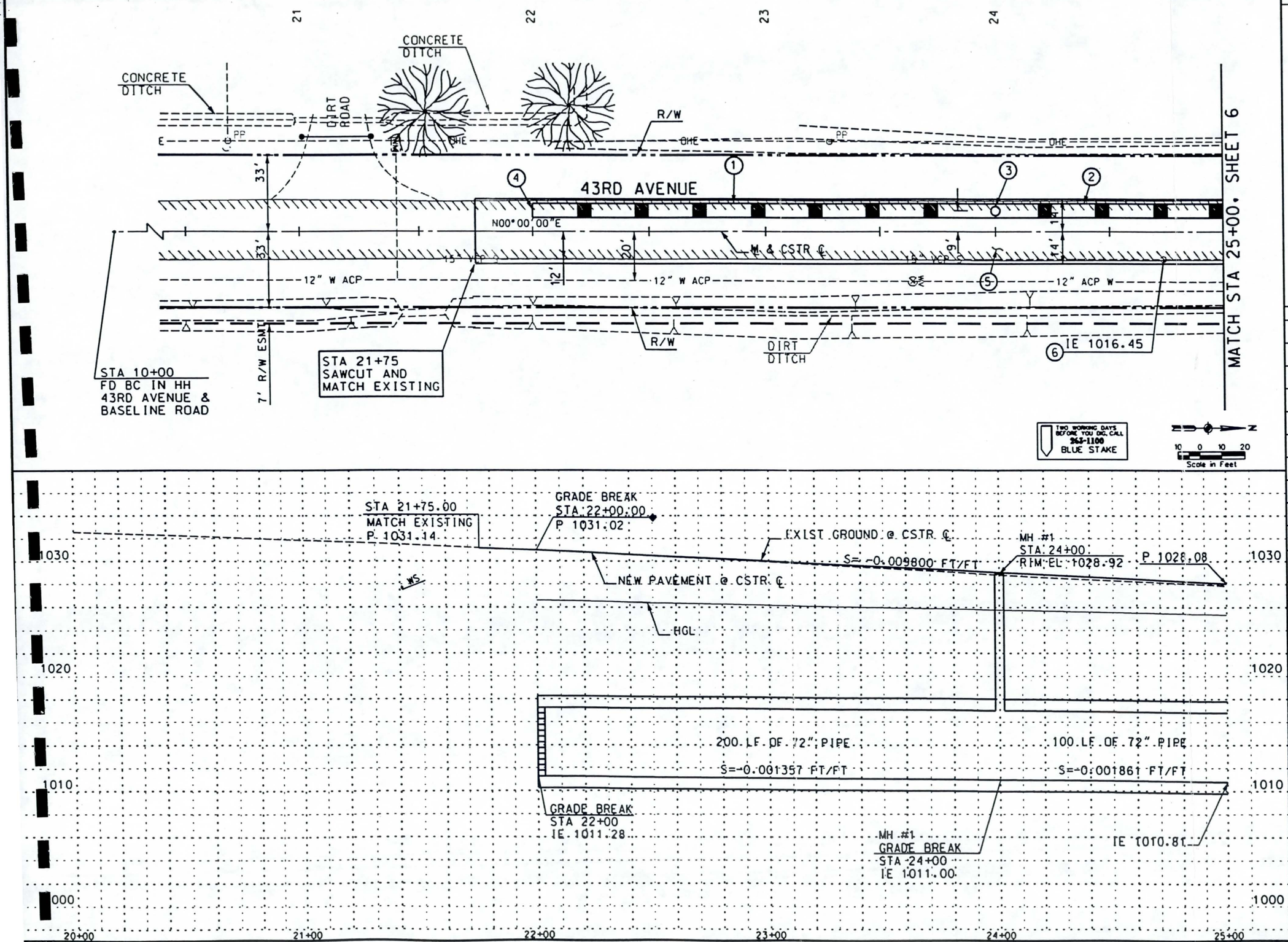

☐ REMOVE ☐

○ CONSTRUCT ○

INSTALL NEW STORM DRAIN PIPE

NO.	STATION TO STATION	DIAMETER INCHES	LENGTH FEET
1	22+00 TO 24+00	72	200
2	24+00 TO 25+00	72	100

INSTALL NEW STORM DRAIN MANHOLE

NO.	STATION	BASE DETAIL	SHAFT DETAIL	COVER DETAIL
3	24+00	MAG DET 521	MAG 522	MAG 52

INSTALL PIPE PLUG

NO.	STATION	SIZE	TYPE
4	22+00	72"	MAG DET 427

PAVEMENT REPLACEMENT

NO.	STA TO STA	UNIT	QUANTITY
5	21+75 TO 25+00	SY	1011

6 ADJUST MANHOLE FRAME AND COVER PER MAG DET 422. 1 EACH

NO.	REVISION	BY	DATE

FLOOD CONTROL DISTRICT OF MARICOPA COUNTY
ENGINEERING DIVISION

43RD AVENUE STORM DRAIN
BASELINE ROAD TO SOUTHERN AVENUE
FCD PROJECT NO. 1170230

	BY	DATE
DESIGNED	JRR	03/01/99
DRAWN	FC	03/01/99
CHECKED	MAL	03/01/99

PLAN AND PROFILE
STA 20+00.00 TO 25+00.00

SHEET 5 OF 21

TRACS NO

43 ave\dgn\phase2\pp20.dgn Apr. 22, 1999 12:16:51

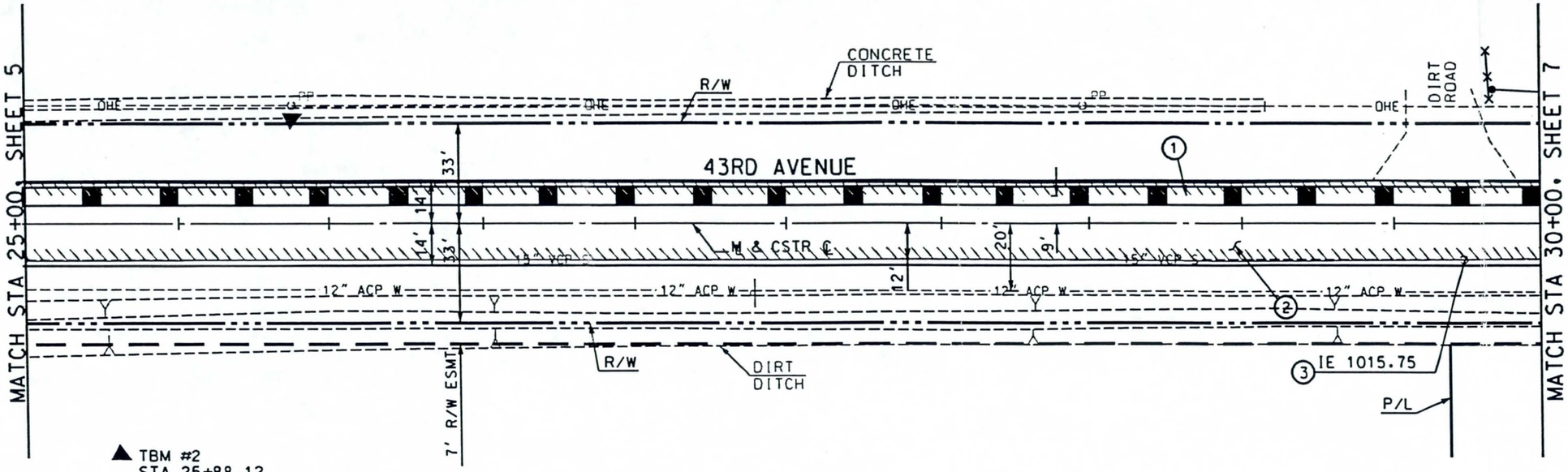

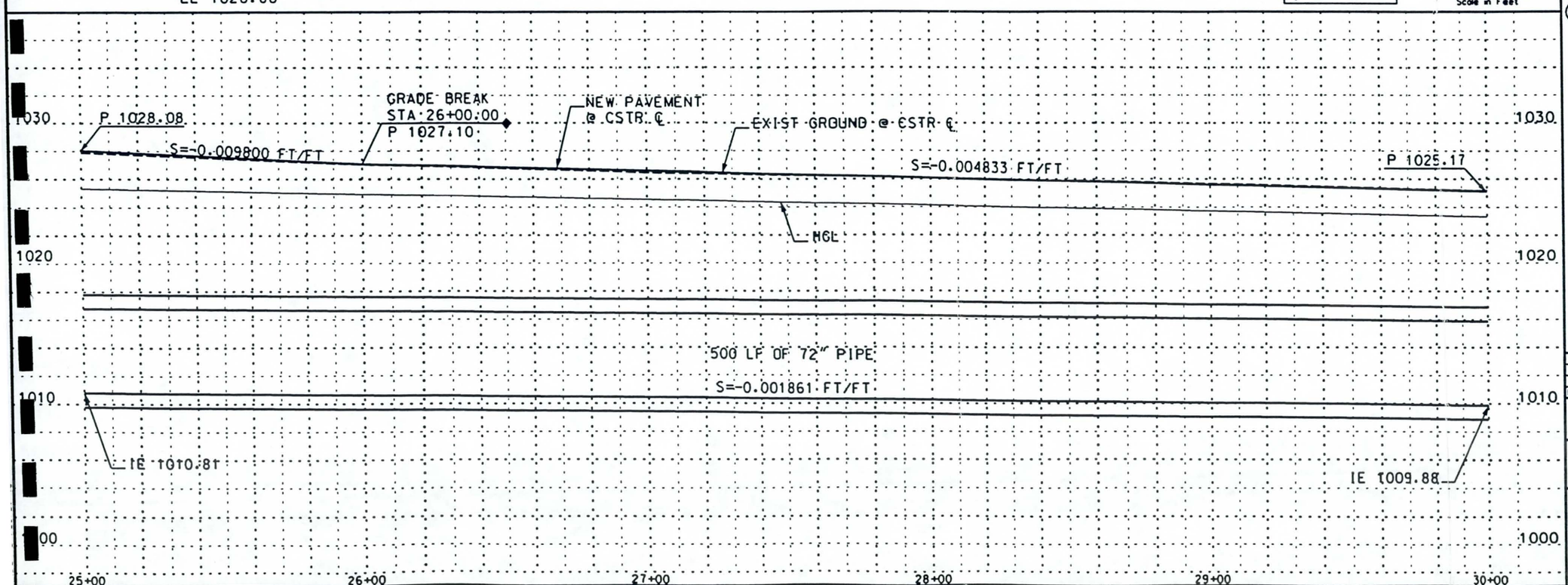

☐ REMOVE ☐

○ CONSTRUCT ○

INSTALL NEW STORM DRAIN PIPE

NO.	STATION TO STATION	DIAMETER INCHES	LENGTH FEET
1	25+00 TO 30+00	72	500

PAVEMENT REPLACEMENT

NO.	STA TO STA	UNIT	QUANTITY
2	25+00 TO 30+00	SY	1556

3 ADJUST MANHOLE FRAME & COVER PER MAG DET 422. 1 EACH

NO.	REVISION	BY	DATE

FLOOD CONTROL DISTRICT OF MARICOPA COUNTY
ENGINEERING DIVISION

43RD AVENUE STORM DRAIN
BASELINE ROAD TO SOUTHERN AVENUE
FCD PROJECT NO. 1170230

	BY	DATE
DESIGNED	JRR	03/01/99
DRAWN	FC	03/01/99
CHECKED	MAL	03/12/99

PLAN AND PROFILE
STA 25+00.00 TO 30+00.00

SHEET 6 OF 21

TRACS NO

\4 d ave\dgn\phase2\pp25.dgn Apr. 22, 1999 12:15:35

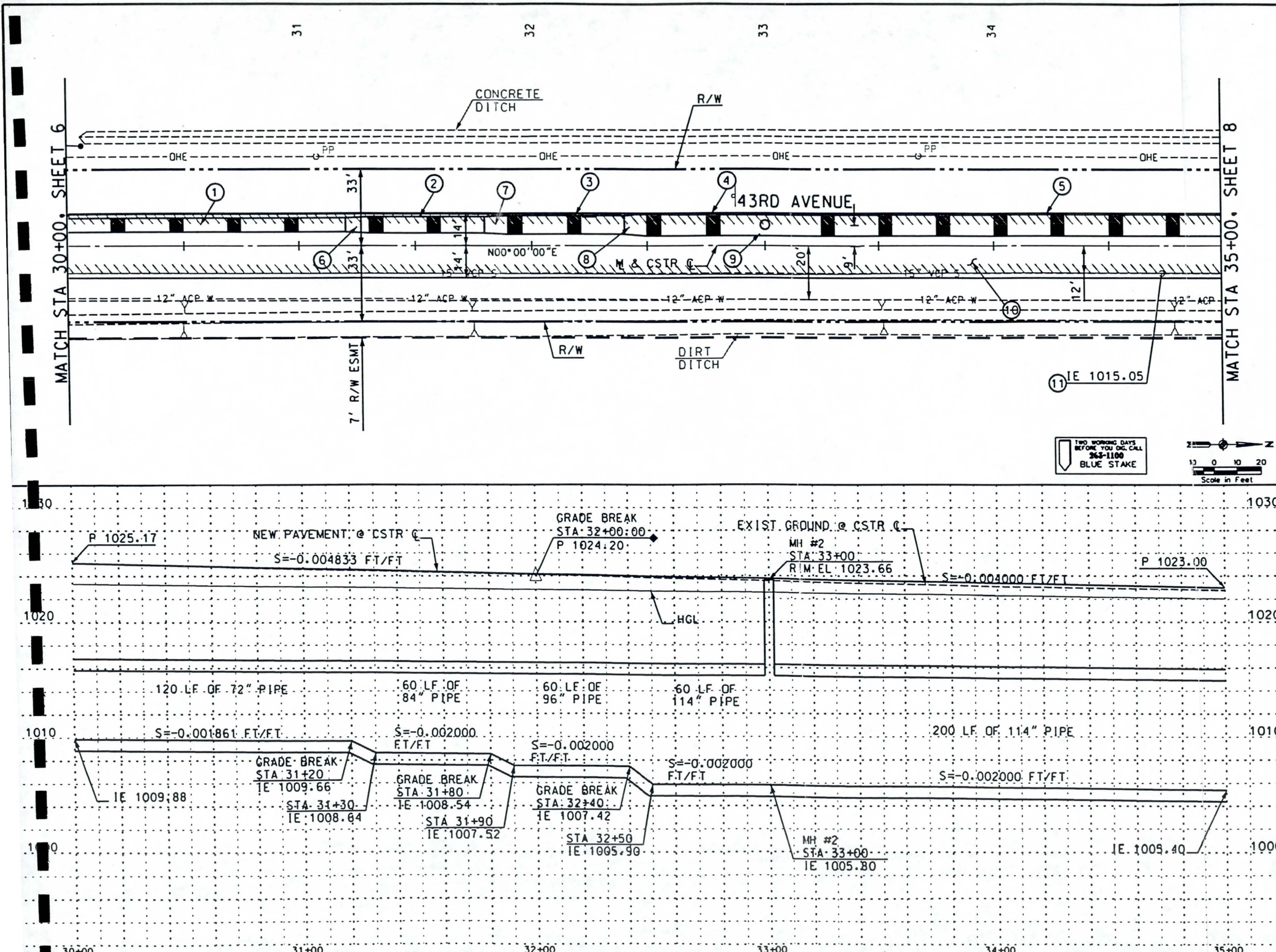

☐ REMOVE ☐

○ CONSTRUCT ○

INSTALL NEW STORM DRAIN PIPE

NO.	STATION TO STATION	DIAMETER INCHES	LENGTH FEET
1	30+00 TO 31+20	72	120
2	31+20 TO 31+80	84	60
3	31+80 TO 32+40	96	60
4	32+40 TO 33+00	114	60
5	33+00 TO 35+00	114	200

INSTALL PIPE TRANSITION

NO.	STATION TO STATION	DIAMETER INCHES
6	31+20 TO 31+30	72 TO 84
7	31+80 TO 31+90	84 TO 96
8	32+40 TO 32+50	96 TO 114

INSTALL NEW STORM DRAIN MANHOLE

NO.	STATION	BASE DETAIL	SHAFT DETAIL	COVER DETAIL
9	33+00	DETAIL A	MAG 522	MAG 523

PAVEMENT REPLACEMENT

NO.	STA TO STA	UNIT	QUANTITY
10	30+00 TO 35+00	SY	1556

11 ADJUST MANHOLE FRAME & COVER PER MAG DET 422. 1 EACH

NO.	REVISION	BY	DATE

FLOOD CONTROL DISTRICT OF MARICOPA COUNTY
ENGINEERING DIVISION

43RD AVENUE STORM DRAIN
BASELINE ROAD TO SOUTHERN AVENUE
FCD PROJECT NO. 1170230

	BY	DATE
DESIGNED	JRR	03/01/99
DRAWN	FC	03/01/99
CHECKED	MAL	03/12/99

PLAN AND PROFILE
STA 30+00.00 TO 35+00.00

SHEET 7 OF 21

\43rd ave\dgn\phase2\pp30.dgn Apr. 22, 1999 12:37:07

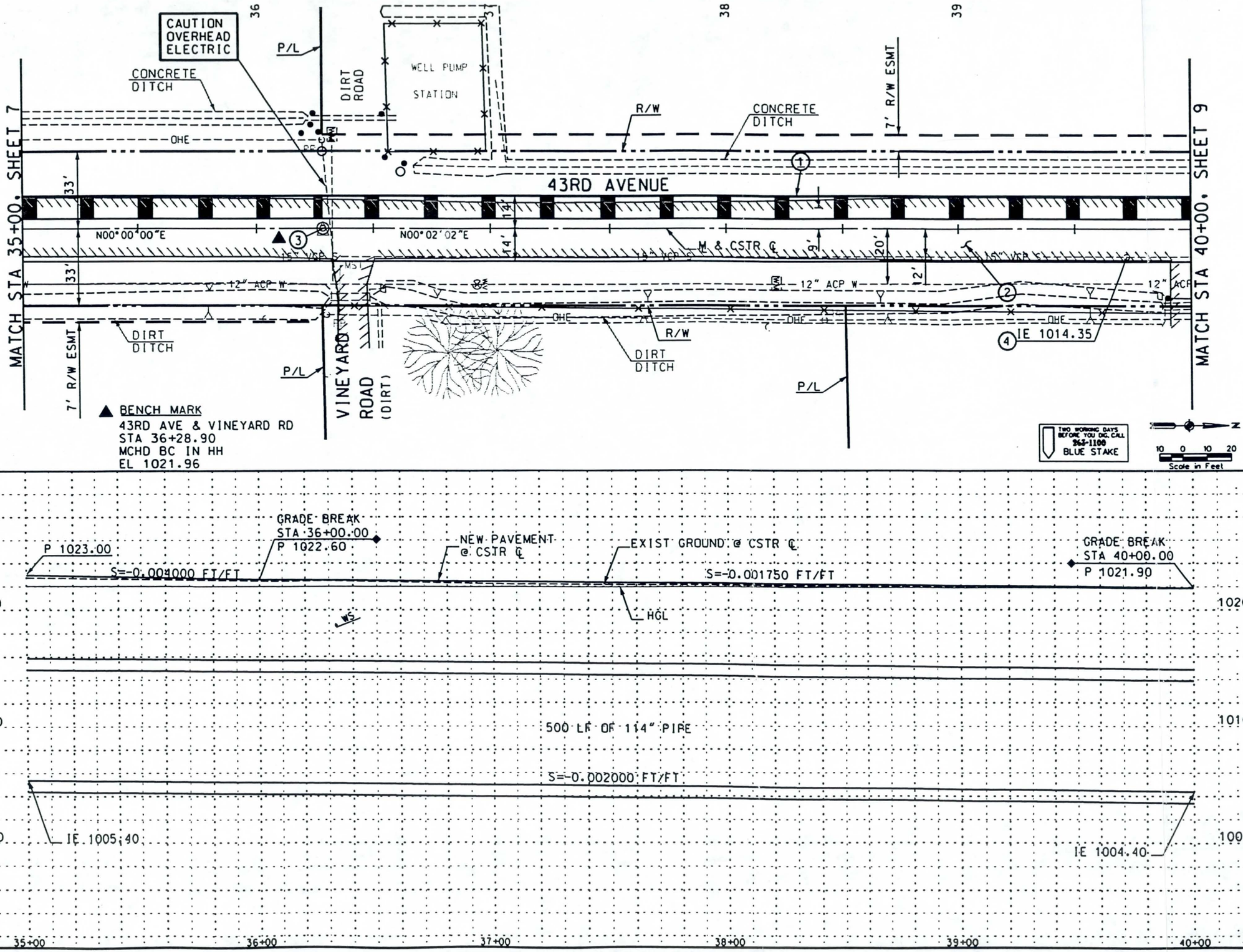

☐ REMOVE

○ CONSTRUCT ○

INSTALL NEW STORM DRAIN PIPE

NO.	STATION TO STATION	DIAMETER INCHES	LENGTH FEET
1	35+00 TO 40+00	114	500

PAVEMENT REPLACEMENT

NO.	STA TO STA	UNIT	QUANTITY
2	35+00 TO 40+00	SY	1556

3 INSTALL SURVEY MONUMENT PER MAG DET 120-1. TYPE A. 1 EACH

4 ADJUST MANHOLE FRAME & COVER PER MAG DET 422. 1 EACH

NO.	REVISION	BY	DATE

FLOOD CONTROL DISTRICT OF MARICOPA COUNTY
ENGINEERING DIVISION

43RD AVENUE STORM DRAIN
BASELINE ROAD TO SOUTHERN AVENUE
FCD PROJECT NO. 1170230

	BY	DATE
DESIGNED	JRR	03/01/99
DRAWN	FC	03/01/99
CHECKED	MAL	03/12/99

PLAN AND PROFILE
STA 35+00.00 TO 40+00.00

SHEET 8 OF 21

TRACS NO.

43rd ave\dgn\phase2\pp35.dgn Apr. 22, 1999 12:29:34

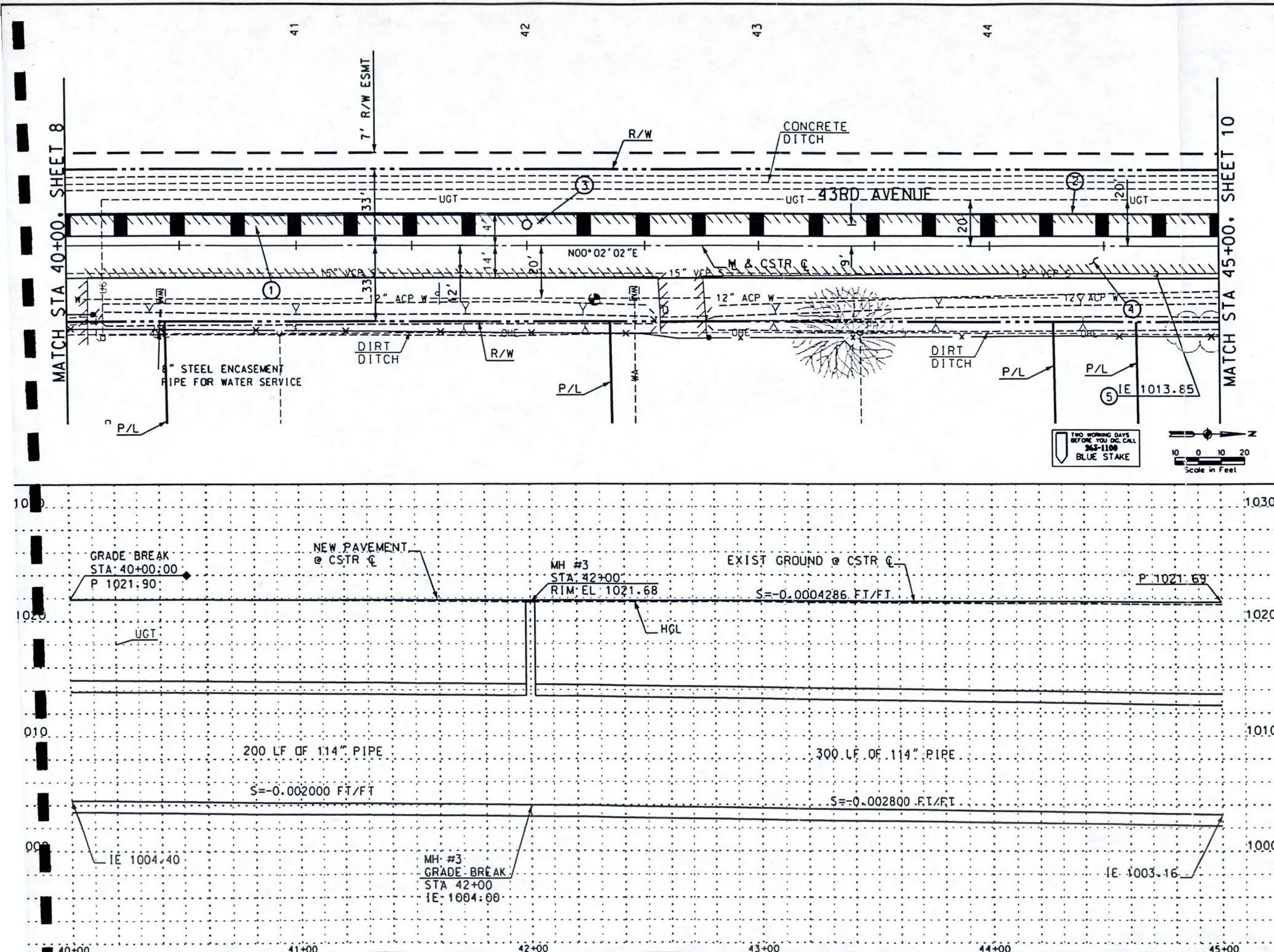

☐ REMOVE ☐

○ CONSTRUCT ○

INSTALL NEW STORM DRAIN PIPE

NO.	STATION TO STATION	DIAMETER INCHES	LENGTH FEET
1	40+00 TO 42+00	114	200
2	42+00 TO 45+00	114	300

INSTALL NEW STORM DRAIN MANHOLE

NO.	STATION	BASE DETAIL	SHAFT DETAIL	COVER DETAIL
3	42+00	DETAIL A	MAG 522	MAG 523

PAVEMENT REPLACEMENT

NO.	STA TO STA	UNIT	QUANTITY
4	40+00 TO 45+00	SY	1556

5 ADJUST MANHOLE FRAME & COVER PER MAG DET 422. 1 EACH

NO.	REVISION	BY	DATE

FLOOD CONTROL DISTRICT OF MARICOPA COUNTY
ENGINEERING DIVISION

43RD AVENUE STORM DRAIN
BASELINE ROAD TO SOUTHERN AVENUE
FCD PROJECT NO. 1170230

	BY	DATE
DESIGNED	JRR	03/01/99
DRAWN	FC	03/01/99
CHECKED	MAL	03/12/99

PLAN AND PROFILE
STA 40+00.00 TO 45+00.00

SHEET 9 OF 21

3rd ave\dgn\phase2\pp40.dgn Apr. 22, 1999 12:30:52

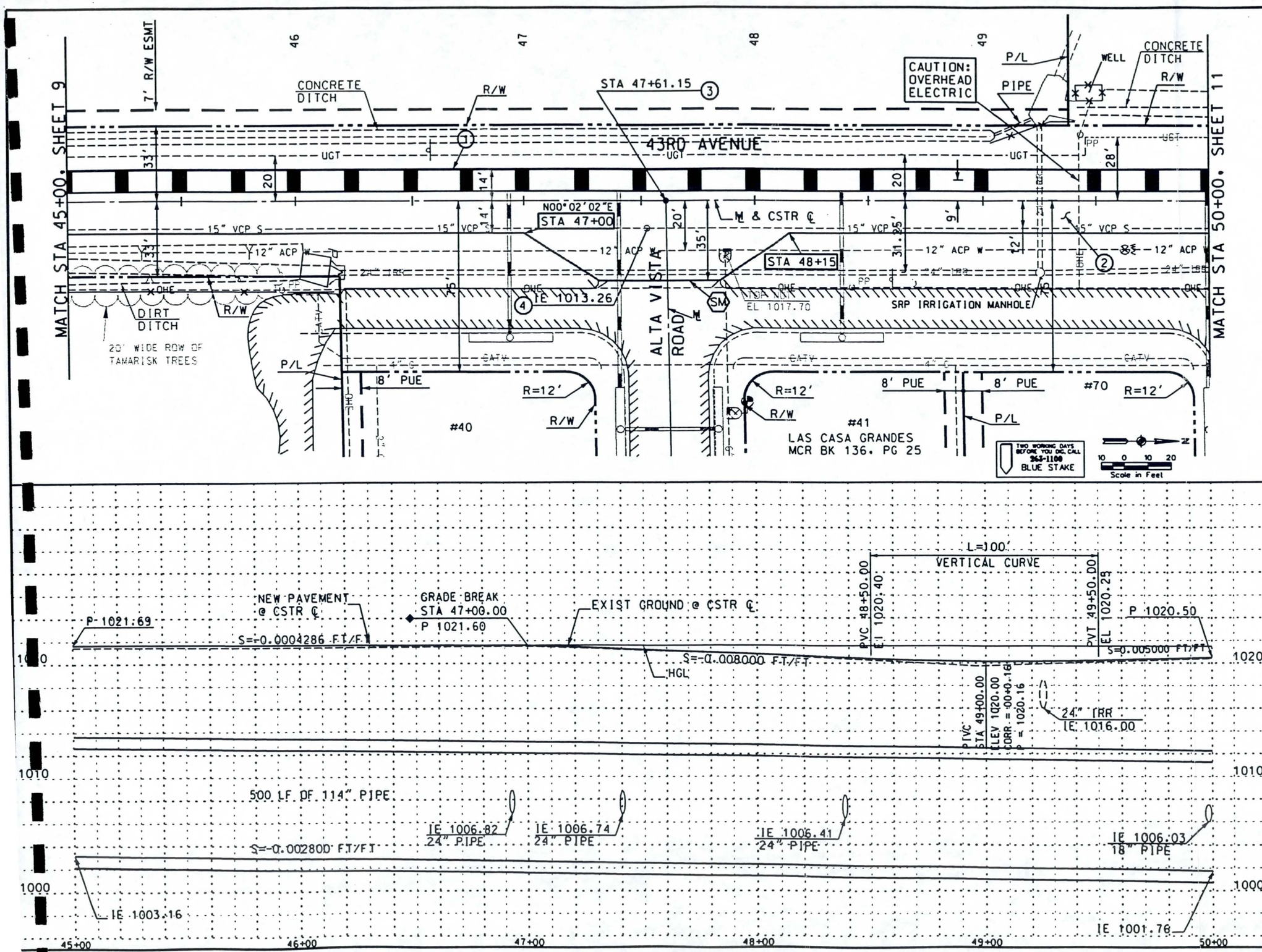

☐ REMOVE ☐

○ CONSTRUCT ○

INSTALL NEW STORM DRAIN PIPE

NO.	STATION TO STATION	DIAMETER INCHES	LENGTH FEET
1	45+00 TO 50+00	114	500

PAVEMENT REPLACEMENT

NO.	STA TO STA	UNIT	QUANTITY
2	45+00 TO 50+00	SY	1753

3 INSTALL SURVEY MONUMENT PER MAG DET 120-1, TYPE B. 1 EACH

4 ADJUST MANHOLE FRAME & COVER PER MAG DET 422. 1 EACH

SEE SHEET 14 FOR CATCH BASINS, CONNECTOR PIPES, & TEES

NO.	REVISION	BY	DATE

FLOOD CONTROL DISTRICT OF MARICOPA COUNTY
ENGINEERING DIVISION

43RD AVENUE STORM DRAIN
BASELINE ROAD TO SOUTHERN AVENUE
FCD PROJECT NO. 1170230

	BY	DATE
DESIGNED	JRR	03/01/99
DRAWN	FC	03/01/99
CHECKED	MAL	03/12/99

PLAN AND PROFILE
STA 45+00.00 TO 50+00.00

SHEET 10 OF 21

TRACS NO.

3rd ave\dgn\phase2\pp45.dgn Apr. 22, 1999 12:33:00

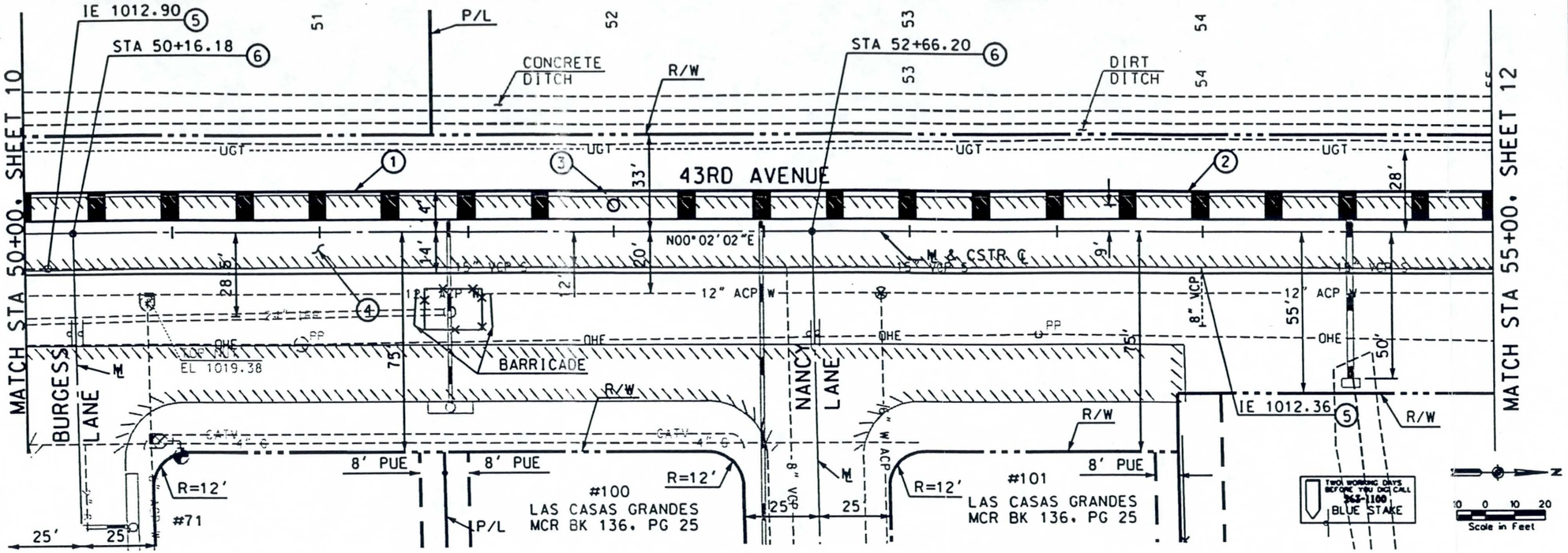

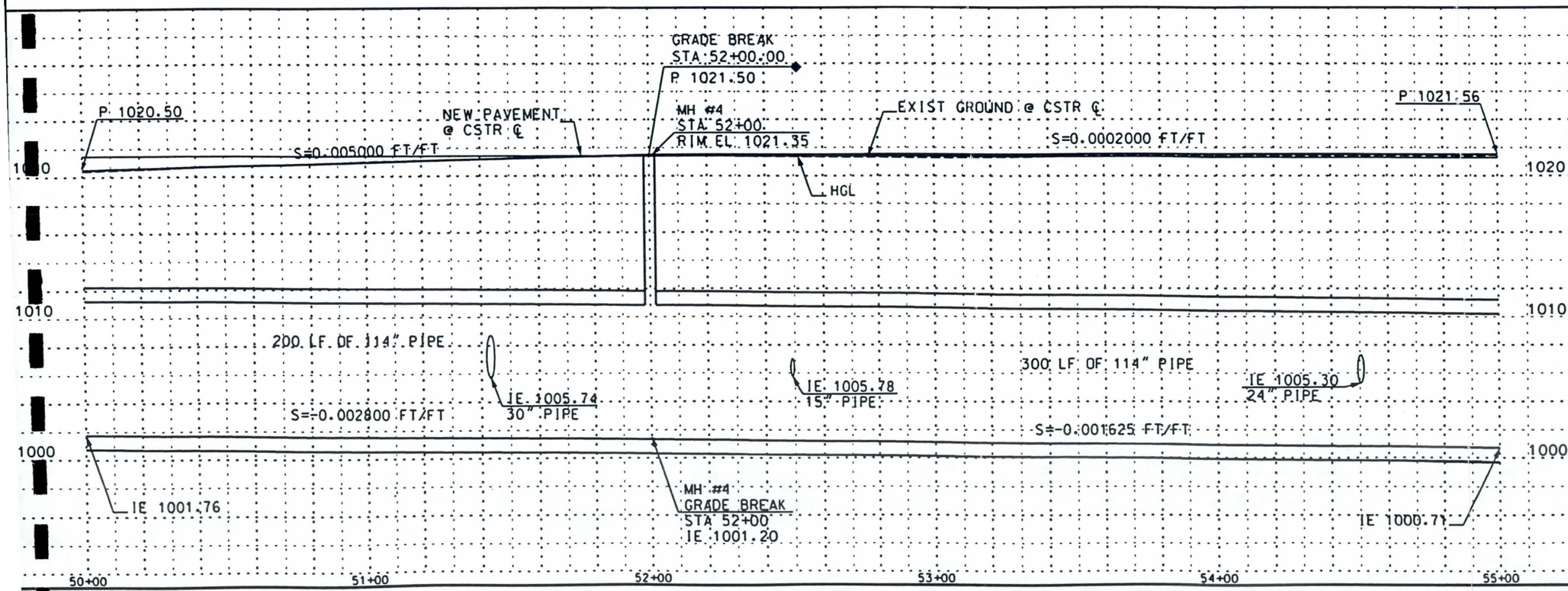

☐ REMOVE ☐

○ CONSTRUCT ○

INSTALL NEW STORM DRAIN PIPE

NO.	STATION TO STATION	DIAMETER INCHES	LENGTH FEET
1	50+00 TO 52+00	114	200
2	52+00 TO 55+00	114	300

INSTALL NEW STORM DRAIN MANHOLE

NO.	STATION	BASE DETAIL	SHAFT DETAIL	COVER DETAIL
3	52+00	DETAIL A	MAG 522	MAG 523

PAVEMENT REPLACEMENT

NO.	STA TO STA	UNIT	QUANTITY
4	50+00 TO 55+00	SY	1556

5 ADJUST MANHOLE FRAME & COVER PER MAG DET 422. 2 EACH

6 INSTALL SURVEY MONUMENT PER MAG DET 120-1. TYPE B. 2 EACH

SEE SHEET 14 FOR CATCH BASINS. CONNECTOR PIPES & TEES.

NO.	REVISION	BY	DATE

FLOOD CONTROL DISTRICT OF MARICOPA COUNTY
ENGINEERING DIVISION

43RD AVENUE STORM DRAIN
BASELINE ROAD TO SOUTHERN AVENUE
FCD PROJECT NO. 1170230

	BY	DATE
DESIGNED	JRR	03/01/99
DRAWN	FC	03/01/99
CHECKED	MAL	03/12/99

PLAN AND PROFILE
STA 50+00.00 TO 55+00.00

SHEET 11 OF 21

TRACS NO.

13 ave\dgn\phase2\pp50.dgn Apr. 22, 1999 12:34:28

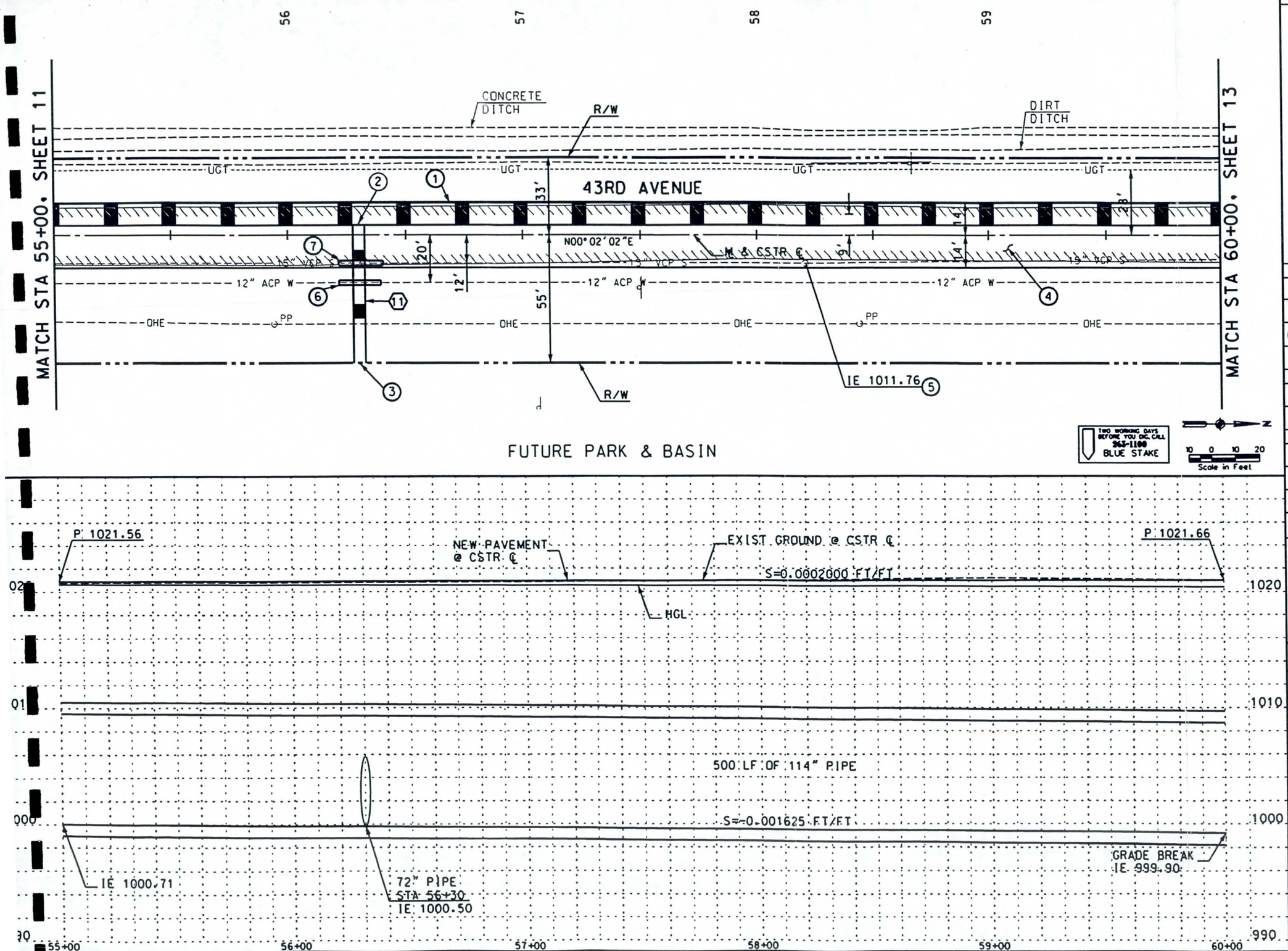

☐ REMOVE

○ CONSTRUCT ○

INSTALL NEW STORM DRAIN PIPE

NO.	STATION TO STATION	DIAMETER INCHES	LENG FEET
1	55+00 TO 60+00	114	500

INSTALL PREFAB TANGENT TEE

NO.	STATION	SIZE
2	56+30	114"x72"

INSTALL PIPE PLUG

NO.	STATION	SIZE	TYPE
3	56+30	72"	MAG DET 427

PAVEMENT REPLACEMENT

NO.	STA TO STA	UNIT	QUANTITY
4	55+00 TO 60+00	SY	1556

5 ADJUST MANHOLE FRAME & COVER PER MAG DET 422. 1 EACH

6 INSTALL 12" DIP PIPE & FITTINGS 22 LF

7 INSTALL PERMANENT PIPE SUPPORT PER MAG DET 403-3 1 EACH

NEW CONNECTOR PIPE AND FITTING

NO.	STATION	TYPE	SIZE & LENGTH	TEE
11	STA 56+30 RT	N/A	72"x64'	N/A

SEE SHEET 21 FOR CONNECTOR PIPE DETAIL.

NO.	REVISION	BY	DATE

FLOOD CONTROL DISTRICT OF MARICOPA COUNTY
ENGINEERING DIVISION

43RD AVENUE STORM DRAIN
BASELINE ROAD TO SOUTHERN AVENUE
FCD PROJECT NO. 1170230

	BY	DATE
DESIGNED	JRR	03/01/99
DRAWN	FC	03/01/99
CHECKED	MAL	04/14/99

PLAN AND PROFILE
STA 55+00.00 TO 60+00.00

SHEET 12 OF 21

43rd Ave\dgn\phase2\pp55.dgn May. 03, 1999 14:10:55

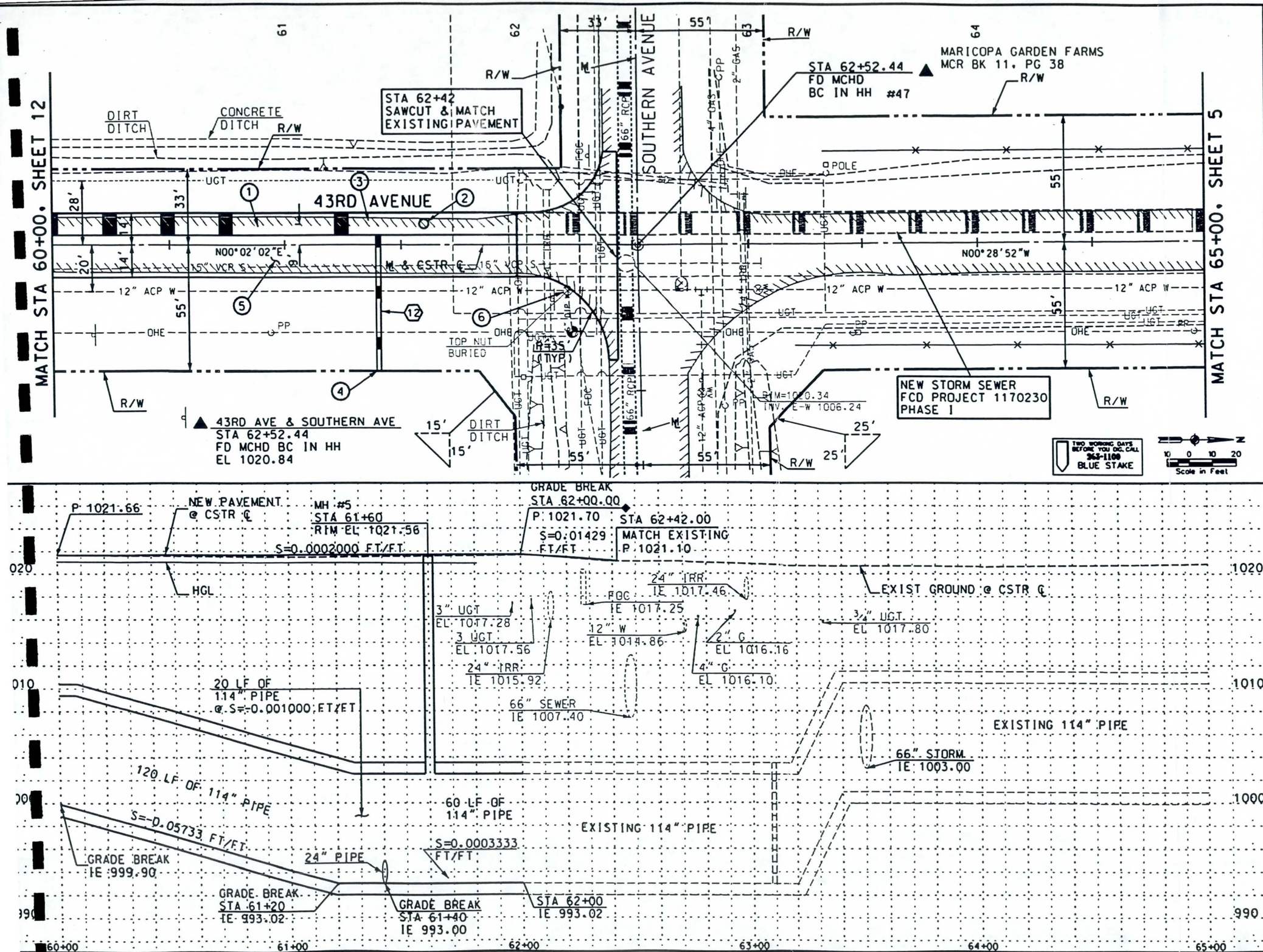

43rd Ave\dgn\phase2\pp60.dgn May. 03, 1999 14:15:40

☐ REMOVE ☐

○ CONSTRUCT ○

INSTALL NEW STORM DRAIN PIPE

NO.	STATION TO STATION	DIAMETER INCHES	LENGTH FEET
1	60+00 TO 62+00	114	200

INSTALL NEW STORM DRAIN MANHOLE

NO.	STA TO STA	BASE DETAIL	SHAFT DETAIL	COVER DETAIL
2	61+60	DETAIL A	MAG 522	MAG 52

INSTALL PREFAB TANGENT TEE

NO.	STATION	SIZE
3	61+40	114" x 24"

INSTALL PIPE PLUG

NO.	STATION	SIZE	TYPE
4	61+40	24"	MAG 427

PAVEMENT REPLACEMENT

NO.	STA TO STA	UNIT	QUANTITY
5	60+00 TO 62+42	SY	855

6 ADJUST WATER VALVE PER MAG STD DET 391-1, TYPE A — 1 EACH

NEW CONNECTOR PIPE AND FITTING

NO.	STATION	TYPE	SIZE & LENGTH	TEE
12	STA 61+40 RT	N/A	24"x64'	N/A

SEE SHEET 20 FOR CONNECTOR PIPE PROFILE.

NO.	REVISION	BY	DATE

FLOOD CONTROL DISTRICT OF MARICOPA COUNTY
ENGINEERING DIVISION

43RD AVENUE STORM DRAIN
BASELINE ROAD TO SOUTHERN AVENUE
FCD PROJECT NO. 1170230

	BY	DATE
DESIGNED	JRR	03/01/99
DRAWN	FC	03/01/99
CHECKED	MAL	04/14/99

Registered Professional Engineer (Civil) CERTIFICATE NO. 15608 JEFFREY R. RIDDLE Date Signed ARIZONA, U.S.A.

PLAN AND PROFILE
STA 60+00.00 TO 65+00.00

SHEET 13 OF 21

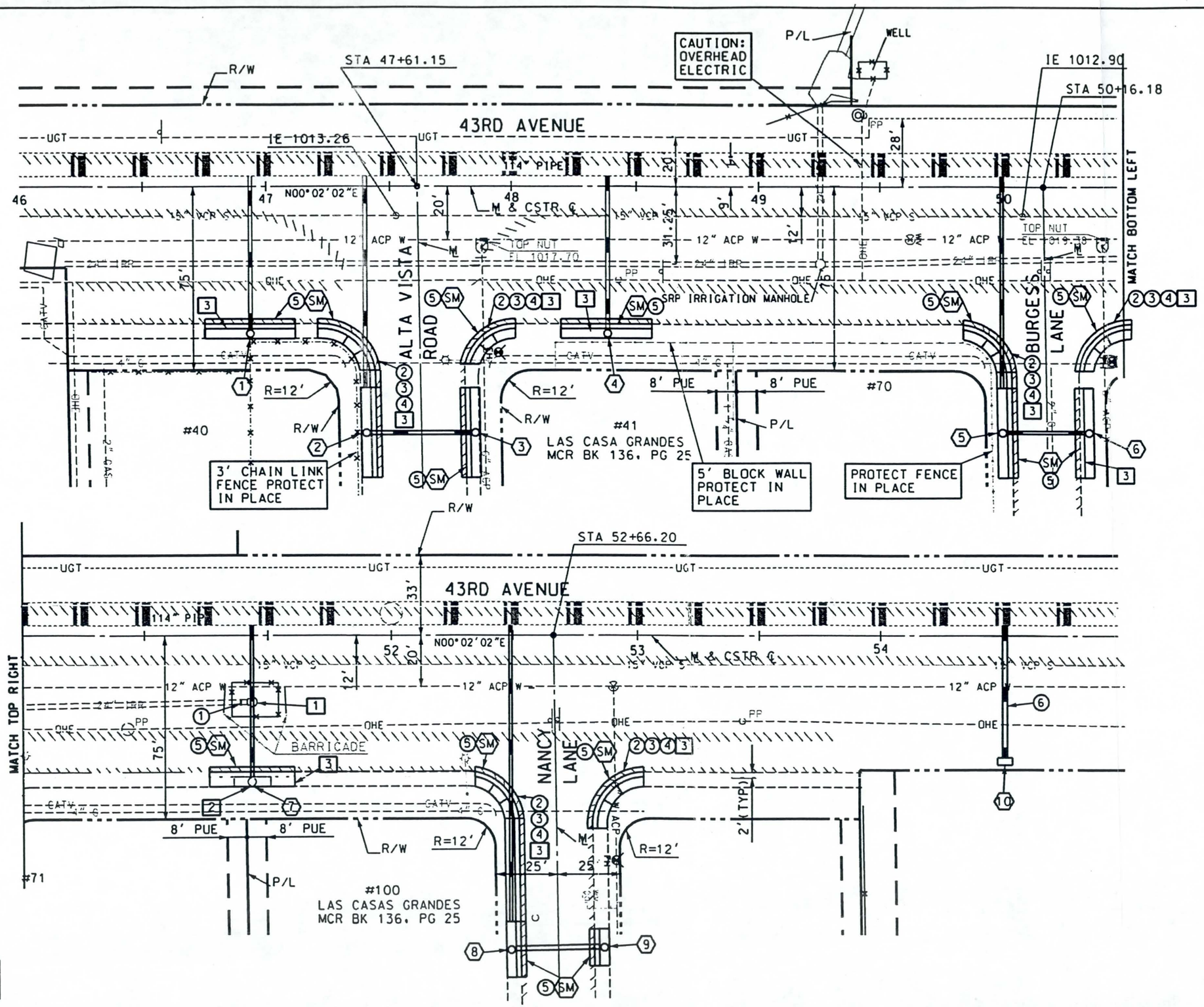

REMOVE

1. REMOVE FENCE AND BARRICADES AND REMOVE EXISTING PUMP AND SALVAGE FOR THE CITY OF PHOENIX (NPI).
2. STA 51+43.50 RT. REMOVE EXISTING CATCH BASIN AND CONNECTOR PIPE.
3. REMOVE CURB, GUTTER, & SIDEWALK.

CONSTRUCT

INSTALL PIPE PLUG

NO.	STATION	SIZE	TYPE
1	51+40 RT	24"	MAG DET 427

2. CONSTRUCT TYPE B SIDEWALK RAMP PER MAG DET 232.
3. CONSTRUCT CURB & GUTTER PER MAG DET 220, TYPE A — 242 LF
4. CONSTRUCT SIDEWALK PER MAG DET 230. — 902 SF
5. PAVEMENT REPLACEMENT. — 190 SY
6. CONSTRUCT CONCRETE PIPE COLLAR PER MAG DET 505 (24" AND LARGER) — 1 EA

NEW CATCH BASIN, CONNECTOR PIPE, AND FITTING

NO.	STATION	TYPE	SIZE & LENGTH	TEE
1	46+93.20 RT	M-2, L=17' P1569-1	24"x62'	114"x24"
2	47+39.30 RT	M-2, L=17' P1569-1	24"x86'	114"x24"
3	47+82.51 RT	M-2, L=17' P1569-1	18"x40'	NONE
4	48+38 RT	M-2, L=17' P1569-1	24"x62'	114"x24"
5	49+98 RT	M-2, L=17' P1569-1	18"x86'	114"x18"
6	50+34 RT	M-2, L=17' P1569-1	15"x32'	NONE
7	51+43.50 RT	M-2, L=17' P1569-1	30"x62'	114"x30"
8	52+47 RT	M-2, L=10' P1569-1	15"x124'	114"x15"
9	52+84.52 RT	M-2, L=6' P1569-1	15"x32'	NONE
10	54+50 RT	N-DOUBLE P-1570	24"x54'	114"x24"

SEE SHEET 17-21 FOR CONNECTOR PIPE PROFILES.

SEE SHEET 10 & 12 FOR MAIN LINE PIPE.

NO.	REVISION	BY	DATE
3			
2			
1			

FLOOD CONTROL DISTRICT OF MARICOPA COUNTY
ENGINEERING DIVISION

43RD AVENUE STORM DRAIN
BASELINE ROAD TO SOUTHERN AVENUE
FCD PROJECT NO. 1170230

	BY	DATE
DESIGNED	JRR	03/03/99
DRAWN	FC	03/03/99
CHECKED	MAL	04/14/99

CATCH BASIN DETAILS

SHEET 14 OF 21

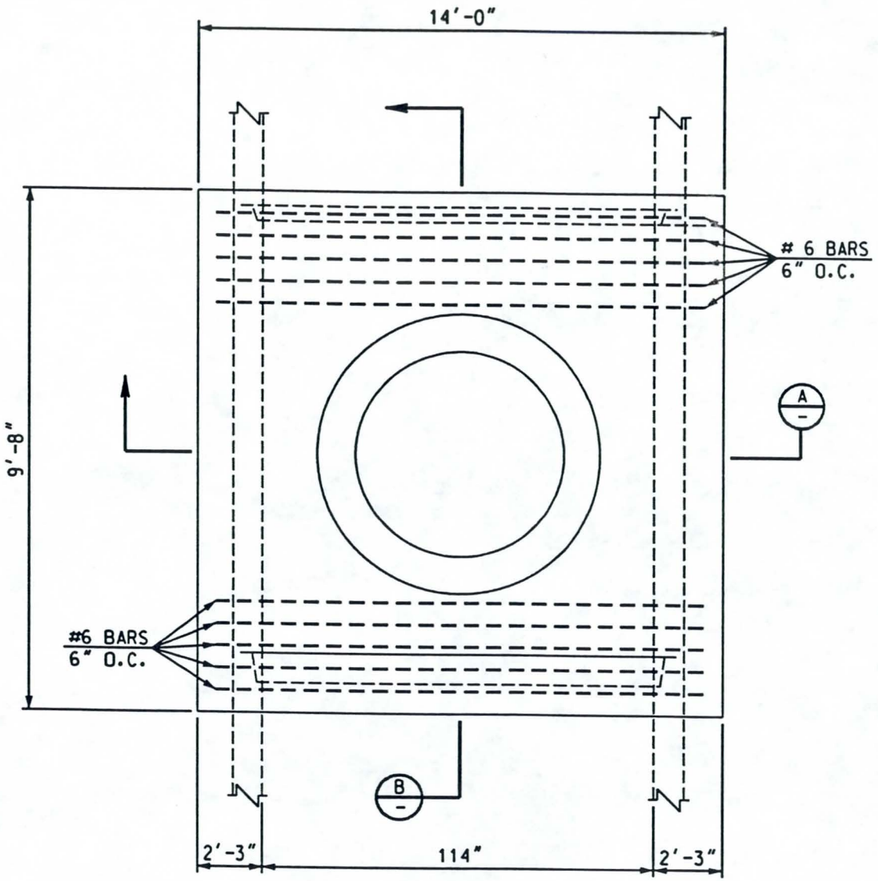

PLAN
NTS

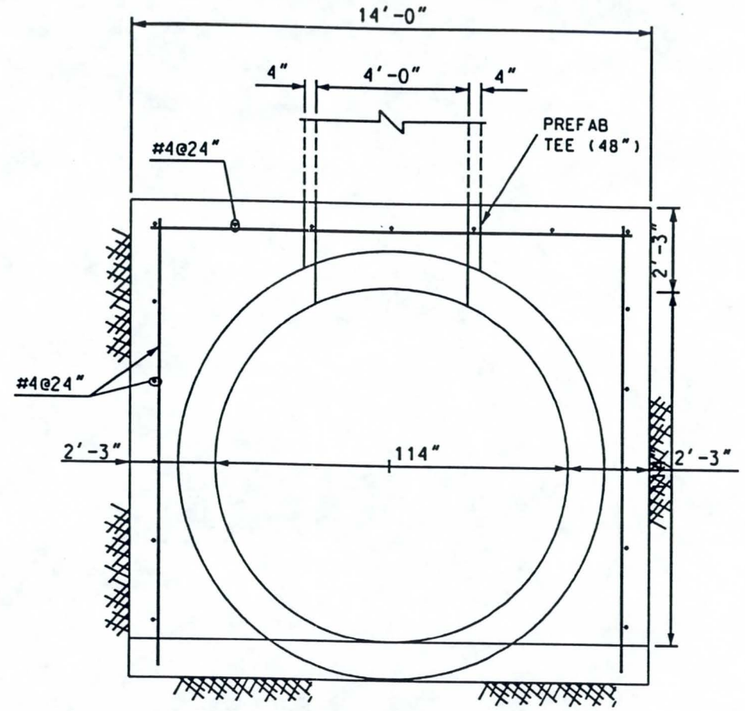

A SECTION
SCALE: 1/2" = 1'-0

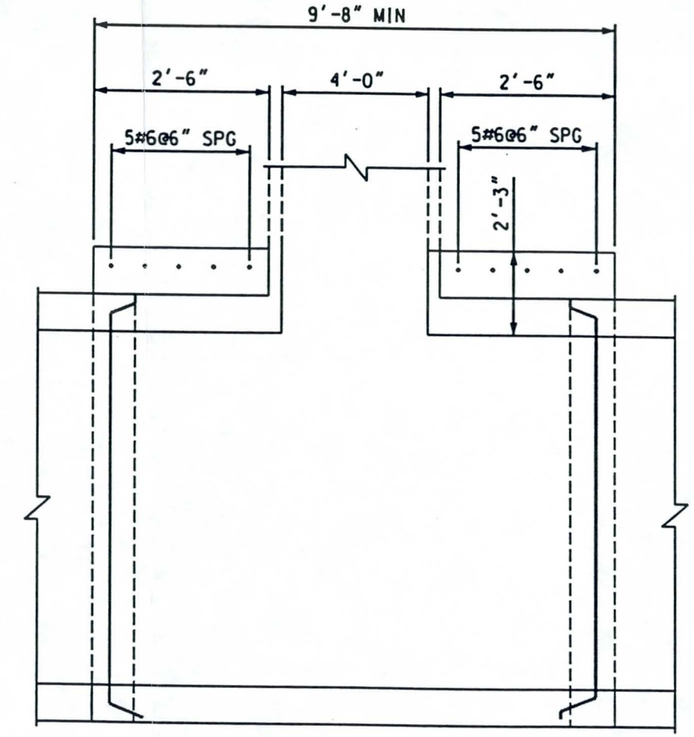

B SECTION
SCALE: 1/2" = 1'-0

NOTES:

1. LINE PIPE & STUB MAY BE CAST MONOLITHICALLY OR STUB MAY BE CAST ON TO LINE PIPE SECTION PRIOR TO COMPLETE CURING.
2. ALL LINE PIPE REINFORCEMENT SHALL BE TURNED UP INTO STUB.
3. THE VERTICAL STUB TO BE A.S.T.M. C-76 CLASS II WALL 'A' AND THE HORIZONTAL PIPE TO BE EQUAL TO STRENGTH OF PIPE ENTERING MANHOLE.
4. ALL REINFORCING STEEL SHALL CLEAR FACE OF CONCRETE BY 1½" UNLESS SHOWN OTHERWISE.
5. CONCRETE ENCASEMENT SHALL BE MAG CLASS 'A' CONCRETE PER SECT 725. 505.

DETAIL A

NO.	REVISION	BY	DATE
3			
2			
1			

FLOOD CONTROL DISTRICT OF MARICOPA COUNTY
ENGINEERING DIVISION

43RD AVENUE STORM DRAIN
BASELINE ROAD TO SOUTHERN AVENUE
FCD PROJECT NO. 1170230

	BY	DATE
DESIGNED	KVH	08/27/98
DRAWN	FC	08/27/98
CHECKED	MAL	03/12/99

STORM DRAIN MANHOLE
BASE. DETAIL A

SHEET 15 OF 21

ALTERNATE PIPE MATERIALS

MAIN LINE PIPE

STATION FROM	STATION TO	QUANTITY LF.	PIPE DIAMETER RCP (I.D.) IN.	PIPE DIAMETER CIP (I.D.) IN.	DEPTH TO TOP OF PIPE MIN. (FT.)	DEPTH TO TOP OF PIPE MAX. (FT.)	MAX TRENCH WIDTH AT TOP OF PIPE RCP FT.	REINFORCED CONCRETE PIPE CLASS*	N.R.C.P.* ASTM C14 CLASS	CAST-IN-PLACE CONCRETE PIPE MINIMUM WALL THICKNESS IN.	CONCRETE LINED CORRUGATED METAL PIPE: SLURRY BEDDING TO SPRING LINE 2 2/3"X1/2" CORR. TYPE "F" MIN. GAGE	SLURRY BEDDING TO SPRING LINE 3"X1" CORR. TYPE "F" MIN. GAGE	SLURRY BEDDING TO 1' OVER TOP OF PIPE 2 2/3"X1/2" CORR. TYPE "F" MIN. GAGE	SLURRY BEDDING TO 1' OVER TOP OF PIPE 3"X1" CORR. TYPE "F" MIN. GAGE
22+00.00	24+00.00	200	72	N/A	11	13	10.17	IV	N/A	N/A	N/A	N/A	N/A	10
24+00.00	31+20.00	720	72	N/A	8	11	10.17	III	N/A	N/A	N/A	N/A	N/A	10
31+20.00	31+80.00	60	84	N/A	8	8	11.33	III	N/A	N/A	N/A	N/A	N/A	10
31+80.00	32+40.00	60	96	N/A	8	8	12.50	III	N/A	N/A	N/A	N/A	N/A	10
32+40.00	60+00.00	2760	114	N/A	8	11	14.25	III	N/A	N/A	N/A	N/A	N/A	10
60+00.00	62+00.00	200	114	N/A	11	18	14.25	IV	N/A	N/A	N/A	N/A	N/A	10

CONNECTOR PIPE

LOCATION STATION (LT. OR RT.)	QUANTITY LF.	DEPTH TO TOP OF PIPE MIN. (FT.)	DEPTH TO TOP OF PIPE MAX. (FT.)	PIPE DIAMETER NRCP RCP (I.D.) IN	RCP CLASS	PIPE DIAMETER CIP (I.D.) IN.	CMP 2 2/3"X1/2" CORR. TYPE "A" MIN. GAGE	NRCP * ASTM C-14 CLASS
46+93.20 RT.	62	5	12	24	IV	N/A	N/A	N/A
46+39.20 RT.	86	8	12	24	IV	N/A	N/A	N/A
47+82.50 RT.	40	6	6	18	IV	N/A	N/A	N/A
48+38.00 RT.	62	5	12	24	IV	N/A	N/A	N/A
49+98.00 RT.	86	8	12	18	IV	N/A	N/A	N/A
50+34.00 RT.	32	3	7	15	IV	N/A	N/A	N/A
51+43.50 RT.	62	4	13	30	IV	N/A	N/A	N/A
52+47.00 RT.	124	4	14	15	IV	N/A	N/A	N/A
52+84.52 RT.	32	3	3	15	IV	N/A	N/A	N/A
54+50.00 RT.	54	3	14	24	IV	N/A	N/A	N/A
56+30.00 RT.	64	12	14	72	IV	N/A	N/A	N/A
61+40.00 RT.	64	20	22	24	V	N/A	N/A	N/A

MAIN LINE PIPE

1- ONLY PIPE MATERIAL SPECIFIED ON THIS SHEET ARE ACCEPTABLE FOR THIS PROJECT.

2- WHERE MAXIMUM TRENCH WIDTH IS NOTED AS "UNRESTRICTED" . PIPE STRENGTHS ARE SPECIFIED FOR A POSITIVE PROJECTING OR EMBANKMENT LOADING CONDITION. TRENCH WIDTH RESTRICTIONS FOR THE CAST IN PLACE CONCRETE OPERATION. SHALL COMPLY WITH SECTION 620.

* RUBBER GASKET PIPE IS REQUIRED .

N/A NOT APPLICABLE

NO.	REVISION	BY	DATE
3			
2			
1			

FLOOD CONTROL DISTRICT
OF MARICOPA COUNTY
ENGINEERING DIVISION

43RD AVE STORM DRAIN
BASELINE RD TO SOUTHERN AVE.
PROJECT CONTROL NO. 1170203

	BY	DATE
DESIGNED	JRR	03/03/99
DRAWN	MMM	03/03/99
CHECKED	MAL	03/12/99

PIPE SUMMARY SHEET

SHEET 16 21

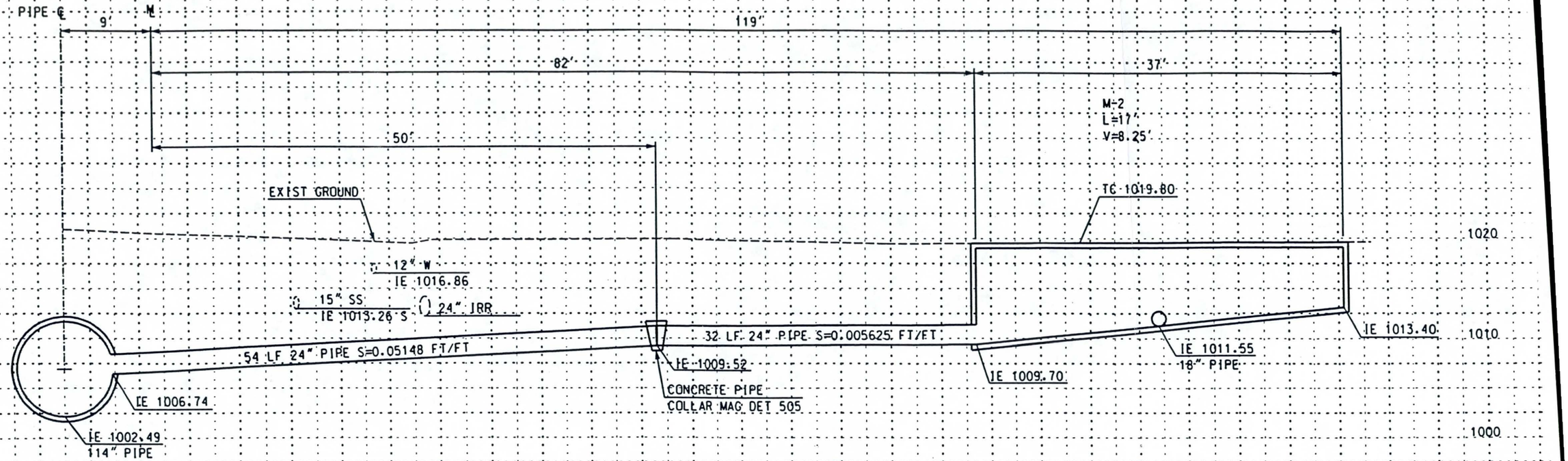

2 STA 47+39.30 RT

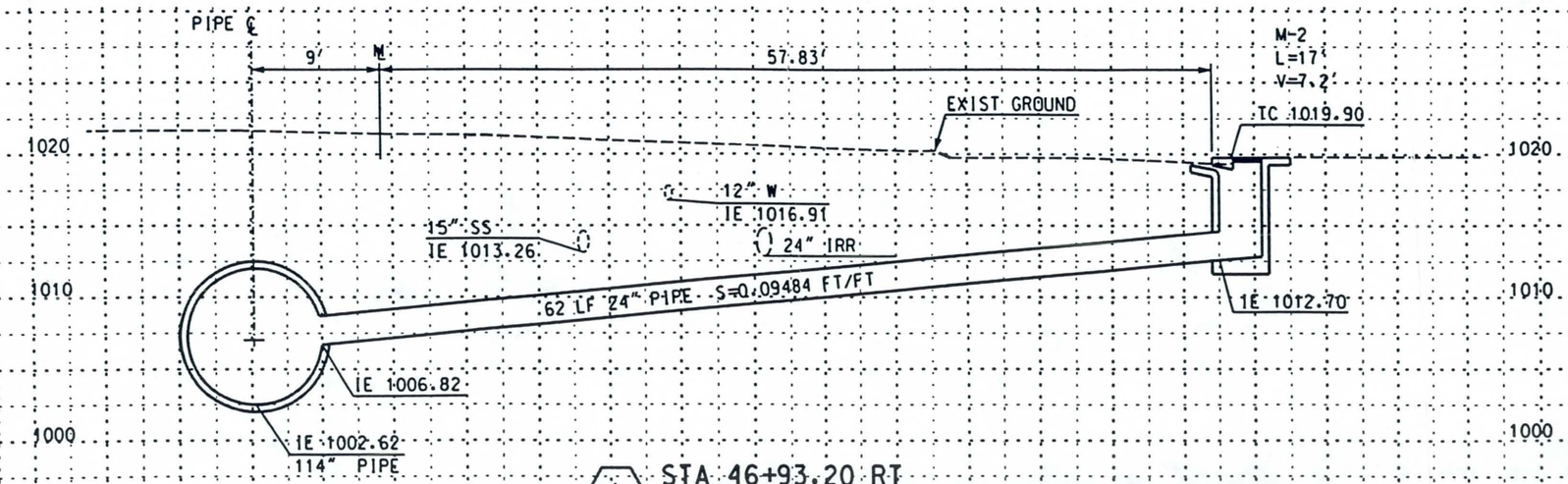

1 STA 46+93.20 RT

NOTES:

SEE SHEET 5 FOR CATCH BASIN REINFORCING NOTES.

NO.	REVISION	BY	DATE
3			
2			
1			

FLOOD CONTROL DISTRICT OF MARICOPA COUNTY
ENGINEERING DIVISION

43RD AVENUE STORM DRAIN
BASELINE ROAD TO SOUTHERN AVENUE
FCD PROJECT NO. 1170230

	BY	DATE
DESIGNED	JRR	01/27/99
DRAWN	FC	01/27/99
CHECKED	MAL	03/12/99

CONNECTOR PIPE PROFILE

SHEET 17 OF 21

TRACS NO.

dgn\phase2\xsht17-p2.dgn Apr. 22, 1999 11:43:15

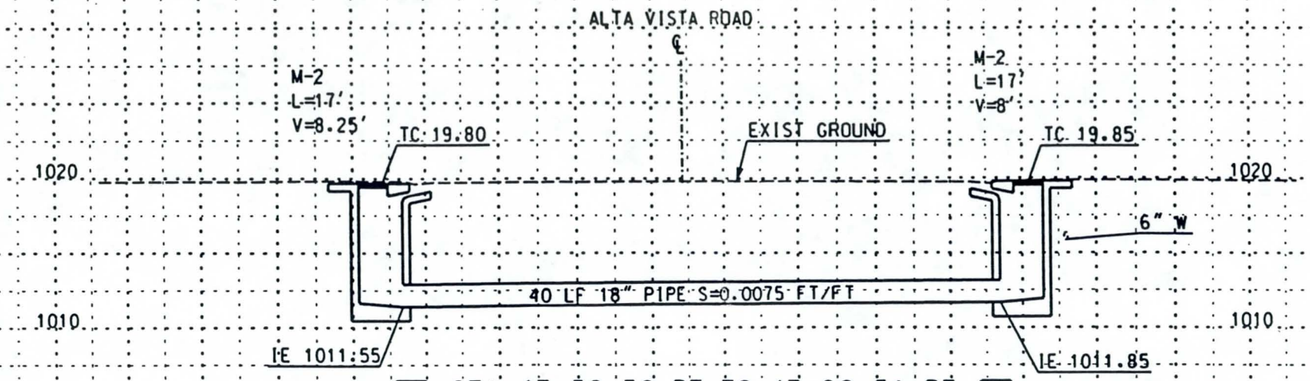

2 STA 47+39.30 RT TO 47+82.51 RT 3

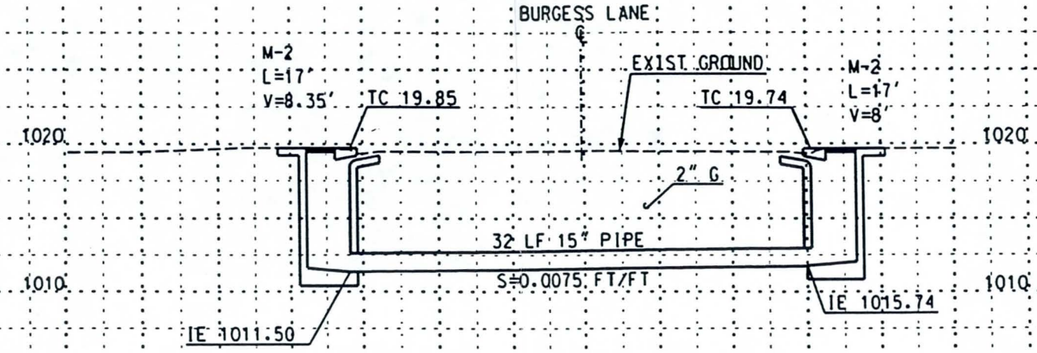

5 STA 49+98 RT TO 50+34 RT 6

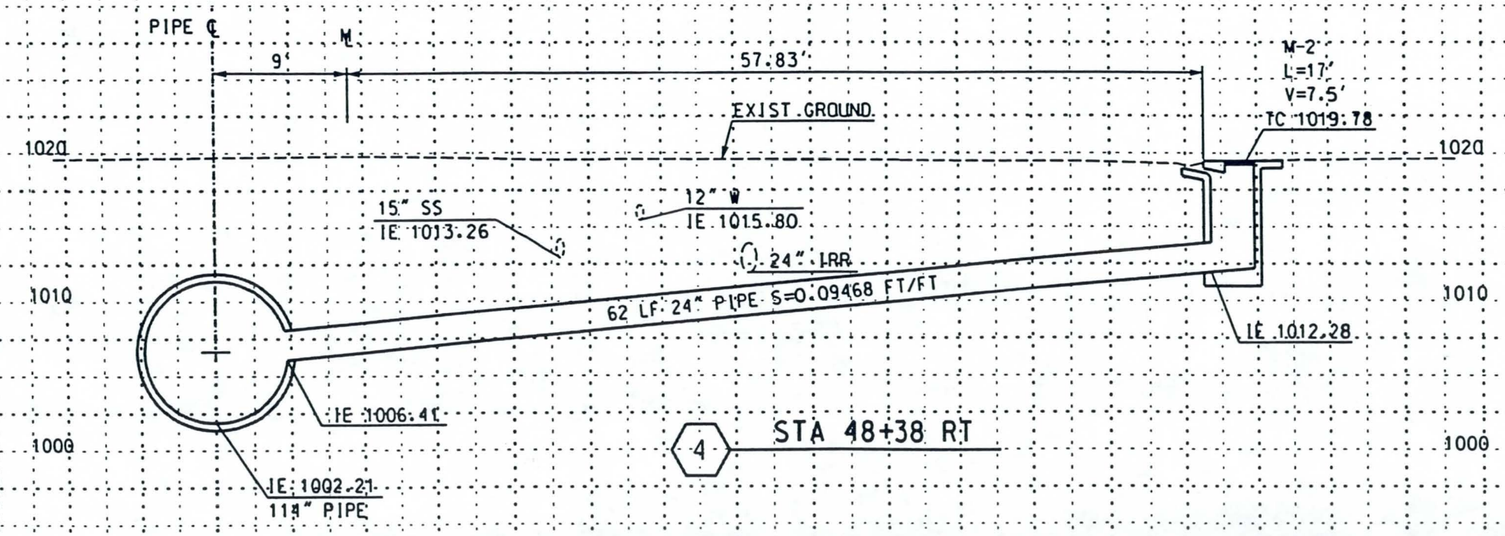

4 STA 48+38 RT

NOTES:

SEE SHEET 5 FOR CATCH BASIN REINFORCING NOTES.

NO.	REVISION	BY	DATE
3			
2			
1			

FLOOD CONTROL DISTRICT OF MARICOPA COUNTY
ENGINEERING DIVISION

43RD AVENUE STORM DRAIN
BASELINE ROAD TO SOUTHERN AVENUE
FCD PROJECT NO. 1170230

	BY	DATE
DESIGNED	JRR	01/27/99
DRAWN	FC	01/27/99
CHECKED	MAL	03/12/99

CONNECTOR PIPE PROFILE

SHEET 18 OF 21

\dgn\phase2\xsht18-p2.dgn Apr. 22, 1999 09:48:12

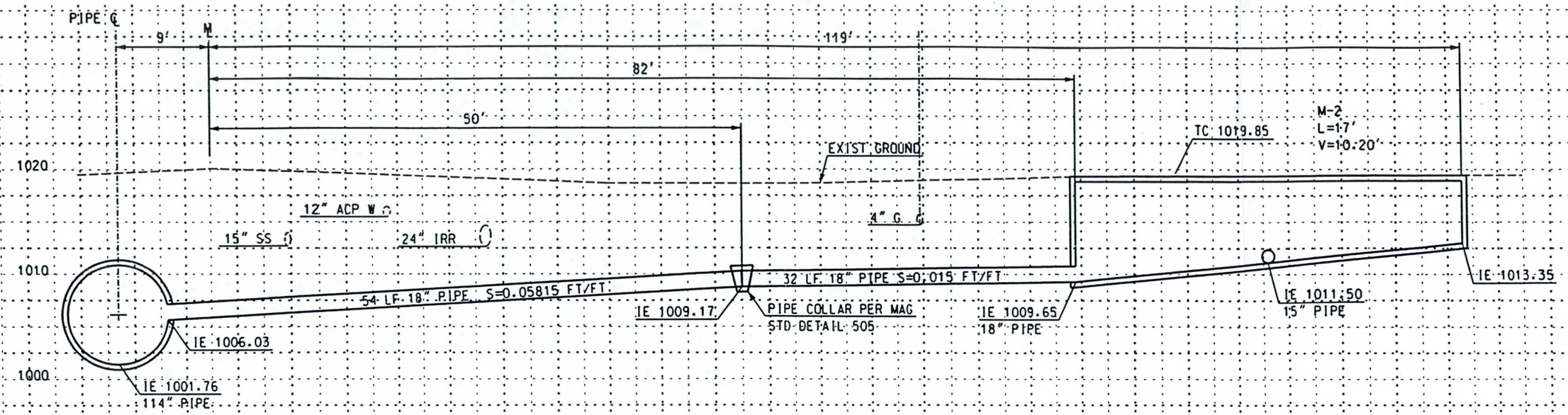

5 STA 49+98 RT

NOTES:

SEE SHEET 5 FOR CATCH BASIN REINFORCING NOTES

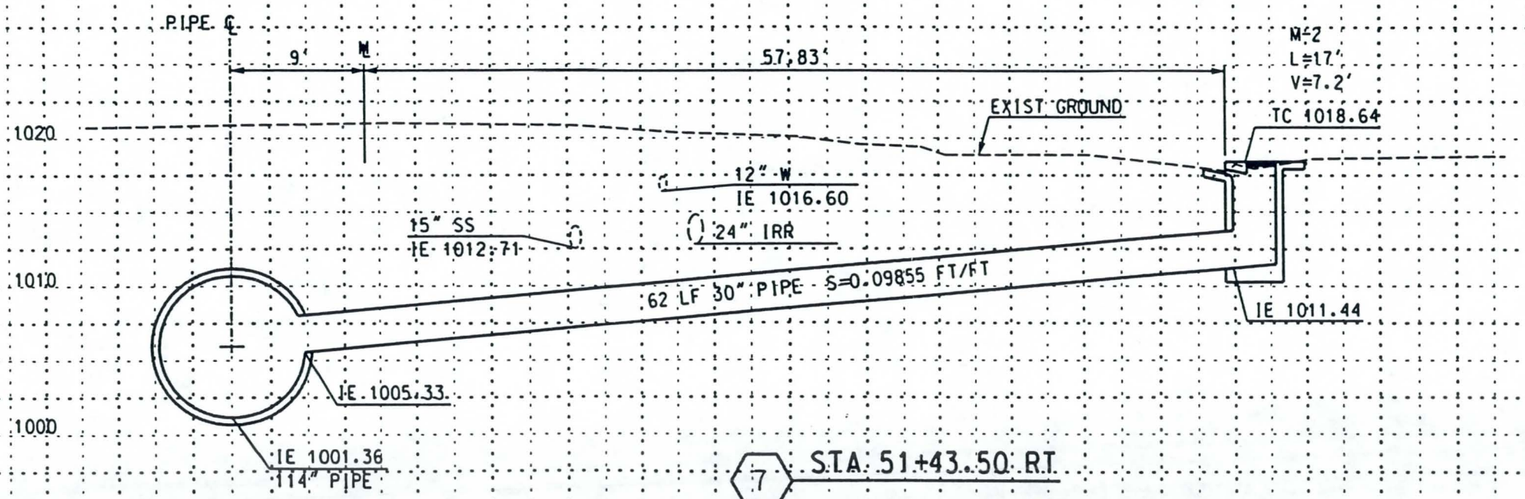

7 STA 51+43.50 RT

NO.	REVISION	BY	DATE
3			
2			
1			

FLOOD CONTROL DISTRICT OF MARICOPA COUNTY
ENGINEERING DIVISION

43RD AVENUE STORM DRAIN
BASELINE ROAD TO SOUTHERN AVENUE
FCD PROJECT NO. 1170230

	BY	DATE
DESIGNED	JRR	01/27/99
DRAWN	FC	01/27/99
CHECKED	MAL	03/12/99

CONNECTOR PIPE PROFILE

SHEET 19 OF 21

dgn\phase2\xsht19-p2.dgn Apr. 22, 1999 11:37:02

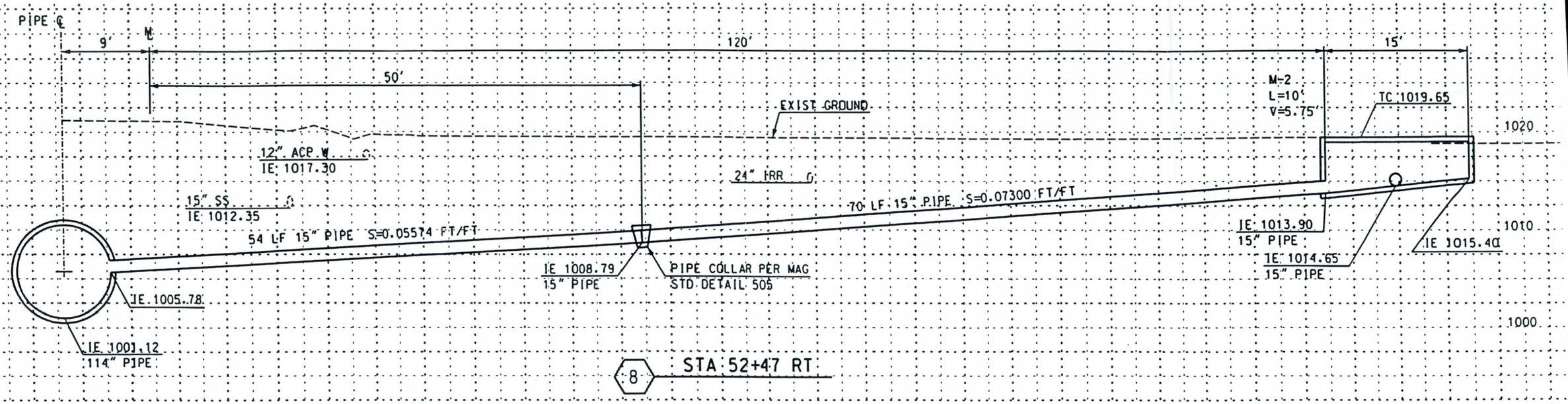

8 STA 52+47 RT

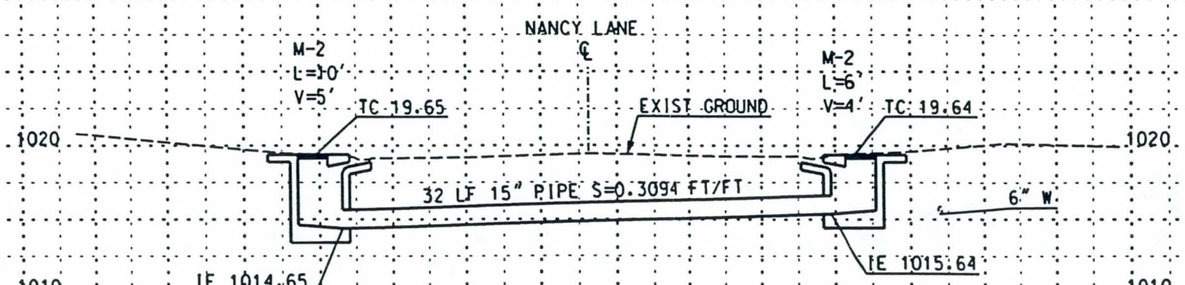

8 STA 52+47 RT TO 52+84.52 RT 9

NOTES:

SEE SHEET 5 FOR CATCH BASIN REINFORCING NOTES

NO.	REVISION	BY	DATE
3			
2			
1			

FLOOD CONTROL DISTRICT OF MARICOPA COUNTY
ENGINEERING DIVISION

43RD AVENUE STORM DRAIN
BASELINE ROAD TO SOUTHERN AVENUE
FCD PROJECT NO. 1170230

	BY	DATE
DESIGNED	JRR	01/27/99
DRAWN	FC	01/27/99
CHECKED	MAL	03/12/99

CONNECTOR PIPE PROFILE

SHEET OF 20 21

dgn hase2\xsht20-p2.dgn Apr. 22, 1999 11:38:27

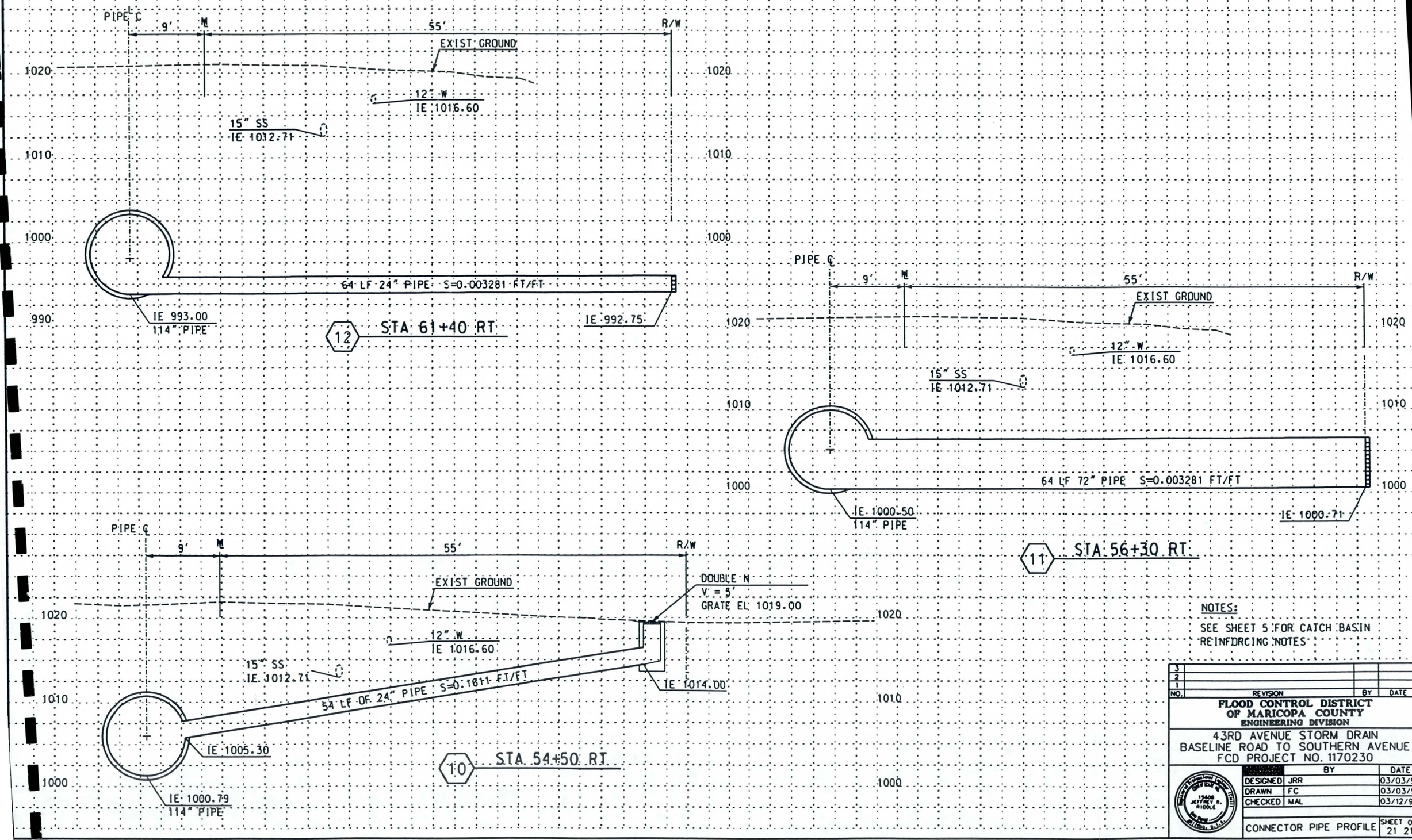

NOTES:

SEE SHEET 5 FOR CATCH BASIN REINFORCING NOTES

NO.	REVISION	BY	DATE
3			
2			
1			

FLOOD CONTROL DISTRICT OF MARICOPA COUNTY
ENGINEERING DIVISION

43RD AVENUE STORM DRAIN
BASELINE ROAD TO SOUTHERN AVENUE
FCD PROJECT NO. 1170230

	BY	DATE
DESIGNED	JRR	03/03/99
DRAWN	FC	03/03/99
CHECKED	MAL	03/12/99

CONNECTOR PIPE PROFILE

SHEET 21 OF 21

TRACS NO.

gn\phase2\xsht21-p2.dgn Apr. 22, 1999 11:39:39