TABLE OF CONTENTS

SPILLWAY STRUCTURE	P.1-50
OUTLET STRUCTURE	P.51-90
INLET STRUCTURES	P.91-97
JUNCTION STR. STA.10+63	P.98-106
JUNCTION STR. STA.20+08	P.107-133
JUNCTION STR. STA.106+00	P.134-164
MISCELLANEOUS	P.165-169

Junct. STR. @ 106+00 — Phase 1
NO Major Structure — Phase 2
Spillway,
Outlet STR.
Inlet STR. N & S — 2
Junct. STR — 2
1 @ 20+08
1 @ 10+63
} Phase 3

FLOOD CONTROL DISTRICT OF MARICOPA COUNTY

PROJECT 43rd Ave. Storm Drain PAGE ____ OF ____

DETAIL ____ COMPUTED ____ DATE ____

____ CHECKED BY ____ DATE ____

SPILLWAY STRUCTURE

PHASE. 3

6910-153 4-90

FLOOD CONTROL DISTRICT OF MARICOPA COUNTY

PROJECT 43rd AVE BASIN PAGE 1 OF 3

DETAIL OUTLET STRUCTURES COMPUTED CSC DATE 8/14/0

QUANTITIES CHECKED BY DATE

STRUCTURE 1

COVER

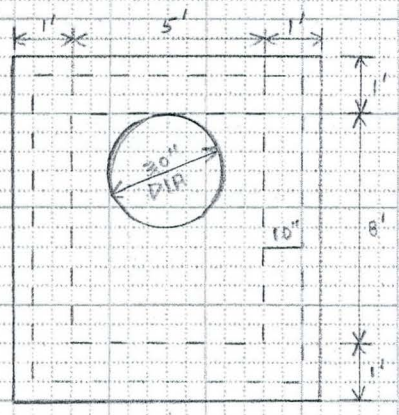

TOP SECTION

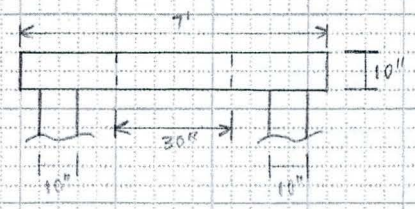

SIDE SECTION

10" = 0.833'
30" = 2.5'

VOLUME OF WHOLE

$\forall = 7(10)(.8333) = 58.33\ cf = 2.16\ cy$

VOLUME OF HOLE

$\forall = \pi(2.5/2)^2 = 4.909\ cf = 0.1818\ cy$

TOTAL

$\forall = 2.16 - 0.1818 = 1.978\ cy$

$\boxed{\forall_T = 1.978\ cy}$

BASE

6" = 0.5'

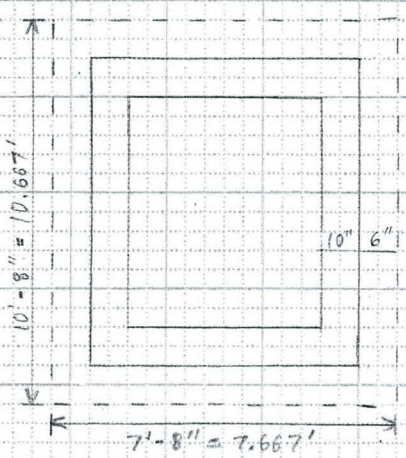

TOP SECTION

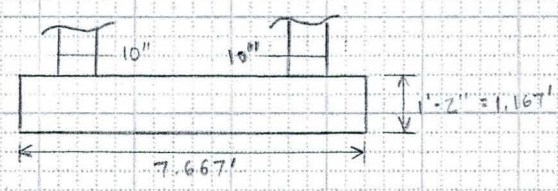

SIDE SECTION

VOL OF BASE

$\forall = 7.667(10.667)(1.167) = 95.44\ ft^3 = 3.53\ cy$

$\boxed{\forall_T = 3.53\ cy}$

FLOOD CONTROL DISTRICT OF MARICOPA COUNTY

PROJECT 43rd Ave Basin PAGE 2 OF 3

DETAIL Outlet Structures COMPUTED CSE DATE 8/14/01

Quantities CHECKED BY DATE

WINGWALLS

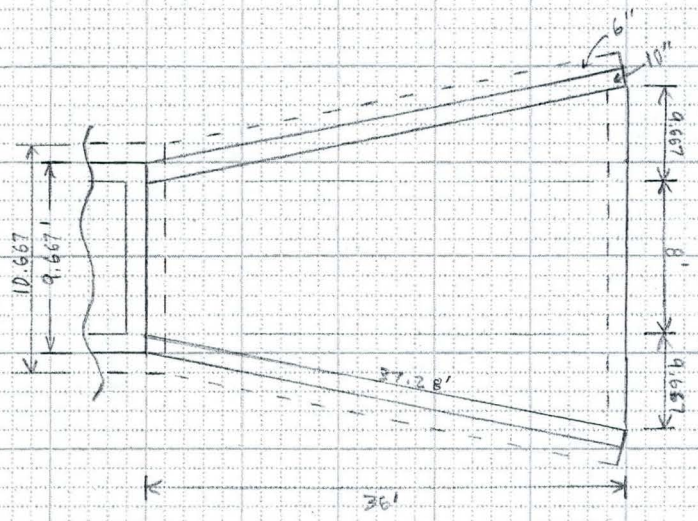

VOL OF SLAB INSIDE WALLS

$V = \frac{1}{2}(36)(8 + 27.33)(1) = 636.01\ cf$

$= 23.6\ cy$

VOL OF SLAB REMAIN

$V = 37.28(1.333)(1) = 49.69\ cf$

$= 49.69(2)/27 = 3.68\ cy$

VOL OF TOE INSIDE WALLS

$V = 0.833(2)(27.33) = 45.53\ cf$

$= 1.686\ cy$

VOL OF TOE REMAINING

$V = 0.833^2(4) = 2.78\ cf = 0.1029\ cy$

VOL OF WALLS

$V = \frac{1}{2}(37.28)(9.3 + .833)(.833) = 157.3\ cf$

$= 5.83(2) = 11.65\ cy$

TOP SECTION

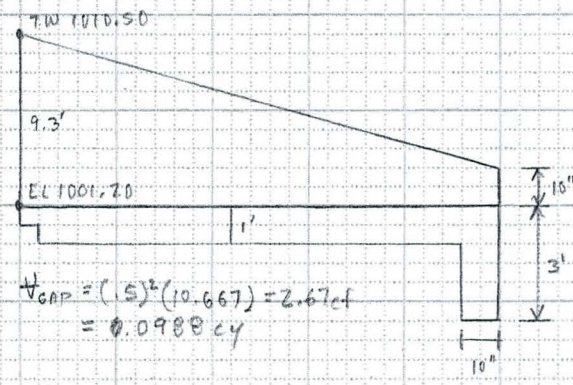

$V_{CAP} = (.5)^2(10.667) = 2.67\ cf$

$= 0.0988\ cy$

$V_T = 23.6 + 3.68 + 1.686 + 0.1029 + 11.65 + 0.0988 = 40.6\ cy$

$V_T = 40.6\ cy$

FLOOD CONTROL DISTRICT OF MARICOPA COUNTY

PROJECT 43RD AVE BASIN PAGE 3 OF 3

DETAIL OUTLET STRUCTURES COMPUTED CSE DATE 8/14/01

QUANTITIES CHECKED BY _____ DATE _____

WALLS

WALL HEIGHT = 10.3' (DOES NOT INCLUDE COVER THICKNESS)

L = 10' W = 7'

SIDE w/ 2 36" DIA HOLES

$\forall = 10.3(8)(.833) - 2(\pi)(1.5)^2(.833) = 56.86\ cf = 2.11\ cy$

SIDE w/ 72" PIPE

$\forall = 10.3(8)(.833) - \pi(3)^2(.833) = 45.09\ cf = 1.67\ cy$

OTHER SIDES

$\forall = 6.67(10.3)(.833)(2) = 114.5\ cf = 4.24\ cy$

TOTAL

$\forall = 2.11 + 1.67 + 4.24 = 8.02\ cy$

$\boxed{\forall_T = 8.02\ cy}$

GRAND TOTAL $\forall = 1.978 + 3.53 + 40.6 + 8.02 = 54.1\ cy$

$\forall_{TOTAL} = 54.1\ cy$

FLOOD CONTROL DISTRICT OF MARICOPA COUNTY

PROJECT 43rd Ave Basin PAGE 1 OF 1

DETAIL Outlet Structures COMPUTED CSE DATE 8/15/01

Quantities CHECKED BY _____ DATE _____

STRUCTURE 2

WALLS

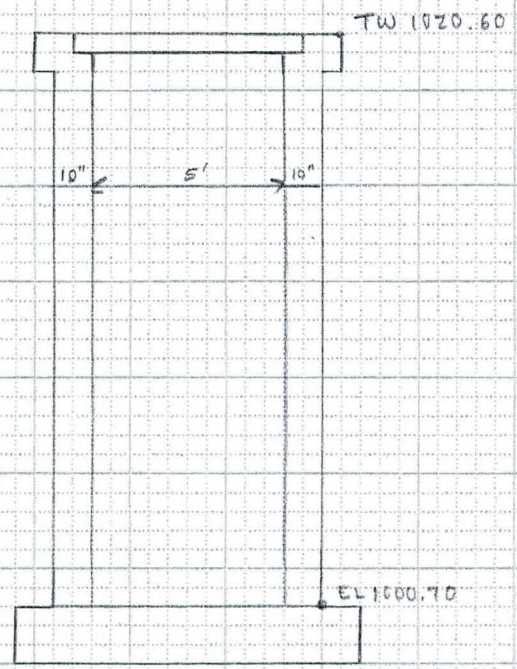

VOL OF TOP PORTION (COVER)

$\forall = 7(10)(.833) - 5(8)(.833) = 25cf = 0.926cy$

VOL OF BASE $\forall = 3.53cy$

72" = 6'

WALL HEIGHT = 19.07' (DOES NOT INCLUDE COVER)

L = 10', W = 7'

SIDE w/ 72" DIA HOLE & 12" GAP

$\forall = 19.07(8)(.833) - \pi(3)^2(.833) - 1(8)(.833) = 96.87cf = 3.59cy$

SIDE w/ 72" PIPE

$\forall = 19.07(8)(.833) - \pi(3^2)(.833) = 103.53cf = 3.83cy$

OTHER SIDES

$\forall = 6.67(19.07)(.833)(2) = 211.9cf = 7.85cy$

TOTAL

$\forall = 3.59 + 3.83 + 7.85 = 15.27cy$

$\boxed{\forall_T = 15.27cy}$

GRAND TOTAL $\forall = 15.27 + 3.53 + 0.926 = 19.7cy$

$\forall_{TOTAL} = 19.70cy$

FLOOD CONTROL DISTRICT OF MARICOPA COUNTY

PROJECT 43rd Ave Basin PAGE ____ OF ____
DETAIL Outlet Structure COMPUTED KVH DATE 8/01
Concrete Qtys CHECKED BY ____ DATE ____

Concrete Qtys:

Section G: (8'x5'x20' Structure c. 1)

Base slab: (7.67 x 10.67 x 1.17) = 95.8 cy — 95.8 cy

walls with 72" dia pipe:

Assume wall t = 6",

6" (72") 6" $A = \frac{3.14 \times 7^2}{4} = 38.5$

$L_1 = (8 + 1.67) = 9.67'$, Ht = 19.9

A_1 = wall 1 = (9.67 x 19.9) − 38.5 = 154

Qty = $(154 \times \frac{10}{12})$ = 128.3 cy

Wall 2, opening (8' x 1)

Qty = $(154 - 8)\frac{10}{12}$ = 121.7

250.0 — 250.0

Walls 3 & 4: $(5 \times \frac{10}{12})19.9 \times 2$ = 165.8 — 165.8

2 walls

511.6 cy

(19 cy)

Section-N (8'x5'x10') Structure. 2

Base slab: 95.8 cy

Ht = (1011 − 1008.7) = 10.3'

wall 1: (9.67 x 10.3) − 38.5 = 61.1 = A_1

Qty. 1 = $(61.1 \times \frac{10}{12})$ = 51.0 cy

wall 2: Dia = (36" + 3" + 3") = 3.5'

$A = (3.14 \times 3.5^2/4) = 9.6 \times 2 = 19.2$

2 openings

Net A = (9.67 x 10.3) − 19.2 = 80.4

Qty_2 = $80.4 \times \frac{10}{12}$ = 67.0

118.0 — 118.0

213.8

6910-153 4-90

FLOOD CONTROL DISTRICT OF MARICOPA COUNTY

PROJECT 43rd Ave. Basin PAGE ____ OF ____
DETAIL Outlet Structure COMPUTED KVH DATE 8/01
Conc. Qtys CHECKED BY ____ DATE ____

from previous page	213.8
Walls 3 & 4:	
$(5 \times \frac{10}{12})\ 10.3 \times 2$ = (2 walls)	85.8 cy
Top Slab:	
$A = (7 \times 10) = 70$	
2'-6" dbg $3.14 \times 2.5^2/4 = 4.9$	
Net. $A = (70 - 4.9) = 65.1$	
Qty $= (65.1 \times \frac{10}{12})$ =	54.3
	353.9 cy
	(13.1 cy)
Wing Walls	
$L = \sqrt{9.67^2 + 36^2} = 37.3'$	
Base Slab: $(10.67 + 30.0)/2 = 20.34'$	
$A = (20.34 \times 36) = 732.2$	
Qty $= (732.2)\ 1.0$ =	732.2
Tie Down: $(2 \times \frac{10}{12})\ 30'$ =	50.0
Wall $L = 37.3$, Ht (AV) $= \frac{(9.8 + 0.83)}{2} = 5.32'$	
Qty $= (5.32' \times \frac{10}{12} \times 37.3)\ 2$ = (2 walls)	330.7
	112.9 cy
	(41.2 cy)
Summary:	
Structure 1 $(8 \times 5 \times 20)$	19.0 cy
Structure 2 $(8 \times 5 \times 10)$ $(13.1 + 41.2)$ =	54.3 cy
	73.3

Say 74 cyd.

6910-153 4-90

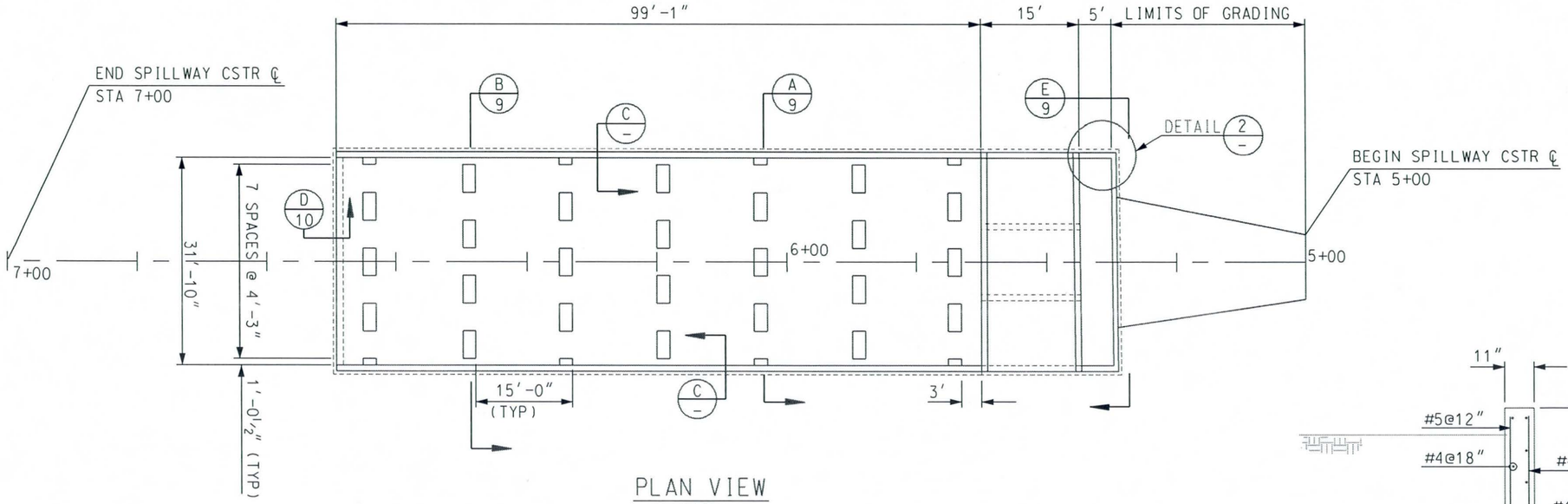

PLAN VIEW
NTS

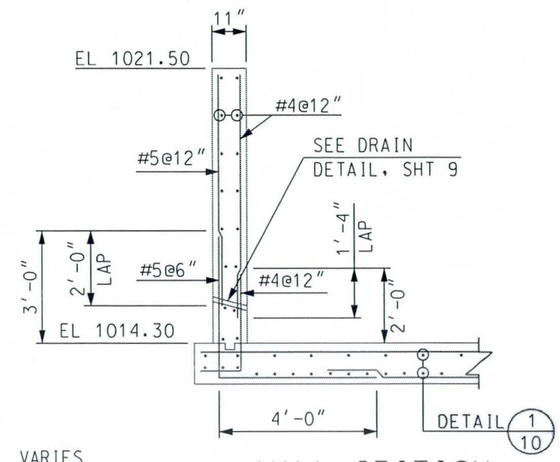

P WALL SECTION
SCALE: ½" = 1'-0"

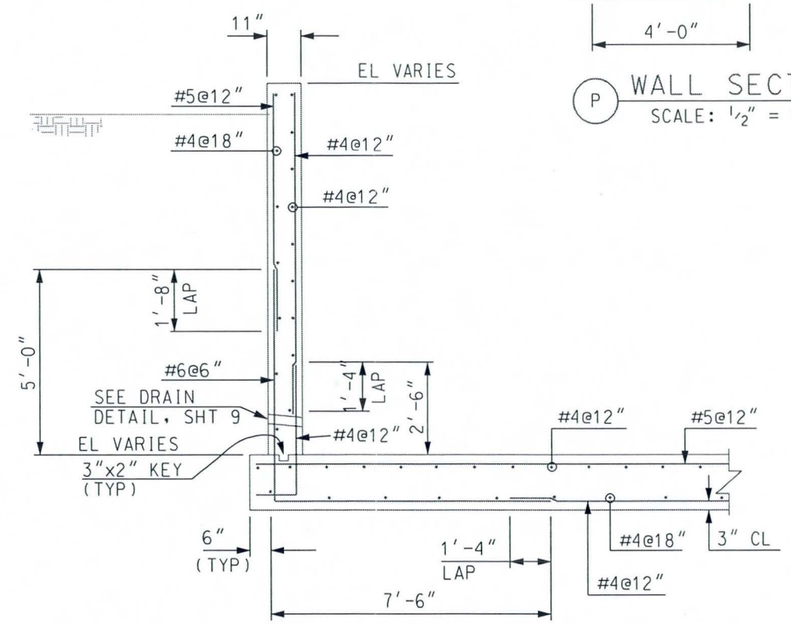

C WALL SECTION
SCALE: ½" = 1'-0"

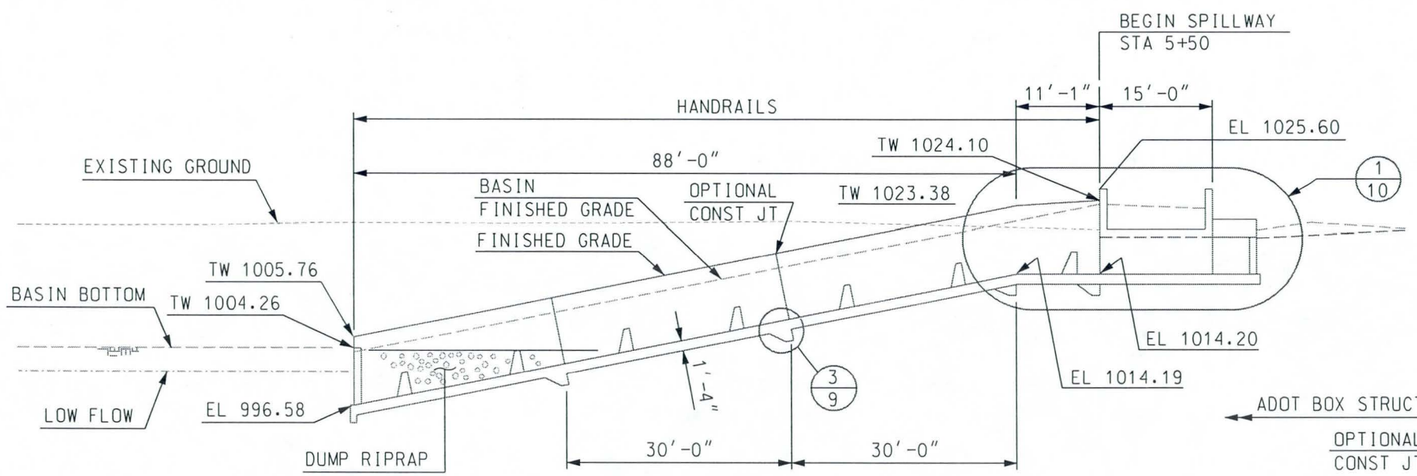

NORTH & SOUTH WALL ELEVATION
NTS

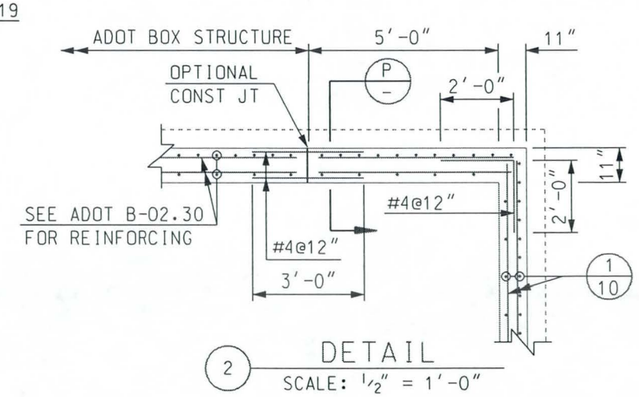

2 DETAIL
SCALE: ½" = 1'-0"

NO.	REVISION	BY	DATE
3			
2			
1			

FLOOD CONTROL DISTRICT OF MARICOPA COUNTY
ENGINEERING DIVISION

43RD AVENUE DETENTION BASIN
FCD PROJECT NO. 1170230
90% SUBMITTAL

	BY	DATE
DESIGNED	KVH	02/18/99
DRAWN	FC	02/18/99
CHECKED	MAL	

PRELIMINARY NOT FOR CONSTRUCTION

SPILLWAY PLAN & ELEVATION

SHEET 8 OF 26

...\dgn\phase3\SPILWAY1.DGN Mar. 19, 1999 08:24:41

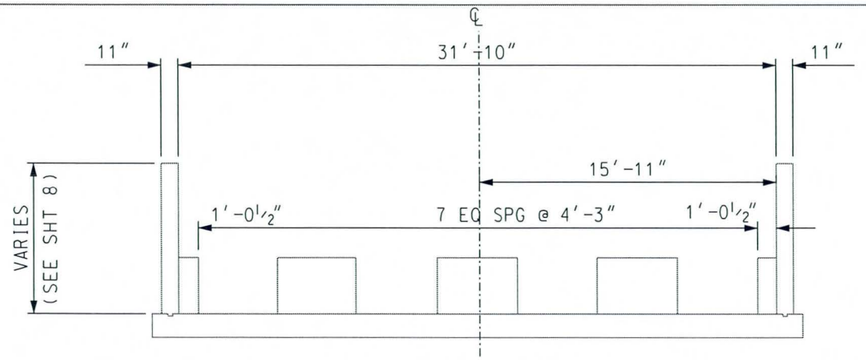

A/8 SECTION
SCALE: ¼" = 1'-0

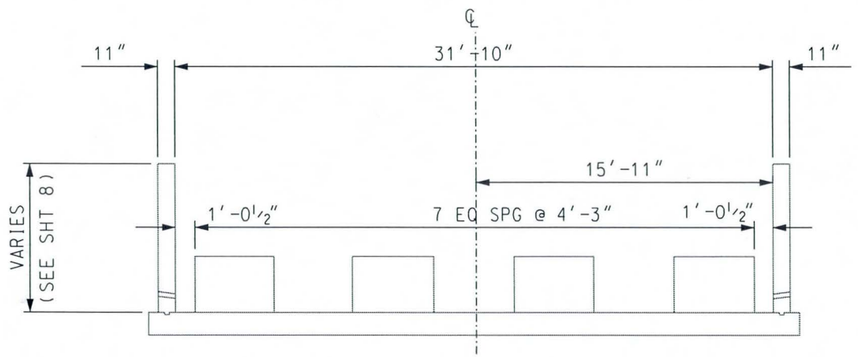

B/8 SECTION
SCALE: ¼" = 1'-0

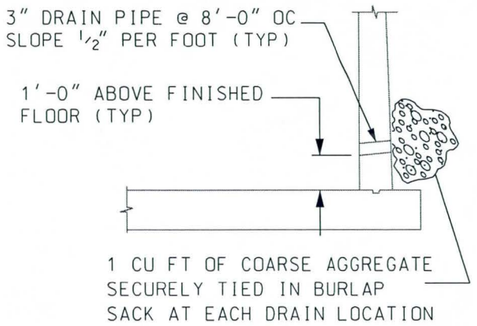

DRAIN DETAIL
NTS

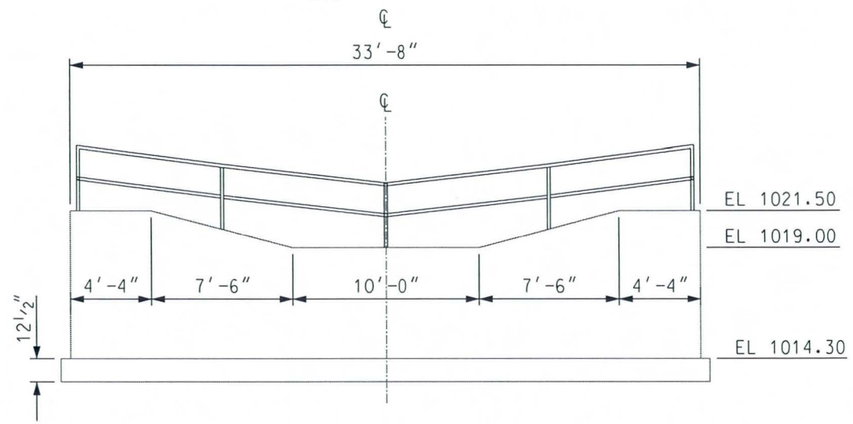

E/8 SECTION
NTS

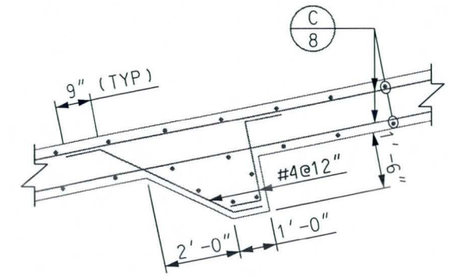

3/8 DETAIL
SCALE: ½"=1'-0"

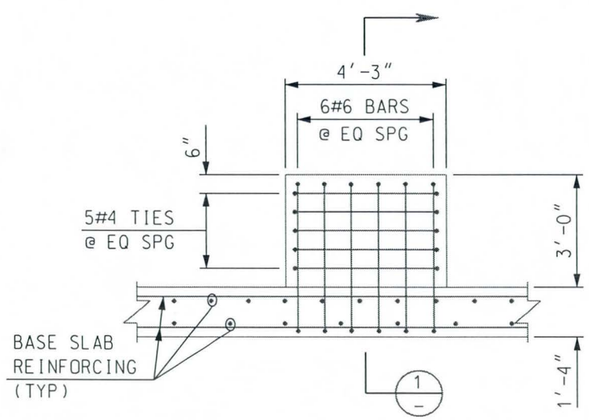

MIDDLE BLOCK DETAIL
SCALE: ½" = 1'-0

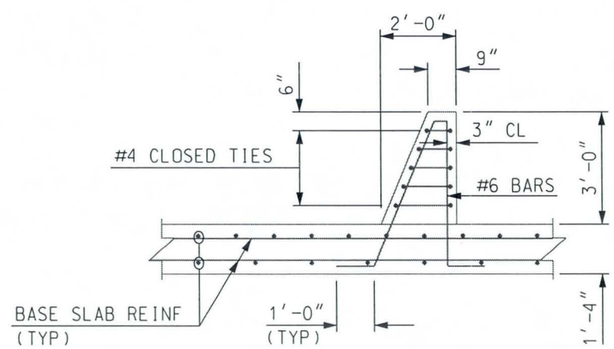

1 SECTION
SCALE: ½" = 1'-0

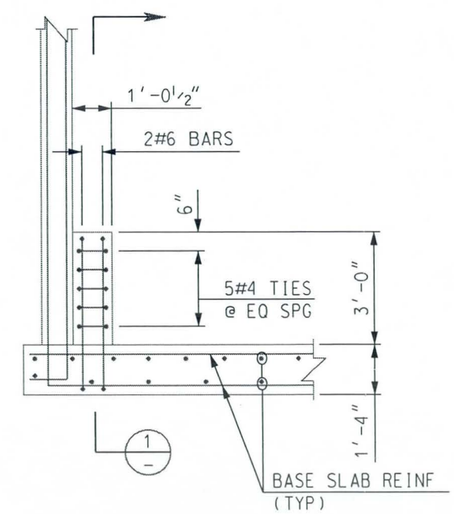

END BLOCK DETAIL
SCALE: ½" = 1'-0

NO.	REVISION	BY	DATE
3			
2			
1			

FLOOD CONTROL DISTRICT OF MARICOPA COUNTY
ENGINEERING DIVISION

43RD AVENUE DETENTION BASIN
FCD PROJECT NO. 1170230
90% SUBMITTAL

PRELIMINARY NOT FOR CONSTRUCTION

	BY	DATE
DESIGNED	KVH	12/30/98
DRAWN	FC	12/30/98
CHECKED	MAL	

SPILLWAY DETAILS

SHEET 9 OF 26

...\dgn\phase3\SPILWAY2.DGN Mar. 19, 1999 08:25:04

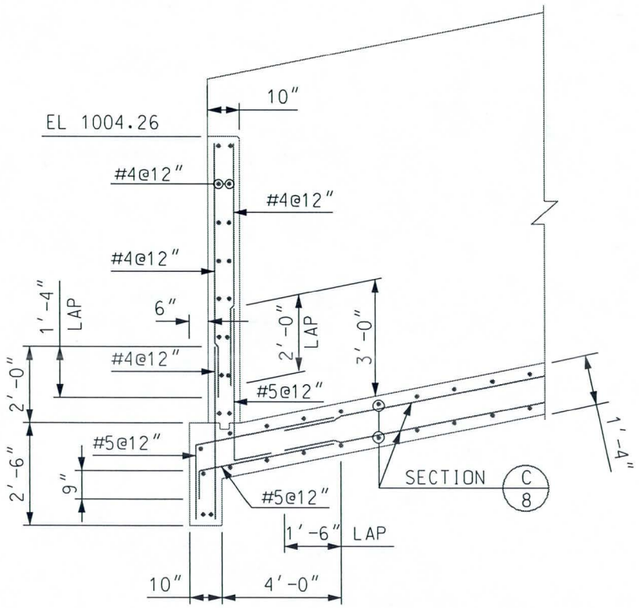

D/8 SECTION
SCALE: 1/2" = 1'-0

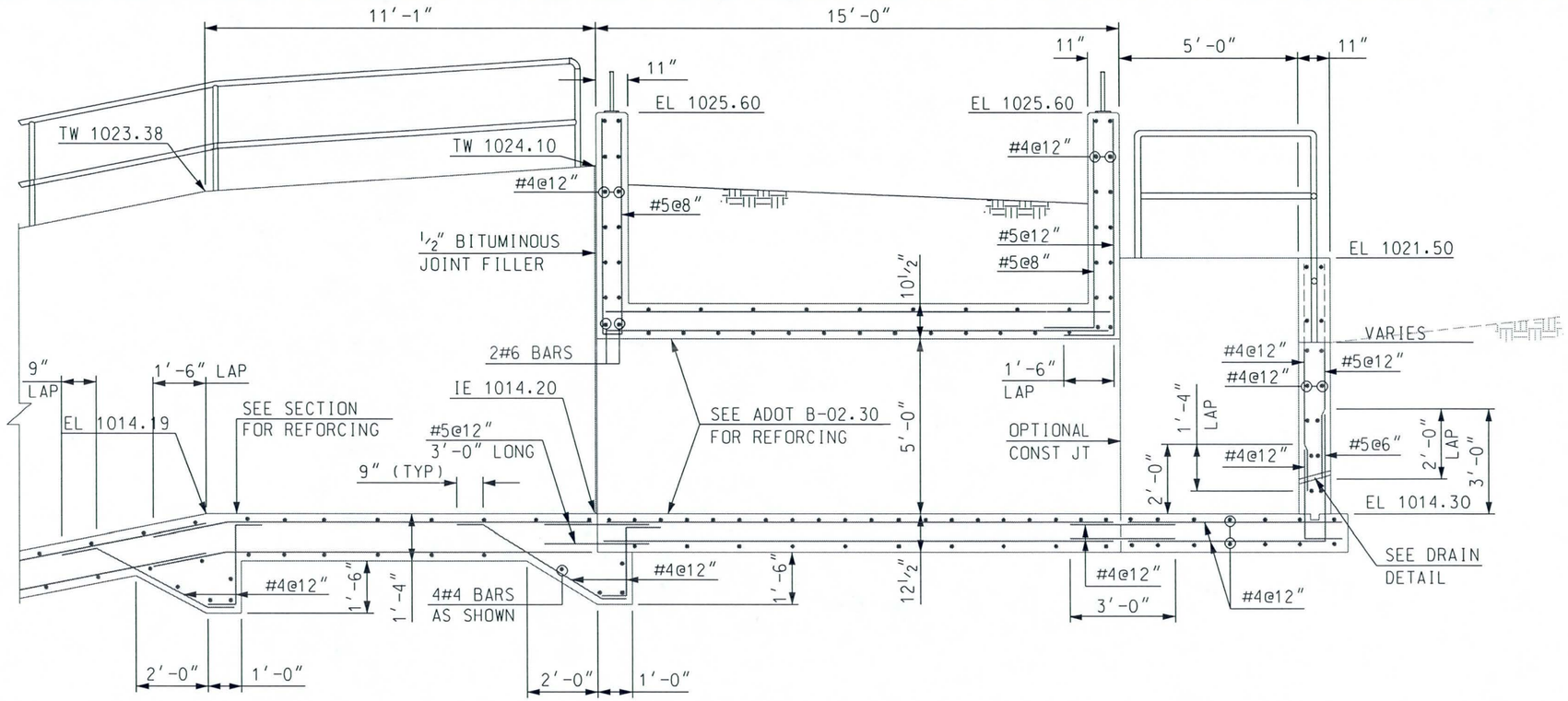

1/8 DETAIL
NTS

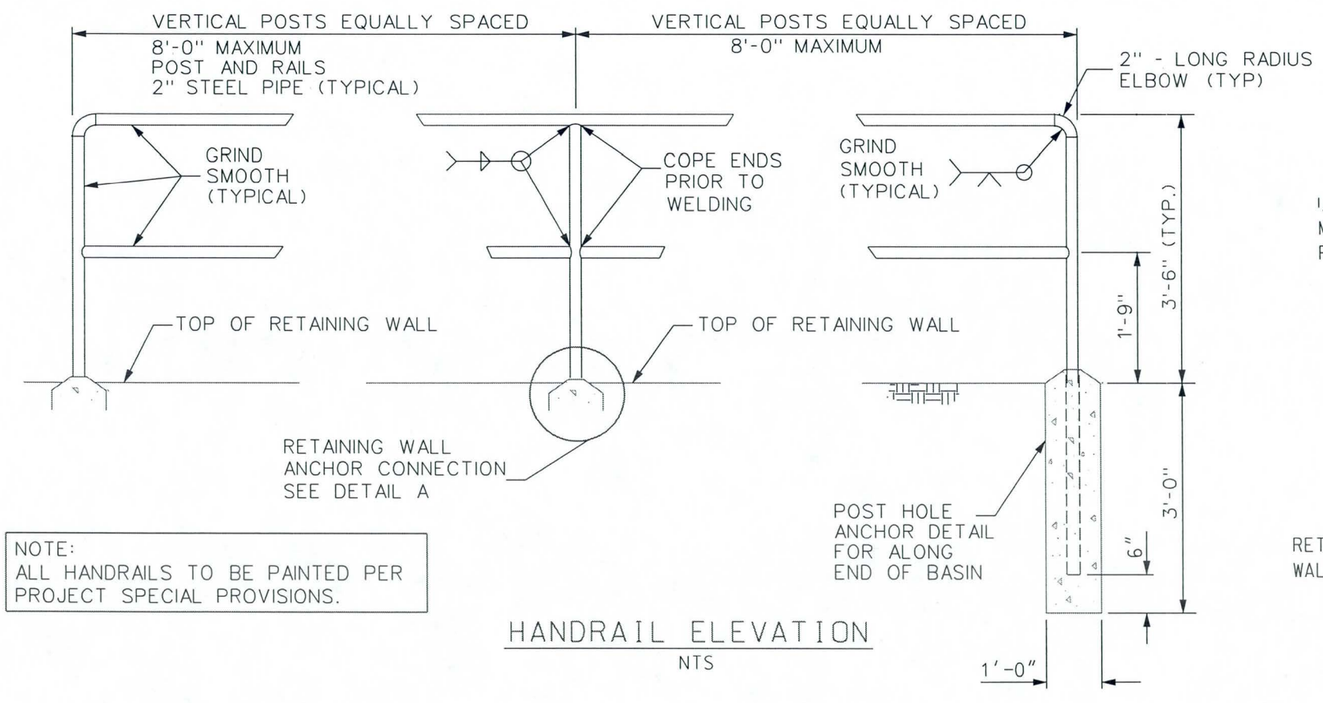

NOTE:
ALL HANDRAILS TO BE PAINTED PER PROJECT SPECIAL PROVISIONS.

HANDRAIL ELEVATION
NTS

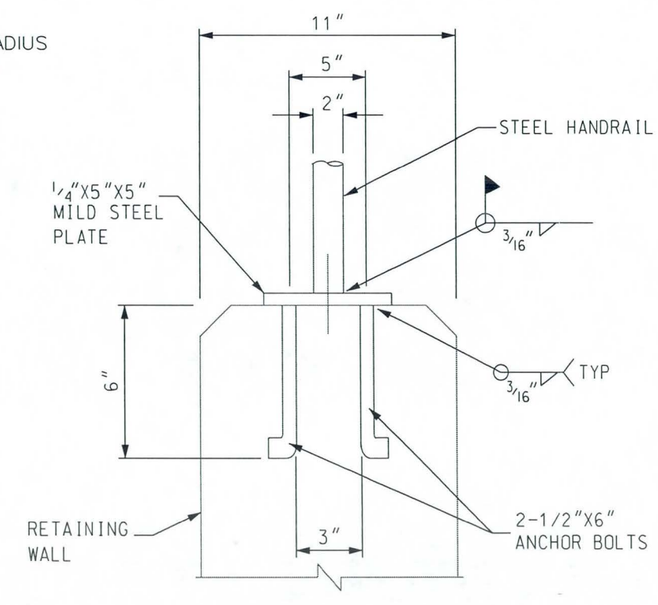

A DETAIL
NTS

NO.	REVISION	BY	DATE
3			
2			
1			

FLOOD CONTROL DISTRICT OF MARICOPA COUNTY
ENGINEERING DIVISION

43RD AVENUE DETENTION BASIN
FCD PROJECT NO. 1170230
90% SUBMITTAL

PRELIMINARY NOT FOR CONSTRUCTION

	BY	DATE
DESIGNED	KVH	02/18/99
DRAWN	FC	02/18/99
CHECKED	MAL	

SPILLWAY WALL DETAILS — SHEET 10 OF 26

...\dgn\phase3\spilway3.dgn Mar. 19, 1999 08:25:25

FLOOD CONTROL DISTRICT OF MARICOPA COUNTY

PROJECT 43rd Ave. Basin PAGE 1 OF

DETAIL Walls. COMPUTED KVH DATE July 9

Spillway. CHECKED BY DATE

Spillway walls:

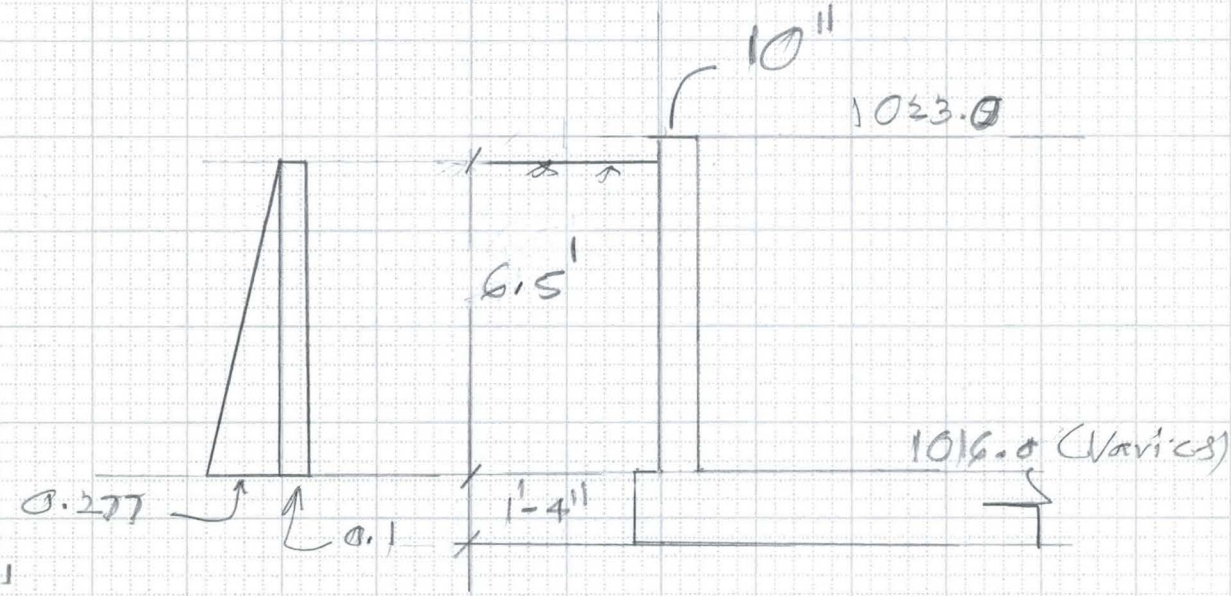

$Ht = 6.5'$

$Pr_E = (0.12 \times 0.33 \times 6.5) = 0.257$ ksf

Surch = 2', $pr_S = (0.12 \times 0.33 \times 2) = 0.08$ ksf say 0.1 ksf

$P_E = (\frac{0.257}{2} \times 6.5) = 0.84^k$

$P_S = (0.1 \times 6.5) = 0.65^k$

$M = (0.84 \times \frac{6.5}{3}) + (0.65 \times \frac{6.5}{2}) = (1.82 + 2.11) = 3.93$ k'

Try 10" wall, $d_{eff} = (10 - 2 - 0.5) = 7.5''$

$$A_s = \frac{3.93 \times 12}{24 \times 0.88 \times 7.5} = 0.30$$

Use #5 @ 9" $A_s = 0.41$ as there may be some water pr behind the wall

FLOOD CONTROL DISTRICT OF MARICOPA COUNTY

PROJECT 43rd Ave. Basin PAGE 2 OF

DETAIL Channel Sect. COMPUTED KVH DATE July/9

Spillway CHECKED BY DATE

Channel Section:

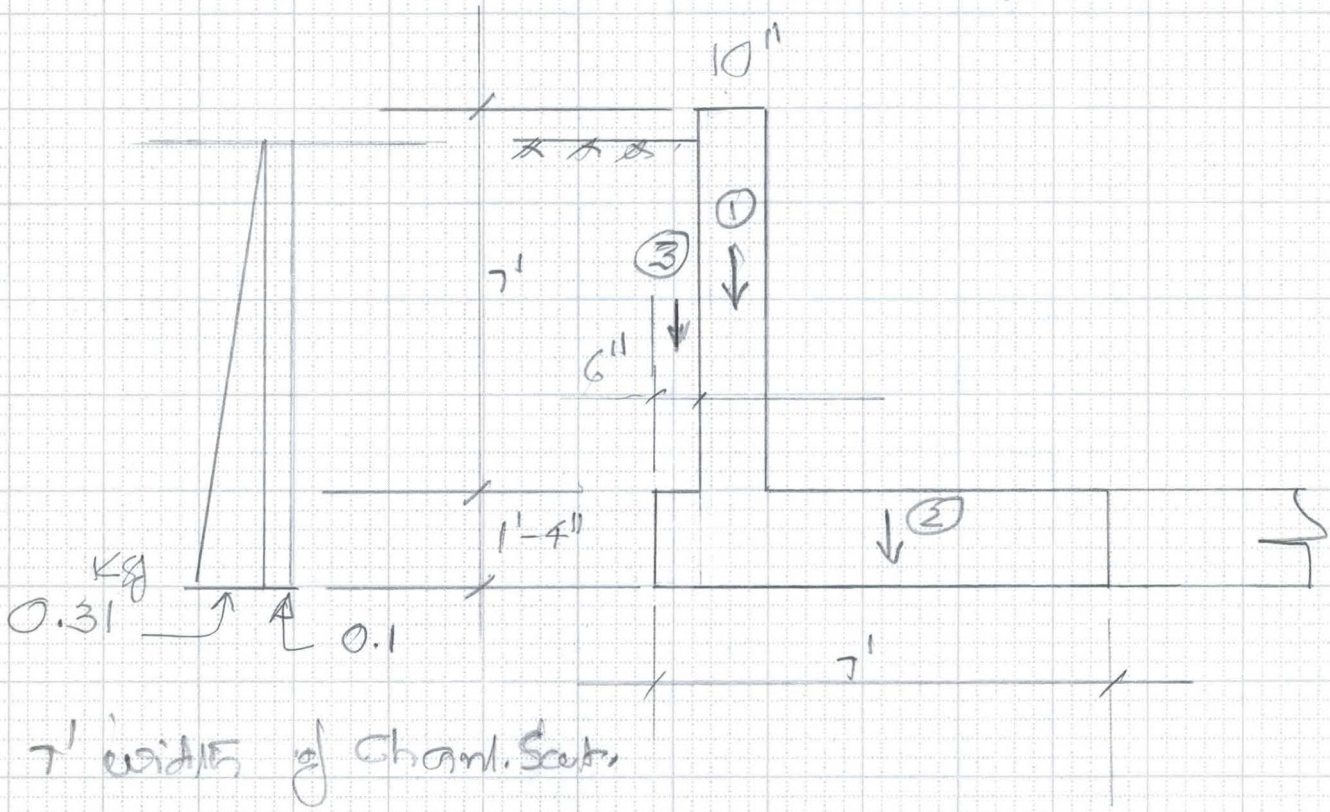

Use 7' width of Channel Sect.

Stabilizing:

① $(0.833 \times 7.0)\,0.15 = 0.88^{K}$

② $(1.33 \times 7.0)\,0.15 = 1.40$

③ $0.5 \times (6.5+2)\,0.12 = 0.51$

$\Sigma = 2.79$

$M_{STB} = (0.88 \times 6.09) + (1.4 \times 3.5) + (0.51 \times 6.75)$

$= (5.36 + 4.9 + 3.44) = 13.70$ Kft

Overturning:

$P_{rE} = 0.12 \times 0.33 \times (6.5 + 1.33) = 0.31^{K}$

$P_{rS} = (0.12 \times 0.33 \times 2) = 0.079 \approx 0.10$

(4)

FLOOD CONTROL DISTRICT OF MARICOPA COUNTY

PROJECT 43rd Ave. Basin PAGE 3(A) OF

DETAIL Spillway Detail COMPUTED KVH DATE July/98

Spillway CHECKED BY DATE

$P_E = \frac{0.31}{2}(7.83) = 1.21^K$

$P_3 = (0.1 \times 7.83) = 0.78^K$

$M_{O.T} = \left(1.21 \times \frac{7.83}{3}\right) + \left(0.78 \times \frac{7.83}{2}\right)$

$= (3.16 + 3.05) = 6.21^{K'}$

$F.S = \frac{13.7}{6.21} = 2.21 > 1.5 \therefore OK$

Dist. of Resultant $x_R = (13.70 - 6.21)/2.79 = 2.68'$

$e = \left(\frac{7.0}{2} - 2.68\right) = 0.82, \quad \frac{b}{6} = \frac{7.0}{6} = 1.17$

$e < \frac{b}{6} \therefore$ Resultant with in Mid Third.

6910-153 4-90

FLOOD CONTROL DISTRICT OF MARICOPA COUNTY

PROJECT 43rd Ave. Basin PAGE 3(B) OF

DETAIL Inlet. Str. walls COMPUTED KVH DATE Sept. 9

CHECKED BY DATE

Check wall Reinf:

$H = (1021.50 - 1014.3) = 7.2'$

$(1019.00 - 1014.3) = 4.7'$

Varies from 4.7' to 7.2'

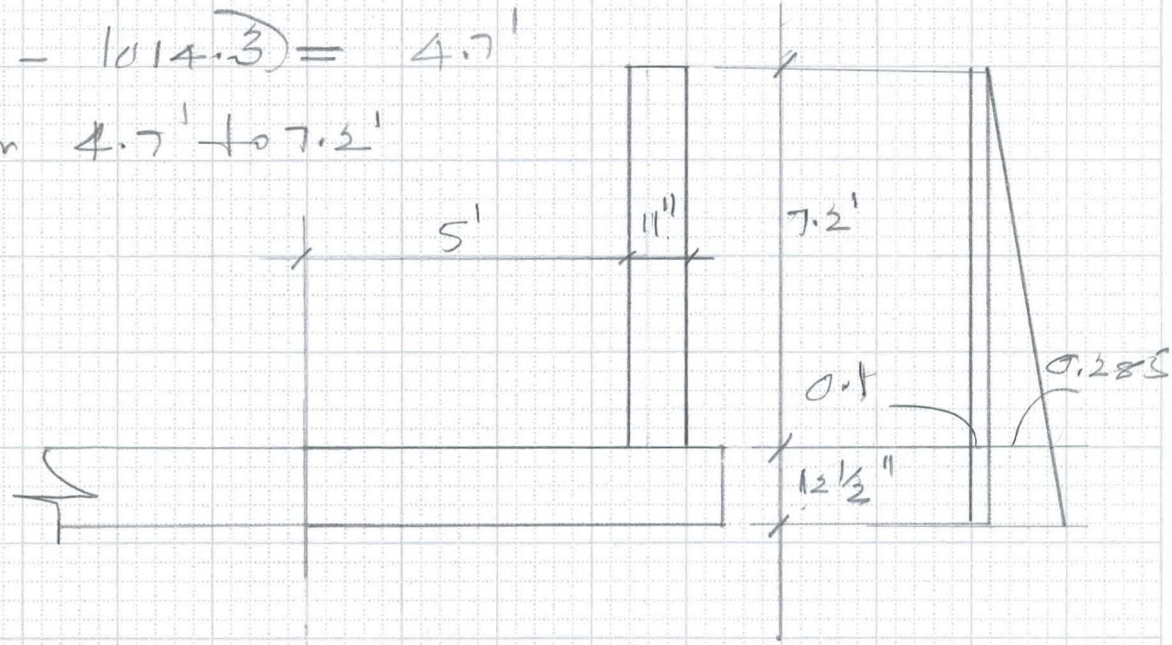

$Pr_E = (0.12 \times 0.33 \times 7.2) = 0.285^{ksf}$

$Pr_{surch} = (0.12 \times 0.33 \times 2) = 0.08$ Say 0.1 ksf

$P_E = \left(\frac{0.285}{2}\right) 7.2 = 1.03^{K}$

$P_S = (0.1 \times 7.2) = 0.72$

$M_{cant} = (1.03 \times 7.2/3) + \left(0.72 \times \frac{7.2}{2}\right)$

$= (2.5 + 2.6) = 5.1$

$d_{eff} = (11 - 2 - 0.5) = 8.5$

$A_s = \frac{5.1 \times 12}{24 \times 0.88 \times 8.5}$

$= 0.34 \text{ in}^2$

Use #5 @ 6" to Match with Box. Vert. Steel

FLOOD CONTROL DISTRICT OF MARICOPA COUNTY

PROJECT 43rd Ave. Basin PAGE 4 OF ____
DETAIL Wall Ht's. COMPUTED KVH DATE Aug/98
Spillway. CHECKED BY ____ DATE ____

Spillway Walls

Wall Ht's @ the Spillway

(1005.76 − 996.58) = 9.18 } Ht of Main Walls
~~(1023.38~~ 1023.37 − 1014.19) = ~~9.19'~~ 9.18' } North & South Walls.
(1024.10 − 1014.20) = 9.9' } t = ~~12"~~ 11"

West wall (Down Stream Side)

(1004.26 − 996.58) = 7.68', t = 10"

Wall Ht at the Spillway (Grated)

Ht = (1021.50 − 1014.30) = 7.2', t = 11"

Outlet Structure:

Wing Ht = (1010.20 − 1001.0) = 9.2'

Ht of Box = (1020.60 − 1001.00) = 19.6'

FLOOD CONTROL DISTRICT OF MARICOPA COUNTY

PROJECT 43rd Ave. Basin PAGE 5 OF

DETAIL Section & Detail COMPUTED KVH DATE July 9

CHECKED BY DATE

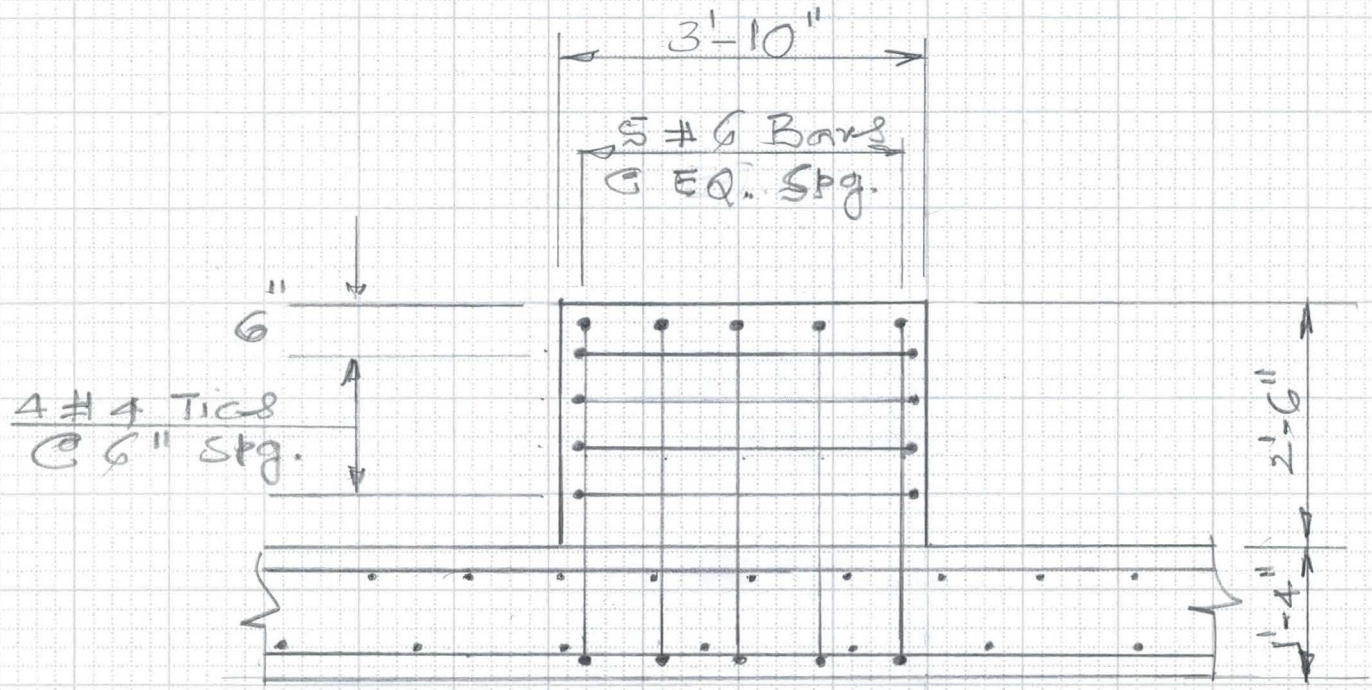

1 Section
Scale: ½" = 1'-0

FLOOD CONTROL DISTRICT OF MARICOPA COUNTY

PROJECT 43rd Ave. Basin PAGE 6 OF

DETAIL Sections 4 Details COMPUTED KVH DATE July 98

CHECKED BY DATE

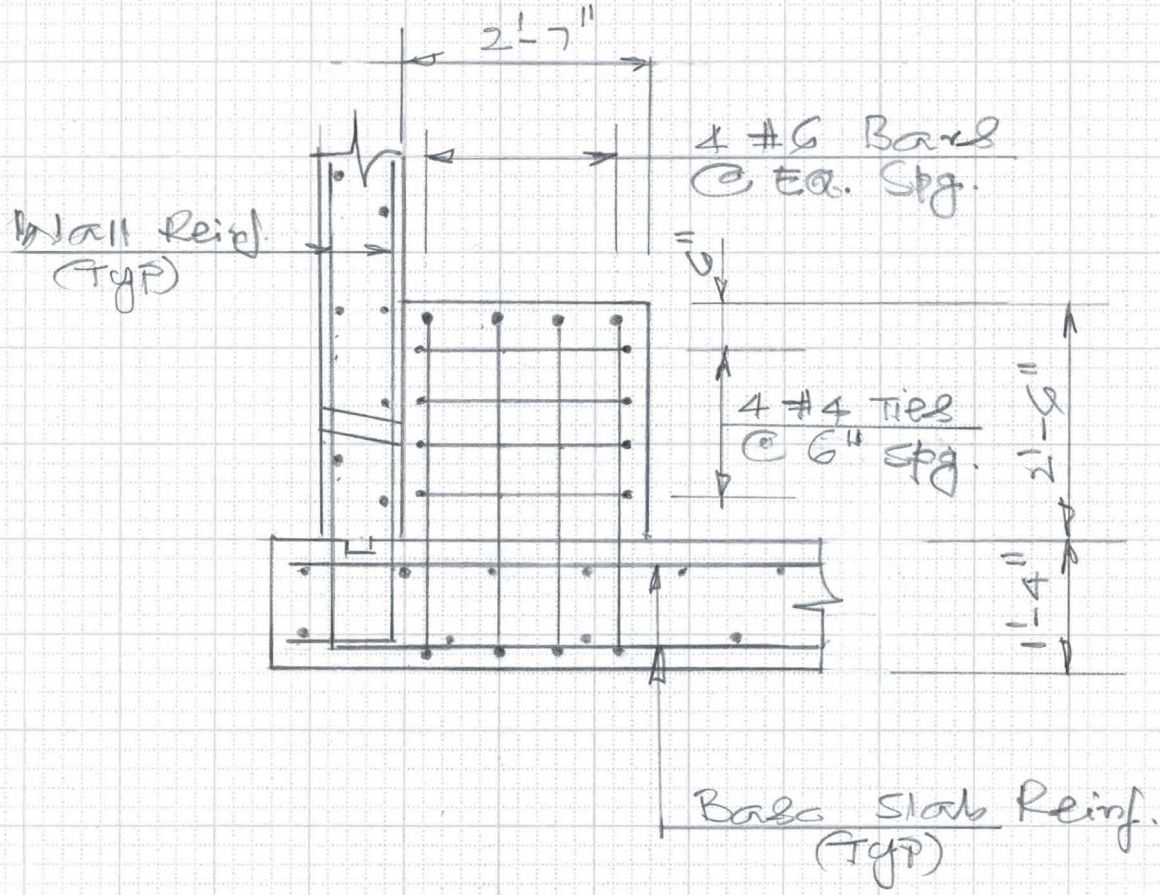

2 Section - End Block
Scale: 1/2" = 1'-0"

6910-153 4-90

FLOOD CONTROL DISTRICT OF MARICOPA COUNTY

PROJECT 43rd Ave. Basin PAGE 7 OF

DETAIL Sections & Details COMPUTED KVH DATE July 98

CHECKED BY DATE

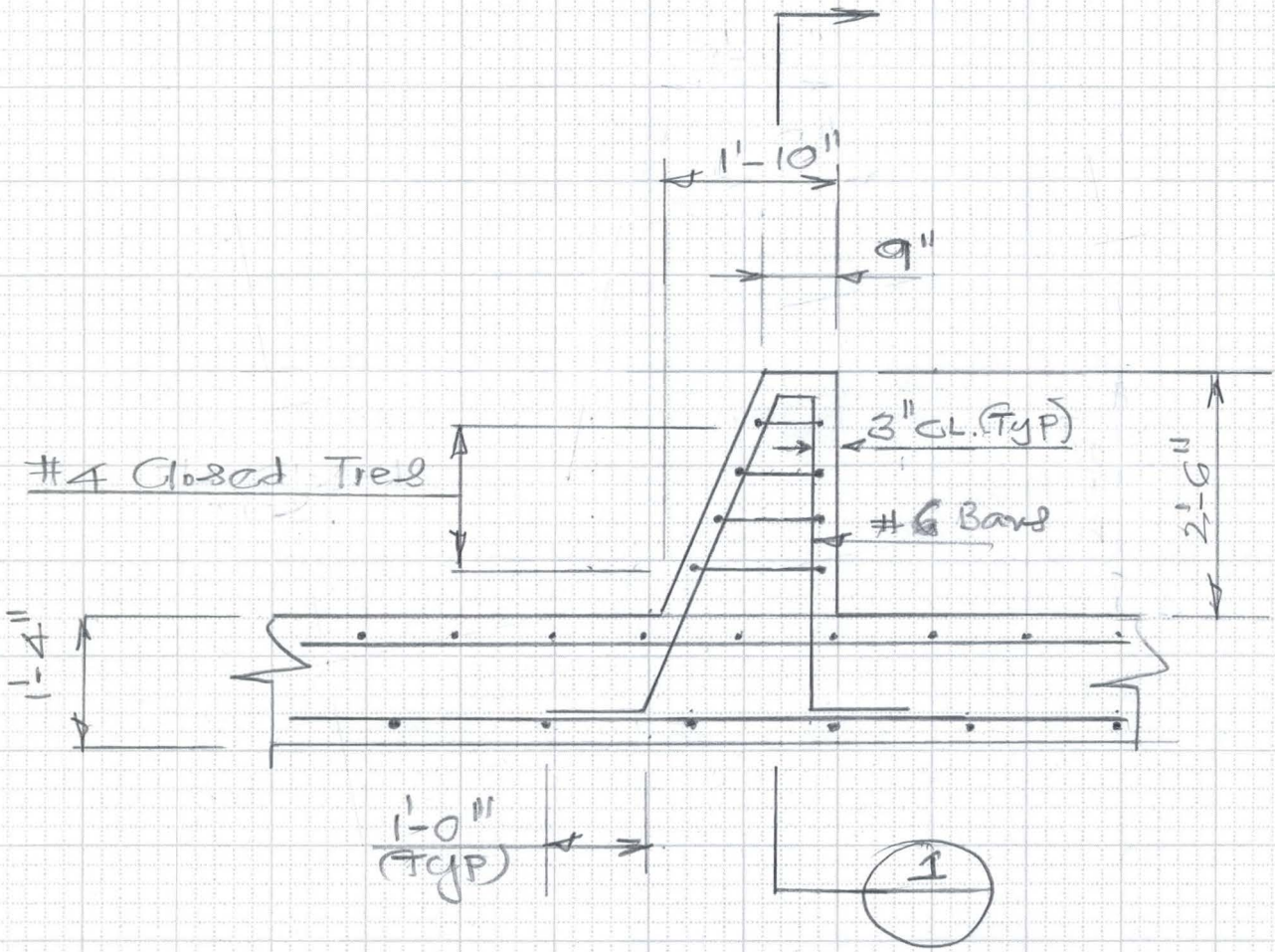

Chute Block Detail

Scale: 1/2" = 1'-0

FLOOD CONTROL DISTRICT OF MARICOPA COUNTY

PROJECT _____ PAGE 8 OF _____

DETAIL _____ COMPUTED _____ DATE _____

CHECKED BY _____ DATE _____

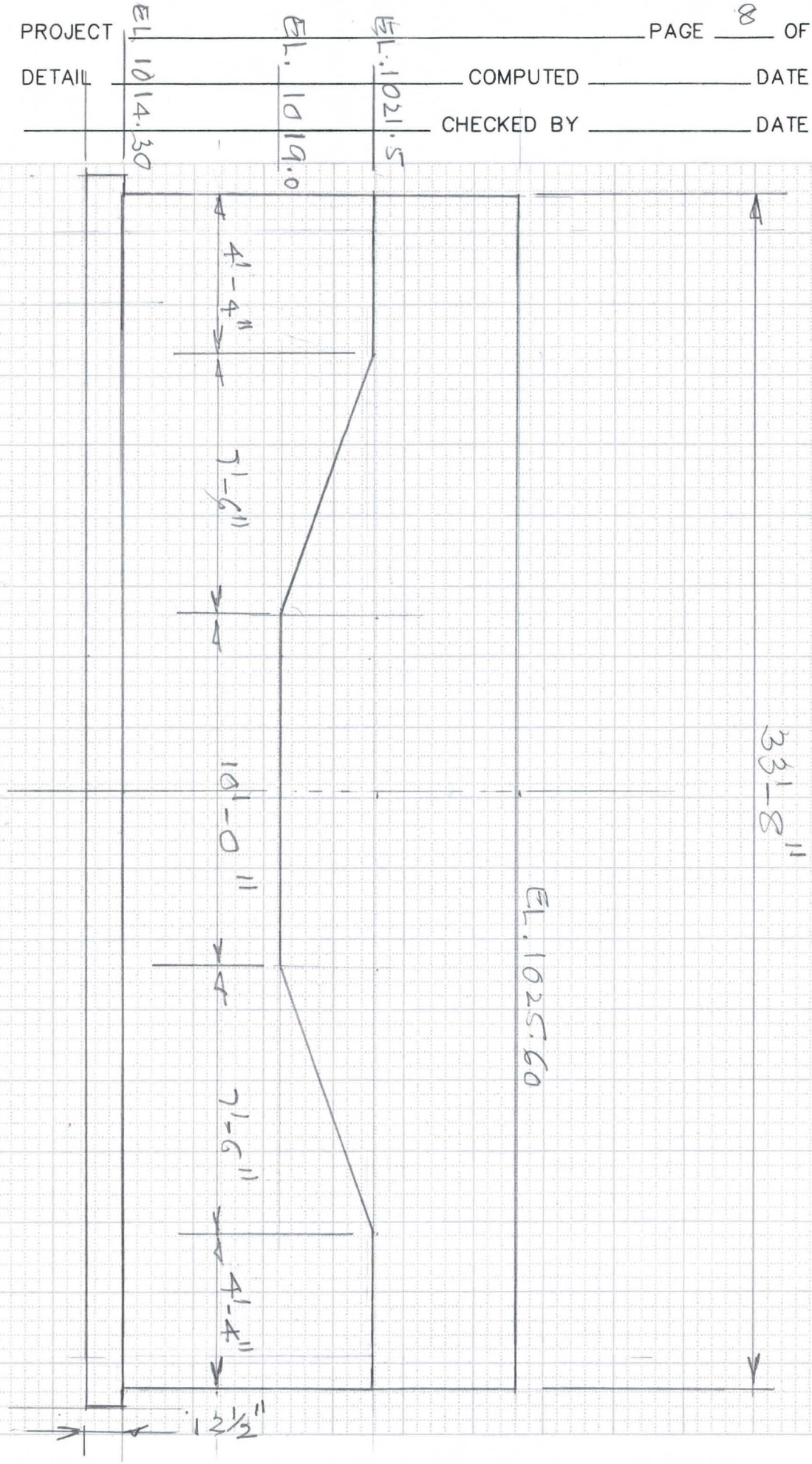

FLOOD CONTROL DISTRICT OF MARICOPA COUNTY

PROJECT 43rd Ave. Basin PAGE 9 OF ____

DETAIL Details COMPUTED KVH DATE July 98

CHECKED BY ____ DATE ____

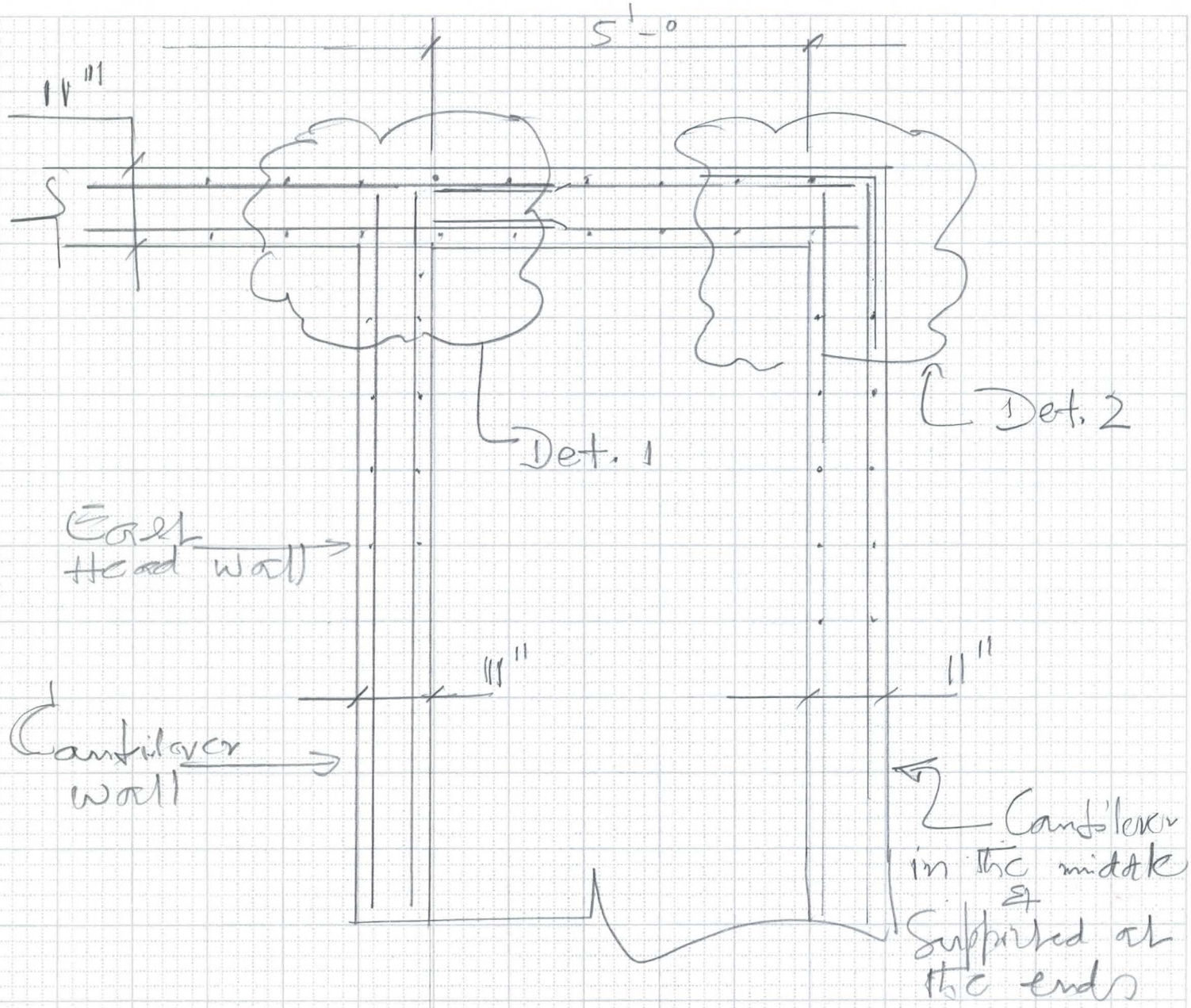

West Head wall acts as a Basic Cantilever wall, though it gets a little support from the Channel walls at the ends. Because of the Expansion Jt this Head wall may not get any supports at all from the channel walls

FLOOD CONTROL DISTRICT OF MARICOPA COUNTY

PROJECT 43rd Ave. Basin PAGE 10 OF

DETAIL Wall Section COMPUTED KVH DATE July 98

CHECKED BY DATE

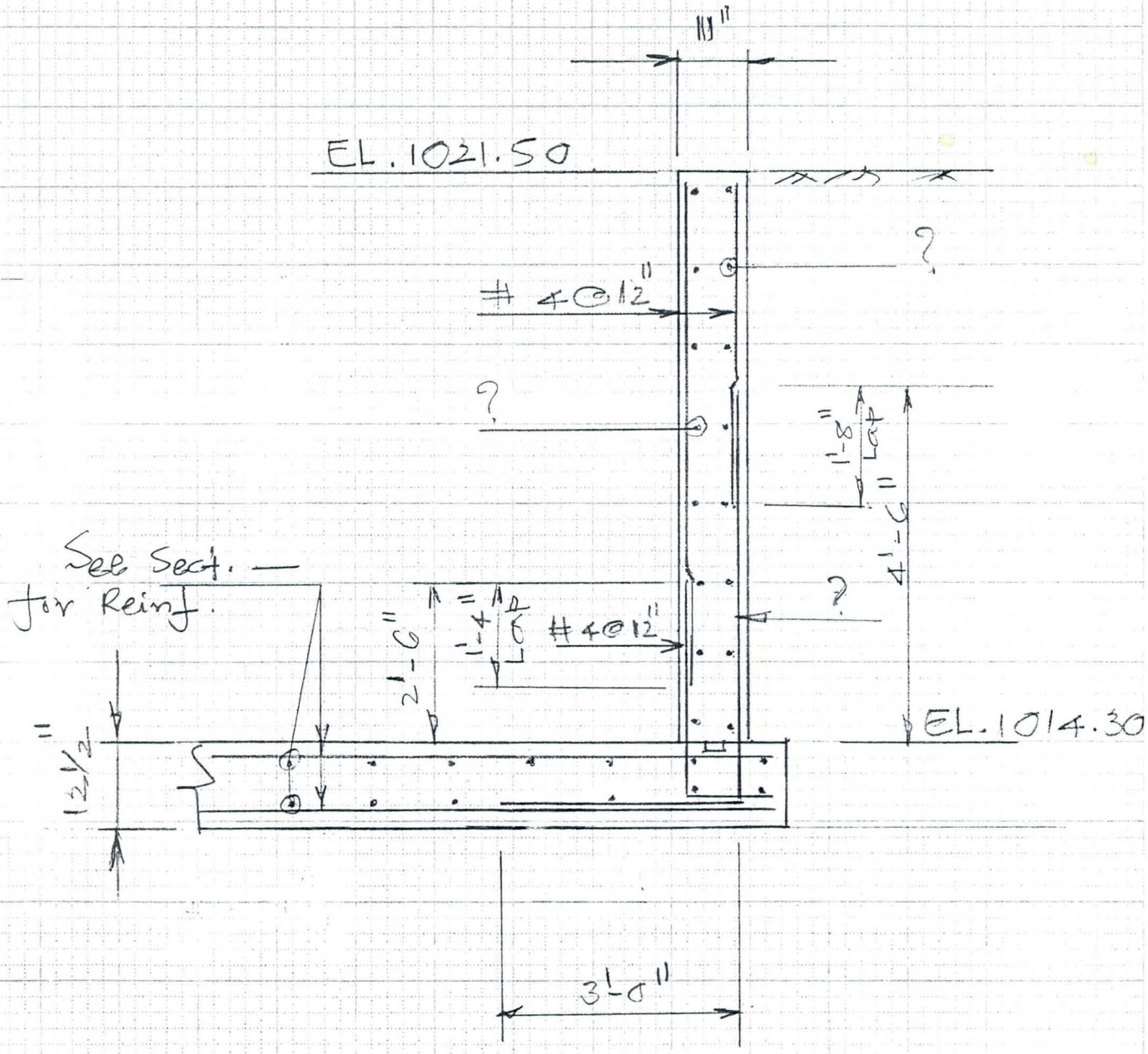

SECTION

Scale: ½" = 1'-0

FLOOD CONTROL DISTRICT OF MARICOPA COUNTY

PROJECT 43rd Ave. Drain PAGE 11 OF

DETAIL Wall Sect COMPUTED KVH DATE July 9

CHECKED BY DATE

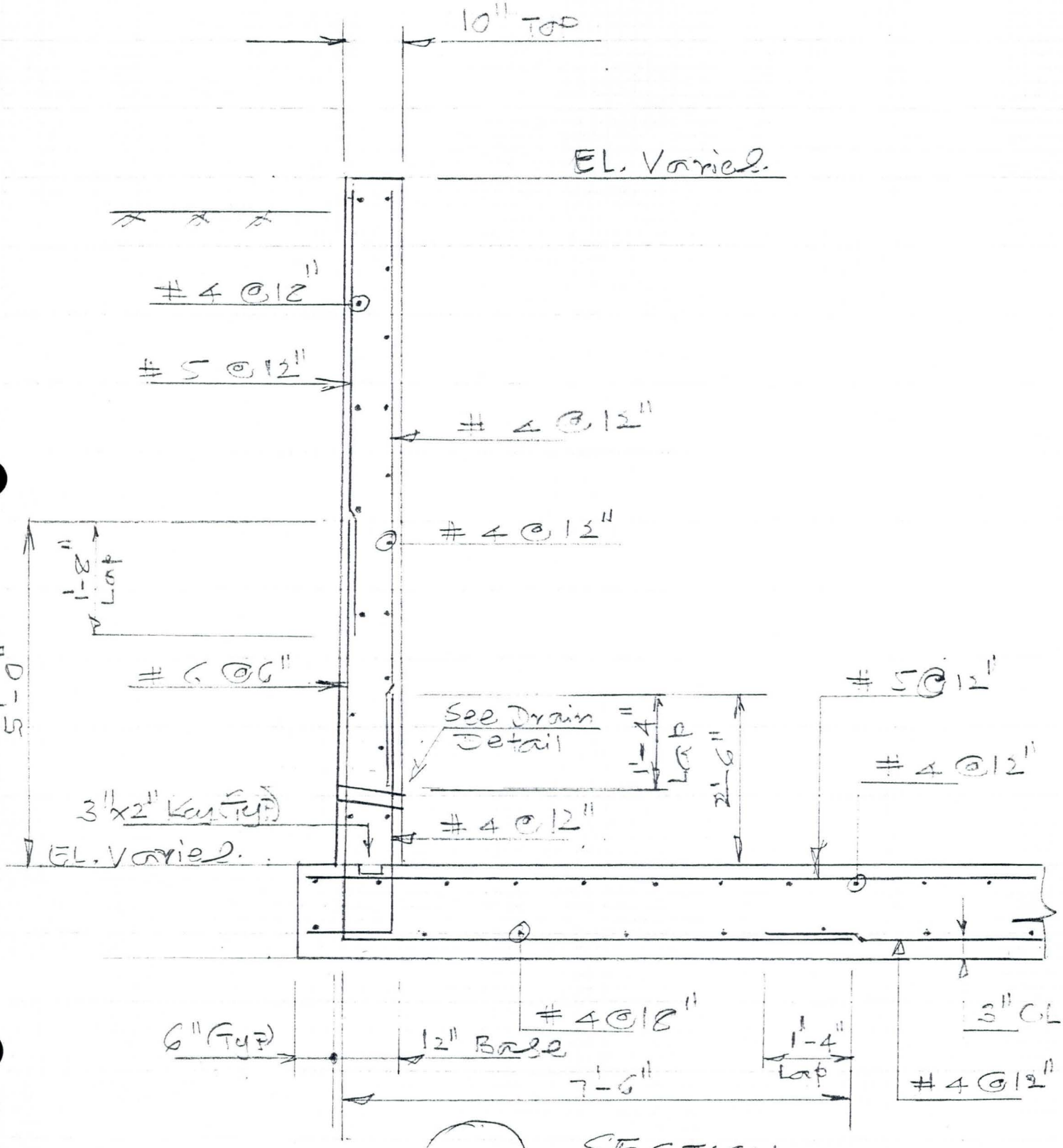

SECTION
Scale: 1/2" = 1'-0"

FLOOD CONTROL DISTRICT OF MARICOPA COUNTY

PROJECT 43rd Ave. Basin PAGE 12 OF

DETAIL Wall Sect COMPUTED KVH DATE July 9

CHECKED BY DATE

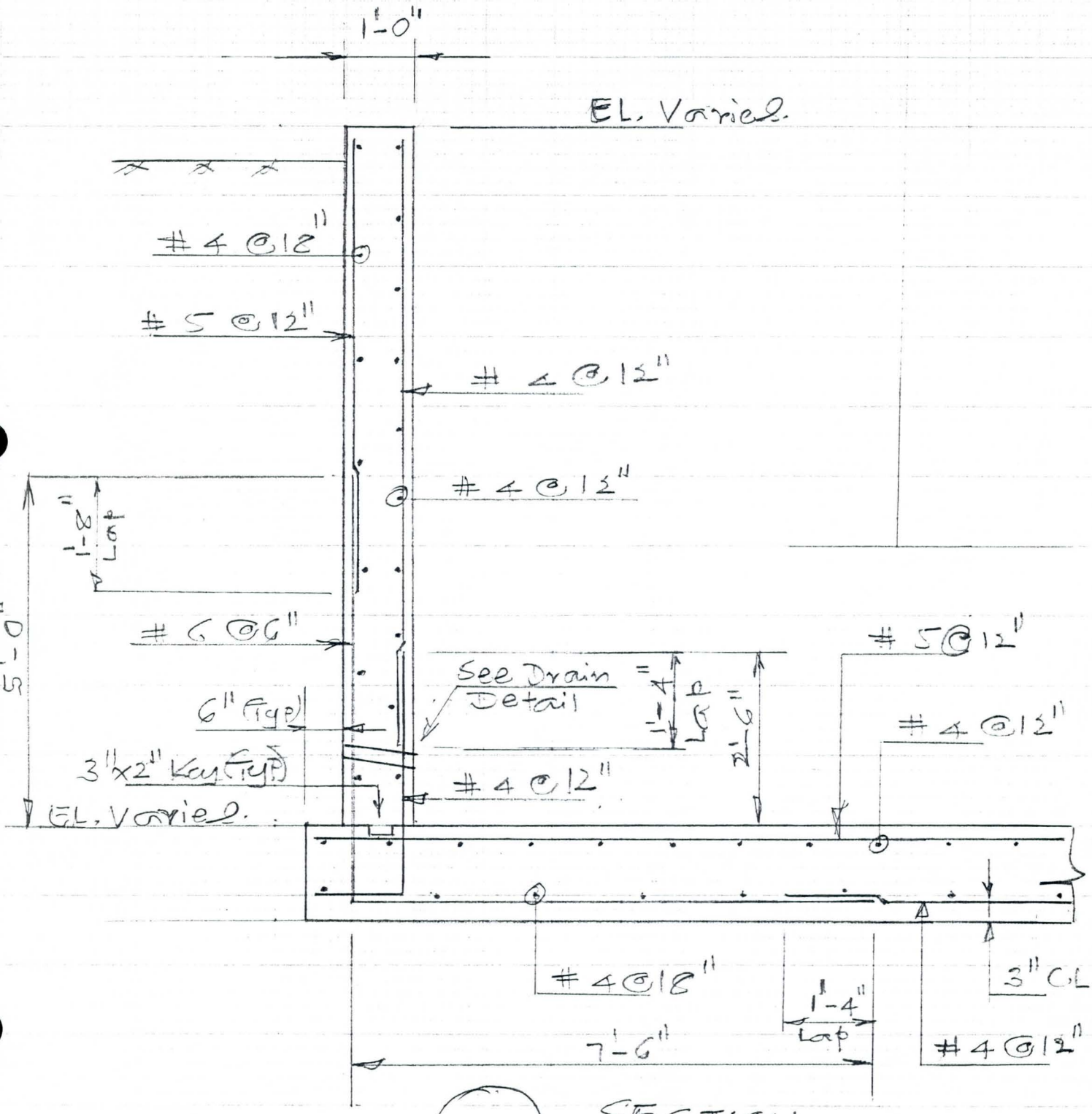

SECTION
Scale: 1/2" = 1'-0"

FLOOD CONTROL DISTRICT OF MARICOPA COUNTY

PROJECT 43rd Ave. Basin PAGE 13 OF

DETAIL Detail COMPUTED KWL DATE July 92

CHECKED BY DATE

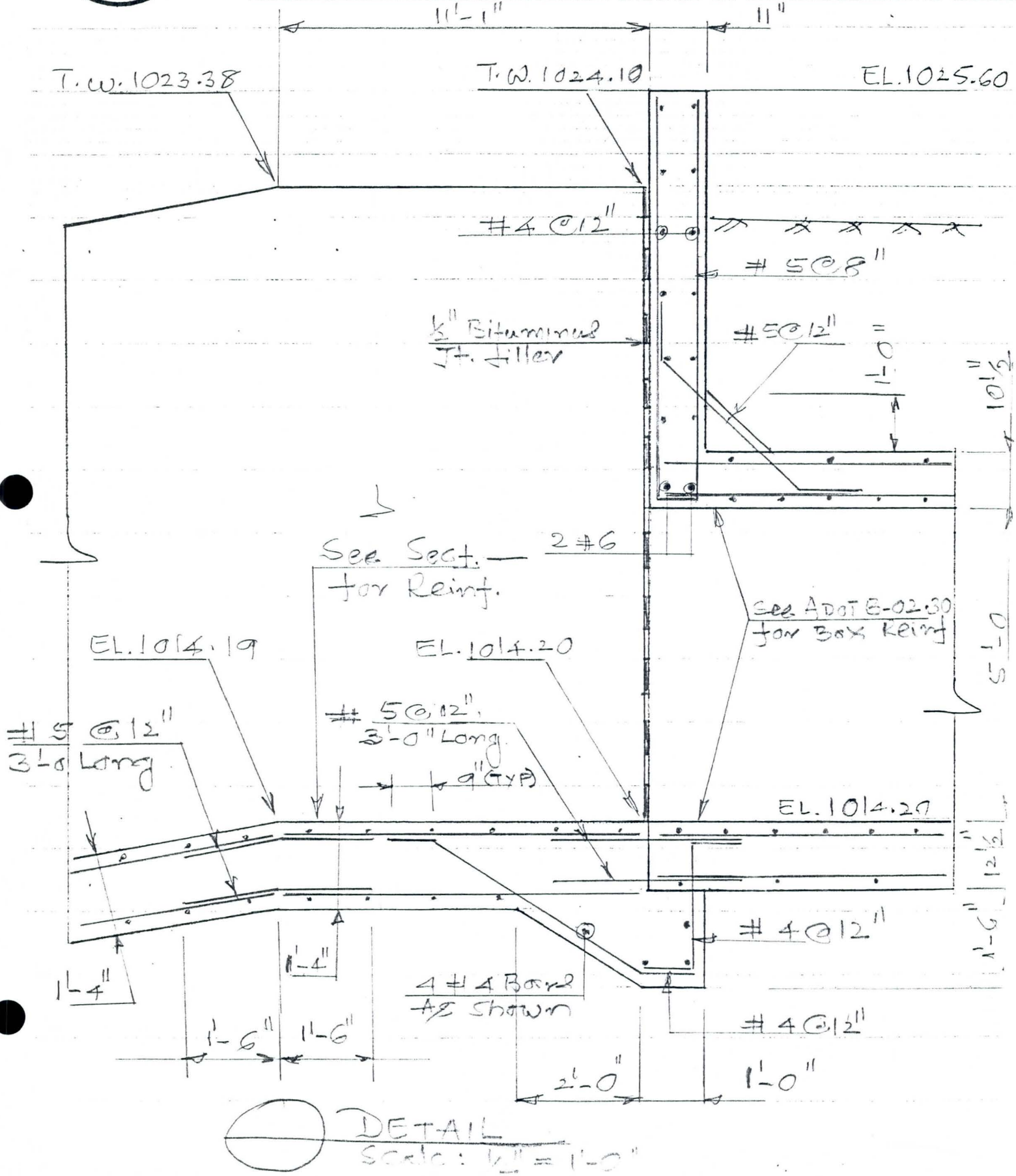

DETAIL
Scale: ½" = 1'-0"

FLOOD CONTROL DISTRICT OF MARICOPA COUNTY

(16)

PROJECT 43rd Ave. Basin PAGE 14 OF

DETAIL Detail COMPUTED KVH DATE July 1982

CHECKED BY DATE

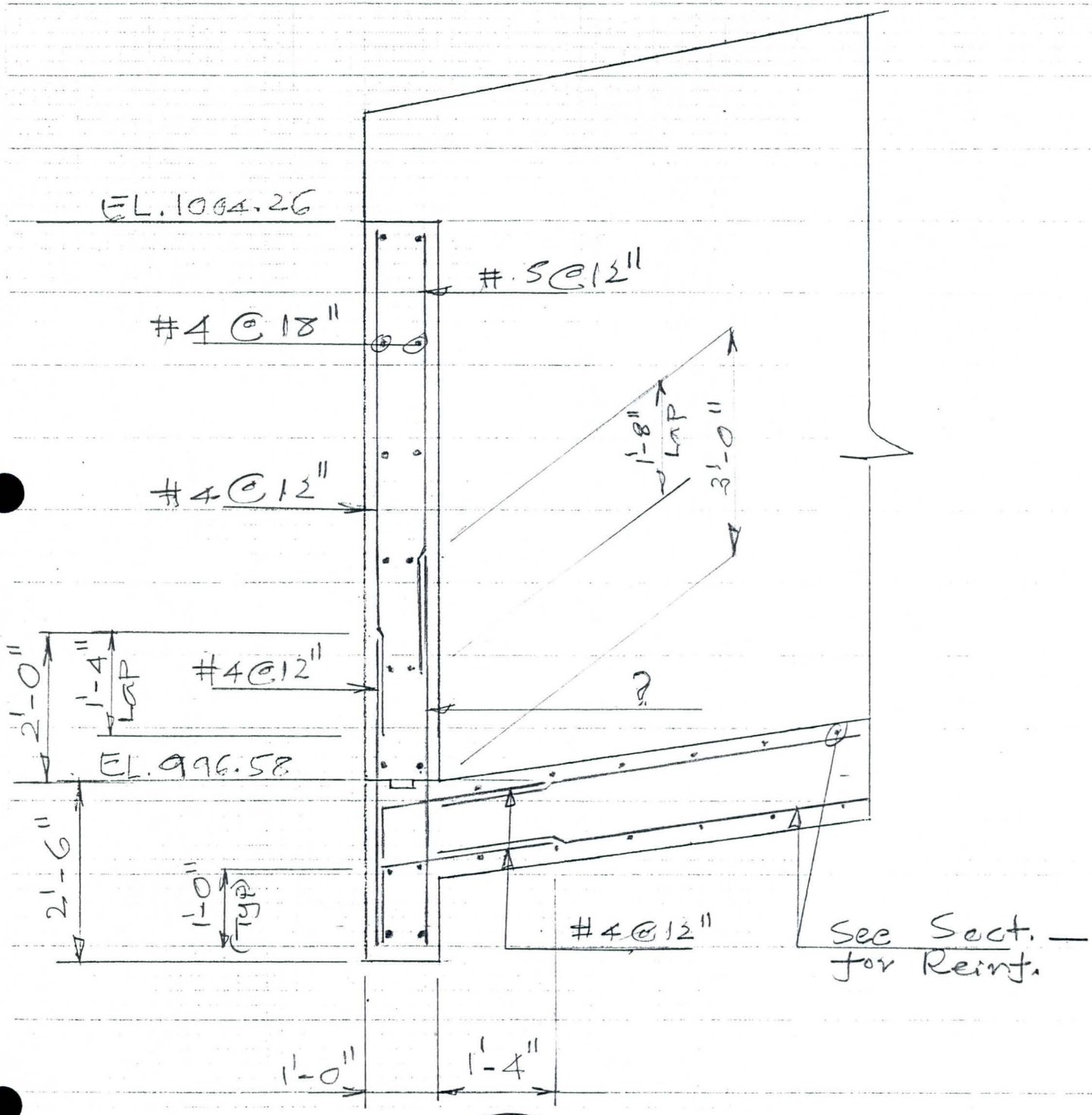

SECTION
Scale : ½" = 1'-0"

FLOOD CONTROL DISTRICT OF MARICOPA COUNTY

(11)

PROJECT 43rd Ave. Basin PAGE 15 OF

DETAIL Grate Detail COMPUTED KNH DATE July 98

CHECKED BY DATE

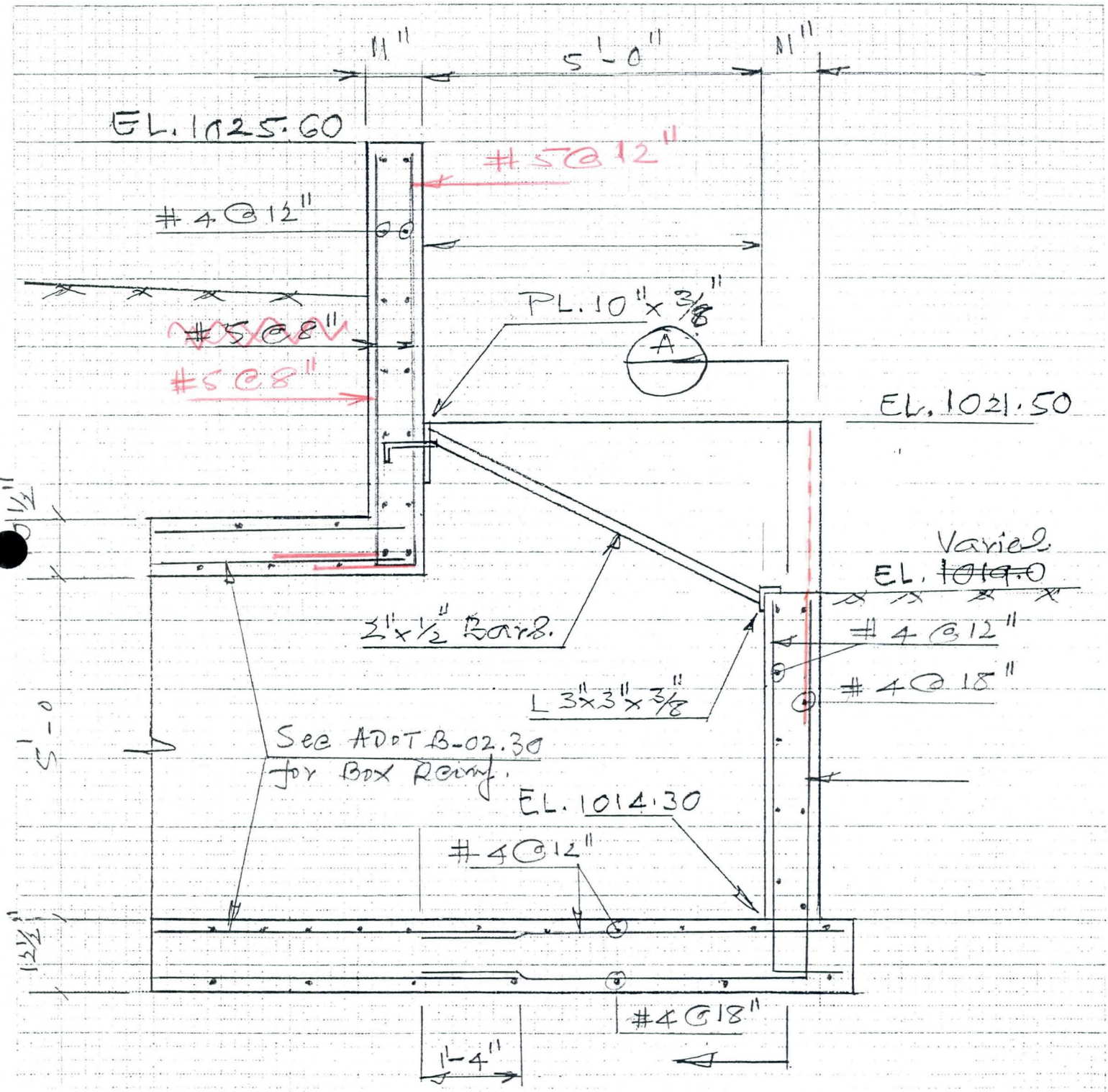

B Section

Scale : 1/2" = 1'-0

FLOOD CONTROL DISTRICT OF MARICOPA COUNTY

PROJECT ~~LACC~~ 43rd Ave. PAGE ___ OF ___

DETAIL Grate Bars COMPUTED KVH DATE 1/02

CHECKED BY ___ DATE ___

Check Grate Bar Spacing

AASHTO . Sect. 3.30

Tire Contact Area = 0.01P

P = wheel load = 16000 lbs

A = 0.01 x 16000 , A = 160 Sq in.

$\frac{L}{W} = \frac{1}{2.5}$ W = 2.5 L , 160 = L x W = $\frac{W}{2.5}$ x W

(160 x 2.5) = W^2, W = 20"

No. of Bars @ 2½" o.c = $\frac{20}{2.5}$ = 8 Bars

Load per Bar = $\frac{16^K}{8}$ = 2^K

Clear Sp = 3.5'

C/c of Bearing Bars = 3.75'

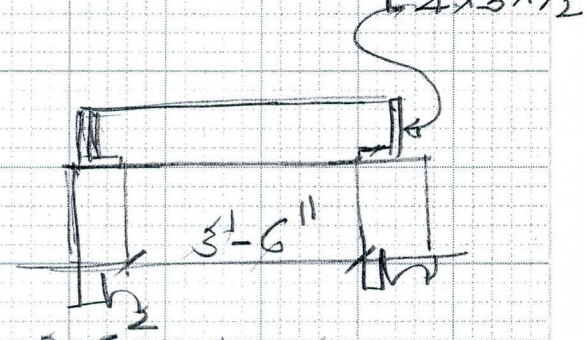

M = $\frac{PL}{4}$ = $\frac{2 \times 3.75}{4}$ = 1.88 KFL

M = f S,

Bars ½" x 3½ , S = $\frac{bd^2}{6}$ = $\frac{0.5 \times 3.5^2}{6}$ = 1.02

(1.88 x 12) = f x 1.02 , f = 22.1 Ksi < 24 Ksi

6910-153 4-90

FLOOD CONTROL DISTRICT OF MARICOPA COUNTY

PROJECT ~~LACC~~ 43rd Ave. PAGE ___ OF ___

DETAIL Grate Detail COMPUTED KVH DATE ___

CHECKED BY ___ DATE ___

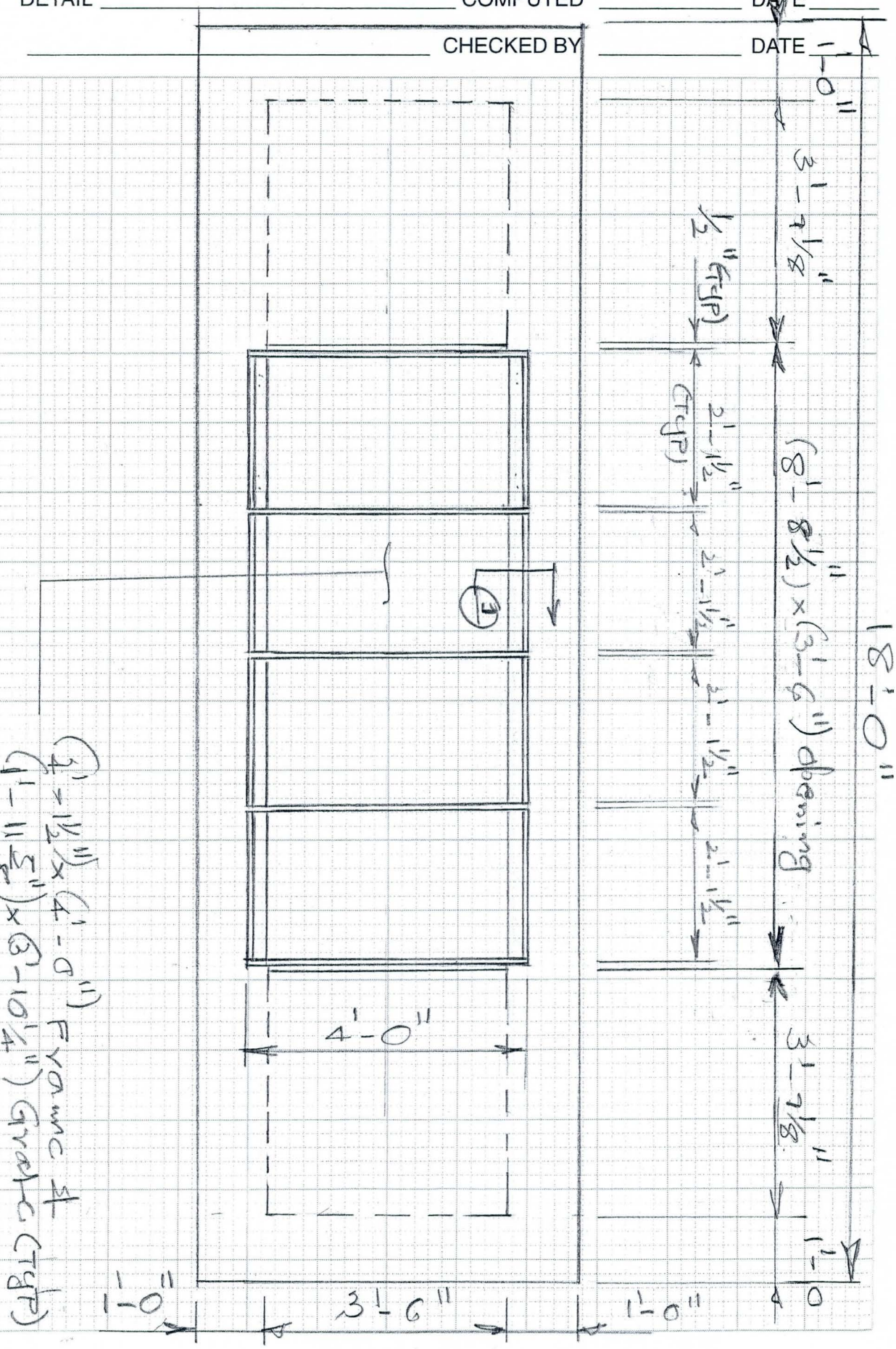

6910-153 4-90

FLOOD CONTROL DISTRICT OF MARICOPA COUNTY

PROJECT ~~LACE~~ 43rd Ave PAGE ___ OF ___

DETAIL Junction Box COMPUTED KVH DATE 1/02

CHECKED BY ___ DATE ___

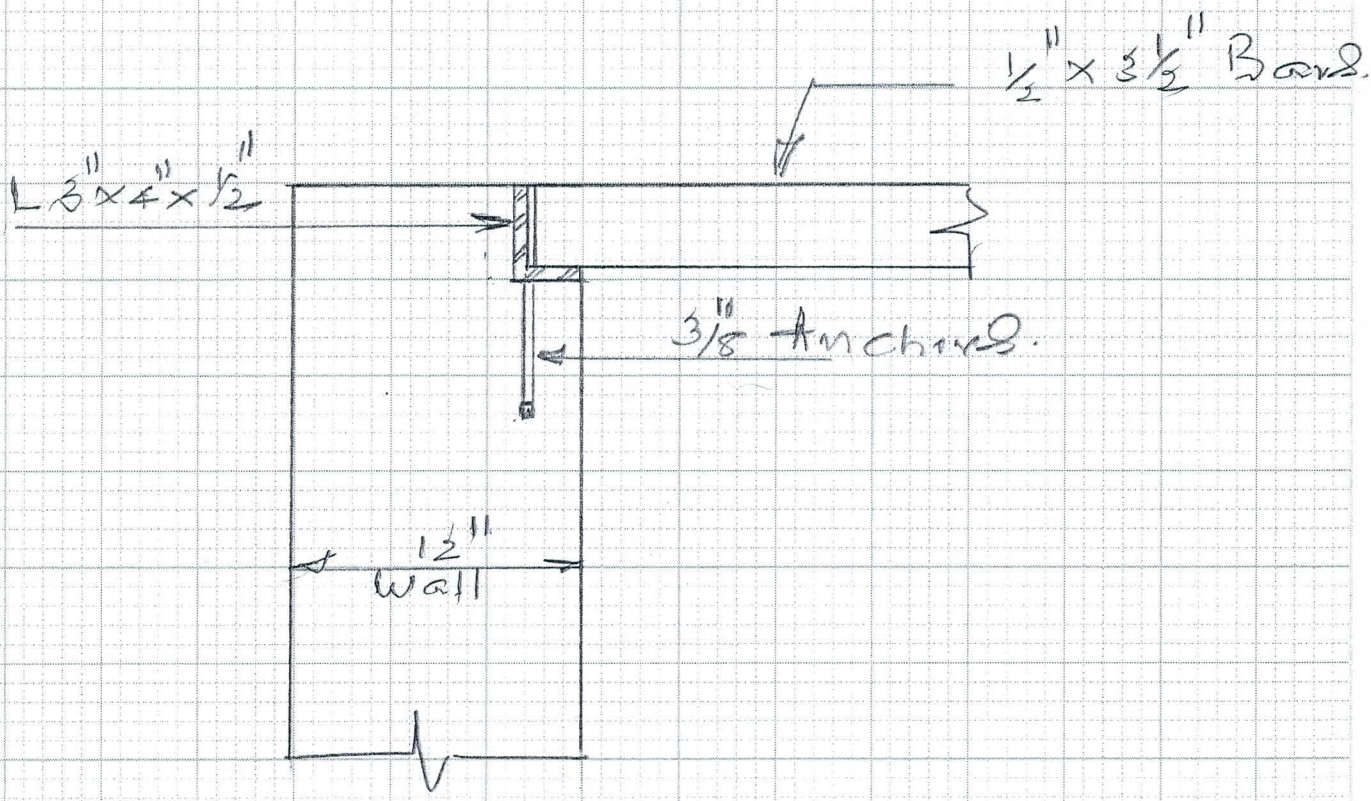

SECTION 1

Scale: 1 1/2" = 1'-0

6910-153 4-90

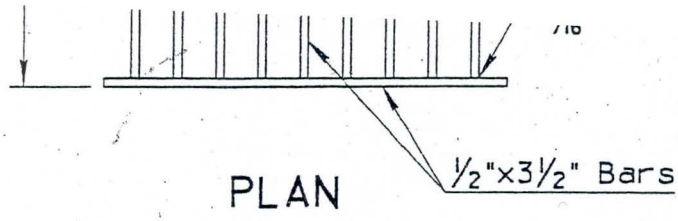

PLAN

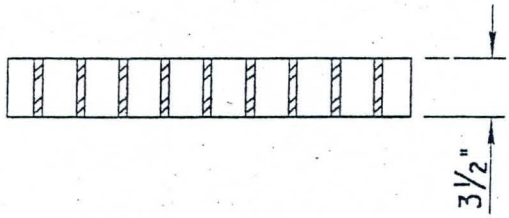

SECTION
GRATES TYPE LW-1 AND LW-2

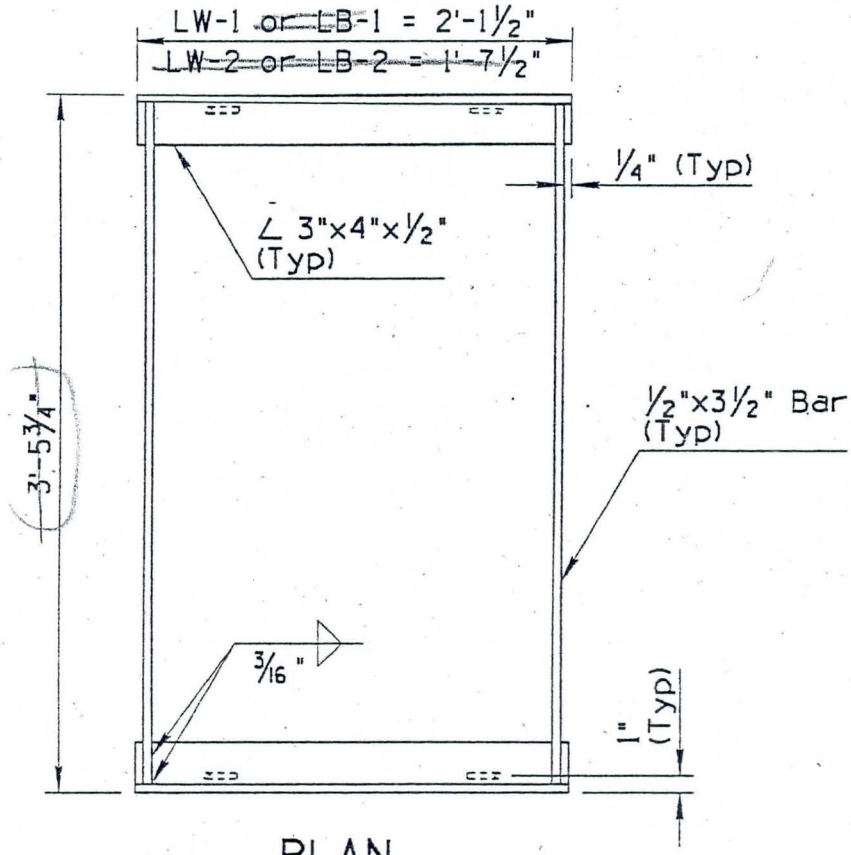

PLAN

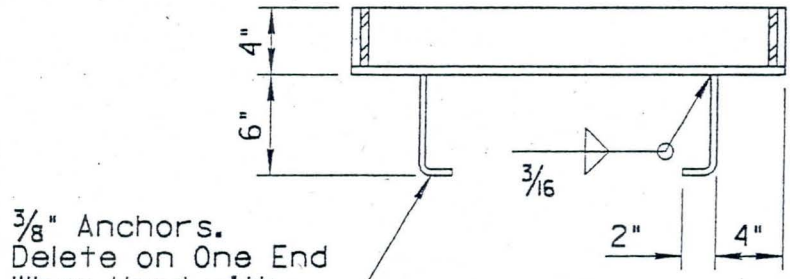

SECTION
FRAME

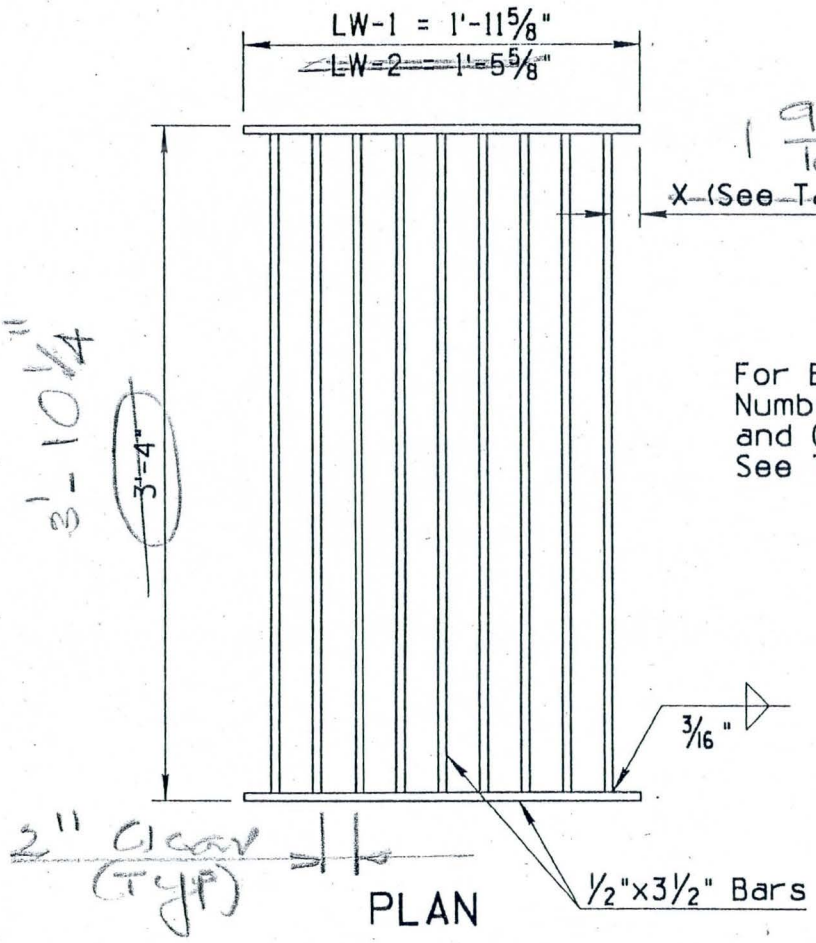

PLAN

For Bar Spacing, Number of Bars and Grate Opening, See Table.

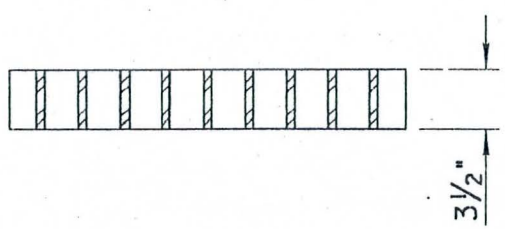

SECTION
GRATES TYPE LW-1 ~~AND LW-2~~

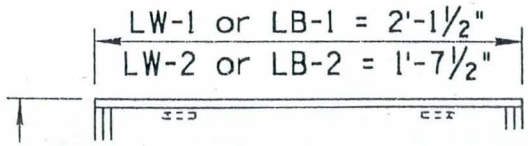

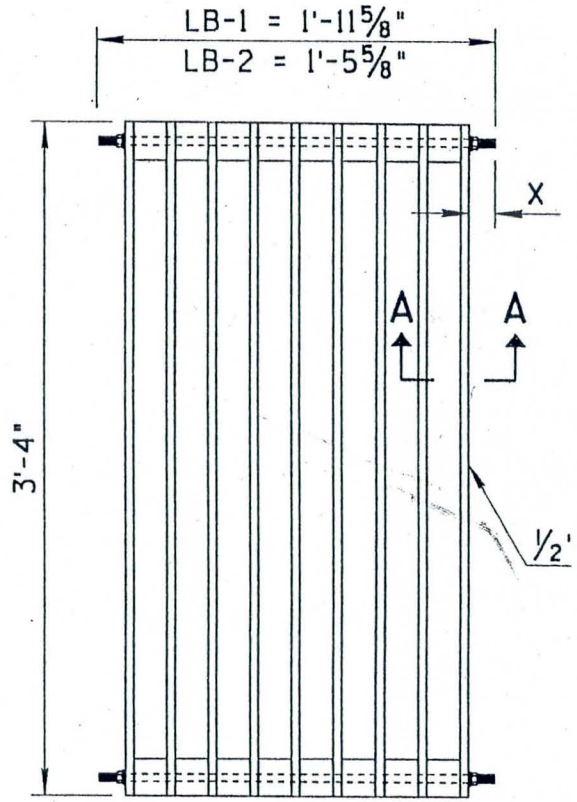

PLAN
GRATES TYPE LB-1 AND LB-

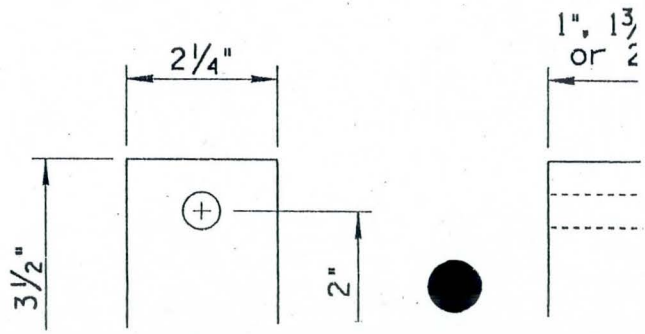

FLOOD CONTROL DISTRICT OF MARICOPA COUNTY

PROJECT 43rd Ave. Basin PAGE 16 OF

DETAIL Grate Detail COMPUTED AWH DATE July/9

Inlet Str.

CHECKED BY DATE

@ Spillway

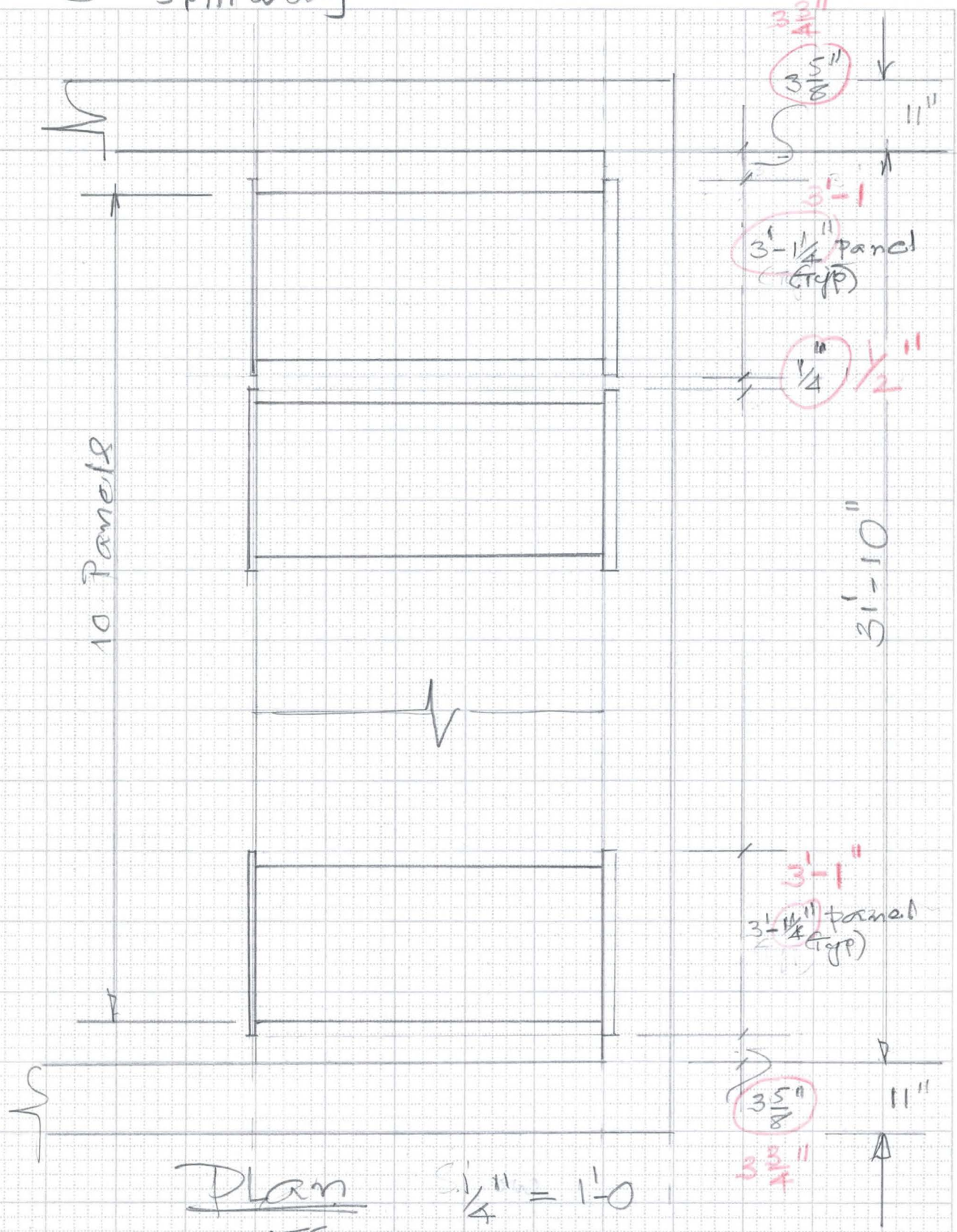

Plan 1/4" = 1'-0

NTS

6910-153 4-90

(19)

FLOOD CONTROL DISTRICT OF MARICOPA COUNTY

PROJECT 43rd Ave. Basin PAGE 17 OF

DETAIL Grate Detail COMPUTED KVH DATE July 92

Inlet Str. @ Spillway CHECKED BY DATE

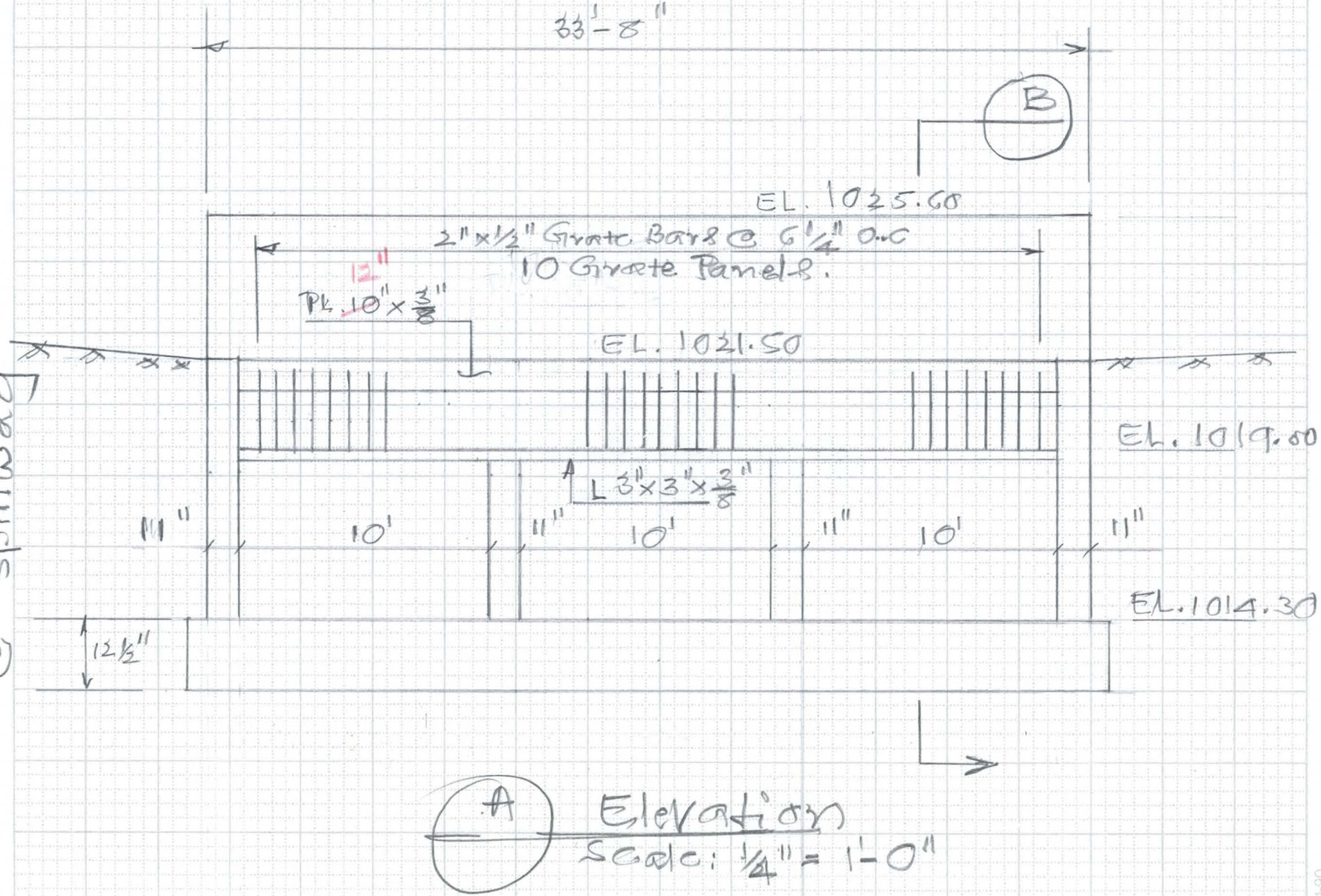

FLOOD CONTROL DISTRICT OF MARICOPA COUNTY

6910-153 4-90

FLOOD CONTROL DISTRICT OF MARICOPA COUNTY

PROJECT 43rd Ave. Basin PAGE 18 OF

DETAIL Anchor PL. Det. COMPUTED KVH DATE July/78

Inlet Str. @ Spillway CHECKED BY DATE

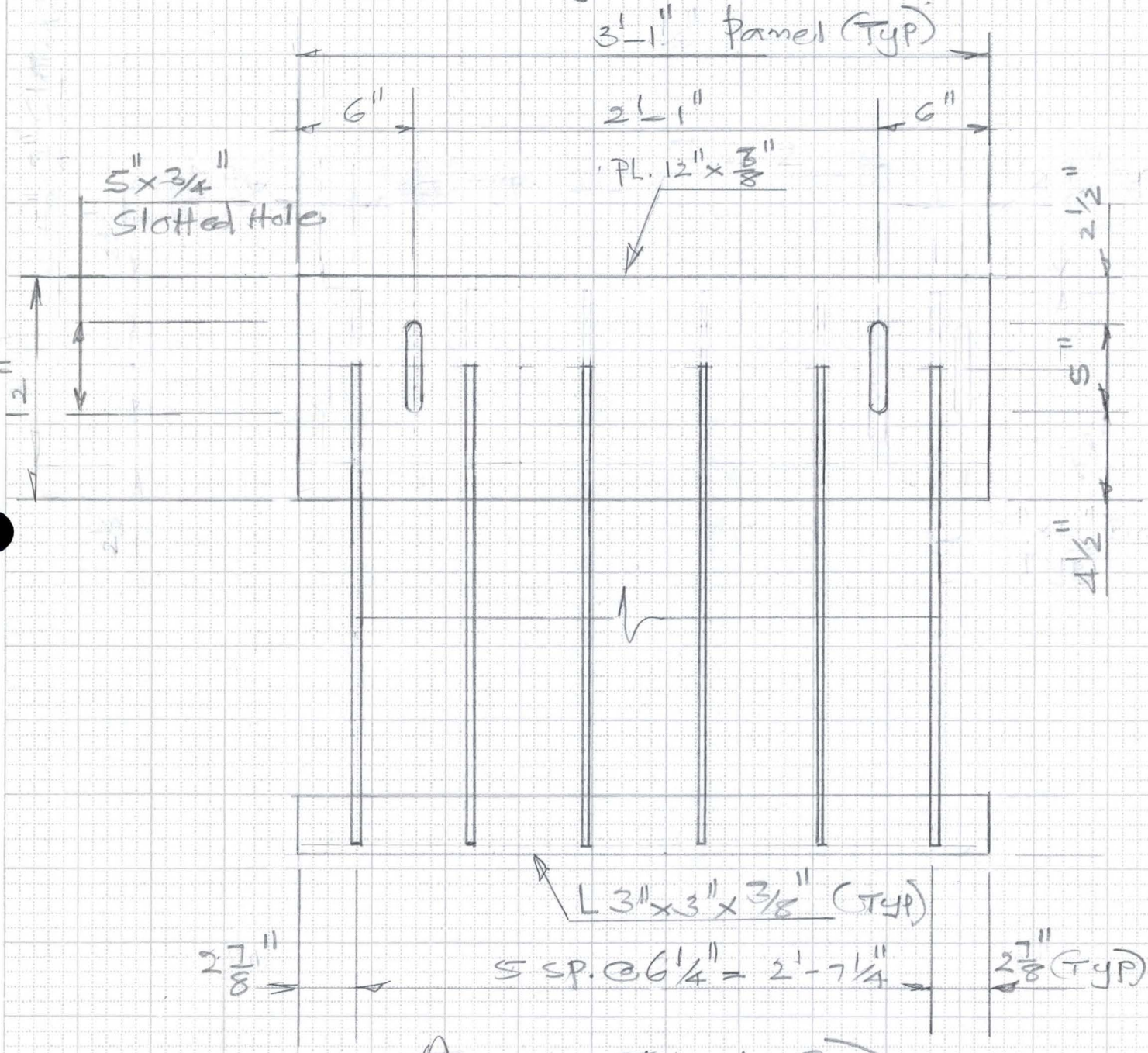

Anchor Plate (Typ) - Elevation

Scale: 1 1/2" = 1'-0"

FLOOD CONTROL DISTRICT OF MARICOPA COUNTY

PROJECT 43rd Ave. Basin PAGE 19 OF

DETAIL Detail. COMPUTED KVH DATE July/98

Inlet Str. CHECKED BY DATE

@ Spillway

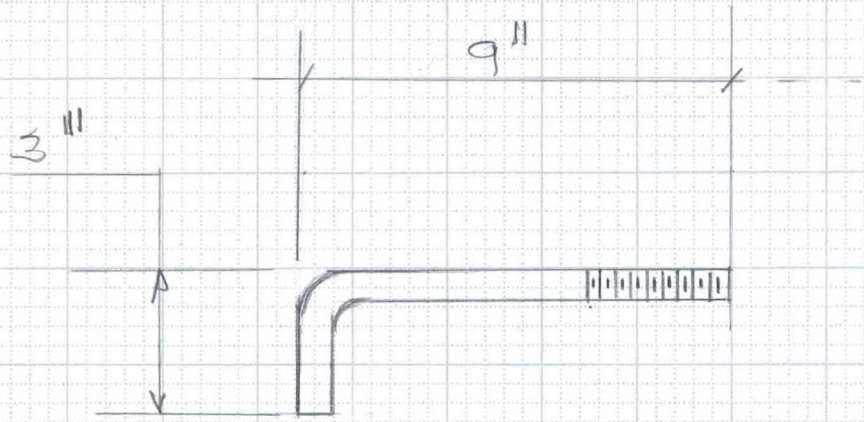

5/8" DIA. HOOK BOLT

NTS.

FLOOD CONTROL DISTRICT OF MARICOPA COUNTY

PROJECT 43rd Ave. Basin PAGE 20 OF

DETAIL Grate Detail COMPUTED KVH DATE July 98

Inlet Str. @ Spillway CHECKED BY DATE

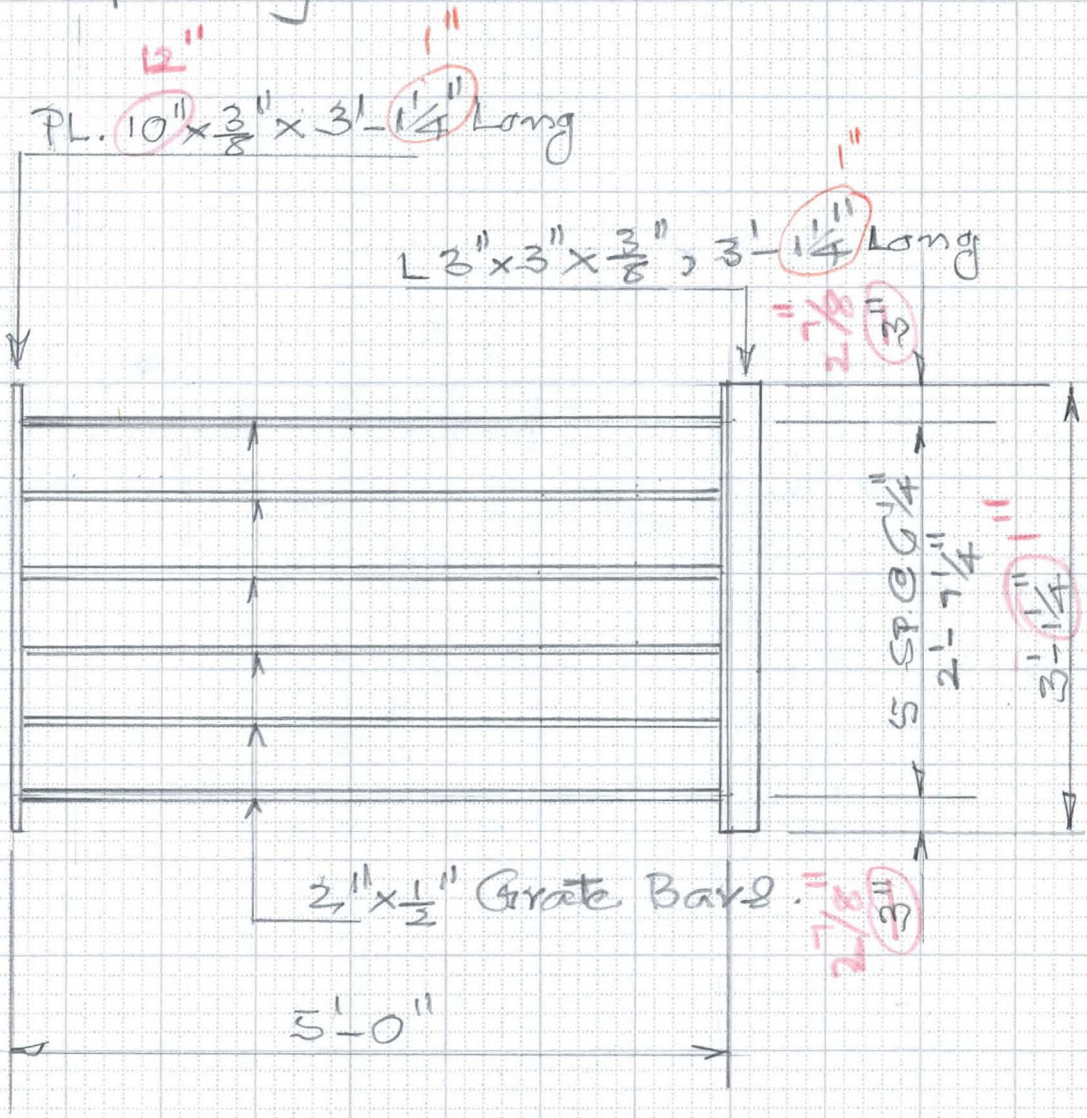

Trash Rack Panel (Typ) - Plan

Scale: 3/4" = 1'-0

FLOOD CONTROL DISTRICT OF MARICOPA COUNTY

PROJECT 43rd Ave. Basin PAGE 21 OF

DETAIL Grate Detail COMPUTED KVH DATE July 9

Inlet Str. CHECKED BY DATE

@ Spillway

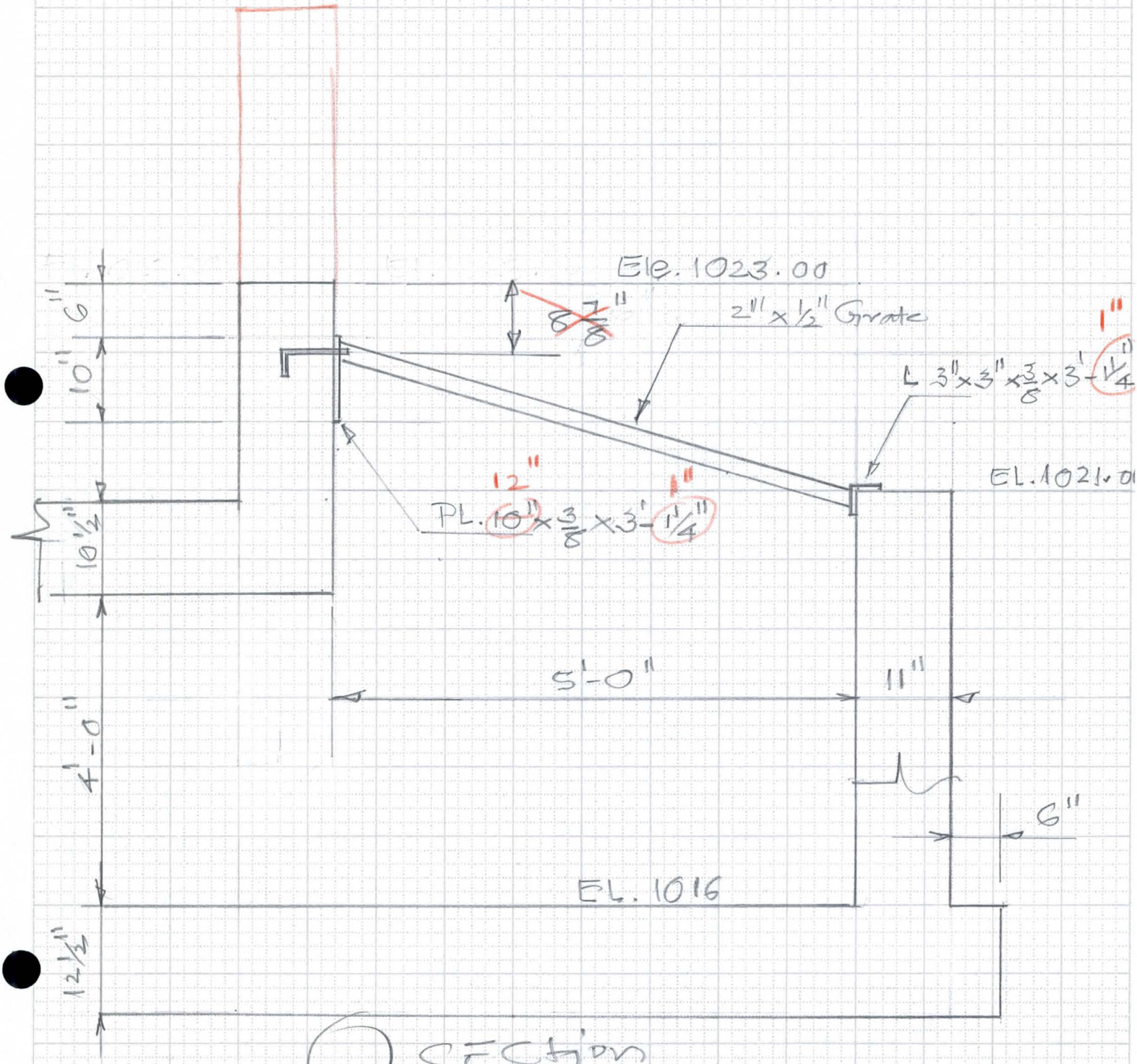

SECTION

Scale: 3/4" = 1'-0

6910-153 4-90

(24)

FLOOD CONTROL DISTRICT OF MARICOPA COUNTY

PROJECT 43rd Ave. Basin PAGE 22 OF

DETAIL Wall Inlet Str. COMPUTED KWH DATE July 98

CHECKED BY DATE

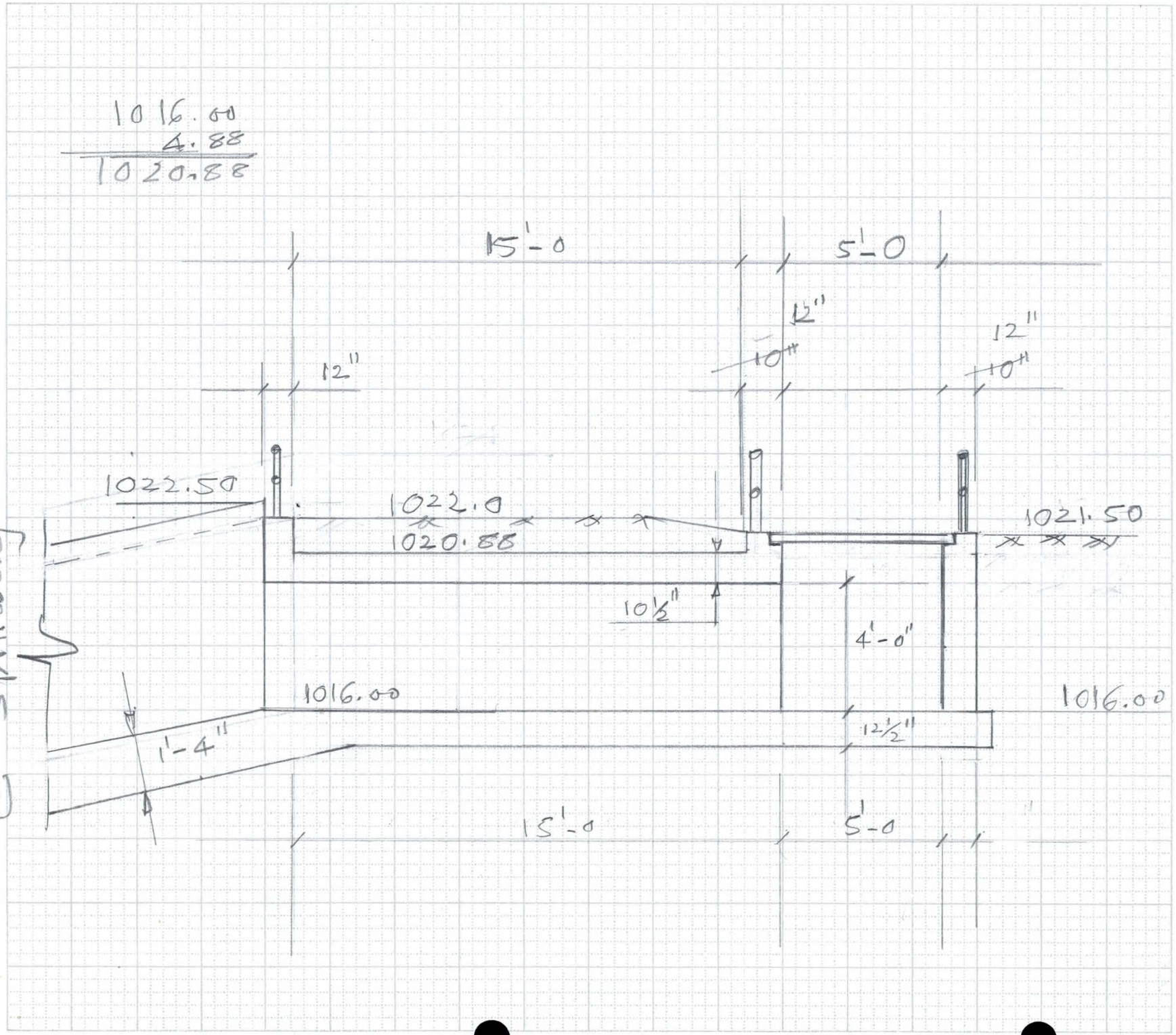

6910-153 4-90

FLOOD CONTROL DISTRICT OF MARICOPA COUNTY

PROJECT 43rd Av. Basin PAGE 23 OF

DETAIL Grate Detail COMPUTED KVH DATE July/98

In Let Str. CHECKED BY DATE

@ Spillway

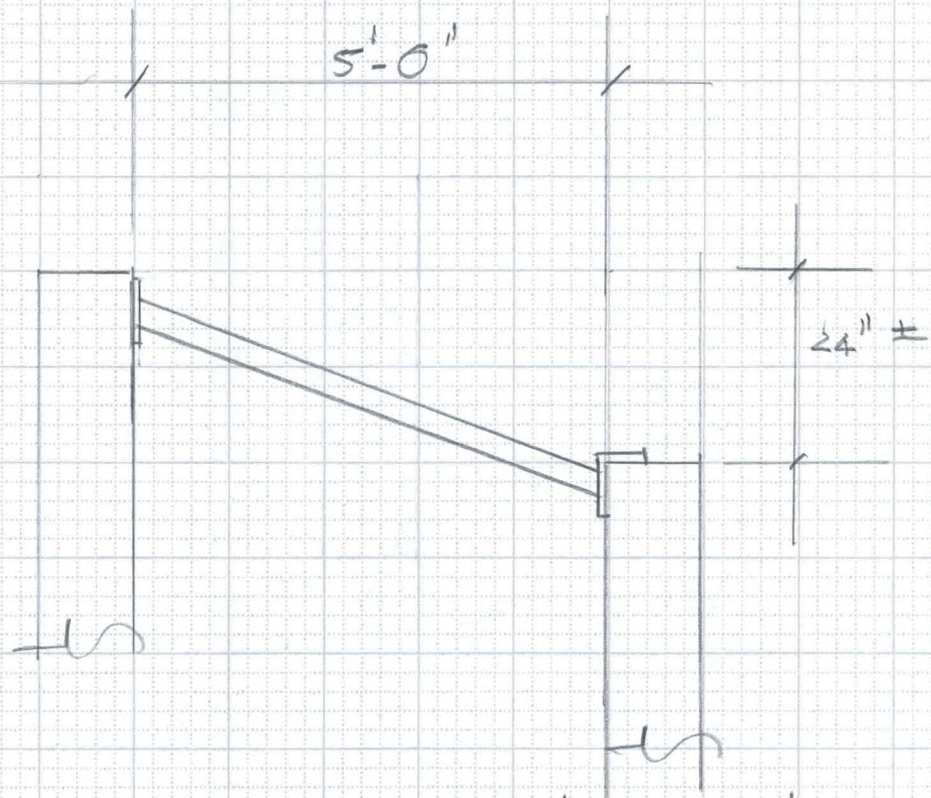

Grate Bar $L = \sqrt{60^2 + 24^2} \approx 64" = 5.33'$

wt of Single Panel:

PL: $\left(\frac{3}{8}" \times 8" \times 4.0\right) \frac{1}{144} \times 490 = 41$ lbs

L: $\left(4 \times 4 \times \frac{3}{8}\right)$ @ 9.8 lbs $\times 4 = 39$

Grate Bars $\left(\frac{1}{2}" \times 2"\right) 5.33 \times \frac{1}{144} \times 490$

$= (18.1)\,8 = 145$

8 Bars per pan.

225

say 250 lbs per panel of 4' width

For 3' wide panel $250 \times \frac{3}{4} \approx 185$ lbs

FLOOD CONTROL DISTRICT OF MARICOPA COUNTY

PROJECT 43rd Ave. Basin PAGE 24 OF

DETAIL Grate Detail COMPUTED KNH DATE July 98

Inlet Str. CHECKED BY DATE

@ Spillway

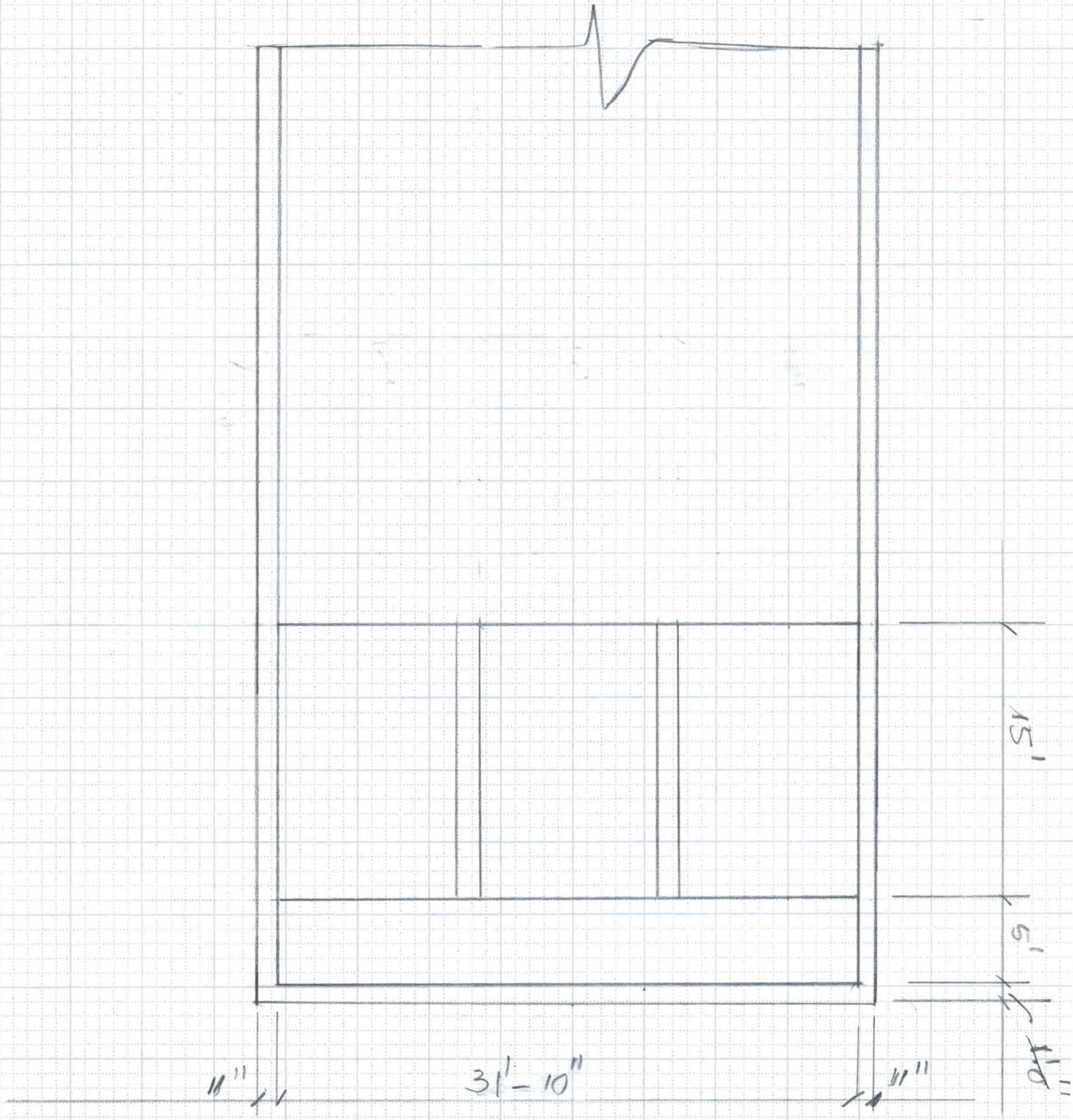

FLOOD CONTROL DISTRICT OF MARICOPA COUNTY

PROJECT 43rd Ave. Basin PAGE 25 OF

DETAIL Grate Detail @ Spillway (Inlet) COMPUTED KVH DATE July/98

CHECKED BY DATE

$L = 31'-10''$

$(3 \times 10) = 30'$

10 panels

5 Sps @ $6\frac{1}{2}'' = 32.5'' \Rightarrow (2'-8\frac{1}{2}'') + 6 = 3'-2\frac{1}{2}''$

10 panels $(3-2\frac{1}{2}'') = 30' + (2'-1'') = 32'-1'' > 31'-10''$

Try 5 Sps @ $6\frac{1}{4}'' = 31.25 = (2'-7\frac{1}{4}'') + 6 = (3'-1\frac{1}{4}'')$

$10\,(3'-1\frac{1}{4}'') = 30' - (1-\frac{1}{2}'') = (31'-\frac{1}{2}'')$

9 Sps @ $\frac{1}{4}'' = 2\frac{1}{4}'' + (31'-\frac{1}{2}'') = 31'-2\frac{3}{4}''$

$[(31-10) - (31-2\frac{3}{4})] = 7\frac{1}{4}'' = 3\frac{5}{8}$ Each En

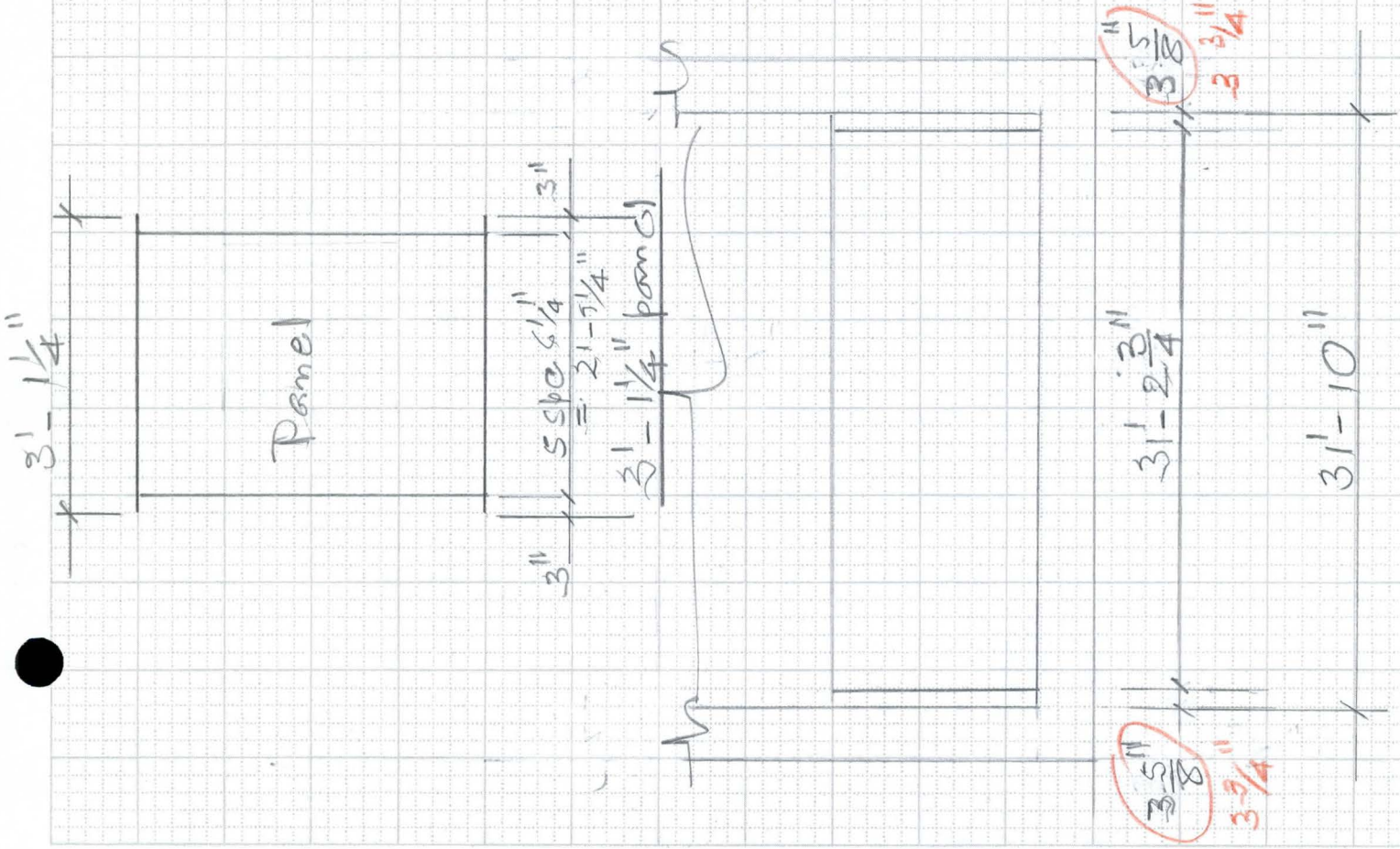

FLOOD CONTROL DISTRICT OF MARICOPA COUNTY

PROJECT 43rd Ave. Basin PAGE 26 OF

DETAIL Grate Detail COMPUTED KVH DATE

Spillway Inlet CHECKED BY DATE

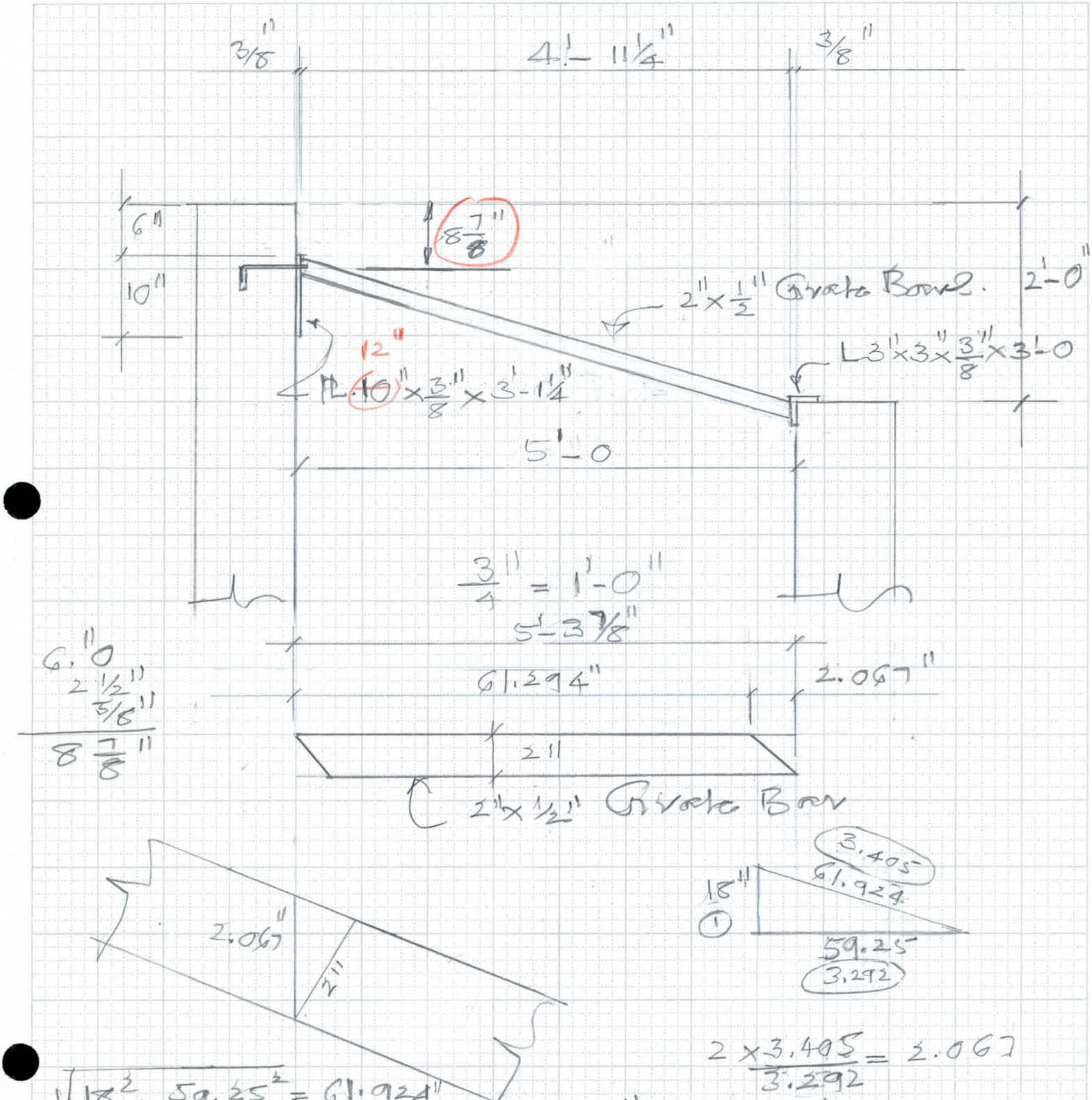

$\sqrt{18^2 + 59.25^2} = 61.924''$

$\frac{2.067}{63.991} \approx 63\frac{7}{8}'' = 5'-3\frac{7}{8}''$

$\frac{2 \times 3.405}{3.292} = 2.067$

FLOOD CONTROL DISTRICT OF MARICOPA COUNTY

PROJECT 43rd Ave. Basin PAGE 27 OF

DETAIL Wall Sect. COMPUTED KVH DATE July 98

Inlet Str.

CHECKED BY DATE

@ Spillway

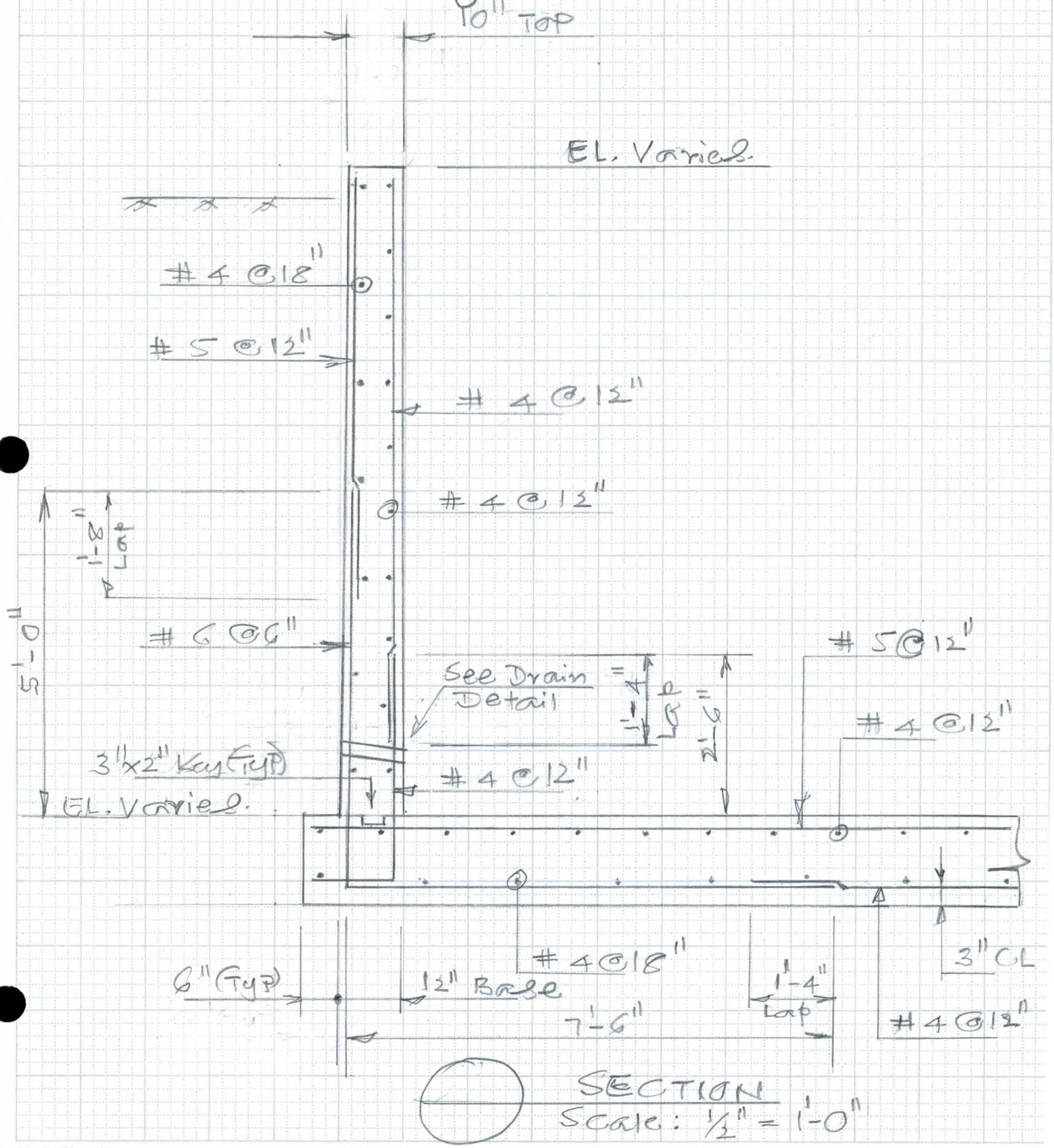

SECTION
Scale: 1/2" = 1'-0"

FLOOD CONTROL DISTRICT OF MARICOPA COUNTY

PROJECT 43rd Ave. Basin PAGE 28 OF

DETAIL Wall Sections COMPUTED KVH DATE July 98

Inlet Str. @ Spillway CHECKED BY DATE

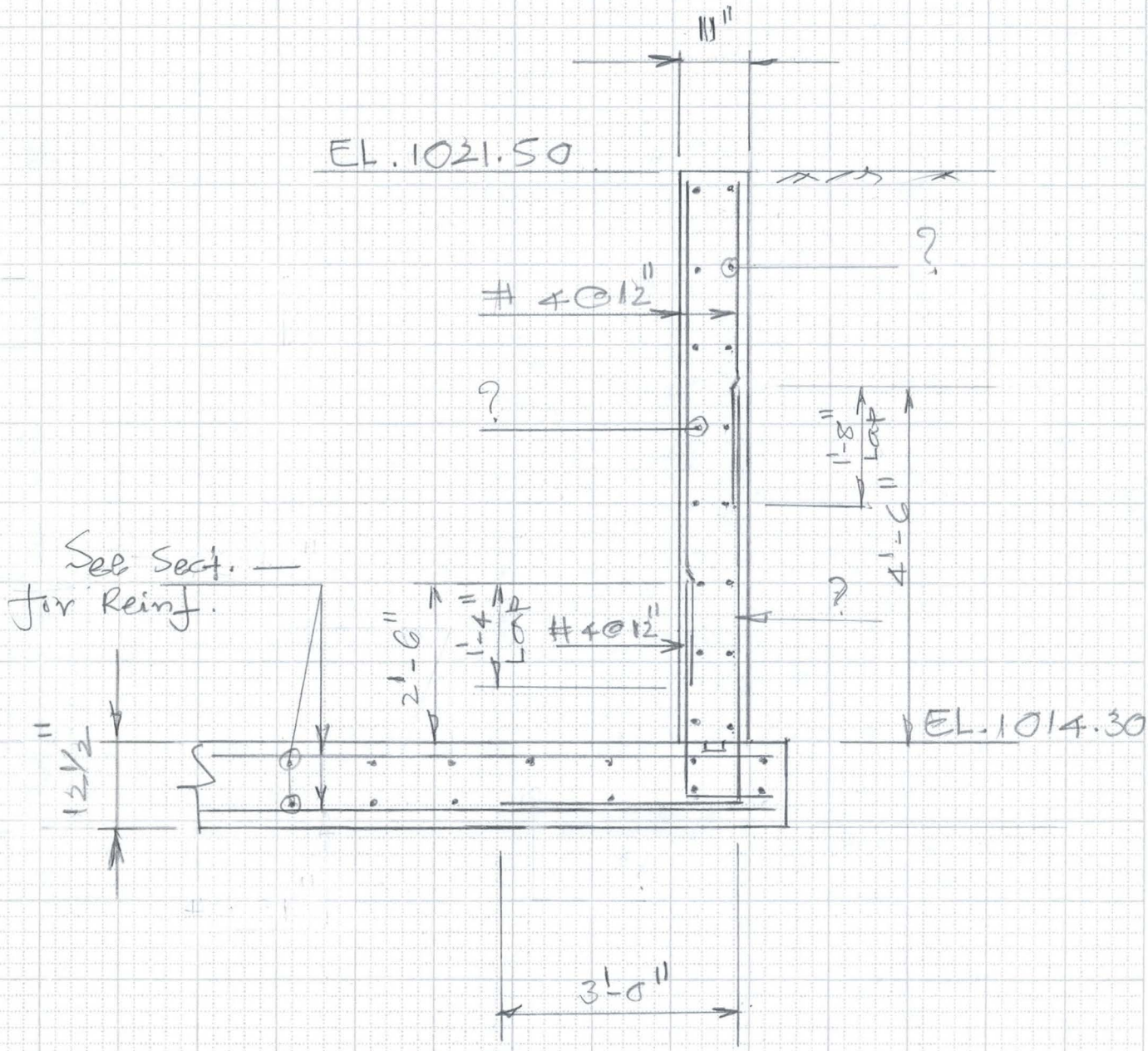

SECTION

Scale: 1/2" = 1'-0

FLOOD CONTROL DISTRICT OF MARICOPA COUNTY

PROJECT 43rd Ave. Basin PAGE 29 OF

DETAIL Detail COMPUTED KVH DATE July 98

Inlet Str. @ Spillway CHECKED BY DATE

Use 10" wall instead of 12"

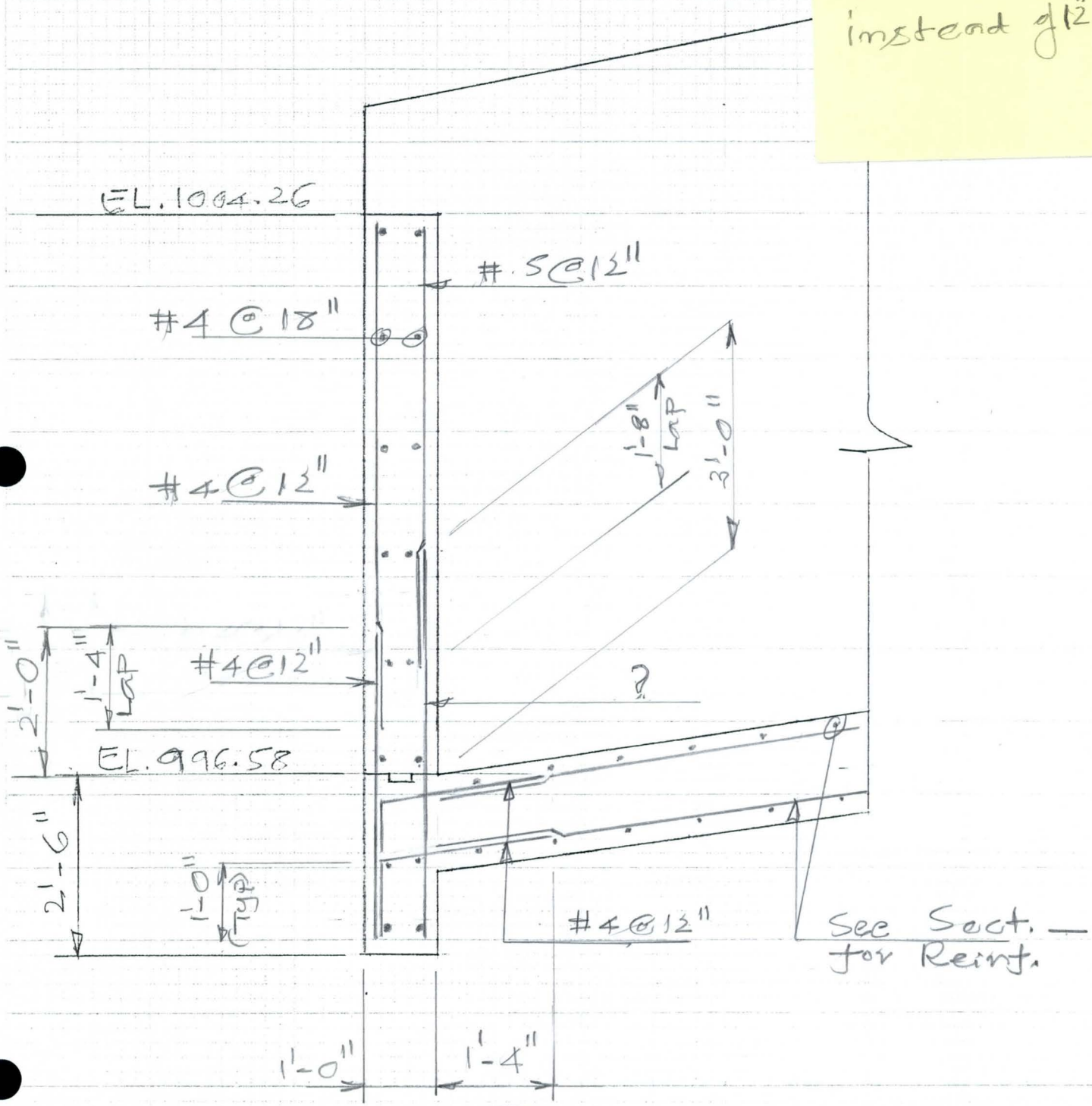

SECTION
Scale: 1/2" = 1'-0"

FLOOD CONTROL DISTRICT OF MARICOPA COUNTY

PROJECT 43rd Ave. Basin PAGE 30 OF

DETAIL Detail COMPUTED KYL DATE July 98

Inlet Str. CHECKED BY DATE

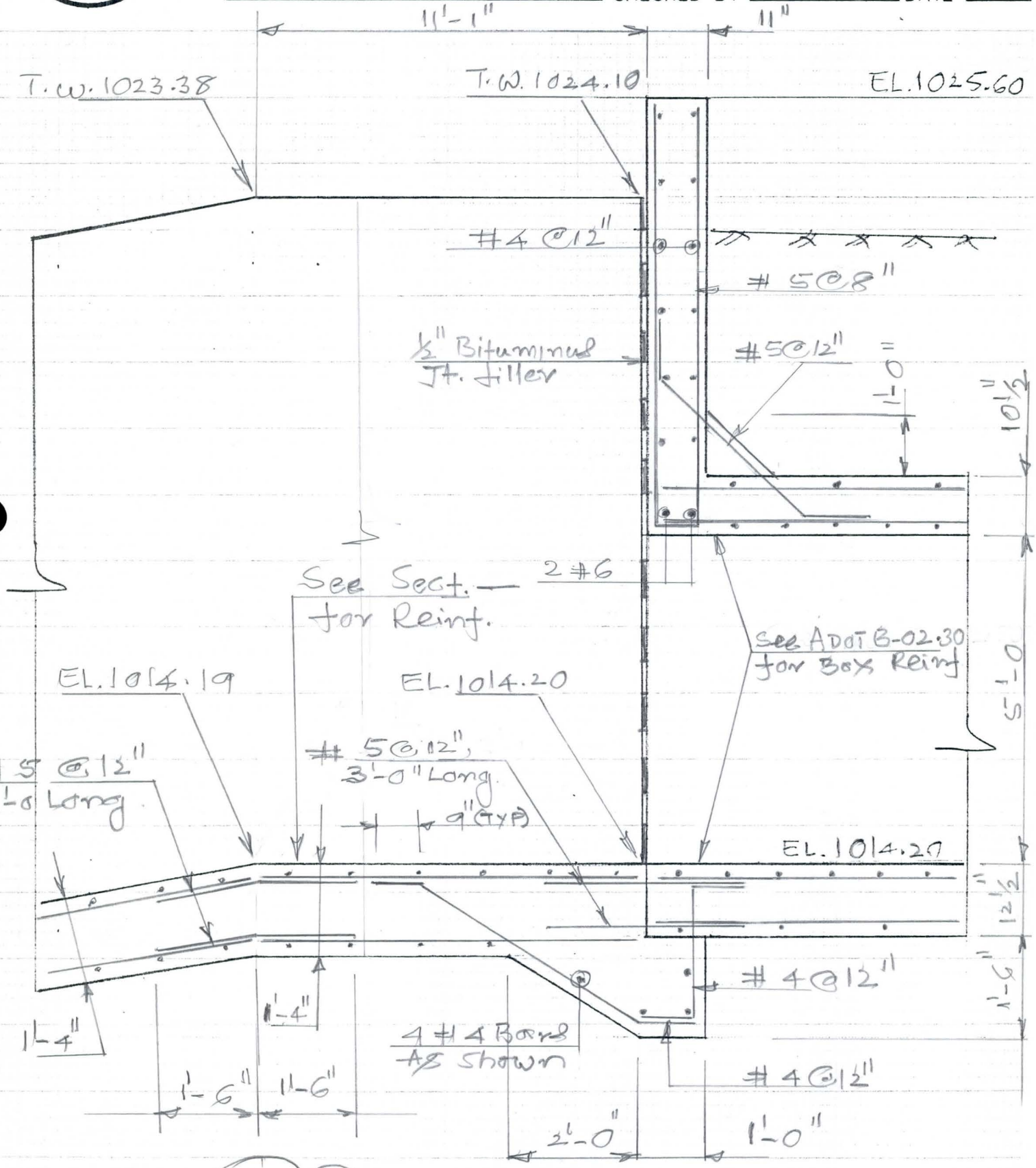

DETAIL
Scale: ½" = 1'-0"

37

GUADALUPE ROAD
MARICOPA COUNTY

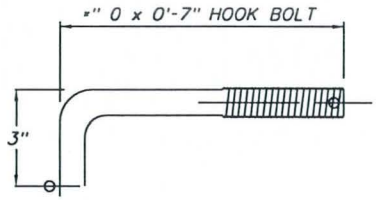

HOOK BOLT
N.T.S.

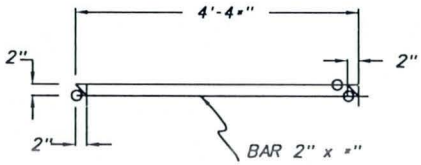

RACK BAR DETAIL

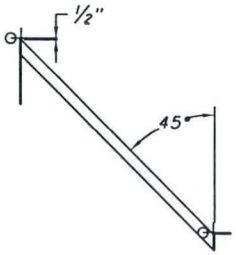

RACK BAR ANGLE

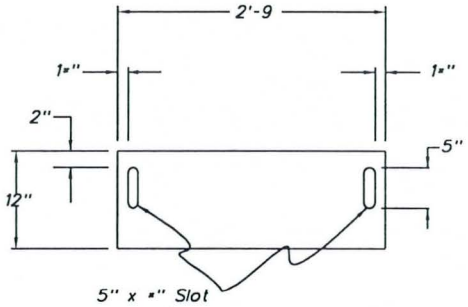

ANCHOR PLATE
N.T.S.

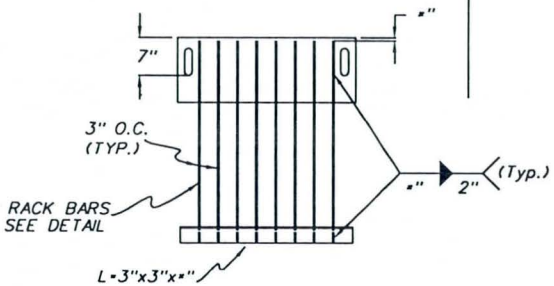

TRASH RACK ASSEMBLY
N.T.S.

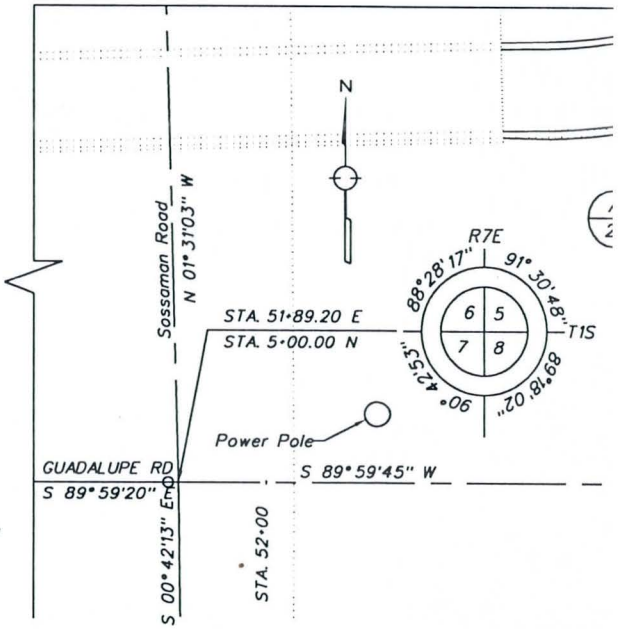

INLET STRUC
N.T.S

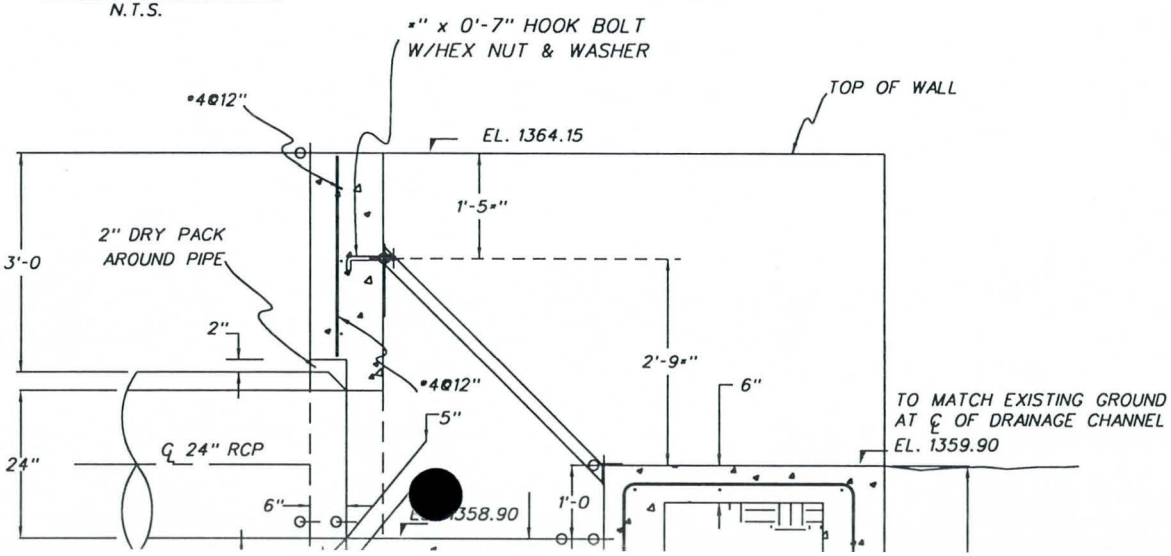

EL. 1351.6

FLOOD CONTROL DISTRICT OF MARICOPA COUNTY

PROJECT 43rd Ave Basin PAGE 32 OF

DETAIL Grate wt COMPUTED DATE

CHECKED BY DATE

Wt. of Grate (Outlet Structure)

~~L 4x4x1/2 - 8.5' (12.8x8.5)2 = 217 lbs~~

Fr. Bar: (1/2" x 3 1/2") , $\left(\frac{0.5}{12} \times \frac{3.5}{12} \times 8.5\right) 490$

$= (50.6 \text{ lbs})\, 2 \approx$ 101 lbs

$\left(\frac{1}{2}'' \times 3\frac{1}{2}\right) - \left(\frac{0.5}{12} \times \frac{3.5}{12} \times 5.5\right) 490 \times 2 \approx$ 66

$\left(\frac{1}{2} \times 2''\right) - \left(\frac{0.5}{12} \times \frac{2}{12} \times 5.5\right) 490 \times 32 \approx$ 600

767

Too Heavy

In Lot Structure: Use 4 Panels

PL: $\left(12'' \times \frac{3}{8}\right) 3'\text{-}1'' = \left(1.0 \times \frac{0.375}{12} \times 3.1\right) 490 =$ 47 lbs

L $3 \times 3 \times \frac{3}{8}$ $\left(\frac{3}{12} \times \frac{3}{12} \times \frac{0.375}{12}\right) 490$

$\left(\frac{3''}{12} \times \frac{0.375}{12}\right) 490$

$= 3.8 \times 2 = 7.6 \approx 7.2 \times 3.08 =$ 22

$2'' \times \frac{1}{2} = \left(\frac{2}{12} \times \frac{0.5}{12}\right) 490 = 3.4$ lbs/ft

$(3.4 \times 5.0)\, 6$

Not

= 102

171 lbs

Wt. of each Panel Under Structure ≈ 175 lbs

FLOOD CONTROL DISTRICT OF MARICOPA COUNTY

PROJECT 43rd Ave. Basin PAGE 33 OF

DETAIL Grate Detail COMPUTED KVH DATE July/98

CHECKED BY DATE

~~6 sp @ 3 3/4" = 22.5" = (1'-10 1/2")~~

7 sp @ 3 1/4" = 22.75

(1 1/4) 2

(2'-1 1/4) 4 = (8'-5"

wt is heavy
Increase
Spacing from
3 1/4" to about
4" o.c

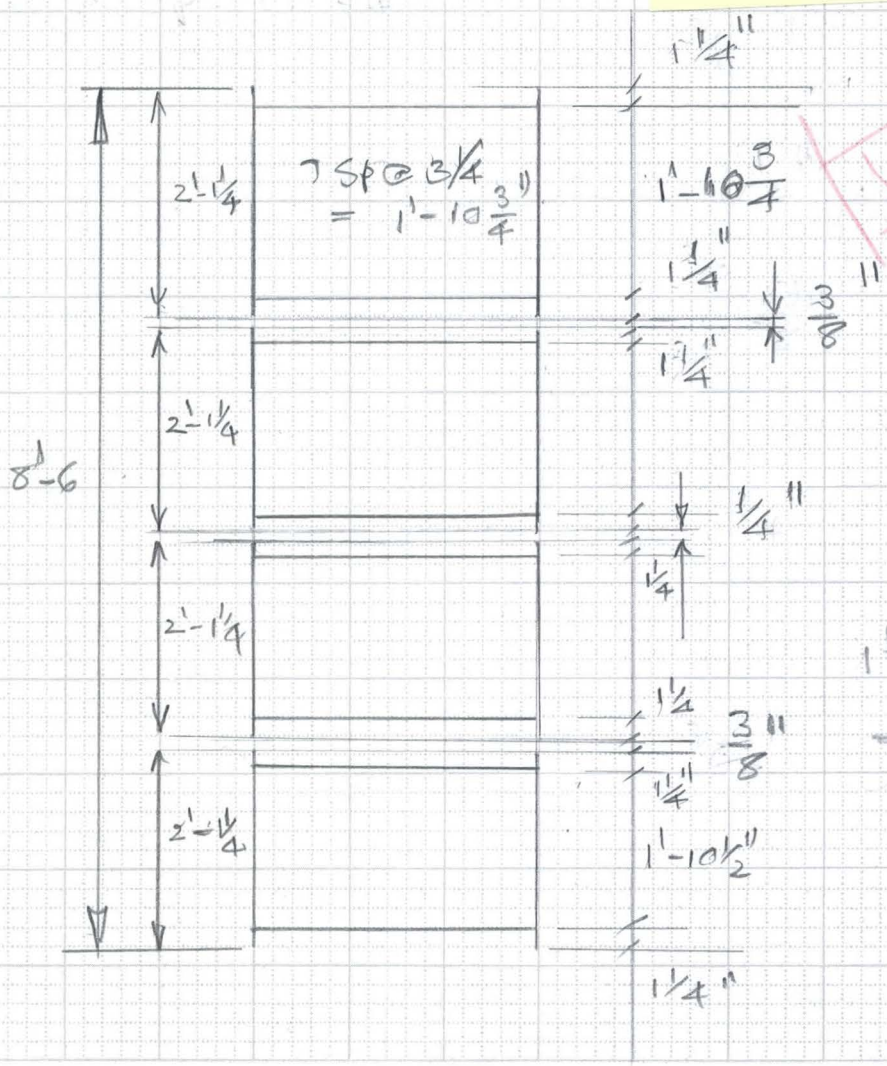

VOID

2.5"
1'-10.5
1'-13
1'-1
(2'-1) 4 = 8'-4
1 1/2
8'-5 1/2

2.25"
1'-10.50
1'-12.75
1'-3/4
(2'-0 3/4) 4 = 8'-3"
1 1/2
8'-4 1/2

1'-10 1/2"
2 3/4"
1'-13 1/4
1'-1 1/4
(2'-1 1/4) 4 = 8'-5"
1 1/2

VOID

FLOOD CONTROL DISTRICT OF MARICOPA COUNTY

PROJECT 43rd Ave. Basin PAGE 33 OF

DETAIL Grate Detail COMPUTED KVH DATE July 98

CHECKED BY DATE

~~6 Sp @ 3 3/4" = 22.5" = 1'-10 1/2" 4X~~

7 Sp @ 3 1/4" = 22.75" = 1'-10 3/4"

(1 1/4) 2 = 2 1/2

1 - 1 1/4

2'-1 1/4"

(2'-1 1/4) 4 = (8'-5") + 3/8 + 1/4 + 3/8

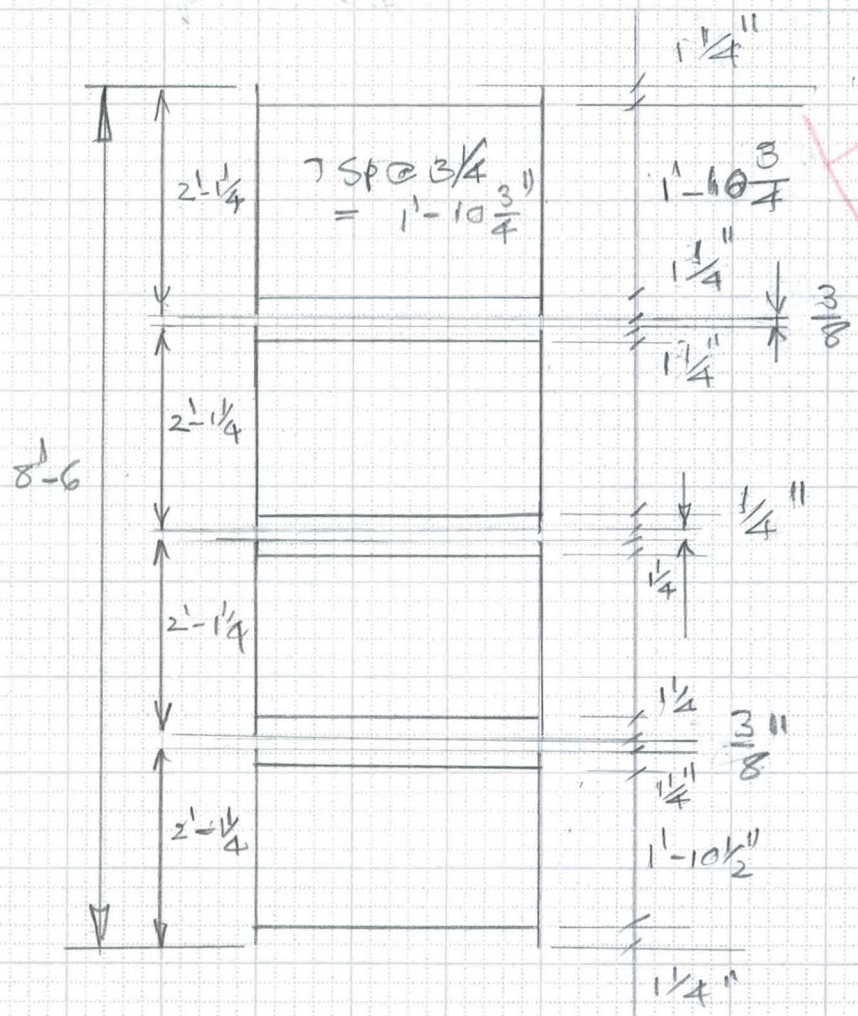

VOID

2.5"
1'-10.5
1'-13
1 - 1
(2'-1) 4 = 8'-4
1 1/2
8'-5 1/2

2.25"
1'-10.50
1'-12.75
1'-3/4
(2'-0 3/4) 4 = 8'-3
1 1/2
8'-4 1/2

1'-10 1/2"
2 3/4"
1'-13 1/4
1 - 1 1/4
(2'-1 1/4) 4 = 8'-5
1 1/2

VOID

(36)

FLOOD CONTROL DISTRICT OF MARICOPA COUNTY

PROJECT 43rd Ave. Basin PAGE 34 OF

DETAIL Grate Detail COMPUTED KVH DATE July/98

Out Let Structure CHECKED BY DATE

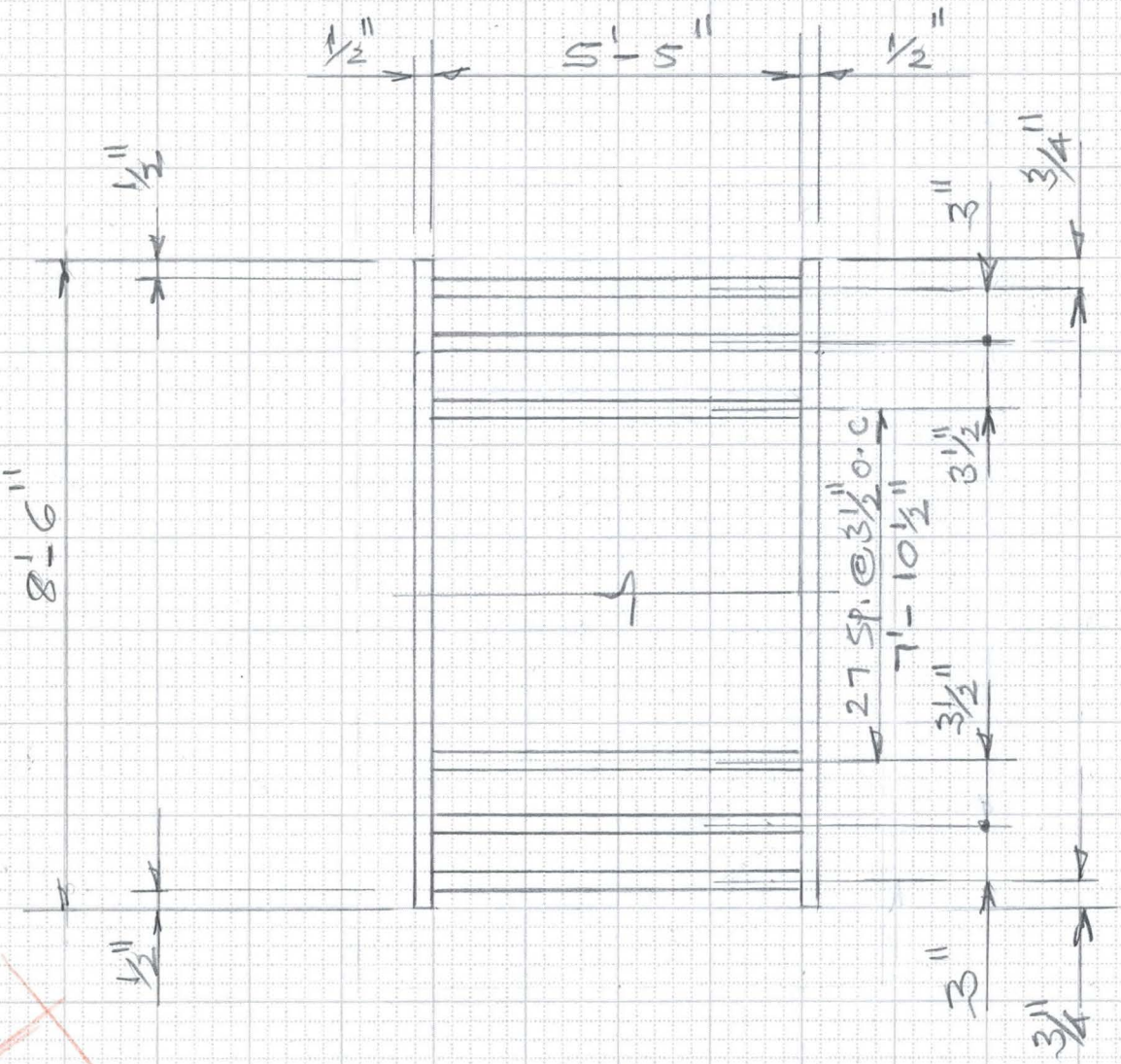

Plan View - Grate Detail
N.T.S.

Show A.B
one at
Each
Cor

Void

6910-153 4-90

FLOOD CONTROL DISTRICT OF MARICOPA COUNTY

PROJECT 43rd Ave. Basin PAGE 35 OF

DETAIL Chute Block COMPUTED KVH DATE Aug 98

CHECKED BY DATE

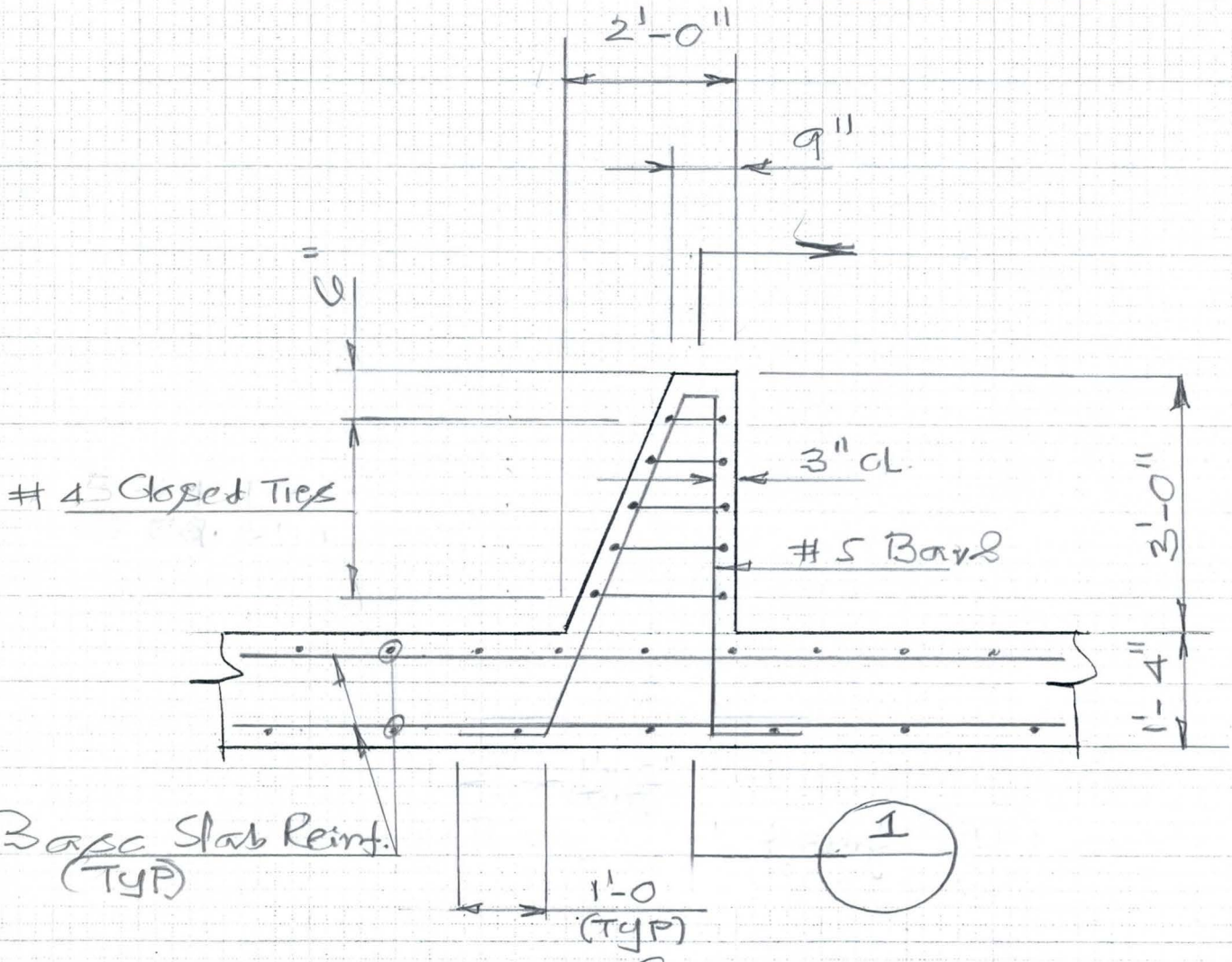

CHUTE BLOCK DETAIL

Scale: 1/2" = 1'-0"

FLOOD CONTROL DISTRICT OF MARICOPA COUNTY

PROJECT 43rd Ave. Basin PAGE 36 OF

DETAIL Chute Block COMPUTED KVH DATE Aug 98

CHECKED BY DATE

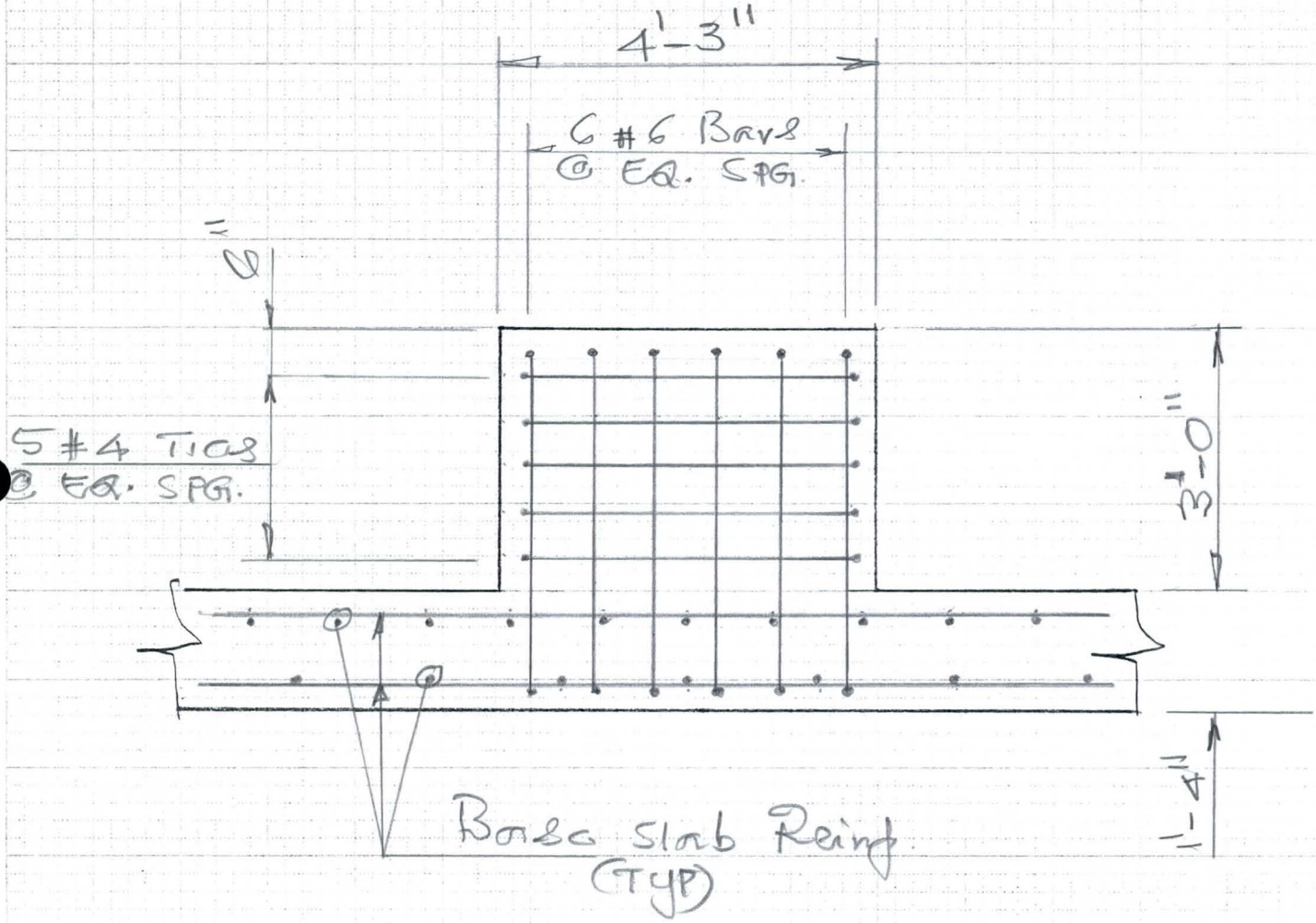

1 SECTION
Scale: 1/2" = 1'-0"

FLOOD CONTROL DISTRICT OF MARICOPA COUNTY

PROJECT 43rd Ave. Basin PAGE 37 OF

DETAIL Spillway COMPUTED KVH DATE Aug/98

CHECKED BY DATE

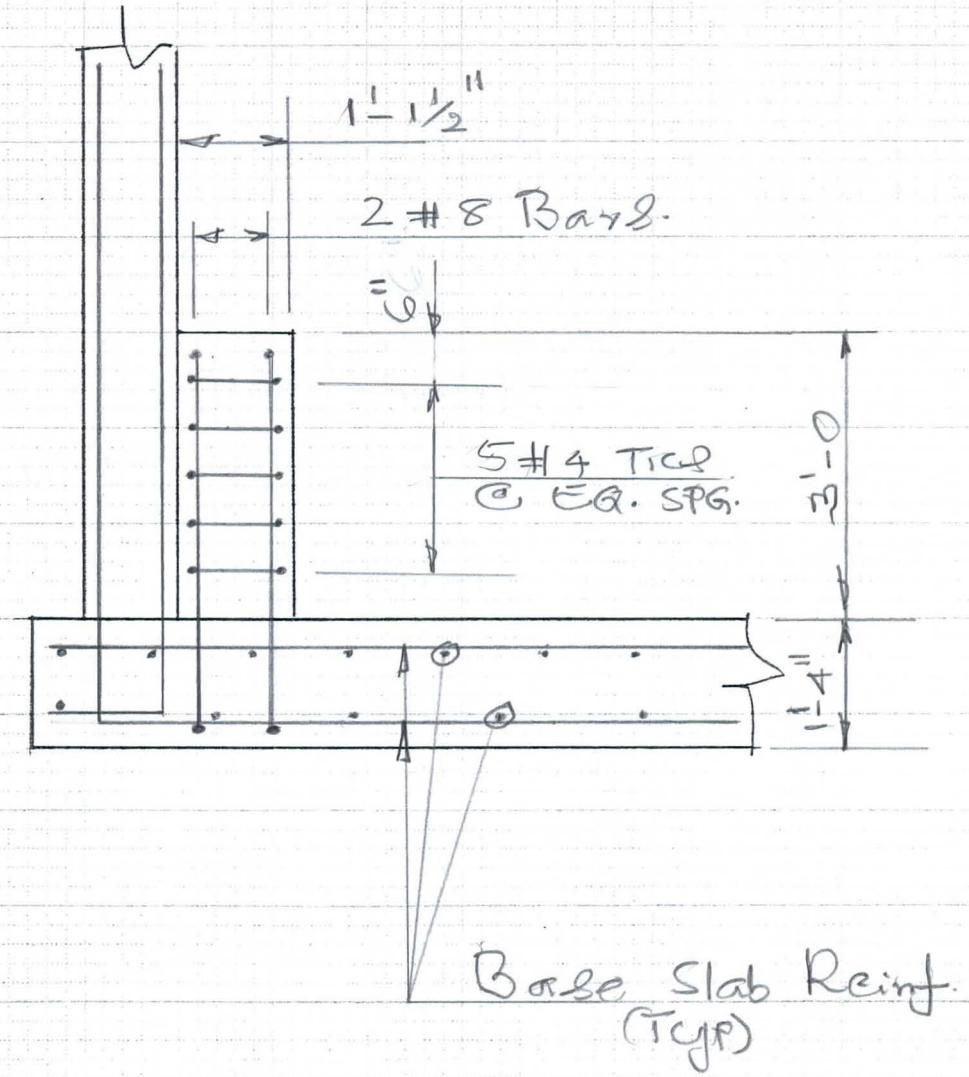

End Block Detail

Scale: ½" = 1'-0

FLOOD CONTROL DISTRICT OF MARICOPA COUNTY

PROJECT 43rd Ave. Basin PAGE 38 OF

DETAIL Inlet S+R. Walls COMPUTED KVH DATE Sept. 98

CHECKED BY DATE

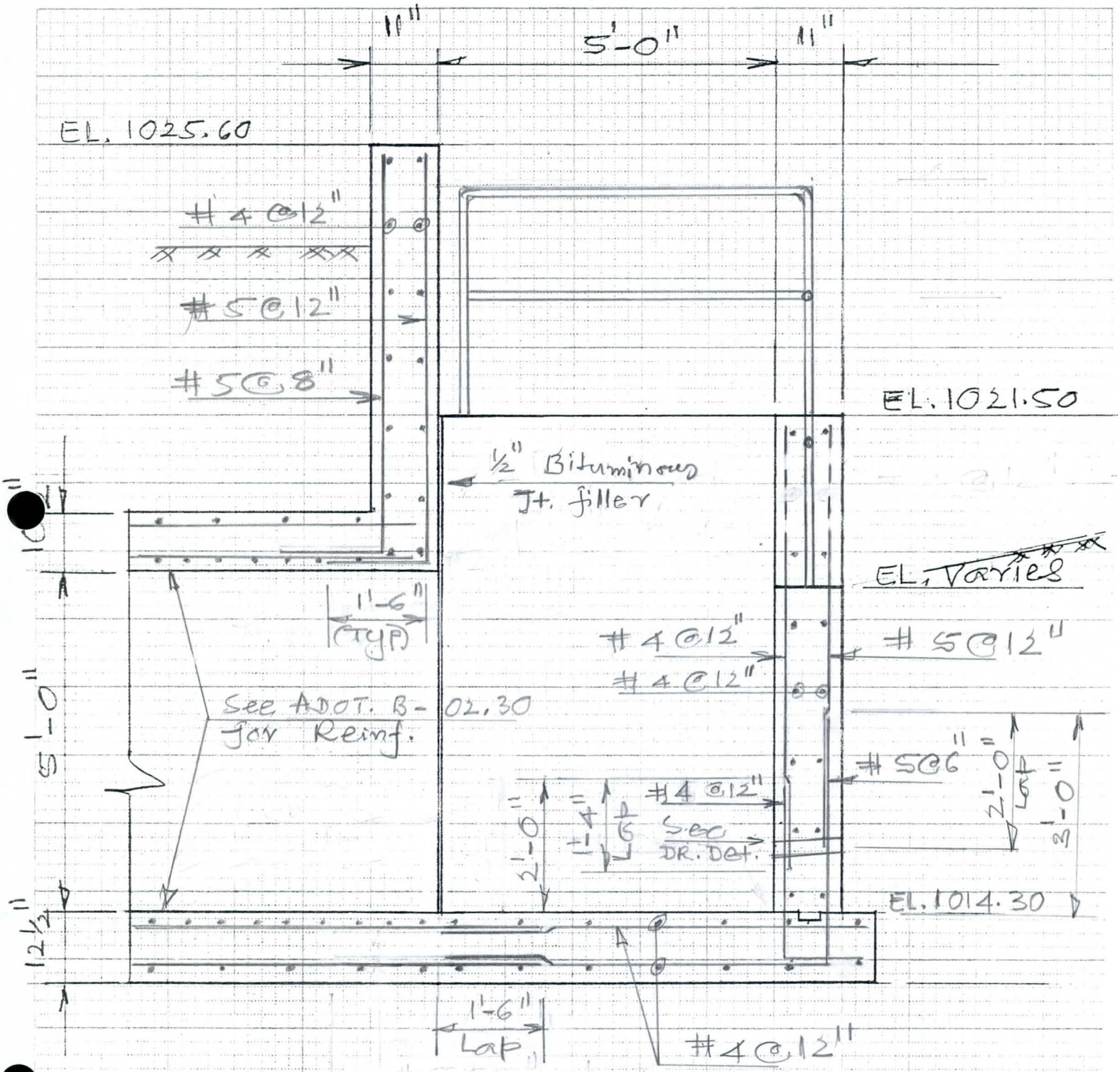

1/8 Detail

Scale: ½" = 1'-0"

FLOOD CONTROL DISTRICT OF MARICOPA COUNTY

PROJECT 43rd Ave. Basin PAGE 39 OF

DETAIL Inlet STR. COMPUTED KVH DATE Sept. 98

CHECKED BY DATE

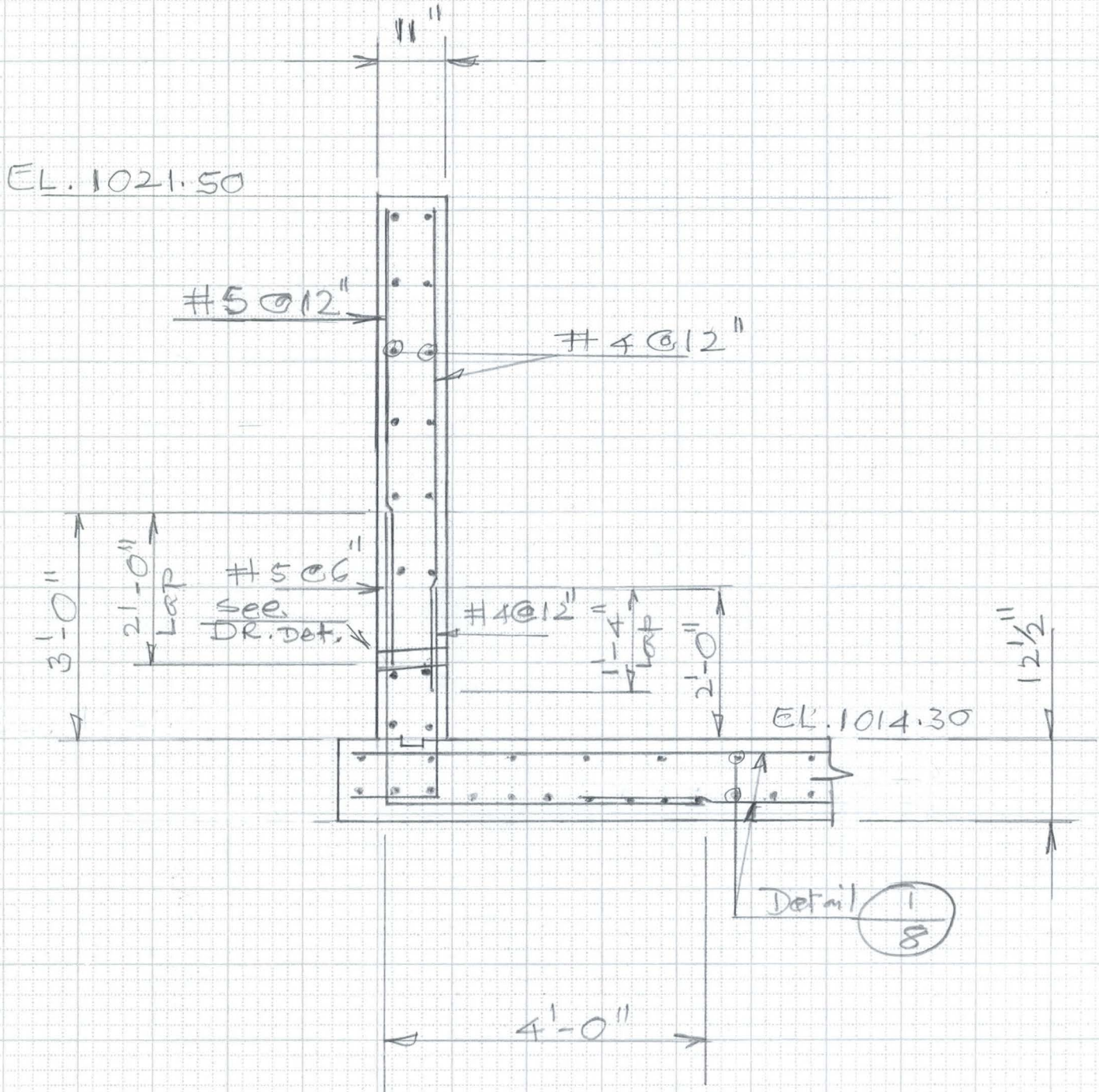

P Section
Scale: 1/2" = 1'-0"

FLOOD CONTROL DISTRICT OF MARICOPA COUNTY

PROJECT 43rd Ave. Basin PAGE 40 OF

DETAIL Inlet STR. COMPUTED KVH DATE Sept. 92

Detail CHECKED BY DATE

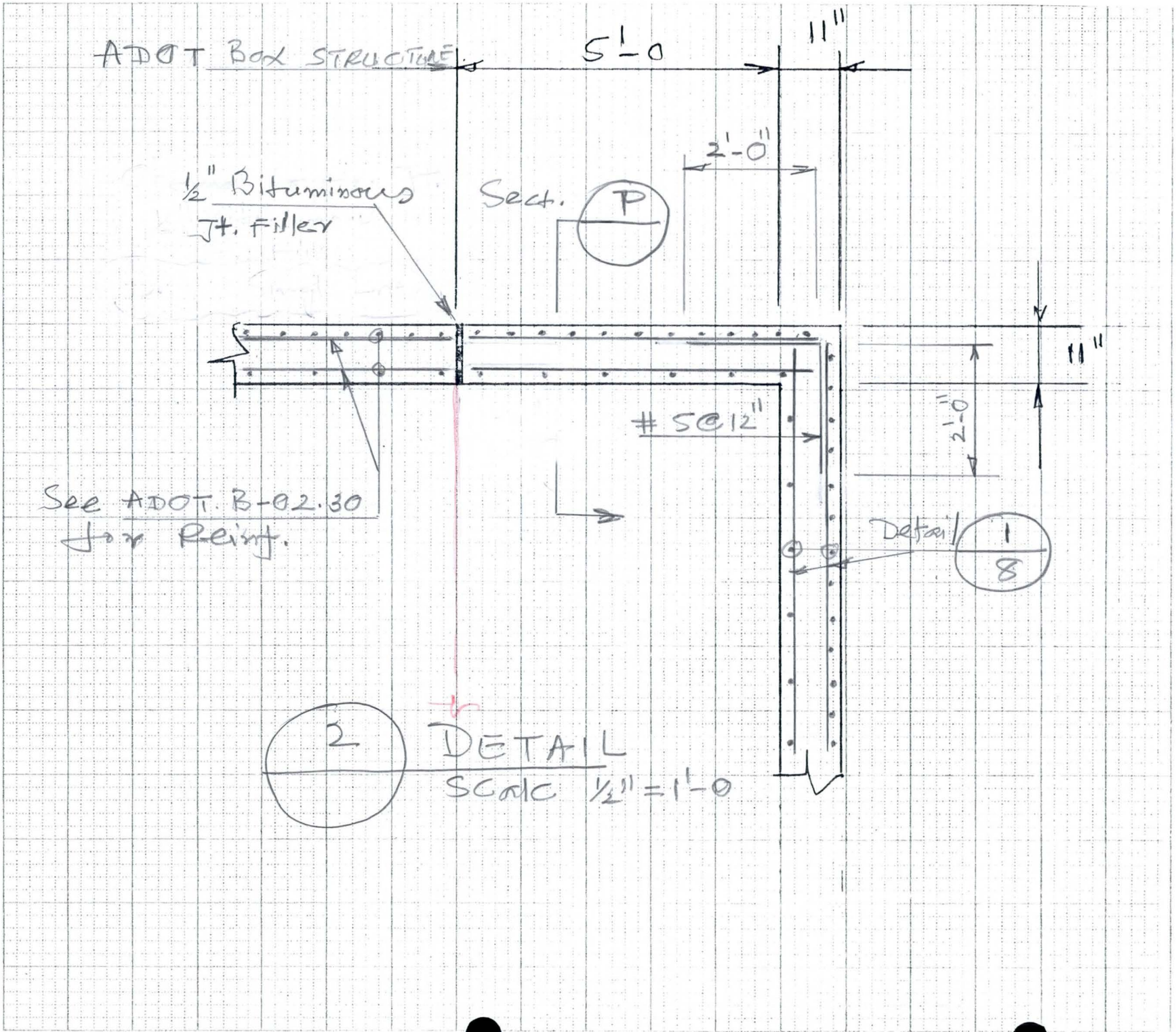

FLOOD CONTROL DISTRICT OF MARICOPA COUNTY

(42)

PROJECT 43rd Ave. Basin PAGE 41 OF

DETAIL Wall 8 COMPUTED KVH DATE Sept 98

Inlet STR. CHECKED BY DATE

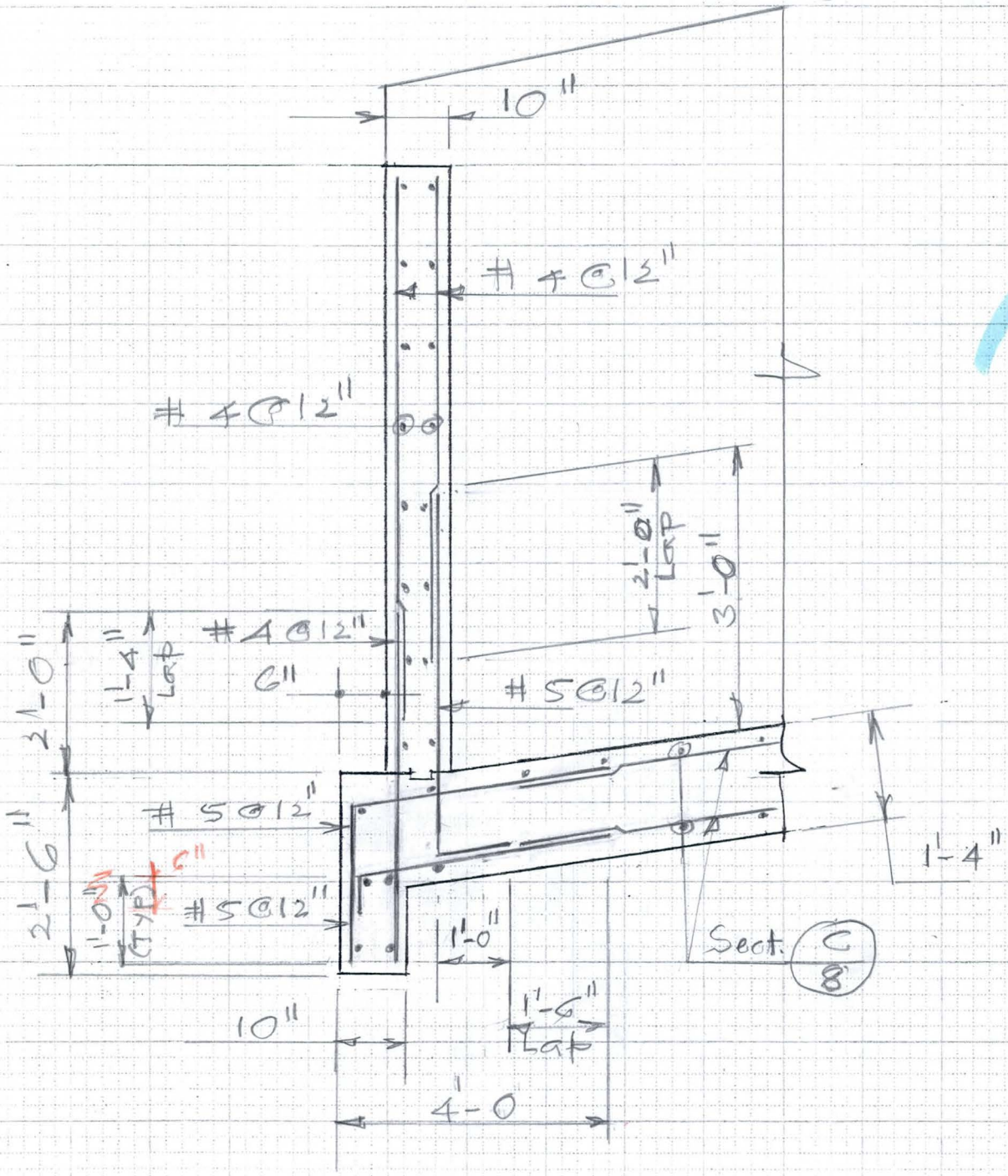

D/8 SECTION
Scale: ½" = 1'-0"

FLOOD CONTROL DISTRICT OF MARICOPA COUNTY

PROJECT 43rd Ave. Basin PAGE ____ OF ____

DETAIL Spillway COMPUTED KVH DATE 2/99

Key Detail CHECKED BY ____ DATE ____

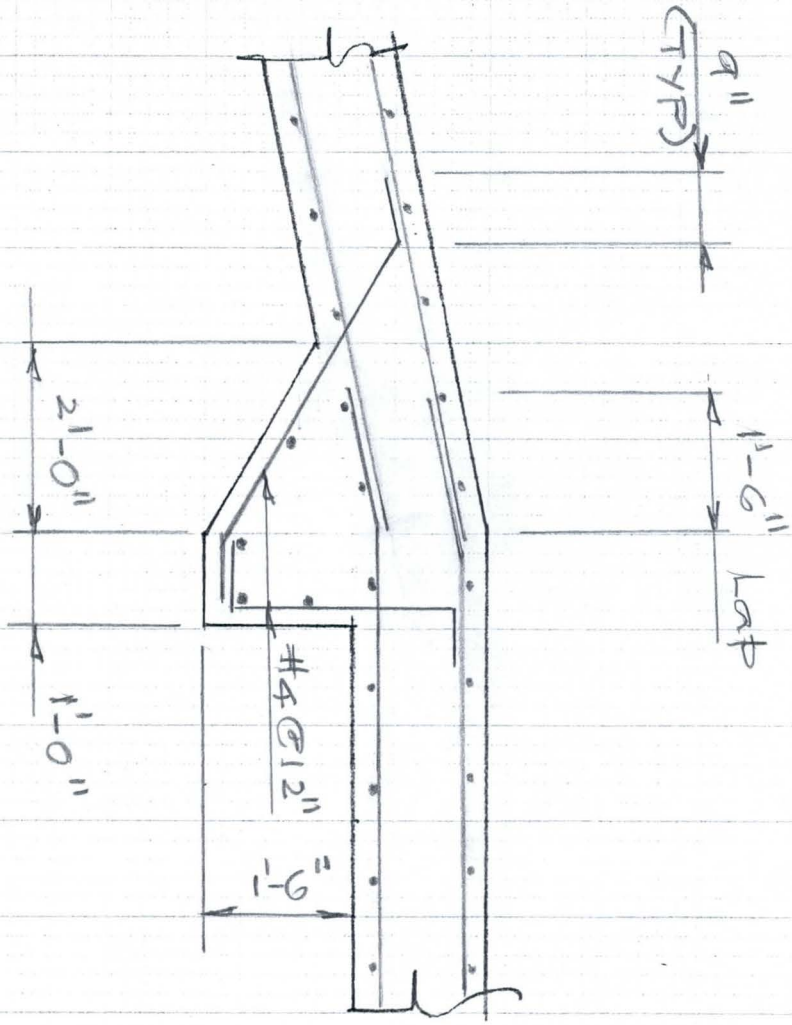

FLOOD CONTROL DISTRICT OF MARICOPA COUNTY

PROJECT 43rd Ave. Basin PAGE ____ OF ____

DETAIL Spillway Detail COMPUTED KVH DATE 2/99

CHECKED BY ____ DATE ____

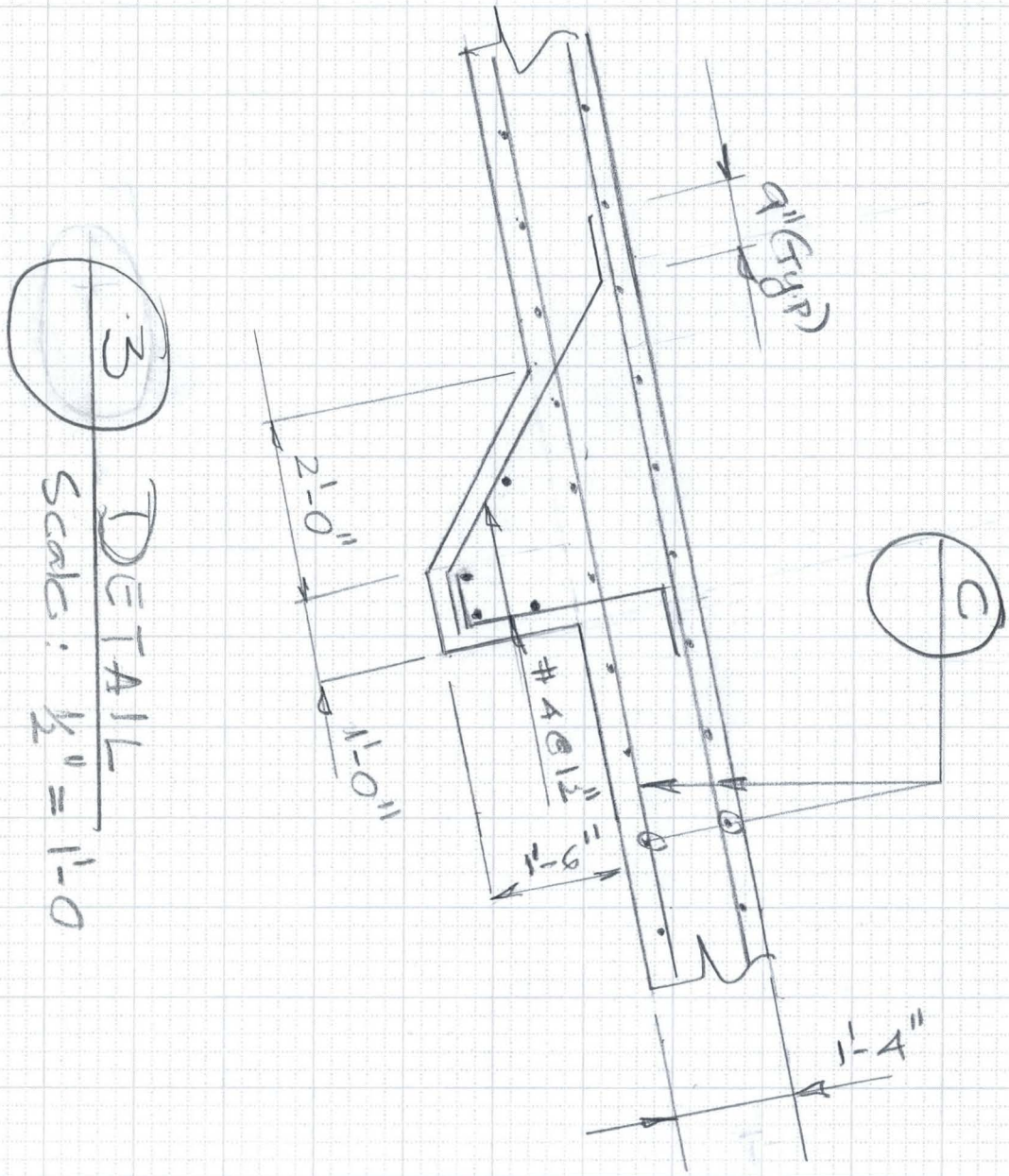

My copy

43rd AVENUE BASIN (Concrete quantities)
Spillway

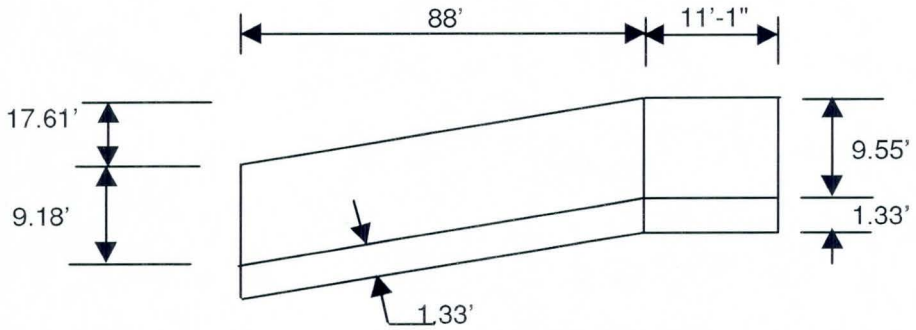

Wall Elevation:

SPILLWAY:				
North and South walls				
Ht=1005.76-996.58=	9.18 ft			
L=	88 ft			
Thickness=11"=	0.92 ft			
Number of walls=2,				
Qty=(9.18x0.92x88x2)		1481.04 cft.	54.85	cyd.
Ht1=1023.38-1014.19	9.19 ft			
Ht2=1024.10.1014.19	9.91 ft			
Ht(av)	9.55 ft			
T=11"=	0.92 ft			
L=11'-1"	11.08 ft			
No.of walls=2				
Qty=(9.55x0.92x11.08x2)		194.70 cft.	7.21	cyd.
Base slab:				
L=(88^2+17.61^2)$^{0.5}$	89.74 ft			
W=(31'-10"+10"x2+1.0')=	34.50 ft			
Thickness=16"	1.33 ft			
Qty=89.74x34.5x1.33		4127.86 cft.	152.88	cyd.
L=11'-1"	11.08 ft			
W=	34.50 ft			
T=	1.33 ft			
Qty=(11.08x34.5x1.33)		509.63 cft.	18.88	cyd.
	Sub total	**6,313.23 cft.**	**233.82**	**cyd.**

Concrete quantities(contd)
Spillway Inlet Box and chamber:

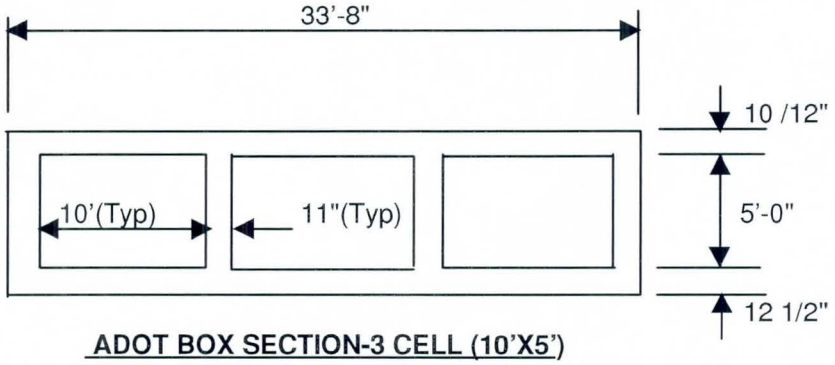

ADOT BOX SECTION-3 CELL (10'X5')

Top slab:			
Width=	33.67 ft.		
Thickness=	0.875 ft.		
Length=	15 ft.		
Qty=(33.67x).875x15)=		441.92 cft.	16.37 cyd.
Bottom slab:			
Width=	34.67 ft.		
Thickness=	1.042 ft.		
Length=	15 ft.		
Qty=(34.67x1.042x15)=		541.89 cft.	20.07 cyd.
Walls:			
Height=	5 ft.		
Thickness=	0.917 ft.		
Length=	15 ft.		
No.of walls=	4		
Qty=(5.0x0.917x15)4		275.1 cft.	10.19 cyd.
Head walls for the box:			
Ht.=1025.6-1020.08	5.52 ft.		
Thickness=11"	0.917 ft.		
Length=33'-8"	33.67 ft.		
No=2			
Qty=		340.74 cft.	12.62 cyd.
Open Inlet chamber:			
N & S walls:			
Ht=1021.5-1014.3=	7.2 ft.		
W=5'	5 ft.		
Thickness=11"	0.917 ft.		
No=2			
Qty=		66 cft.	2.44 cyd.
Sub total		**1665.65 cft.**	**61.69 cyd.**

Concrete quantities (contd)

Spillway,Inlet chamber & Chute blocks:

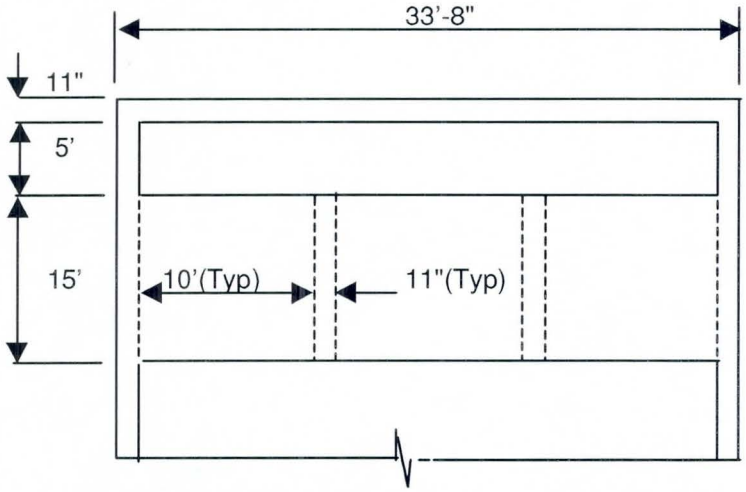

PLAN VIEW OF ADOT BOX & INLET CHAMBER

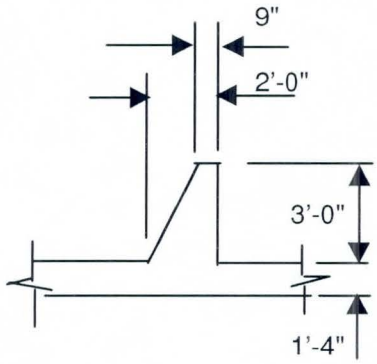

CHUTE BLOCK SECTION

Open Inlet chamber:			
End wall:			
Av.Ht.=(7.2+5)/2=	6.1 ft.		
T=11"	0.917 ft.		
Length=33'-8"	33.67 ft.		
Qty=		188.27 cft.	6.97 cyd.
Base slab:			
Length=(5+11/12+0.5)	6.42 ft.		
width=34.67'	34.67 ft.		
Thickness=12 1/2"	1.042 ft.		
Qty=		231.86 cft.	8.59 cyd.
End wall (Down stream)			
Ht.=(1004.26-996.58)+2.5	10.18 ft.		
Thickness=10"	0.833 ft.		
Length=31'-10"	31.83 ft.		
Qty=		269.92 cft.	10.00 cyd.
Chute Blocks:			
Area=(0.75+2.0)/2x3 sq.ft	4.125 sq.ft.		
Width end block=12 1/2"	1.042 ft		
No. of blocks=8		34.38 cft.	1.27 cyd.
Qty=			
Width of mid block=4'-3"	4.25 ft.		
No 0f blocks=24			
Qty=		420.75 cft.	15.58 cyd.
Sub total		**1145.17 cft.**	**42.41 cyd.**
Total concrete for Spillway and Inlet box		**9124.05 cft.**	**337.93 cyd.**

Concrete quantities(contd) page.4

Outlet structure:

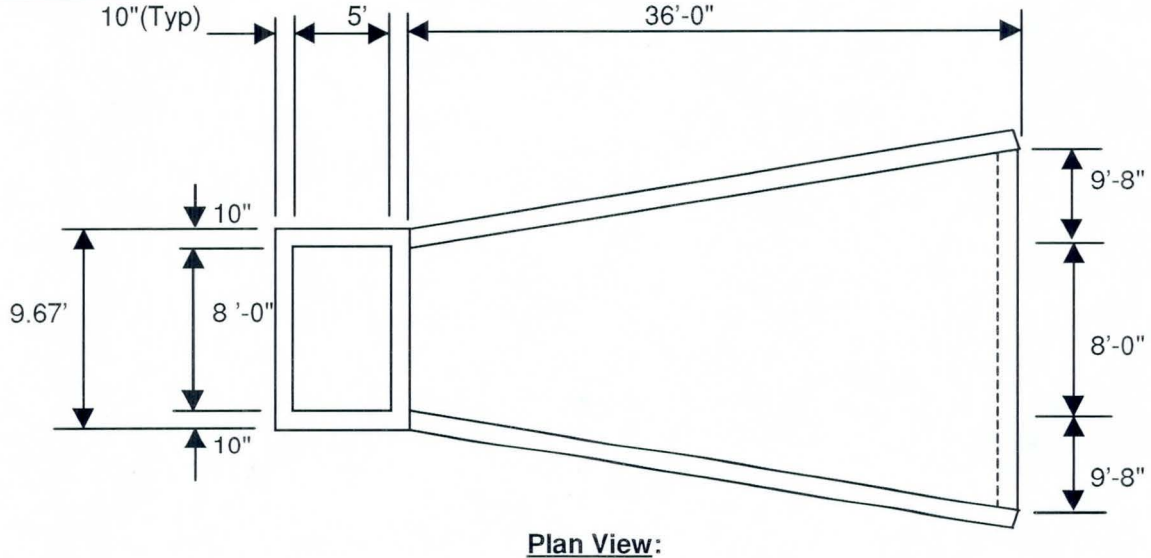

Plan View:

5' Walls:			
Ht.=1020.6-1001.0=	19.6 ft.		
Length=	5 ft.		
Thickness=10"	0.833 ft.		
No=	2		
Qty=		163.33 cft.	6.05 cyd.
8' Wall w/72" Dia.pipe			
Area=19.6x9.67	189.53 sq.ft.		
Assume outside pipe Dia=7'			
Pipe area	38.47 sq.ft.		
Net area=	151.07 sq.ft.		
Thickmess=10"	0.833 ft.		
Qty=		125.84 cft.	4.66 cyd.
8' wall w/ 2x36" Dia. Pipes:			
Assume outside pipe Dia.=44"			
Area of pipes=	21.15 sq.ft		
Net area=	168.39 sq.ft.		
Thickness=	0.833 ft.		
Qty=		140.27 cft.	5.20 cyd.
Base slab:			
Length=	7.67 ft.		
Width=	10.67 ft.		
Thickness=1'-2"	1.17 ft.		
Qty=		95.75 cft.	3.55 cyd.
sub total		**525.19 cft.**	**19.45 cyd.**

Concrete quantities(contd)
Outlet structure:

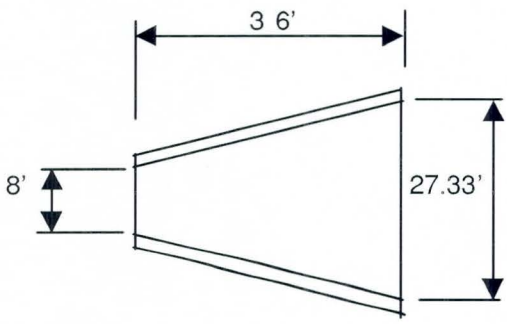

Plan view

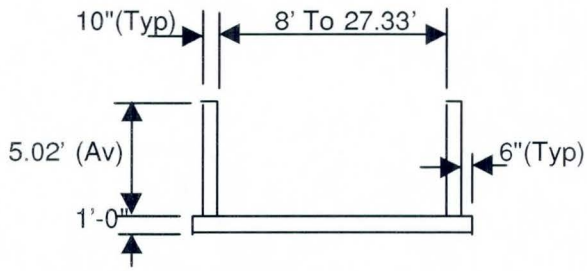

Channel Section

Base slab:			
Av width=(8.0+27.33)/2=17.67'			
Tot.Av.W=(17.67+20/12+1.0')	20.34 ft.		
Length=	36.00 ft.		
Thickness=	1 ft.		
Qty=		732.12 cft.	27.12 cyd.
key:(2'x0.833'x27.33')=		45.53 cft.	1.69 cyd.
Walls:			
Av.ht=	5.02 ft		
$L=(36^2+9.67^2)^{0.5}$	37.28 ft		
T=10"	0.833 ft		
No=	2		
Qty.=		311.75 cft.	11.55 cyd.
Sub total		**1,089.40 cft.**	**40.35 cyd.**
Total concrete for Outlet structure		**1,614.59 cft.**	**59.80 cyd.**

SUMMARY OF CONCRETE QUANTITIES:		
Spillway& Inlet box	9,124.05 cft.	337.93 cyd.
Outlet structure	1,614.59 cft.	59.80 cyd.
TOTAL CONCRETE	**10,738.64 CFT.**	**397.73 CYD.**

FLOOD CONTROL DISTRICT OF MARICOPA COUNTY

PROJECT 43rd Ave. Basin PAGE ____ OF ____

DETAIL ____ COMPUTED ____ DATE ____

____ CHECKED BY ____ DATE ____

OUTLET STRUCTURE

PHASE. 3

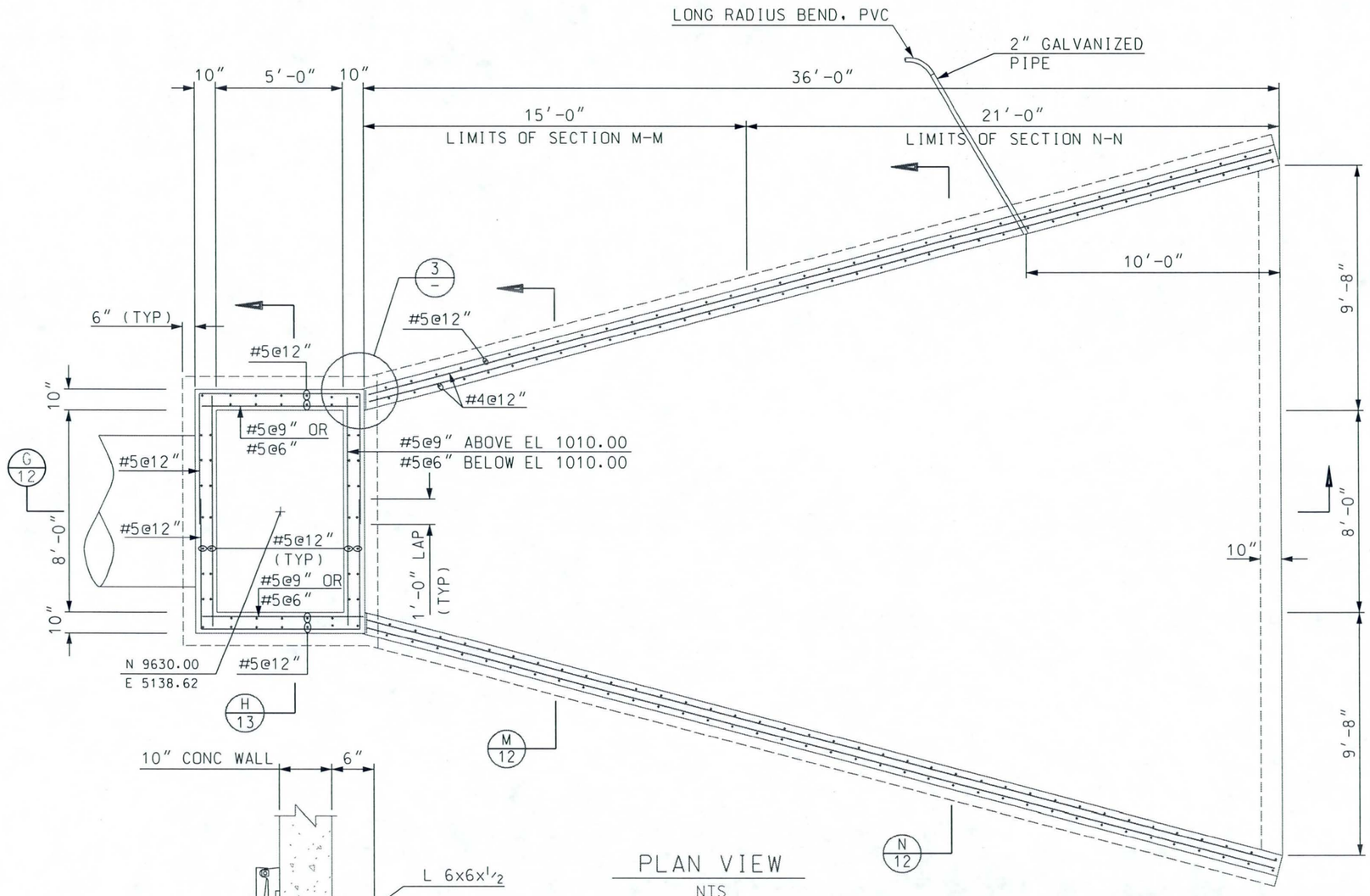

PLAN VIEW
NTS

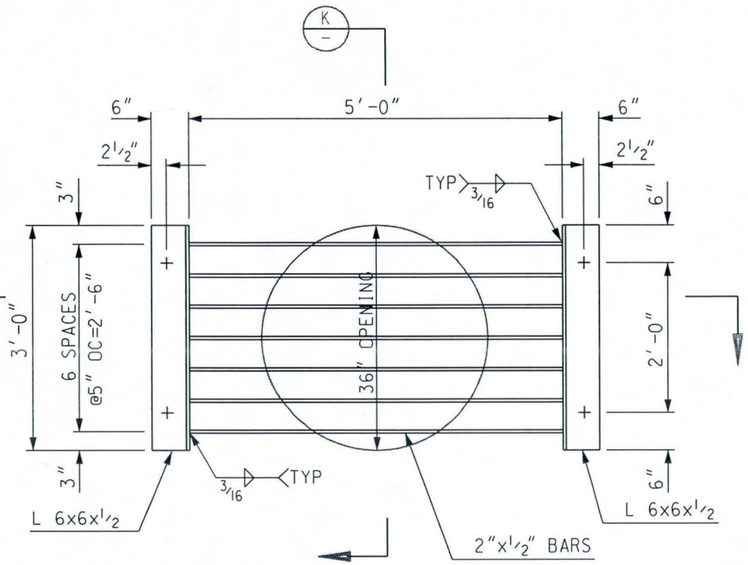

ELEVATION
ACCESS BARRIER/TRASH RACK
NTS

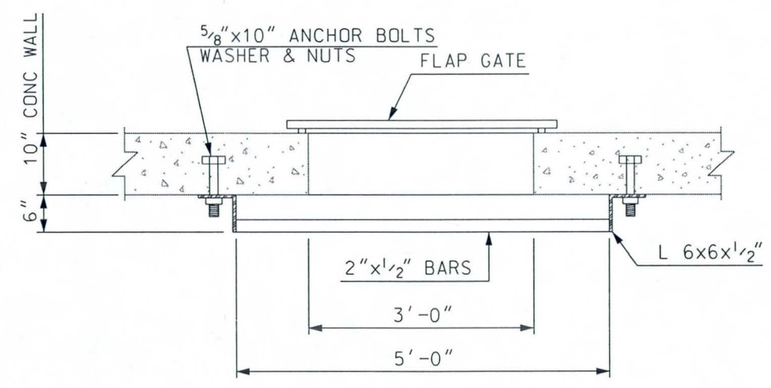

L SECTION
NTS

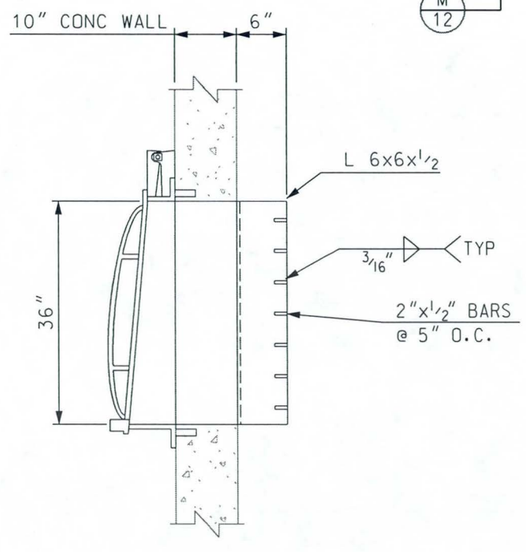

K SECTION
NTS

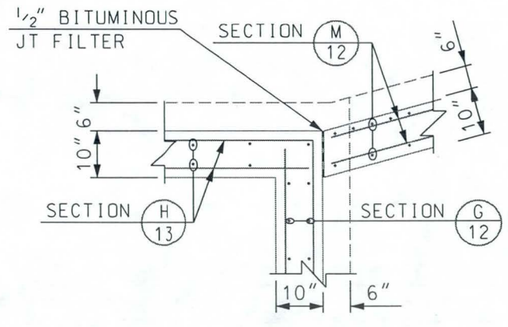

3 DETAIL
SCALE: ¾" = 1'-0"

NO.	REVISION	BY	DATE
3			
2			
1			

FLOOD CONTROL DISTRICT OF MARICOPA COUNTY
ENGINEERING DIVISION

43RD AVENUE DETENTION BASIN
FCD PROJECT NO. 1170230
90% SUBMITTAL

PRELIMINARY NOT FOR CONSTRUCTION

	BY	DATE
DESIGNED	KVH	02/26/99
DRAWN	FC	02/26/99
CHECKED	MAL	

OUTLET STRUCTURE PLAN

SHEET 11 OF 26

...\43rd Ave\dgn\phase3\outdtl.dgn Mar. 19, 1999 08:23:37

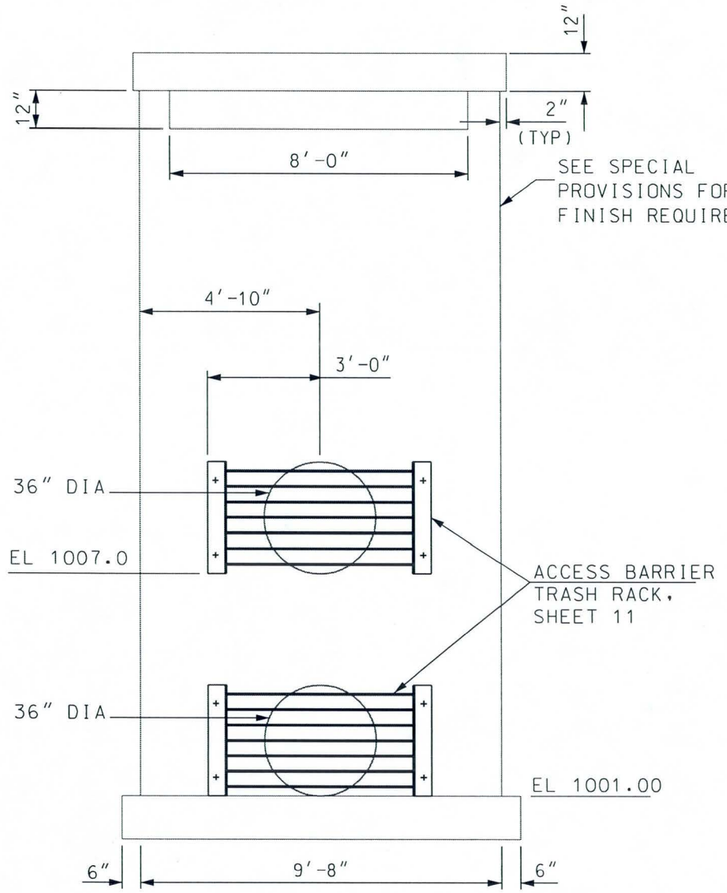

I ELEVATION
NTS

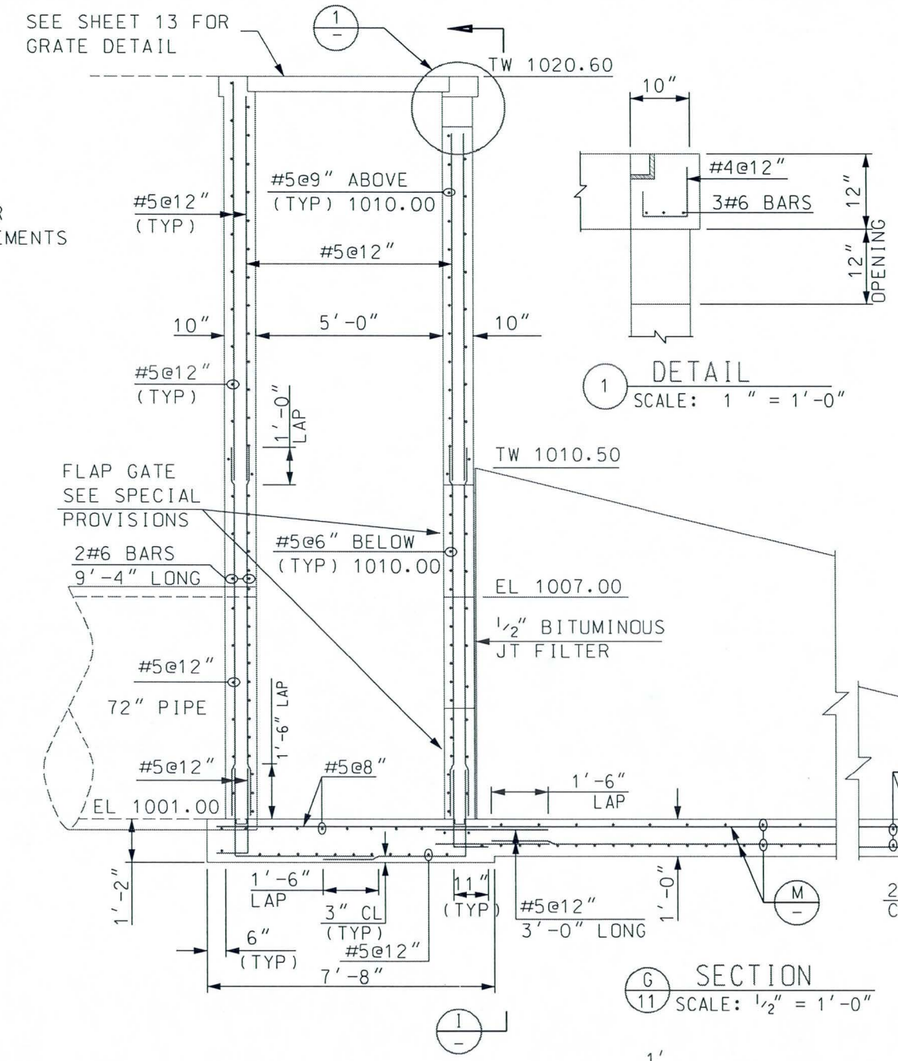

G SECTION
11 SCALE: 1/2" = 1'-0"

1 DETAIL
SCALE: 1 " = 1'-0"

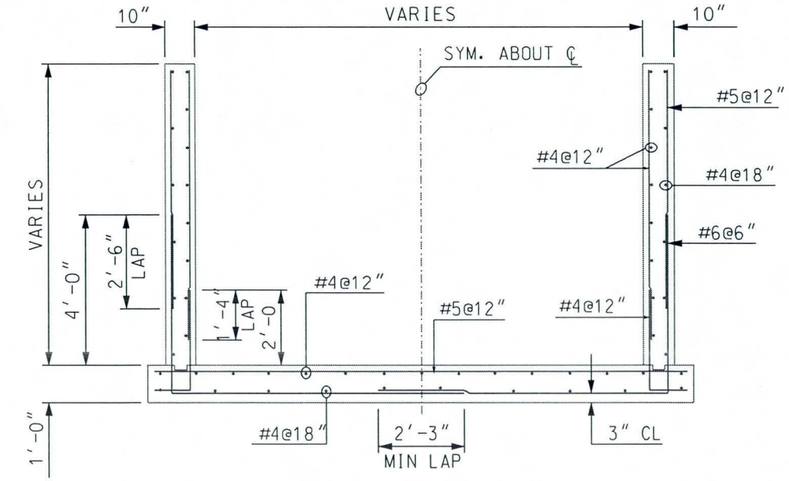

M SECTION
11 SCALE: 1/2" = 1'-0"

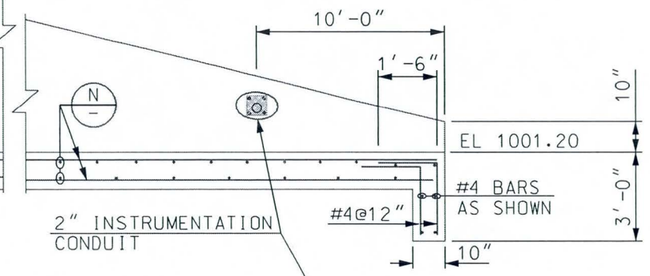

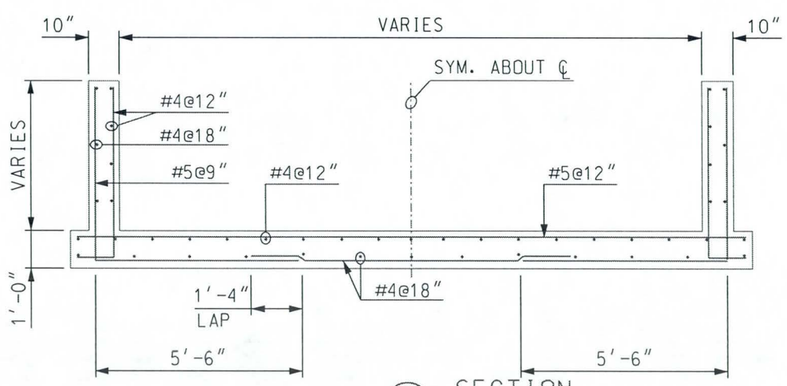

N SECTION
11 SCALE: 1/2" = 1'-0"

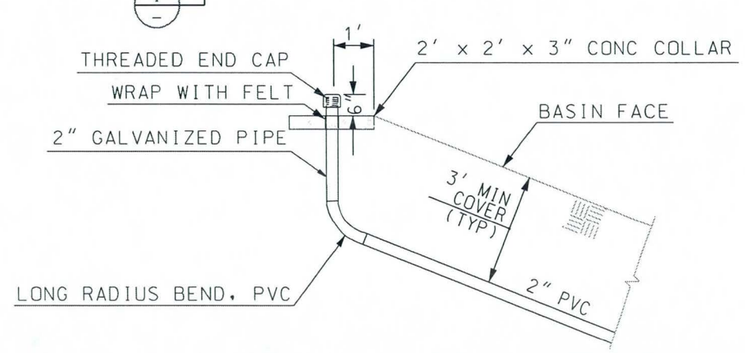

NOTE:PROVIDE COUPLINGS AND ADAPTERS AS NECESSARY

INSTRUMENTATION CONDUIT
ELEVATION DETAIL
NTS

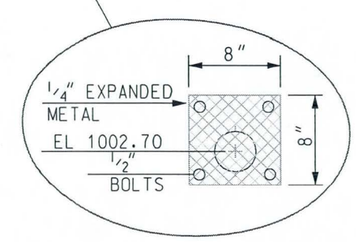

NO.	REVISION	BY	DATE
3			
2			
1			

FLOOD CONTROL DISTRICT OF MARICOPA COUNTY
ENGINEERING DIVISION

43RD AVENUE DETENTION BASIN
FCD PROJECT NO. 1170230
90% SUBMITTAL

		BY	DATE
PRELIMINARY NOT FOR CONSTRUCTION	DESIGNED	KVH	03/01/99
	DRAWN	FC	03/01/99
	CHECKED	MAL	

OUTLET STRUCTURE DETAIL

SHEET 12 OF 26

...\dgn\phase3\outdtl2.dgn Mar. 19, 1999 08:23:56

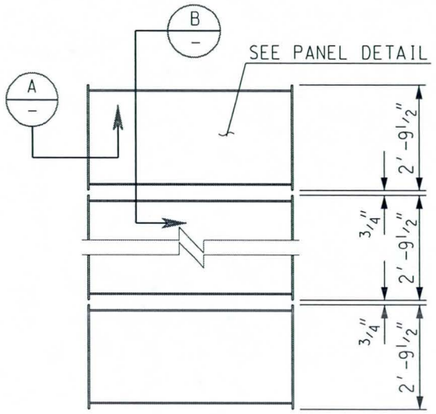

PLAN VIEW OF PANELS
NTS

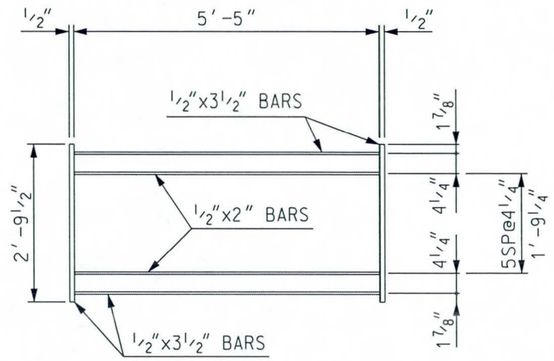

PANEL DETAIL
NTS

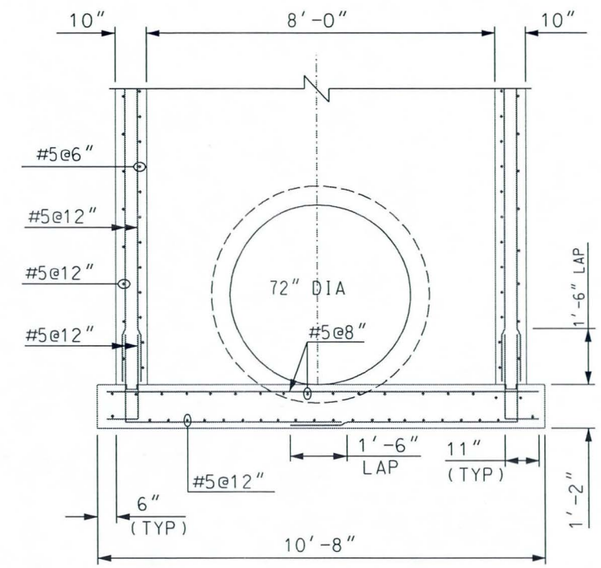

H/11 SECTION
SCALE: 1/2" = 1'-0"

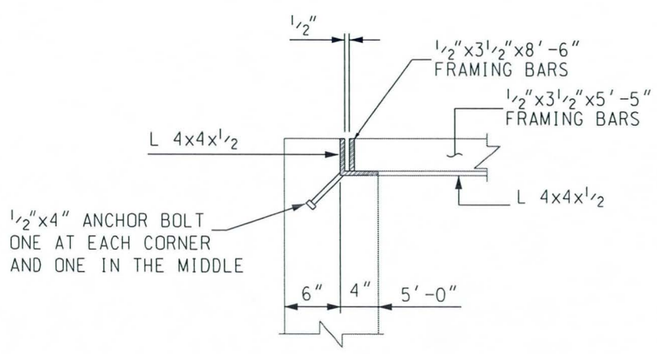

A SECTION
SCALE: 1 1/2" = 1'-0"

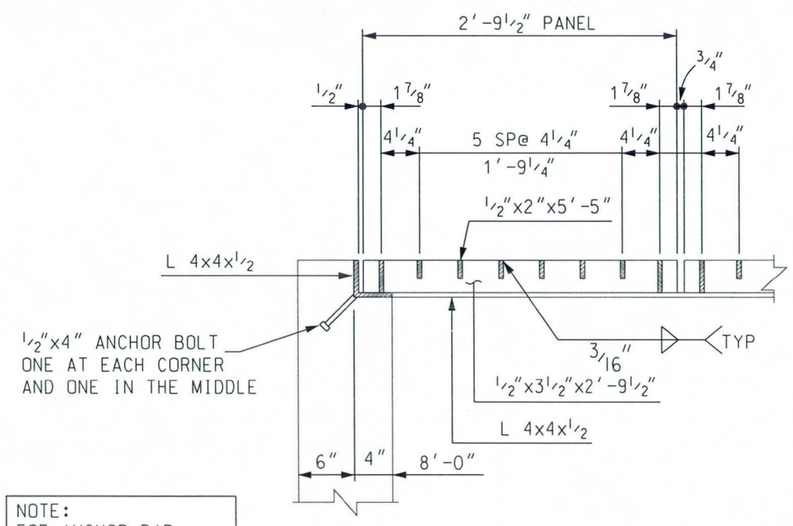

NOTE:
FOR ANCHOR BAR
& MISC. DETAILS
SEE MAG. DET. 540-1

B SECTION
SCALE: 1 1/2" = 1'-0"

NO.	REVISION	BY	DATE
3			
2			
1			

FLOOD CONTROL DISTRICT OF MARICOPA COUNTY
ENGINEERING DIVISION

43RD AVENUE DETENTION BASIN
FCD PROJECT NO. 1170230
90% SUBMITTAL

		BY	DATE
PRELIMINARY NOT FOR CONSTRUCTION	DESIGNED	KVH	03/02/99
	DRAWN	FC	03/02/99
	CHECKED	MAL	
	OUTLET GRATE DETAIL		SHEET 13 OF 26

...\dgn\phase3\outdtl3.dgn Mar. 19, 1999 08:24:17

FLOOD CONTROL DISTRICT OF MARICOPA COUNTY

PROJECT 43rd Ave. Basin PAGE 1 OF

DETAIL Out Let Str. COMPUTED KVH DATE Sept. 98

Base Slab & walls CHECKED BY DATE

Elevations:

1020.60
− 1001.0 — INV
19.60
+ 0.60 — 7" pipe Thickness. (Approx)
20.20 — Ht. of wall.

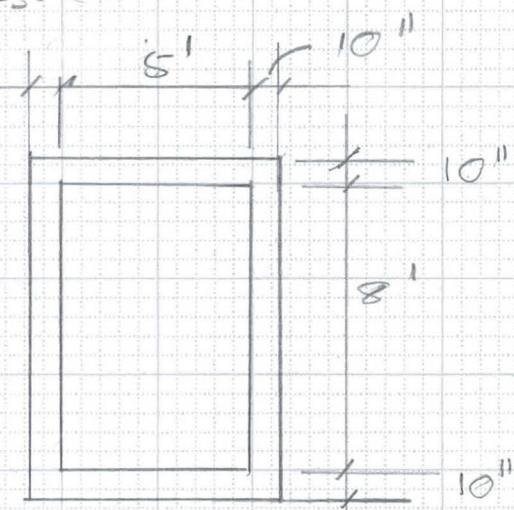

wt. of Stack:

$[(5.0 \times 0.833)\ 20.2]\ 2 \times 0.15 = \boxed{25.2^K}$

Side walls:

$A = (9.67 \times 20.2) = 195.3$

Pipe Dia $= 72 + 7'' + 7'' = 86'' = 7.17'$

Pipe Area $= 3.14 \times 7.17^2/4 = 40.4$

Net Area $A_1 = (195.3 - 40.4) = 154.9$

$WT = (154.9 \times 0.833)\ 0.15 = \boxed{19.4^K}$

Area of 2 (36" Dia. pipe)

$D = (36 + 3.5 \times 2) = 43'' = 3.58'$

$A = \left(3.14 \times \frac{3.58^2}{4}\right) 2 = 20.1'$

Net Area $= 195.3 - 20.1 = 175.2$

$Wt = (175.2 \times 0.833)\ 0.15 = \boxed{21.9^K}$

Total Wt $= (25.2 + 19.4 + 21.9) = 66.5^K$

L.L @ 60psf $= (60 \times 6.83 \times 9.83) = 4.0^K$

Total wt $= 70.5^K$

Base Slab Area $= (7.83 \times 10.83) = 84.8$ Sq ft

$Pr = \frac{70.5}{84.8} = 0.83$ Ksf

FLOOD CONTROL DISTRICT OF MARICOPA COUNTY

PROJECT 43rd Ave. Basin PAGE 2 OF

DETAIL Outlet Str COMPUTED KVH DATE Sept 9

Base Slab & walls CHECKED BY DATE

$w = 0.83$ Ksf
0.07 — DL & Misc.
$w_{Total} = 0.90$ ksf

Span $= 5.83'$ $\quad M = \frac{wl^2}{10} = \frac{0.9 \times 5.83^2}{10} = 3.06$ kk

$d_{eff} = (14 - 3.5) = 10.5''$

$A_s = \frac{3.06 \times 12}{24 \times 0.88 \times 10.5}$

$= 0.17 \text{ in}^2$

Use Min St. #5 @12"

Check Soil pr:

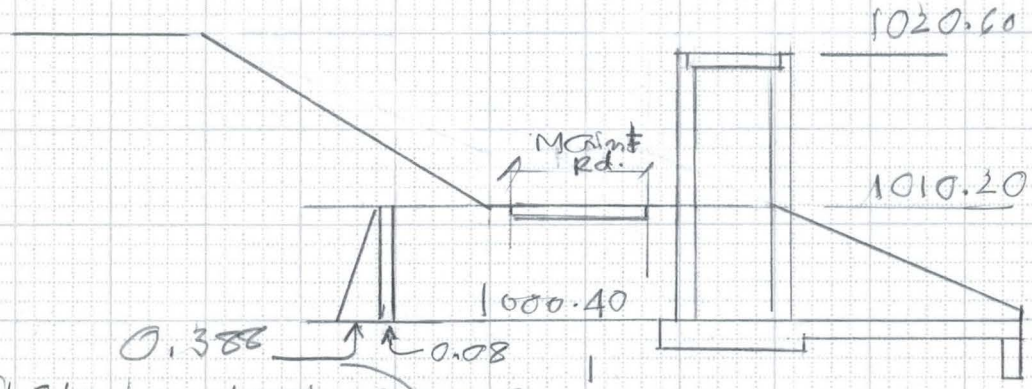

$H_t = (1010.20 - 1000.40) = 9.8'$

pr soil $= (0.12 \times 0.33 \times 9.8) = 0.388$ ksf
pr sur $= (0.12 \times 0.33 \times 2) = 0.08$

pr @ the Base $= (0.388 + 0.08) = 0.468$ ksf (per ft)

FLOOD CONTROL DISTRICT OF MARICOPA COUNTY

PROJECT 43rd Ave. Basin PAGE 3 OF

DETAIL Out Lot Struct. walls. COMPUTED KVH DATE Sept. 92

CHECKED BY DATE

$p_w = 0.468$ kg

$M = \frac{wl^2}{10} = 0.468 \times 9.83^2/10$

$= 4.52$ kft

$d_{eff} = (10 - 2.5) = 7.5''$

$A_s = \frac{4.52 \times 12}{24 \times 0.88 \times 7.5} = 0.34$

$M = \frac{wl^2}{12} = 0.468 \times 9.83^2/12 = 3.77$

$A_s = \frac{3.77 \times 12}{24 \times 0.88 \times 7.5}$

$= 0.29$ #5 @ 12"

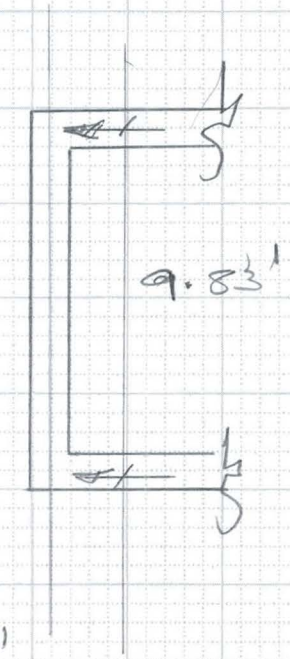

Use #5 @ 8" outside St.
#5 @ 12" Inside St.
as there may be some water fr. Build up.

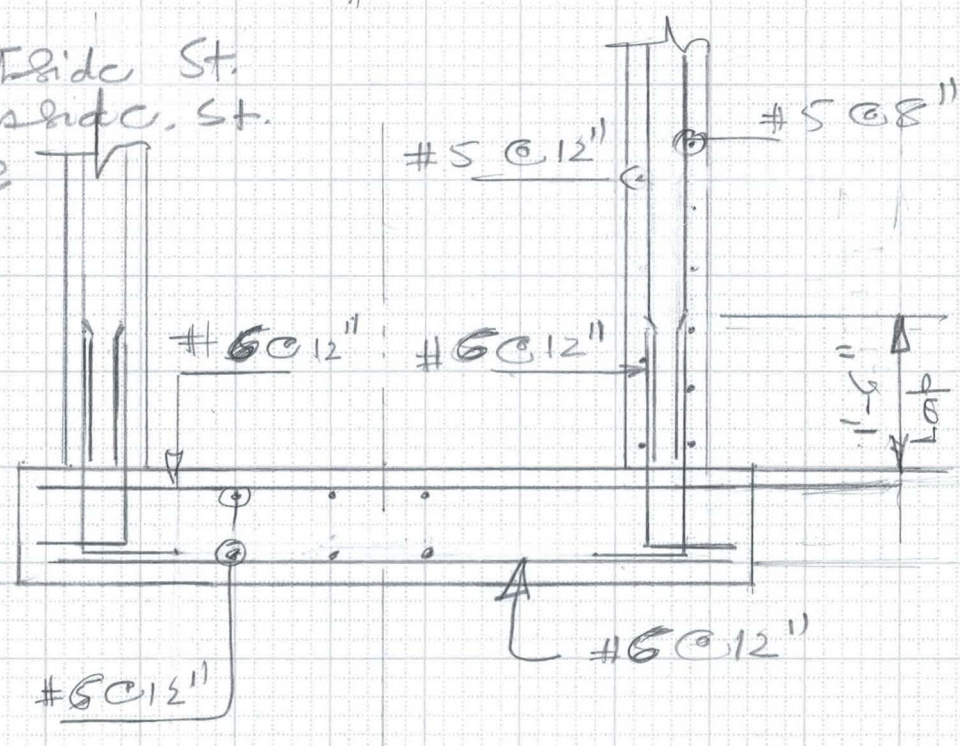

FLOOD CONTROL DISTRICT OF MARICOPA COUNTY

PROJECT 43rd Av. Basin PAGE 4 OF

DETAIL (8' x 5') Outlet. Str. COMPUTED KVH DATE NOV. 98

CHECKED BY DATE

Outlet Structure: (8' x 5')

Ht = (1020.60 − 1001.00) = 19.60'

Pr at the Base:

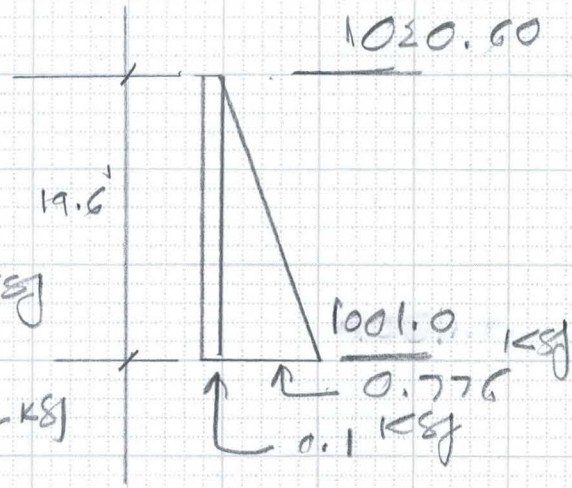

Pr_1 = (0.12 x 0.33 x 19.6) = 0.776 KSF

Pr Surch = (0.12 x 0.33 x 2)
= 0.08 KSF say 0.1 KSF

Unif Pr. (At the Base) = 0.876 KSF

Span.1 = 5.83'

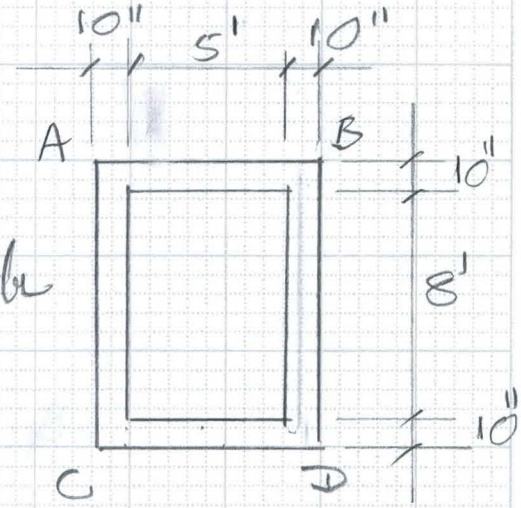

M_{Neg} = 0.876 x 5.83²/10 = 2.98 k/L

$M_{pos.}$ = 0.876 x 5.83²/12 = 2.48

Span.2 = 8.83

M_{Neg} = 0.876 x 8.83²/10 = 6.83 k/L

M_{pos} = 0.876 x 8.83²/12 = 5.69

deff = (10 − 2 − 0.5) = 7.5"

$$As_1 = \frac{6.83 \times 12}{24 \times 0.87 \times 7.5} = 0.52$$

$$As_2 = \frac{5.69 \times 12}{24 \times 0.87 \times 7.5} = 0.44$$

FLOOD CONTROL DISTRICT OF MARICOPA COUNTY

PROJECT 43rd Av. Basin PAGE 5 OF

DETAIL (8'x5') Outlet Str. COMPUTED KVH DATE Nov. 98

CHECKED BY DATE

$M_{F_1} = 0.876 \times 5.83^2/12 = 2.5$ K/L

$M_{F_2} = 0.876 \times 8.83^2/12 = 5.7$ K/L

$K_1 = \frac{I}{L}, \quad I_1 = I_2 = \frac{12 \times 10^3}{12} = 1000$

$K_1 = I_1/L_1 = \frac{1000}{5.83 \times 12} = 14.3$

$K_2 = I_2/L_2 = \frac{1000}{8.83 \times 12} = 9.4$

$DF_1 = \left(\frac{14.3}{14.3 + 9.4}\right) = 0.60$

$DF_2 = \left(\frac{9.4}{23.7}\right) = 0.40$

FLOOD CONTROL DISTRICT OF MARICOPA COUNTY

PROJECT 43rd AVE. Basin PAGE 6 OF

DETAIL (8' x 5') Out Lot. STR. COMPUTED KVH DATE NOV. 98

CHECKED BY DATE

+4.4		-4.4	
+0.5		-0.5	
-0.5		+0.5	
+1.0		-1.0	
-1.0		+1.0	
+1.9		-1.9	
+2.5		-2.5	
-5.7	0.6	0.6	+5.7
+1.3	0.4	0.4	-1.3
-0.7			+0.7
+0.7			-0.7
-0.4			+0.4
+0.4			-0.4
-4.4			+4.4
+5.7	0.9	0.4	-5.7
-1.3	0.6	0.6	+1.3
+0.7	-2.5	+2.5	-0.7
-0.7	-1.9	+1.9	+0.7
+0.4	+1.0	-1.0	-0.4
-0.4	-1.0	+1.0	+0.4
+4.4	+0.5	-0.5	-4.4
	-0.5	+0.5	
	-4.4	+4.4	

FLOOD CONTROL DISTRICT OF MARICOPA COUNTY

PROJECT 43rd AVE. Basin PAGE 7 OF

DETAIL (8'x5') Outlet. Str. COMPUTED KVH DATE NOV. 98

CHECKED BY DATE

Span. 1

$L_1 = 5.83'$

$M_s = (0.876 \times 5.83^2/8) = 3.72^{kft}$

$L_2 = 8.83'$

$M_s = (0.876 \times 8.83^2/8) = 8.54$

M_{Neg} (AB) $= 4.4^{kft}$ It is all Negative Mom & Min Positive Steel

M_{Neg} (AC) $= 4.4$

Mom. (Pos) AC $= (8.54 - 4.4) = 4.14^{kft}$

$d_{eff} = (10 - 2 - 0.5) = 7.5''$

$$A_{s_1} = \frac{4.4 \times 12}{24 \times 0.88 \times 7.5}$$

$= 0.33$

Use # 5 @ ~~8~~ 12", $A_s = \cancel{0.47}$ 0.31

Use # 5 @ 8" (Neg. Steel)

FLOOD CONTROL DISTRICT OF MARICOPA COUNTY

PROJECT 43rd Ave. Basin PAGE 8 OF

DETAIL Outlet Strct. COMPUTED KNH DATE Aug 98

CHECKED BY DATE

Check wall Section at the Box:

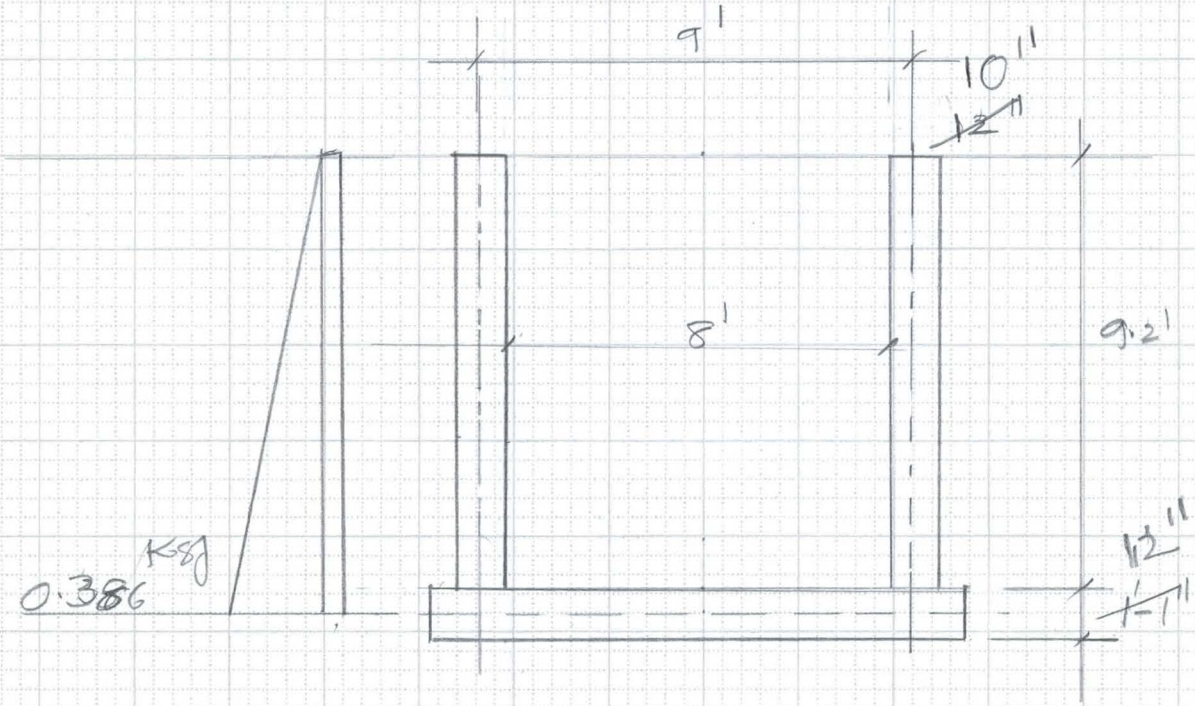

$H_t = \left(9.2 + \frac{1.08}{2}\right) = 9.74'$

$P_{re} = 0.12 \times 0.33 \times 9.74$
$= 0.386$ Ksf

$P = \left(\frac{0.386}{2} \times 9.74\right) = 1.88^K$

$M_{cant} = 1.88 \times \frac{9.74}{3} = 6.1$

Wt. of walls: $[(1.0 \times 9.74) 0.15] 2 = 2.92^K$

$w/ft = \frac{2.92}{9} = 0.324$ K/ft

$M_s = 0.324 \times 9^2/8 = 3.28$ K'ft

FLOOD CONTROL DISTRICT OF MARICOPA COUNTY

PROJECT 43rd Av. Basin PAGE 9 OF

DETAIL Outlet Str. COMPUTED KVH DATE Aug/98

CHECKED BY DATE

Check As a Retaining wall:

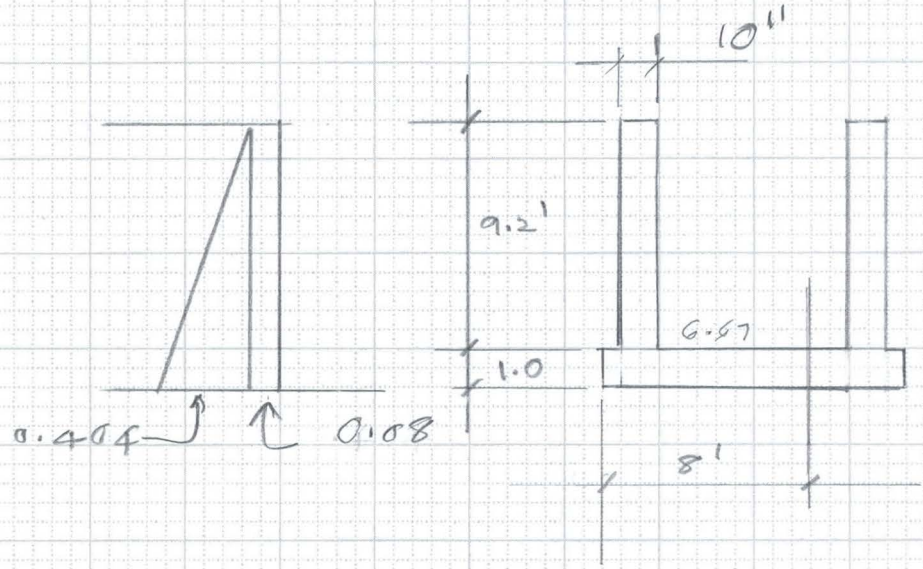

Try 8' ftg width for pr. Distribution

$H_t = 10.2'$ $\quad p_{re} = (0.12 \times 0.33 \times 10.2) = 0.404$ KSF

$p_{rs} = 0.12 \times 0.33 \times 2 = 0.08$

$P_e = \left(\frac{0.404}{2}\right) 10.2 = 2.06$ K

$P_s = 0.08 \times 10.2 = 0.82$ K

$M_{OT} = \left(2.06 \times \frac{10.2}{3}\right) + \left(0.82 \times \frac{10.2}{2}\right) = (7.0 + 4.2) = 11.2$

M_{STB}: $\quad W_{wall} = (0.833 \times 9.2)\, 0.15 = 1.15$ K

$W_{ftg.} = (8 \times 1 \times 0.15) = 1.20$

$W_{soil} = [0.5 \times (9.2 + 2)\, 0.12] = 0.67$

3.02 K

FLOOD CONTROL DISTRICT OF MARICOPA COUNTY

PROJECT 43rd Av. Basin PAGE 10 OF ____
DETAIL Outlet Str. COMPUTED KNH DATE Aug. 98
CHECKED BY ____ DATE ____

Include 2' Surch. as there will be Some Infln.

$P_{rs} = (0.12 \times 0.33 \times 2') = 0.08^{ksf}$

$P_s = 0.08 \times 9.74 = 0.78^{k}$

$M_{1surch} = (0.78 \times \frac{9.74}{2}) = 3.8^{k/ft}$

$M_{tot} = (6.1 + 3.8) = 9.9^{k/ft}$

$d_{eff} = (12 - 2.5) = 9.5''$

$A_s = \frac{9.9 \times 12}{24 \times 0.88 \times 9.5}$

$= 0.6 \text{ in}^2$

Try 10" wall

$d_{eff} = (10 - 2.5) = 7.5''$

$A_s = \frac{9.9 \times 12}{24 \times 0.88 \times 7.5}$

$= 0.75 \text{ in}^2$

#6 @ 6", $A_s = 0.88$

Shear check:

$V = (1.88 + 0.78) = 2.66^{k}$

$b = 12, \quad d = 7.5$

$v = \frac{2.66 \times 1000}{12 \times 7.5} = 29.5 \text{ psi}$

$v_c = 0.95\sqrt{f'c} = 0.95\sqrt{3000} = 52 \text{ psi}$

Wt. of 10" wall: $(\frac{10}{12} \times 9.74) \, 0.15 \times 2 = 2.44^{k}$

$wt/ft = \frac{2.44}{9} = 0.271^{k/ft}$

$M_s = (0.271 \times 9^2/8) = 2.75^{k/ft}$

FLOOD CONTROL DISTRICT OF MARICOPA COUNTY

PROJECT 43rd AVE. Basin PAGE 11 OF

DETAIL Outlet Str. COMPUTED KVH DATE Aug/98

CHECKED BY DATE

$M_{STB} = (1.15 \times 7.09) + (1.2 \times 4) + (0.67 \times 7.5)$

$= (8.15 + 4.8 + 5.03) = 17.98$

$X_R = (17.98 - 11.2)/3.02 = 2.25'$

$e = (\frac{8}{2} - 2.25) = 1.75$

$\frac{b}{6} = \frac{8}{6} = 1.33'$ $e > \frac{b}{6}$ ∴ Therefore Triag. fr. of Resultant outside Mid Third

$X_R = 2.25 = m$

$p_t = \frac{2R}{3m} = \frac{2 \times 3.02}{3 \times 2.25} = 0.89^{ksf}$

Say UDL of 0.89^{ksf}

$M_S = 0.89 \times 8.83^2/8 = 8.67$

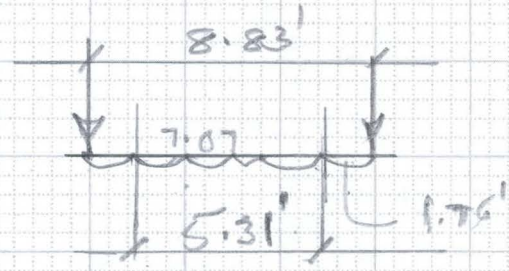

FLOOD CONTROL DISTRICT OF MARICOPA COUNTY

PROJECT 43rd Ave. Basin PAGE 12 OF

DETAIL Outlet Structure COMPUTED KVH DATE Sept. 78

CHECKED BY DATE

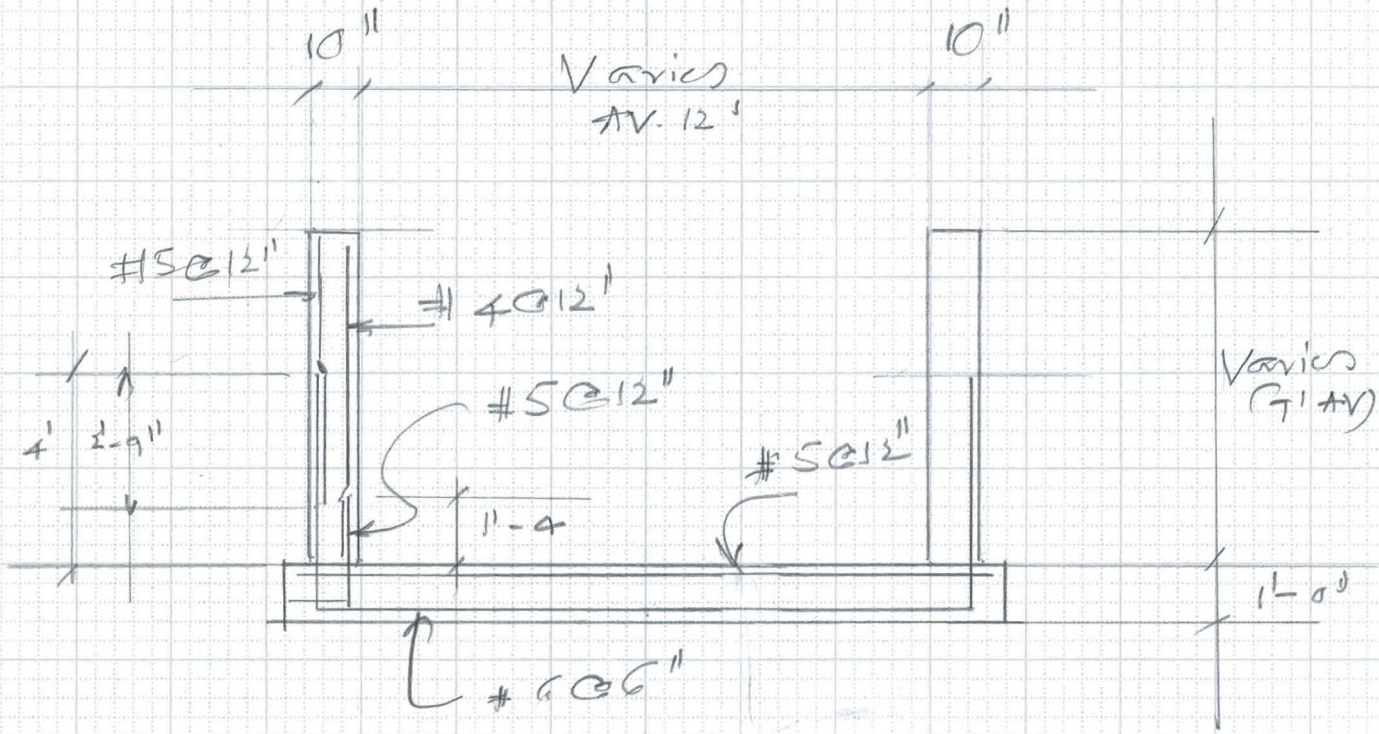

FLOOD CONTROL DISTRICT OF MARICOPA COUNTY

PROJECT 43rd Ave. Basin PAGE 13(A) OF

DETAIL COMPUTED KVH DATE Jan/98

CHECKED BY DATE

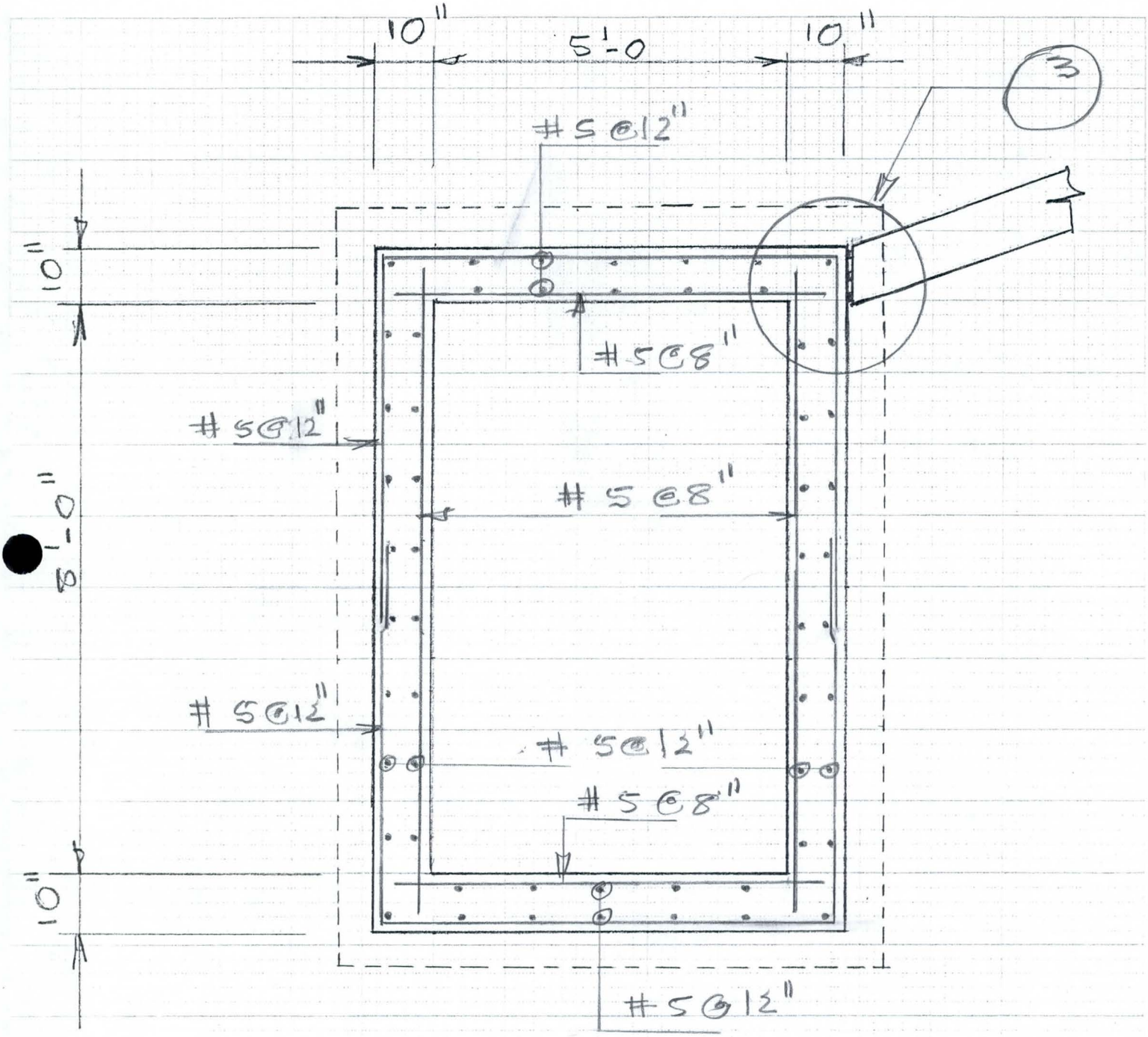

PLAN

Scale: 1/2" = 1'-0"

(66)

FLOOD CONTROL DISTRICT OF MARICOPA COUNTY

PROJECT 43rd AVE. Basin PAGE 13(B) OF

DETAIL Out Let STR. COMPUTED KVH DATE Sept. 98

CHECKED BY DATE

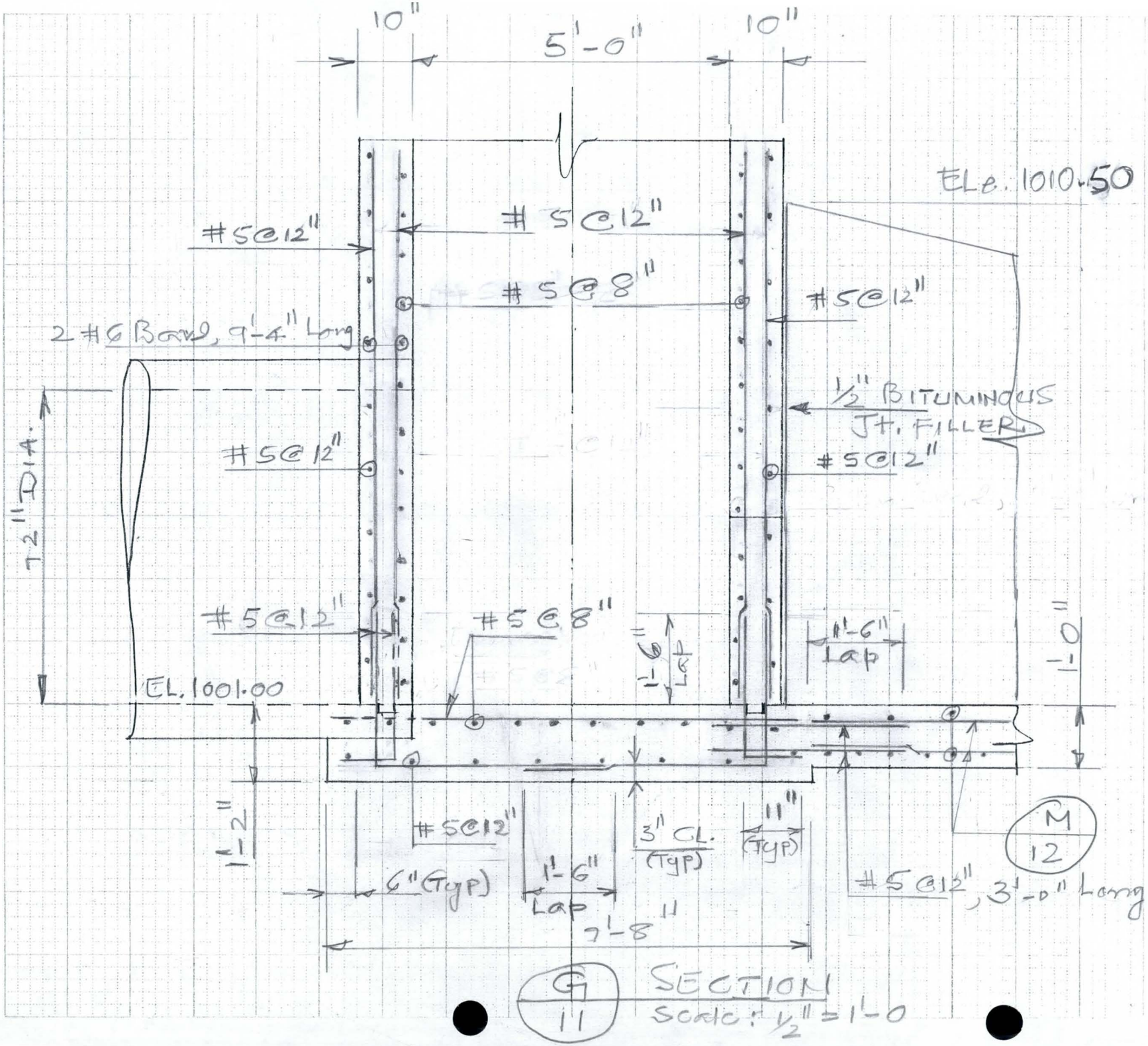

FLOOD CONTROL DISTRICT OF MARICOPA COUNTY

PROJECT 43rd Ave. Bonsin PAGE 14 OF

DETAIL Outlet Str. COMPUTED KVH DATE Sept. 98

CHECKED BY DATE

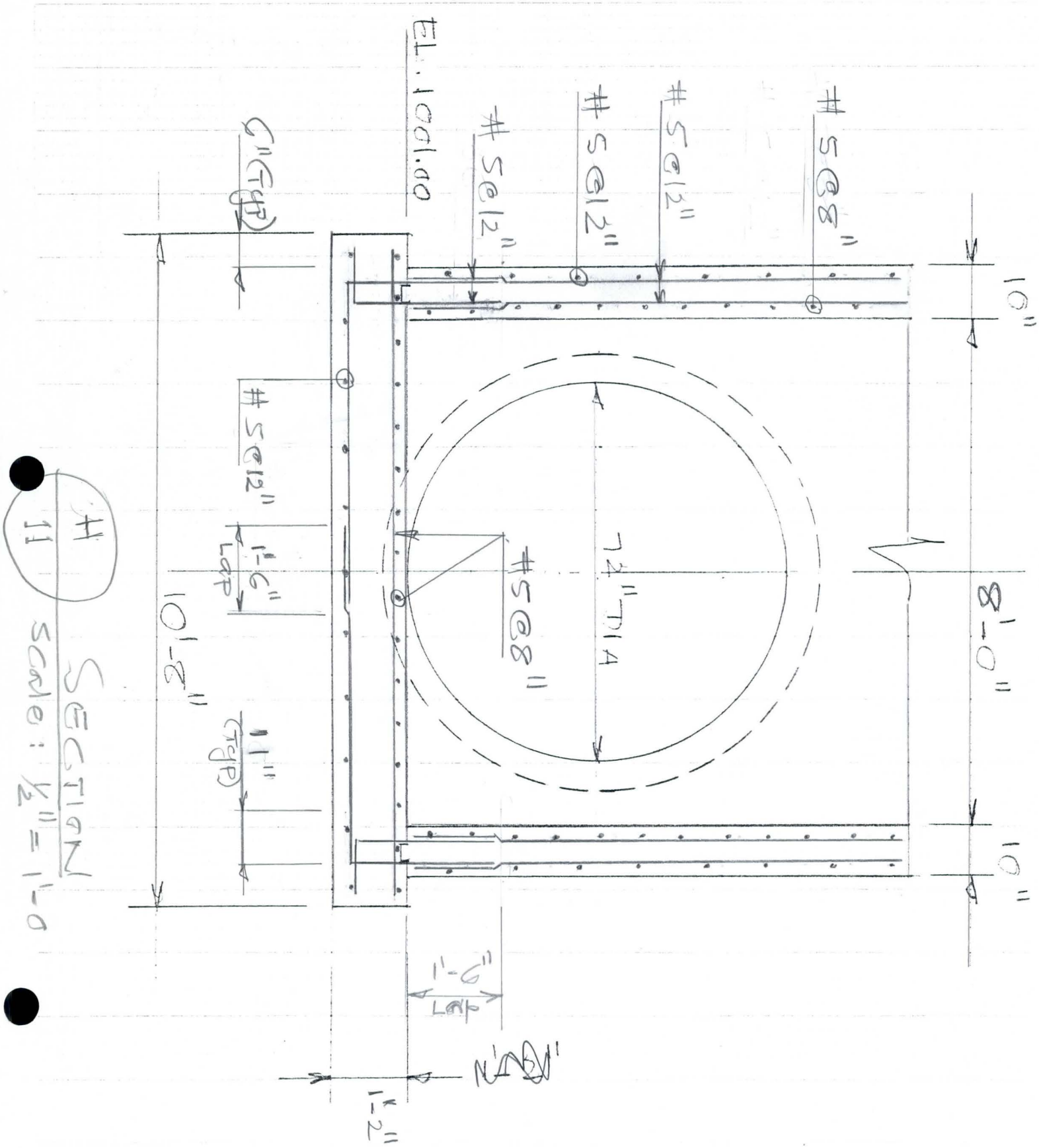

H
11
SECTION
Scale: 1/2" = 1'-0

FLOOD CONTROL DISTRICT OF MARICOPA COUNTY

(68)

PROJECT 43rd Ave. Basin PAGE 15 OF

DETAIL Outlet Str. COMPUTED KVH DATE Sept. 98

CHECKED BY DATE

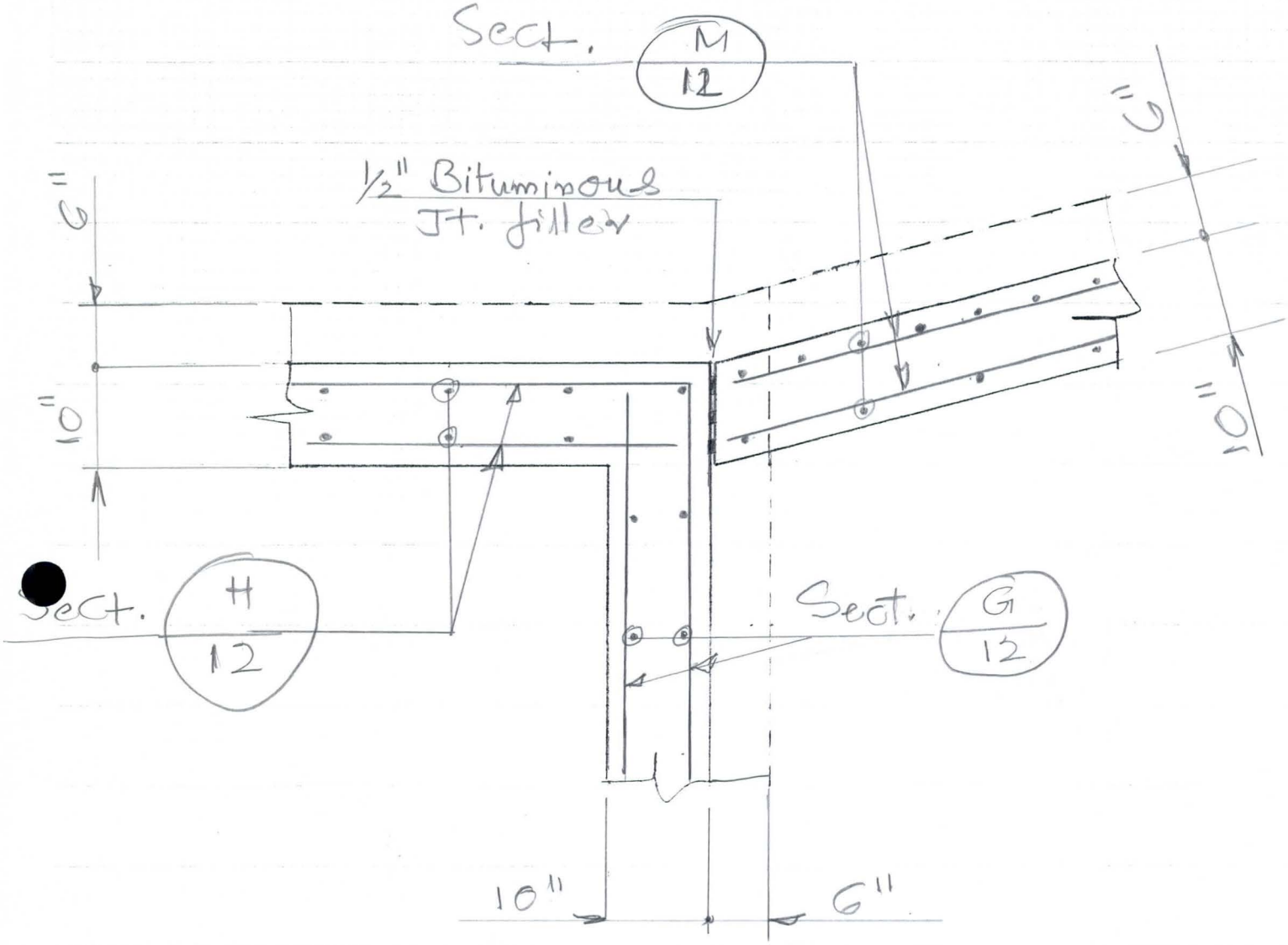

B DETAIL

Scale: 3/4" = 1'-0"

FLOOD CONTROL DISTRICT OF MARICOPA COUNTY

(69)

PROJECT 43rd Ave. Basin PAGE 16 OF

DETAIL Outlet Str COMPUTED KrH DATE 8/98

CHECKED BY DATE

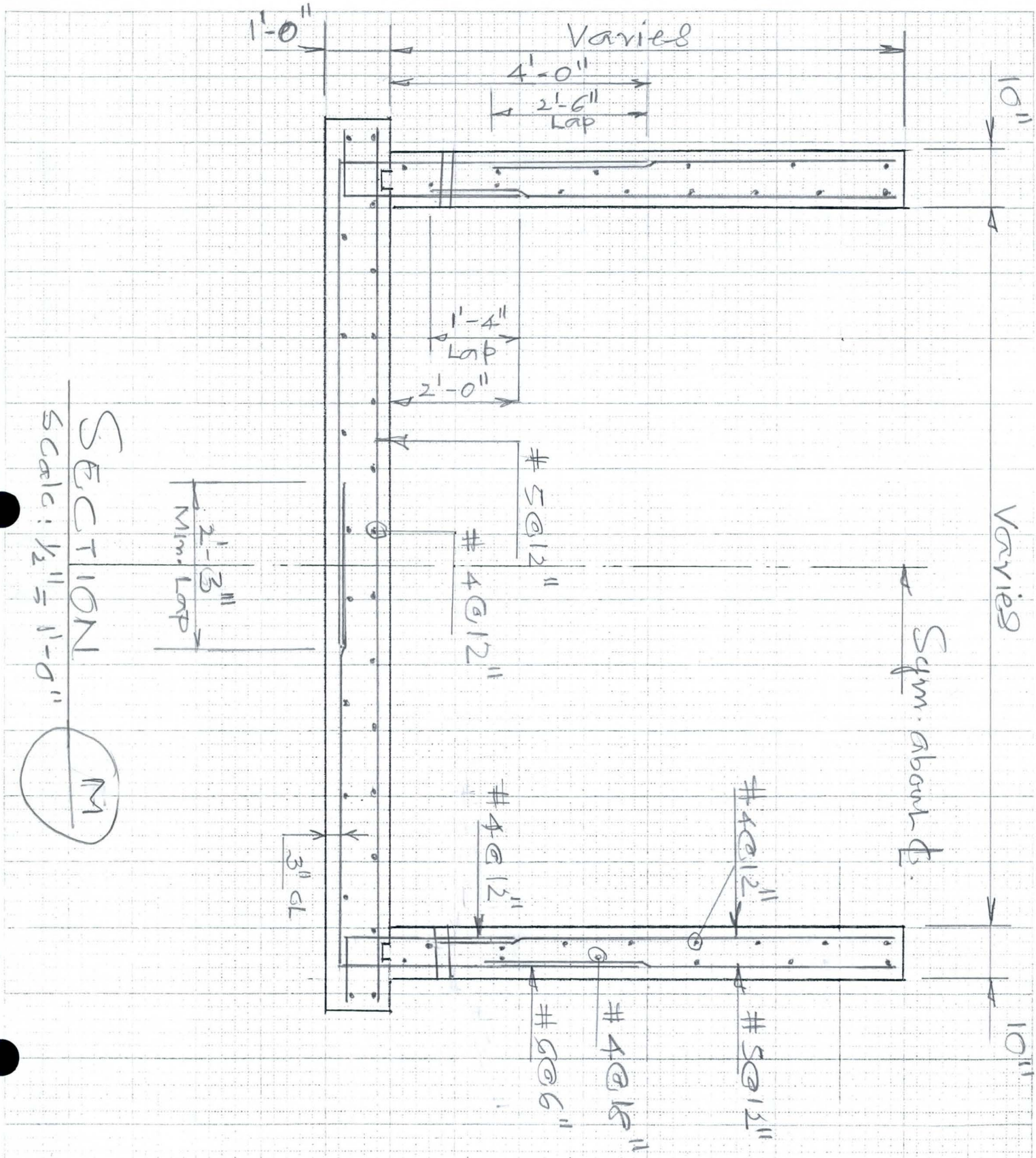

FLOOD CONTROL DISTRICT OF MARICOPA COUNTY

PROJECT 43rd Ave Basin PAGE 17 OF

DETAIL Outlet STR. COMPUTED KWH DATE Aug/98

CHECKED BY DATE

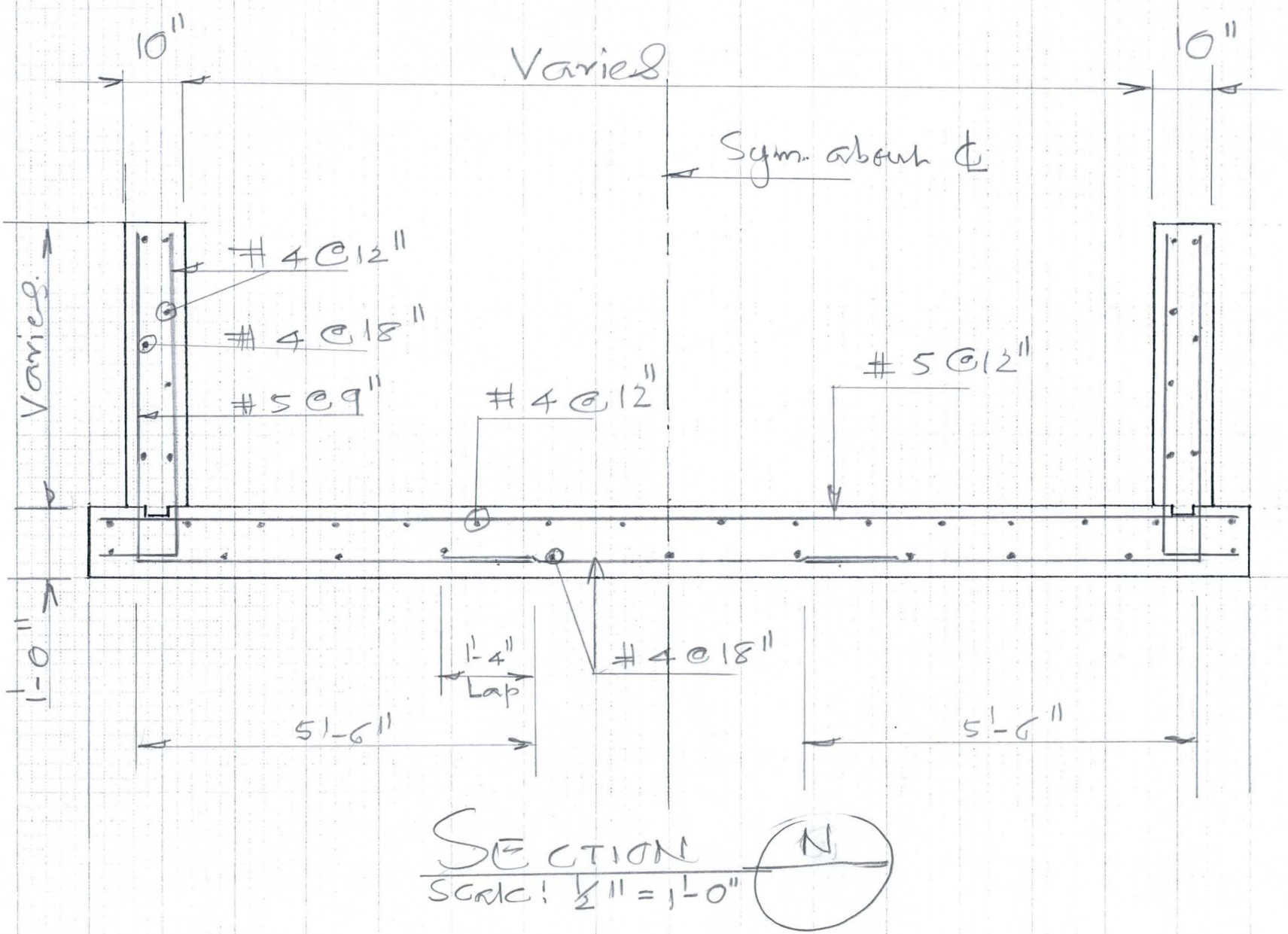

SECTION

SCALE: 1/2" = 1'-0"

N

FLOOD CONTROL DISTRICT OF MARICOPA COUNTY

PROJECT 43rd Ave. Basin PAGE ____ OF ____

DETAIL Out Let Str. COMPUTED KNH DATE 2/99

Pr & Reinf. Check CHECKED BY ____ DATE ____

Check Reinf - Long Span:

Check Strip Just Above the 36" Dia. pipe

$Ht = (19.6 - 3) = 16.6'$

At Rock pr at 60 psf

$Pr = (0.06 \times 16.6) = 0.996$ ksf

$M_{long.sp} = 0.996 \times 8.83^2/10 = 7.77$ k/ft

$$A_s = \frac{7.77 \times 12}{24 \times 0.88 \times 7.5} = 0.59$$

Using an Av. Strip between 36" pipes:

$Ht = (19.6 - 5) = 14.6'$

$Pr = (0.06 \times 14.6) = 0.876$ ksf

Using Clear Span = 8.0'

$M = 0.876 \times 8^2/10 = 5.61$ k/ft

$$A_s = \frac{5.61 \times 12}{24 \times 0.88 \times 7.5} = 0.43 \text{ in}^2$$

Use #5 @ 8", $A_s = 0.47 \text{ in}^2$

∴ Use #5 @ 8" Inside Horz. Steel &

#5 @ 12" Outside Horz. Steel.

FLOOD CONTROL DISTRICT OF MARICOPA COUNTY

PROJECT 43rd Ave Basin PAGE ____ OF ____
DETAIL Out Let STR. COMPUTED KVH DATE 2/99
Pr & Reinf. Check CHECKED BY ____ DATE ____

Wall Pr & Reinforcing:

$Ht = (1020.6 - 1001.00) = 19.6'$

$Pr = (0.12 \times 0.33 \times 19.6) = 0.776$ Ksf

Span Short Direction = 5.53' C to C

Max Pr. at the Base = 0.776

Short Span

$M_{AB} = 0.776 \times 5.83^2/10$

$= 2.64$ Kft

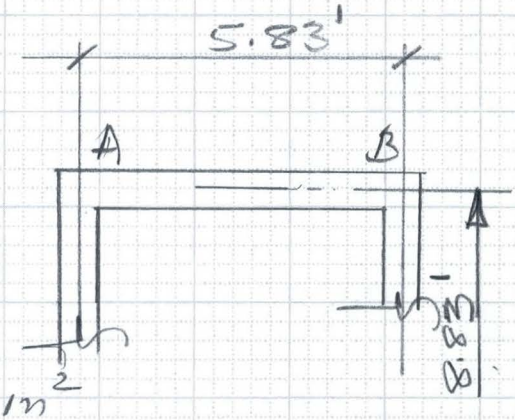

$d_{eff} = (10'' - 2 - 0.5) = 7.5''$

$As = \dfrac{2.64 \times 12}{24 \times 0.88 \times 7.5} = 0.2 \text{ in}^2$

Min Steel #5@12"

Check using At Rest pr:

$K_{active} = \left(\dfrac{1 - \sin 30}{1 + \sin 30}\right) = \dfrac{0.5}{1.5} = 0.33$

K At Rest $= (1 - \sin 30) = 0.50$

$Pr = (0.12 \times 0.5) = 0.06$ Eqt. fluid pr

$Pr_{Base} = (0.06 \times 19.6) = 1.18$ Ksf

$M_{AB} = 1.18 \times 5.83^2/10 = 4.01$ $As = \dfrac{4.01 \times 12}{24 \times 0.88 \times 7.5}$

$= 0.30 \text{ in}^2$

Min Steel #5@12"

FLOOD CONTROL DISTRICT OF MARICOPA COUNTY

PROJECT 43rd Ave. Basin PAGE 18 OF

DETAIL Panel Detail COMPUTED KVH DATE Aug 9.

Outlet Str. CHECKED BY DATE

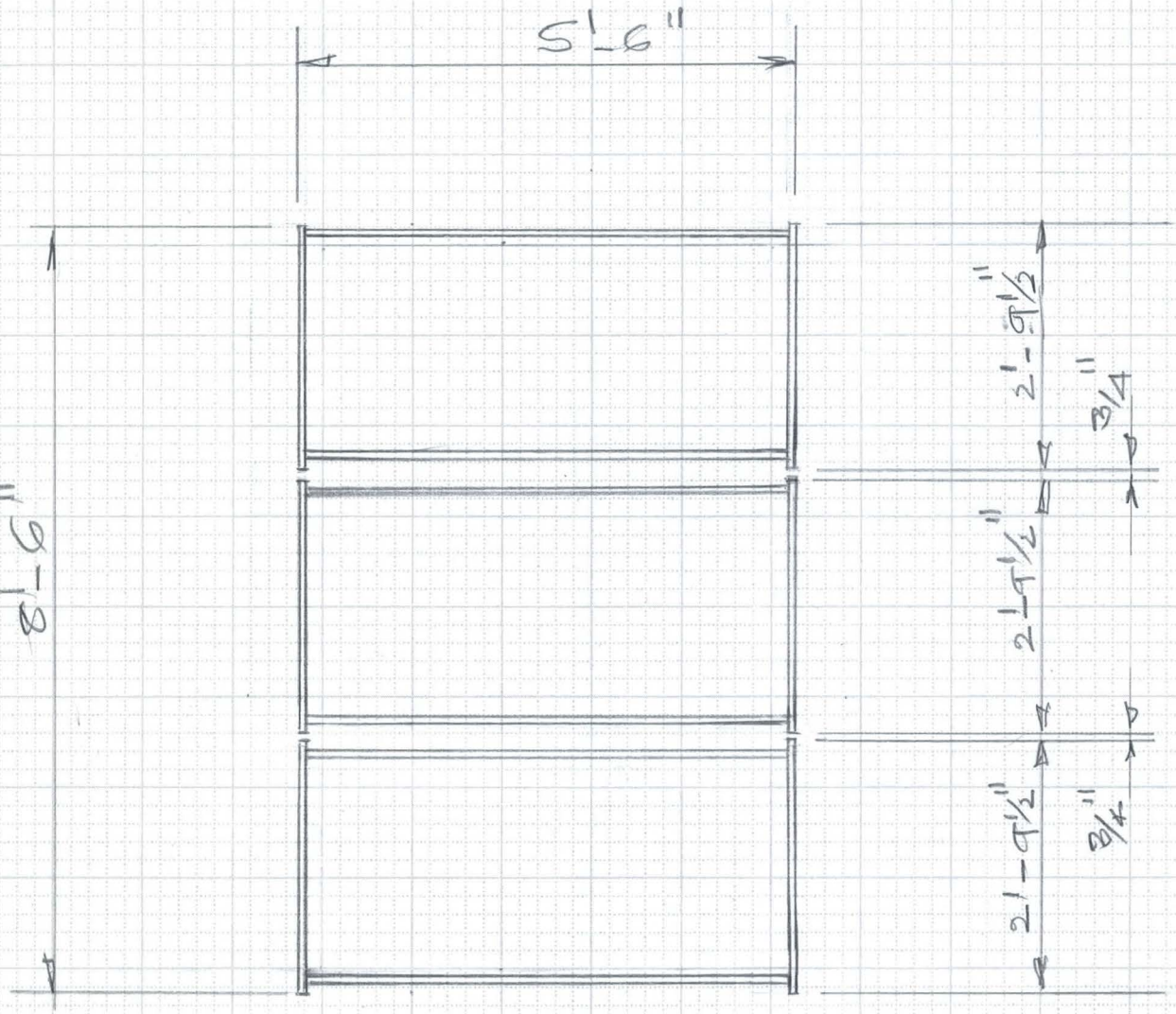

Plan View of Panels.

NTS

FLOOD CONTROL DISTRICT OF MARICOPA COUNTY

PROJECT 43rd Ave. Basin PAGE 19 OF

DETAIL Grate Detail COMPUTED KVH DATE Aug/92

Outlet Str. CHECKED BY DATE

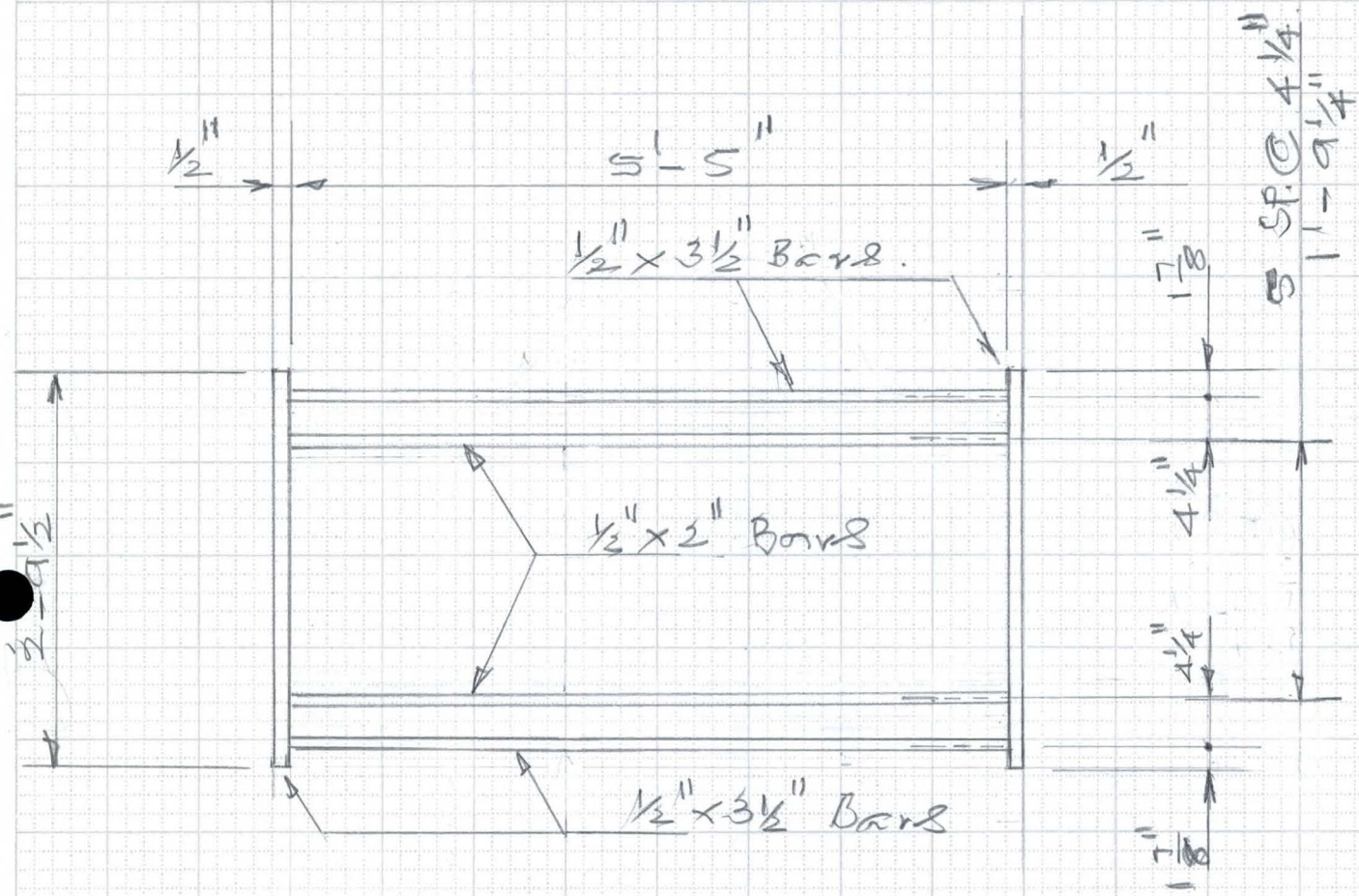

Panel Detail

NTS

FLOOD CONTROL DISTRICT OF MARICOPA COUNTY

PROJECT ~~Lake~~ 43rd Ave. Basin PAGE ___ OF ___

DETAIL Grate Bars COMPUTED KVH DATE 1/02

CHECKED BY ___ DATE ___

Check Grate Bar Spacing

AASHTO . Sect. 3.30

Tire Contact Area = 0.01P

P = wheel load = 16000 lbs

A = 0.01 x 16000 , A = 160 Sq in.

$\frac{L}{W} = \frac{1}{2.5}$ W = 2.5 L , 160 = L x W = $\frac{W}{2.5}$ x W

$(160 \times 2.5) = W^2$, W = 20"

No. of Bars @ 2½" o.c = $\frac{20}{2.5}$ = 8 Bars

Load per Bar = $\frac{16^K}{8}$ = 2^K

Clear Sp = 3.5'

C/C of Bearing Bars = 3.75'

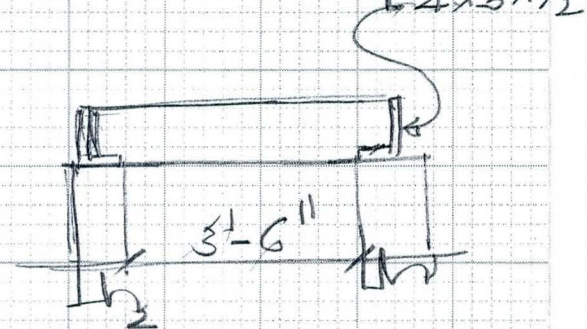

$M = \frac{PL}{4} = \frac{2 \times 3.75}{4} = 1.88^{KFL}$

M = f S,

Bars ½" x 3½ , $S = \frac{bd^2}{6} = \frac{0.5 \times 3.5^2}{6} = 1.02$

$(1.88 \times 12) = f \times 1.02$, f = 22.1 Ksi < 24 Ksi

6910-153 4-90

FLOOD CONTROL DISTRICT OF MARICOPA COUNTY

PROJECT Lace 43rd Ave

DETAIL Grate Detail

PAGE KVH OF

DATE DATE

COMPUTED

CHECKED BY

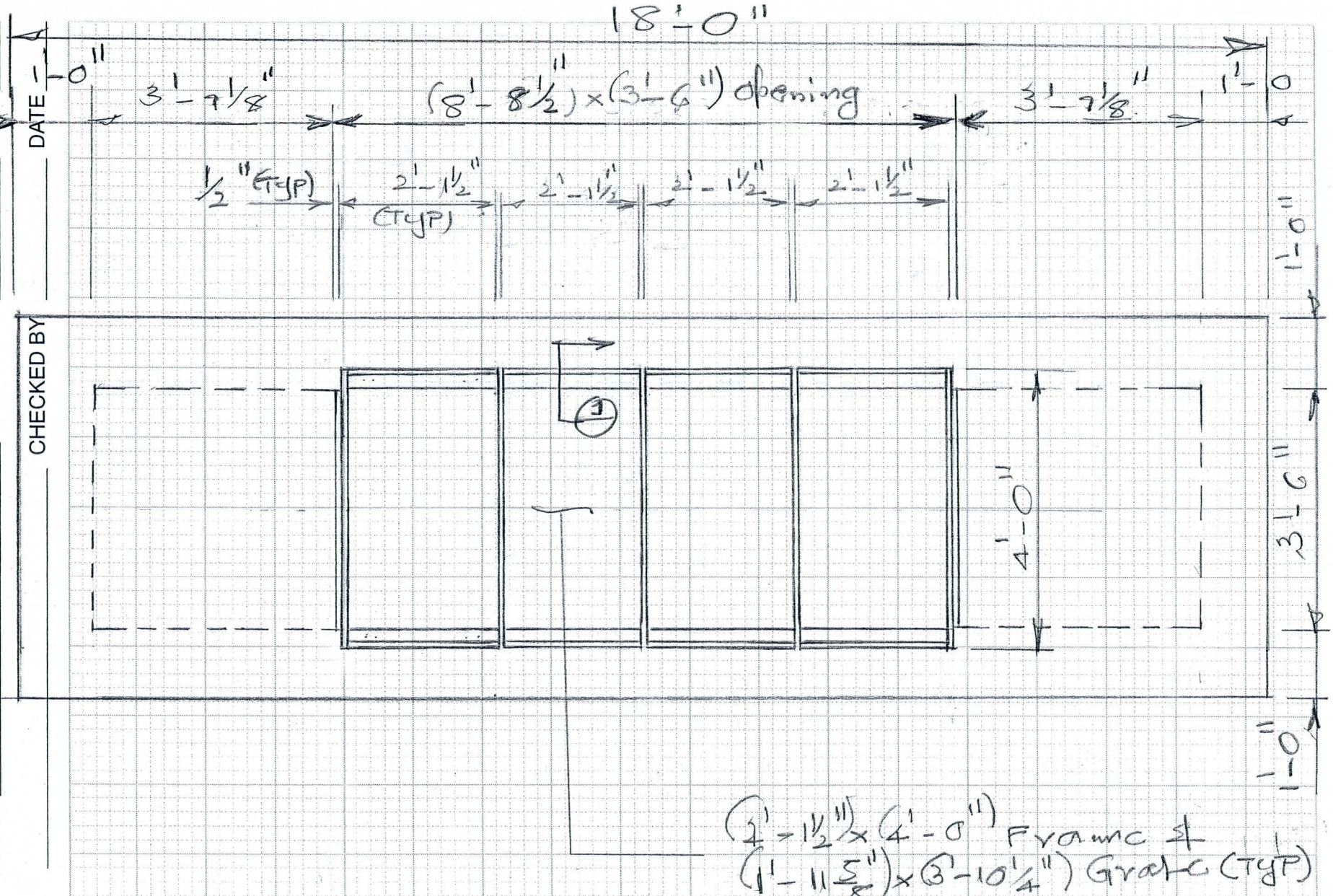

PLAN of Grate 8

Scale: 1/2" = 1'-0

6910-153 4-90

FLOOD CONTROL DISTRICT OF MARICOPA COUNTY

PROJECT ~~LAGE~~ 43rd Ave. PAGE ___ OF ___

DETAIL Junction Box COMPUTED KVH DATE 1/02

CHECKED BY ___ DATE ___

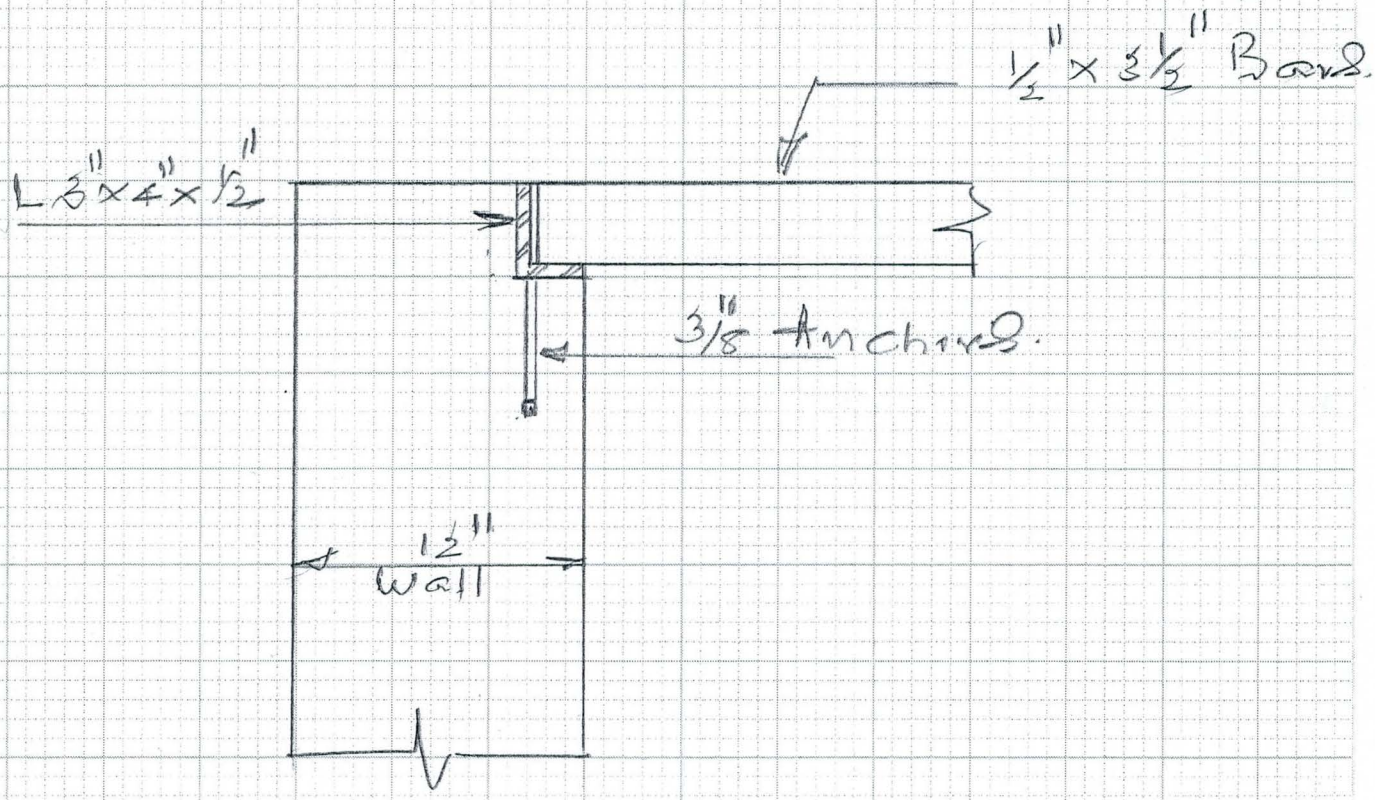

SECTION 1

Scale: 1½" = 1'-0

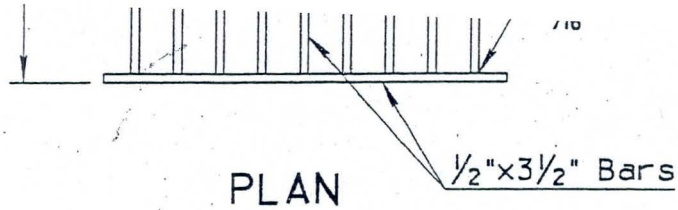

PLAN

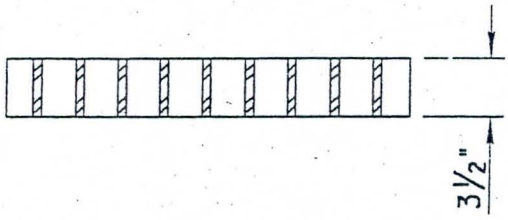

SECTION
GRATES TYPE LW-1 AND LW-2

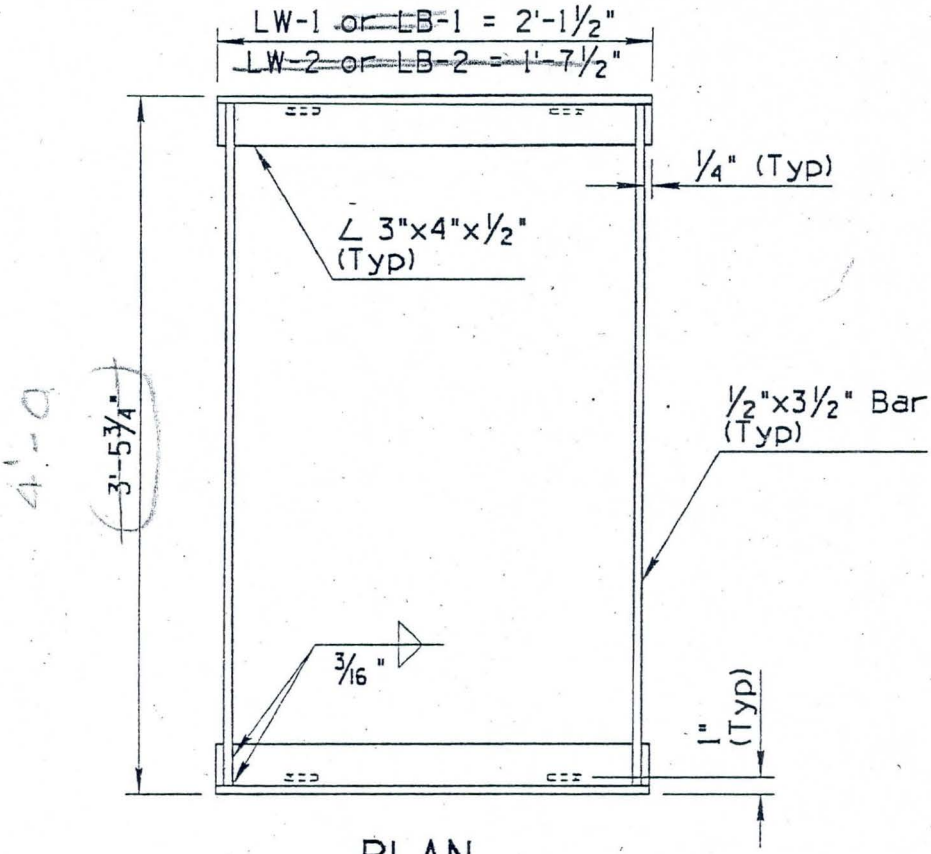

PLAN

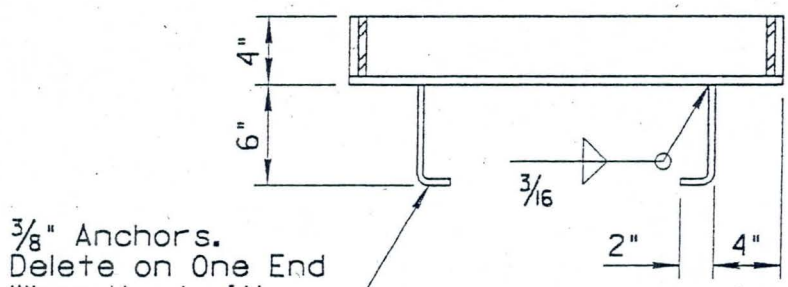

SECTION
FRAME

GR

3 1/2"

1/2"Φ Roc
Threade

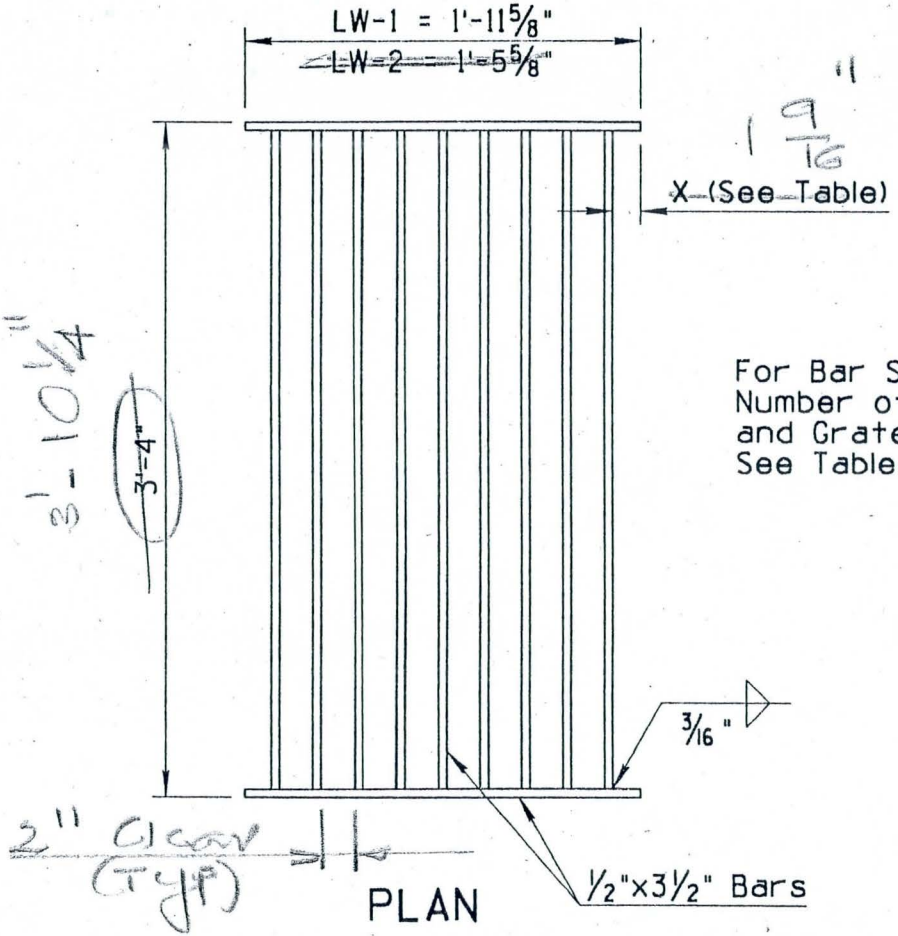

PLAN

For Bar Spacing, Number of Bars and Grate Opening, See Table.

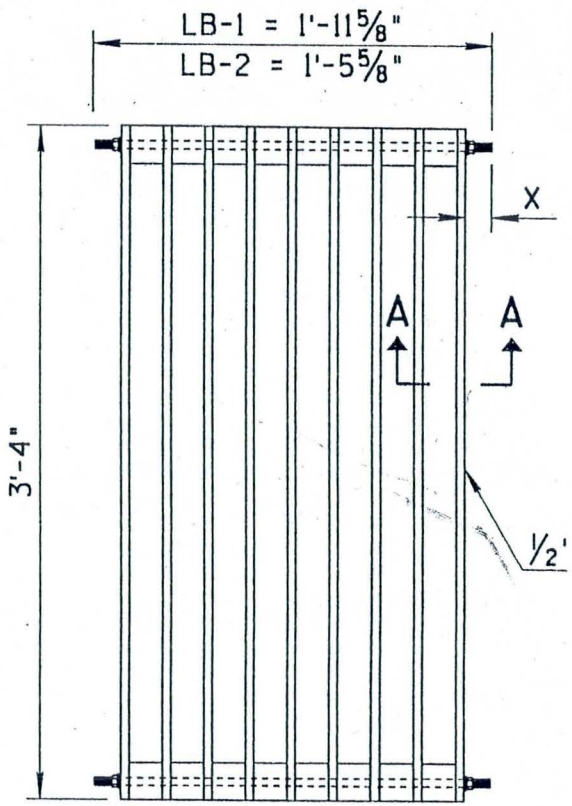

PLAN
GRATES TYPE LB-1 AND LB-

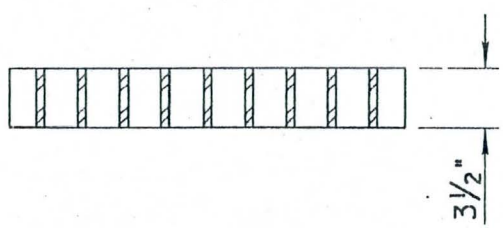

SECTION
GRATES TYPE LW-1 ~~AND LW-2~~

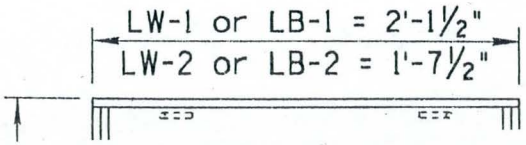

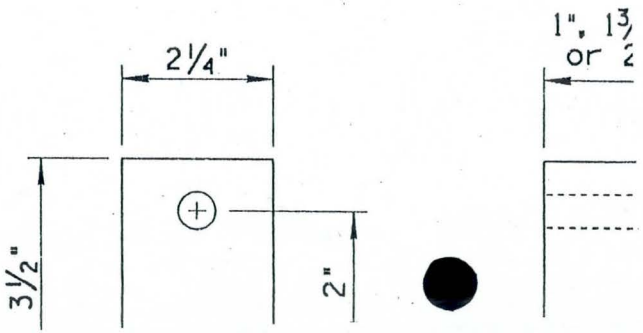

FLOOD CONTROL DISTRICT OF MARICOPA COUNTY

PROJECT 43rd Ave. Basin PAGE 20 OF

DETAIL Grate Detail COMPUTED KWH DATE July 98

Outlet Str. CHECKED BY DATE

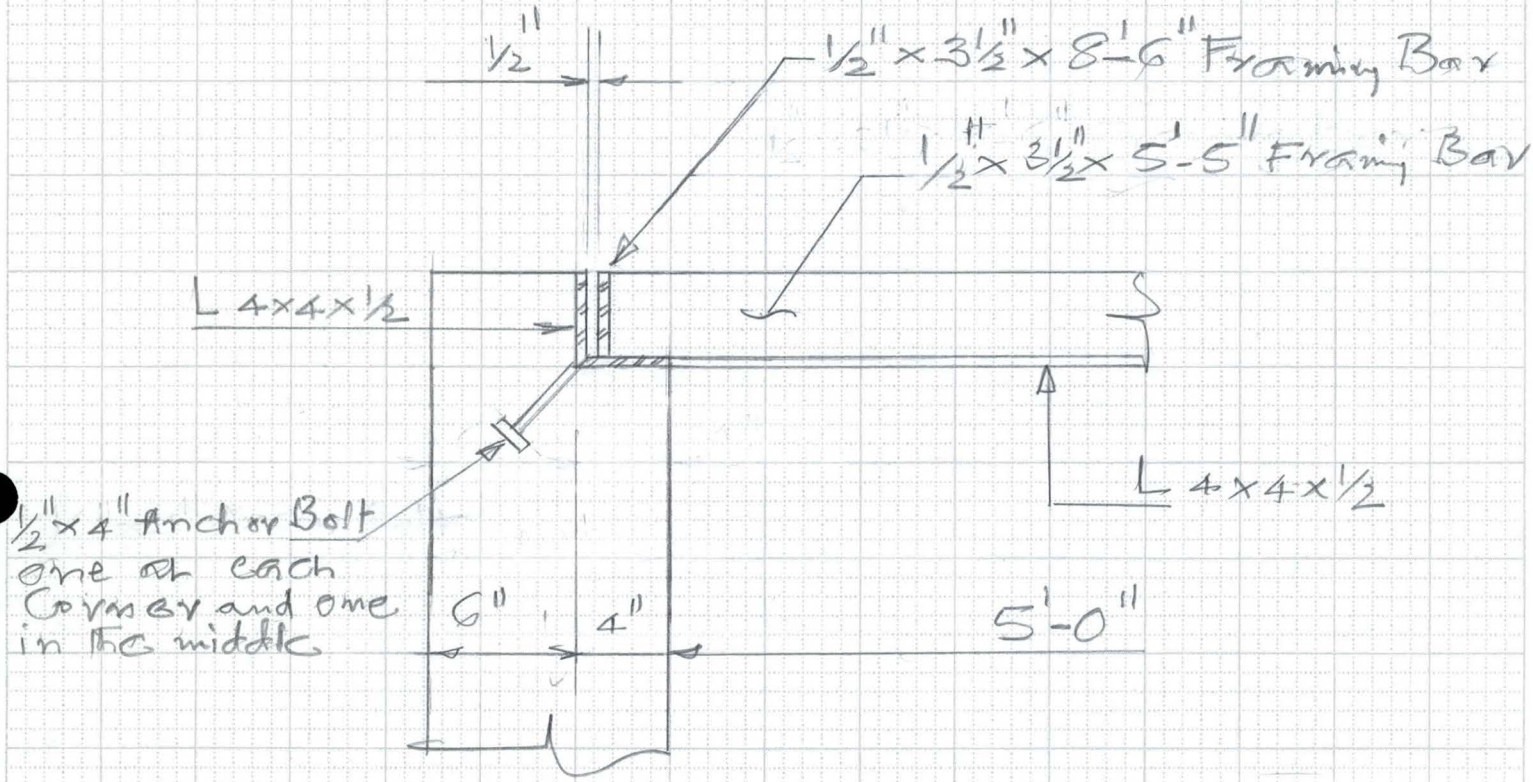

A Section
Scale: 1 1/2" = 1'-0"

FLOOD CONTROL DISTRICT OF MARICOPA COUNTY

(76)

PROJECT 43 AV. Basin PAGE 21 OF

DETAIL Grate Detail COMPUTED KVH DATE July 98

Outlet Str.

CHECKED BY DATE

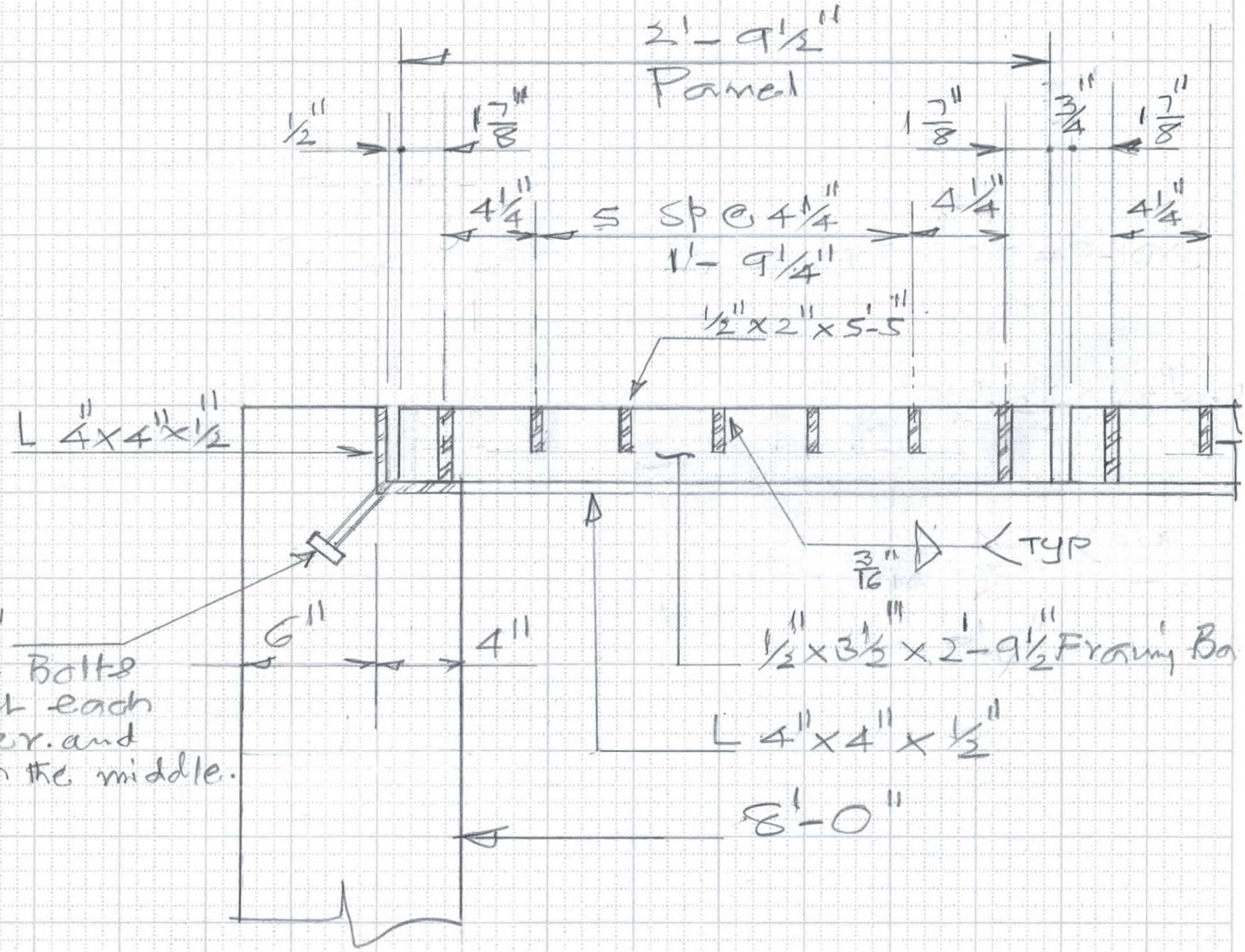

B Section

Scale: 1½" = 1'-0"

6910-153 4-90

FLOOD CONTROL DISTRICT OF MARICOPA COUNTY

PROJECT 43rd Ave. Basin PAGE 22 OF ____

DETAIL Grate Detail COMPUTED KVH DATE Aug 98

Outlet Str. CHECKED BY ____ DATE ____

Try Bar Spacing of 4" ± to reduce Panel wt.

7 Sp × 3.25 = 22.75" +

6 Sp × 4 = 24.00

~~2'~~ (2'.0) 4 = 8.0'

(2'-1") 4 = (8'-4) + 3/4" + 1/2" + 3/4" = 8'-6"

Using 5 Sp @ 4" = 20" = 1'-8"

Using 3 panels: 8.5/3 = 2.83, ≈ 2'-9"

7 Sp @ 4 1/4" = 29 3/4" = 2'-5 3/4"

(9.5 - 5.75) = 3.75"

3.75/2 = 1 7/8"

(1 7/8) 6 = 11.25"

(2'-5 3/4) 3 = 6'-17.25 8'-6"

(3/4") 2 = 1.50

30"

2-6

8'-6"

(2'-9 1/2") 3 = 6'-28.5

(3/4) 2 = 1.5

30"

2-6

8'-6"

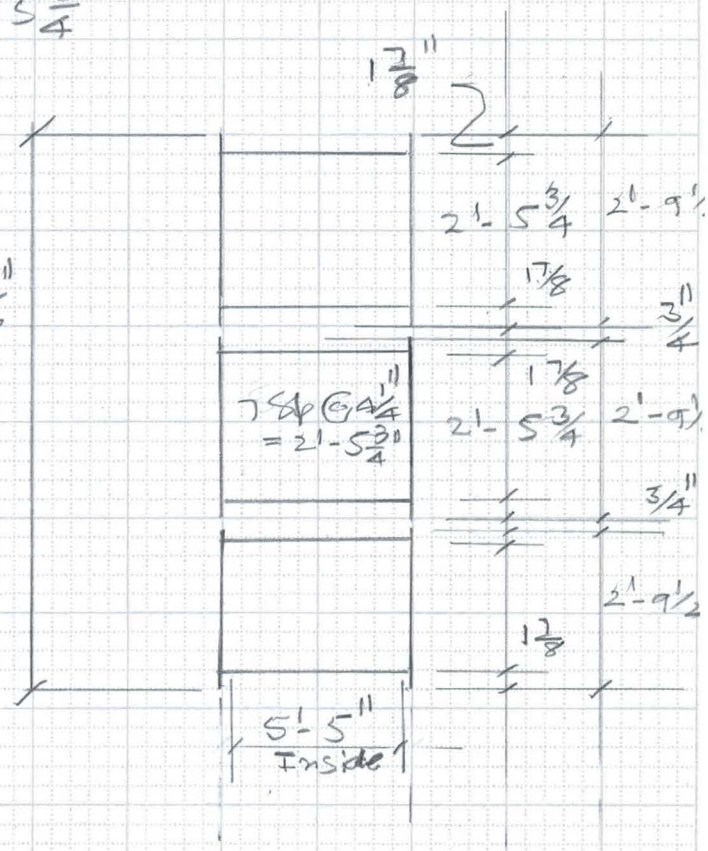

FLOOD CONTROL DISTRICT OF MARICOPA COUNTY

PROJECT 43rd Ave. Basin PAGE 23 OF

DETAIL Grate Detail COMPUTED KWH DATE Aug 95

Outlet Struct CHECKED BY DATE

Wt Panel (2'-9½") x 5'-5

$L_1 = 2'-9\frac{1}{2}'' = 2.79'$

$L_1 = \left(\frac{0.5''}{12} \times \frac{3.5}{12} \times 2.79\right) 490 \times 2 = 33$ lbs

$L_2 = \left(\frac{0.5}{12} \times \frac{3.5}{12} \times 5.42\right) 490 \times 2 = 65$

$L_3 = \left(\frac{0.5}{12} \times \frac{2}{12} \times 5.42\right) 490 \times 8 = \frac{148}{246}$ lbs

No. of Bars

Heavy bar not too Heavy

Total of 3 panels, Stg ±¼" o.c

FLOOD CONTROL DISTRICT OF MARICOPA COUNTY

PROJECT 43rd Ave. Basin PAGE 24 OF ____
DETAIL Concrete Qty COMPUTED KVH DATE Aug 98
Spillway CHECKED BY ____ DATE ____

Concrete Qty:

Spillway walls N & South

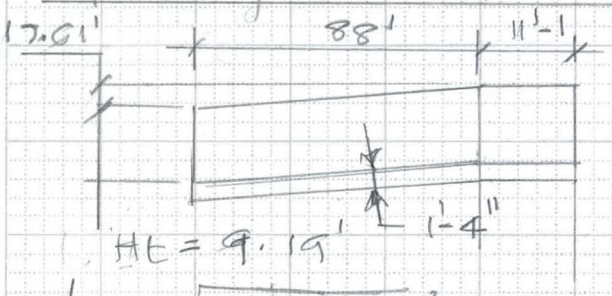

Ht = 9.19'

$L = \sqrt{88^2 + 17.61^2} = 89.75'$

Walls: $\left(\frac{11}{12} \times 9.19 \times 88.0 \times 2\right) = 1482.7$ cft — 2 Nos — 1482.7 cft

Ht = (1024.1 − 1014.2) = 9.9'
(1023.38 − 1014.19) = 9.19

Av. Ht = (9.9 + 9.19)/2 = 9.55'

$\left(\frac{11}{12} \times 9.55 \times 11.083\right) 2 = 194.0$ — 194.0

Base Slab; w = (31.83) + (0.917 × 2) + 1 = 34.67'

(34.67 × 1.33 × 89.75) = 4138.5 — 4138.5

(34.67 × 1.33 × 11.083) = 511.1 — 511.1

ADOT Box: (10 × 5)

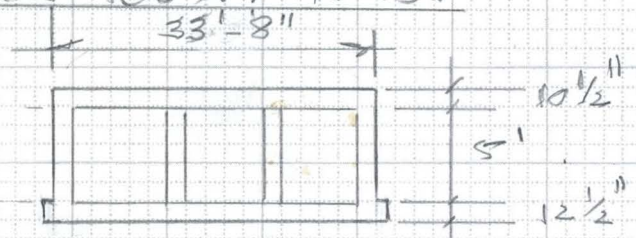

Top slab = $33.67 \times \frac{10.5}{12} = 29.46$ sq ft

Bot. Slab = $34.67 \times \frac{12.5}{12} = 36.12$

Walls: $= \left(\frac{11}{12} \times 5\right) 4 = 18.33$ — 4 Nos.

83.91

Qty = (83.91 × 15) = — 1258.7

7585.0 cf

FLOOD CONTROL DISTRICT OF MARICOPA COUNTY

PROJECT 43rd Ave Basin PAGE 25 OF

DETAIL Concrete Qtys COMPUTED KVH DATE 8/98

Spillway CHECKED BY DATE

Head walls on Box

$1014.20 + 5.0 + \frac{10.5}{12} = 1020.08$

$Ht = (1025.6 - 1020.08) = 5.52'$

$\left[\left(\frac{11}{12} \times 5.52\right) 33.67\right] 2 =$ cft 340.7

Nos.

Box for Grate:

N & S. walls: $(1021.5 - 1014.30) = 7.2'$

$\left(\frac{11}{12} \times 7.2 \times 5.0\right) 2 = 66$

End wall: Av. Ht $= (7.2 + 5)/2 = 6.1$

$\left(\frac{11}{12} \times 6.1 \times 33.67\right) = 188.3$

Base slab: $\left(5. + \frac{11}{12} + 0.5\right) = 6.42'$

width $= 34.67'$

Qty: $\left(6.42 \times \frac{12.5}{12}\right) 34.67 = 231.9$

486.2 486.2

End wall (Down stream)

$Ht = (1004.26 - 996.58) + 2.5 = 10.18'$

$\left(\frac{10}{12} \times 10.18\right) 31.83 =$ 270.0

Chute Blks: $A = \left(\frac{0.75 + 2.0}{2}\right) \times 3 = 4.125'$

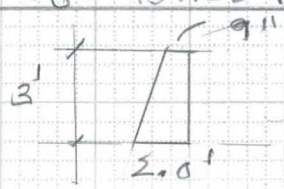

End Blk: $(4.125 \times 1.042) 8 = 33$

Mid Blk: $(4.125 \times 4.25) 24 = 420.8$

453.8 453.8

1550.7

FLOOD CONTROL DISTRICT OF MARICOPA COUNTY

PROJECT 43rd Ave. Basin PAGE 26 OF
DETAIL Conc. Qty's COMPUTED KVH DATE 8/98
Out Let Str. CHECKED BY DATE

Out Let Str.

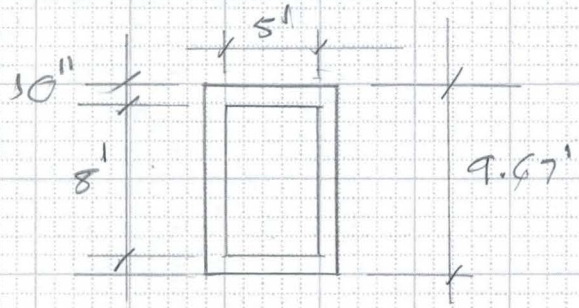

5' walls: $(1020.6 - 1000.5) = 20.1' = Ht$

$(20.1 \times \frac{10}{12} \times 5)\,2 =$ 167.5 cft

8' wall w/ 72" pipe: $D = (6.0 + 6'' + 6'') = 7.0'$

$A_1 = (9.67 \times 20.1) = 194.37$

$A_2 = 3.14 \times \frac{7^2}{4} = 38.47$

$A_{net} = (194.37 - 38.47) = 155.9$

$Qty = (155.9 \times \frac{10}{12}) =$ 129.9

8' wall w/ Tr. Rock

$A_1 = 194.37$ $D = (3 + 4'' + 4'') = 3.67'$

$A_2 = (3.14 \times \frac{3.67^2}{4})\,2 = 21.15$
(No 8)

$A_{net} = (194.37 - 21.15) = 173.22$

$Qty = (173.22 \times \frac{10}{12}) =$ 144.4

Base Slab: Assume $t = 1'-2''$

$(10.67 \times 7.67 \times 1.17) =$ 95.8

537.6

FLOOD CONTROL DISTRICT OF MARICOPA COUNTY (82)

PROJECT 43rd Av. Basin PAGE 27 OF

DETAIL Conc. Qty's COMPUTED KVH DATE 8/98

Outlet Str. CHECKED BY DATE

Channel Section

Base Slab:

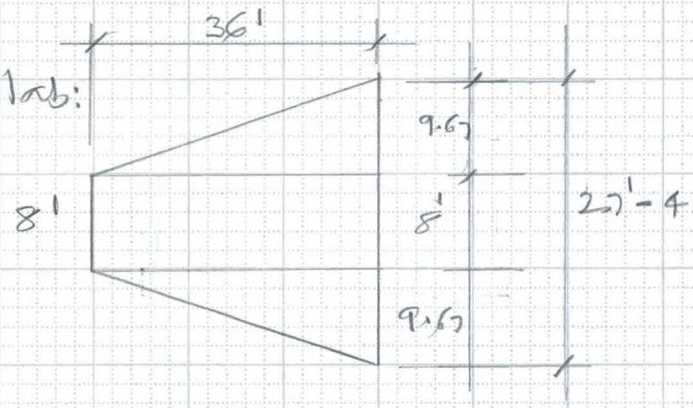

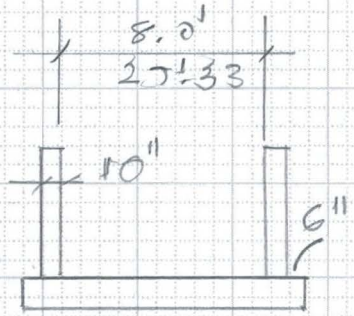

$Ht = (1010.2 - 1001.0) = 9.2'$

$b_1 = (8 + \frac{10}{12} + \frac{10}{12} + 1.0) = 10.67$

$b_2 = (27'.33 + 2.67) = 30.0$

$A = \frac{1}{2}(10.67 + 30.0)\,36 = 732.06$ sqft

$Qty = 732.06 \times 1.0 = 732.1$ cft

Key: $(2 \times \frac{10}{12})\,27.33$

45.6

777.7 | 777.7 cft

Walls: $L = \sqrt{36^2 + 9.67^2} = 37.28'$

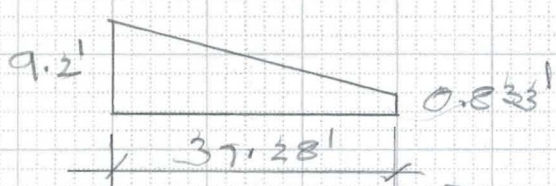

$A = \frac{(9.2 + 0.833)}{2}\,37.28 = 187.02$

$Qty = (187.02 \times \frac{10}{12})\,2$ ← Nos = 311.7

1089.4

Total = (7585 + 1550.7 + 537.6 + 1089.4)

= 10762.7 cft = 398.6 cy | 398.6 cy

FLOOD CONTROL DISTRICT OF MARICOPA COUNTY

PROJECT 43rd Ave. Basin PAGE 28 OF

DETAIL Conc Qty COMPUTED DATE

Approx Chk. CHECKED BY DATE

Approx. Check:

Outlet STR:

Walls: (9.67 x 6.67) - (8 x 5) = 24.5 sqft

Ht = (1020.6 - 1000.5) = 20.1

Openings: 3.14 x 7²/4 = 38.5

(3.14 x 3.5²/4) 2 = 19.2

57.7

Qty = (24.5 x 20.1) = 492.5 cft

Deduct: (57.7 x 10/12) = - 48.1

444.4 cft

Base Slab: (7.67 x 10.67 x 1.17) = 95.8

Actual = 537.6 ≈ 540.2 ∴ ok 540.2

Walls:

b1 = (8 + 1.67 + 1) = 10.67

b2 = (27.33 + 1.67 + 1) = 30

Av. b = (30 + 10.67)/2 = 20.34

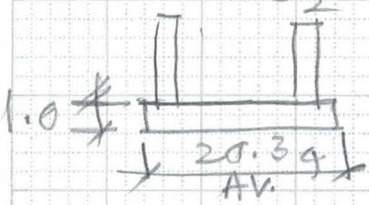

Qty = (20.34 x 1.0) 36 = 732.2

wall L = 37.28 [((0.833 + 9.2)/2) 37.28 x 0.833] 2 311.6

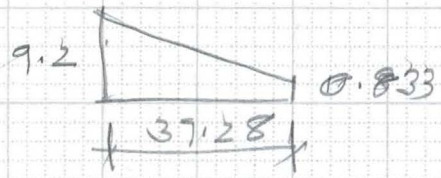

Key: (2 x 0.833 x 27.33) = 45.5

1089.3

Checks OK with Exact Qty 1089.4

Sht. 4

6910-153 4-90

FLOOD CONTROL DISTRICT OF MARICOPA COUNTY

PROJECT 43rd Ave. Basin PAGE 29 OF

DETAIL Conc. Qty COMPUTED KVH DATE 8/98

Appx Check CHECKED BY DATE

Approx. Qty. Check

Spillway Str.

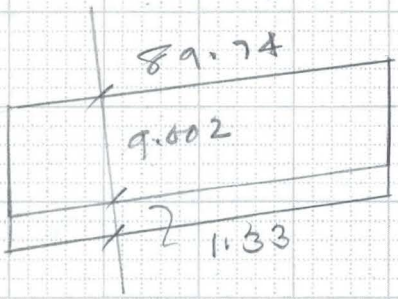

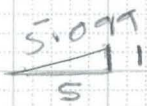

$88 \times \frac{5.099}{5} = 89.74$

$9.18 \times \frac{5}{5.099} = 9.002$

Walls: $(89.74 \times 9.002 \times \frac{11}{12})2 = 1481$ cfr — 5619

Base Sl. $(1.33 \times 89.74 \times 34.67) = 4138$

Ht (Av) = 9.55' $(11.08 \times 9.55 \times \frac{11}{12})2 = 194$

Base Sl: $(1.33 \times 11.08 \times 34.67) = 511$ — 705

6324

Sht. ① $(1483 + 194 + 4139 + 511) = 6327 \approx 6324$

Box: $w = 33'-8$, $Ht = 5 + \frac{(10.5 + 12.5)}{12} = 6.917$

$L = 15'$, $A_1 = (33.67 \times 6.917) = 232.9$

$A_2 = (10 \times 5)3 = 150$

$A_{net} = (232.9 - 150) = 82.9$

$Qty = (82.9 \times 15) + (0.5 \times \frac{12.5}{12})15 \times 2 = 1259$ cfr — 1259

Hr wall: $1014.19 + 5 + \frac{10.5}{12} = 1020.07$

$Ht = (1025.60 - 1020.07) = 5.53$

$Qty = (\frac{11}{12} \times 5.53 \times 33.67)2 = 341$ — 341

End walls: $Ht = 7.2$, $Qty = (5 \times 7.2 \times \frac{11}{12})2 = 66$ — 66

$Ht_1 = 4.7$, $(4.7 \times \frac{11}{12} \times 33.67) = 145$

$(\frac{1}{2} \times 10 \times 2.5 \times \frac{11}{12})2 = 23$

Base slab: $(5.5 \times 1.04 \times 34.67) = 198$

Checks OK. — 366

2032

Approx. Check:

Out Let STR:

Walls: (9.67 × 6.67) − (8 × 5) = 24.5 sqft

Ht = (1030.6 − 1000.5) = 20.1

Openings: 3.14 × 7²/4 = 38.5

(3.14 × 3.5²/4) 2 = 19.2

57.7

Qty = (24.5 × 20.1) = 492.5 cft

Deduct: (57.7 × 10/12) = − 48.1

444.4 cft

Base Slab: (7.67 × 10.67 × 1.17) = 95.8

Actual = 537.6 ≈ 540.2 ok 540.2

Walls:

b_1 = (8 + 1.67 + 1) = 10.67

b_2 = (27.33 + 1.67 + 1) = 30

Av. b = (30 + 10.67)/2 = 20.34

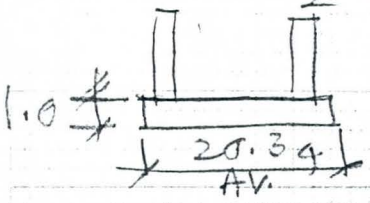

Qty = (20.34 × 1.0) 36 = 732.2

Wall L = 37.28 [((0.833 + 9.2)/2) 37.28 × 0.833] 2 311.6

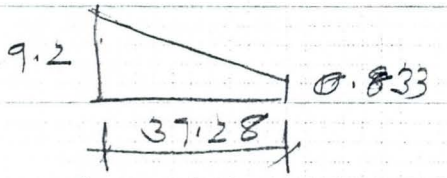

Key: (2 × 0.833 × 27.33) = 45.5

1089.3

Checks OK with Exact Qty 1089.4

Sht. 4

FLOOD CONTROL DISTRICT OF MARICOPA COUNTY

PROJECT 43rd Ave. Basin PAGE 31 OF ____
DETAIL Conc. Qty COMPUTED KVH DATE 8/98
Appx Check CHECKED BY ____ DATE ____

Approx. Qty. Check
Spillway Str.

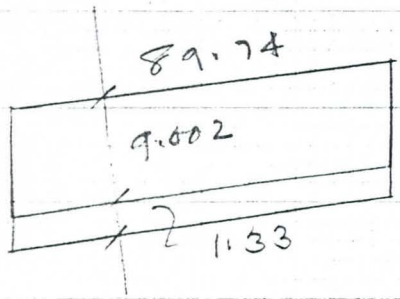

5.097 / 5 = 1

$88 \times \frac{5.097}{5} = 89.74$

$9.18 \times \frac{5}{5.097} = 9.002$

Wall: $(89.74 \times 9.002 \times \frac{11}{12})2 = 1481$ cyl
Base Sl. $(1.33 \times 89.74 \times 34.67) = 4138$ — 5619

Ht (AV) = 7.55', $(11.08 \times 9.55 \times \frac{11}{12})2 = 194$
Base Sl: $(1.33 \times 11.08 \times 34.67) = 511$ — 705

6324

Sht. ① $(1483 + 194 + 4139 + 511) = 6327 \approx 6324$

Box: $w = 33' - 8$, $Ht = 5 + (\frac{10.5 + 12.5}{12}) = 6.917$
$L = 15'$, $A_1 = (33.67 \times 6.917) = 232.9$
$A_2 = (10 \times 5)3 = 150$
$A_{net} = (232.9 - 150) = 82.9$
Qty $= (82.9 \times 15) + (10.5 \times \frac{12.5}{12})15 \times 2 = 1259$ cyl — 1259

Hr wall: $1014.19 + 5 + \frac{10.5}{12} = 1020.07$
$Ht = (1025.60 - 1020.07) = 5.53$
Qty $= (\frac{11}{12} \times 5.53 \times 33.67)2 = 341$ — 341

End walls: $Ht = 7.2$, Qty $= (5 \times 7.2 \times \frac{11}{12})2 = 66$ — 66

$Ht_1 = 4.7$, $(4.7 \times \frac{11}{12} \times 33.67) = 145$
$(\frac{1}{2} \times 10 \times 2.5 \times \frac{11}{12})2 = 23$
Base slab: $(5.5 \times 1.04 \times 34.67) = 198$

Checks OK. — 366

2032

CHANNEL TYPE RETAINING WALL

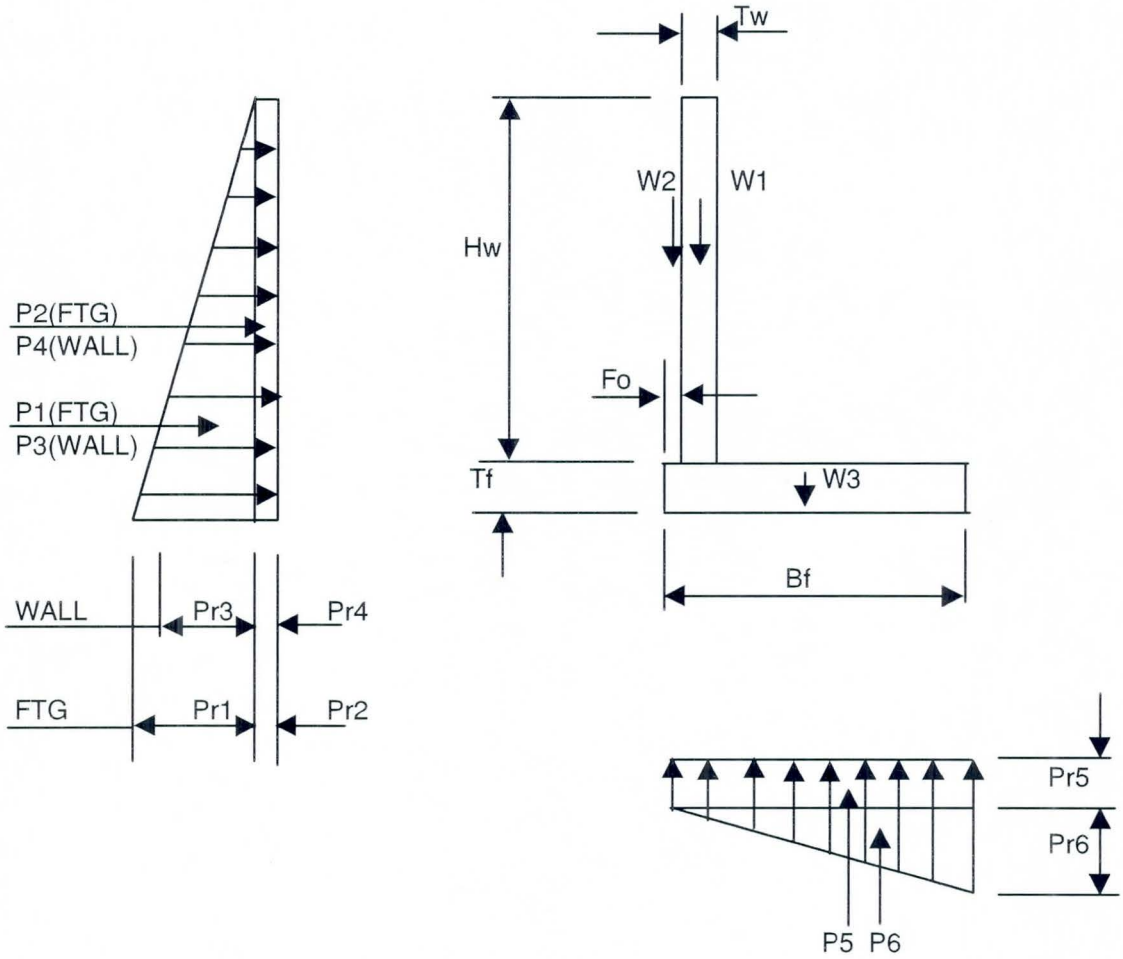

CHANNEL TYPE RETAINING(WALL HEIGHT=8')

HEIGHT O F WALL(FT)-H_W	8
THICKNESS OF WAL L(IN)-T_W	10
THICKNESS OF FOO TING(IN)-T_F	16
WIDTH OF FOOTING (FT)-B_F	7
SURCHAF GE(FT)-H_S	2
FOOTING OFFSET(IN)-F_O	6
SOIL WT.(KCF)	0.12
ANGLE-Φ (DEG)	33
K_A=1-SIN(Φ)/1+SIN(Φ)	0.295

STABILIZING FORCES:

W1=H_WXT_W/12X0.15	1.00	
W2=(H_W+2)XF_OX0.12	0.6	
W3=B_FXT_F/12X0.150	1.4	
(W1+W2+W3)=W	3.00	KIPS

RESISTING MOMENT

W1X(B_F-F_O-T_W/24)	6.08
W2X(B_F-F_O/2)	4.05
W3XB_F/2	4.90
	15.03 K-FT

EARTH PRESSURE:

SOIL: 0.12XK_AX(H_W+T_F/12)	Pr_1	0.330	ksf
SURCH: 0.12XK_AX2	Pr_2	0.071	ksf
PSOIL=Pr_1/2(H_W+T_F/12)	P1	1.54	KIPS
PSURCH=$Pr_{2(}$$H_W$+$T_F$/12)	P2	0.66	KIPS

MOMENT OVERTURNING

P1X(H_W+T_F/12)/3	4.79
P2X(HW+TF/12)/2	3.08
	7.88 K-FT
F.S=M_{RES}/M_{OT}	1.91
	Close to 2.0 O.K

(WALL HEIGHT- 8')

FOOTING DESIGN:

Distance of the Resultant from Toe=X_R

$X_R=(M_{RES}-M_{OT})/(W1+W2+W3)$ 2.39 FT.

$e=B_F/2-X_R$ 1.11

$B_F/6=$ 1.17

$e<B_F/6$

Therefore Resultant is within the mid third

FOOTING PRESSURE:

$Pr(max) =W/B_F X1(1+6e/B_F)$ = 0.84 ksf

$Pr(min) =W/B_F X1(1-6e/B_F)$ = 0.02 ksf

$Pr(uniform)=Pr_5$ 0.02 ksf

$Pr(Triangular)=Pr_6$ 0.82 ksf

$P5(UNI)=Pr_5(B_F)$ 0.14 KIPS

$P6(TRIA)=(Pr_6+0)/2xB_F$ 2.86 KIPS

Moment about the face of the wall
(Neglecting the weight of the footing)

$M_F=P5(B_F/2-F_O-T_W)+P6(2/3XB_F-F_O-T_W)$ 9.84 KFT

f'c=	3000	psi	fc=0.4f'c	1200 psi	
fy=	60000	psi	fs=0.4fy	24000 psi =	24 ksi
n=	9				

k=fc/(fc+fs/n)= 0.31

j=1-k/3= 0.90

R=(fc/2)jk= 167 psi

Assuming # 8 bars, d(eff)=(T_F-3"cover-1/2 bar dia.)= 12.5 in

$M=Rbd^2$ 313020 lbs-in= 26.09 kft > 9.84 kft o.k for Mom.Resistance

$As_1(Req)=(Mx12)/fsxj$ 0.44 in^2 Therefore requires min.steel.

Extend main wall steel into Ftg. As=Actual steel provided, #5@6"= 0.62

Check stresses:

Locating Neutral Axis: $bx(x/2)=n\ A_s(d-x)$, $(6x^2+nAsx-nAsd)=0$

nAs= 5.58 nAsd= 69.75

$ax^2+bx+c=0$ a= 6 b= 5.58 c= - 69.75

$(b^2-4ac)^{0.5}$ = 41.29 x= 2.98

Arm=(d-x/3)= 11.51 in C=T=M/Arm= 10.26 kips

fs=T/As= 16553 psi o.k

fc=C/(0.5bx)= 575 psi o.k

(WALL HEIGHT- 8')

Shear check(Footing):

V=P5+P6=	3.00 kips	v(act)=V/bd		20 psi.
		$v(allow)=0.95(f'c)^{0.5}$		52 psi.
			>	20 psi. o.k

WALL DESIGN:

Pressure on the wall:

Soil: $Wt.XK_AXH_W$	Pr_3	0.283 ksf
Surch: $WtXK_AX2$	Pr_4	0.071 ksf
$Psoil:=Pr_3/2(H_W)$	P3	1.13 KIPS
$Psurch=Pr_4(H_W)$	P4	0.57 KIPS

Mom(cantr)=(P3xHw/3)+(P4xHw/2)= 5.28 k-ft

f'c=	3000	psi	fc=0.4f'c	1200 psi	
fy=	60000	psi	fs=0.4fy	24000 psi =	24 ksi
n=	9				

k=fc/(fc+fs/n)= 0.31

j=1-k/3= 0.90

R=(fc/2)jk= 167 psi

Assuming # 8 bars, d(eff)=(Tw-2" cover-1/2bar dia.)= 7.5 in

$M=Rbd^2$ 112687 lbs-in 9.39 k-ft.> 5.28 k-ft.o.k for Mom.Resistance

As1(Reqd)=(Mx12)/fsxjd= 0.39 in^2. Therefore requires minimum steel.

Use a little more than actually required.

As=Actual steel provided, # 5@ 8"= 0.47 in^2

Check stresses:

Locating Neutral Axis: $bx(x/2)=nAs(d-x)$, $(6x^2+nAsx-nAsd)=0$

nAs= 4.23 nAsd= 31.73

$ax^2+bx+c=0$ a= 6 b= 4.23 c= - 31.73

$(b^2-4ac)^{0.5}$ = 27.92 x= 1.97

Arm=(d-x/3)= 6.84 in C=T=M/Arm= 9.27 kips

fs=T/As= 19,713 psi. o.k.

fc=2C/(bx)= 782 psi. o.k.

Shear check(Wall):

V=P3+P4=	1.70 kips	v(act)=V/bd		19 psi.
		$v(allow)=0.95(f'c)^{0.5}$		52 psi.
			>	19 psi. o.k.

(91)

FLOOD CONTROL DISTRICT OF MARICOPA COUNTY

PROJECT 43rd Ave. Storm DR. PAGE ____ OF ____

DETAIL & Basin COMPUTED ____ DATE ____

CHECKED BY ____ DATE ____

BASIN INLET STRUCTS.
NORTH & SOUTH

PHASE. 3

6910-153 4-90

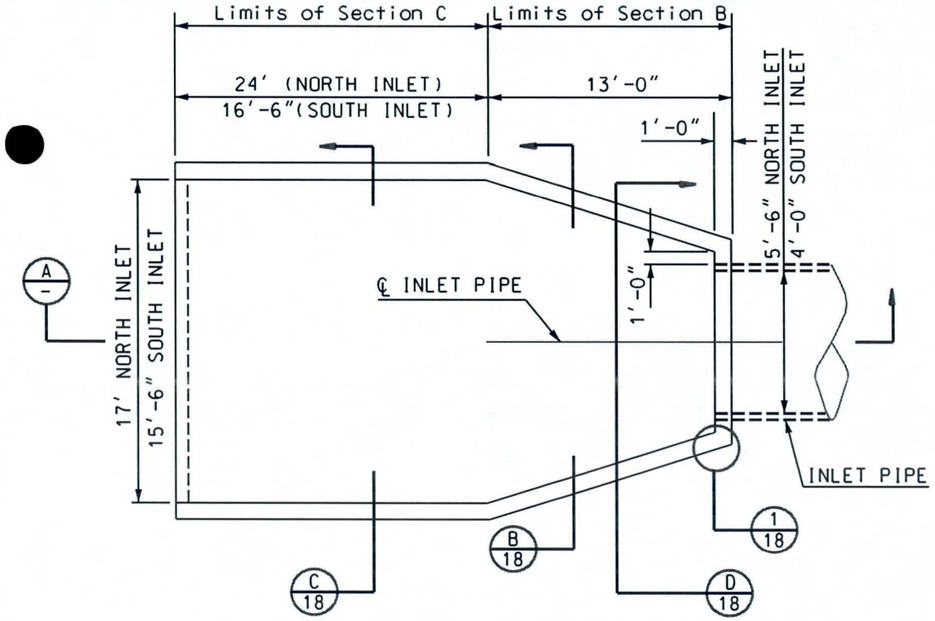

PLAN VIEW
NTS

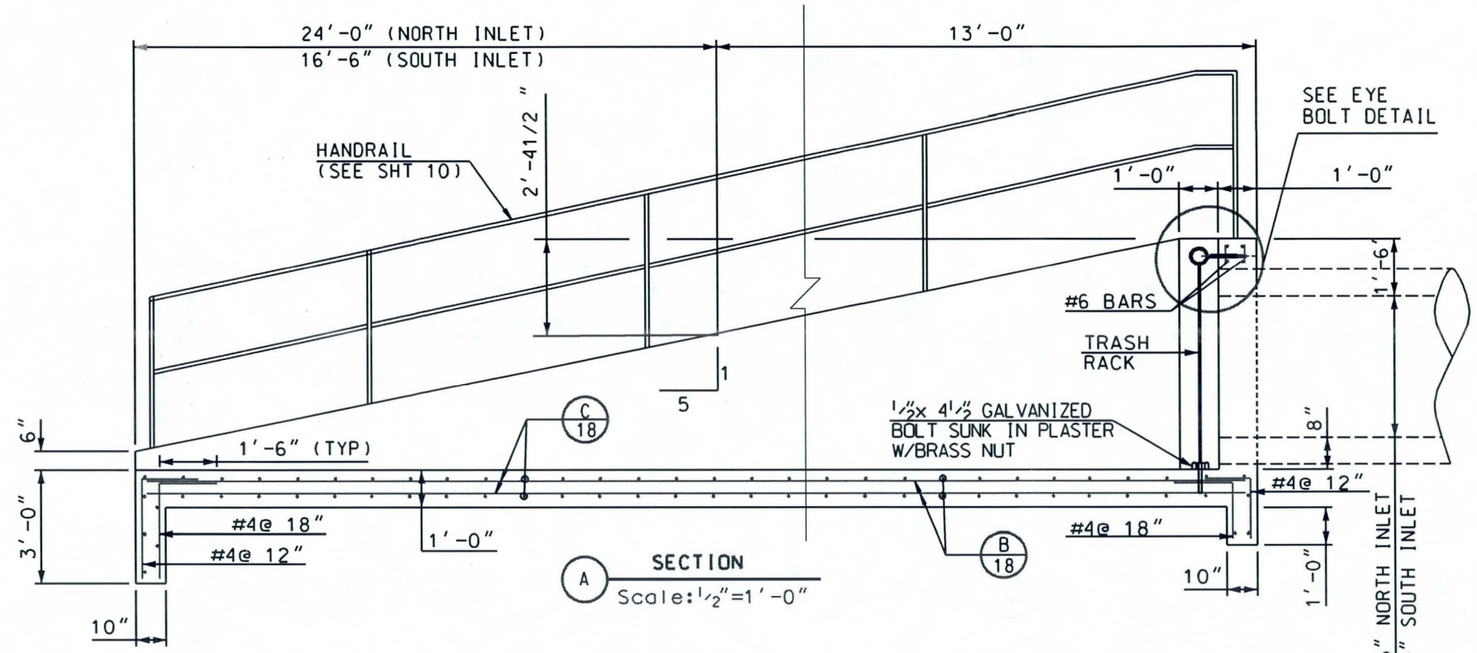

A SECTION
Scale: 1/2"=1'-0"

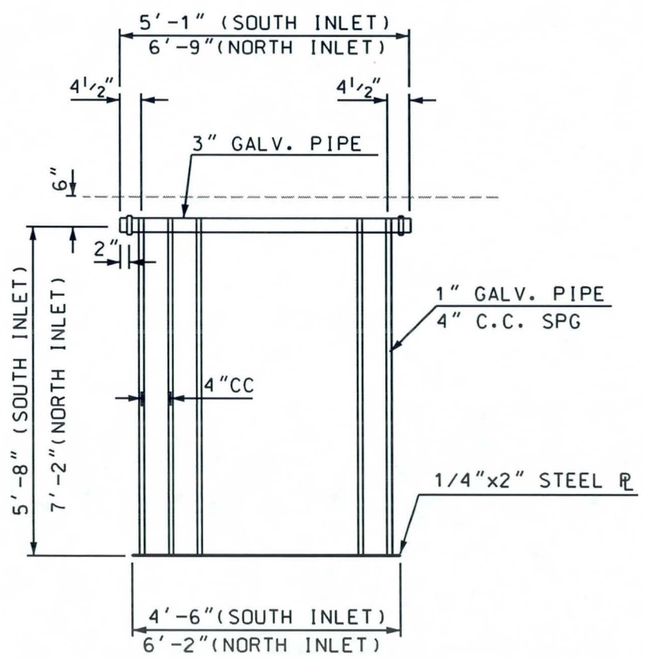

PANEL DETAIL
NTS

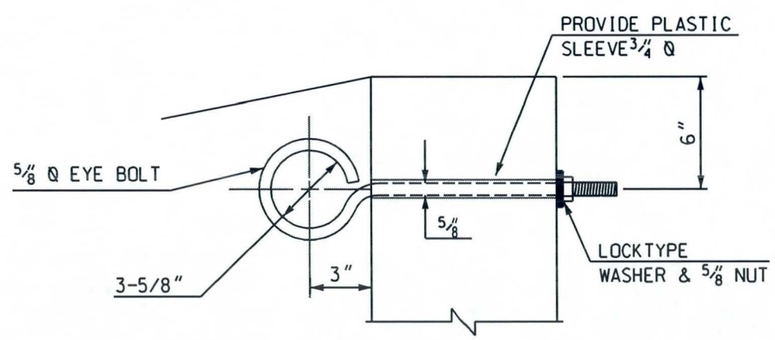

EYE BOLT DETAIL
NTS

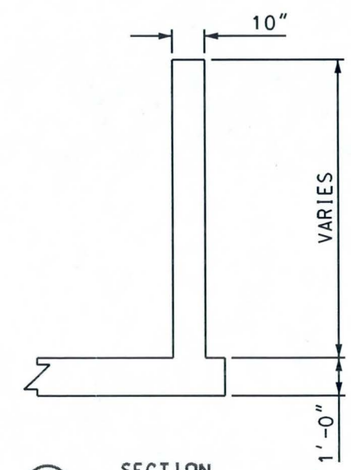

B SECTION
NTS

Phase 3

NO.	REVISION	BY	DATE
3			
2			
1			

FLOOD CONTROL DISTRICT OF MARICOPA COUNTY
ENGINEERING DIVISION

43RD AVENUE DETENTION BASIN
FCD PROJECT NO. 1170230
90% SUBMITTAL

PRELIMINARY NOT FOR CONSTRUCTION

	BY	DATE
DESIGNED	KVH	09/09/98
DRAWN	MMM	09/09/98
CHECKED	MAL	

NORTH & SOUTH INLET STRUCTURES

SHEET 17 OF 26

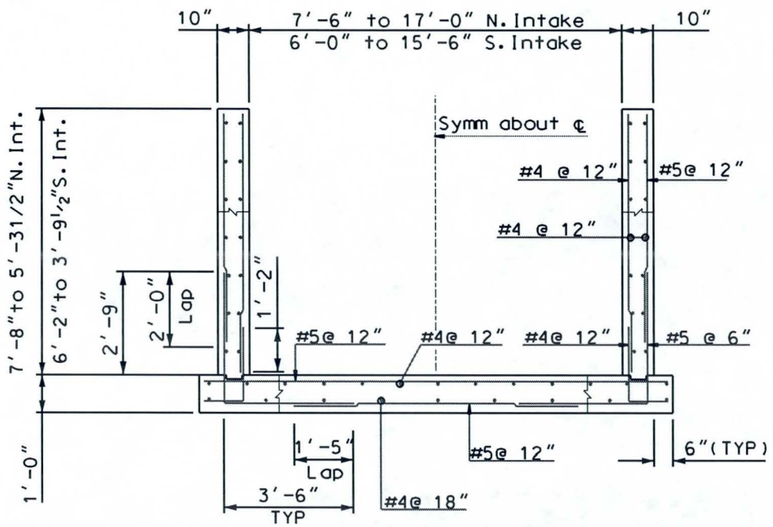

B/17 SECTION
Scale: 1/2" = 1'-0"

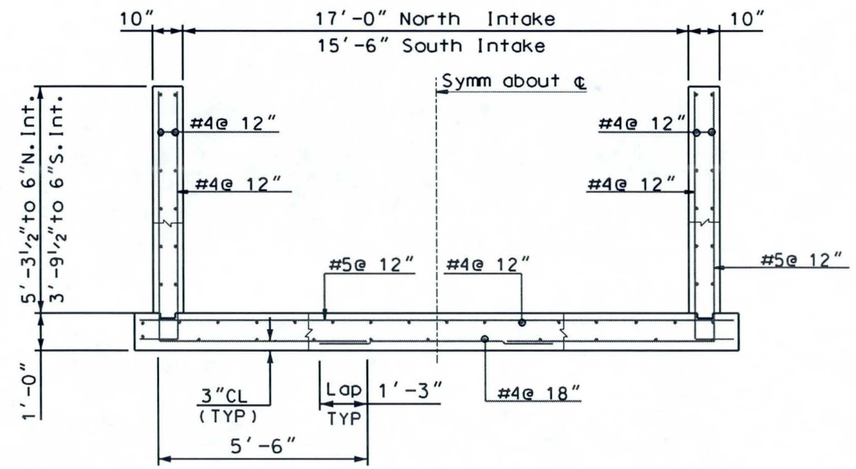

C/17 SECTION
Scale: 1/2" = 1'-0"

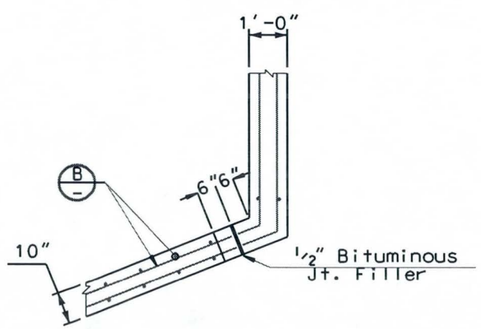

1/17 DETAIL
Scale: 1/2" = 1'-0"

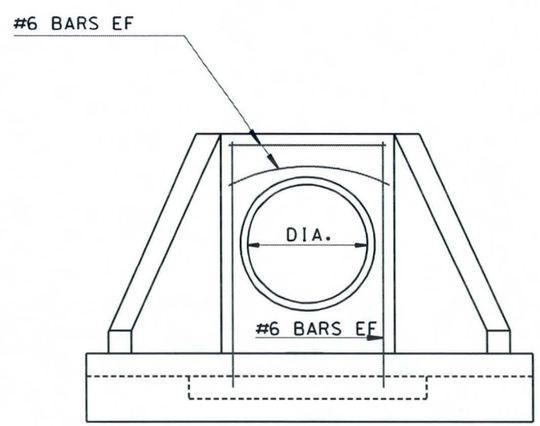

D/17 ELEVATION
NTS

Phase 3

NO.	REVISION	BY	DATE
3			
2			
1			

FLOOD CONTROL DISTRICT OF MARICOPA COUNTY
ENGINEERING DIVISION

43RD AVENUE DETENTION BASIN
FCD PROJECT NO. 1170230
90% SUBMITTAL

		BY	DATE
PRELIMINARY NOT FOR CONSTRUCTION	DESIGNED	KVH	12/30/98
	DRAWN	MMM	12/30/98
	CHECKED	MAL	

North & South Inlet Sructures

SHEET 18 OF 28

...\dgn\phase3\nsinlet1.dgn Mar. 17, 1999 11:23:02

FLOOD CONTROL DISTRICT OF MARICOPA COUNTY

PROJECT 43rd Ave. Basin PAGE ____ OF ____

DETAIL Inlet Str. COMPUTED KVH DATE 12/98

North & South CHECKED BY ____ DATE ____

Wall Reinf:

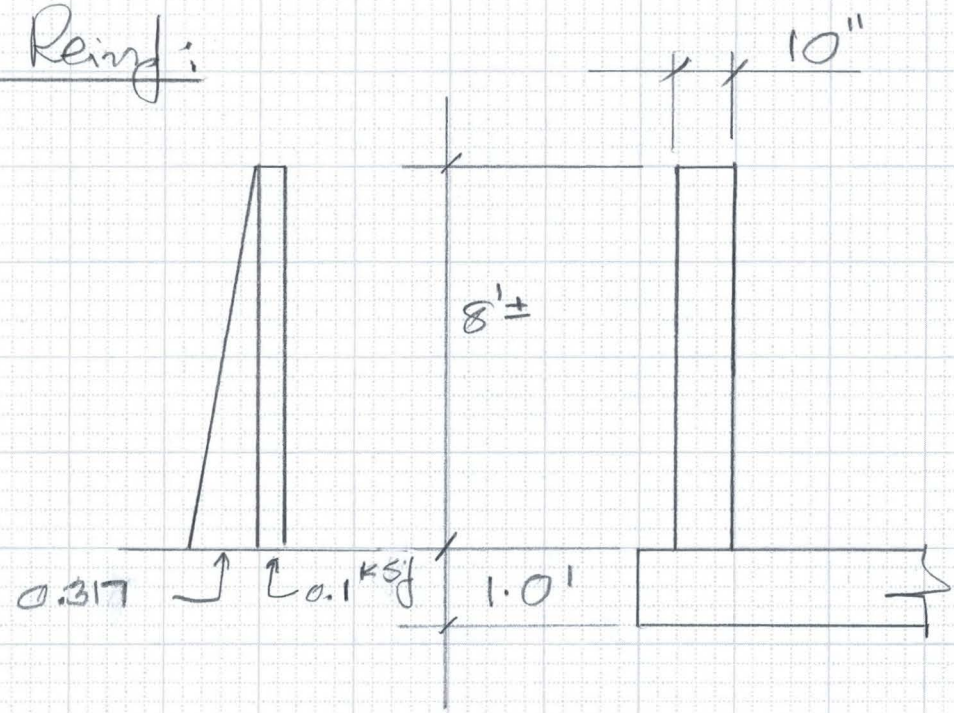

$Pr_E = (0.12 \times 0.33 \times 8.0) = 0.317^{ksf}$

$Pr_S = (0.12 \times 0.33 \times 2) = 0.08$, say 0.1^{ksf}

$P_1 = (0.317/2 \times 8.0) = 1.27^{K}$

$P_2 = (0.1 \times 8.0) = 0.80^{K}$

$M_c = (1.27 \times \frac{8}{3}) + (0.8 \times \frac{8}{2})$

$= (3.4 + 3.2) = 6.6^{K}$

$d_{eff} = (10 - 2 - 0.5) = 7.5''$ $A_s = \frac{6.6 \times 12}{24 \times 0.88 \times 7.5}$

$= 0.5 \text{ in}^2$ USe #5@6"

Shear Check:

$V = (1.27 + 0.8) = 2.07^{K}$

$b = 12$, $d_{eff} = 7.5$

$v = \frac{2.07 \times 1000}{12 \times 7.5} = 23$ psi $v_{allow} = 0.95\sqrt{3000}$

$= 52$ psi > 23 psi

$\therefore$ ok. for Shear

6910-153 4-90

(1)

FLOOD CONTROL DISTRICT OF MARICOPA COUNTY

PROJECT 43rd Ave Basin PAGE ____ OF ____

DETAIL Inlet. STRS (Basin) COMPUTED KVH DATE Dec/9

North & South CHECKED BY ____ DATE ____

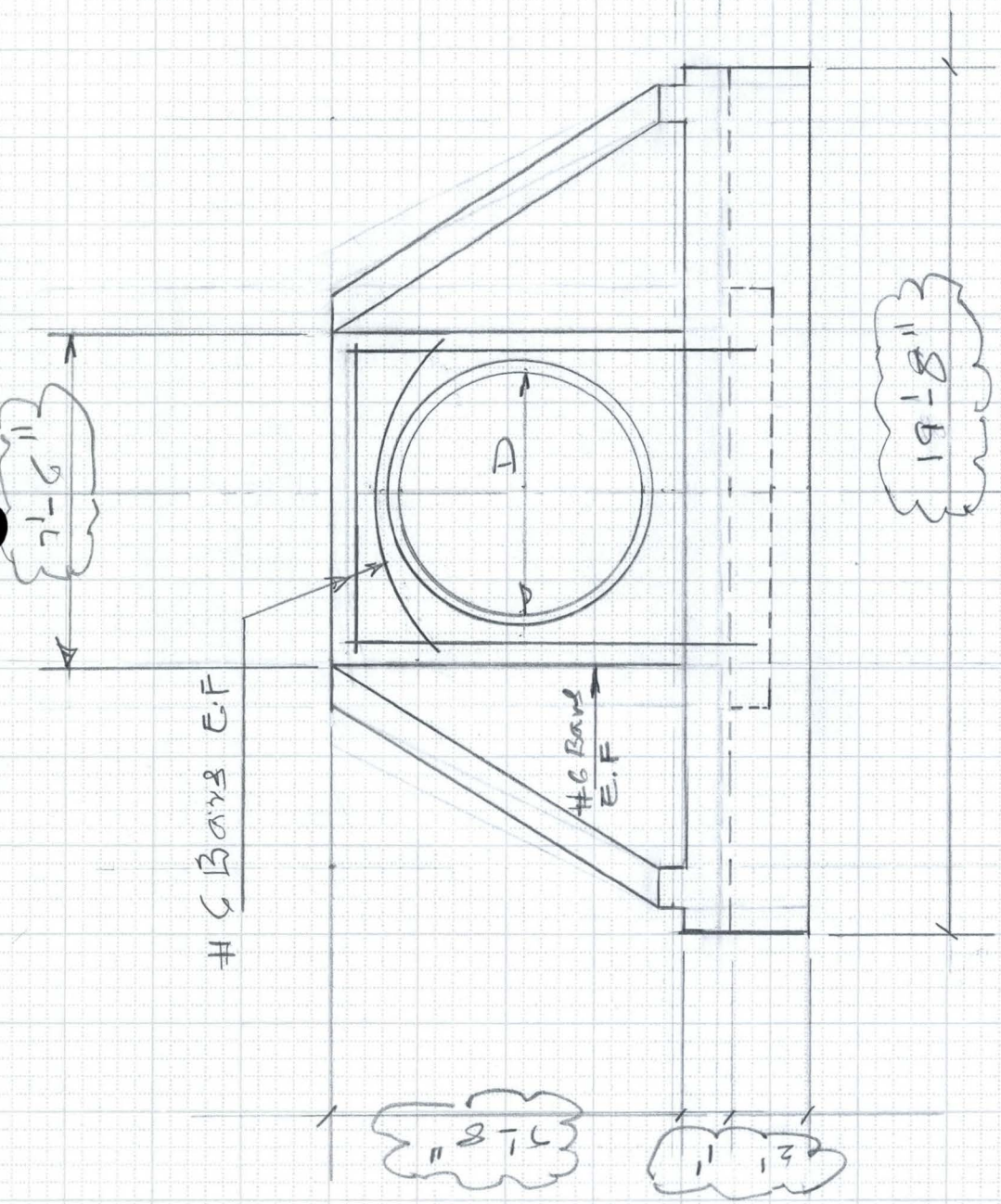

6910-153 4-90

FLOOD CONTROL DISTRICT OF MARICOPA COUNTY

PROJECT 43rd Ave. Basin PAGE ____ OF ____

DETAIL Inlet Strs. (Basin) COMPUTED KVH DATE Dec. 92

CHECKED BY ____ DATE ____

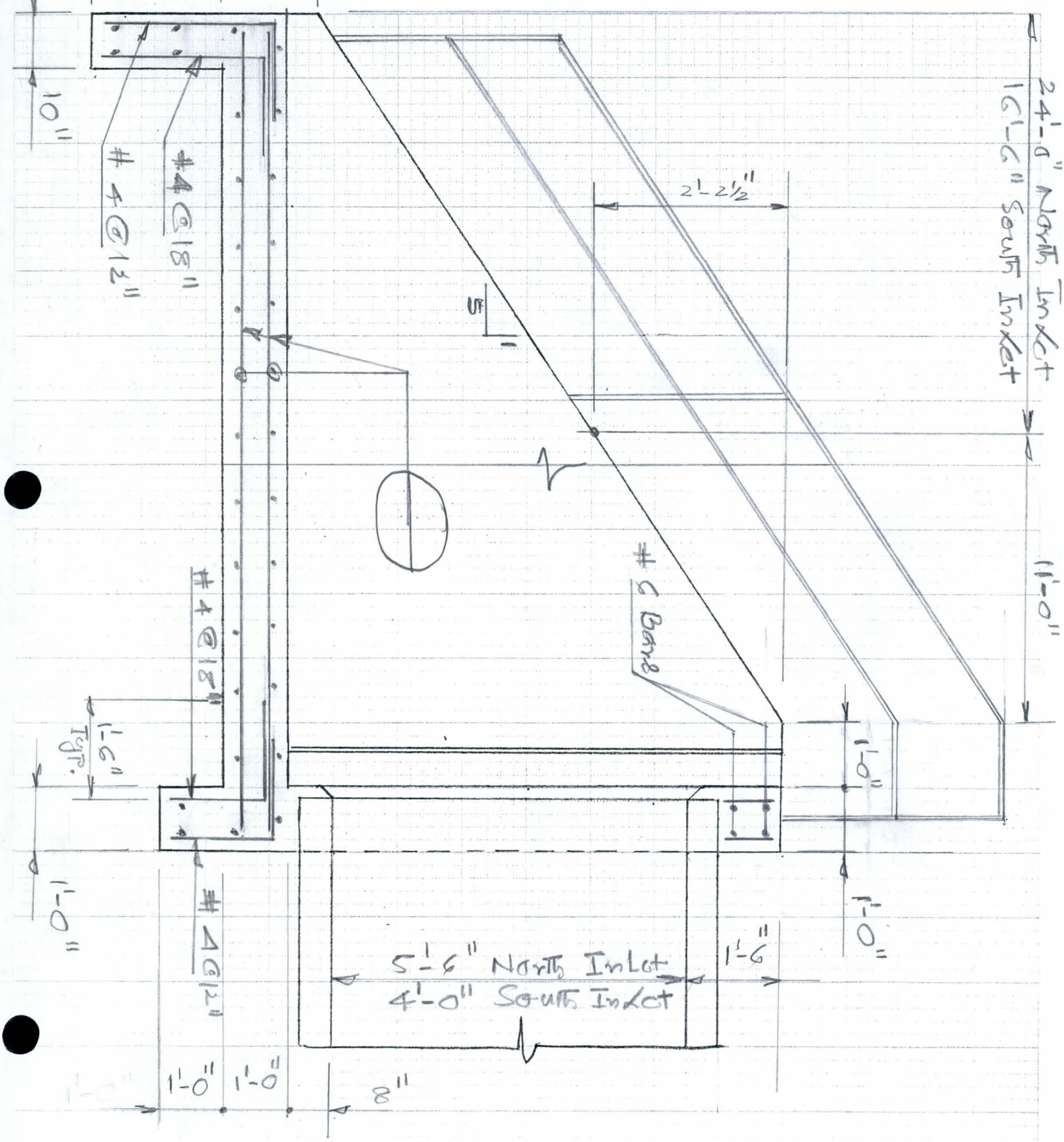

(94)

FLOOD CONTROL DISTRICT OF MARICOPA COUNTY

PROJECT 43rd Ave. Basin PAGE ____ OF ____

DETAIL Inlet Str. Basin COMPUTED KVH DATE Dec. 98

North & South CHECKED BY ____ DATE ____

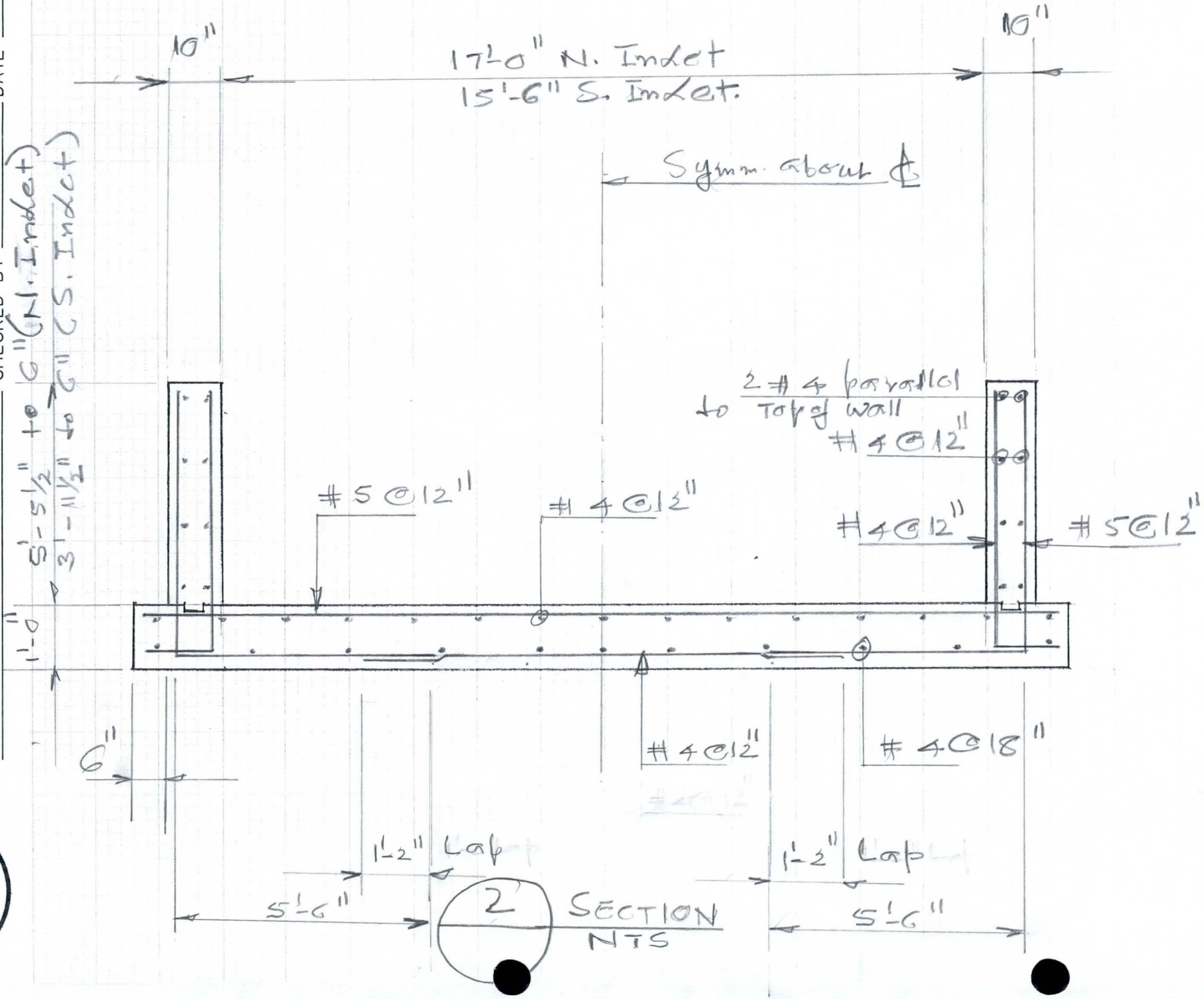

(95)

FLOOD CONTROL DISTRICT OF MARICOPA COUNTY

PROJECT 43rd Ave. Basin PAGE ___ OF ___

DETAIL Inlet Str. (Basin) COMPUTED KVH DATE Dec. 98

North & South CHECKED BY ___ DATE ___

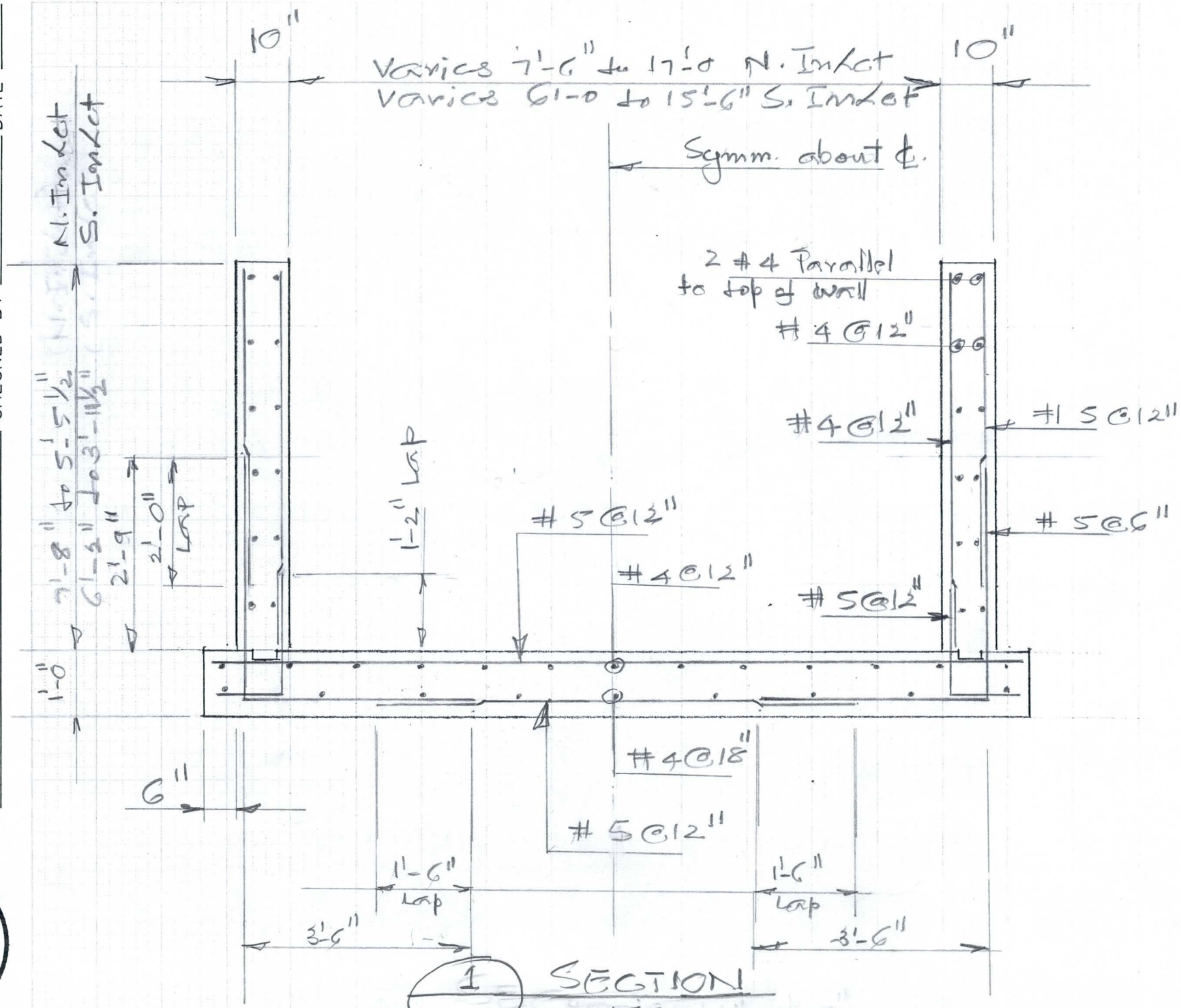

1 SECTION
NTS

FLOOD CONTROL DISTRICT OF MARICOPA COUNTY

PROJECT 43rd Ave. Basin PAGE ____ OF ____

DETAIL Inlet Str. (Basin) COMPUTED KVH DATE Dec/98

North & South CHECKED BY ____ DATE ____

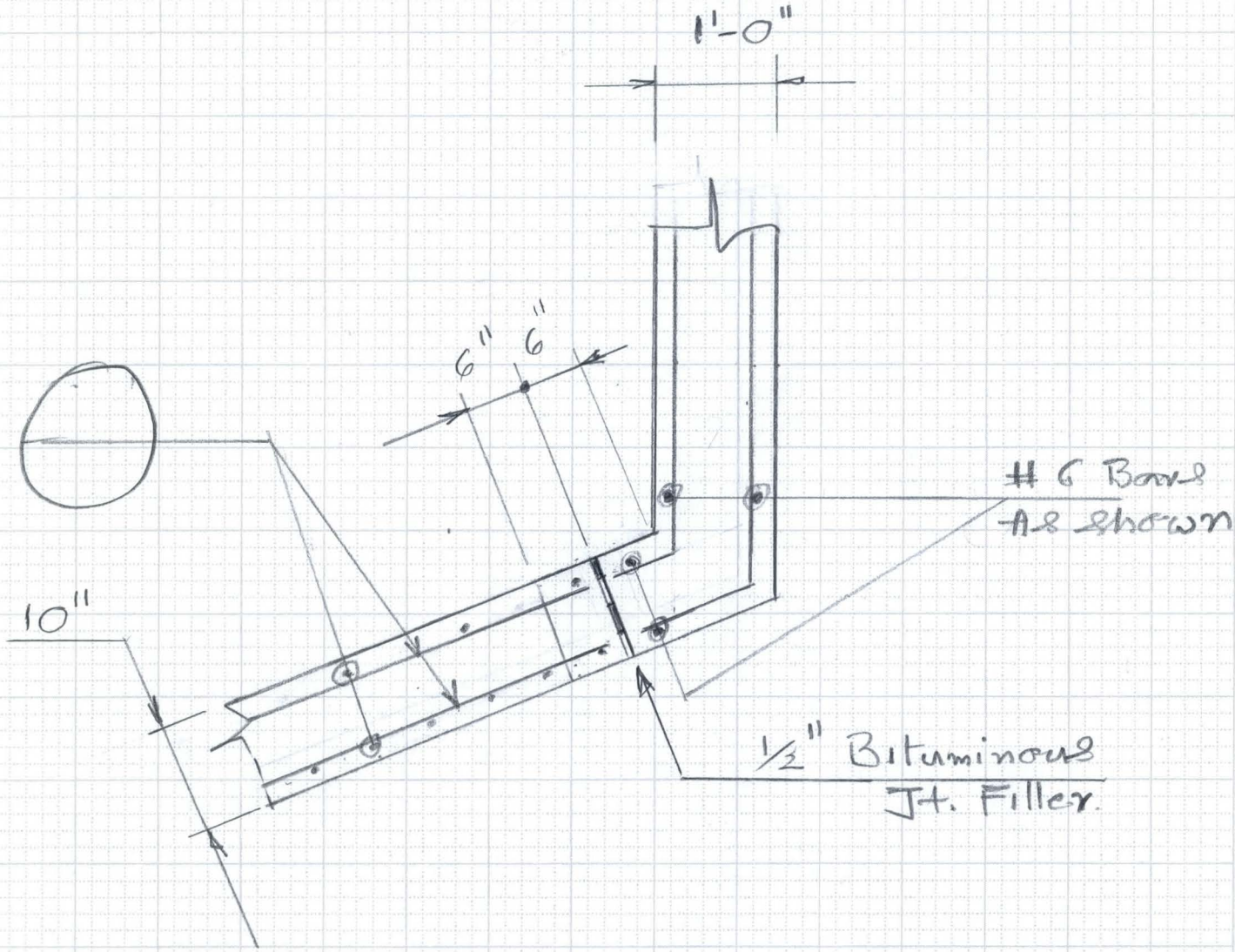

1 DETAIL
Scale: 3/4" = 1'-0

FLOOD CONTROL DISTRICT OF MARICOPA COUNTY

PROJECT 43rd Ave. Storm Dr. PAGE ____ OF ____
DETAIL Inlet Structures COMPUTED KVH DATE Feb. 9
CHECKED BY ____ DATE ____

Sloping wall:

(13 - 2) = 11 @ 5 to 1 Slope

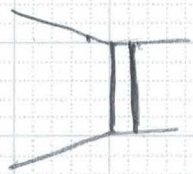

for 5' — 12"
~~11'~~ 12' —

$\left(\frac{11}{5} \times 12\right) = \cancel{26.4}''$ 28.5"
$= 2' - \cancel{2\frac{1}{2}}''$ 4 1/2

Wall Ht = (5 - 6) + (1 - 6") + 8" = 7 - 8"
− 2 - 4 1/2
5 - 3 1/2"

Wall Ht (End) − 6"
4 - 9 1/2"

With 5 to 1 Slope

for $\left(24 \times \frac{12}{5}\right) = 57.6'' = 4' - 9\frac{1}{2}''$

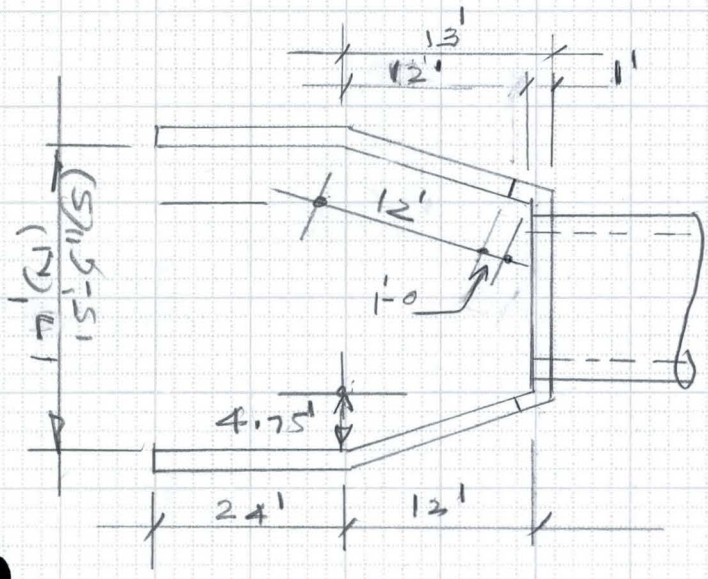

$\frac{(17 - 7.5)}{2} = 4.75'$

Sloping L = $\sqrt{12^2 + 4.75^2} = 12.91'$
Say 13'

Actual Sloping L = 13 - 1 = 12'

24' @ 5 to 1 = 4' - 9 1/2"
2 - 4 1/2
6"
7' - 8"

Wall Ht = (5 - 6) + (1 - 6") + 8"
= 7' - 8"

Checks OK

(98)

FLOOD CONTROL DISTRICT OF MARICOPA COUNTY

PROJECT 43rd Ave STORM. DR PAGE ____ OF ____

DETAIL ____ COMPUTED ____ DATE ____

____ CHECKED BY ____ DATE ____

JUNCTION STRUCTURE

STA. 10 + 63.8

PHASE. 3

6910-153 4-90

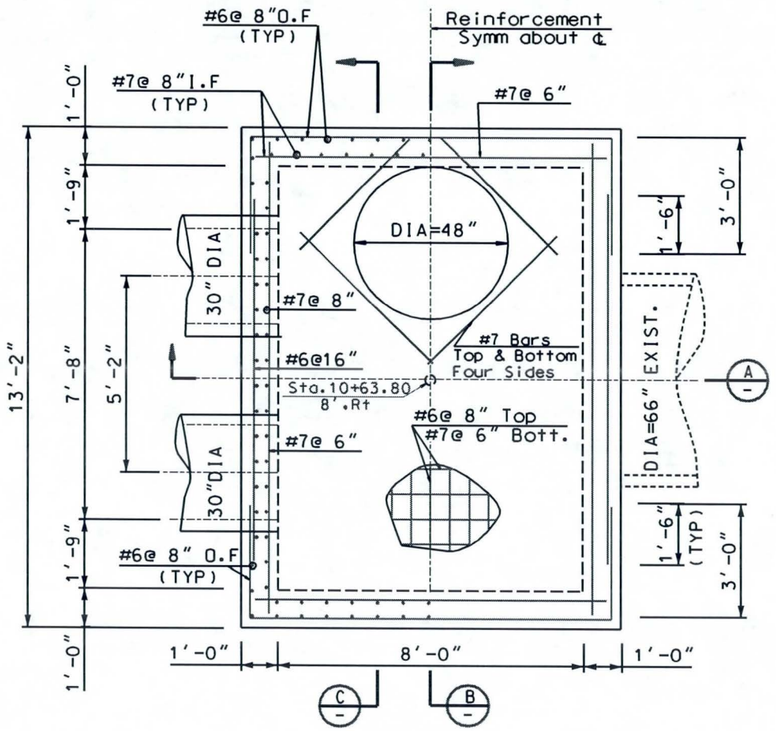

PLAN
SCALE: 1/2"=1'-0"

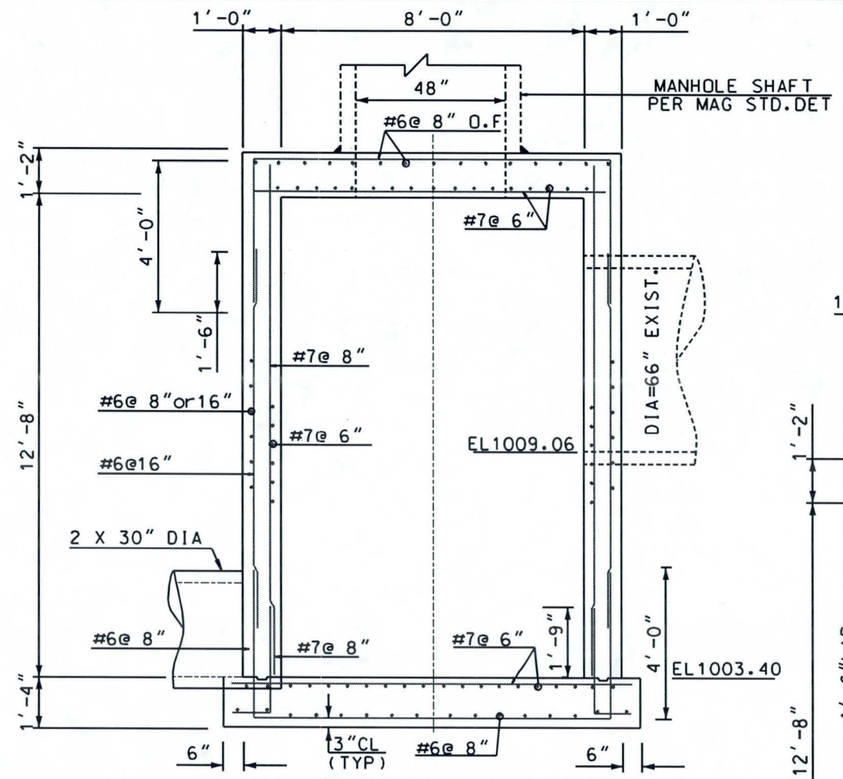

A SECTION DETAIL
SCALE: 1/2"=1'-0"

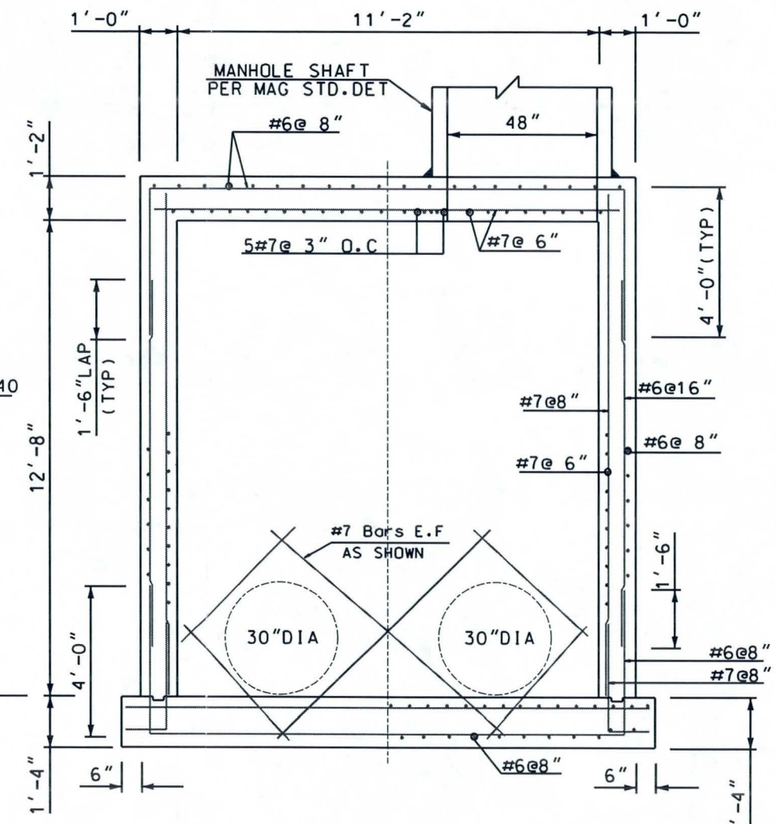

C SECTION DETAIL
SCALE: 1/2"=1'-0"

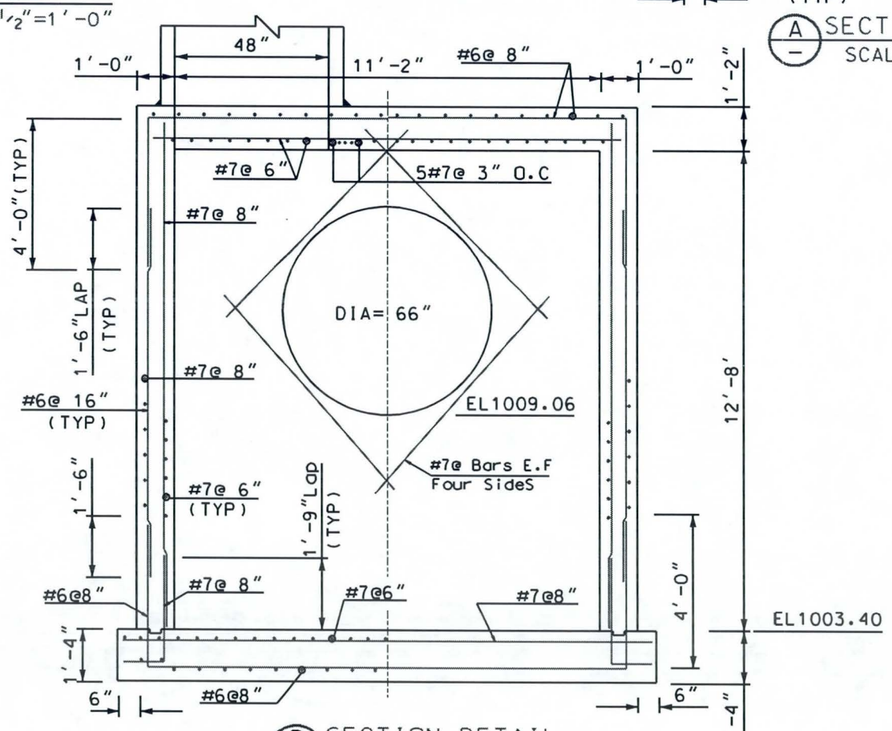

B SECTION DETAIL
SCALE: 1/2"=1'-0"

Phase.3 Sta. 10+63.8

NO.	REVISION	BY	DATE
3			
2			
1			

FLOOD CONTROL DISTRICT OF MARICOPA COUNTY
ENGINEERING DIVISION

43RD AVENUE DETENTION BASIN
FCD PROJECT NO. 1170230
90% SUBMITTAL

PRELIMINARY NOT FOR CONSTRUCTION

	BY	DATE
DESIGNED	KVH	12/30/98
DRAWN	MMM	12/30/98
CHECKED	MAL	

DETAIL 2
JUNCTION BOX DETAIL

SHEET OF 21 26

...\dgn\phase3\junctionbox.dgn Mar. 17, 1999 14:23:58

FLOOD CONTROL DISTRICT OF MARICOPA COUNTY

PROJECT 43rd Ave. Storm DR PAGE 1 OF

DETAIL Junction Str. COMPUTED KVH DATE Dec. 96

Sta. 10+63.8 CHECKED BY DATE

Loading on Box:

Inv. 1003.40, Rim El. 1020.8

w/S.Box = 1016.06 — 1017.2

Slab t 1'-2" = 1.17 — 3.6'

Top of Box — 1017.23

Say 4' Fill

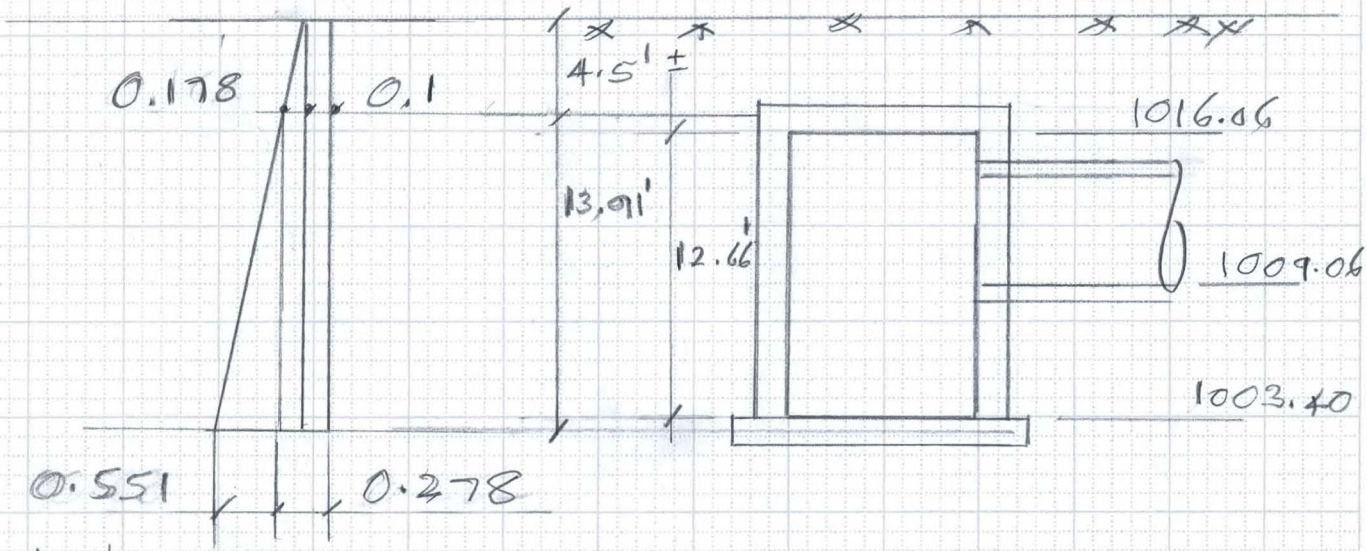

Earth Pressure:

Ht = 4.5' p_{r_1} = (0.12 × 0.33 × 4.5) = 0.178 KSf

Ht = 18.41' p_{r_2} = (0.12 × 0.33 × 18.41) = 0.729

P_r (Surch.) = (0.12 × 0.33 × 2) = 0.08 KSf Say 0.1 KSf

(0.729 − 0.178) = 0.551 KSf

p_r = 0.12 × 0.33 × 13.91 = 0.551

Checks ok

FLOOD CONTROL DISTRICT OF MARICOPA COUNTY

PROJECT 43rd Ave. Storm DR. PAGE 2 OF

DETAIL Junction Str COMPUTED KVH DATE Dec. 92

Sta. 10+63.8 CHECKED BY DATE

Top Slab:

fill Ht = 4', wt = (4 × 0.120) = 0.480 ksf

Con. Slab: (1.17 × 0.150) = 0.176

L. Load: P = 16^K × 1.3 ← Impact

Dist^n: (1.75 × 4') = 7'

$w_{L.L} = \left(\frac{16 \times 1.3}{7 \times 7}\right) = \frac{0.425}{1.081 \text{ ksf}}$

L.L. (Surch) = (0.12 × 2) = $\frac{0.240}{1.321}$

$w_S = \frac{(12.17)^4}{(12.17)^4 + (9)^4} = \frac{21936}{28497} = 0.77$

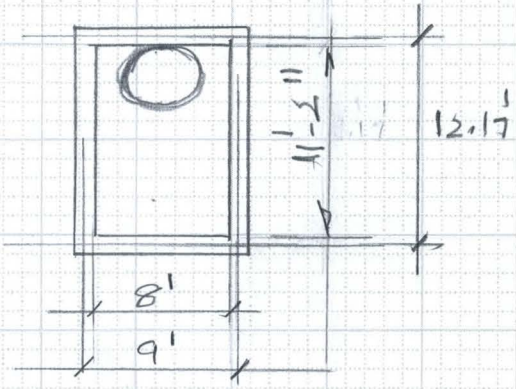

$w_L = \frac{(9)^4}{(12.17)^4 + (9)^4} = 0.23$

Checks o.K

Because of the Manhole opening Top slab will act basically as a one-way slab spanning in the 8' direction.

$M_S = 1.321 \times 9^2/8 = 13.4^{kft}$

d = 1-2", $d_{eff} = (14 - 2 - 0.5) = 11.5''$

$A_S = \frac{13.4 \times 12}{24 \times 0.88 \times 11.5} = 0.66 \text{ in}^2$

Span = 12.17'

$M_S = (1.321 \times 12.17^2/8) = 24.5^{kft}$

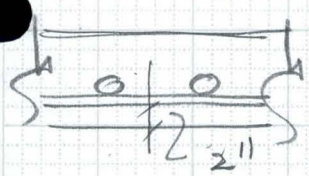

$d_{eff} = \left(14 - 2 - 0.88 - \frac{0.88}{2}\right) = 10.68''$

using #7 Bars

$A_S = \frac{24.5 \times 12}{24 \times 0.88 \times 10.68} = 1.30$

FLOOD CONTROL DISTRICT OF MARICOPA COUNTY

PROJECT 43rd AVE. Storm DR PAGE 3 OF
DETAIL Junction STR. COMPUTED KVH DATE Jan 9
Sta. 10+63.8 CHECKED BY DATE

Wall Spanning in the Horz. Direction:

a) Span.1 = 12.17'

Max. Soil pr = (0.551 + 0.278) = 0.829 ksf

$M_s = 0.829 \times 12.17^2/8 = 15.35$ kft

$d_{eff} = (12 - 2 - 0.5) = 9.5''$

$$A_s = \frac{15.35 \times 12}{24 \times 0.88 \times 9.5}$$

$$= 0.92 \text{ in}^2$$

Span.2 = 9.0'

$M_s = 0.829 \times 9^2/8 = 8.4$ kft

$$A_s = \frac{8.4 \times 12}{24 \times 0.88 \times 9.5}$$

$$= 0.50 \text{ in}^2$$

FLOOD CONTROL DISTRICT OF MARICOPA COUNTY

(105)

PROJECT 43rd AV Storm Drain PAGE 4 OF

DETAIL Junction Box COMPUTED KVH DATE Dec 98

Stat. 10+63.8 CHECKED BY DATE

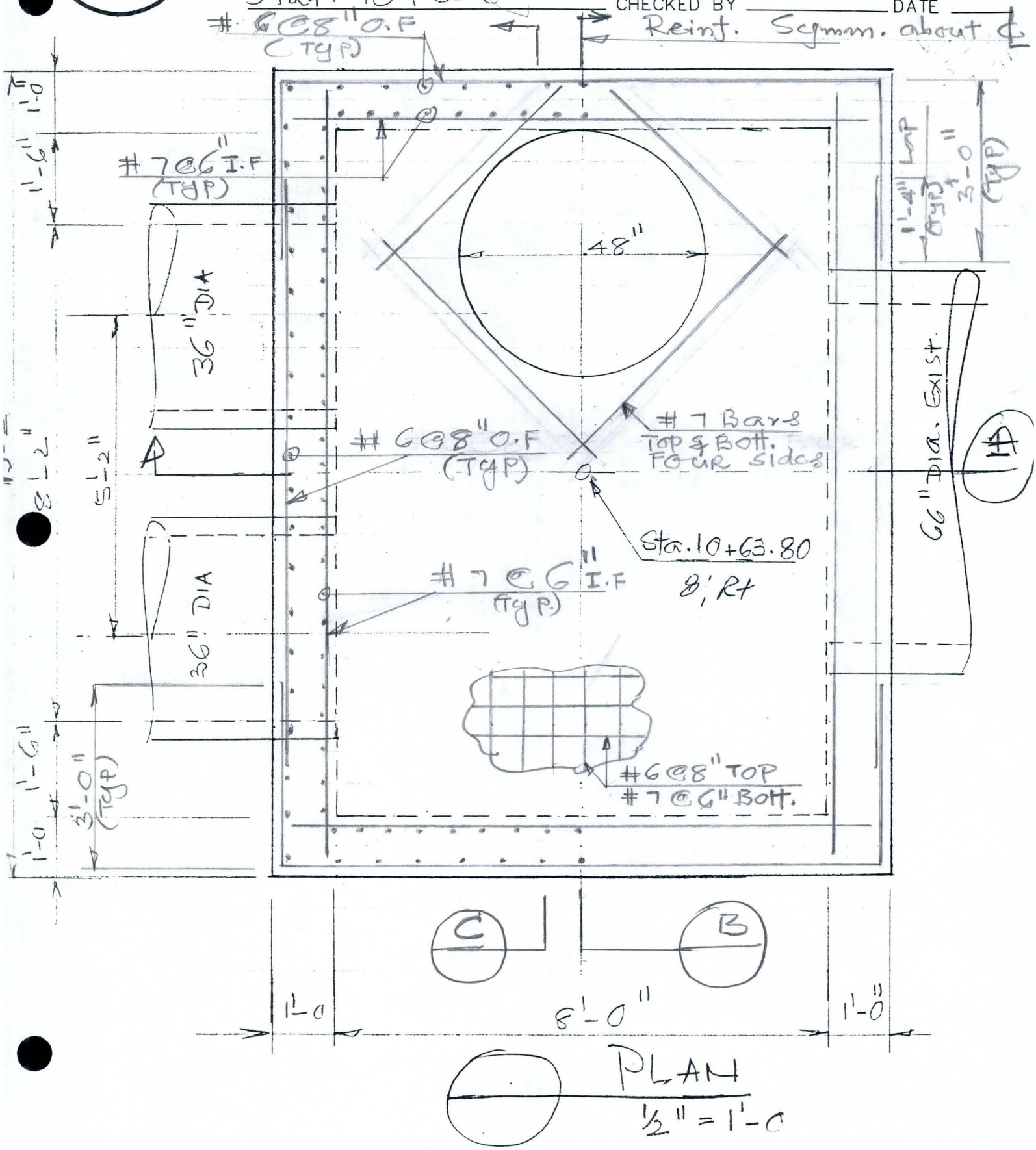

PLAN

½" = 1'-0

FLOOD CONTROL DISTRICT OF MARICOPA COUNTY

PROJECT 43rd Ave. Storm Dr. PAGE 5 OF

DETAIL Junction Box COMPUTED KWH DATE Dec/98

Stat. 10+63.8 CHECKED BY DATE

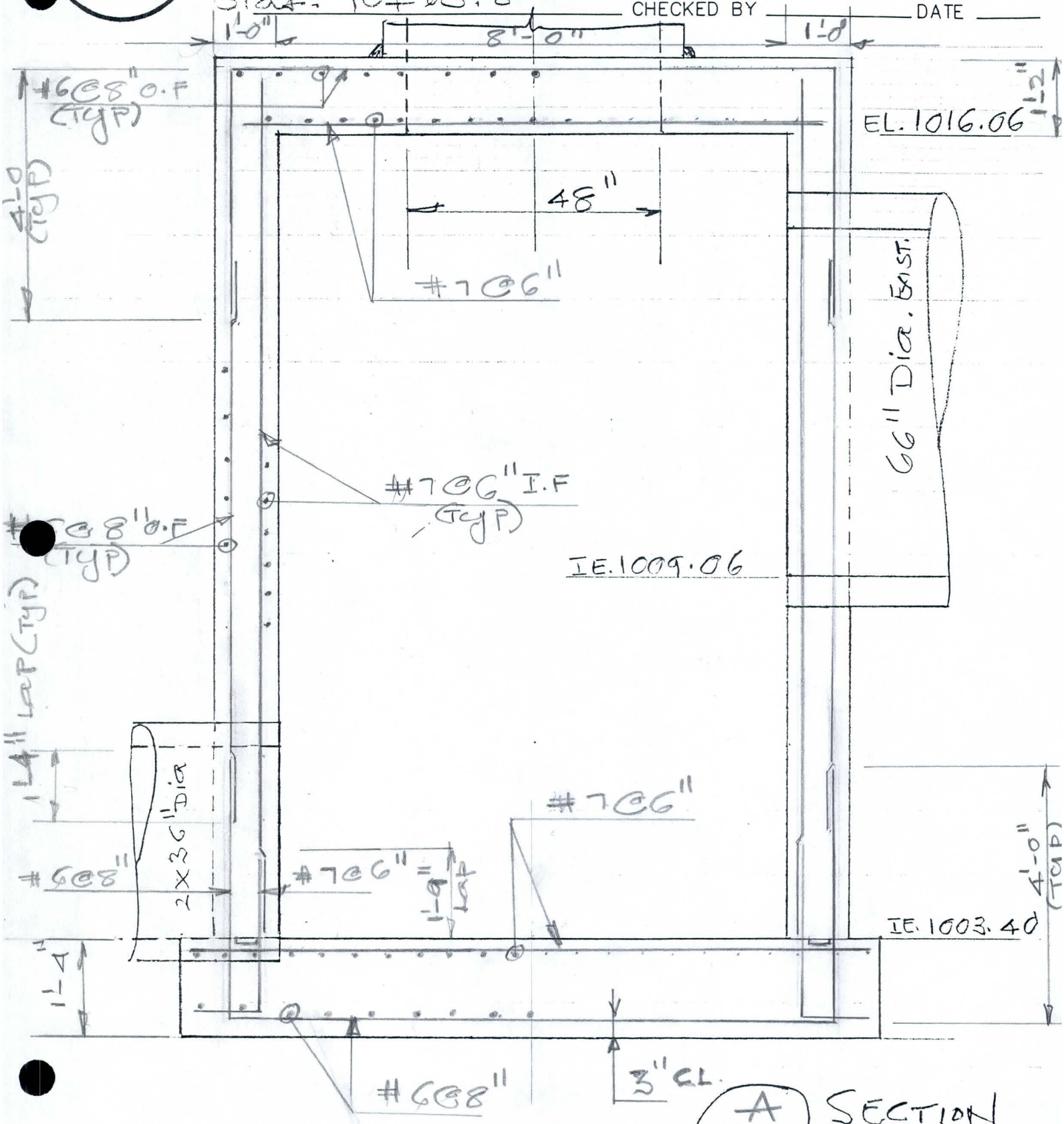

A SECTION

1/2" = 1'-0

(105)

FLOOD CONTROL DISTRICT OF MARICOPA COUNTY

PROJECT 43rd Ave. Storm DR. PAGE 6 OF

DETAIL Junction Str. COMPUTED KVH DATE Jan/99

Sta. 10+63.80 CHECKED BY DATE

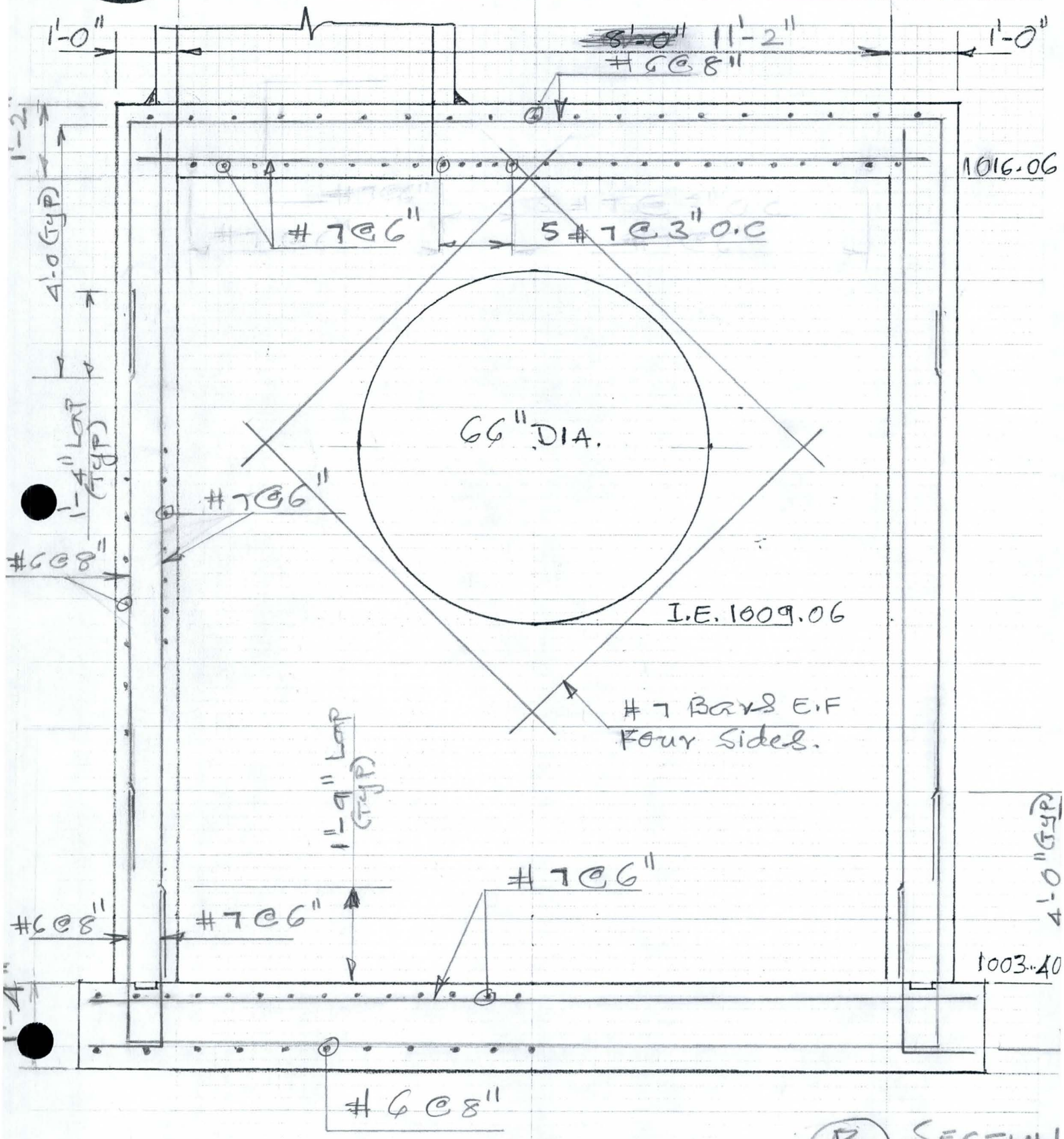

B SECTION
Scale ½" = 1'

(106)

FLOOD CONTROL DISTRICT OF MARICOPA COUNTY

PROJECT 43rd Ave. Storm DR. PAGE 7 OF

DETAIL Junction Str. COMPUTED KVH DATE Jan/9

Sta. 10+63.80 CHECKED BY DATE

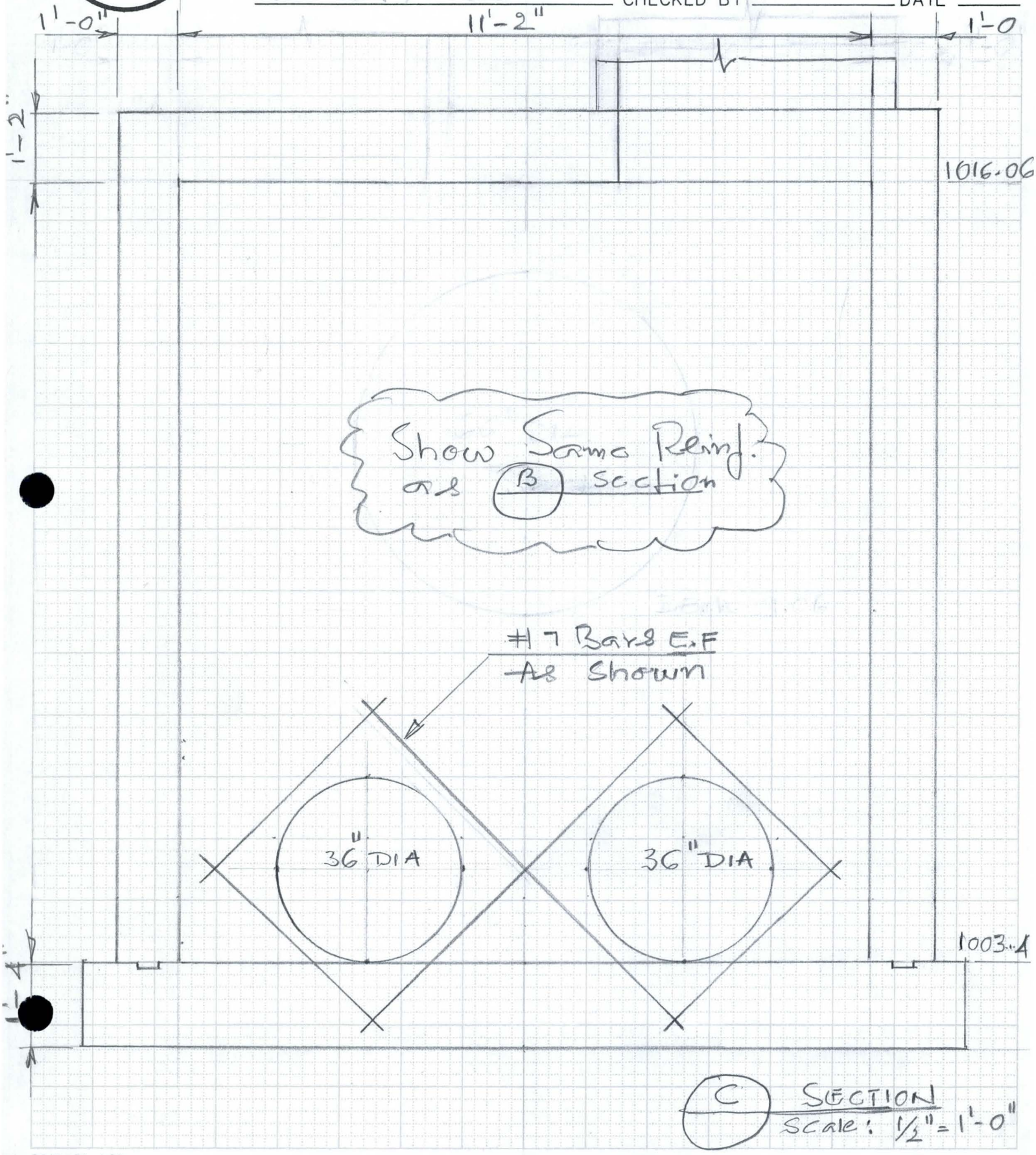

6910-153 4-90

(107)

FLOOD CONTROL DISTRICT OF MARICOPA COUNTY

PROJECT 43rd Ave. Basin E PAGE ____ OF ____

DETAIL Storm Drain COMPUTED ____ DATE ____

CHECKED BY ____ DATE ____

JUNCTION STRUCTURE
STA. 20+08

PHASE. 3

6910-153 4-90

(108)

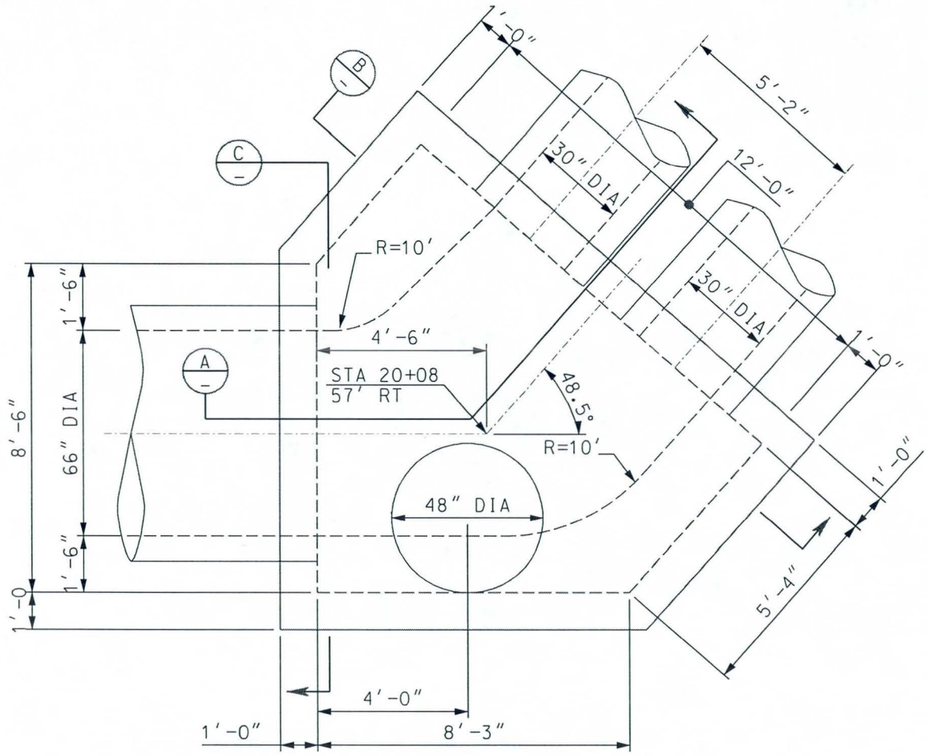

JUNCTION STRUCTURE PLAN

SCALE: 1/2" = 1'-0"

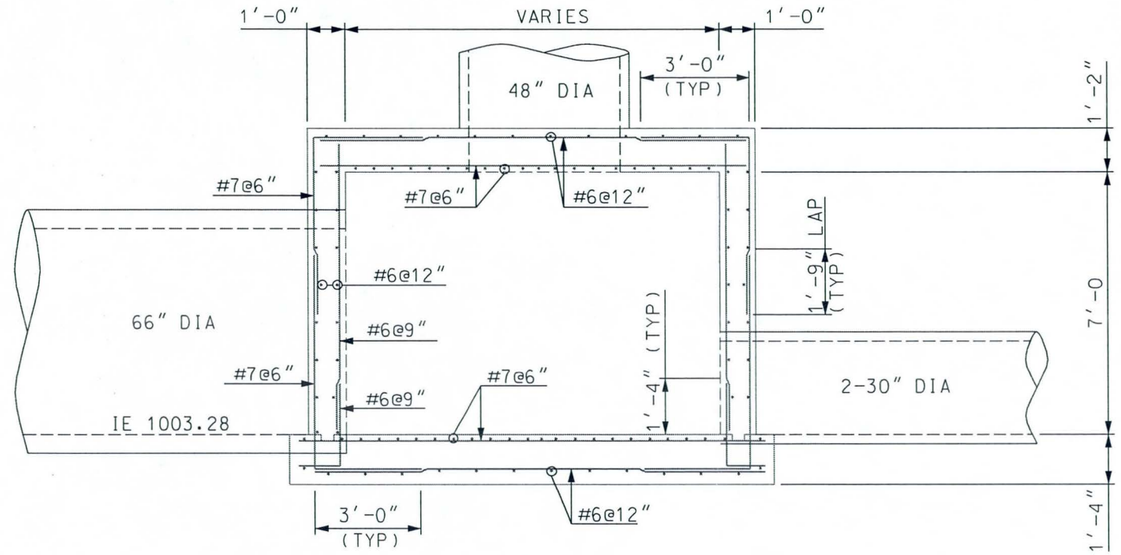

SECTION A

SCALE: 1/2" = 1'-0"

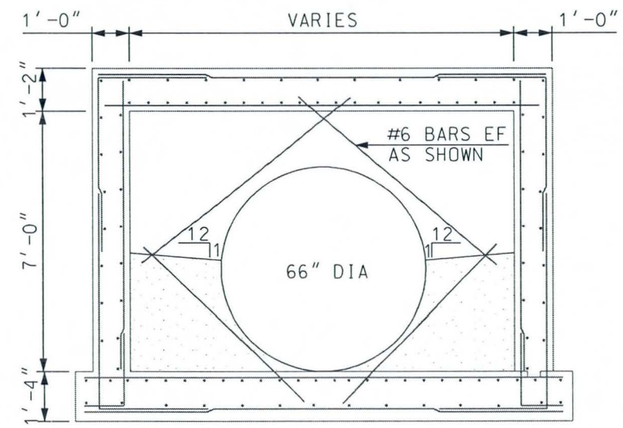

NOTE: SAME REINFORCING AS SECTION B

SECTION C

SCALE: 1/2" = 1'-0"

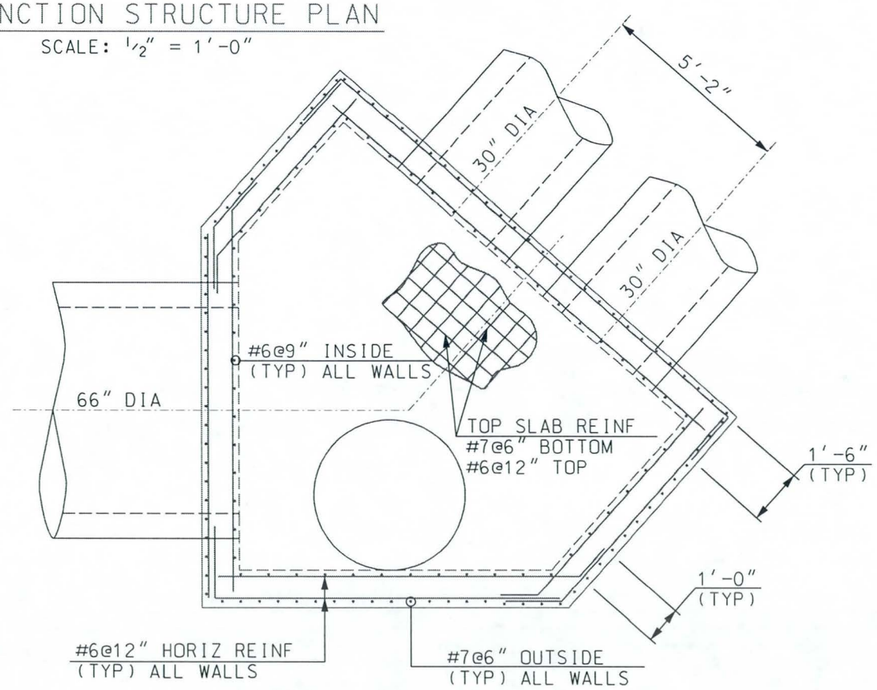

JUNCTION STRUCTURE PLAN

SCALE: 1/2" = 1'-0"

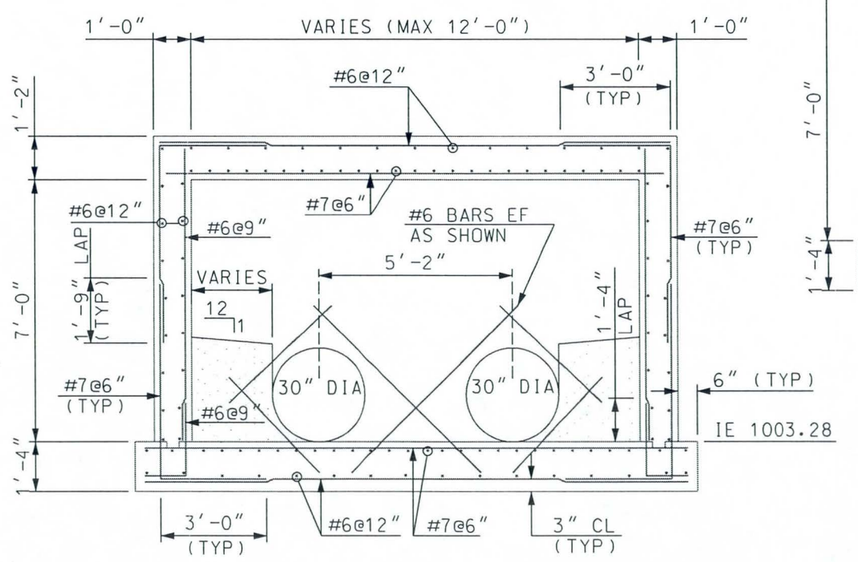

SECTION B

SCALE: 1/2" = 1'-0"

NO.	REVISION	BY	DATE
3			
2			
1			

FLOOD CONTROL DISTRICT OF MARICOPA COUNTY
ENGINEERING DIVISION

43RD AVENUE DETENTION BASIN
FCD PROJECT NO. 1170230
90% SUBMITTAL

PRELIMINARY NOT FOR CONSTRUCTION

	BY	DATE
DESIGNED	KVH	02/10/99
DRAWN	FC	02/10/99
CHECKED	MAL	

DETAIL 1
JUNCTION STRUCTURE DETAIL

SHEET OF 20 26

...\dgn\phase3\jsbx-p3.dgn Mar. 19, 1999 08:22:46

FLOOD CONTROL DISTRICT OF MARICOPA COUNTY

PROJECT 43rd Ave. Storm DR. PAGE 1 OF
DETAIL Junction Box COMPUTED KVH DATE Dec/98
Sta. 20+08 CHECKED BY DATE

Loading on the Box:

Inv. El 1003.28
Ht = 8.25
1011.53

Rim El. 1022.7
− 1011.5
11.2

Say Fill Ht = 11'

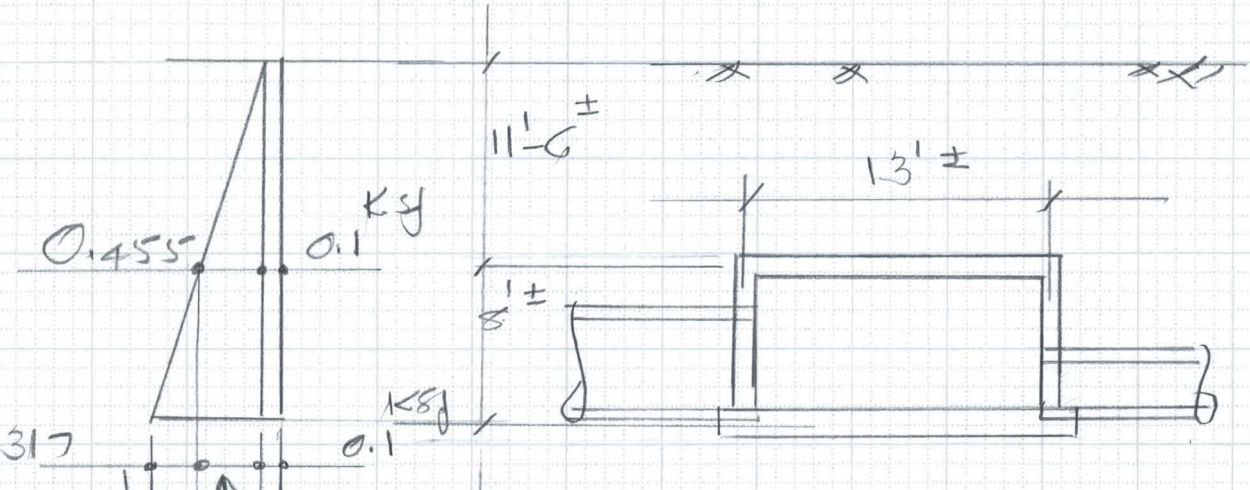

Earth pr:

$Ht_1 = 11.5$, $pr_1 = (0.12 \times 0.33 \times 11.5) = 0.455$ ksf

$Ht_2 = 19.5$ $pr_2 = (0.12 \times 0.33 \times 19.5) = 0.772$

pr (Surch) $= (0.12 \times 0.33 \times 2') = 0.08$ Say 0.1 ksf

$(0.317 + 0.455) = 0.772$ ksf

FLOOD CONTROL DISTRICT OF MARICOPA COUNTY

PROJECT 43rd Ave. Storm DR. PAGE 2(A) OF
DETAIL Junction Box COMPUTED KVH DATE Dec/98
Sta. 20+08 CHECKED BY DATE

Top Slab:

fill Ht = 11' wt = (0.12 x 11) = 1.32 KSf
Conc. Slab: wt. (1.25 x 0.15) = 0.19
2' Surch: (2 x 0.11) = 0.22

1.73 KSf

$M_s = (1.73 \times 13^2/8)$
$= 36.6$ Kft

$d_{eff} = (14 - 2.5) = 11.5''$

$A_{s_1} = \frac{36.6 \times 12}{24 \times 0.88 \times 11.5}$
$= 1.81 \text{ in}^2$

$M_{fix} = \frac{wl^2}{12} = 1.73 \times 13^2/12$
$= 24.4$

$A_{s_2} = \frac{24.4 \times 12}{24 \times 0.88 \times 11.5}$
$= 1.21 \text{ in}^2$

Use #7 @ 6", $A_s = 1.2$

Stiffness Ratio:

$I_1 = \frac{1 \times 14^3}{12} = 228$, $\frac{I_1}{L_1} = \frac{228}{13 \times 12} = 1.46$

$I_2 = \frac{1 \times 12^3}{12} = 144$ $\frac{I_2}{L_2} = \frac{144}{8 \times 12} = 1.50$

$K_{slab} = \left(\frac{1.46}{1.46 + 1.50}\right) = 0.49$

$K_{wall} = \left(\frac{1.50}{1.46 + 1.50}\right) = 0.51$

∴ Almost Equal Distribution between wall and Slabs

FLOOD CONTROL DISTRICT OF MARICOPA COUNTY

PROJECT 43rd Ave. Storm DR PAGE 2 (B) OF

DETAIL Junction Box COMPUTED KVH DATE 2/99

Sta. 20+08 CHECKED BY DATE

Check Wall Reinf:

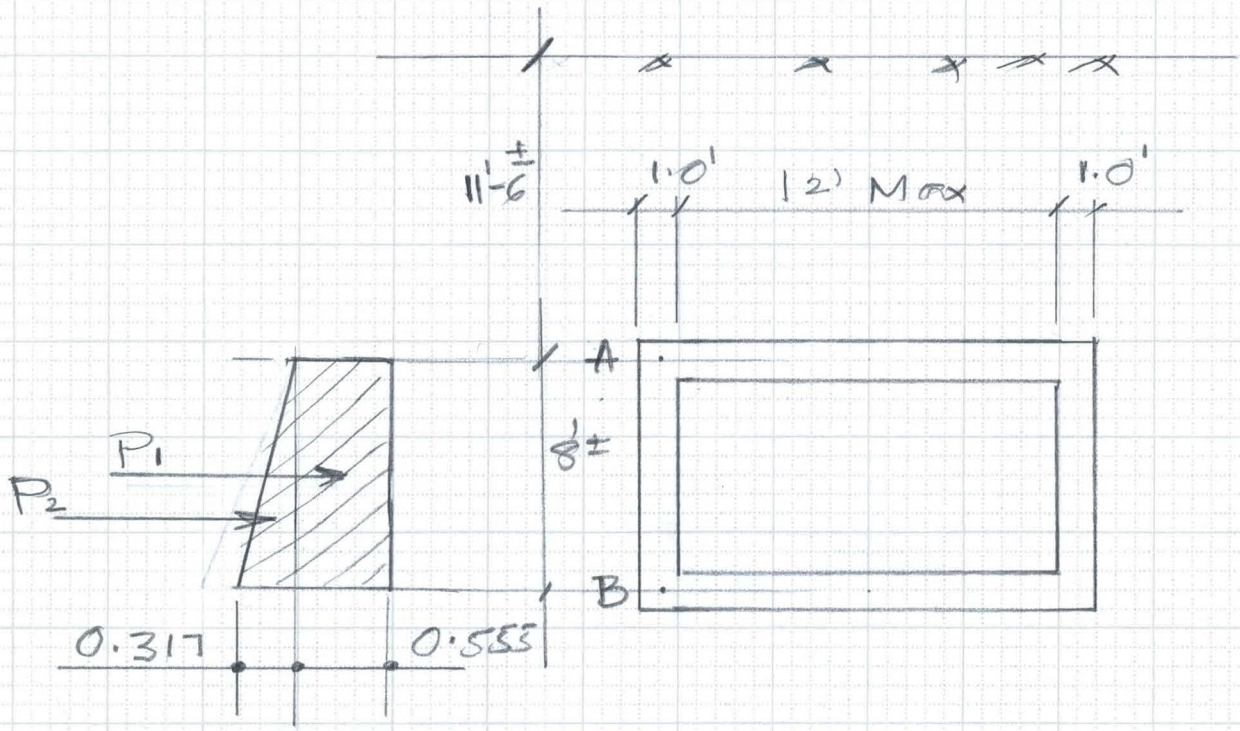

Check Wall Moments:

$P_1 = (0.555 \times 8) = 4.44^K$

$P_2 = \left(\frac{0.317}{2} \times 8\right) = 1.27^K$

$M_1 = (2.22 \times 4) = 8.88^{K'}$

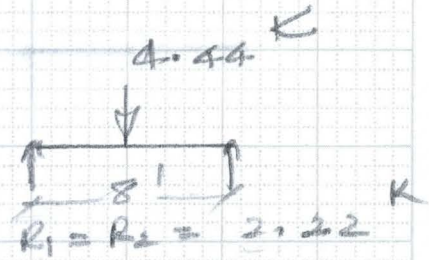

$R_1 = 1.27 \times 2.67/8 = 0.42^K$

$R_2 = (1.27 - 0.42) = 0.85^K$

$M_2 = (0.42 \times 5.33) = 2.24^{K'}$

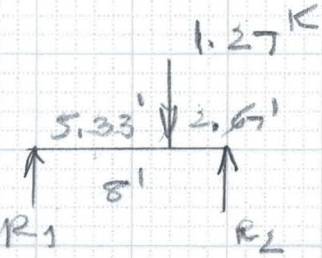

$M_{Total} = (8.88 + 2.24) = 11.12^{K'}$

$d_{eff} = (12 - 2 - 0.5) = 9.5''$ $\quad A_s = \frac{11.12 \times 12}{24 \times 0.88 \times 9.5} = 0.65$

use #6 @ 9" $A_s = 0.59$

This is 0.1< as there will be some cont. at the ends.

FLOOD CONTROL DISTRICT OF MARICOPA COUNTY

PROJECT 43rd Ave. Storm DR. PAGE 2(a) OF

DETAIL Junction Box COMPUTED KVH DATE Dec/98

Sta. 20+08 CHECKED BY DATE

Top Slab:

fill Ht = 11' wt = (0.12 x 11) = 1.32 ksf

Conc. Slab: wt. (1.25 x 0.15) = 0.19

2' Surch: (2 x 0.11) = 0.22

1.73 ksf

$M_s = (1.73 \times 13^2/8)$

$= 36.6$ kft

$d_{eff} = (14 - 2.5) = 11.5''$ $A_{s_1} = \frac{36.6 \times 12}{24 \times 0.88 \times 11.5}$

$= 1.81 \text{ in}^2$

$M_{fix} = \frac{wl^2}{12} = 1.73 \times 13^2/12$

$= 24.4$

$A_{s_2} = \frac{24.4 \times 12}{24 \times 0.88 \times 11.5}$

$= 1.21 \text{ in}^2$

use #7 @ 6", $A_s = 1.2$

Stiffness Ratio:

$I_1 = \frac{1 \times 14^3}{12} = 228$, $\frac{I_1}{L_1} = \frac{228}{13 \times 12} = 1.46$

$I_2 = \frac{1 \times 12^3}{12} = 144$ $\frac{I_2}{L_2} = \frac{144}{8 \times 12} = 1.50$

$K_{slab} = \left(\frac{1.46}{1.46 + 1.50}\right) = 0.49$

$K_{wall} = \left(\frac{1.50}{1.46 + 1.50}\right) = 0.51$

∴ Almost Equal Distribution between wall and Slabs

FLOOD CONTROL DISTRICT OF MARICOPA COUNTY

PROJECT 43rd Ave. Storm DR PAGE 2 (B) OF

DETAIL Junction Box COMPUTED KVH DATE 2/99

Sta. 20+08 CHECKED BY DATE

Check Wall Reinf:

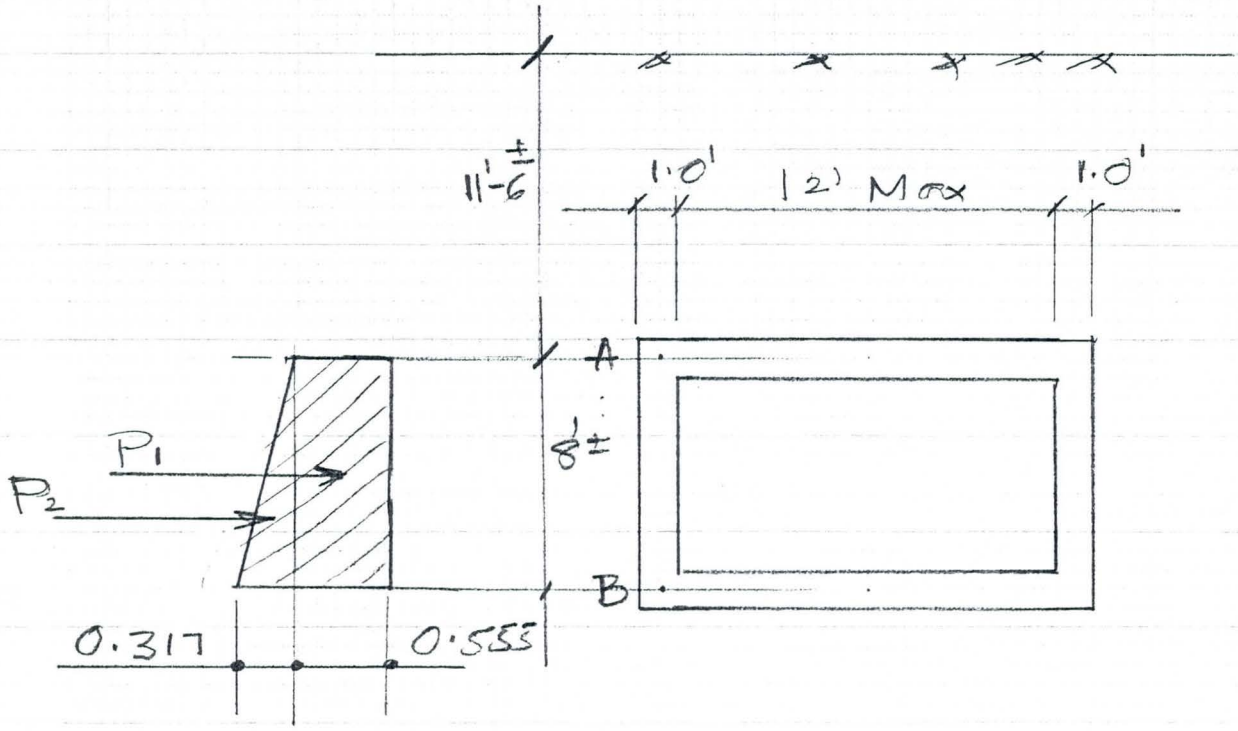

Check Wall Moments:

$P_1 = (0.555 \times 8) = 4.44^K$

$P_2 = (\frac{0.317}{2} \times 8) = 1.27^K$

$M_1 = (2.22 \times 4) = 8.88^{K'}$

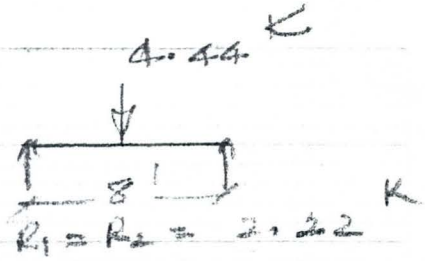

$R_1 = 1.27 \times 2.67/8 = 0.42^K$

$R_2 = (1.27 - 0.42) = 0.85^K$

$M_2 = (0.42 \times 5.33) = 2.24^{K'}$

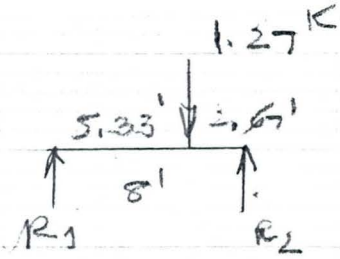

$M_{Total} = (8.88 + 2.24) = 11.12^{K'}$

$d_{eff} = (12 - 2 - 0.5) = 9.5''$ $\quad A_s = \frac{11.12 \times 12}{24 \times 0.88 \times 9.5} = 0.55$

Use 1 #6 @ ~~8''~~ 9'' $\quad A_s = \cancel{0.66}\ 0.59$

FLOOD CONTROL DISTRICT OF MARICOPA COUNTY

PROJECT 43rd Ave. Storm DR PAGE 3 OF

DETAIL Junction Box COMPUTED KVH DATE Dec.98

Stat. 20+08 CHECKED BY DATE

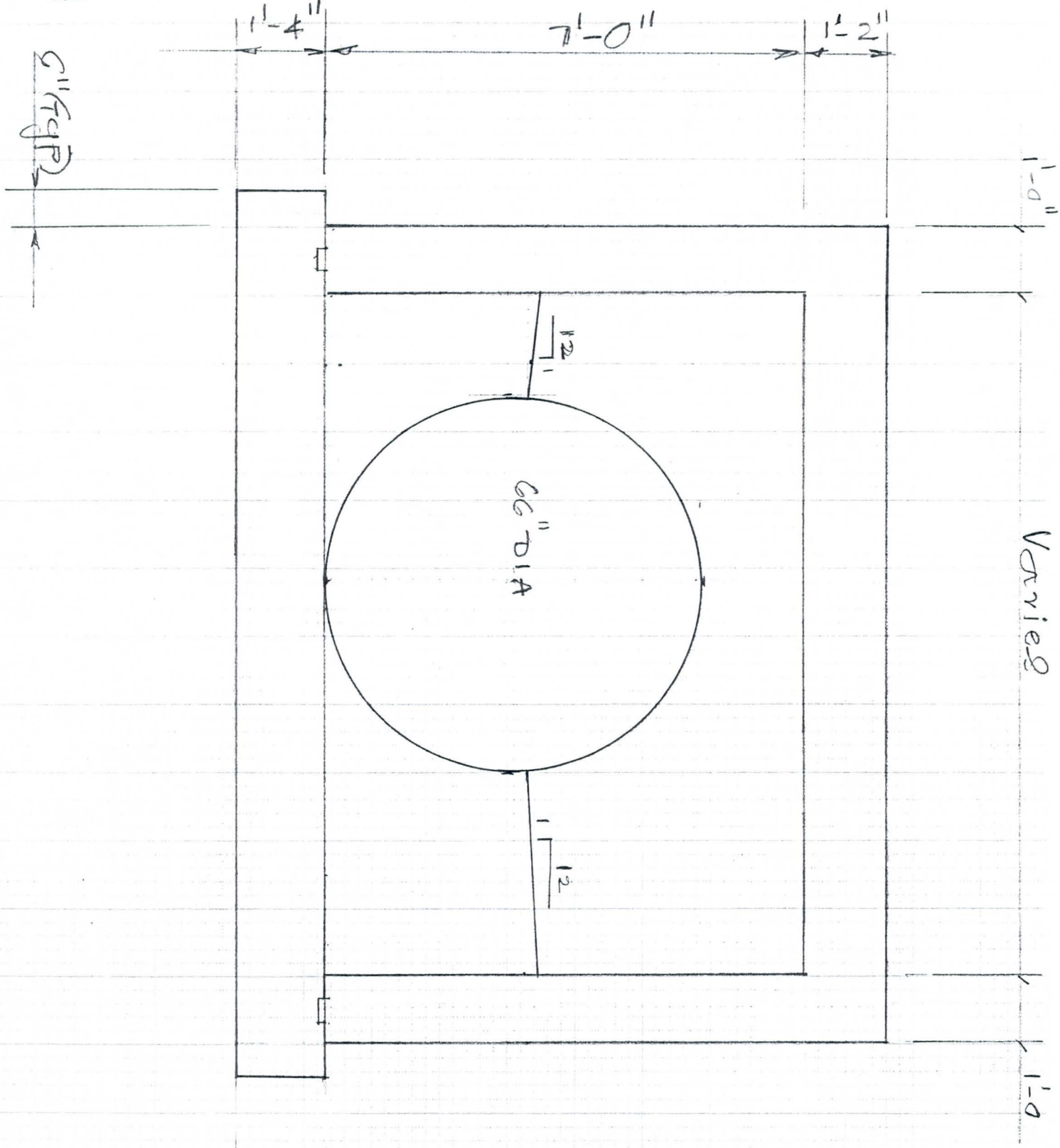

FLOOD CONTROL DISTRICT OF MARICOPA COUNTY

PROJECT 43rd Ave. Storm DR PAGE 4 OF

DETAIL Junction Box COMPUTED KWH DATE Dec/98

Sta. 20+08 CHECKED BY DATE

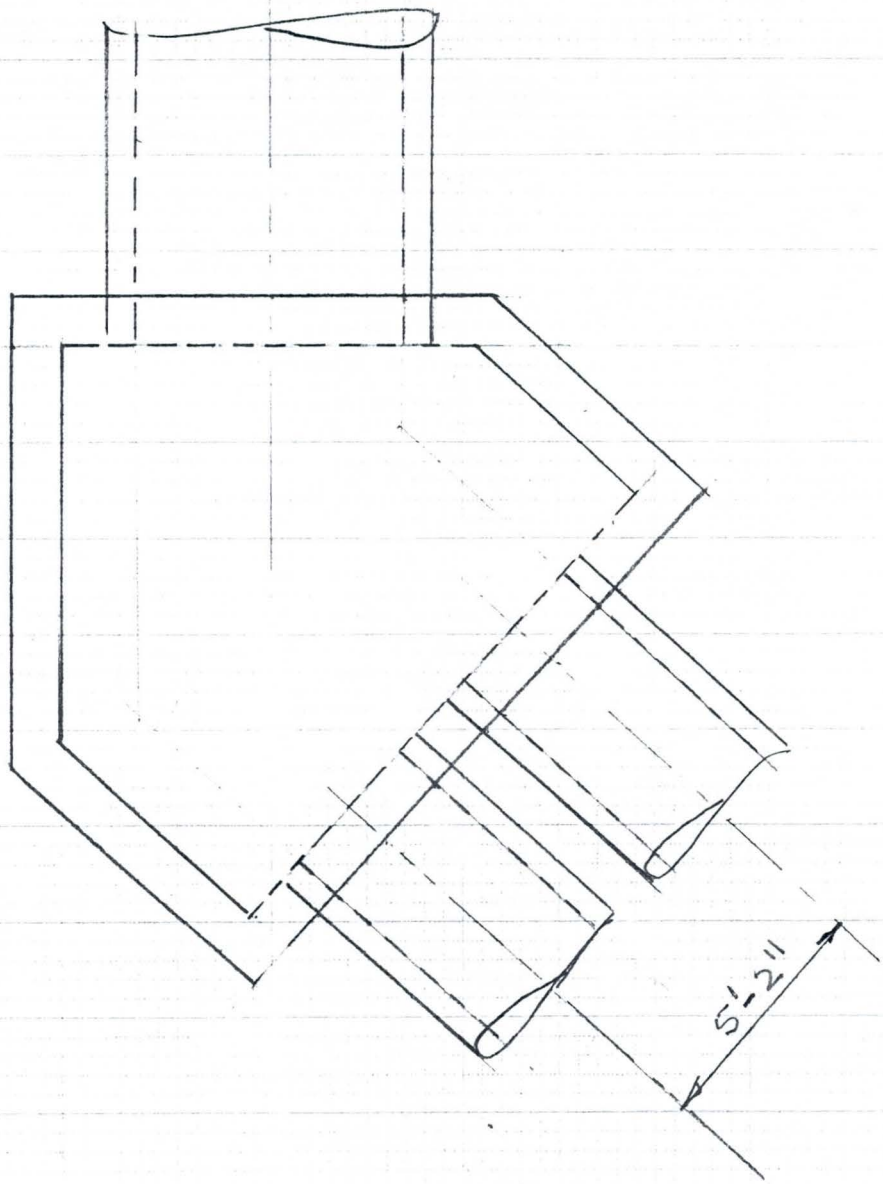

FLOOD CONTROL DISTRICT OF MARICOPA COUNTY

PROJECT 43rd Ave Storm DR PAGE 5 OF

DETAIL Junction Box COMPUTED KVH DATE Dec 98

Sta. 20+08 CHECKED BY DATE

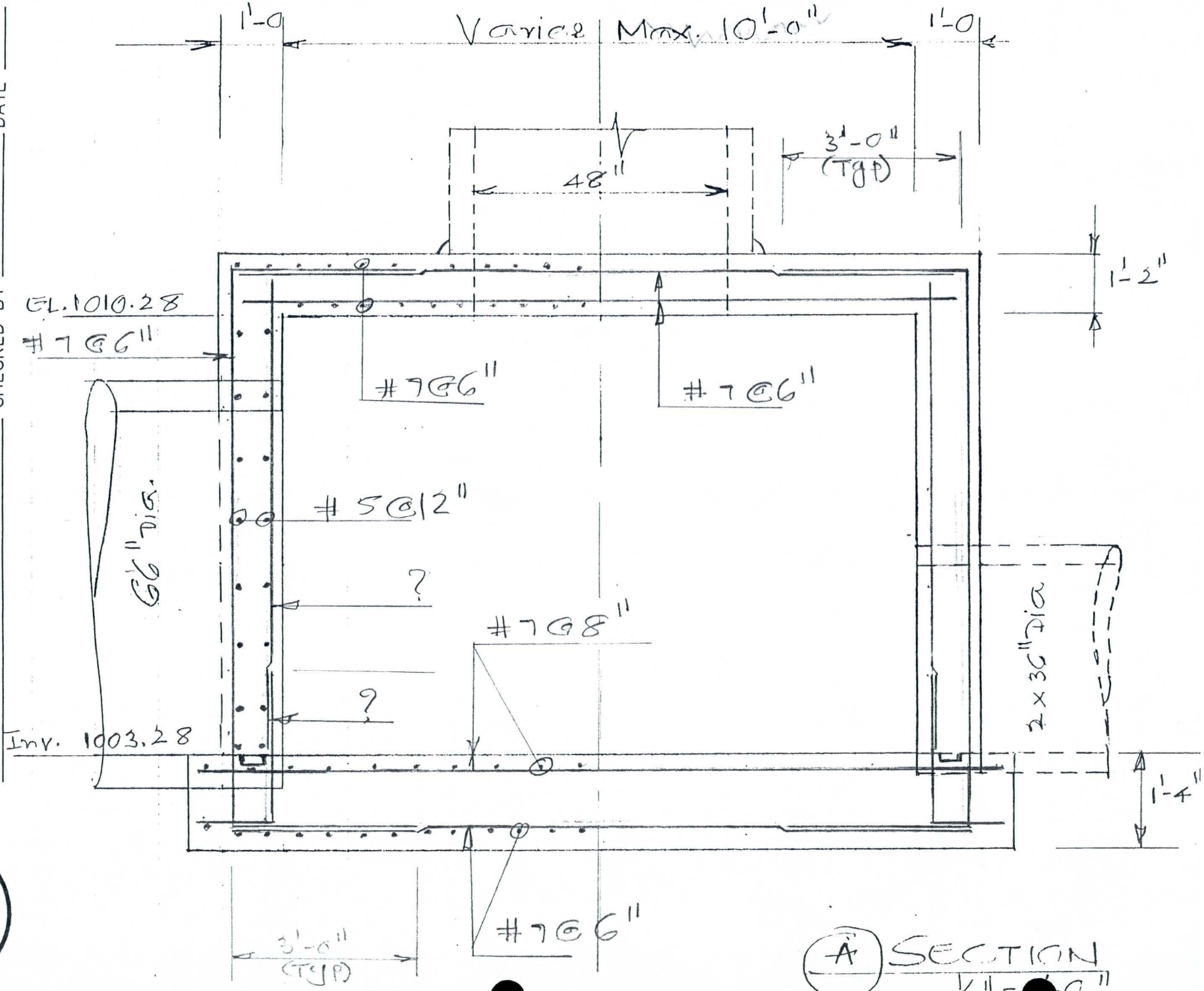

A SECTION

1/2" = 1'-0"

FLOOD CONTROL DISTRICT OF MARICOPA COUNTY

FLOOD CONTROL DISTRICT OF MARICOPA COUNTY

PROJECT 43rd Ave Storm DR. PAGE 6 OF 117

DETAIL Junction Box COMPUTED KVH DATE Dec 9

Sta. 20+08 CHECKED BY DATE

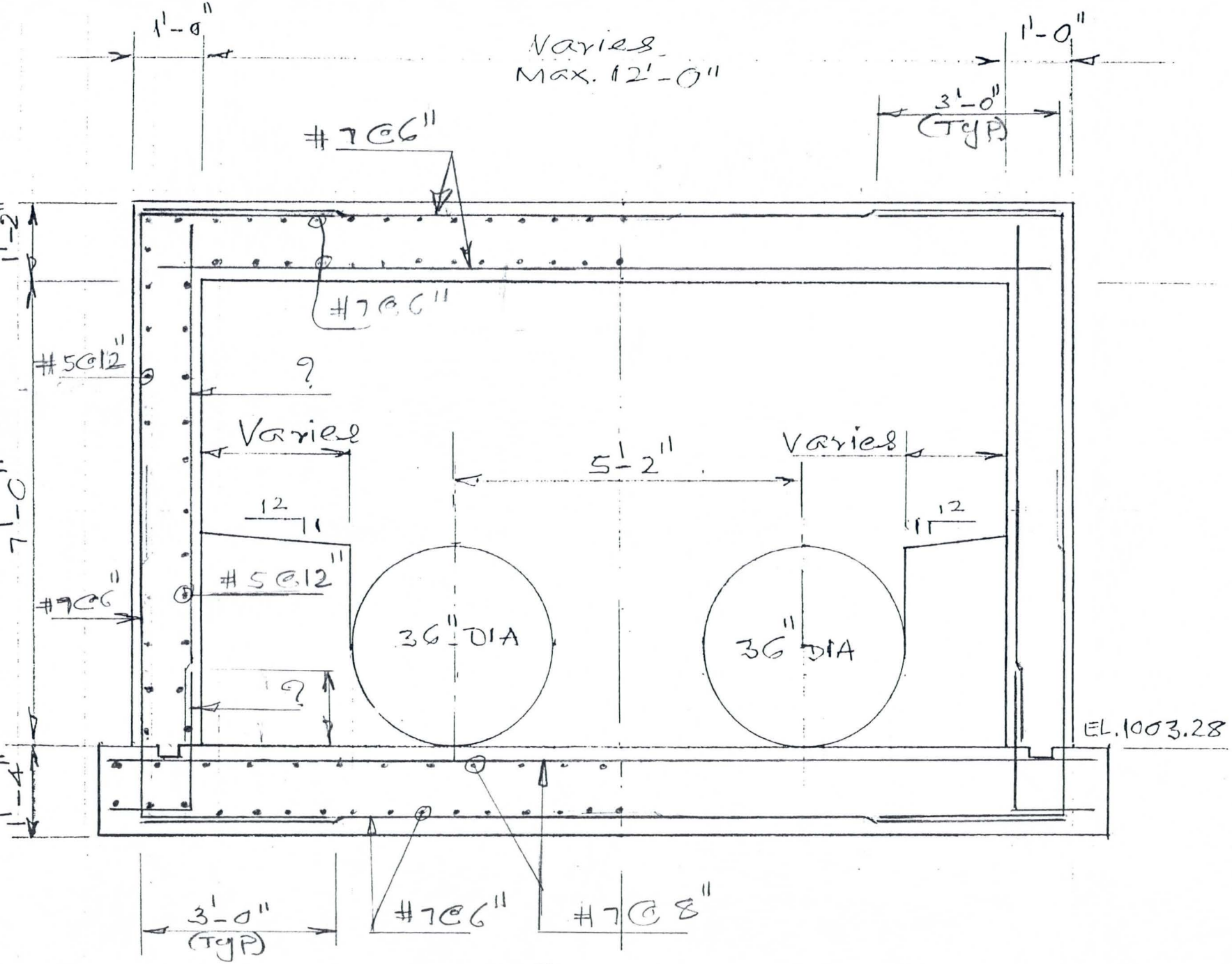

B

Section

Scale: 1/2" = 1'-0

FLOOD CONTROL DISTRICT OF MARICOPA COUNTY

118

PROJECT 43rd Ave. Storm DR PAGE 7 OF

DETAIL Junction Box COMPUTED KVH DATE DEC.98

Stat. 20+08 CHECKED BY DATE

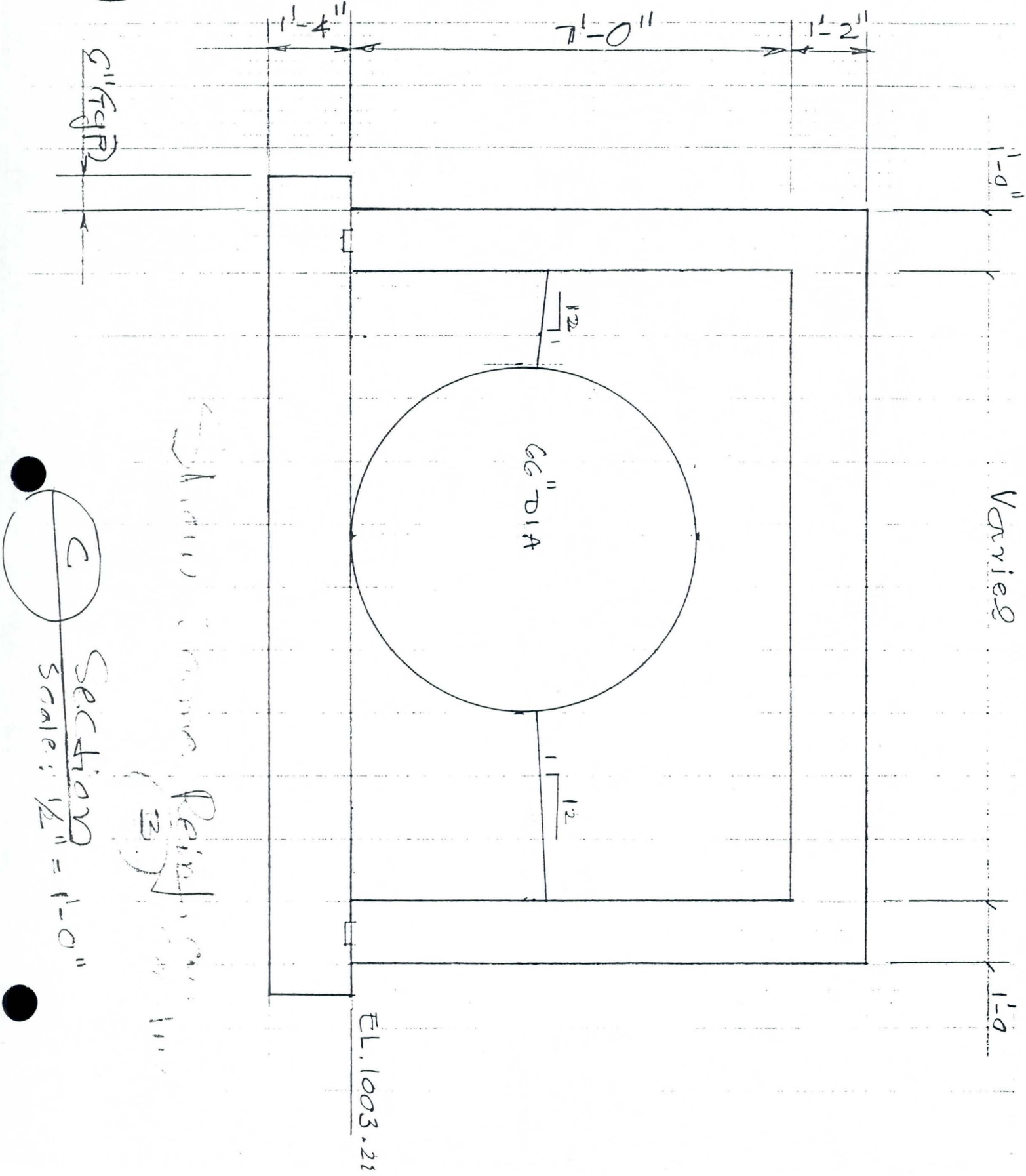

(119)

FLOOD CONTROL DISTRICT OF MARICOPA COUNTY

PROJECT 43rd Ave. Storm DR PAGE 3 OF

DETAIL Junction Box COMPUTED KVH DATE DEC.98

Stat. 20+08 CHECKED BY DATE

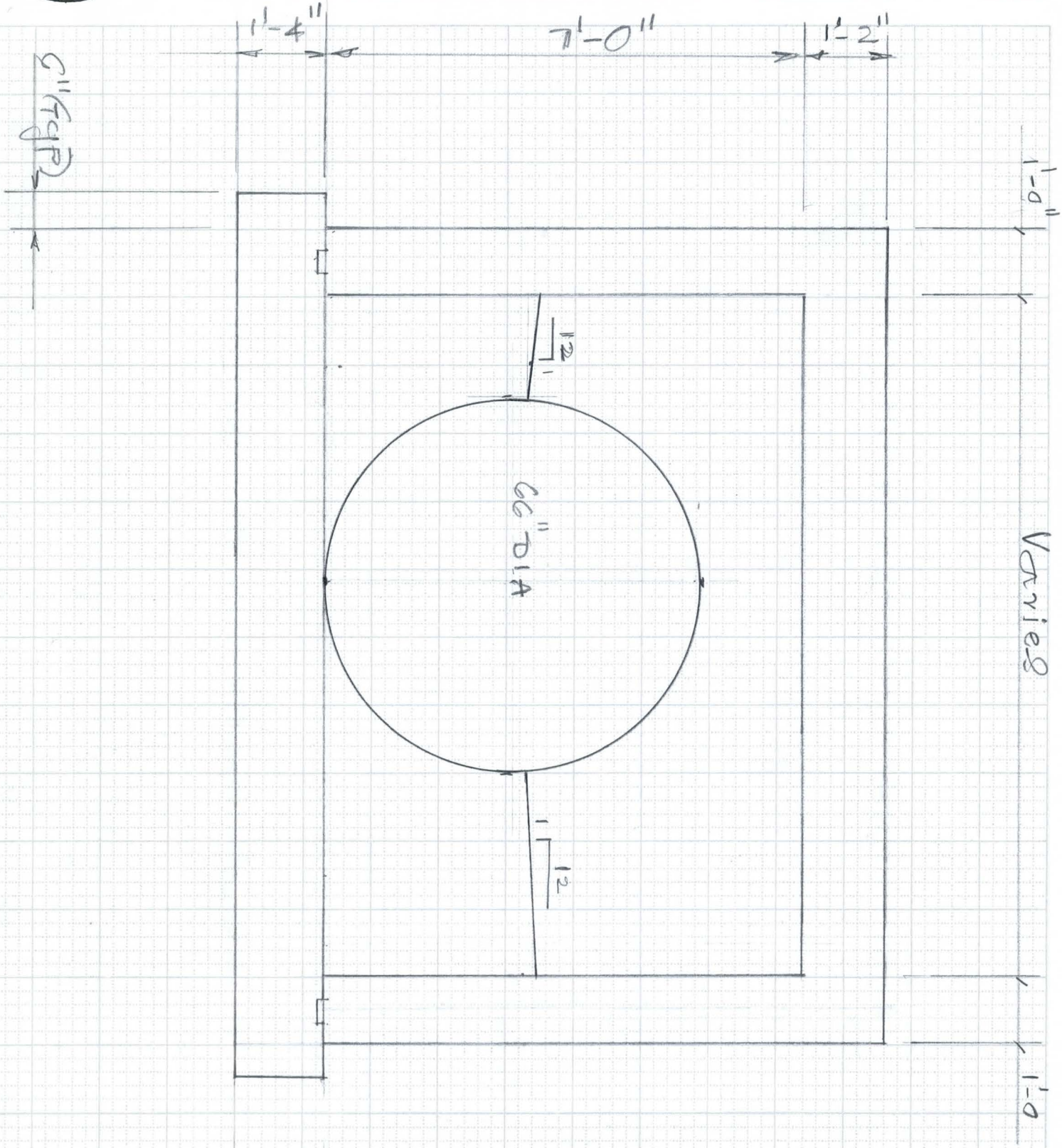

6910-153 4-90

(120)

FLOOD CONTROL DISTRICT OF MARICOPA COUNTY

PROJECT 43rd Ave. Storm DR PAGE 4 OF

DETAIL Junction Box COMPUTED KWH DATE Dec/9

Sta. 20+08 CHECKED BY DATE

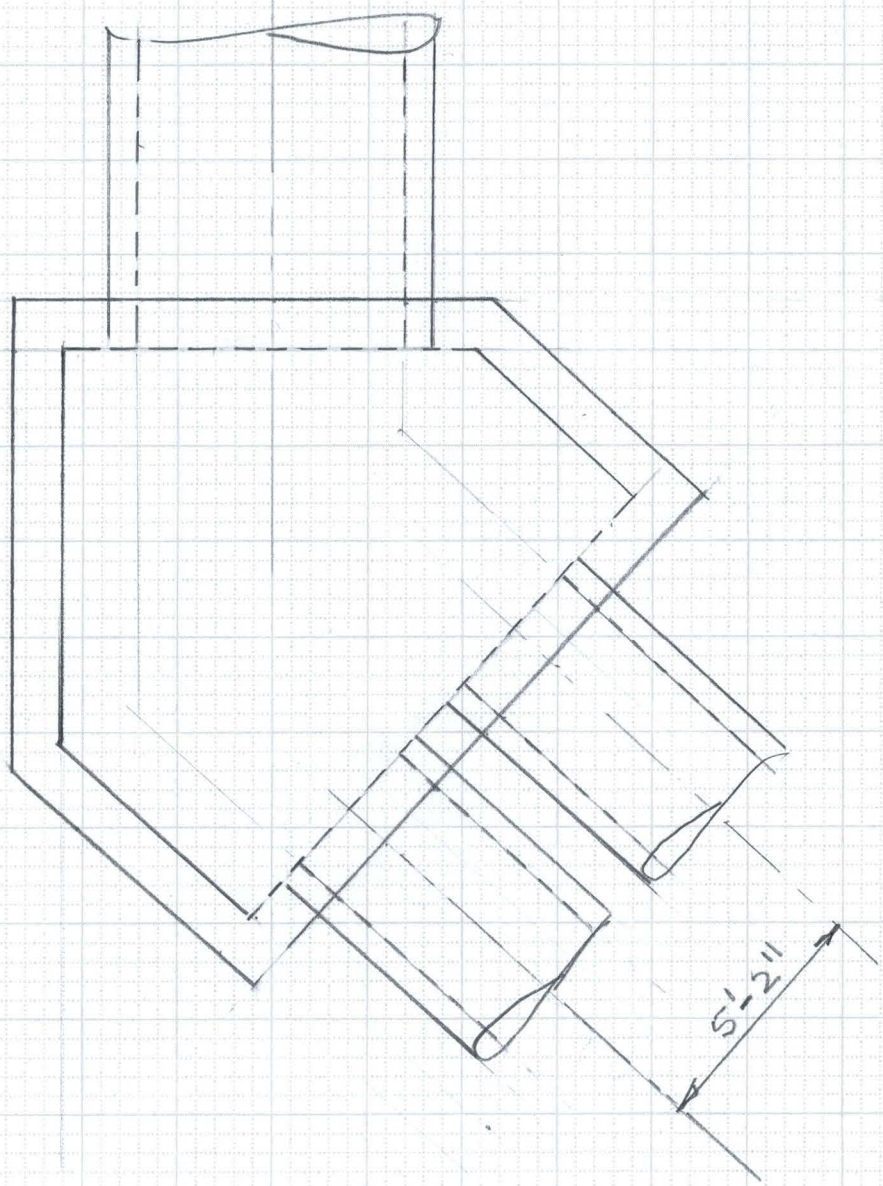

6910-153 4-90

FLOOD CONTROL DISTRICT OF MARICOPA COUNTY

PROJECT 43rd Ave Storm Dr PAGE 5 OF

DETAIL Transition Box COMPUTED KVH DATE Dec 98

Sta. 20+08 CHECKED BY DATE

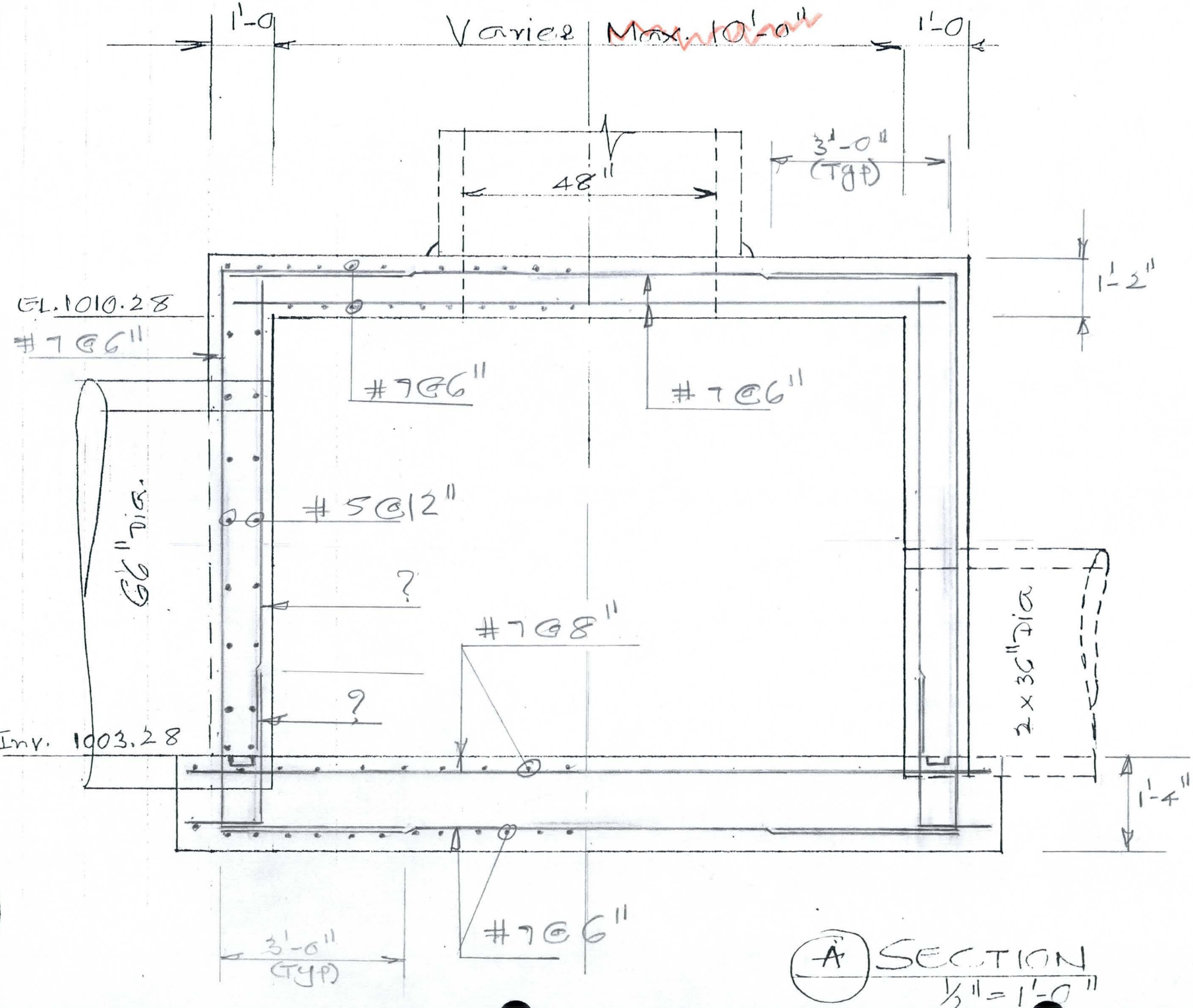

A SECTION
½" = 1'-0"

FLOOD CONTROL DISTRICT OF MARICOPA COUNTY

PROJECT 43rd Ave Storm Dr. PAGE 6 OF

DETAIL Junction Box COMPUTED KVH DATE Dec 92

Sta. 20+08 CHECKED BY DATE

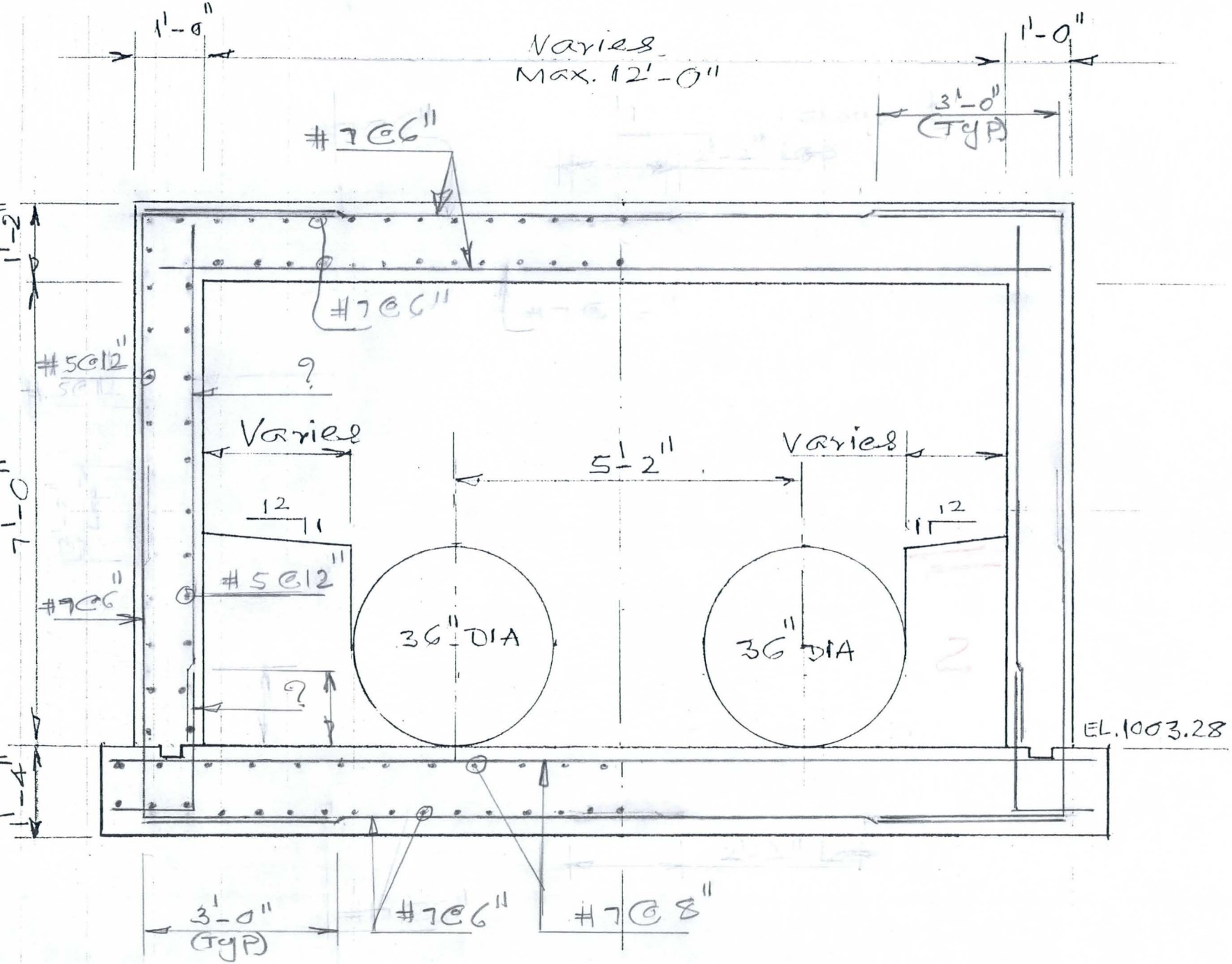

B

Section

Scale: 1/2" = 1'-0

FLOOD CONTROL DISTRICT OF MARICOPA COUNTY

PROJECT 43rd Ave. Storm DR PAGE 7 OF

DETAIL Junction Box COMPUTED KVH DATE Dec.98

Stat. 20+08 CHECKED BY DATE

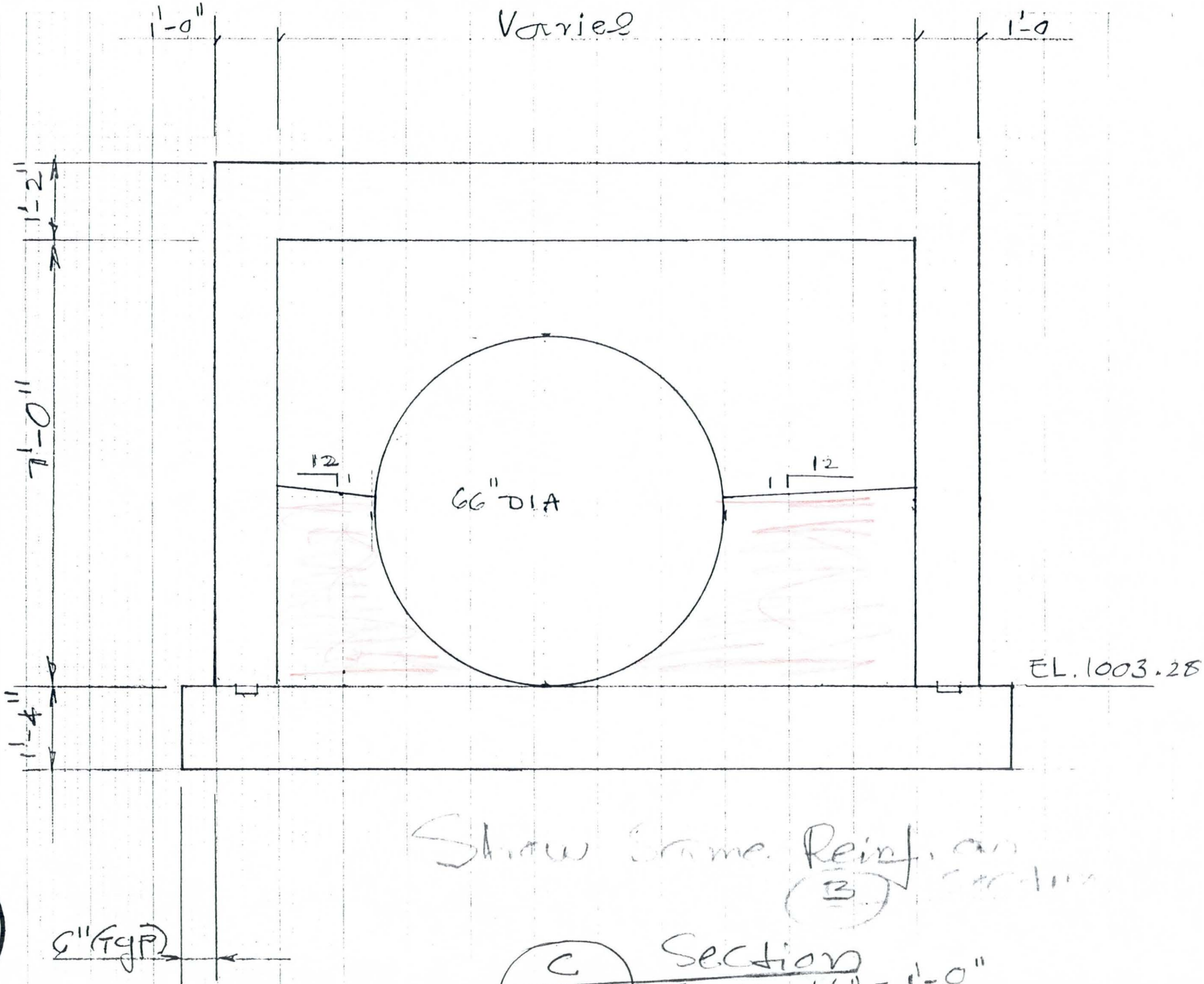

Show Same Reinf. on Section (B)

C Section

Scale: 1/2" = 1'-0"

FLOOD CONTROL DISTRICT OF MARICOPA COUNTY

FLOOD CONTROL DISTRICT OF MARICOPA COUNTY

PROJECT _____ PAGE ____ OF ____

DETAIL _____ COMPUTED _____ DATE ____

_____ CHECKED BY _____ DATE ____

Preliminary

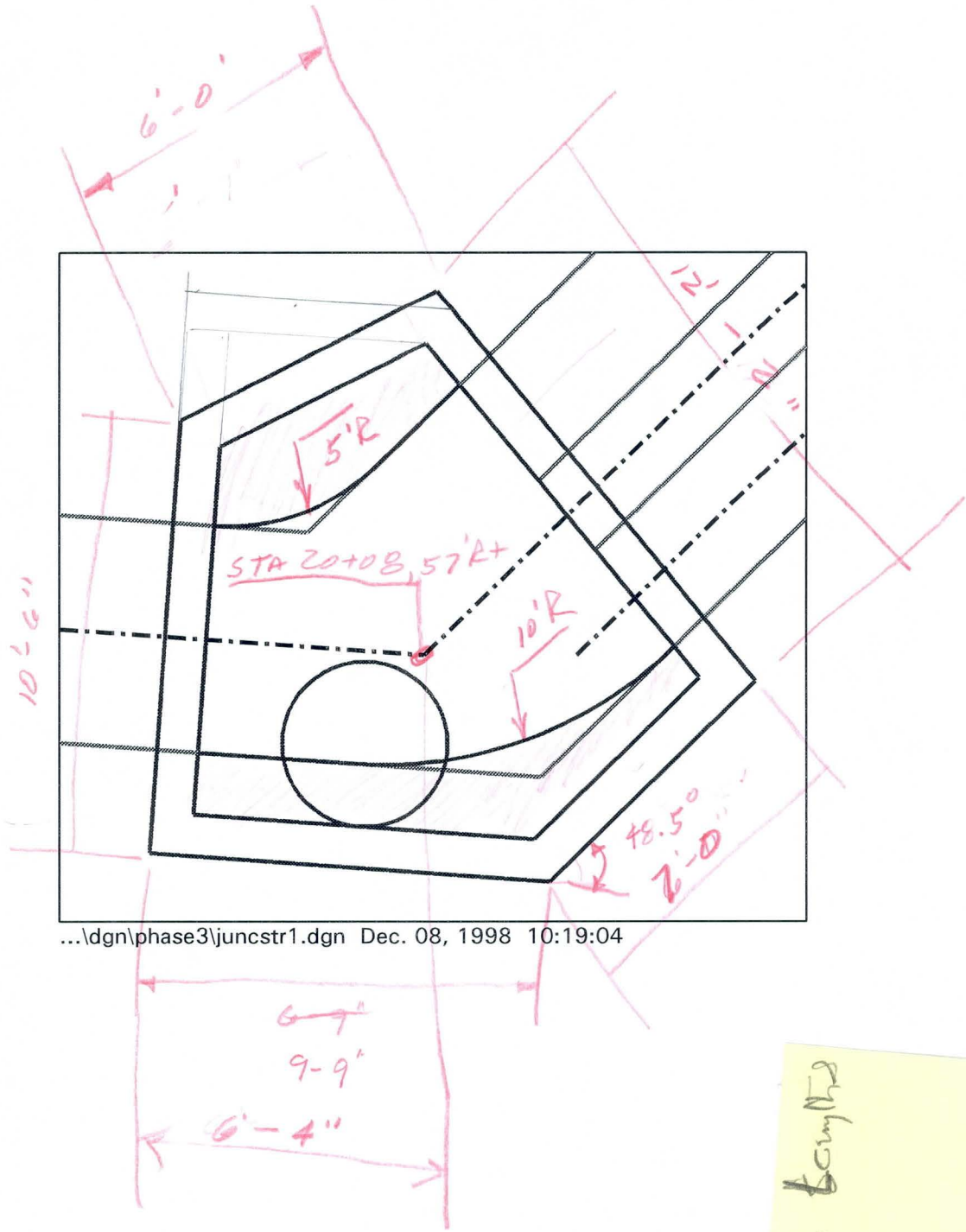

...\dgn\phase3\juncstr1.dgn Dec. 08, 1998 10:19:04

Lap Sampling

FLOOD CONTROL DISTRICT OF MARICOPA COUNTY

PROJECT 43rd Ave. Storm DR. PAGE ____ OF ____

DETAIL Junction Box COMPUTED KVH DATE Dec 19

Sta. 20+08 CHECKED BY ____ DATE ____

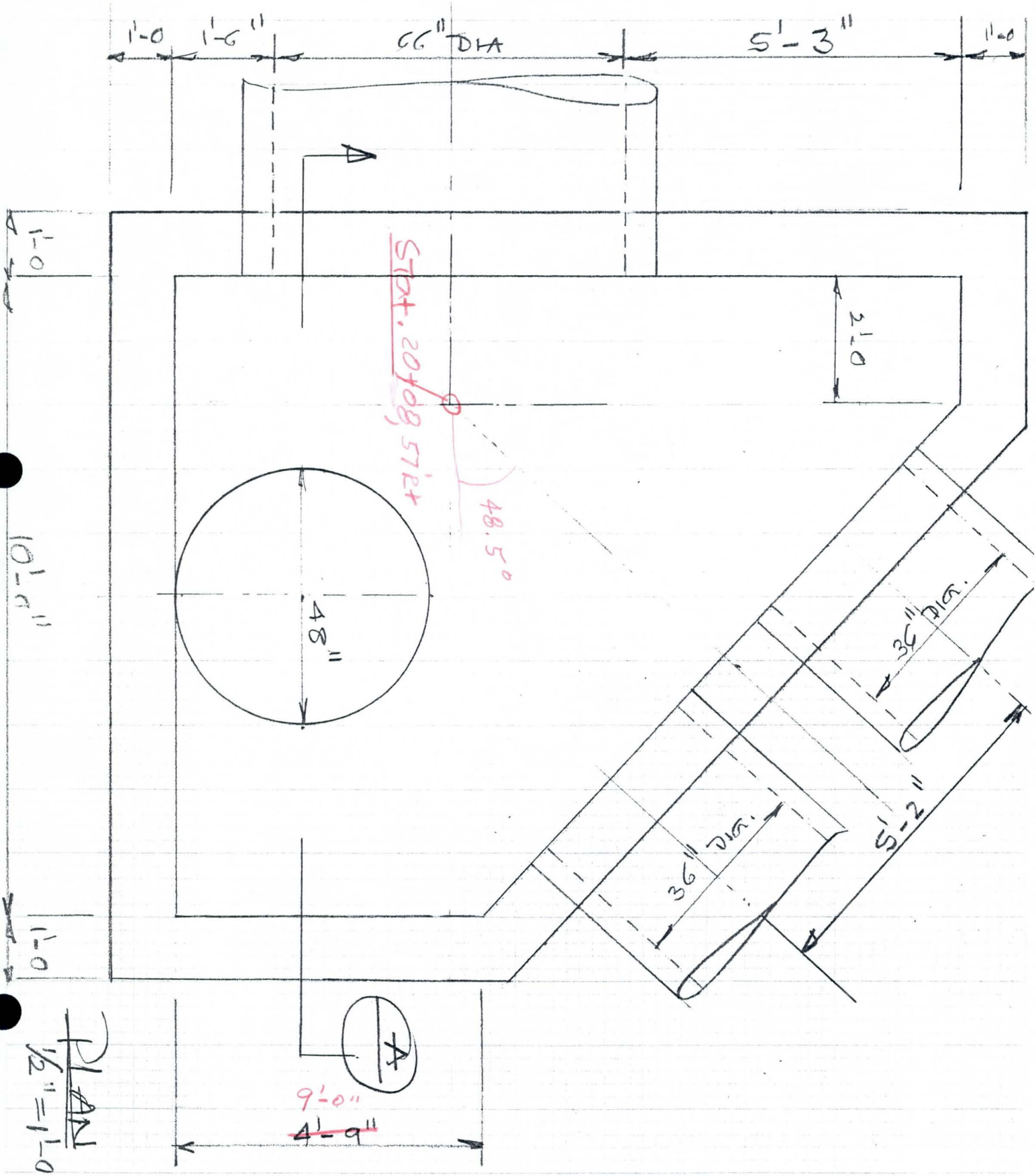

FLOOD CONTROL DISTRICT OF MARICOPA COUNTY

(127)

PROJECT 43rd Ave Storm DR PAGE ____ OF ____

DETAIL Junction Box COMPUTED ____ DATE ____

CHECKED BY ____ DATE ____

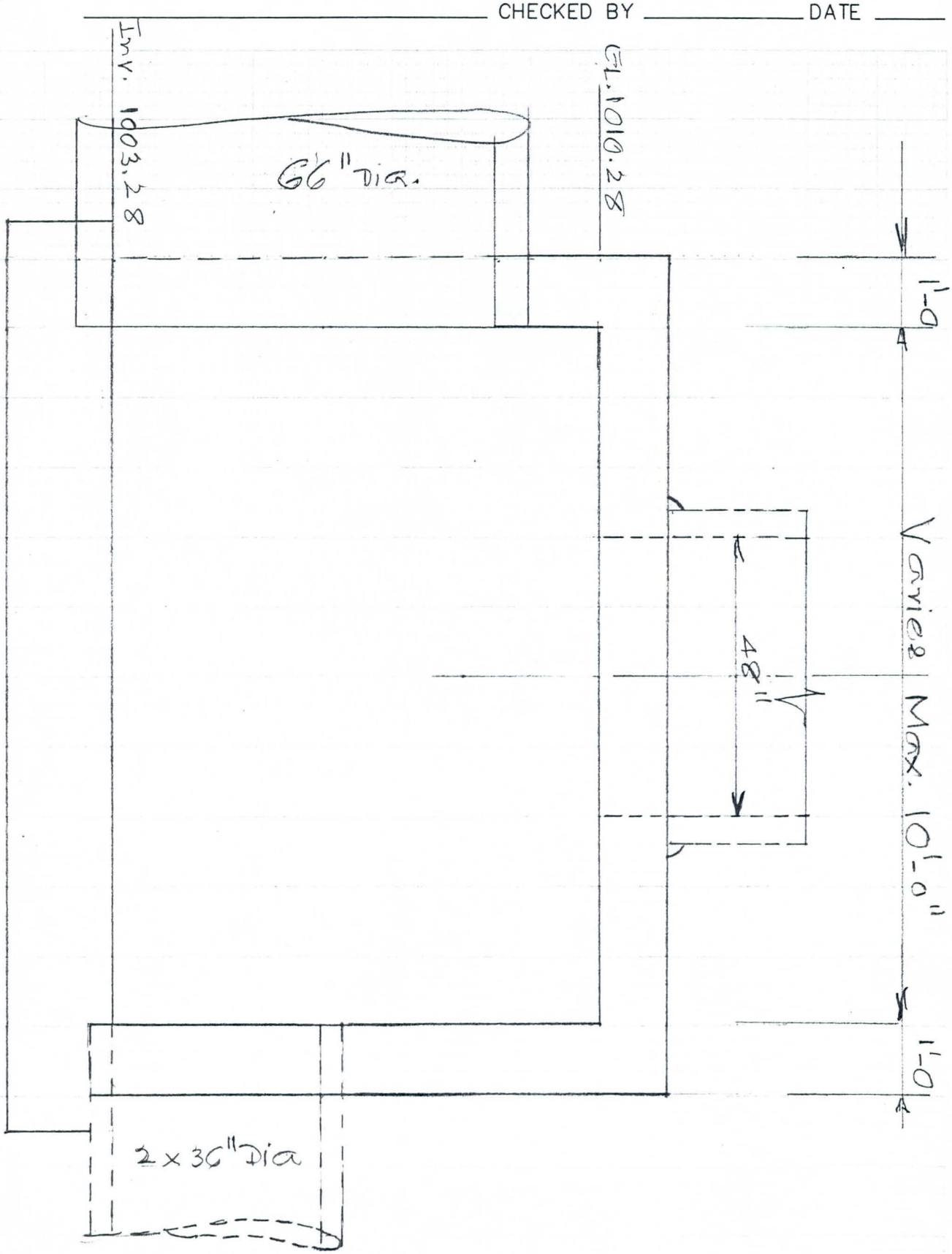

4 SECTION
1/2" = 1'-0"

FLOOD CONTROL DISTRICT OF MARICOPA COUNTY

(128)

PROJECT 43rd Ave. Storm DR. PAGE ____ OF ____

DETAIL Junction Box COMPUTED KVH DATE Dec/92

Sta. 20+08 CHECKED BY ____ DATE ____

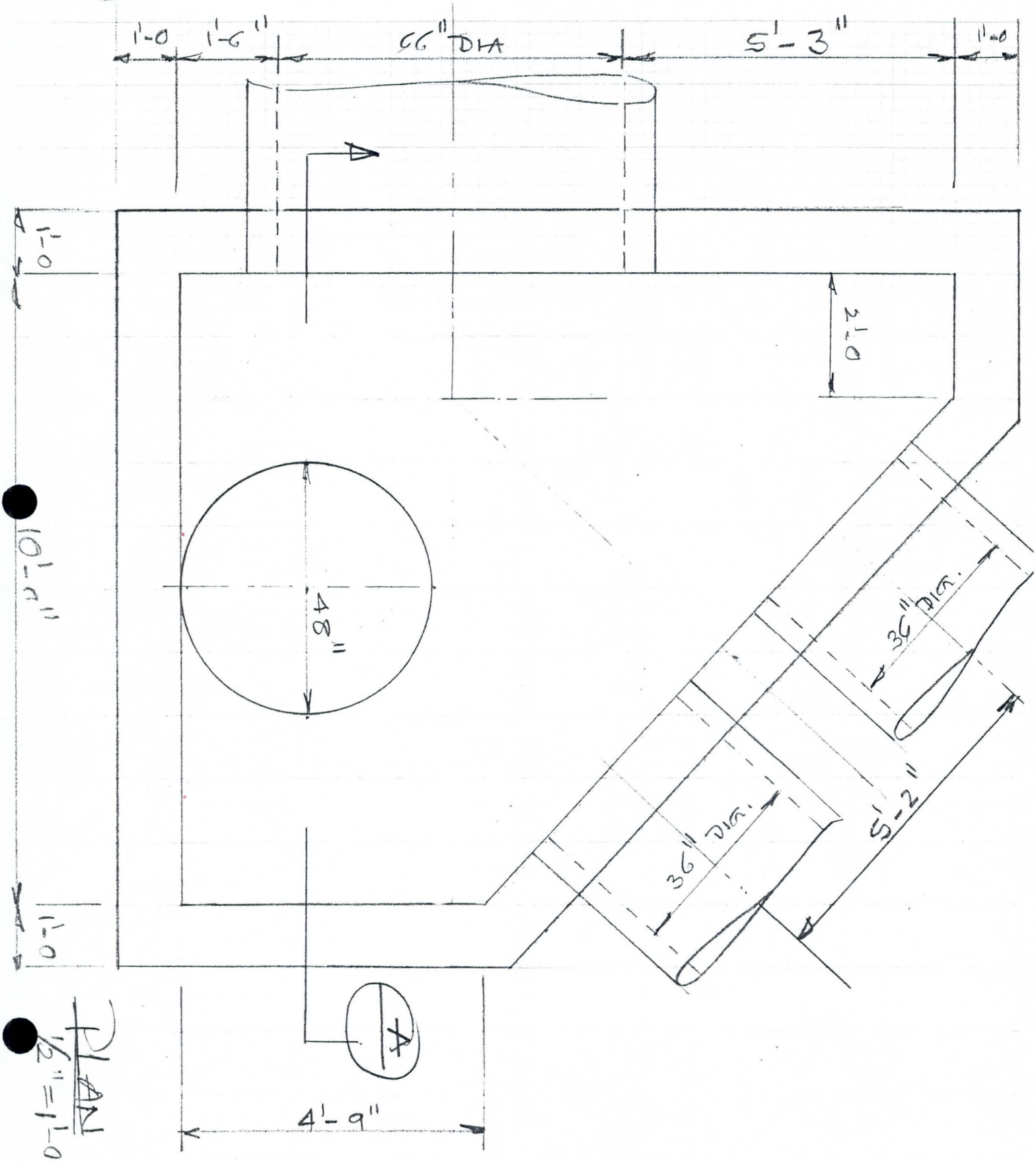

(129)

FLOOD CONTROL DISTRICT OF MARICOPA COUNTY

PROJECT 43rd AVE. Storm DR. PAGE ____ OF ____

DETAIL Junction Box COMPUTED ____ DATE ____

CHECKED BY ____ DATE ____

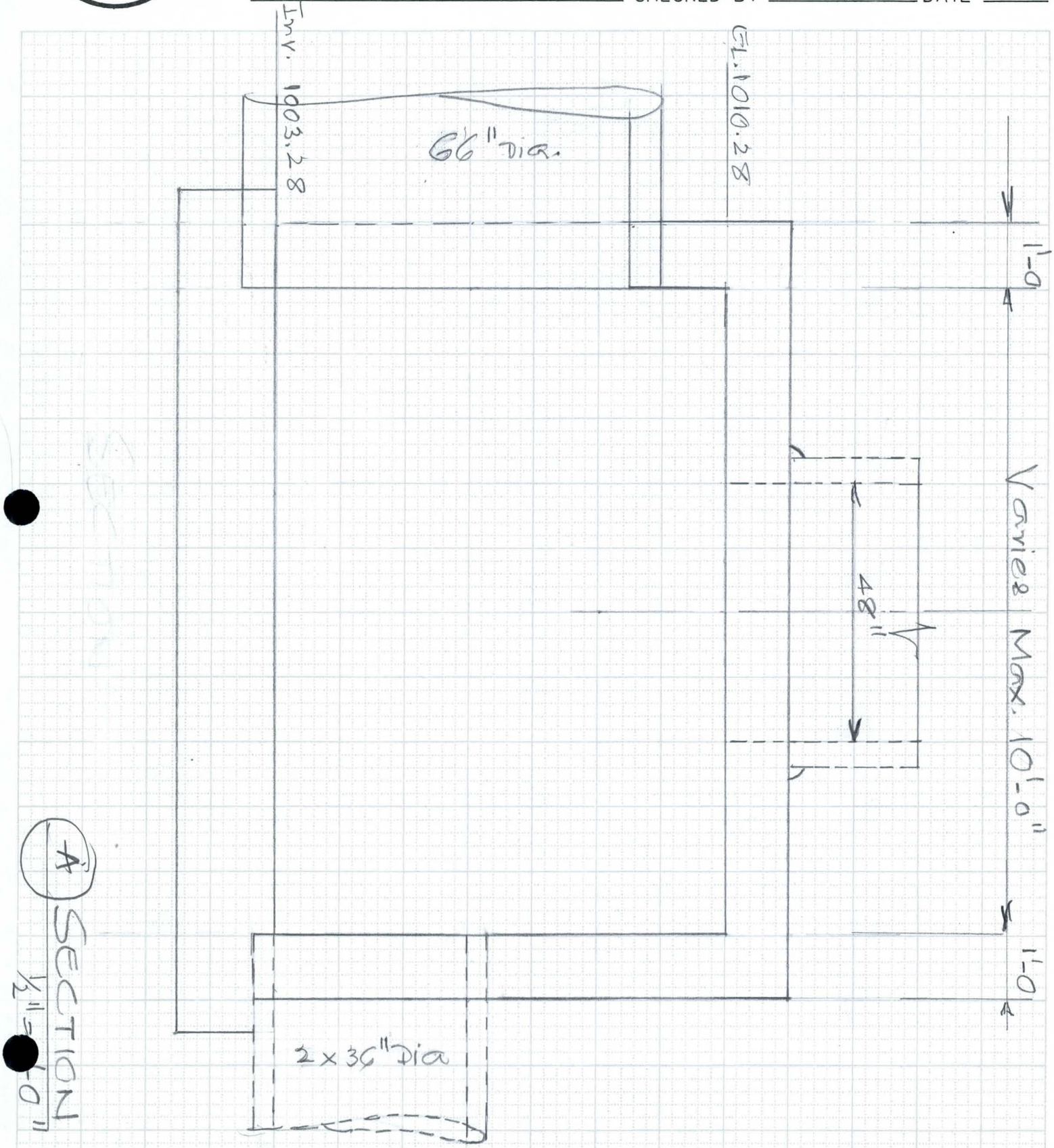

4 SECTION
1/2" = 1'-0"

6910-153 4-90

(130)

FLOOD CONTROL DISTRICT OF MARICOPA COUNTY

PROJECT 43rd Ave. Storm Dr. PAGE ____ OF ____

DETAIL Junction Box COMPUTED KVH DATE Dec/98

Sta. 20+08 CHECKED BY ____ DATE ____

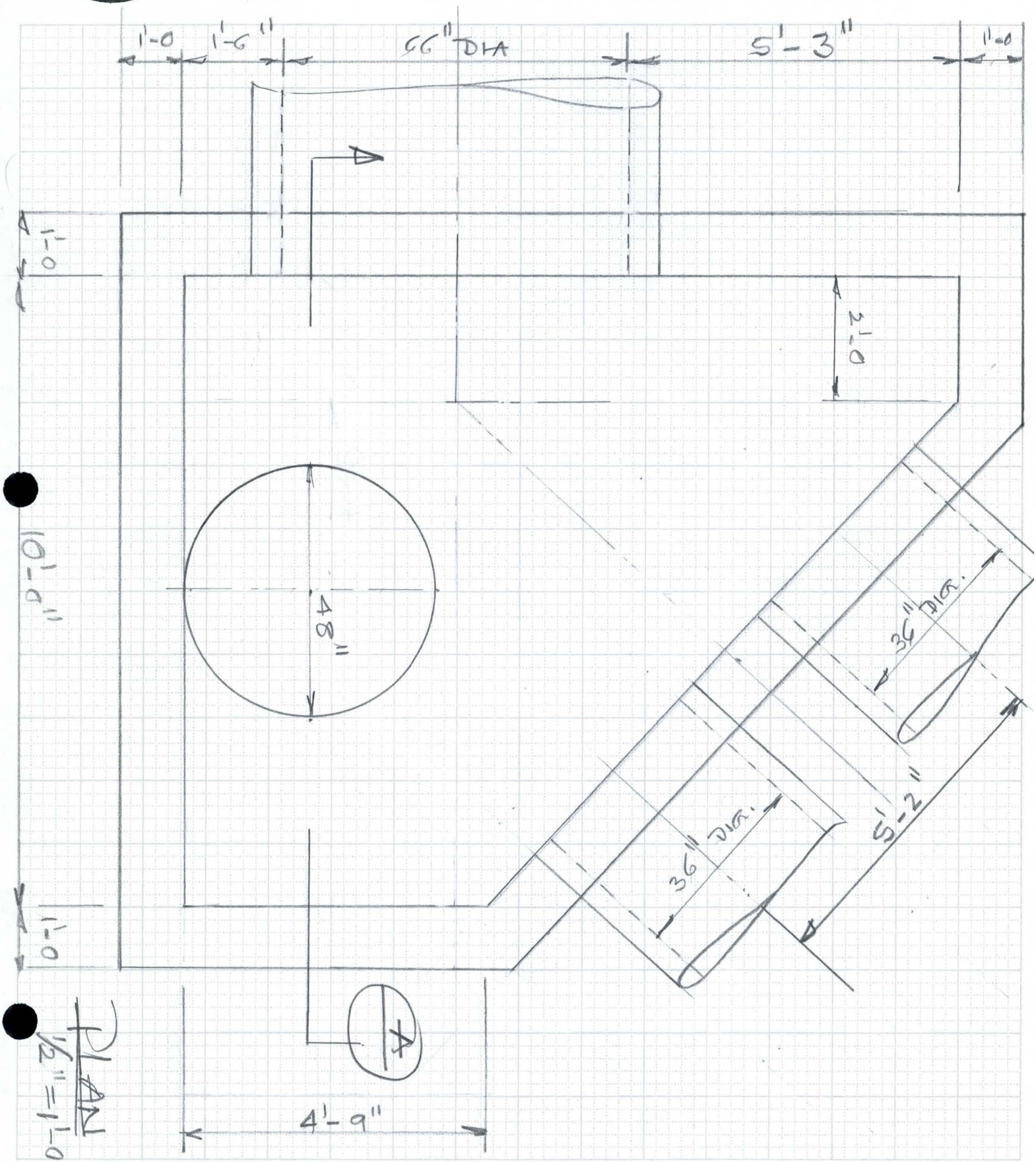

6910-153 4-90

FLOOD CONTROL DISTRICT OF MARICOPA COUNTY

(131)

PROJECT 43rd Ave. Storm DR. PAGE ____ OF ____

DETAIL Junction Box COMPUTED KVH DATE Dec 98

Sta. 20+08 CHECKED BY ____ DATE ____

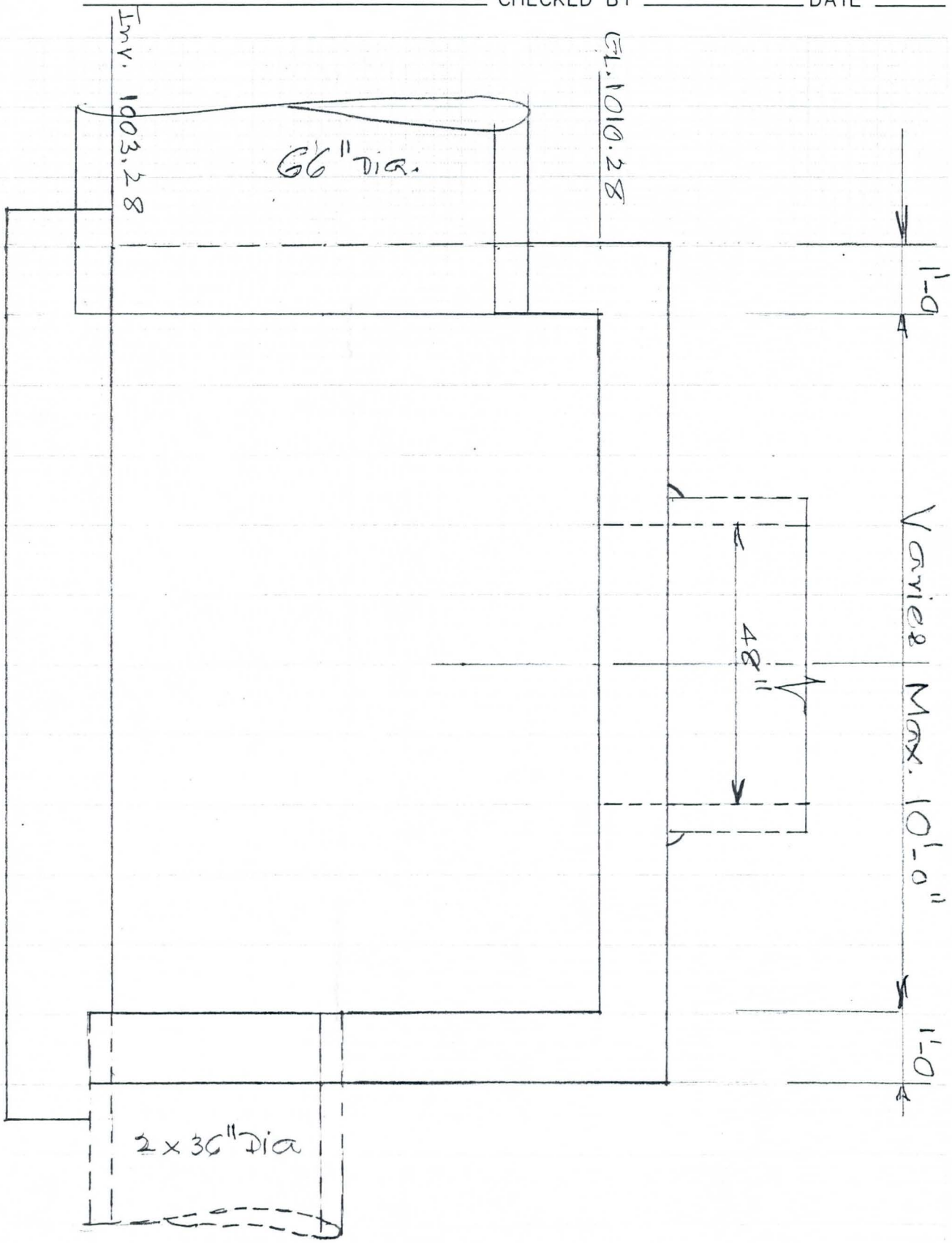

4 SECTION
1/2" = 1'-0"

(132)

FLOOD CONTROL DISTRICT OF MARICOPA COUNTY

PROJECT 43rd Ave Storm DR. PAGE ____ OF ____

DETAIL Junction Box COMPUTED KVH DATE Dec 9

Sta. 20+08 CHECKED BY ____ DATE ____

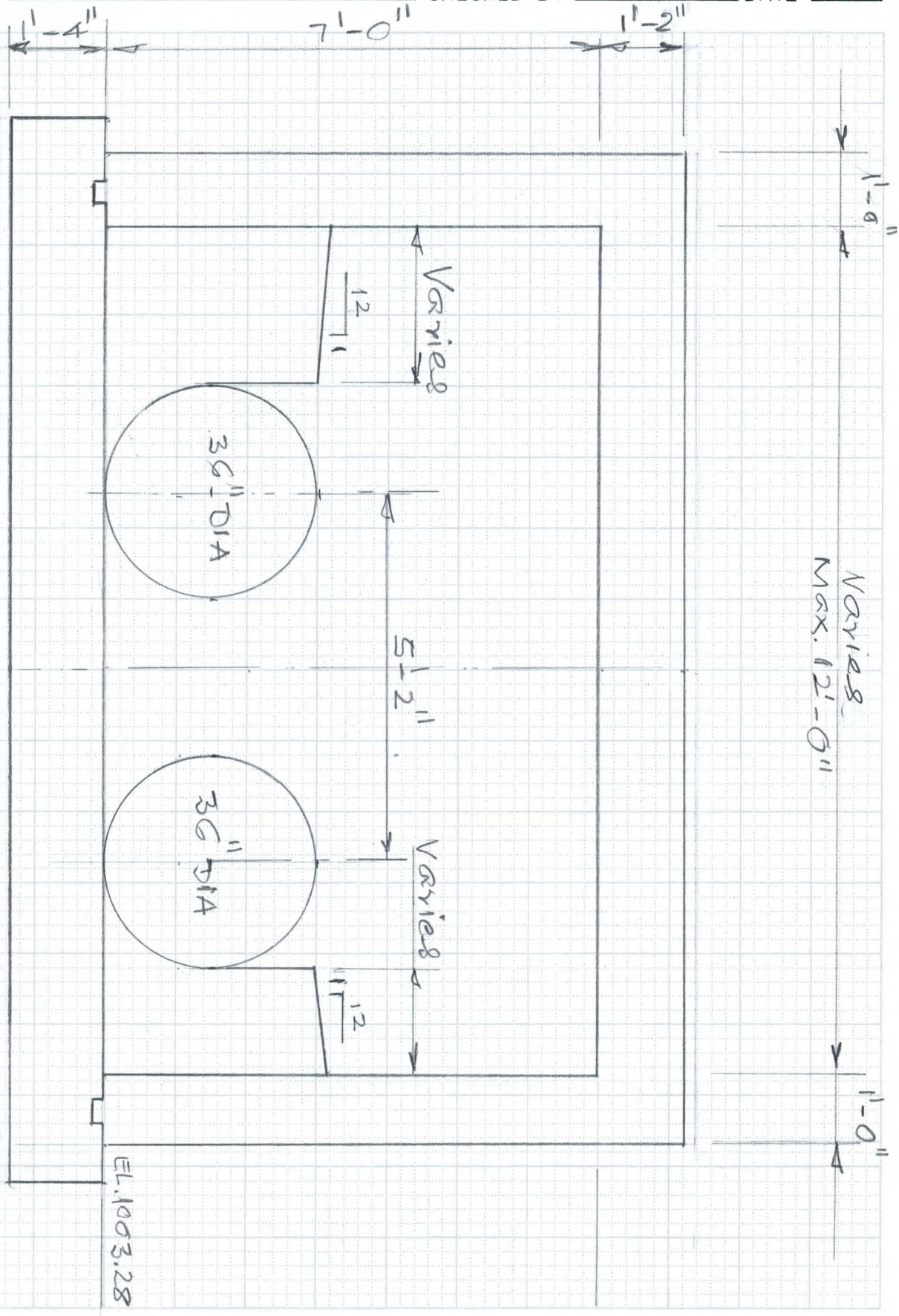

6910-153 4-90

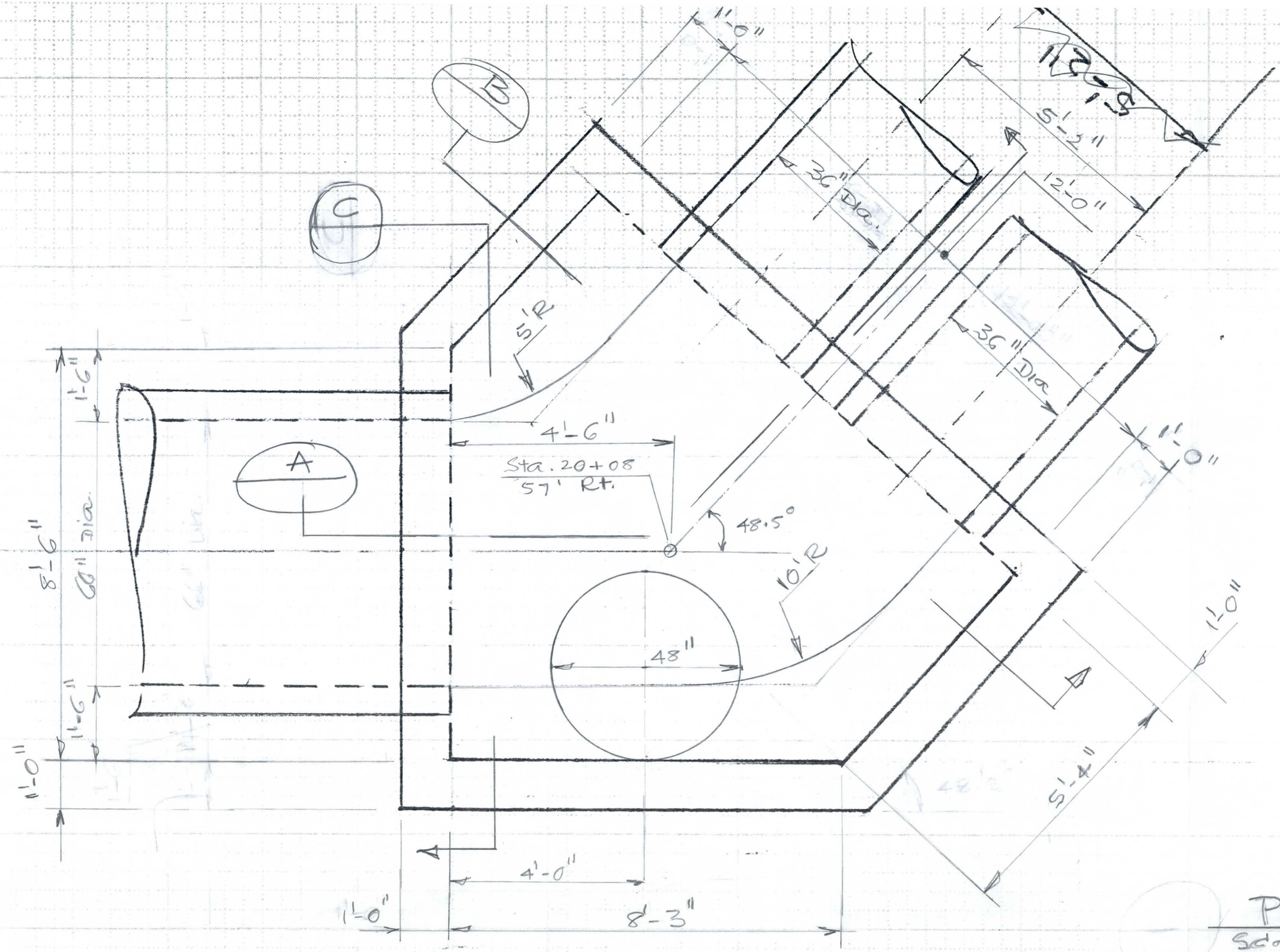

PLAN

Scale: 1/2" = 1'-0"

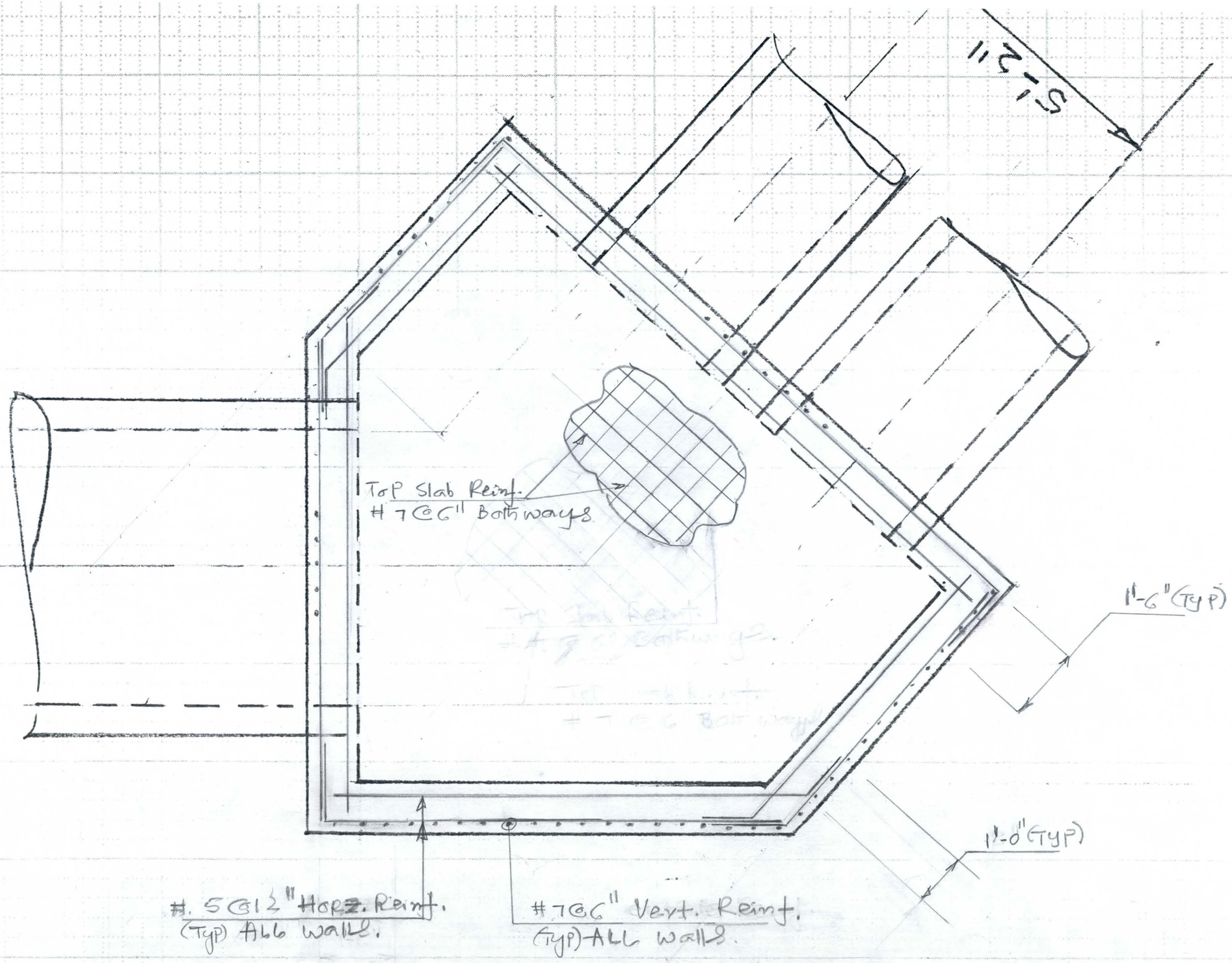
5'-2"
Top Slab Reinf.
#7@6" Both ways
1'-6" (Typ)
1'-0" (Typ)
#5@12" Horz. Reinf.
(Typ) All walls.
#7@6" Vert. Reinf.
(Typ) All walls.

(134) A

FLOOD CONTROL DISTRICT OF MARICOPA COUNTY

PROJECT 43rd Ave. Storm DR & Basin PAGE ____ OF ____

DETAIL ____ COMPUTED ____ DATE ____

CHECKED BY ____ DATE ____

JUNCTION STRUCTURE @ STAT. 106+00

PHASE-1

6910-153 4-90

134(B)

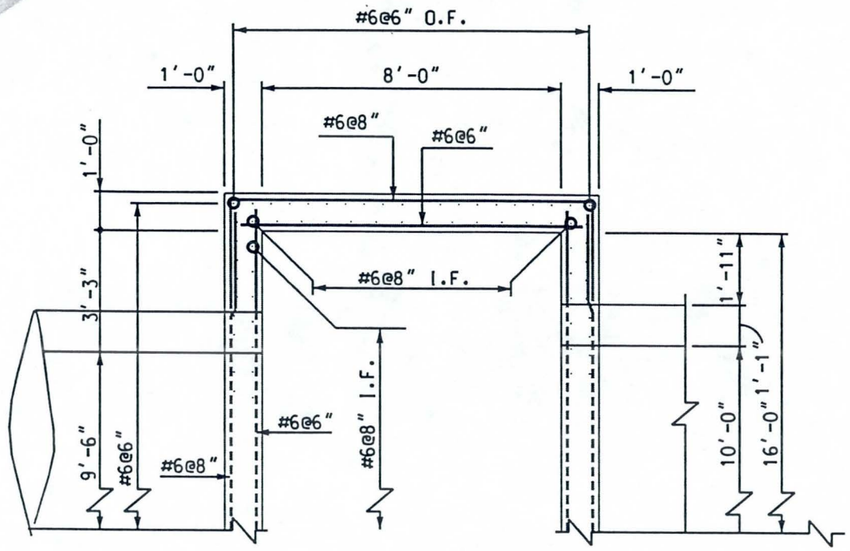

PART PLAN
SCALE: 1/2" = 1'-0

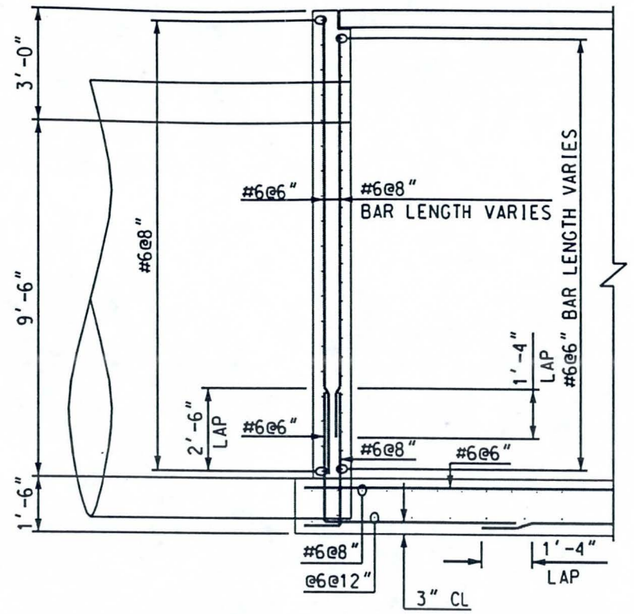

1 DETAIL
SCALE: 1/2" = 1'-0

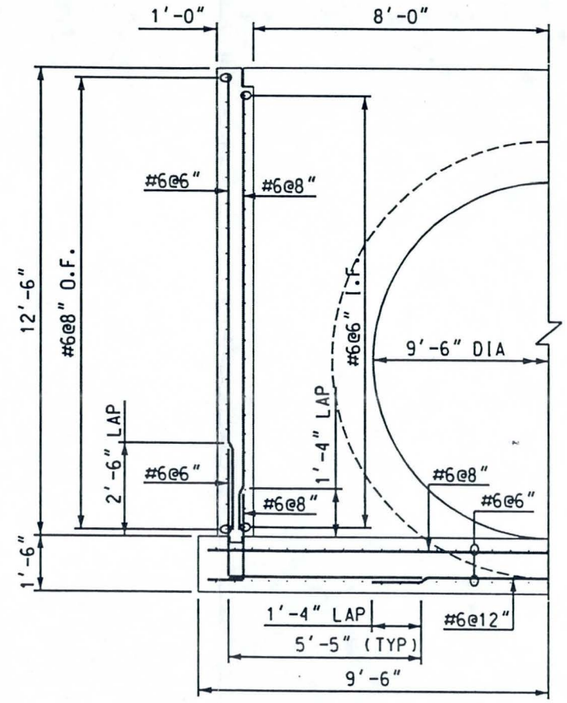

2 DETAIL
SCALE: 1/2" = 1'-0

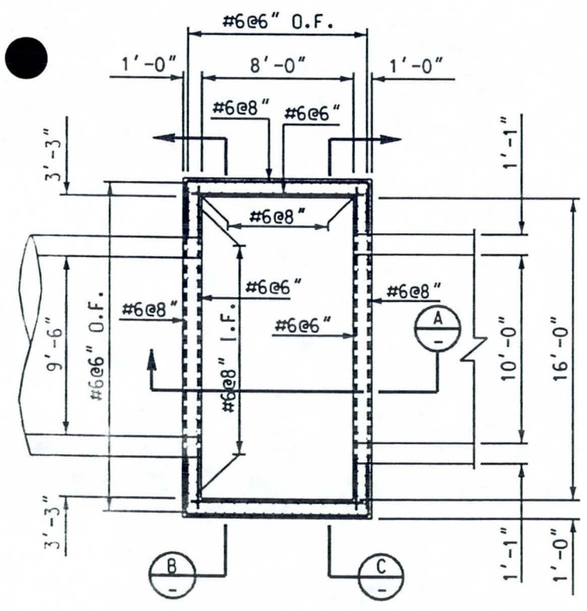

JUNCTION STRUCTURE PLAN
SCALE: 1/4" = 1'-0

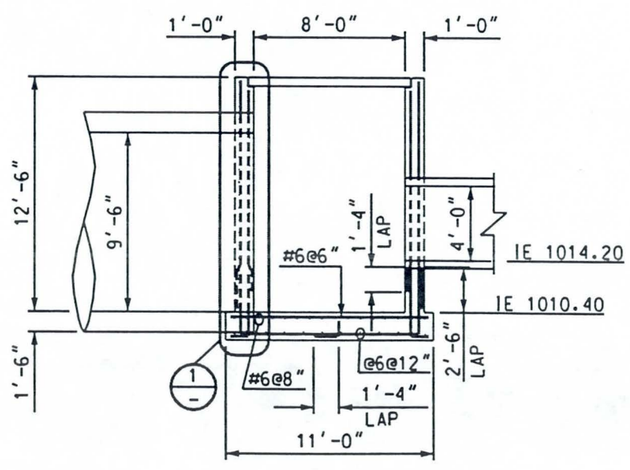

A SECTION
SCALE: 1/4" = 1'-0

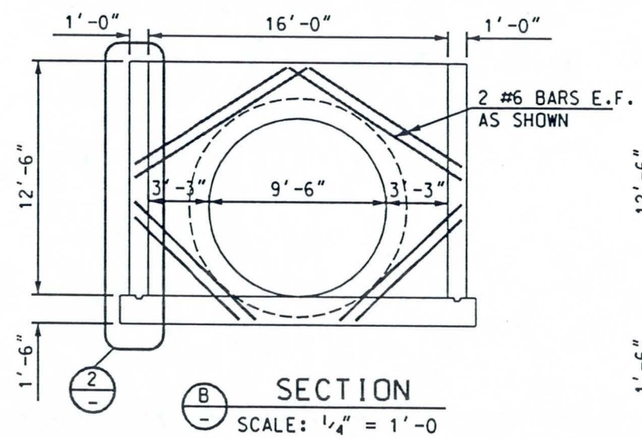

B SECTION
SCALE: 1/4" = 1'-0

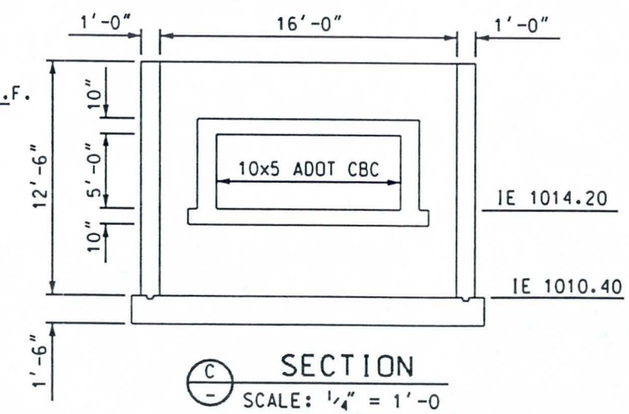

C SECTION
SCALE: 1/4" = 1'-0

NO.	REVISION	BY	DATE
3			
2			
1			

FLOOD CONTROL DISTRICT OF MARICOPA COUNTY
ENGINEERING DIVISION

43RD AVENUE STORM DRAIN
SOUTHERN AVENUE TO SALT RIVER
FCD PROJECT NO. 1170230

	BY	DATE
DESIGNED	KVH	12/09/98
DRAWN	FC	12/09/98
CHECKED	MAL	03/12/99

JUNCTION STRUCTURE DETAIL

SHEET 20 OF 30

FLOOD CONTROL DISTRICT OF MARICOPA COUNTY

PROJECT 43rd Ave. Basin PAGE 1 OF

DETAIL Junction STR. COMPUTED KVH DATE Nov. 98

@ Stat. 106+00 CHECKED BY DATE

Assume the Box is open on Top:

$Ht = (1023.23 - 1010.40) = 12.83'$

$Pr\ (Earth) = (0.12 \times 0.33 \times 12.83) = 0.508^{KSF}$

Surch = 2'

$Pr\ (Surch) = (0.12 \times 0.33 \times 2) = 0.08\ KSF$, say 0.1^{KSF}

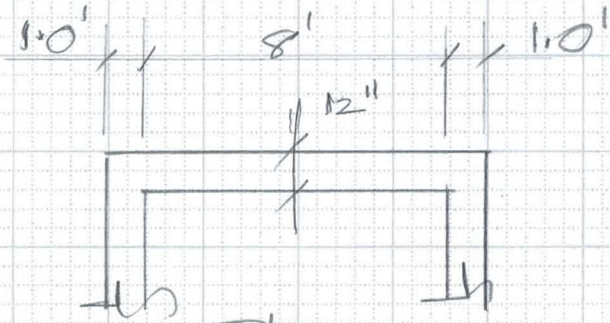

Plan

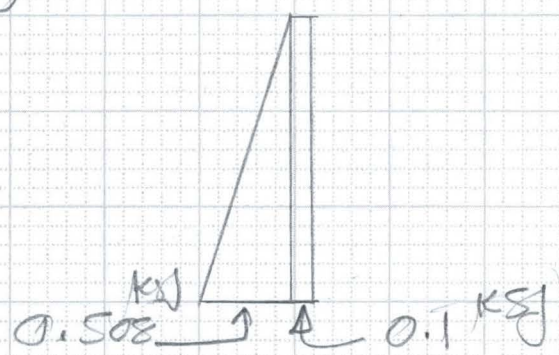

Max. pr. at the Base $= (0.508 + 0.1) = 0.608^{KSF}$

$M_s = 0.608 \times 9^2/8 = 6.2^{KFT}$

$Mom.\ Neg = 0.608 \times 9^2/12 = 4.1^{KFT}$

$d_{eff} = (12 - 2 - 0.5) = 9.5''$ $\quad A_{s1} = \dfrac{6.2 \times 12}{24 \times 0.88 \times 9.5} = 0.37$

$= \#5 @ 8''$ $\quad A_s = 0.47$

or $\#6 @ 12$, $A_s = 0.44$

$A_{s2} = \dfrac{4.1 \times 12}{24 \times 0.88 \times 9.5} = 0.25\ in^2$

use $\#5 @ 12''$

FLOOD CONTROL DISTRICT OF MARICOPA COUNTY

PROJECT 43rd Av. Basin PAGE ____ OF ____
DETAIL Junction STR. COMPUTED KVH DATE Nov. 98
@ STA. (106+00) CHECKED BY ____ DATE ____

Check Reinf.:

Span = 16', pr = 0.608 ksf

Check 1' Strip at the Bottom:

$M_s = \frac{wl^2}{12} = 0.608 \times 17^2/12 = 14.64$ k'

$d_{eff} = (12 - 2 - 0.5) = 9.5''$

$A_s = \frac{14.64 \times 12}{24 \times 0.88 \times 9.5}$

$= 0.88$

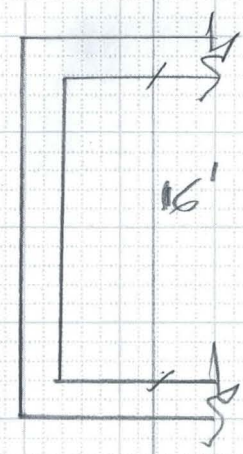

Use #6 @ 6", $A_s = 0.88 \text{ in}^2$

Since the Box is opened on the Top, Check a 1' Strip as a Cantilever.

$P_s = (0.1 \times 12.83) = 1.3^K$

$P_E = 0.508/2 \, (12.83) = 3.26^K$

$M_c = (1.3 \times \frac{12.83}{2}) + (3.26 \times \frac{12.83}{3})$

$= (8.4 + 13.94) = 22.34$ (Too High)

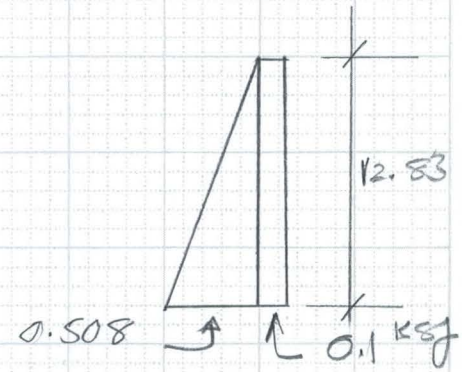

Wall will basically span in the Horz. direction & therefore provide Min Req. Steel on the outside face. Use #6 @ 6" vert. outside face.

FLOOD CONTROL DISTRICT OF MARICOPA COUNTY

PROJECT 43rd Ave. Storm Drain PAGE ____ OF ____

DETAIL Junction Str COMPUTED KVH DATE 4/99

@ Sta. 106+00 CHECKED BY ____ DATE ____

Additional Ht. Revised

$H_t = (12.5 + 2) = 14.5'$

Using At. Rest p_r:-

$K_{A.R} = (1 - \sin\phi) = (1 - \sin 30) = 0.50$

$p_r = (0.12 \times 0.5 \times 14.5) = 0.87^{ksf}$

p_r at $\frac{2}{3} H_t = \frac{2}{3}(14.5) = 9.67$

$p_r = (0.12 \times 0.5 \times 9.67) = 0.58$

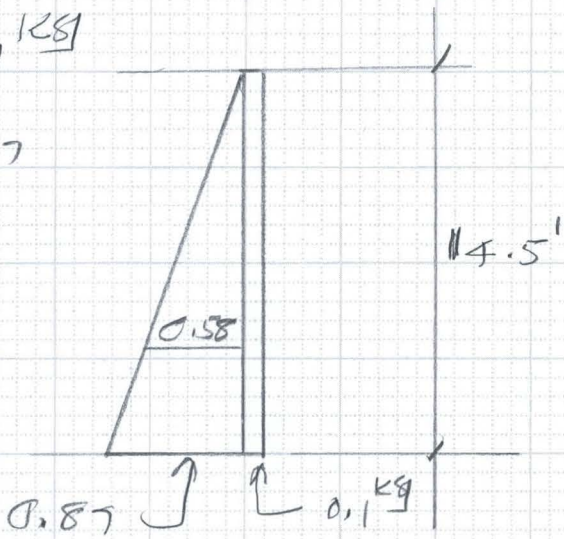

Check Bottom 1' Strip:

$M_s = 0.97 \times 9^2/8 = 9.82^{k'}$

$d_{eff} = (12 - 2 - 0.5) = 9.5''$

$A_s = \dfrac{9.82 \times 12}{24 \times 0.88 \times 9.5} = 0.60 \text{ in}^2$

#6 @ 6" $A_s = 0.88$

Shear check:

$V = (0.97 \times \frac{9}{2}) = 3.15^k$, $b = 12$, $d = 9.5$

$v = \dfrac{3.15}{12 \times 9.5} = 27.6$ psi

$v_c = 0.95\sqrt{f'_c} = 0.95\sqrt{3000} = 52$ psi

FLOOD CONTROL DISTRICT OF MARICOPA COUNTY

PROJECT 43rd Ave. Storm Dr. PAGE ____ OF ____

DETAIL Junction STR. COMPUTED KVH DATE 4/99

@ STA. 106+00 CHECKED BY ____ DATE ____

Check 1' Strip, in the middle as a Cantilever:

$M_{UDL} = \left(0.1 \times 14.5 \times \frac{14.5}{2}\right) = 10.5$

$M_{Triang.} = \frac{WL}{3} = \left(\frac{0.87}{2} \times 14.5\right)\frac{14.5}{3} = 30.5^{k/ft}$

This is too High. will not act as Cantilever

The two 9' walls will be Supported on Three Sides.

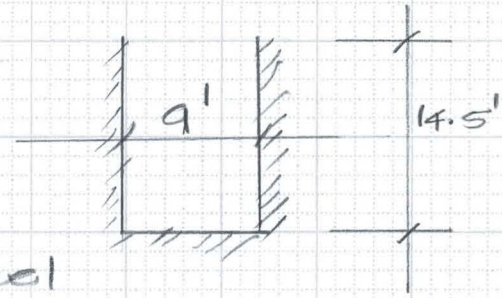

Therefore Provide Main Reinf. in the 9' Direction & Min. Steel in the Vertical direction

$(4-3) - 9''^{\pm} = 3.5'$

Pipe "t"

$P_r (Max) = 0.97^{ksf}$

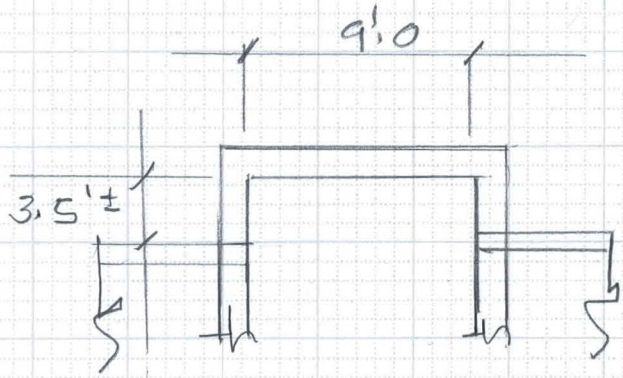

$M_{cant} = 0.97 \times 3.5 \times \frac{3.5}{2}$

$= 5.94^{k/ft}$

$A_s = \frac{5.94 \times 12}{24 \times 0.88 \times 9.5} = 0.36$

#6 @ 8" used is OK

FLOOD CONTROL DISTRICT OF MARICOPA COUNTY

PROJECT 43rd AVE. Basin PAGE 2 OF

DETAIL Junct. Struct. @ Stat. 106+00 COMPUTED KVH DATE NOV. 95

CHECKED BY DATE

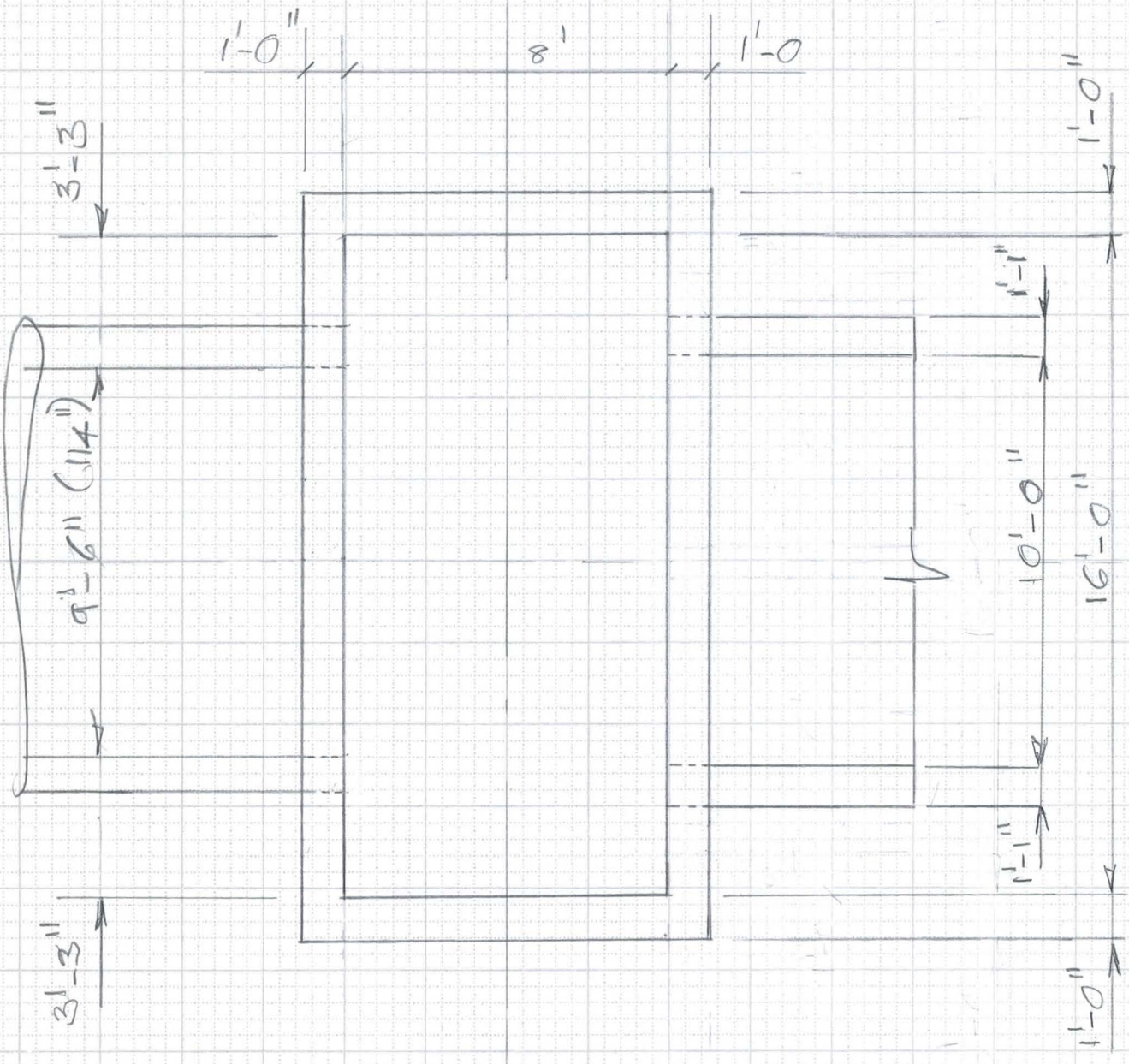

PLAN

1/4" = 1'-0

FLOOD CONTROL DISTRICT OF MARICOPA COUNTY

PROJECT 43rd Ave. Basin PAGE 3 OF

DETAIL Junction Str. COMPUTED KVH DATE NOV-98

@ STA. 106+00 CHECKED BY DATE

11.50
1.33
12.83

1010.40
12.83
1023.23

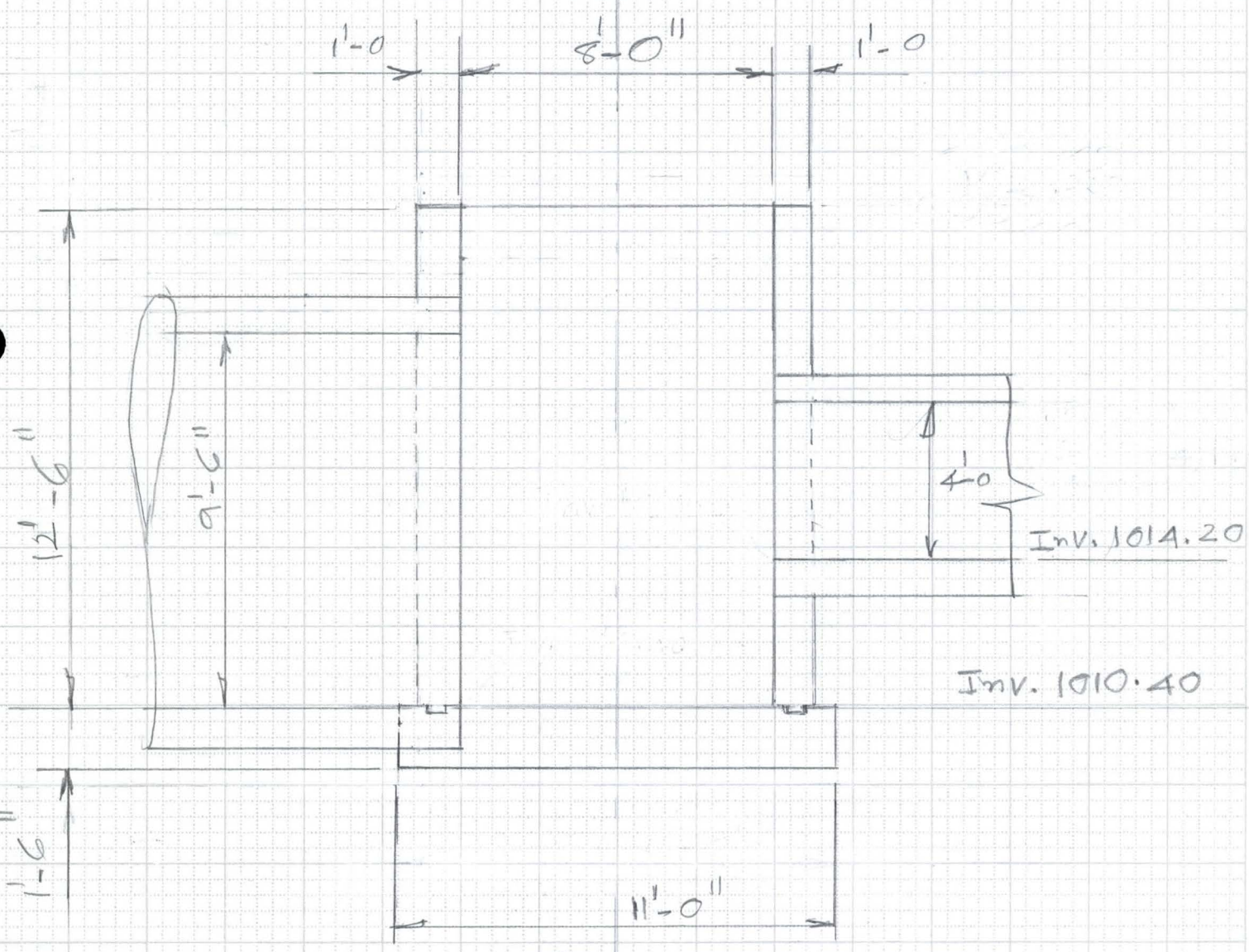

SECTION-1

FLOOD CONTROL DISTRICT OF MARICOPA COUNTY

PROJECT 43rd AVE. Basin PAGE 4 OF

DETAIL Junction Str. COMPUTED KVH DATE NOV. 98

@ Stat. 106+00 CHECKED BY DATE

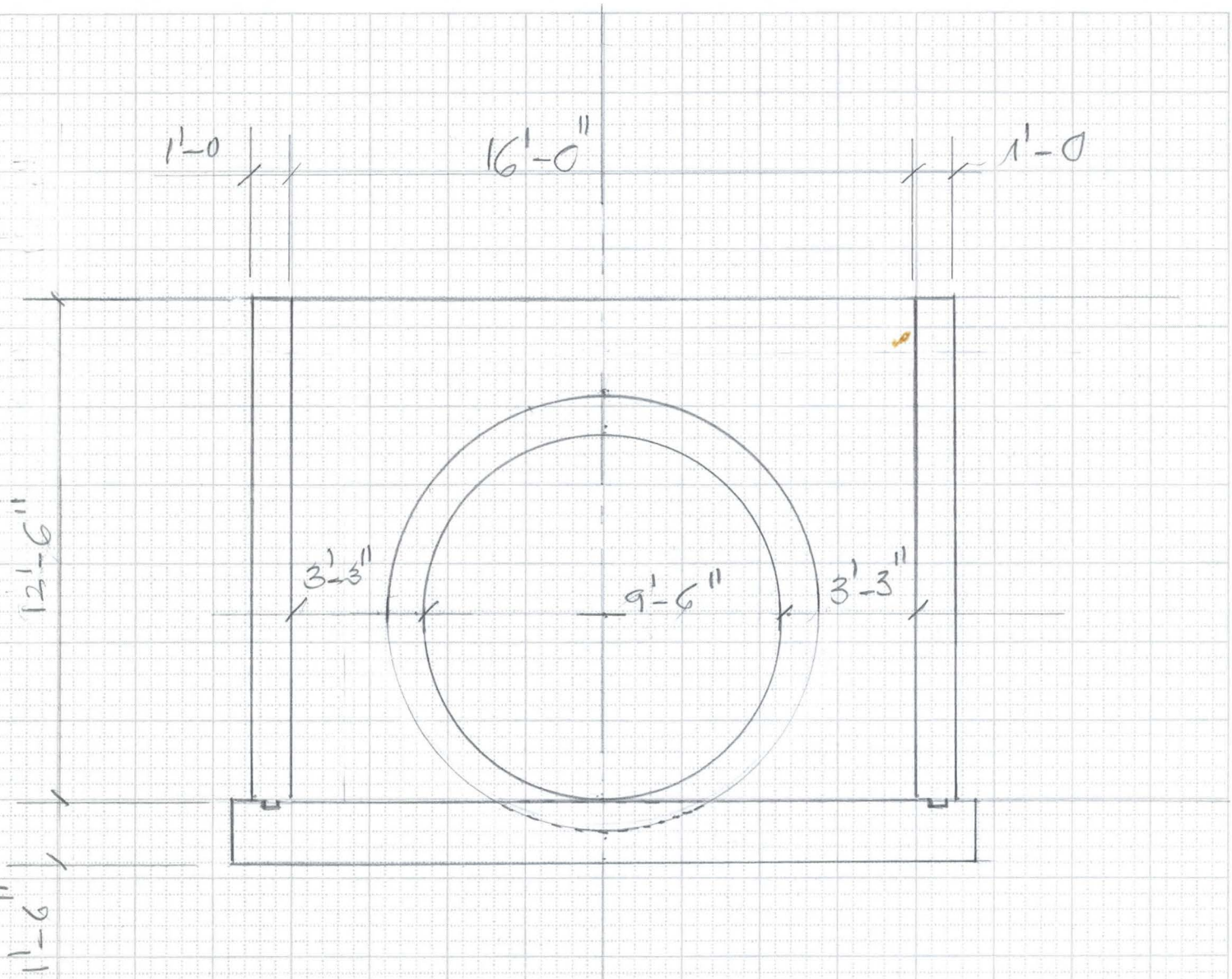

SECTION-2

(140)

FLOOD CONTROL DISTRICT OF MARICOPA COUNTY

PROJECT 43rd Ave. Basin PAGE 5 OF

DETAIL Junction Str. COMPUTED KVH DATE Nov. 98

@ Stat. 106+00 CHECKED BY DATE

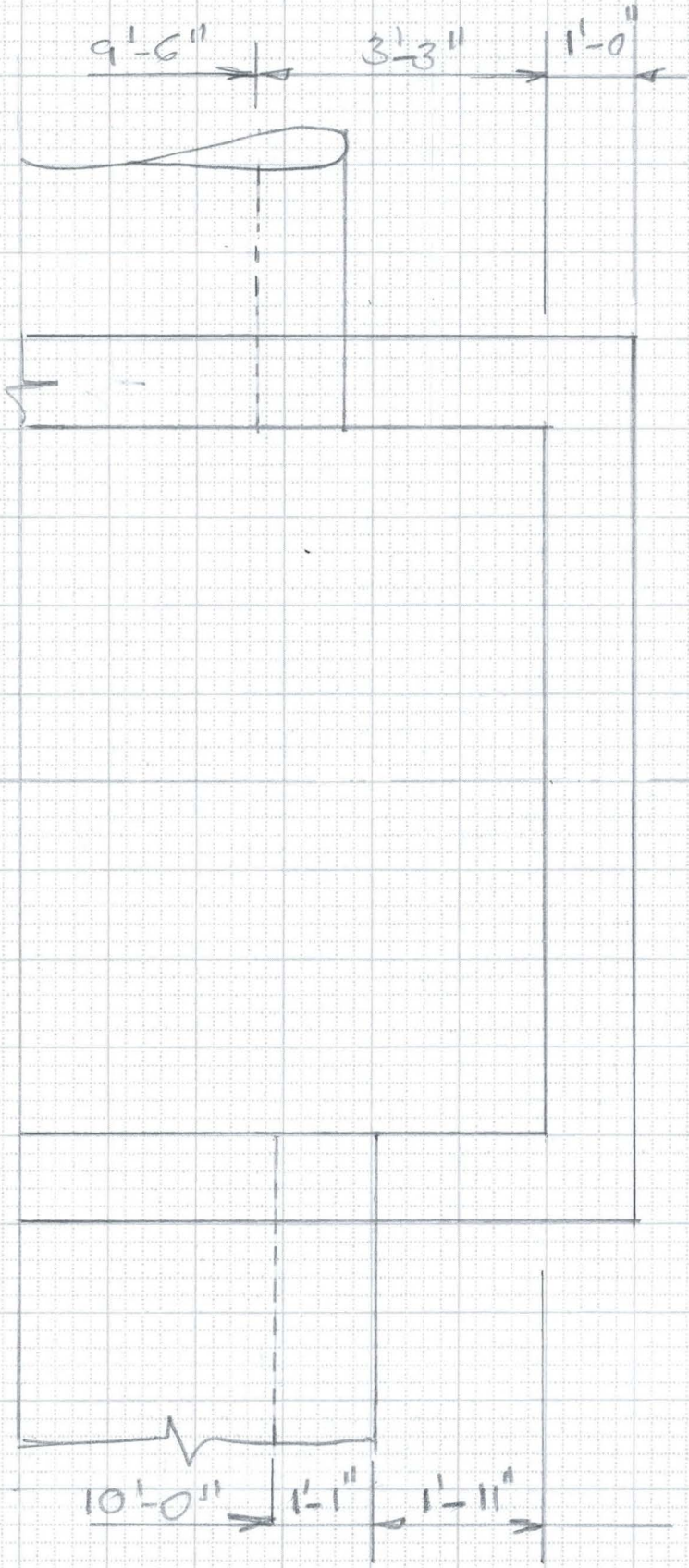

6910-153 4-90

(14)

FLOOD CONTROL DISTRICT OF MARICOPA COUNTY

PROJECT 43rd Ave. Basin PAGE 6 OF

DETAIL Junction Str. COMPUTED KVH DATE Nov. 9

CHECKED BY DATE

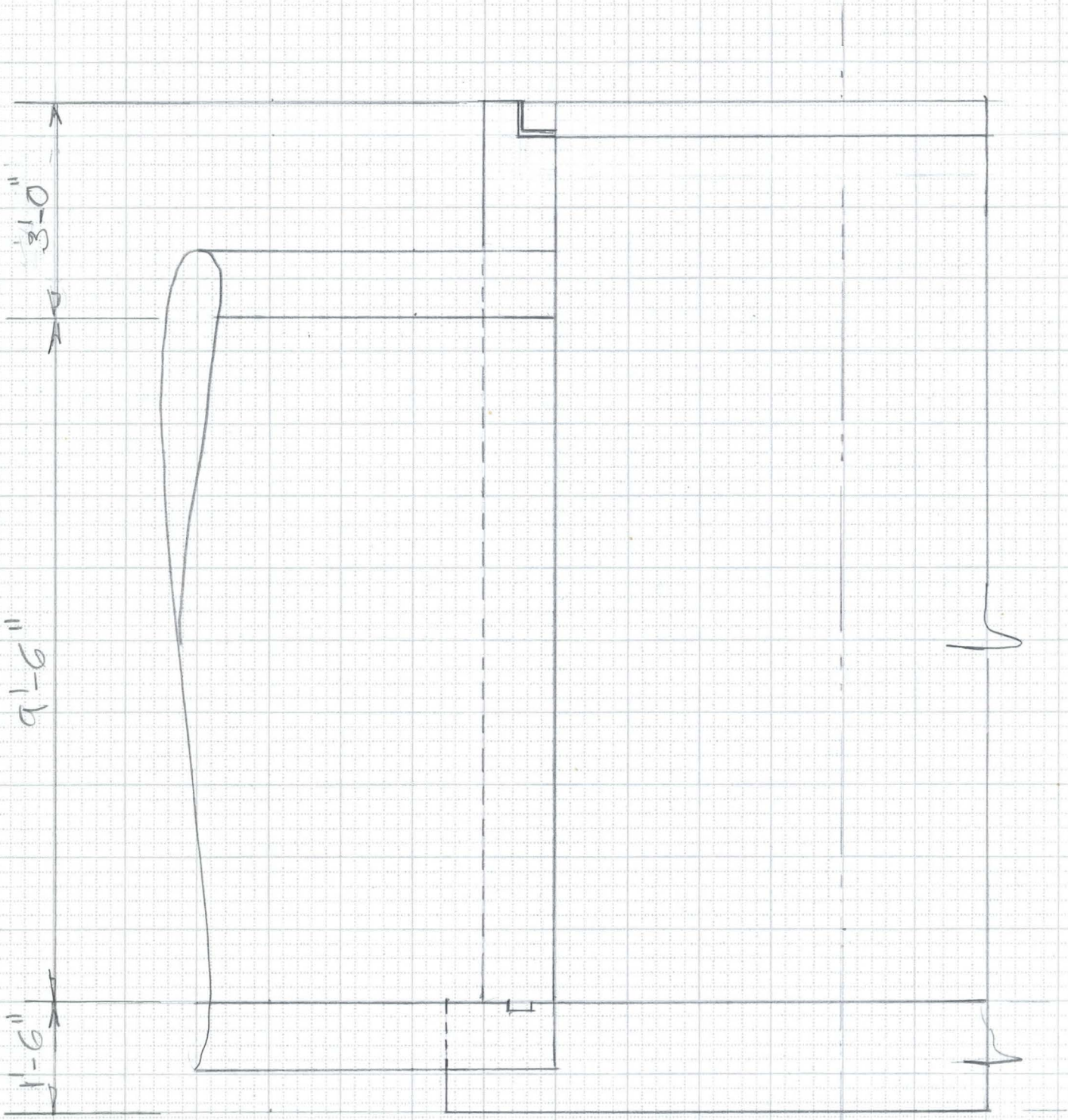

6910-153 4-90

FLOOD CONTROL DISTRICT OF MARICOPA COUNTY

PROJECT 43rd AVE. Bridge PAGE 15 OF

DETAIL Junct. Struct. @ Stat. 106+00 COMPUTED KVH DATE NOV. 98

CHECKED BY DATE

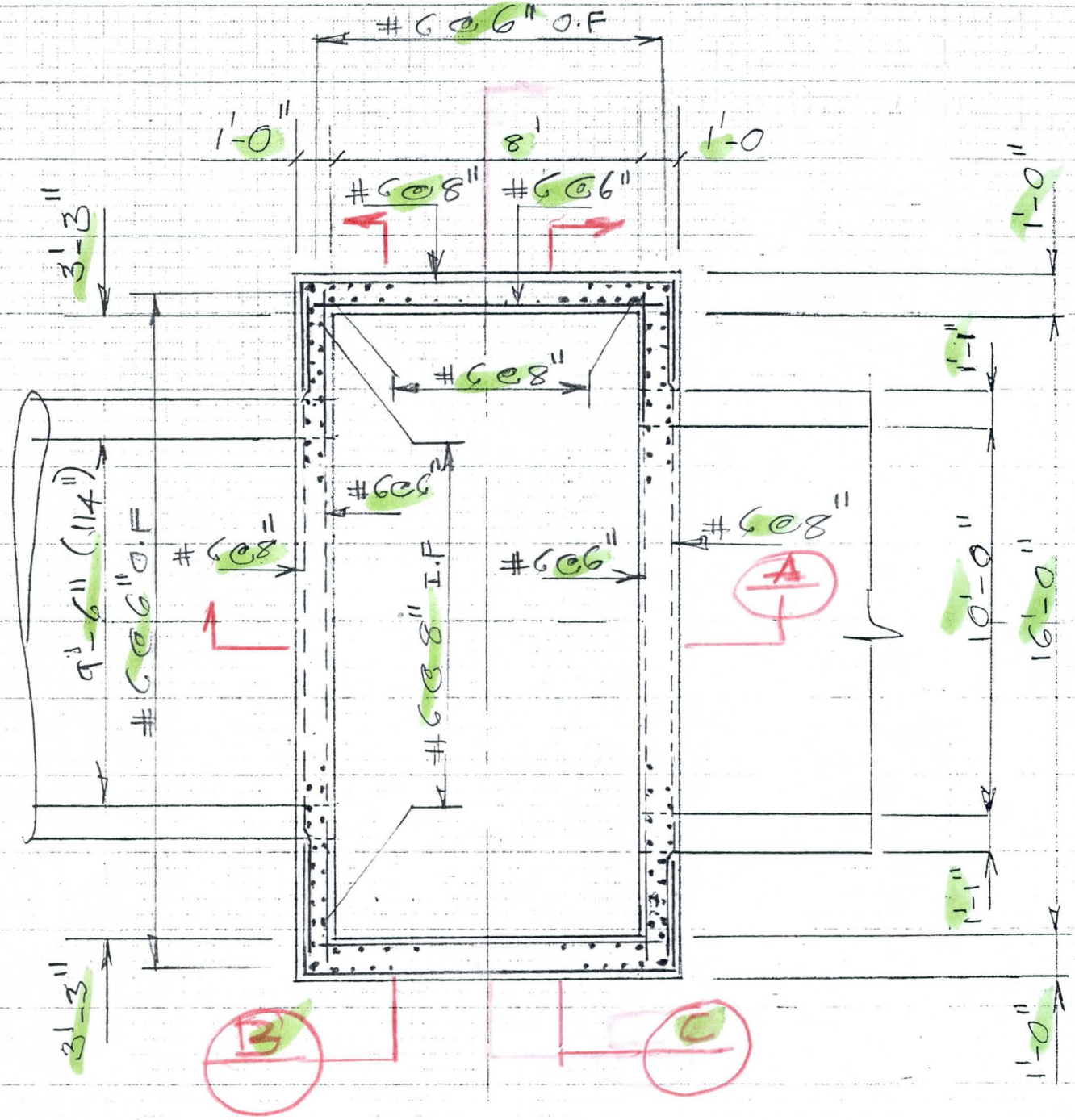

PLAN

1/4" = 1'-0

FLOOD CONTROL DISTRICT OF MARICOPA COUNTY

(143)

PROJECT 43rd Ave. Bridge PAGE 16 OF

DETAIL Junction Str. COMPUTED KNH DATE NOV. 98

@ STA. 106+00 CHECKED BY DATE

11.50
1.33
12.83

1010.40
12.83
1023.23

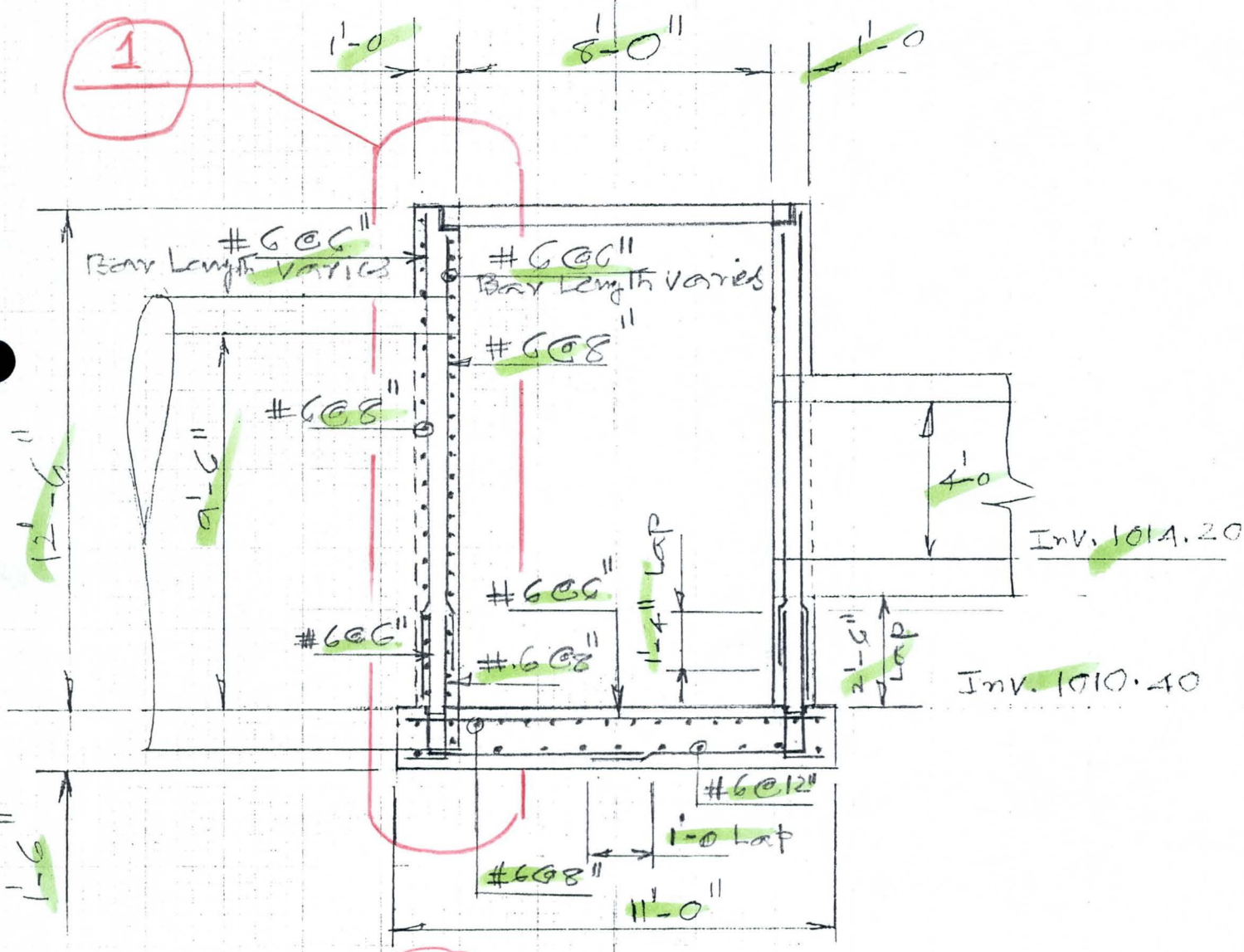

A SECTION A

1/4" = 1'-0"

FLOOD CONTROL DISTRICT OF MARICOPA COUNTY

PROJECT 43rd Ave. Basin PAGE 17 OF

DETAIL Junction Str COMPUTED KVH DATE NOV. 92

@ Stat. 106+00 CHECKED BY DATE

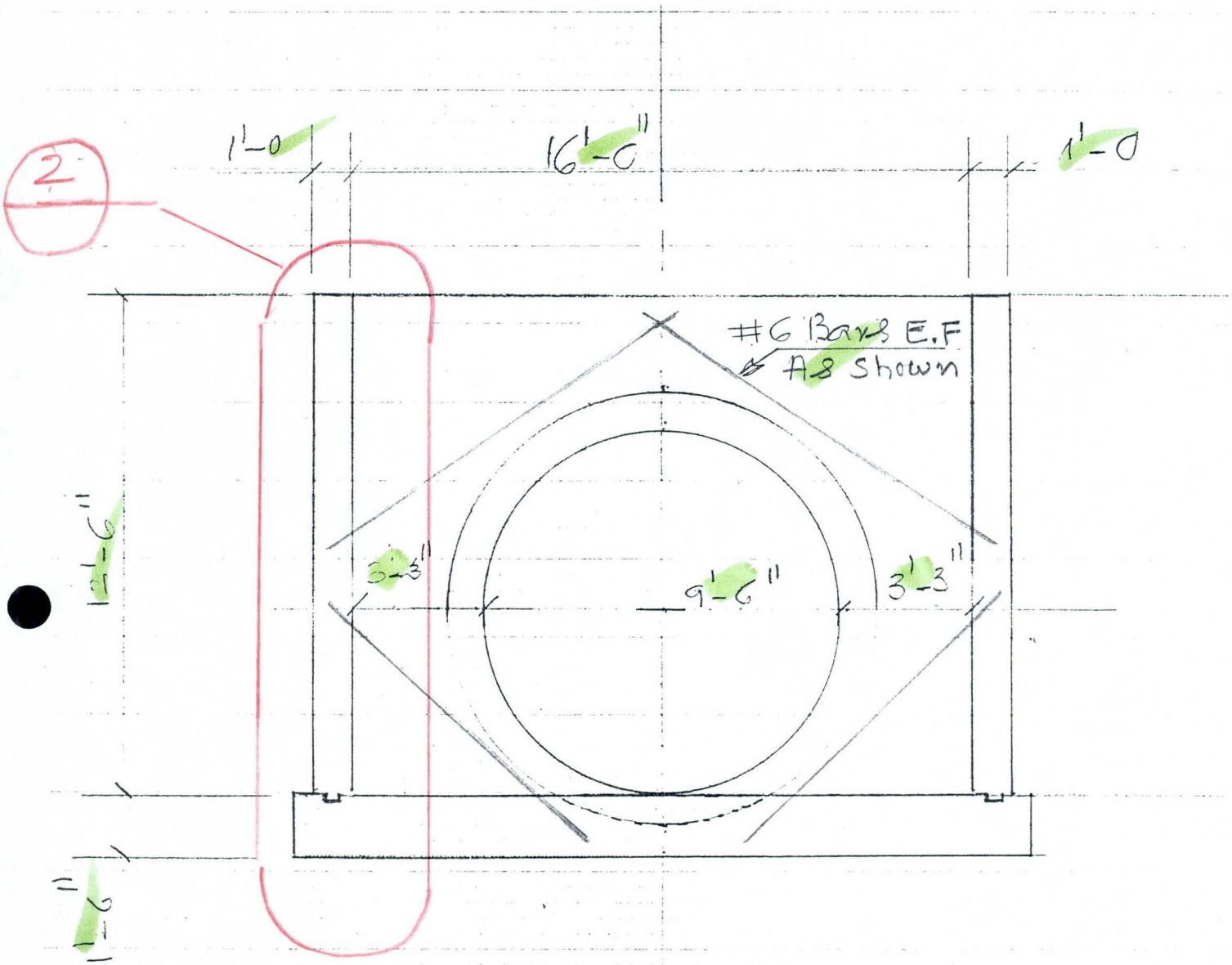

B SECTION-2

1/4" = 1'-0

FLOOD CONTROL DISTRICT OF MARICOPA COUNTY

145

PROJECT 43rd Ave. Basin PAGE 18 OF

DETAIL Junction STR. COMPUTED KVH DATE Nov. 9

@ Sta. 106+00 CHECKED BY DATE

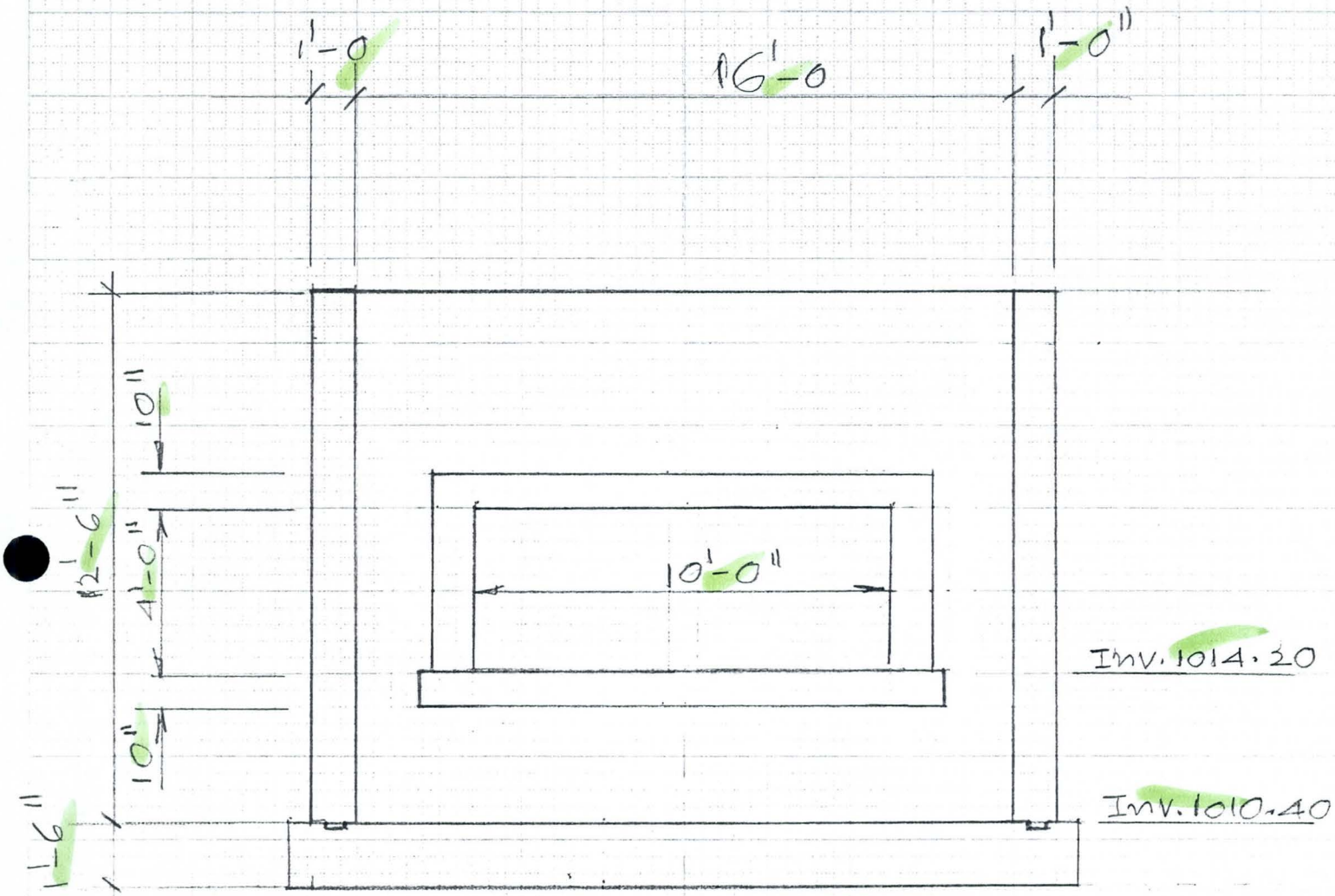

d SECTION - 3

1/4" = 1'-0

FLOOD CONTROL DISTRICT OF MARICOPA COUNTY

(146)

PROJECT 43rd Ave. Basin PAGE 19 OF

DETAIL Junction Str. COMPUTED KVH DATE Nov. 98

@ Stat. 106+00 CHECKED BY DATE

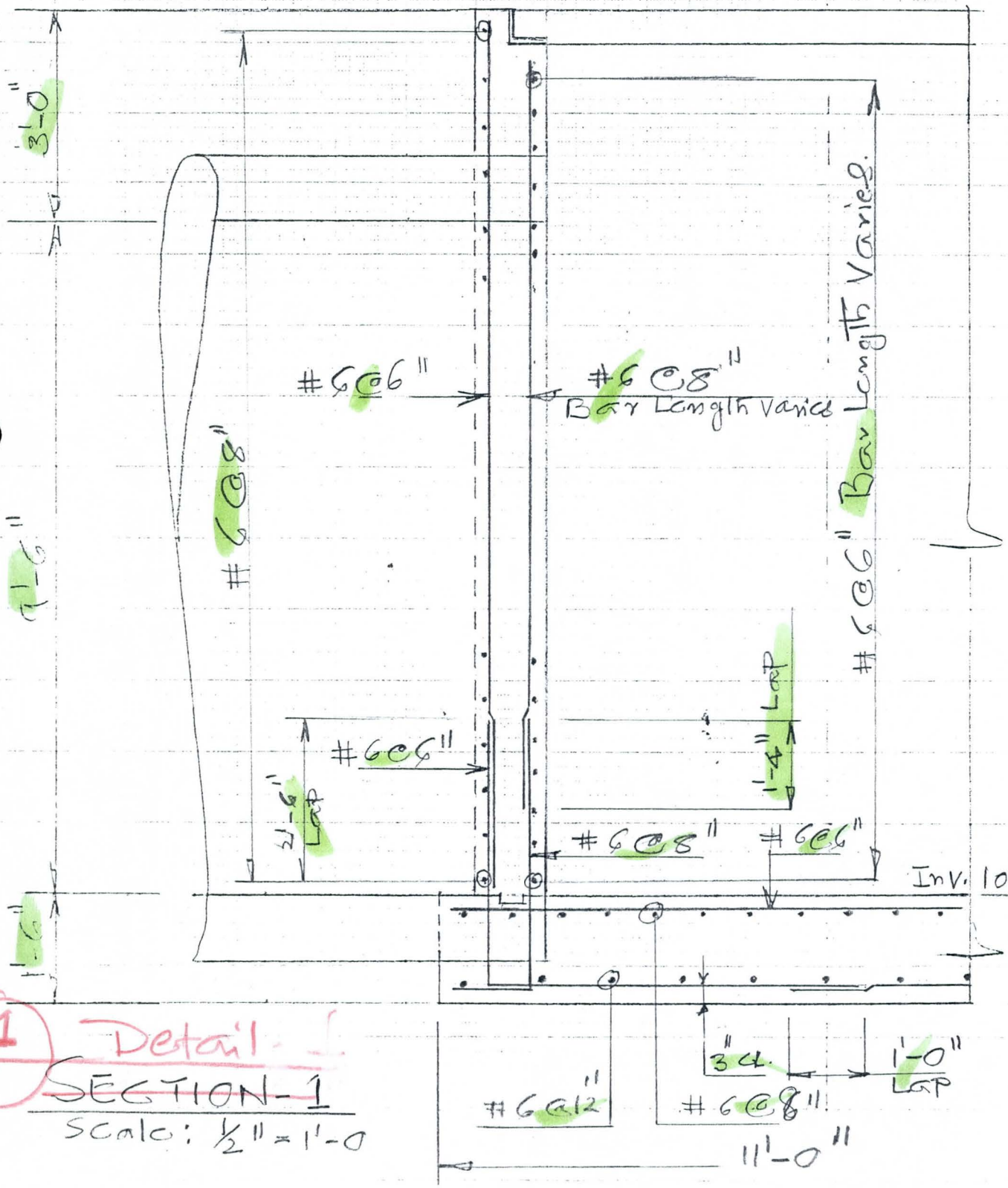

1 Detail

SECTION-1

Scale: 1/2" = 1'-0

FLOOD CONTROL DISTRICT OF MARICOPA COUNTY (147)

PROJECT 43rd Ave. Bozan PAGE 20 OF

DETAIL Junction Str. COMPUTED KVH DATE Nov-98

@ Stat. 106+00 CHECKED BY DATE

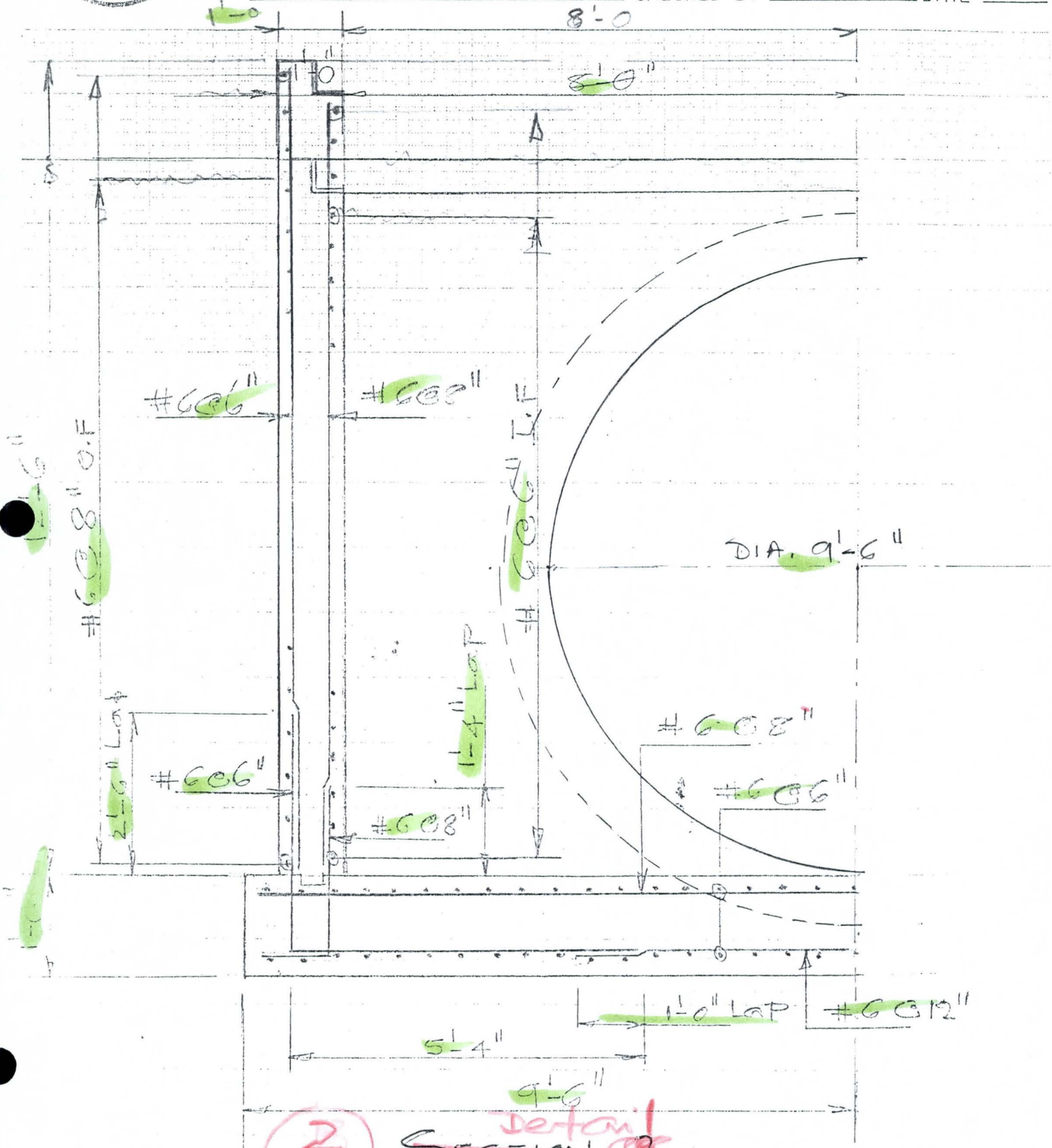

2

~~SECTION C2~~ Detail

Scale: 1/2" = 1'-0"

FLOOD CONTROL DISTRICT OF MARICOPA COUNTY

(148)

PROJECT 43rd Ave. Basin PAGE 21 OF

DETAIL Junction Str. COMPUTED KVH DATE Nov. 98

@ Stat. 106+00 CHECKED BY DATE

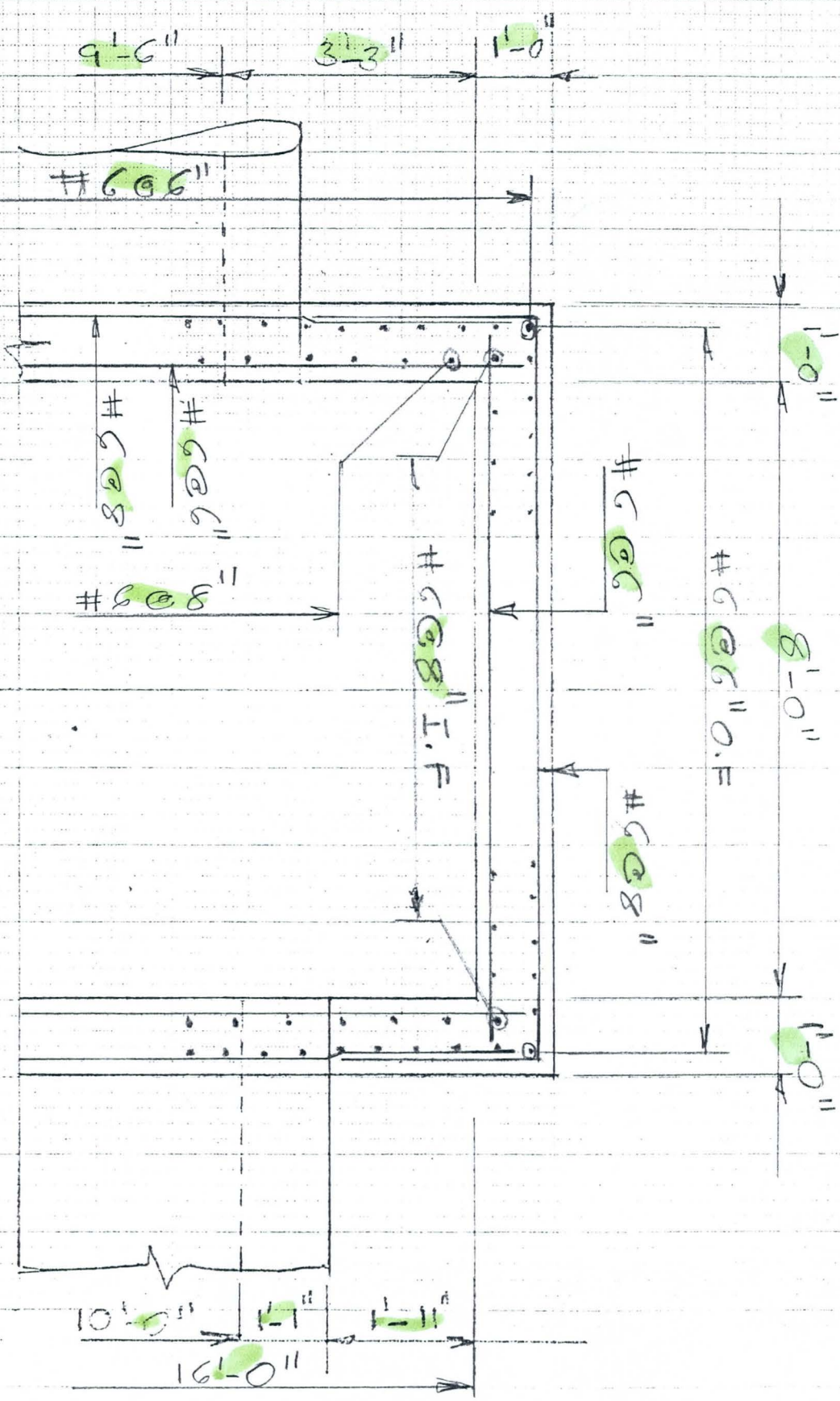

PLAN:-
Scale: 1/2" = 1'-0"

FLOOD CONTROL DISTRICT OF MARICOPA COUNTY

PROJECT 43rd Ave. Basin PAGE 22 OF

DETAIL Junction STR. COMPUTED KVH DATE Nov. 9

@ Sta. 106+00 CHECKED BY DATE

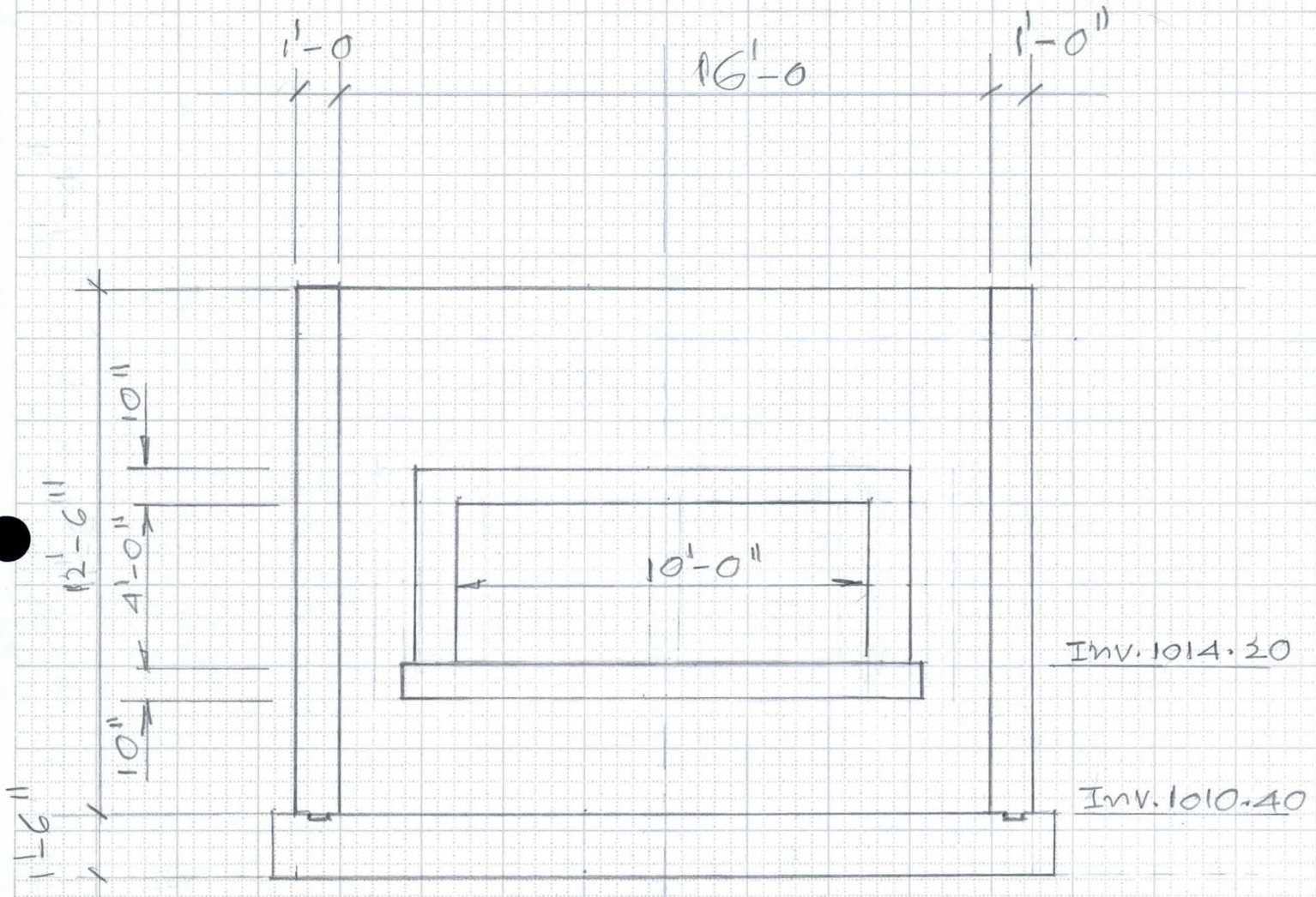

SECTION-3

FLOOD CONTROL DISTRICT OF MARICOPA COUNTY

PROJECT 43rd Ave. Basin PAGE 23 OF

DETAIL Junction Str. COMPUTED KVH DATE NOV. 92

@ Stat. 106+00 CHECKED BY DATE

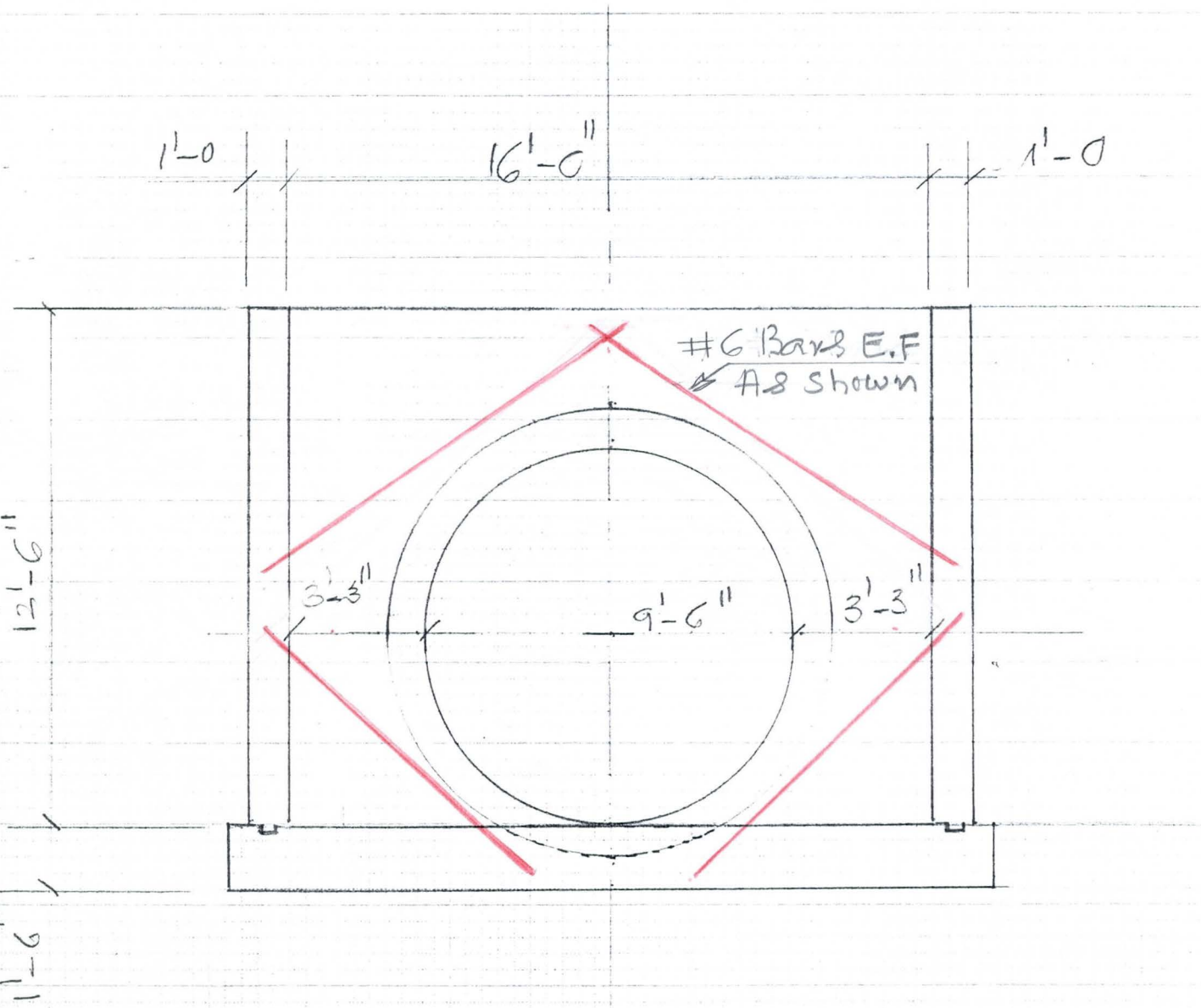

SECTION-2

FLOOD CONTROL DISTRICT OF MARICOPA COUNTY

(151)

PROJECT 43rd Ave. Basin PAGE 24 OF

DETAIL Junction Str. COMPUTED KVH DATE Nov. 98

@ Stat. 106+00 CHECKED BY DATE

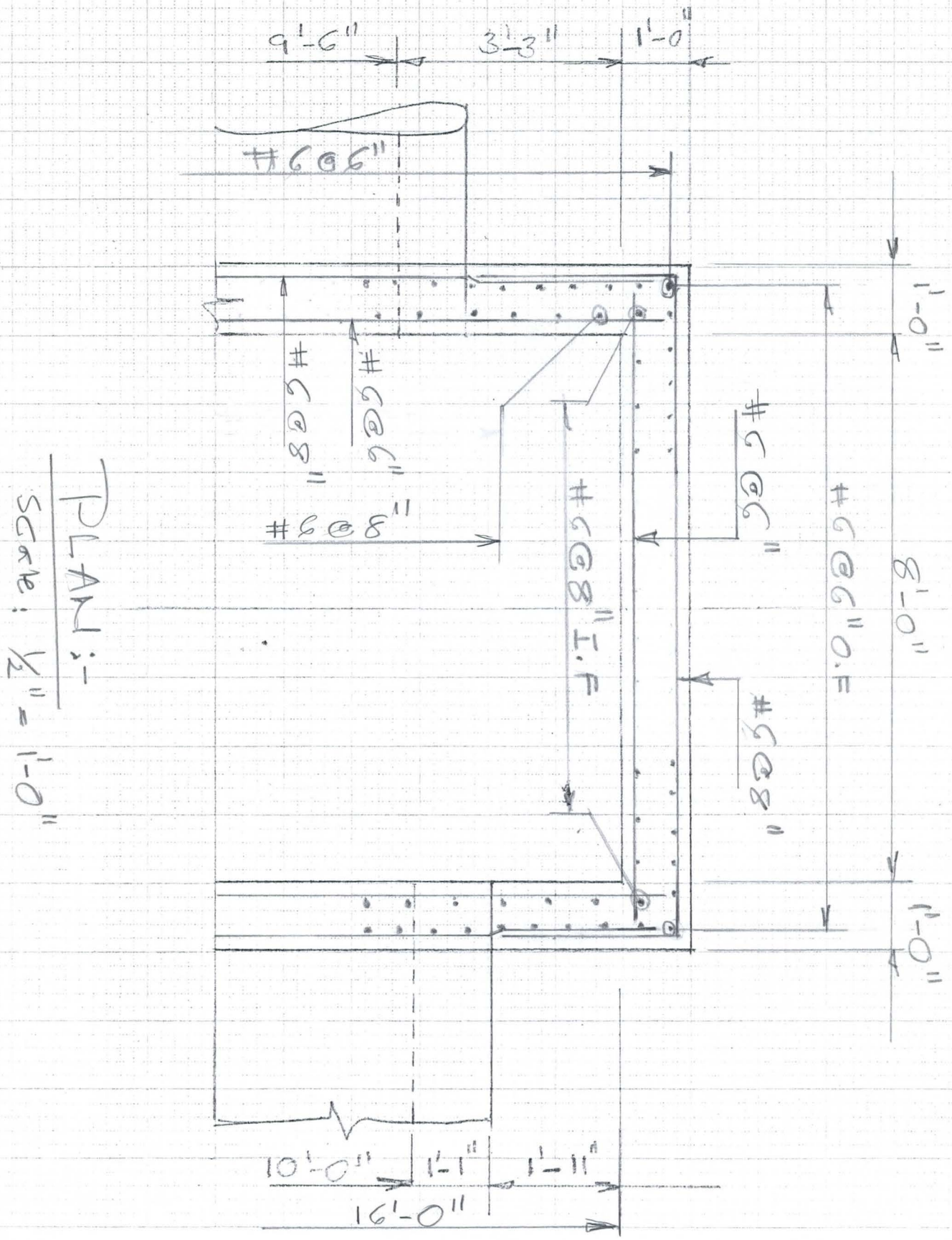

FLOOD CONTROL DISTRICT OF MARICOPA COUNTY

PROJECT 43rd Ave. Basin PAGE 25 OF

DETAIL Junction Str. COMPUTED KVH DATE Nov. 98

@ Stat. 106+00 CHECKED BY DATE

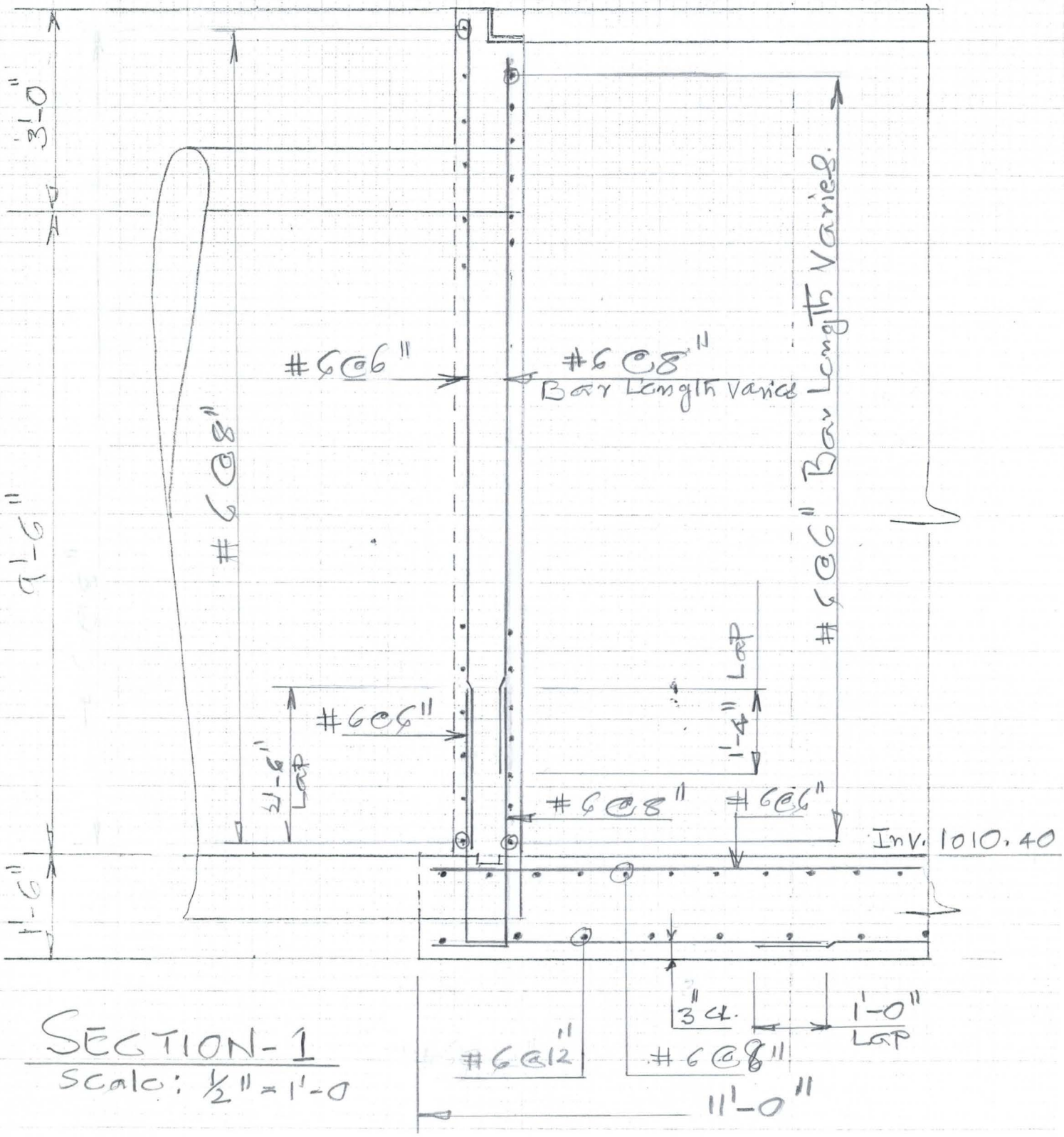

SECTION-1

Scale: 1/2" = 1'-0

FLOOD CONTROL DISTRICT OF MARICOPA COUNTY

PROJECT 43rd AVE. Bridge PAGE 26 OF

DETAIL Junction STR. COMPUTED KVH DATE Nov. 92

@ Stat. 106+00 CHECKED BY DATE

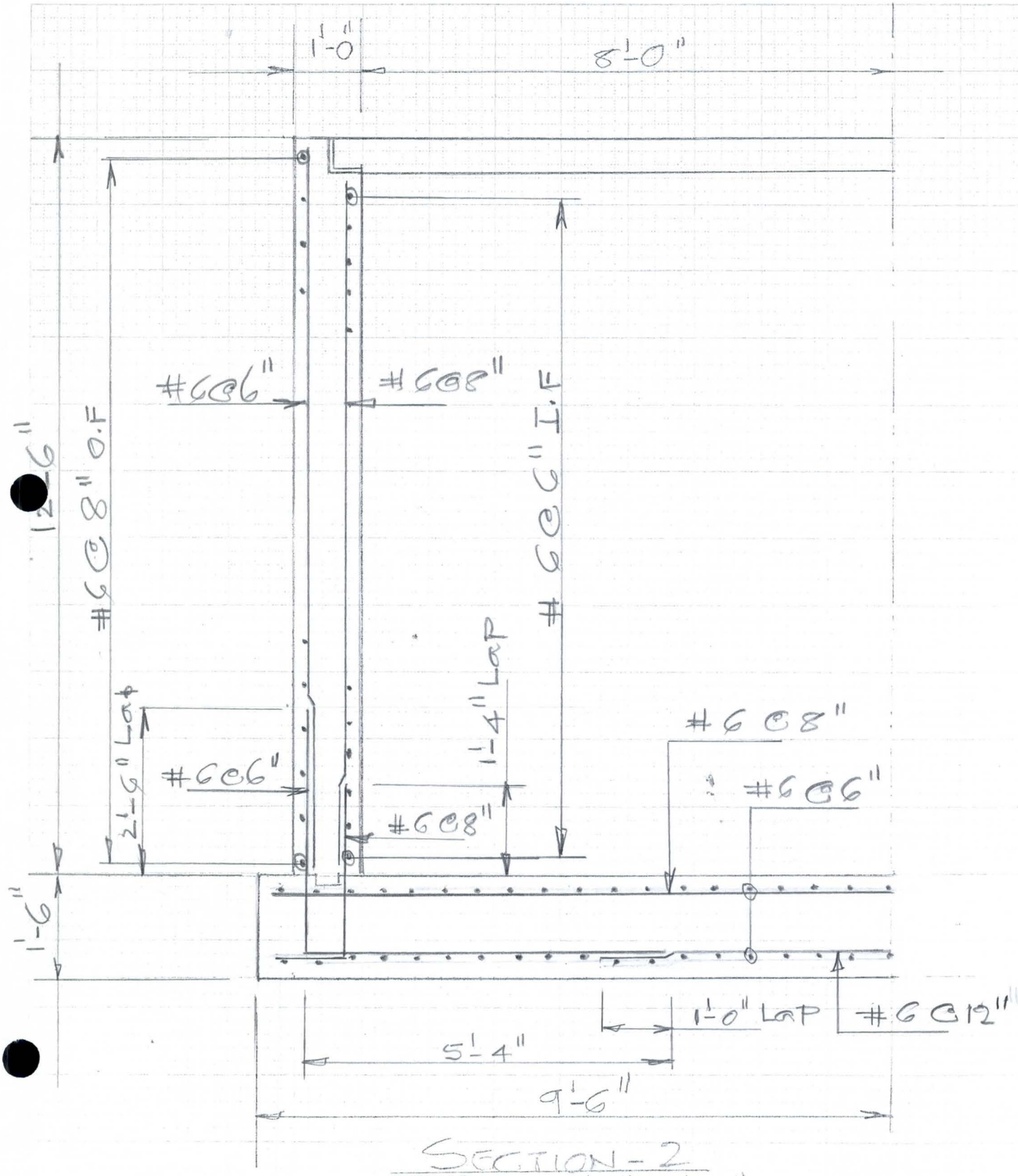

SECTION-2

Scale: 1/2" = 1'-0"

FLOOD CONTROL DISTRICT OF MARICOPA COUNTY (154)

PROJECT 43rd AVE. Basin PAGE 27 OF

DETAIL Junction STR. COMPUTED KVH DATE Nov-95

@ Stat. 106+00 CHECKED BY DATE

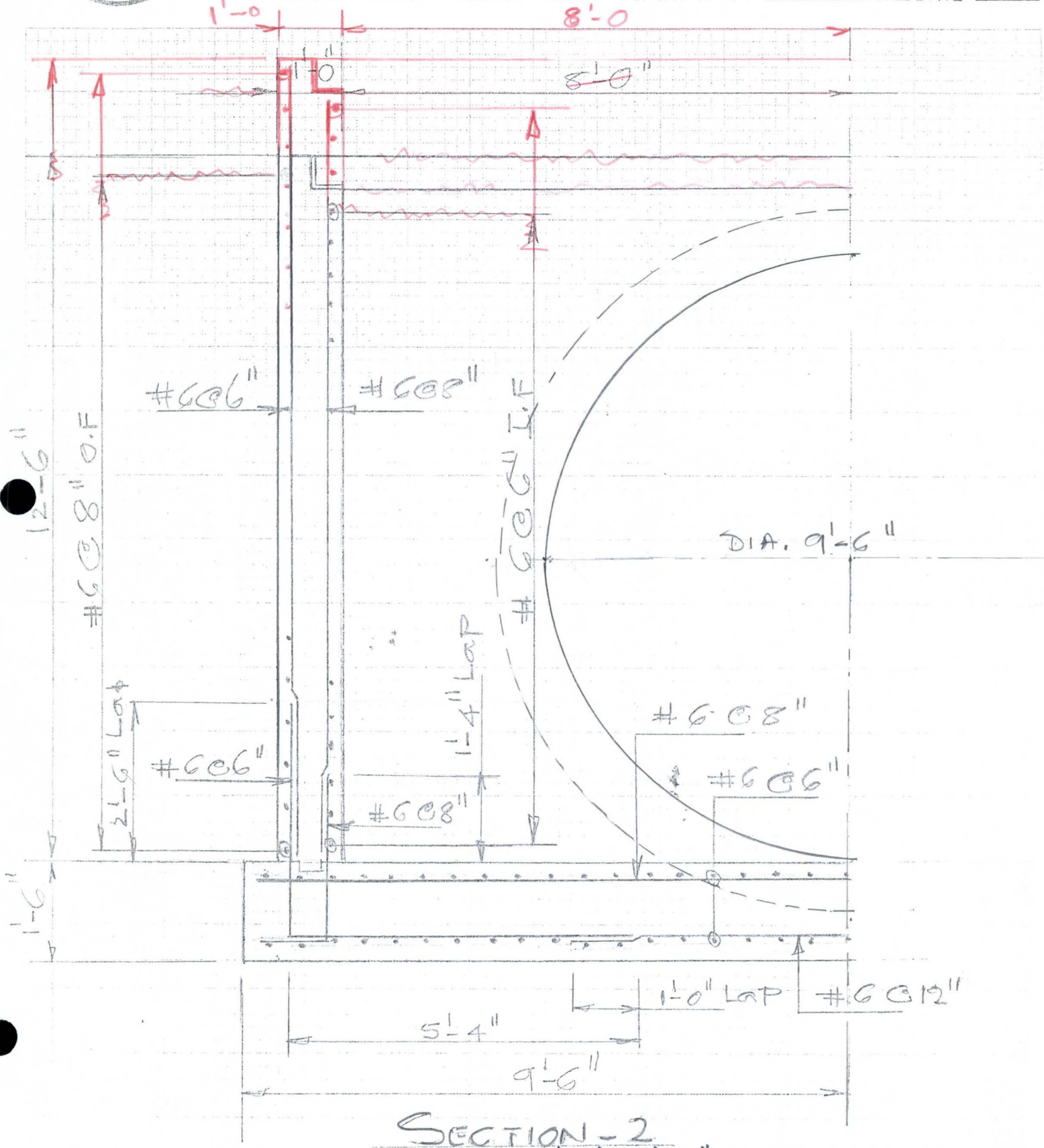

SECTION - 2
Scale: 1/2" = 1'-0"

(155)

FLOOD CONTROL DISTRICT OF MARICOPA COUNTY

PROJECT 43rd Ave. Basin PAGE 218 OF

DETAIL Junction Str. COMPUTED KVH DATE NOV. 98

@ STA. 106+00 CHECKED BY DATE

11.50
1.33
12.83

1010.40
12.83
1023.23

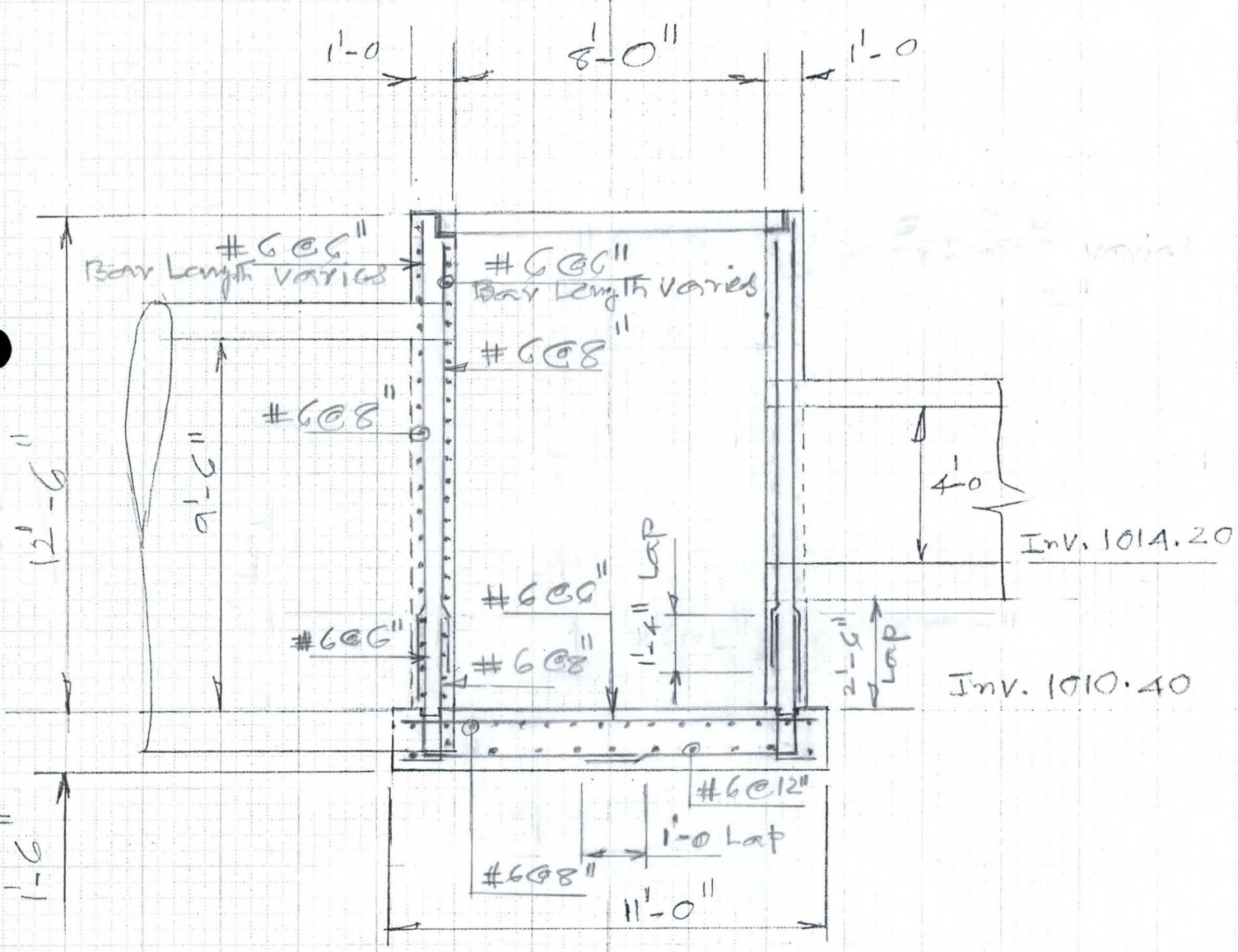

SECTION-1

(156) A

FLOOD CONTROL DISTRICT OF MARICOPA COUNTY

PROJECT 43rd AVE. Basin PAGE 29 OF

DETAIL Junct. Struct. @ Stat. 106+00 COMPUTED KVH DATE NOV. 98

CHECKED BY DATE

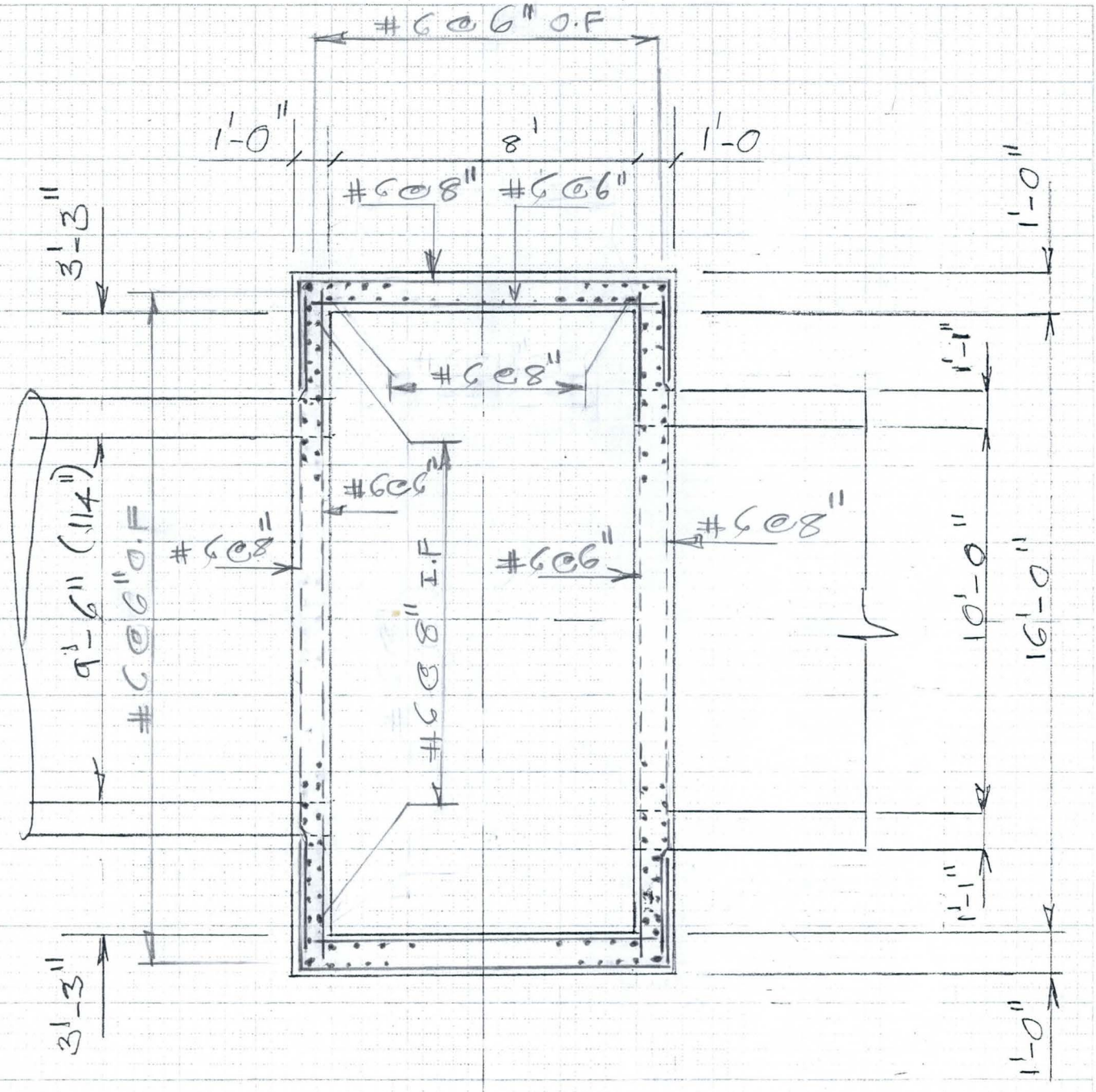

PLAN

1/4" = 1'-0

FLOOD CONTROL DISTRICT OF MARICOPA COUNTY

(15T)

PROJECT 43rd Ave. Storm Drain PAGE 30 OF

DETAIL Junction STR COMPUTED KYH DATE 1/99

9'-6" Pipe & 10x5' ADOT BOX CHECKED BY DATE

Sta. 106+00

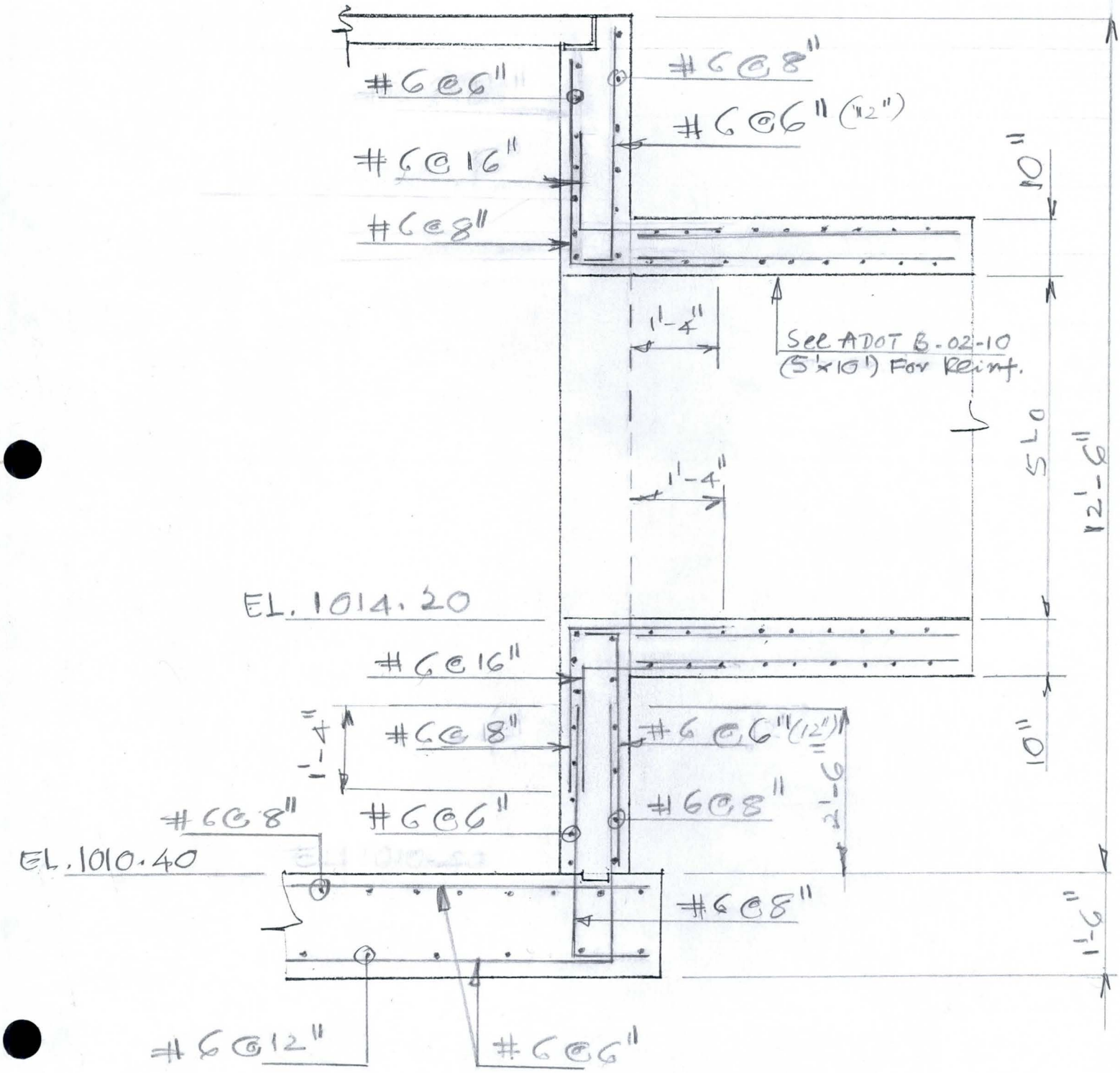

(158)

FLOOD CONTROL DISTRICT OF MARICOPA COUNTY

PROJECT 43rd Ave. Storm DR. PAGE 31 OF

DETAIL (8'x16') opening COMPUTED KVH DATE 2/99

Diamond Pt & Grate CHECKED BY DATE

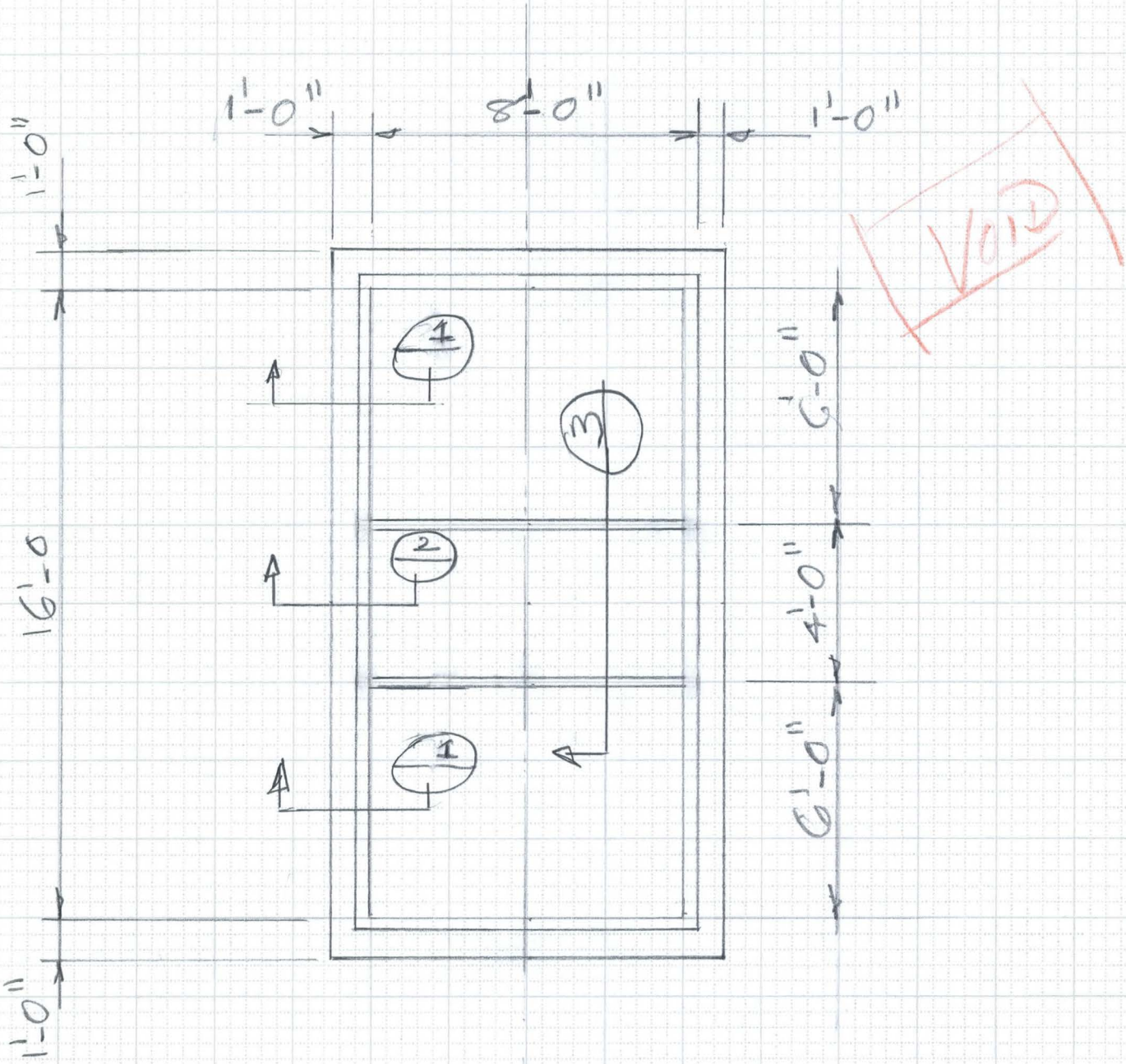

PLAN

Scale: 1/4" = 1'-0"

6910-153 4-90

FLOOD CONTROL DISTRICT OF MARICOPA COUNTY

PROJECT 43rd Ave. Storm Drain PAGE 32 OF

DETAIL Diamond Plate COMPUTED KVH DATE 2/99

(8'x16') Opening CHECKED BY DATE

VOID

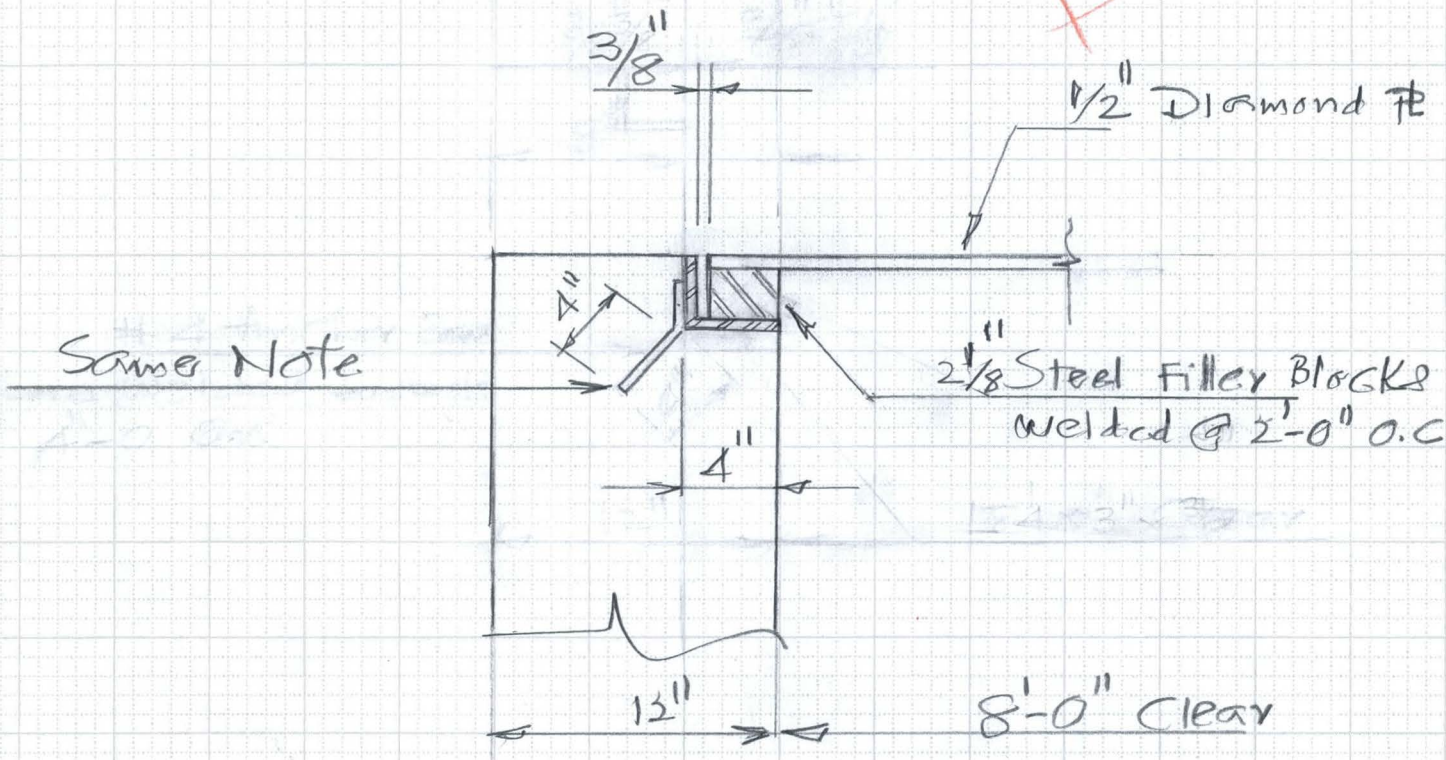

1 SECTION

Scale: 1 1/2" = 1'-0

FLOOD CONTROL DISTRICT OF MARICOPA COUNTY

PROJECT 43rd Ave. Storm DR. PAGE 33 OF

DETAIL Grate Detail COMPUTED DATE

CHECKED BY DATE

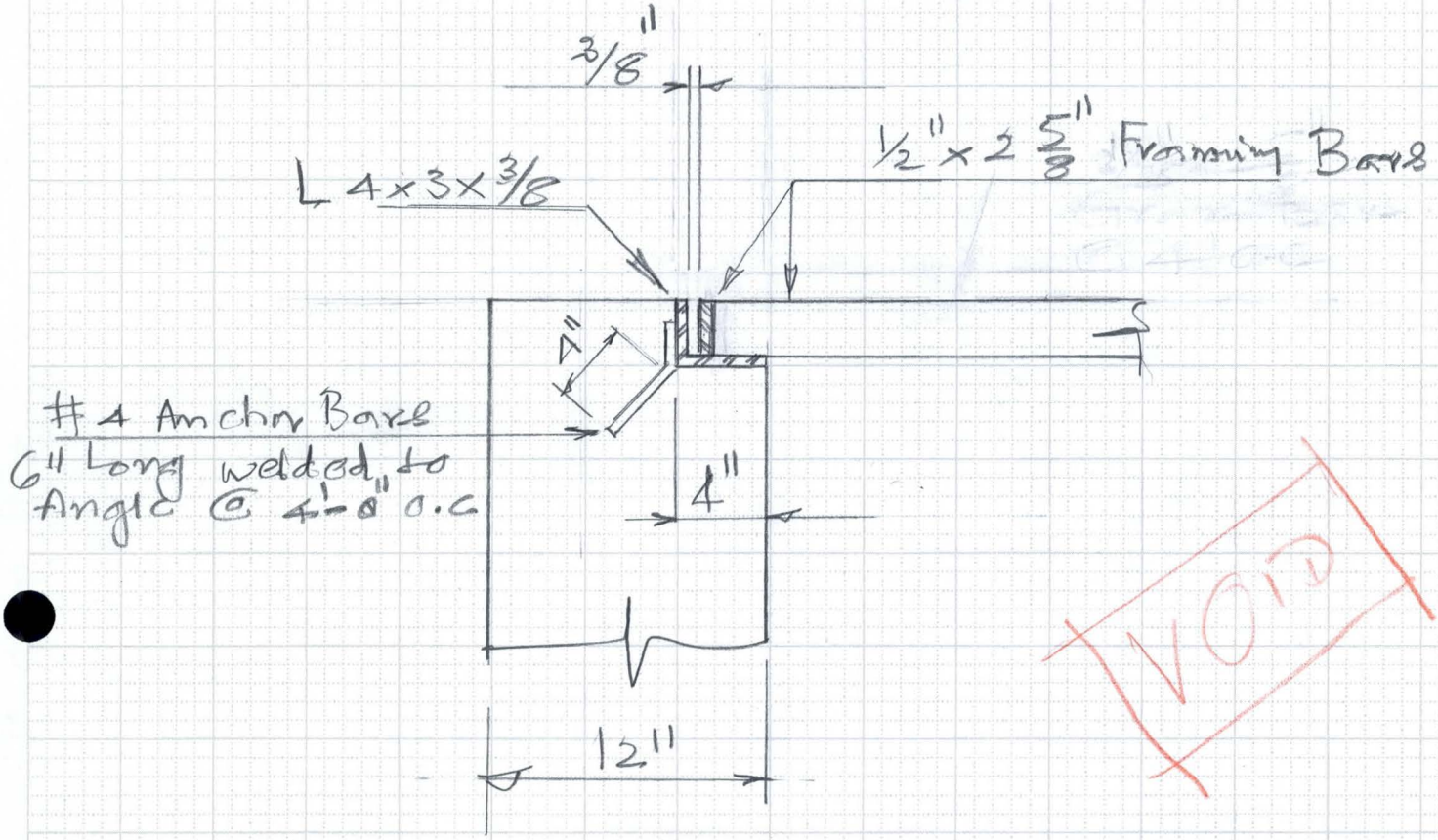

2 SECTION

Scale: 1 1/2" = 1'-0"

(16)

FLOOD CONTROL DISTRICT OF MARICOPA COUNTY

PROJECT 43rd Ave. Storm DR. PAGE 34 OF

DETAIL 8'x16' Junct. ST COMPUTED KVH DATE 2/99

Grate Detail CHECKED BY DATE

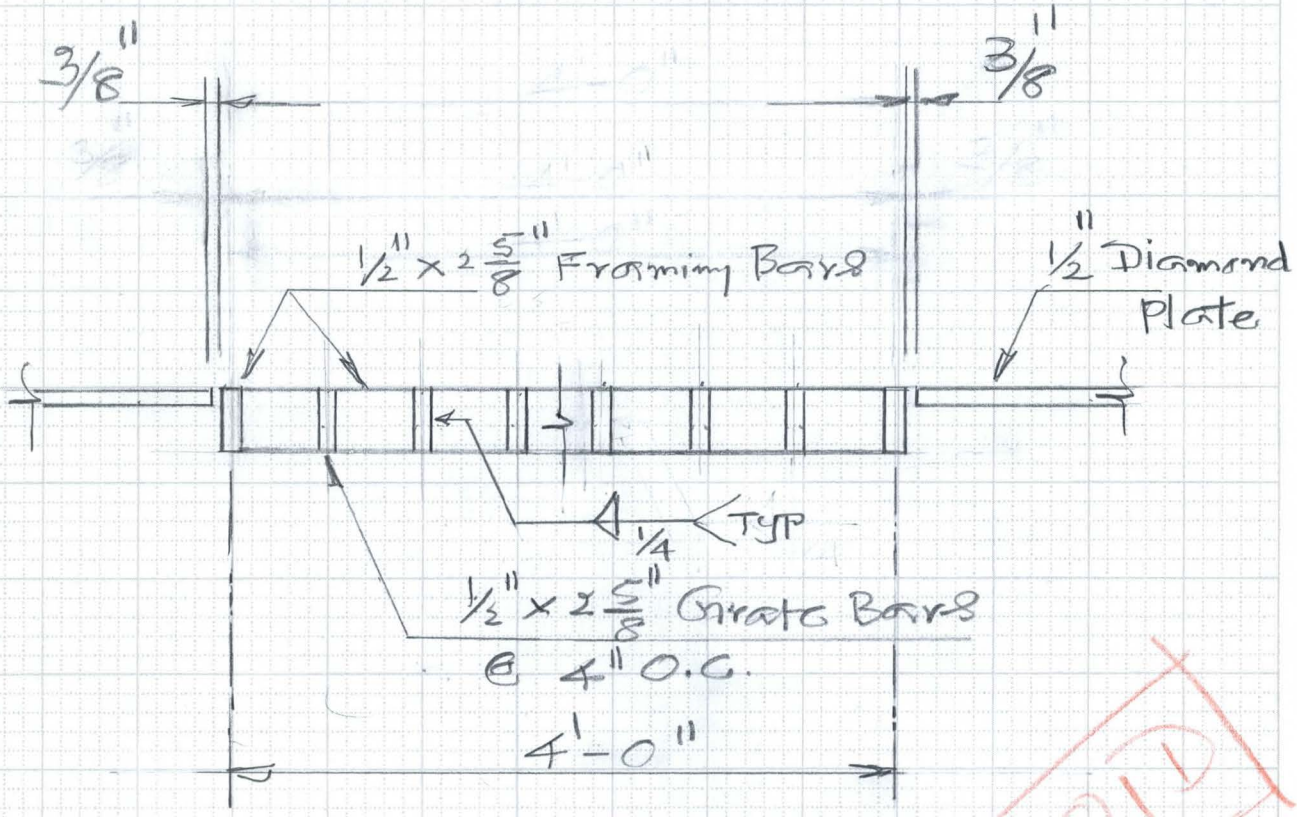

VOID

3 SECTION
SCALE 1 1/2" = 1'-0"

6910-153 4-90

FLOOD CONTROL DISTRICT OF MARICOPA COUNTY

PROJECT 43rd Ave. Storm Drain PAGE 35 OF ____

DETAIL Grate opening COMPUTED KVH DATE 2/99

Junction STR. CHECKED BY ____ DATE ____

Check Bar Size:

VOID

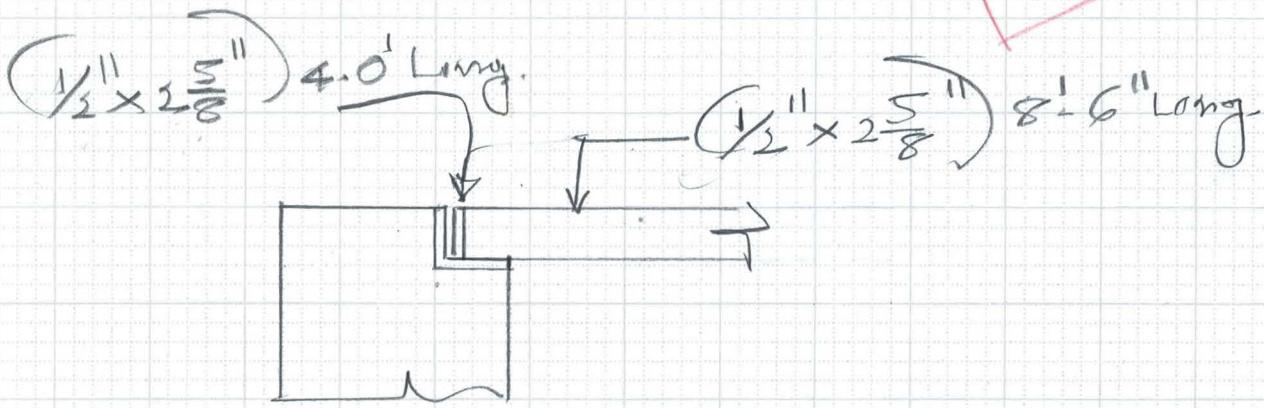

Check wt. of Panel:

$\left[\left(\frac{1}{2} \times 2\frac{5}{8}\right)\frac{1}{144}\right] 490 = 4.47$ lbs/ft

$(4.47 \times 4)\,2 = 35.8$ lbs $\simeq 36$

Length

Bars @ 4" O.C: No. of Bars $= \frac{4 \times 12}{4''} = 12$ sp.

$(4.47 \times 8.5)\,13 = 494$ lbs

Length Bars

Tot. wt. of (4' × 8') Grate $= (36 + 494) = 530$ lbs

Check Stresses:

Span = 8.5'

No. of Bars per ft = 3

D.L = (4.47)3 = 13.41 lbs/ft

LL @ 50 psf = 50.00

63.41 PLf

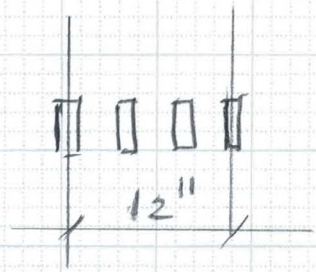

FLOOD CONTROL DISTRICT OF MARICOPA COUNTY

PROJECT 43rd Ave. Storm Dr. PAGE 36 OF

DETAIL Grate opening (8'x16') Junct. STR. COMPUTED KVH DATE 2/99

CHECKED BY DATE

$M = 63.41 \times 8.5^2/8 = 573$ lbs ft.

VOID

Bars $(1/2'' \times 2\,5/8)$ $S = \left(0.5 \times \frac{2.625^2}{6}\right) 3 = 1.722$

Nos

$M = fS$, $f = \frac{573 \times 12}{1.722} = 3.93$ Ksi

Check Deflection:

L.L @ 50 psf Load on Each Bar $= 50/3 = 16.7$ psf

$W = 4.5 + 16.7 = 21.2$ psf

L.L

$W = (21.2 \times 8.5) = 180.2$

$I = 0.5 \times 2.625^3/12 = 0.754$

$\Delta Defl = \frac{5}{384} \times \frac{180.2 \times (8.5 \times 12)^3}{29 \times 10^6 \times 0.754} = 0.11''$

$\frac{L}{360} = \frac{8.5 \times 12}{360} = 0.28'' < 0.11$ ∴ OK

Actually we can reduce 1/2" Bar to $3/8 \times 2\frac{5}{8}$

$\left(\frac{3}{8} \times 2\frac{5}{8}\right) \frac{1}{144} \times 490 = 3.35$ lbs/ft

$(3.35 \times 8.5)\,13 = 370$ lbs

$(3.35 \times 4)\,2 = 27$

397 lbs

Too light

Use $1/2'' \times 2\frac{5}{8}''$ Grate Bars

FLOOD CONTROL DISTRICT OF MARICOPA COUNTY

PROJECT 43rd Ave. Storm DR PAGE 37 OF

DETAIL Diamond PL. COMPUTED KVH DATE 2/99

(8'x16') opening. CHECKED BY DATE

VOID

Check Bearing of Diamond PL.

wt. of 1/2" PL = 20.5 psf.

Placing Steel Filler Blks @ 2'-0 o.c

D.L = 20.5
L.L = 50
70.5 psf

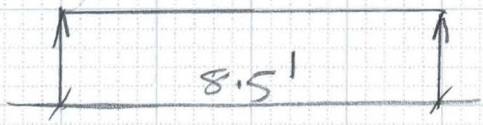

$R = (70.5 \times \frac{8.5}{2})\,2 = 599^{\text{lbs}}$

Spacing

Blk say (3"x3") 2 1/8"

Depth

Brg Pr = (599/3x3) = 66 psf

164 (A)

FLOOD CONTROL DISTRICT OF MARICOPA COUNTY

PROJECT 43rd Ave. Storm Drain PAGE ____ OF ____

DETAIL Junct. Str. Cover COMPUTED KVH DATE 2/99

CHECKED BY ____ DATE ____

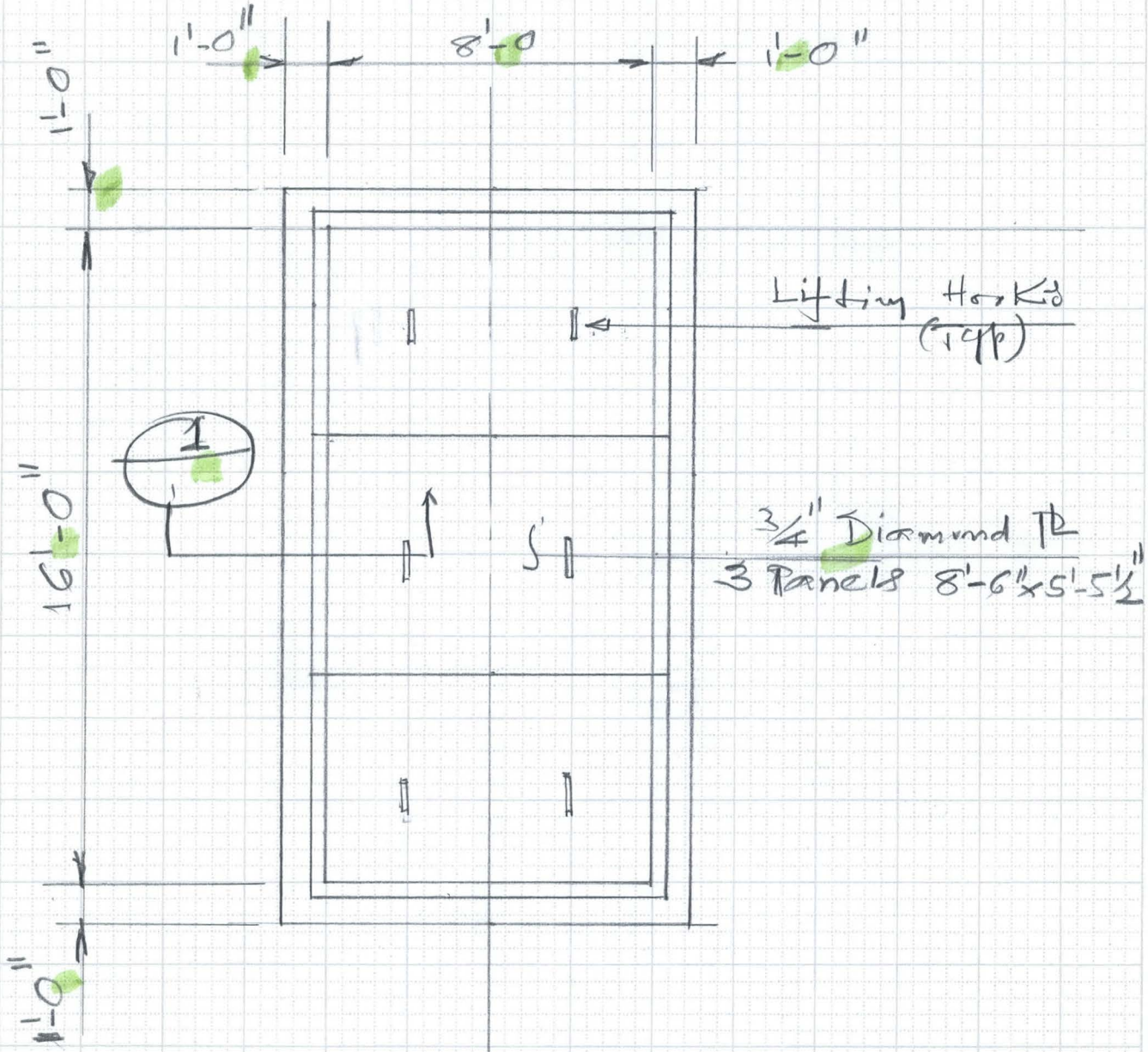

PLAN

scale: 1/4" = 1'-0"

6910-153 4-90

FLOOD CONTROL DISTRICT OF MARICOPA COUNTY

164(c)

PROJECT 43rd Ave. Storm Drain PAGE 32 OF

DETAIL Diamond Plate (8'x16') Opening COMPUTED KVH DATE 2/99

CHECKED BY DATE

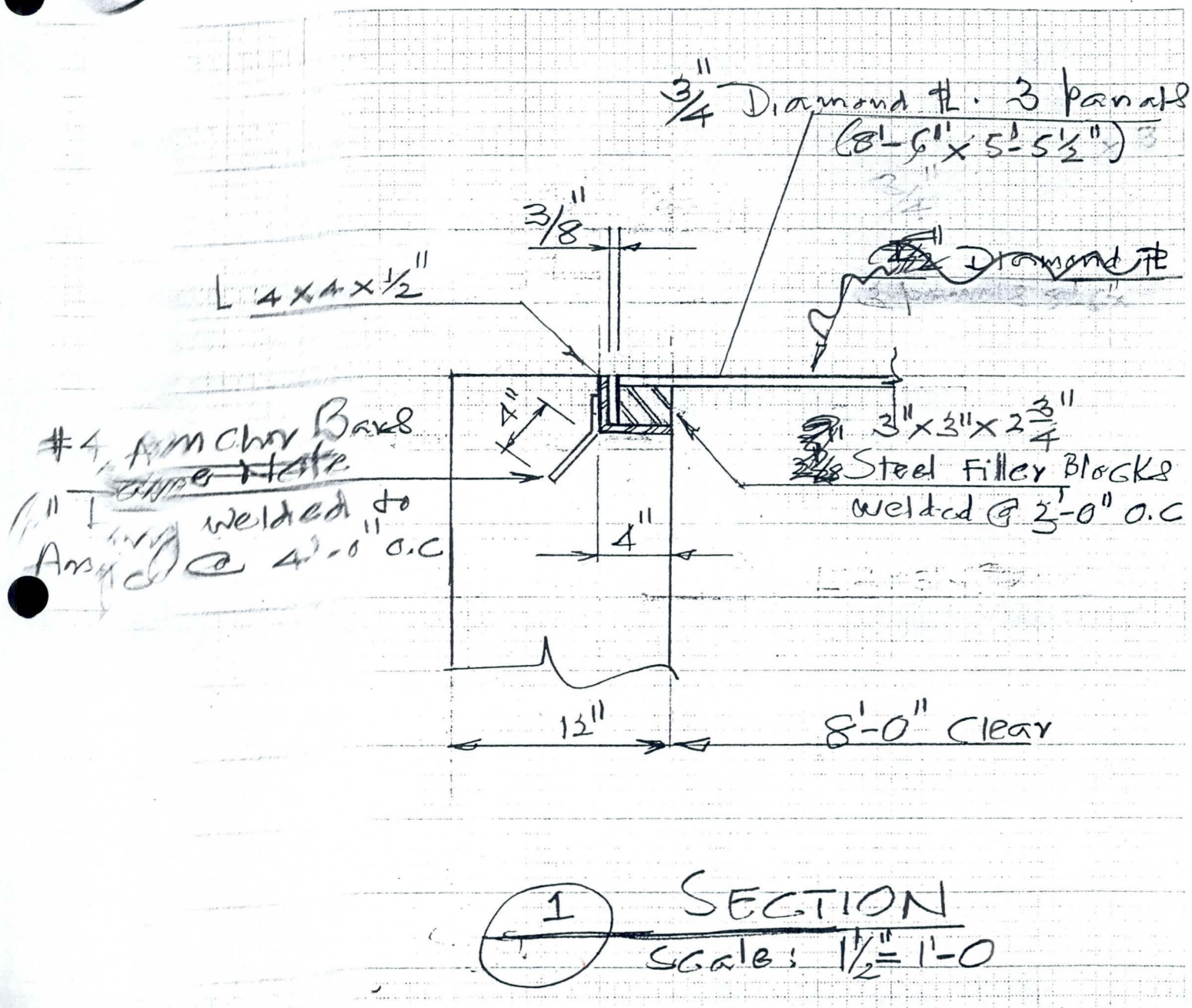

1 SECTION

Scale: 1½" = 1'-0

FLOOD CONTROL DISTRICT OF MARICOPA COUNTY

PROJECT 43rd AV PAGE ____ OF ____

DETAIL Cover PL. COMPUTED KVH DATE 6/79

Junction STR. CHECKED BY ____ DATE ____

Try 1/2" PL Diamond PL:

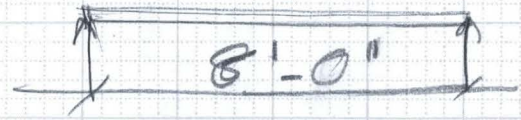

D.L. $(1 \times 1 \times \frac{0.5}{12})\ 490 = 20.4$ lbs/ft

L.L $= 85$ psf

105.4 psf

$M_s = 105.4 \times 8.0^2 / 8 = 843$ lbs ft

$M = f_s \quad S = 12 \times 0.5^2/6 = 0.5$

$f = \frac{843 \times 12}{0.5} = 20.2$ ksi

< 24 ksi

$\Delta = \frac{5}{384} \frac{WL^3}{EI}$

$W = (105.4 \times 8.0) = 843$

$E = (29 \times 10^6), \quad I = \frac{12 \times 0.5^3}{12} = 0.125$

$\Delta = \frac{5}{384} \times \frac{843 \times (8.0 \times 12)^3}{29 \times 10^6 \times 0.125} = 2.68''$

FLOOD CONTROL DISTRICT OF MARICOPA COUNTY

PROJECT 43rd AV. PAGE ____ OF ____

DETAIL Cover PL. COMPUTED KVH DATE 6/99

Junction STR. CHECKED BY ____ DATE ____

Using 3/4" PL.

$DL = \left(\frac{1 \times 1 \times 0.75}{12}\right) 490 = 30.6$ psf

$LL = 85.0$

115.6 psf

$M_s = 115.6 \times 8^2/8$

$= 925$ lb-ft

$S = (12 \times 0.75^2/6) = 1.125$

$M = fS, \quad f = \frac{925 \times 12}{1.125} = 9.8$ Ksi

< 24 Ksi

$\Delta = \frac{5}{384} \frac{WL^3}{EI}$

$W = (115.6 \times 8) = 925$ lbs

$I = 12 \times 0.75^3/12 = 0.422$

$\Delta = \frac{5}{384} \times \frac{925 \times (8 \times 12)^3}{29 \times 10^6 \times 0.422} = 0.87''$

$\frac{L}{360} = \frac{8 \times 12}{360} = 0.27''$

$\frac{L}{240} = \frac{8 \times 12}{240} = 0.4''$

3/4" PL

$wt = \left(8.5 \times 16.5 \times \frac{0.75}{12}\right) 490 = 4295$ lbs

5/8" PL

$\left(8.5 \times 16.5 \times \frac{0.625}{12}\right) 490 = 3580$ lbs

6910-153 4-90

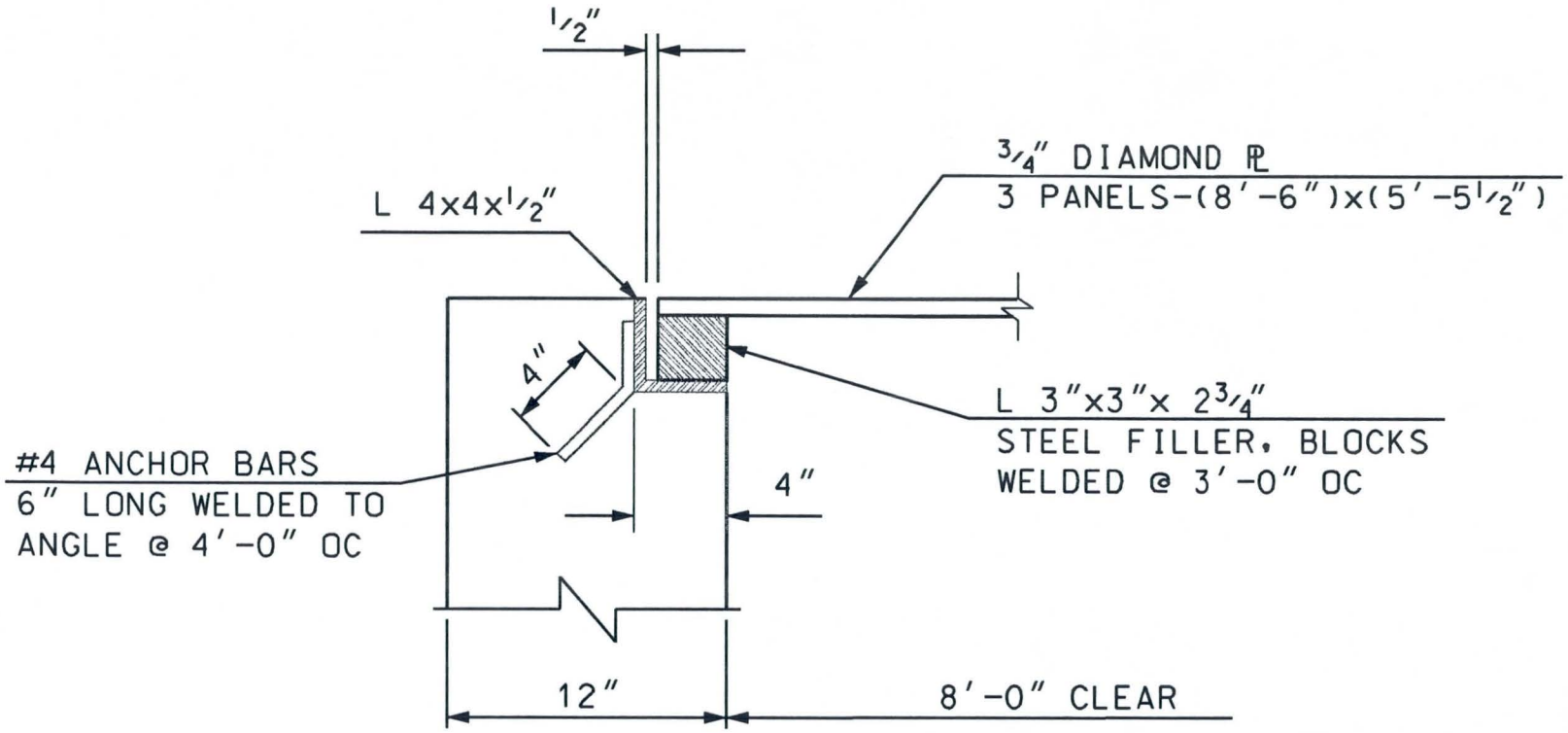

1 SECTION
SCALE: 1 1/2" = 1'-0"

NO.	REVISION	BY	DAT
3			
2			
1			

FLOOD CONTROL DISTRICT OF MARICOPA COUNTY
ENGINEERING DIVISION

43RD AVENUE STORM DRAIN
SOUTHERN AVENUE TO SALT RIVER
FCD PROJECT NO. 1170230

		BY	DA
PRELIMINARY NOT FOR CONSTRUCTION	DESIGNED	KVH	06/0
	DRAWN	FC	06/0
	CHECKED	MAL	
	JUNCTION STRUCTURE COVER		SHEE 2

164(15)

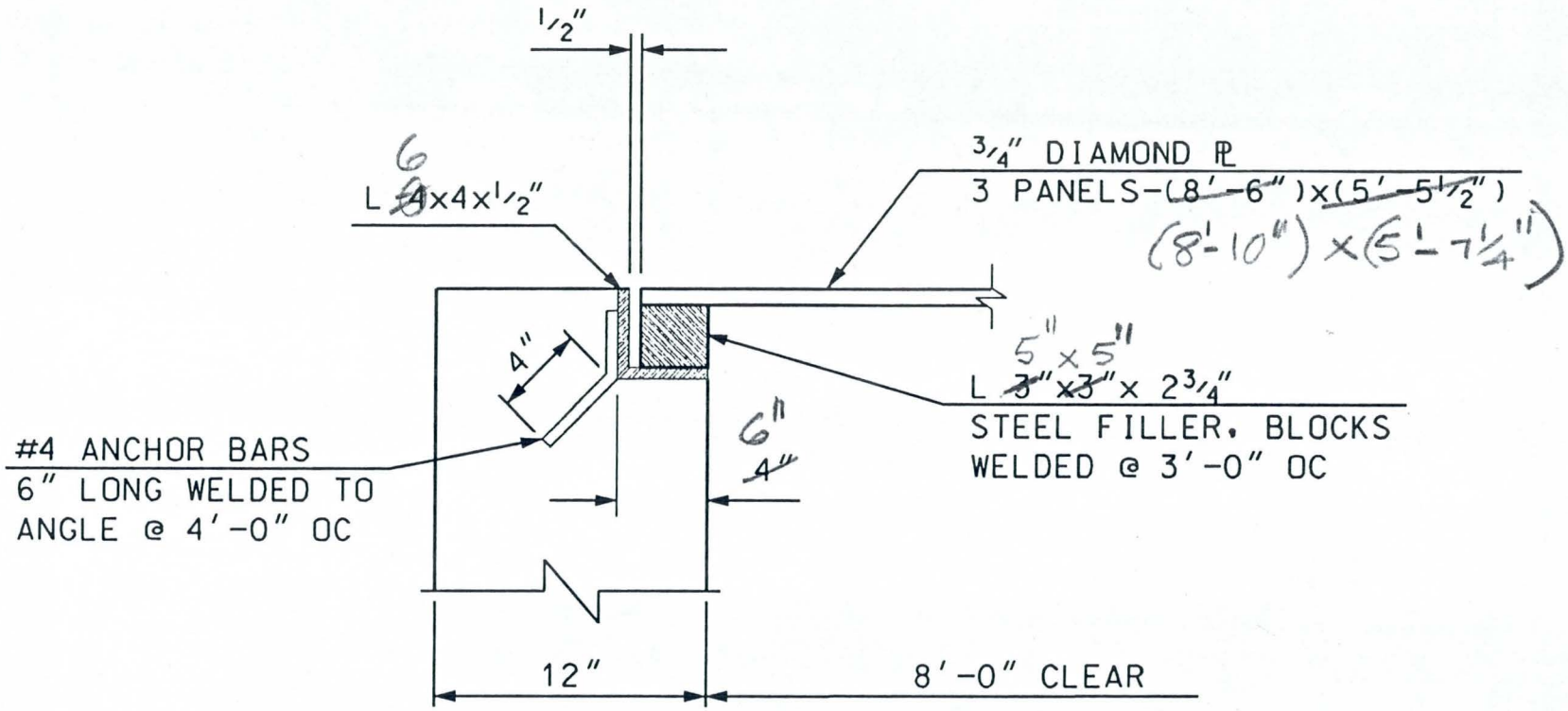

1 SECTION
SCALE: 1 1/2" = 1'-0"

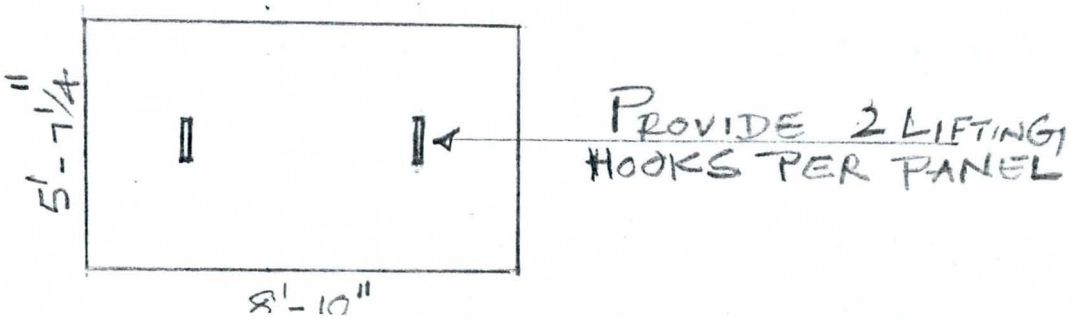

NO.	REVISION	BY	DATE
3			
2			
1			

FLOOD CONTROL DISTRICT OF MARICOPA COUNTY
ENGINEERING DIVISION

43RD AVENUE STORM DRAIN
SOUTHERN AVENUE TO SALT RIVER
FCD PROJECT NO. 1170230

		BY	DATE
PRELIMINARY NOT FOR CONSTRUCTION	DESIGNED	KVH	06/08
	DRAWN	FC	06/08
	CHECKED	MAL	

JUNCTION STRUCTURE COVER — SHEET 2

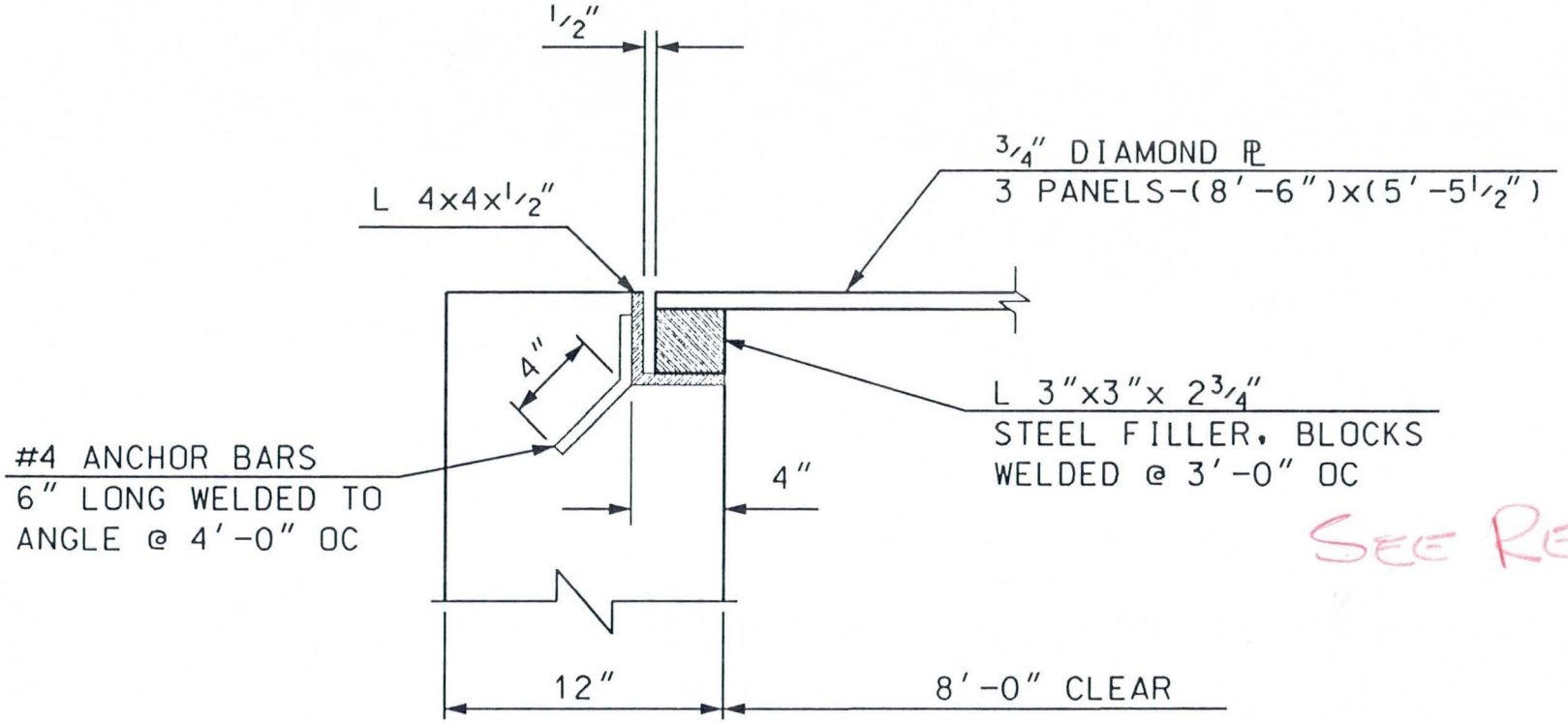

SEE REVISED

1 SECTION
SCALE: 1 1/2" = 1'-0"

NO.	REVISION	BY	DAT
3			
2			
1			

FLOOD CONTROL DISTRICT OF MARICOPA COUNTY
ENGINEERING DIVISION

43RD AVENUE STORM DRAIN
SOUTHERN AVENUE TO SALT RIVER
FCD PROJECT NO. 1170230

		BY	DA
PRELIMINARY NOT FOR CONSTRUCTION	DESIGNED	KVH	06/0
	DRAWN	FC	06/0
	CHECKED	MAL	

JUNCTION STRUCTURE

SHEET 2

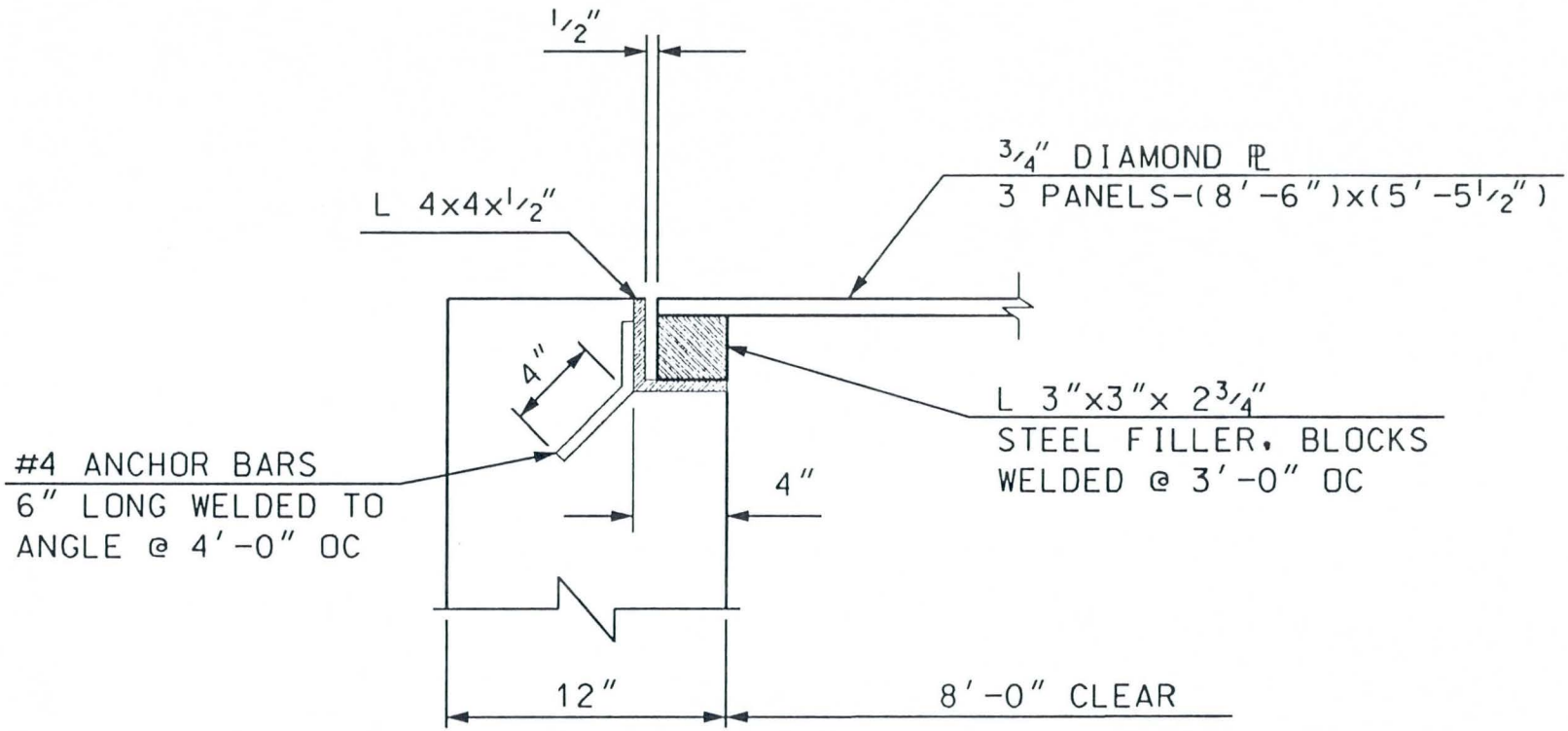

1 SECTION
SCALE: 1 1/2" = 1'-0"

NO.	REVISION	BY	DAT
3			
2			
1			

FLOOD CONTROL DISTRICT OF MARICOPA COUNTY
ENGINEERING DIVISION

43RD AVENUE STORM DRAIN
SOUTHERN AVENUE TO SALT RIVER
FCD PROJECT NO. 1170230

		BY	DAT
PRELIMINARY NOT FOR CONSTRUCTION	DESIGNED	KVH	06/08
	DRAWN	FC	06/08
	CHECKED	MAL	
	JUNCTION STRUCTURE COVER		SHEET 2

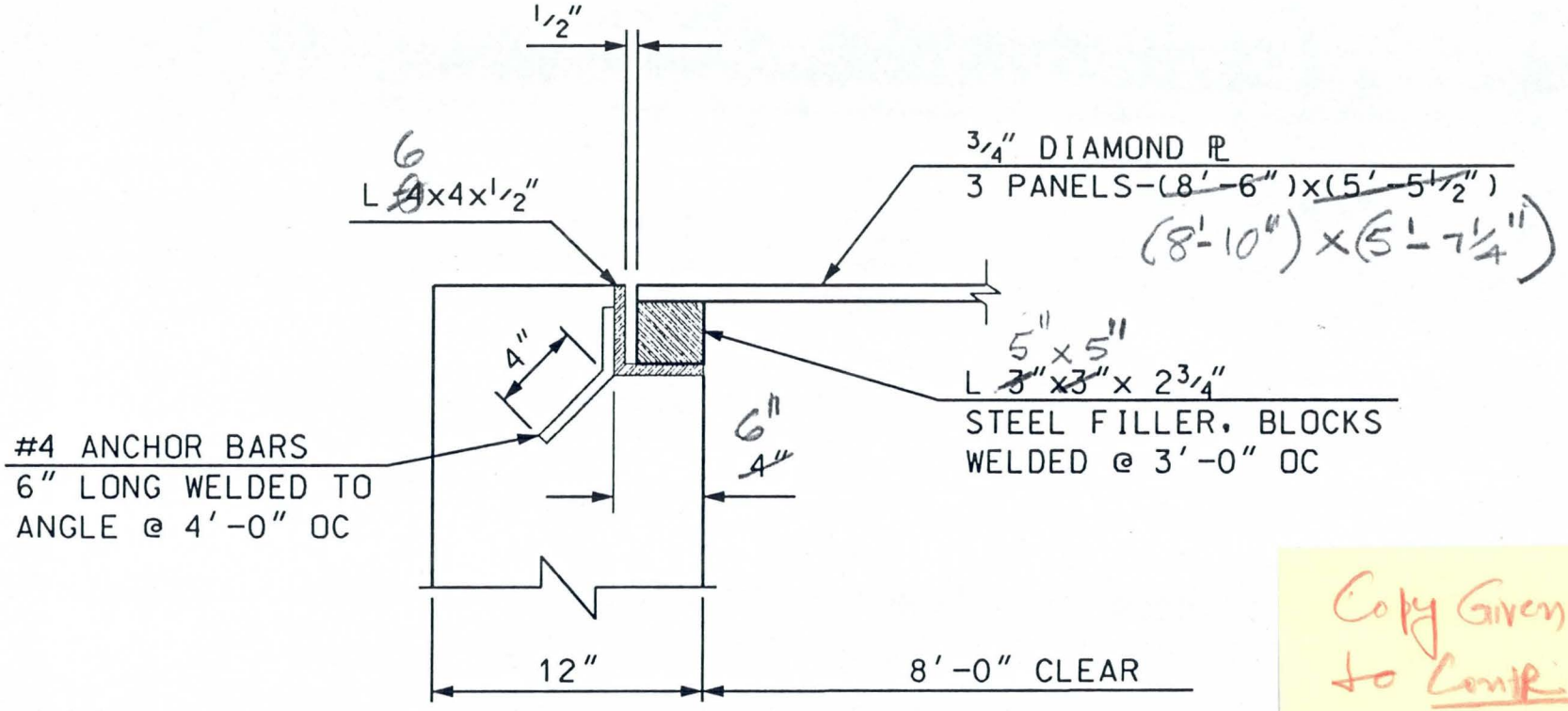

Copy Given to Const.

1 SECTION
SCALE: 1 1/2" = 1'-0"

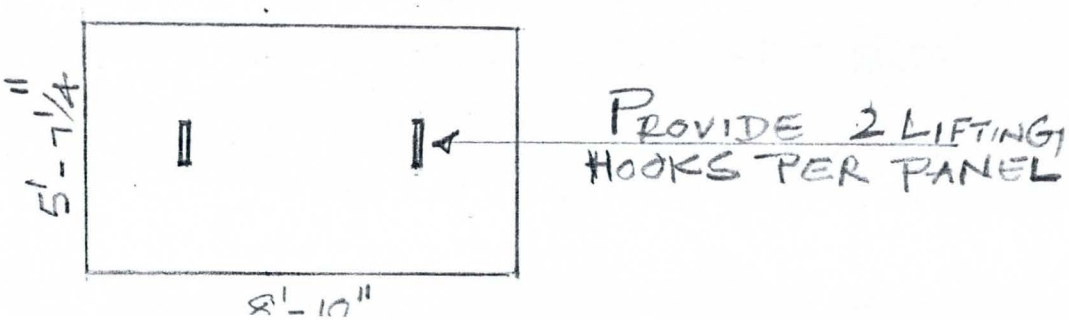

NO.	REVISION	BY	DAT
3			
2			
1			

FLOOD CONTROL DISTRICT OF MARICOPA COUNTY
ENGINEERING DIVISION

43RD AVENUE STORM DRAIN
SOUTHERN AVENUE TO SALT RIVER
FCD PROJECT NO. 1170230

		BY	DA
PRELIMINARY NOT FOR CONSTRUCTION	DESIGNED	KVH	06/0
	DRAWN	FC	06/0
	CHECKED	MAL	
	JUNCTION STRUCTURE		SHEET 2

AMES CONSTRUCTION, INC.
3410 E. UNIVERSITY, SUITE 380
PHOENIX, ARIZONA 85034-7224
TELEPHONE: (602) 431-2111
FAX: (602) 431-5952
AZ LIC # 074995-002 CLASS A

March 20, 2000

Flood Control District of Maricopa County
2801 W. Durango St.
Phoenix, AZ 85009

Attn: Thomas D. Johnson, P.E., and R.L.S.
Deputy Chief Engineer

Re: 43rd Ave Storm Drain Project.

Subject: Junction Structure Cover VE proposal.

Gentlemen.

On February 23rd Ames submitted an RFI for the block out details of the junction structure covers at station 105+00. The response was returned on March 15th with angle embeds and steel blocks added to the ¾" thick diamond plate originally designed. These additions would be a change order to Ames and may cost up to $3,000.

3/8"

We would like to propose a simplified design that will reduce the overall weight, labor, and cost of installing and maintaining the diamond plate covers. We propose to use ¼" diamond plate with lifting hooks, and add 3"x3"x1/4" angle stiffeners to the bottom of the plates as detailed in the sketch attached. The plates will rest on the concrete walls of the junction structure with out embeds in the walls. The revised thickness of the plate and angle stiffeners are based solely on supporting the covers own weight. If additional loading requirements are needed, we will need the parameters required to design the plates and angles accordingly.

Please let us know if this concept is of interest to the Flood Control District. We will submit a cost savings as soon as the quotes are received.

Sincerely,

Scott Effing
Project Manager

AMES CONSTRUCTION, INC.

10 E. UNIVERSITY, SUITE 380
PHOENIX, ARIZONA 85034
TELEPHONE (602) 431-2111
FAX (602) 431-5952

Project: 43RD AVE STORM DRAIN	Page:
Location: STA 105+00 JUNCTION STR.	Date: 3-20-00
Subject: COVER PLATE ALTERNATE DESIGN	By: [illegible]
	Checked:

PROPOSED REDESIGN OF JUNCTION STRUCTURE COVER PLATES

PLAN VIEW

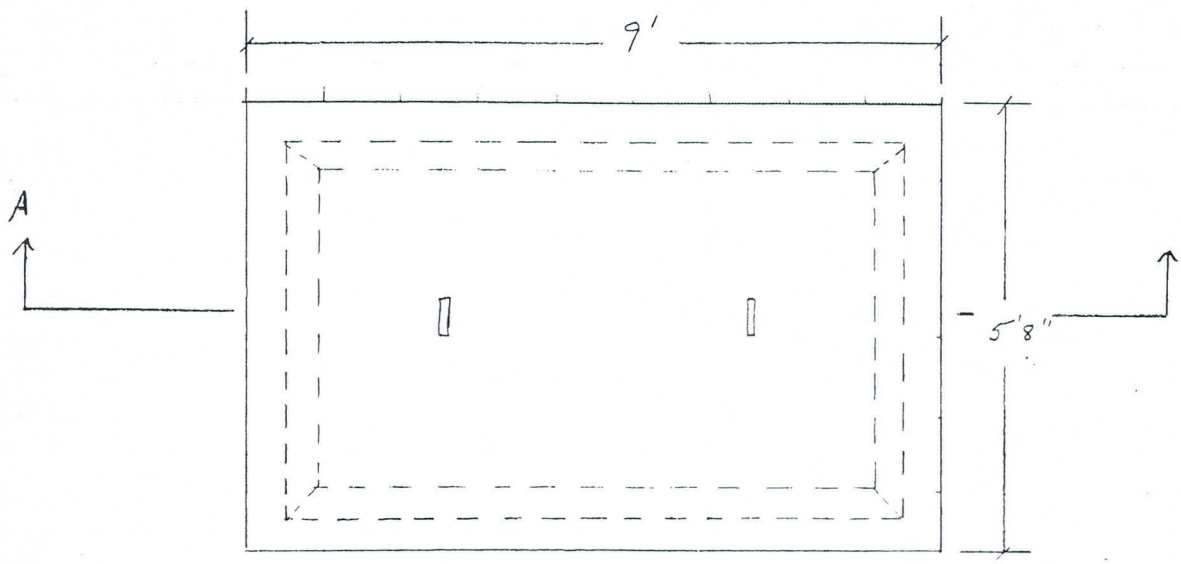

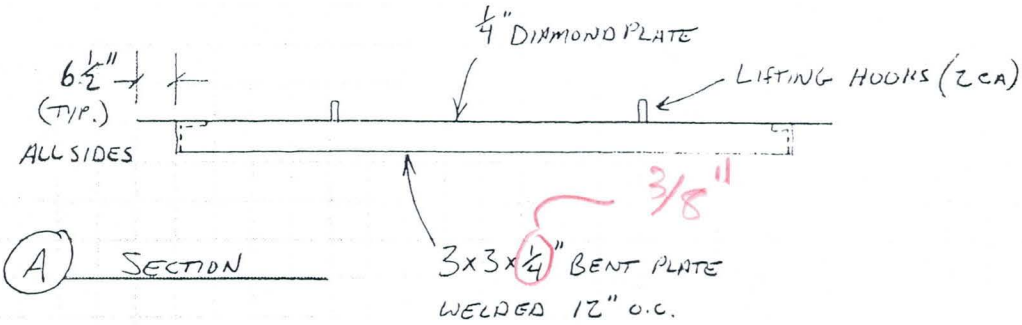

(A) SECTION

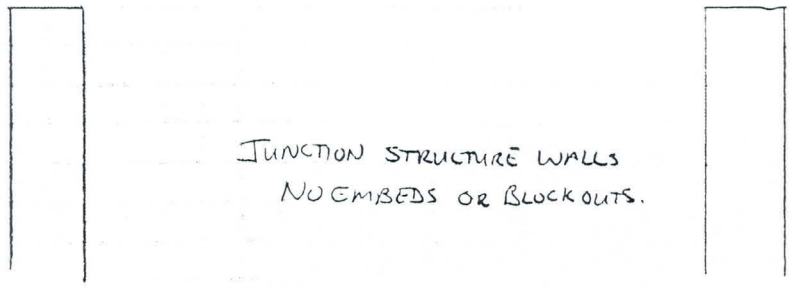

JUNCTION STRUCTURE WALLS
NO EMBEDS OR BLOCKOUTS.

FLOOD CONTROL DISTRICT OF MARICOPA COUNTY

PROJECT 43rd AV. Storm DR PAGE ____ OF ____

DETAIL Cover PL COMPUTED KVH DATE 3/00

CHECKED BY ____ DATE ____

Using 1/4" PL & Angles:

$9 \times 5.67 \times (1/4 \times \frac{1}{12})\ 490 = 520$ lbs

1/4" PL @ 10.2 psf = 520

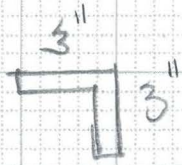

$3 \times 3 \times 1/4$,

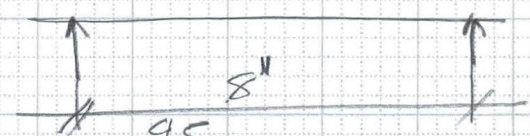

PL = 10.2

L.L = 85

95

$V = \cancel{620}\ 95 \times 4 = \cancel{2480}$ lbs

$Z = \frac{\cancel{2480}}{12 \times 0.25} = \cancel{0.82}$ Ksi Min

$3 \times 3 \times 1/4$, $I = 1.24$

$S = 0.577$

width $= \frac{51.67}{2} = 2.84'$ 0.270 K/ft

@ $\cancel{620}$ 95 (2.84) = ~~1.76 Ksf~~

$M = \cancel{1.76}\ 0.270 \times 8^2/8 = \cancel{14.1}\ 2.16$ Kft

$M = fS$, $f = \frac{\cancel{14.1}\ 2.1 \times 12}{0.577} = 43$ Ksi

Using 3/8" L $S = 0.833$

$f = \frac{2.1 \times 12}{0.833} = 30.2$

6910-153 4-90

FLOOD CONTROL DISTRICT OF MARICOPA COUNTY

PROJECT 43rd Ave. ST. DR PAGE ____ OF ____

DETAIL Cover Pl COMPUTED KVH DATE 3/90

CHECKED BY ____ DATE ____

Spacing 1'-0"

$M = (95 \times 1^2/8) = 11.88$ lbs/ft

1/4" pl $S = 12 \times 0.25^2/6 = 0.125$

$M = f S$, $f = \frac{11.88 \times 12}{0.125} = 1.14$ ksi

Spacing (5-8) - 6" - 6" = 4'-8

$M = 95 \times 4.67^2/8 = 258$ lbs/ft

$f = \frac{258 \times 12}{0.125} = 24.8$ ksi

Deflection Check:

$\Delta = \frac{5}{384} \frac{WL^3}{EI}$

$W = (95 \times 4.67) = 444$ lbs

$E = 29 \times 10^6$, $I = \frac{12 \times 0.25^3}{12} = 0.063$

$\Delta = \frac{5}{384} \times \frac{444 \times (4.67 \times 12)^3}{29 \times 10^6 \times 0.063} = 0.55''$

OK 1/4" pl with 3 x 3 x 3/8" L

6910-153 4-90

FLOOD CONTROL DISTRICT OF MARICOPA COUNTY

PROJECT _____ PAGE ____ OF ____

DETAIL _____ COMPUTED _____ DATE ____

_____ CHECKED BY _____ DATE ____

MISCE

FLOOD CONTROL DISTRICT OF MARICOPA COUNTY

PROJECT 43rd Ave. Storm DR. PAGE 1 OF 3

DETAIL Catch Basin COMPUTED KVH DATE 3/99

Type-M P.1569-1 CHECKED BY _____ DATE _____

Reinf. Check:

wall Ht = 8'

t = 8"

$K_{At\ Rest} = (1 - \sin\phi)$

$= (1 - \sin 30)$

$= 0.5$

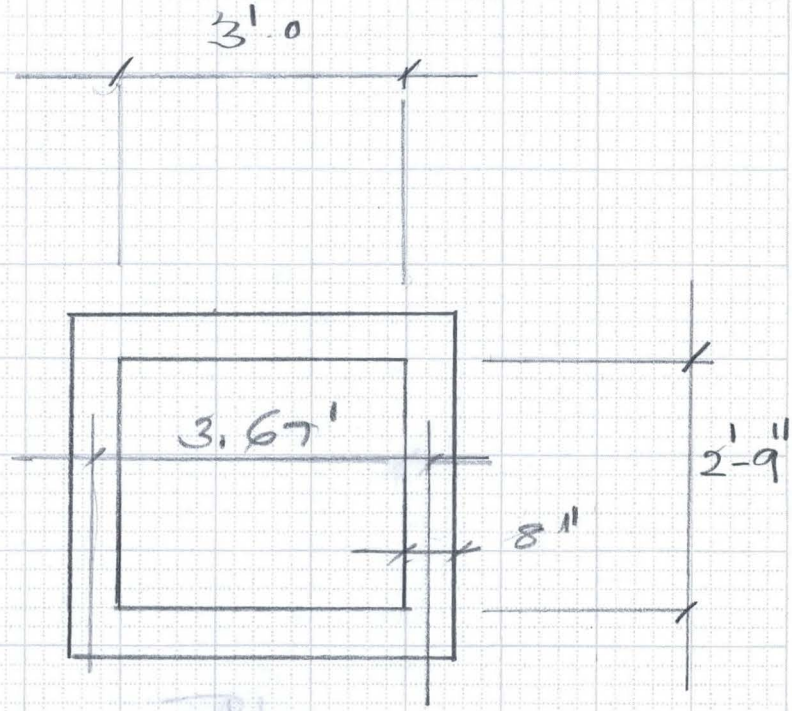

$p_r = (0.12 \times 0.5 \times 8)$

$= 0.48$ KSF

Search = 2'

$p_{rs} = 0.12 \times 0.5 \times 2 = 0.12$

$p_{r(tot)} = (0.48 + 0.12) = 0.60$ KSF

$M = 0.60 \times 3.67^2 / 8 = 1.01$ K'

$d_{eff} = (8 - 3.5 - 0.25) = 4.25"$

$A_s = \dfrac{1.01 \times 12}{24 \times 0.88 \times 4.25}$

$= 0.14\ in^2$

PLAN

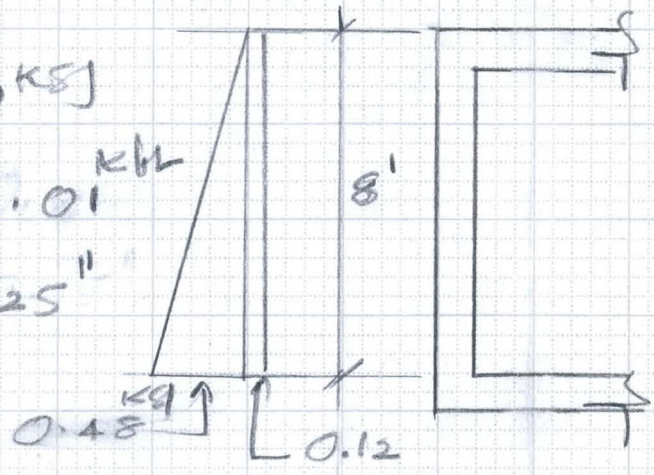

Use # 4 @ 12" Each way

$A_s = 0.20$

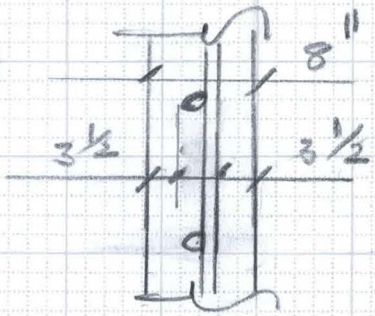

FLOOD CONTROL DISTRICT OF MARICOPA COUNTY

PROJECT 43rd Ave. Storm DR PAGE 2 OF 3

DETAIL Catch Basin COMPUTED KVH DATE 3/99

Type-M P1569-1 CHECKED BY _____ DATE _____

$H_t = 12'$

$P_r = (0.12 \times 0.5 \times 12) = 0.72$ ksf

$P_r(s.ch) = 0.12$

0.84

$M = (0.84 \times 3.67^2/8) = 1.41$

Try 10" walls, $d_{eff} = (10 - 2 - 0.25) = 7.75''$

$$A_s = \frac{1.41 \times 12}{24 \times 0.88 \times 7.75} = 0.10$$

#4 @ 12" Each way is Still ok

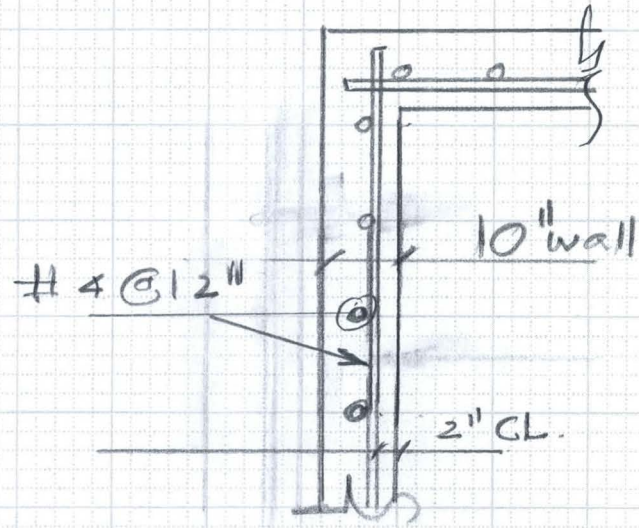

Plan

FLOOD CONTROL DISTRICT OF MARICOPA COUNTY

PROJECT 43rd Ave. Storm DR. PAGE 3 OF 3

DETAIL Catch Basin COMPUTED KVH DATE 3/99

Type-M, P1569-1 CHECKED BY _____ DATE _____

T = 6", If V = 4' or Less
Reinf #4 @ 12" Each way
Centered on the walls & Base Slab

T = 8" If V = 4' to 8'
Reinf. #4 @ 12" Each way
Centered on the walls & Base Slab.

T = 10" If V = 8 to 12'
Reinf #4 @ 12" Each way with
2" Clearance from The Inside
face of walls & Base Slab

169

GUTTER TRANSITION	
CURB HEIGHT	DIM 'A'
4"	3'-3"
5"	2'-6"
6"	1'-9"

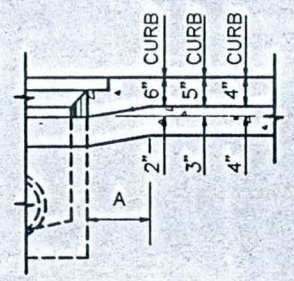

DEPRESSED GUTTER

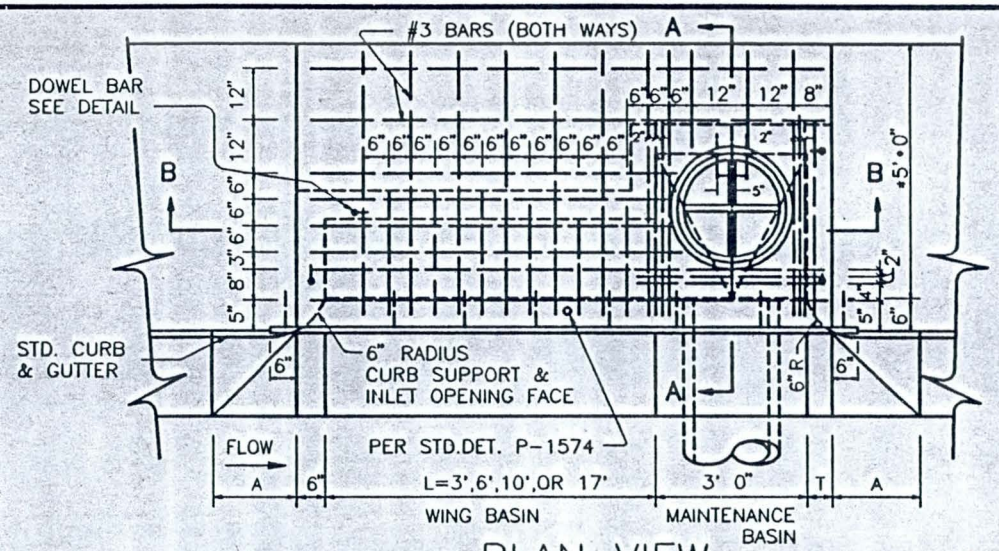

PLAN VIEW

TRANSITION (BOTH SIDES)

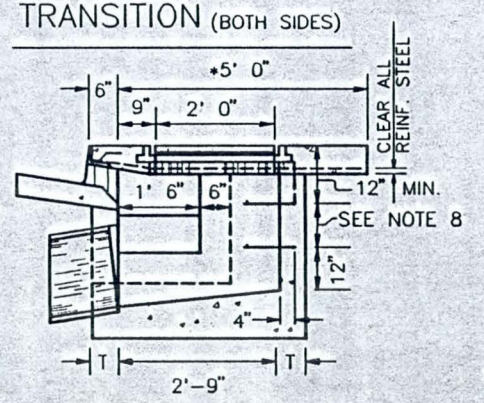

SECTION A – A

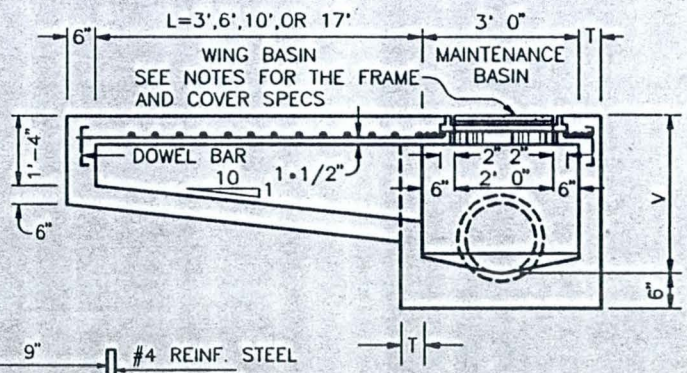

SECTION B – B

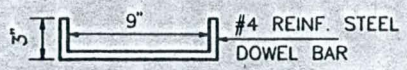

DOWEL BAR DETAIL

NOTES

1. TYPES ARE DESIGNATES AS FOLLOWS: 'M'.. NO WING, 'M-1'.. ONE WING, 'M-2'.. TWO WINGS.
2. ALL CONCRETE SHALL BE CLASS 'A'.
3. ALL REINFORCING STEEL SHALL BE DEFORMED BARS AMD SHALL CONFORM TO A.S.T.M. SPECIFICATION 615.
4. CONNECTOR PIPES SHALL BE PLACED IN THE APPROPRIATE WALL OF THE MAINTENANCE BASIN.
5. FLOOR OF BASIN SHALL BE TROWLLED TO A HARD, SMOOTH SURFACE AND SHALL SLOPE FROM ALL DIRECTIONS TO OUTLET.
6. CONSTRUCTION DRAINS SHALL BE INSTALLED IN ALL INLETS BUILT WITH PAVING PROJECTS. (SEE DET. P-1575.)
7. LOCATE WING BASIN ON UPSTREAM SIDE OF MAINTENANCE BASIN FOR TYPE M-1. WING BASINS FOR TYPE M-2 SHALL BE BOTH SIDES OF MAINTENANCE BASIN.
8. STEPS (M.A.G. DET. 428 POLYPROPYLENE)- V=3' (INCL.), PLACE ONE STEP 12" ABOVE THE FLOOR OF THE BASIN. V OVER 3', PLACE STEPS AT 12" INTERVALS FROM THE FLOOR OF THE BASIN WITH THE TOP STEP AT 12" (MIN.) BELOW THE TOP OF THE GRATE.
9. ACCESS FRAME AND COVER PER DET. P-1561

CATCH BASIN WALL THICKNESS
T = 6" IF V = 4' OR LESS T = 8" IF V = 4' TO 8' (IF V EXCEEDS 8', SPECIAL DESIGN IS REQUIRED.)
L = 0' UNLESS SPECIFIED ON THE PLANS V = 3'-6" MIN. WHEN L = 0:3' OR 6' V = 4'-0" MIN WHEN L = 10' OR 17'

*4'-0" IN LOCATIONS WHERE 4' SIDEWALK IS REQ'D

REVISED 03-01-92

DETAIL NO.	City of Phoenix STANDARD DETAIL	CATCH BASIN TYPE 'M'	APPROVED Kenny W Harris CITY ENGINEER 7-9-92 DATE	DETAIL NO.
P1569-1				P1569-1

FLOOD CONTROL DISTRICT OF MARICOPA COUNTY

PROJECT 43rd Ave. ST. Drain PAGE ____ OF ____

DETAIL STA. (20+18) ± COMPUTED KVH DATE 5/99

CHECKED BY ____ DATE ____

1008.31
9
1017.31

Rim = 1021.30
Top of BOX → 1017.31
Cover → 3.99

Say 4' fill

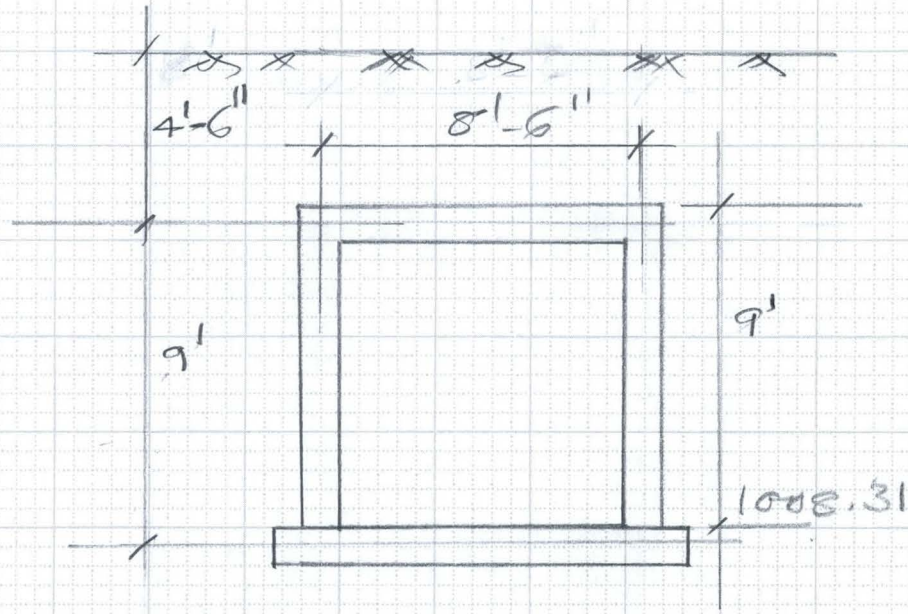

Fill 4' wt = 4 × 0.12 = 0.48 KSF
Conc. Slab 1' = 0.15
width = (1.75 × 4) = 7'
L.L = 16K/7×7 = 0.33
0.96 KSF

$M_s = 0.96 \times 8.5^2/8 = 8.7$ K'

deff = (12 − 2 − 0.5) = 9.5"

$A_s = \frac{8.7 \times 12}{24 \times 0.88 \times 9.5}$
= 0.52

#5 @ 6" Both ways.

Shear Check:

$V = 0.96 \times \frac{8.5}{2} = 4.1^K$

$v = \left(\frac{4.1}{12 \times 9.5}\right) = 36$ psi

$v_c = 0.85\sqrt{3000} = 52$ psi

(B)

FLOOD CONTROL DISTRICT OF MARICOPA COUNTY

PROJECT 43rd Ave St. Drain PAGE ____ OF ____

DETAIL Sta. 20+18± COMPUTED KVH DATE 5/99

CHECKED BY ____ DATE ____

Wall Check:

Using At Rest pr.:

$K_A = (1 - \sin\phi) = (1 - \sin 30) = 0.5$

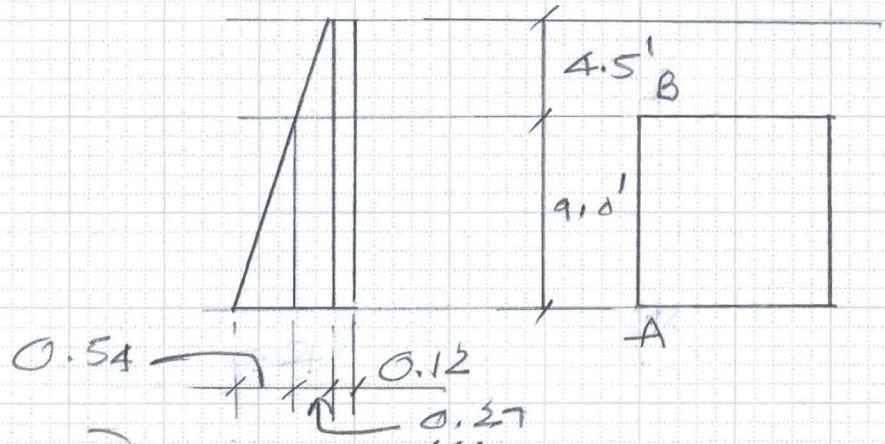

$pr_1 = (0.12 \times 0.5 \times 4.5) = 0.27$ KSF

$pr_2 = (0.12 \times 0.5 \times 9) = 0.54$

pr Sur. 0.2' $= (0.12 \times 0.5 \times 2) = 0.12$ KSF

UDL $= (0.27 + 0.12) = 0.39$

$M_{s_1} = 0.39 \times 9^2/8 = 3.95$

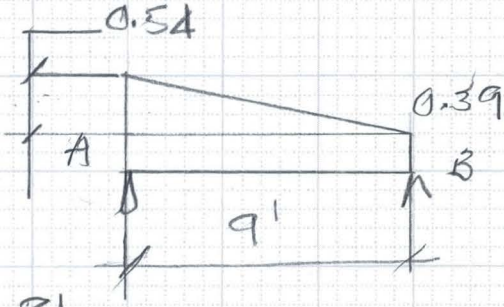

Triangular Load:

$M_{s_2} = 0.1283\, WL$

$0.1283\left(\frac{0.54}{2} \times 9\right) 9 = 2.81$

$M_s = (3.95 + 2.81) = 6.76$ K'

$A_s = \frac{6.76 \times 12}{24 \times 0.88 \times 9.5}$

$= 0.40$

6910-153 4-90

(c)

FLOOD CONTROL DISTRICT OF MARICOPA COUNTY

PROJECT 43rd AV. Storm DR. PAGE ____ OF ____

DETAIL STA. (20+18)± COMPUTED KVH DATE 5/99

CHECKED BY ____ DATE ____

Check Bottom Mat Strip Spanning in The Horz. Direction:

Span c/c = 8.5', f_r (Max) = (0.54 + 0.39) = 0.93 ksf

$M_{pos} = 0.93 \times 8.5^2/10 = 6.72$ k'/'

$d_{eff} = (12 - 2 - 0.75 - \frac{0.75}{2}) = 8.88''$

Assume #6 Bars

$$A_s = \frac{6.72 \times 12}{24 \times 0.88 \times 8.88}$$

$= 0.43 \text{ in}^2$

use #5 @ 8" $A_s = 0.47$

Check Beam Spanning over Pipe:

w = 0.96 ksf

Width = 4.75'

w = (0.96 × 4.75) = 4.56 k/ft

self wt = (2.25 × 1 × 0.15) = 0.34

W_{total} = (4.56 + 0.34)

= 4.90 k/ft

$M_s = 4.90 \times 8.5^2/8 = 44.3$ k'/'

$d_{eff} = (27 - 2 - 0.5 - 0.5) = 24''$

$$A_s = \frac{44.3 \times 12}{24 \times 0.88 \times 24}$$

$= 1.05 \text{ in}^2$

use 3 #6, (3 × 0.44) = 1.32

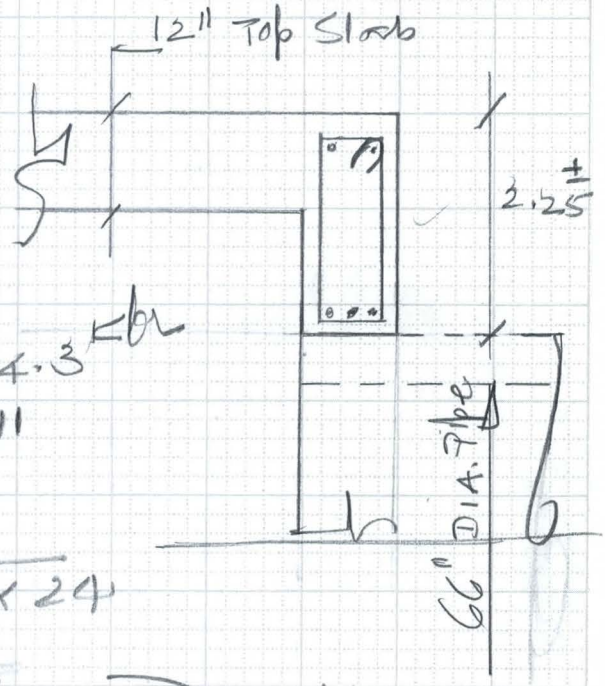

6910-153 4-90

FLOOD CONTROL DISTRICT OF MARICOPA COUNTY

PROJECT 43rd Av. Storm Dr PAGE ____ OF ____

DETAIL STA. (20+18)± COMPUTED KVH DATE 5/99

CHECKED BY ____ DATE ____

Shear Check:

$V = (4.9 \times \frac{8.5}{2}) = 20.83^K$

$b = 12$, $d_{eff} = 24''$ $\quad v = \frac{20.83}{12 \times 24} = 72.3$ psi

$v_c = 0.75\sqrt{3000} = 52$ psi

$v_s = (72.3 - 52) = 20.3$ psi

$S = \frac{(A_v f_s)}{(v - v_c)\, b_w} = \frac{(0.11 \times 2) \times 24}{20.3 \times 12} = 21.7''$

Check V at "d" from the face:

$V = (4.9 \times 3.75) = 18.4^K$

$v = \frac{18.4}{12 \times 24} = 63$ psi

Shear Reinf. can be ignored because of the following:

1) Depth of Beam varies from 2'-3" in the middle to a large depth at the supports.

2) UDL of 4.9 K/ft is actually distributed in 2 directions. Actual shear will be about half of 63 psi

∴ Ignore Shear Reinforcing.

FLOOD CONTROL DISTRICT OF MARICOPA COUNTY

PROJECT 43rd Ave Storm DR. PAGE ____ OF ____

DETAIL STA (20+18)± COMPUTED KNH DATE 5/99

CHECKED BY ____ DATE ____

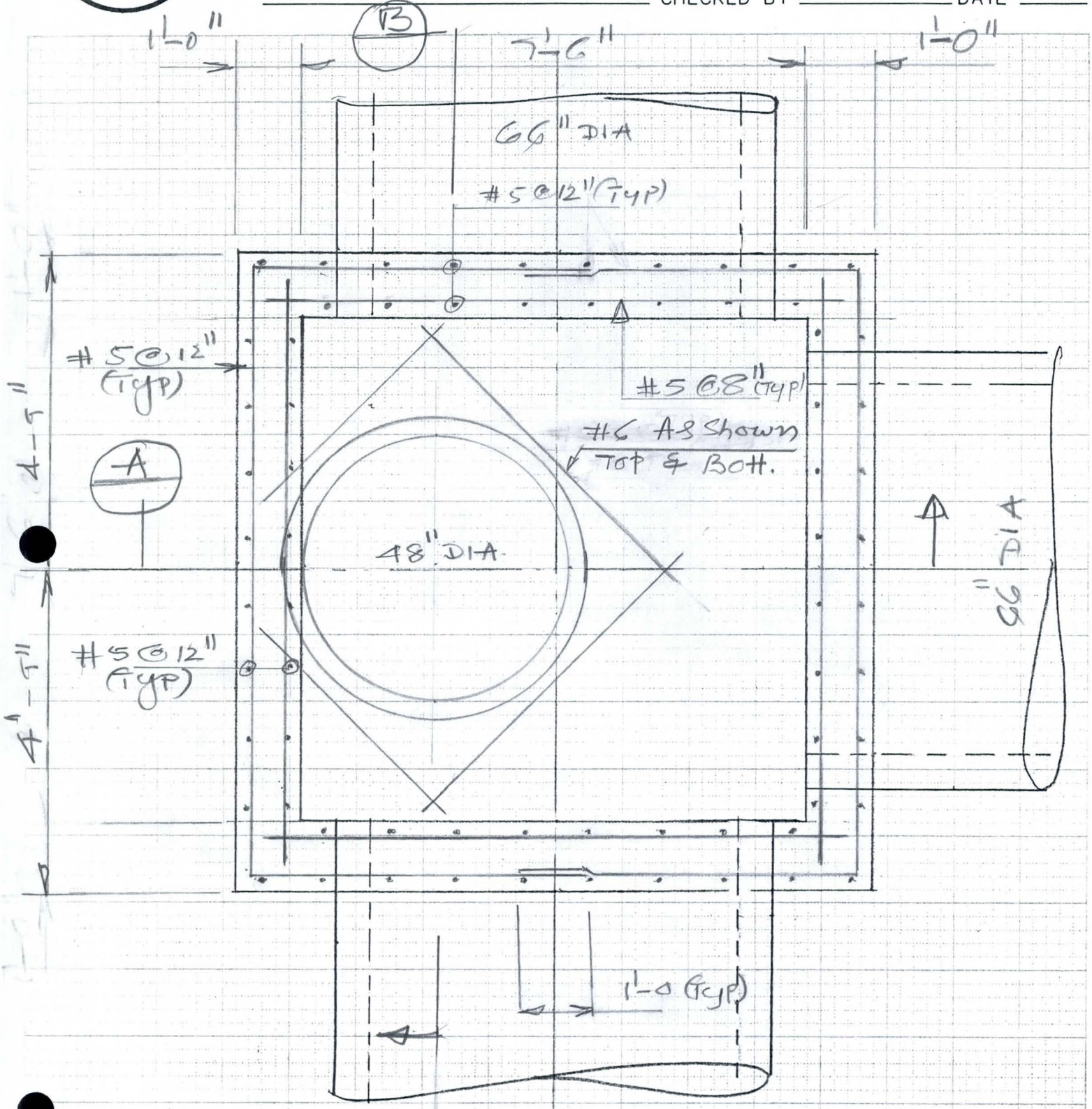

PLAN

Scale: 1/2" = 1'-0"

FLOOD CONTROL DISTRICT OF MARICOPA COUNTY

(F)

PROJECT 43rd Ave Storm Drain PAGE ____ OF ____

DETAIL STA. (20+18)± COMPUTED KVH DATE 5/99

CHECKED BY ____ DATE ____

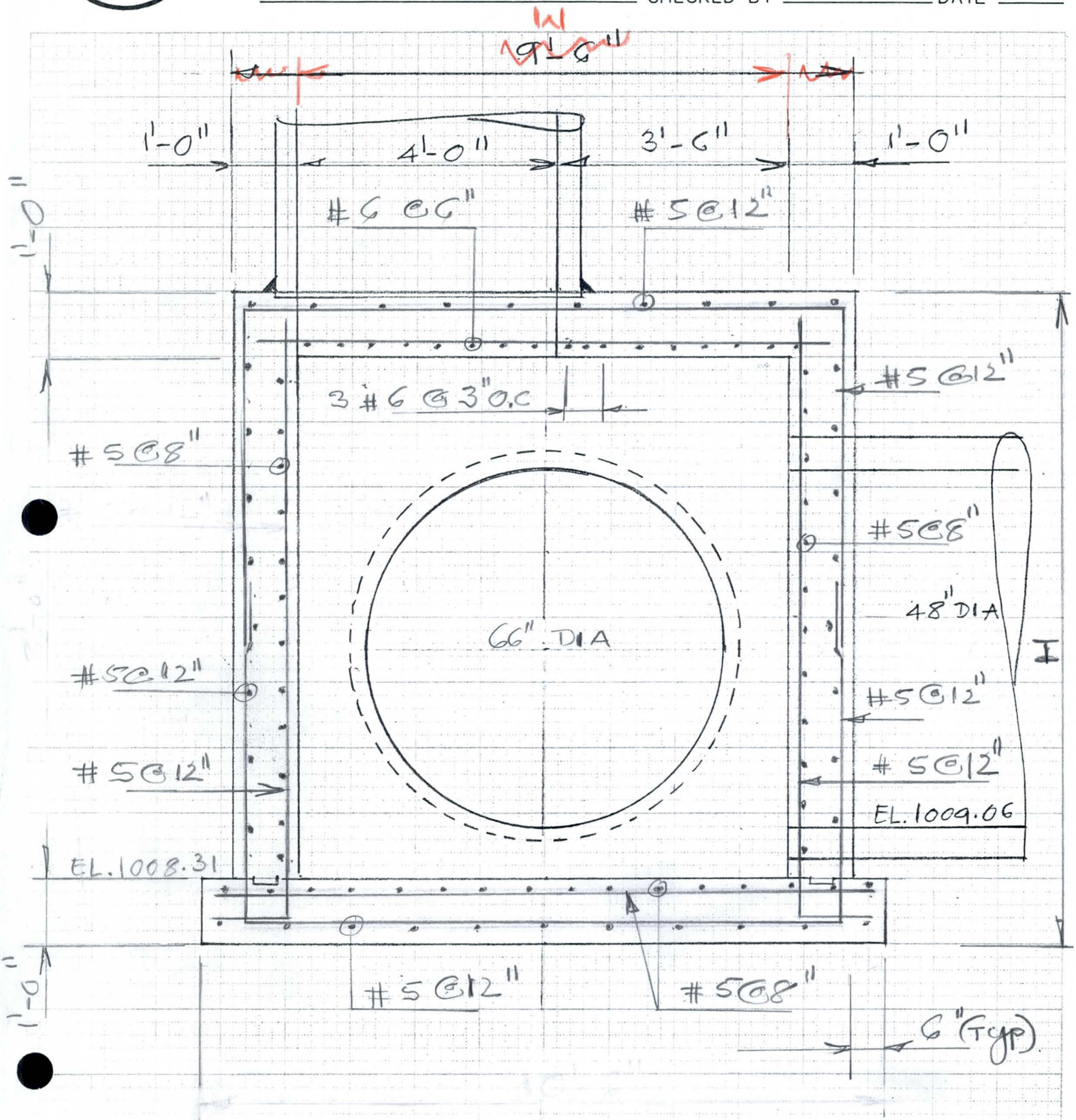

(A) SECTION

Scale: 1/2" = 1'-0"

(G)

FLOOD CONTROL DISTRICT OF MARICOPA COUNTY

PROJECT 43rd AVC Storm DR PAGE ____ OF ____

DETAIL STA. (20+18)± COMPUTED KVH DATE 5/99

CHECKED BY ____ DATE ____

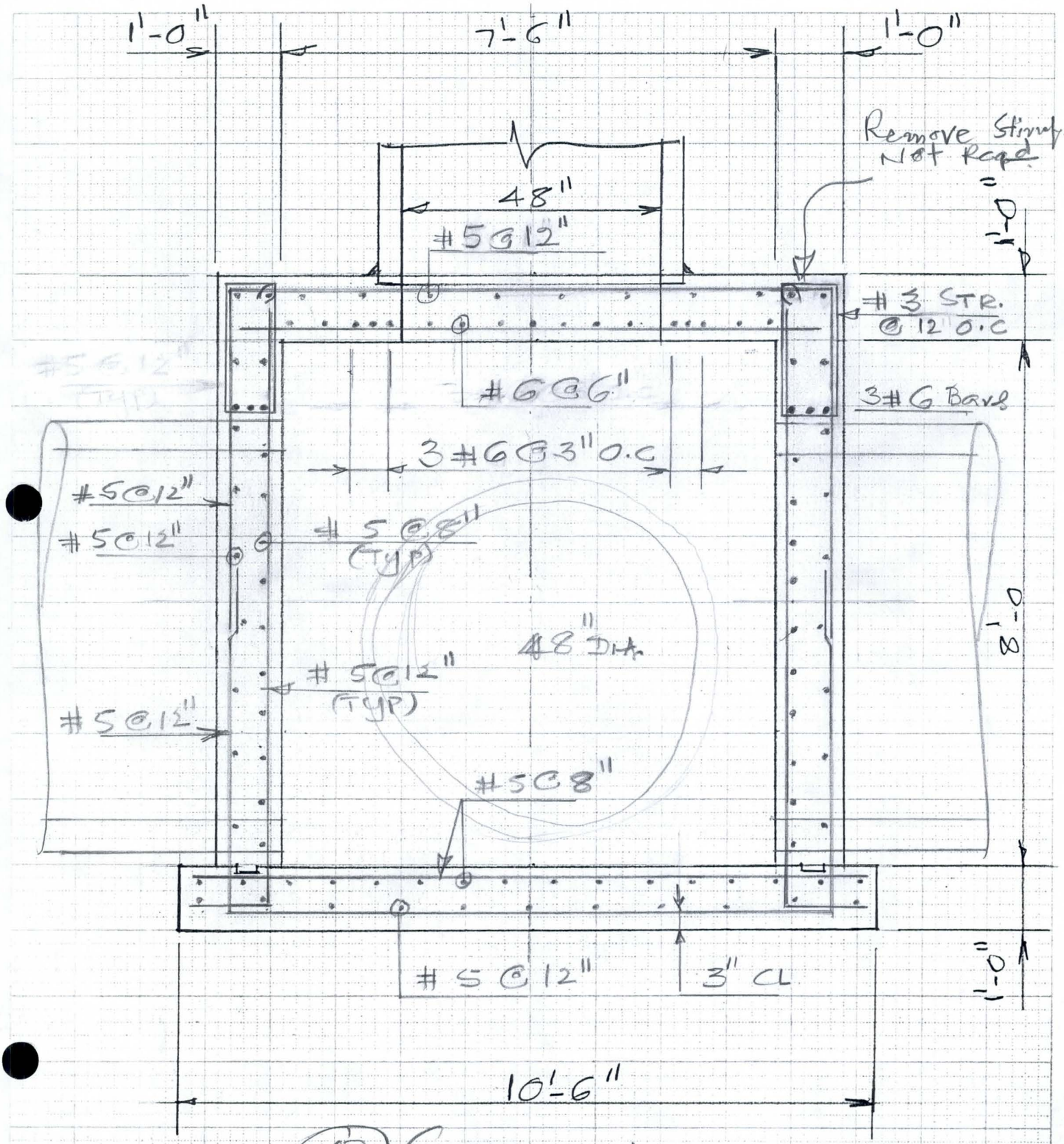

(B) SECTION

Scale: 1/2" = 1'-0"

FLOOD CONTROL DISTRICT OF MARICOPA COUNTY

PROJECT 43rd AV. Storm DR. PAGE 7 OF

DETAIL Junct. STR. COMPUTED KVH DATE 4/99

@ Sta. (23+90) CHECKED BY DATE

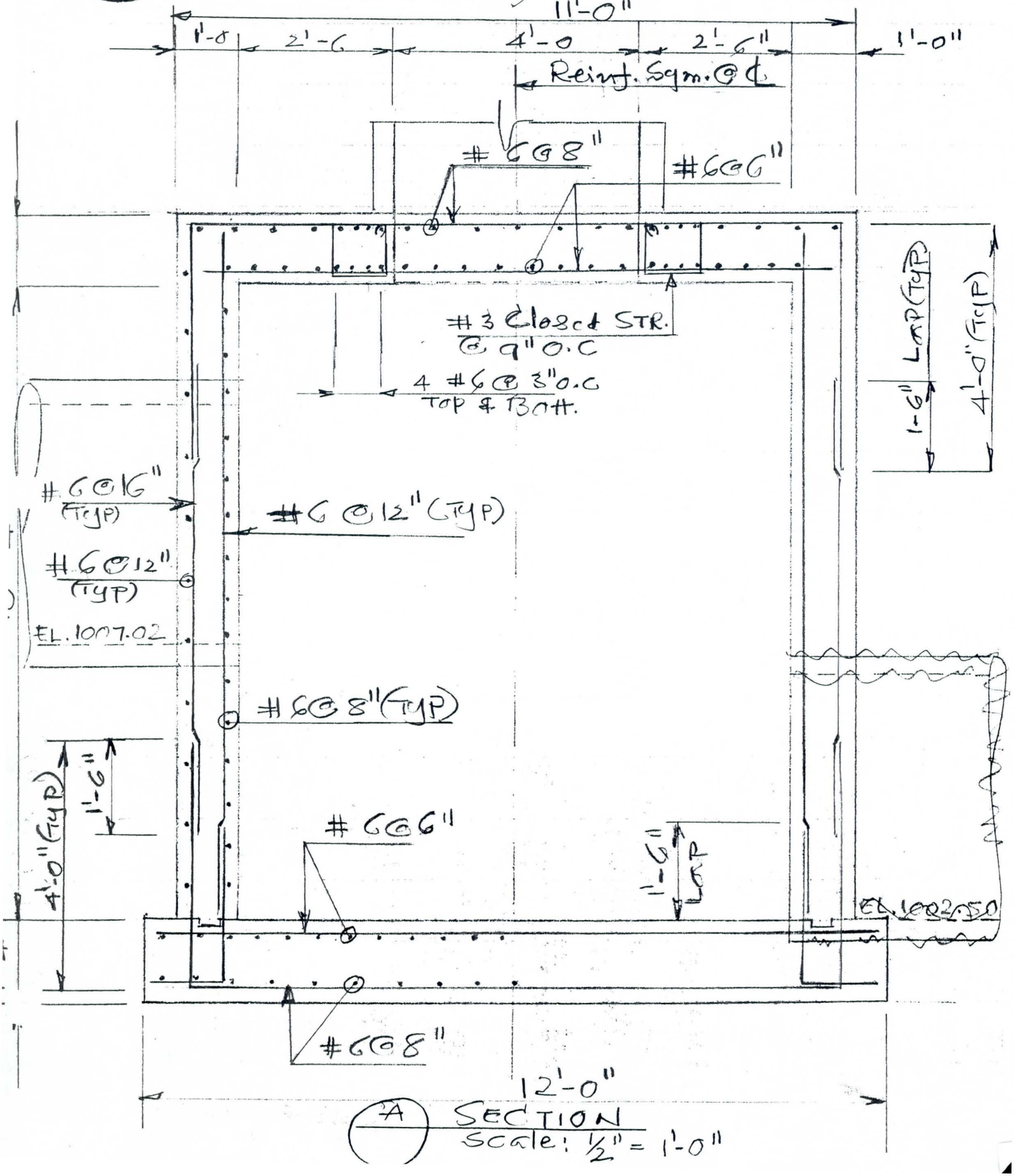

(A) SECTION
Scale: 1/2" = 1'-0"

FLOOD CONTROL DISTRICT OF MARICOPA COUNTY

PROJECT 43rd Ave. Storm Drain PAGE 6 OF

DETAIL Junct. Str. COMPUTED KVH DATE 4/99

@ Sta. (53+90) CHECKED BY DATE

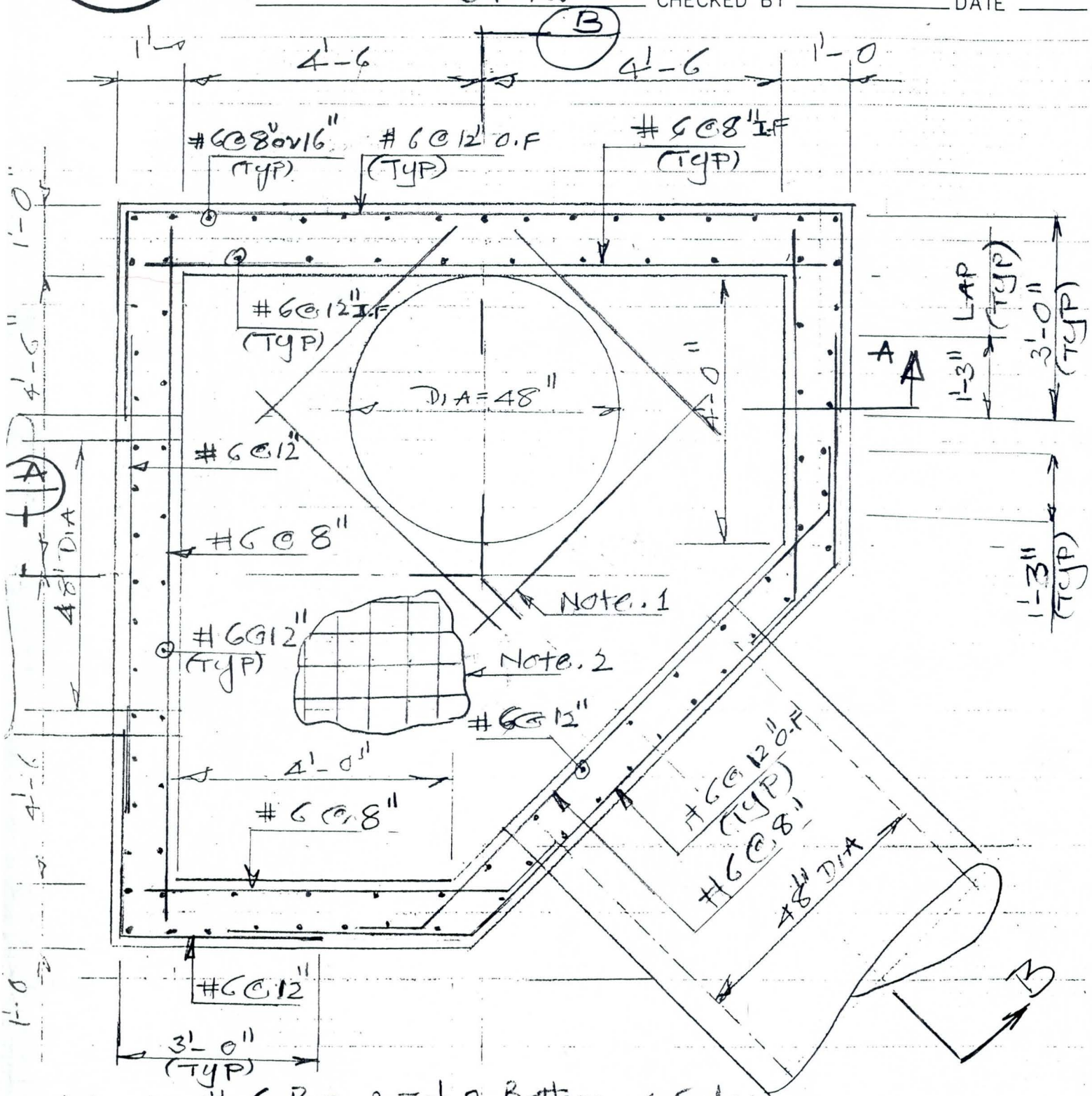

Note. 1: #6 Bars Top & Bottom, 4 Sides

Note. 2: #6@8" Top, #6@6" Bottom Both ways.

PLAN

Scale: 1/2" = 1'-0"

FLOOD CONTROL DISTRICT OF MARICOPA COUNTY

PROJECT 43rd Av. Storm Drain PAGE 8 OF

DETAIL Junction STR. COMPUTED KVH DATE 4/99

@ STA. (53+90) CHECKED BY DATE

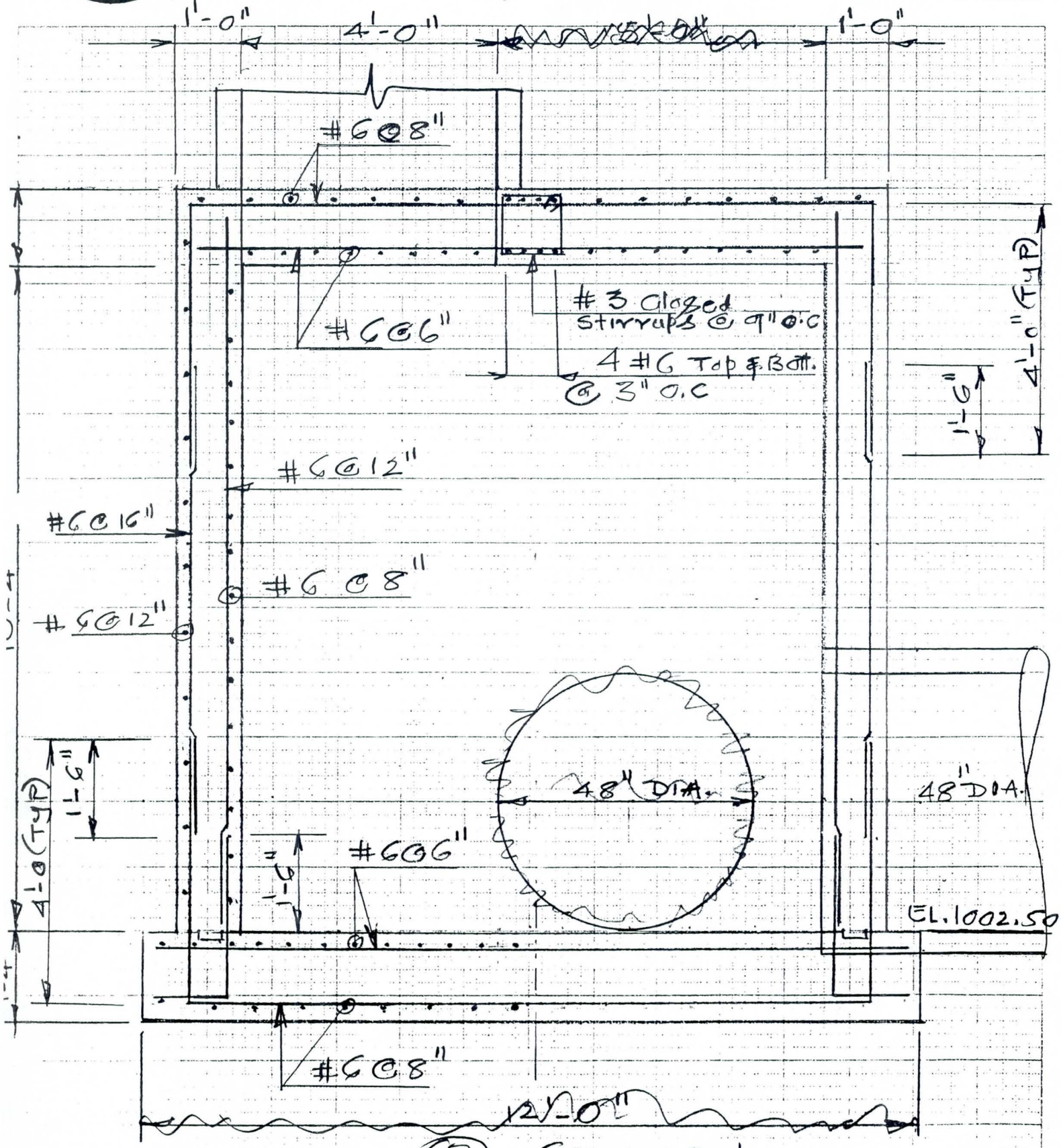

(B) SECTION

Scale: 1/2" = 1'-0"

FLOOD CONTROL DISTRICT OF MARICOPA COUNTY

PROJECT 43rd Ave. Storm DR. PAGE 1(A) OF ____

DETAIL Junct. STR. COMPUTED KVH DATE 4/99

@ STA. (53+90) CHECKED BY ____ DATE ____

Elevations:

EL. 1002.50
10.33
1012.83
Slab T — 1.17
1014.00

Rim EL — 1019.72
Top of Box — 1014.00
5.72'

Avg Fill ≈ 6'

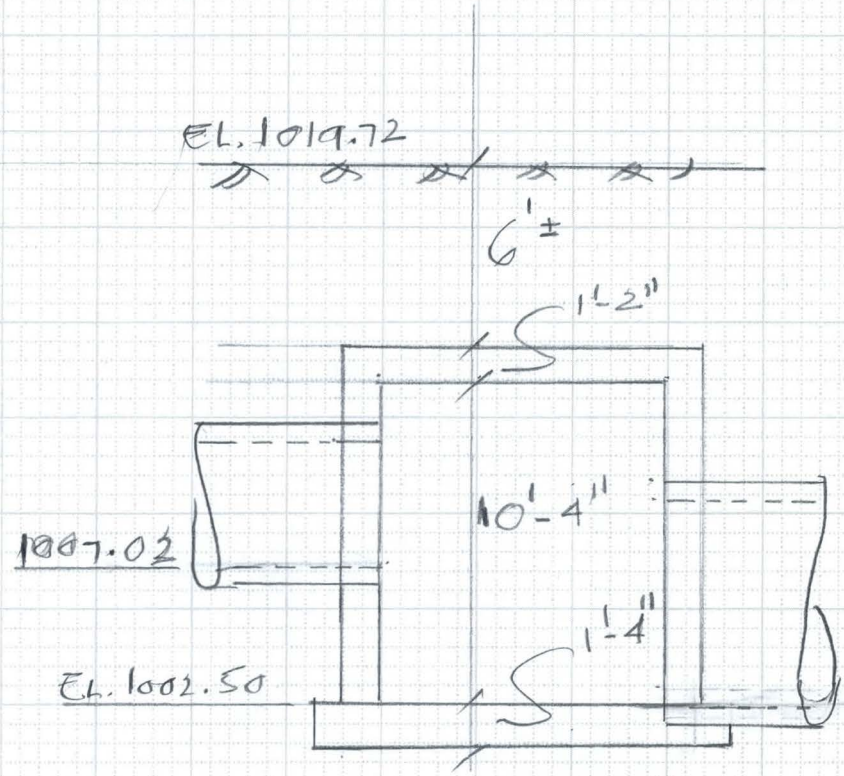

(A) Section

6910-153 4-90

FLOOD CONTROL DISTRICT OF MARICOPA COUNTY

PROJECT 43rd Av. St. Drain PAGE 1(B) OF

DETAIL Junct. Str. COMPUTED KVH DATE 4/99

@ Sta. (53+90) CHECKED BY DATE

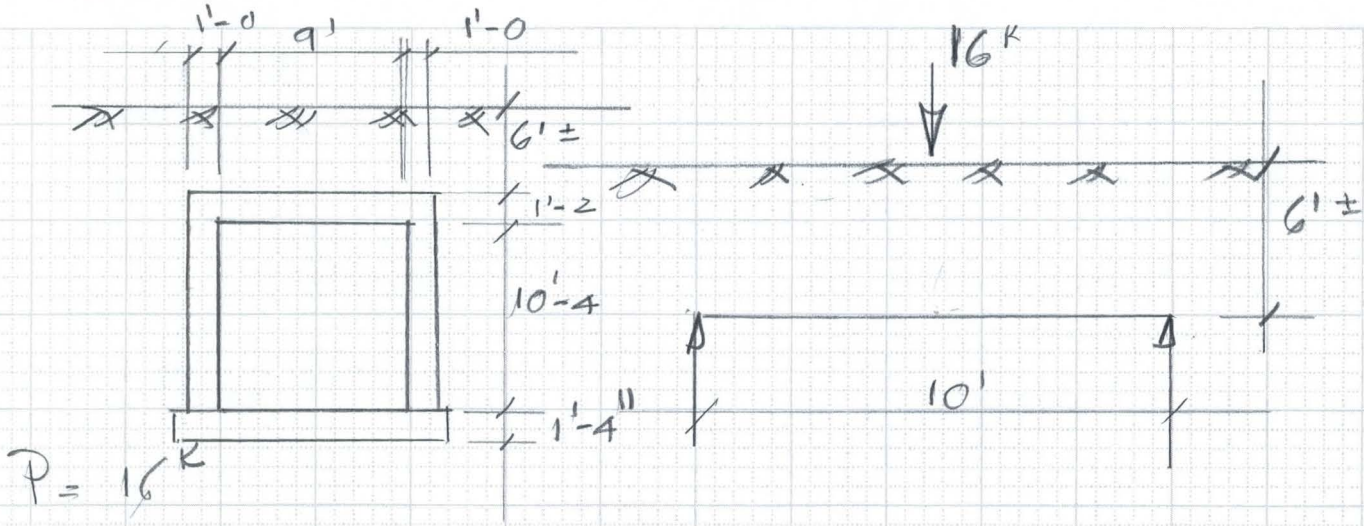

$P = 16^K$

$1.75 \times 6 = 10.5'$

$(16/10.5 \times 10.5) = 0.145$ KSF

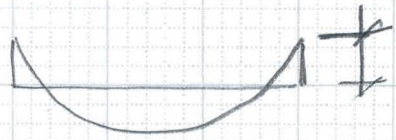

Soil. wt $= 6 \times 0.12 = 0.720$

Conc. $(1'-2'')\,0.15 = 0.176$

1.041 KSF

$wl^2/12 = (1.041 \times 10^2/12) = 8.7$ kft

$wl^2/16 = (1.041 \times 10^2/16) = 6.5$ kft

$d_{eff} = (14 - 2 - 0.75 - \frac{0.75}{2}) = 13.07''$

#6 Bar

$A_{s1} = \frac{8.7 \times 12}{24 \times 0.88 \times 13.07}$

$= 0.38\ in^2$

$\frac{wl^2}{8} = \frac{1.041 \times 10^2}{8} = 13.1$ kft

#6 @ 12"

$A_s = \frac{13.1 \times 12}{24 \times 0.88 \times 13.07}$

$= 0.57\ in^2$

#6 @ 8, $A_s = 0.66$

6910-153 4-90

Shear Check:

$V = (1.041 \times \frac{10}{2}) = 5.21^K$

$b = 12, \; d_{eff} = 13.0'' \qquad v = \frac{5.21}{12 \times 13} = 33.4 \text{ psi}$

$v_{(Allow)} = 0.85\sqrt{3000} = 52 \text{ psi} > 33.4$ OK

Check Strip Next to M.H. opening:

2' of shear transferred to Each 1' Strip.

$V = (1.041 \times \frac{10}{2})3 = 15.62^K$

$v = \frac{15.62}{12 \times 13} = 100.1 \text{ psi}$

$v_c = 52 \text{ psi}$

$v_s = (100.1 - 52) = 48.1 \text{ psi}$

$S = \frac{A_v f_s}{(v - v_c) b_w} = \frac{0.4 \times 24}{48.1 \times 12} = 16.5''$

Using #4 Stirrups,

$A_v = 0.40$

Using #3, $A_v = 0.22$, $S = \frac{0.22 \times 24}{48.1 \times 12} = 9.1''$

Use #3 Stirrups @ 9" Spacing

Wall Check:

Using At-Rest pressures:

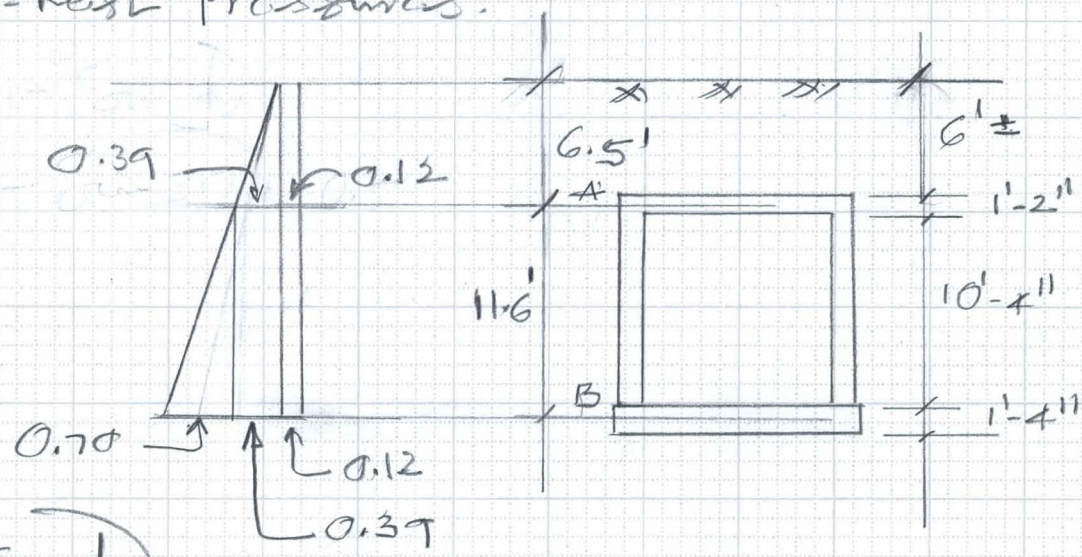

$K_{AR} = (1 - \sin\phi)$

$= (1 - \sin 30) = 0.5$

$P_{r1}: (0.12 \times 0.5 \times 6.5) = 0.39^{ksf}$

$(0.12 \times 0.5 \times 18.1) = 1.09$

$P_r(\text{surch}) = (0.12 \times 0.5 \times 2) = 0.12$

$P_1 = (0.39 \times 11.6) = 4.52^{K}$

$P_2 = (\frac{0.70}{2} \times 11.6) = 4.06$

$P_{sc} = (0.12 \times 11.6) = 1.40$

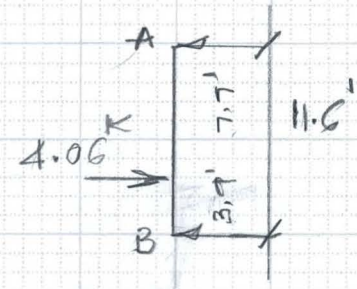

$M_1 = (4.52 + 1.4)\,11.6/4 = 17.2^{K'}$

$R_A = 4.06 \times 3.9/11.6 = 1.37^{K}$

$R_B = 4.06 \times 7.7/11.6 = 2.69$

$M_2 = (2.69 \times 3.9) = 10.5^{K'}$

FLOOD CONTROL DISTRICT OF MARICOPA COUNTY

PROJECT 43rd Av. St. DR. PAGE 4 OF ___

DETAIL Junct. Str. COMPUTED KVH DATE 4/99

@ STA. 53+90 CHECKED BY ___ DATE ___

M_s (Total) = (17.2 + 10.5) = 27.7 kft

Using 50% for Pos & Neg. Moments.

$M_{Pos} = M_{Neg} = 27.7/2 = 13.9$ kft

$d_{eff} = (12 - 2 - 0.75 - 0.75/2) = 8.88''$

$$A_s = \frac{13.9 \times 12}{24 \times 0.88 \times 8.88}$$

$= 0.88 \text{ in}^2$

Check Using Actual Uniform & Triang. Loads.

1) UDL = (0.12 + 0.39) = 0.51 ksf

$M_s = 0.51 \times 11.6^2/8 = 8.6$

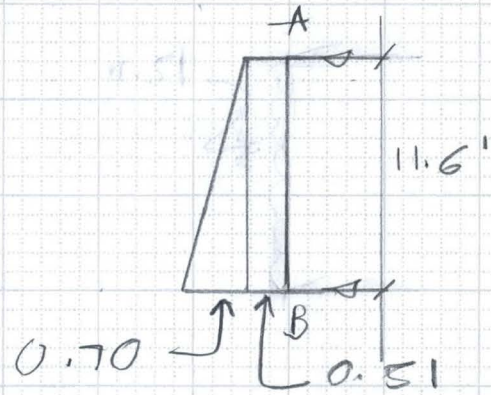

2) Triangular:

$M_s = 0.1283\, WL$

$W = \frac{0.70}{2} \times 11.6 = 4.06'$

$M_s = 0.1283 \times 4.06 \times 11.6$

$= 6.04$

M_s (total) = (8.6 + 6.04) = 14.64 kft

Taking $\frac{2}{3}(14.64) = 9.76 = M(Neg)$

$\frac{1}{3}(14.64) = 4.88 = M(Pos)$

$A_{s_1} = \frac{9.76 \times 12}{24 \times 0.88 \times 8.88} = 0.62$, #6 @ 8''

$A_{s_2} = \frac{4.88}{9.76}(0.62) = 0.31$ #6 @ 12''

6910-153 4-90

Check wall Spanning Horizontally:

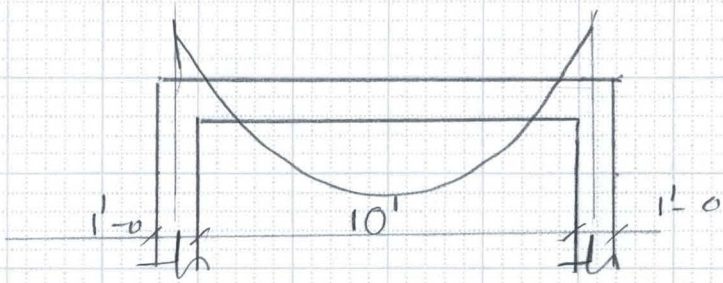

Plan

Check the Bottom most 1' Strip:

$w = (0.70 + 0.39 + 0.12) = 1.21$ KSF

$M_S = 1.21 \times 11^2/8 = 18.3$ Kft

$M_{POS} = \frac{2}{3}(18.3) = 12.2$ Kft

$M_{NEG} = \frac{1}{3}(18.3) = 6.1$

$d_{eff} = \left(12 - 2 - \frac{0.75}{2}\right) = 9.63''$ $\quad A_{s_1} = \frac{12.2 \times 12}{24 \times 0.88 \times 9.63}$

$= 0.72 \text{ in}^2$

$A_s' = \left(\frac{18.3 \times 12}{24 \times 0.88 \times 9.63}\right) = 1.08$

#6 @ 8", = 0.66 — Inside Horz.

#5 @ 12 = 0.44 — Outside Horz.

1.10

FLOOD CONTROL DISTRICT OF MARICOPA COUNTY

PROJECT 43rd Ave. Storm Drain PAGE 6 OF ____

DETAIL Junct. Str. COMPUTED KVH DATE 4/99

@ Sta. (53+90) CHECKED BY ____ DATE ____

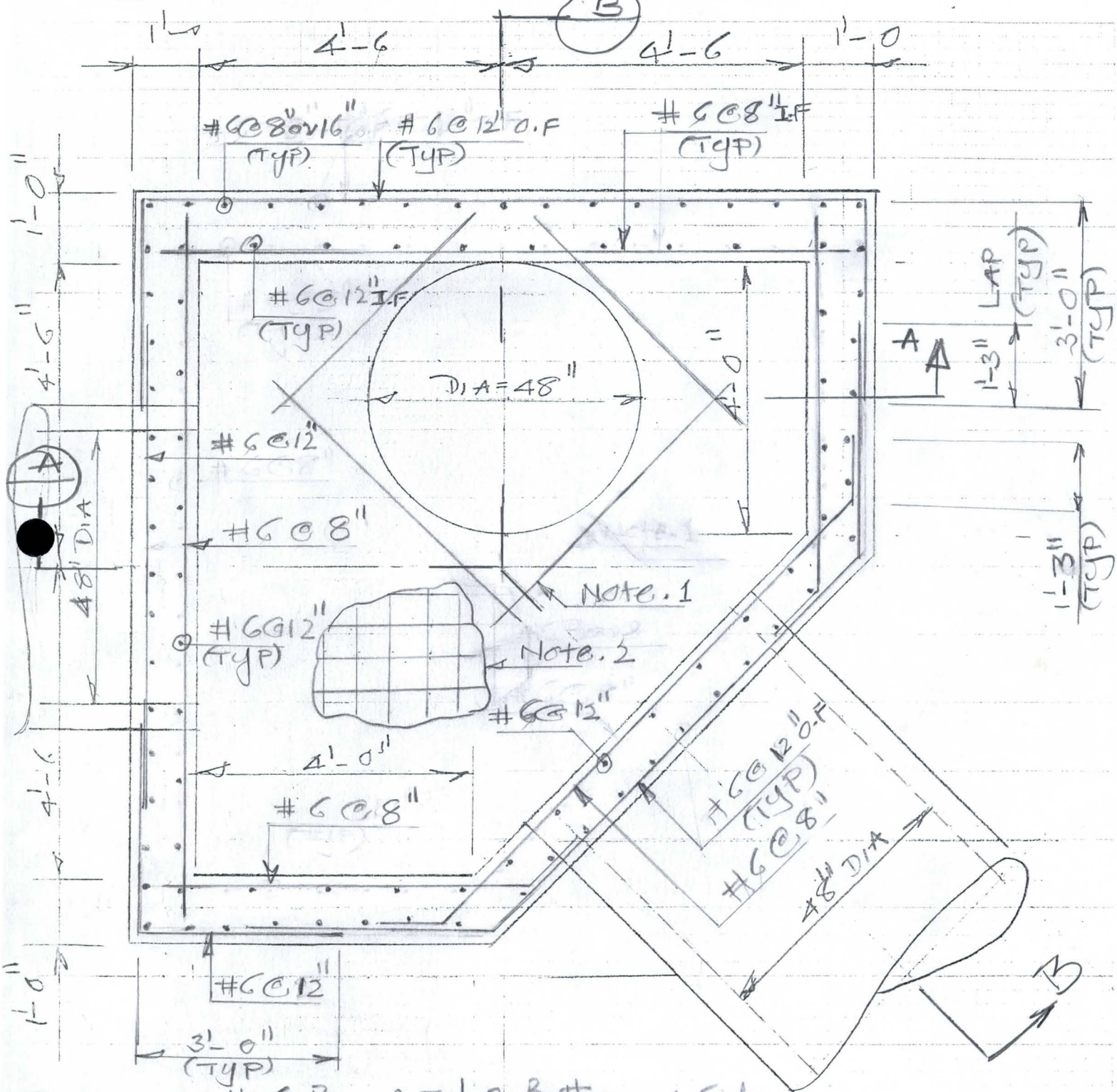

Note. 1: #6 Bars Top & Bottom, 4 Sides

Note. 2: #6@8" Top, #6@6" Bottom Both ways.

PLAN

Scale: 1/2" = 1'-0"

FLOOD CONTROL DISTRICT OF MARICOPA COUNTY

PROJECT 43rd AV. Storm DR. PAGE 7 OF

DETAIL Junct. STR. COMPUTED KVH DATE 4/99

@ Sta. (53+90) CHECKED BY DATE

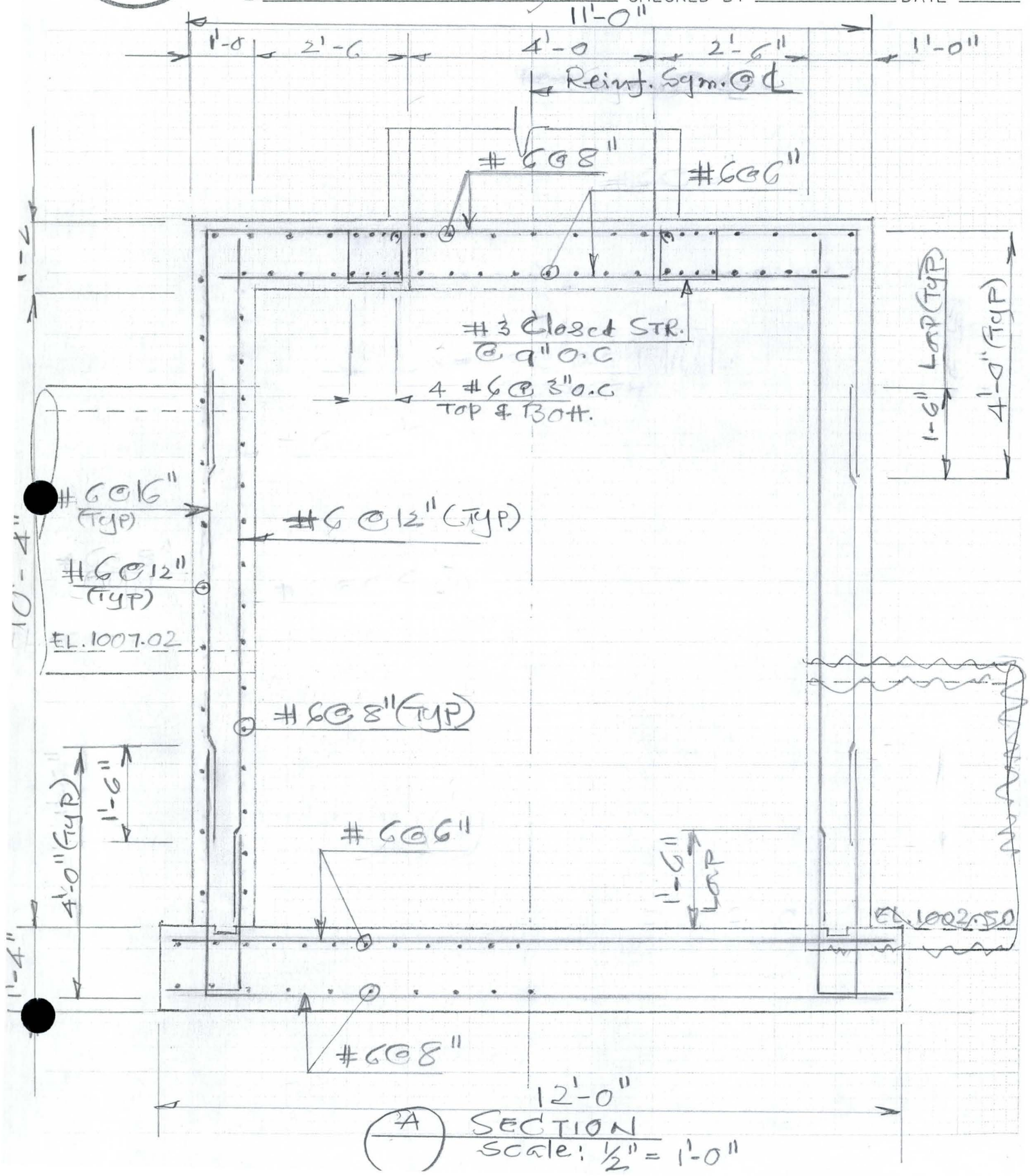

(A) SECTION
Scale: 1/2" = 1'-0"

FLOOD CONTROL DISTRICT OF MARICOPA COUNTY

PROJECT 43rd Av. Storm Drain PAGE 8 OF

DETAIL Junction STR. COMPUTED KVH DATE 4/99

@ STA. (53+90) CHECKED BY DATE

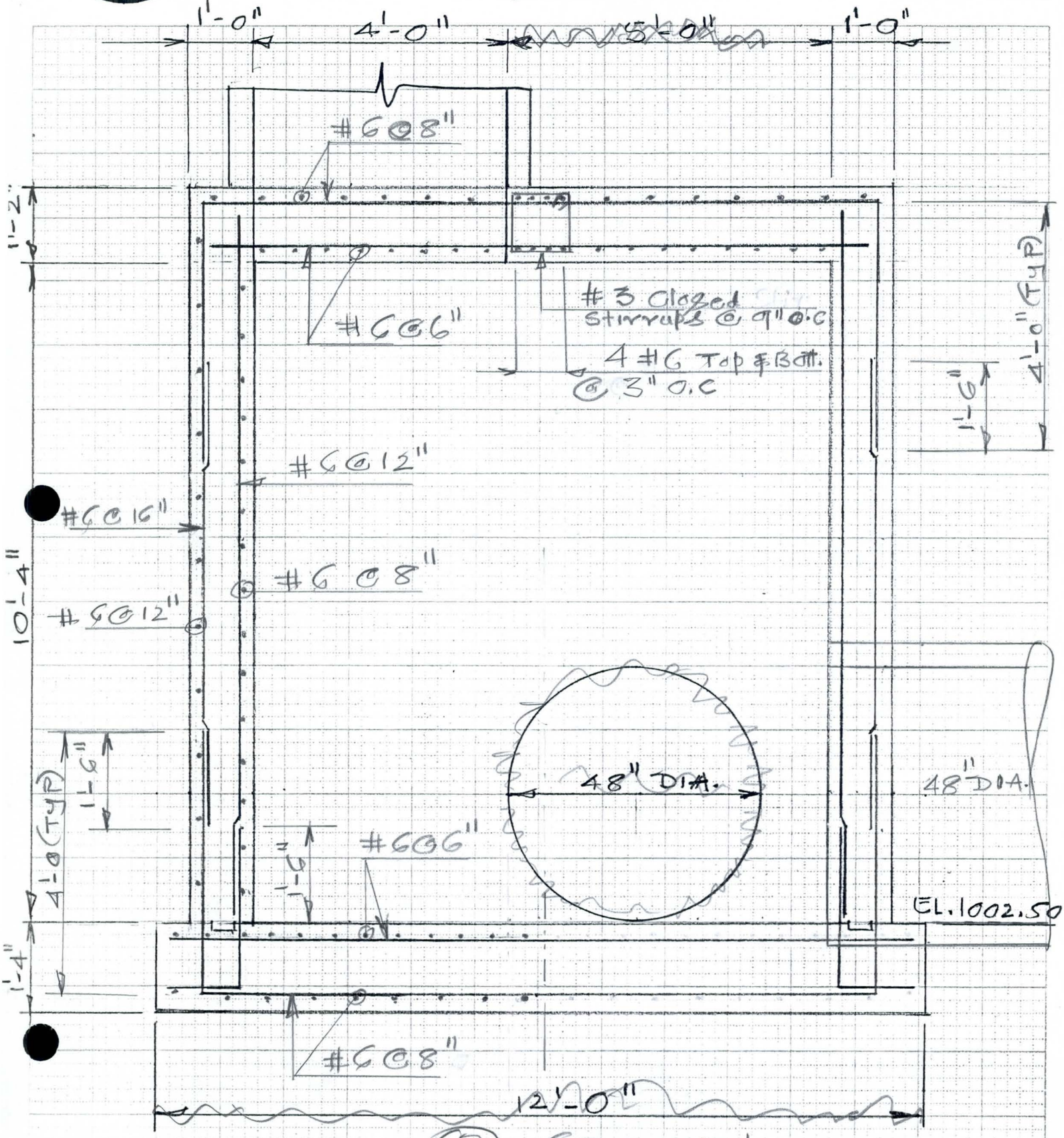

(B) SECTION
Scale: 1/2" = 1'-0"

FLOOD CONTROL DISTRICT OF MARICOPA COUNTY

PROJECT 43rd Ave Basin PAGE 1 OF 7

DETAIL Retaining wall COMPUTED KVH DATE 1/02

CHECKED BY _____ DATE _____

43rd Ave. Basin
Wall Ht = 4'

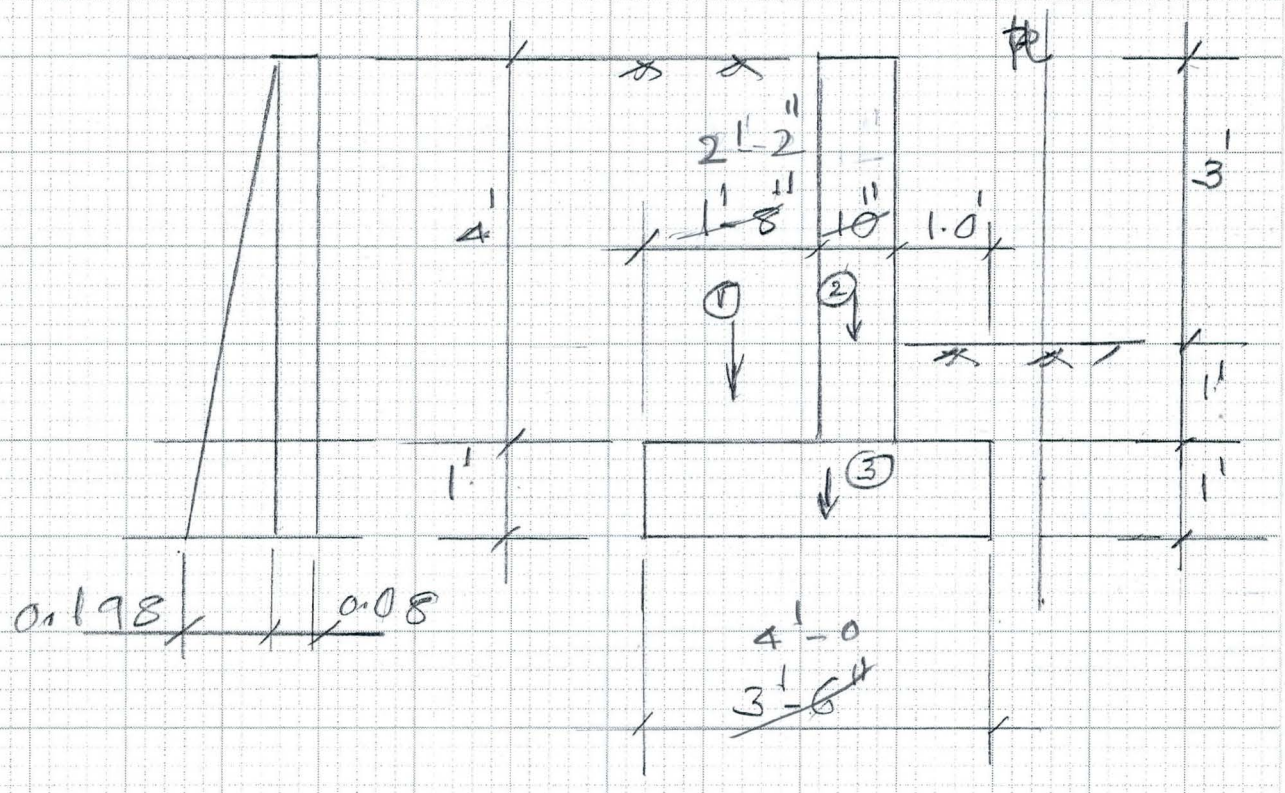

E. pr : $0.12 \times 0.33 \times 5 = 0.198^{Kg}$

Sur. Ch = $0.12 \times 0.33 \times 2 = 0.08^{Kg}$

$P_{soil} = \frac{0.198}{2} \times 5 = 0.5^{K}$

$P_{s.ch.} = 0.08 \times 5 = 0.4^{K}$

$M_{OT} = (0.5 \times \frac{5}{3}) + (0.4 \times \frac{5}{2}) = (0.83 + 1.0) = 1.83^{Kft}$

6910-153 4-90

FLOOD CONTROL DISTRICT OF MARICOPA COUNTY

PROJECT 43rd Av. Bafin PAGE 2 OF 7

DETAIL Retaining wall COMPUTED KVH DATE 2/02

CHECKED BY _____ DATE _____

Stabilizing forces:

W_1 (Soil) $= \cancel{1.67}\ 2.0 \times 4.0 \times 0.12 = \cancel{0.80}\ 0.96^K$

W_2 (wall) $= \frac{\cancel{10}\ 12}{12} \times 4 \times 0.15 = \cancel{0.50}\ 0.6$

W_3 (ftg) $= \cancel{3.5}\ 4 \times 1.0 \times 0.15 = \cancel{0.53}\ 0.6$

$W_{s.ch} = (\cancel{1.67}\ 2.0 \times 2 \times 0.12) = \cancel{0.40}\ 0.48$

$\cancel{2.23}\ 2.64^K$

Mom. (Stabilizing)

$= (\cancel{0.8}\ 0.96 \times \cancel{2.84}\ 3.0) + (\cancel{0.5}\ 0.6 \times \cancel{1.42}\ 1.5) + (\cancel{0.53}\ 0.6 \times \cancel{2.5}\ 4.0) + (\cancel{0.4}\ 0.48 \times \cancel{2.84}\ 3.0)$

$= (\cancel{2.27}\ 2.88 + \cancel{0.71}\ 0.9 + \cancel{0.73}\ 1.2 + \cancel{1.14}\ 1.44) = \cancel{5.05}\ 6.42\ K\text{-}ft$

$F.S = \frac{\cancel{5.05}\ 6.42}{1.83} = \cancel{2.7}\ 3.5 > 2.0$ ok

Sliding

$P_H = (0.5 + 0.4) = 0.9^K$

Frictional force $= \mu W = 0.4 \times \cancel{2.23}\ 2.64 = \cancel{0.89}\ 1.06$

$FS = \cancel{0.89}\ 1.06 / 0.9 = \cancel{1.0}\ 1.2 < 1.5$

$\therefore$ Need Key

Use $12'' \times 6''$ Key

6910-153 4-90

FLOOD CONTROL DISTRICT OF MARICOPA COUNTY

PROJECT 43rd Ave Basin PAGE 3 OF 7

DETAIL Retaining wall COMPUTED Krit DATE 1/02

CHECKED BY _____ DATE _____

Wall Ht = 4'

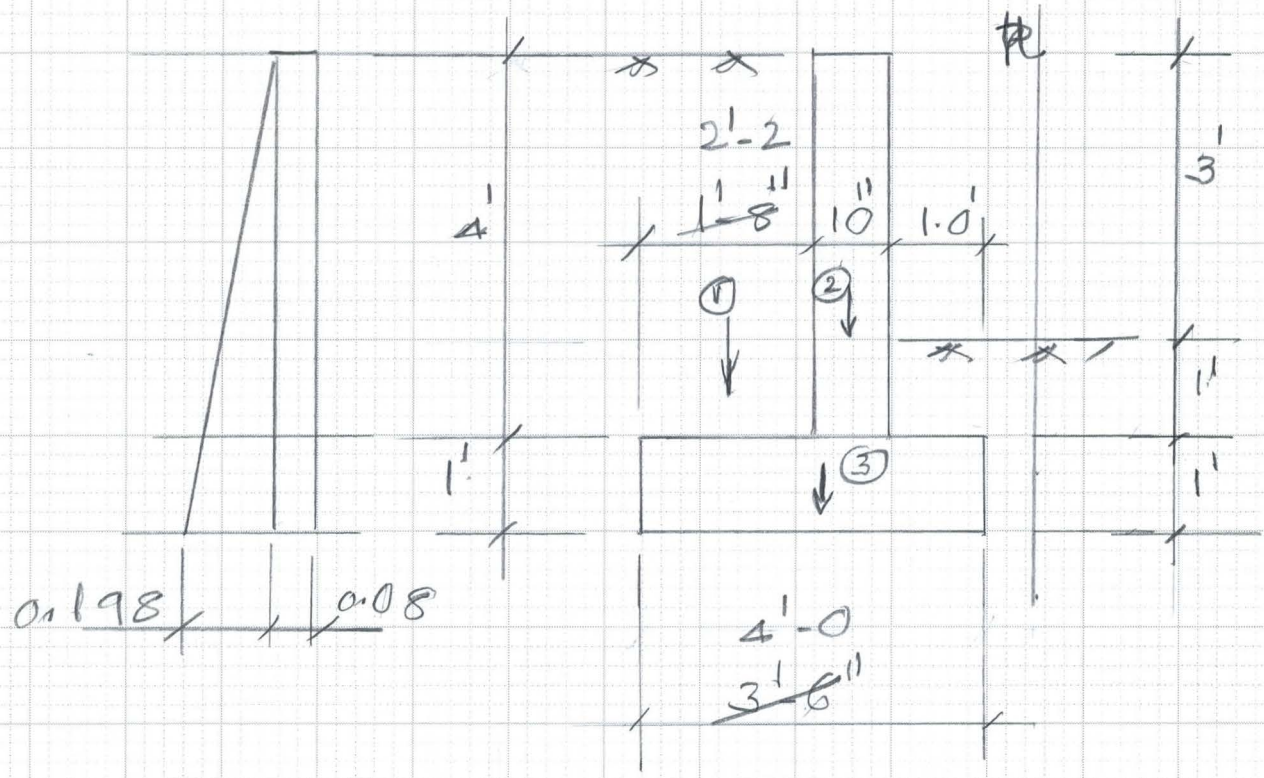

E. for : $0.12 \times 0.33 \times 5 = 0.198^{Kg}$

Sur. Ch = $0.12 \times 0.33 \times 2 = 0.08^{Kg}$

P soil = $\frac{0.198}{2} \times 5 = 0.5^{K}$

P s. Ch. = $0.08 \times 5 = 0.4^{K}$

$M_{OT} = \left(0.5 \times \frac{5}{3}\right) + \left(0.4 \times \frac{5}{2}\right) = (0.83 + 1.0) = 1.83^{K\phi}$

6910-153 4-90

FLOOD CONTROL DISTRICT OF MARICOPA COUNTY

PROJECT 43rd Av. Basin PAGE 4 OF 7

DETAIL Retaining Wall COMPUTED KVH DATE 2/02

CHECKED BY _____ DATE _____

Try 4' ftg, ~~12"~~ 10" wall & 1'-0" ftg

Stb. forces:

W_1 (Soil) = ~~0.10~~ 2.17 × 4 × 0.12	= 0.96 K	1.04 K
W_2 (Wall) = ~~1.0~~ 0.833 × 4 × 0.15	= 0.60	0.50
W_3 (ftg) = (4 × 1.0 × 0.15)	= 0.60	0.60
W (S.Cb) = ~~2~~ 2.17 × 2 × 0.12	= 0.48	0.52
	2.64 K	2.66 K

Mom (Stb.)

$= (0.96 \times 3.0) + (0.6 \times 1.5) + (0.6 \times 2) + (0.48 \times 3.0)$

$= (2.88 + 0.9 + 1.2 + 1.44) = 6.42$

$F.S = \frac{6.42}{1.83} = 3.5 > 2.0$ OK

Sliding:

$P_H = (0.5 + 0.4) = 0.9^K$

Frictional force $= 0.4 \times 2.64 = 1.06^K$

$F.S = 1.06/0.9 = 1.18 < 1.5$

∴ Provide 12" × 6" Key for Sliding

6910-153 4-90

FLOOD CONTROL DISTRICT OF MARICOPA COUNTY

PROJECT 43rd Ave. Basin PAGE 5 OF 7

DETAIL Retaining wall COMPUTED KVH DATE 2/02

CHECKED BY _____ DATE _____

Check wall Steel

Wall Ht = 4', pr (Soil) = (0.12 x 0.33 x 4) = 0.158 KSF

pr (S. Ch) = 0.08

$P_1 = \left(\frac{0.158}{2} \times 4\right) = 0.32^K$ $P_2 = (0.08 \times 4) = 0.32^K$

$M_{wall} = \left(0.32 \times \frac{4}{3}\right) + \left(0.32 \times \frac{4}{2}\right) = (0.43 + 0.64)$

$= 1.1^{KH}$

$d_{eff} = (10 - 2 - 0.5) = 7.5''$

$A_s = \left(\frac{1.1 \times 12}{24 \times 0.88 \times 7.5}\right)$

$= 0.1 \text{ in}^2$ Min Steel

Min Steel = 0.003 x 10 (wall t.) x 12

$= 0.36 \text{ in}^2$

#4 @ 12" Each face

Check Soil pr:

$M_{SPB} = 6.42$, $M_{O.T} = 1.83$, $W = 2.64^K$

$X_R = (6.42 - 1.83)/2.64 = 1.74'$

$e = \left(\frac{4}{2} - 1.74\right) = 0.26'$ $\frac{b}{6} = \frac{4}{6} = 0.67'$

$e < \frac{b}{6}$ ∴ ok

$pr = \frac{2.64}{4}\left(1 \pm \frac{6 \times 0.26}{4}\right)$

$= 0.66(1 \pm 0.39)$

pr (max) = 0.92 KSF, pr (min) = 0.40

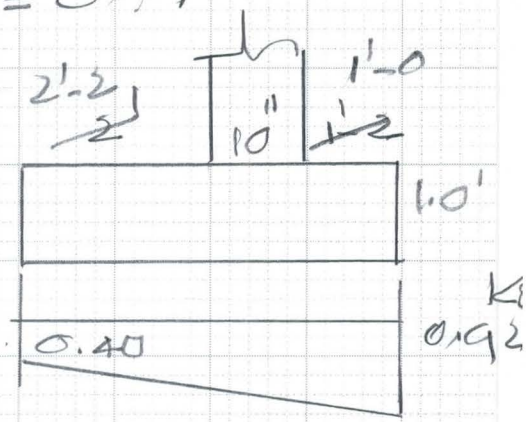

FLOOD CONTROL DISTRICT OF MARICOPA COUNTY

PROJECT 43rd Ave Basin PAGE 6 OF 7

DETAIL Retaining Wall COMPUTED KVH DATE 2/02

CHECKED BY _____ DATE _____

Heel Design:

$M = (2 \times 4 \times 0.12)1.0 + (2 \times 1 \times 0.15)1.0 - (0.4 \times 2 \times 1)$

$= (0.96 + 0.3 - 0.8) = 0.46$ k-ft Min Steel

Toe Design

$M = (0.92 \times 1.17 \times \frac{1.17}{2}) - (1.17 \times 1 \times 0.15)\frac{1.17}{2}$

$= (0.63 - 0.1) = 0.53$

$d_{eff} = (12 - 3 - 0.5) = 8.5''$ $A_s = \frac{0.53 \times 12}{24 \times 0.88 \times 8.5}$

$= 0.04 \text{ in}^2$

#4 @ 12" Min Steel.

6910-153 4-90

FLOOD CONTROL DISTRICT OF MARICOPA COUNTY

PROJECT 43rd Av. Basin PAGE 7 OF 7

DETAIL Retaining Wall COMPUTED KVH DATE 5/02

CHECKED BY _____ DATE _____

- Concrete f'_c = 3000 psi
- Reinf. Steel. Grade 60 f_s = 24000 psi
- All reinf. steel shall have 2" clear cover unless otherwise noted.

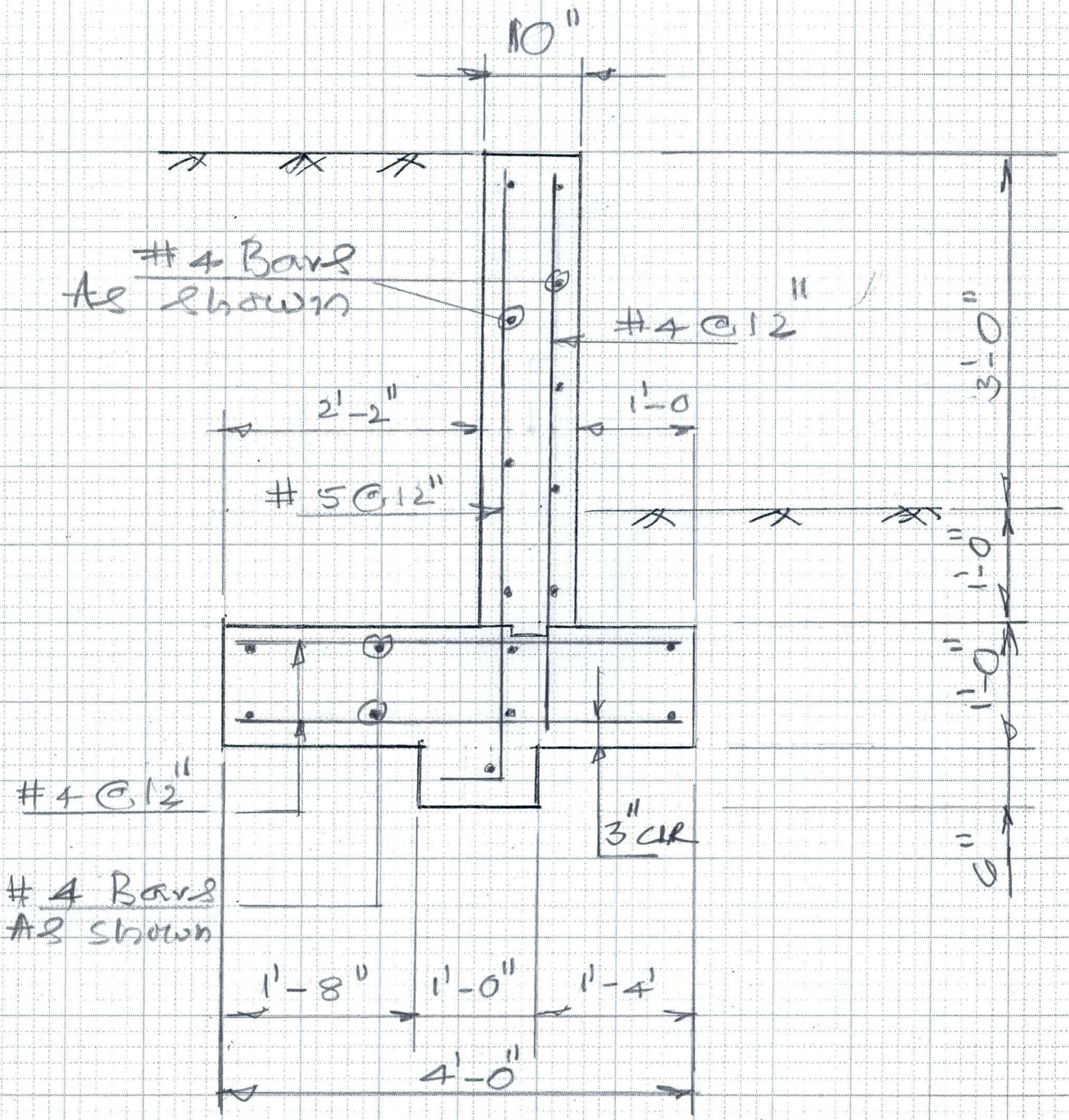

6910-153 4-90

FLOOD CONTROL DISTRICT OF MARICOPA COUNTY

PROJECT 43rd Ave. PAGE ___ OF ___

DETAIL Detention Basin Phase 3 COMPUTED KVH DATE 8/01

CHECKED BY ___ DATE ___

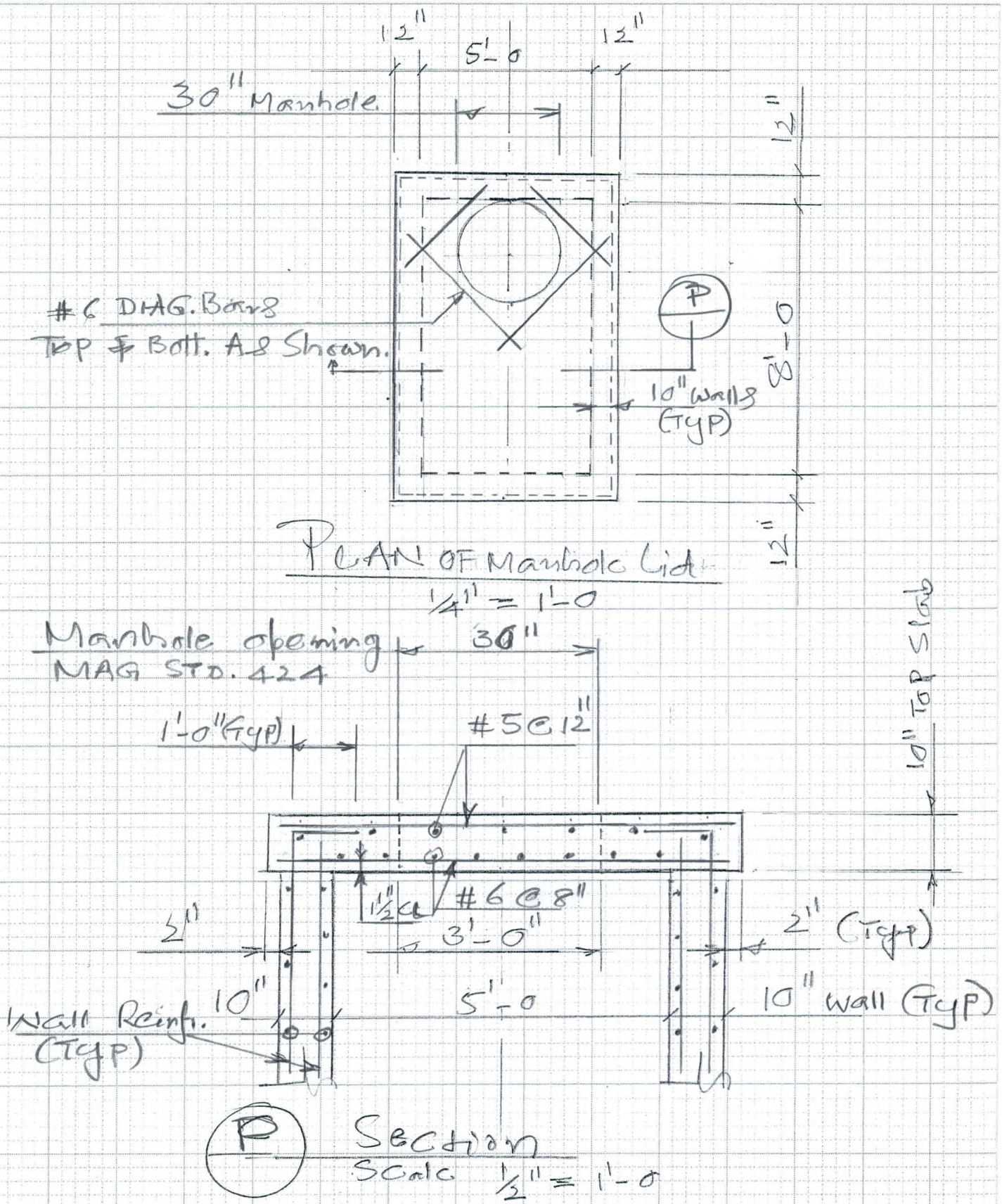

6910-153 4-90

FLOOD CONTROL DISTRICT OF MARICOPA COUNTY

PROJECT 43rd Ave. PAGE ___ OF ___

DETAIL Detention Basin Phase 3 COMPUTED KVH DATE 8/01

CHECKED BY ___ DATE ___

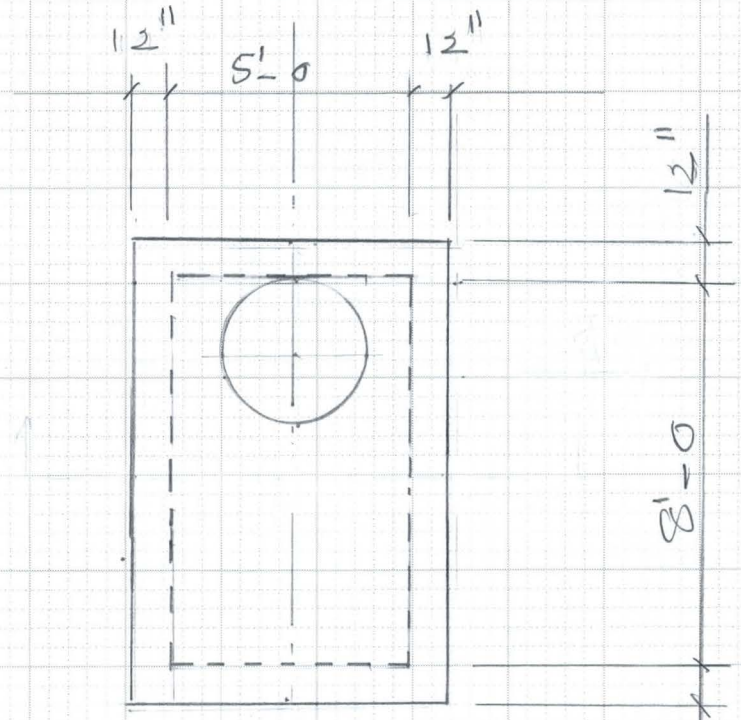

PLAN OF Manhole Lid
1/4" = 1'-0

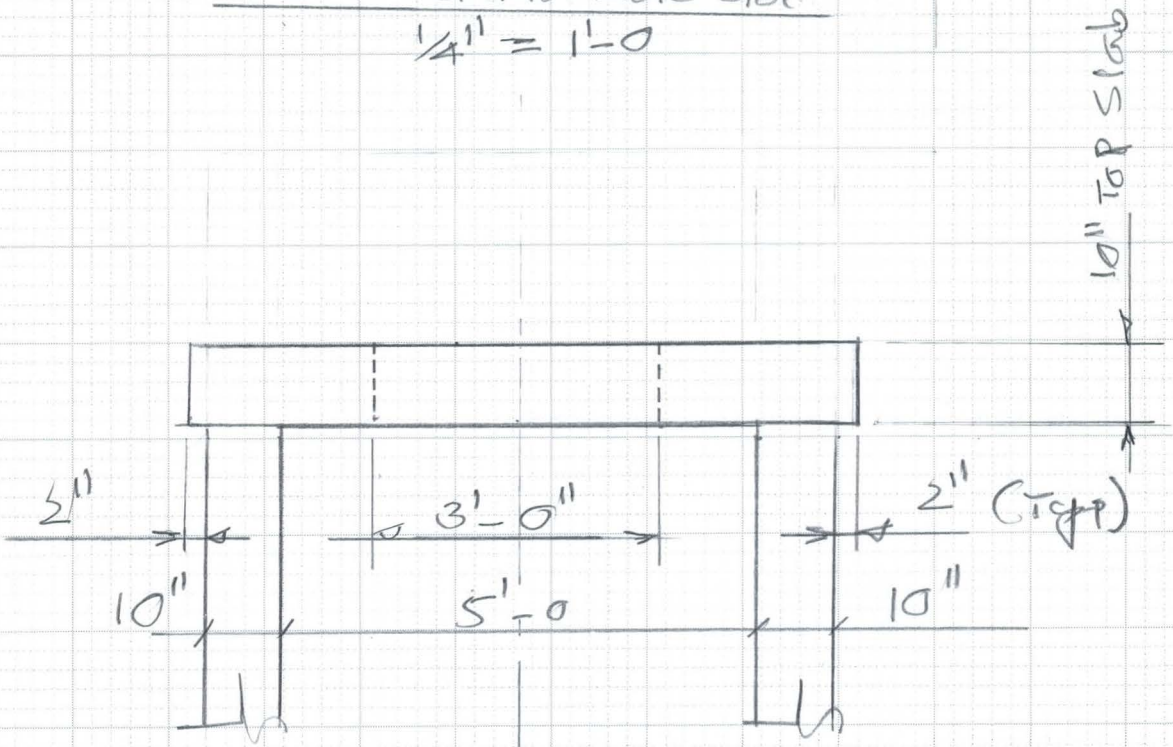

℄ Section
Scale 1/2" = 1'-0

6910-153 4-90

FLOOD CONTROL DISTRICT OF MARICOPA COUNTY

PROJECT 43rd AVC. Detention PAGE ___ OF ___

DETAIL Detention Basin COMPUTED KVH DATE 8/01

Phase 3 CHECKED BY ___ DATE ___

Inv 1000.7

Top of Box 1020.6

Ht = 19.9 say 20'

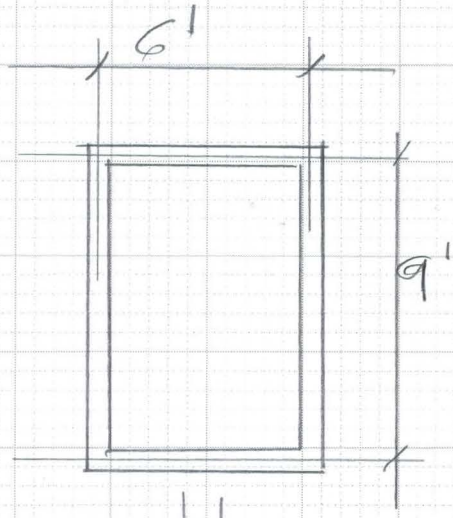

plan

$P_{w_{20'}} = 0.12 \times 0.5 \times 20 = 1.2$ ksf

$K_{At,Rest}$

$M_s = 1.2 \times 9^2/8 = 12.2^{kh}$

$f'_c = 3000$, $f_s = 24$, $f_c = 1.2$

$K = \dfrac{f_c}{\frac{f_s}{n} + f_c} = \left(\dfrac{1.2}{\frac{24}{9} + 1.2}\right)$

$= 0.31$, $j = \left(1 - \frac{0.31}{3}\right) = 0.89$

$R = \frac{f_c}{2} jK = \frac{1.2}{2} \times 0.89 \times 0.31 = 0.166$

$M = Rbd^2$, $d_{reqd} = \sqrt{\dfrac{12.2 \times 12}{0.166 \times 12}} = 8.6''$

$d_{total} = (8.6 + 2 + 0.5) = 11.1''$ use $12''$

$(12 - 2 - 0.5) = 9.5''$ $A_s = \dfrac{12.2 \times 12}{24 \times 0.89 \times 9.5} = 0.72$

Using $M_{pos} = \dfrac{wl^2}{10} = \dfrac{1.2 \times 9^2}{10} = 9.72$

$A_s = \left(0.72 \times \dfrac{9.72}{12.2}\right) = 0.57$

5 @ 6'' used is ok. $A_s = 0.62$

6910-153 4-90

FLOOD CONTROL DISTRICT OF MARICOPA COUNTY

PROJECT 43rd Ave. PAGE ___ OF ___

DETAIL Detention Basin Phase 3 COMPUTED KVH DATE 8/01

CHECKED BY ___ DATE ___

Check @ 10':

$f_{r,10'} = (0.12 \times 0.5 \times 10) = 0.6$ kcs

$M_s = 0.6 \times 9^2/10 = 4.9$ k'ft

$A_s = \frac{4.9 \times 12}{24 \times 0.88 \times 9.5} = 0.3$

Check with $M = 9.72$

$d_{rqd} = \sqrt{\frac{9.72 \times 12}{0.166 \times 12}} = 7.7''$

$d_{total} = (7.7 + 2 + 0.5) = 10.2''$ ∴ 10'' is ok

$(10 - 2 - 0.5) = 7.5$

$A_{s_1} = \frac{9.72 \times 12}{24 \times 0.88 \times 7.5} = 0.74$

use # 6 @ 6'', $A_s = 0.88$

$A_{s_2} = \frac{4.9 \times 12}{24 \times 0.88 \times 7.5}$

$= 0.37$

use # 6 @ 9'' after Ekv-1010

6910-153 4-90

FLOOD CONTROL DISTRICT OF MARICOPA COUNTY

PROJECT 43RA AVE. PAGE ___ OF ___

DETAIL Detention Basin Phase-3 COMPUTED KVH DATE 8/01

CHECKED BY ___ DATE ___

Top Slab

Span = (5' + 10") 5'.83

$M_s = \left(\frac{S+2}{32}\right) P_{20} = \left(\frac{5.83}{32}\right)(16^k \times 1.3)$

$= 3.8$ kft / per ft.

Assume Slab 12" $M_s = 0.15 \times 5.83^2/8 = 0.7$ kft

M_s (total) $= (3.8 + 0.7) = 4.5$ kft

$d = (12 - 1.5 - 0.5) = 10"$ $A_s = \frac{4.5 \times 12}{24 \times 0.89 \times 10}$

$= 0.25$ in^2

Using 10" Slab

deff = 8" $A_s = \frac{4.5 \times 12}{24 \times 0.89 \times 8} = 0.32$

Main Reinf parallel to Traffic:

LLM = 900 S = (900 × 5.83) 1.3 = 6.82 kft

Impact

M total = (6.82 + 0.7) = 7.52

$A_s = \frac{7.52 \times 12}{24 \times 0.89 \times 10}$

$= 0.42$

Use #6 @ 8" = 0.66

because of 3'-0 opening

6910-153 4-90

TABLE OF CONTENTS

SPILLWAY STRUCTURE	P.1-50	Phase. 3
OUTLET STRUCTURE	P.51-90	
INLET STRUCTURES	P.91-97	
JUNCTION STR. STA.10+63	P.98-106	
JUNCTION STR. STA.20+08	P.107-133	
JUNCTION STR. STA.106+00	P.134-164	Phase. 1 & 2 STORM DRAIN
MISCELLANEOUS	P.165-169	

Flood Control District of Maricopa County
ENGINEERING
Contract Change Order No. 1

Date: November 24, 1998 FCD Contract No. 98-07

Contract Description: Pump Station Design for 43rd Avenue Detention Basin

By mutual agreement of the parties, the following contract change(s) are incorporated into Contract FCD 98-07
All other contract terms and conditions remain unchanged.

Sheet No. 1 of 1

DESCRIPTION OF CHANGE

This is a time only extention request. FCD Value Engineering delayed Carollo's start date. The pump station was also relocated from 43rd Avenue and Southern Avenue to 43rd Avenue at the Salt River.

Contract Recap:

Original Contract Amount	$68,386.00
Amended Contract Amount through previous change orders	$0.00
Change Order # 1	$0.00
Total Contract amount through this change order	$68,386.00

By means of this change order, 210 days are added to the contract completion date.
The revised contract completion date is 6/1/99

We, the undersigned Consultant, hereby agree that upon execution of this change order we will perform all services as identified above, and will accept the above specified amount(s) as full payment therefor.

Consultant: Carollo Engineers
3877 North Seventh Street, Suite 400
Phoenix, AZ 85014

By: George E. Shirley
Title: Principal
Date: 11/25/98

Recommended by: Michael Lopez
Date: November 23, 1998

Approved by:
Chief Engineer and General Manager
Date: 12/1/98

Revised 7/28/98

Change Order Justification/Authorization Memorandum

DATE: November 24, 1998

Contract No. & Description: FCD 98-07

MEMO TO: Michael S. Ellegood, P.E.

Pump Station Design for 43rd Avenue Detention Basin

FROM: Michael Lopez

Change Order No. 1

SUBJECT: Contract FCD 98-07 – Pump Station Design for 43rd Avenue Detention Basin

This is a time only extension request.

The following financial information is submitted:

Initial Contract Amount:		$ 68,386.00
Amended Contract Amount w/previous change orders		$ 68,386.00
Amended Contract Amount w/current change order		$ 68,386.00
Change Order Authorization Limit		
Total Change: A/E - 20% or $20,000 max	$ 13,677.20	
Individual Change: A/E - 15% or $15,000 max	$ 10,257.90	
Amount Previously Authorized in Change Orders:		$ 0.00
Change Order Authorization Remaining:		$ 13,677.20
Amount Requested for this Change:		$ 0.00
Remaining Change Order Authority:		$ 13,677.20

I certify that this change is required to accomplish the overall task for which this contract was initiated.

for Edward O. Raleigh
Project Manager

Concur: Edward O. Raleigh
Division Manager

Funds are available to accomplish this Change Order.

Michael J. Lucas
Controller

I certify that this change is within the limits authorized by the County Procurement Code.

Barbara C Hummell
Contracts Manager

APPROVED/~~DISAPPROVED~~

Chief Engineer and General Manager

Copy to: Contract File, Controller, Division Manager, and Project Manager

Revised 6/7/95

FLOOD CONTROL DISTRICT OF MARICOPA COUNTY

PROJECT 43rd Av. Storm Drain PAGE ____ OF ____

DETAIL Junction Str (8'x16') COMPUTED KVH DATE Jan 9

@ STAT. 106+00 CHECKED BY ____ DATE ____

Concrete Qty's:

8' x 16' Junction Str (open)
with 10x4 ADOT Box

8' walls: Sect. A & B

Ht = 12.5' T = 1.0' NO = 2, width = 8.0

Qty = (12.5 x 1.0 x 8.0) 2 = 200 cfl = 7.41 cyd

16' walls:

A1 = (18 x 12.5) = 225

Dia = (9.5 + 6" + 6") = 10.5'

A2 = 3.14 x 10.5²/4 = 86.5

Anet.1 = (225 - 86.5) = 138.5

ADOT Box: (10 x 4)

Area = (12.17 x 5.67) = 69.0

Anet. 2 = (225 - 69) = 156.0

Qty = (138.5 + 156) 1 = 294.5 10.91

Base Slab:

(11.0 x 19) 1.5 = 313.5 11.61

29.93 cy

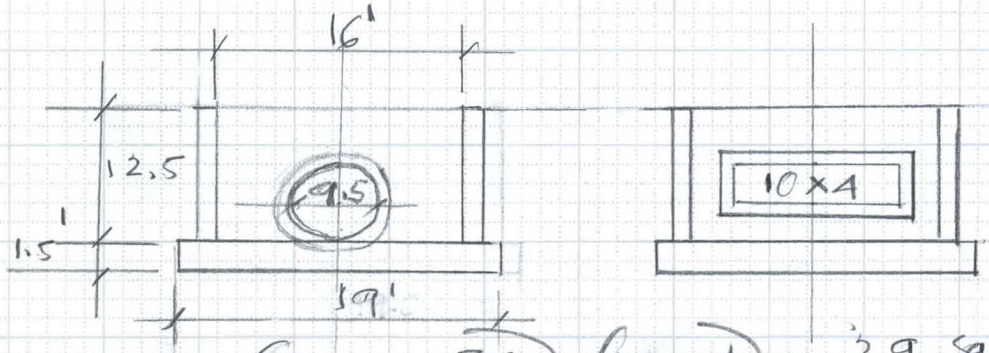

Box Area: (12.17 x 5.67) - (10 x 4) = 29 sq ft

Box Qty: (29 x Length) — ? —

6910-153 4-90

FLOOD CONTROL DISTRICT OF MARICOPA COUNTY

PROJECT 43rd Ave. Basin & St. Dk PAGE ____ OF ____

DETAIL ____ COMPUTED KVH DATE Jan/99

Conc. Quantities CHECKED BY ____ DATE ____

Qtys to be worked out:

Concrete Quantities:

1) North Indet. Str.

2) South Indet Str.

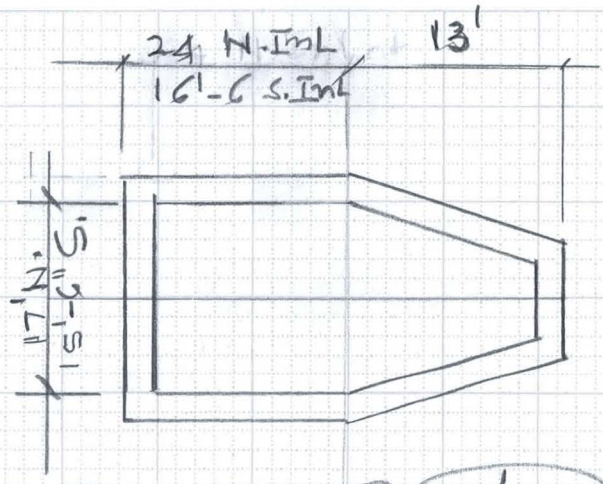

8'x16' Junct. St. @ STA. (106+00) with 114" Pipe & (10x5) ADOT Box

Qty for this is Completed

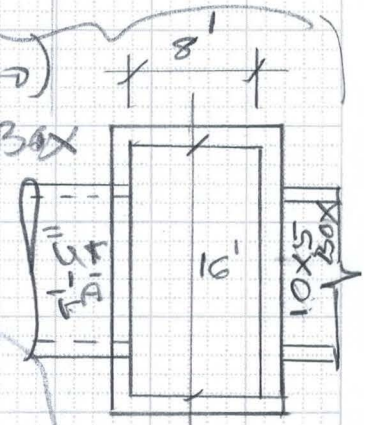

3) Junct. St. w/ 66" Dia. Sta (20+08) & 2x30" pipes

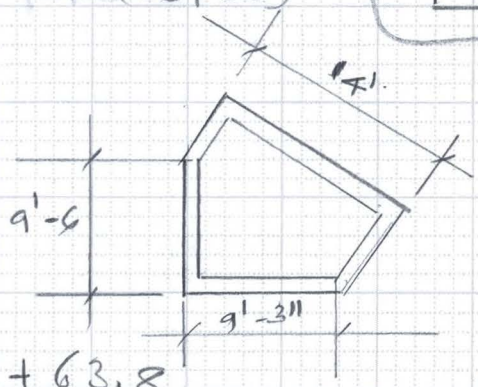

4) Junction Str. Sta. 10+63.8
8'x11-2" with 2x30" pipes & 66" Dia. Exist. pipe.

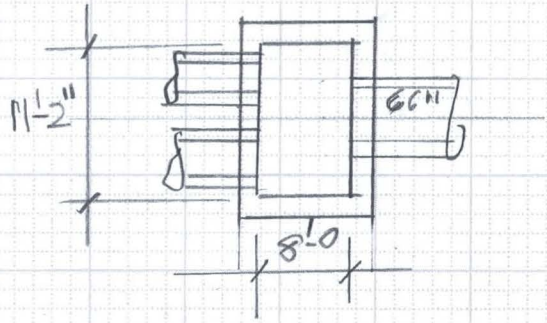

6910-153 4-90

FLOOD CONTROL DISTRICT OF MARICOPA COUNTY

PROJECT 43rd Ave. Basin PAGE ____ OF ____

DETAIL N. Inlet. STR. COMPUTED KVH DATE 1/99

Conc. Qtys CHECKED BY ____ DATE ____

N. Inlet. STR. (with 66" Dia pipe)

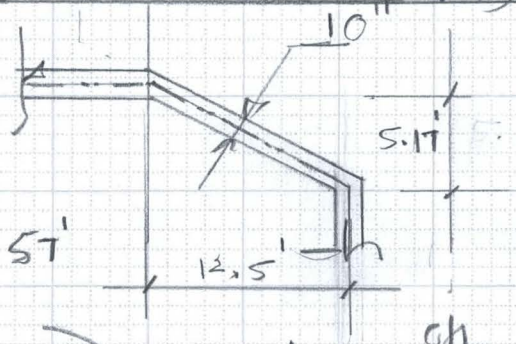

$L_1 = \sqrt{5.17^2 + 12.5^2}$

$= 13.53'$

$Ht(Av) = (7.67 + 5.46)/2 = 6.57'$

$T = 10'' = 0.833'$

$Qty = (6.57 \times 0.833 \times 13.53)\,2 = 148.1$ cft — 5.49 cy

2 sides

$L_2 = 24'$

$Ht(Av) = (5.17 + 0.5)/2 = 2.84'$

$T = 10''$

$Qty = (2.84 \times 0.833)\,24 \times 2 = 113.6$ — 4.21

6910-153 4-90

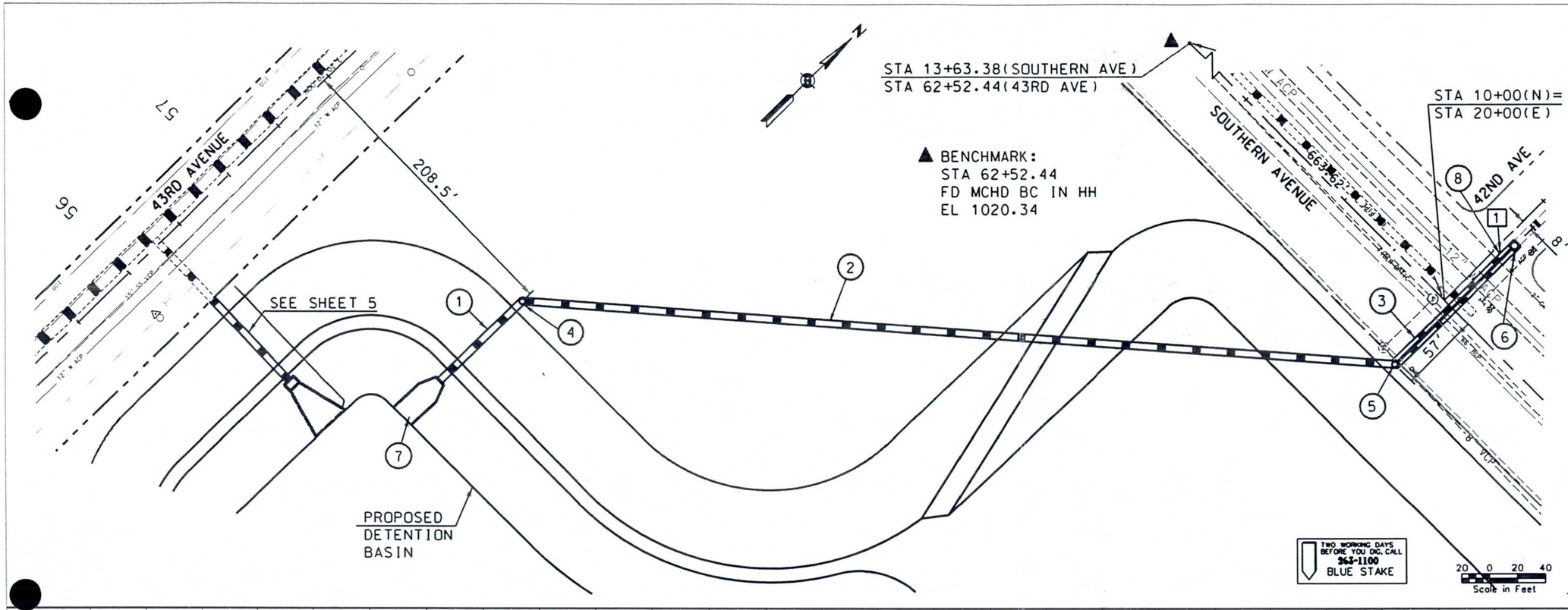

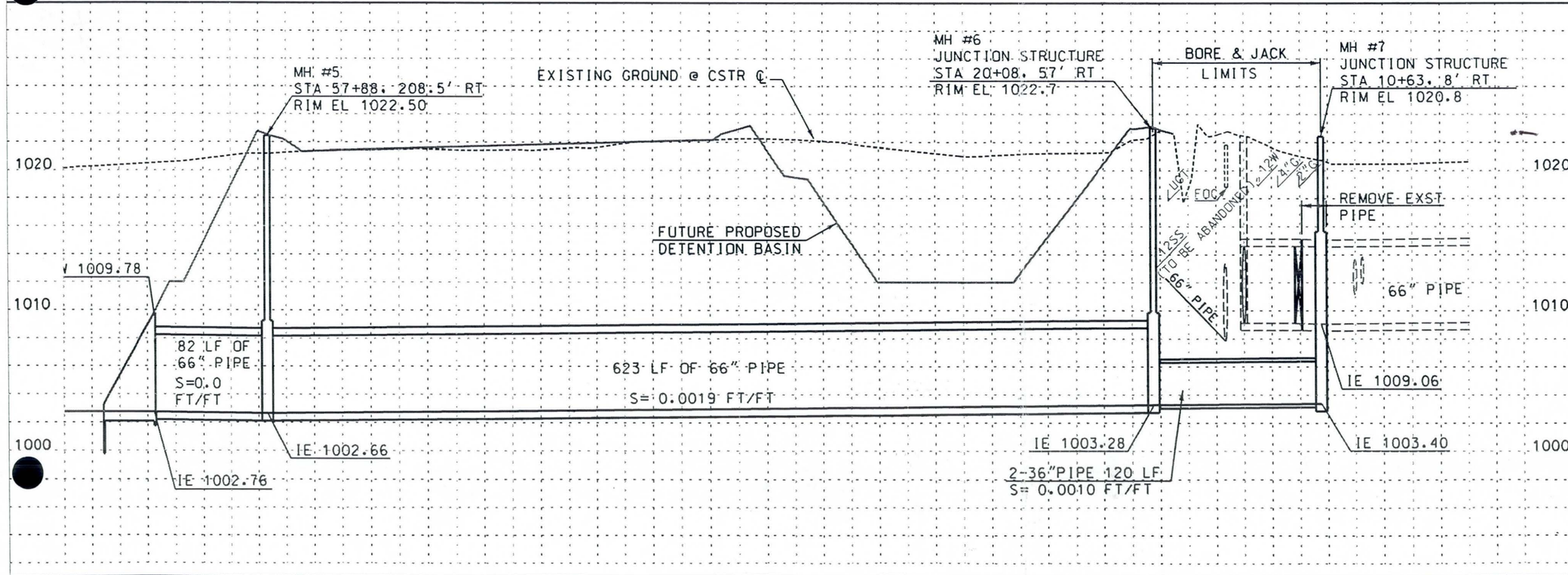

REMOVE

1 REMOVE PIPE 12 LF

CONSTRUCT

INSTALL NEW STORM SEWER PIPE

NO.	STATION TO STATION	DIAMETER INCHES	LENGTH FEET
1	57+06 TO 57+88	66	82
2	57+88 TO 62+04.9	66	629
*3	9+43 TO 10+63	36	240

INSTALL NEW STORM SEWER MANHOLE

NO.	STATION	BASE DETAIL	SHAFT DETAIL
4	57+88	DET 1	MAG DET 522
5	20+08	DET 2	MAG DET 522
6	10+63	DET 3	MAG DET 522

7 CONSTRUCT NORTH INLET STRUCTURE (SEE SHEET 18) 26 CY

8 INSTALL PIPE PLUG PER MAG STD DET 427 1 EACH

* BORE & JACK

NO.	REVISION	BY	DATE
3			
2			
1			

FLOOD CONTROL DISTRICT OF MARICOPA COUNTY
ENGINEERING DIVISION

43RD AVENUE STORM DRAIN
BASELINE ROAD TO SOUTHERN AVENUE
FCD PROJECT NO. 117021

PRELIMINARY NOT FOR CONSTRUCTION

	BY	DATE
DESIGNED	MAL	12/02/98
DRAWN	FC	12/02/98
CHECKED	JRR	

PLAN AND PROFILE

SHEET 17 OF 23

...\43rd ave\dgn\phase3\sd3-2.dgn Dec. 02, 1998 09:58:32

16