STRUCTURAL CALCULATIONS

ENGINEERING DIVISION
LIBRARY

Property of
Flood Control District of MC Library
Please Return to
2801 W. Durango
Phoenix, AZ 85009

PROJECT:

67TH AVENUE BRIDGE
OVER ARIZONA CANAL
DIVERSION CHANNEL
PHOENIX, ARIZONA.

CLIENT:

FLOOD CONTROL DISTRICT
OF MARICOPA COUNTY
ARIZONA.

~~PRELIMINARY~~

DECEMBER 1982.

E. M. PLUMMER
CONSULTING ENGINEERS
3666 NORTH MILLER RD.
SCOTTSDALE, ARIZONA 85251
941-2061

E.M. PLUMMER
CONSULTING ENGINEERS
STRUCTURAL . CIVIL ENGINEERS
CLIENT:

SUBJECT 67th Avenue Bridge SHEET NO 1 OF
Phoenix BY S.H DATE 10.25.82
JOB NO 374.

Basis for Design.

Total length of bridge
center to center of abutments = 550'-0"
width of the bridge = 82'-6"
Angle of skew = 38°

Type of girders = AASHTO type IV Girders.

No of spans = 6 @ 91'-8"

Specifications:
1. Standard specifications for Highway Bridges AASHTO

Loading:
Dead Load : Actual. + 25 psf future wearing course.
Live load : AASHTO HS20-44.

Materials:
Prestressing strands f_y = 270,000 psi
Reinforcing steel f_y = 40,000 psi #6 and smaller
f_y = 60,000 psi , #7 and larger.

Concrete:
f'_c = 5000 psi , prestressed girders.
f'_c = 4000 psi , piles, pile caps, deck slab, diaphragm
f'_c = 3000 psi , barriers.
f'_c = 3000 psi all other concrete.

E.M. PLUMMER
CONSULTING ENGINEERS
STRUCTURAL . CIVIL ENGINEERS

CLIENT:

SUBJECT 67th Avenue Bridge
Phoenix

SHEET NO 2 OF

BY S.H DATE 10.25.81

JOB NO 374.

Superstructure Design.

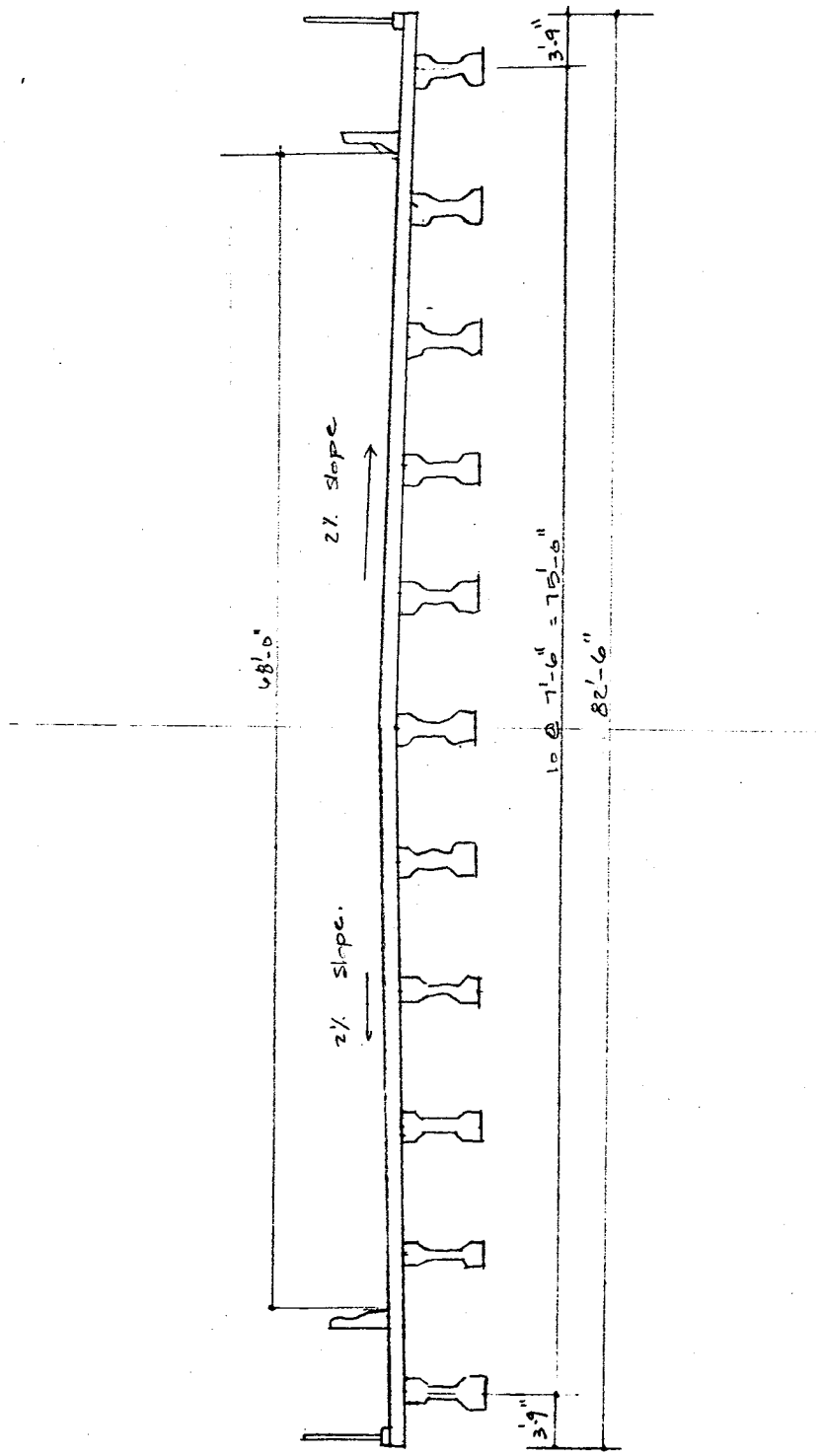

E.M. PLUMMER
CONSULTING ENGINEERS
STRUCTURAL . CIVIL ENGINEERS
CLIENT:

SUBJECT 67th Avenue Bridge — Phoenix
SHEET NO 3 OF
BY S.H DATE 10.25.82
JOB NO 374

Deck Design:

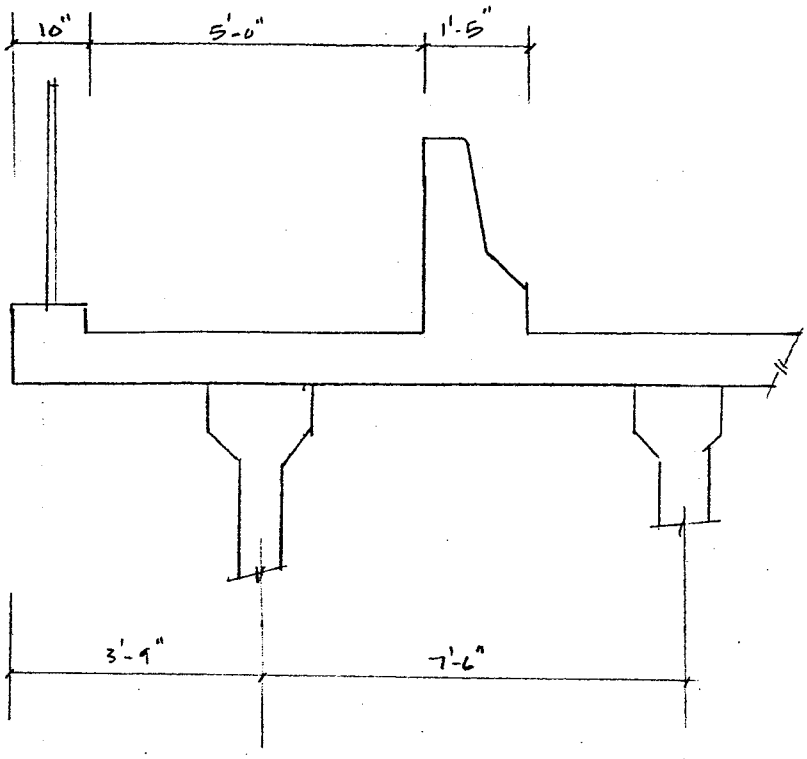

Pedestrian Railing:

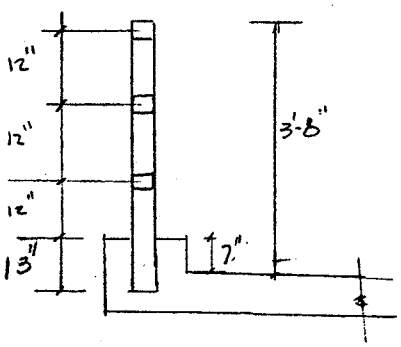

Rail post spacing = 10'-0" (max^m)

Height of Railing from walkway = 3'-8"

(AASHTO min. 3'-6")

Railing:

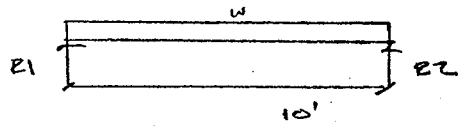

$w_x = w_y = 50$ #/' (AASHTO 1.1.8 B)

$R_{1x} = R_{2x} = R_{1y} = R_{2y} = 250$#

$M_x = M_y = 0.10 \times 50 \times 100 = 500$#'

$S_x = S_y = 500 \times 12 / 24000 = 0.25$ in³.

$M_{max} = \frac{1}{10} W L^2$

$S =$

$S = M / \sigma_{max}$

$\sigma = \frac{My}{I}$ $\sigma = M/S$

use 2"x2"x3/16" TS

Pedestrian Railing (Cont'd)

$$\Delta = \frac{5wL^4}{384EI} - \Sigma A_k b_k \quad ML^2/8EI$$

$$= \frac{5 \times 50 \times 10^4 \times 1728}{384 \times 30 \times 10^6 \times 0.668} - \frac{500 \times 12 \times 100 \times 144}{8 \times 30 \times 10^6 \times 0.668}$$

$$= 0.56 - 0.54 = 0.02'' \quad \text{Negligible.}$$

Rail Post:

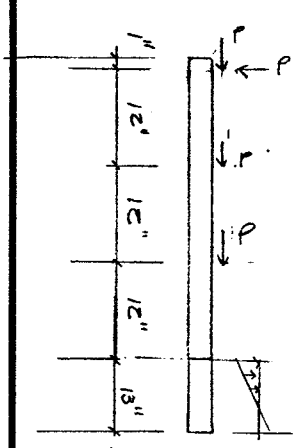

$P = 500^*$

$M_{max} = 500 \times 3.67 = 1835^{*'}$

$N_{max} = 3P = 1500^*$

Try $3'' \times 3'' \times 1/4''$

$S = 2.10 \text{ in}^3$

$A = 2.59 \text{ in}^2$

$\sigma_{max} = 1500/2.59 + 1835 \times 12/2.10 = 11065$ psi O.K.

$\boxed{3'' \times 3'' \times 1/4'' \text{ T.S.}}$

Base thrust $= 1835/0.5 = 3670^*$

Bearing stress $\sigma = 3670/3.5 \times 3.5 = 300$ psi

$\boxed{\text{for grout } f'_m = 1350 \text{ psi.}}$

Details:

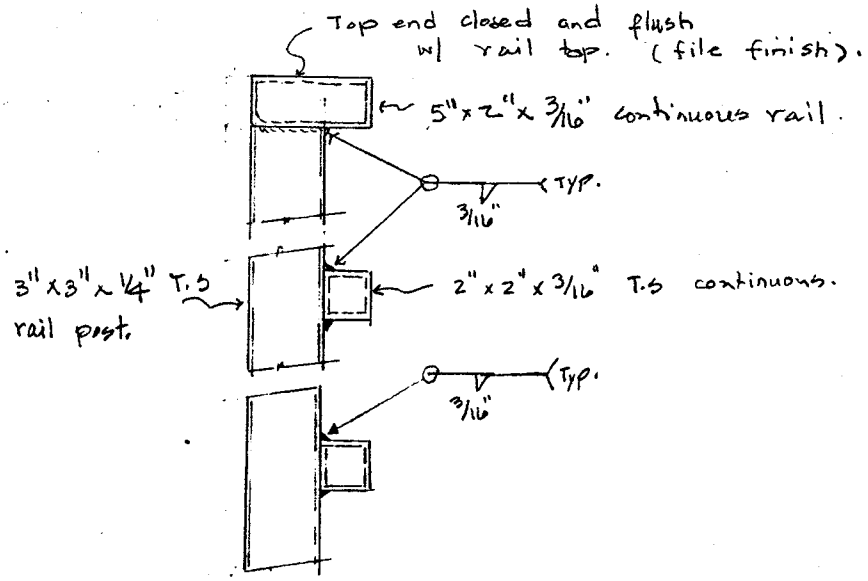

E.M. PLUMMER
CONSULTING ENGINEERS
STRUCTURAL . CIVIL ENGINEERS
CLIENT:

SUBJECT 67th Avenue Bridge
Phoenix
SHEET NO 5 OF
BY S.H DATE 10.26.82
JOB NO 374.

Pedestrian railing (Contd)

Rail post base detail:

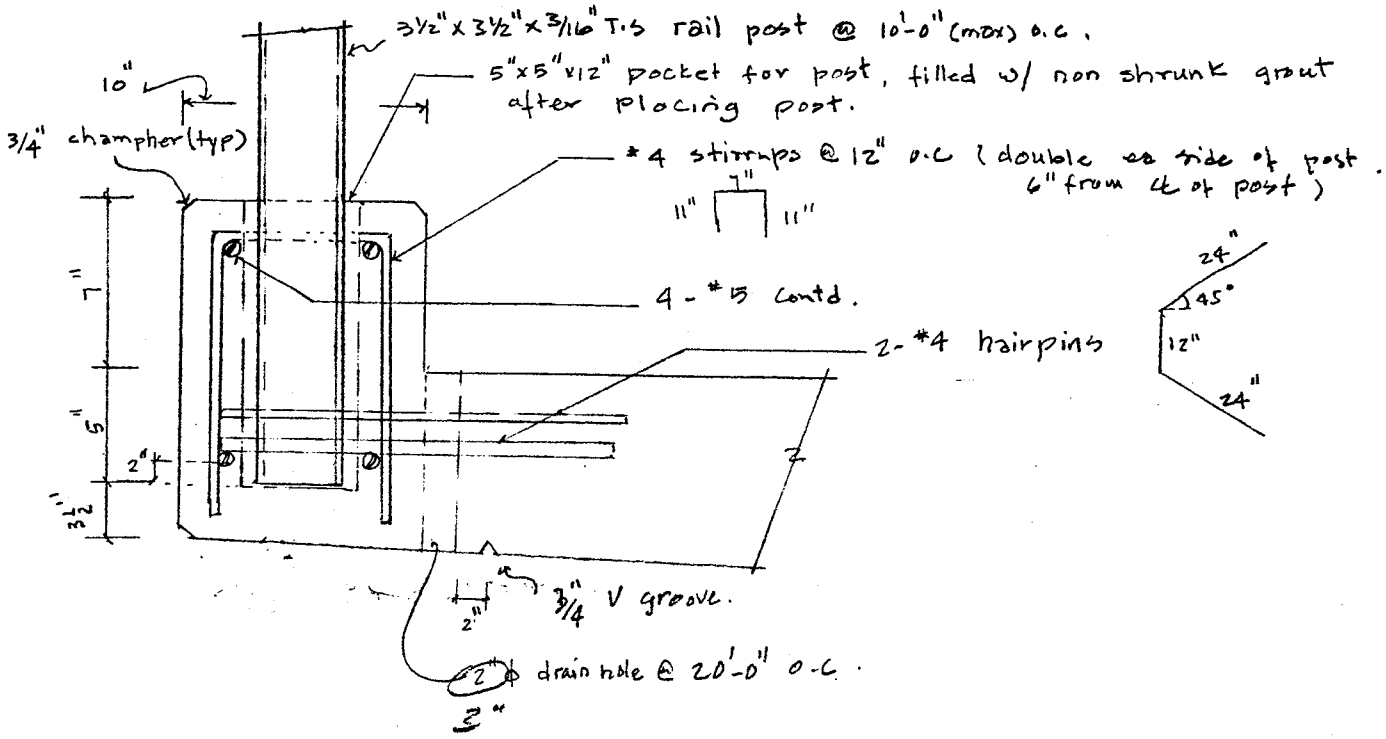

Deck Design (contd)

Traffic Barrier:

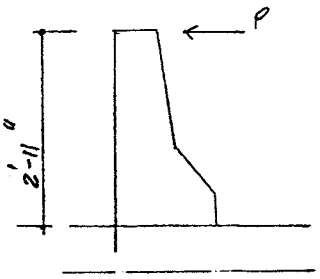

$P = 10^k/5' = 2^{k/'}$

Dead load barrier = $766^{\#/'}$

Barrier moment = $2 \times 2.67 = 5.34^{'k/'}$

$A_b = 5.34 \times 12 / 20 \times 0.87 \times 14 = 0.26 \text{ in}^2/\text{ft}$.

Use #4 @ 8" o.c.

$l_d = 9''$

$A_{bz} = (0.002)[9 \times 19 + 10 \times 13.5 + 3 \times 17] = 0.714 \text{ in}^2$.

Use 4 - #4 long.
1 - #6 long

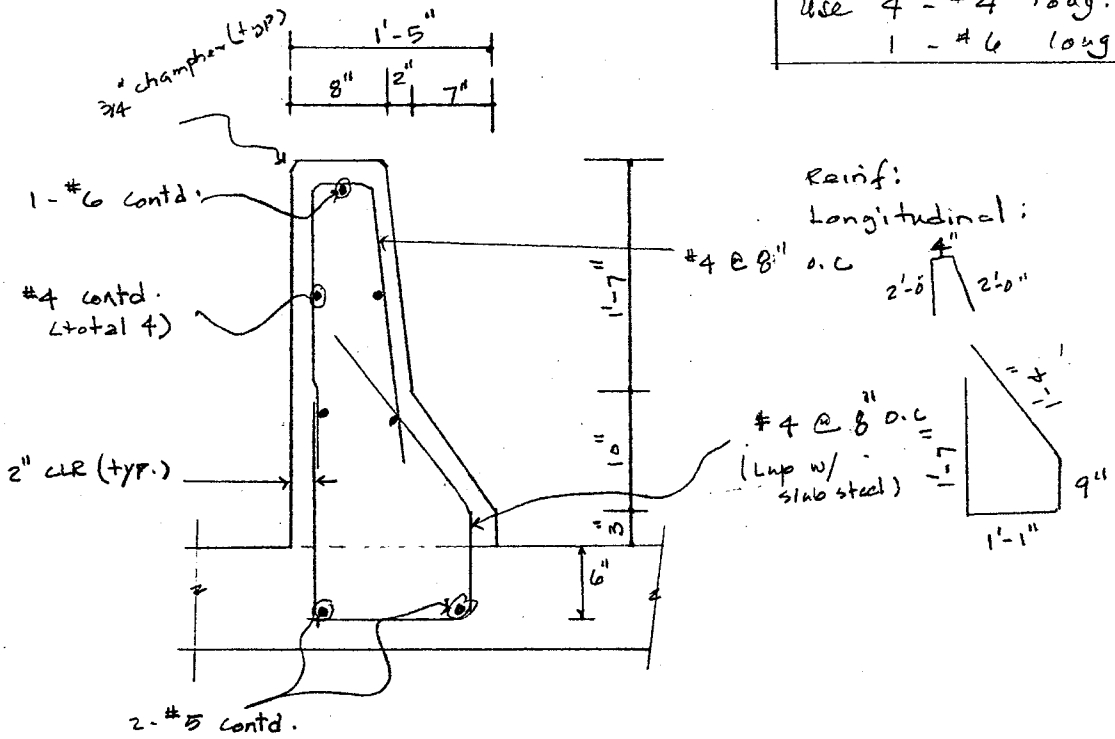

Deck Design: (cont'd)

Deck Slab:

1. Dead load Analysis:

Loads:

Railing = 125#

Barrier = 360#

self wt = 107 #/' (@ 8 1/2" thick slab)

+25 psf future wearing surface

= 132 psf

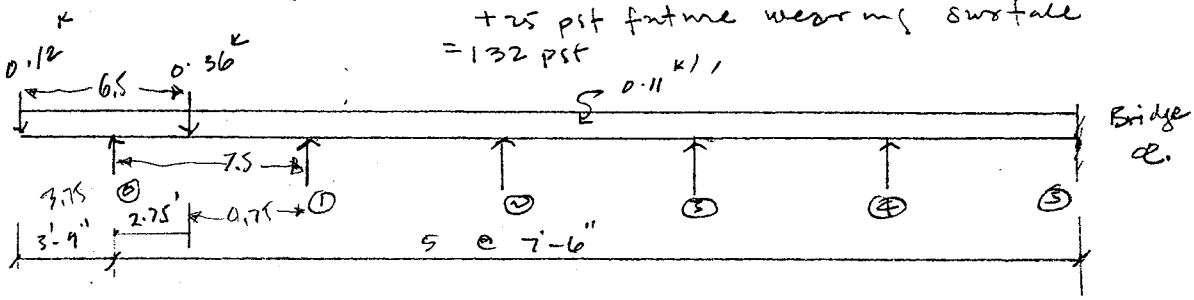

$M_0 = 0.5 \times 0.13 \times 3.75^2 + 0.12 \times 3.75 = 1.38^{'K}$

$FM_{10} = 0.125 \times 0.13 \times 7.5^2 + 0.36 \times 4.75 \times 2.75^2/7.5^2 - 0.5 \times 0.36 \times 4.75^2 \times 2.75/7.5^2$
$- 0.5 \times 1.23 = 0.2^{'K/'}$

$FM_{12} = FM_{21} = \ldots 0.0833 \times 0.13 \times 7.5^2 = 0.61^{'K}$

Exterior girder reaction

$R_0 = 0.12 + 0.13 \times (3.75 + 3.75) + 0.63 \times 0.36 + (1.23 - 0.2)/7.5$

$= \underline{1.41^{K/'}}$

Interior girder reaction $R_2 = 0.18 \times 7.5 = \underline{0.98^{K/'}}$

Deck slab (cont'd)

b. Live load analysis:

Barrier moment:

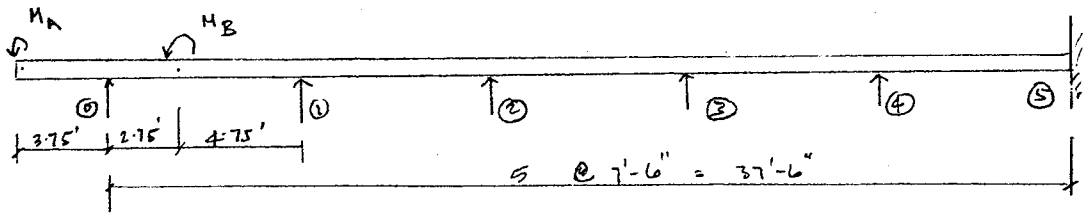

$M_A = 1835^{\#'} \simeq 1.84^{'K}$

$M_B = 2 \times (2.67 + 0.40) = 6.12^{'K}$ (Barrier moment to center of slab)

$M_0' = 1.84^{'K}$

$FM_{01} = M_B \left(\frac{4.75}{7.5}\right)\left(2 - 3 \times 4.75/7.5\right) = 5.3^{'K}$

$FM_{10} = M_B (0.367)(2 - 0.367) = 3.67^{'K}$

$EM_{10} = 3.67 + 0.5(5.3 + 1.84) = 7.24^{'K}$

	1.0	0.43	0.57	0.5	0.5	0.5	0.5	0.5	0.5	0.
		7.24								
		-3.11	-4.13							
				-2.06						
				1.03	1.03					
			0.51			0.51				
		-0.22	-0.29			-0.25	-0.25			
				-0.12	-0.12			-0.12		
				+0.12	0.12			+0.06	+0.06	
-1.84	1.84	3.91	-3.91	-1.03	1.03	0.25	-0.25	-0.06	+0.06	
$\Delta M/L$	0.77	-0.77	-0.66	0.66	0.17	-0.17				

Slab moments:

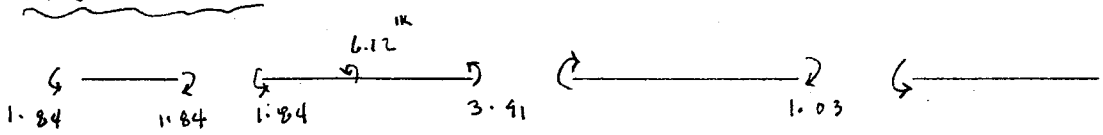

girder reactions

Exterior = 0.77 K/'

Interior = 0.82 K/'

Deck Slab: (Contd)

Live load:

Side walk = 85 psf AASHTO 1.2.11 A.

Roadway : HS20-44.

(Roadway load governs)

$M_{L.L} = 0.80 \frac{S+2}{32} P_{2v}$

$= 0.80 \left(\frac{8.53}{32}\right)(16)$

$= \underline{3.42}$ k'/'

S = clear span + slab thickness
= (7.5 − 1.67) + 0.70 = 6.53'
← type IV

Impact factor = 0.30

$M_I = 0.30(3.42) = \underline{1.02}$ k'/'

Slab design:

Dead load moment.
Ext: 1.38 k/'
Int 0.61 k/'

Barrier moment :
Ext : 1.84 k/'
Int: 3.91 k/'

Live load + Impact
Ext: 0.48 k
Int: 2.14 k/'

Ext = 3.55 k/'

Design moment = 0.61 + 3.91 + 2.14 = 6.66 k/' First interior panel
1.03 3.78 k/' Interior panels.

concrete strength $\boxed{f'_c = 4000 \text{ psi}}$

steel : $f_y = 4000$ psi #6 and smaller.

$n = 8$
$f'_c = 4000$ psi
$f_s = 20{,}000$ psi

$f_c = 0.40 f'_c = 1600$ psi
$K = 0.39$
$J = 0.87$

(Appendix B, concrete design Winter)

$d = \sqrt{\frac{2M}{f_c K J b}}$

$= \sqrt{\frac{2 \times 6.56 \times 12}{1.6 \times 0.39 \times 0.87 \times 12}}$

$= 4.91$ in $< 8.5 - 2.35 = 6.15$ o.k.

Slab design (Contd).

$$A_s = \frac{6.66 \times 12}{20 \times 0.87 \times 6.15} = 0.75 \text{ in}^2/\text{ft.}$$

#5 @ 8" o.c straight bars #4 x 12'-6" @ 8" o.c straight w/ end hook } Alternate

Interior panels:

$$A_s = \frac{3.78 \times 12}{20 \times 0.87 \times 6.15} = 0.423 \text{ in}^2.$$

#5 @ 8" o.c straight bars.

Distribution reinforcement: (AASHTO 1.3.2.E)

main reinforcement perpendicular to traffic

% of main reinf $= \frac{220}{\sqrt{6.53}} = 86\% > 67\%$. $\therefore$ 67%

First Interior panel $= 0.67 \times 0.75 = 0.50$ in^2/ft.

outside 3'-9" Plus 1/4 span 1'-10"

$A_s = 0.50 \times 0.50 \times 5.6 = 1.4$ in^2. $\approx$ 5 - #5 bars

Provide 4 - #4 bottom 5 - #4 top.

mid section of 3'-9":

$A_s = 0.50 \times 3.75 = 1.88$ in^2 = 6 - #5

Provide 5 - #4 bottom 5 - #4 top.

End section of 1'-10"

$A_s = 0.5 \times 0.5 \times 1.9 = 0.47$ in^2 = 3 - #4

2 - #4 bottom, 3 - #4 top.

Slab design

Distribution reinf (contd:)

Interior panels:

$A_s = 0.67 \times 0.42 = 0.28 \text{ in}^2/\text{ft}$

mid section of 3'-9"

$A_s = 0.28 \times 3.75 = 1.05 \text{ in}^2 = 5\text{-}\#4$ bars

Slab reinf @ mid span:

5-#4 bottom
3-#4 top

cantilever end:

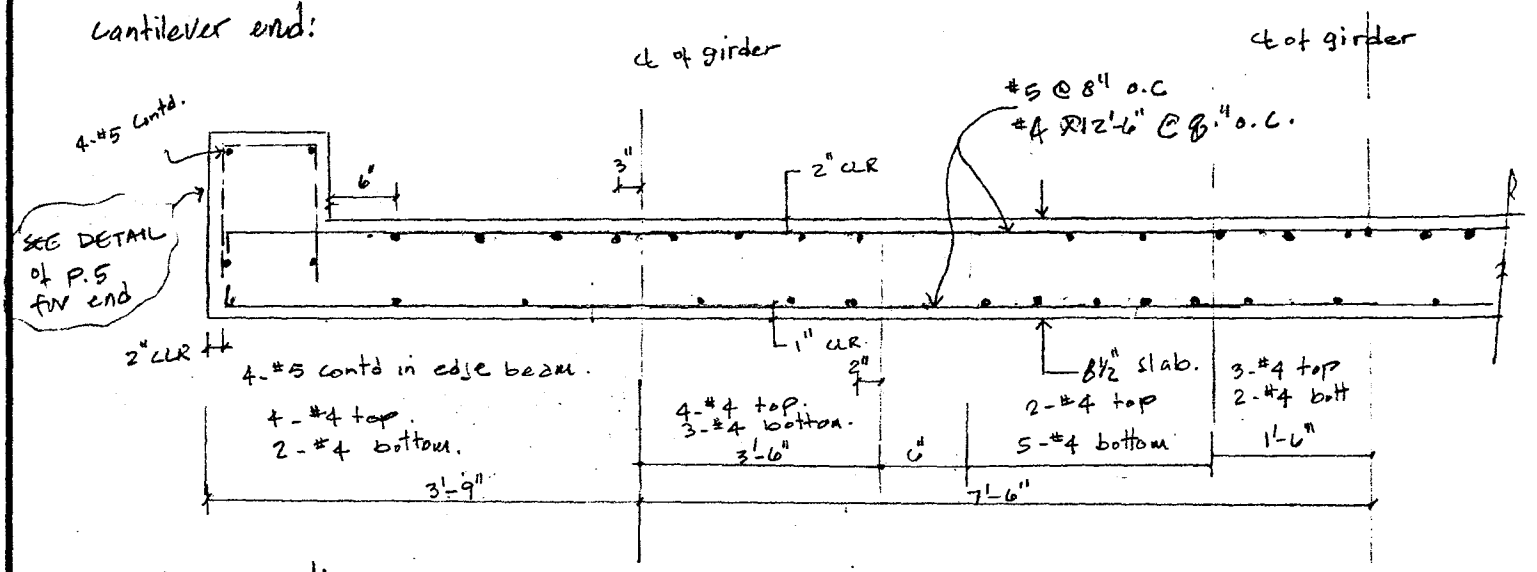

Interior panel:

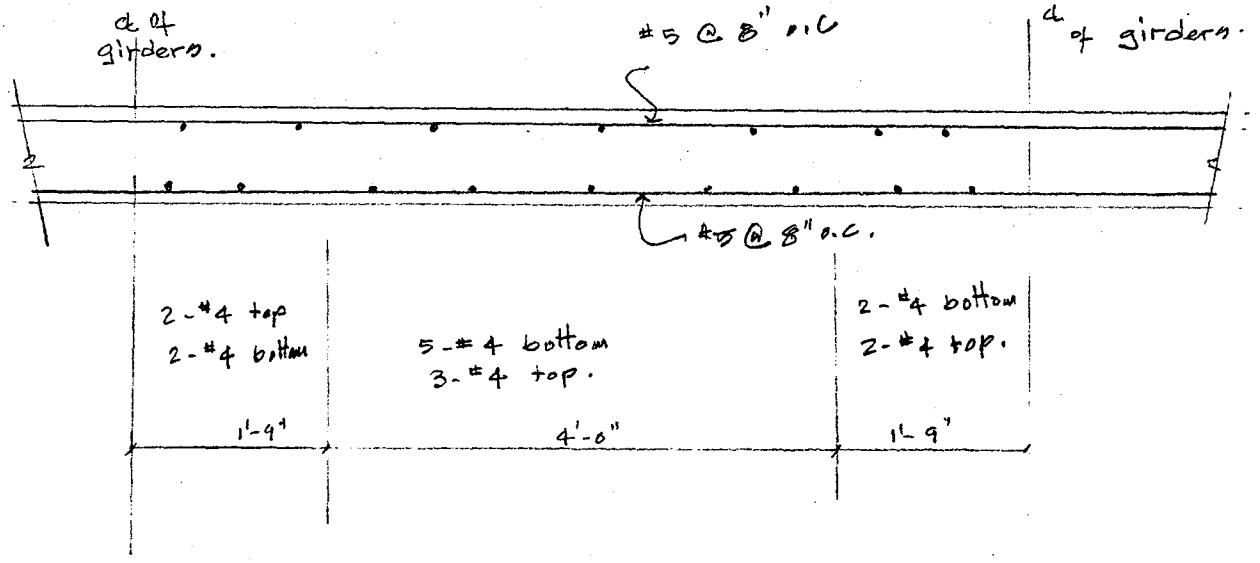

E.M. PLUMMER
CONSULTING ENGINEERS
STRUCTURAL . CIVIL ENGINEERS
CLIENT:

SUBJECT 67th Avenue Bridge Phoenix
SHEET NO 12 OF
BY G.H DATE 11.12.82
JOB NO 374
12/82

Deck Drain:

Spacing of drains = 20' ±

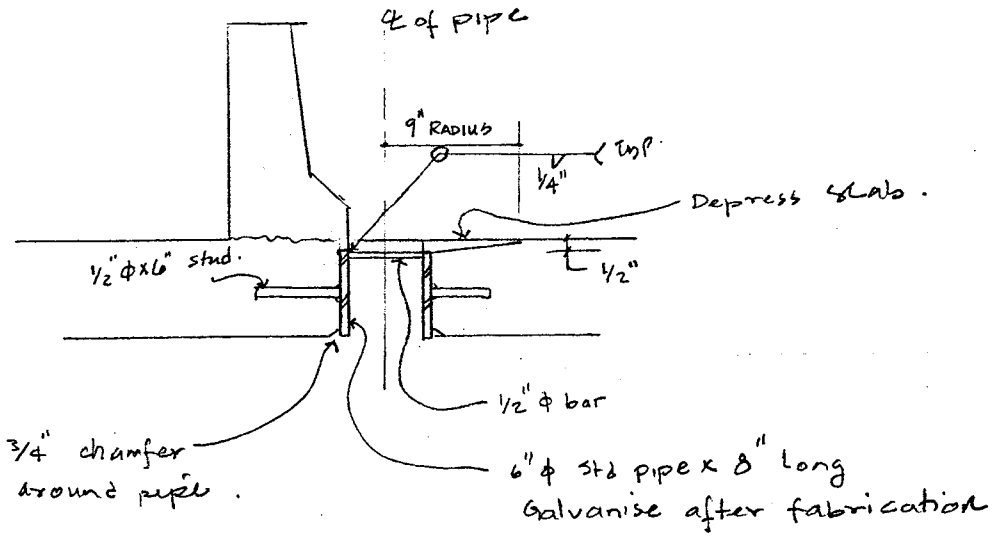

E.M. PLUMMER
CONSULTING ENGINEERS
STRUCTURAL . CIVIL ENGINEERS
CLIENT:

SUBJECT 67th Avenue Bridge Phoenix
SHEET NO 13 OF
BY S.H DATE 11.3.82
JOB NO 374

Precast stay in place deck (alternative)

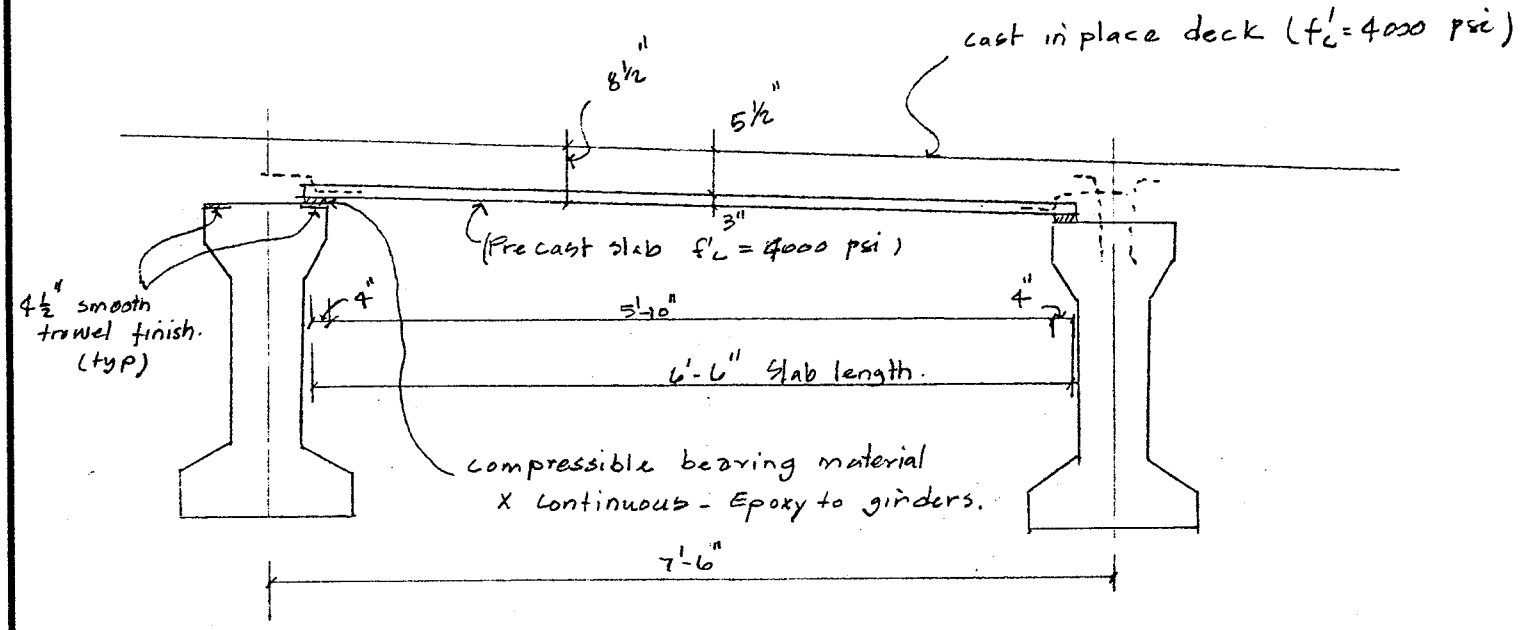

construction loads:

span = 5'-10" + 4" = 6'-2"
future wearing = 25
Precast slab = 37.5 psf
5½" C.I.P. slab = 68.75 psf +25 added thickness
181.25
misc 3.75
Dead load total = 185 psf.
Live load = 50 psf
D.L + L.L 185 psf. x 8' wide = 1.48 K/LF

width of slab = 8'-0"

210 psf = 1.68 K/LF

section properties:
A = 3 x 96 = 288 in²
I = 96(3)³/12 = 216 in⁴
SM = 96x9/6 = 144 in³
$\bar{y}$ = 1.50 in
wt = 300 #/L.F

7.99"

Precast deck slab (cont'd)

$M = 0.125 \times 1.2 \times 6.17^2 = 5.71^{1K}$

$f_b = 5.71 \times 12000/144 = 476$ psi (-) 666 psi (-)

$f_t = 476$ psi (+) 666 psi (+)

max^m spacing of rebar per AASHTO
$= 1\frac{1}{2} \times$ slab $= 1.5 \times 8.5 = 12.75"$
use 12" spacing.

Try 8 - 1/2" ϕ 270 K strands.

Prestress force P = 28.9^K / strand
$\sigma_p = 803$ psi
$f_b = -476 + 803 = 327$ psi
$f_t = 476 + 803 = 1279$ psi (1469 psi top) O.K

Transverse reinforcing:
Per AASHTO specs
$A_{s,min} = 0.11$ in²/ft.

Provide #3 @ 12" O.C.

Pick-ups:
Total slab weight $= 300 \times 6.5 = 2100^{\#} \times 4^{F.S} = 8400^{\#}$
For 4 pickups $T = 8400/4 = 2100^{\#}$
For #3 (40) $A_b = 0.22$ in²
Allowable tension $= 0.22(20{,}000) = 4400^{\#} > 2100^{\#}$ O.K

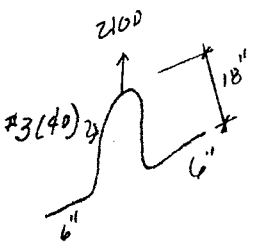

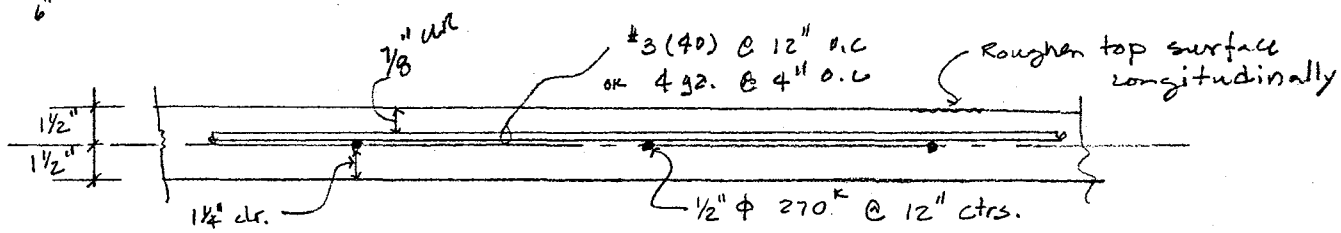

Prestressing force = 28.9^K per strand.

Precast Deck slab: (Contd)

Composite section:

span = 6'-6"

Design moments:

Exterior panel = 3.78 'k/'
First Interior panel = 6.66 'k/'
Typ. Interior panel } Negative & positive

For negative steel: use same as poured deck slab.

check positive stress:

I_{com} = 414 in⁴ f_t = 6.66 x 12000/144 = 555 psi O.K

S_{comp} = 144 in³ f_b = 555 - 327 = 228 psi O.K.

check ultimate moment capacity:

D.L.M = 0.61 x 1.3 = 0.79 'k/'

L.L.M+I = (3.91+2.14)(1.3)(1.67) = 13.13

M_u = 13.13+0.79 = 13.92 'k/'

ultimate moment capacity:-

A_s = 0.153 in² f'_c = 4000 psi f'_s = 270000 psi

b = 12" d = 7"

f_{su} = 250.6 ksi. a = 1 in

M_u = 0.9[0.153 x 250.6 x (7 - 1/2)/12] = 18.69 'k > 13.78 'k

O.K

$\rho^* = \frac{.153}{12 \times 7} = .0018$

$f^*_{su} = 270\left(1 - \frac{.0018}{7} \times \frac{270}{4}\right) = 253.8$

$f^*_{su} = \frac{48}{15} + \frac{2}{3} \times 94 = 189$

use 1/2" φ 7 wire 270 ksi strands @ 12" o.c

$M_{D.L}$ = 135 #/' x 6.17²/8 = 0.642 'k

$M_{L.L}$ = ((6.17+2)/32) x 16 'k = 4.09 'k

M_u = 0.642 x 1.3 = 0.83 'k

4.09 x 1.3 x 1.67 = 8.88

9.71 'k < 18.67 'k O.K

E.M. PLUMMER
CONSULTING ENGINEERS
STRUCTURAL . CIVIL ENGINEERS
CLIENT:

SUBJECT 67th Avenue Bridge
Phoenix

SHEET NO 16 OF
BY S.H DATE 11.3.82
JOB NO 374

End - 401'

Precast deck slab (Cont'd)

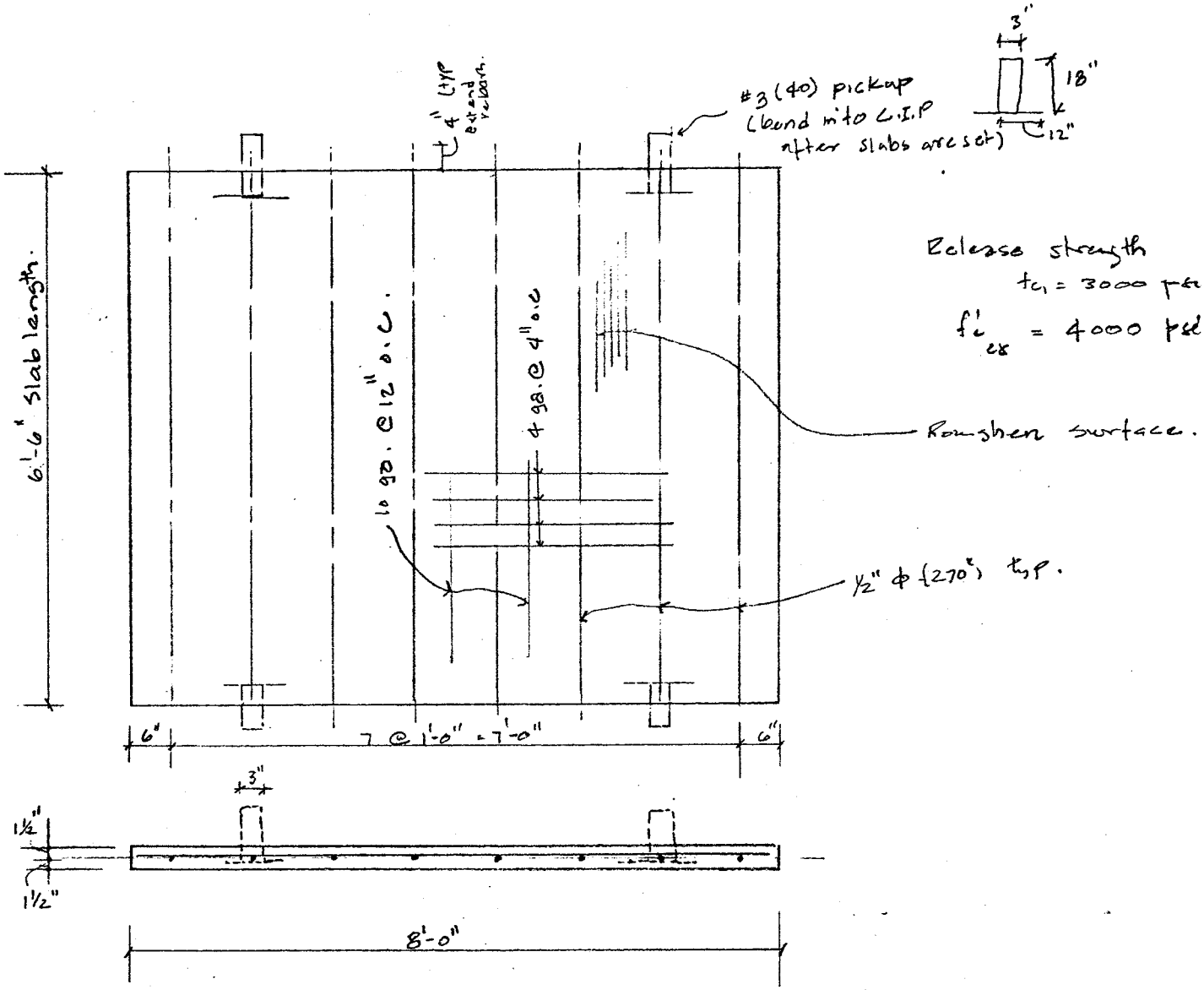

Girder Design

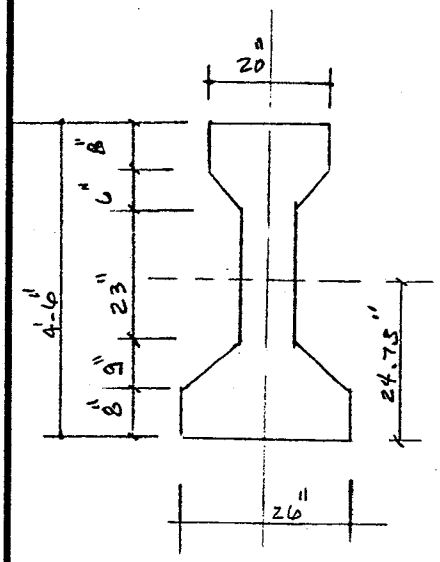

1. Girder section properties:

weight = 822 #/'

Area = 789 in²

I_x = 260730 in⁴

y_b = 24.73 in

S_b = 10543 in³

S_t = 8908 in³

2. Girder Design:

f'_c = 5000 psi

f'_s = 270,000 psi

f_{si} = 0.7 x 270000 = 189000 psi

L = 91'-2"

Use AASHTO type IV std I-girders.

1. Interior Diaphragm

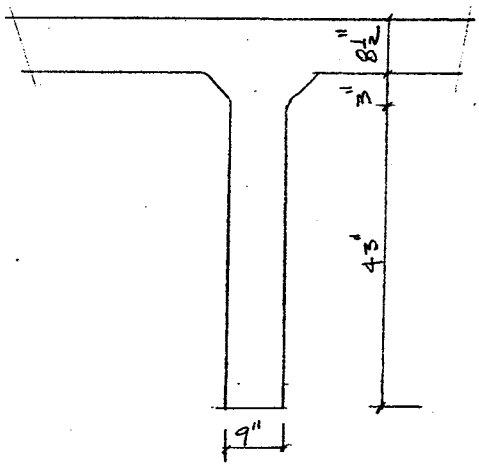

Diaphragm wt

= 0.75 x 3.83 = 2.87

2 x .25²/2 = 0.06

2.93 x 150

= 431 #/'

wt = 431 #/'

Reaction to girder = 6.84 x 0.431

= 2.95 K

Girder Design Contd.

Dead load analysis:

a. Exterior Girder.

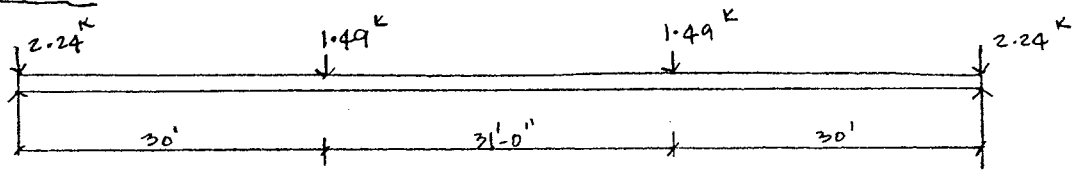

Future wearing course 25psf x 7.5 = 187.5 #/'

8½" slab = 12.5 x 8.5 x 7.5 = 797 #/'

Built up @ girders = 50 #/'

type IV girders = 822 #/'

Barrier Reaction = 360/11 girder = 33 #/'

Railing = 120/11 = 11 #/'

Int Diaphragm Rt = 0.431 x 3.44 = 1.49K

End diaphragm = 2.24K

R = 90.20K

b. Interior girder:

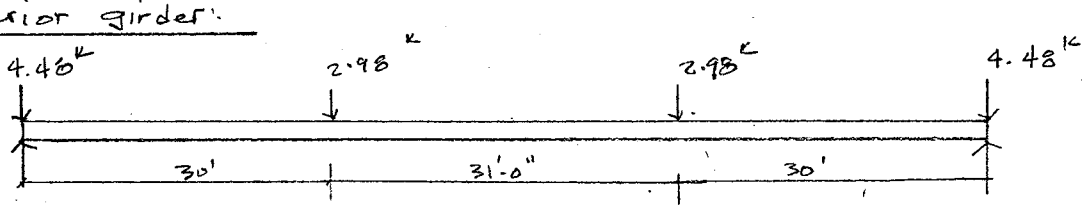

Future wearing surface = 25 x 7.5 = 187.5 #/'

8½" slab = 797 #/'

Built up @ girders = 50 #/'

type IV girders = 822 #/'

Barrier + Railing = 480/11 = 44 #/'

Int. diaphragm = 2.98K

End diaphragm = 4.48K

Reaction R = 93.93K

Dead Load moments:

(a) Exterior girder:

M_{diaph} =	1.49 x 30	= 44.7 'K
$M_{F,wear}$ =	$187.5 \times \bar{91}^2/8$ (1/1000)	= 194 'K
M_{slab} =	797 x —	= 825 'K
$M_{Gird\ B.up}$ =	50 x —	= 51.76 'K
M_{Gird} =	822 x —	= 850.87 'K
$M_{Barrier\ rail}$ =	33 x —	= 34.16 'K
$M_{railing\ rail}$ =	111 x —	= 114.39 'K
		2011.87 'K

(b) Interior girder:

M_{diaph} =	2.98 x 30	= 89.4 'K
$M_{F,wear}$ =	$187.5 \times \bar{91}^2/8$ (1/1000)	= 194.0 'K
M_{slab} =	797 x —	= 825.0 'K
$M_{Gird.B.up}$ =	50 x —	= 51.76 'K
M_{Gird} =	822 x —	= 850.87 'K
$M_{Barrier+railing}$ =	44 x	= 45.54 'K
		2056.57 'K

(governs)

Live load analysis:

Impact factor $I = \frac{50}{91+125} = 0.23$

Exterior girder:

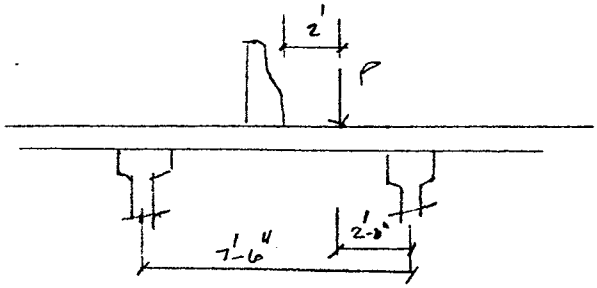

Reaction to exterior girder

$= 2/7.5\,P = 0.267\,P$ (TRUCK)

$(2/7.5)(4/10)[\bar{w} + \bar{P}] = 0.11\bar{w} + 0.11\bar{P}$ (governs)

side walk load $\bar{w}_1 = 430$ #/'

$0.11\bar{w} = 0.11(640) = 71 \times 1.23 = 88$

$w = 517$ #/'

$\bar{P} = \begin{cases} 2.46^{k} \text{ (moment)} \\ 3.52^{k} \text{ (shear)} \end{cases}$

Interior girder:

Truck loading $= 16^{k} \times \frac{7.5}{5.5} \times 1.23 = 26.62^{k}$

Lane load $= 0.64 \times \frac{7.5}{5.5 \times 2} \times 1.23 = 0.53$ k/'

conc. $M = 18 \times \frac{7.5}{5.5 \times 2} \times 1.23 = 14.97^{k}$

conc. $V = 26 \times \frac{7.5}{5.5 \times 2} \times 1.23 = 21.62^{k}$

maximum positive moment: (3 span continuous) (Interior girder governs)

Span #1 (Lane)

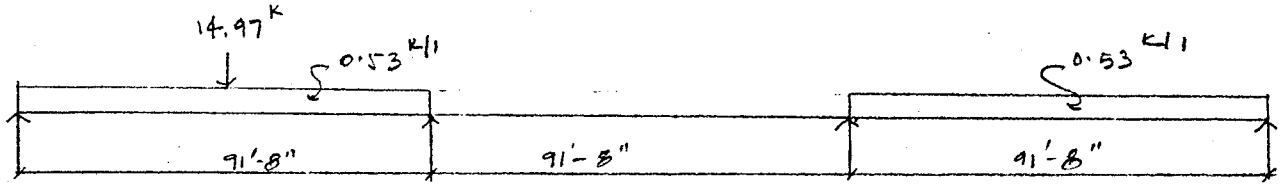

Positive moment @ 0.45 pt

Span # 1 = 0.093

Span # 3 = 0.0067

$0.0997 \times 0.53 \times 91.67^2 = 4.44^{k}$

concentrated P $= 0.204 \times 14.97 \times 91.67 = 280.0^{k}$

724.01^{k}

Ref: Ten decimal Influence line for continuous beams – Georg Anger

Live load analysis:

End span (Truck load):

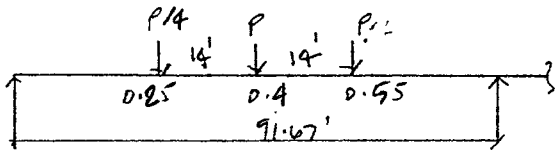

P @ 0.40 = 0.204
P/4 @ 0.35 = 0.0313
P/4 @ 0.65 = 0.1395
0.3748

max^m positive moment = 0.3748 × 26.62 × 91.67 = 914.6 ^1K ✓
(governs)

Live load analysis (cont'd)

middle span positive moment
(Lane load)

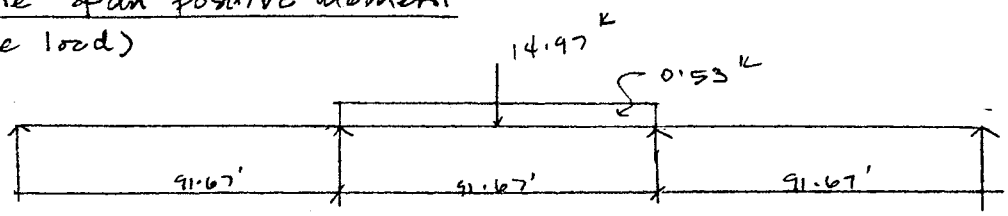

Positive moment @ 0.5 pt

$= 0.075 \times 0.53 \times 91.67^2 = 334^{1K}$

$0.175 \times 14.97 \times 91.67 = 240^{1K}$

574^{1K}

truck load:

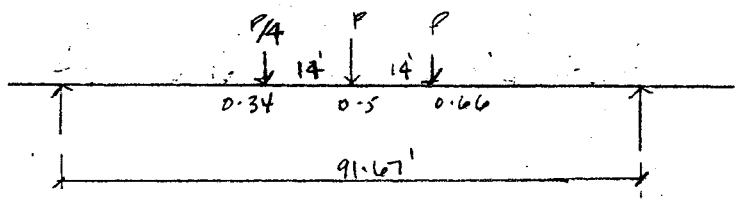

P/4 @ 0.34 = 0.10 × 0.25 = 0.025

P @ 0.50 = = 0.175

P @ 0.66 = 0.10

$0.30 \times 26.62 \times 91.67$

$= 733.5^{1K}$

Design L.L + I positive moment for girders = 914.6^{1K}

Live load analysis: (Contd)

Maxm L.L negative Moment:

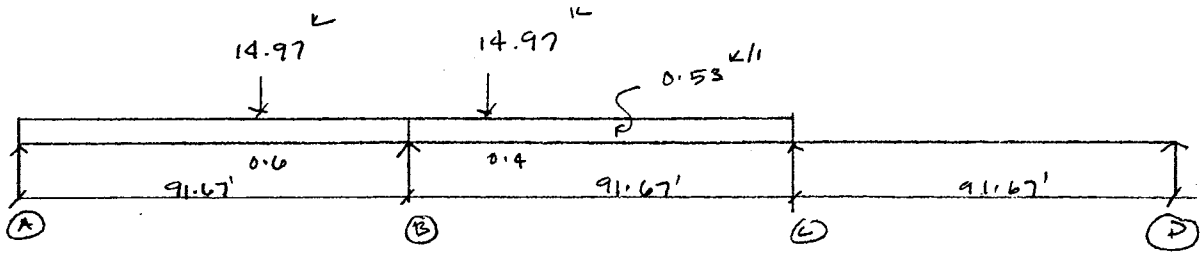

maximum negative moment @ B

W: Span #1 Loaded = 0.0667
Span #2 Loaded = 0.0500
$0.1167 \times 0.53 \times 91.67^2 = 519.67^{'K}$

Conc. P @ 0.60 = 0.1024
Conc P @ 0.40 = 0.0800
$0.1824 \times 14.97 \times 91.67 = 250.31^{'K}$

$770^{'K}$

$\boxed{\text{Design L.L+I negative moment} = 770^{'K}}$

Live load moments (simple span)

Center to center span = 90'-0"

Impact factor $I = \frac{50}{90+125} = 0.232$

From AASHTO appendix

$M_{LL} = 1344.4 \times \frac{7.5}{5.5 \times 2} = 916.63^{'K}$

$M_{L.L+I} = 916.63 \times 1.232 = \underline{1129.3^{'K}}$

End shear $V = 64.5 \times 1.232 \times \frac{7.5}{5.5 \times 2} = \underline{54.18^{K}}$

Live load analysis:

Exterior girders:

Span #1: (Lane)

Positive moment

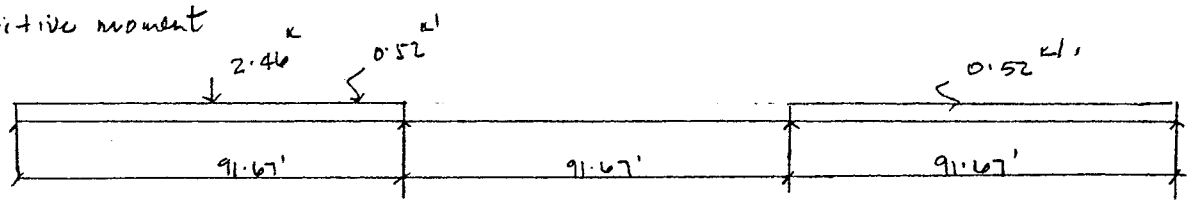

span #1 = 0.093

span # 3 = 0.0085

$0.1015\,(0.52) \times 91.67^2 = 443.53^{K}$

concentrated P = $0.20 \times 2.46 \times 91.67 = 45.0^{K}$

488^{K} ←

Positive moment:

Span #1 (Truck load)

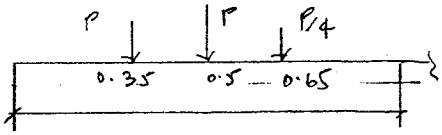

P @ 0.5 = 0.20

P @ 0.35 = 0.14

P/4 @ 0.65 = 0.033

0.373

maximum positive moment = $0.373 \times 2.45 \times 91.67 = 83.77^{K}$

midspan (Lane)

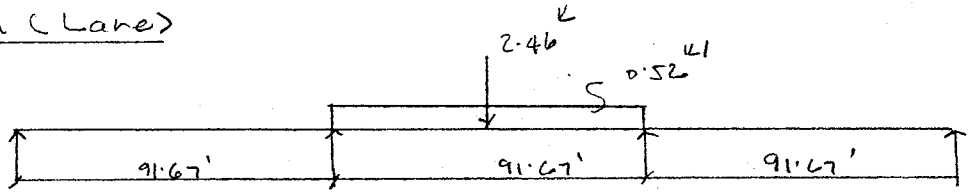

Positive moment @ 0.5 pt

$= 0.075 \times 0.52 \times 91.67^2 = 327$

$= 0.175 \times 2.46 \times 91.67 = 39.5$

366.5^{K}

Live Load Negative moment:

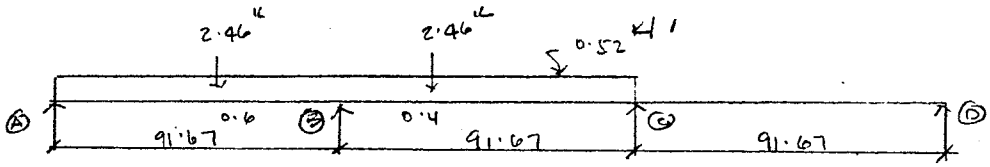

Live load analysis:

maximum negative moment @ B

span #1 loaded = 0.0667

span #2 loaded = 0.0500

$0.1167 \times 0.52 \times 91.67^2 = 510^{1K}$

Const P. @ 0.60L = 0.1024

Const P @ 1.4L = 0.080

$0.1824 \times 2.46 \times 91.67 = 41.2^{1K}$

551.2^{1K}.

simple span moment:

$M_{L.L+I} = 1.232[\,0.125 \times 0.52 \times 91.67^2 + 0.25 \times 2.46 \times 91.67\,]$

$= 742^{1K}$.

Design moments:

A. Exterior girder

D.L. positive moment = 2011.87^{1K}

L.L+I positive moment = 488^{1K}

L.L+I negative moment = 551.2^{1K}

Simple span LL+I moment = 742^{1K}

B. Interior girder:

D.L positive moment = 2056.57^{1K}

L.L+I, positive moment = 914.6^{1K}

L.L+I negative moment = 770^{1K}

simple span LL+I moment = 1129.3^{1K}

Properties of Composite section

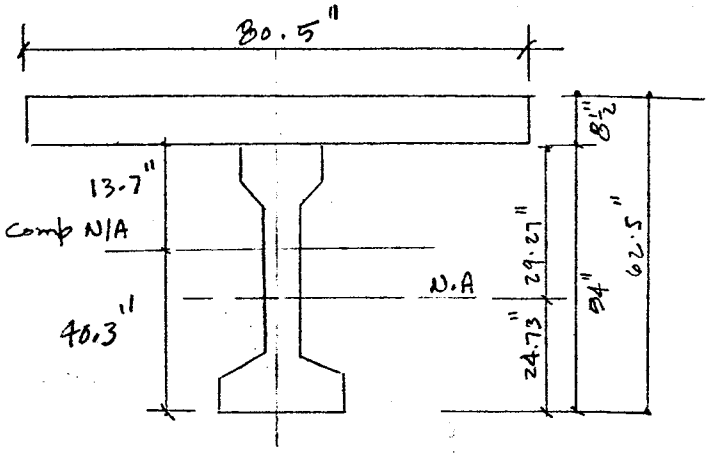

slab f'_c = 4000 psi $E = 3.63 \times 10^3$ ksi
Girder f'_c = 5000 psi. $E = 4.06 \times 10^3$ ksi

$E_G / E_S = 4.06/3.63 = 1.118$

$12t = 12 \times 8.5 = 102''$
c.l c = 7'6" = 90" ← governs
1/4 L = 273"

equivalent width = $90 \times 1/1.118 = 80.5''$

	A	Y	Ay	Ay^2	I_o
Slab	684.25	33.52	22936	768817	4120
Girder	789	0			260,730
	1473				264850

$\bar{y} = 22936/1473 = 15.57'$

$I_{comp} = 264850 + 684.25(17.95)^2 + 789(15.57)^2 = 676\,600 \text{ in}^4$

Slab Y_t = 22.2 in S_t = 30 504 in^3.
Girder Y_t = 13.7 in S_t = 49 386 in^3
Girder Y_b = 40.3 in S_b = 16790 in^3

Girder design:

Homogenous section stresses (Interior girder governs)

	Top	Bottom
Slab DL_T = 825 x12000/8908 =	1111	—
Slab DL_B = 825 x12000/10543 =	-	939
diaph DL_T, 89.4x12000/8908 =	120.5	—
diaph DL_B, 89.4x12000/10543 =	—	102
Gird+Builtup, DL_T, (850.87+51.76)(12000)/8908 =	1216	—
Gird.+Builtup DL_B, (850.87+51.76)(12000)/10543 =	—	1027
Barrier+Railing DL_T 45.54x12000/49386 =	11	—
Barrier+Railing DL_B 45.54x12000/16790 =	—	33
Future Wearing DL_T 194x12000/49386 =	47	
Future Wearing DL_B 194x12000/16790 =	-	139
$(LL+I)_T$ 914.6 x12000/49386	222	
$(LL+I)_B$ 914.6x12000/16790		654
	2727.5	2894

Allowable tension = 212 psi

$f_b' = 2894 - 212 = 2682$ psi

Appr Prestress force required:

$e = 24.73 - 5.5 = 19.23''$

$y_b = 24.73''$

$r = I/A$

(a) $P_F = f_b' A / \left(\frac{ey_b}{r^2} + 1 \right)$

$= \frac{2682 \times 789}{\left(\frac{19.23 \times 24.73 \times 789}{260730} + 1 \right)}$

$= 867.5^K$

(b) $P.F = \frac{M_{D.L} + m_b M_{LL} - f_t' K_b A}{e + K_t}$

$m_b = I/c_b / I'/c_b' = (260730/24.73)/(676600/40.3) = 10543/17906 = 0.59$

$\Sigma M_{D.L} = 2056 - 194 = 1862^{'K}$

$\Sigma M_{LL} = 914.6 + 194 = 1108.6^{'K}$

$K_t = I/Ay_t = 260730/789 \times 29.27 = 11.29''$

$P.F = [(1862 + 0.59 \times 1108.6)(12) - 0.20 \times 11.29 \times 789] / (19.23 + 11.29)$

$= 930.9^K$

Girder Design: (contd)

steel design:

$U = 1.3D + 2.86(L.L + I)$

$= 1.3(2056) + 2.86(914.6)$

$= 5288.6^{K}$

$d = 54 - 5.5 - 5.5/2 = 45.75''$

$F_u = 5289 \times 12 / 45.75 = 1387^{K}$

$A_s = 1387 / 270 \times 0.9 = 5.77 \text{ in}^2$

No of $\frac{1}{2}''\phi$ strands = 38

Prestress Loss:

$\Delta f_s = 45000$ psi AASHTO spec. p125.

$\therefore f_s = 0.7 \times 270000 - 45000 = 144000$ psi

$P_T = (812 + 881)/2 = 847$

$A_s = 847/144 = 5.88 \text{ in}^2$

Use 40 - $\frac{1}{2}''\phi$ 7-wire prestressing strands

$K_b = \frac{260730}{789 \times 24.73} = 13.36''$

$P_F = 881^{K}$

$P_i = 881 \times \frac{0.7 \times 270}{144} = 1156.7^{K}$

$f_t = \frac{F_o}{A} - \left(\frac{F_o e - M_a}{A K_b}\right) = \frac{1156.7}{789} - \left(\frac{1156 \times 19.23 - 860.25 \times 12}{789 \times 13.36}\right)$

$= 1466 - 1131 = \underline{335 \text{ psi}}$. < 424 psi. o.k.

Girder design (Contd)

$$f_b = \frac{1156.7}{789} + \left(\frac{1156 \times 19.23 - 860.25 \times 12}{789 \times 13.36}\right)$$

$$= 14.66 + 11.31 = \underline{2597.\ \text{psi.}}$$

Properties of I-Beam Transformed.

steel centroid:

$\bar{x}$

$11 \times 2.0 = 22.0$
$11 \times 4.0 = 44.0$
$9 \times 6.0 = 54.0$
$9 \times 10.0 = 90.0$
$210/40 = 5.25''$

$A_s = 40 \times 0.153 = 6.12\ in^2.$

$A_n = 6.12(6.77 - 1) = 35.35\ in^2.$

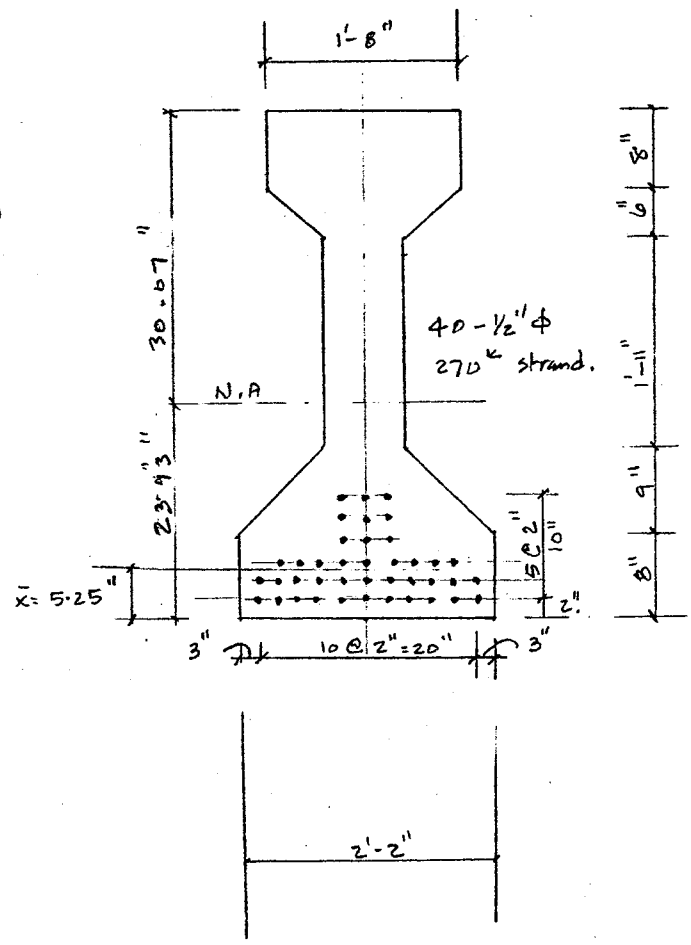

	A	y	Ay	Ay^2	I_o
Girder	789	-	-		260.730
steel	35.35	18.56	656	12177	
	824.35				

260730
12177
272907
(−) 602
272305 in⁴ — I_x

$t = \frac{656}{824.35} = 0.796 \times 656$

Girder design: (Contd)

$y_b = 24.73 - 0.80 = 23.93''$ $\quad S_b = 272305/23.93 = 11379 \text{ in}^3$

$y_t = 29.27 + 0.80 = 30.07''$ $\quad S_t = 272305/30.07 = 9055 \text{ in}^3$

$K_t = I/Ay = 272305/824.35 \times 30.07 = 10.98''$

$K_b = I/Ay = 272305/824.35 \times 23.93 = 13.80''$

Properties of Composite section w/ I-beam Transformed.

	A	Y	Ay	Ay^2	I_o
Girder	824	-	-		272305
slab	684	34.57	23646	817438	4119
	1508				276424
					817438
					1093862
					(-) 370778
					723084

$6 = 23646/1508 = 15.68''$

$\times 23646$

slab $Y_t = 30.07 - 15.68 + 8.5 = 22.89''$ $\quad S_t = 723084/22.89 = 31589 \text{ in}^3.$

Girder $Y_t = 14.39''$ $\quad S_t = 723084/14.39 = 50249 \text{ in}^3.$

Girder $Y_b = 39.61''$ $\quad S_b = 723084/39.61 = 18255 \text{ in}^3$

$$m_b = \frac{I/c_b}{I'/c_b} = \frac{272305/23.93}{723084/39.61} = 11380/18255 = 0.623$$

$$m_t = \frac{I/c_t}{I'/c_t} = \frac{272305/30.07}{723084/14.39} = 9055/50249 = 0.18.$$

Girder Design:

ck. Homogenous section stresses:

	Top	Bottom
Slab DL_T : 825x12000/ 9055	1093	–
Slab DL_B : 825x12000/ 11379	–	870
diaph DL_T : 89.4x12000/ 9055	118.5	–
diaph DL_B : 89.4x12000/ 11379	–	94.3
Gird + Builtup$_T$: 920.63x12000/ 9055	1220	–
Gird + Built up DL_B 920.63x12000/11379	–	971
Barrier + Railing DL_T : 45.54x12000/ 50249	11	–
Barrier + Railing DL_B : 45.54x12000/18255	–	30
Fu. Wear DL_T : 194x12000 / 50249	46.4	–
Fu. Wear DL_B : 194x12000 / 18255	–	127.52
$(LL+I)_T$: 914.6x12000/ 50249	218.42	–
$(LL+I)_B$: 914.6x12000/ 18255		601.2
	2707.3	2694

use 40 - ½" ϕ 270^K strands.

$f_{ci}' = 4100$ psi

$P_i = 1156.7^K$

$P_o = 881^K$

$f_c' = 5000$ psi.

Girder design:

check Initial stresses:

$P_i = 1156.7^K$

$$f_t = \frac{P_i}{A} - \frac{P_i e}{S_t} + \frac{M_G}{S_t}$$

$$= \left[\frac{1156.7}{824.35} - \frac{1156.7 \times 18.68}{9055} + \frac{851 \times 12}{9055}\right](1000)$$

$= 1403 - 2386 + 1128 = (+)145$ psi o.k.

$$f_b = \frac{P_i}{A} + \frac{P_i e}{S_b} - \frac{M_G}{S_b}$$

$$= \left[\frac{1156.7}{824.35} + \frac{1156.7 \times 18.68}{11379} - \frac{851 \times 12}{11379}\right](1000)$$

$= 1403 + 1899 - 897 = (+)2405$ psi O.K.

$f_{ci} = 4100$ psi

check final stresses: (In position)

Prestress forces:

$$f_t = \frac{P_f}{A} - \frac{P_f e}{S_t} = \frac{881}{824.35} - \frac{881 \times 18.68}{9055} = 1069 - 1817 = (-)748 \text{ psi.}$$

$$f_b = \frac{P_f}{A} + \frac{P_f e}{S_b} = \frac{881}{824.35} + \frac{881 \times 18.68}{11379} = 1069 + 1446 = +2515 \text{ psi}$$

Dead load:

$f_t = 1862 \times 12000/9055 = 2468$ psi

$f_b = 1862 \times 12000/11379 = (-)1964$ psi

$F_{D.L}$ + Live load + Impact

$f_t = 1108.6 \times 12000/50249 = 264.8$ psi

$f_b = 1108.6 \times 12000/18255 = (-)729$ psi.

P.F + D.L $f_t = -748 + 2468 = 1720$ psi

$f_b = 2515 - 1964 = 551$ psi

P.F. + D.L + L.L + I

$f_t = 1720 + 265 = 1985$ psi $f_c = 1985/0.4 = 5000$ psi.

$f_b = 551 - 729 = (-)178$ psi $< 6\sqrt{5000} = 424$ psi

Girder Design

check for ultimate capacity:

$$u = \frac{1.3}{\phi}[D + 2.2(L+I)]$$

$\phi = 1.00$ for flexure
$\phi = 0.9$ for shear.

$$M_u = A_s f_{su} d\left[1 - \frac{0.6\rho f_{su}}{f'_c}\right]$$

$$d = 54 + 8 - 5.88 = 56.12 \text{ in}$$

$$\rho = \frac{A_s}{bd} = \frac{40 \times 0.153}{80 \times 56.12} = 0.00136$$

$$f_{su} = f_s'\left(1 - \frac{0.5\rho f_s'}{f'_c}\right)$$

$$= 270\left(1 - \frac{0.5 \times 0.00136 \times 270}{5}\right) = 260.1 \text{ ksi.}$$

check N.A

$$t > \frac{1.4 d \rho f_{su}}{f'_c} = 1.4 \times 56.12 \times 0.00136 \times 260.1/5 = 5.56''$$

$t = 8'' > 5.56$ in $\therefore$ N.A within flange.

$$M_u = 40 \times 0.153 \times 260.1 \times 56.12\left(1 - \frac{0.6 \times 0.00136 \times 260.1}{5.0}\right)(0.9)/12$$

$$= 6415^{1K} \text{ (allowable)}$$

ultimate moment: (simple span condition)

$$M_u' = 1.3[2056.57 + 2.2(1129.3)] = \underline{5903.4^{1K} < 6415^{1K}}$$

O.K

LK steel %

$$\rho \frac{f_{su}}{f'_c} \leq .30 \qquad \rho \frac{f_{su}}{f'_c} = 0.00136 \times 260.1/5 = 0.07 < 0.3 \quad \text{OK.}$$

Req $A_s = 0.003 A_c$ @ time of transfer

$$= 0.003 \times 789 = 2.37 \text{ in}^2 < 40 \times 0.153 = 6.12 \text{ in}^2 \checkmark$$

O.K

(Girder Design Contd)

Path of prestressing stl.

at end:

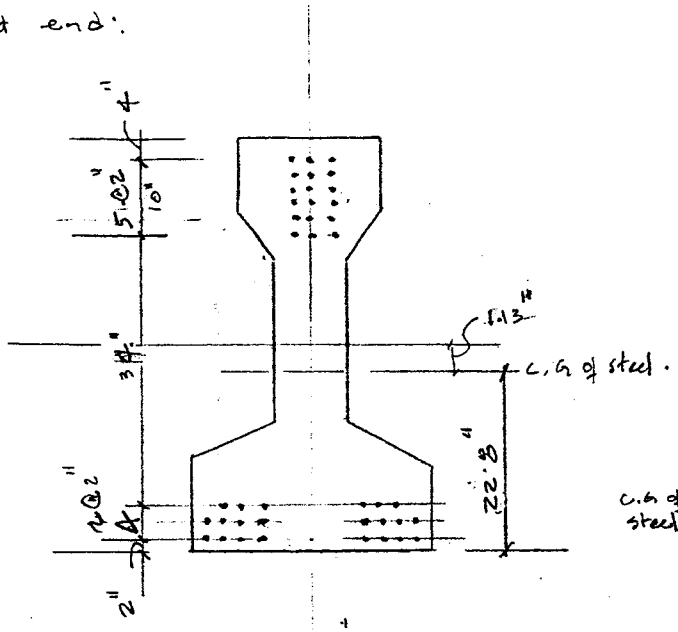

at ℄

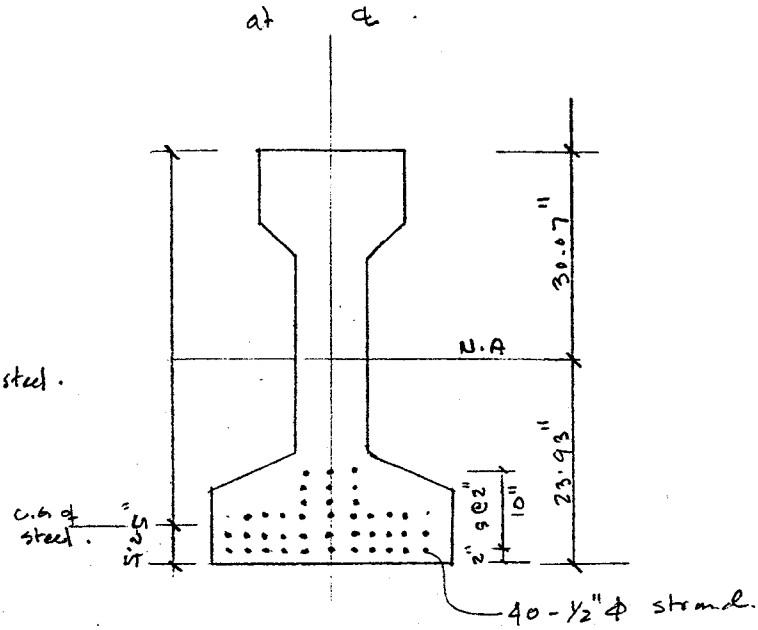

8 @ 2" = 22"
8 @ 4" = 32"
6 @ 6" = 48"
18 @ 45" = 810
912/40 = 22.8"

11 @ 2" = 22"
11 @ 4" = 44
9 @ 6" = 54
9 @ 10 = 90
210/40 = 5.25"

Path of Prestressing steel (Contd)

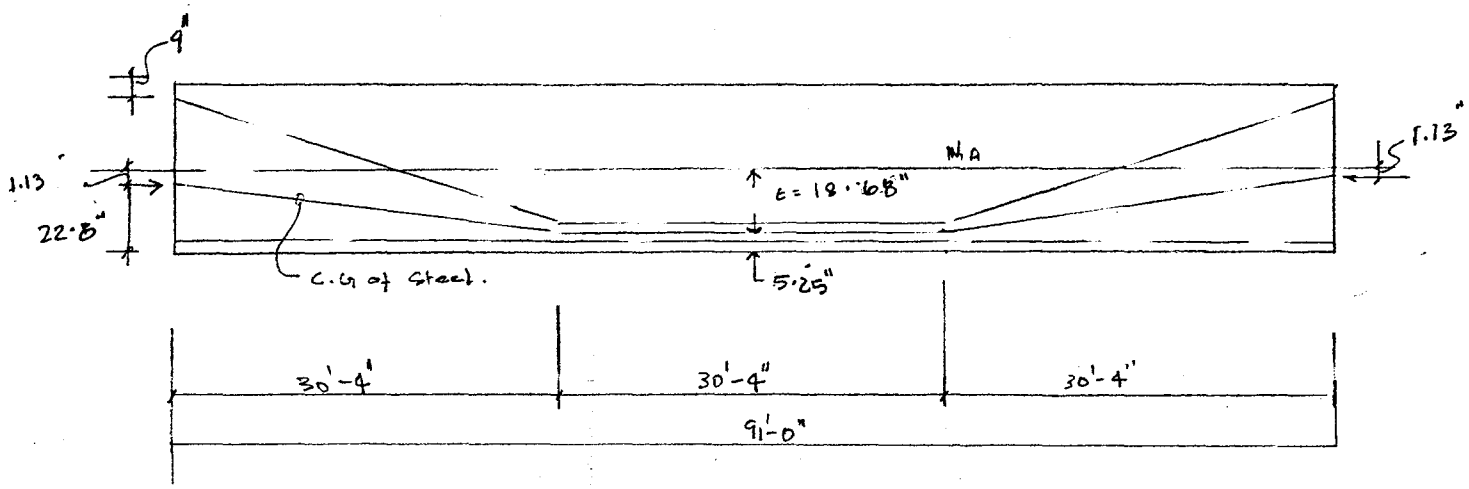

@ 0.25 pt.

$x = 30.33 - 22.75 = 7.58'$

$y = 45 \times \frac{7.58}{30.33} + 5.25'' = 16.49''$

$x_0 = \frac{1}{40 \times 0.153}[18 \times 0.153 \times 16.49'' + 22 \times 0.153 \times 5.25] = 10.31''$

$e_{1/4} = 23.93 - 10.31 = 13.62''$

Girder design (contd)

check stresses at end.

a. Initial stresses:

$P_i = 1156.7^K$

$e = 1.13''$

$$f_t = \frac{P_i}{A} - \frac{P_i e}{S_t} + M_G^D / S_t$$

$$= \frac{1156.7 \times 1000}{824.35} - \frac{1156.7 \times 1.13 \times 12{,}000}{9055} = 1403 - 144 = 1259 \text{ psi.}$$

$$f_b = \frac{1156.7 \times 1000}{824.35} + \frac{1156.7 \times 1.13 \times 1000}{11379} = 1403 + 115 = 1518 \text{ psi.}$$

b. final stresses:

$P_e = 881^K$

$$f_t = 1403\left(\frac{881}{1156.7}\right) - 144\left(\frac{881}{1156.7}\right) = 1069 - 110 = 959 \text{ psi}$$

$$f_b = 1069 + 115\left(881/1156.7\right) = 1069 + 110 = 1180 \text{ psi} \quad \text{O.K.}$$

check design @ 1/4 pt.

L.L @ 1/4 pt.

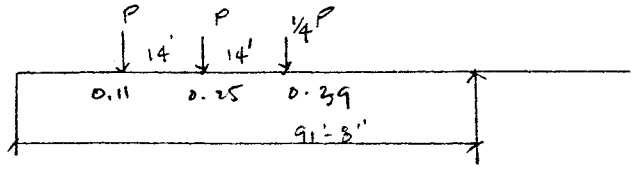

Moment at 0.25 pt

P @ 0.25 = 0.1469
P @ 0.11 = 0.0690
1/4 @ 0.39 = 0.0313
0.2472.

$M_{L.L+I}$ @ 0.25 pt = 0.2472 × 26.62 × 91.67
= 603.23 ^1K

D.L. @ 1/4 pt

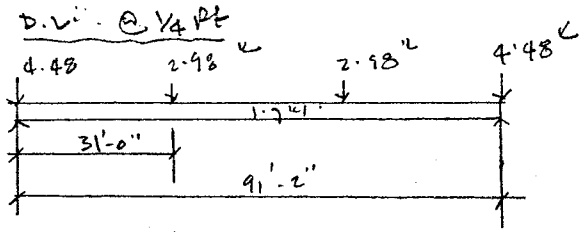

R = 84.95 K

M @ 1/4 pt = 80.47 × 22.8 − 0.5 × 1.7 × 22.8²
= 1393 ^1K

Homogenous Section stresses @ 1/4 pt.

D.L + L.L.

Top fiber stress = $\frac{1393 \times 12000}{9055} + \frac{603.23 \times 12000}{50249}$

= 1846 + 144 = 1990 psi.

Bottom fiber stress

= $\frac{1393 \times 12000}{11379} + \frac{603.23 \times 12000}{18255}$

= 1469 + 396 = 1865 psi

Check design @ 1/4 pt (cont'd)

$$\frac{e y_b}{r^2} + 1 = \frac{13.92 \times 25.93 \times 789}{240730} + 1 = 2.63$$

$$P_{F_{req}} = \frac{f_b A_c}{\left(\frac{e y_b}{r^2} + 1\right)} = \frac{1865 \times 789}{2.63} = 559.5^{k} < 832^{k}$$

$$P_{i_{req}} = P_F \times \frac{189.7}{144} = 559.5 \times \frac{189.7}{144} = 737^{k} < 1132^{k}$$

$$A_s = P_i/189 = P_F/144 = 3.91 \text{ in}^2 \quad \text{o.k}$$

stresses @ 1/4 pt.

Initial stresses -

$P_i = 1132^{k}$

M_g @ 1/4 pt $= 37.4 \times 22.75 - 0.5 \times 0.822 \times 22.75^2 = 638^{'k}$

$$f_t = \frac{P_i}{A} - \frac{P_i e}{S_t} + \frac{M_g}{S_t}$$

$$= \frac{1132}{789} - \frac{1132 \times 13.92}{9090} + \frac{638 \times 12}{9090}$$

$$= 1435 - 1733 + 842 = 544 \text{ psi} \quad \text{o.k}$$

$$f_b = \frac{P_i}{A} + \frac{P_i e}{S_b} - \frac{M_g}{S_t}$$

$$= \frac{1132}{789} + \frac{1132 \times 13.92}{11379} - \frac{638 \times 12}{11379}$$

$$= 1434 + 1385 - 672 = (+)\ 2147 \text{ psi} < 2334 \text{ psi} \quad \text{o.k.}$$

check design @ 1/4 pt (cont'd).

2. Final Stresses –

$P_f = 832^k$

$$f_t = \frac{P_f}{A} - \frac{P_f e}{S_t} + 1.99$$

$$= \frac{832}{789} - \frac{832 \times 13.92}{9090} + 1.99 = 1.054 - 1.274 + 1.99$$

$= (+)1170$ psi < 2000 psi o.k.

$$f_b = \frac{P_f}{A} + \frac{P_f e}{S_b} - 1.865$$

$$= \frac{832}{789} + \frac{832 \times 13.92}{11374} - 1.865 = 1.054 + 1.018 - 1.865$$

$= (+)\ 207$ psi o.k.

Post-tensioned girder:

Prestress Loss

$\Delta f_s = 32000$ psi. (friction loss not included)
AASHTO p. 125

$\therefore f_s = 0.7 \times 270{,}000 - 32000 = 157\,000$ psi.

Try 40 - ½" φ 7 wire uncoated stress-relieved strands.
w/ parabolic path.

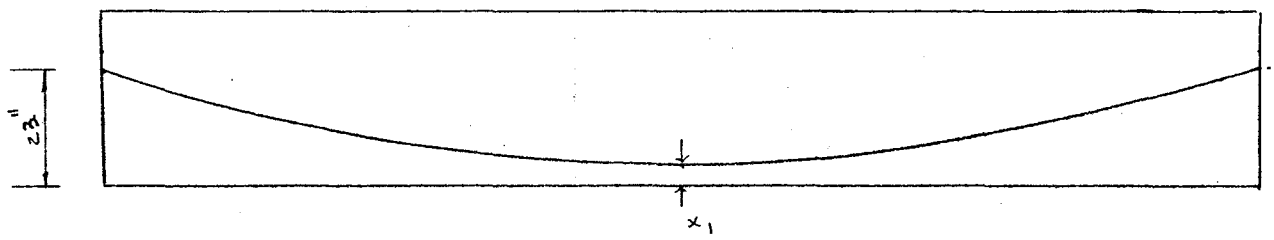

midspan:

$x_1 = 5.5"$ (c.g. of steel).

$I_x = 272305$ in^4.

$\theta = 0.07$ rad.

Length effect $KL = 0.0015 \times 91 = 0.136$ (AASHTO p121)

curvature effect $\mu\theta = 0.30 \times 0.07 = 0.021$

Total $= 0.157$

$f_{s_f} = (0.843)(157{,}000) = 132.4$ ksi.

∴ overtension by 12 ksi to overcome friction loss and for effective prestress of 144 ksi.

$P_F = 881^K$

Post tensioned girder:

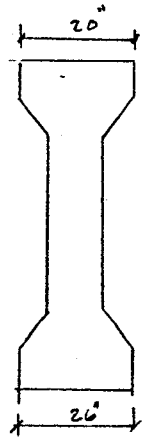

1. Girder section properties:

wt: 822 #/'
Area: 789 in²
I_x = 260730 in⁴
y_b = 24.73 in
S_b = 10543 in³
S_t = 8908 in³.

2. Girder design:

f'_c = 5000 psi
f'_s = 270000 psi
f_{si} = 0.70 f'_s = 189000 psi
ℓ = 91'-2" (AASHTO type IV std girders)

Design moment:

D.L positive moment = 2056.57 'K
LL+I positive moment = 914.6 'K
LL+I negative moment = 770 'K
Simple span LL+I moment = 1129.3 'K

Composite section:

I = 676600 in⁴
Slab y_t = 22.2 in S_t = 30504 in³.
Girder y_t = 13.7 in S_t = 49386 in³
Girder y_b = 40.3 in S_b = 16790 in³.

Homogenous section stresses:

Top: 2727 psi
Bottom: (-)2894 psi
Allowable tension = 212 psi
∴ f_b' = 2894 − 212 = 2682 psi.

E.M. PLUMMER
CONSULTING ENGINEERS
STRUCTURAL . CIVIL ENGINEERS
CLIENT:

SUBJECT 67th Avenue Phoenix
SHEET NO. 42 OF
BY S.H. DATE 12.7.82
JOB NO.

Post tensioned girder.

End block detail:

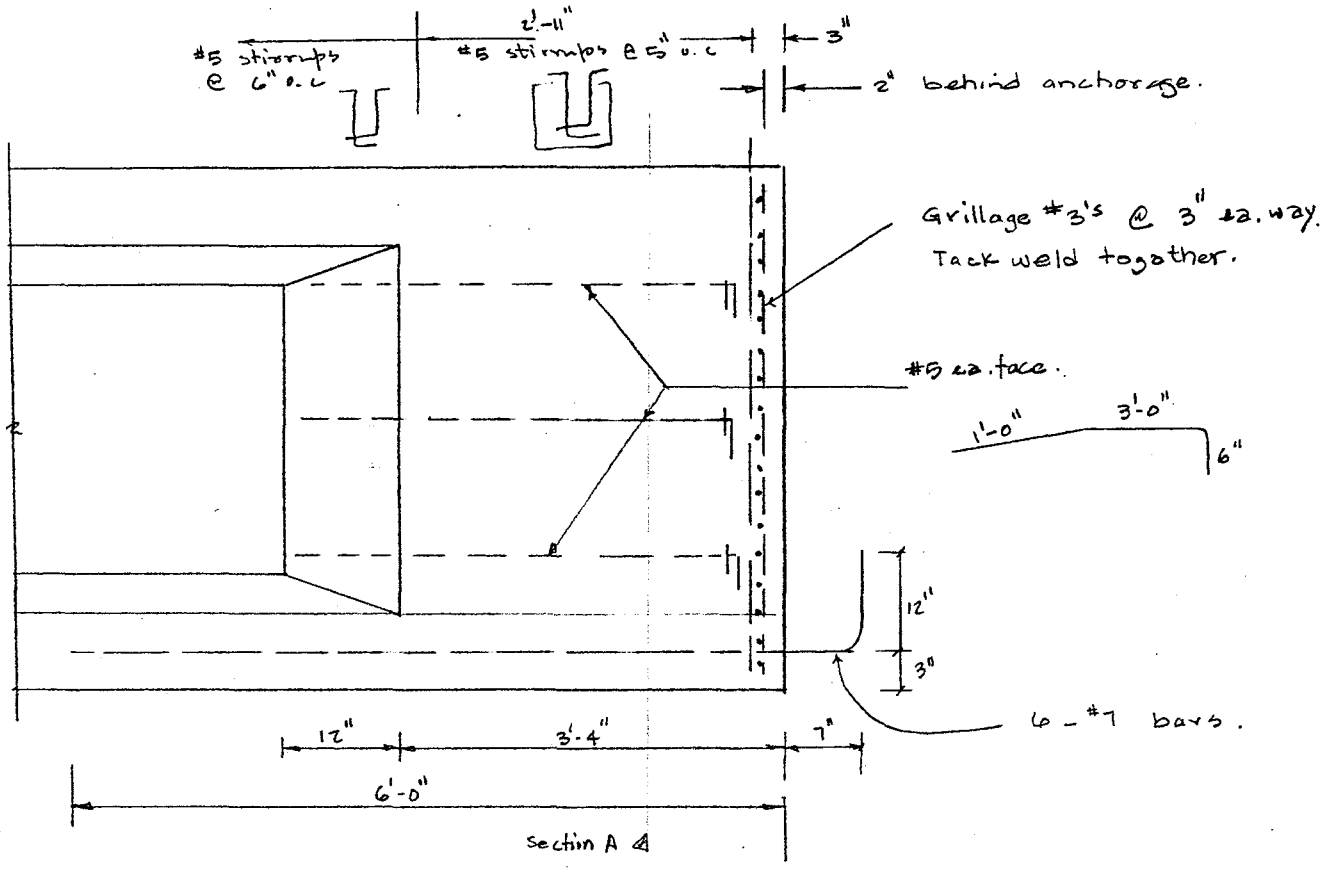

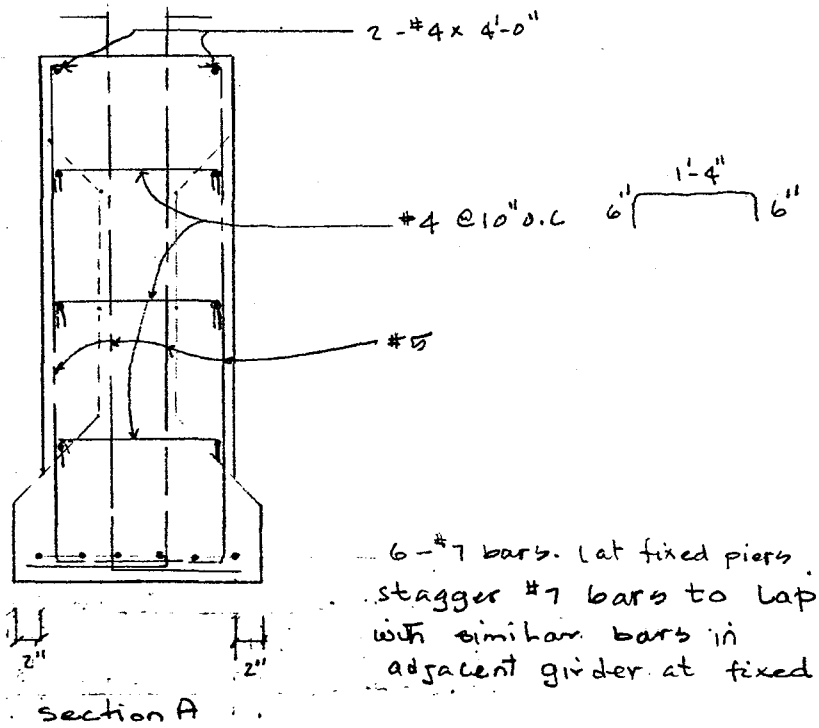

6 - #7 bars. (at fixed piers only)
stagger #7 bars to lap with similar bars in adjacent girder at fixed piers.

Girder Design (Cont'd)

Girder shear

1. Dead load shear:

Exterior girder = 103.1 − 2.24 = 100.9 K

Interior girder = 84.95 − 4.48 = 80.47 K

2. Live load shear

Exterior girder:

Truck loading = 16 K × 2/7.5 × 1.23 = 5.25 K

Lane load = 0.64 × 0.5 × 2/7.5 × 1.23 = 0.11 K/'

Lane load 26 K = 26 × 0.5 × 2/7.5 × 1.23 = 4.27 K

Interior girder

Truck loading = 16 K × 7.5/5.5 × 1.23 = 26.8 K

Lane load = 0.64 × 7.5/(5.5×2) × 1.23 = 0.53 K/'

Conc ✓ = 26 × 7.5/(5.5×2) × 1.23 = 21.62 K/'

Interior girder governs in combined loading.

3. L.L Shear @ expansion end.

(a) Truck loading:

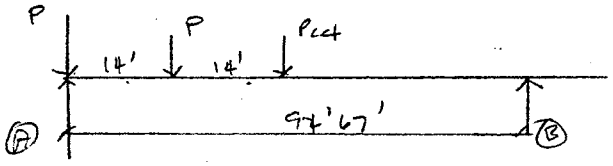

M @ B P @ 0.15 = 0.0360

P/4 @ 0.30 = 0.0192

0.0552

Mom @ B = 0.0552 × 26.8 × 97 = 134.62 K

Girder shear (cont'd)

Influence Coefficients = 1.00 + 0.86 + 0.184

= 2.04 P = 2.04 × 26.8 = 54.67 K

$\Delta M/L$ = 134.62/91 = (−) 1.48 K

53.19 K

(b) Live load shear @ exp end.

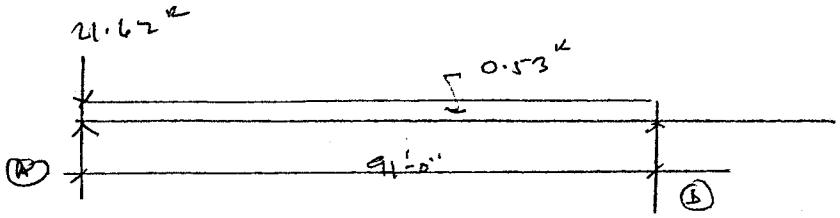

L.L moment @ B = 0.53 × 0.1071 × 91² = 470 'K

V @ = 0.53 × 45.5 = 24.11

+ 21.62

(−) $\Delta M/L$ = 470/91 = (−) 5.16

40.57 K

4. L.L Shear @ continuous end.

(a) Truck loading:

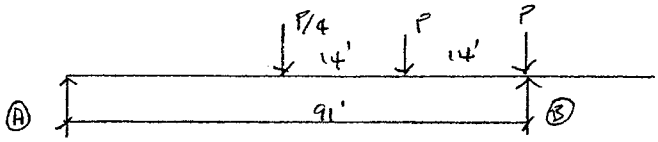

Moment @ B

P @ 0.85 = 0.0574

0.0919/4 P/4 @ 0.70 = 0.0230

0.0804

Mom @ B = 0.0804 × 26.8 × 91 = 196 'K

L.L Shear

1.00 P
0.85
0.18
2.03 × 26.8 = 54.4

$\Delta M/L$ = 196/91 (−) 2.15

52.3 K

Girder shear:

Max end shear.

L.L shear = 53.19 K
D.L shear = 80.47 K
133.6 K ←

5. L.L shear at points + D.L

(a) L.L V @ 0.20

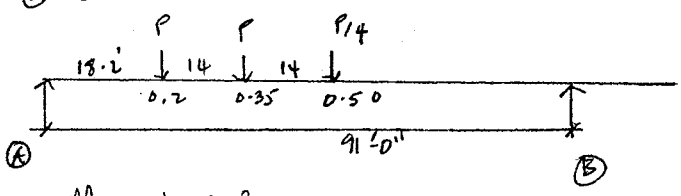

Moment @ 13

P = @ 0.20 = 0.0514
P @ 0.35 = 0.0798
P/4 @ .50 = 0.026
0.157 x 26.8 x 91 = 383.4 K

V @ A w/ wls @ 0.2 pt.

R_A = 0.800
0.660
P/4 0.130
1.59 x 26.6 x 1 = 42.3 K

$\Delta M/L$ = 383.4/91 = (+) 4.21 K
46.5.1 ← L.L

D.L = 80.47 − 2.18 x 20 = 46.87 K D.L
93.38 K TL

(b) L.L V @ 1/3 pt.

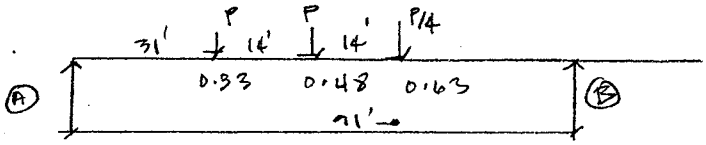

M @ B:
P @ 0.33 = 0.07817
P @ 0.47 = 0.0972
P/4 @ 0.61 = 0.0256
0.2009 x 26.8 x 91 = 490 K

Girder shear (Loads)

$R_A = 0.670$
$- 0.530$
$0.61/4 = 0.153$
$1.353 \times 26.8 = 36.26^k$

$4M/L = 440/91 = 5.38^k$
41.64^k ← L.L

D.L $= 80.47 - 2.18 \times 31 = 12.90^k$ ← D.L
54.23^k ← T.L

(C) L.L V @ 1/2 pt.

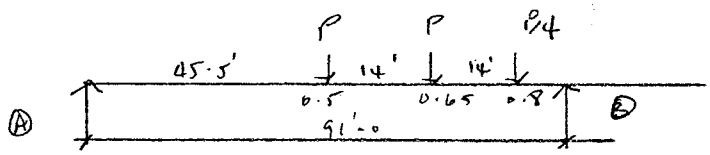

Mom @ B
P @ 0.50 = 0.1004
P @ 0.65 = 0.1000
$P/4$ @ 0.80 = 0.0202
$0.2206 \times 26.8 \times 91 = 538'^k$

$R_A = 0.50$
0.35
0.20
$1.05 \times 26.8 = 28.14$

$4M/L$ $538/91 = 5.91$
34.05 L.L
0 D.L
34.05 STL.

Girder Shear

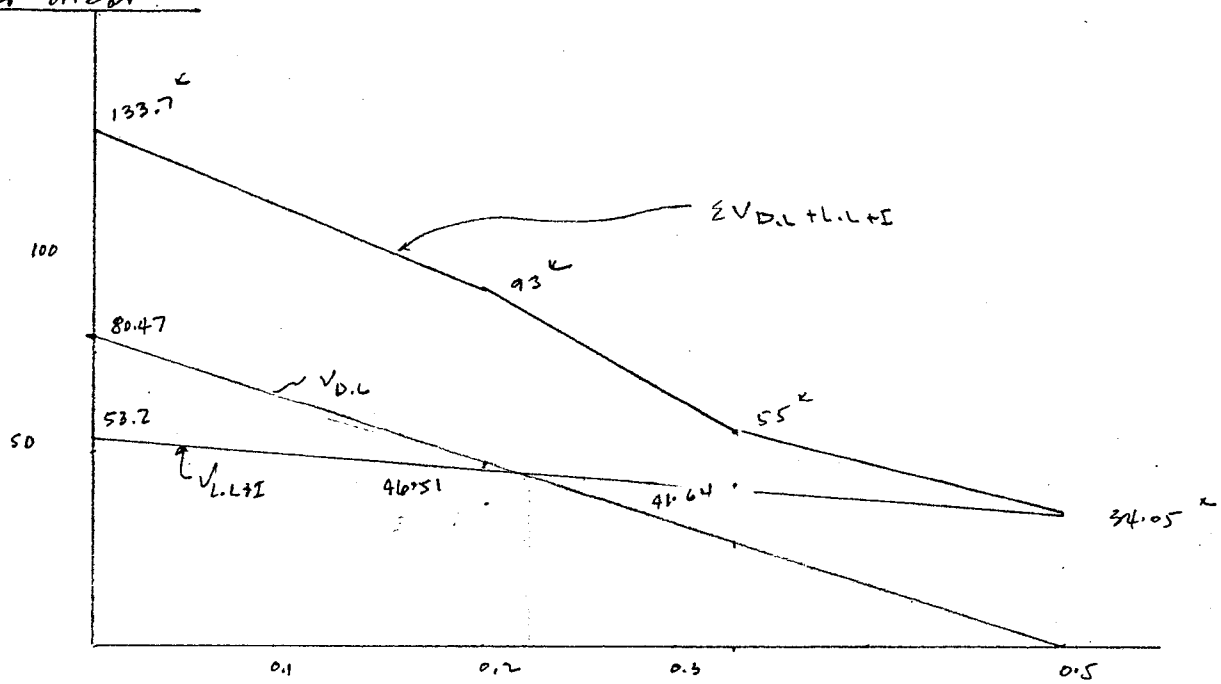

shear carried by concrete @ ℄ = 180 in x 8" x 7/8 x (54 - 5.66") = 60.9 k

shear carried by concrete @ Ends = 180 x 8 x 7/8 (54 - 21) = 41.58 k.

Girder design (cont'd)

Section Properties for Tensile stress @ N.A

1. At Girder N.A

Sect.	in²	ȳ	Ay
①	160	25.27	4043.2
②	36	19.27	693.7
③	170.2	10.64	1810.9
	366.2 A_G		6547.8 Q_G.

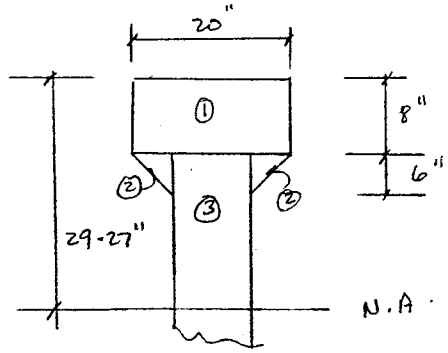

2. At Composite N.A

Sect	A in²	y	Ay
①	684	17.95	12278
②	160	9.7	1552
③	36	3.7	133
④	48	3	144
			14107 $\approx Q_c$.

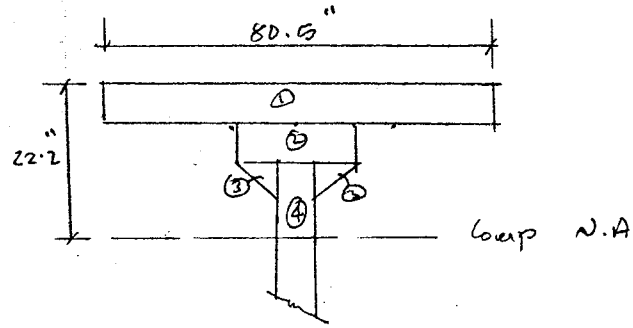

Tensile Shear Stresses:

Tendon to Horizontal

$\alpha = \tan^{-1}\left(\frac{21-5.7}{30.33\times12}\right) = 2.87°$ low

Neglect uplift force due to Prestress to Reduce.

for tensile stress

$V_c = 0.03 f'_c b'_w d$

$= 0.03 \times 5000 \times 8 \times 7/8\, d = 1050\, d.$

@ ℄ $V_c = 1050\,(54 - 5.7) = \underline{50.71^k}$

@ End $V_c = 1050\,(54 - 21) = \underline{34.65^k}$

Girder Design Contd)

1. Ck. shear @ 1.5d from support.

$1.5d = 1.5 \times 54/12 = 6.75'$

$V_{D.L} @ 6.75' = 80.47 - 2.18 \times 6.75 = 65.75^k$

$v_{D.L} = \frac{V_{D.L} Q_G}{Ib} = \frac{65750 \times 6547}{260730 \times 8} = 206$ psi

$V_{L.L+I} @ 6.75' = 50.1^k$

$v_{L.L} = \frac{V_{LL} Q_G}{Ib} = \frac{50100 \times 14107}{272000 \times 8} = 325$ psi

$v_{D.L+LL+I} = 206 + 325 = 531$ psi

$P_{working} = 881.^k$

$e \doteq 6.01$

$M_{working} = 881 \times 6.01 = 5295^{'k}$

$M_{D.L.@6.75'} = 80.47 \times 6.75 - 2.18 \times 0.5 \times 6.75^2 = 493^{'k}$

$f_{D.L} = \frac{493 \times 12 \times 6.79}{260,730} = 154$ psi

$f_c = \frac{881}{259} - \frac{5295 \times 6.79}{272000} + 0.154$

$= 1.117 - 0.132 + 0.154 = 1.139$ ksi

$f_b = \sqrt{v^2 + (f_c/2)^2} - f_c/2$

$= \sqrt{531^2 + (1139/2)^2} - 1139/2 = 778 - 569 = 209$ psi.

$s = \frac{A_s f_v}{v_b} = \frac{0.62 \times 20,000}{209 \times 8} = 7.41''$ (use 6")

Girder Design (Contd)

2. LL shear @ 0.25L

22.75'

$V_{D.L} = 80.47 - 2.1 \times 22.75 = 32.7^k$

$v_{D.L} = \frac{32700 \times 6547}{27000 \times 8} = 98.4$ psi.

$V_{L.L}$ @ 0.25 $= 44^k$

$v_{L.L} = \frac{44000 \times 13.26}{27200 \times 8} = 268$ psi.

$v_{T.L} = 99 + 268 = 367$ psi

$P = 881^k$

$f_c = \frac{881}{789} - \frac{881 \times 15.7 \times 6.8}{272000} + 0.033$

$= 1.12 - 0.346 + 0.033 = 807$ psi

$S_b = \sqrt{(268)^2 + (807/2)^2} - 404$

$= 484 - 404 = 80$ psi

$S = \frac{0.62 \times 20,000}{80 \times 8} = 18.6''$ use 12"

3. 1/4L pt to 1/2L pt
use #5 @ 15" o.c.

Positive moment @ Piers due to continuity.

Ref: PCA Engineering Bulletin.

$P_i = 1132^K$

$P_e = 881^K$

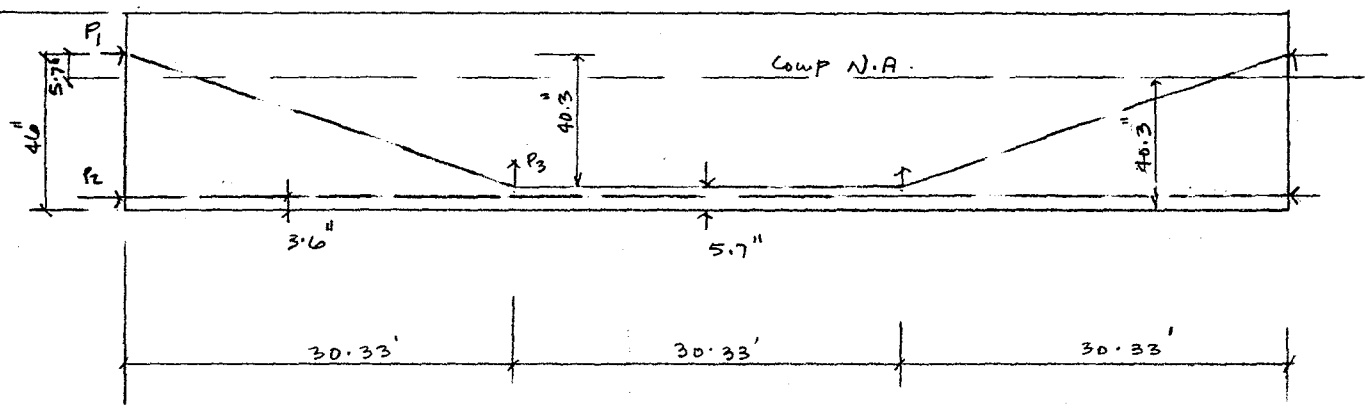

$P_1 = 15 \times 0.153 \times 144 = 330.5^K$

$P_2 = 25 \times 0.153 \times 144 = 550.8^K$

$\theta = \tan^{-1} \frac{40.3}{30.33 \times 12} = 6.32^\circ$

$P_3 = 330 \sin 6.318^\circ = 36.32^K$

$$(\text{P/s slope}) = \frac{P_1 d_1 L}{2EI} - \frac{P_2 d_2 L}{2EI} - \frac{P_3 L_1^2}{2EI} - \frac{P_3 L_1 L_2}{2EI}$$

$$\frac{P_1 d_1 L}{2EI} = 330.5 \times 5.7 \times 91 \times 12/2 = (+)\ 1{,}028{,}582^{"K}$$

$$-\frac{P_2 d_2 L}{2EI} = 550.8 \times 36.7 \times 91 \times 12/2 = (-)\ 11{,}037{,}041^{"K}$$

$$-\frac{P_3 L_1^2}{2EI} = 36.32 \times 364^2/2 = (-)\ 2{,}405{,}600^{"K}$$

$$-\frac{P_3 L_1 L_2}{2EI} = 36.32 \times 364 \times 364/2 = (-)\ 2{,}405{,}600^{"K}$$

(P/s slope) -14.82×10^6 "K / EI

For three span.

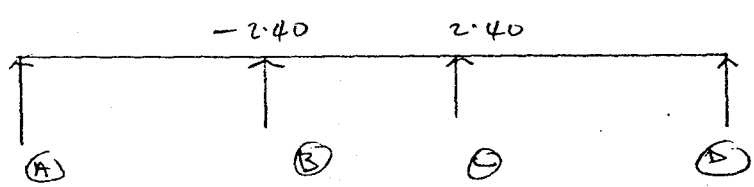

Girder design (contd)

At B $= (-)\frac{2.40\,EI}{91\times12}\left[-14.82\times10^{6}/EC\right] = 32571^{\,'K} = 2714^{\,'K}$

D.L creep restraint Moment (NOT adjusted by creep factor)

Assume continuity connection made 28 days after Prestress Release.

Exposure @ 40% Relative humidity and

ultimate shrinkage = 0.0006 in/in

$\epsilon_s = 0.0006\times40\times1.1 = 0.00026$ in/in

$M_s = \epsilon_s E_b A_b (e_c + t/2)$

$= 0.00026\times3.8\times10^{6}\times90\times8.5\,(17.95)/1000\times12$

$= 1130^{\,'K}$

Final Elastic shrinkage restraint moment

$= -1.20\times1130^{\,'K} = 1356^{\,'K}$ ←

~ three span.

L.L positive moment @ piers.

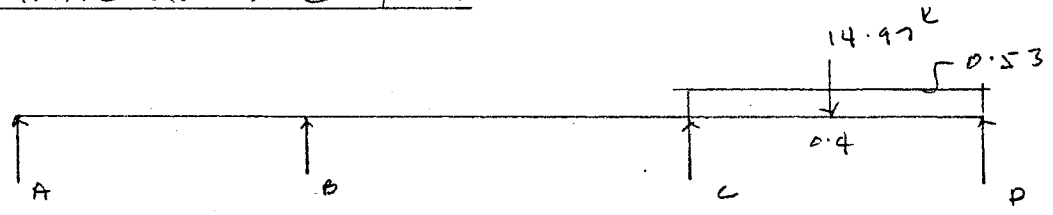

Positive moment at B.

w @ span #3 $= 0.0134\times0.53\times91^{2} = 58.81^{\,'K}$

P @ 0.4 $= 0.021\times14.97\times91 = 28.61^{\,'K}$

$87.42^{\,'K}$

For elastic modulus release @ strand $= 3.8\times10^{6}$ psi

Creep @ 20 years $= 0.4\times10^{-6}$ in/in/psi.

For release @ 24 hours

$= 1.8\times0.40\times10^{-6} = 0.72\times10^{-6}$

Volume/surface correction for Type IV AASHTO-PCI girders

$= 1.16\times0.72\times10^{-6} = 0.84\times10^{-6}$

Girder design (contd)

At 28 day 40% of creep has occurred leaving 60%.

$\therefore \; 60 \times 0.84 \times 10^{-6} = 0.50 \times 10^{-6}$

$\phi = \epsilon_s / \epsilon_c$ @ 28 days

$= \epsilon_c \times E = 0.5 \times 10^{-6} \times 4 \times 10^{6} = 2.0$

$1 - e^{-\phi} = 0.87$

$\left(\frac{1 - e^{-\phi}}{\phi}\right) = 0.43$

shrinkage + creep

$= (2714 - 0.86 \times 1852)(0.87) - 1356 \times 0.43$

$= 392.5^{k}$

Add L.L + I

$= 392.5 + 87.42 = 479.85^{k}$

$M_u = 1.3[D.L + 2.2(L.L + I)]$

$= 1.3[392.5 + 2.2 \times 87.42] = 760.27^{k}$

For $b = 26''$ $d = 51''$ $F = bd^2/12000$

$F = 26 \times 51^2/12000 = 5.64$

$f'_c = 5000$ psi

$f_{yL} = 60{,}000$ psi

$K_u = 760.27/5.64 = 1.35$ $A_u = 4.13$

$A_s = \frac{760.27}{4.13 \times 51} = 3.60 \text{ in}^2$

For #6 bars $= 3.60/.44 =$ bar 10 - #6 bars.
w 6 - #7

using prestress cables

$A_s = \frac{760.27}{270 \times 0.9} = 3.12$

Extend min of 5 strands for positive moment connection.

Girder Design (Contd)

Negative moment Reinf. over piers:

max^m. Negative LL+I moment = 770 ^{1k}

$M_u = 1.3[0 + 2.2(770)] = 2202$ ^{1k}

Fw $b = 26''$ $d = 57.75''$

$F = 26 \times 57.75^2/12000 = 7.23$

$K_u = 2307/7.23 = 319$ $A_v = 4.29$

$A_s = 2307/4.29 \times 57.75 = 9.31$ in^2 (use 10 - #9 bars)

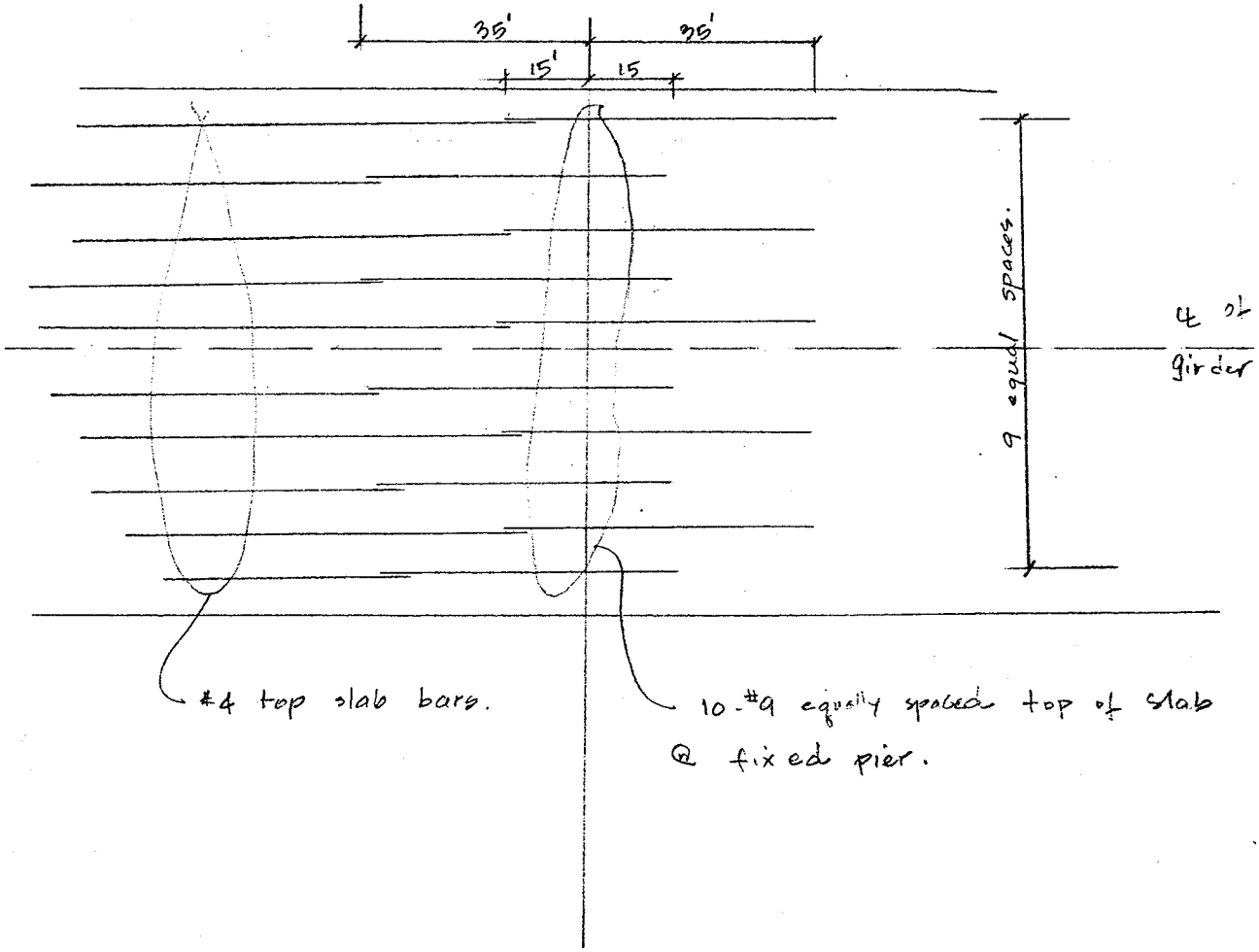

uplift due to Earthquake load :

Dead load to Rest from girder = 103.1 ↙

E.Q = 0.25 x 103.1 = 25.77 ↙

use 2 - 1½" ϕ x 3'-6" A.B w/ 12" bend.

Camber & Deflection

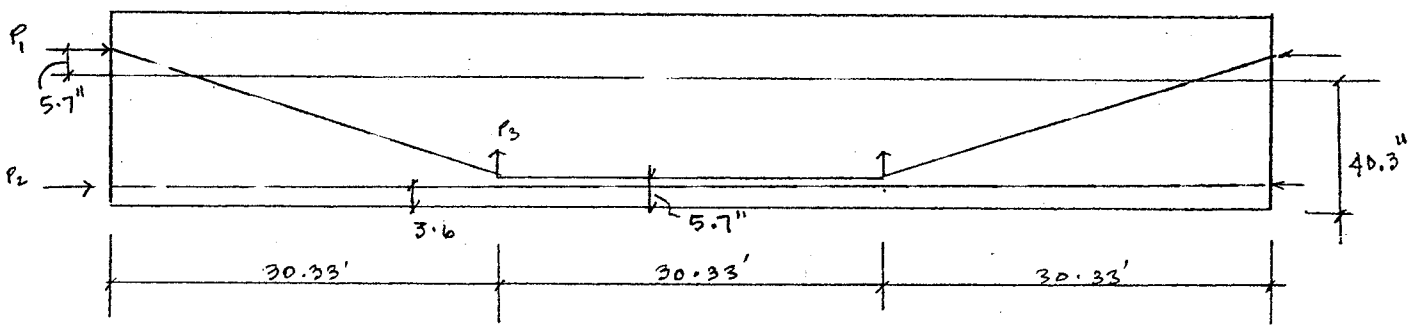

$P_1 = 330.5$ ↙

$P_2 = 550.8$ ↙

$P_3 = 36.32$ ↙

$E = 4.05 \times 10^6$ psi

$I = 260730$ in⁴

camber due to Prestress :

$$\Delta_1 = \frac{L^2}{8EI}(P_2 \times 36.7)$$

$$= \frac{(91 \times 12)^2 \times 550.8 \times 34.6}{8 \times 4 \times 10^3 \times 260730} = 2.88'' \uparrow$$

$$\Delta_2 = \frac{L^2}{8EI}\left[P_1(-5.7) + P_1(40.3) - \frac{P_1(40.3)}{3}(0.67)^2\right]$$

$$= \frac{P_1 L^2}{8EI}[28.57] = 1.42'' \uparrow$$

Dead load deflection :

$$\Delta_3 = \frac{5 \times 0.822 \times 91^4 \times 1728}{384 \times 4 \times 10^3 \times 260730} = 1.22'' \downarrow$$

$\Delta_{slab} = 1.18''$

Resultant camber @ mid span = 3.1" @ erection

final camber = 3.1 - 1.18 = 1.92"

Substructure Design

1. Superstructure loads:

D.L to piers:

exterior girders: R = 103.1 × 2 = 206.2

Interior girders R = 84.95 × 9 = 764.5

970.75 K

× 2

1941.5 K

D.L to abutments:

= 970.75 K

2. Live load to piers:

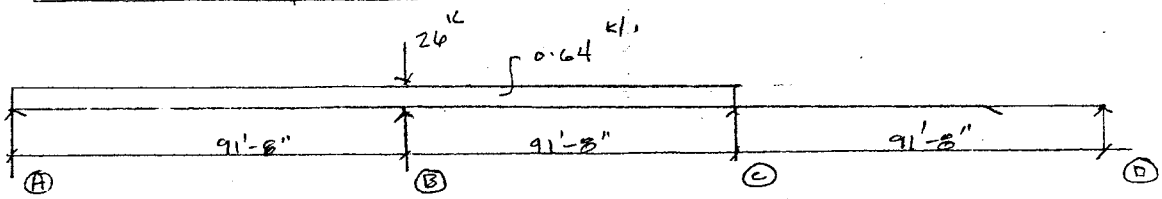

$\Delta M/L = 0.125 \times 0.64 \times 91.67^2 / 91.67 = 7.33$

× 2

= 14.67 K

S. Bm 0.64 × 91.67 = 58.67

P = 26.00 K

99.34 K × 4 Lanes

397.36 K

Side walk $\Delta M/L = 0.125 \times .085 \times 91.67 = 0.97$

S. BM = 0.085 × 91.67 = 7.79

8.76

406.13 K max^m per Position

Truck load;

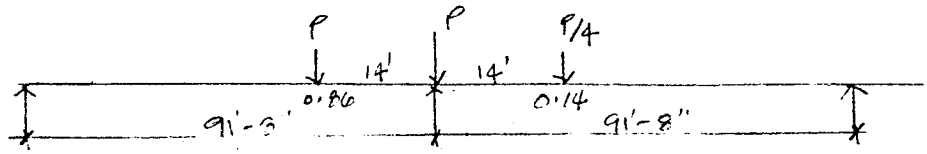

P – $\Delta M/L$ @ P @ 0.86 = 0.0584/91.67 = 0.00064

P/4 – $\Delta M/L$ @ P/4 @ 0.14 = = 0.00007

0.00071

P = 32 × 2.08 × 4 Lanes = 266.24 K

$\Delta M/L$ = 0.00071 × 266.24 × 91.67 = 17.33 K

283.57 K (Lane Load Governs)

Substructure Design:

3. Live load to abutments:

Lane load:

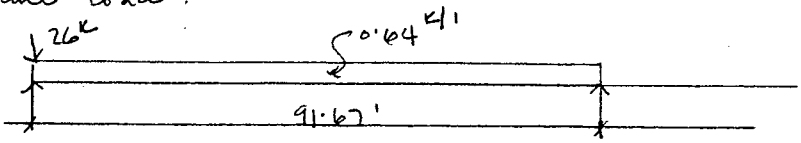

Moment correction for uniff load

$\Delta M/L = 0.0670 \times 0.64 \times 91.67 = (-)3.93^K$

S. Beam $= 0.64 \times 91.67/2 = 29.33^K$

$P = 26.00^K$

51.4^K

$\times 4$ Lanes $= 205.6^K$

Side walk $= 0.085 \times 5 \times 91.67 \times 0.5 = 19.47 \times 2$ sides $= 38.96^K$

244.56^K

Truck load:

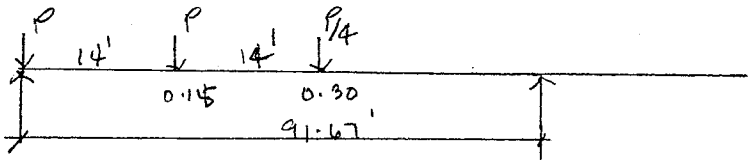

P @ axle $= 1.000$
P @ 0.15 $= 0.85$
P @ 0.30 $= 0.18$
2.03

$P = 2.04 \times 32 \times 4$ Lanes $= 261.12^K$

$P = \Delta M/L$ w/ P @ 0.15 $= 0.03646$

$P = \Delta M/L$ w/ P/4 0.30 $= 0.06880$

$0.10526/91.67$

$= 0.00105$

$\Delta M/L = 0.00105 \times 261.12 \times 91.67 = (-)25.13$

236^K

Side walk 38.96

275^K ← Controls.

Substructure Design:

4. Wind on Superstructure

(a) Transverse

Barrier = 32"

Deck = 8.5

Girder = 24

$\frac{}{94.5/12} = 7.88'$

Wind to Rier = 7.88 × 91.67 = 722.36 A²

$P_\perp$ = 722.36 × 50 = 36.12 K

(b) Longitudinal wind

$P_{\parallel}$ = 0.012 × 7.88 × 91.67 = 8.67 K

(5) Longitudinal forces:

P = 0.040 × 91.67 × 0.05 = 2.94 (4 Lanes) = 11.76 K / pier.

(6) Wind on L.L

A. Longitudinal

P_L = 0.04 K/L × 91.67 = 3.67 K / pier.

B. Transverse:

P_T = 0.10 × 91.67 = 9.17 K / pier.

(7) Substructure wind.

Cap beam area ⊥ to face:

A = 4 × 82 = 328 × 40 psf = 13.12 K

Col^ns = 4 × 20 × 40 = 3.2 K (4 col^n) = 12.8 K

Total Longitudinal = 13.12 + 12.8 = 25.92 K

Transverse:

Beam = 4.5 × 4 × 40 = 0.72 K

Col^n = 4 × 20 × 40 = 3.20 K

3.92 K

Substructure Design.

(8) Stream flow (Assume Max 30°)

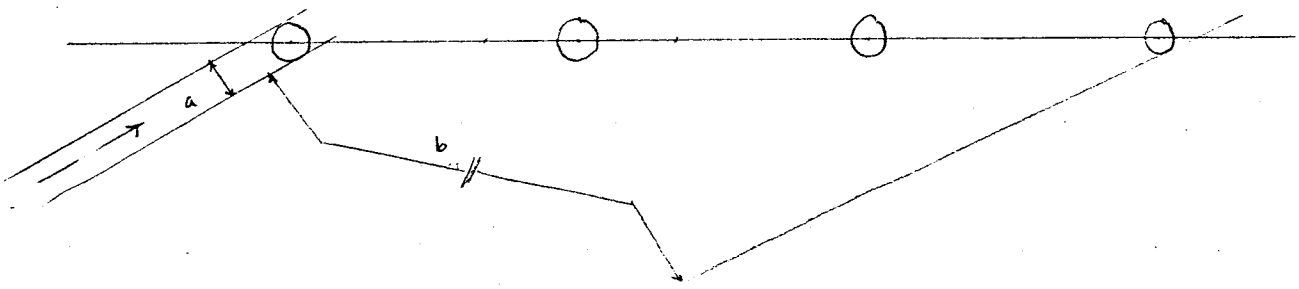

Velocity = 6.1 fps.

$P = KV^2 = 73 \times 6.1^2 = 24.93$ #/□

$a = 25 \times 4.5 = 113$ #/ / □.

load parallel $P_{\parallel} = 113 \cdot \cos 30° = 98$ #/

$P_{\perp} = 113 \cdot \sin 30° = 57$ #/

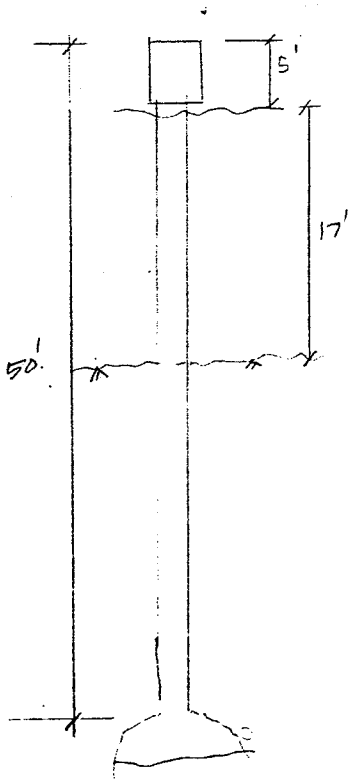

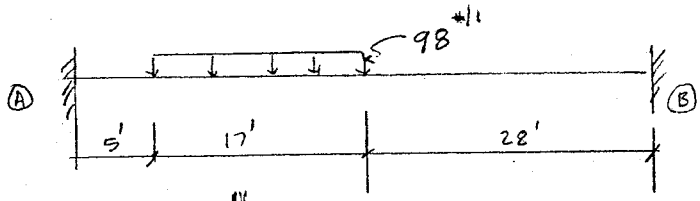

$FEM_A = 11.75$ 'K

$FEM_B = 4.32$ 'K

$EM_{AB} = 11.75 + 0.5 \times 4.32 = 13.91$ 'K

Top Beam $K = 4.5 \times 4.5^3 / 12 \times 28 = 1.22$

Col $K = 3.14 (4.5)^4 / 64 = 0.40 (0.76) = 0.31$

$DF_{BEAM} = 0.80$ $DF_{COL} = 0.20$

Substructure Design:

(9) Thermal forces:

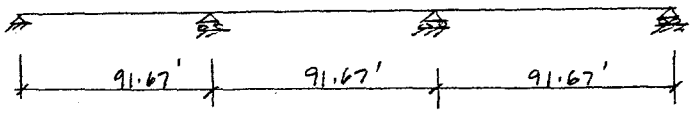

$T_{max} = 120°$

$T_{min} = 40°$

$\Delta t = 60°$

$\alpha = 6 \times 10^{-6}/°F$

$\epsilon = 60 \times 6.0 \times 10^{-6}$ in/in

$\Delta = 225 \times 12 \times 60 \times 6.0 \times 10^{-6} = 0.972''$

VOID

Provide slide bearing at piers and fixity at abutment

(10) Seismic forces:

Longitudinal seismic force @ piers & abutments:

superstructure D.L

Pier = 1941.15 (x 2.5 piers) = 4854

Abutment = 970.75 = 970.75

5824.5 K

Seismic force $V_{\parallel} = 0.10 \times 5824.5 = 582.45^K/3$

$= 194.15^K$

Transverse seismic force

Abutment & piers $V_{\perp} = 1941.15 \times 0.10 = 194.15^K$

(11) Buoyancy

Volume of water displaced

Cols: $\pi \times 4^2/4 \times 40 \times 4$ cols = 2000 ft³.

uplift = 2000 x 0.0625 = 125.6 K ↑

(12) Cap Bm. D.L.

Bm = 4.5 x 4.75 x 0.15 = 3.20 K/'

Substructure design:

Longitudinal forces:

A. Thermal

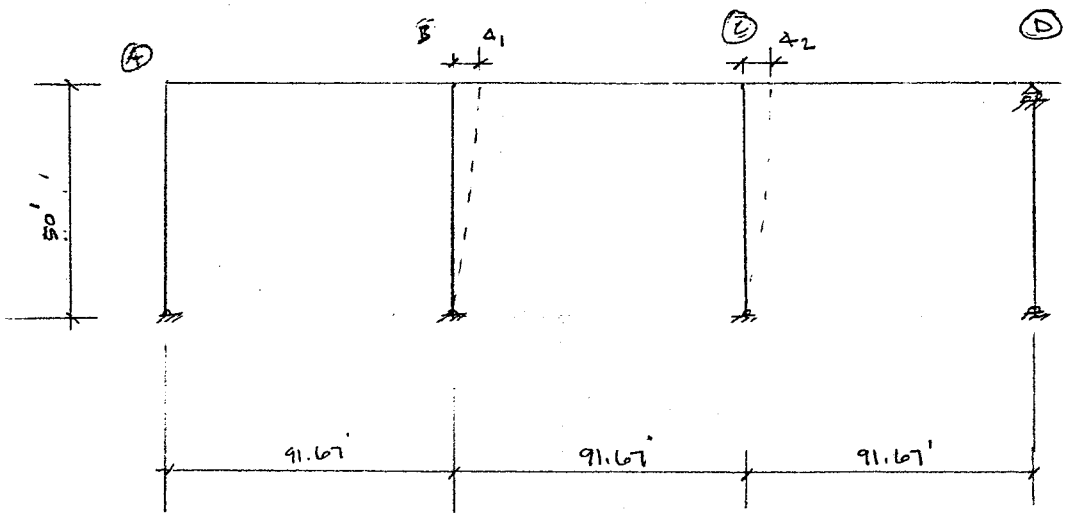

$T_{max} = 120°F$ construction temperature range 65° - 80° F

$T_{min} = 30°F$

$\Delta t = 60°F$

$\epsilon_t = \alpha \Delta t = 6 \times 10^{-6}/°F \times 60°F = 3.6 \times 10^{-4}$ in/in

$\Delta_1 = 91.67 \times 12 \times 3.6 \times 10^{-4} = 0.396$ in

$\Delta_2 = 2\Delta_1 = 0.792$

$\Delta_3 = 3\Delta_1 = 1.19$ in

Provide 2½" exp joint @ 70°F

$I_{col} = 0.0491 \times 54^4 = 417,181$ in$^4 \times 4 = 1,668724$ in^4

$I_{beam+slab\ comp\ section}$

$= 676600 \times 11 = 7\ 442\ 600$ in^4

Distribution factors

@ A $K'_{col} = 0.75(I/L) = 0.75 \times 1668724/50 \times 12 = 2086 \rightarrow 0.24$

$K_{beam} = I/L = 7\ 442\ 600/91.67 \times 12$ 6766 0.76

@ B $K'_{col} = 2086 \rightarrow 0.14$

$K_{beam} = 6766 \rightarrow 0.43$

$K_{beam} = 6766 \rightarrow 0.43$

@ C $K'_{col} = 2086 \rightarrow 0.15$

$K_{beam} = 6766 \rightarrow 0.48$

$K'_{beam} = 0.75(6766) \rightarrow 0.37$

Substructure design

A Thermal (cont'd)

$$\Delta M_B = \frac{3EI\Delta}{L^2} = \frac{3 \times 3.5 \times 10^3 \times 80.47 \times 0.396 \times 12}{50^2} = 1606^{\,IK}$$

$$\Delta M_C = 3212^{\,IK}$$

47	378	1105	1644	1115
-14	-17.2	-17.2	-9	-6.5
18		40	18	62
125	36	36	80	
-165		-83	-166	
-262	-331	-332	-166	-128
345		771	345	
	640	690	1542	1188
0.76	0.43	0.43	0.48	0.37

0.24				
-83				
40				
-4				
-47				
	0.14		0.15	
	-1606		-3212	
	226		482	
	-108		-52	
	11		24	
	-5.6		-215	
	-1483		-2760	

Final longitudinal moments @ ea. column

$= 2760/4 = 690^{\,IK}$.

substructure design:

Longitudinal forces:

B. Longitudinal wind load forces on structure

$P_{11} = 8.67 \times 3 = 26^{k}$

unit moment distribution

79.85	35	53.7	54	29
3.95	2.23	2.23	-5.2	-8
-5.2		-5.2	-10.3	
-16.4	-10.3	-10.3	21.5	
21.5		24	48	37
76	43	43		
0.79	0.43	0.43	0.48	0.37

0.24	0.14	0.15	
-100	-100	-100	
24	14	15	
-5.1	-3.4	-3.2	
1.25	0.73	-58.2	
-79.85	-68.7		
← 1.6^{k}	← 1.77^{k}	← 1.76	

correction factor = 26/5.13 = 5.06

405^{1k}	177	271	273	147
405^{1k}	449		446	

max^{m} moment to column = 449/4 = 112^{1k}.

Substructure design:

C. wind load on live load.

$V = 3.69 \times 3 = 11.07^{K}$

correction factor $= 11.07/5.13 = 2.157$

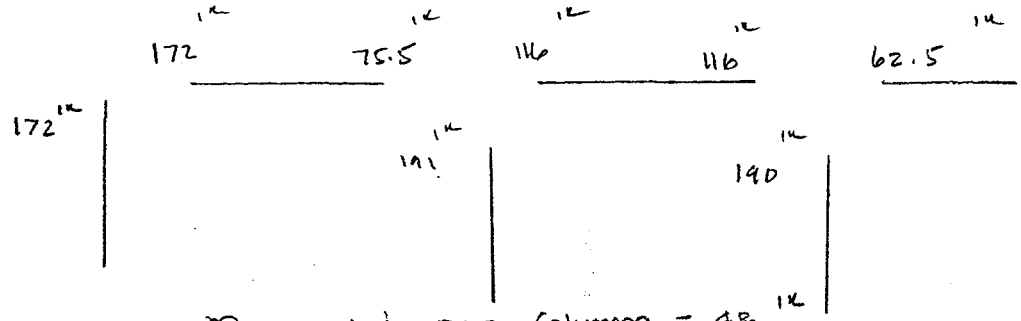

max^m moment per column $= 48^{1K}$

D. Longitudinal force from live load

$V = 11.76 \times 3 = 35.28^{K}$

correction factor $= 35.28/5.13 = 6.87$

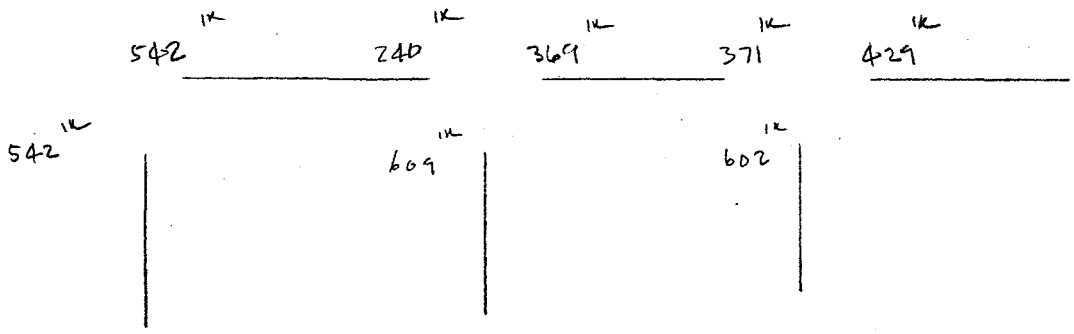

max^m moment per column $= 609/4 = 152.25^{1K}$

E. Longitudinal seismic force.

$V = 144$

Substructure design

Stiffness coefficients for pier/abutment shafts.

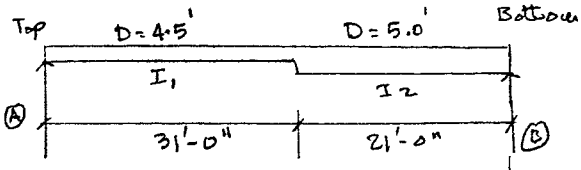

$I_1 = \pi d_1^4/64 = 3.14 \times 4.5^4/64 = 20.12 \text{ ft}^4$

$I_2 = \pi d_2^4/64 = 3.14 \times 5^4/64 = 30.67 \text{ ft}^4$

$I_2 = 1.524 \cdot I_1$

unit stiffness:

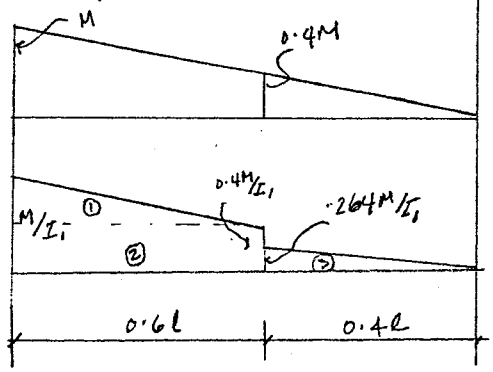

$\cancel{\delta_B}^{0} = \cancel{\delta_A}^{0} + \theta_A l + \Sigma A_K b_K$

K	$A_K/(ML/I)$	b_K	$A_K b_K$
1	0.18	0.8L	0.144
2	0.24	0.7L	0.168
3	0.052	0.267L	0.044
			0.3205

$A_1 = (0.5)(0.6l)(0.6M/I_1)$
$= 0.18\ ML/I$

$A_2 = (0.4M)(0.6l/I)$
$= 0.24\ ML/I_1$

$A_3 = (0.5)(0.26M/I)(0.4l)$
$= 0.052\ ML/I$

$\cancel{\theta_A}^{1} L = 0.326 \dfrac{ML^2}{EI_1}$

$\boxed{M = 3.07 \dfrac{EI_1}{L}} \simeq 3EI/L$

substructure design.

Pier

Dead load:

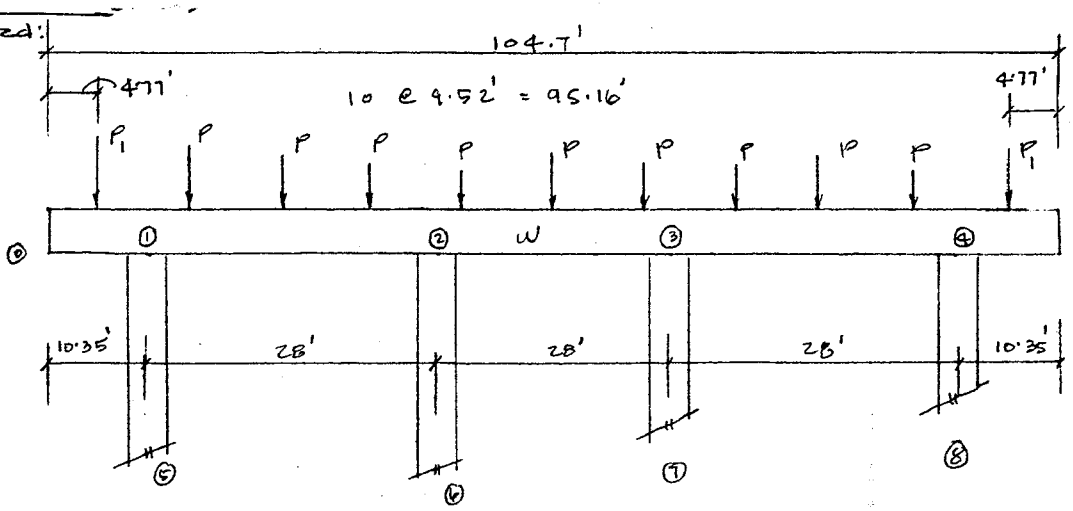

$w = 3.04^{k/'}$

$P = 170^{k}$

$P_1 = 206$

Length of shaft = 63'-0"

member stiffness:

$I_{sp\ beam} = 4.5 \times 4.5^3/12 = 34.17\ ft^4$

$I_{col} = 3.14 \times 4^4/64 = 12.56\ ft^4$

$I/L_{beam} = 34.17/28 = 1.22$

$I/L_{col} = 12.56/48 = 0.26$

Assume pinned condition at the bottom of column.

Distribution factors:

Joint 1 $\quad \Sigma K = 1.22 + 0.75 \times 0.26 = 1.37$

$DF_{12} = 1.22/1.37 = 0.89$

$DF_{15} = 0.11$

Joint 2 $\quad \Sigma K = 1.22 + 0.5 \times 1.22 + 0.75 \times 0.20 = 1.98$

$DF_{21} = 0.62$

$DF_{23} = 0.31$

$DF_{26} = 0.07$

Substructure design:

Cap beam (cont'd)

Dead load analysis

Fixed end moments:

$$EM_{10} = 0.5 \times 3.04 \times 10.35^2 + 206 \times (10.35 - 4.77) = 1312^{'K}$$

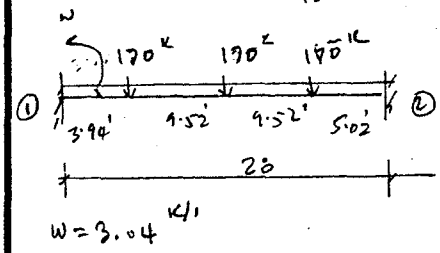

$$FM_{12} = 0.0833 \times 3.04 \times 28^2 + \frac{85 \times 2}{28 \times 28}\left[5.02^2 \times 22.98 + 14.54^2 \times 13.46 + 24.06^2 \times 3.94\right]$$

$$= 198.53 + 1237 = 1435.5^{K}$$

$$FM_{21} = 0.0833 \times 3.04 \times 28^2 + \frac{85 \times 2}{28 \times 28}\left[5.02 \times 22.98^2 + 14.54 \times 13.46^2 + 24.06 \times 3.94^2\right]$$

$$= 198.53 + 1227 = 1425.5$$

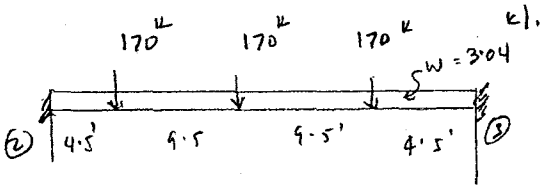

$$FM_{23} = 0.0833 \times 3.04 \times 28^2 + \frac{85 \times 2}{28 \times 28}\left[4.5^2 \times 23.5 + 14^2 \times 14 + 4.5 \times 23.5^2\right]$$

$$= 198.53 + 1232 = 1435.5^{'K}$$

1312	0.89	0.62	0.31	
0.11			0.07	
0				
43.6	-1435.5	1425.5		
-.35	109.5	6.2	0.7	
1.9	3.1	55	-3.85	
15.15	-2.75	-34	-.28	
	-17	-1.4	3.43	
	15.1	0.87		
	0.43	7.5		
	1327	-4.65		
		1455		

-2.30
-0.43
-17.0
3.1
-1435.5
→ 1450.8 'K

℄ of symmetry.

Substructure design:

Dead load analysis (cont'd)

End forces:

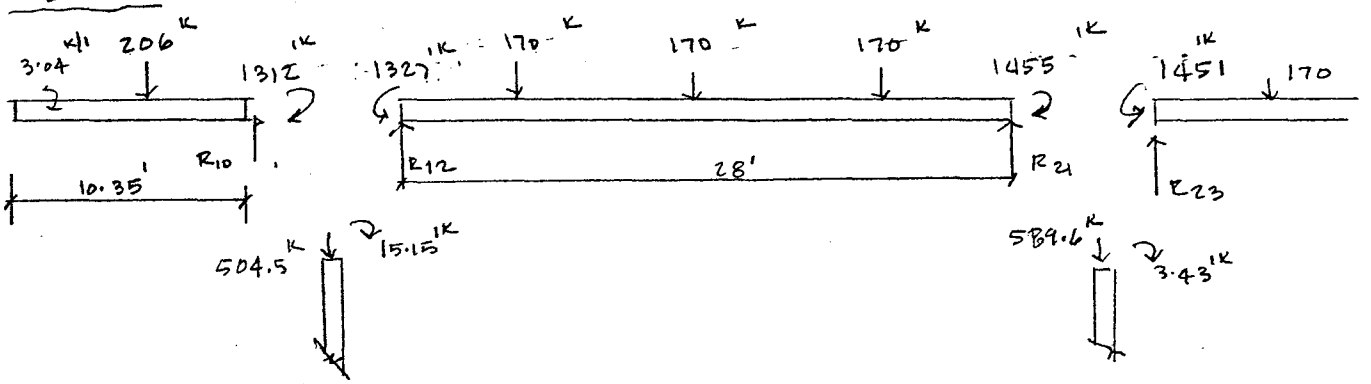

$R_{10} = 237.5^K$

$R_{12} = 3.04 \times 14 + \frac{1327 - 1455}{28} + \frac{170}{28}[5.02 + 14.56 + 24.08] =$

$= 42.56 - 4.57 + 265 = 303^K$

$R_{21} = 42.56 + 4.57 + \frac{170}{28}[3.94 + 13.46 + 22.98]$

$= 42.56 + 4.57 + 245 = 292^K$

$R_{23} = 42.56 + 1.5 \times 170 = 297.6^K$

$R_1 = 237.5 + 303 = \underline{504.5^K} + 3.84 = 508.34^K$

$R_2 = 292 + 297.6 = \underline{589.6^K} + 4.48 = 594.08^K$

Substructure design:

Live load analysis:

ⓐ L.L Girder reactions = 40·6·13/9 = 45.1 K

No Load @ ext girder.

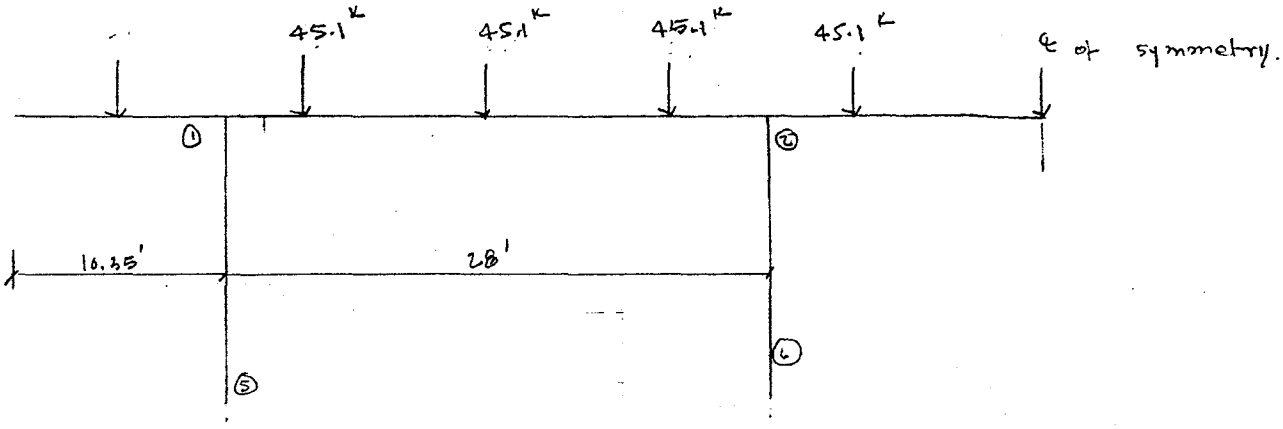

Distribution factors:

$\begin{cases} DF_{12} = 0.89 \\ DF_{15} = 0.11 \end{cases}$

$\begin{cases} DF_{21} = 0.62 \\ DF_{23} = 0.31 \\ DF_{26} = 0.07 \end{cases}$

Fixed end moments:

$F_{12} = \frac{45.1}{170} \times 1237 = 328.2^{1K}$

$F_{21} = 45.1/170\,(1227) = 325.5^{1K}$

$F_{23} = 45.1/170\,(1237) = 328.2^{1K}$.

	0.89	0.62	0.31
0.11 36.1 -0.10 5.0 41.0	-328 +292 0.85 -0.75 -45.25 40.27 -41.0	325.5 1.7 146 -90.5 0.375 — 20.27 -12.56 390.41 1K	-328.2 0.85 -45.2 0.07 0.19 10.22 -1.40 -11.58 1K -6.28 -378.83 1K

Substructure design (contd)

Live Load analysis:

End Forces:

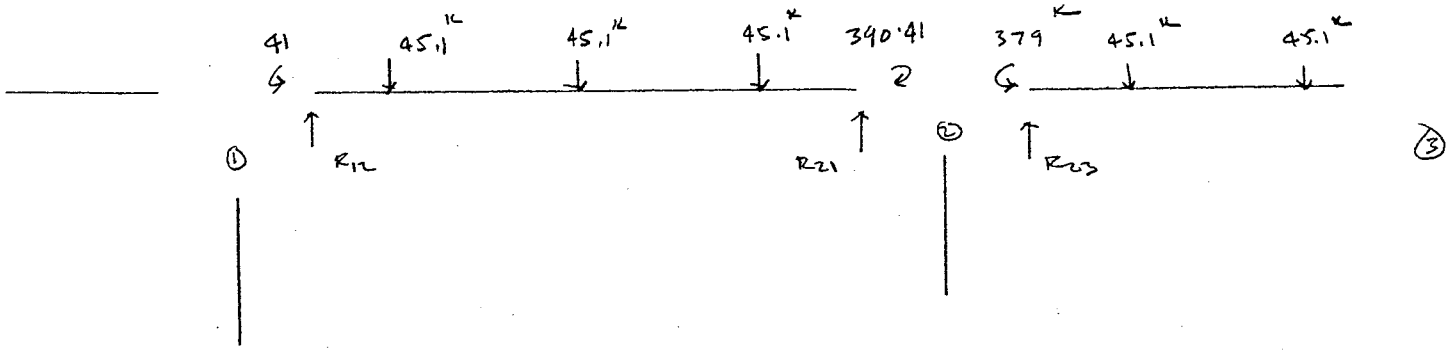

$$R_{12} = \frac{41 - 390.41}{28} + \frac{45.1}{28}[5.02 + 14.56 + 24.08] = -12.5 + 70.32 = 57.85^{K}$$

$$R_{21} = 12.5 + \frac{45.1}{28}[3.94 + 13.46 + 22.98] = 12.5 + 65.04 = 77.54^{K}$$

$$R_{23} = 1.5 \times 45.1 = 67.65^{K}$$

$$R_1 = 57.85^{K}$$

$$R_2 = R_{21} + R_{23} = 77.54 + 67.65 = 145.2^{K}$$

Substructure design:

PIERS:

Transverse seismic force:

$V_\perp = 194^K$

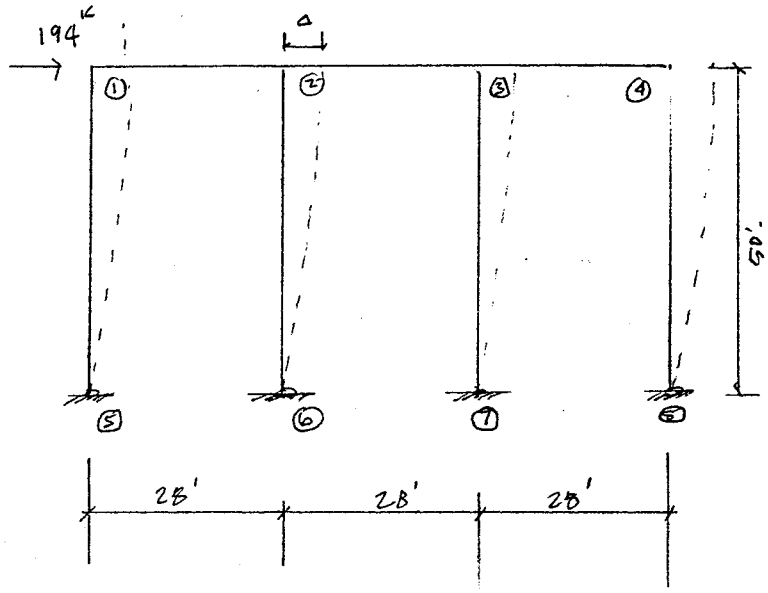

member stiffnesses:

$I_{beam} = 4 \cdot 5^4/12 = 54.2 \ ft^4$

$I_{col} = 3.14 \times 4^4/64 = 12.56 \ ft^4$

Distribution factors:

$K_{Beam} = I/L = 34.2/28 = 1.22$

$K_{col} = I/L = 12.56/50 = 0.26$

Joint ① $\Sigma K = 1.22 + 0.75 \times 0.26 = 1.41$

$DF_{12} = 1.22/1.41 = 0.86$

$DF_{15} = 0.14$

Joint ② $\Sigma K = 1.22 + 1.5 \times 1.22 + 0.75 \times 0.26 = 3.25$

$DF_{21} = 1.22/3.25 = 0.37$

$DF_{23} = 0.37 \times 1.5 = 0.56$

$DF_{26} = 0.07$

Fixed end moments

$M_{15} = M_{26} = 100^{1K}$ (Assumed)

			34.5
			-1.91
			4.5
			-24.1
			56
			0.56
0.14	0.86	0.37	0.07
	86	37	
-100	18.5	43	-100
14	-15.9	-15.9	7
-1.6	-8	-8	-3
1.1	6.9	3	0.5
	1.5	3.45	
-.2	-1.3	-1.27	0.24
-86.7	86.7	61.28	95.26

Substructure design

Transverse seismic force

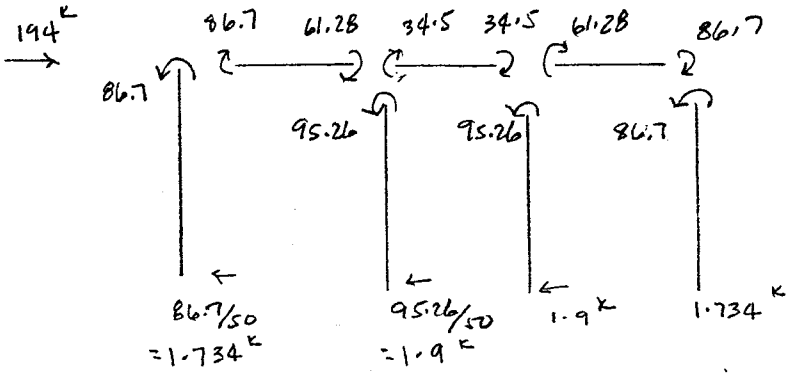

Correction factor

$m = 194/7.27 = 26.68$

member moment and forces:

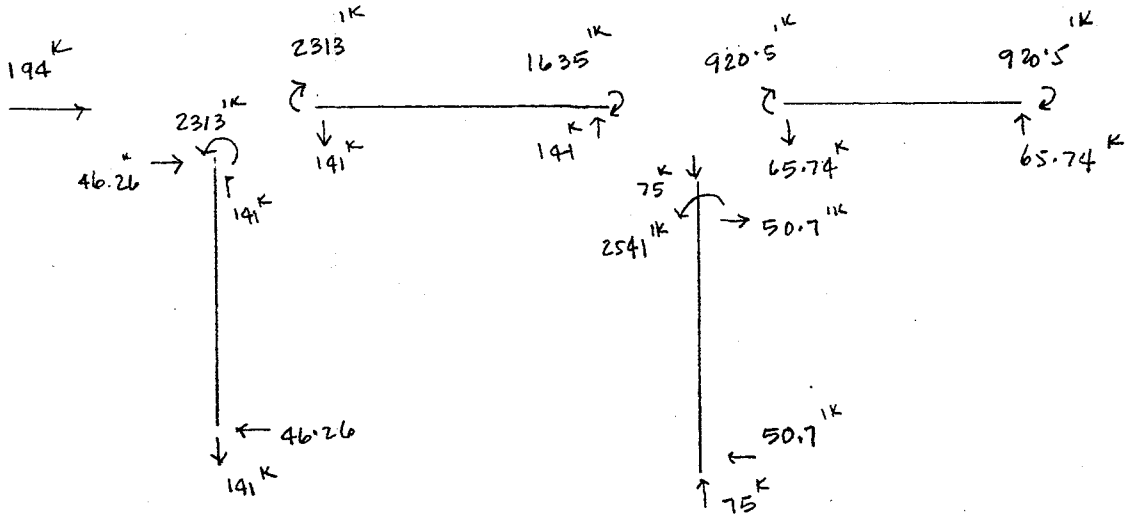

Substructure design:

Cap Beam:

1. D.L forces:

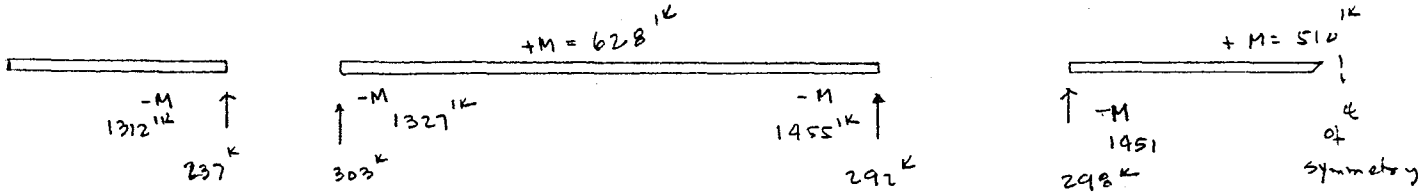

2. L.L+I forces

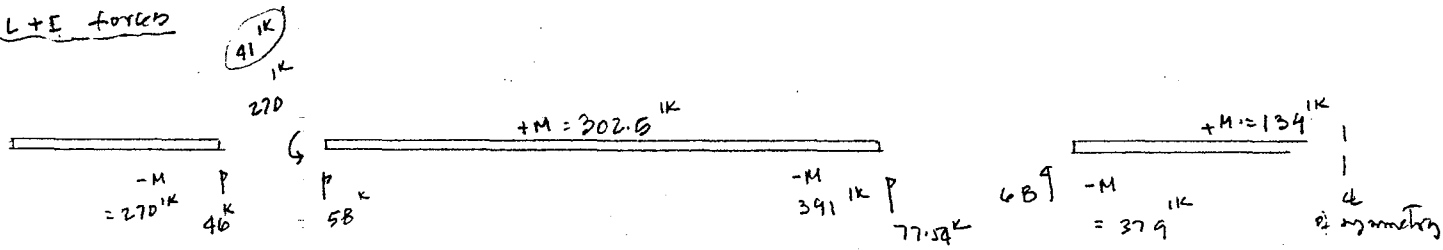

3. Transverse wind load forces on L.L (Reversible)

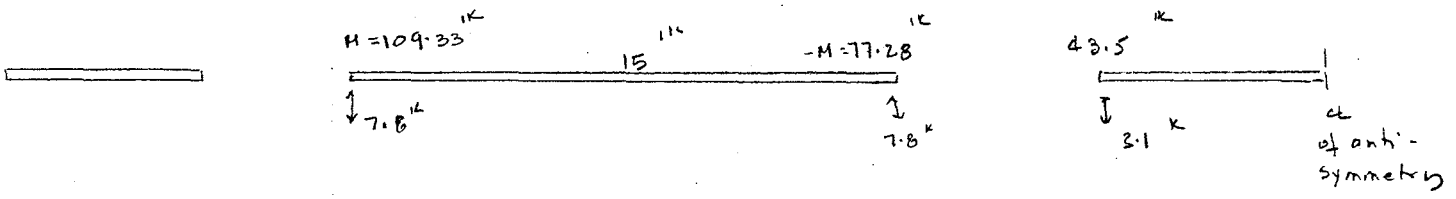

4. Transverse wind load on structure: (Reversible)

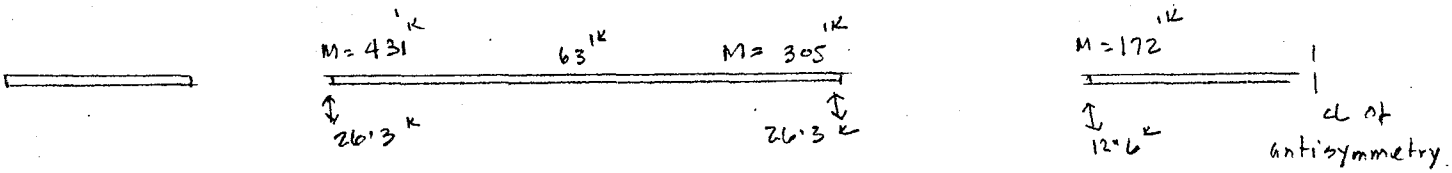

5. Transverse Earthquake forces (Reversible)

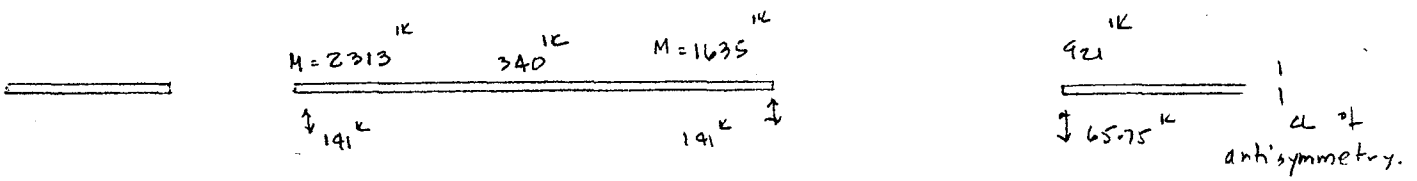

6. stream flow:

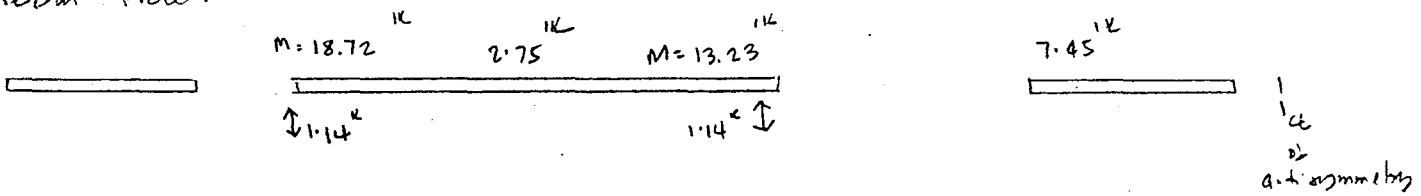

Substructure design.

Cap Beam.

Load combinations:

Group I

T.L = (D.L + LL + I + E + B + SF) Stress 100%

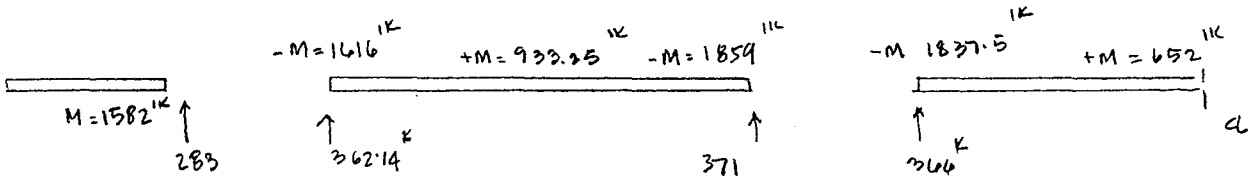

Group II

T.L = (D.L + E + B + S.F + W) Stress 125%

multiplying factor = 1/1.25 = 0.80.

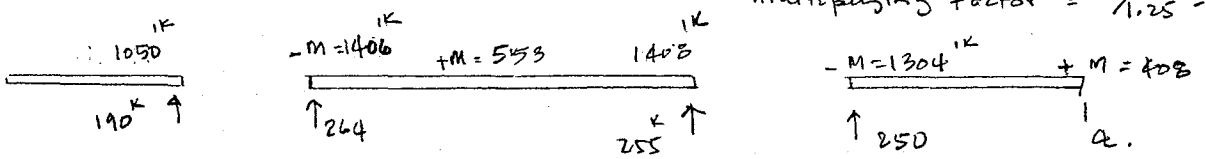

Group III

TL = Group I + LF + 30% W + WL Stress = 125%
multiplying factor = 0.80

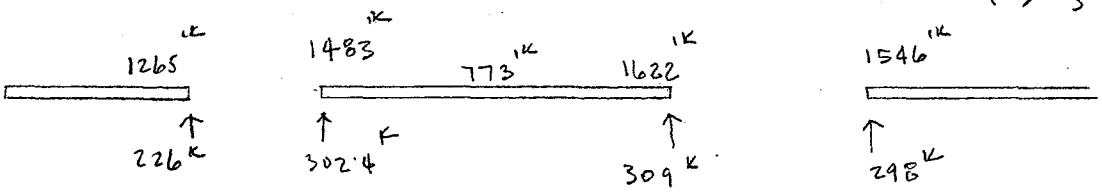

Group IV

TL = D.L + LL + CF + B + SF + T Stress = 125%
M.F = 0.8

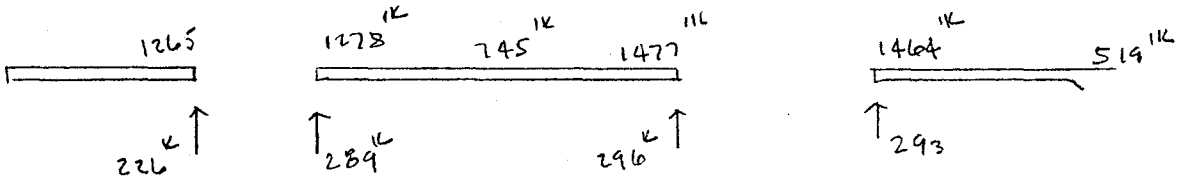

Substructure design

Cap beam:

Load combinations (contd)

Group V

TL = DL + E + B + SF + W + T

Stress level = 140%

M.F = 0.714

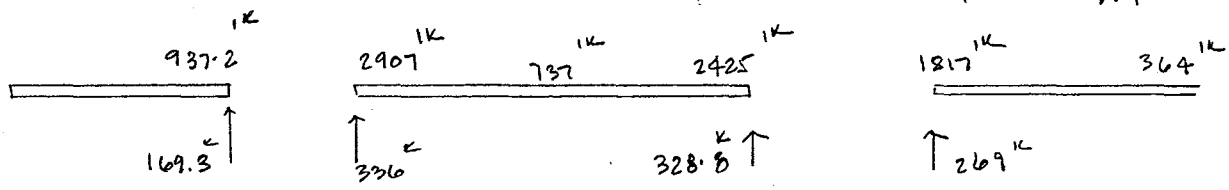

Group VI

TL = DL + LL + CF + B + SF + 0.3W + WL + LF + T (140%)

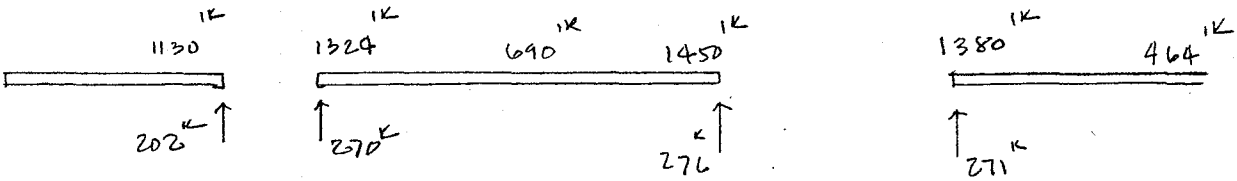

Group VII

TL = D.L + E + B + SF + EQ (133%)

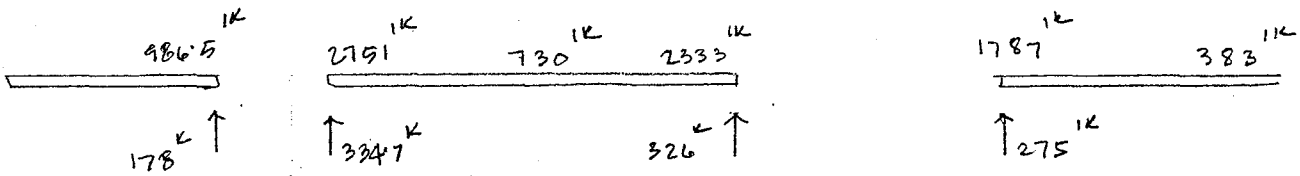

Substructure design.

Cap Beam (cont'd)

Governing moments and shears.

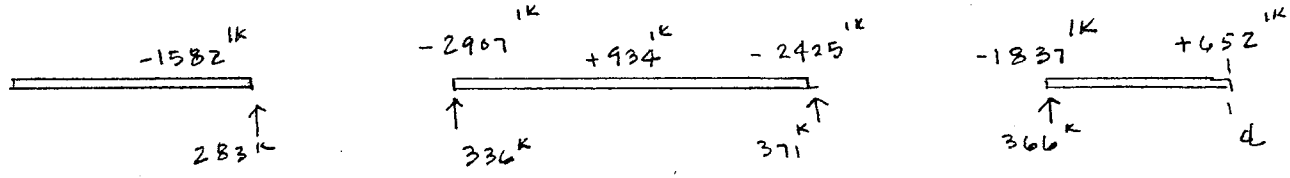

Max negative moment = 2907 1K

$f'_c = 4000$ psi

$b = 5'-0" = 60"$

$f_c = 0.4 f'_c = 1600$ psi

$$d_{req} = \left(\frac{2 \times 2907 \times 12}{1.6 \times 0.36 \times 0.87 \times 60} \right)^{1/2} = 48.17"$$

$$t = 48.17 + 0.75 + 0.25 + 3" = 52.17 < 54"$$

Provide total depth ≥ 4'-6"

Negative reinf:

$$-A_s = \frac{2907 \times 12}{24 \times 0.87 \times 49.5} = 33.75 \text{ in}^2$$

Provide 22 - #11 (60)
as 11 bundles of 2-#11

Positive reinf:

$$+A_s = \frac{934 \times 12}{24 \times 0.87 \times 49.5} = 10.84 \text{ in}^2$$

Provide
11 - #9 (60) - bars.

substructure design:

cap Beam (cont'd)

shear reinforcement:

$v_c = 0.95\sqrt{f'_c} = 0.95\sqrt{4000} = 60$ psi.

$V_c = v_c bd = 0.06 \times 60 \times 49.5 = 178.2^k$

$V_1 = 371^k - (2.0 + 4.0)(3.5) = 350^k$

use #5 double stirrups

spacing $s = \dfrac{A_v f_s d}{V - V_c}$

$= \dfrac{0.31 \times 4 \times 20 \times 49.5}{350 - 178.2} = 7.14''$

use #5 double stirrups @ 7" o.c.

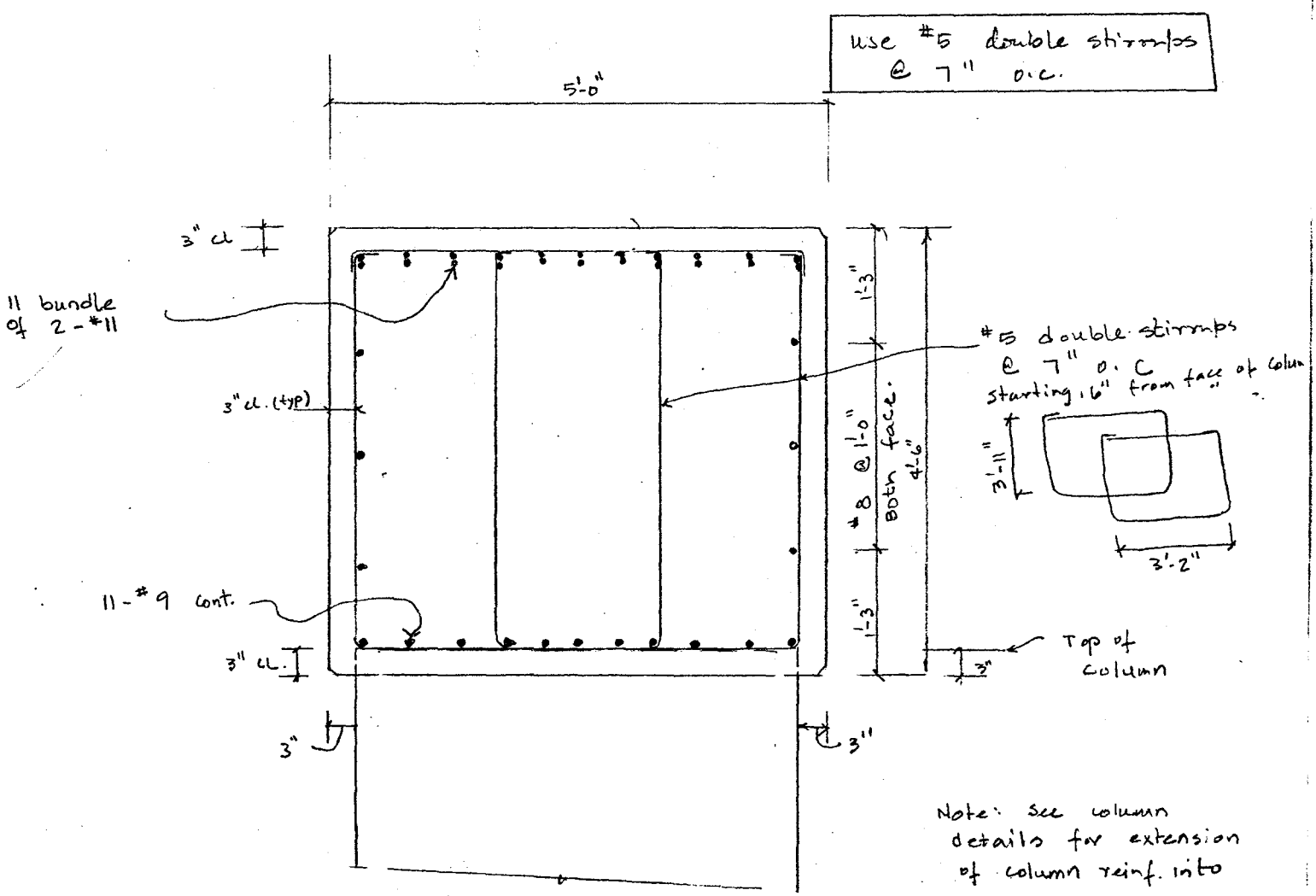

Note: See column details for extension of column reinf. into cap beam.

Substructure design:

column design: (Piers)

Section:

4'-6" ϕ from cap beam to 4'-0" below finished channel bottom [EL. 1186.0].

5'-ϕ from EL 1186.0 to belled bottom.

scour depth:

channel constriction @ bridge = 3%.

design for constriction of 25%.

Y_1 = upstream depth of flow = 15.8 ft

Y_2 = scour depth of flow [Hydraulic analysis]

$$Y_2 = Y_1 (b_1/b_2)^{0.64}$$

$$= 15.8 (1.25)^{0.64} = 18.22 \text{ ft.}$$

general scour depth = 18.22 − 15.8 = 2.4 ft.

Equillibrium local scour at circular piers.

$$Y_s = 2.0\, Y_1 (a/Y_1)^{0.61} (F_1)^{0.43}$$

F_1 = froude no = 0.27

pier diameter a = 4.5 ft.

$$Y_s = 2.0 (15.8) (4.5/15.8)^{0.65} (0.27)^{0.43}$$

$$= 7.95 \text{ ft.}$$

Instantaneous scour = 7.95 x 1.3 = 10.34 ft.

Total scour = 10.34 + 2.4 = 12.74 ft.

minimum depth of foundation

= 12.74 x 1.7 = 21.67 ft below channel invert

set bottom of bell at EL 1163.0.

Substructure design:

Pier columns:

Load combinations:

Group I: TL = DL + LL + I + E + B + SF (100% stress).

Int. (a) Axial force $P = 589.6 + 145.2 = 734.8^{k}$

$M_{\parallel} = 0$

$M_{\perp} = 3.43 + 12 + 11.73 = 27.16^{'k}$

ext. (b) Axial force $P = 504.5^{k} + 57.85 =$

$M_{\parallel} = 0$

$M_{\perp} = 15.15^{'k} + 41^{'k} + 13.1 = 69.25^{'k}$

Group II: TL = DL + LL + I + E + B + SF + W (125 %) Not governing

Group III: TL = Gr I + LF + 30% W + WL 125 %

(a) Axial force $P = 734.8 + 5.0 = 740^{k}(0.8) = 592^{k}$

$M_{\parallel} = 152 + 0.3(112) + 48 = 233.6(0.8) = 187^{'k}$

$M_{\perp} = 27.16 = 27.16(0.8) = 22^{'k}$

(b) Axial force $P = 562.35 + 5.0 = 567.35(0.8) = 454^{k}$

$M_{\parallel} = 152 + 0.3(112) + 48 = 233.6(0.8) = 187^{'k}$

$M_{\perp} = 69.25 = 69.25(0.8) = 55.4^{'k}$

Group IV TL = DL + LL + CF + B + SF + T (125 %)

(a) $P = 738.4(0.8) = 591^{k}$

$M_{\parallel} = 690(0.8) = 552^{'k}$

$M_{\perp} = 69.25(0.8) = 55.4^{'k}$

Group V TL = D + E + B + SF + W + T (140 %)

$P = 589.6 + 26 = 615.6(0.714) = 439.5^{k}$

$M_{\parallel} = 112 + 690 = 802(0.714) = 572^{'k}$

$M_{\perp} = 305^{'k}(0.714) = 218^{'k}$

Substructure design:

Columns

Load combinations (cont'd)

Group VI

TL = D + L + LF + B + SF + 0.3W + WL + LF + T (140%)

$P = 734.8 + 5.0 = 740 \ (0.714) = 528.4^{k}$

$M_{\parallel} = 233.6 + 690 = 923 \ (0.714) = 659^{'k}$

$M_{\perp} = 64.25 + 305 = 374 \ (0.714) = 267^{'k}$

Group VII

TL = D + E + B + SF + EQ (133%)

$P = 589.6^{k} \ (0.75) = 442.2^{k}$

$M_{\parallel} = 2425^{'k} \ (0.75) = 1819^{'k}$

OR

$M_{\perp} = 2425^{'k} \ (0.75) = 1819^{'k}$

governing combinations

Group I and Group VII

section & Reinforcement:

cols: $I/L = 20.12/48 = 0.42$

beam: $I/L = 34.17/28 = 1.22$

$$\psi_A = \frac{\Sigma\, EI/l_{col}}{\Sigma\, EI/l_{beam}} = \frac{0.42}{2.44} = 0.172$$

$$\psi_B = \frac{\Sigma\, EI/l_{col}}{\Sigma\, EI/l_{soil}} = 0.42/0 = \infty$$

$K = 2.05$ (sideways uninhibited)

$r = 0.25 \times 56 = 14$

$K l_u / r = 50 \times 2.05 \times 12 / 14 = 88 < 100$ O.K.

$I_g = 0.049 \times 56^4 = 481890 \text{ in}^4$

$\beta_d = 589.6 / 734.8 = 0.80$ (AASHTO 1.5.34)

Substructure design

Column:

$$EI = \frac{E_c I_g / 2.5}{1+\beta_d} = \frac{3.6\times10^6 \times 481890}{(1+0.8)\times 2.5} = 3.86\times10^{11} \text{ in}^2$$

$$P_c = \frac{\pi^2 EI}{(Klu)^2} = \frac{3.14^2 \times 3.86\times10^{11}}{(2.05\times50\times12)^2} = 2515^K$$

$$P_u = 1.3(442) = 574.6^K$$

$$\delta = \frac{C_m}{1-\frac{P_u}{\phi P_c}} = \frac{1.0}{1-\frac{575}{0.75\times2515}} = 1.44$$

$$M = \delta M = 1.44\times1819 = 2619^{'K}$$

$$M_u = 1.3\times2619 = 3405^{'K}$$

$$P = 1.3(442) = 575^K$$

$$e = 3405\times12/575 = 71 \text{ in}$$

$$e/D = 71/56 = 1.27$$

$$K = \frac{P_n}{\phi D^2 f'_c} = \frac{575}{0.75\times56^2\times4.0} = 0.061$$

$$K\,e/d = 0.061\times1.27 = 0.0776$$

$$\rho_t m = 0.38$$

$$m = f_y/0.85f'_c = 60/0.85\times4 = 17.64$$

$$\rho_t = 0.022$$

$$A_s = \rho_t A_g = 0.022\times0.785\times54^2 = 50.36 \text{ in}^2$$

Spiral:

$$\rho_s = 0.45[A_g/A_c - 1](f'_c/f_y)$$

$$A_g = 0.785\times54^2 = 2289 \text{ in}^2$$

$$A_c = 0.785\times48^2 = 1809 \text{ in}^2$$

$$A_g/A_c = 2289/1809 = 1.265$$

Substructure design:

Column (cont'd)

$P_n = 0.45(1.265-1)(4/60) = 0.008$

use #4 (60) spiral

pitch

$g = \frac{4a_s}{P_s D_c} = \frac{4 \times 0.20}{0.008 \times 48} = 2.08$

use #4 (60) spirals w/ 2" pitch.

Column reinforcement;
Vertical: 33-#11 (60)
spaced @ 11" o.c
spiral: #4 (60) spiral w/ 2" pitch.

Belled bottom:

Allowable soil bearing pressure = 15000 psf

maxm vertical loading = 735 kip

Bearing area req = 735/15 = 49 ft²

use 10'-0" dia bell
and 5'-0" dia shaft.

Check punching shear.

$p = 9.36$ ksf.

$b_o = \pi d_o = 3.14 \times 6 = 176.4$ ft

$d_o = 5'$

$V_c = 0.126 \times 176.4 \times 5 \times 144 = 3213^k > 735^k$ o.k

Substructure design:

column base:

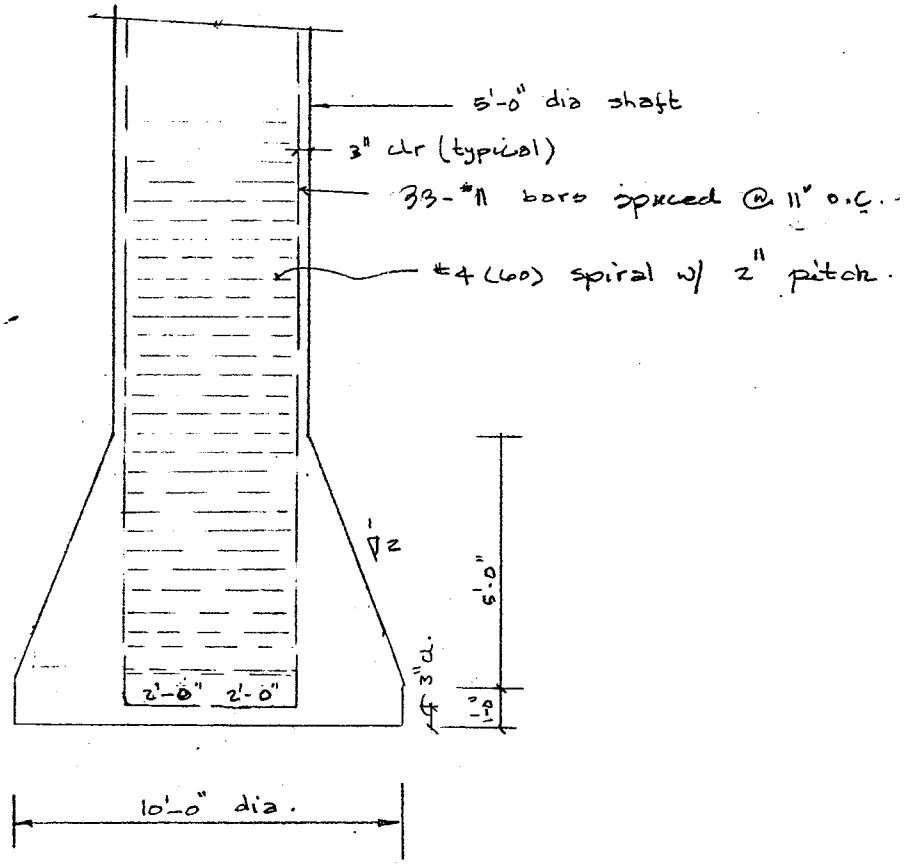

E.M. PLUMMER
CONSULTING ENGINEERS
STRUCTURAL . CIVIL ENGINEERS
CLIENT:

SUBJECT 67th Avenue Bridge
Phoenix
SHEET NO. 84 OF
BY S.H DATE 12.2.82
JOB NO.

Substructure design
Shafts @ Piers.

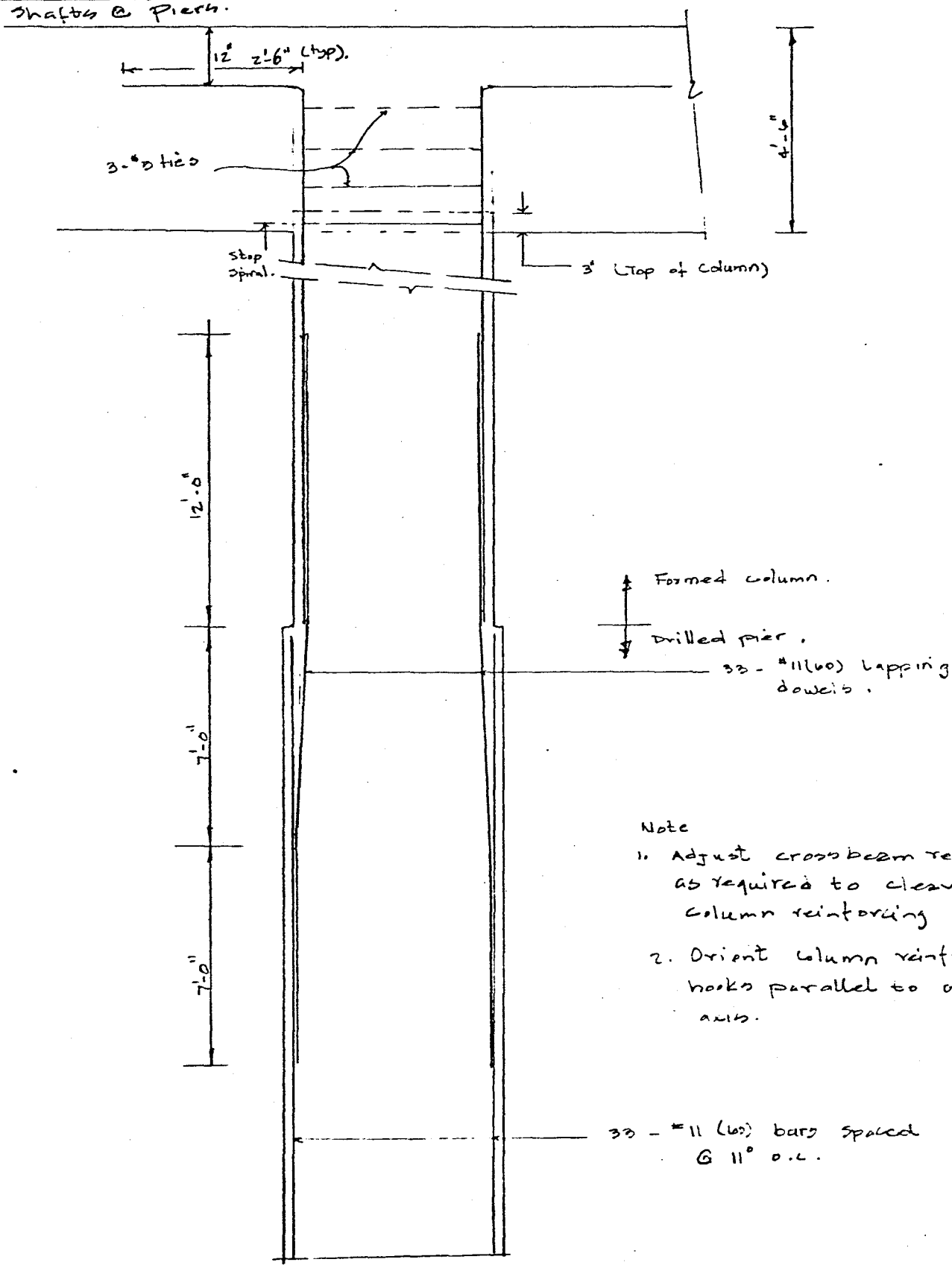

Note
1. Adjust crossbeam reinforcement as required to clear column reinforcing
2. Orient column reinforcing hooks parallel to crossbeam axis.

Substructure design
Shafts @ abutments.

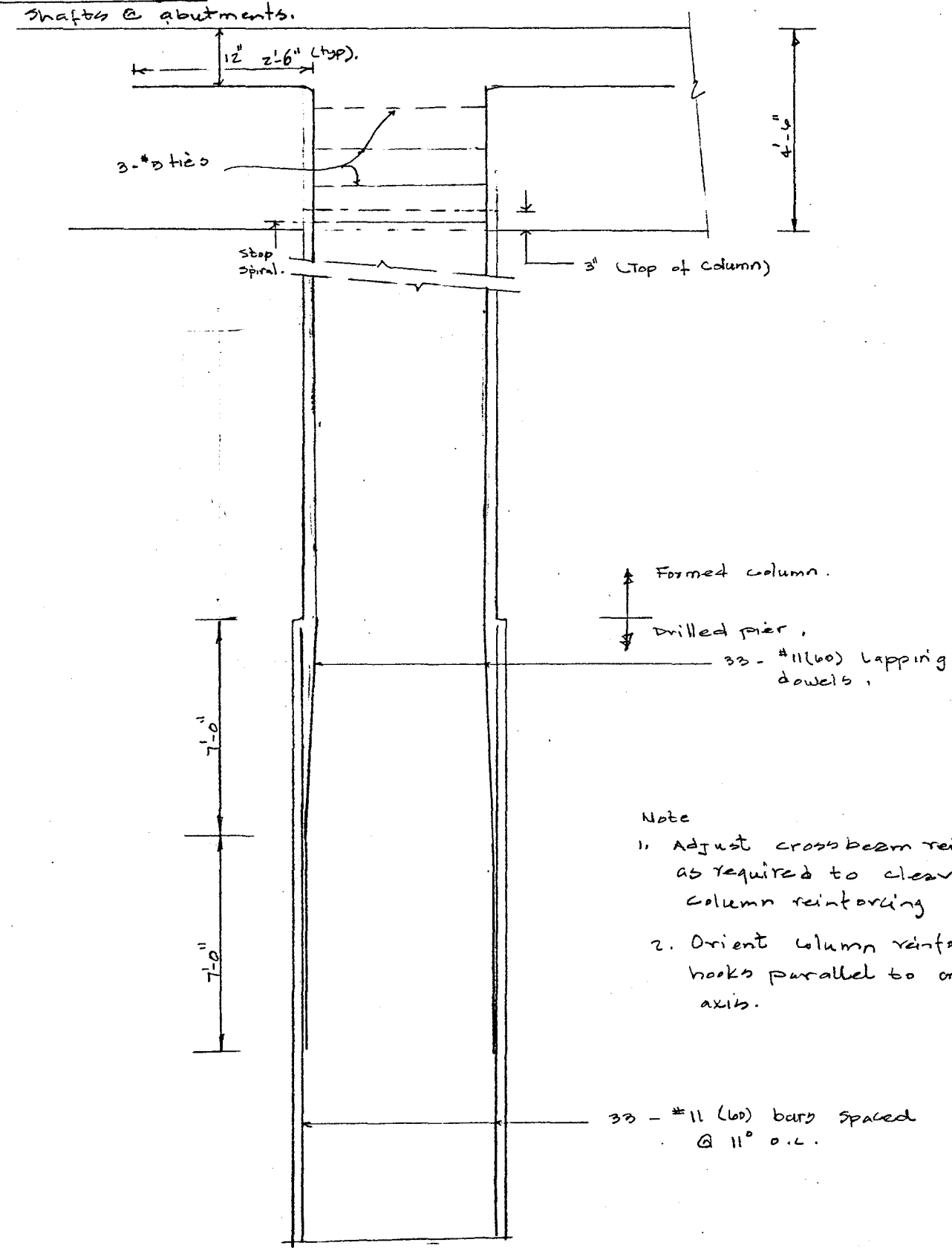

Note
1. Adjust crossbeam reinforcement as required to clear column reinforcing
2. Orient column reinforcing hooks parallel to crossbeam axis.

Substructure design:

Abutment wing wall

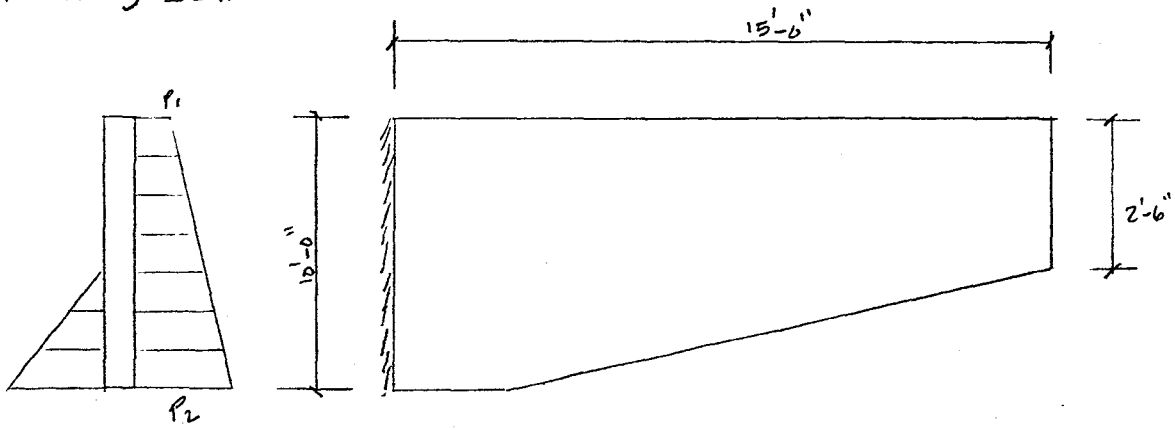

$P_1 = 150 \times 0.333 = 50$ #/a'

$P_2 = 50 + 33.33 \times 10 = 383$ #/a'

$P_3 = 50 + 33.33 \times 2.5 = 117$ #/'

V_x varies from 117 psf to 350 psf.

use average $(383 + 117)/2 = 250$ psf.

$M_u = 250 \times 15^2/2 = 28.12$ 'k $\times 1.7 = 47.81$ 'k

18" wall $d = 18" - 2" - 1" - 1/2" = 14.5"$

$M_u/\phi bd^2 = 47.81 \times 12000 / 0.9 \times 18 \times 14.5^2 = 169$

$\rho = 0.0033$

$A_s = 0.0033 \times 18 \times 14.5 = 0.86$ in²/'

use 18" wall

Reinf: Inside face
vert #5 @ 12" o.c
Horiz #9 @ 12" o.c

outside face
vert #5 @ 12" o.c
Horiz #5 @ 12" o.c

Bearing pads:

@ Fixed piers and abutments:

Ref: Design of Neoprene Bearing pads by DuPont.

Bearing length = 2'-2"

bearing thickness = 0.012 × 91.67 = 1.10" ≈ 1¼"

bearing width $= \frac{(D.L + L.L)}{(800)(\text{bearing length})}$

$= \frac{(93930 + 53200)}{(800)(26)} = 7.07$ use 10"

check bearing hardness:

compressive stress $= \frac{147130}{26 \times 10} = 566$ psi

shape factor $= \frac{26 \times 10}{2 \times (26 + 10)(1.25)} = 2.89$

From fig.1. for 50 hardness $\epsilon = 14.9\% < 15\%$.

$\boxed{\text{use } 2'\text{-}2'' \times 1\tfrac{1}{4}'' \times 10'' \text{ pad w/ durometer hardness 50.}}$

check slippage:

$= \frac{(93920)(1.25)(1.9)}{5 \times 260 \times 110} = 1.56$ in o.k

@ expansion piers:

Bearing length = 2'-2"
bearing thickness = 1¼"
bearing width = 10"
compressive stress = 566 psi

$\boxed{\text{use } 2'\text{-}2'' \times 10'' \times 1\tfrac{1}{4}'' \text{ neoprene pad w/ durometer hardness 50.}}$