FLOOD CONTROL DISTRICT OF MARICOPA COUNTY

10TH STREET WASH DETENTION BASIN NO. 1 (FCD 93-31)

Property of
Flood Control District of MC Library
Please Return to
2801 W. Durango
Phoenix, AZ 85009

PRELIMINARY CALCULATIONS FOR FINAL DESIGN

PREPARED FOR

FLOOD CONTROL DISTRICT OF MARICOPA COUNTY
2801 West Durango Street
Phoenix, Arizona 85009

PREPARED BY

STANLEY CONSULTANTS, INC.
2929 E. Camelback Road, Suite 130
Phoenix, Arizona 85016
912-6500

FLOOD CONTROL DISTRICT
RECEIVED
MAR 23 1995
CHENG | P & PM
DEP | BEB
ADMIN | MGT
FINANCE | FILE
C & M
ENGR
REMARKS

PREPARED MARCH 1995
SCI #12183

FLOOD CONTROL DISTRICT OF MARICOPA COUNTY

10TH STREET WASH DETENTION BASIN NO. 1 (FCD 93-31)

PRELIMINARY CALCULATIONS FOR FINAL DESIGN

PREPARED FOR

FLOOD CONTROL DISTRICT OF MARICOPA COUNTY
2801 West Durango Street
Phoenix, Arizona 85009

PREPARED BY

STANLEY CONSULTANTS, INC.
2929 E. Camelback Road, Suite 130
Phoenix, Arizona 85016
912-6500

Registered Professional Engineer (Civil)
CERTIFICATE NO.
26837
G. SCOTT
BUCHANAN
Date Signed 3-22-95
ARIZONA, U.S.A.

PREPARED MARCH 1995
SCI #12183

STANLEY CONSULTANTS, INC.

2929 East Camelback Road, Suite 130 • Phoenix, AZ 85016-4425 Tel: 602/912-6500 • Fax: 602/912-6599

March 22, 1995

Mr. Don Rerick
FLOOD CONTROL DISTRICT OF MARICOPA COUNTY
2801 West Durango Street
Phoenix, Arizona 85009

RE: 10th Street Wash Detention Basin No. 1
(FCD 93-31)
Preliminary Design Calculations

Dear Mr. Rerick:

The enclosed supporting calculations document the 60% submittal of the design for 10th Street Wash Detention Basin No. 1. The various sections pertain to individual components of the project. The reference page contains all materials used in the design process. The inside pocket contains a diskette with HEC-1 and HEC-2 computer model files. (Microstation 5.0 CADD files will be included under separate cover with the final deliverables.)

At this time, several design components are not complete. In particular, the design of the energy dissipation structures for the pipe outlets into the detention basin and for the west tributary channel just downstream of the inlet have not been finalized. Preliminary design has been initiated for these items and we would like to discuss the procedures prior to final design. Other components which are not included in this 60% submittal involve rather straight forward structural design. For example, the headwall structures have been located and sized but not designed. They are also not included in the structural sheets of the plan set. These details will be designed concurrent with your review of the 60% submittal and can be forwarded as soon as completed if you desire.

Please review the enclosed calculations and contact me if you have any questions or comments.

Sincerely,

STANLEY CONSULTANTS, INC.

G Scott Buchanan

Scott Buchanan, P.E.
Project Manager

Registered Professional Engineer (Civil)
CERTIFICATE NO.
26837
G. SCOTT
BUCHANAN
Date Signed 3-22-95
ARIZONA, U.S.A.

gsb/tlb:MAR058:12183

10TH STREET WASH DETENTION BASIN NO. 1
(FCD 93-31)
FINAL DESIGN CALCULATIONS

TABLE OF CONTENTS

Introduction (cover letter)

HEC-1 and HEC-2 Filenames and Descriptions

References

SECTIONS

HEC-1

HEC-2

Hydraulics/Miscellaneous
- Detention Basin
- East Tributary Inlet
- West Tributary Inlet
- Detention Basin Outlet
- Channel Stability
- Riprap Design

Structures
- Detention Basin Retaining Wall - West
- West Tributary Inlet
- East Tributary Inlet

Inside Pocket
- Diskettes containing HEC-1 and HEC-2

Registered Professional Engineer (Civil)
CERTIFICATE NO.
26837
G. SCOTT
BUCHANAN
Date Signed 3-27-95
ARIZONA, U.S.A.

HEC-1 AND HEC-2 FILENAMES AND DESCRIPTIONS

HEC-1

12183H1B	Existing condition for 100-year, 6-hour storm. (Based on Kaminski-Hubbard model provided to SCI by the Flood Control District of Maricopa County.)
12183H1C	Existing condition for 10-year, 6-hour storm.
12183H1D	Proposed condition for 100-year, 6-hour storm.
12183H1E	Proposed condition for 10-year, 6-hour storm.
12183H1F	Proposed condition for 100-year, 2-hour storm. (Emergency spillway design)
12183H1G	Proposed condition for consecutive 100-year, 6-hour storms. (Emergency spillway design) The starting condition is basin full with outlet plugged.

HEC-2

12183H2B	Existing condition water surface profiles for 10-year, 6-hour and 100-year, 6-hour storms.
12183H2C	Proposed condition water surface profiles for 10-year, 6-hour, 100-year, 6-hour, and 100-year, 2-hour (emergency) storms.

REFERENCES

1. Arizona Canal Diversion Channel Area Drainage Master Study, Phase 1, "10th Street Wash Watershed", Flood Control District of Maricopa County, Kaminski-Hubbard Engineering, June 11, 1992.

2. Two-foot contour aerial topography, ACDC/ADMS, Flood Control District of Maricopa County, Kaminski-Hubbard/Kenney Aerial Mapping, Flight date: November 15, 1990.

3. One-foot contour aerial topography, "10th Street Wash", Flood Control District of Maricopa County (FCD #93-23), DMJM Engineering/Kenney Aerial Mapping, April 1994.

4. Improvement plans for The Point Resort Condominiums at Tapatio Cliffs, Gosnell Development Corporation, Phoenix, Arizona, September 1984.

5. As-built plans for Cave Creek Road, City of Phoenix (Project No. P-65164.001), Hastain and Deatherage, Phoenix, Arizona, October 1975.

6. Geotechnical Report for 10th Street Wash Detention Basin No. 1, Huntingdon Engineering, June 1994.

7. HEC-1 Flood Hydrograph Package, Version 4.0, U.S. Army Corps of Engineers, Hydrologic Engineering Center, Davis, California, September 1990.

8. HEC-2 Water Surface Profiles, Version 4.6.2, U.S. Army Corps of Engineers, Hydrologic Engineering Center, Davis, California, May 1991.

9. Drainage Design Manual for Maricopa County, Volume I - Hydrology, Flood Control District of Maricopa County, June 1992.

10. Drainage Design Manual for Maricopa County, Volume II - Hydraulics, Flood Control District of Maricopa County, November 1991.

11. Construction Costs 1993, Arizona Department of Transportation, Highway Division, Contracts and Specifications Section.

12. Urban Highways - Channel Lining Design Guidelines, Arizona Department of Transportation, February 1989.

13. Drainage of Highway Pavements, Hydraulic Engineering Circular No. 12, U.S. Department of Transportation Federal Highway Administration, March 1984.

14. Hydraulic Design of Energy Dissipators for Culverts and Channels, Hydraulic Engineering Circular No. 14, U.S. Department of Transportation Federal Highway Administration, September 1983.

15. Hydraulic Design of Stilling Basins and Energy Dissipators, Engineering Monograph No. 25, U.S. Department of the Interior, Bureau of Reclamation, May 1984.

16. Computing Degradation and Local Scour, U.S. Department of the Interior, Bureau of Reclamation, January 1984.

17. Hydraulic Design of Flood Control Channels, Engineer Manual 1110-02-1601, U.S. Army Corps of Engineers, July 1991.

18. Hydraulic Models as an Aid to the Development of Design Criteria, U.S. Waterways Experiment Station Bulletin 37, June 1951.

19. Handbook of Hydraulics, Fifth Edition, King & Brater, 1963.

20. Uniform Standard Specifications for Public Works Construction, Maricopa Association of Governments, Arizona 1979.

21. Uniform Standard Details for Public Works Construction, Maricopa Association of Governments, Arizona 1979.

22. Phoenix Supplemental Standard Details for Public Works Construction, Engineering Department, City of Phoenix, 1981.

```
1****************************************                                    ****************************************
*                                      *                                    *                                      *
*   FLOOD HYDROGRAPH PACKAGE  (HEC-1)  *                                    *   U.S. ARMY CORPS OF ENGINEERS       *
*            SEPTEMBER 1990            *                                    *   HYDROLOGIC ENGINEERING CENTER      *
*             VERSION 4.0              *                                    *         609 SECOND STREET            *
*                                      *                                    *      DAVIS, CALIFORNIA 95616         *
*  RUN DATE  03/17/1995  TIME  15:15:30 *                                    *          (916) 756-1104              *
*                                      *                                    *                                      *
****************************************                                    ****************************************


                                        X     X  XXXXXXX   XXXXX          X
                                        X     X  X       X     X        XX
                                        X     X  X       X               X
                                        XXXXXXX  XXXX    X        XXXXX  X
                                        X     X  X       X               X
                                        X     X  X       X     X         X
                                        X     X  XXXXXXX   XXXXX        XXX


THIS PROGRAM REPLACES ALL PREVIOUS VERSIONS OF HEC-1 KNOWN AS HEC1 (JAN 73), HEC1GS, HEC1DB, AND HEC1KW.

THE DEFINITIONS OF VARIABLES -RTIMP- AND -RTIOR- HAVE CHANGED FROM THOSE USED WITH THE 1973-STYLE INPUT STRUCTURE.
THE DEFINITION OF -AMSKK- ON RM-CARD WAS CHANGED WITH REVISIONS DATED 28 SEP 81. THIS IS THE FORTRAN77 VERSION
NEW OPTIONS: DAMBREAK OUTFLOW SUBMERGENCE , SINGLE EVENT DAMAGE CALCULATION, DSS:WRITE STAGE FREQUENCY,
DSS:READ TIME SERIES AT DESIRED CALCULATION INTERVAL   LOSS RATE:GREEN AND AMPT INFILTRATION
KINEMATIC WAVE: NEW FINITE DIFFERENCE ALGORITHM

1                                                HEC-1 INPUT                                                    PAGE  1

  LINE          ID.......1.......2.......3.......4.......5.......6.......7.......8.......9......10

    1           ID
    2           ID        FLOOD CONTROL DISTRICT OF MARICOPA COUNTY
    3           ID        TENTH STREET WASH DETENTION BASIN NO 1  (FCD 93-31)
    4           ID        STANLEY CONSULTANTS, INC.  (SCI JOB # 12183)
    5           ID        HEC-1 INPUT FILENAME :  12183H1B
    6           ID
    7           ID        ************************************************************************
    8           ID        THIS HEC-1 MODEL IS BASED ON THE KAMINSKI-HUBBARD ACDC ADMS AS MODIFIED
    9           ID        BY FCD TO REFLECT TWO HYPOTHETICAL DETENTION BASINS (NUMBERS 1 AND 2).
   10           ID        THE DIFFERENCES BETWEEN THIS MODEL AND THE ORIGINAL MODEL TRANSMITTED
   11           ID        BY FCD TO SCI AT THE PROJECT KICKOFF MEETING ARE AS FOLLOWS:
   12           ID          1. USE OF THE HEC-1 DATA STORAGE SYSTEM OPTION HAS BEEN DELETED;
   13           ID          2. THE TWO HYPOTHETICAL DETENTION BASINS 1 AND 2 HAVE BEEN DELETED;
   14           ID          3. THE CROSS SECTIONAL AREA OF THE PRINCIPAL SPILLWAY OUTLET PIPE OF
   15           ID             THE EXISTING CITY OF PHOENIX DET DAM NO. 3 HAS BEEN CHANGED FROM
   16           ID             4.91 SQFT (WHICH CORRESPONDS TO AN OUTLET PIPE DIAM OF 30") TO
   17           ID             1.36 SQFT CORRESPONDING TO THE 14" X 14" STEEL ORIFICE PLATE WHICH
   18           ID             WAS ORIGINALLY DESIGNED AND INSTALLED.
   19           ID          4. THE "IT" RECORD UTILIZES 300 HYDROGRAPH POINTS INSTEAD OF 1000 AND
   20           ID             THE DATE AND TIME DATA HAVE BEEN DELETED.
   21           ID        ************************************************************************
   22           ID
   23           ID   ACDC AREA DRAINAGE MASTER STUDY
   24           ID   10TH STREET WASH WATERSHED
   25           ID   FILENAME:  TEN36.DAT     KHE JOB NO. 0146
   26           ID   100-YEAR 6-HOUR DURATION STORM
                *
                *  Based on FCDMC comments dated March 17,1992 we adjusted the Mannings "n"
                *  coefficient to reflect weighted averaging in lieu of log averaging.
                *  We also changed the S-graph from Phoenix Mountain to Phoenix Valley.
                *
                *DIAGRAM
   27           IT       3                    300
   28           IO       5

   29           KK    140S
   30           KM   RUNOFF GENERATED ON SUB-BASIN 140
   31           KM    THE FOLLOWING PARAMETERS WERE PROVIDED FOR THIS BASIN
   32           KM    L= 1.22 mi.  Lca= 0.51 mi.  S= 162 ft/mi.  Kn= .050  LAG= 22.87 min.
   33           KM    PHOENIX VALLEY S-GRAPH WAS USED FOR THIS BASIN
   34           BA    .516
   35           IN      15
   36           KM   RAINFALL DEPTH OF 3.00 WAS SPACIALLY REDUCED AS SHOWN BY THE PB RECORD
   37           KM   AN AREAL REDUCTION COEFFICIENT OF .975 WAS USED
   38           PB  2.9200
   39           KM   THE FOLLOWING PC RECORD USED A 6-HOUR RAINFALL WITH PATTERN NO. 2.01
   40           PC    .000    .009    .016    .025    .034    .042    .051    .059    .067    .076
   41           PC    .087    .100    .120    .163    .252    .451    .694    .837    .900    .938
   42           PC    .950    .963    .975    .988   1.000
   43           LG    .145    .339   4.25    .488   20.44
   44           UI     76.    119.    294.    391.    468.    577.    793.    930.    712.    588.
   45           UI    474.    381.    274.    154.    127.     90.     76.     26.     23.     23.
   46           UI     23.     23.      0.      0.      0.      0.      0.      0.      0.      0.
   47           UI      0.      0.      0.      0.      0.      0.      0.      0.      0.      0.
1                                                HEC-1 INPUT                                                    PAGE  2

  LINE          ID.......1.......2.......3.......4.......5.......6.......7.......8.......9......10

   48           KK   DT140
   49           KM   THROW AWAY 10-YR 2-HR RETENTION VOLUME:  1) 2.0 AC-FT FROM SUB-BASIN 140
   50           KM                                             (Hydrograph identified as OR140)
```

```
 51          KM                                          2) Balance of runoff continues on.
 52          KM                                            (Hydrograph identified as DT140)
 53          DT   OR140     2.0
 54          DI       0   10000
 55          DQ       0   10000
 56          KM   ****************************************************************************
 57          KM    KK 140RR
 58          KM    KM ROUTE FLOW THROUGH NORTH MOUNTAIN DETENTION NO.3
 59          KM    RS     1    ELEV    55.9
 60          KM    SV     0     .06    1.52    6.32   17.42   35.46   60.34   95.64
 61          KM    SE  55.9      58      62      66      70      74      78      82
 62          KM    SL 57.15    4.91      .6      .5
 63          KM       ***********************************************************************
 64          KM    THE SL RECORD (LOW-LEVEL OUTLET) SECOND FIELD (ORIFICE AREA) VALUE HAS
 65          KM    BEEN CHANGED BY SCI FROM 4.91 sq.ft. TO 1.36 sq.ft. (14"x14" INLET)
 66          KM       ***********************************************************************
 67          KM    SS 79.66     100     3.0     1.5
 68          KM   ****************************************************************************

 69          KK   140RR
 70          KM   ROUTE FLOW THROUGH NORTH MOUNTAIN DETENTION NO.3
 71          RS       1    ELEV    55.9
 72          SV       0     .06    1.52    6.32   17.42   35.46   60.34   95.64
 73          SE    55.9      58      62      66      70      74      78      82
 74          SL   56.43    1.36      .6      .5
 75          SS   80.00     100     3.0     1.5

 76          KK   RM140
 77          KM   MUSKINGUM-CUNGE ROUTE IN CHANNEL FROM DETENTION BASIN THROUGH SUB-BASIN 141
 78          KM            1) Reach Length = 3600 ft.
 79          RD
 80          RC    .045    .045    .045    3600   .0108
 81          RX       0       0    46.5    76.4    79.9   110.2   160.2   160.2
 82          RY      16    12.6     7.3       0       0     9.9    15.9      16

 83          KK    141S
 84          KM   RUNOFF GENERATED ON SUB-BASIN 141
 85          KM    THE FOLLOWING PARAMETERS WERE PROVIDED FOR THIS BASIN
 86          KM    L= 0.83 mi.  Lca= 0.57 mi.  S= 315 ft/mi.  Kn= .042  LAG= 15.26 min.
 87          KM    PHOENIX VALLEY S-GRAPH WAS USED FOR THIS BASIN
 88          BA    .187
 89          LG    .126    .303    3.61    .313   38.57
 90          UI     41.    136.    222.    297.    467.    414.    304.    220.    131.     70.
 91          UI     47.     23.     13.     13.     13.      0.      0.      0.      0.      0.
 92          UI      0.      0.      0.      0.      0.      0.      0.      0.      0.      0.
1                                          HEC-1 INPUT                                          PAGE  3

LINE         ID.......1.......2.......3.......4.......5.......6.......7.......8.......9......10

 93          KK   DT141
 94          KM   THROW AWAY 10-YR 2-HR RETENTION VOLUME:  1) 2.4 AC-FT FROM SUB-BASIN 141
 95          KM                                            (Hydrograph identified as OR141)
 96          KM                                          2) Balance of runoff continues on.
 97          KM                                            (Hydrograph identified as DT141)
 98          DT   OR141     2.4
 99          DI       0   10000
100          DQ       0   10000

101          KK   HC141
102          KM   COMBINE HYDROGRAPHS FROM SUB-BASIN 141 WITH ROUTED FLOW FROM DETENTION
103          HC       2

104          KK    142S
105          KM   RUNOFF GENERATED ON SUB-BASIN 142
106          KM    THE FOLLOWING PARAMETERS WERE PROVIDED FOR THIS BASIN
107          KM    L= 1.16 mi.  Lca= 0.75 mi.  S= 257 ft/mi.  Kn= .042  LAG= 19.99 min.
108          KM    PHOENIX VALLEY S-GRAPH WAS USED FOR THIS BASIN
109          BA    .512
110          LG    .127    .309    4.12    .267   34.03
111          UI     86.    178.    377.    488.    608.    839.   1049.    795.    637.    498.
112          UI    380.    210.    146.    107.     80.     26.     26.     26.     26.      0.
113          UI      0.      0.      0.      0.      0.      0.      0.      0.      0.      0.
114          UI      0.      0.      0.      0.      0.      0.      0.      0.      0.      0.

115          KK   DT142
116          KM   THROW AWAY 10-YR 2-HR RETENTION VOLUME:  1) 3.6 AC-FT FROM SUB-BASIN 142
117          KM                                            (Hydrograph identified as OR142)
118          KM                                          2) Balance of runoff continues on.
119          KM                                            (Hydrograph identified as DT142)
120          DT   OR142     3.6
121          DI       0   10000
122          DQ       0   10000

123          KK   HC142
124          KM   COMBINE HYDROGRAPHS FROM SUB-BASIN 142 WITH 141
125          HC       2

126          KK   RM142
127          KM   MUSKINGUM-CUNGE ROUTE IN CHANNEL FROM SUB-BASINS 141/142 THROUGH 143
128          KM            1) Reach Length = 5140 ft.
129          RD
130          RC    .050    .045    .050    5140   .0086
131          RX       0       0    43.8    61.3    67.4    78.3    89.8    89.8
132          RY    10.8     9.4     9.4       0       0     5.4     8.8    10.8

133          KK    143S
134          KM   RUNOFF GENERATED ON SUB-BASIN 143
135          KM    THE FOLLOWING PARAMETERS WERE PROVIDED FOR THIS BASIN
136          KM    L= 1.64 mi.  Lca= 0.88  S= 273 ft/mi.  Kn= .035  LAG= 19.96 min.
```

```
137          KM    PHOENIX VALLEY S-GRAPH WAS USED FOR THIS BASIN
138          BA    .604
139          LG    .115    .279    4.12    .269   49.66
140          UI    102.    212.    446.    577.    720.    994.   1238.    937.    750.    586.
1                                          HEC-1 INPUT                                                    PAGE  4

LINE         ID.......1.......2.......3.......4.......5.......6.......7.......8.......9......10

141          UI    447.    244.    173.    125.     93.     31.     31.     31.     31.      0.
142          UI      0.      0.      0.      0.      0.      0.      0.      0.      0.      0.
143          UI      0.      0.      0.      0.      0.      0.      0.      0.      0.      0.

144          KK   DT143
145          KM   THROW AWAY 10-YR 2-HR RETENTION VOLUME:  1) 5.7 AC-FT FROM SUB-BASIN 143
146          KM                                              (Hydrograph identified as OR143)
147          KM                                            2) Balance of runoff continues on.
148          KM                                              (Hydrograph identified as DT143)
149          DT   OR143     5.7
150          DI       0   10000
151          DQ       0   10000

152          KK   HC143
153          KM   COMBINE HYDROGRAPHS FROM SUB-BASIN 143 WITH ROUTED FLOW FROM 141/142
154          HC       2

155          KK   RM143
156          KM   MUSKINGUM-CUNGE ROUTE IN CHANNEL FROM SUB-BASIN 143 THROUGH 144
157          KM            1) Reach Length = 1400 ft.
158          RD
159          RC    .040    .035    .030    1400   .0100
160          RX       0       0    77.8    88.3    96.6   112.8   161.3   161.3
161          RY      10     6.2     6.2       0       0     6.3     6.9      10

162          KK    144S
163          KM   RUNOFF GENERATED ON SUB-BASIN 144
164          KM    THE FOLLOWING PARAMETERS WERE PROVIDED FOR THIS BASIN
165          KM    L= 1.80 mi.  Lca= 1.11 mi.  S= 291 ft/mi.  Kn= .036  LAG= 22.95 min.
166          KM    PHOENIX VALLEY S-GRAPH WAS USED FOR THIS BASIN
167          BA    .475
168          LG    .118    .280    3.61     .32   43.17
169          UI     70.    108.    269.    357.    428.    527.    721.    857.    657.    543.
170          UI    437.    353.    256.    145.    117.     85.     70.     26.     21.     21.
171          UI     21.     21.      0.      0.      0.      0.      0.      0.      0.      0.
172          UI      0.      0.      0.      0.      0.      0.      0.      0.      0.      0.

173          KK   DT144
174          KM   THROW AWAY 10-YR 2-HR RETENTION VOLUME:  1) 2.1 AC-FT FROM SUB-BASIN 144
175          KM                                              (Hydrograph identified as OR144)
176          KM                                            2) Balance of runoff continues on.
177          KM                                              (Hydrograph identified as DT144)
178          DT   OR144     2.1
179          DI       0   10000
180          DQ       0   10000

181          KK   HC144
182          KM   COMBINE HYDROGRAPHS FROM SUB-BASIN 144 WITH ROUTED FLOW FROM 143
183          HC       2
1                                          HEC-1 INPUT                                                    PAGE  5

LINE         ID.......1.......2.......3.......4.......5.......6.......7.......8.......9......10

184          KK   RM144
185          KM   MUSKINGUM-CUNGE ROUTE IN CHANNEL FROM SUB-BASIN 144 THROUGH 145
186          KM            1) Reach Length = 3000 ft.
187          RD
188          RC    .035    .035    .030    3000   .0073
189          RX       0       0    36.6      52    64.9    79.8   107.8   107.8
190          RY      11     7.7     7.4       0       0     8.3     8.5      11

191          KK    145S
192          KM   RUNOFF GENERATED ON SUB-BASIN 145
193          KM    THE FOLLOWING PARAMETERS WERE PROVIDED FOR THIS BASIN
194          KM    L= 1.37 mi.  Lca= 0.86 mi.  S= 242 ft/mi.  Kn= .032  LAG= 17.28 min.
195          KM    PHOENIX VALLEY S-GRAPH WAS USED FOR THIS BASIN
196          BA    .548
197          LG    .105    .265    5.67    .210   44.60
198          UI    107.    287.    526.    678.    922.   1303.    982.    755.    568.    378.
199          UI    186.    145.     98.     33.     33.     33.     33.      0.      0.      0.
200          UI      0.      0.      0.      0.      0.      0.      0.      0.      0.      0.

201          KK   HC145
202          KM   COMBINE HYDROGRAPHS FROM SUB-BASIN 145 WITH ROUTED FLOW FROM 144
203          KM   ALSO DETERMINES 10TH STREET WASH DISCHARGE INTO ACDC
204          HC       2
205          ZZ
1
          SCHEMATIC DIAGRAM OF STREAM NETWORK
 INPUT
  LINE     (V) ROUTING          (--->) DIVERSION OR PUMP FLOW

   NO.     (.) CONNECTOR        (<---) RETURN OF DIVERTED OR PUMPED FLOW

    29       140S
                .
                .
    53          .------->   OR140
    48      DT140
                V
                V
```

```
 69        140RR
               V
               V
 76        RM140
               .
               .
 83            .        141S
               .           .
               .           .
 98            .           .-------->   OR141
 93            .       DT141
               .           .
               .           .
101        HC141............
               .
               .
104            .        142S
               .           .
               .           .
120            .           .-------->   OR142
115            .       DT142
               .           .
               .           .
123        HC142............
               V
               V
126        RM142
               .
               .
133            .        143S
               .           .
               .           .
149            .           .-------->   OR143
144            .       DT143
               .           .
               .           .
152        HC143............
               V
               V
155        RM143
               .
               .
162            .        144S
               .           .
               .           .
178            .           .-------->   OR144
173            .       DT144
               .           .
               .           .
181        HC144............
               V
               V
184        RM144
               .
               .
191            .        145S
               .           .
               .           .
201        HC145............
```

(***) RUNOFF ALSO COMPUTED AT THIS LOCATION

```
1****************************************                    ****************************************
*                                      *                    *                                      *
*   FLOOD HYDROGRAPH PACKAGE  (HEC-1)  *                    *   U.S. ARMY CORPS OF ENGINEERS       *
*            SEPTEMBER 1990            *                    *   HYDROLOGIC ENGINEERING CENTER      *
*             VERSION 4.0              *                    *         609 SECOND STREET            *
*                                      *                    *      DAVIS, CALIFORNIA 95616         *
*  RUN DATE  03/17/1995  TIME  15:15:30 *                    *         (916) 756-1104               *
*                                      *                    *                                      *
****************************************                    ****************************************
```

FLOOD CONTROL DISTRICT OF MARICOPA COUNTY
TENTH STREET WASH DETENTION BASIN NO 1 (FCD 93-31)
STANLEY CONSULTANTS, INC. (SCI JOB # 12183)
HEC-1 INPUT FILENAME : 12183H1B

```
**********************************************************************
THIS HEC-1 MODEL IS BASED ON THE KAMINSKI-HUBBARD ACDC ADMS AS MODIFIED
BY FCD TO REFLECT TWO HYPOTHETICAL DETENTION BASINS (NUMBERS 1 AND 2).
THE DIFFERENCES BETWEEN THIS MODEL AND THE ORIGINAL MODEL TRANSMITTED
BY FCD TO SCI AT THE PROJECT KICKOFF MEETING ARE AS FOLLOWS:
  1. USE OF THE HEC-1 DATA STORAGE SYSTEM OPTION HAS BEEN DELETED;
  2. THE TWO HYPOTHETICAL DETENTION BASINS 1 AND 2 HAVE BEEN DELETED;
  3. THE CROSS SECTIONAL AREA OF THE PRINCIPAL SPILLWAY OUTLET PIPE OF
     THE EXISTING CITY OF PHOENIX DET DAM NO. 3 HAS BEEN CHANGED FROM
     4.91 SQFT (WHICH CORRESPONDS TO AN OUTLET PIPE DIAM OF 30") TO
     1.36 SQFT CORRESPONDING TO THE 14" X 14" STEEL ORIFICE PLATE WHICH
     WAS ORIGINALLY DESIGNED AND INSTALLED.
  4. THE "IT" RECORD UTILIZES 300 HYDROGRAPH POINTS INSTEAD OF 1000 AND
     THE DATE AND TIME DATA HAVE BEEN DELETED.
**********************************************************************
```

ACDC AREA DRAINAGE MASTER STUDY
10TH STREET WASH WATERSHED
FILENAME: TEN36.DAT KHE JOB NO. 0146

100-YEAR 6-HOUR DURATION STORM

```
28 IO          OUTPUT CONTROL VARIABLES
                    IPRNT          5  PRINT CONTROL
                    IPLOT          0  PLOT CONTROL
                    QSCAL         0.  HYDROGRAPH PLOT SCALE

   IT          HYDROGRAPH TIME DATA
                     NMIN          3  MINUTES IN COMPUTATION INTERVAL
                    IDATE      1   0  STARTING DATE
                    ITIME       0000  STARTING TIME
                       NQ        300  NUMBER OF HYDROGRAPH ORDINATES
                   NDDATE      1   0  ENDING DATE
                   NDTIME       1457  ENDING TIME
                    ICENT         19  CENTURY MARK

              COMPUTATION INTERVAL     .05 HOURS
                   TOTAL TIME BASE   14.95 HOURS

        ENGLISH UNITS
             DRAINAGE AREA          SQUARE MILES
             PRECIPITATION DEPTH    INCHES
             LENGTH, ELEVATION      FEET
             FLOW                   CUBIC FEET PER SECOND
             STORAGE VOLUME         ACRE-FEET
             SURFACE AREA           ACRES
             TEMPERATURE            DEGREES FAHRENHEIT
1
```

RUNOFF SUMMARY
FLOW IN CUBIC FEET PER SECOND
TIME IN HOURS, AREA IN SQUARE MILES

	OPERATION	STATION	PEAK FLOW	TIME OF PEAK	AVERAGE FLOW FOR MAXIMUM PERIOD 6-HOUR	24-HOUR	72-HOUR	BASIN AREA	MAXIMUM STAGE	TIME OF MAX STAGE
+	HYDROGRAPH AT	140S	496.	4.25	69.	28.	28.	.52		
+	DIVERSION TO	OR140	20.	4.25	4.	2.	2.	.52		
+	HYDROGRAPH AT	DT140	496.	4.25	65.	26.	26.	.52		
+	ROUTED TO	140RR	26.	5.10	25.	18.	18.	.52		
+									72.36	5.15
+	ROUTED TO	RM140	26.	5.45	25.	18.	18.	.52		
+	HYDROGRAPH AT	141S	263.	4.10	38.	15.	15.	.19		
+	DIVERSION TO	OR141	57.	4.10	5.	2.	2.	.19		
+	HYDROGRAPH AT	DT141	263.	4.10	33.	13.	13.	.19		
+	2 COMBINED AT	HC141	275.	4.10	56.	31.	31.	.70		
+	HYDROGRAPH AT	142S	671.	4.15	100.	40.	40.	.51		
+	DIVERSION TO	OR142	45.	4.15	7.	3.	3.	.51		
+	HYDROGRAPH AT	DT142	671.	4.15	93.	37.	37.	.51		
+	2 COMBINED AT	HC142	943.	4.15	148.	68.	68.	1.21		
+	ROUTED TO	RM142	933.	4.30	148.	68.	68.	1.21		
+	HYDROGRAPH AT	143S	841.	4.15	136.	55.	55.	.60		
+	DIVERSION TO	OR143	58.	4.15	11.	5.	5.	.60		
+	HYDROGRAPH AT	DT143	841.	4.15	125.	50.	50.	.60		
+	2 COMBINED AT	HC143	1745.	4.25	271.	118.	118.	1.82		
+	ROUTED TO	RM143	1735.	4.30	271.	118.	118.	1.82		
+	HYDROGRAPH AT	144S	615.	4.20	100.	40.	40.	.47		
+	DIVERSION TO	OR144	14.	4.20	4.	2.	2.	.47		

```
          HYDROGRAPH AT
+                        DT144      615.    4.20        96.        38.        38.       .47

          2 COMBINED AT
+                        HC144     2335.    4.30       363.       156.       156.      2.29

          ROUTED TO
+                        RM144     2333.    4.35       363.       156.       156.      2.29

          HYDROGRAPH AT
+                         145S      786.    4.10       121.        49.        49.       .55

          2 COMBINED AT
+                        HC145     2967.    4.25       478.       204.       204.      2.84
1
                                   SUMMARY OF KINEMATIC WAVE - MUSKINGUM-CUNGE ROUTING
                                       (FLOW IS DIRECT RUNOFF WITHOUT BASE FLOW)
                                                                          INTERPOLATED TO
                                                                       COMPUTATION INTERVAL
          ISTAQ    ELEMENT      DT       PEAK    TIME TO     VOLUME      DT       PEAK    TIME TO     VOLUME
                                                    PEAK                                     PEAK

                              (MIN)     (CFS)     (MIN)      (IN)    (MIN)     (CFS)     (MIN)      (IN)

            RM140  MANE        3.00     26.07    330.00       .79     3.00     26.07    330.00       .79

CONTINUITY SUMMARY (AC-FT) - INFLOW= .2263E+02 EXCESS= .0000E+00 OUTFLOW= .2176E+02 BASIN STORAGE= .6323E+00 PERCENT ERROR=   1.1

            RM142  MANE        2.70    935.30    256.50      1.29     3.00    933.15    258.00      1.29

CONTINUITY SUMMARY (AC-FT) - INFLOW= .8412E+02 EXCESS= .0000E+00 OUTFLOW= .8343E+02 BASIN STORAGE= .9667E+00 PERCENT ERROR=  -.3

            RM143  MANE        2.00   1736.83    257.72      1.50     3.00   1735.02    258.00      1.50

CONTINUITY SUMMARY (AC-FT) - INFLOW= .1453E+03 EXCESS= .0000E+00 OUTFLOW= .1452E+03 BASIN STORAGE= .2223E+00 PERCENT ERROR=  -.1

            RM144  MANE        3.00   2333.03    261.00      1.57     3.00   2333.03    261.00      1.57

CONTINUITY SUMMARY (AC-FT) - INFLOW= .1927E+03 EXCESS= .0000E+00 OUTFLOW= .1924E+03 BASIN STORAGE= .6002E+00 PERCENT ERROR=  -.2


*** NORMAL END OF HEC-1 ***
```

```
1****************************************                    ****************************************
*                                      *                    *
*   FLOOD HYDROGRAPH PACKAGE  (HEC-1)  *                    *   U.S. ARMY CORPS OF ENGINEERS
*          SEPTEMBER 1990              *                    *   HYDROLOGIC ENGINEERING CENTER
*           VERSION 4.0                *                    *         609 SECOND STREET
*                                      *                    *      DAVIS, CALIFORNIA 95616
*  RUN DATE  03/17/1995  TIME  15:15:49 *                    *         (916) 756-1104
*                                      *                    *
****************************************                    ****************************************


                                X     X  XXXXXXX   XXXXX          X
                                X     X  X        X     X        XX
                                X     X  X        X               X
                                XXXXXXX  XXXX     X        XXXXX  X
                                X     X  X        X               X
                                X     X  X        X     X         X
                                X     X  XXXXXXX   XXXXX        XXX


THIS PROGRAM REPLACES ALL PREVIOUS VERSIONS OF HEC-1 KNOWN AS HEC1 (JAN 73), HEC1GS, HEC1DB, AND HEC1KW.

THE DEFINITIONS OF VARIABLES -RTIMP- AND -RTIOR- HAVE CHANGED FROM THOSE USED WITH THE 1973-STYLE INPUT STRUCTURE.
THE DEFINITION OF -AMSKK- ON RM-CARD WAS CHANGED WITH REVISIONS DATED 28 SEP 81. THIS IS THE FORTRAN77 VERSION
NEW OPTIONS: DAMBREAK OUTFLOW SUBMERGENCE , SINGLE EVENT DAMAGE CALCULATION, DSS:WRITE STAGE FREQUENCY,
DSS:READ TIME SERIES AT DESIRED CALCULATION INTERVAL   LOSS RATE:GREEN AND AMPT INFILTRATION
KINEMATIC WAVE: NEW FINITE DIFFERENCE ALGORITHM

1                                          HEC-1 INPUT                                                    PAGE  1

      LINE          ID.......1.......2.......3.......4.......5.......6.......7.......8.......9......10

        1           ID
        2           ID        FLOOD CONTROL DISTRICT OF MARICOPA COUNTY
        3           ID        TENTH STREET WASH DETENTION BASIN NO 1  (FCD 93-31)
        4           ID        STANLEY CONSULTANTS, INC.  (SCI JOB # 12183)
        5           ID        HEC-1 INPUT FILENAME :  12183H1C     (10YR 6HR)
        6           ID
        7           ID        ************************************************************************
        8           ID        THIS IS THE SAME MODEL AS 12183B(100-YR) EXCEPT THE PRECIPITATION AMOUNT
        9           ID        HAS BEEN REDUCED TO THE 10-YR VALUE AS USED IN THE FCD MODELS PROVIDED
       10           ID        TO SCI.
       11           ID
       12           ID        THE 100-YR WATERSHED ROUGHNESS FACTORS DEVELOPED BY KHE ARE USED IN BOTH
       13           ID        THE 100-YR AND THE 10-YR MODELS.  NO ADJUSTMENTS HAVE BEEN MADE BY FCD
       14           ID        OR SCI TO REFLECT THE 10-YR ROUGHNESS FACTORS.
       15           ID        ************************************************************************
       16           ID
       17           ID        ************************************************************************
       18           ID        THIS HEC-1 MODEL IS BASED ON THE KAMINSKI-HUBBARD ACDC ADMS AS MODIFIED
       19           ID        BY FCD TO REFLECT TWO HYPOTHETICAL DETENTION BASINS (NUMBERS 1 AND 2).
       20           ID        THE DIFFERENCES BETWEEN THIS MODEL AND THE ORIGINAL MODEL TRANSMITTED
       21           ID        BY FCD TO SCI AT THE PROJECT KICKOFF MEETING ARE AS FOLLOWS:
       22           ID          1. USE OF THE HEC-1 DATA STORAGE SYSTEM OPTION HAS BEEN DELETED;
       23           ID          2. THE TWO HYPOTHETICAL DETENTION BASINS 1 AND 2 HAVE BEEN DELETED;
       24           ID          3. THE CROSS SECTIONAL AREA OF THE PRINCIPAL SPILLWAY OUTLET PIPE OF
       25           ID             THE EXISTING CITY OF PHOENIX DET DAM NO. 3 HAS BEEN CHANGED FROM
       26           ID             4.91 SQFT (WHICH CORRESPONDS TO AN OUTLET PIPE DIAM OF 30") TO
       27           ID             1.36 SQFT CORRESPONDING TO THE 14" X 14" STEEL ORIFICE PLATE WHICH
       28           ID             WAS ORIGINALLY DESIGNED AND INSTALLED.
       29           ID          4. THE "IT" RECORD UTILIZES 300 HYDROGRAPH POINTS INSTEAD OF 1000 AND
       30           ID             THE DATE AND TIME DATA HAVE BEEN DELETED.
       31           ID        ************************************************************************
       32           ID
       33           ID   ACDC AREA DRAINAGE MASTER STUDY
       34           ID   10TH STREET WASH WATERSHED
       35           ID   FILENAME:  TEN36.DAT     KHE JOB NO. 0146
       36           ID   10-YEAR 6-HOUR DURATION STORM
                    *
                    *  Based on FCDMC comments dated March 17,1992 we adjusted the Mannings "n"
                    *  coefficient to reflect weighted averaging in lieu of log averaging.
                    *  We also changed the S-graph from Phoenix Mountain to Phoenix Valley.
                    *
                    *DIAGRAM
       37           IT       3                    300
       38           IO       5

       39           KK    140S
       40           KM   RUNOFF GENERATED ON SUB-BASIN 140
       41           KM    THE FOLLOWING PARAMETERS WERE PROVIDED FOR THIS BASIN
       42           KM    L= 1.22 mi.  Lca= 0.51 mi.  S= 162 ft/mi.  Kn= .050  LAG= 22.87 min.
       43           KM    PHOENIX VALLEY S-GRAPH WAS USED FOR THIS BASIN
       44           BA    .516
       45           IN      15
       46           KM   RAINFALL DEPTH OF 1.94 WAS SPACIALLY REDUCED AS SHOWN BY THE PB RECORD
       47           KM   AN AREAL REDUCTION COEFFICIENT OF .975 WAS USED
       48           PB  1.8915
1                                          HEC-1 INPUT                                                    PAGE  2

      LINE          ID.......1.......2.......3.......4.......5.......6.......7.......8.......9......10

       49           KM   THE FOLLOWING PC RECORD USED A 6-HOUR RAINFALL WITH PATTERN NO. 2.01
       50           PC    .000    .009    .016    .025    .034    .042    .051    .059    .067    .076
       51           PC    .087    .100    .120    .163    .252    .451    .694    .837    .900    .938
```

```
 52          PC    .950    .963    .975    .988   1.000
 53          LG    .145    .339    4.25    .488   20.44
 54          UI     76.    119.    294.    391.    468.    577.    793.    930.    712.    588.
 55          UI    474.    381.    274.    154.    127.     90.     76.     26.     23.     23.
 56          UI     23.     23.      0.      0.      0.      0.      0.      0.      0.      0.
 57          UI      0.      0.      0.      0.      0.      0.      0.      0.      0.      0.

 58          KK   DT140
 59          KM   THROW AWAY 10-YR 2-HR RETENTION VOLUME:  1) 2.0 AC-FT FROM SUB-BASIN 140
 60          KM                                              (Hydrograph identified as OR140)
 61          KM                                            2) Balance of runoff continues on.
 62          KM                                              (Hydrograph identified as DT140)
 63          DT   OR140     2.0
 64          DI       0   10000
 65          DQ       0   10000
 66          KM   ******************************************************************************
 67          KM    KK 140RR
 68          KM    KM ROUTE FLOW THROUGH NORTH MOUNTAIN DETENTION NO.3
 69          KM    RS     1    ELEV    55.9
 70          KM    SV     0     .06    1.52    6.32   17.42   35.46   60.34   95.64
 71          KM    SE  55.9      58      62      66      70      74      78      82
 72          KM    SL 57.15    4.91      .6      .5
 73          KM      ***************************************************************************
 74          KM    THE SL RECORD (LOW-LEVEL OUTLET) SECOND FIELD (ORIFICE AREA) VALUE HAS
 75          KM    BEEN CHANGED BY SCI FROM 4.91 sq.ft. TO 1.36 sq.ft. (14"x14" INLET)
 76          KM      ***************************************************************************
 77          KM    SS 79.66     100     3.0     1.5
 78          KM   ******************************************************************************

 79          KK   140RR
 80          KM   ROUTE FLOW THROUGH NORTH MOUNTAIN DETENTION NO.3
 81          RS       1    ELEV    55.9
 82          SV       0     .06    1.52    6.32   17.42   35.46   60.34   95.64
 83          SE    55.9      58      62      66      70      74      78      82
 84          SL   56.43    1.36      .6      .5
 85          SS   80.00     100     3.0     1.5

 86          KK   RM140
 87          KM   MUSKINGUM-CUNGE ROUTE IN CHANNEL FROM DETENTION BASIN THROUGH SUB-BASIN 141
 88          KM            1) Reach Length = 3600 ft.
 89          RD
 90          RC    .045    .045    .045    3600   .0108
 91          RX       0       0    46.5    76.4    79.9   110.2   160.2   160.2
 92          RY      16    12.6     7.3       0       0     9.9    15.9      16

 93          KK    141S
 94          KM   RUNOFF GENERATED ON SUB-BASIN 141
 95          KM    THE FOLLOWING PARAMETERS WERE PROVIDED FOR THIS BASIN
 96          KM    L= 0.83 mi.  Lca= 0.57 mi.  S= 315 ft/mi.  Kn= .042  LAG= 15.26 min.
 97          KM    PHOENIX VALLEY S-GRAPH WAS USED FOR THIS BASIN
 98          BA    .187
 99          LG    .126    .303    3.61    .313   38.57
1                                         HEC-1 INPUT                                          PAGE  3

LINE         ID.......1.......2.......3.......4.......5.......6.......7.......8.......9......10

100          UI     41.    136.    222.    297.    467.    414.    304.    220.    131.     70.
101          UI     47.     23.     13.     13.     13.      0.      0.      0.      0.      0.
102          UI      0.      0.      0.      0.      0.      0.      0.      0.      0.      0.

103          KK   DT141
104          KM   THROW AWAY 10-YR 2-HR RETENTION VOLUME:  1) 2.4 AC-FT FROM SUB-BASIN 141
105          KM                                              (Hydrograph identified as OR141)
106          KM                                            2) Balance of runoff continues on.
107          KM                                              (Hydrograph identified as DT141)
108          DT   OR141     2.4
109          DI       0   10000
110          DQ       0   10000

111          KK   HC141
112          KM   COMBINE HYDROGRAPHS FROM SUB-BASIN 141 WITH ROUTED FLOW FROM DETENTION
113          HC       2

114          KK    142S
115          KM   RUNOFF GENERATED ON SUB-BASIN 142
116          KM    THE FOLLOWING PARAMETERS WERE PROVIDED FOR THIS BASIN
117          KM    L= 1.16 mi.  Lca= 0.75 mi.  S= 257 ft/mi.  Kn= .042  LAG= 19.99 min.
118          KM    PHOENIX VALLEY S-GRAPH WAS USED FOR THIS BASIN
119          BA    .512
120          LG    .127    .309    4.12    .267   34.03
121          UI     86.    178.    377.    488.    608.    839.   1049.    795.    637.    498.
122          UI    380.    210.    146.    107.     80.     26.     26.     26.     26.      0.
123          UI      0.      0.      0.      0.      0.      0.      0.      0.      0.      0.
124          UI      0.      0.      0.      0.      0.      0.      0.      0.      0.      0.

125          KK   DT142
126          KM   THROW AWAY 10-YR 2-HR RETENTION VOLUME:  1) 3.6 AC-FT FROM SUB-BASIN 142
127          KM                                              (Hydrograph identified as OR142)
128          KM                                            2) Balance of runoff continues on.
129          KM                                              (Hydrograph identified as DT142)
130          DT   OR142     3.6
131          DI       0   10000
132          DQ       0   10000

133          KK   HC142
134          KM   COMBINE HYDROGRAPHS FROM SUB-BASIN 142 WITH 141
135          HC       2

136          KK   RM142
137          KM   MUSKINGUM-CUNGE ROUTE IN CHANNEL FROM SUB-BASINS 141/142 THROUGH 143
```

```
 138          KM            1) Reach Length = 5140 ft.
 139          RD
 140          RC    .050    .045    .050    5140   .0086
 141          RX       0       0    43.8    61.3    67.4    78.3    89.8    89.8
 142          RY    10.8     9.4     9.4       0       0     5.4     8.8    10.8
1                                          HEC-1 INPUT                                                          PAGE  4

LINE          ID.......1.......2.......3.......4.......5.......6.......7.......8.......9......10


 143          KK    143S
 144          KM   RUNOFF GENERATED ON SUB-BASIN 143
 145          KM    THE FOLLOWING PARAMETERS WERE PROVIDED FOR THIS BASIN
 146          KM    L= 1.64 mi.  Lca= 0.88  S= 273 ft/mi.  Kn= .035  LAG= 19.96 min.
 147          KM    PHOENIX VALLEY S-GRAPH WAS USED FOR THIS BASIN
 148          BA    .604
 149          LG    .115    .279    4.12    .269   49.66
 150          UI    102.    212.    446.    577.    720.    994.   1238.    937.    750.    586.
 151          UI    447.    244.    173.    125.     93.     31.     31.     31.     31.      0.
 152          UI      0.      0.      0.      0.      0.      0.      0.      0.      0.      0.
 153          UI      0.      0.      0.      0.      0.      0.      0.      0.      0.      0.

 154          KK   DT143
 155          KM   THROW AWAY 10-YR 2-HR RETENTION VOLUME:  1) 5.7 AC-FT FROM SUB-BASIN 143
 156          KM                                               (Hydrograph identified as OR143)
 157          KM                                            2) Balance of runoff continues on.
 158          KM                                               (Hydrograph identified as DT143)
 159          DT   OR143     5.7
 160          DI       0   10000
 161          DQ       0   10000

 162          KK   HC143
 163          KM   COMBINE HYDROGRAPHS FROM SUB-BASIN 143 WITH ROUTED FLOW FROM 141/142
 164          HC       2

 165          KK   RM143
 166          KM   MUSKINGUM-CUNGE ROUTE IN CHANNEL FROM SUB-BASIN 143 THROUGH 144
 167          KM            1) Reach Length = 1400 ft.
 168          RD
 169          RC    .040    .035    .030    1400   .0100
 170          RX       0       0    77.8    88.3    96.6   112.8   161.3   161.3
 171          RY      10     6.2     6.2       0       0     6.3     6.9      10

 172          KK    144S
 173          KM   RUNOFF GENERATED ON SUB-BASIN 144
 174          KM    THE FOLLOWING PARAMETERS WERE PROVIDED FOR THIS BASIN
 175          KM    L= 1.80 mi.  Lca= 1.11 mi.  S= 291 ft/mi.  Kn= .036  LAG= 22.95 min.
 176          KM    PHOENIX VALLEY S-GRAPH WAS USED FOR THIS BASIN
 177          BA    .475
 178          LG    .118    .280    3.61     .32   43.17
 179          UI     70.    108.    269.    357.    428.    527.    721.    857.    657.    543.
 180          UI    437.    353.    256.    145.    117.     85.     70.     26.     21.     21.
 181          UI     21.     21.      0.      0.      0.      0.      0.      0.      0.      0.
 182          UI      0.      0.      0.      0.      0.      0.      0.      0.      0.      0.

 183          KK   DT144
 184          KM   THROW AWAY 10-YR 2-HR RETENTION VOLUME:  1) 2.1 AC-FT FROM SUB-BASIN 144
 185          KM                                               (Hydrograph identified as OR144)
 186          KM                                            2) Balance of runoff continues on.
 187          KM                                               (Hydrograph identified as DT144)
 188          DT   OR144     2.1
 189          DI       0   10000
 190          DQ       0   10000
1                                          HEC-1 INPUT                                                          PAGE  5

LINE          ID.......1.......2.......3.......4.......5.......6.......7.......8.......9......10


 191          KK   HC144
 192          KM   COMBINE HYDROGRAPHS FROM SUB-BASIN 144 WITH ROUTED FLOW FROM 143
 193          HC       2

 194          KK   RM144
 195          KM   MUSKINGUM-CUNGE ROUTE IN CHANNEL FROM SUB-BASIN 144 THROUGH 145
 196          KM            1) Reach Length = 3000 ft.
 197          RD
 198          RC    .035    .035    .030    3000   .0073
 199          RX       0       0    36.6      52    64.9    79.8   107.8   107.8
 200          RY      11     7.7     7.4       0       0     8.3     8.5      11

 201          KK    145S
 202          KM   RUNOFF GENERATED ON SUB-BASIN 145
 203          KM    THE FOLLOWING PARAMETERS WERE PROVIDED FOR THIS BASIN
 204          KM    L= 1.37 mi.  Lca= 0.86 mi.  S= 242 ft/mi.  Kn= .032  LAG= 17.28 min.
 205          KM    PHOENIX VALLEY S-GRAPH WAS USED FOR THIS BASIN
 206          BA    .548
 207          LG    .105    .265    5.67    .210   44.60
 208          UI    107.    287.    526.    678.    922.   1303.    982.    755.    568.    378.
 209          UI    186.    145.     98.     33.     33.     33.     33.      0.      0.      0.
 210          UI      0.      0.      0.      0.      0.      0.      0.      0.      0.      0.

 211          KK   HC145
 212          KM   COMBINE HYDROGRAPHS FROM SUB-BASIN 145 WITH ROUTED FLOW FROM 144
 213          KM   ALSO DETERMINES 10TH STREET WASH DISCHARGE INTO ACDC
 214          HC       2
 215          ZZ
1
          SCHEMATIC DIAGRAM OF STREAM NETWORK
 INPUT
  LINE     (V) ROUTING          (--->) DIVERSION OR PUMP FLOW
```

```
NO.      (.) CONNECTOR        (<---) RETURN OF DIVERTED OR PUMPED FLOW

 39       140S
             .
             .
 63          .------->   OR140
 58      DT140
             V
             V
 79      140RR
             V
             V
 86      RM140
             .
             .
 93          .        141S
             .           .
             .           .
108          .           .------->   OR141
103          .       DT141
             .           .
             .           .
111      HC141............
             .
             .
114          .        142S
             .           .
             .           .
130          .           .------->   OR142
125          .       DT142
             .           .
             .           .
133      HC142............
             V
             V
136      RM142
             .
             .
143          .        143S
             .           .
             .           .
159          .           .------->   OR143
154          .       DT143
             .           .
             .           .
162      HC143............
             V
             V
165      RM143
             .
             .
172          .        144S
             .           .
             .           .
188          .           .------->   OR144
183          .       DT144
             .           .
             .           .
191      HC144............
             V
             V
194      RM144
             .
             .
201          .        145S
             .           .
             .           .
211      HC145............
```

(***) RUNOFF ALSO COMPUTED AT THIS LOCATION

```
1****************************************
*                                      *
*   FLOOD HYDROGRAPH PACKAGE  (HEC-1)  *
*            SEPTEMBER 1990            *
*             VERSION 4.0              *
*                                      *
*  RUN DATE  03/17/1995  TIME  15:15:49 *
*                                      *
****************************************
```

```
****************************************
*                                      *
*    U.S. ARMY CORPS OF ENGINEERS      *
*    HYDROLOGIC ENGINEERING CENTER     *
*          609 SECOND STREET           *
*       DAVIS, CALIFORNIA 95616        *
*           (916) 756-1104             *
*                                      *
****************************************
```

FLOOD CONTROL DISTRICT OF MARICOPA COUNTY
TENTH STREET WASH DETENTION BASIN NO 1 (FCD 93-31)
STANLEY CONSULTANTS, INC. (SCI JOB # 12183)
HEC-1 INPUT FILENAME : 12183H1C (10YR 6HR)

****

THIS IS THE SAME MODEL AS 12183B(100-YR) EXCEPT THE PRECIPITATION AMOUNT HAS BEEN REDUCED TO THE 10-YR VALUE AS USED IN THE FCD MODELS PROVIDED TO SCI.

THE 100-YR WATERSHED ROUGHNESS FACTORS DEVELOPED BY KHE ARE USED IN BOTH THE 100-YR AND THE 10-YR MODELS. NO ADJUSTMENTS HAVE BEEN MADE BY FCD OR SCI TO REFLECT THE 10-YR ROUGHNESS FACTORS.

****

```
                    ************************************************************************
                    THIS HEC-1 MODEL IS BASED ON THE KAMINSKI-HUBBARD ACDC ADMS AS MODIFIED
                    BY FCD TO REFLECT TWO HYPOTHETICAL DETENTION BASINS (NUMBERS 1 AND 2).
                    THE DIFFERENCES BETWEEN THIS MODEL AND THE ORIGINAL MODEL TRANSMITTED
                    BY FCD TO SCI AT THE PROJECT KICKOFF MEETING ARE AS FOLLOWS:
                      1. USE OF THE HEC-1 DATA STORAGE SYSTEM OPTION HAS BEEN DELETED;
                      2. THE TWO HYPOTHETICAL DETENTION BASINS 1 AND 2 HAVE BEEN DELETED;
                      3. THE CROSS SECTIONAL AREA OF THE PRINCIPAL SPILLWAY OUTLET PIPE OF
                         THE EXISTING CITY OF PHOENIX DET DAM NO. 3 HAS BEEN CHANGED FROM
                         4.91 SQFT (WHICH CORRESPONDS TO AN OUTLET PIPE DIAM OF 30") TO
                         1.36 SQFT CORRESPONDING TO THE 14" X 14" STEEL ORIFICE PLATE WHICH
                         WAS ORIGINALLY DESIGNED AND INSTALLED.
                      4. THE "IT" RECORD UTILIZES 300 HYDROGRAPH POINTS INSTEAD OF 1000 AND
                         THE DATE AND TIME DATA HAVE BEEN DELETED.
                    ************************************************************************

                  ACDC AREA DRAINAGE MASTER STUDY
                  10TH STREET WASH WATERSHED
                  FILENAME:  TEN36.DAT     KHE JOB NO. 0146
                  10-YEAR 6-HOUR DURATION STORM

38 IO        OUTPUT CONTROL VARIABLES
                  IPRNT          5  PRINT CONTROL
                  IPLOT          0  PLOT CONTROL
                  QSCAL         0.  HYDROGRAPH PLOT SCALE

   IT        HYDROGRAPH TIME DATA
                   NMIN          3  MINUTES IN COMPUTATION INTERVAL
                  IDATE      1   0  STARTING DATE
                  ITIME       0000  STARTING TIME
                     NQ        300  NUMBER OF HYDROGRAPH ORDINATES
                 NDDATE      1   0  ENDING DATE
                 NDTIME       1457  ENDING TIME
                  ICENT         19  CENTURY MARK

             COMPUTATION INTERVAL     .05 HOURS
                 TOTAL TIME BASE   14.95 HOURS

      ENGLISH UNITS
           DRAINAGE AREA          SQUARE MILES
           PRECIPITATION DEPTH    INCHES
           LENGTH, ELEVATION      FEET
           FLOW                   CUBIC FEET PER SECOND
           STORAGE VOLUME         ACRE-FEET
           SURFACE AREA           ACRES
           TEMPERATURE            DEGREES FAHRENHEIT
1
                                          RUNOFF SUMMARY
                                     FLOW IN CUBIC FEET PER SECOND
                                  TIME IN HOURS,  AREA IN SQUARE MILES

                                   PEAK   TIME OF   AVERAGE FLOW FOR MAXIMUM PERIOD   BASIN   MAXIMUM   TIME OF
        OPERATION        STATION   FLOW    PEAK    6-HOUR   24-HOUR   72-HOUR        AREA    STAGE   MAX STAGE
+
        HYDROGRAPH AT
+                         140S     184.    4.25      27.      11.       11.          .52
        DIVERSION TO
+                        OR140      38.    4.25       4.       2.        2.          .52
        HYDROGRAPH AT
+                        DT140     184.    4.25      23.       9.        9.          .52
        ROUTED TO
+                        140RR      21.    5.05      19.       9.        9.          .52
+                                                                                   66.86     5.05
        ROUTED TO
+                        RM140      21.    5.40      19.       9.        9.          .52
        HYDROGRAPH AT
+                         141S     143.    4.10      20.       8.        8.          .19
        DIVERSION TO
+                        OR141      64.    4.10       5.       2.        2.          .19
        HYDROGRAPH AT
+                        DT141     143.    4.10      16.       6.        6.          .19
        2 COMBINED AT
+                        HC141     143.    4.10      33.      16.       16.          .70
        HYDROGRAPH AT
+                         142S     360.    4.20      53.      21.       21.          .51
        DIVERSION TO
+                        OR142      79.    4.20       7.       3.        3.          .51
        HYDROGRAPH AT
+                        DT142     360.    4.20      46.      19.       19.          .51
        2 COMBINED AT
+                        HC142     499.    4.15      79.      34.       34.         1.21
        ROUTED TO
+                        RM142     494.    4.35      79.      34.       34.         1.21
        HYDROGRAPH AT
```

```
+                          143S      480.    4.20        78.        31.        31.       .60
+        DIVERSION TO
                           OR143     108.    4.20        11.         5.         5.       .60
+        HYDROGRAPH AT
                           DT143     480.    4.20        67.        27.        27.       .60
+        2 COMBINED AT
                           HC143     938.    4.25       145.        61.        61.      1.82
+        ROUTED TO
                           RM143     933.    4.30       145.        61.        61.      1.82
+        HYDROGRAPH AT
                           144S      340.    4.25        56.        22.        22.       .47
+        DIVERSION TO
                           OR144      16.    4.25         4.         2.         2.       .47
+        HYDROGRAPH AT
                           DT144     340.    4.25        52.        21.        21.       .47
+        2 COMBINED AT
                           HC144    1265.    4.30       195.        82.        82.      2.29
+        ROUTED TO
                           RM144    1261.    4.35       195.        82.        82.      2.29
+        HYDROGRAPH AT
                           145S      448.    4.15        68.        27.        27.       .55
+        2 COMBINED AT
                           HC145    1610.    4.30       257.       109.       109.      2.84
1
                                  SUMMARY OF KINEMATIC WAVE - MUSKINGUM-CUNGE ROUTING
                                      (FLOW IS DIRECT RUNOFF WITHOUT BASE FLOW)
                                                                          INTERPOLATED TO
                                                                       COMPUTATION INTERVAL
          ISTAQ    ELEMENT      DT       PEAK    TIME TO     VOLUME      DT       PEAK    TIME TO     VOLUME
                                                   PEAK                                      PEAK
                               (MIN)     (CFS)     (MIN)      (IN)    (MIN)     (CFS)     (MIN)      (IN)
            RM140   MANE        3.00     21.08    324.00       .42     3.00     21.08    324.00       .42

CONTINUITY SUMMARY (AC-FT) - INFLOW= .1161E+02 EXCESS= .0000E+00 OUTFLOW= .1160E+02 BASIN STORAGE= .5034E-03 PERCENT ERROR=    .1

            RM142   MANE        1.80    493.56    261.00       .65     3.00    493.56    261.00       .65

CONTINUITY SUMMARY (AC-FT) - INFLOW= .4234E+02 EXCESS= .0000E+00 OUTFLOW= .4239E+02 BASIN STORAGE= .6765E-03 PERCENT ERROR=   -.1

            RM143   MANE        2.35    933.56    258.68       .78     3.00    932.62    258.00       .78

CONTINUITY SUMMARY (AC-FT) - INFLOW= .7549E+02 EXCESS= .0000E+00 OUTFLOW= .7552E+02 BASIN STORAGE= .1869E-03 PERCENT ERROR=    .0

            RM144   MANE        3.00   1260.96    261.00       .83     3.00   1260.96    261.00       .83

CONTINUITY SUMMARY (AC-FT) - INFLOW= .1011E+03 EXCESS= .0000E+00 OUTFLOW= .1011E+03 BASIN STORAGE= .3644E-03 PERCENT ERROR=    .0


*** NORMAL END OF HEC-1 ***
```

```
1****************************************                                    ****************************************
*                                      *                                    *                                      *
*   FLOOD HYDROGRAPH PACKAGE  (HEC-1)  *                                    *   U.S. ARMY CORPS OF ENGINEERS       *
*          SEPTEMBER 1990              *                                    *   HYDROLOGIC ENGINEERING CENTER      *
*           VERSION 4.0                *                                    *         609 SECOND STREET            *
*                                      *                                    *      DAVIS, CALIFORNIA 95616         *
*  RUN DATE  03/17/1995  TIME  15:13:27 *                                    *         (916) 756-1104               *
*                                      *                                    *                                      *
****************************************                                    ****************************************


                                    X     X  XXXXXXX   XXXXX          X
                                    X     X  X        X     X        XX
                                    X     X  X        X              X
                                    XXXXXXX  XXXX     X        XXXXX  X
                                    X     X  X        X              X
                                    X     X  X        X     X        X
                                    X     X  XXXXXXX   XXXXX        XXX


THIS PROGRAM REPLACES ALL PREVIOUS VERSIONS OF HEC-1 KNOWN AS HEC1 (JAN 73), HEC1GS, HEC1DB, AND HEC1KW.

THE DEFINITIONS OF VARIABLES -RTIMP- AND -RTIOR- HAVE CHANGED FROM THOSE USED WITH THE 1973-STYLE INPUT STRUCTURE.
THE DEFINITION OF -AMSKK- ON RM-CARD WAS CHANGED WITH REVISIONS DATED 28 SEP 81. THIS IS THE FORTRAN77 VERSION
NEW OPTIONS: DAMBREAK OUTFLOW SUBMERGENCE , SINGLE EVENT DAMAGE CALCULATION, DSS:WRITE STAGE FREQUENCY,
DSS:READ TIME SERIES AT DESIRED CALCULATION INTERVAL   LOSS RATE:GREEN AND AMPT INFILTRATION
KINEMATIC WAVE: NEW FINITE DIFFERENCE ALGORITHM

1                                          HEC-1 INPUT                                                    PAGE  1

LINE          ID.......1.......2.......3.......4.......5.......6.......7.......8.......9......10

  1           ID
  2           ID        FLOOD CONTROL DISTRICT OF MARICOPA COUNTY
  3           ID        TENTH STREET WASH DETENTION BASIN NO 1  (FCD 93-31)
  4           ID        STANLEY CONSULTANTS, INC.  (SCI JOB # 12183)
  5           ID        HEC-1 INPUT FILENAME :  12183H1D
  6           ID
  7           ID        ************************************************************************
  8           ID        THIS MODEL REPRESENTS THE PROPOSED 10TH STREET WASH DETENTION BASIN #1.
  9           ID        THE FOLLOWING IMPROVEMENTS ARE REFLECTED.
 10           ID          1. EAST TRIBUTARY (SUB-BASIN 141): 29' WEIR INLET AT CREST ELEV. 1321.
 11           ID             DIVERSION RECORDS REFLECT BYPASS OF LOW FLOWS THROUGH EXISTING 30"
 12           ID             CMP AND INLET RATING CURVE.
 13           ID          1. WEST TRIBUTARY (SUB-BASIN 142): 100' SIDE WEIR 3.34' ABOVE PROPOSED
 14           ID             FLOW LINE AT WEIR CREST ELEV. 1319.  DIVERSION RECORDS REFLECT LOW
 15           ID             FLOW BYPASS AND INLET RATING CURVE.
 16           ID          2. BASIN CONFIGURATION: 3:1 SLOPES ON 3 SIDES AND A VERTICAL RETAINING
 17           ID             WALL ON THE WEST SIDE, A BOTTOM ELEVATION (OUTLET INV. ELEV.) OF
 18           ID             1306.8, AND A HIGH WATER ELEV. 1319 WITH 1' FREEBOARD TO ELEV.
 19           ID             1320.
 20           ID          3. OUTLET CONFIGURATION: 30" RCP AT INV. ELEV. 1306.8 AS THE LOW FLOW
 21           ID             AND PRINCIPAL OUTLET, AND A 260' EMERGENCY WEIR AT CREST ELEV.
 22           ID             1318.3.
 23           ID        ************************************************************************
 24           ID
 25           ID        ************************************************************************
 26           ID        THIS HEC-1 MODEL IS BASED ON THE KAMINSKI-HUBBARD ACDC ADMS AS MODIFIED
 27           ID        BY FCD TO REFLECT TWO HYPOTHETICAL DETENTION BASINS (NUMBERS 1 AND 2).
 28           ID        THE DIFFERENCES BETWEEN THIS MODEL AND THE ORIGINAL MODEL TRANSMITTED
 29           ID        BY FCD TO SCI AT THE PROJECT KICKOFF MEETING ARE AS FOLLOWS:
 30           ID          1. USE OF THE HEC-1 DATA STORAGE SYSTEM OPTION HAS BEEN DELETED;
 31           ID          2. THE TWO HYPOTHETICAL DETENTION BASINS 1 AND 2 HAVE BEEN DELETED;
 32           ID          3. THE CROSS SECTIONAL AREA OF THE PRINCIPAL SPILLWAY OUTLET PIPE OF
 33           ID             THE EXISTING CITY OF PHOENIX DET BASIN NO. 3 HAS BEEN CHANGED FROM
 34           ID             4.91 SQFT (WHICH CORRESPONDS TO AN OUTLET PIPE DIAM OF 30") TO
 35           ID             1.36 SQFT CORRESPONDING TO THE 14" X 14" STEEL ORIFICE PLATE WHICH
 36           ID             WAS ORIGINALLY DESIGNED AND INSTALLED.
 37           ID        ************************************************************************
 38           ID
 39           ID   ACDC AREA DRAINAGE MASTER STUDY
 40           ID   10TH STREET WASH WATERSHED
 41           ID   FILENAME:  TEN36.DAT     KHE JOB NO. 0146
 42           ID   100-YEAR 6-HOUR DURATION STORM
              *
              *  Based on FCDMC comments dated March 17,1992 we adjusted the Mannings "n"
              *  coefficient to reflect weighted averaging in lieu of log averaging.
              *  We also changed the S-graph from Phoenix Mountain to Phoenix Valley.
              *
              *DIAGRAM
 43           IT       3                    300
 44           IO       5
1                                          HEC-1 INPUT                                                    PAGE  2

LINE          ID.......1.......2.......3.......4.......5.......6.......7.......8.......9......10

 45           KK    140S
 46           KM   RUNOFF GENERATED ON SUB-BASIN 140
 47           KM    THE FOLLOWING PARAMETERS WERE PROVIDED FOR THIS BASIN
 48           KM    L= 1.22 mi.  Lca= 0.51 mi.  S= 162 ft/mi.  Kn= .050  LAG= 22.87 min.
 49           KM    PHOENIX VALLEY S-GRAPH WAS USED FOR THIS BASIN
 50           BA    .516
 51           IN      15
```

```
 52          KM   RAINFALL DEPTH OF 3.00 WAS SPACIALLY REDUCED AS SHOWN BY THE PB RECORD
 53          KM   AN AREAL REDUCTION COEFFICIENT OF .975 WAS USED
 54          PB  2.9200
 55          KM   THE FOLLOWING PC RECORD USED A 6-HOUR RAINFALL WITH PATTERN NO. 2.01
 56          PC    .000    .009    .016    .025    .034    .042    .051    .059    .067    .076
 57          PC    .087    .100    .120    .163    .252    .451    .694    .837    .900    .938
 58          PC    .950    .963    .975    .988   1.000
 59          LG    .145    .339   4.25    .488   20.44
 60          UI     76.    119.    294.    391.    468.    577.    793.    930.    712.    588.
 61          UI    474.    381.    274.    154.    127.     90.     76.     26.     23.     23.
 62          UI     23.     23.      0.      0.      0.      0.      0.      0.      0.      0.
 63          UI      0.      0.      0.      0.      0.      0.      0.      0.      0.      0.

 64          KK   DT140
 65          KM   THROW AWAY 10-YR 2-HR RETENTION VOLUME:  1) 2.0 AC-FT FROM SUB-BASIN 140
 66          KM                                               (Hydrograph identified as OR140)
 67          KM                                            2) Balance of runoff continues on.
 68          KM                                               (Hydrograph identified as DT140)
 69          DT   OR140     2.0
 70          DI       0   10000
 71          DQ       0   10000
 72          KM   ******************************************************************************
 73          KM    KK 140RR
 74          KM    KM ROUTE FLOW THROUGH NORTH MOUNTAIN DETENTION NO.3
 75          KM    RS     1    ELEV    55.9
 76          KM    SV     0     .06    1.52    6.32   17.42   35.46   60.34   95.64
 77          KM    SE  55.9      58      62      66      70      74      78      82
 78          KM    SL 57.15    4.91      .6      .5
 79          KM       ***********************************************************************
 80          KM    THE SL RECORD (LOW-LEVEL OUTLET) SECOND FIELD (ORIFICE AREA) VALUE HAS
 81          KM    BEEN CHANGED BY SCI FROM 4.91 sq.ft. TO 1.36 sq.ft. (14"x14" INLET)
 82          KM       ***********************************************************************
 83          KM    SS 79.66     100     3.0     1.5
 84          KM   ******************************************************************************

 85          KK   140RR
 86          KM   ROUTE FLOW THROUGH NORTH MOUNTAIN DETENTION NO.3
 87          RS       1    ELEV    55.9
 88          SV       0     .06    1.52    6.32   17.42   35.46   60.34   95.64
 89          SE    55.9      58      62      66      70      74      78      82
 90          SL   56.43    1.36      .6      .5
 91          SS   80.00     100     3.0     1.5
1                                   HEC-1 INPUT                                          PAGE  3

LINE         ID.......1.......2.......3.......4.......5.......6.......7.......8.......9......10

 92          KK   RM140
 93          KM   MUSKINGUM-CUNGE ROUTE IN CHANNEL FROM DETENTION BASIN THROUGH SUB-BASIN 141
 94          KM            1) Reach Length = 3600 ft.
 95          RD
 96          RC    .045    .045    .045    3600   .0108
 97          RX       0       0    46.5    76.4    79.9   110.2   160.2   160.2
 98          RY      16    12.6     7.3       0       0     9.9    15.9      16

 99          KK    141S
100          KM   RUNOFF GENERATED ON SUB-BASIN 141
101          KM    THE FOLLOWING PARAMETERS WERE PROVIDED FOR THIS BASIN
102          KM    L= 0.83 mi.  Lca= 0.57 mi.  S= 315 ft/mi.  Kn= .042  LAG= 15.26 min.
103          KM    PHOENIX VALLEY S-GRAPH WAS USED FOR THIS BASIN
104          BA    .187
105          LG    .126    .303    3.61    .313   38.57
106          UI     41.    136.    222.    297.    467.    414.    304.    220.    131.     70.
107          UI     47.     23.     13.     13.     13.      0.      0.      0.      0.      0.
108          UI      0.      0.      0.      0.      0.      0.      0.      0.      0.      0.

109          KK   DT141
110          KM   THROW AWAY 10-YR 2-HR RETENTION VOLUME:  1) 2.4 AC-FT FROM SUB-BASIN 141
111          KM                                               (Hydrograph identified as OR141)
112          KM                                            2) Balance of runoff continues on.
113          KM                                               (Hydrograph identified as DT141)
114          DT   OR141     2.4
115          DI       0   10000
116          DQ       0   10000

117          KK   HC141
118          KM   COMBINE HYDROGRAPHS FROM SUB-BASIN 141 WITH ROUTED FLOW FROM DETENTION
119          HC       2
120          KM   ******************************************************************************

121          KK  DVT141   SPLIT HYDROGRAPH 141 TO DET142 AND HC142
122          KM           DI-DQ BASED ON HYDRAULIC RATING CURVE FOR PROPOSED INLET AND
123          KM           EXISTING 30" PIPE.  WEIR LENGTH IS 29' WEIR CREST AT ELEV 1321.
124          KM           DQ IS AMOUNT DIVERTED AROUND DETENTION BASIN DOWNSTREAM.
125          KM           DI-DQ DIFFERENCE IS ROUTED THRU THE PROPOSED DETENTION BASIN
126          DT  DVT141
127          DI       0       5      10      25      57     114     188     275
128          DQ       0       5      10      25      26      27      28      29
129          KM   ******************************************************************************

130          KK    142S
131          KM   RUNOFF GENERATED ON SUB-BASIN 142
132          KM    THE FOLLOWING PARAMETERS WERE PROVIDED FOR THIS BASIN
133          KM    L= 1.16 mi.  Lca= 0.75 mi.  S= 257 ft/mi.  Kn= .042  LAG= 19.99 min.
134          KM    PHOENIX VALLEY S-GRAPH WAS USED FOR THIS BASIN
135          BA    .512
136          LG    .127    .309    4.12    .267   34.03
137          UI     86.    178.    377.    488.    608.    839.   1049.    795.    637.    498.
138          UI    380.    210.    146.    107.     80.     26.     26.     26.     26.      0.
139          UI      0.      0.      0.      0.      0.      0.      0.      0.      0.      0.
```

```
140          UI     0.     0.     0.     0.     0.     0.     0.     0.     0.     0.
1                                        HEC-1 INPUT                                                    PAGE  4

LINE         ID.......1.......2.......3.......4.......5.......6.......7.......8.......9......10

141          KK   DT142
142          KM   THROW AWAY 10-YR 2-HR RETENTION VOLUME:  1) 3.6 AC-FT FROM SUB-BASIN 142
143          KM                                              (Hydrograph identified as OR142)
144          KM                                           2) Balance of runoff continues on.
145          KM                                              (Hydrograph identified as DT142)
146          DT   OR142     3.6
147          DI       0   10000
148          DQ       0   10000
149          KM   ******************************************************************************

150          KK  DVT142   SPLIT HYDROGRAPH DVT142 TO DET142 AND HC142
151          KM           DI-DQ BASED ON HYDRAULIC RATING CURVE FOR PROPOSED INLET AND
152          KM           IMPROVED WASH CROSS SECTION.  WEIR LENGTH IS 100' WEIR CREST ELEV IS
153          KM           3.34' ABOVE WASH FLOWLINE AT 1319.  HEC-2 SPLIT FLOW OPTION USED TO
154          KM           ESTIMATE THE INLET HYDRAULICS AT THE INCREMENTAL FLOW RATES.
155          KM           DQ IS AMOUNT DIVERTED AROUND DETENTION BASIN DOWNSTREAM.
156          KM           DI-DQ DIFFERENCE IS ROUTED THRU THE PROPOSED DETENTION BASIN
157          DT  DVT142
158          DI       0      50     100     150     195     200     250     300     350     400
159          DI     450     500     550     600     650     672     700     750
160          DQ       0      50     100     150     195     197     223     248     271     293
161          DQ     317     346     378     399     408     410     413     418

162          KK  ADD142
163          KM   COMBINE HYDROGRAPHS FROM (DI-DQ) FROM DVT141 WITH (DI-DQ) FROM DVT142
164          HC       2

165          KK  DET142   ROUTE HYDROGRAPH ADD142 THRU DET BASIN 142
166          KM           30" RCP  AS LOW FLOW AND PRINCIPAL OUTLET (INV. EL. 1306.8)
167          KM           260' EMERGENCY WEIR AT ELEV. 1318.3
168          RS       1    STOR      -1
169          SV     0.0   0.006   0.283   1.103   2.596   4.477   6.448   8.507   10.66   12.89
170          SV   15.22   17.64   20.14   20.92   21.44   22.21   22.73   25.42
171          SQ       0       0     0.0     0.0     5.0    15.0    29.0    40.0    49.0    57.0
172          SQ      65      70      74      75     151     371     565    1924
173          SE  1306.8    1307    1308    1309    1310    1311    1312    1313    1314    1315
174          SE    1316    1317    1318  1318.3  1318.5  1318.8    1319    1320

175          KK  DVT141    RETRIEVE PREVIOUSLY SPLIT HYDROGRAPH FROM SUB-BASIN 141
176          DR  DVT141

177          KK  DVT142    RETRIEVE PREVIOUSLY SPLIT HYDROGRAPH FROM SUB-BASIN 142
178          DR  DVT142

179          KK   HC142
180          KM   COMBINE HYDROGRAPHS (DQ) FROM DVT142, (DQ) FROM DVT141 AND DET142 OUTFLOW
181          HC       3
182          KM   ******************************************************************************
1                                        HEC-1 INPUT                                                    PAGE  5

LINE         ID.......1.......2.......3.......4.......5.......6.......7.......8.......9......10

183          KK   RM142
184          KM   MUSKINGUM-CUNGE ROUTE IN CHANNEL FROM SUB-BASINS 141/142 THROUGH 143
185          KM            1) Reach Length = 5140 ft.
186          RD
187          RC    .050    .045    .050    5140   .0086
188          RX       0       0    43.8    61.3    67.4    78.3    89.8    89.8
189          RY    10.8     9.4     9.4       0       0     5.4     8.8    10.8

190          KK    143S
191          KM   RUNOFF GENERATED ON SUB-BASIN 143
192          KM    THE FOLLOWING PARAMETERS WERE PROVIDED FOR THIS BASIN
193          KM    L= 1.64 mi.  Lca= 0.88  S= 273 ft/mi.  Kn= .035  LAG= 19.96 min.
194          KM    PHOENIX VALLEY S-GRAPH WAS USED FOR THIS BASIN
195          BA    .604
196          LG    .115    .279    4.12    .269   49.66
197          UI    102.    212.    446.    577.    720.    994.   1238.    937.    750.    586.
198          UI    447.    244.    173.    125.     93.     31.     31.     31.     31.      0.
199          UI      0.      0.      0.      0.      0.      0.      0.      0.      0.      0.
200          UI      0.      0.      0.      0.      0.      0.      0.      0.      0.      0.

201          KK   DT143
202          KM   THROW AWAY 10-YR 2-HR RETENTION VOLUME:  1) 5.7 AC-FT FROM SUB-BASIN 143
203          KM                                              (Hydrograph identified as OR143)
204          KM                                           2) Balance of runoff continues on.
205          KM                                              (Hydrograph identified as DT143)
206          DT   OR143     5.7
207          DI       0   10000
208          DQ       0   10000

209          KK   HC143
210          KM   COMBINE HYDROGRAPHS FROM SUB-BASIN 143 WITH ROUTED FLOW FROM 141/142
211          HC       2

212          KK   RM143
213          KM   MUSKINGUM-CUNGE ROUTE IN CHANNEL FROM SUB-BASIN 143 THROUGH 144
214          KM            1) Reach Length = 1400 ft.
215          RD
216          RC    .040    .035    .030    1400   .0100
217          RX       0       0    77.8    88.3    96.6   112.8   161.3   161.3
218          RY      10     6.2     6.2       0       0     6.3     6.9      10
```

```
 219          KK    144S
 220          KM    RUNOFF GENERATED ON SUB-BASIN 144
 221          KM     THE FOLLOWING PARAMETERS WERE PROVIDED FOR THIS BASIN
 222          KM     L= 1.80 mi.  Lca= 1.11 mi.  S= 291 ft/mi.  Kn= .036  LAG= 22.95 min.
 223          KM     PHOENIX VALLEY S-GRAPH WAS USED FOR THIS BASIN
 224          BA    .475
 225          LG    .118    .280    3.61     .32   43.17
 226          UI     70.    108.    269.    357.    428.    527.    721.    857.    657.    543.
 227          UI    437.    353.    256.    145.    117.     85.     70.     26.     21.     21.
 228          UI     21.     21.      0.      0.      0.      0.      0.      0.      0.      0.
 229          UI      0.      0.      0.      0.      0.      0.      0.      0.      0.      0.
1                                              HEC-1 INPUT                                          PAGE  6

LINE          ID.......1.......2.......3.......4.......5.......6.......7.......8.......9......10


 230          KK   DT144
 231          KM   THROW AWAY 10-YR 2-HR RETENTION VOLUME:  1) 2.1 AC-FT FROM SUB-BASIN 144
 232          KM                                               (Hydrograph identified as OR144)
 233          KM                                            2) Balance of runoff continues on.
 234          KM                                               (Hydrograph identified as DT144)
 235          DT   OR144     2.1
 236          DI       0   10000
 237          DQ       0   10000

 238          KK   HC144
 239          KM   COMBINE HYDROGRAPHS FROM SUB-BASIN 144 WITH ROUTED FLOW FROM 143
 240          HC       2

 241          KK   RM144
 242          KM   MUSKINGUM-CUNGE ROUTE IN CHANNEL FROM SUB-BASIN 144 THROUGH 145
 243          KM            1) Reach Length = 3000 ft.
 244          RD
 245          RC    .035    .035    .030    3000   .0073
 246          RX       0       0    36.6      52    64.9    79.8   107.8   107.8
 247          RY      11     7.7     7.4       0       0     8.3     8.5      11

 248          KK    145S
 249          KM   RUNOFF GENERATED ON SUB-BASIN 145
 250          KM    THE FOLLOWING PARAMETERS WERE PROVIDED FOR THIS BASIN
 251          KM    L= 1.37 mi.  Lca= 0.86 mi.  S= 242 ft/mi.  Kn= .032  LAG= 17.28 min.
 252          KM    PHOENIX VALLEY S-GRAPH WAS USED FOR THIS BASIN
 253          BA    .548
 254          LG    .105    .265    5.67    .210   44.60
 255          UI    107.    287.    526.    678.    922.   1303.    982.    755.    568.    378.
 256          UI    186.    145.     98.     33.     33.     33.     33.      0.      0.      0.
 257          UI      0.      0.      0.      0.      0.      0.      0.      0.      0.      0.

 258          KK   HC145
 259          KM   COMBINE HYDROGRAPHS FROM SUB-BASIN 145 WITH ROUTED FLOW FROM 144
 260          KM   ALSO DETERMINES 10TH STREET WASH DISCHARGE INTO ACDC
 261          HC       2
 262          ZZ
1
              SCHEMATIC DIAGRAM OF STREAM NETWORK
 INPUT
  LINE     (V) ROUTING          (--->) DIVERSION OR PUMP FLOW

   NO.     (.) CONNECTOR        (<---) RETURN OF DIVERTED OR PUMPED FLOW

   45        140S
                .
                .
   69           .------->   OR140
   64       DT140
                V
                V
   85       140RR
                V
                V
   92       RM140
                .
                .
   99           .        141S
                .          .
                .          .
  114           .          .------->   OR141
  109           .       DT141
                .          .
                .          .
  117       HC141............
                .
                .
  126           .------->  DVT141
  121      DVT141
                .
                .
  130           .        142S
                .          .
                .          .
  146           .          .------->   OR142
  141           .       DT142
                .          .
                .          .
  157           .          .------->  DVT142
  150           .      DVT142
                .          .
                .          .
  162      ADD142............
                V
```

```
                V
165        DET142
                .
                .
176             .          .<-------  DVT141
175             .      DVT141
                .          .
                .          .
178             .          .          .<-------  DVT142
177             .          .      DVT142
                .          .          .
                .          .          .
179        HC142.......................
                V
                V
183        RM142
                .
                .
190             .        143S
                .          .
                .          .
206             .          .------->   OR143
201             .       DT143
                .          .
                .          .
209        HC143............
                V
                V
212        RM143
                .
                .
219             .        144S
                .          .
                .          .
235             .          .------->   OR144
230             .       DT144
                .          .
                .          .
238        HC144............
                V
                V
241        RM144
                .
                .
248             .        145S
                .          .
                .          .
258        HC145............
```

(***) RUNOFF ALSO COMPUTED AT THIS LOCATION

```
1****************************************
*                                      *
*   FLOOD HYDROGRAPH PACKAGE  (HEC-1)  *
*            SEPTEMBER 1990            *
*             VERSION 4.0              *
*                                      *
*  RUN DATE  03/17/1995  TIME  15:13:27 *
*                                      *
****************************************
```

```
****************************************
*                                      *
*    U.S. ARMY CORPS OF ENGINEERS      *
*    HYDROLOGIC ENGINEERING CENTER     *
*          609 SECOND STREET           *
*       DAVIS, CALIFORNIA 95616        *
*           (916) 756-1104             *
*                                      *
****************************************
```

FLOOD CONTROL DISTRICT OF MARICOPA COUNTY
TENTH STREET WASH DETENTION BASIN NO 1 (FCD 93-31)
STANLEY CONSULTANTS, INC. (SCI JOB # 12183)
HEC-1 INPUT FILENAME : 12183H1D

****

THIS MODEL REPRESENTS THE PROPOSED 10TH STREET WASH DETENTION BASIN #1.
THE FOLLOWING IMPROVEMENTS ARE REFLECTED.

1. EAST TRIBUTARY (SUB-BASIN 141): 29' WEIR INLET AT CREST ELEV. 1321. DIVERSION RECORDS REFLECT BYPASS OF LOW FLOWS THROUGH EXISTING 30" CMP AND INLET RATING CURVE.
1. WEST TRIBUTARY (SUB-BASIN 142): 100' SIDE WEIR 3.34' ABOVE PROPOSED FLOW LINE AT WEIR CREST ELEV. 1319. DIVERSION RECORDS REFLECT LOW FLOW BYPASS AND INLET RATING CURVE.
2. BASIN CONFIGURATION: 3:1 SLOPES ON 3 SIDES AND A VERTICAL RETAINING WALL ON THE WEST SIDE, A BOTTOM ELEVATION (OUTLET INV. ELEV.) OF 1306.8, AND A HIGH WATER ELEV. 1319 WITH 1' FREEBOARD TO ELEV. 1320.
3. OUTLET CONFIGURATION: 30" RCP AT INV. ELEV. 1306.8 AS THE LOW FLOW AND PRINCIPAL OUTLET, AND A 260' EMERGENCY WEIR AT CREST ELEV. 1318.3.

****

****

THIS HEC-1 MODEL IS BASED ON THE KAMINSKI-HUBBARD ACDC ADMS AS MODIFIED BY FCD TO REFLECT TWO HYPOTHETICAL DETENTION BASINS (NUMBERS 1 AND 2). THE DIFFERENCES BETWEEN THIS MODEL AND THE ORIGINAL MODEL TRANSMITTED BY FCD TO SCI AT THE PROJECT KICKOFF MEETING ARE AS FOLLOWS:

1. USE OF THE HEC-1 DATA STORAGE SYSTEM OPTION HAS BEEN DELETED;
2. THE TWO HYPOTHETICAL DETENTION BASINS 1 AND 2 HAVE BEEN DELETED;
3. THE CROSS SECTIONAL AREA OF THE PRINCIPAL SPILLWAY OUTLET PIPE OF THE EXISTING CITY OF PHOENIX DET BASIN NO. 3 HAS BEEN CHANGED FROM 4.91 SQFT (WHICH CORRESPONDS TO AN OUTLET PIPE DIAM OF 30") TO 1.36 SQFT CORRESPONDING TO THE 14" X 14" STEEL ORIFICE PLATE WHICH WAS ORIGINALLY DESIGNED AND INSTALLED.

```
*************************************************************************

                    ACDC AREA DRAINAGE MASTER STUDY
                    10TH STREET WASH WATERSHED
                    FILENAME:  TEN36.DAT     KHE JOB NO. 0146
                    100-YEAR 6-HOUR DURATION STORM

 44 IO        OUTPUT CONTROL VARIABLES
                   IPRNT          5  PRINT CONTROL
                   IPLOT          0  PLOT CONTROL
                   QSCAL         0.  HYDROGRAPH PLOT SCALE

    IT        HYDROGRAPH TIME DATA
                    NMIN          3  MINUTES IN COMPUTATION INTERVAL
                   IDATE      1   0  STARTING DATE
                   ITIME       0000  STARTING TIME
                      NQ        300  NUMBER OF HYDROGRAPH ORDINATES
                  NDDATE      1   0  ENDING DATE
                  NDTIME       1457  ENDING TIME
                   ICENT         19  CENTURY MARK

              COMPUTATION INTERVAL     .05 HOURS
                   TOTAL TIME BASE   14.95 HOURS

         ENGLISH UNITS
              DRAINAGE AREA          SQUARE MILES
              PRECIPITATION DEPTH    INCHES
              LENGTH, ELEVATION      FEET
              FLOW                   CUBIC FEET PER SECOND
              STORAGE VOLUME         ACRE-FEET
              SURFACE AREA           ACRES
              TEMPERATURE            DEGREES FAHRENHEIT
1
                                          RUNOFF SUMMARY
                                     FLOW IN CUBIC FEET PER SECOND
                                  TIME IN HOURS,  AREA IN SQUARE MILES

                                   PEAK   TIME OF   AVERAGE FLOW FOR MAXIMUM PERIOD   BASIN   MAXIMUM   TIME OF
+        OPERATION       STATION   FLOW    PEAK     6-HOUR    24-HOUR    72-HOUR     AREA    STAGE   MAX STAGE
+        HYDROGRAPH AT
+                          140S    496.    4.25       69.       28.        28.       .52
         DIVERSION TO
+                          OR140    20.    4.25        4.        2.         2.       .52
         HYDROGRAPH AT
+                          DT140   496.    4.25       65.       26.        26.       .52
         ROUTED TO
+                          140RR    26.    5.10       25.       18.        18.       .52
+                                                                                   72.36     5.15
         ROUTED TO
+                          RM140    26.    5.45       25.       18.        18.       .52
         HYDROGRAPH AT
+                           141S   263.    4.10       38.       15.        15.       .19
         DIVERSION TO
+                          OR141    57.    4.10        5.        2.         2.       .19
         HYDROGRAPH AT
+                          DT141   263.    4.10       33.       13.        13.       .19
         2 COMBINED AT
+                          HC141   275.    4.10       56.       31.        31.       .70
         DIVERSION TO
+                         DVT141    29.    4.10       26.       19.        19.       .70
         HYDROGRAPH AT
+                         DVT141   246.    4.10       30.       12.        12.       .70
         HYDROGRAPH AT
+                           142S   671.    4.15      100.       40.        40.       .51
         DIVERSION TO
+                          OR142    45.    4.15        7.        3.         3.       .51
         HYDROGRAPH AT
+                          DT142   671.    4.15       93.       37.        37.       .51
         DIVERSION TO
+                         DVT142   410.    4.15       69.       28.        28.       .51
         HYDROGRAPH AT
+                         DVT142   261.    4.15       24.        9.         9.       .51
         2 COMBINED AT
+                         ADD142   504.    4.15       54.       22.        22.      1.21
         ROUTED TO
+                         DET142   105.    4.60       46.       20.        20.      1.21
+                                                                                 1318.38     4.60
         HYDROGRAPH AT
+                         DVT141    29.    4.10       26.       19.        19.       .00
```

+	HYDROGRAPH AT	DVT142	410.	4.15	69.	28.	28.	.00
+	3 COMBINED AT	HC142	502.	4.25	139.	67.	67.	1.21
+	ROUTED TO	RM142	498.	4.40	139.	66.	66.	1.21
+	HYDROGRAPH AT	143S	841.	4.15	136.	55.	55.	.60
+	DIVERSION TO	OR143	58.	4.15	11.	5.	5.	.60
+	HYDROGRAPH AT	DT143	841.	4.15	125.	50.	50.	.60
+	2 COMBINED AT	HC143	1294.	4.25	260.	116.	116.	1.82
+	ROUTED TO	RM143	1289.	4.25	260.	116.	116.	1.82
+	HYDROGRAPH AT	144S	615.	4.20	100.	40.	40.	.47
+	DIVERSION TO	OR144	14.	4.20	4.	2.	2.	.47
+	HYDROGRAPH AT	DT144	615.	4.20	96.	38.	38.	.47
+	2 COMBINED AT	HC144	1904.	4.25	352.	154.	154.	2.29
+	ROUTED TO	RM144	1894.	4.30	352.	154.	154.	2.29
+	HYDROGRAPH AT	145S	786.	4.10	121.	49.	49.	.55
+	2 COMBINED AT	HC145	2586.	4.25	464.	203.	203.	2.84

1

SUMMARY OF KINEMATIC WAVE - MUSKINGUM-CUNGE ROUTING
(FLOW IS DIRECT RUNOFF WITHOUT BASE FLOW)

ISTAQ	ELEMENT	DT (MIN)	PEAK (CFS)	TIME TO PEAK (MIN)	VOLUME (IN)	INTERPOLATED TO COMPUTATION INTERVAL DT (MIN)	PEAK (CFS)	TIME TO PEAK (MIN)	VOLUME (IN)
RM140	MANE	3.00	26.07	330.00	.79	3.00	26.07	330.00	.79

CONTINUITY SUMMARY (AC-FT) - INFLOW= .2263E+02 EXCESS= .0000E+00 OUTFLOW= .2176E+02 BASIN STORAGE= .6323E+00 PERCENT ERROR= 1.1

RM142	MANE	3.00	498.25	264.00	1.26	3.00	498.25	264.00	1.26

CONTINUITY SUMMARY (AC-FT) - INFLOW= .8243E+02 EXCESS= .0000E+00 OUTFLOW= .8160E+02 BASIN STORAGE= .1045E+01 PERCENT ERROR= -.3

RM143	MANE	2.16	1291.46	257.15	1.48	3.00	1289.22	255.00	1.48

CONTINUITY SUMMARY (AC-FT) - INFLOW= .1435E+03 EXCESS= .0000E+00 OUTFLOW= .1433E+03 BASIN STORAGE= .2387E+00 PERCENT ERROR= -.1

RM144	MANE	3.00	1894.22	258.00	1.56	3.00	1894.22	258.00	1.56

CONTINUITY SUMMARY (AC-FT) - INFLOW= .1908E+03 EXCESS= .0000E+00 OUTFLOW= .1904E+03 BASIN STORAGE= .6384E+00 PERCENT ERROR= -.1

*** NORMAL END OF HEC-1 ***

```
1****************************************                                    ****************************************
*                                      *                                    *                                      *
*   FLOOD HYDROGRAPH PACKAGE  (HEC-1)  *                                    *   U.S. ARMY CORPS OF ENGINEERS       *
*          SEPTEMBER 1990              *                                    *   HYDROLOGIC ENGINEERING CENTER      *
*           VERSION 4.0                *                                    *         609 SECOND STREET            *
*                                      *                                    *      DAVIS, CALIFORNIA 95616         *
*  RUN DATE  03/17/1995  TIME  14:52:10 *                                    *          (916) 756-1104              *
*                                      *                                    *                                      *
****************************************                                    ****************************************


                                        X     X  XXXXXXX   XXXXX          X
                                        X     X  X        X     X        XX
                                        X     X  X        X               X
                                        XXXXXXX  XXXX     X        XXXXX  X
                                        X     X  X        X               X
                                        X     X  X        X     X         X
                                        X     X  XXXXXXX   XXXXX        XXX


          THIS PROGRAM REPLACES ALL PREVIOUS VERSIONS OF HEC-1 KNOWN AS HEC1 (JAN 73), HEC1GS, HEC1DB, AND HEC1KW.

          THE DEFINITIONS OF VARIABLES -RTIMP- AND -RTIOR- HAVE CHANGED FROM THOSE USED WITH THE 1973-STYLE INPUT STRUCTURE.
          THE DEFINITION OF -AMSKK- ON RM-CARD WAS CHANGED WITH REVISIONS DATED 28 SEP 81. THIS IS THE FORTRAN77 VERSION
          NEW OPTIONS: DAMBREAK OUTFLOW SUBMERGENCE , SINGLE EVENT DAMAGE CALCULATION, DSS:WRITE STAGE FREQUENCY,
          DSS:READ TIME SERIES AT DESIRED CALCULATION INTERVAL   LOSS RATE:GREEN AND AMPT INFILTRATION
          KINEMATIC WAVE: NEW FINITE DIFFERENCE ALGORITHM

1                                                   HEC-1 INPUT                                                    PAGE  1

       LINE          ID.......1.......2.......3.......4.......5.......6.......7.......8.......9......10

         1           ID
         2           ID        FLOOD CONTROL DISTRICT OF MARICOPA COUNTY
         3           ID        TENTH STREET WASH DETENTION BASIN NO 1  (FCD 93-31)
         4           ID        STANLEY CONSULTANTS, INC.  (SCI JOB # 12183)
         5           ID        HEC-1 INPUT FILENAME :  12183H1E   (10YR 6HR PROPOSED)
         6           ID
         7           ID        ************************************************************************
         8           ID        THIS MODEL REPRESENTS THE PROPOSED 10TH STREET WASH DETENTION BASIN #1.
         9           ID        THE FOLLOWING IMPROVEMENTS ARE REFLECTED.
        10           ID          1. EAST TRIBUTARY (SUB-BASIN 141): 29' WEIR INLET AT CREST ELEV. 1321.
        11           ID             DIVERSION RECORDS REFLECT BYPASS OF LOW FLOWS THROUGH EXISTING 30"
        12           ID             CMP AND INLET RATING CURVE.
        13           ID          1. WEST TRIBUTARY (SUB-BASIN 142): 100' SIDE WEIR 3.34' ABOVE PROPOSED
        14           ID             FLOW LINE AT WEIR CREST ELEV. 1319.  DIVERSION RECORDS REFLECT LOW
        15           ID             FLOW BYPASS AND INLET RATING CURVE.
        16           ID          2. BASIN CONFIGURATION: 3:1 SLOPES ON 3 SIDES AND A VERTICAL RETAINING
        17           ID             WALL ON THE WEST SIDE, A BOTTOM ELEVATION (OUTLET INV. ELEV.) OF
        18           ID             1306.8, AND A HIGH WATER ELEV. 1319 WITH 1' FREEBOARD TO ELEV.
        19           ID             1320.
        20           ID          3. OUTLET CONFIGURATION: 30" RCP AT INV. ELEV. 1306.8 AS THE LOW FLOW
        21           ID             AND PRINCIPAL OUTLET, AND A 260' EMERGENCY WEIR AT CREST ELEV.
        22           ID             1318.3.
        23           ID        ************************************************************************
        24           ID
        25           ID        ************************************************************************
        26           ID        THIS HEC-1 MODEL IS BASED ON THE KAMINSKI-HUBBARD ACDC ADMS AS MODIFIED
        27           ID        BY FCD TO REFLECT TWO HYPOTHETICAL DETENTION BASINS (NUMBERS 1 AND 2).
        28           ID        THE DIFFERENCES BETWEEN THIS MODEL AND THE ORIGINAL MODEL TRANSMITTED
        29           ID        BY FCD TO SCI AT THE PROJECT KICKOFF MEETING ARE AS FOLLOWS:
        30           ID          1. USE OF THE HEC-1 DATA STORAGE SYSTEM OPTION HAS BEEN DELETED;
        31           ID          2. THE TWO HYPOTHETICAL DETENTION BASINS 1 AND 2 HAVE BEEN DELETED;
        32           ID          3. THE CROSS SECTIONAL AREA OF THE PRINCIPAL SPILLWAY OUTLET PIPE OF
        33           ID             THE EXISTING CITY OF PHOENIX DET BASIN NO. 3 HAS BEEN CHANGED FROM
        34           ID             4.91 SQFT (WHICH CORRESPONDS TO AN OUTLET PIPE DIAM OF 30") TO
        35           ID             1.36 SQFT CORRESPONDING TO THE 14" X 14" STEEL ORIFICE PLATE WHICH
        36           ID             WAS ORIGINALLY DESIGNED AND INSTALLED.
        37           ID        ************************************************************************
        38           ID
        39           ID   ACDC AREA DRAINAGE MASTER STUDY
        40           ID   10TH STREET WASH WATERSHED
        41           ID   FILENAME:  TEN36.DAT     KHE JOB NO. 0146
        42           ID   10-YEAR 6-HOUR DURATION STORM
                     *
                     *  Based on FCDMC comments dated March 17,1992 we adjusted the Mannings "n"
                     *  coefficient to reflect weighted averaging in lieu of log averaging.
                     *  We also changed the S-graph from Phoenix Mountain to Phoenix Valley.
                     *
                     *DIAGRAM
        43           IT       3                    300
        44           IO       5
1                                                   HEC-1 INPUT                                                    PAGE  2

       LINE          ID.......1.......2.......3.......4.......5.......6.......7.......8.......9......10

        45           KK    140S
        46           KM   RUNOFF GENERATED ON SUB-BASIN 140
        47           KM    THE FOLLOWING PARAMETERS WERE PROVIDED FOR THIS BASIN
        48           KM    L= 1.22 mi.  Lca= 0.51 mi.  S= 162 ft/mi.  Kn= .050  LAG= 22.87 min.
        49           KM    PHOENIX VALLEY S-GRAPH WAS USED FOR THIS BASIN
        50           BA    .516
        51           IN      15
```

```
 52          KM   RAINFALL DEPTH OF 1.94 WAS SPACIALLY REDUCED AS SHOWN BY THE PB RECORD
 53          KM   AN AREAL REDUCTION COEFFICIENT OF .975 WAS USED
 54          PB  1.8915
 55          KM   THE FOLLOWING PC RECORD USED A 6-HOUR RAINFALL WITH PATTERN NO. 2.01
 56          PC    .000    .009    .016    .025    .034    .042    .051    .059    .067    .076
 57          PC    .087    .100    .120    .163    .252    .451    .694    .837    .900    .938
 58          PC    .950    .963    .975    .988   1.000
 59          LG    .145    .339   4.25    .488   20.44
 60          UI     76.    119.    294.    391.    468.    577.    793.    930.    712.    588.
 61          UI    474.    381.    274.    154.    127.     90.     76.     26.     23.     23.
 62          UI     23.     23.      0.      0.      0.      0.      0.      0.      0.      0.
 63          UI      0.      0.      0.      0.      0.      0.      0.      0.      0.      0.

 64          KK   DT140
 65          KM   THROW AWAY 10-YR 2-HR RETENTION VOLUME:  1) 2.0 AC-FT FROM SUB-BASIN 140
 66          KM                                               (Hydrograph identified as OR140)
 67          KM                                            2) Balance of runoff continues on.
 68          KM                                               (Hydrograph identified as DT140)
 69          DT   OR140     2.0
 70          DI       0   10000
 71          DQ       0   10000
 72          KM   ******************************************************************************
 73          KM    KK 140RR
 74          KM    KM ROUTE FLOW THROUGH NORTH MOUNTAIN DETENTION NO.3
 75          KM    RS     1    ELEV    55.9
 76          KM    SV     0     .06    1.52    6.32   17.42   35.46   60.34   95.64
 77          KM    SE  55.9      58      62      66      70      74      78      82
 78          KM    SL 57.15    4.91      .6      .5
 79          KM       ***********************************************************************
 80          KM    THE SL RECORD (LOW-LEVEL OUTLET) SECOND FIELD (ORIFICE AREA) VALUE HAS
 81          KM    BEEN CHANGED BY SCI FROM 4.91 sq.ft. TO 1.36 sq.ft. (14"x14" INLET)
 82          KM       ***********************************************************************
 83          KM    SS 79.66     100     3.0     1.5
 84          KM   ******************************************************************************

 85          KK   140RR
 86          KM   ROUTE FLOW THROUGH NORTH MOUNTAIN DETENTION NO.3
 87          RS       1    ELEV    55.9
 88          SV       0     .06    1.52    6.32   17.42   35.46   60.34   95.64
 89          SE    55.9      58      62      66      70      74      78      82
 90          SL   56.43    1.36      .6      .5
 91          SS   80.00     100     3.0     1.5
1                                   HEC-1 INPUT                                          PAGE  3

LINE         ID.......1.......2.......3.......4.......5.......6.......7.......8.......9......10

 92          KK   RM140
 93          KM   MUSKINGUM-CUNGE ROUTE IN CHANNEL FROM DETENTION BASIN THROUGH SUB-BASIN 141
 94          KM            1) Reach Length = 3600 ft.
 95          RD
 96          RC    .045    .045    .045    3600   .0108
 97          RX       0       0    46.5    76.4    79.9   110.2   160.2   160.2
 98          RY      16    12.6     7.3       0       0     9.9    15.9      16

 99          KK    141S
100          KM   RUNOFF GENERATED ON SUB-BASIN 141
101          KM    THE FOLLOWING PARAMETERS WERE PROVIDED FOR THIS BASIN
102          KM    L= 0.83 mi.  Lca= 0.57 mi.  S= 315 ft/mi.  Kn= .042  LAG= 15.26 min.
103          KM    PHOENIX VALLEY S-GRAPH WAS USED FOR THIS BASIN
104          BA    .187
105          LG    .126    .303    3.61    .313   38.57
106          UI     41.    136.    222.    297.    467.    414.    304.    220.    131.     70.
107          UI     47.     23.     13.     13.     13.      0.      0.      0.      0.      0.
108          UI      0.      0.      0.      0.      0.      0.      0.      0.      0.      0.

109          KK   DT141
110          KM   THROW AWAY 10-YR 2-HR RETENTION VOLUME:  1) 2.4 AC-FT FROM SUB-BASIN 141
111          KM                                               (Hydrograph identified as OR141)
112          KM                                            2) Balance of runoff continues on.
113          KM                                               (Hydrograph identified as DT141)
114          DT   OR141     2.4
115          DI       0   10000
116          DQ       0   10000

117          KK   HC141
118          KM   COMBINE HYDROGRAPHS FROM SUB-BASIN 141 WITH ROUTED FLOW FROM DETENTION
119          HC       2
120          KM   ******************************************************************************

121          KK  DVT141   SPLIT HYDROGRAPH 141 TO DET142 AND HC142
122          KM           DI-DQ BASED ON HYDRAULIC RATING CURVE FOR PROPOSED INLET AND
123          KM           EXISTING 30" PIPE.  WEIR LENGTH IS 29' WEIR CREST AT ELEV 1321.
124          KM           DQ IS AMOUNT DIVERTED AROUND DETENTION BASIN DOWNSTREAM.
125          KM           DI-DQ DIFFERENCE IS ROUTED THRU THE PROPOSED DETENTION BASIN
126          DT  DVT141
127          DI       0       5      10      25      57     114     188     275
128          DQ       0       5      10      25      26      27      28      29
129          KM   ******************************************************************************

130          KK    142S
131          KM   RUNOFF GENERATED ON SUB-BASIN 142
132          KM    THE FOLLOWING PARAMETERS WERE PROVIDED FOR THIS BASIN
133          KM    L= 1.16 mi.  Lca= 0.75 mi.  S= 257 ft/mi.  Kn= .042  LAG= 19.99 min.
134          KM    PHOENIX VALLEY S-GRAPH WAS USED FOR THIS BASIN
135          BA    .512
136          LG    .127    .309    4.12    .267   34.03
137          UI     86.    178.    377.    488.    608.    839.   1049.    795.    637.    498.
138          UI    380.    210.    146.    107.     80.     26.     26.     26.     26.      0.
139          UI      0.      0.      0.      0.      0.      0.      0.      0.      0.      0.
```

```
 140          UI      0.      0.      0.      0.      0.      0.      0.      0.      0.      0.
1                                          HEC-1 INPUT                                                    PAGE  4

LINE          ID.......1.......2.......3.......4.......5.......6.......7.......8.......9......10

 141          KK   DT142
 142          KM   THROW AWAY 10-YR 2-HR RETENTION VOLUME:  1) 3.6 AC-FT FROM SUB-BASIN 142
 143          KM                                              (Hydrograph identified as OR142)
 144          KM                                            2) Balance of runoff continues on.
 145          KM                                              (Hydrograph identified as DT142)
 146          DT   OR142     3.6
 147          DI       0   10000
 148          DQ       0   10000
 149          KM   ******************************************************************************

 150          KK  DVT142   SPLIT HYDROGRAPH DVT142 TO DET142 AND HC142
 151          KM           DI-DQ BASED ON HYDRAULIC RATING CURVE FOR PROPOSED INLET AND
 152          KM           IMPROVED WASH CROSS SECTION.  WEIR LENGTH IS 100' WEIR CREST ELEV IS
 153          KM           3.34' ABOVE WASH FLOWLINE AT 1319.  HEC-2 SPLIT FLOW OPTION USED TO
 154          KM           ESTIMATE THE INLET HYDRAULICS AT THE INCREMENTAL FLOW RATES.
 155          KM           DQ IS AMOUNT DIVERTED AROUND DETENTION BASIN DOWNSTREAM.
 156          KM           DI-DQ DIFFERENCE IS ROUTED THRU THE PROPOSED DETENTION BASIN
 157          DT  DVT142
 158          DI       0      50     100     150     195     200     250     300     350     400
 159          DI     450     500     550     600     650     672     700     750
 160          DQ       0      50     100     150     195     197     223     248     271     293
 161          DQ     317     346     378     399     408     410     413     418

 162          KK  ADD142
 163          KM   COMBINE HYDROGRAPHS FROM (DI-DQ) FROM DVT141 WITH (DI-DQ) FROM DVT142
 164          HC       2

 165          KK  DET142   ROUTE HYDROGRAPH ADD142 THRU DET BASIN 142
 166          KM           30" RCP  AS LOW FLOW AND PRINCIPAL OUTLET (INV. EL. 1306.8)
 167          KM           260' EMERGENCY WEIR AT ELEV. 1318.3
 168          RS       1    STOR      -1
 169          SV     0.0   0.006   0.283   1.103   2.596   4.477   6.448   8.507   10.66   12.89
 170          SV   15.22   17.64   20.14   20.92   21.44   22.21   22.73   25.42
 171          SQ       0       0     0.0     0.0     5.0    15.0    29.0    40.0    49.0    57.0
 172          SQ      65      70      74      75     151     371     565    1924
 173          SE  1306.8    1307    1308    1309    1310    1311    1312    1313    1314    1315
 174          SE    1316    1317    1318  1318.3  1318.5  1318.8    1319    1320

 175          KK  DVT141    RETRIEVE PREVIOUSLY SPLIT HYDROGRAPH FROM SUB-BASIN 141
 176          DR  DVT141

 177          KK  DVT142    RETRIEVE PREVIOUSLY SPLIT HYDROGRAPH FROM SUB-BASIN 142
 178          DR  DVT142

 179          KK   HC142
 180          KM   COMBINE HYDROGRAPHS (DQ) FROM DVT142, (DQ) FROM DVT141 AND DET142 OUTFLOW
 181          HC       3
 182          KM   ******************************************************************************
1                                          HEC-1 INPUT                                                    PAGE  5

LINE          ID.......1.......2.......3.......4.......5.......6.......7.......8.......9......10

 183          KK   RM142
 184          KM   MUSKINGUM-CUNGE ROUTE IN CHANNEL FROM SUB-BASINS 141/142 THROUGH 143
 185          KM           1) Reach Length = 5140 ft.
 186          RD
 187          RC    .050    .045    .050    5140   .0086
 188          RX       0       0    43.8    61.3    67.4    78.3    89.8    89.8
 189          RY    10.8     9.4     9.4       0       0     5.4     8.8    10.8

 190          KK    143S
 191          KM   RUNOFF GENERATED ON SUB-BASIN 143
 192          KM    THE FOLLOWING PARAMETERS WERE PROVIDED FOR THIS BASIN
 193          KM    L= 1.64 mi.  Lca= 0.88  S= 273 ft/mi.  Kn= .035  LAG= 19.96 min.
 194          KM    PHOENIX VALLEY S-GRAPH WAS USED FOR THIS BASIN
 195          BA    .604
 196          LG    .115    .279    4.12    .269   49.66
 197          UI    102.    212.    446.    577.    720.    994.   1238.    937.    750.    586.
 198          UI    447.    244.    173.    125.     93.     31.     31.     31.     31.      0.
 199          UI      0.      0.      0.      0.      0.      0.      0.      0.      0.      0.
 200          UI      0.      0.      0.      0.      0.      0.      0.      0.      0.      0.

 201          KK   DT143
 202          KM   THROW AWAY 10-YR 2-HR RETENTION VOLUME:  1) 5.7 AC-FT FROM SUB-BASIN 143
 203          KM                                              (Hydrograph identified as OR143)
 204          KM                                            2) Balance of runoff continues on.
 205          KM                                              (Hydrograph identified as DT143)
 206          DT   OR143     5.7
 207          DI       0   10000
 208          DQ       0   10000

 209          KK   HC143
 210          KM   COMBINE HYDROGRAPHS FROM SUB-BASIN 143 WITH ROUTED FLOW FROM 141/142
 211          HC       2

 212          KK   RM143
 213          KM   MUSKINGUM-CUNGE ROUTE IN CHANNEL FROM SUB-BASIN 143 THROUGH 144
 214          KM           1) Reach Length = 1400 ft.
 215          RD
 216          RC    .040    .035    .030    1400   .0100
 217          RX       0       0    77.8    88.3    96.6   112.8   161.3   161.3
 218          RY      10     6.2     6.2       0       0     6.3     6.9      10
```

```
 219          KK    144S
 220          KM   RUNOFF GENERATED ON SUB-BASIN 144
 221          KM    THE FOLLOWING PARAMETERS WERE PROVIDED FOR THIS BASIN
 222          KM    L= 1.80 mi.  Lca= 1.11 mi.  S= 291 ft/mi.  Kn= .036  LAG= 22.95 min.
 223          KM    PHOENIX VALLEY S-GRAPH WAS USED FOR THIS BASIN
 224          BA    .475
 225          LG    .118    .280    3.61     .32   43.17
 226          UI     70.    108.    269.    357.    428.    527.    721.    857.    657.    543.
 227          UI    437.    353.    256.    145.    117.     85.     70.     26.     21.     21.
 228          UI     21.     21.      0.      0.      0.      0.      0.      0.      0.      0.
 229          UI      0.      0.      0.      0.      0.      0.      0.      0.      0.      0.
1                                          HEC-1 INPUT                                                    PAGE  6

LINE          ID.......1.......2.......3.......4.......5.......6.......7.......8.......9......10


 230          KK   DT144
 231          KM   THROW AWAY 10-YR 2-HR RETENTION VOLUME:  1) 2.1 AC-FT FROM SUB-BASIN 144
 232          KM                                               (Hydrograph identified as OR144)
 233          KM                                            2) Balance of runoff continues on.
 234          KM                                               (Hydrograph identified as DT144)
 235          DT   OR144     2.1
 236          DI       0   10000
 237          DQ       0   10000

 238          KK   HC144
 239          KM   COMBINE HYDROGRAPHS FROM SUB-BASIN 144 WITH ROUTED FLOW FROM 143
 240          HC       2

 241          KK   RM144
 242          KM   MUSKINGUM-CUNGE ROUTE IN CHANNEL FROM SUB-BASIN 144 THROUGH 145
 243          KM            1) Reach Length = 3000 ft.
 244          RD
 245          RC    .035    .035    .030    3000   .0073
 246          RX       0       0    36.6      52    64.9    79.8   107.8   107.8
 247          RY      11     7.7     7.4       0       0     8.3     8.5      11

 248          KK    145S
 249          KM   RUNOFF GENERATED ON SUB-BASIN 145
 250          KM    THE FOLLOWING PARAMETERS WERE PROVIDED FOR THIS BASIN
 251          KM    L= 1.37 mi.  Lca= 0.86 mi.  S= 242 ft/mi.  Kn= .032  LAG= 17.28 min.
 252          KM    PHOENIX VALLEY S-GRAPH WAS USED FOR THIS BASIN
 253          BA    .548
 254          LG    .105    .265    5.67    .210   44.60
 255          UI    107.    287.    526.    678.    922.   1303.    982.    755.    568.    378.
 256          UI    186.    145.     98.     33.     33.     33.     33.      0.      0.      0.
 257          UI      0.      0.      0.      0.      0.      0.      0.      0.      0.      0.

 258          KK   HC145
 259          KM   COMBINE HYDROGRAPHS FROM SUB-BASIN 145 WITH ROUTED FLOW FROM 144
 260          KM   ALSO DETERMINES 10TH STREET WASH DISCHARGE INTO ACDC
 261          HC       2
 262          ZZ
1
              SCHEMATIC DIAGRAM OF STREAM NETWORK
 INPUT
  LINE     (V) ROUTING          (--->) DIVERSION OR PUMP FLOW

   NO.     (.) CONNECTOR        (<---) RETURN OF DIVERTED OR PUMPED FLOW

   45        140S
                .
                .
   69           .-------->   OR140
   64       DT140
                V
                V
   85       140RR
                V
                V
   92       RM140
                .
                .
   99           .        141S
                .           .
                .           .
  114           .           .-------->   OR141
  109           .       DT141
                .           .
                .           .
  117       HC141............
                .
                .
  126           .-------->  DVT141
  121      DVT141
                .
                .
  130           .        142S
                .           .
                .           .
  146           .           .-------->   OR142
  141           .       DT142
                .           .
                .           .
  157           .           .-------->  DVT142
  150           .      DVT142
                .           .
                .           .
  162      ADD142............
                V
```

```
                V
165        DET142
                .
                .
176             .          .<-------  DVT141
175             .      DVT141
                .          .
                .          .
178             .          .          .<-------  DVT142
177             .          .      DVT142
                .          .          .
                .          .          .
179        HC142.......................
                V
                V
183        RM142
                .
                .
190             .        143S
                .          .
                .          .
206             .          .------->   OR143
201             .      DT143
                .          .
                .          .
209        HC143............
                V
                V
212        RM143
                .
                .
219             .        144S
                .          .
                .          .
235             .          .------->   OR144
230             .      DT144
                .          .
                .          .
238        HC144............
                V
                V
241        RM144
                .
                .
248             .        145S
                .          .
                .          .
258        HC145............
```

(***) RUNOFF ALSO COMPUTED AT THIS LOCATION

```
1****************************************
*                                      *
*   FLOOD HYDROGRAPH PACKAGE  (HEC-1)  *
*            SEPTEMBER 1990            *
*             VERSION 4.0              *
*                                      *
*  RUN DATE  03/17/1995  TIME  14:52:10 *
*                                      *
****************************************
```

```
****************************************
*                                      *
*    U.S. ARMY CORPS OF ENGINEERS      *
*    HYDROLOGIC ENGINEERING CENTER     *
*          609 SECOND STREET           *
*       DAVIS, CALIFORNIA 95616        *
*           (916) 756-1104             *
*                                      *
****************************************
```

FLOOD CONTROL DISTRICT OF MARICOPA COUNTY
TENTH STREET WASH DETENTION BASIN NO 1 (FCD 93-31)
STANLEY CONSULTANTS, INC. (SCI JOB # 12183)
HEC-1 INPUT FILENAME : 12183H1E (10YR 6HR PROPOSED)

****

THIS MODEL REPRESENTS THE PROPOSED 10TH STREET WASH DETENTION BASIN #1.
THE FOLLOWING IMPROVEMENTS ARE REFLECTED.

1. EAST TRIBUTARY (SUB-BASIN 141): 29' WEIR INLET AT CREST ELEV. 1321. DIVERSION RECORDS REFLECT BYPASS OF LOW FLOWS THROUGH EXISTING 30" CMP AND INLET RATING CURVE.
1. WEST TRIBUTARY (SUB-BASIN 142): 100' SIDE WEIR 3.34' ABOVE PROPOSED FLOW LINE AT WEIR CREST ELEV. 1319. DIVERSION RECORDS REFLECT LOW FLOW BYPASS AND INLET RATING CURVE.
2. BASIN CONFIGURATION: 3:1 SLOPES ON 3 SIDES AND A VERTICAL RETAINING WALL ON THE WEST SIDE, A BOTTOM ELEVATION (OUTLET INV. ELEV.) OF 1306.8, AND A HIGH WATER ELEV. 1319 WITH 1' FREEBOARD TO ELEV. 1320.
3. OUTLET CONFIGURATION: 30" RCP AT INV. ELEV. 1306.8 AS THE LOW FLOW AND PRINCIPAL OUTLET, AND A 260' EMERGENCY WEIR AT CREST ELEV. 1318.3.

****

****

THIS HEC-1 MODEL IS BASED ON THE KAMINSKI-HUBBARD ACDC ADMS AS MODIFIED BY FCD TO REFLECT TWO HYPOTHETICAL DETENTION BASINS (NUMBERS 1 AND 2). THE DIFFERENCES BETWEEN THIS MODEL AND THE ORIGINAL MODEL TRANSMITTED BY FCD TO SCI AT THE PROJECT KICKOFF MEETING ARE AS FOLLOWS:

1. USE OF THE HEC-1 DATA STORAGE SYSTEM OPTION HAS BEEN DELETED;
2. THE TWO HYPOTHETICAL DETENTION BASINS 1 AND 2 HAVE BEEN DELETED;
3. THE CROSS SECTIONAL AREA OF THE PRINCIPAL SPILLWAY OUTLET PIPE OF THE EXISTING CITY OF PHOENIX DET BASIN NO. 3 HAS BEEN CHANGED FROM 4.91 SQFT (WHICH CORRESPONDS TO AN OUTLET PIPE DIAM OF 30") TO 1.36 SQFT CORRESPONDING TO THE 14" X 14" STEEL ORIFICE PLATE WHICH WAS ORIGINALLY DESIGNED AND INSTALLED.

```
*****************************************************************************

                    ACDC AREA DRAINAGE MASTER STUDY
                    10TH STREET WASH WATERSHED
                    FILENAME:  TEN36.DAT     KHE JOB NO. 0146
                    10-YEAR 6-HOUR DURATION STORM

 44 IO        OUTPUT CONTROL VARIABLES
                   IPRNT          5  PRINT CONTROL
                   IPLOT          0  PLOT CONTROL
                   QSCAL         0.  HYDROGRAPH PLOT SCALE

    IT        HYDROGRAPH TIME DATA
                    NMIN          3  MINUTES IN COMPUTATION INTERVAL
                   IDATE      1   0  STARTING DATE
                   ITIME       0000  STARTING TIME
                      NQ        300  NUMBER OF HYDROGRAPH ORDINATES
                  NDDATE      1   0  ENDING DATE
                  NDTIME       1457  ENDING TIME
                   ICENT         19  CENTURY MARK

              COMPUTATION INTERVAL     .05 HOURS
                   TOTAL TIME BASE   14.95 HOURS

         ENGLISH UNITS
              DRAINAGE AREA          SQUARE MILES
              PRECIPITATION DEPTH    INCHES
              LENGTH, ELEVATION      FEET
              FLOW                   CUBIC FEET PER SECOND
              STORAGE VOLUME         ACRE-FEET
              SURFACE AREA           ACRES
              TEMPERATURE            DEGREES FAHRENHEIT
1
                                          RUNOFF SUMMARY
                                     FLOW IN CUBIC FEET PER SECOND
                                  TIME IN HOURS,  AREA IN SQUARE MILES

                                   PEAK   TIME OF    AVERAGE FLOW FOR MAXIMUM PERIOD     BASIN   MAXIMUM   TIME OF
+        OPERATION       STATION   FLOW    PEAK                                          AREA    STAGE   MAX STAGE
                                                      6-HOUR     24-HOUR     72-HOUR
+
         HYDROGRAPH AT
+                          140S    184.    4.25        27.         11.         11.       .52
         DIVERSION TO
+                          OR140    38.    4.25         4.          2.          2.       .52
         HYDROGRAPH AT
+                          DT140   184.    4.25        23.          9.          9.       .52
         ROUTED TO
+                          140RR    21.    5.05        19.          9.          9.       .52
+                                                                                        66.86     5.05
         ROUTED TO
+                          RM140    21.    5.40        19.          9.          9.       .52
         HYDROGRAPH AT
+                           141S   143.    4.10        20.          8.          8.       .19
         DIVERSION TO
+                          OR141    64.    4.10         5.          2.          2.       .19
         HYDROGRAPH AT
+                          DT141   143.    4.10        16.          6.          6.       .19
         2 COMBINED AT
+                          HC141   143.    4.10        33.         16.         16.       .70
         DIVERSION TO
+                         DVT141    27.    4.10        22.         11.         11.       .70
         HYDROGRAPH AT
+                         DVT141   116.    4.10        12.          5.          5.       .70
         HYDROGRAPH AT
+                           142S   360.    4.20        53.         21.         21.       .51
         DIVERSION TO
+                          OR142    79.    4.20         7.          3.          3.       .51
         HYDROGRAPH AT
+                          DT142   360.    4.20        46.         19.         19.       .51
         DIVERSION TO
+                         DVT142   276.    4.20        41.         16.         16.       .51
         HYDROGRAPH AT
+                         DVT142    85.    4.20         6.          2.          2.       .51
         2 COMBINED AT
+                         ADD142   197.    4.15        17.          7.          7.      1.21
         ROUTED TO
+                         DET142    32.    4.55        13.          6.          6.      1.21
+                                                                                      1312.27     4.55
         HYDROGRAPH AT
+                         DVT141    27.    4.10        22.         11.         11.       .00
```

+	HYDROGRAPH AT	DVT142	276.	4.20	41.	16.	16.	.00
+	3 COMBINED AT	HC142	319.	4.25	75.	33.	33.	1.21
+	ROUTED TO	RM142	316.	4.45	74.	33.	33.	1.21
+	HYDROGRAPH AT	143S	480.	4.20	78.	31.	31.	.60
+	DIVERSION TO	OR143	108.	4.20	11.	5.	5.	.60
+	HYDROGRAPH AT	DT143	480.	4.20	67.	27.	27.	.60
+	2 COMBINED AT	HC143	756.	4.25	140.	60.	60.	1.82
+	ROUTED TO	RM143	750.	4.25	140.	60.	60.	1.82
+	HYDROGRAPH AT	144S	340.	4.25	56.	22.	22.	.47
+	DIVERSION TO	OR144	16.	4.25	4.	2.	2.	.47
+	HYDROGRAPH AT	DT144	340.	4.25	52.	21.	21.	.47
+	2 COMBINED AT	HC144	1090.	4.25	189.	81.	81.	2.29
+	ROUTED TO	RM144	1085.	4.35	189.	81.	81.	2.29
+	HYDROGRAPH AT	145S	448.	4.15	68.	27.	27.	.55
+	2 COMBINED AT	HC145	1469.	4.25	251.	108.	108.	2.84

1

SUMMARY OF KINEMATIC WAVE - MUSKINGUM-CUNGE ROUTING
(FLOW IS DIRECT RUNOFF WITHOUT BASE FLOW)

ISTAQ	ELEMENT	DT (MIN)	PEAK (CFS)	TIME TO PEAK (MIN)	VOLUME (IN)	INTERPOLATED TO COMPUTATION INTERVAL DT (MIN)	PEAK (CFS)	TIME TO PEAK (MIN)	VOLUME (IN)
RM140	MANE	3.00	21.08	324.00	.42	3.00	21.08	324.00	.42

CONTINUITY SUMMARY (AC-FT) - INFLOW= .1161E+02 EXCESS= .0000E+00 OUTFLOW= .1160E+02 BASIN STORAGE= .5034E-03 PERCENT ERROR= .1

RM142	MANE	2.10	316.40	266.70	.63	3.00	316.03	267.00	.63

CONTINUITY SUMMARY (AC-FT) - INFLOW= .4099E+02 EXCESS= .0000E+00 OUTFLOW= .4104E+02 BASIN STORAGE= .6011E-01 PERCENT ERROR= -.3

RM143	MANE	2.49	753.72	256.86	.76	3.00	750.11	255.00	.76

CONTINUITY SUMMARY (AC-FT) - INFLOW= .7418E+02 EXCESS= .0000E+00 OUTFLOW= .7421E+02 BASIN STORAGE= .1340E-01 PERCENT ERROR= -.1

RM144	MANE	3.00	1084.85	261.00	.82	3.00	1084.85	261.00	.82

CONTINUITY SUMMARY (AC-FT) - INFLOW= .9976E+02 EXCESS= .0000E+00 OUTFLOW= .9974E+02 BASIN STORAGE= .3207E-01 PERCENT ERROR= .0

*** NORMAL END OF HEC-1 ***

```
1****************************************
*                                      *
*   FLOOD HYDROGRAPH PACKAGE  (HEC-1)  *
*            SEPTEMBER 1990            *
*             VERSION 4.0              *
*                                      *
*  RUN DATE  03/17/1995  TIME  15:33:21 *
*                                      *
****************************************
```

```
****************************************
*                                      *
*    U.S. ARMY CORPS OF ENGINEERS      *
*    HYDROLOGIC ENGINEERING CENTER     *
*          609 SECOND STREET           *
*       DAVIS, CALIFORNIA 95616        *
*           (916) 756-1104             *
*                                      *
****************************************
```

```
X     X  XXXXXXX   XXXXX          X
X     X  X        X     X        XX
X     X  X        X               X
XXXXXXX  XXXX     X        XXXXX  X
X     X  X        X               X
X     X  X        X     X         X
X     X  XXXXXXX   XXXXX         XXX
```

THIS PROGRAM REPLACES ALL PREVIOUS VERSIONS OF HEC-1 KNOWN AS HEC1 (JAN 73), HEC1GS, HEC1DB, AND HEC1KW.

THE DEFINITIONS OF VARIABLES -RTIMP- AND -RTIOR- HAVE CHANGED FROM THOSE USED WITH THE 1973-STYLE INPUT STRUCTURE.
THE DEFINITION OF -AMSKK- ON RM-CARD WAS CHANGED WITH REVISIONS DATED 28 SEP 81. THIS IS THE FORTRAN77 VERSION
NEW OPTIONS: DAMBREAK OUTFLOW SUBMERGENCE , SINGLE EVENT DAMAGE CALCULATION, DSS:WRITE STAGE FREQUENCY,
DSS:READ TIME SERIES AT DESIRED CALCULATION INTERVAL LOSS RATE:GREEN AND AMPT INFILTRATION
KINEMATIC WAVE: NEW FINITE DIFFERENCE ALGORITHM

```
1                                        HEC-1 INPUT                                                    PAGE  1

  LINE          ID.......1.......2.......3.......4.......5.......6.......7.......8.......9......10

    1           ID
    2           ID        FLOOD CONTROL DISTRICT OF MARICOPA COUNTY
    3           ID        TENTH STREET WASH DETENTION BASIN NO 1  (FCD 93-31)
    4           ID        STANLEY CONSULTANTS, INC.  (SCI JOB # 12183)
    5           ID        HEC-1 INPUT FILENAME :  12183H1F  (100YR 2HR EMERGENCY)
    6           ID
    7           ID        ************************************************************************
    8           ID        THIS MODEL REPRESENTS THE PROPOSED 10TH STREET WASH DETENTION BASIN #1.
    9           ID        THE FOLLOWING IMPROVEMENTS ARE REFLECTED.
   10           ID          1. EAST TRIBUTARY (SUB-BASIN 141): 29' WEIR INLET AT CREST ELEV. 1321.
   11           ID             DIVERSION RECORDS REFLECT BYPASS OF LOW FLOWS THROUGH EXISTING 30"
   12           ID             CMP AND INLET RATING CURVE.
   13           ID          1. WEST TRIBUTARY (SUB-BASIN 142): 100' SIDE WEIR 3.34' ABOVE PROPOSED
   14           ID             FLOW LINE AT WEIR CREST ELEV. 1319.  DIVERSION RECORDS REFLECT LOW
   15           ID             FLOW BYPASS AND INLET RATING CURVE.
   16           ID          2. BASIN CONFIGURATION: 3:1 SLOPES ON 3 SIDES AND A VERTICAL RETAINING
   17           ID             WALL ON THE WEST SIDE, A BOTTOM ELEVATION (OUTLET INV. ELEV.) OF
   18           ID             1306.8, AND A HIGH WATER ELEV. 1319 WITH 1' FREEBOARD TO ELEV.
   19           ID             1320.
   20           ID          3. OUTLET CONFIGURATION: 30" RCP AT INV. ELEV. 1306.8 AS THE LOW FLOW
   21           ID             AND PRINCIPAL OUTLET, AND A 260' EMERGENCY WEIR AT CREST ELEV.
   22           ID             1318.3.
   23           ID        ************************************************************************
   24           ID
   25           ID        ************************************************************************
   26           ID        THIS HEC-1 MODEL IS BASED ON THE KAMINSKI-HUBBARD ACDC ADMS AS MODIFIED
   27           ID        BY FCD TO REFLECT TWO HYPOTHETICAL DETENTION BASINS (NUMBERS 1 AND 2).
   28           ID        THE DIFFERENCES BETWEEN THIS MODEL AND THE ORIGINAL MODEL TRANSMITTED
   29           ID        BY FCD TO SCI AT THE PROJECT KICKOFF MEETING ARE AS FOLLOWS:
   30           ID          1. USE OF THE HEC-1 DATA STORAGE SYSTEM OPTION HAS BEEN DELETED;
   31           ID          2. THE TWO HYPOTHETICAL DETENTION BASINS 1 AND 2 HAVE BEEN DELETED;
   32           ID          3. THE CROSS SECTIONAL AREA OF THE PRINCIPAL SPILLWAY OUTLET PIPE OF
   33           ID             THE EXISTING CITY OF PHOENIX DET BASIN NO. 3 HAS BEEN CHANGED FROM
   34           ID             4.91 SQFT (WHICH CORRESPONDS TO AN OUTLET PIPE DIAM OF 30") TO
   35           ID             1.36 SQFT CORRESPONDING TO THE 14" X 14" STEEL ORIFICE PLATE WHICH
   36           ID             WAS ORIGINALLY DESIGNED AND INSTALLED.
   37           ID        ************************************************************************
   38           ID
   39           ID   ACDC AREA DRAINAGE MASTER STUDY
   40           ID   10TH STREET WASH WATERSHED
   41           ID   FILENAME:  TEN36.DAT     KHE JOB NO. 0146
   42           ID   100-YEAR 2-HOUR DURATION STORM
                *
                *  Based on FCDMC comments dated March 17,1992 we adjusted the Mannings "n"
                *  coefficient to reflect weighted averaging in lieu of log averaging.
                *  We also changed the S-graph from Phoenix Mountain to Phoenix Valley.
                *
                *DIAGRAM
   43           IT       3                    300
   44           IO       5
1                                        HEC-1 INPUT                                                    PAGE  2

  LINE          ID.......1.......2.......3.......4.......5.......6.......7.......8.......9......10

   45           KK    140S
   46           KM   RUNOFF GENERATED ON SUB-BASIN 140
   47           KM    THE FOLLOWING PARAMETERS WERE PROVIDED FOR THIS BASIN
   48           KM    L= 1.22 mi.  Lca= 0.51 mi.  S= 162 ft/mi.  Kn= .050  LAG= 22.87 min.
   49           KM    PHOENIX VALLEY S-GRAPH WAS USED FOR THIS BASIN
   50           BA    .516
   51           IN       5
```

```
 52          KM   RAINFALL DEPTH OF 2.53 WAS SPACIALLY REDUCED AS SHOWN BY THE PB RECORD
 53          KM   AN AREAL REDUCTION COEFFICIENT OF .975 WAS USED
 54          PB  2.4668
 55          KM    THE FOLLOWING PC RECORDS REFLECT A 100-YEAR 2-HOUR DISTRIBUTION.
 56          PC    .000    .011    .018    .023    .028    .032    .046    .071    .100    .137
 57          PC    .176    .232    .327    .601    .743    .863    .901    .930    .954    .962
 58          PC    .970    .977    .982    .992   1.000
 59          LG    .145    .339   4.25    .488   20.44
 60          UI     76.    119.    294.    391.    468.    577.    793.    930.    712.    588.
 61          UI    474.    381.    274.    154.    127.     90.     76.     26.     23.     23.
 62          UI     23.     23.      0.      0.      0.      0.      0.      0.      0.      0.
 63          UI      0.      0.      0.      0.      0.      0.      0.      0.      0.      0.

 64          KK   DT140
 65          KM   THROW AWAY 10-YR 2-HR RETENTION VOLUME:  1) 2.0 AC-FT FROM SUB-BASIN 140
 66          KM                                               (Hydrograph identified as OR140)
 67          KM                                            2) Balance of runoff continues on.
 68          KM                                               (Hydrograph identified as DT140)
 69          DT   OR140     2.0
 70          DI       0   10000
 71          DQ       0   10000
 72          KM   ******************************************************************************
 73          KM    KK 140RR
 74          KM    KM ROUTE FLOW THROUGH NORTH MOUNTAIN DETENTION NO.3
 75          KM    RS      1    ELEV    55.9
 76          KM    SV      0     .06    1.52    6.32   17.42   35.46   60.34   95.64
 77          KM    SE   55.9      58      62      66      70      74      78      82
 78          KM    SL 57.15    4.91      .6      .5
 79          KM        ***********************************************************************
 80          KM    THE SL RECORD (LOW-LEVEL OUTLET) SECOND FIELD (ORIFICE AREA) VALUE HAS
 81          KM    BEEN CHANGED BY SCI FROM 4.91 sq.ft. TO 1.36 sq.ft. (14"x14" INLET)
 82          KM        ***********************************************************************
 83          KM    SS 79.66     100     3.0     1.5
 84          KM   ******************************************************************************

 85          KK   140RR
 86          KM   ROUTE FLOW THROUGH NORTH MOUNTAIN DETENTION NO.3
 87          RS       1    ELEV    55.9
 88          SV       0     .06    1.52    6.32   17.42   35.46   60.34   95.64
 89          SE    55.9      58      62      66      70      74      78      82
 90          SL   56.43    1.36      .6      .5
 91          SS   80.00     100     3.0     1.5
1                                   HEC-1 INPUT                                          PAGE  3

LINE         ID.......1.......2.......3.......4.......5.......6.......7.......8.......9......10

 92          KK   RM140
 93          KM   MUSKINGUM-CUNGE ROUTE IN CHANNEL FROM DETENTION BASIN THROUGH SUB-BASIN 141
 94          KM            1) Reach Length = 3600 ft.
 95          RD
 96          RC    .045    .045    .045    3600   .0108
 97          RX       0       0    46.5    76.4    79.9   110.2   160.2   160.2
 98          RY      16    12.6     7.3       0       0     9.9    15.9      16

 99          KK    141S
100          KM   RUNOFF GENERATED ON SUB-BASIN 141
101          KM    THE FOLLOWING PARAMETERS WERE PROVIDED FOR THIS BASIN
102          KM    L= 0.83 mi.  Lca= 0.57 mi.  S= 315 ft/mi.  Kn= .042  LAG= 15.26 min.
103          KM    PHOENIX VALLEY S-GRAPH WAS USED FOR THIS BASIN
104          BA    .187
105          LG    .126    .303    3.61    .313   38.57
106          UI     41.    136.    222.    297.    467.    414.    304.    220.    131.     70.
107          UI     47.     23.     13.     13.     13.      0.      0.      0.      0.      0.
108          UI      0.      0.      0.      0.      0.      0.      0.      0.      0.      0.

109          KK   DT141
110          KM   THROW AWAY 10-YR 2-HR RETENTION VOLUME:  1) 2.4 AC-FT FROM SUB-BASIN 141
111          KM                                               (Hydrograph identified as OR141)
112          KM                                            2) Balance of runoff continues on.
113          KM                                               (Hydrograph identified as DT141)
114          DT   OR141     2.4
115          DI       0   10000
116          DQ       0   10000

117          KK   HC141
118          KM   COMBINE HYDROGRAPHS FROM SUB-BASIN 141 WITH ROUTED FLOW FROM DETENTION
119          HC       2
120          KM   ******************************************************************************

121          KK  DVT141   SPLIT HYDROGRAPH 141 TO DET142 AND HC142
122          KM           DI-DQ BASED ON HYDRAULIC RATING CURVE FOR PROPOSED INLET AND
123          KM           EXISTING 30" PIPE.  WEIR LENGTH IS 29' WEIR CREST AT ELEV 1321.
124          KM           DQ IS AMOUNT DIVERTED AROUND DETENTION BASIN DOWNSTREAM.
125          KM           DI-DQ DIFFERENCE IS ROUTED THRU THE PROPOSED DETENTION BASIN
126          DT  DVT141
127          DI       0       5      10      25      57     114     188     275     396     539
128          DQ       0       5      10      25      26      27      28      29      52      87
129          KM   ******************************************************************************

130          KK    142S
131          KM   RUNOFF GENERATED ON SUB-BASIN 142
132          KM    THE FOLLOWING PARAMETERS WERE PROVIDED FOR THIS BASIN
133          KM    L= 1.16 mi.  Lca= 0.75 mi.  S= 257 ft/mi.  Kn= .042  LAG= 19.99 min.
134          KM    PHOENIX VALLEY S-GRAPH WAS USED FOR THIS BASIN
135          BA    .512
136          LG    .127    .309    4.12    .267   34.03
137          UI     86.    178.    377.    488.    608.    839.   1049.    795.    637.    498.
138          UI    380.    210.    146.    107.     80.     26.     26.     26.     26.      0.
139          UI      0.      0.      0.      0.      0.      0.      0.      0.      0.      0.
```

```
 140          UI      0.      0.      0.      0.      0.      0.      0.      0.      0.      0.
1                                          HEC-1 INPUT                                                    PAGE  4
LINE          ID.......1.......2.......3.......4.......5.......6.......7.......8.......9......10

 141          KK   DT142
 142          KM   THROW AWAY 10-YR 2-HR RETENTION VOLUME:  1) 3.6 AC-FT FROM SUB-BASIN 142
 143          KM                                              (Hydrograph identified as OR142)
 144          KM                                           2) Balance of runoff continues on.
 145          KM                                              (Hydrograph identified as DT142)
 146          DT   OR142     3.6
 147          DI       0   10000
 148          DQ       0   10000
 149          KM   ******************************************************************************

 150          KK  DVT142   SPLIT HYDROGRAPH DVT142 TO DET142 AND HC142
 151          KM           DI-DQ BASED ON HYDRAULIC RATING CURVE FOR PROPOSED INLET AND
 152          KM           IMPROVED WASH CROSS SECTION.  WEIR LENGTH IS 100' WEIR CREST ELEV IS
 153          KM           3.34' ABOVE WASH FLOWLINE AT 1319.  HEC-2 SPLIT FLOW OPTION USED TO
 154          KM           ESTIMATE THE INLET HYDRAULICS AT THE INCREMENTAL FLOW RATES.
 155          KM           DQ IS AMOUNT DIVERTED AROUND DETENTION BASIN DOWNSTREAM.
 156          KM           DI-DQ DIFFERENCE IS ROUTED THRU THE PROPOSED DETENTION BASIN
 157          DT  DVT142
 158          DI       0     100     200     300     400     500     600     700     800     900
 159          DI    1000    1100    1200    1300    1400    1500    1600
 160          DQ       0     100     197     248     292     346     399     413     427     435
 161          DQ     445     500     600     700     800     900    1000

 162          KK  ADD142
 163          KM   COMBINE HYDROGRAPHS FROM (DI-DQ) FROM DVT141 WITH (DI-DQ) FROM DVT142
 164          HC       2

 165          KK  DET142   ROUTE HYDROGRAPH ADD142 THRU DET BASIN 142
 166          KM           30" RCP  AS LOW FLOW AND PRINCIPAL OUTLET (INV. EL. 1306.8)
 167          KM           260' EMERGENCY WEIR AT ELEV. 1318.3
 168          RS       1    STOR      -1
 169          SV     0.0   0.006   0.283   1.103   2.596   4.477   6.448   8.507   10.66   12.89
 170          SV   15.22   17.64   20.14   20.92   21.44   22.21   22.73   25.42
 171          SQ       0       0     0.0     0.0     5.0    15.0    29.0    40.0    49.0    57.0
 172          SQ      65      70      74      75     151     371     565    1924
 173          SE  1306.8    1307    1308    1309    1310    1311    1312    1313    1314    1315
 174          SE    1316    1317    1318  1318.3  1318.5  1318.8    1319    1320

 175          KK  DVT141    RETRIEVE PREVIOUSLY SPLIT HYDROGRAPH FROM SUB-BASIN 141
 176          DR  DVT141

 177          KK  DVT142    RETRIEVE PREVIOUSLY SPLIT HYDROGRAPH FROM SUB-BASIN 142
 178          DR  DVT142

 179          KK   HC142
 180          KM   COMBINE HYDROGRAPHS (DQ) FROM DVT142, (DQ) FROM DVT141 AND DET142 OUTFLOW
 181          HC       3
 182          KM   ******************************************************************************
1                                          HEC-1 INPUT                                                    PAGE  5
LINE          ID.......1.......2.......3.......4.......5.......6.......7.......8.......9......10

 183          KK   RM142
 184          KM   MUSKINGUM-CUNGE ROUTE IN CHANNEL FROM SUB-BASINS 141/142 THROUGH 143
 185          KM            1) Reach Length = 5140 ft.
 186          RD
 187          RC    .050    .045    .050    5140   .0086
 188          RX       0       0    43.8    61.3    67.4    78.3    89.8    89.8
 189          RY    10.8     9.4     9.4       0       0     5.4     8.8    10.8

 190          KK    143S
 191          KM   RUNOFF GENERATED ON SUB-BASIN 143
 192          KM    THE FOLLOWING PARAMETERS WERE PROVIDED FOR THIS BASIN
 193          KM    L= 1.64 mi.  Lca= 0.88  S= 273 ft/mi.  Kn= .035  LAG= 19.96 min.
 194          KM    PHOENIX VALLEY S-GRAPH WAS USED FOR THIS BASIN
 195          BA    .604
 196          LG    .115    .279    4.12    .269   49.66
 197          UI    102.    212.    446.    577.    720.    994.   1238.    937.    750.    586.
 198          UI    447.    244.    173.    125.     93.     31.     31.     31.     31.      0.
 199          UI      0.      0.      0.      0.      0.      0.      0.      0.      0.      0.
 200          UI      0.      0.      0.      0.      0.      0.      0.      0.      0.      0.

 201          KK   DT143
 202          KM   THROW AWAY 10-YR 2-HR RETENTION VOLUME:  1) 5.7 AC-FT FROM SUB-BASIN 143
 203          KM                                              (Hydrograph identified as OR143)
 204          KM                                           2) Balance of runoff continues on.
 205          KM                                              (Hydrograph identified as DT143)
 206          DT   OR143     5.7
 207          DI       0   10000
 208          DQ       0   10000

 209          KK   HC143
 210          KM   COMBINE HYDROGRAPHS FROM SUB-BASIN 143 WITH ROUTED FLOW FROM 141/142
 211          HC       2

 212          KK   RM143
 213          KM   MUSKINGUM-CUNGE ROUTE IN CHANNEL FROM SUB-BASIN 143 THROUGH 144
 214          KM            1) Reach Length = 1400 ft.
 215          RD
 216          RC    .040    .035    .030    1400   .0100
 217          RX       0       0    77.8    88.3    96.6   112.8   161.3   161.3
 218          RY      10     6.2     6.2       0       0     6.3     6.9      10
```

```
 219          KK    144S
 220          KM   RUNOFF GENERATED ON SUB-BASIN 144
 221          KM    THE FOLLOWING PARAMETERS WERE PROVIDED FOR THIS BASIN
 222          KM    L= 1.80 mi.  Lca= 1.11 mi.  S= 291 ft/mi.  Kn= .036  LAG= 22.95 min.
 223          KM    PHOENIX VALLEY S-GRAPH WAS USED FOR THIS BASIN
 224          BA    .475
 225          LG    .118    .280    3.61     .32   43.17
 226          UI     70.    108.    269.    357.    428.    527.    721.    857.    657.    543.
 227          UI    437.    353.    256.    145.    117.     85.     70.     26.     21.     21.
 228          UI     21.     21.      0.      0.      0.      0.      0.      0.      0.      0.
 229          UI      0.      0.      0.      0.      0.      0.      0.      0.      0.      0.
1                                                HEC-1 INPUT                                                    PAGE  6

LINE          ID.......1.......2.......3.......4.......5.......6.......7.......8.......9......10


 230          KK   DT144
 231          KM   THROW AWAY 10-YR 2-HR RETENTION VOLUME:  1) 2.1 AC-FT FROM SUB-BASIN 144
 232          KM                                               (Hydrograph identified as OR144)
 233          KM                                             2) Balance of runoff continues on.
 234          KM                                               (Hydrograph identified as DT144)
 235          DT   OR144     2.1
 236          DI       0   10000
 237          DQ       0   10000

 238          KK   HC144
 239          KM   COMBINE HYDROGRAPHS FROM SUB-BASIN 144 WITH ROUTED FLOW FROM 143
 240          HC       2

 241          KK   RM144
 242          KM   MUSKINGUM-CUNGE ROUTE IN CHANNEL FROM SUB-BASIN 144 THROUGH 145
 243          KM            1) Reach Length = 3000 ft.
 244          RD
 245          RC    .035    .035    .030    3000   .0073
 246          RX       0       0    36.6      52    64.9    79.8   107.8   107.8
 247          RY      11     7.7     7.4       0       0     8.3     8.5      11

 248          KK    145S
 249          KM   RUNOFF GENERATED ON SUB-BASIN 145
 250          KM    THE FOLLOWING PARAMETERS WERE PROVIDED FOR THIS BASIN
 251          KM    L= 1.37 mi.  Lca= 0.86 mi.  S= 242 ft/mi.  Kn= .032  LAG= 17.28 min.
 252          KM    PHOENIX VALLEY S-GRAPH WAS USED FOR THIS BASIN
 253          BA    .548
 254          LG    .105    .265    5.67    .210   44.60
 255          UI    107.    287.    526.    678.    922.   1303.    982.    755.    568.    378.
 256          UI    186.    145.     98.     33.     33.     33.     33.      0.      0.      0.
 257          UI      0.      0.      0.      0.      0.      0.      0.      0.      0.      0.

 258          KK   HC145
 259          KM   COMBINE HYDROGRAPHS FROM SUB-BASIN 145 WITH ROUTED FLOW FROM 144
 260          KM   ALSO DETERMINES 10TH STREET WASH DISCHARGE INTO ACDC
 261          HC       2
 262          ZZ
1
              SCHEMATIC DIAGRAM OF STREAM NETWORK
INPUT
 LINE     (V) ROUTING          (--->) DIVERSION OR PUMP FLOW

  NO.     (.) CONNECTOR        (<---) RETURN OF DIVERTED OR PUMPED FLOW

   45       140S
              .
              .
   69         .-------->   OR140
   64      DT140
              V
              V
   85      140RR
              V
              V
   92      RM140
              .
              .
   99         .        141S
              .          .
              .          .
  114         .          .-------->   OR141
  109         .       DT141
              .          .
              .          .
  117      HC141............
              .
              .
  126         .-------->  DVT141
  121     DVT141
              .
              .
  130         .        142S
              .          .
              .          .
  146         .          .-------->   OR142
  141         .       DT142
              .          .
              .          .
  157         .          .-------->  DVT142
  150         .      DVT142
              .          .
              .          .
  162     ADD142............
              V
```

```
                V
165       DET142
                .
                .
176             .<-------  DVT141
175             .      DVT141
                .          .
                .          .
178             .          .<-------  DVT142
177             .          .      DVT142
                .          .          .
                .          .          .
179        HC142.........................
                V
                V
183        RM142
                .
                .
190             .        143S
                .          .
                .          .
206             .          .-------> OR143
201             .       DT143
                .          .
                .          .
209        HC143............
                V
                V
212        RM143
                .
                .
219             .        144S
                .          .
                .          .
235             .          .-------> OR144
230             .       DT144
                .          .
                .          .
238        HC144............
                V
                V
241        RM144
                .
                .
248             .        145S
                .          .
                .          .
258        HC145............
```

(***) RUNOFF ALSO COMPUTED AT THIS LOCATION

```
1****************************************
*                                      *
*   FLOOD HYDROGRAPH PACKAGE  (HEC-1)  *
*            SEPTEMBER 1990            *
*             VERSION 4.0              *
*                                      *
*  RUN DATE  03/17/1995  TIME  15:33:21 *
*                                      *
****************************************
```

```
****************************************
*                                      *
*    U.S. ARMY CORPS OF ENGINEERS      *
*    HYDROLOGIC ENGINEERING CENTER     *
*          609 SECOND STREET           *
*       DAVIS, CALIFORNIA 95616        *
*           (916) 756-1104             *
*                                      *
****************************************
```

FLOOD CONTROL DISTRICT OF MARICOPA COUNTY
TENTH STREET WASH DETENTION BASIN NO 1 (FCD 93-31)
STANLEY CONSULTANTS, INC. (SCI JOB # 12183)
HEC-1 INPUT FILENAME : 12183H1F (100YR 2HR EMERGENCY)

****

THIS MODEL REPRESENTS THE PROPOSED 10TH STREET WASH DETENTION BASIN #1.
THE FOLLOWING IMPROVEMENTS ARE REFLECTED.

1. EAST TRIBUTARY (SUB-BASIN 141): 29' WEIR INLET AT CREST ELEV. 1321. DIVERSION RECORDS REFLECT BYPASS OF LOW FLOWS THROUGH EXISTING 30" CMP AND INLET RATING CURVE.
1. WEST TRIBUTARY (SUB-BASIN 142): 100' SIDE WEIR 3.34' ABOVE PROPOSED FLOW LINE AT WEIR CREST ELEV. 1319. DIVERSION RECORDS REFLECT LOW FLOW BYPASS AND INLET RATING CURVE.
2. BASIN CONFIGURATION: 3:1 SLOPES ON 3 SIDES AND A VERTICAL RETAINING WALL ON THE WEST SIDE, A BOTTOM ELEVATION (OUTLET INV. ELEV.) OF 1306.8, AND A HIGH WATER ELEV. 1319 WITH 1' FREEBOARD TO ELEV. 1320.
3. OUTLET CONFIGURATION: 30" RCP AT INV. ELEV. 1306.8 AS THE LOW FLOW AND PRINCIPAL OUTLET, AND A 260' EMERGENCY WEIR AT CREST ELEV. 1318.3.

****

****

THIS HEC-1 MODEL IS BASED ON THE KAMINSKI-HUBBARD ACDC ADMS AS MODIFIED BY FCD TO REFLECT TWO HYPOTHETICAL DETENTION BASINS (NUMBERS 1 AND 2). THE DIFFERENCES BETWEEN THIS MODEL AND THE ORIGINAL MODEL TRANSMITTED BY FCD TO SCI AT THE PROJECT KICKOFF MEETING ARE AS FOLLOWS:

1. USE OF THE HEC-1 DATA STORAGE SYSTEM OPTION HAS BEEN DELETED;
2. THE TWO HYPOTHETICAL DETENTION BASINS 1 AND 2 HAVE BEEN DELETED;
3. THE CROSS SECTIONAL AREA OF THE PRINCIPAL SPILLWAY OUTLET PIPE OF THE EXISTING CITY OF PHOENIX DET BASIN NO. 3 HAS BEEN CHANGED FROM 4.91 SQFT (WHICH CORRESPONDS TO AN OUTLET PIPE DIAM OF 30") TO 1.36 SQFT CORRESPONDING TO THE 14" X 14" STEEL ORIFICE PLATE WHICH WAS ORIGINALLY DESIGNED AND INSTALLED.

```
*****************************************************************************

                    ACDC AREA DRAINAGE MASTER STUDY
                    10TH STREET WASH WATERSHED
                    FILENAME:  TEN36.DAT     KHE JOB NO. 0146
                    100-YEAR 2-HOUR DURATION STORM

44 IO          OUTPUT CONTROL VARIABLES
                     IPRNT          5  PRINT CONTROL
                     IPLOT          0  PLOT CONTROL
                     QSCAL         0.  HYDROGRAPH PLOT SCALE

   IT          HYDROGRAPH TIME DATA
                      NMIN          3  MINUTES IN COMPUTATION INTERVAL
                     IDATE     1    0  STARTING DATE
                     ITIME       0000  STARTING TIME
                        NQ        300  NUMBER OF HYDROGRAPH ORDINATES
                    NDDATE     1    0  ENDING DATE
                    NDTIME       1457  ENDING TIME
                     ICENT         19  CENTURY MARK

              COMPUTATION INTERVAL     .05 HOURS
                   TOTAL TIME BASE   14.95 HOURS

        ENGLISH UNITS
             DRAINAGE AREA          SQUARE MILES
             PRECIPITATION DEPTH    INCHES
             LENGTH, ELEVATION      FEET
             FLOW                   CUBIC FEET PER SECOND
             STORAGE VOLUME         ACRE-FEET
             SURFACE AREA           ACRES
             TEMPERATURE            DEGREES FAHRENHEIT
1
                                          RUNOFF SUMMARY
                                     FLOW IN CUBIC FEET PER SECOND
                                  TIME IN HOURS,  AREA IN SQUARE MILES

                                   PEAK   TIME OF   AVERAGE FLOW FOR MAXIMUM PERIOD   BASIN   MAXIMUM   TIME OF
        OPERATION        STATION   FLOW    PEAK                                      AREA    STAGE    MAX STAGE
+                                                    6-HOUR     24-HOUR    72-HOUR
        HYDROGRAPH AT
+                         140S     851.    1.45       74.        30.        30.      .52
        DIVERSION TO
+                         OR140    102.    1.45        4.         2.         2.      .52
        HYDROGRAPH AT
+                         DT140    851.    1.45       70.        28.        28.      .52
        ROUTED TO
+                         140RR     27.    2.20       26.        22.        22.      .52
+                                                                                    73.24     2.20
        ROUTED TO
+                         RM140     27.    2.55       26.        22.        22.      .52
        HYDROGRAPH AT
+                         141S     477.    1.30       35.        14.        14.      .19
        DIVERSION TO
+                         OR141    125.    1.30        5.         2.         2.      .19
        HYDROGRAPH AT
+                         DT141    477.    1.30       31.        12.        12.      .19
        2 COMBINED AT
+                         HC141    477.    1.30       54.        34.        34.      .70
        DIVERSION TO
+                         DVT141    72.    1.30       27.        23.        23.      .70
        HYDROGRAPH AT
+                         DVT141   405.    1.30       27.        11.        11.      .70
        HYDROGRAPH AT
+                         142S    1111.    1.40       95.        38.        38.      .51
        DIVERSION TO
+                         OR142    192.    1.40        7.         3.         3.      .51
        HYDROGRAPH AT
+                         DT142   1111.    1.40       87.        35.        35.      .51
        DIVERSION TO
+                         DVT142   511.    1.40       51.        21.        21.      .51
        HYDROGRAPH AT
+                         DVT142   600.    1.40       36.        14.        14.      .51
        2 COMBINED AT
+                         ADD142   988.    1.35       63.        25.        25.     1.21
        ROUTED TO
+                         DET142   567.    1.55       56.        24.        24.     1.21
+                                                                                  1319.00     1.55
        HYDROGRAPH AT
+                         DVT141    72.    1.30       27.        23.        23.      .00
```

+	HYDROGRAPH AT	DVT142	511.	1.40	51.	21.	21.	.00
+	3 COMBINED AT	HC142	1023.	1.55	134.	68.	68.	1.21
+	ROUTED TO	RM142	883.	1.70	133.	67.	67.	1.21
+	HYDROGRAPH AT	143S	1376.	1.40	124.	50.	50.	.60
+	DIVERSION TO	OR143	228.	1.40	11.	5.	5.	.60
+	HYDROGRAPH AT	DT143	1376.	1.40	113.	45.	45.	.60
+	2 COMBINED AT	HC143	1819.	1.40	244.	113.	113.	1.82
+	ROUTED TO	RM143	1806.	1.50	244.	112.	112.	1.82
+	HYDROGRAPH AT	144S	968.	1.45	93.	37.	37.	.47
+	DIVERSION TO	OR144	81.	1.45	4.	2.	2.	.47
+	HYDROGRAPH AT	DT144	968.	1.45	89.	36.	36.	.47
+	2 COMBINED AT	HC144	2745.	1.45	332.	148.	148.	2.29
+	ROUTED TO	RM144	2724.	1.55	331.	148.	148.	2.29
+	HYDROGRAPH AT	145S	1355.	1.35	111.	44.	44.	.55
+	2 COMBINED AT	HC145	3572.	1.50	438.	192.	192.	2.84

1

SUMMARY OF KINEMATIC WAVE - MUSKINGUM-CUNGE ROUTING
(FLOW IS DIRECT RUNOFF WITHOUT BASE FLOW)

ISTAQ	ELEMENT	DT (MIN)	PEAK (CFS)	TIME TO PEAK (MIN)	VOLUME (IN)	INTERPOLATED TO COMPUTATION INTERVAL DT (MIN)	PEAK (CFS)	TIME TO PEAK (MIN)	VOLUME (IN)
RM140	MANE	3.00	26.80	153.00	.97	3.00	26.80	153.00	.97

CONTINUITY SUMMARY (AC-FT) - INFLOW= .2754E+02 EXCESS= .0000E+00 OUTFLOW= .2670E+02 BASIN STORAGE= .6134E+00 PERCENT ERROR= .8

RM142	MANE	1.80	900.26	102.60	1.28	3.00	882.58	102.00	1.28

CONTINUITY SUMMARY (AC-FT) - INFLOW= .8377E+02 EXCESS= .0000E+00 OUTFLOW= .8302E+02 BASIN STORAGE= .9689E+00 PERCENT ERROR= -.3

RM143	MANE	1.98	1813.34	88.90	1.43	3.00	1806.00	90.00	1.43

CONTINUITY SUMMARY (AC-FT) - INFLOW= .1391E+03 EXCESS= .0000E+00 OUTFLOW= .1389E+03 BASIN STORAGE= .2230E+00 PERCENT ERROR= -.1

RM144	MANE	3.00	2724.32	93.00	1.49	3.00	2724.32	93.00	1.49

CONTINUITY SUMMARY (AC-FT) - INFLOW= .1830E+03 EXCESS= .0000E+00 OUTFLOW= .1827E+03 BASIN STORAGE= .6023E+00 PERCENT ERROR= -.2

*** NORMAL END OF HEC-1 ***

```
1****************************************                                    ****************************************
 *                                      *                                    *                                      *
 *   FLOOD HYDROGRAPH PACKAGE  (HEC-1)  *                                    *   U.S. ARMY CORPS OF ENGINEERS       *
 *            SEPTEMBER 1990            *                                    *   HYDROLOGIC ENGINEERING CENTER      *
 *             VERSION 4.0              *                                    *         609 SECOND STREET            *
 *                                      *                                    *      DAVIS, CALIFORNIA 95616         *
 *  RUN DATE  03/17/1995  TIME  15:50:56 *                                    *          (916) 756-1104              *
 *                                      *                                    *                                      *
 ****************************************                                    ****************************************


                                X     X  XXXXXXX   XXXXX          X
                                X     X  X        X     X        XX
                                X     X  X        X              X
                                XXXXXXX  XXXX     X        XXXXX  X
                                X     X  X        X              X
                                X     X  X        X     X        X
                                X     X  XXXXXXX   XXXXX        XXX


 THIS PROGRAM REPLACES ALL PREVIOUS VERSIONS OF HEC-1 KNOWN AS HEC1 (JAN 73), HEC1GS, HEC1DB, AND HEC1KW.

 THE DEFINITIONS OF VARIABLES -RTIMP- AND -RTIOR- HAVE CHANGED FROM THOSE USED WITH THE 1973-STYLE INPUT STRUCTURE.
 THE DEFINITION OF -AMSKK- ON RM-CARD WAS CHANGED WITH REVISIONS DATED 28 SEP 81. THIS IS THE FORTRAN77 VERSION
 NEW OPTIONS: DAMBREAK OUTFLOW SUBMERGENCE , SINGLE EVENT DAMAGE CALCULATION, DSS:WRITE STAGE FREQUENCY,
 DSS:READ TIME SERIES AT DESIRED CALCULATION INTERVAL   LOSS RATE:GREEN AND AMPT INFILTRATION
 KINEMATIC WAVE: NEW FINITE DIFFERENCE ALGORITHM

1                                          HEC-1 INPUT                                                    PAGE  1

      LINE          ID.......1.......2.......3.......4.......5.......6.......7.......8.......9......10

        1           ID
        2           ID        FLOOD CONTROL DISTRICT OF MARICOPA COUNTY
        3           ID        TENTH STREET WASH DETENTION BASIN NO 1  (FCD 93-31)
        4           ID        STANLEY CONSULTANTS, INC.  (SCI JOB # 12183)
        5           ID        HEC-1 INPUT FILENAME :  12183H1G   (100YR 6HR EMERGENCY)
        6           ID
        7           ID        ************************************************************************
        8           ID        THIS MODEL REPRESENTS THE PROPOSED 10TH STREET WASH DETENTION BASIN #1.
        9           ID        THE FOLLOWING IMPROVEMENTS ARE REFLECTED.
       10           ID          1. EAST TRIBUTARY (SUB-BASIN 141): 29' WEIR INLET AT CREST ELEV. 1321.
       11           ID             DIVERSION RECORDS REFLECT BYPASS OF LOW FLOWS THROUGH EXISTING 30"
       12           ID             CMP AND INLET RATING CURVE.
       13           ID          1. WEST TRIBUTARY (SUB-BASIN 142): 100' SIDE WEIR 3.34' ABOVE PROPOSED
       14           ID             FLOW LINE AT WEIR CREST ELEV. 1319.  DIVERSION RECORDS REFLECT LOW
       15           ID             FLOW BYPASS AND INLET RATING CURVE.
       16           ID          2. BASIN CONFIGURATION: 3:1 SLOPES ON 3 SIDES AND A VERTICAL RETAINING
       17           ID             WALL ON THE WEST SIDE, A BOTTOM ELEVATION (OUTLET INV. ELEV.) OF
       18           ID             1306.8, AND A HIGH WATER ELEV. 1319 WITH 1' FREEBOARD TO ELEV.
       19           ID             1320.
       20           ID          3. OUTLET CONFIGURATION: 30" RCP AT INV. ELEV. 1306.8 AS THE LOW FLOW
       21           ID             AND PRINCIPAL OUTLET, AND A 260' EMERGENCY WEIR AT CREST ELEV.
       22           ID             1318.3.
       23           ID        ************************************************************************
       24           ID
       25           ID        ************************************************************************
       26           ID        THIS HEC-1 MODEL IS BASED ON THE KAMINSKI-HUBBARD ACDC ADMS AS MODIFIED
       27           ID        BY FCD TO REFLECT TWO HYPOTHETICAL DETENTION BASINS (NUMBERS 1 AND 2).
       28           ID        THE DIFFERENCES BETWEEN THIS MODEL AND THE ORIGINAL MODEL TRANSMITTED
       29           ID        BY FCD TO SCI AT THE PROJECT KICKOFF MEETING ARE AS FOLLOWS:
       30           ID          1. USE OF THE HEC-1 DATA STORAGE SYSTEM OPTION HAS BEEN DELETED;
       31           ID          2. THE TWO HYPOTHETICAL DETENTION BASINS 1 AND 2 HAVE BEEN DELETED;
       32           ID          3. THE CROSS SECTIONAL AREA OF THE PRINCIPAL SPILLWAY OUTLET PIPE OF
       33           ID             THE EXISTING CITY OF PHOENIX DET BASIN NO. 3 HAS BEEN CHANGED FROM
       34           ID             4.91 SQFT (WHICH CORRESPONDS TO AN OUTLET PIPE DIAM OF 30") TO
       35           ID             1.36 SQFT CORRESPONDING TO THE 14" X 14" STEEL ORIFICE PLATE WHICH
       36           ID             WAS ORIGINALLY DESIGNED AND INSTALLED.
       37           ID        ************************************************************************
       38           ID
       39           ID   ACDC AREA DRAINAGE MASTER STUDY
       40           ID   10TH STREET WASH WATERSHED
       41           ID   FILENAME:  TEN36.DAT     KHE JOB NO. 0146
       42           ID   100-YEAR 6-HOUR DURATION STORM
                    *
                    *  Based on FCDMC comments dated March 17,1992 we adjusted the Mannings "n"
                    *  coefficient to reflect weighted averaging in lieu of log averaging.
                    *  We also changed the S-graph from Phoenix Mountain to Phoenix Valley.
                    *
                    *DIAGRAM
       43           IT       3                    300
       44           IO       5
1                                          HEC-1 INPUT                                                    PAGE  2

      LINE          ID.......1.......2.......3.......4.......5.......6.......7.......8.......9......10

       45           KK    140S
       46           KM   RUNOFF GENERATED ON SUB-BASIN 140
       47           KM    THE FOLLOWING PARAMETERS WERE PROVIDED FOR THIS BASIN
       48           KM    L= 1.22 mi.  Lca= 0.51 mi.  S= 162 ft/mi.  Kn= .050  LAG= 22.87 min.
       49           KM    PHOENIX VALLEY S-GRAPH WAS USED FOR THIS BASIN
       50           BA    .516
       51           IN      15
```

```
 52          KM   RAINFALL DEPTH OF 3.00 WAS SPACIALLY REDUCED AS SHOWN BY THE PB RECORD
 53          KM   AN AREAL REDUCTION COEFFICIENT OF .975 WAS USED
 54          PB  2.9200
 55          KM   THE FOLLOWING PC RECORD USED A 6-HOUR RAINFALL WITH PATTERN NO. 2.01
 56          PC    .000    .009    .016    .025    .034    .042    .051    .059    .067    .076
 57          PC    .087    .100    .120    .163    .252    .451    .694    .837    .900    .938
 58          PC    .950    .963    .975    .988   1.000
 59          LG    .145    .339   4.25    .488   20.44
 60          UI     76.    119.    294.    391.    468.    577.    793.    930.    712.    588.
 61          UI    474.    381.    274.    154.    127.     90.     76.     26.     23.     23.
 62          UI     23.     23.      0.      0.      0.      0.      0.      0.      0.      0.
 63          UI      0.      0.      0.      0.      0.      0.      0.      0.      0.      0.

 64          KK   DT140
 65          KM   THROW AWAY 10-YR 2-HR RETENTION VOLUME:  1) 2.0 AC-FT FROM SUB-BASIN 140
 66          KM                                               (Hydrograph identified as OR140)
 67          KM                                            2) Balance of runoff continues on.
 68          KM                                               (Hydrograph identified as DT140)
 69          DT   OR140     2.0
 70          DI       0   10000
 71          DQ       0   10000
 72          KM   ******************************************************************************
 73          KM    KK 140RR
 74          KM    KM ROUTE FLOW THROUGH NORTH MOUNTAIN DETENTION NO.3
 75          KM    RS      1    ELEV    55.9
 76          KM    SV      0     .06    1.52    6.32   17.42   35.46   60.34   95.64
 77          KM    SE  55.9      58      62      66      70      74      78      82
 78          KM    SL 57.15    4.91      .6      .5
 79          KM        ***********************************************************************
 80          KM    THE SL RECORD (LOW-LEVEL OUTLET) SECOND FIELD (ORIFICE AREA) VALUE HAS
 81          KM    BEEN CHANGED BY SCI FROM 4.91 sq.ft. TO 1.36 sq.ft. (14"x14" INLET)
 82          KM        ***********************************************************************
 83          KM    SS 79.66     100     3.0     1.5
 84          KM   ******************************************************************************

 85          KK   140RR
 86          KM   ROUTE FLOW THROUGH NORTH MOUNTAIN DETENTION NO.3
 87          RS       1    ELEV    55.9
 88          SV       0     .06    1.52    6.32   17.42   35.46   60.34   95.64
 89          SE    55.9      58      62      66      70      74      78      82
 90          SL   56.43    1.36      .6      .5
 91          SS   80.00     100     3.0     1.5
1                                   HEC-1 INPUT                                          PAGE  3

LINE         ID.......1.......2.......3.......4.......5.......6.......7.......8.......9......10

 92          KK   RM140
 93          KM   MUSKINGUM-CUNGE ROUTE IN CHANNEL FROM DETENTION BASIN THROUGH SUB-BASIN 141
 94          KM            1) Reach Length = 3600 ft.
 95          RD
 96          RC    .045    .045    .045    3600   .0108
 97          RX       0       0    46.5    76.4    79.9   110.2   160.2   160.2
 98          RY      16    12.6     7.3       0       0     9.9    15.9      16

 99          KK    141S
100          KM   RUNOFF GENERATED ON SUB-BASIN 141
101          KM    THE FOLLOWING PARAMETERS WERE PROVIDED FOR THIS BASIN
102          KM    L= 0.83 mi.  Lca= 0.57 mi.  S= 315 ft/mi.  Kn= .042  LAG= 15.26 min.
103          KM    PHOENIX VALLEY S-GRAPH WAS USED FOR THIS BASIN
104          BA    .187
105          LG    .126    .303    3.61    .313   38.57
106          UI     41.    136.    222.    297.    467.    414.    304.    220.    131.     70.
107          UI     47.     23.     13.     13.     13.      0.      0.      0.      0.      0.
108          UI      0.      0.      0.      0.      0.      0.      0.      0.      0.      0.

109          KK   DT141
110          KM   THROW AWAY 10-YR 2-HR RETENTION VOLUME:  1) 2.4 AC-FT FROM SUB-BASIN 141
111          KM                                               (Hydrograph identified as OR141)
112          KM                                            2) Balance of runoff continues on.
113          KM                                               (Hydrograph identified as DT141)
114          DT   OR141     2.4
115          DI       0   10000
116          DQ       0   10000

117          KK   HC141
118          KM   COMBINE HYDROGRAPHS FROM SUB-BASIN 141 WITH ROUTED FLOW FROM DETENTION
119          HC       2
120          KM   ******************************************************************************

121          KK  DVT141   SPLIT HYDROGRAPH 141 TO DET142 AND HC142
122          KM           DI-DQ BASED ON HYDRAULIC RATING CURVE FOR PROPOSED INLET AND
123          KM           EXISTING 30" PIPE.  WEIR LENGTH IS 29' WEIR CREST AT ELEV 1321.
124          KM           DQ IS AMOUNT DIVERTED AROUND DETENTION BASIN DOWNSTREAM.
125          KM           DI-DQ DIFFERENCE IS ROUTED THRU THE PROPOSED DETENTION BASIN
126          DT  DVT141
127          DI       0       5      10      25      57     114     188     275
128          DQ       0       5      10      25      26      27      28      29
129          KM   ******************************************************************************

130          KK    142S
131          KM   RUNOFF GENERATED ON SUB-BASIN 142
132          KM    THE FOLLOWING PARAMETERS WERE PROVIDED FOR THIS BASIN
133          KM    L= 1.16 mi.  Lca= 0.75 mi.  S= 257 ft/mi.  Kn= .042  LAG= 19.99 min.
134          KM    PHOENIX VALLEY S-GRAPH WAS USED FOR THIS BASIN
135          BA    .512
136          LG    .127    .309    4.12    .267   34.03
137          UI     86.    178.    377.    488.    608.    839.   1049.    795.    637.    498.
138          UI    380.    210.    146.    107.     80.     26.     26.     26.     26.      0.
139          UI      0.      0.      0.      0.      0.      0.      0.      0.      0.      0.
```

```
 140          UI      0.      0.      0.      0.      0.      0.      0.      0.      0.      0.
1                                          HEC-1 INPUT                                                    PAGE  4

LINE          ID.......1.......2.......3.......4.......5.......6.......7.......8.......9......10

 141          KK   DT142
 142          KM   THROW AWAY 10-YR 2-HR RETENTION VOLUME:  1) 3.6 AC-FT FROM SUB-BASIN 142
 143          KM                                              (Hydrograph identified as OR142)
 144          KM                                           2) Balance of runoff continues on.
 145          KM                                              (Hydrograph identified as DT142)
 146          DT   OR142     3.6
 147          DI       0   10000
 148          DQ       0   10000
 149          KM   ******************************************************************************

 150          KK  DVT142   SPLIT HYDROGRAPH DVT142 TO DET142 AND HC142
 151          KM           DI-DQ BASED ON HYDRAULIC RATING CURVE FOR PROPOSED INLET AND
 152          KM           IMPROVED WASH CROSS SECTION.  WEIR LENGTH IS 100' WEIR CREST ELEV IS
 153          KM           3.34' ABOVE WASH FLOWLINE AT 1319.  HEC-2 SPLIT FLOW OPTION USED TO
 154          KM           ESTIMATE THE INLET HYDRAULICS AT THE INCREMENTAL FLOW RATES.
 155          KM           DQ IS AMOUNT DIVERTED AROUND DETENTION BASIN DOWNSTREAM.
 156          KM           DI-DQ DIFFERENCE IS ROUTED THRU THE PROPOSED DETENTION BASIN
 157          DT  DVT142
 158          DI       0      50     100     150     195     200     250     300     350     400
 159          DI     450     500     550     600     650     672     700     750
 160          DQ       0      50     100     150     195     197     223     248     271     293
 161          DQ     317     346     378     399     408     410     413     418

 162          KK  ADD142
 163          KM   COMBINE HYDROGRAPHS FROM (DI-DQ) FROM DVT141 WITH (DI-DQ) FROM DVT142
 164          HC       2

 165          KK  DET142   ROUTE HYDROGRAPH ADD142 THRU DET BASIN 142
 166          KM           30" RCP  AS LOW FLOW AND PRINCIPAL OUTLET (INV. EL. 1306.8)
 167          KM           260' EMERGENCY WEIR AT ELEV. 1318.3
 168          RS       1    ELEV  1318.3
 169          SV     0.0   0.006   0.283   1.103   2.596   4.477   6.448   8.507   10.66   12.89
 170          SV   15.22   17.64   20.14   20.92   21.44   22.21   22.73   25.42
 171          SQ       0       0       0       0       0       0       0       0       0       0
 172          SQ       0       0       0       0      75     294     487    1844
 173          SE  1306.8    1307    1308    1309    1310    1311    1312    1313    1314    1315
 174          SE    1316    1317    1318  1318.3  1318.5  1318.8    1319    1320

 175          KK  DVT141    RETRIEVE PREVIOUSLY SPLIT HYDROGRAPH FROM SUB-BASIN 141
 176          DR  DVT141

 177          KK  DVT142    RETRIEVE PREVIOUSLY SPLIT HYDROGRAPH FROM SUB-BASIN 142
 178          DR  DVT142

 179          KK   HC142
 180          KM   COMBINE HYDROGRAPHS (DQ) FROM DVT142, (DQ) FROM DVT141 AND DET142 OUTFLOW
 181          HC       3
 182          KM   ******************************************************************************
1                                          HEC-1 INPUT                                                    PAGE  5

LINE          ID.......1.......2.......3.......4.......5.......6.......7.......8.......9......10

 183          KK   RM142
 184          KM   MUSKINGUM-CUNGE ROUTE IN CHANNEL FROM SUB-BASINS 141/142 THROUGH 143
 185          KM            1) Reach Length = 5140 ft.
 186          RD
 187          RC    .050    .045    .050    5140   .0086
 188          RX       0       0    43.8    61.3    67.4    78.3    89.8    89.8
 189          RY    10.8     9.4     9.4       0       0     5.4     8.8    10.8

 190          KK    143S
 191          KM   RUNOFF GENERATED ON SUB-BASIN 143
 192          KM    THE FOLLOWING PARAMETERS WERE PROVIDED FOR THIS BASIN
 193          KM    L= 1.64 mi.  Lca= 0.88  S= 273 ft/mi.  Kn= .035  LAG= 19.96 min.
 194          KM    PHOENIX VALLEY S-GRAPH WAS USED FOR THIS BASIN
 195          BA    .604
 196          LG    .115    .279    4.12    .269   49.66
 197          UI    102.    212.    446.    577.    720.    994.   1238.    937.    750.    586.
 198          UI    447.    244.    173.    125.     93.     31.     31.     31.     31.      0.
 199          UI      0.      0.      0.      0.      0.      0.      0.      0.      0.      0.
 200          UI      0.      0.      0.      0.      0.      0.      0.      0.      0.      0.

 201          KK   DT143
 202          KM   THROW AWAY 10-YR 2-HR RETENTION VOLUME:  1) 5.7 AC-FT FROM SUB-BASIN 143
 203          KM                                              (Hydrograph identified as OR143)
 204          KM                                           2) Balance of runoff continues on.
 205          KM                                              (Hydrograph identified as DT143)
 206          DT   OR143     5.7
 207          DI       0   10000
 208          DQ       0   10000

 209          KK   HC143
 210          KM   COMBINE HYDROGRAPHS FROM SUB-BASIN 143 WITH ROUTED FLOW FROM 141/142
 211          HC       2

 212          KK   RM143
 213          KM   MUSKINGUM-CUNGE ROUTE IN CHANNEL FROM SUB-BASIN 143 THROUGH 144
 214          KM            1) Reach Length = 1400 ft.
 215          RD
 216          RC    .040    .035    .030    1400   .0100
 217          RX       0       0    77.8    88.3    96.6   112.8   161.3   161.3
 218          RY      10     6.2     6.2       0       0     6.3     6.9      10
```

```
 219          KK    144S
 220          KM   RUNOFF GENERATED ON SUB-BASIN 144
 221          KM    THE FOLLOWING PARAMETERS WERE PROVIDED FOR THIS BASIN
 222          KM    L= 1.80 mi.  Lca= 1.11 mi.  S= 291 ft/mi.  Kn= .036  LAG= 22.95 min.
 223          KM    PHOENIX VALLEY S-GRAPH WAS USED FOR THIS BASIN
 224          BA    .475
 225          LG    .118    .280    3.61     .32   43.17
 226          UI     70.    108.    269.    357.    428.    527.    721.    857.    657.    543.
 227          UI    437.    353.    256.    145.    117.     85.     70.     26.     21.     21.
 228          UI     21.     21.      0.      0.      0.      0.      0.      0.      0.      0.
 229          UI      0.      0.      0.      0.      0.      0.      0.      0.      0.      0.
1                                                HEC-1 INPUT                                          PAGE  6

LINE          ID.......1.......2.......3.......4.......5.......6.......7.......8.......9......10


 230          KK   DT144
 231          KM   THROW AWAY 10-YR 2-HR RETENTION VOLUME:  1) 2.1 AC-FT FROM SUB-BASIN 144
 232          KM                                               (Hydrograph identified as OR144)
 233          KM                                             2) Balance of runoff continues on.
 234          KM                                               (Hydrograph identified as DT144)
 235          DT   OR144     2.1
 236          DI       0   10000
 237          DQ       0   10000

 238          KK   HC144
 239          KM   COMBINE HYDROGRAPHS FROM SUB-BASIN 144 WITH ROUTED FLOW FROM 143
 240          HC       2

 241          KK   RM144
 242          KM   MUSKINGUM-CUNGE ROUTE IN CHANNEL FROM SUB-BASIN 144 THROUGH 145
 243          KM            1) Reach Length = 3000 ft.
 244          RD
 245          RC    .035    .035    .030    3000   .0073
 246          RX       0       0    36.6      52    64.9    79.8   107.8   107.8
 247          RY      11     7.7     7.4       0       0     8.3     8.5      11

 248          KK    145S
 249          KM   RUNOFF GENERATED ON SUB-BASIN 145
 250          KM    THE FOLLOWING PARAMETERS WERE PROVIDED FOR THIS BASIN
 251          KM    L= 1.37 mi.  Lca= 0.86 mi.  S= 242 ft/mi.  Kn= .032  LAG= 17.28 min.
 252          KM    PHOENIX VALLEY S-GRAPH WAS USED FOR THIS BASIN
 253          BA    .548
 254          LG    .105    .265    5.67    .210   44.60
 255          UI    107.    287.    526.    678.    922.   1303.    982.    755.    568.    378.
 256          UI    186.    145.     98.     33.     33.     33.     33.      0.      0.      0.
 257          UI      0.      0.      0.      0.      0.      0.      0.      0.      0.      0.

 258          KK   HC145
 259          KM   COMBINE HYDROGRAPHS FROM SUB-BASIN 145 WITH ROUTED FLOW FROM 144
 260          KM   ALSO DETERMINES 10TH STREET WASH DISCHARGE INTO ACDC
 261          HC       2
 262          ZZ
1
          SCHEMATIC DIAGRAM OF STREAM NETWORK
 INPUT
  LINE    (V) ROUTING          (--->) DIVERSION OR PUMP FLOW

   NO.    (.) CONNECTOR        (<---) RETURN OF DIVERTED OR PUMPED FLOW

   45       140S
              .
              .
   69         .------->   OR140
   64     DT140
              V
              V
   85     140RR
              V
              V
   92     RM140
              .
              .
   99         .        141S
              .          .
              .          .
  114         .          .------->   OR141
  109         .      DT141
              .          .
              .          .
  117     HC141............
              .
              .
  126         .------->  DVT141
  121    DVT141
              .
              .
  130         .        142S
              .          .
              .          .
  146         .          .------->   OR142
  141         .      DT142
              .          .
              .          .
  157         .          .------->  DVT142
  150         .     DVT142
              .          .
              .          .
  162    ADD142............
              V
```

```
                V
165        DET142
                .
                .
176             .<-------  DVT141
175             .     DVT141
                .          .
                .          .
178             .          .<-------  DVT142
177             .          .     DVT142
                .          .          .
                .          .          .
179        HC142.......................
                V
                V
183        RM142
                .
                .
190             .       143S
                .          .
                .          .
206             .          .------->   OR143
201             .      DT143
                .          .
                .          .
209        HC143............
                V
                V
212        RM143
                .
                .
219             .       144S
                .          .
                .          .
235             .          .------->   OR144
230             .      DT144
                .          .
                .          .
238        HC144............
                V
                V
241        RM144
                .
                .
248             .       145S
                .          .
                .          .
258        HC145............
```

(***) RUNOFF ALSO COMPUTED AT THIS LOCATION

```
1****************************************
*                                      *
*   FLOOD HYDROGRAPH PACKAGE  (HEC-1)  *
*            SEPTEMBER 1990            *
*             VERSION 4.0              *
*                                      *
*  RUN DATE  03/17/1995  TIME  15:50:56 *
*                                      *
****************************************
```

```
*************************************
*                                   *
*    U.S. ARMY CORPS OF ENGINEERS   *
*    HYDROLOGIC ENGINEERING CENTER  *
*          609 SECOND STREET        *
*       DAVIS, CALIFORNIA 95616     *
*           (916) 756-1104          *
*                                   *
*************************************
```

FLOOD CONTROL DISTRICT OF MARICOPA COUNTY
TENTH STREET WASH DETENTION BASIN NO 1 (FCD 93-31)
STANLEY CONSULTANTS, INC. (SCI JOB # 12183)
HEC-1 INPUT FILENAME : 12183H1G (100YR 6HR EMERGENCY)

****

THIS MODEL REPRESENTS THE PROPOSED 10TH STREET WASH DETENTION BASIN #1.
THE FOLLOWING IMPROVEMENTS ARE REFLECTED.

1. EAST TRIBUTARY (SUB-BASIN 141): 29' WEIR INLET AT CREST ELEV. 1321. DIVERSION RECORDS REFLECT BYPASS OF LOW FLOWS THROUGH EXISTING 30" CMP AND INLET RATING CURVE.
1. WEST TRIBUTARY (SUB-BASIN 142): 100' SIDE WEIR 3.34' ABOVE PROPOSED FLOW LINE AT WEIR CREST ELEV. 1319. DIVERSION RECORDS REFLECT LOW FLOW BYPASS AND INLET RATING CURVE.
2. BASIN CONFIGURATION: 3:1 SLOPES ON 3 SIDES AND A VERTICAL RETAINING WALL ON THE WEST SIDE, A BOTTOM ELEVATION (OUTLET INV. ELEV.) OF 1306.8, AND A HIGH WATER ELEV. 1319 WITH 1' FREEBOARD TO ELEV. 1320.
3. OUTLET CONFIGURATION: 30" RCP AT INV. ELEV. 1306.8 AS THE LOW FLOW AND PRINCIPAL OUTLET, AND A 260' EMERGENCY WEIR AT CREST ELEV. 1318.3.

****

****

THIS HEC-1 MODEL IS BASED ON THE KAMINSKI-HUBBARD ACDC ADMS AS MODIFIED BY FCD TO REFLECT TWO HYPOTHETICAL DETENTION BASINS (NUMBERS 1 AND 2). THE DIFFERENCES BETWEEN THIS MODEL AND THE ORIGINAL MODEL TRANSMITTED BY FCD TO SCI AT THE PROJECT KICKOFF MEETING ARE AS FOLLOWS:

1. USE OF THE HEC-1 DATA STORAGE SYSTEM OPTION HAS BEEN DELETED;
2. THE TWO HYPOTHETICAL DETENTION BASINS 1 AND 2 HAVE BEEN DELETED;
3. THE CROSS SECTIONAL AREA OF THE PRINCIPAL SPILLWAY OUTLET PIPE OF THE EXISTING CITY OF PHOENIX DET BASIN NO. 3 HAS BEEN CHANGED FROM 4.91 SQFT (WHICH CORRESPONDS TO AN OUTLET PIPE DIAM OF 30") TO 1.36 SQFT CORRESPONDING TO THE 14" X 14" STEEL ORIFICE PLATE WHICH WAS ORIGINALLY DESIGNED AND INSTALLED.

```
*************************************************************************

                    ACDC AREA DRAINAGE MASTER STUDY
                    10TH STREET WASH WATERSHED
                    FILENAME:  TEN36.DAT     KHE JOB NO. 0146
                    100-YEAR 6-HOUR DURATION STORM

44 IO         OUTPUT CONTROL VARIABLES
                    IPRNT          5  PRINT CONTROL
                    IPLOT          0  PLOT CONTROL
                    QSCAL         0.  HYDROGRAPH PLOT SCALE

   IT         HYDROGRAPH TIME DATA
                     NMIN          3  MINUTES IN COMPUTATION INTERVAL
                    IDATE     1    0  STARTING DATE
                    ITIME       0000  STARTING TIME
                       NQ        300  NUMBER OF HYDROGRAPH ORDINATES
                   NDDATE     1    0  ENDING DATE
                   NDTIME       1457  ENDING TIME
                    ICENT         19  CENTURY MARK

              COMPUTATION INTERVAL     .05 HOURS
                   TOTAL TIME BASE   14.95 HOURS

        ENGLISH UNITS
             DRAINAGE AREA          SQUARE MILES
             PRECIPITATION DEPTH    INCHES
             LENGTH, ELEVATION      FEET
             FLOW                   CUBIC FEET PER SECOND
             STORAGE VOLUME         ACRE-FEET
             SURFACE AREA           ACRES
             TEMPERATURE            DEGREES FAHRENHEIT
1
                                          RUNOFF SUMMARY
                                     FLOW IN CUBIC FEET PER SECOND
                                   TIME IN HOURS,  AREA IN SQUARE MILES

                                 PEAK   TIME OF    AVERAGE FLOW FOR MAXIMUM PERIOD     BASIN   MAXIMUM   TIME OF
        OPERATION        STATION FLOW   PEAK       6-HOUR    24-HOUR    72-HOUR       AREA    STAGE   MAX STAGE
+
        HYDROGRAPH AT
+                          140S   496.   4.25        69.       28.       28.          .52
        DIVERSION TO
+                          OR140   20.   4.25         4.        2.        2.          .52
        HYDROGRAPH AT
+                          DT140  496.   4.25        65.       26.       26.          .52
        ROUTED TO
+                          140RR   26.   5.10        25.       18.       18.          .52
+                                                                                   72.36     5.15
        ROUTED TO
+                          RM140   26.   5.45        25.       18.       18.          .52
        HYDROGRAPH AT
+                           141S  263.   4.10        38.       15.       15.          .19
        DIVERSION TO
+                          OR141   57.   4.10         5.        2.        2.          .19
        HYDROGRAPH AT
+                          DT141  263.   4.10        33.       13.       13.          .19
        2 COMBINED AT
+                          HC141  275.   4.10        56.       31.       31.          .70
        DIVERSION TO
+                         DVT141   29.   4.10        26.       19.       19.          .70
        HYDROGRAPH AT
+                         DVT141  246.   4.10        30.       12.       12.          .70
        HYDROGRAPH AT
+                           142S  671.   4.15       100.       40.       40.          .51
        DIVERSION TO
+                          OR142   45.   4.15         7.        3.        3.          .51
        HYDROGRAPH AT
+                          DT142  671.   4.15        93.       37.       37.          .51
        DIVERSION TO
+                         DVT142  410.   4.15        69.       28.       28.          .51
        HYDROGRAPH AT
+                         DVT142  261.   4.15        24.        9.        9.          .51
        2 COMBINED AT
+                         ADD142  504.   4.15        54.       22.       22.         1.21
        ROUTED TO
+                         DET142  498.   4.20        54.       22.       22.         1.21
+                                                                                 1319.01     4.20
        HYDROGRAPH AT
+                         DVT141   29.   4.10        26.       19.       19.          .00
```

```
+          HYDROGRAPH AT
                          DVT142      410.   4.15        69.        28.        28.       .00
+          3 COMBINED AT
                           HC142      937.   4.15       148.        68.        68.      1.21
+          ROUTED TO
                           RM142      927.   4.30       148.        68.        68.      1.21
+          HYDROGRAPH AT
                            143S      841.   4.15       136.        55.        55.       .60
+          DIVERSION TO
                           OR143       58.   4.15        11.         5.         5.       .60
+          HYDROGRAPH AT
                           DT143      841.   4.15       125.        50.        50.       .60
+          2 COMBINED AT
                           HC143     1726.   4.25       271.       118.       118.      1.82
+          ROUTED TO
                           RM143     1717.   4.30       271.       118.       118.      1.82
+          HYDROGRAPH AT
                            144S      615.   4.20       100.        40.        40.       .47
+          DIVERSION TO
                           OR144       14.   4.20         4.         2.         2.       .47
+          HYDROGRAPH AT
                           DT144      615.   4.20        96.        38.        38.       .47
+          2 COMBINED AT
                           HC144     2317.   4.30       363.       156.       156.      2.29
+          ROUTED TO
                           RM144     2310.   4.35       363.       156.       156.      2.29
+          HYDROGRAPH AT
                            145S      786.   4.10       121.        49.        49.       .55
+          2 COMBINED AT
                           HC145     2932.   4.30       478.       204.       204.      2.84
1
                                   SUMMARY OF KINEMATIC WAVE - MUSKINGUM-CUNGE ROUTING
                                       (FLOW IS DIRECT RUNOFF WITHOUT BASE FLOW)
                                                                    INTERPOLATED TO
                                                                  COMPUTATION INTERVAL
          ISTAQ    ELEMENT      DT       PEAK    TIME TO     VOLUME      DT       PEAK    TIME TO     VOLUME
                                                   PEAK                                     PEAK

                              (MIN)     (CFS)     (MIN)      (IN)    (MIN)     (CFS)     (MIN)       (IN)

            RM140  MANE        3.00     26.07    330.00       .79     3.00     26.07    330.00        .79

CONTINUITY SUMMARY (AC-FT) - INFLOW= .2263E+02 EXCESS= .0000E+00 OUTFLOW= .2176E+02 BASIN STORAGE= .6323E+00 PERCENT ERROR=   1.1

            RM142  MANE        2.70    931.39    259.20      1.29     3.00    927.25    258.00       1.29

CONTINUITY SUMMARY (AC-FT) - INFLOW= .8413E+02 EXCESS= .0000E+00 OUTFLOW= .8344E+02 BASIN STORAGE= .9668E+00 PERCENT ERROR=   -.3

            RM143  MANE        2.00   1718.05    258.49      1.50     3.00   1716.65    258.00       1.50

CONTINUITY SUMMARY (AC-FT) - INFLOW= .1453E+03 EXCESS= .0000E+00 OUTFLOW= .1452E+03 BASIN STORAGE= .2223E+00 PERCENT ERROR=   -.1

            RM144  MANE        3.00   2310.47    261.00      1.57     3.00   2310.47    261.00       1.57

CONTINUITY SUMMARY (AC-FT) - INFLOW= .1927E+03 EXCESS= .0000E+00 OUTFLOW= .1924E+03 BASIN STORAGE= .6001E+00 PERCENT ERROR=   -.2


*** NORMAL END OF HEC-1 ***
```

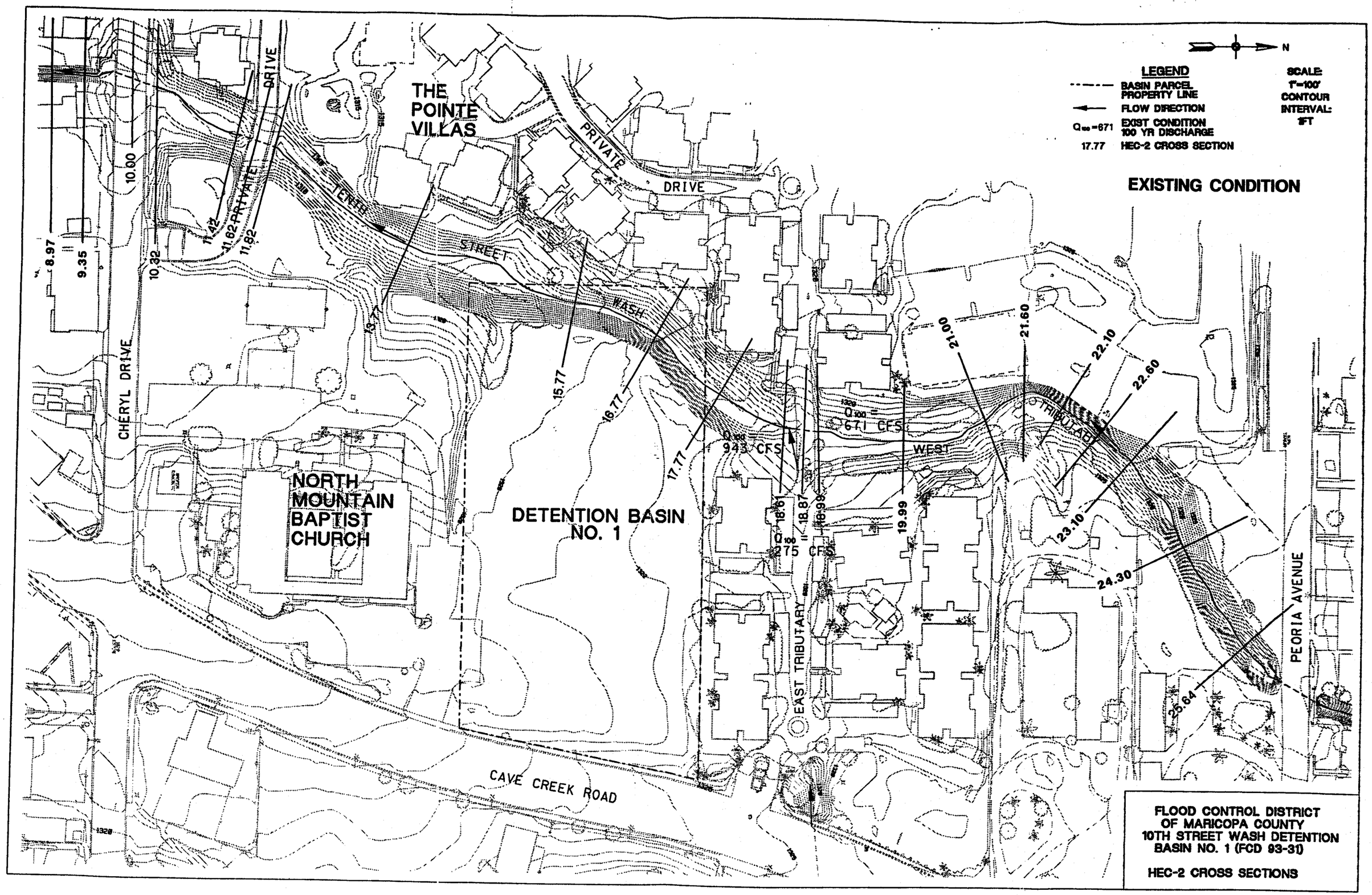

FLOOD CONTROL DISTRICT OF MARICOPA COUNTY
10TH STREET WASH DETENTION BASIN NO. 1 (FCD 93-31)

HEC-2 CROSS SECTIONS

```
1*********************************************
 *  HEC-2 WATER SURFACE PROFILES             *
 *                                           *
 *  Version   4.6.2;  May 1991               *
 *                                           *
 *  RUN DATE    14MAR95    TIME   19:38:05   *
 *********************************************
```

```
*************************************
*  U.S. ARMY CORPS OF ENGINEERS
*  HYDROLOGIC ENGINEERING CENTER
*  609 SECOND STREET, SUITE D
*  DAVIS, CALIFORNIA 95616-4687
*        (916) 756-1104
*************************************
```

```
X     X  XXXXXXX   XXXXX              XXXXX
X     X  X        X     X            X     X
X     X  X        X                        X
XXXXXXX  XXXX     X          XXXXX    XXXXX
X     X  X        X                  X
X     X  X        X     X            X
X     X  XXXXXXX   XXXXX             XXXXXXX
```

```
1
   14MAR95      19:38:05                                                                                    PAGE    1
```

```
                                                                                THIS RUN EXECUTED 14MAR95    19:38:05
*************************************
 HEC-2 WATER SURFACE PROFILES

 Version   4.6.2;  May 1991
*************************************


T1      10TH STREET WASH                    STANLEY CONSULTANTS PROJECT # 12183
T2      BASIN NO. 1                                          FILENAME: 12183H2B
T3      MAIN STREAM SUBCRITICAL FLOW
T4
T4      ************************************************************************
T4      THIS MODEL IS INTENDED FOR USE IN ESTIMATING THE WATER SURFACE ELEVATION
T4      ALONG THE 10TH WASH AND THE WEST TRIBUTARY FOR EXISTING CONDITIONS.
T4      THE FLOWS USED IN THIS MODEL WERE TAKEN FROM THE HEC-1 MODEL DONE BY
T4      KAMINSKI-HUBBARD (ADMS) AND MODIFIED BY SCI USING THE 14"x14" STEEL
T4      PLATE ORIFICE OPENING FOR THE PRINCIPAL SPILLWAY OUTLET PIPE OF THE
T4      EXISTING CITY OF PHOENIX DETENTION DAM NO. 3.
T4      ************************************************************************
T4
T4      1. CROSS SECTION DATA DEVELOPED FROM ONE-FOOT CONTOUR AERIAL TOPOGRAPHIC
T4         MAPS (DMJM ENGINEERING/KENNEY AERIAL MAPPING).
T4         DATUM IS CITY OF PHOENIX.
T4
T4      2. CROSS SECTIONS ORIENTED LEFT TO RIGHT LOOKING DOWNSTREAM.
T4
T4      3. CROSS SECTION GR STATION 1000 CORRESPONDS TO CENTERLINE OF THE WASH.
T4
T4      4. THE ROUGHNESS COEFFICIENT USED FOR THE EXISTING CONDITION WASH RANGES
T4         FROM "n"=0.020 TO "n"=0.100.
T4
T4      5. STARTING WATER SURFACE ELEVATION CALCULATED USING SLOPE AREA
T4         METHOD FOR ALL PROFILES.
T4
T4      6. PROFILE 1 -  10 YR
T4         PROFILE 2 - 100 YR
T4

J1  ICHECK    INQ      NINV     IDIR     STRT     METRIC   HVINS    Q        WSEL     FQ

                2                        0.001                                1306.6

J2  NPROF     IPLOT    PRFVS    XSECV    XSECH    FN       ALLDC    IBW      CHNIM    ITRACE

     1                 -1                                  -1


J3  VARIABLE CODES FOR SUMMARY PRINTOUT

     38       43        1        2       13       55       16       14       26       17
     15       56       18                38       43        1       25       42        8
1
   14MAR95      19:38:05                                                                                    PAGE    2

     39       27       53       54       28        4       37                38       43
      1       68       50        3       61       27       21       23       24       22
     28

J5  LPRNT    NUMSEC                 ********REQUESTED SECTION NUMBERS********

    -10      -10

NC    0.100    0.045    0.025    0.2      0.4
QT        2      499      943
X1     8.97        9      992   1007.5
X2                                                                                                    15
X3                                                   1042
GR     1310      797     1309      938     1308      992     1305      997     1304     1000
GR     1305     1002     1308   1007.5     1309     1028     1310     1042

X1     9.35        9      992     1011       38       38       38
```

```
X2                                                                                                                  15
X3                                                                  1042
GR      1310        816       1309        926       1308        992       1305        998       1304       1000
GR      1305       1002       1308       1009       1309       1011       1310       1043

NC     0.020      0.020      0.020        0.1        0.3
X1     10.00         16        807       1080         55         55         60
GR    1311.0        673     1310.0        807     1309.0        877     1308.0        898     1307.0        924
GR    1306.0        950     1305.0        980     1305.0       1000     1305.0       1010     1306.0       1026
GR    1307.0       1040     1308.0       1052     1309.0       1065     1310.0       1080     1311.0       1100
GR    1312.0       1127

NC     0.045      0.045      0.045        0.1        0.3
X1     10.32         16        890       1064         25         36         32
GR    1311.0        849     1310.0        890     1309.0        900     1308.0        930     1307.0        949
GR    1306.0        978     1305.0        996     1305.0       1000     1305.0       1002     1306.0       1011
GR    1307.0       1019     1308.0       1032     1309.0       1047     1310.0       1064     1311.0       1079
GR    1312.0       1111

X1     11.42         18        968       1042         90        115        110
GR    1313.0        965     1312.0        968     1311.0        971     1310.0        974     1309.0        977
GR    1308.0        982     1307.0        986     1306.0        989     1305.0        993     1304.0       1000
GR    1305.0       1007     1306.0       1015     1307.0       1021     1308.0       1027     1309.0       1033
GR    1310.0       1036     1311.0       1039     1312.0       1042

NC     0.020      0.020      0.020        0.1        0.3
X1     11.62         12        952       1080         20         20         20
GR    1313.0        941     1312.0        952     1311.0        958     1310.0        963     1309.0        970
GR    1308.0        977     1307.5       1000     1308.0       1014     1309.0       1026     1310.0       1034
GR    1311.0       1041     1312.0       1080
1
    14MAR95      19:38:05                                                                                      PAGE    3


NC     0.045      0.045      0.045        0.1        0.3
X1     11.82         14        966       1071         20         20         20
GR    1313.0        963     1312.0        966     1311.0        969     1310.0        972     1309.0        977
GR    1308.0        983     1307.0        989     1307.0       1000     1307.0       1005     1308.0       1018
GR    1309.0       1025     1310.0       1033     1311.0       1049     1312.0       1071

X1     13.77         21        959       1033        185        205        195
GR    1315.0        956     1314.0        959     1313.0        962     1312.0        965     1311.0        968
GR    1310.0        971     1309.0        976     1308.0        980     1307.0        985     1306.0        993
GR    1306.0       1000     1306.0       1005     1307.0       1009     1308.0       1013     1309.0       1016
GR    1310.0       1020     1311.0       1023     1312.0       1026     1313.0       1029     1314.0       1033
GR    1315.0       1036

X1     15.77         23        978       1060        195        205        200
GR    1318.0        976     1317.0        978     1316.0        980     1315.0        982     1314.0        985
GR    1313.0        987     1312.0        988     1311.0        990     1310.0        992     1309.0        994
GR    1308.0        998     1307.8       1000     1308.0       1002     1309.0       1007     1310.0       1011
GR    1311.0       1017     1312.0       1023     1313.0       1035     1314.0       1040     1315.0       1047
GR    1316.0       1054     1317.0       1060     1318.0       1063

X1     16.77         22        980       1053         92        115        100
GR    1320.0        977     1319.0        979     1318.0        980     1317.0        982     1316.0        983
GR    1315.0        985     1314.0        987     1313.0        989     1312.0        991     1311.0        993
GR    1310.0        995     1308.9       1000     1310.0       1008     1311.0       1012     1312.0       1016
GR    1313.0       1020     1314.0       1024     1315.0       1029     1316.0       1033     1317.0       1037
GR    1318.0       1053     1319.0       1069

X1     17.77         23        967       1051        100        105        100
GR    1321.0        967     1320.0        969     1319.0        971     1318.0        973     1317.0        975
GR    1316.0        977     1315.0        979     1314.0        981     1313.0        983     1312.0        985
GR    1311.0        993     1310.7       1000     1311.0       1004     1312.0       1012     1313.0       1018
GR    1314.0       1023     1315.0       1028     1316.0       1032     1317.0       1037     1318.0       1041
GR    1319.0       1045     1320.0       1048     1321.0       1051

X1     18.61         17        915       1066        110         60         84
GR    1320.0        874     1319.0        915     1318.0        936     1317.0        951     1316.0        963
GR    1315.0        985     1314.0        992     1313.1        998     1313.1       1000     1313.1       1001
GR    1314.0       1011     1315.0       1018     1316.0       1027     1317.0       1038     1318.0       1051
GR    1319.0       1066     1320.0       1081

NC     0.020      0.020      0.020        0.1        0.3
QT         2        430        807
X1     18.87         13        900       1073         30         20         26
GR    1320.0        840     1319.0        900     1318.0        933     1317.0        947     1316.0        957
GR    1315.0        974     1314.2       1000     1315.0       1022     1316.0       1036     1317.0       1047
GR    1318.0       1060     1319.0       1073     1320.0       1093

NC     0.045      0.045      0.045        0.1        0.3
QT         2        360        671
1
    14MAR95      19:38:05                                                                                      PAGE    4


X1     18.99         13        900       1055         12         12         12
GR    1320.0        900     1319.0        924     1317.5        950     1316.0        963     1315.0        980
GR    1314.8        993     1314.3       1000     1314.8       1003     1315.0       1009     1316.0       1020
GR    1317.0       1033     1318.0       1045     1319.0       1055

X1     19.99          8        968       1051        100        100        100
GR    1320.0        968     1318.0        979     1316.0        983     1315.0        1000     1315.9       1018
GR    1318.0       1029     1320.0       1041     1322.0       1051

X1     21.00          8        947       1036        110         90        101
GR    1325.3        947     1318.0        973     1317.0        985     1316.5        1000     1317.0       1012
GR    1319.5       1025     1322.0       1029     1325.3       1036
```

```
X1    21.60        8       916      1010        40        65        60
GR   1325.0      916    1320.0       942    1319.0       961    1319.5       977    1318.5       986
GR   1316.8      997    1316.9      1002    1325.0      1010

NC    0.065    0.065     0.065
X1    22.10        6       952      1012        25        60        50
GR   1323.9      952    1319.5       974    1319.2       989    1317.2       997    1317.8      1003
GR   1326.1     1012

X1    22.60        6       958      1014        50        50        50
GR   1325.0      958    1320.0       985    1319.2       993    1317.5       997    1318.1      1003
GR   1326.9     1014

X1    23.10        6       960      1025        50        50        50
GR   1326.0      960    1324.7       967    1317.3       997    1317.3      1003    1320.7      1014
GR   1326.6     1025

X1    24.30       15       990      1018       115       125       120
GR   1324.0      990    1323.0       991    1322.0       993    1321.0       994    1320.0       996
GR   1319.0      997    1318.0       999    1317.2      1000    1318.0      1002    1319.0      1004
GR   1320.0     1007    1321.0      1009    1322.0      1012    1323.0      1015    1324.0      1018

X1    25.64       19       981      1018       134       134       134
GR   1327.0      978    1326.0       981    1325.0       983    1324.0       986    1323.0       988
GR   1322.0      991    1321.0       993    1320.0       996    1319.0       998    1318.7      1000
GR   1319.0     1002    1320.0      1005    1321.0      1007    1322.0      1009    1323.0      1011
GR   1324.0     1013    1325.0      1016    1326.0      1018    1327.0      1020
1
   14MAR95      19:38:05                                                                          PAGE    5

    SECNO     DEPTH     CWSEL     CRIWS     WSELK     EG        HV        HL        OLOSS     L-BANK ELEV
    Q         QLOB      QCH       QROB      ALOB      ACH       AROB      VOL       TWA       R-BANK ELEV
    TIME      VLOB      VCH       VROB      XNL       XNCH      XNR       WTN       ELMIN     SSTA
    SLOPE     XLOBL     XLCH      XLOBR     ITRIAL    IDC       ICONT     CORAR     TOPWID    ENDST

FLOW DISTRIBUTION FOR SECNO=      8.97          CWSEL=   1310.29

STA=     797.     938.     992.    1008.    1028.    1042.
  PER Q=      8.9     13.4     64.5     11.3      1.9
   AREA=    110.9     96.5     68.7     36.6     11.0
    VEL=       .4       .7      4.7      1.5       .9
  DEPTH=       .8      1.8      4.4      1.8       .8

FLOW DISTRIBUTION FOR SECNO=      9.35          CWSEL=   1310.32

STA=     816.     926.     992.    1011.    1042.
  PER Q=      7.7     17.3     70.0      4.9
   AREA=     90.7    120.4     76.7     26.1
    VEL=       .4       .7      4.6       .9
  DEPTH=       .8      1.8      4.0       .8

1
   14MAR95      19:38:05                                                                          PAGE    6

T1      10TH STREET WASH            STANLEY CONSULTANTS PROJECT # 12183

J1  ICHECK    INQ       NINV      IDIR      STRT      METRIC    HVINS     Q         WSEL      FQ

                3                           .001                                    1307.1

J2  NPROF     IPLOT     PRFVS     XSECV     XSECH     FN        ALLDC     IBW       CHNIM     ITRACE

     2                   -1                                      -1

FLOW DISTRIBUTION FOR SECNO=      8.97          CWSEL=   1311.33

STA=     797.     938.     992.    1008.    1028.    1042.
  PER Q=     19.2     15.3     48.7     12.9      4.0
   AREA=    257.7    152.7     84.8     58.0     25.6
    VEL=       .7       .9      5.4      2.1      1.5
  DEPTH=      1.8      2.8      5.5      2.8      1.8

FLOW DISTRIBUTION FOR SECNO=      9.35          CWSEL=   1311.36

STA=     816.     926.     992.    1011.    1042.
  PER Q=     15.8     19.6     54.7      9.9
   AREA=    205.3    189.2     96.5     58.3
    VEL=       .7      1.0      5.3      1.6
  DEPTH=      1.9      2.9      5.1      1.9

1
   14MAR95      19:38:05                                                                          PAGE    7


                                                                    THIS RUN EXECUTED 14MAR95    19:38:08
*************************************
 HEC-2 WATER SURFACE PROFILES

 Version   4.6.2;  May 1991
*************************************


NOTE- ASTERISK (*) AT LEFT OF CROSS-SECTION NUMBER INDICATES MESSAGE IN SUMMARY OF ERRORS LIST
```

MAIN STREAM SUBCRITICAL

SUMMARY PRINTOUT

	SECNO	Q	CWSEL	CRIWS	QLOB	VLOB	K*XNL	QCH	VCH	K*XNCH	QROB	VROB	K*XN
	8.970	499.00	1310.29	1309.39	111.25	.54	100.00	321.74	4.68	25.00	66.01	1.39	45.0
	8.970	943.00	1311.33	1310.27	324.86	.79	100.00	458.91	5.41	25.00	159.22	1.91	45.0
	9.350	499.00	1310.32	1309.32	124.86	.59	100.00	349.53	4.56	25.00	24.62	.94	45.(
	9.350	943.00	1311.36	1310.38	334.29	.85	100.00	515.82	5.35	25.00	92.89	1.59	45.(
*	10.000	499.00	1310.57	1306.43	2.64	.12	20.00	495.96	.59	20.00	.39	.12	20.0
*	10.000	943.00	1311.63	1306.98	49.55	.33	20.00	885.30	.78	20.00	8.15	.29	20.0
*	10.320	499.00	1310.57	1307.16	1.23	.19	45.00	497.32	.92	45.00	.45	.19	45.(
*	10.320	943.00	1311.62	1307.80	23.75	.52	45.00	909.13	1.26	45.00	10.12	.44	45.(
*	11.420	499.00	1310.56	1307.24	.00	.00	.00	499.00	2.05	45.00	.00	.00	.0
*	11.420	943.00	1311.58	1308.25	.00	.00	.00	943.00	3.02	45.00	.00	.00	.(
	11.620	499.00	1310.51	1309.38	.00	.00	.00	499.00	3.17	20.00	.00	.00	.(
	11.620	943.00	1311.54	1310.08	.00	.00	.00	943.00	3.80	20.00	.00	.00	.0
*	11.820	499.00	1310.54	1309.11	.00	.00	.00	499.00	3.18	45.00	.00	.00	.0
*	11.820	943.00	1311.57	1309.94	.00	.00	.00	943.00	3.91	45.00	.00	.00	.(
*	13.770	499.00	1311.00	1308.54	.00	.00	.00	499.00	2.78	45.00	.00	.00	.0
	13.770	943.00	1312.15	1309.56	.00	.00	.00	943.00	3.83	45.00	.00	.00	.0
*	15.770	499.00	1311.47	1311.47	.00	.00	.00	499.00	8.12	45.00	.00	.00	.(
*	15.770	943.00	1312.69	1312.69	.00	.00	.00	943.00	8.89	45.00	.00	.00	.(
*	16.770	499.00	1313.44	1312.55	.00	.00	.00	499.00	5.72	45.00	.00	.00	.0
*	16.770	943.00	1314.67	1313.77	.00	.00	.00	943.00	7.05	45.00	.00	.00	.0
	17.770	499.00	1314.38	1313.39	.00	.00	.00	499.00	4.70	45.00	.00	.00	.(
	17.770	943.00	1315.77	1314.38	.00	.00	.00	943.00	5.38	45.00	.00	.00	.(

	SECNO	Q	CWSEL	CRIWS	QLOB	VLOB	K*XNL	QCH	VCH	K*XNCH	QROB	VROB	K*XN
*	18.610	499.00	1315.88	1315.88	.00	.00	.00	499.00	6.49	45.00	.00	.00	.0
*	18.610	943.00	1316.61	1316.61	.00	.00	.00	943.00	7.38	45.00	.00	.00	.0
*	18.870	430.00	1316.50	1315.90	.00	.00	.00	430.00	3.44	20.00	.00	.00	.(
*	18.870	807.00	1317.38	1316.45	.00	.00	.00	807.00	3.80	20.00	.00	.00	.0
*	18.990	360.00	1316.42	1316.22	.00	.00	.00	360.00	4.79	45.00	.00	.00	.0
*	18.990	671.00	1317.33	1316.78	.00	.00	.00	671.00	4.63	45.00	.00	.00	.(
*	19.990	360.00	1317.61	1316.94	.00	.00	.00	360.00	4.23	45.00	.00	.00	.(
	19.990	671.00	1318.24	1317.65	.00	.00	.00	671.00	5.78	45.00	.00	.00	.0
*	21.000	360.00	1318.58	1318.32	.00	.00	.00	360.00	5.17	45.00	.00	.00	.(
	21.000	671.00	1319.41	1318.98	.00	.00	.00	671.00	5.91	45.00	.00	.00	.(
	21.600	360.00	1319.76	1319.72	.00	.00	.00	360.00	5.79	45.00	.00	.00	.0
	21.600	671.00	1320.34	1320.28	.00	.00	.00	671.00	6.81	45.00	.00	.00	.0
	22.100	360.00	1321.04	1320.26	.00	.00	.00	360.00	4.45	65.00	.00	.00	.(
	22.100	671.00	1321.70	1321.07	.00	.00	.00	671.00	6.18	65.00	.00	.00	.(
	22.600	360.00	1321.81	1320.93	.00	.00	.00	360.00	4.94	65.00	.00	.00	.0
	22.600	671.00	1322.79	1321.91	.00	.00	.00	671.00	6.23	65.00	.00	.00	.0
*	23.100	360.00	1322.44	1320.18	.00	.00	.00	360.00	2.88	65.00	.00	.00	.(
*	23.100	671.00	1323.65	1321.15	.00	.00	.00	671.00	3.74	65.00	.00	.00	.(
*	24.300	360.00	1323.04	1321.79	.00	.00	.00	360.00	5.30	65.00	.00	.00	.0
*	24.300	671.00	1324.35	1323.10	.00	.00	.00	671.00	6.53	65.00	.00	.00	.0
*	25.640	360.00	1324.56	1322.44	.00	.00	.00	360.00	3.74	65.00	.00	.00	.(
*	25.640	671.00	1326.10	1323.63	.00	.02	65.00	671.00	4.50	65.00	.00	.02	65.0

MAIN STREAM SUBCRITICAL

SUMMARY PRINTOUT

	SECNO	Q	CWSEL	AREA	ELMIN	DEPTH	XLCH	STENCL	SSTA	ENDST	STENCR	TOPWID	TWA
	8.970	499.00	1310.29	323.78	1304.00	6.29	.00	.00	797.00	1042.00	1042.00	245.00	.0
	8.970	943.00	1311.33	578.80	1304.00	7.33	.00	.00	797.00	1042.00	1042.00	245.00	.(
	9.350	499.00	1310.32	313.92	1304.00	6.32	38.00	.00	816.00	1042.00	1042.00	226.00	.2
	9.350	943.00	1311.36	549.22	1304.00	7.36	38.00	.00	816.00	1042.00	1042.00	226.00	.2
*	10.000	499.00	1310.57	866.64	1305.00	5.57	60.00	.00	730.43	1091.43	.00	361.00	.5
*	10.000	943.00	1311.63	1308.08	1305.00	6.63	60.00	.00	673.00	1116.90	.00	443.90	.(

*	10.320	499.00	1310.57	549.69	1305.00	5.57	32.00	.00	866.75	1072.51	.00	205.76	.7
*	10.320	943.00	1311.62	791.99	1305.00	6.62	32.00	.00	849.00	1098.74	.00	249.74	.8
*	11.420	499.00	1310.56	243.35	1304.00	6.56	110.00	.00	972.29	1037.71	.00	65.42	1.1
*	11.420	943.00	1311.58	312.56	1304.00	7.58	110.00	.00	969.26	1040.74	.00	71.49	1.2
	11.620	499.00	1310.51	157.37	1307.50	3.01	20.00	.00	960.43	1037.60	.00	77.17	1.1
	11.620	943.00	1311.54	248.05	1307.50	4.04	20.00	.00	954.74	1062.21	.00	107.48	1.3
*	11.820	499.00	1310.54	156.79	1307.00	3.54	20.00	.00	970.40	1041.54	.00	71.15	1.2
*	11.820	943.00	1311.57	241.15	1307.00	4.57	20.00	.00	967.31	1061.42	.00	94.11	1.3
*	13.770	499.00	1311.00	179.43	1306.00	5.00	195.00	.00	968.00	1023.00	.00	54.99	1.4
	13.770	943.00	1312.15	246.47	1306.00	6.15	195.00	.00	964.56	1026.44	.00	61.88	1.7
*	15.770	499.00	1311.47	61.46	1307.80	3.67	200.00	.00	989.06	1019.82	.00	30.76	1.6
*	15.770	943.00	1312.69	106.08	1307.80	4.89	200.00	.00	987.31	1031.26	.00	43.95	1.9
*	16.770	499.00	1313.44	87.22	1308.90	4.54	100.00	.00	988.13	1021.74	.00	33.61	1.7
*	16.770	943.00	1314.67	133.71	1308.90	5.77	100.00	.00	985.65	1027.37	.00	41.72	2.0
	17.770	499.00	1314.38	106.26	1310.70	3.68	100.00	.00	980.26	1024.86	.00	44.60	1.8
	17.770	943.00	1315.77	175.30	1310.70	5.07	100.00	.00	977.45	1031.09	.00	53.64	2.1
*	18.610	499.00	1315.88	76.91	1313.10	2.78	84.00	.00	965.65	1025.92	.00	60.27	1.9
*	18.610	943.00	1316.61	127.75	1313.10	3.51	84.00	.00	955.68	1033.71	.00	78.04	2.3
*	18.870	430.00	1316.50	125.06	1314.20	2.30	26.00	.00	951.97	1041.53	.00	89.55	1.9
*	18.870	807.00	1317.38	212.42	1314.20	3.18	26.00	.00	941.65	1051.97	.00	110.33	2.3
*	18.990	360.00	1316.42	75.23	1314.30	2.12	12.00	.00	959.36	1025.46	.00	66.09	2.0
*	18.990	671.00	1317.33	144.87	1314.30	3.03	12.00	.00	951.42	1037.04	.00	85.62	2.3
*	19.990	360.00	1317.61	85.11	1315.00	2.61	100.00	.00	979.78	1026.97	.00	47.19	2.1
	19.990	671.00	1318.24	116.00	1315.00	3.24	100.00	.00	977.71	1030.41	.00	52.70	2.5
*	21.000	360.00	1318.58	69.57	1316.50	2.08	101.00	.00	970.93	1020.23	.00	49.30	2.2
	21.000	671.00	1319.41	113.49	1316.50	2.91	101.00	.00	967.97	1024.54	.00	56.57	2.6

SECNO	Q	CWSEL	AREA	ELMIN	DEPTH	XLCH	STENCL	SSTA	ENDST	STENCR	TOPWID	TWA
21.600	360.00	1319.76	62.14	1316.80	2.96	60.00	.00	946.61	1004.82	.00	58.22	2.3
21.600	671.00	1320.34	98.54	1316.80	3.54	60.00	.00	940.24	1005.40	.00	65.16	2.7
22.100	360.00	1321.04	80.89	1317.20	3.84	50.00	.00	966.31	1006.51	.00	40.21	2.3
22.100	671.00	1321.70	108.61	1317.20	4.50	50.00	.00	963.02	1007.22	.00	44.20	2.8
22.600	360.00	1321.81	72.81	1317.50	4.31	50.00	.00	975.26	1007.63	.00	32.37	2.4
22.600	671.00	1322.79	107.66	1317.50	5.29	50.00	.00	969.98	1008.85	.00	38.87	2.8
* 23.100	360.00	1322.44	124.94	1317.30	5.14	50.00	.00	976.17	1017.24	.00	41.07	2.4
* 23.100	671.00	1323.65	179.26	1317.30	6.35	50.00	.00	971.24	1019.51	.00	48.26	2.9
* 24.300	360.00	1323.04	67.94	1317.20	5.84	120.00	.00	990.95	1015.15	.00	24.21	2.5
* 24.300	671.00	1324.35	102.73	1317.20	7.15	120.00	.00	990.00	1018.00	.00	28.00	3.0
* 25.640	360.00	1324.56	96.17	1318.70	5.86	134.00	.00	984.32	1014.68	.00	30.36	2.6
* 25.640	671.00	1326.10	149.05	1318.70	7.40	134.00	.00	980.68	1018.21	.00	37.53	3.1

MAIN STREAM SUBCRITICAL

SUMMARY PRINTOUT

SECNO	Q	CWSEL	FRCH	DIFWSP	EG	DIFEG	STENCL	STCHL	XLBEL	RBEL	STCHR	STENC
8.970	499.00	1310.29	.39	.00	1310.51	.00	.00	992.00	1308.00	1308.00	1007.50	1042.0
8.970	943.00	1311.33	.41	1.04	1311.56	1.05	.00	992.00	1308.00	1308.00	1007.50	1042.0
9.350	499.00	1310.32	.40	.00	1310.55	.00	.00	992.00	1308.00	1309.00	1011.00	1042.0
9.350	943.00	1311.36	.42	1.03	1311.61	1.06	.00	992.00	1308.00	1309.00	1011.00	1042.0
* 10.000	499.00	1310.57	.06	.00	1310.58	.00	.00	807.00	1310.00	1310.00	1080.00	.0
* 10.000	943.00	1311.63	.07	1.05	1311.64	1.06	.00	807.00	1310.00	1310.00	1080.00	.0
* 10.320	499.00	1310.57	.09	.00	1310.58	.00	.00	890.00	1310.00	1310.00	1064.00	.0
* 10.320	943.00	1311.62	.11	1.05	1311.64	1.06	.00	890.00	1310.00	1310.00	1064.00	.0
* 11.420	499.00	1310.56	.19	.00	1310.63	.00	.00	968.00	1312.00	1312.00	1042.00	.0
* 11.420	943.00	1311.58	.25	1.02	1311.72	1.09	.00	968.00	1312.00	1312.00	1042.00	.0
11.620	499.00	1310.51	.39	.00	1310.67	.00	.00	952.00	1312.00	1312.00	1080.00	.0
11.620	943.00	1311.54	.44	1.03	1311.77	1.10	.00	952.00	1312.00	1312.00	1080.00	.0
* 11.820	499.00	1310.54	.38	.00	1310.70	.00	.00	966.00	1312.00	1312.00	1071.00	.0
* 11.820	943.00	1311.57	.43	1.03	1311.80	1.11	.00	966.00	1312.00	1312.00	1071.00	.0
* 13.770	499.00	1311.00	.27	.00	1311.12	.00	.00	959.00	1314.00	1314.00	1033.00	.0
13.770	943.00	1312.15	.34	1.15	1312.37	1.26	.00	959.00	1314.00	1314.00	1033.00	.0
* 15.770	499.00	1311.47	1.01	.00	1312.49	.00	.00	978.00	1317.00	1317.00	1060.00	.0
* 15.770	943.00	1312.69	1.01	1.22	1313.92	1.42	.00	978.00	1317.00	1317.00	1060.00	.0

*	16.770	499.00	1313.44	.63	.00	1313.94	.00	.00	980.00	1318.00	1318.00	1053.00	.0
*	16.770	943.00	1314.67	.69	1.24	1315.45	1.50	.00	980.00	1318.00	1318.00	1053.00	.0
	17.770	499.00	1314.38	.54	.00	1314.72	.00	.00	967.00	1321.00	1321.00	1051.00	.0
	17.770	943.00	1315.77	.52	1.40	1316.22	1.50	.00	967.00	1321.00	1321.00	1051.00	.0
*	18.610	499.00	1315.88	1.01	.00	1316.53	.00	.00	915.00	1319.00	1319.00	1066.00	.0
*	18.610	943.00	1316.61	1.02	.73	1317.46	.92	.00	915.00	1319.00	1319.00	1066.00	.0
*	18.870	430.00	1316.50	.51	.00	1316.69	.00	.00	900.00	1319.00	1319.00	1073.00	.0
*	18.870	807.00	1317.38	.48	.88	1317.61	.92	.00	900.00	1319.00	1319.00	1073.00	.0
*	18.990	360.00	1316.42	.79	.00	1316.77	.00	.00	900.00	1320.00	1319.00	1055.00	.0
*	18.990	671.00	1317.33	.63	.91	1317.67	.89	.00	900.00	1320.00	1319.00	1055.00	.0
*	19.990	360.00	1317.61	.56	.00	1317.89	.00	.00	968.00	1320.00	1322.00	1051.00	.0
	19.990	671.00	1318.24	.69	.62	1318.76	.86	.00	968.00	1320.00	1322.00	1051.00	.0
*	21.000	360.00	1318.58	.77	.00	1319.00	.00	.00	947.00	1325.30	1325.30	1036.00	.0
	21.000	671.00	1319.41	.74	.83	1319.96	.96	.00	947.00	1325.30	1325.30	1036.00	.0

SECNO	Q	CWSEL	FRCH	DIFWSP	EG	DIFEG	STENCL	STCHL	XLBEL	RBEL	STCHR	STENC
21.600	360.00	1319.76	.99	.00	1320.28	.00	.00	916.00	1325.00	1325.00	1010.00	.0
21.600	671.00	1320.34	.98	.58	1321.06	.78	.00	916.00	1325.00	1325.00	1010.00	.0
22.100	360.00	1321.04	.55	.00	1321.35	.00	.00	952.00	1323.90	1326.10	1012.00	.0
22.100	671.00	1321.70	.69	.65	1322.29	.94	.00	952.00	1323.90	1326.10	1012.00	.0
22.600	360.00	1321.81	.58	.00	1322.19	.00	.00	958.00	1325.00	1326.90	1014.00	.0
22.600	671.00	1322.79	.66	.97	1323.39	1.20	.00	958.00	1325.00	1326.90	1014.00	.0
* 23.100	360.00	1322.44	.29	.00	1322.57	.00	.00	960.00	1326.00	1326.60	1025.00	.0
* 23.100	671.00	1323.65	.34	1.22	1323.87	1.30	.00	960.00	1326.00	1326.60	1025.00	.0
* 24.300	360.00	1323.04	.56	.00	1323.48	.00	.00	990.00	1324.00	1324.00	1018.00	.0
* 24.300	671.00	1324.35	.60	1.31	1325.01	1.53	.00	990.00	1324.00	1324.00	1018.00	.0
* 25.640	360.00	1324.56	.37	.00	1324.78	.00	.00	981.00	1326.00	1326.00	1018.00	.0
* 25.640	671.00	1326.10	.40	1.54	1326.42	1.64	.00	981.00	1326.00	1326.00	1018.00	.0

SUMMARY OF ERRORS AND SPECIAL NOTES

```
WARNING SECNO=     10.000  PROFILE=  1  CONVEYANCE CHANGE OUTSIDE ACCEPTABLE RANGE
WARNING SECNO=     10.000  PROFILE=  2  CONVEYANCE CHANGE OUTSIDE ACCEPTABLE RANGE

WARNING SECNO=     10.320  PROFILE=  1  CONVEYANCE CHANGE OUTSIDE ACCEPTABLE RANGE
WARNING SECNO=     10.320  PROFILE=  2  CONVEYANCE CHANGE OUTSIDE ACCEPTABLE RANGE

WARNING SECNO=     11.420  PROFILE=  1  CONVEYANCE CHANGE OUTSIDE ACCEPTABLE RANGE
WARNING SECNO=     11.420  PROFILE=  2  CONVEYANCE CHANGE OUTSIDE ACCEPTABLE RANGE

WARNING SECNO=     11.820  PROFILE=  1  CONVEYANCE CHANGE OUTSIDE ACCEPTABLE RANGE
WARNING SECNO=     11.820  PROFILE=  2  CONVEYANCE CHANGE OUTSIDE ACCEPTABLE RANGE

WARNING SECNO=     13.770  PROFILE=  1  CONVEYANCE CHANGE OUTSIDE ACCEPTABLE RANGE

CAUTION SECNO=     15.770  PROFILE=  1  CRITICAL DEPTH ASSUMED
CAUTION SECNO=     15.770  PROFILE=  1  MINIMUM SPECIFIC ENERGY
CAUTION SECNO=     15.770  PROFILE=  2  CRITICAL DEPTH ASSUMED
CAUTION SECNO=     15.770  PROFILE=  2  MINIMUM SPECIFIC ENERGY

WARNING SECNO=     16.770  PROFILE=  1  CONVEYANCE CHANGE OUTSIDE ACCEPTABLE RANGE
WARNING SECNO=     16.770  PROFILE=  2  CONVEYANCE CHANGE OUTSIDE ACCEPTABLE RANGE

CAUTION SECNO=     18.610  PROFILE=  1  CRITICAL DEPTH ASSUMED
CAUTION SECNO=     18.610  PROFILE=  1  MINIMUM SPECIFIC ENERGY
CAUTION SECNO=     18.610  PROFILE=  2  CRITICAL DEPTH ASSUMED
CAUTION SECNO=     18.610  PROFILE=  2  MINIMUM SPECIFIC ENERGY

WARNING SECNO=     18.870  PROFILE=  1  CONVEYANCE CHANGE OUTSIDE ACCEPTABLE RANGE
WARNING SECNO=     18.870  PROFILE=  2  CONVEYANCE CHANGE OUTSIDE ACCEPTABLE RANGE

WARNING SECNO=     18.990  PROFILE=  1  CONVEYANCE CHANGE OUTSIDE ACCEPTABLE RANGE
WARNING SECNO=     18.990  PROFILE=  2  CONVEYANCE CHANGE OUTSIDE ACCEPTABLE RANGE

WARNING SECNO=     19.990  PROFILE=  1  CONVEYANCE CHANGE OUTSIDE ACCEPTABLE RANGE

WARNING SECNO=     21.000  PROFILE=  1  CONVEYANCE CHANGE OUTSIDE ACCEPTABLE RANGE

WARNING SECNO=     23.100  PROFILE=  1  CONVEYANCE CHANGE OUTSIDE ACCEPTABLE RANGE
WARNING SECNO=     23.100  PROFILE=  2  CONVEYANCE CHANGE OUTSIDE ACCEPTABLE RANGE

WARNING SECNO=     24.300  PROFILE=  1  CONVEYANCE CHANGE OUTSIDE ACCEPTABLE RANGE
WARNING SECNO=     24.300  PROFILE=  2  CONVEYANCE CHANGE OUTSIDE ACCEPTABLE RANGE

WARNING SECNO=     25.640  PROFILE=  1  CONVEYANCE CHANGE OUTSIDE ACCEPTABLE RANGE
WARNING SECNO=     25.640  PROFILE=  2  CONVEYANCE CHANGE OUTSIDE ACCEPTABLE RANGE
```

```
1*******************************************
 *  HEC-2 WATER SURFACE PROFILES           *
 *                                         *
 *  Version   4.6.2;  May 1991             *
 *                                         *
 *  RUN DATE    22MAR95    TIME   09:54:25 *
 *******************************************
```

```
*************************************
*  U.S. ARMY CORPS OF ENGINEERS
*  HYDROLOGIC ENGINEERING CENTER
*  609 SECOND STREET, SUITE D
*  DAVIS, CALIFORNIA 95616-4687
*        (916) 756-1104
*************************************
```

```
X     X  XXXXXXX   XXXXX              XXXXX
X     X  X        X     X            X     X
X     X  X        X                        X
XXXXXXX  XXXX     X          XXXXX    XXXXX
X     X  X        X                  X
X     X  X        X     X            X
X     X  XXXXXXX   XXXXX             XXXXXXX
```

```
1
   22MAR95      09:54:25                                                                    PAGE    1
```

```
                                                                THIS RUN EXECUTED 22MAR95    09:54:25
*************************************
 HEC-2 WATER SURFACE PROFILES

 Version   4.6.2;  May 1991
*************************************


SPLIT FLOW BEING PERFORMED


SF  SPLIT FLOW ROUTINE


TW  RIGHT BANK WEIR FLOW FIRST UPSTREAM SECTION
WS     2   20.98   21.18      -1     3.0
WC     0 1319.00    16.5 1319.00

TW  LEFT BANK WEIR FLOW FIRST UPSTREAM SECTION
WS     2   20.98   21.18      -1     3.0
WC     0 1319.00    16.5 1319.00

TW  RIGHT BANK WEIR FLOW MIDDLE SECTION
WS     2   20.78   20.98      -1     3.0
WC     0 1319.00    16.5 1319.00

TW  LEFT BANK WEIR FLOW MIDDLE SECTION
WS     2   20.78   20.98      -1     3.0
WC     0 1319.00    16.5 1319.00

TW  RIGHT BANK WEIR FLOW LAST DOWNSTREAM SECTION
WS     2   20.58   20.78      -1     3.0
WC     0 1319.00    16.5 1319.00

TW  LEFT BANK WEIR FLOW LAST DOWNSTREAM SECTION
WS     2   20.58   20.78      -1     3.0
WC     0 1319.00    16.5 1319.00
1
   22MAR95      09:54:25                                                                    PAGE    2


T1      10TH STREET WASH                    STANLEY CONSULTANTS PROJECT # 12183
T2      BASIN NO. 1                                          FILENAME: 12183H2C
T3      MAIN STREAM SUBCRITICAL FLOW                        PROPOSED CONDITION
T4
T4      ************************************************************************
T4      THIS MODEL IS INTENDED FOR USE IN ESTIMATING THE WATER SURFACE ELEVATION
T4      ALONG THE 10TH WASH AND THE WEST TRIBUTARY FOR PROPOSED CONDITIONS.
T4      REFER TO THE EXISTING CONDITION HEC-2 EXHIBIT AND THE WEST TRIBUTARY
T4      STATIONING ON THE DESIGN PLANS FOR THE LOCATION OF IMPROVED XSECTS.
T4      THE FLOWS USED IN THIS MODEL WERE TAKEN FROM THE HEC-1 MODEL DONE BY
T4      KAMINSKI-HUBBARD (ADMS) AND MODIFIED BY SCI USING THE 14"x14" STEEL
T4      PLATE ORIFICE OPENING FOR THE PRINCIPAL SPILLWAY OUTLET PIPE OF THE
T4      EXISTING CITY OF PHOENIX DETENTION DAM NO. 3.
T4      ************************************************************************
T4
T4      ************************************************************************
T4      THIS MODEL IS ESSENTIALLY THE SAME AS MODEL 12183H2B EXCEPT FOR THE
T4      ADDITIONAL AND MODIFIED CROSS SECTIONS USED TO BETTER ESTIMATE FLOW
T4      CONDITIONS TO REFLECT THE FOLLOWING PROPOSED CHANNEL IMPROVEMENTS:
T4
T4  1.  THIS MODEL REFLECTS THE PROPOSED IMPROVEMENTS REQUIRED FOR THE INLET
T4      LOCATED ON THE WEST TRIBUTARY.  THE CHANNEL IMPROVEMENT CONSISTS OF
T4      CONCRETE LINED REACH INCLUDING A TRANSITION SECTION FROM A TRAPEZOIDAL
T4      SECTION TO A RECTANGULAR SECTION UPSTREAM OF THE WEIR INLET, A
T4      RECTANGULAR REACH JUST UPSTREAM FROM THE WEIR AND THROUGHOUT THE WEIR
T4      LENGTH, AND A TRANSITION FROM A RECTANGULAR SECTION TO A TRAPEZOIDAL
T4      SECTION DOWNSTREAM OF THE WEIR.  ADDITIONAL TRANSITION LENGTHS ARE USED
T4      TO MATCH EXISTING CHANNEL GEOMETRY BOTH UPSTREAM AND DOWNSTREAM OF THE
T4      CONCRETE LINED REACH.  THESE ADDITIONAL TRANSITIONS ARE RIPRAP LINED TO
T4      TO PROVIDE SCOUR PROTECTION AND BANK STABILITY.  THE PROPOSED WEIR REACH
```

```
T4      HAS A 12' BOTTOM WIDTH AT THE UPSTREAM END AND A 9' BOTTOM WIDTH AT THE
T4      DOWNSTREAM END.  THE TAPERED WEIR ALLOWS THE CONTROL SECTION TO BE
T4      LOCATED AT THE DOWNSTREAM END OF THE WEIR AND PROVIDES GREATER HEAD
T4      THROUGHOUT THE WIER LENGTH.  PROPOSED CONDITION WATER SURFACE ELEVATIONS
T4      ARE NOT ABOVE THE EXISTING WATER SURFACE ELEVATIONS UPSTREAM OF THE
T4      PROJECT.  THE MANNING'S ROUGHNESS COEFICIENT "n" = 0.016 FOR THE
T4      CONCRETE LINED REACH AND "n" = 0.035 FOR THE RIPRAP LINED REACHES.
T4
T4  2.  CROSS-SECTIONS 15.77, 16.77, AND 17.77 WERE MODIFIED TO REFLECT THE
T4      DESIGN CHANNEL CONDITIONS FOR THE PROJECT.  THE CHANNEL BOTTOM WIDTH
T4      WAS WIDENED TO 15 ft ADJACENT TO THE RETENTION BASIN AND 4:1 SLOPES
T4      (H:V) CONSTRUCTED ALONG THE RETENTION BASIN RETAINING WALL.  THE
T4      BANK SLOPES ALONG THE EAST SIDE OF THE WASH ARE GRADED TO A 4:1 (H:V)
T4      TO TIE INTO EXISTING GROUND.  THE CHANNEL PROFILE WAS NOT MODIFIED
T4      AND MATCHES THE EXISTING INVERT FROM FIELD SURVEYS.
T4
T4      THIS RUN WILL BE USED TO ESTIMATE THE PROPOSED WATER SURFACE PROFILE
T4      UPSTREAM OF THE WEIR AND DOWNSTREAM OF THE CONCRETE LINED SECTION.  THE
T4      WATER SURFACE ELEVATIONS WITHIN THE WEIR SECTION AND IN THE EXPANSION
T4      TRANSITION DOWNSTREAM OF THE WIER SECTION MAY NOT BE ACCURATE DUE TO
T4      SUPERCRITICAL FLOW EXPERIENCED IN THE SPLIT FLOW WEIR PERFORMANCE.  A
T4      HYDRAULIC JUMP WILL BE FORCED TO OCCUR IN THE CONCRETE LINED TRANSITION
T4      BY A SERIES OF BAFFLE BLOCKS.  THE SPLIT FLOW GENERATED BY THIS MODEL
T4      IS USED FOR THE HEC-1 WEST TRIBUTARY WEIR INFLOW RATING CURVE.
1
   22MAR95      09:54:25                                                          PAGE    3

T4      ************************************************************************
T4
T4      1. CROSS SECTION DATA DEVELOPED FROM ONE-FOOT CONTOUR AERIAL TOPOGRAPHIC
T4         MAPS (DMJM ENGINEERING/KENNEY AERIAL MAPPING) AND SUPPLEMENTAL SURVEY
T4         CONDUCTED BY SCI.  DATUM IS CITY OF PHOENIX.
T4
T4      2. CROSS SECTIONS ORIENTED LEFT TO RIGHT LOOKING DOWNSTREAM.
T4
T4      3. CROSS SECTION GR STATION 1000 CORRESPONDS TO CENTERLINE OF THE WASH.
T4
T4      4. THE ROUGHNESS COEFFICIENTS USED RANGE FROM "n"=0.020 TO "n"=0.100 FOR
T4         EXISTING CONDITIONS AND "n"=0.016 TO "n"=0.100 FOR PROPOSED
T4         CONDITIONS.
T4
T4      5. STARTING WATER SURFACE ELEVATION IS CALCULATED USING SLOPE AREA.
T4
T4      6. PROFILE 1: 10YR
T4         PROFILE 2: 100YR
T4         PROFILE 3: EMERGENCY (100YR 2HR FLOWS USED AS WORST CASE)
T4
T4

J1  ICHECK    INQ       NINV      IDIR      STRT      METRIC    HVINS     Q         WSEL      FQ

                2                           0.001                                   1306.5

J2  NPROF     IPLOT     PRFVS     XSECV     XSECH     FN        ALLDC     IBW       CHNIM     ITRACE

     1                  -1                                      -1

J3  VARIABLE CODES FOR SUMMARY PRINTOUT

     38        43         1         2        13        55        16        14        26        17
     15        56        18                  38        43         1        25        42         8
     39        27        53        54        28         4        37                  38        43
      1        68        50         3        61        27        21        23        24        22
     28

J5  LPRNT    NUMSEC                    ********REQUESTED SECTION NUMBERS********

    -10       -10
1
   22MAR95      09:54:25                                                          PAGE    4


NC    0.100     0.045     0.025       0.2       0.4
QT        3       404       764      1694
X1     8.97         9       992    1007.5
X2                                                                                  15
X3                                                   1042
GR     1310       797      1309       938      1308       992      1305       997      1304      1000
GR     1305      1002      1308    1007.5      1309      1028      1310      1042

X1     9.35         9       992      1011        38        38        38
X2                                                                                  15
X3                                                   1042
GR     1310       816      1309       926      1308       992      1305       998      1304      1000
GR     1305      1002      1308      1009      1309      1011      1310      1043

NC    0.020     0.020     0.020       0.1       0.3
X1    10.00        16       807      1080        55        55        60
GR   1311.0       673    1310.0       807    1309.0       877    1308.0       898    1307.0       924
GR   1306.0       950    1305.0       980    1305.0      1000    1305.0      1010    1306.0      1026
GR   1307.0      1040    1308.0      1052    1309.0      1065    1310.0      1080    1311.0      1100
GR   1312.0      1127

NC    0.045     0.045     0.045       0.1       0.3
X1    10.32        16       890      1064        25        36        32
GR   1311.0       849    1310.0       890    1309.0       900    1308.0       930    1307.0       949
GR   1306.0       978    1305.0       996    1305.0      1000    1305.0      1002    1306.0      1011
```

```
GR   1307.0     1019     1308.0     1032     1309.0     1047     1310.0     1064     1311.0     1079
GR   1312.0     1111

X1     11.42      18      968      1042       90       115       110
GR   1313.0      965     1312.0     968     1311.0     971     1310.0     974     1309.0     977
GR   1308.0      982     1307.0     986     1306.0     989     1305.0     993     1304.0     1000
GR   1305.0     1007     1306.0    1015     1307.0    1021     1308.0    1027     1309.0     1033
GR   1310.0     1036     1311.0    1039     1312.0    1042

NC     0.020    0.020    0.020     0.1       0.3
X1     11.62      12      952      1080       20        20        20
GR   1313.0      941     1312.0     952     1311.0     958     1310.0     963     1309.0     970
GR   1308.0      977     1307.5    1000     1308.0    1014     1309.0    1026     1310.0     1034
GR   1311.0     1041     1312.0    1080

NC     0.045    0.045    0.045     0.1       0.3
X1     11.82      14      966      1071       20        20        20
GR   1313.0      963     1312.0     966     1311.0     969     1310.0     972     1309.0     977
GR   1308.0      983     1307.0     989     1307.0    1000     1307.0    1005     1308.0     1018
GR   1309.0     1025     1310.0    1033     1311.0    1049     1312.0    1071

X1     13.77      21      959      1033      185       205       195
GR   1315.0      956     1314.0     959     1313.0     962     1312.0     965     1311.0     968
GR   1310.0      971     1309.0     976     1308.0     980     1307.0     985     1306.0     993
GR   1306.0     1000     1306.0    1005     1307.0    1009     1308.0    1013     1309.0     1016
GR   1310.0     1020     1311.0    1023     1312.0    1026     1313.0    1029     1314.0     1033
GR   1315.0     1036
1
   22MAR95      09:54:25                                                                    PAGE    5

QT       3       382      697      1400
X1     15.77      13      968      1060      195       205       200
GR   1312.7      963     1312.6     968     1307.8     989     1307.8    1004     1310.8     1016.4
GR   1311.0     1017     1312.0    1023     1313.0    1035     1314.0    1040     1315.0     1047
GR   1316.0     1054     1317.0    1060     1318.0    1063

X1     16.77      15      969      1053       92       115       100
GR   1313.3      964     1313.2     969     1308.9     988     1308.9    1003     1309.6     1005
GR   1310.0     1008     1311.0    1012     1312.0    1016     1313.0    1020     1314.0     1024
GR   1315.0     1029     1316.0    1033     1317.0    1037     1318.0    1053     1319.0     1069

QT       3       382      697      1170
X1     17.77      14      969      1051      100       105       100
GR   1314.7      964     1314.6     969     1310.7     991     1310.7    1006.6   1311.9     1012
GR   1313.0     1018     1314.0    1023     1315.0    1028     1316.0    1032     1317.0     1037
GR   1318.0     1041     1319.0    1045     1320.0    1048     1321.0    1051

QT       3       360      672      1111
X1     18.61      17      915      1066      110        60        84
GR   1320.0      874     1319.0     915     1318.0     936     1317.0     951     1316.0     963
GR   1315.0      985     1314.0     992     1313.1     998     1313.1    1000     1313.1     1001
GR   1314.0     1011     1315.0    1018     1316.0    1027     1317.0    1038     1318.0     1051
GR   1319.0     1066     1320.0    1081

NC     0.020    0.020    0.020     0.1       0.3
X1     18.87      13      900      1073       30        20        26
GR   1320.0      840     1319.0     900     1318.0     933     1317.0     947     1316.0     957
GR   1315.0      974     1314.2    1000     1315.0    1022     1316.0    1036     1317.0     1047
GR   1318.0     1060     1319.0    1073     1320.0    1093

NC     0.045    0.045    0.045     0.1       0.3
X1     18.99      13      900      1055       12        12        12
GR   1320.0      900     1319.0     924     1317.5     950     1316.0     963     1315.0     980
GR   1314.8      993     1314.3    1000     1314.8    1003     1315.0    1009     1316.0     1020
GR   1317.0     1033     1318.0    1045     1319.0    1055

X1     19.57      11      954      1023       58        58        58
GR   1319.0      954     1318.0     958     1317.0     963     1316.0     976     1315.0     986
GR   1314.7     1000     1315.0    1008     1316.0    1012     1317.0    1016     1318.0     1020
GR   1319.0     1023

NC     0.035    0.035    0.035       .3        .5
X1     19.98       4      978.1   1015.3       41        41        41
GR   1318.5      978.1   1315.4    990.5     1315.4   1004.5     1319.0   1015.3

NC     0.016    0.016    0.016
X1     20.18       4      985.3   1014.7       20        20        20
X3        10                       985.5                1014.5
GR   1319.0      985.3   1315.6    995.5     1315.6   1004.5     1319.0   1014.7
1
   22MAR95      09:54:25                                                                    PAGE    6

X1     20.28       6      986.4   1013.7       10        10        10
X3        10                       988                  1012
GR   1319.5      986.4   1316.45   995.4     1315.62   995.5     1315.62  1004.5   1316.45    1004.6
GR   1319.5     1013.7

X1     20.38       6      987.4   1012.6       10        10        10
X3        10                       990.5                1009.5
GR   1320.0      987.4   1317.30   995.4     1315.63   995.5     1315.63  1004.5   1317.30    1004.6
GR   1320.0     1012.6

X1     20.48       6      988.5   1011.6       10        10        10
X3        10                       993                  1007
GR   1320.5      988.5   1318.15   995.4     1315.65   995.5     1315.65  1004.5   1318.15    1004.6
GR   1320.5     1011.6
```

```
NC    0.016     0.016     0.016       .1        .3
X1    20.58         4     995.4    1004.6        10        10        10
GR   1321.0     995.4   1315.66     995.5   1315.66    1004.5    1321.0    1004.6

X1    20.78         4     994.9    1005.1        20        20        20
GR   1322.0     994.9   1315.69     995.0   1315.69    1005.0    1322.0    1005.1

X1    20.98         4     994.4    1005.6        20        20        20
GR   1322.0     994.4   1315.72     994.5   1315.72    1005.5    1322.0    1005.6

X1    21.18         4     993.9    1006.1        20        20        20
GR   1323.0     993.9   1315.75     994.0   1315.75    1006.0    1323.0    1006.1

NC    0.016     0.016     0.016       .3        .5
X1    21.38         4     993.9    1006.1        20        20        20
GR   1323.0     993.9   1315.78     994.0   1315.78    1006.0    1323.0    1006.1

X1    21.48         6     989.9    1010.1        10        10        10
GR   1324.0     989.9   1317.42     990.0   1316.10       994   1316.10      1006   1317.42      1010
GR   1324.0    1010.1

X1    21.58         6     985.4    1014.6        10        10        10
GR   1324.0     985.4   1319.07     985.5   1316.40       994   1316.40      1006   1319.07    1014.5
GR   1324.0    1014.6

X1    21.68         6     981.4    1018.6        10        10        10
GR   1324.0     981.4   1320.71     981.5   1316.70       994   1316.70      1006   1320.71    1018.5
GR   1324.0    1018.6

X1    21.78         6     976.9    1023.1        10        10        10
GR   1324.0     976.9   1322.36     977.0   1317.00       994   1317.00      1006   1322.36      1023
GR   1324.0    1023.1
1
   22MAR95      09:54:25                                                                          PAGE    7


NC    0.035     0.035     0.035       .1        .3
X1    21.88         4       973     1027        10        10        10
GR   1324.0       973   1317.30     994.0   1317.30    1006.0    1324.0    1027.0

NC    0.065     0.065     0.065
X1    22.22         4       979     1018        15        50        34
GR   1324.0       979   1317.45     995.5   1317.45    1004.5    1324.0      1018

X1    22.80         6       960     1025        58        58        58
GR   1326.0       960    1324.7      967    1317.3       997    1317.3      1003    1320.7      1014
GR   1326.6      1025

X1    24.05        15       990     1018       125       125       125
GR   1324.0       990   1323.0      991    1322.0       993    1321.0       994    1320.0       996
GR   1319.0       997   1318.0      999    1317.2      1000    1318.0      1002    1319.0      1004
GR   1320.0      1007   1321.0     1009    1322.0      1012    1323.0      1015    1324.0      1018

X1    25.37        19       981     1018       132       132       132
GR   1327.0       978   1326.0      981    1325.0       983    1324.0       986    1323.0       988
GR   1322.0       991   1321.0      993    1320.0       996    1319.0       998    1318.7      1000
GR   1319.0      1002   1320.0     1005    1321.0      1007    1322.0      1009    1323.0      1011
GR   1324.0      1013   1325.0     1016    1326.0      1018    1327.0      1020
1
   22MAR95      09:54:25                                                                          PAGE    8

    SECNO     DEPTH     CWSEL     CRIWS     WSELK     EG        HV        HL        OLOSS     L-BANK ELEV
    Q         QLOB      QCH       QROB      ALOB      ACH       AROB      VOL       TWA       R-BANK ELEV
    TIME      VLOB      VCH       VROB      XNL       XNCH      XNR       WTN       ELMIN     SSTA
    SLOPE     XLOBL     XLCH      XLOBR     ITRIAL    IDC       ICONT     CORAR     TOPWID    ENDST

FLOW DISTRIBUTION FOR SECNO=      8.97          CWSEL=   1309.66

STA=     845.     938.     992.    1008.    1028.    1037.
  PER Q=      2.2      10.2      78.5       8.6       .5
   AREA=     30.7      62.6      59.0      23.8      3.0
    VEL=       .2        .5       4.2       1.2       .5
  DEPTH=       .3       1.2       3.8       1.2       .3

FLOW DISTRIBUTION FOR SECNO=      9.35          CWSEL=   1309.71

STA=     849.     926.     992.    1011.    1033.
  PER Q=      2.0      13.6      83.1       1.3
   AREA=     27.1      79.3      64.8       7.9
    VEL=       .2        .5       4.1        .5
  DEPTH=       .4       1.2       3.4        .4

1
   22MAR95      09:54:25                                                                          PAGE    9

T1      10TH STREET WASH            STANLEY CONSULTANTS PROJECT # 12183

J1  ICHECK    INQ       NINV      IDIR      STRT      METRIC    HVINS     Q         WSEL      FQ

                3                           .001                                    1307.1

J2  NPROF     IPLOT     PRFVS     XSECV     XSECH     FN        ALLDC     IBW       CHNIM     ITRACE

     2                   -1                                      -1
```

FLOW DISTRIBUTION FOR SECNO= 8.97 CWSEL= 1310.30

STA=	797.	938.	992.	1008.	1028.	1042.
PER Q=	9.0	13.4	64.3	11.3	2.0	
AREA=	112.1	96.9	68.8	36.8	11.1	
VEL=	.4	.7	4.7	1.5	.9	
DEPTH=	.8	1.8	4.4	1.8	.8	

FLOW DISTRIBUTION FOR SECNO= 9.35 CWSEL= 1310.33

STA=	816.	926.	992.	1011.	1042.
PER Q=	7.7	17.4	69.9	5.0	
AREA=	91.5	120.9	76.8	26.3	
VEL=	.4	.7	4.6	1.0	
DEPTH=	.8	1.8	4.0	.8	

1

T1 10TH STREET WASH STANLEY CONSULTANTS PROJECT # 12183

J1	ICHECK	INQ	NINV	IDIR	STRT	METRIC	HVINS	Q	WSEL	FQ
		4			.001				1309.0	

J2	NPROF	IPLOT	PRFVS	XSECV	XSECH	FN	ALLDC	IBW	CHNIM	ITRACE
	3		-1				-1			

FLOW DISTRIBUTION FOR SECNO= 8.97 CWSEL= 1311.48

STA=	797.	938.	992.	1008.	1028.	1042.
PER Q=	20.2	15.4	47.1	13.0	4.2	
AREA=	279.0	160.8	87.2	61.1	27.7	
VEL=	.7	1.0	5.5	2.2	1.6	
DEPTH=	2.0	3.0	5.6	3.0	2.0	

FLOW DISTRIBUTION FOR SECNO= 9.35 CWSEL= 1311.51

STA=	816.	926.	992.	1011.	1042.
PER Q=	16.6	19.8	53.3	10.3	
AREA=	220.6	198.4	99.1	62.7	
VEL=	.8	1.0	5.5	1.7	
DEPTH=	2.0	3.0	5.2	2.0	

1

THIS RUN EXECUTED 22MAR95 09:55:09

****
HEC-2 WATER SURFACE PROFILES

Version 4.6.2; May 1991
****

NOTE- ASTERISK (*) AT LEFT OF CROSS-SECTION NUMBER INDICATES MESSAGE IN SUMMARY OF ERRORS LIST

MAIN STREAM SUBCRITICAL

SUMMARY PRINTOUT

	SECNO	Q	CWSEL	CRIWS	QLOB	VLOB	K*XNL	QCH	VCH	K*XNCH	QROB	VROB	K*XN
	8.970	319.03	1309.66	1308.32	39.55	.42	100.00	250.44	4.25	25.00	29.04	1.08	45.0
	8.970	501.89	1310.30	1309.40	112.55	.54	100.00	322.74	4.69	25.00	66.61	1.39	45.0
	8.970	1023.75	1311.48	1310.39	365.08	.83	100.00	482.54	5.54	25.00	176.13	1.98	45.0
	9.350	319.03	1309.71	1308.33	49.79	.47	100.00	265.03	4.09	25.00	4.21	.53	45.0
	9.350	501.89	1310.33	1309.33	126.05	.59	100.00	350.87	4.57	25.00	24.97	.95	45.0
	9.350	1023.75	1311.51	1310.48	372.59	.89	100.00	545.64	5.51	25.00	105.52	1.68	45.0
*	10.000	319.03	1309.94	1306.13	.00	.00	.00	319.03	.48	20.00	.00	.00	.0
*	10.000	501.89	1310.58	1306.43	2.75	.12	20.00	498.73	.59	20.00	.41	.12	20.0
*	10.000	1023.75	1311.78	1307.06	62.21	.36	20.00	950.86	.81	20.00	10.68	.31	20.0
*	10.320	319.03	1309.94	1306.80	.00	.00	.00	319.03	.74	45.00	.00	.00	.0
*	10.320	501.89	1310.58	1307.17	1.31	.19	45.00	500.11	.92	45.00	.48	.19	45.0
*	10.320	1023.75	1311.77	1307.89	30.17	.57	45.00	979.83	1.30	45.00	13.75	.47	45.0
*	11.420	319.03	1309.95	1306.66	.00	.00	.00	319.03	1.56	45.00	.00	.00	.0
*	11.420	501.89	1310.57	1307.25	.00	.00	.00	501.89	2.06	45.00	.00	.00	.0
*	11.420	1023.75	1311.73	1308.40	.00	.00	.00	1023.75	3.17	45.00	.00	.00	.0
	11.620	319.03	1309.90	1309.01	.00	.00	.00	319.03	2.84	20.00	.00	.00	.0
	11.620	501.89	1310.52	1309.38	.00	.00	.00	501.89	3.17	20.00	.00	.00	.0
	11.620	1023.75	1311.70	1310.19	.00	.00	.00	1023.75	3.85	20.00	.00	.00	.0
*	11.820	319.03	1309.94	1308.66	.00	.00	.00	319.02	2.70	45.00	.00	.00	.0
*	11.820	501.89	1310.55	1309.11	.00	.00	.00	501.89	3.18	45.00	.00	.00	.0
*	11.820	1023.75	1311.72	1310.08	.00	.00	.00	1023.75	4.00	45.00	.00	.00	.0
*	13.770	319.03	1310.31	1308.01	.00	.00	.00	319.03	2.23	45.00	.00	.00	.0
*	13.770	501.89	1311.01	1308.55	.00	.00	.00	501.89	2.79	45.00	.00	.00	.0

	13.770	1023.75	1312.31	1309.72	.00	.00	.00	1023.75	3.99	45.00	.00	.00	.0

1

	SECNO	Q	CWSEL	CRIWS	QLOB	VLOB	K*XNL	QCH	VCH	K*XNCH	QROB	VROB	K*XN
*	15.770	297.03	1310.64	1309.70	.00	.00	.00	297.02	3.85	45.00	.00	.00	.0
*	15.770	434.89	1311.39	1310.15	.00	.00	.00	434.89	4.00	45.00	.00	.00	.0
*	15.770	729.75	1312.87	1310.89	.73	.67	45.00	729.02	3.83	45.00	.00	.00	.0
	16.770	297.03	1311.30	1310.81	.00	.00	.00	297.02	4.88	45.00	.00	.00	.0
	16.770	434.89	1311.93	1311.25	.00	.00	.00	434.89	5.10	45.00	.00	.00	.0
	16.770	729.75	1313.19	1312.00	.00	.00	.00	729.75	5.08	45.00	.00	.00	.0
	17.770	297.03	1312.66	1312.52	.00	.00	.00	297.02	5.92	45.00	.00	.00	.0
*	17.770	434.89	1313.08	1312.95	.00	.00	.00	434.89	6.53	45.00	.00	.00	.0
*	17.770	499.75	1313.92	1313.12	.00	.00	.00	499.75	4.77	45.00	.00	.00	.0
*	18.610	275.03	1315.26	1315.26	.00	.00	.00	275.02	6.02	45.00	.00	.00	.0
*	18.610	409.89	1315.67	1315.67	.00	.00	.00	409.89	6.31	45.00	.00	.00	.0
*	18.610	440.75	1315.75	1315.75	.00	.00	.00	440.75	6.37	45.00	.00	.00	.0
*	18.870	275.03	1315.79	1315.60	.00	.00	.00	275.02	4.11	20.00	.00	.00	.0
*	18.870	409.89	1316.21	1315.87	.00	.00	.00	409.89	4.10	20.00	.00	.00	.0
*	18.870	440.75	1316.29	1315.93	.00	.00	.00	440.75	4.12	20.00	.00	.00	.0
*	18.990	275.03	1316.03	1316.03	.00	.00	.00	275.02	5.40	45.00	.00	.00	.0
*	18.990	409.89	1316.32	1316.32	.00	.00	.00	409.89	5.94	45.00	.00	.00	.0
*	18.990	440.75	1316.38	1316.38	.00	.00	.00	440.75	6.07	45.00	.00	.00	.0
*	19.570	275.03	1317.04	1316.36	.00	.00	.00	275.02	3.48	45.00	.00	.00	.0
*	19.570	409.89	1317.40	1316.73	.00	.00	.00	409.89	4.14	45.00	.00	.00	.0
*	19.570	440.75	1317.48	1316.81	.00	.00	.00	440.75	4.27	45.00	.00	.00	.0
*	19.980	275.03	1317.32	1317.32	.00	.00	.00	275.02	6.89	35.00	.00	.00	.0
*	19.980	409.89	1317.81	1317.81	.00	.00	.00	409.89	7.57	35.00	.00	.00	.0
*	19.980	440.75	1317.91	1317.91	.00	.00	.00	440.75	7.70	35.00	.00	.00	.0
*	20.180	275.03	1317.95	1317.95	.00	.00	.00	275.02	7.30	16.00	.00	.00	.0
*	20.180	409.89	1318.50	1318.50	.00	.00	.00	409.89	7.98	16.00	.00	.00	.0
*	20.180	440.75	1318.61	1318.61	.00	.00	.00	440.75	8.11	16.00	.00	.00	.0
*	20.280	275.03	1318.39	1318.39	.00	.00	.00	275.02	7.53	16.00	.00	.00	.0
*	20.280	409.89	1318.99	1318.99	.00	.00	.00	409.89	8.20	16.00	.00	.00	.0
*	20.280	440.75	1319.09	1319.09	.00	.00	.00	440.75	8.42	16.00	.00	.00	.0
*	20.380	275.03	1318.74	1318.74	.00	.00	.00	275.02	7.95	16.00	.00	.00	.0
*	20.380	409.89	1319.35	1319.35	.00	.00	.00	409.89	8.90	16.00	.00	.00	.0
*	20.380	440.75	1319.47	1319.47	.00	.00	.00	440.75	9.11	16.00	.00	.00	.0
*	20.480	275.03	1318.94	1318.94	.00	.00	.00	275.02	8.64	16.00	.00	.00	.0
*	20.480	409.89	1319.63	1319.63	.00	.00	.00	409.89	9.87	16.00	.00	.00	.0
*	20.480	440.75	1319.78	1319.78	.00	.00	.00	440.75	10.11	16.00	.00	.00	.0
	20.580	275.03	1318.75	1318.71	.00	.00	.00	275.02	9.79	16.00	.00	.00	.0
*	20.580	409.89	1319.65	1319.65	.00	.00	.00	409.89	11.33	16.00	.00	.00	.0
*	20.580	440.75	1319.85	1319.85	.00	.00	.00	440.75	11.58	16.00	.00	.00	.0

1

	SECNO	Q	CWSEL	CRIWS	QLOB	VLOB	K*XNL	QCH	VCH	K*XNCH	QROB	VROB	K*XN
*	20.780	285.06	1319.52	1318.62	.00	.00	.00	285.06	7.39	16.00	.00	.00	.0
*	20.780	470.13	1319.78	1319.78	.00	.00	.00	470.13	11.43	16.00	.00	.00	.0
*	20.780	541.05	1320.16	1320.16	.00	.00	.00	541.05	12.02	16.00	.00	.00	.0
	20.980	322.23	1319.52	1318.69	.00	.00	.00	322.23	7.66	16.00	.00	.00	.0
*	20.980	550.20	1319.96	1319.96	.00	.00	.00	550.20	11.72	16.00	.00	.00	.0
*	20.980	721.43	1320.81	1320.81	.00	.00	.00	721.43	12.79	16.00	.00	.00	.0
	21.180	360.00	1319.53	1318.77	.00	.00	.00	360.00	7.91	16.00	.00	.00	.0
*	21.180	672.00	1320.33	1320.33	.00	.00	.00	672.00	12.17	16.00	.00	.00	.0
*	21.180	1111.00	1322.14	1322.14	.00	.00	.00	1111.00	14.38	16.00	.00	.00	.0
	21.380	360.00	1319.60	1318.80	.00	.00	.00	360.00	7.81	16.00	.00	.00	.0
	21.380	672.00	1321.42	1320.36	.00	.00	.00	672.00	9.86	16.00	.00	.00	.0
	21.380	1111.00	1323.64	1322.18	.00	.00	.00	1111.00	11.68	16.00	.00	.00	.0
*	21.480	360.00	1320.46	1318.51	.00	.00	.00	360.00	4.39	16.00	.00	.00	.0
*	21.480	672.00	1322.86	1319.62	.00	.00	.00	672.00	5.16	16.00	.00	.00	.0
*	21.480	1111.00	1325.70	1320.92	.00	.00	.00	1111.00	5.92	16.00	.00	.00	.0
	21.580	360.00	1320.58	1318.83	.00	.00	.00	360.00	3.65	16.00	.00	.00	.0
	21.580	672.00	1323.09	1319.71	.00	.00	.00	672.00	3.92	16.00	.00	.00	.0
*	21.580	1111.00	1326.03	1320.74	.00	.00	.00	1111.00	4.31	16.00	.00	.00	.0
	21.680	360.00	1320.57	1319.14	.00	.00	.00	360.00	3.86	16.00	.00	.00	.0
	21.680	672.00	1323.15	1320.12	.00	.00	.00	672.00	3.56	16.00	.00	.00	.0
	21.680	1111.00	1326.13	1321.07	.00	.00	.00	1111.00	3.71	16.00	.00	.00	.0
	21.780	360.00	1320.55	1319.42	.00	.00	.00	360.00	4.37	16.00	.00	.00	.0
	21.780	672.00	1323.16	1320.40	.00	.00	.00	672.00	3.50	16.00	.00	.00	.0
	21.780	1111.00	1326.18	1321.41	.00	.00	.00	1111.00	3.35	16.00	.00	.00	.0
*	21.880	360.00	1320.48	1319.73	.00	.00	.00	360.00	5.13	35.00	.00	.00	.0
*	21.880	672.00	1323.14	1320.71	.00	.00	.00	672.00	3.80	35.00	.00	.00	.0

*	21.880	1111.00	1326.19	1321.74	.00	.00	.00	1111.00	3.27	35.00	.00	.00	.0
*	22.220	360.00	1320.62	1320.31	.00	.00	.00	360.00	6.97	65.00	.00	.00	.0
*	22.220	672.00	1323.08	1321.43	.00	.00	.00	672.00	5.45	65.00	.00	.00	.0
*	22.220	1111.00	1326.12	1322.62	.00	.00	.00	1111.00	4.63	65.00	.00	.00	.0
*	22.800	360.00	1321.95	1320.18	.00	.00	.00	360.00	3.42	65.00	.00	.00	.0
*	22.800	672.00	1323.76	1321.15	.00	.00	.00	672.00	3.64	65.00	.00	.00	.0
	22.800	1111.00	1326.49	1322.18	.00	.00	.00	1111.00	3.25	65.00	.00	.00	.0
*	24.050	360.00	1322.94	1321.79	.00	.00	.00	360.00	5.52	65.00	.00	.00	.0
*	24.050	672.00	1324.43	1323.10	.00	.00	.00	672.00	6.41	65.00	.00	.00	.0
*	24.050	1111.00	1326.68	1324.29	.00	.00	.00	1111.00	6.62	65.00	.00	.00	.0
*	25.370	360.00	1324.54	1322.44	.00	.00	.00	360.00	3.76	65.00	.00	.00	.0
*	25.370	672.00	1326.11	1323.63	.00	.02	65.00	672.00	4.50	65.00	.00	.02	65.0
*	25.370	1111.00	1327.96	1324.91	7.43	1.70	65.00	1099.10	5.05	65.00	4.48	1.54	65.0

MAIN STREAM SUBCRITICAL

SUMMARY PRINTOUT

	SECNO	Q	CWSEL	AREA	ELMIN	DEPTH	XLCH	STENCL	SSTA	ENDST	STENCR	TOPWID	TWA
	8.970	319.03	1309.66	179.09	1304.00	5.66	.00	.00	844.99	1037.23	1042.00	192.25	.0
	8.970	501.89	1310.30	325.81	1304.00	6.30	.00	.00	797.00	1042.00	1042.00	245.00	.0
	8.970	1023.75	1311.48	615.76	1304.00	7.48	.00	.00	797.00	1042.00	1042.00	245.00	.0
	9.350	319.03	1309.71	179.21	1304.00	5.71	38.00	.00	848.75	1033.47	1042.00	184.72	.1
	9.350	501.89	1310.33	315.47	1304.00	6.33	38.00	.00	816.00	1042.00	1042.00	226.00	.2
	9.350	1023.75	1311.51	580.81	1304.00	7.51	38.00	.00	816.00	1042.00	1042.00	226.00	.2
*	10.000	319.03	1309.94	669.75	1305.00	4.94	60.00	.00	811.08	1079.13	.00	268.05	.4
*	10.000	501.89	1310.58	869.77	1305.00	5.58	60.00	.00	729.27	1091.60	.00	362.33	.5
*	10.000	1023.75	1311.78	1378.81	1305.00	6.78	60.00	.00	673.00	1121.18	.00	448.18	.6
*	10.320	319.03	1309.94	431.91	1305.00	4.94	32.00	.00	890.58	1063.01	.00	172.43	.6
*	10.320	501.89	1310.58	552.36	1305.00	5.58	32.00	.00	866.22	1072.70	.00	206.48	.8
*	10.320	1023.75	1311.77	834.23	1305.00	6.77	32.00	.00	849.00	1104.10	.00	255.10	.9
*	11.420	319.03	1309.95	203.97	1304.00	5.95	110.00	.00	974.15	1035.85	.00	61.71	.9
*	11.420	501.89	1310.57	243.96	1304.00	6.57	110.00	.00	972.26	1037.74	.00	65.48	1.1
*	11.420	1023.75	1311.73	323.38	1304.00	7.73	110.00	.00	968.80	1041.20	.00	72.39	1.3
	11.620	319.03	1309.90	112.14	1307.50	2.40	20.00	.00	963.71	1033.19	.00	69.48	.9
	11.620	501.89	1310.52	158.27	1307.50	3.02	20.00	.00	960.37	1037.68	.00	77.31	1.1
	11.620	1023.75	1311.70	266.10	1307.50	4.20	20.00	.00	953.76	1068.55	.00	114.78	1.3
*	11.820	319.03	1309.94	118.21	1307.00	2.94	20.00	.00	972.27	1032.57	.00	60.30	.9
*	11.820	501.89	1310.55	157.86	1307.00	3.55	20.00	.00	970.35	1041.79	.00	71.43	1.2
*	11.820	1023.75	1311.72	256.18	1307.00	4.72	20.00	.00	966.84	1064.86	.00	98.03	1.3
*	13.770	319.03	1310.31	143.03	1306.00	4.31	195.00	.00	970.07	1020.93	.00	50.87	1.2
*	13.770	501.89	1311.01	179.81	1306.00	5.01	195.00	.00	967.98	1023.02	.00	55.03	1.4
	13.770	1023.75	1312.31	256.46	1306.00	6.31	195.00	.00	964.08	1026.92	.00	62.84	1.7
*	15.770	297.03	1310.64	77.19	1307.80	2.84	200.00	.00	976.54	1015.77	.00	39.22	1.4
*	15.770	434.89	1311.39	108.80	1307.80	3.59	200.00	.00	973.29	1019.35	.00	46.07	1.7
*	15.770	729.75	1312.87	191.29	1307.80	5.07	200.00	.00	963.00	1033.42	.00	70.42	2.0
	16.770	297.03	1311.30	60.92	1308.90	2.40	100.00	.00	977.37	1013.22	.00	35.85	1.5
	16.770	434.89	1311.93	85.19	1308.90	3.03	100.00	.00	974.58	1015.75	.00	41.16	1.8
	16.770	729.75	1313.19	143.78	1308.90	4.29	100.00	.00	969.01	1020.79	.00	51.78	2.2
	17.770	297.03	1312.66	50.13	1310.70	1.96	100.00	.00	979.97	1016.12	.00	36.14	1.6
*	17.770	434.89	1313.08	66.60	1310.70	2.38	100.00	.00	977.56	1018.41	.00	40.85	1.9
*	17.770	499.75	1313.92	104.79	1310.70	3.22	100.00	.00	972.81	1022.62	.00	49.81	2.3
*	18.610	275.03	1315.26	45.71	1313.10	2.16	84.00	.00	979.18	1020.38	.00	41.20	1.6
*	18.610	409.89	1315.67	64.96	1313.10	2.57	84.00	.00	970.26	1024.03	.00	53.76	2.0
*	18.610	440.75	1315.75	69.15	1313.10	2.65	84.00	.00	968.59	1024.71	.00	56.13	2.4

	SECNO	Q	CWSEL	AREA	ELMIN	DEPTH	XLCH	STENCL	SSTA	ENDST	STENCR	TOPWID	TWA
*	18.870	275.03	1315.79	66.97	1314.20	1.59	26.00	.00	960.53	1033.09	.00	72.57	1.7
*	18.870	409.89	1316.21	100.08	1314.20	2.01	26.00	.00	954.86	1038.35	.00	83.49	2.0
*	18.870	440.75	1316.29	106.88	1314.20	2.09	26.00	.00	954.05	1039.24	.00	85.19	2.4
*	18.990	275.03	1316.03	50.90	1314.30	1.73	12.00	.00	962.77	1020.34	.00	57.57	1.7
*	18.990	409.89	1316.32	69.04	1314.30	2.02	12.00	.00	960.19	1024.22	.00	64.03	2.0
*	18.990	440.75	1316.38	72.62	1314.30	2.08	12.00	.00	959.71	1024.94	.00	65.23	2.4
*	19.570	275.03	1317.04	78.92	1314.70	2.34	58.00	.00	962.80	1016.16	.00	53.36	1.8
*	19.570	409.89	1317.40	98.97	1314.70	2.70	58.00	.00	960.98	1017.62	.00	56.64	2.1
*	19.570	440.75	1317.48	103.23	1314.70	2.78	58.00	.00	960.60	1017.92	.00	57.31	2.5
*	19.980	275.03	1317.32	39.91	1315.40	1.92	41.00	.00	982.80	1010.27	.00	27.47	1.8
*	19.980	409.89	1317.81	54.13	1315.40	2.41	41.00	.00	980.85	1011.74	.00	30.88	2.1
*	19.980	440.75	1317.91	57.24	1315.40	2.51	41.00	.00	980.45	1012.03	.00	31.58	2.6
*	20.180	275.03	1317.95	37.67	1315.60	2.35	20.00	985.50	988.46	1011.54	1014.50	23.09	1.8

*	20.180	409.89	1318.50	51.36	1315.60	2.90	20.00	985.50	986.80	1013.20	1014.50	26.41	2.2
*	20.180	440.75	1318.61	54.35	1315.60	3.01	20.00	985.50	986.46	1013.54	1014.50	27.08	2.6
*	20.280	275.03	1318.39	36.53	1315.62	2.77	10.00	988.00	989.68	1010.38	1012.00	20.70	1.8
*	20.280	409.89	1318.99	49.98	1315.62	3.37	10.00	988.00	988.00	1012.00	1012.00	24.00	2.2
*	20.280	440.75	1319.09	52.35	1315.62	3.47	10.00	988.00	988.00	1012.00	1012.00	24.00	2.6
*	20.380	275.03	1318.74	34.59	1315.63	3.11	10.00	990.50	991.13	1008.87	1009.50	17.73	1.8
*	20.380	409.89	1319.35	46.06	1315.63	3.72	10.00	990.50	990.50	1009.50	1009.50	19.00	2.2
*	20.380	440.75	1319.47	48.36	1315.63	3.84	10.00	990.50	990.50	1009.50	1009.50	19.00	2.6
*	20.480	275.03	1318.94	31.84	1315.65	3.29	10.00	993.00	993.08	1006.95	1007.00	13.86	1.8
*	20.480	409.89	1319.63	41.53	1315.65	3.98	10.00	993.00	993.00	1007.00	1007.00	14.00	2.2
*	20.480	440.75	1319.78	43.62	1315.65	4.13	10.00	993.00	993.00	1007.00	1007.00	14.00	2.6
	20.580	275.03	1318.75	28.09	1315.66	3.09	10.00	.00	995.44	1004.56	.00	9.12	1.8
*	20.580	409.89	1319.65	36.19	1315.66	3.99	10.00	.00	995.43	1004.57	.00	9.15	2.2
*	20.580	440.75	1319.85	38.06	1315.66	4.19	10.00	.00	995.42	1004.58	.00	9.16	2.6
*	20.780	285.06	1319.52	38.55	1315.69	3.83	20.00	.00	994.94	1005.06	.00	10.12	1.8
*	20.780	470.13	1319.78	41.14	1315.69	4.09	20.00	.00	994.94	1005.06	.00	10.13	2.2
*	20.780	541.05	1320.16	45.01	1315.69	4.47	20.00	.00	994.93	1005.07	.00	10.14	2.6
	20.980	322.23	1319.52	42.05	1315.72	3.80	20.00	.00	994.44	1005.56	.00	11.12	1.8
*	20.980	550.20	1319.96	46.96	1315.72	4.24	20.00	.00	994.43	1005.57	.00	11.14	2.2
*	20.980	721.43	1320.81	56.43	1315.72	5.09	20.00	.00	994.42	1005.58	.00	11.16	2.6
	21.180	360.00	1319.53	45.51	1315.75	3.78	20.00	.00	993.95	1006.05	.00	12.10	1.8
*	21.180	672.00	1320.33	55.24	1315.75	4.58	20.00	.00	993.94	1006.06	.00	12.13	2.2
*	21.180	1111.00	1322.14	77.28	1315.75	6.39	20.00	.00	993.91	1006.09	.00	12.18	2.6
	21.380	360.00	1319.60	46.09	1315.78	3.82	20.00	.00	993.95	1006.05	.00	12.11	1.8
	21.380	672.00	1321.42	68.12	1315.78	5.64	20.00	.00	993.92	1006.08	.00	12.16	2.2
	21.380	1111.00	1323.64	95.12	1315.78	7.86	20.00	.00	993.90	1006.10	.00	12.20	2.6

	SECNO	Q	CWSEL	AREA	ELMIN	DEPTH	XLCH	STENCL	SSTA	ENDST	STENCR	TOPWID	TW
*	21.480	360.00	1320.46	81.96	1316.10	4.36	10.00	.00	989.95	1010.05	.00	20.09	1.9
*	21.480	672.00	1322.86	130.33	1316.10	6.76	10.00	.00	989.92	1010.08	.00	20.17	2.2
*	21.480	1111.00	1325.70	187.57	1316.10	9.60	10.00	.00	989.90	1010.10	.00	20.20	2.6
	21.580	360.00	1320.58	98.61	1316.40	4.18	10.00	.00	985.47	1014.53	.00	29.06	1.9
	21.580	672.00	1323.09	171.64	1316.40	6.69	10.00	.00	985.42	1014.58	.00	29.16	2.2
*	21.580	1111.00	1326.03	257.50	1316.40	9.63	10.00	.00	985.40	1014.60	.00	29.20	2.6
	21.680	360.00	1320.57	93.21	1316.70	3.87	10.00	.00	981.93	1018.07	.00	36.14	1.9
	21.680	672.00	1323.15	188.57	1316.70	6.45	10.00	.00	981.43	1018.57	.00	37.15	2.2
	21.680	1111.00	1326.13	299.58	1316.70	9.43	10.00	.00	981.40	1018.60	.00	37.20	2.6
	21.780	360.00	1320.55	82.40	1317.00	3.55	10.00	.00	982.76	1017.24	.00	34.49	1.9
	21.780	672.00	1323.16	192.22	1317.00	6.16	10.00	.00	976.95	1023.05	.00	46.10	2.2
	21.780	1111.00	1326.18	331.93	1317.00	9.18	10.00	.00	976.90	1023.10	.00	46.20	2.6
*	21.880	360.00	1320.48	70.22	1317.30	3.18	10.00	.00	984.00	1016.00	.00	32.01	1.9
*	21.880	672.00	1323.14	176.91	1317.30	5.84	10.00	.00	975.70	1024.30	.00	48.60	2.2
*	21.880	1111.00	1326.19	339.61	1317.30	8.89	10.00	.00	973.00	1027.00	.00	54.00	2.6
*	22.220	360.00	1320.62	51.68	1317.45	3.17	34.00	.00	987.50	1011.05	.00	23.55	1.9
*	22.220	672.00	1323.08	123.39	1317.45	5.63	34.00	.00	981.31	1016.11	.00	34.80	2.3
*	22.220	1111.00	1326.12	239.94	1317.45	8.67	34.00	.00	979.00	1018.00	.00	39.00	2.7
*	22.800	360.00	1321.95	105.38	1317.30	4.65	58.00	.00	978.18	1016.32	.00	38.14	1.9
*	22.800	672.00	1323.76	184.64	1317.30	6.46	58.00	.00	970.79	1019.71	.00	48.92	2.3
	22.800	1111.00	1326.49	341.68	1317.30	9.19	58.00	.00	960.00	1024.80	.00	64.80	2.8
*	24.050	360.00	1322.94	65.21	1317.20	5.74	125.00	.00	991.13	1014.81	.00	23.69	2.0
*	24.050	672.00	1324.43	104.83	1317.20	7.23	125.00	.00	990.00	1018.00	.00	28.00	2.4
*	24.050	1111.00	1326.68	167.90	1317.20	9.48	125.00	.00	990.00	1018.00	.00	28.00	2.9
*	25.370	360.00	1324.54	95.68	1318.70	5.84	132.00	.00	984.37	1014.63	.00	30.26	2.1
*	25.370	672.00	1326.11	149.20	1318.70	7.41	132.00	.00	980.67	1018.22	.00	37.55	2.5
*	25.370	1111.00	1327.96	224.77	1318.70	9.26	132.00	.00	978.00	1020.00	.00	42.00	3.0

MAIN STREAM SUBCRITICAL

SUMMARY PRINTOUT

	SECNO	Q	CWSEL	FRCH	DIFWSP	EG	DIFEG	STENCL	STCHL	XLBEL	RBEL	STCHR	STENC
	8.970	319.03	1309.66	.38	.00	1309.88	.00	.00	992.00	1308.00	1308.00	1007.50	1042.0
	8.970	501.89	1310.30	.39	.64	1310.52	.64	.00	992.00	1308.00	1308.00	1007.50	1042.0
	8.970	1023.75	1311.48	.41	1.18	1311.72	1.84	.00	992.00	1308.00	1308.00	1007.50	1042.0
	9.350	319.03	1309.71	.39	.00	1309.92	.00	.00	992.00	1308.00	1309.00	1011.00	1042.0
	9.350	501.89	1310.33	.40	.63	1310.56	.64	.00	992.00	1308.00	1309.00	1011.00	1042.0
	9.350	1023.75	1311.51	.42	1.17	1311.77	1.84	.00	992.00	1308.00	1309.00	1011.00	1042.0
*	10.000	319.03	1309.94	.05	.00	1309.95	.00	.00	807.00	1310.00	1310.00	1080.00	.0
*	10.000	501.89	1310.58	.06	.64	1310.59	.64	.00	807.00	1310.00	1310.00	1080.00	.0
*	10.000	1023.75	1311.78	.07	1.20	1311.79	1.85	.00	807.00	1310.00	1310.00	1080.00	.0

*	10.320	319.03	1309.94	.08	.00	1309.95	.00	.00	890.00	1310.00	1310.00	1064.00	.0
*	10.320	501.89	1310.58	.09	.64	1310.59	.64	.00	890.00	1310.00	1310.00	1064.00	.0
*	10.320	1023.75	1311.77	.11	1.20	1311.80	1.85	.00	890.00	1310.00	1310.00	1064.00	.0
*	11.420	319.03	1309.95	.15	.00	1309.98	.00	.00	968.00	1312.00	1312.00	1042.00	.0
*	11.420	501.89	1310.57	.19	.63	1310.64	.65	.00	968.00	1312.00	1312.00	1042.00	.0
*	11.420	1023.75	1311.73	.26	1.16	1311.89	1.90	.00	968.00	1312.00	1312.00	1042.00	.0
	11.620	319.03	1309.90	.39	.00	1310.02	.00	.00	952.00	1312.00	1312.00	1080.00	.0
	11.620	501.89	1310.52	.39	.63	1310.68	.66	.00	952.00	1312.00	1312.00	1080.00	.0
	11.620	1023.75	1311.70	.45	1.18	1311.93	1.91	.00	952.00	1312.00	1312.00	1080.00	.0
*	11.820	319.03	1309.94	.34	.00	1310.05	.00	.00	966.00	1312.00	1312.00	1071.00	.0
*	11.820	501.89	1310.55	.38	.61	1310.71	.66	.00	966.00	1312.00	1312.00	1071.00	.0
*	11.820	1023.75	1311.72	.44	1.17	1311.97	1.92	.00	966.00	1312.00	1312.00	1071.00	.0
*	13.770	319.03	1310.31	.23	.00	1310.39	.00	.00	959.00	1314.00	1314.00	1033.00	.0
*	13.770	501.89	1311.01	.27	.69	1311.13	.74	.00	959.00	1314.00	1314.00	1033.00	.0
	13.770	1023.75	1312.31	.35	1.31	1312.56	2.17	.00	959.00	1314.00	1314.00	1033.00	.0
*	15.770	297.03	1310.64	.48	.00	1310.87	.00	.00	968.00	1312.60	1317.00	1060.00	.0
*	15.770	434.89	1311.39	.46	.76	1311.64	.78	.00	968.00	1312.60	1317.00	1060.00	.0
*	15.770	729.75	1312.87	.40	1.47	1313.10	2.23	.00	968.00	1312.60	1317.00	1060.00	.0
	16.770	297.03	1311.30	.66	.00	1311.67	.00	.00	969.00	1313.20	1318.00	1053.00	.0
	16.770	434.89	1311.93	.63	.63	1312.34	.66	.00	969.00	1313.20	1318.00	1053.00	.0
	16.770	729.75	1313.19	.54	1.26	1313.59	1.92	.00	969.00	1313.20	1318.00	1053.00	.0
	17.770	297.03	1312.66	.89	.00	1313.21	.00	.00	969.00	1314.60	1321.00	1051.00	.0
*	17.770	434.89	1313.08	.90	.42	1313.74	.54	.00	969.00	1314.60	1321.00	1051.00	.0
*	17.770	499.75	1313.92	.58	.84	1314.28	1.07	.00	969.00	1314.60	1321.00	1051.00	.0
*	18.610	275.03	1315.26	1.01	.00	1315.83	.00	.00	915.00	1319.00	1319.00	1066.00	.0
*	18.610	409.89	1315.67	1.01	.41	1316.29	.46	.00	915.00	1319.00	1319.00	1066.00	.0
*	18.610	440.75	1315.75	1.01	.08	1316.38	.55	.00	915.00	1319.00	1319.00	1066.00	.0

	SECNO	Q	CWSEL	FRCH	DIFWSP	EG	DIFEG	STENCL	STCHL	XLBEL	RBEL	STCHR	STENC
*	18.870	275.03	1315.79	.75	.00	1316.05	.00	.00	900.00	1319.00	1319.00	1073.00	.0
*	18.870	409.89	1316.21	.66	.42	1316.47	.42	.00	900.00	1319.00	1319.00	1073.00	.0
*	18.870	440.75	1316.29	.65	.08	1316.56	.50	.00	900.00	1319.00	1319.00	1073.00	.0
*	18.990	275.03	1316.03	1.01	.00	1316.48	.00	.00	900.00	1320.00	1319.00	1055.00	.0
*	18.990	409.89	1316.32	1.01	.30	1316.87	.39	.00	900.00	1320.00	1319.00	1055.00	.0
*	18.990	440.75	1316.38	1.01	.06	1316.95	.47	.00	900.00	1320.00	1319.00	1055.00	.0
*	19.570	275.03	1317.04	.50	.00	1317.23	.00	.00	954.00	1319.00	1319.00	1023.00	.0
*	19.570	409.89	1317.40	.55	.36	1317.67	.44	.00	954.00	1319.00	1319.00	1023.00	.0
*	19.570	440.75	1317.48	.56	.07	1317.76	.53	.00	954.00	1319.00	1319.00	1023.00	.0
*	19.980	275.03	1317.32	1.01	.00	1318.06	.00	.00	978.10	1318.50	1319.00	1015.30	.0
*	19.980	409.89	1317.81	1.01	.49	1318.70	.64	.00	978.10	1318.50	1319.00	1015.30	.0
*	19.980	440.75	1317.91	1.01	.10	1318.83	.77	.00	978.10	1318.50	1319.00	1015.30	.0
*	20.180	275.03	1317.95	1.01	.00	1318.78	.00	985.50	985.30	100000.00	100000.00	1014.70	1014.5
*	20.180	409.89	1318.50	1.01	.55	1319.49	.71	985.50	985.30	100000.00	100000.00	1014.70	1014.5
*	20.180	440.75	1318.61	1.01	.11	1319.63	.86	985.50	985.30	100000.00	100000.00	1014.70	1014.5
*	20.280	275.03	1318.39	1.00	.00	1319.27	.00	988.00	986.40	100000.00	100000.00	1013.70	1012.0
*	20.280	409.89	1318.99	1.00	.60	1320.03	.76	988.00	986.40	100000.00	100000.00	1013.70	1012.0
*	20.280	440.75	1319.09	1.00	.10	1320.19	.92	988.00	986.40	100000.00	100000.00	1013.70	1012.0
*	20.380	275.03	1318.74	1.00	.00	1319.72	.00	990.50	987.40	100000.00	100000.00	1012.60	1009.5
*	20.380	409.89	1319.35	1.01	.61	1320.58	.86	990.50	987.40	100000.00	100000.00	1012.60	1009.5
*	20.380	440.75	1319.47	1.01	.12	1320.76	1.04	990.50	987.40	100000.00	100000.00	1012.60	1009.5
*	20.480	275.03	1318.94	1.00	.00	1320.10	.00	993.00	988.50	100000.00	100000.00	1011.60	1007.0
*	20.480	409.89	1319.63	1.01	.69	1321.14	1.05	993.00	988.50	100000.00	100000.00	1011.60	1007.0
*	20.480	440.75	1319.78	1.01	.15	1321.37	1.27	993.00	988.50	100000.00	100000.00	1011.60	1007.0
	20.580	275.03	1318.75	.98	.00	1320.24	.00	.00	995.40	1321.00	1321.00	1004.60	.0
*	20.580	409.89	1319.65	1.00	.89	1321.64	1.40	.00	995.40	1321.00	1321.00	1004.60	.0
*	20.580	440.75	1319.85	1.00	.21	1321.93	1.69	.00	995.40	1321.00	1321.00	1004.60	.0
*	20.780	285.06	1319.52	.67	.00	1320.37	.00	.00	994.90	1322.00	1322.00	1005.10	.0
*	20.780	470.13	1319.78	1.00	.26	1321.81	1.44	.00	994.90	1322.00	1322.00	1005.10	.0
*	20.780	541.05	1320.16	1.01	.38	1322.40	2.03	.00	994.90	1322.00	1322.00	1005.10	.0
	20.980	322.23	1319.52	.69	.00	1320.43	.00	.00	994.40	1322.00	1322.00	1005.60	.0
*	20.980	550.20	1319.96	1.01	.44	1322.09	1.66	.00	994.40	1322.00	1322.00	1005.60	.0
*	20.980	721.43	1320.81	1.00	.85	1323.35	2.92	.00	994.40	1322.00	1322.00	1005.60	.0
	21.180	360.00	1319.53	.72	.00	1320.50	.00	.00	993.90	1323.00	1323.00	1006.10	.0
*	21.180	672.00	1320.33	1.00	.80	1322.63	2.13	.00	993.90	1323.00	1323.00	1006.10	.0
*	21.180	1111.00	1322.14	1.01	1.81	1325.35	4.85	.00	993.90	1323.00	1323.00	1006.10	.0
	21.380	360.00	1319.60	.71	.00	1320.55	.00	.00	993.90	1323.00	1323.00	1006.10	.0
	21.380	672.00	1321.42	.73	1.82	1322.93	2.38	.00	993.90	1323.00	1323.00	1006.10	.0
	21.380	1111.00	1323.64	.74	2.22	1325.76	5.21	.00	993.90	1323.00	1323.00	1006.10	.0

SECNO Q CWSEL FRCH DIFWSP EG DIFEG STENCL STCHL XLBEL RBEL STCHR STENC

*	21.480	360.00	1320.46	.38	.00	1320.76	.00	.00	989.90	1324.00	1324.00	1010.10	.0
*	21.480	672.00	1322.86	.36	2.40	1323.27	2.52	.00	989.90	1324.00	1324.00	1010.10	.0
*	21.480	1111.00	1325.70	.34	2.84	1326.24	5.48	.00	989.90	1324.00	1324.00	1010.10	.0
	21.580	360.00	1320.58	.35	.00	1320.79	.00	.00	985.40	1324.00	1324.00	1014.60	.0
	21.580	672.00	1323.09	.28	2.51	1323.33	2.54	.00	985.40	1324.00	1324.00	1014.60	.0
*	21.580	1111.00	1326.03	.26	2.94	1326.32	5.53	.00	985.40	1324.00	1324.00	1014.60	.0
	21.680	360.00	1320.57	.42	.00	1320.80	.00	.00	981.40	1324.00	1324.00	1018.60	.0
	21.680	672.00	1323.15	.28	2.57	1323.34	2.54	.00	981.40	1324.00	1324.00	1018.60	.0
	21.680	1111.00	1326.13	.23	2.99	1326.34	5.54	.00	981.40	1324.00	1324.00	1018.60	.0
	21.780	360.00	1320.55	.50	.00	1320.84	.00	.00	976.90	1324.00	1324.00	1023.10	.0
	21.780	672.00	1323.16	.30	2.61	1323.35	2.50	.00	976.90	1324.00	1324.00	1023.10	.0
	21.780	1111.00	1326.18	.22	3.03	1326.36	5.52	.00	976.90	1324.00	1324.00	1023.10	.0
*	21.880	360.00	1320.48	.61	.00	1320.89	.00	.00	973.00	1324.00	1324.00	1027.00	.0
*	21.880	672.00	1323.14	.35	2.65	1323.36	2.47	.00	973.00	1324.00	1324.00	1027.00	.0
*	21.880	1111.00	1326.19	.23	3.06	1326.36	5.47	.00	973.00	1324.00	1324.00	1027.00	.0
*	22.220	360.00	1320.62	.83	.00	1321.37	.00	.00	979.00	1324.00	1324.00	1018.00	.0
*	22.220	672.00	1323.08	.51	2.47	1323.54	2.17	.00	979.00	1324.00	1324.00	1018.00	.0
*	22.220	1111.00	1326.12	.33	3.04	1326.45	5.08	.00	979.00	1324.00	1324.00	1018.00	.0
*	22.800	360.00	1321.95	.36	.00	1322.13	.00	.00	960.00	1326.00	1326.60	1025.00	.0
*	22.800	672.00	1323.76	.33	1.81	1323.97	1.84	.00	960.00	1326.00	1326.60	1025.00	.0
	22.800	1111.00	1326.49	.25	2.73	1326.66	4.53	.00	960.00	1326.00	1326.60	1025.00	.0
*	24.050	360.00	1322.94	.59	.00	1323.42	.00	.00	990.00	1324.00	1324.00	1018.00	.0
*	24.050	672.00	1324.43	.58	1.49	1325.07	1.66	.00	990.00	1324.00	1324.00	1018.00	.0
*	24.050	1111.00	1326.68	.48	2.25	1327.36	3.95	.00	990.00	1324.00	1324.00	1018.00	.0
*	25.370	360.00	1324.54	.37	.00	1324.76	.00	.00	981.00	1326.00	1326.00	1018.00	.0
*	25.370	672.00	1326.11	.40	1.56	1326.42	1.66	.00	981.00	1326.00	1326.00	1018.00	.0
*	25.370	1111.00	1327.96	.37	1.85	1328.35	3.59	.00	981.00	1326.00	1326.00	1018.00	.0

1

SUMMARY OF ERRORS AND SPECIAL NOTES

```
WARNING SECNO=     10.000  PROFILE=  1  CONVEYANCE CHANGE OUTSIDE ACCEPTABLE RANGE
WARNING SECNO=     10.000  PROFILE=  2  CONVEYANCE CHANGE OUTSIDE ACCEPTABLE RANGE
WARNING SECNO=     10.000  PROFILE=  3  CONVEYANCE CHANGE OUTSIDE ACCEPTABLE RANGE

WARNING SECNO=     10.320  PROFILE=  1  CONVEYANCE CHANGE OUTSIDE ACCEPTABLE RANGE
WARNING SECNO=     10.320  PROFILE=  2  CONVEYANCE CHANGE OUTSIDE ACCEPTABLE RANGE
WARNING SECNO=     10.320  PROFILE=  3  CONVEYANCE CHANGE OUTSIDE ACCEPTABLE RANGE

WARNING SECNO=     11.420  PROFILE=  1  CONVEYANCE CHANGE OUTSIDE ACCEPTABLE RANGE
WARNING SECNO=     11.420  PROFILE=  2  CONVEYANCE CHANGE OUTSIDE ACCEPTABLE RANGE
WARNING SECNO=     11.420  PROFILE=  3  CONVEYANCE CHANGE OUTSIDE ACCEPTABLE RANGE

WARNING SECNO=     11.820  PROFILE=  1  CONVEYANCE CHANGE OUTSIDE ACCEPTABLE RANGE
WARNING SECNO=     11.820  PROFILE=  2  CONVEYANCE CHANGE OUTSIDE ACCEPTABLE RANGE
WARNING SECNO=     11.820  PROFILE=  3  CONVEYANCE CHANGE OUTSIDE ACCEPTABLE RANGE

WARNING SECNO=     13.770  PROFILE=  1  CONVEYANCE CHANGE OUTSIDE ACCEPTABLE RANGE
WARNING SECNO=     13.770  PROFILE=  2  CONVEYANCE CHANGE OUTSIDE ACCEPTABLE RANGE

WARNING SECNO=     15.770  PROFILE=  1  CONVEYANCE CHANGE OUTSIDE ACCEPTABLE RANGE
WARNING SECNO=     15.770  PROFILE=  2  CONVEYANCE CHANGE OUTSIDE ACCEPTABLE RANGE
WARNING SECNO=     15.770  PROFILE=  3  CONVEYANCE CHANGE OUTSIDE ACCEPTABLE RANGE

WARNING SECNO=     17.770  PROFILE=  2  CONVEYANCE CHANGE OUTSIDE ACCEPTABLE RANGE
WARNING SECNO=     17.770  PROFILE=  3  CONVEYANCE CHANGE OUTSIDE ACCEPTABLE RANGE

CAUTION SECNO=     18.610  PROFILE=  1  CRITICAL DEPTH ASSUMED
CAUTION SECNO=     18.610  PROFILE=  1  MINIMUM SPECIFIC ENERGY
CAUTION SECNO=     18.610  PROFILE=  2  CRITICAL DEPTH ASSUMED
CAUTION SECNO=     18.610  PROFILE=  2  MINIMUM SPECIFIC ENERGY
CAUTION SECNO=     18.610  PROFILE=  3  CRITICAL DEPTH ASSUMED
CAUTION SECNO=     18.610  PROFILE=  3  MINIMUM SPECIFIC ENERGY

WARNING SECNO=     18.870  PROFILE=  1  CONVEYANCE CHANGE OUTSIDE ACCEPTABLE RANGE
WARNING SECNO=     18.870  PROFILE=  2  CONVEYANCE CHANGE OUTSIDE ACCEPTABLE RANGE
WARNING SECNO=     18.870  PROFILE=  3  CONVEYANCE CHANGE OUTSIDE ACCEPTABLE RANGE

CAUTION SECNO=     18.990  PROFILE=  1  CRITICAL DEPTH ASSUMED
CAUTION SECNO=     18.990  PROFILE=  1  MINIMUM SPECIFIC ENERGY
CAUTION SECNO=     18.990  PROFILE=  2  CRITICAL DEPTH ASSUMED
CAUTION SECNO=     18.990  PROFILE=  2  MINIMUM SPECIFIC ENERGY
CAUTION SECNO=     18.990  PROFILE=  3  CRITICAL DEPTH ASSUMED
CAUTION SECNO=     18.990  PROFILE=  3  MINIMUM SPECIFIC ENERGY

WARNING SECNO=     19.570  PROFILE=  1  CONVEYANCE CHANGE OUTSIDE ACCEPTABLE RANGE
WARNING SECNO=     19.570  PROFILE=  2  CONVEYANCE CHANGE OUTSIDE ACCEPTABLE RANGE
WARNING SECNO=     19.570  PROFILE=  3  CONVEYANCE CHANGE OUTSIDE ACCEPTABLE RANGE

CAUTION SECNO=     19.980  PROFILE=  1  CRITICAL DEPTH ASSUMED
CAUTION SECNO=     19.980  PROFILE=  1  MINIMUM SPECIFIC ENERGY
CAUTION SECNO=     19.980  PROFILE=  2  CRITICAL DEPTH ASSUMED
```

1

```
CAUTION SECNO=     19.980  PROFILE=  2  MINIMUM SPECIFIC ENERGY
CAUTION SECNO=     19.980  PROFILE=  3  CRITICAL DEPTH ASSUMED
CAUTION SECNO=     19.980  PROFILE=  3  MINIMUM SPECIFIC ENERGY

CAUTION SECNO=     20.180  PROFILE=  1  CRITICAL DEPTH ASSUMED
CAUTION SECNO=     20.180  PROFILE=  1  MINIMUM SPECIFIC ENERGY
CAUTION SECNO=     20.180  PROFILE=  2  CRITICAL DEPTH ASSUMED
CAUTION SECNO=     20.180  PROFILE=  2  MINIMUM SPECIFIC ENERGY
CAUTION SECNO=     20.180  PROFILE=  3  CRITICAL DEPTH ASSUMED
CAUTION SECNO=     20.180  PROFILE=  3  MINIMUM SPECIFIC ENERGY

CAUTION SECNO=     20.280  PROFILE=  1  CRITICAL DEPTH ASSUMED
CAUTION SECNO=     20.280  PROFILE=  1  MINIMUM SPECIFIC ENERGY
CAUTION SECNO=     20.280  PROFILE=  2  CRITICAL DEPTH ASSUMED
CAUTION SECNO=     20.280  PROFILE=  2  MINIMUM SPECIFIC ENERGY
CAUTION SECNO=     20.280  PROFILE=  3  CRITICAL DEPTH ASSUMED
CAUTION SECNO=     20.280  PROFILE=  3  MINIMUM SPECIFIC ENERGY

CAUTION SECNO=     20.380  PROFILE=  1  CRITICAL DEPTH ASSUMED
CAUTION SECNO=     20.380  PROFILE=  1  MINIMUM SPECIFIC ENERGY
CAUTION SECNO=     20.380  PROFILE=  2  CRITICAL DEPTH ASSUMED
CAUTION SECNO=     20.380  PROFILE=  2  MINIMUM SPECIFIC ENERGY
CAUTION SECNO=     20.380  PROFILE=  3  CRITICAL DEPTH ASSUMED
CAUTION SECNO=     20.380  PROFILE=  3  MINIMUM SPECIFIC ENERGY

CAUTION SECNO=     20.480  PROFILE=  1  CRITICAL DEPTH ASSUMED
CAUTION SECNO=     20.480  PROFILE=  1  MINIMUM SPECIFIC ENERGY
CAUTION SECNO=     20.480  PROFILE=  2  CRITICAL DEPTH ASSUMED
CAUTION SECNO=     20.480  PROFILE=  2  MINIMUM SPECIFIC ENERGY
CAUTION SECNO=     20.480  PROFILE=  3  CRITICAL DEPTH ASSUMED
CAUTION SECNO=     20.480  PROFILE=  3  MINIMUM SPECIFIC ENERGY

CAUTION SECNO=     20.580  PROFILE=  2  CRITICAL DEPTH ASSUMED
CAUTION SECNO=     20.580  PROFILE=  2  MINIMUM SPECIFIC ENERGY
CAUTION SECNO=     20.580  PROFILE=  3  CRITICAL DEPTH ASSUMED
CAUTION SECNO=     20.580  PROFILE=  3  MINIMUM SPECIFIC ENERGY

WARNING SECNO=     20.780  PROFILE=  1  CONVEYANCE CHANGE OUTSIDE ACCEPTABLE RANGE
CAUTION SECNO=     20.780  PROFILE=  2  CRITICAL DEPTH ASSUMED
CAUTION SECNO=     20.780  PROFILE=  2  MINIMUM SPECIFIC ENERGY
CAUTION SECNO=     20.780  PROFILE=  3  CRITICAL DEPTH ASSUMED
CAUTION SECNO=     20.780  PROFILE=  3  MINIMUM SPECIFIC ENERGY

CAUTION SECNO=     20.980  PROFILE=  2  CRITICAL DEPTH ASSUMED
CAUTION SECNO=     20.980  PROFILE=  2  MINIMUM SPECIFIC ENERGY
CAUTION SECNO=     20.980  PROFILE=  3  CRITICAL DEPTH ASSUMED
CAUTION SECNO=     20.980  PROFILE=  3  MINIMUM SPECIFIC ENERGY

CAUTION SECNO=     21.180  PROFILE=  2  CRITICAL DEPTH ASSUMED
CAUTION SECNO=     21.180  PROFILE=  2  MINIMUM SPECIFIC ENERGY
CAUTION SECNO=     21.180  PROFILE=  3  CRITICAL DEPTH ASSUMED
CAUTION SECNO=     21.180  PROFILE=  3  MINIMUM SPECIFIC ENERGY

WARNING SECNO=     21.480  PROFILE=  1  CONVEYANCE CHANGE OUTSIDE ACCEPTABLE RANGE
```



```
WARNING SECNO=     21.480  PROFILE=  2  CONVEYANCE CHANGE OUTSIDE ACCEPTABLE RANGE
WARNING SECNO=     21.480  PROFILE=  3  CONVEYANCE CHANGE OUTSIDE ACCEPTABLE RANGE

WARNING SECNO=     21.580  PROFILE=  3  CONVEYANCE CHANGE OUTSIDE ACCEPTABLE RANGE

WARNING SECNO=     21.880  PROFILE=  1  CONVEYANCE CHANGE OUTSIDE ACCEPTABLE RANGE
WARNING SECNO=     21.880  PROFILE=  2  CONVEYANCE CHANGE OUTSIDE ACCEPTABLE RANGE
WARNING SECNO=     21.880  PROFILE=  3  CONVEYANCE CHANGE OUTSIDE ACCEPTABLE RANGE

WARNING SECNO=     22.220  PROFILE=  1  CONVEYANCE CHANGE OUTSIDE ACCEPTABLE RANGE
WARNING SECNO=     22.220  PROFILE=  2  CONVEYANCE CHANGE OUTSIDE ACCEPTABLE RANGE
WARNING SECNO=     22.220  PROFILE=  3  CONVEYANCE CHANGE OUTSIDE ACCEPTABLE RANGE

WARNING SECNO=     22.800  PROFILE=  1  CONVEYANCE CHANGE OUTSIDE ACCEPTABLE RANGE
WARNING SECNO=     22.800  PROFILE=  2  CONVEYANCE CHANGE OUTSIDE ACCEPTABLE RANGE

WARNING SECNO=     24.050  PROFILE=  1  CONVEYANCE CHANGE OUTSIDE ACCEPTABLE RANGE
WARNING SECNO=     24.050  PROFILE=  2  CONVEYANCE CHANGE OUTSIDE ACCEPTABLE RANGE
WARNING SECNO=     24.050  PROFILE=  3  CONVEYANCE CHANGE OUTSIDE ACCEPTABLE RANGE

WARNING SECNO=     25.370  PROFILE=  1  CONVEYANCE CHANGE OUTSIDE ACCEPTABLE RANGE
WARNING SECNO=     25.370  PROFILE=  2  CONVEYANCE CHANGE OUTSIDE ACCEPTABLE RANGE
WARNING SECNO=     25.370  PROFILE=  3  CONVEYANCE CHANGE OUTSIDE ACCEPTABLE RANGE
```

DETENTION BASIN

10th Street Wash Detention Basin #1
Water Surface Elevation-Storage Relationship
Proposed Basin Configuration

Stanley Consultants
Date: 3/15/95
Designed By: SW
Checked By: GSS

Elevation	Surface Area (acre)	Average Surface Area (acre)	Difference in Elevation (ft)	Interval Storage (acre-ft)	Storage (acre-ft)	Storage (cu. ft.)
1306.80	0.001				0.000	0
		0.03	0.20	0.01		
1307.00	0.062				0.006	274
		0.28	1.00	0.28		
1308.00	0.491				0.283	12,319
		0.82	1.00	0.82		
1309.00	1.149				1.103	48,038
		1.49	1.00	1.49		
1310.00	1.837				2.596	113,073
		1.88	1.00	1.88		
1311.00	1.926				4.477	195,031
		1.97	1.00	1.97		
1312.00	2.015				6.448	280,866
		2.06	1.00	2.06		
1313.00	2.104				8.507	370,578
		2.15	1.00	2.15		
1314.00	2.193				10.656	464,167
		2.24	1.00	2.24		
1315.00	2.282				12.893	561,632
		2.33	1.00	2.33		
1316.00	2.371				15.220	662,974
		2.42	1.00	2.42		
1317.00	2.460				17.635	768,194
		2.50	1.00	2.50		
1318.00	2.549				20.140	877,290
		2.59	1.00	2.59		
1319.00	2.638				22.733	990,263
		2.68	1.00	2.68		
1320.00	2.727				25.416	1,107,112

SURFACE AREAS ARE BASED ON PRELIMINARY CONTOUR ELEVATIONS OF PROPOSED BASIN GRADING. A DIGITAL PLANIMETER WAS USED TO CALCULATE THE AREAS. SEE BASIN GRADING PLAN.

EAST TRIBUTARY INLET

DESIGNED BY SW DATE 3/10/95 SHEET NO. 1 PAGE NO.
CHECKED BY [illegible] DATE 3-21-95 OF 10 JOB NO. 12183
REVIEWED BY DATE SUBJECT:
APPROVED BY DATE

EAST TRIBUTARY INLET

RATING CURVE: 30" CMP AND INLET WEIR

30" CMP INLET CONTROL

INV EL 1316.80 (EXISTING INV AND LOCATION MAINTAIN FOR PROPOSED CONDITION)

BYPASS FLOWS H = 1321 − 1316.8 = 4.2 ft

FLOMC DRAINAGE DESIGN MANUAL VOLUME II HYDRAULICS p. 156
FIG 4.54 SCALE 1

HW/D = 1.68 D = 30" Q = 40 cfs

PEAK FLOW H = 1323 − 1316.8 = 6.2 ft
HW/D = 2.48 D = 30" Q = 50 cfs

OUTLET CONTROL: CHECK HYDRAULIC GRADELINE

TAILWATER ESTIMATED FROM PROPOSED CONDITION HEC-2 WSEL BETWEEN CROSS SECTIONS 17.77 AND 18.61 FOR 100 YR STORM.

17.77 WSEL = 1313.10
18.61 WSEL = 1315.69 AVE = 1314.40

EXIST OUTLET INV ELEV = 1312.90
PROPOSED OUTLET INV ELEV = 1313.25

$d_c = 1.8$ $\frac{d_c + D}{2} = \frac{1.8 + 2.5}{2} = 2.15$ 1313.25 + 2.15 = 1315.40

REFER TO FOLLOWING PAGES FOR HYDRAULICS AND RATING CURVE.

OUTLET CONTROLS 30" CMP

SC 3020

$Q = 29$ cfs FOR PEAK 30" CMP

MAX WSEL HEADWATER ELEV 1323

TAILWATER = HEC-2 = 1314.4 $\frac{d_c + D}{2} = 2.15 + 1313.25 = 1315.4$

LOSS COEF FROM "HANDBOOK OF HYDRAULICS" KING & BRATER CH. 6

$S_f = \left(\frac{Qn}{1.486AR^{2/3}}\right)^2$; $n = 0.024$

$Q = VA$; for $Q > 22$ cfs

POINT	STATION	REACH DESCRIPTION	ENERGY GRADE LINE ELEVATION	HYDRAULIC GRADE LINE ELEVATION	HEAD LOSS CALCULATION
		$\frac{d_c+D}{2} + 1313.25 = 1315.40$			
1	0+00	OUTLET LOSS $Q = 29$ cfs $V = 5.91$ ft/s $\frac{v^2}{2g} = 0.54$	1315.40	1315.40	$Loss_{EXIT} = \frac{v^2}{2g} = 0.54$ (ASSUME $V_2 = 0$)
1	0+00	FRICTION LOSS L=100' $S_f = \left(\frac{29}{122}\right)^2 = 0.0170$	1316.48	1315.94	$Loss_{fr} = 100(0.0170) = 1.7'$
2	100+00	BEND 30° (APPROX)	1318.18	1317.64	$Loss_B = 0.23(v^2/2g) = 0.23(.54) = 0.12'$
2	100+00	FRICTION LOSS L = 280' $S_f = 0.0170$	1318.30	1317.76	$Loss_{fr} = 280(0.017) = 4.76'$
3	380+00	ENTRANCE LOSS	1323.06	1322.52	$Loss_{ent} = 0.5(0.54) = 0.27$
3	380+00		1323.33	1322.79	

USE 29 cfs AS MAX 30" CMP FLOW RATE

DESIGNED BY SW DATE 3/10/95 SHEET NO. 2 PAGE NO.
CHECKED BY [illegible] DATE 3-21-95 OF 10 JOB NO. 12182
REVIEWED BY DATE SUBJECT:
APPROVED BY DATE

TRY Q = 25 cfs FOR FLOWS OCCURRING UP TO INLET WEIR CREST = 1321.00

$\frac{d_c + D}{2}$ + INV ELEV = 1315.40 (BYPASS FLOWS)

POINT	STATION	REACH DESCRIPTION	ENERGY GRADE LINE ELEVATION	HYDRAULIC GRADE LINE ELEVATION	HEAD LOSS CALCULATION
1	0+00	$\frac{d_c+D}{2}$ + INV ELEV = 1315.40	1315.40	1315.40	
1	0+00	OUTLET LOSS Q = 25 cfs V = 5.09 ft/s $\frac{V^2}{2g}$ = 0.40	1316.20	1315.80	$Loss_{EXIT} = \frac{V^2}{2g} = 0.40$
2	100+00	FRICTION LOSS L = 100' $S_f = (25/222)^2 = 0.0127$	1317.47	1317.07	$Loss_{fr} = 100(0.0127) = 1.27'$
2	100+00	BEND 30°	1317.56	1317.16	$Loss_{bend} = 0.23(0.40) = 0.09'$
3	380+00	FRICTION LOSS L = 280' S_f = 0.0127	1321.12	1320.72	$Loss_{fr} = 280(0.0127) = 3.56'$
3	380+00	ENTRANCE LOSS	1321.32	1320.92	$Loss_{ent} = 0.5(.40) = 0.20$

FLOWS UP TO 25 cfs will bypass inlet (basin).

(SEE NEXT SHEET FOR WEIR HYDRAULICS AND RATING CURVE)

DESIGNED BY SW DATE 3/10/95 SHEET NO. 3 PAGE NO.
CHECKED BY LSS DATE 3-21-95 OF 10 JOB NO. 12103
REVIEWED BY DATE SUBJECT:
APPROVED BY DATE

DESIGNED BY SW DATE 3/10/95 SHEET NO. 4 PAGE NO.
CHECKED BY GSB DATE 3-21-95 OF 10 JOB NO. 12183
REVIEWED BY DATE SUBJECT:
APPROVED BY DATE

INLET WEIR HYDRAULICS

$Q = C P H^{3/2}$; $C = 3.0$ (FHWA HEC-12 p. 69)

* $P = 34$ ft (30 ft FRONT AND 4 ft EAST END)

* CLOGGING POTENTIAL IS LOW DUE TO THE CONFIGURATION OF THE INLET AND 30" CMP LOW FLOW. THE GRATE IS NOT AT GRADE AND THEREFORE IS SUBJECT TO ONLY FLOATING OBJECTS. ALSO FREQUENT EVENTS (UP TO APPROX 2YR) ARE CONVEYED BY THE 30" CMP STORM DRAIN. THE BAR SPACING IS APPROX 6" ON CENTER, WIDER THAN THAT CONSIDERED ACCEPTABLE FOR ROADWAY GRATES (NO BICYCLE REQUIREMENTS). FOR THESE REASONS A LOW PERCENTAGE CLOGGING FACTOR IS USED. 15% OF THE TOTAL PERIMETER LENGTH WILL BE SUBTRACTED TO ACCOUNT FOR CLOGGING POTENTIAL.

EFFECTIVE WEIR LENGTH = 29 ft

WEIR CREST ELEVATION 1321
MAX HWSEL 1323

RATING CURVE BASED ON 0.5' INCREMENTS ABOVE 1321

ELEV	PIPE (DQ)	INLET WEIR (DI-DQ)	TOTAL (DI)
1321	25 cfs	0 cfs	25 cfs
1321.5	26 cfs	31 cfs	57 cfs
1322.0	27 cfs	87 cfs	114 cfs
1322.5	28 cfs	160 cfs	188 cfs
1323.0	29 cfs	246 cfs	275 cfs

DI/DQ VALUES ARE USED IN PROPOSED HEC-1 MODELS.

DESIGNED BY SW DATE 3/10/95 SHEET NO. 5 PAGE NO.
CHECKED BY GSB DATE 3-21-95 OF 10 JOB NO. 12183
REVIEWED BY DATE SUBJECT:
APPROVED BY DATE

EAST TRIBUTARY INLET PIPES

2 - 60" RCP STORM DRAIN

PEAK FLOW INTO BASIN IS 246 cfs OR 123 cfs EACH.

(REFER TO PLAN SHEET FOR EAST TRIBUTARY PLAN/PROFILE.)

INLET CONTROL FOR 60" RCP (D = 5')

HWSEL = 1320.5 (6" BELOW WEIR CREST)

INV ELEV = 1315.50

HW/D = 5/5 = 1.0

DRAINAGE DESIGN MANUAL VOL II
FIG 4.53 p. 155
SCALE 1

Q = 125 cfs ok

OUTLET CONTROL: CHECK HYDRAULIC GRADE LINE FOR BASIN WSEL AND INFLOW.

USE HYDROGRAPH ORDINATES TO ESTIMATE QUANTITY OF FLOW CARRIED IN PIPE AND BASIN STAGE.

TWO CRITICAL POINTS WILL BE CHECKED

1.) PEAK INFLOW AND CORRESPONDING BASIN STAGE;

2.) MAX BASIN STAGE AND CORRESPONDING INFLOW.

OPEN CHANNEL FLOW OCCURS FOR THE PEAK INFLOW FOR BOTH PIPE SEGMENTS. TAILWATER EFFECTS AND LOSSES DO NOT EXCEED THE PIPE CAPACITY UPSTREAM OF THE BEND. PRESSURE FLOW IS NOT EXPERIENCED. REFER TO THE FOLLOWING PAGES FOR NORMAL DEPTH HYDRAULICS.

ENERGY GRADE CALCULATION: NORMAL DEPTH (HYD GRADE LINE) IN PIPE PLUS ENTRANCE LOSS AND VELOCITY HEAD SHOULD GIVE REQUIRED WSEL.

INV ELEV = 1315.50

DEPTH = 3.61, V = 8.1 ft/s $V^2/2g$ = 1.02 END LOSS = $0.5 \frac{V^2}{2g}$

WSEL = INV + DEPTH + $0.5(\frac{V^2}{2g})$ + $V^2/2g$

= 1315.50 + 3.61 + 1.5(1.02) = 1320.64 ok

SC 3020

SW 3/10/95
GSB 3-21-95
6/10

Circular Channel Analysis & Design
Solved with Manning's Equation

Open Channel - Uniform flow

Worksheet Name: 10TH STREET WASH

Comment: EAST TRIBUTARY INLET 60" RCP - FLAT SLOPE

Solve For Actual Depth

Given Input Data:

Diameter.....	5.00 ft
Slope.....	0.0025 ft/ft
Manning's n.....	0.012
Discharge.....	123.00 cfs

Computed Results:

Depth.....	3.61 ft
Velocity.....	8.10 fps
Flow Area.....	15.19 sf
Critical Depth....	3.17 ft
Critical Slope....	0.0036 ft/ft
Percent Full.....	72.26 %
Full Capacity.....	141.07 cfs
QMAX @.94D.....	151.75 cfs
Froude Number.....	0.77 (flow is Subcritical)

Open Channel Flow Module, Version 3.21 (c) 1990
Haestad Methods, Inc. * 37 Brookside Rd * Waterbury, Ct 06708

SW 3/10/95
CS 3-21-95
7/10

Circular Channel Analysis & Design
Solved with Manning's Equation

Open Channel - Uniform flow

Worksheet Name: 10TH STREET WASH

Comment: EAST TRIBUTARY INLET 60" RCP - STEEP SLOPE

Solve For Actual Depth

Given Input Data:

Diameter.....	5.00 ft
Slope.....	0.1600 ft/ft
Manning's n.....	0.012
Discharge.....	123.00 cfs

Computed Results:

Depth.....	1.11 ft
Velocity.....	37.69 fps
Flow Area.....	3.26 sf
Critical Depth....	3.17 ft
Critical Slope....	0.0036 ft/ft
Percent Full.....	22.29 %
Full Capacity.....	1128.58 cfs
QMAX @.94D.....	1214.03 cfs
Froude Number.....	7.50 (flow is Supercritical)

Open Channel Flow Module, Version 3.21 (c) 1990
Haestad Methods, Inc. * 37 Brookside Rd * Waterbury, Ct 06708

DESIGNED BY SW DATE 3/10/95 SHEET NO. 8 PAGE NO.
CHECKED BY GSB DATE 3-21-95 OF 10 JOB NO. 12183
REVIEWED BY DATE SUBJECT:
APPROVED BY DATE

EAST TRIBUTARY INLET OUTFALL

TWO DESIGN CONDITIONS ARE CONSIDERED:

1. HYDRAULIC JUMP OCCURRENCE FROM SUPER-CRITICAL PIPE FLOW TO SUB-CRITICAL BASIN CHANNEL FLOW.

2. BASIN STAGE, PIPE INFLOW AND LOW FLOW CHANNEL CAPACITY RELATIONSHIP.

HYDRAULIC JUMP

THE OUTFALL OF THE PIPES WILL REQUIRE AN ENERGY DISSIPATION STRUCTURE. THE STRUCTURE WILL MOST LIKELY CONSIST OF SEVERAL ROWS (3) OF BAFFLE BLOCKS LOCATED WITHIN THE CONCRETE APRON. THE OUTFALL DOES NOT PERFORM AS A STANDARD STILLING BASIN OR BAFFLED CHUTE SPILLWAY. THE STILLING BASIN DESIGN REQUIRES THE USE OF TAILWATER EQUAL, PREFERABLY, TO THE CONJUGATE DEPTH. FOR THE LOWER BASIN STAGES, THE TAILWATER IS SIGNIFICANTLY BELOW THE REQUIRED DEPTH.

THE BAFFLED CHUTE SPILLWAY IS NOT INTENDED TO CONVERT SUPER-CRITICAL FLOW TO SUB-CRITICAL BUT RATHER TO PREVENT SUPER-CRITICAL FLOW FROM OCCURRING ON STEEP SLOPES (CHUTES).

IT IS ANTICIPATED THAT THE PRINCIPALS OF AN IMPACT STILLING BASIN THROUGH THE USE OF BAFFLES WILL BE IMPLEMENTED. THREE ROWS OF BAFFLES INCREASING IN HEIGHT DOWNSTREAM OF THE CULVERT WILL BE STAGGERED TO DISSIPATE ENERGY PRIOR TO THE TRAPEZOIDAL LOW FLOW CHANNEL. FINAL CALCULATIONS WILL CONCLUDE UPON 60% SUBMITTAL REVIEW.

DESIGNED BY SW DATE 3/10/95 SHEET NO. 9 PAGE NO.
CHECKED BY GSB DATE 3-21-95 OF 10 JOB NO. 12183
REVIEWED BY DATE SUBJECT:
APPROVED BY DATE

EAST TRIBUTARY INLET OUTFALL (CONT)

LOW FLOW CHANNEL CAPACITY

THE PURPOSE OF THE LOW FLOW CHANNEL IS TO PROVIDE A DEFINED PATH FOR FLOWS TO REACH THE OUTLET AND TO PROTECT THE BASIN BOTTOM AND FUTURE TENNIS COURTS FROM EXCESSIVE SCOUR AND/OR SEDIMENT ACCUMULATION.

THE HYDROGRAPH ORDINATES OF DET 142 AND OUT 141 FROM THE PROPOSED HEC-1 MODEL (12183 HID) ARE USED TO COMPARE BASIN STAGE AND EAST TRIBUTARY INFLOW.

ORD	BASIN STAGE	INFLOW
74	1307.3	42 cfs
75	1308.1	72 cfs
76	1308.6	105 cfs
77	1309.2	135 cfs
78	1309.8	160 cfs
79	1310.5	182 cfs

THE CAPACITY OF THE UNED LOW FLOW CHANNEL IS 97 cfs (REFER TO CALC SHEET NEXT PAGE)

THEREFORE, FOR SEVERAL ORDINATES THE INFLOW EXCEEDS THE CAPACITY OF THE LOW FLOW CHANNEL (3 MIN ORDINATES) A CROSS SECTION TAKEN AT THE UPSTREAM END OF THE LOW FLOW CHANNEL IS REPRESENTED IN THE SINGLE CROSS SECTION HEC-2 RUN ON THE FOLLOWING PAGES. THE FLOW CORRESPONDS TO A BASIN STAGE OF 1310.0 (DROWNED OUT) THE FLOW THAT EXCEEDS THE CAPACITY OF THE LOW FLOW CHANNEL IS CONTAINED WITHIN THE TENNIS COURT SIDE SLOPE AND BASIN SIDE SLOPE. THE HEC-2 CROSS SECTION INDICATES OUT OF BANK VELOCITIES ON THE ORDER OF 1.0 ft/s, WELL BELOW ACCEPTABLE VELOCITIES FOR THE SLOPES ENCOUNTERED.

THEREFORE, THE BASIN STAGE DROWNS OUT THE LOW FLOW CHANNEL PREVENTING FLOWS FROM SHEETING ACROSS THE BASIN BOTTOM.

Trapezoidal Channel Analysis & Design
Open Channel - Uniform flow

SW 3/10/95
GSB 3-21-95
10/10

Worksheet Name: 10TH STREET WASH

Comment: BASIN LOW FLOW CHANNEL - EAST TRIBUTARY

Solve For Discharge

Given Input Data:

Bottom Width.....	10.00 ft
Left Side Slope..	3.00:1 (H:V)
Right Side Slope.	3.00:1 (H:V)
Manning's n.....	0.018
Channel Slope....	0.0025 ft/ft
Depth.....	1.50 ft

Computed Results:

Discharge.....	96.60 cfs
Velocity.....	4.44 fps
Flow Area.....	21.75 sf
Flow Top Width...	19.00 ft
Wetted Perimeter.	19.49 ft
Critical Depth...	1.25 ft
Critical Slope...	0.0049 ft/ft
Froude Number....	0.73 (flow is Subcritical)

Open Channel Flow Module, Version 3.21 (c) 1990
Haestad Methods, Inc. * 37 Brookside Rd * Waterbury, Ct 06708

```
1*****************************************
 *  HEC-2 WATER SURFACE PROFILES          *
 *                                        *
 *  Version   4.6.2;  May 1991            *
 *                                        *
 *  RUN DATE    16MAR95    TIME   11:17:06 *
 *****************************************
```

```
*************************************
* U.S. ARMY CORPS OF ENGINEERS
* HYDROLOGIC ENGINEERING CENTER
* 609 SECOND STREET, SUITE D
* DAVIS, CALIFORNIA 95616-4687
*        (916) 756-1104
*************************************
```

```
X     X  XXXXXXX   XXXXX              XXXXX
X     X  X        X     X            X     X
X     X  X        X                        X
XXXXXXX  XXXX     X          XXXXX    XXXXX
X     X  X        X                  X
X     X  X        X     X            X
X     X  XXXXXXX   XXXXX             XXXXXXX
```

```
1
   16MAR95      11:17:06                                                                    PAGE    1
```

```
                                                                  THIS RUN EXECUTED 16MAR95    11:17:06
*************************************
 HEC-2 WATER SURFACE PROFILES

 Version   4.6.2;  May 1991
*************************************
```

```
T1      10TH STREET WASH                    STANLEY CONSULTANTS PROJECT # 12183
T2      BASIN NO. 1                                          FILENAME: 12183LOW
T3      LOW FLOW CHANNEL SUBCRITICAL FLOW
T4

J1  ICHECK    INQ       NINV      IDIR      STRT      METRIC    HVINS     Q         WSEL      FQ

                2                           .0025                                   1309.8

J2  NPROF     IPLOT     PRFVS     XSECV     XSECH     FN        ALLDC     IBW       CHNIM     ITRACE

     1                  -1                                      -1

J3  VARIABLE CODES FOR SUMMARY PRINTOUT

    38        43         1         2        13        55        16        14        26        17
    15        56        18                  38        43         1        25        42         8
    39        27        53        54        28         4        37                  38        43
     1        68        50         3        61        27        21        23        24        22
    28

NC    0.025     0.025     0.018       0.1       0.3
QT        1       166
X1     1.00         6     990.5    1009.5
GR     1310     980.5    1309.5     990.5      1308       995      1308      1005    1309.5    1009.5
GR   1310.5    1012.5
1
   16MAR95      11:17:06                                                                    PAGE    2

    SECNO     DEPTH     CWSEL     CRIWS     WSELK     EG        HV        HL        OLOSS     L-BANK ELEV
    Q         QLOB      QCH       QROB      ALOB      ACH       AROB      VOL       TWA       R-BANK ELEV
    TIME      VLOB      VCH       VROB      XNL       XNCH      XNR       WTN       ELMIN     SSTA
    SLOPE     XLOBL     XLCH      XLOBR     ITRIAL    IDC       ICONT     CORAR     TOPWID    ENDST

*PROF 1

CRITICAL DEPTH TO BE CALCULATED AT ALL CROSS SECTIONS

CCHV=     .100 CEHV=     .300
*SECNO 1.000
     1.000      1.93   1309.93   1309.72   1309.80   1310.39       .46       .00       .00   1309.50
     166.0       1.9     163.8        .3       1.8      29.9        .3        .0        .0   1309.50
       .00      1.06      5.49      1.02      .025      .018      .025      .000   1308.00    981.96
   .002499        0.        0.        0         0         8         5       .00     28.82   1010.78

1
   16MAR95      11:17:06                                                                    PAGE    3
```

```
                                                                  THIS RUN EXECUTED 16MAR95    11:17:06
*************************************
 HEC-2 WATER SURFACE PROFILES

 Version   4.6.2;  May 1991
*************************************
```

NOTE- ASTERISK (*) AT LEFT OF CROSS-SECTION NUMBER INDICATES MESSAGE IN SUMMARY OF ERRORS LIST

LOW FLOW CHANNEL SUBCRIT

SUMMARY PRINTOUT

SECNO	Q	CWSEL	CRIWS	QLOB	VLOB	K*XNL	QCH	VCH	K*XNCH	QROB	VROB	K*XN
1.000	166.00	1309.93	1309.72	1.93	1.06	25.00	163.79	5.49	18.00	.28	1.02	25.0

1

16MAR95 11:17:06 PAGE 4

LOW FLOW CHANNEL SUBCRIT

SUMMARY PRINTOUT

SECNO	Q	CWSEL	AREA	ELMIN	DEPTH	XLCH	STENCL	SSTA	ENDST	STENCR	TOPWID	TWA
1.000	166.00	1309.93	31.96	1308.00	1.93	.00	.00	981.96	1010.78	.00	28.82	.0

1

16MAR95 11:17:06 PAGE 5

LOW FLOW CHANNEL SUBCRIT

SUMMARY PRINTOUT

SECNO	Q	CWSEL	FRCH	DIFWSP	EG	DIFEG	STENCL	STCHL	XLBEL	RBEL	STCHR	STENC
1.000	166.00	1309.93	.77	.00	1310.39	.00	.00	990.50	1309.50	1309.50	1009.50	.0

1

16MAR95 11:17:06 PAGE 6

SUMMARY OF ERRORS AND SPECIAL NOTES

WEST TRIBUTARY INLET

DESIGNED BY SW DATE 3/10/95 SHEET NO. 1 PAGE NO.
CHECKED BY GSD DATE 3-21-95 OF 6 JOB NO. 12183
REVIEWED BY DATE SUBJECT:
APPROVED BY DATE

WEST TRIBUTARY INLET

THE WEST TRIBUTARY INLET CONSISTS OF AN IMPROVED CHANNEL REACH WITH A SIDE WEIR LOCATED APPROXIMATELY IN THE MIDDLE. THE SIDE WEIR IS LOCATED APPROXIMATELY 330' UPSTREAM FROM THE BASIN.

THE WEIR HYDRAULICS ARE ESTIMATED BY HEC-2 SPLIT FLOW ROUTING UTILIZING THE WEIR EQUATION. THE LOCATION, ORIENTATION, AND SIZE OF THE WEIR STRUCTURE HAS EVOLVED FROM SEVERAL CONCEPTUAL CONFIGURATIONS AND MANY OPTIMIZATIONS OF THE BASIN, INLETS, OUTLETS, AND OTHER CONSTRAINTS.

SOME OF THE MAJOR DESIGN CONSIDERATIONS ARE BELOW:

1.) WEIR CREST ELEVATION IS EQUAL TO OR GREATER THAN THE BASIN HIGH WATER SURFACE ELEVATION FOR THE FINAL PROPOSED HEC-1 MODEL. THIS REMOVES THE POSSIBILITY OF THE INLET ACTING AS AN OUTLET ON THE RECEDING LIMB OF HYDROGRAPHS. MAXIMIZES BASIN HWSEL.

2.) WHILE MAINTAINING #1 ABOVE, KEEP INLET AS CLOSE TO BASIN AS POSSIBLE. THIS KEEPS LENGTH OF PIPES/IMPROVEMENTS AS WELL AS COSTS DOWN. ALSO, THE EXISTING DRAINAGE EASEMENT ENDS NEAR THE PROPOSED UPSTREAM LIMIT OF THE IMPROVEMENTS.

3.) MINIMIZE EFFECTS ON THE UPSTREAM WSEL. NET INCREASE IS LESS THAN 0.10'.

4.) MINIMIZE R.O.W. REQUIREMENTS AND WASH IMPROVEMENTS.

5.) DOWNSTREAM FLOW CONDITIONS RETURNED TO EXISTING CONDITIONS

SC 3020

DESIGNED BY SW DATE 3/10/95 SHEET NO. 2 PAGE NO.
CHECKED BY CSB DATE 3-21-95 OF 6 JOB NO. 12183
REVIEWED BY DATE SUBJECT:
APPROVED BY DATE

THE HEC-2 MODEL FOR PROPOSED CONDITIONS INCLUDES 3 PROFILES; 10YR 6HR, 100YR 6HR, AND 100YR 2HR (EMERG)

THE FLOW SPLIT FOR THE HEC-1 MODEL IS GENERATED BY RUNNING THE INCREMENTAL FLOW RATES (DI) IN THE PROPOSED HEC-2 MODEL AND REFLECTING THE BYPASS FLOWS (DQ) ACCORDINGLY.

THE WEIR EQUATION IN HEC-2 USES THE FOLLOWING PARAMETERS:

C = 3.0 (FHWA HEC-12 p.69)

L = 33' (PER 20' SECTION OF WEIR)

THE ACTUAL LENGTH IS APPROXIMATELY 120' (60' EACH SIDE). THE REDUCED LENGTH ACCOUNTS FOR POTENTIAL CLOGGING OF THE GRATED INLETS. SIMILAR TO THE EAST TRIBUTARY, THE CLOGGING POTENTIAL IS RELATIVELY LOW. THE GRATES ARE SLOPED TOWARDS THE CHANNEL, THEY ARE SET ABOVE THE FLOW LINE BY APPROX 3.34' (LOW FLOWS ≈ 2YR BYPASS STRUCTURE), AND THERE IS NO OBSTRUCTION IN THE WEIR REACH OF CHANNEL FOR WHICH DEBRIS TO COLLECT ON OR UPSTREAM OF.

15% OF THE TOTAL LENGTH WILL BE SUBTRACTED FOR CLOGGING POTENTIAL. OUT OF 120', 100' OF WEIR IS EFFECTIVE.

WEIR CREST 1319.0
HWSEL 1323.0
FE ELEV VARIES 1315.75 TO 1315.66 (S = 0.0015 FT/FT)

THE RESULTS OF THE HEC-2 FLOW SPLIT HAVE BEEN CHECKED BY HAND AS WELL. A SAMPLE CALCULATION FOR THE PEAK FLOW IS ON THE NEXT PAGE. THE FLOW SPLIT IS WELL BEHAVED FOR MOST FLOWS. THE FLOW RATES ABOVE APPROX. 400cfs ARE MODELLED AS EXPERIENCING SUPER-CRITICAL FLOW WITHIN THE WEIR SECTION AND DOWNSTREAM. PRELIMINARY SUPER-CRITICAL FLOW MODELS HAVE BEEN MADE TO ESTIMATE THE CHANNEL VELOCITIES AND F_r NUMBERS.

V_{MAX} = 15 FT/S

F_r = 2.4

SC 3020

DESIGNED BY SW DATE 3/15/95 SHEET NO. 3 PAGE NO.
CHECKED BY CSB DATE 3-21-95 OF 6 JOB NO. 12183
REVIEWED BY DATE SUBJECT:
APPROVED BY DATE

BETWEEN XSECT 21.18 AND 20.98

$Q = CLH^{3/2}$ $C = 3.0$ CREST ELEV 1319.0
$L = 33'$

XSECT 21.18 WSEL = 1320.33
XSECT 20.98 WSEL = 1319.96
AVE WSEL = 1320.15

HEAD = 1320.15 − 1319.00 = 1.15'

$Q = 3.0(33)(1.15)^{3/2} = 122$ cfs

HEC-2 FLOW RATE AT XSECT 21.18 = 672 cfs
FLOW RATE AT XSECT 20.98 = 550 cfs

HEC-2 WEIR PERFORMANCE 672 − 550 = 122 cfs = 122 cfs

ok

THIS DECREASE IN FLOW IN THE WEIR REACH CAUSES SIGNIFICANT DRAW DOWN AND SUPER-CRITICAL FLOW.

THE DRAWDOWN CAUSED BY THE WEIR OPERATION IS ESTIMATED FROM HAND CALCULATIONS PERFORMED IN THE CONCEPTUAL REPORT AND THE WSEL PROFILE THROUGH THE CHANNEL WITHOUT THE WEIR OPERATING. FOR THE PEAK FLOW RATE THERE IS APPROX. 1.0 FT OF DRAW DOWN.

THE SUPER-CRITICAL FLOW SHOULD NOT REDUCE THE OVERALL PERFORMANCE OF THE WEIR INLET. HOWEVER MEASURES MUST BE TAKEN DOWNSTREAM FROM THE WEIR TO REDUCE THE VELOCITIES AND FORCE THE FLOW BACK TO SUB-CRITICAL. FOR THE LOW F_r OF 2.4 A DEFINED JUMP WILL NOT OCCUR. RATHER A PRE-JUMP WILL OCCUR PRODUCING MINOR ROLLERS AND SURFACE TURBULENCE. THE LOSS OF ENERGY WILL NOT PRODUCE SIGNIFICANTLY HIGHER WSELS OR REQUIRE EXTENSIVE MEANS TO CONVERT THE FLOW BACK TO EXISTING CONDITIONS. PRELIMINARY DESIGN EFFORTS HAVE FOCUSED ON A COMBINATION OF STILLING BASIN AND BAFFLED CHUTE SPILLWAY PRINCIPLES. SEVERAL ROWS OF BAFFLE BLOCKS WILL BE LOCATED APPROX. 20 FT DOWNSTREAM OF THE WEIR. FINAL SIZING, PROPORTIONS, AND LOCATIONS ARE NOT SET.

DESIGNED BY SW DATE 3/15/95 SHEET NO. 4 PAGE NO.
CHECKED BY CSB DATE 3-21-95 OF 6 JOB NO. 12183
REVIEWED BY DATE SUBJECT:
APPROVED BY DATE

WEST TRIBUTARY INLET PIPES

2 - 60" RCP STORM DRAIN

PEAK FLOW INTO BASIN FROM PIPES IS 262 cfs OR 131 cfs EACH.
(REFER TO PLANS FOR WEST TRIBUTARY INLET PLAN/PROFILE)

INLET CONTROL

HWSEL = 1318.5 (6" BELOW WEIR CREST)

INV ELEV = 1308.13

$HW/D = (1318.5 - 1308.13)/5 = 2.1$

Q = 260 cfs OK DRAINAGE DESIGN MANUAL VOL II
> 131 cfs FIG 4.54 p 155 SCALE 1

OUTLET CONTROL CHECK HYDRAULIC GRADE LINE FOR BASIN WSEL AND PIPE INFLOW.

THE HYDROGRAPH ORDINATES FROM DET142 AND DVT 142 ARE USED TO DEFINE TWO CRITICAL POINTS.

1.) PEAK INFLOW AND CORRESPONDING BASIN STAGE

2.) MAX BASIN STAGE AND CORRESPONDING INFLOW.

THE NUMBERS BELOW ARE FROM THE HEC-1 MODEL 12183H.ID:

ORD	FLOW (PER PIPE)	BASIN STAGE	ENERGY GRADE AT INLET
83	125	1313.60	1315.98
84	131	1314.50	1317.12
85	130	1315.30	1317.85
86	124	1316.00	1318.33
87	100	1316.60	1318.12
88	89	1317.20	1318.40
89	78	1317.60	1318.51
90	67	1317.90	1318.57
91	53	1318.20	1318.62
92	36	1318.30	1318.49

SAMPLE CALCS NEXT PAGE

60" RCP HYDRAULIC GRADE LINE

SAMPLE CALC. FOR ORD #84 PREVIOUS PAGE

Q = 131 cfs

$S_f = \left(\frac{Q}{2821}\right)^2$ n = 0.012

Q = VA

POINT	STATION	REACH DESCRIPTION	ENERGY GRADE LINE ELEVATION	HYDRAULIC GRADE LINE ELEVATION	HEAD LOSS CALCULATION
		BASIN HWSEL = 1314.50			
1	9+68	OUTLET LOSS Q = 131 cfs V = 6.67 ft/s $V^2/2g$ = 0.69'	1314.50	1314.50	$Loss_{exit} = V^2/2g = 0.69'$ (V_2 = 0 BASIN)
1	9+68	FRICTION LOSS L = 153.5 $S_f = \left(\frac{131}{2821}\right)^2 = 0.0022$	1315.88	1315.19	$Loss_{fr} = (0.0022)153.5$ = 0.34'
2	11+21.50	BEND 26°	1316.22	1315.53	$Loss_{Bend} = 0.23(V^2/2g)$ = 0.23(.69) = 0.16'
2	11+21.50	FRICTION LOSS L = 176.5 S_f = 0.0022	1316.38	1315.69	$Loss_{fr} = (0.0022)176.5$ = 0.39'
3	12+98	ENTRANCE LOSS	1316.77	1316.08	$Loss = 0.5(V^2/2g)$ = 0.5(.69) = 0.35'
3	12+98		1317.12	1316.43	

DESIGNED BY SW DATE 3/15/95 SHEET NO. 5 PAGE NO.
CHECKED BY GCB DATE 5-21-95 OF 6 JOB NO. 1.7.8.3
REVIEWED BY DATE SUBJECT:
APPROVED BY DATE

DESIGNED BY SW DATE 3/15/95 SHEET NO. 6 PAGE NO.
CHECKED BY LSB DATE 3-21-95 OF 6 JOB NO. 12183
REVIEWED BY DATE SUBJECT:
APPROVED BY DATE

WEST TRIBUTARY INLET OUTFALL

THE WEST INLET OUTFALL AND LOW FLOW CHANNEL ARE DROWNED OUT AT AN ELEVATION OF 1308.7. THE CORRESPONDING INFLOW AT A BASIN STAGE OF 1308.7 IS APPROX. 130 cfs.

ORD	WEST INFLOW (both pipes)	EAST INFLOW (both pipes)	BASIN STAGE
75	0 cfs	72 cfs	1308.1
76	24 cfs	105 cfs	1308.6
77	58 cfs	135 cfs	1309.2

CAPACITY OF LOW FLOW CHANNEL IS APPROX 97 cfs (refer to East Tributary Outfall).

DETENTION BASIN OUTLET

DESIGNED BY SW DATE 3/13/95 SHEET NO. 1 PAGE NO.
CHECKED BY GLB DATE 3-21-95 OF 6 JOB NO. 12183
REVIEWED BY DATE SUBJECT:
APPROVED BY DATE

BASIN OUTLET:

30" RCP LOW FLOW AND PRINCIPAL OUTLET

THE HYDRAULICS FOR THE 30" RCP OUTLET ARE DEFINED USING A RATING CURVE DEVELOPED FROM INLET CONTROL AND OUTLET CONTROL (TAILWATER) CONDITIONS. THE ADJACENT WASH WSEL FOR THE PROPOSED CONDITION HEC-2 MODEL IS USED FOR TAILWATER STARTING ELEVATION. THE BASIN STAGE AND PIPE OUTFLOW ARE COMPARED TO THE WASH WSEL BY THE HYDRAULIC GRADE.

30" RCP $L = 120'$ $S = 0.0025$ FT/FT NORMAL DEPTH:

FULL CAP: 22 cfs

Q_{MAX} = 24 cfs

$Q = \frac{1.486}{n} A R^{2/3} S_f^{1/2}$; $n = 0.012$

$A = 4.91$ FT^2

$S_f = \left(\frac{Q}{444.5}\right)^2$ $R = 0.625$ (FULL)

Q (cfs)	S_f (ft/ft)	FRICTION LOSS HEAD (ft)	Q=VA V (ft/s)	$\left(\frac{V^2}{2g}\right)$	$1.5\left(\frac{V^2}{2g}\right)$ INLET AND OUTLET LOSS (ft)	FR + IN + OUT TOTAL LOSS (ft)
10	0.0005	0.06	2.04	0.065	0.10	0.16
20	0.0020	0.24	4.07	0.257	0.39	0.63
30	0.0046	0.55	6.11	0.580	0.87	1.42
40	0.0081	0.97	8.15	1.03	1.55	2.52
50	0.0127	1.52	10.18	1.61	2.42	3.94
60	0.0182	2.18	12.22	2.32	3.48	5.66
70	0.0248	2.98	14.26	3.16	4.74	7.72
80	0.0324	3.89	16.29	4.12	6.18	10.07

INLET (ENTRANCE) LOSS

$h_e = K_e \frac{V^2}{2g}$ $K = 0.5$ (KING & BRATER 6-19)

$h_e = 0.5 \frac{V^2}{2g}$

OUTLET (EXPANSION) LOSS

$h_o = \frac{(V_1 - V_2)^2}{2g}$ worst case $V_2 = 0$

$h_o = \frac{V^2}{2g}$

TOTAL INLET AND OUTLET LOSS

$h = 1.5 \frac{V^2}{2g}$

THIS TABLE IS USED TO FACILITATE THE HYDRAULIC GRADE COMPUTATIONS.

SC 3020

DESIGNED BY SW DATE 3/17/95 SHEET NO. 2 PAGE NO.
CHECKED BY GSD DATE 3-21-95 OF 6 JOB NO. 12183
REVIEWED BY DATE SUBJECT:
APPROVED BY DATE

TAIL WATER CONDITIONS FOR PROPOSED CONDITION WASH

USING THE PROPOSED HEC-2 MODEL AND CROSS SECTION 13.77 THE FOLLOWING WSELS ARE OBTAINED FOR THE INCREMENTAL FLOW RATES INDICATED

Q IN WASH (cfs)	WSEL (@ 13.77)
50	1308.49
100	1308.93
150	1309.27
200	1309.65
250	1309.96
300	1310.23
350	1310.46
400	1310.66
450	1310.84
(ESTIMATED PEAK) 500	1311.00

SAMPLE CALC:

HYDROGRAPH ORDINATES ARE CHECKED FROM HC 142 AND DET 142. AT A GIVEN FLOW IN THE WASH THE BASIN WILL HAVE A CORRESPONDING STAGE. AT THIS STAGE THE OUTLET, WHICH WAS ORIGINALLY DEFINED AS INLET CONTROL, HAS A DISCHARGE ASSOCIATED WITH IT.

ITERATION PROCESS TO COMPLETE TABLE NEXT PAGE

(1R.) PEAK HC142 ≈ 500 cfs @ 4.25hr (TIME) or 4hr 15min ORD 86

AT 4.25 THE BASIN OUTFLOW, AS MODELED, IS 65 cfs WITH A BASIN STAGE OF 1316.2

AT 65 cfs THE TOTAL HEAD LOSS IS APPROX. 6.69' (INTERPOLATED FROM PREV. PAGE)

THE WASH WSEL IS 1311.00

SO 1311.00 + 6.69' = 1317.69

1317.69 > 1316.2 NO. ACTUAL: 1316.2 − 1311 = 5.2' OF HEAD

5.2' ≈ 58 cfs THROUGH PIPE NOT 65 cfs ADJUST.

SC 3020

DESIGNED BY SW DATE 3/13/95 SHEET NO. 3 PAGE NO.
CHECKED BY CDB DATE 3-21-95 OF 6 JOB NO. 12103
REVIEWED BY DATE SUBJECT:
APPROVED BY DATE

THE FOLLOWING TABLE CONTAINS THE RELATIONSHIP DEVELOPED FROM NUMEROUS ITERATIONS SIMILAR TO THE ONE ABOVE. OF COURSE AS ONE COMPONENT OF THIS SYSTEM CHANGES THE OTHERS DO ALSO. AN ATTEMPT HAS BEEN MADE TO OPTIMIZE THE INLETS, OUTLETS AND WASH CONDITIONS TO MAXIMIZE THE REDUCTION OF THE DOWNSTREAM PEAK Q.

WASH Q	WASH WSEL	BASIN STAGE	* ACTUAL BASIN OUTLET Q (cfs)	** PREVIOUS OUTFLOW Q (cfs)
50	1308.49	1307	0	0
100	1308.93	1307	0	0
150	1309.27	1307	0	0
200	1309.65	1307.8	0	0
250	1309.96	1308.6	0	0
300	1310.23	1309.5	0	0
350	1310.46	1310.5	5	7
400	1310.66	1311.2	18	15
450	1310.84	1312.0	27	29
500	1311.00	1316.0	58	65
450	1310.84	1317.6	67	72
400	1310.66	1318.1	71	75

AT THIS POINT THE SQ RECORD WOULD CHANGE ALTERING THE BASIN HWSEL AND REQUIRING ANOTHER OPTIMIZATION ITERATION.
THE FINAL HEC-1 SQ RECORDS INDICATE THE LAST ITERATION OF THE ABOVE PROCESS. THE VALUES ARE APPROXIMATE AND ARE NOT EXPECTED TO MATCH THE EXACT BASIN STAGE/OUTFALL/WASH WSEL RELATIONSHIP.

ITERATIONS AND RECURRING OPTIMIZATIONS HAVE PRODUCED VARIATIONS IN THE BASIN HWSEL OF APPROX. ± 0.2' AND IN DOWNSTREAM PEAK DISCHARGE OF APPROX ± 10 cfs.

* BASED ON NUMBERS PRESENTED PREVIOUS PAGE.

** INITIAL STARTING ASSUMPTION WAS INLET CONTROL AS ESTIMATED FROM THE DRAINAGE DESIGN MANUAL FIG 4.55 p 155 SCALE 1.

DESIGNED BY SW DATE 3/13/95 SHEET NO. 4 PAGE NO.
CHECKED BY GSS DATE 3-21-95 OF 6 JOB NO. 12183
REVIEWED BY DATE SUBJECT:
APPROVED BY DATE

THIS METHOD OF DEFINING THE OUTLET HYDRAULICS PROHIBITS THE HEC-1 MODEL FROM COMPLETELY DRAINING THE BASIN AFTER THE PEAK HAS PASSED. AFTER THE PEAK PASSES AND THE WSEL IN THE WASH RECEDES, THE OUTLET PIPE BECOMES MORE EFFICIENT AND AT SOME POINT WILL OPERATE SIMILAR TO THE INLET CONTROL CONDITION.

A HEC-1 MODEL WAS DEVELOPED FOR A STARTING BASIN WSEL OF 1318.3 AND INLET CONTROL SQ RECORDS. THE PERFORMANCE WAS ACCEPTABLE AND THE INLET CONTROL ASSUMPTION WAS VALID BASED ON THE WASH WSEL AND BASIN STAGE ANALYSIS (PROCEDURE SIMILAR TO THAT DONE PREVIOUSLY).

THE FOLLOWING RESULTS SUMMARIZE THE ANALYSIS:

HEC-1 MODEL 12183H1B HYDROGRAPH FOR DET 142 INDICATES THAT AT ORDINATE 96 THE BASIN STAGE BEGINS TO DECREASE FROM 1318.3.

AT THIS POINT, THE SUPPLEMENTAL HEC-1 MODEL IS USED TO MODEL THE BASIN OUTFLOW. FROM THE 1318.3 THE BASIN DRAINED IN 159 ORDINATES.

$\therefore$ 96 + 159 = 255 ORDINATES (ORD = 3 min)

3(255) = 765 min

765/60 = 12.75 hrs

OR 12 hrs 45 min TO DRAIN (< 36 ok)

THE EXISTING HEC-1 MODEL INDICATES THAT AT THE ESTIMATED TIME DETENTION BASIN NO. 1 IS DRAINED THERE IS STILL 22 cfs IN THE WASH. THIS MEANS THE CONSTRUCTION OF THIS FACILITY WILL NOT PROLONG THE HYDROGRAPH OR INCREASE NUISANCE FLOW DOWNSTREAM OF THE BASIN. (REFER TO MODEL 12183H1B AT HC142 ORD 255)

SC 3020

DESIGNED BY SW DATE 3/13/95 SHEET NO. 5 PAGE NO.
CHECKED BY LSB DATE 3-21-95 OF 6 JOB NO. 12183
REVIEWED BY DATE SUBJECT:
APPROVED BY DATE

BASIN OUTLET

EMERGENCY WEIR

THE EMERGENCY WEIR IS NOT INTENDED TO BE USED FOR THE 100YR 6HR DESIGN CONDITION. THE WEIR CREST ELEV AND LENGTH HAVE BEEN SIZED BASED ON TWO EMERGENCY STORM EVENTS.

1. THE SAME 100YR 6HR EVENT AS THE DESIGN STORM BUT WITH THE OUTLET CLOGGED AND THE BASIN FULL OF WATER (UP TO THE WEIR CREST). THIS IS MODELLED USING THE ELEV STARTING WSEL OF 1318.3 AND REMOVING THE PIPE OUTLET FLOW FROM THE SQ RECORDS. THIS WOULD HAPPEN IN THE EVENT OF CONSECUTIVE 100YR 6HR STORMS OCCURRING IN A SHORT PERIOD OF TIME.

2. A 100YR 2HR STORM. THE HEC-1 RAINFALL AMOUNT WAS CHANGED TO REFLECT 100YR 2HR VALUES. THE STARTING CONDITION IS SAME AS FOR THE 100YR 6HR DESIGN STORM (ie, BASIN IS EMPTY AND THE OUTLET IS NOT CLOGGED).

THE INLETS ARE ASSUMED TO WORK AS EFFICIENTLY AS IN THE DESIGN CONDITION. ALTHOUGH NO HYDRAULIC GRADE ANALYSIS IS PRESENTED, IT IS ANTICIPATED THAT WITH THE BASIN FULL, THE EMERGENCY INFLOW WOULD NOT ENTER THE BASIN. THIS ASSUMPTION LEADS TO A CONSERVATIVE EMERGENCY WEIR SIZE AS MORE FLOW IS ENTERING THE BASIN THAN HYDRAULICALLY POSSIBLE.

THE WEIR CONFIGURATION IS L = 260' AT ELEV 1318.30
C = 3.2 (SHARP CRESTED WEIR)

SC 3020

DESIGNED BY SW DATE 3/13/95 SHEET NO. 6 PAGE NO.
CHECKED BY GBS DATE 3-21-95 OF 6 JOB NO. 12183
REVIEWED BY DATE SUBJECT:
APPROVED BY DATE

THE FOLLOWING TABLE IS USED TO ADD THIS EMERGENCY WEIR OUTFLOW TO THE SQ RECORDS IN THE HEC-1 MODELS.

ELEV	H (ft)	WEIR Q (cfs)	30" RCP Q (cfs)	COMBINED Q (cfs)
1318.3	0	0	75	75
1318.5	.2	75	76	151
1318.8	.5	294	77	371
1319.0	.7	487	78	565
1320.0	1.7	1844	80	1924

CHANNEL STABILITY

STANLEY CONSULTANTS

Computed by JRM Date 3/10/95
Checked by GSS Date 3-11-95
Reviewed by Date
Approved by Date

Job No. 12183 Page No.
Subject 10th Street Wash Basin No. 1

Sheet No. 1 of 1

CHANNEL STABILITY

The stability of 10th Street Wash was assessed through the evaluation of the variation in the sediment transport capacity. Areas with relatively high sediment transport capacity have greater scour potential, and areas with relatively low ability to transport sediment will tend to aggrade.

Inlets to the retention facility are comprised of side weirs designed to bypass flows up to the 5-year event. A sediment yield analysis for the contributing watershed, performed by SLA (letter dated November 22, 1994), does not indicate significant quantities of sediment would be supplied to the basin inlets. Therefore, the channel hydraulic characteristics will generally govern the sediment transport characteristics of 10th Street Wash since the upstream sediment supply does not significantly impact the channel sediment transport capacity.

A qualitative indicator of the sediment transport capacity of a given study reach is provided by the product of the velocity to the third power and the flow width (V^3W). The following graphs illustrates the variation of this parameter along the study reach for the 10-year and 100-year flood conditions and for both existing and design conditions.

In general, the existing condition sediment transport capacity is of greater magnitude than proposed conditions due to a reduction in the peak discharges. The graphs indicate this conclusion by the general lowering of the lines for the design condition. Section 15.77 indicates significant sediment transport capacity under existing conditions. Section 15.77 would be identified as a location with scour potential since the magnitude of the sediment transport capacity indicator varies significantly upstream and downstream of this location. The design condition indicates a significantly reduced variation in the sediment transport capacity around section 15.77. Therefore, the channel adjacent to the retention facility should remain stable during design conditions.

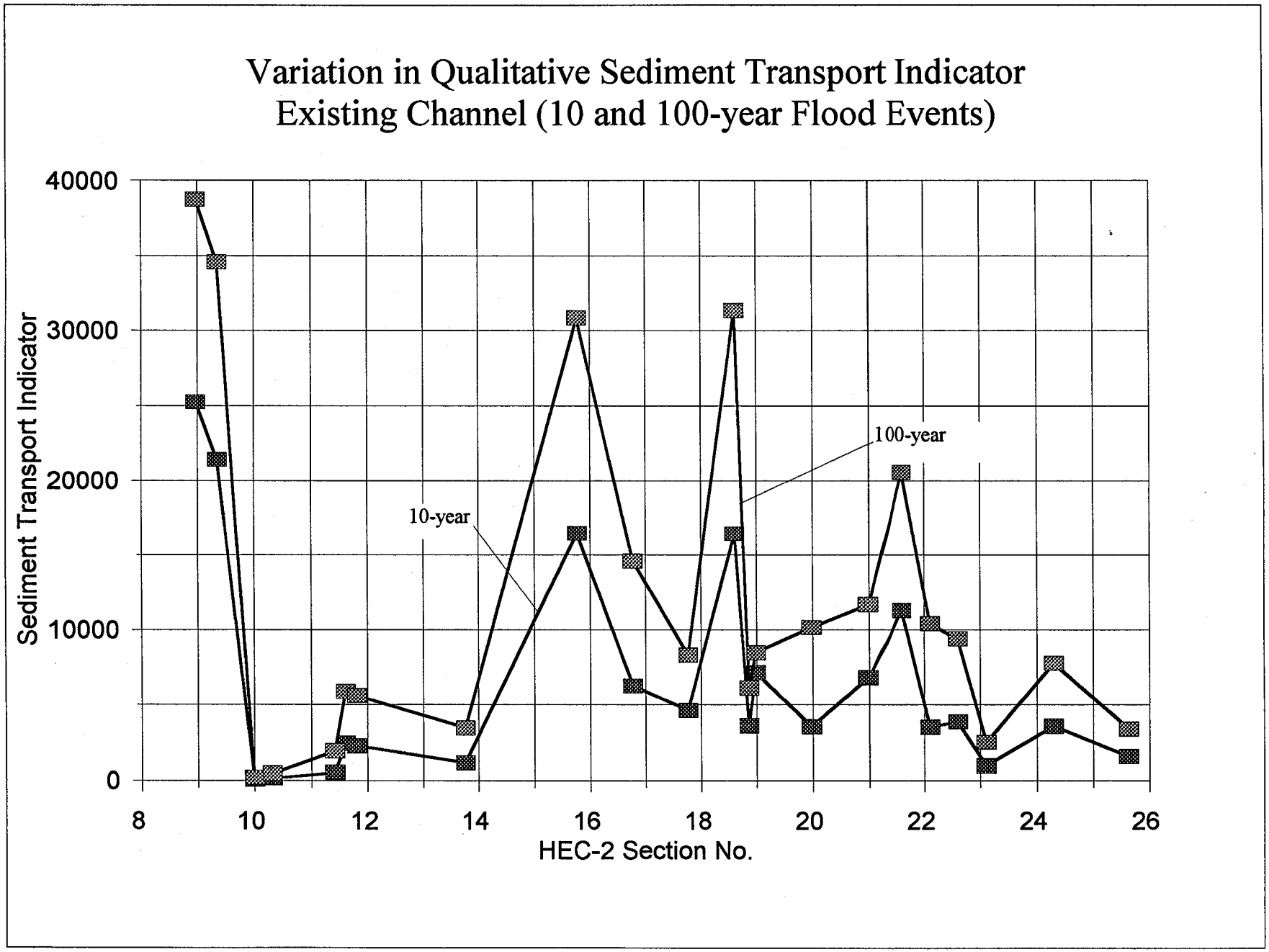
Variation in Qualitative Sediment Transport Indicator
Existing Channel (10 and 100-year Flood Events)
Sediment Transport Indicator
40000
30000
20000
10000
0
8
10
12
14
16
18
20
22
24
26
HEC-2 Section No.
10-year
100-year

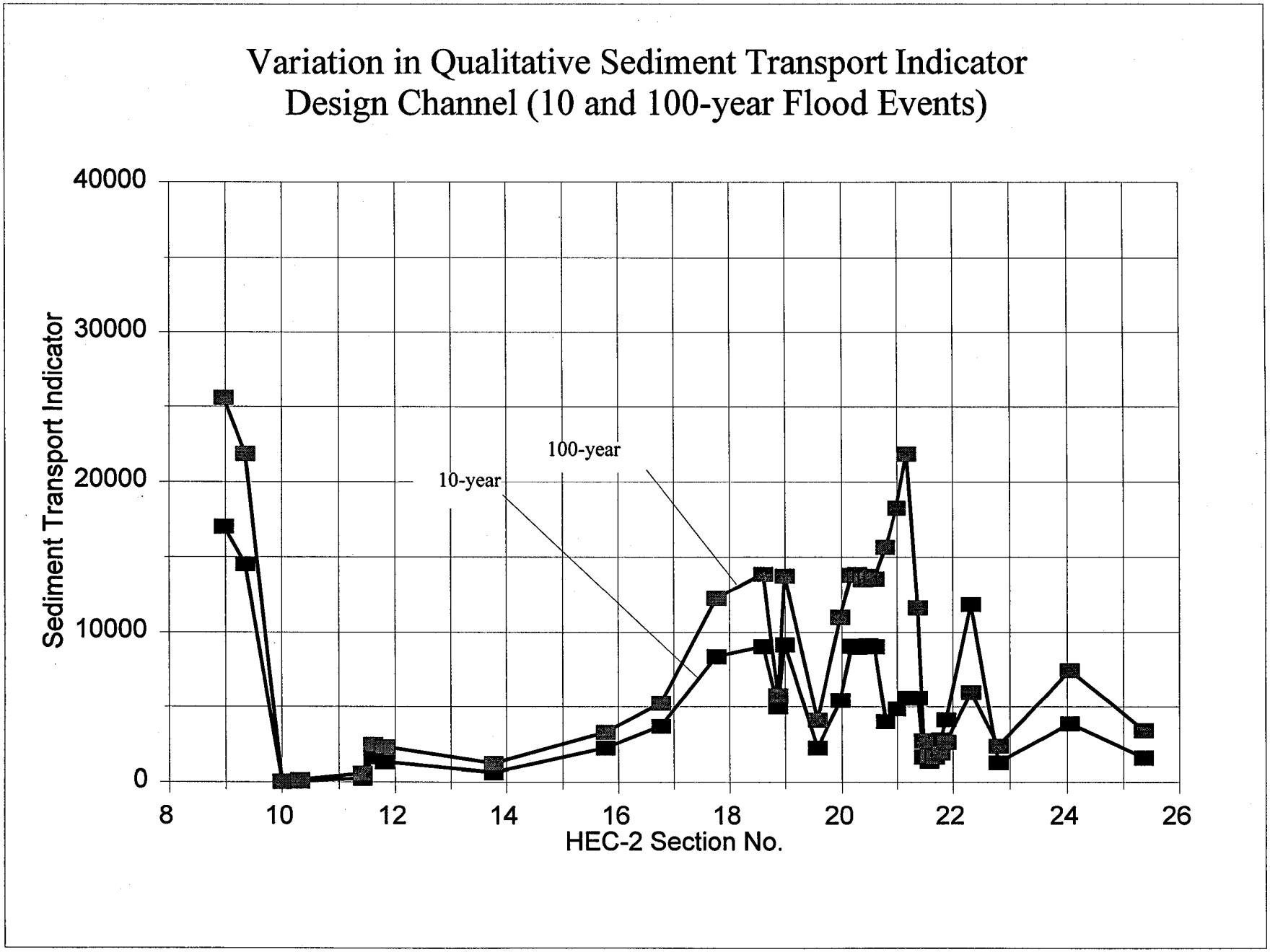
Variation in Qualitative Sediment Transport Indicator
Design Channel (10 and 100-year Flood Events)
Sediment Transport Indicator
40000
30000
20000
10000
0
8
10
12
14
16
18
20
22
24
26
HEC-2 Section No.
100-year
10-year

EXISTING CONDITIONS

				10-YEAR EVENT						100-YEAR EVENT				
SECNO	CUMDS	ELMIN	CWSEL	Q	VCH	AREA	TOPWID	(V^3)*Tw	CWSEL	Q	VCH	AREA	TOPWID	(V^3)*Tw
8.97	0	1304.0	1310.3	500	4.7	325	245	25275	1311.3	943	5.4	579	245	38793
9.35	38	1304.0	1310.3	500	4.6	315	226	21429	1311.4	943	5.4	549	226	34607
10.00	98	1305.0	1310.6	500	0.6	868	361	74	1311.6	943	0.8	1308	444	211
10.32	130	1305.0	1310.6	500	0.9	550	206	160	1311.6	943	1.3	792	250	500
11.42	240	1304.0	1310.6	500	2.1	244	65	564	1311.6	943	3.0	313	71	1969
11.62	260	1307.5	1310.5	500	3.2	158	77	2460	1311.5	943	3.8	248	107	5898
11.82	280	1307.0	1310.5	500	3.2	157	71	2290	1311.6	943	3.9	241	94	5626
13.77	475	1306.0	1311.0	500	2.8	180	55	1182	1312.2	943	3.8	246	62	3477
15.77	675	1307.8	1311.5	500	8.1	62	31	16479	1312.7	943	8.9	106	44	30879
16.77	775	1308.9	1313.4	500	5.7	87	34	6296	1314.7	943	7.1	134	42	14619
17.77	875	1310.7	1314.4	500	4.7	106	45	4634	1315.8	943	5.4	175	54	8353
18.61	959	1313.1	1315.9	500	6.5	77	60	16427	1316.6	943	7.4	128	78	31368
18.87	985	1314.2	1316.5	431	3.4	125	90	3647	1317.4	810	3.8	212	110	6147
18.99	997	1314.3	1316.4	360	4.8	75	66	7183	1317.3	671	4.6	145	86	8497
19.99	1097	1315.0	1317.6	360	4.2	85	47	3571	1318.2	671	5.8	116	53	10176
21.00	1198	1316.5	1318.6	360	5.2	70	49	6813	1319.4	671	5.9	114	57	11677
21.60	1258	1316.8	1319.8	360	5.8	62	58	11299	1320.3	671	6.8	99	65	20576
22.10	1308	1317.2	1321.0	360	4.5	81	40	3543	1321.7	671	6.2	109	44	10432
22.60	1358	1317.5	1321.8	360	4.9	73	32	3902	1322.8	671	6.2	108	39	9399
23.10	1408	1317.3	1322.4	360	2.9	125	41	981	1323.7	671	3.7	179	48	2525
24.30	1528	1317.2	1323.0	360	5.3	68	24	3603	1324.4	671	6.5	103	28	7796
25.64	1662	1318.7	1324.6	360	3.7	96	30	1588	1326.1	671	4.5	149	38	3420

10TH STREET WASH BASIN NO. 1

DESIGN CONDITION

				10-YEAR EVENT						100-YEAR EVENT				
SECNO	CUMDS	ELMIN	CWSEL	Q	VCH	AREA	TOPWID	(V^3)*Tw	CWSEL	Q	VCH	AREA	TOPWID	(V^3)*Tw
8.97	0	1304.0	1309.8	345	4.3	200	208	17032	1310.3	511	4.7	332	245	25599
9.35	38	1304.0	1309.8	345	4.2	199	199	14561	1310.4	511	4.6	321	226	21855
10.00	98	1305.0	1310.1	345	0.5	699	281	33	1310.6	511	0.6	879	366	79
10.32	130	1305.0	1310.1	345	0.8	451	177	81	1310.6	511	0.9	558	208	167
11.42	240	1304.0	1310.1	345	1.6	211	62	275	1310.6	511	2.1	246	66	591
11.62	260	1307.5	1310.0	345	2.9	120	71	1697	1310.6	511	3.2	160	78	2519
11.82	280	1307.0	1310.0	345	2.8	124	62	1326	1310.6	511	3.2	160	72	2356
13.77	475	1306.0	1310.4	345	2.3	149	52	644	1311.0	511	2.8	181	55	1238
15.77	675	1307.8	1310.8	302	3.9	78	40	2289	1311.4	444	4.2	107	47	3326
16.77	775	1308.9	1311.4	302	4.7	65	37	3738	1312.0	444	5.0	88	42	5290
17.77	875	1310.7	1312.7	302	6.2	49	36	8386	1313.1	444	6.7	67	41	12278
18.61	959	1313.1	1315.3	278	6.0	46	42	9056	1315.7	419	6.3	66	54	13879
18.87	985	1314.2	1315.8	278	4.1	68	73	5024	1316.2	419	4.1	102	84	5791
18.99	997	1314.3	1316.0	278	5.4	51	58	9187	1316.3	419	6.0	70	64	13772
19.57	1055	1314.7	1317.1	278	3.5	79	53	2291	1317.4	419	4.2	100	57	4152
19.98	1096	1315.0	1317.2	278	5.7	49	30	5463	1317.6	419	7.0	60	33	11025
20.18	1116	1315.6	1317.8	278	6.9	40	27	9092	1318.3	419	7.8	54	29	13815
20.28	1126	1315.6	1318.3	278	7.3	38	23	9015	1318.8	419	8.3	50	24	13872
20.38	1136	1315.6	1318.7	278	7.8	36	19	9051	1319.3	419	8.9	47	19	13530
20.48	1146	1315.7	1318.9	278	8.7	32	14	9124	1319.7	419	9.9	42	14	13750
20.58	1156	1315.7	1318.7	278	10.0	28	9	9065	1319.7	419	11.4	37	9	13556
20.78	1176	1315.7	1319.6	288	7.4	39	10	4051	1319.8	482	11.6	42	10	15690
20.98	1196	1315.7	1319.6	325	7.6	43	11	4901	1320.0	562	11.8	48	11	18257
21.18	1216	1315.8	1319.6	360	7.8	46	12	5637	1320.3	672	12.2	55	12	21864
21.38	1236	1315.8	1319.6	360	7.8	46	12	5637	1321.4	672	9.9	68	12	11656
21.48	1246	1316.1	1320.5	360	4.4	82	20	1677	1322.9	672	5.2	130	20	2771
21.58	1256	1316.4	1320.6	360	3.6	99	29	1390	1323.1	672	3.9	172	29	1743
21.68	1266	1316.7	1320.6	360	3.8	94	36	2038	1323.2	672	3.6	189	37	1676
21.78	1276	1317.0	1320.6	360	4.3	83	35	2811	1323.2	672	3.5	192	46	1977
21.88	1286	1317.3	1320.5	360	5.1	71	32	4191	1323.1	672	3.8	177	49	2667
22.32	1330	1317.5	1320.7	360	7.8	46	25	11883	1323.1	672	5.3	128	41	6015
22.80	1378	1317.3	1322.1	360	3.2	112	39	1295	1323.7	672	3.7	183	49	2409
24.05	1503	1317.2	1323.0	360	5.5	66	24	3882	1324.4	672	6.4	104	28	7479
25.37	1635	1318.7	1324.6	360	3.8	96	30	1610	1326.1	672	4.5	149	38	3444

sla Simons, Li & Associates, Inc.
Water Resources & Civil Engineering Consultants

November 22, 1994

Mr. Michael Shapiro, P.E.
Daniel, Mann, Johnson & Mendenhall
300 West Clarendon Avenue, Suite 400
Phoenix, AZ 85013

RE: 10TH STREET WASH FEASIBILITY STUDY – FCD 93-23

Dear Michael:

Simons, Li & Associates, Inc. (SLA) has reviewed the HEC-1, HEC-2 and design portions of Concept Alternative 1 as presented in the Draft Final Design Concept Report prepared by Stanley Consultants, Inc.(SCI) for the Flood Control District of Maricopa County. The models reflect the inlet, outlet, and basin configuration for the proposed detention basin number 1 to be located near the confluence of the east and west tributaries of the 10th Street Wash.

On November 16, 1994 SLA received from SCI, preliminary plans for the proposed detention basin number 1. The hydrologic and hydraulic models appear to reflect the preliminary plan layout for the detention basin facilities. The inlet facilities to the detention basin are comprised of two side weir inlet structures and twin 60-inch RCP pipes.

A proposed weir inlet structure is to be located approximately 350 feet upstream from the basin site within the west tributary channel. The weir crest elevation is set at 1,319 feet and the channel flow line elevation at the structure location is 1,315.5 feet. Twin 60-inch RCP pipes direct collected west tributary flows to the proposed detention basin. Flow in the west tributary less then 3.5 feet deep will not be captured by the weir structure and hence bypass the proposed basin completely. All flows less then approximately 275 cfs (5-year event) will bypass the proposed basin completely. A portion (that below the 1,319 foot weir crest) of the larger flows in the west tributary will also bypass the proposed basin.

A weir inlet structure is proposed for the east tributary of the 10th Street Wash. The weir inlet is located approximately 120 feet upstream of the proposed detention basin within a depressed landscaped area of the Pointe Villas. The weir crest elevation of 1,321 feet is approximately three feet above the bottom of the depressed landscaped area. The existing 30-inch CMP currently draining the depressed area will remain in place to direct low flows and nuisance flows (less then 12 cfs, approximately 1 year event) around detention basin number 1 to 10th Street Wash. The east tributary weir structure will collect that portion of larger flows (in excess of 12 cfs) which are not routed through the 30-inch CMP.

The proposed inlet configurations will cause flows in the east and west tributaries to completely or partially bypass detention basin number 1. In order to preliminarily estimate the sediment load to detention basin number 1 for the proposed conceptual design, SLA utilized the Modified Universal Soil Loss Equation to predict sediment yield from the three watershed subbasins

4600 South Mill Avenue, Suite 200 • Tempe, AZ 85282 • Phone: (602) 491-1393 • Fax: (602) 491-1396
An Equal Opportunity Employer

located upstream of detention basin #1. The yield from subbasin 141 was assumed to be 100% retained in detention basin #3 (North Mountain Basin #3). The yield from subbasins 140 and 142 was assumed to be uniformly distributed, in time and space, in the flow column at detention basin #1. The sediment load was then distributed to detention basin #1 as a ratio of the volume of flow entering basin #1. The results of the 100-year and annual yield analysis are shown on the attached tables.

If you have any questions regarding this evaluation, please call.

Sincerely,

SIMONS, LI & ASSOCIATES, INC.

Dennis L. Richards

Dennis L. Richards, P.E.
Vice President

Registered Professional Engineer (Civil) CERTIFICATE 21580 DENNIS L. RICHARDS Date Signed 11-22-94 ARIZONA, U.S.A.

attachment

DLR/BE/kb

c:\wp51\dmjm-06\1111194.dmj

100-YEAR DEBRIS YIELD TO BASIN #1

BY: CJP
DATE: 22-Nov-94
CHK: RAE

	Tributary			EAST	WEST		
	Subbasin #	140	141		142	UNITS	REMARKS
	HEC-1 Designation	DT 140 (140RR)	DT 141	HC 141	DT 142		
	Drainage Area	0.516	0.187		0.512	sq.mi.	
	Unurbanized Area	0.442	0.137		0.222	sq.mi.	
100-YR	Precipitation					in	
100-YR	Peak Q {Out Basin #3}	496 {26}	263	275	671	cfs	{Parenthesis indicates peak and volume from
100-YR	Volume {Out Basin #3}	32 {23}	16	38	46	ac.ft.	North Mountain Basin #3}
100-YR	Sediment Yield	2.44	0.98	0.98	3.23	ac.ft.	See Notes 1&2 below
100-YR	Volume Over Inlet Weirs (DVT 141 & DVT 142)			25	14	ac.ft.	HEC-1 model by STANLEY
100-YR	Volume Ratio (VOLweir/VOLchan)			0.66	0.30		
100-YR	Sediment Yield to Basin #1			0.64	0.98	ac.ft.	See Notes 3&4 below
	TOTAL 100-YR SEDIMENT YIELD TO BASIN #1 =			1.63		ac.ft.	
	Basin #1 Bottom Area (430'x180')=77,400 sq. ft.=			1.78		ac.	
	Depth of Sediment in Basin #1 =			0.9		feet	

NOTES:
1. All sediment yields using MUSLE on unurbanized sediment yielding areas.
2. Sediment yield at HC 141 assumes 100% trap efficiency in Basin #3.
3. Assumes 100% transport from sediment yielding areas, through urbanized area, to weir structures.
4. Assumes sediment evenly distributed in flow column, both in time and space.

ANNUAL SEDIMENT YIELD TO BASIN #1

Year Event	Volume Flow Over Weirs		Main Channel Flow Volume		Volume Ratios		Event Subbasin Total Debris Yield		Event Debris Yield To Basin #1		Depth in Basin #1
	DVT 141 (ac.ft.)	DVT 142 (ac.ft.)	HC 141 (ac.ft.)	DT 142 (ac.ft.)	141	142	141 (ac.ft.)	142 (ac.ft.)	141 (ac.ft.)	142 (ac.ft.)	(ft.)
2	3	0	7	8	0.43	0.00	0.22	0.70	0.09	0.00	0.05
5	6	0	13	17	0.46	0.00	0.38	1.24	0.18	0.00	0.10
10	10	1	19	23	0.53	0.04	0.47	1.55	0.25	0.07	0.18
25	17	5	29	32	0.59	0.16	0.66	2.20	0.39	0.34	0.41
50	21	9	34	39	0.62	0.23	0.83	2.71	0.51	0.63	0.64
100	25	14	38	46	0.66	0.30	0.98	3.23	0.64	0.98	0.91
200	29	20	42	54	0.69	0.37	1.17	3.95	0.81	1.46	1.28

Annual Sediment Yield From Watershed = 0.13 0.05 ac. ft.

Total Annual Sediment Yield to Basin #1 = 0.18 ac. ft.
Annual Depth Sediment in Basin #1 = 0.10 feet

sla Simons, Li & Associates, Inc.
Water Resources & Civil Engineering Consultants

DATE: FEB. 3, 1995

TEL #: (602) 491-1393
FAX #: (602) 491-1396

TO: JEFF MINCH

FROM: BOB EICHINGER

FAX #: 912-6599

OF PAGES (includes this cover page): 4

PROJECT NO.:

SUBJECT:

JEFF:

THIS IS WHAT WE SENT DMJM AND FCD BACK IN NOVEMBER REGARDING SEDIMENT YIELD.

HOPE THIS HELPS.

BOB

4600 South Mill Avenue, Suite 200 • Tempe, AZ 85282 • Phone: (602) 491-1393 • Fax: (602) 491-1396
An Equal Opportunity Employer

RIPRAP DESIGN

RIPRAP DESIGN

To protect the retaining wall and embankment from the 100-year flood event, riprap was designed using FCDMC criteria presented in the "Drainage Design Manual for Maricopa County, Volume II, Hydraulics." The FCDMC manual references the Corps of Engineers "Hydraulic Design of Flood Control Channels," for riprap design (EM 1110-2-1601). Variable assumptions and definitions are provided on the following pages.

The controlling design condition is the 100-year design discharge at the upstream end of the retention basin (section 17.77). Other extreme hydraulic conditions were checked (i.e., max. depth, flow down emergency spillway) but since the procedure is velocity based, the maximum velocity location controlled the riprap design sizing.

The riprap design gradation presented on the following page is the gradation recommended by the Corps given the design hydraulic conditions. A gradation range is provided by weight based on the D_{30} calculated for the controlling hydraulic conditions. The thickness was determined to be 2.25 feet to meet FCDMC design criteria of $T=1.5D_{100}$. Grouted riprap was specified for the top-shelf portion of the riprap protection to maintain stability in the event of an overflow from the emergency spillway (i.e., retaining wall).

TOE-DOWN ELEVATIONS

The toe-down elevations for the riprap bank protection were determined utilizing the competent velocity approach presented in the USBR publication "Computing Degradation and Local Scour," 1984. A field reconnaissance of the site did not present evidence of on-going scour problems or susceptibility. Therefore, the competent channel velocity was estimated to be 3.4 ft/sec for channels with flow depths in the range of 5 feet. The competent mean velocity used in the analysis is a recommended average.

Two hydraulic design conditions were considered for the toe-down design. The first is the 100-year design condition. The second design condition assumes the emergency spillway is operating under a design head of 0.7 feet during successive 100-year storm events. The resulting maximum scour depth was determined to be approximately 2.8 feet.

Due to the significant investment the District is providing for this flood control facility, a safety factor of 1.5 was utilized to determine the riprap toe-down elevation. Therefore, the design riprap elevation is 4.25 feet below the design channel invert.

PROJ. # 12183
JRM 3/8/95
1 OF 1
GSB/3-21-95

10TH STREET WASH SPILLWAY

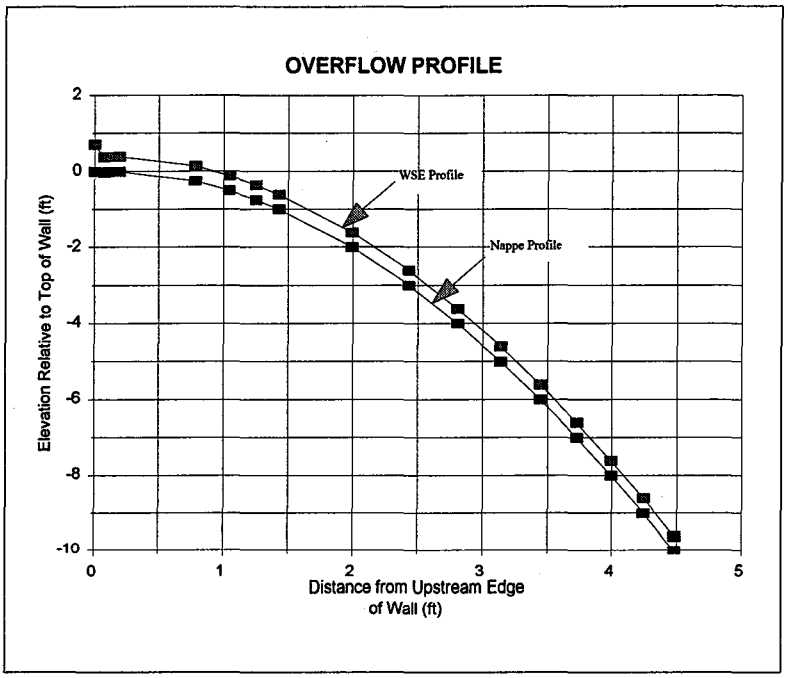

Hs = 0.7 ft, (static head on crest, per HEC-1 model)

a = 0.122 ft, upstream profile inflection point
b = 0.197 ft, distance from upstream face of weir to peak of nappe
r1= 0.350 ft, radius of profile
r2= 0.140 ft, radius of profile
T= 0.392 ft, vertical thickness of nappe
(assuming negligible approach velocity)
x2= distance from upstream face of weir (ft)
x= distance from peak of overflow crest profile (ft)
y= nappe of overflow crest profile relative elevation (ft)
y2 = top of nappe profile relative elevation (ft)

x	x2	y	y2
-0.197	0.00	0.000	0.700
-0.122	0.07	-0.022	0.370
-0.092	0.11	-0.012	0.380
-0.061	0.14	-0.005	0.387
-0.031	0.17	-0.001	0.391
0.00	0.20	0.000	0.392
0.58	0.78	-0.250	0.142
0.85	1.05	-0.500	-0.108
1.06	1.25	-0.750	-0.358
1.23	1.43	-1.000	-0.608
1.80	1.99	-2.000	-1.608
2.24	2.43	-3.000	-2.608
2.61	2.81	-4.000	-3.608
2.95	3.14	-5.000	-4.608
3.25	3.45	-6.000	-5.608
3.53	3.73	-7.000	-6.608
3.80	4.00	-8.000	-7.608
4.05	4.25	-9.000	-8.608
4.29	4.48	-10.000	-9.608

Reference Hydraulic Models as an Aid to the Development of Design Criteria, U.S. Waterways Experiment Station Bulletin 37, Vicksburg Miss., June, 1951.

STANLEY CONSULTANTS

Computed by: JRM Date: 3/8/95
Checked by: LSB Date: 3-21-95
Reviewed by: ____ Date: ____
Approved by: ____ Date: ____

Job No. 12183 Page No. ____
Subject: 10 TH STREET WASH BASIN #1
CHANNEL RIPRAP DESIGN
Sheet No. 1 of 5

REFERENCE: "HYDRAULIC DESIGN OF FLOOD CONTROL CHANNELS" EM 1110-2-1601

$$D_{30} = S_f C_s C_v C_T d \left[\left(\frac{\gamma_w}{\gamma_s - \gamma_w} \right)^{1/2} \frac{V}{\sqrt{K_1 g d}} \right]^{2.5}$$

WHERE:
D_{30} = RIPRAP SIZE OF WHICH 30% IS FINER BY WEIGHT, ft
S_f = SAFETY FACTOR, (1.1)
C_s = STABILITY COEFFICIENT FOR INCIPIENT FAILURE, (0.36 ROUNDED ROCK)
C_v = VERTICAL VELOCITY DISTRIBUTION COEFF.
= 1.0 (STRAIGHT CHANNELS)
= 1.25 (d/s CONCRETE CHANNELS, DIKE ENDS)
C_T = THICKNESS COEFFICIENT (1.0)
d = LOCAL DEPTH OF FLOW, ft
γ_w = UNIT WEIGHT OF WATER, 62.4 lb/ft³
γ_s = UNIT WEIGHT OF RIPRAP, lb/ft³
V = LOCAL AVERAGE VELOCITY, ft/sec
$K_1 = \sqrt{1 - \frac{\sin^2\theta}{\sin^2\phi}} = 1$ (PLATE 39)
K_1 = SIDE SLOPE CORRECTION FACTOR
θ = ANGLE OF SIDE SLOPE w/ HORIZ. (4H:1V)
ϕ = RIPRAP ANGLE OF REPOSE
g = GRAVITATIONAL CONSTANT, 32.2 ft/s²

$$D_{30} = (1.1)(0.36)\, C_v (1)\, d \left[\left(\frac{62.4}{\gamma_s - 62.4} \right)^{1/2} \frac{V}{\sqrt{32.2 d}} \right]^{2.5}$$

$$D_{30} = 0.396\, C_v\, d \left[\left(\frac{\gamma_w}{\gamma_s - \gamma_w} \right)^{1/2} \frac{V}{\sqrt{32.2 d}} \right]^{2.5}$$

STANLEY CONSULTANTS

Computed by JRM Date 3/8/95
Checked by LSS Date 3-21-95
Reviewed by Date
Approved by Date

Job No. 12183 Page No.
Subject 10TH STREET WASH BASIN #1
CHANNEL RIPRAP DESIGN

Sheet No. 2 of 5

SECNO. 17.77 (MAX VELOCITY, 100-YR DESIGN DISCHARGE)

$C_V = 1.283 - 0.2 \log(R/W) = 1.15$

$d = 2.4'$

$V_{avg} = 6.6$ ft/s

TRAP: $\frac{V_{SS}}{V_{avg}} = 1.71 - 0.78 \log(R/W) = 7.8$ ft/s

NATURAL: $\frac{V_{SS}}{V_{avg}} = 1.74 - 0.52 \log(R/W) = 9.3$ ft/s USE

$R = 180'$, $W = 41'$

$$D_{30} = 0.396(1.15)(2.4)\left[\left(\frac{62.4}{165-62.4}\right)^{1/2} \frac{9.3}{\sqrt{32.2(2.4)}}\right]^{2.5}$$

$D_{30} = 0.68'$ USE

SECNO. 15.77 (MAX DEPTH, SPILLWAY HYDRAULICS)

$C_V = 1$ (STRAIGHT CHANNEL)

$d = 5.0'$

$V_{avg} = 5.3$ ft/s

$$D_{30} = 0.396(1)(5)\left[\left(\frac{62.4}{165-62.4}\right)^{1/2} \frac{5.3}{\sqrt{32.2(5)}}\right]^{2.5}$$

$D_{30} = 0.65'$

STANLEY CONSULTANTS

Computed by: VRM Date: 3/8/95
Checked by: GSD Date: 3-21-95
Reviewed by: Date:
Approved by: Date:

Job No. 12183 Page No.
Subject: 10TH STREET WASH BASIN #1
CHANNEL RIPRAP DESIGN

Sheet No. 3 of 5

CHECK RIPRAP SIZE FOR FLOW OVER EMERGENCY SPILLWAY INTO CHANNEL. SEE HEC-1 MODEL FOR HYDROLOGIC ANALYSIS.

1319.0' MAX STAGE
1318.3' TOP OF WALL
0.7' HEAD ON WEIR

L = 260' WEIR (WALL) LENGTH, ft
C = 3.2 SHARP CRESTED WEIR COEFFICIENT

$$Q = CLH^{3/2} = 3.2(260)(0.7)^{3/2} \approx 488 \text{ cfs (PEAK)}$$

$$q = \frac{488}{260} = 1.87 \text{ cfs/ft}$$

$$d_c = \sqrt[3]{\frac{q^2}{g}} = \sqrt[3]{\frac{(1.87)^2}{32.2}} = 0.48'$$

$$V_c = \frac{q}{d_c} = \frac{1.87}{0.48} = 3.9 \text{ ft/s}$$

$$D_{30} = 0.396(1)(0.48)\left[\left(\frac{62.4}{165-62.4}\right)^{1/2}\frac{3.9}{\sqrt{32.2(0.48)}}\right]^{2.5}$$

$$D_{30} = 0.15'$$

SC 3004R2 592

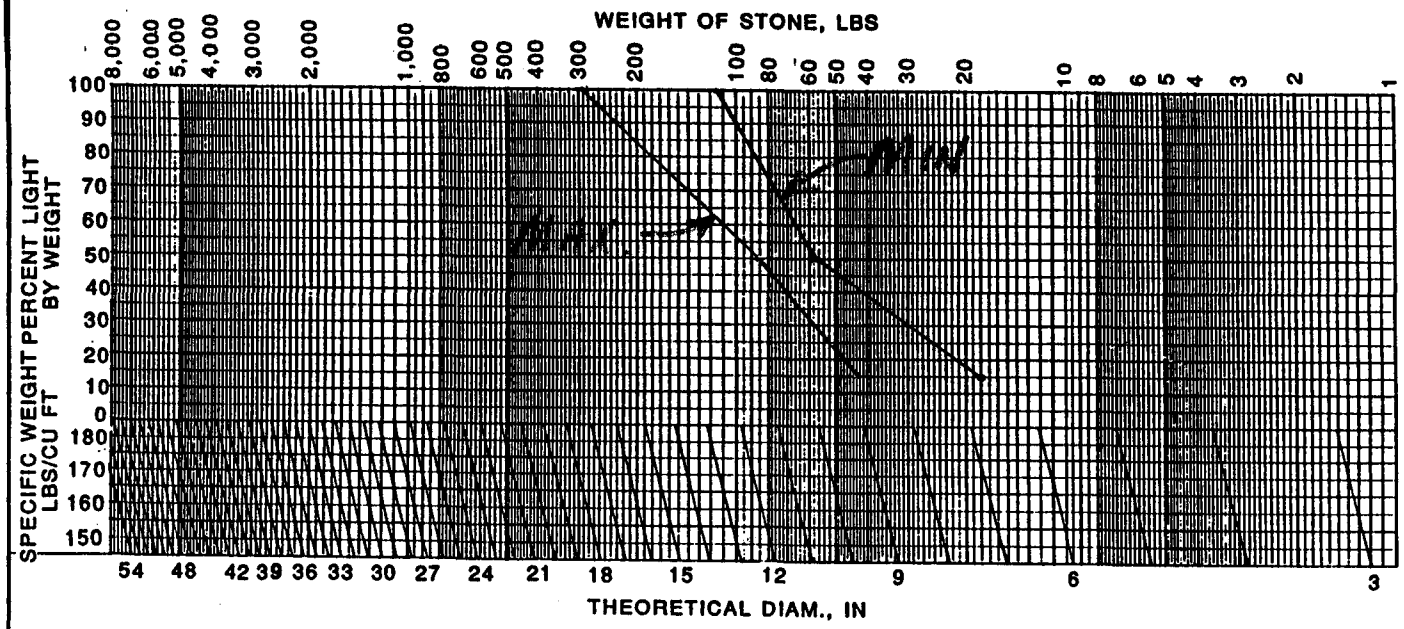

SPECIFIC WEIGHT OF STONE 165 LBS/CU FT

$T = 1.5\ D_{100} = 2.25'$

PROJECT 10TH STREET WASH
AREA DETENTION BASIN CHANNEL
DATE 3/8/95 BY JRM

RIPRAP GRADATION CURVES

$D_{30} = 0.76$ ft (MIN.)
$D_{90} = 1.06$ ft (MIN)
$D_{100} = 18$ IN (MAX)

REFERENCE: TABLE 3-1, PG 3-3

% LIGHTER BY WEIGHT	WEIGHT OF STONE (lb) UPPER	LOWER
100	292	117
50	86	58
15	43	18

PROJ. # 12,183
JRM 3/9/95
5/15
CSS 3-21-95

10th Street Wash Basin No. 1

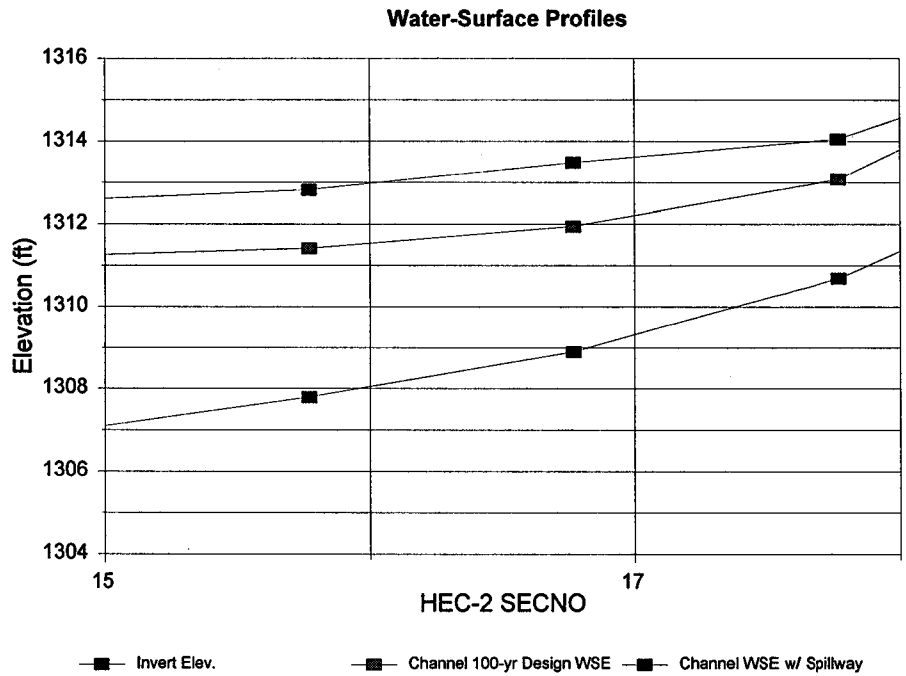

				100-Year Design					Spillway Design				
SECNO	CUMDS	ELMIN	CWSEL	Q	Vm	dm	ds	CWSEL	Q	Vm	dm	ds	ds (max)
15.77	675	1307.80	1311.43	444	4.02	3.63	0.66	1312.84	1000	5.30	5.04	2.82	2.82
16.77	775	1308.90	1311.96	444	5.11	3.06	1.54	1313.50	756	4.70	4.60	1.76	1.76
17.77	875	1310.70	1313.10	444	6.64	2.40	2.29	1314.07	512	4.57	3.37	1.16	2.29

ds = dm ((Vm/Vc) -1)

Reference: USBR, "Computing Degradation and Local Scour," 1984.

ds = Scour depth below streambed, ft
dm = Mean flow depth, ft
Vm = Mean channel velocity, ft/sec
Vc = Competent channel velocity, ft/sec
Vc = 3.4 (assumed from field observations)

— USE SAFETY FACTOR OF 1.5

DESIGN SCOUR DEPTH = 1.5 (2.8) = 4.2' ≈ 4.25'

CSB 3-21-95

PROJ. # 12183
VRM 3/8/95
1 OF 1

<<<<<< Cross Section: 15.77: (FN = exist.out) >>>>>>

Q4= 943 WS4= 1312.69

Q2= 674 WS2= 1311.99
Q3= 819 WS3= 1312.39

Manning-n Values: LOB: 0 CH: .045 ROB: 0

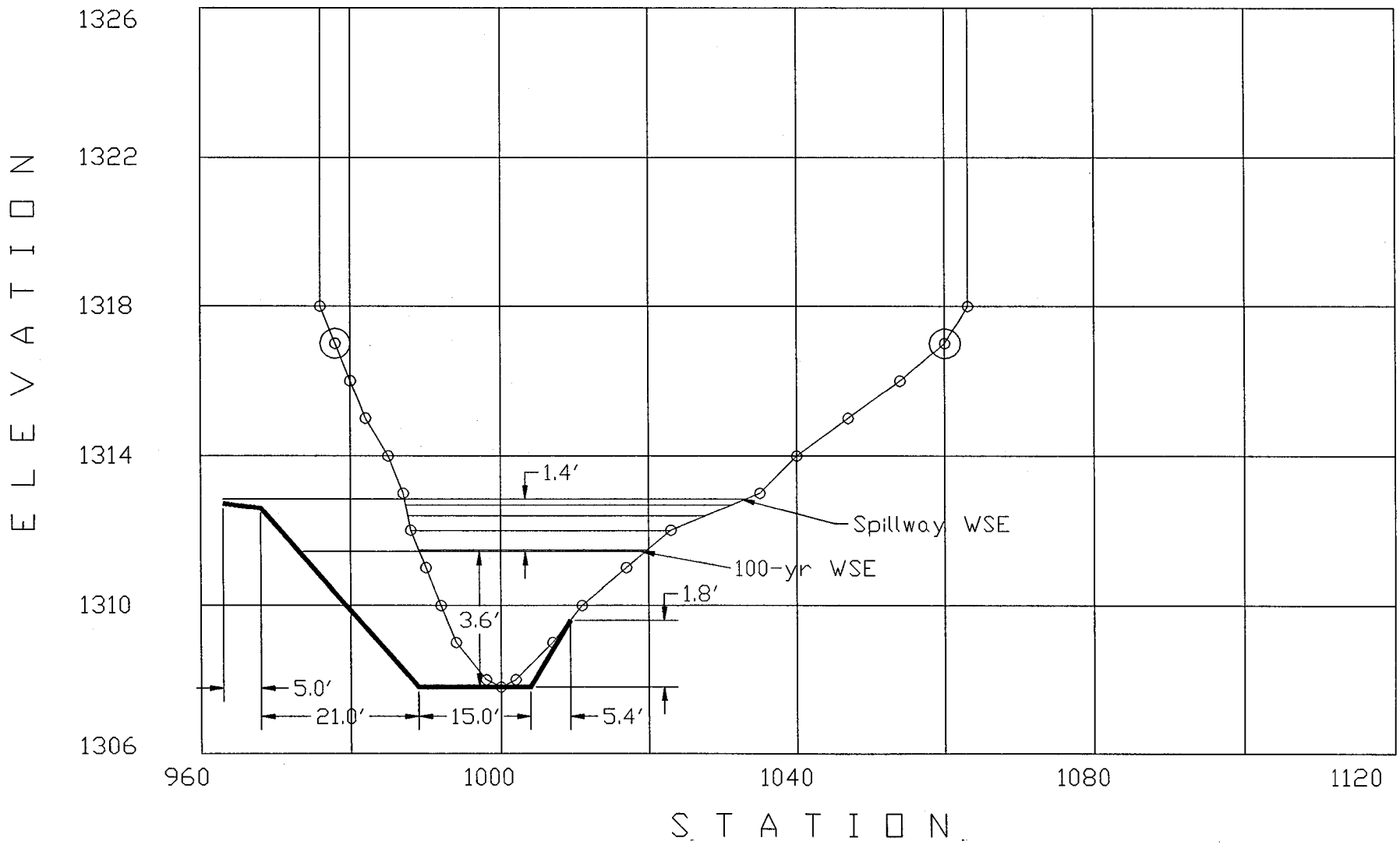

02-16-1995

<<<<<< Cross Section: 16.77: (FN = exist.out) >>>>>>

Q1= 500 WS1= 1313.47
Q2= 674 WS2= 1313.99
Q3= 819 WS3= 1314.39
Q4= 943 WS4= 1314.67

Manning-n Values: LOB: 0 CH: .045 ROB: 0

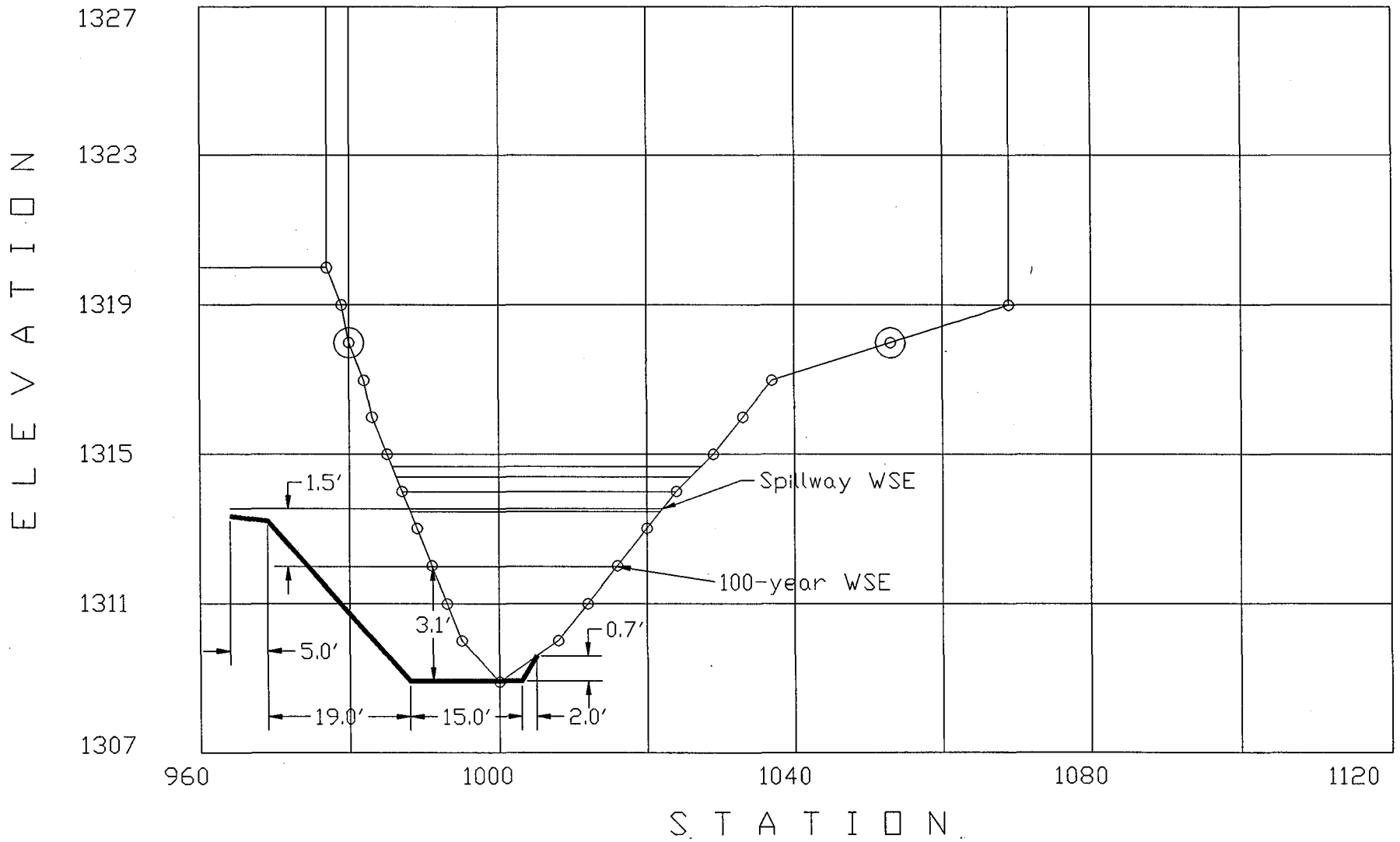

02-16-1995

<<<<<< Cross Section: 17.77: (FN = exist.out) >>>>>>

Q1= 500 WS1= 1314.38
Q2= 674 WS2= 1314.99
Q3= 819 WS3= 1315.44
Q4= 943 WS4= 1315.77

Manning-n Values: LOB: 0 CH: .045 ROB: 0

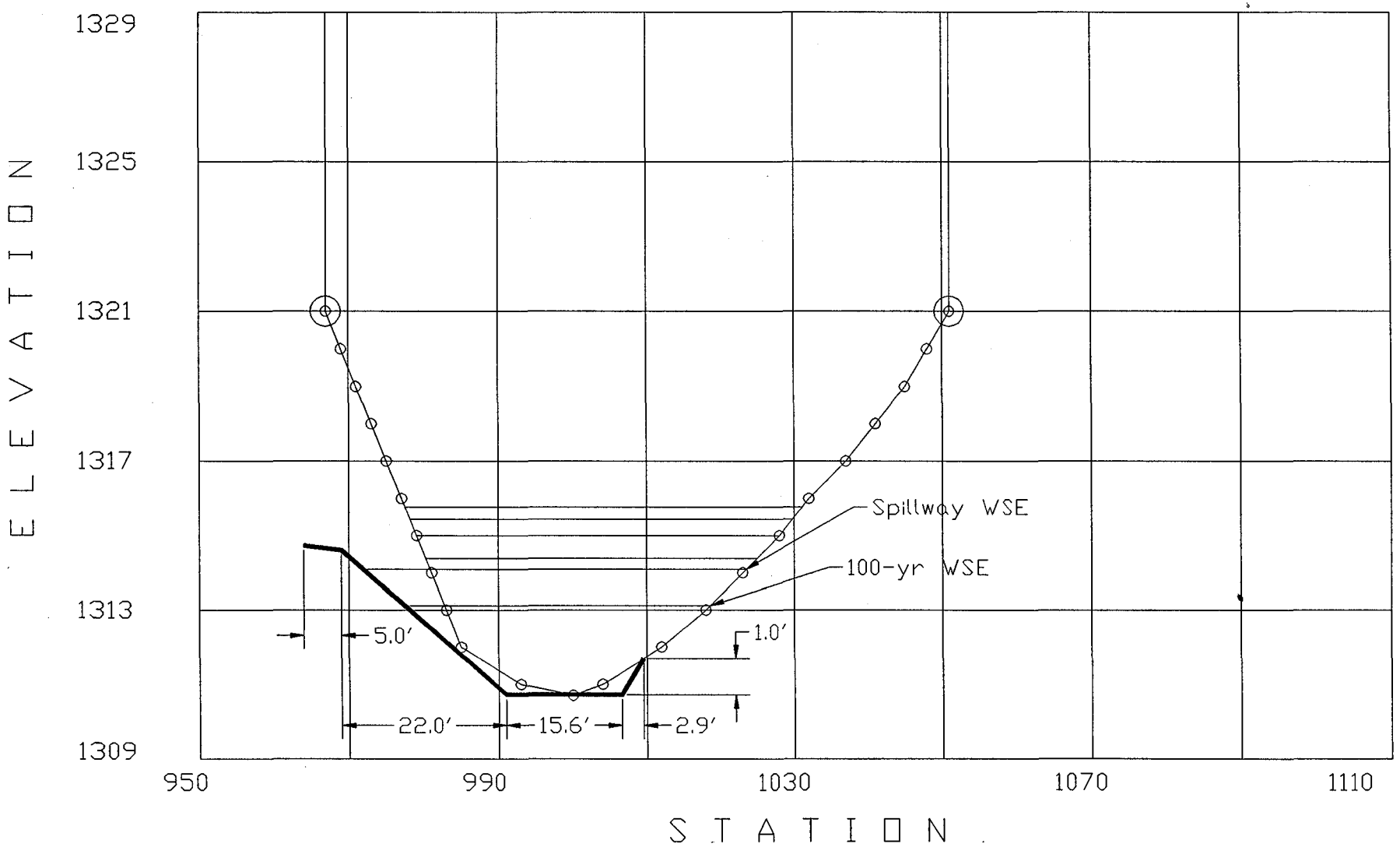

02-16-1995

```
*********************************************
*  HEC-2 WATER SURFACE PROFILES             *
*                                           *
*  Version   4.6.2;  May 1991               *
*                                           *
*  RUN DATE    08MAR95    TIME    18:56:57  *
*********************************************
```

```
****************************************
*  U.S. ARMY CORPS OF ENGINEERS        *
*  HYDROLOGIC ENGINEERING CENTER       *
*  609 SECOND STREET, SUITE D          *
*  DAVIS, CALIFORNIA 95616-4687        *
*          (916) 756-1104              *
****************************************
```

```
X     X  XXXXXXX   XXXXX              XXXXX
X     X  X       X     X            X     X
X     X  X       X                        X
XXXXXXX  XXXX     X         XXXXX    XXXXX
X     X  X       X                  X
X     X  X       X     X            X
X     X  XXXXXXX   XXXXX            XXXXXXX
```

SPILLWAY
ORIGINAL

THIS MODEL IS USED FOR PRELIMINARY SPILLWAY OPERATING WATER SURFACE PROFILES. THE FINAL EMERGENCY/SPILLWAY HEC-2 RUN, MODEL 121031H2C, MAY DIFFER SLIGHTLY.

THIS RUN EXECUTED 08MAR95 18:56:57

```
************************************
 HEC-2 WATER SURFACE PROFILES

 Version   4.6.2;  May 1991
************************************


T1      10TH STREET WASH                    STANLEY CONSULTANTS PROJECT # 12183
T2      BASIN NO. 1                                          FILENAME: H2B_PROP
T3      MAIN STREAM SUBCRITICAL FLOW
T4
T4      ***************************************************************************
T4      THIS MODEL IS INTENDED FOR USE IN ESTIMATING THE WATER SURFACE ELEVATION
T4      ALONG THE 10TH WASH AND THE WEST TRIBUTARY FOR PROPOSED CONDITIONS.
T4      THE FLOWS USED IN THIS MODEL WERE TAKEN FROM THE HEC-1 MODEL DONE BY
T4      KAMINSKI-HUBBARD (ADMS) AND MODIFIED BY SCI USING THE 14"x14" STEEL
T4      PLATE ORIFICE OPENING FOR THE PRINCIPAL SPILLWAY OUTLET PIPE OF THE
T4      EXISTING CITY OF PHOENIX DETENTION DAM NO. 3.
T4      ***************************************************************************
T4
T4      ***************************************************************************
T4      THIS MODEL IS ESSENTIALLY THE SAME AS MODEL 12183H2B EXCEPT FOR THE
T4      ADDITIONAL AND MODIFIED CROSS SECTIONS USED TO BETTER ESTIMATE FLOW
T4      CONDITIONS TO REFLECT THE FOLLOWING PROPOSED CHANNEL IMPROVEMENTS:
T4
T4  1.  THIS MODEL REFLECTS THE PROPOSED IMPROVEMENTS REQUIRED FOR THE INLET
T4      LOCATED ON THE WEST TRIBUTARY.  THE CHANNEL IMPROVEMENT CONSISTS OF
T4      CONCRETE LINED REACH INCLUDING A TRANSITION SECTION FROM A TRAPEZOIDAL
T4      SECTION TO A RECTANGULAR SECTION UPSTREAM OF THE WEIR INLET, A
T4      RECTANGULAR REACH JUST UPSTREAM FROM THE WEIR AND THROUGHOUT THE WEIR
T4      LENGTH, AND A TRANSITION FROM A RECTANGULAR SECTION TO A TRAPEZOIDAL
T4      SECTION DOWNSTREAM OF THE WEIR.  ADDITIONAL TRANSITION LENGTHS ARE USED
T4      TO MATCH EXISTING CHANNEL GEOMETRY BOTH UPSTREAM AND DOWNSTREAM OF THE
T4      CONCRETE LINED REACH.  THESE ADDITIONAL TRANSITIONS ARE RIPRAP LINED TO
T4      TO PROVIDE SCOUR PROTECTION AND BANK STABILITY.  THE PROPOSED WEIR REACH
T4      HAS A 12' BOTTOM WIDTH AT THE UPSTREAM END AND A 9' BOTTOM WIDTH AT THE
T4      DOWNSTREAM END.  THE TAPERED WEIR ALLOWS THE CONTROL SECTION TO BE
T4      LOCATED AT THE DOWNSTREAM END OF THE WEIR AND PROVIDES GREATER HEAD
T4      THROUGHOUT THE WIER LENGTH.  PROPOSED CONDITION WATER SURFACE ELEVATIONS
T4      ARE NOT ABOVE THE EXISTING WATER SURFACE ELEVATIONS UPSTREAM OF THE
T4      PROJECT.  THE MANNING'S ROUGHNESS COEFICIENT "n" = 0.016 FOR THE
T4      CONCRETE LINED REACH AND "n" = 0.035 FOR THE RIPRAP LINED REACHES.
T4
T4  2.  **** CHANNEL REGRADING ETC DOWNSTREAM OF THE WEST TRIB INLET ****
T4
T4
T4      THIS RUN WILL BE USED TO ESTIMATE THE PROPOSED WATER SURFACE PROFILE
T4      UPSTREAM OF THE WEIR AND DOWNSTREAM OF THE CONCRETE LINED SECTION.  THE
T4      WATER SURFACE ELEVATIONS WITHIN THE WEIR SECTION AND IN THE EXPANSION
T4      TRANSITION DOWNSTREAM OF THE WIER SECTION MAY NOT BE ACCURATE DUE TO
T4      SUPERCRITICAL FLOW EXPERIENCED IN THE SPLIT FLOW WEIR PERFORMANCE.  A
T4      HYDRAULIC JUMP WILL BE FORCED TO OCCUR IN THE CONCRETE LINED TRANSITION
T4      BY A SERIES OF BAFFLE BLOCKS.  THE SPLIT FLOW GENERATED BY THIS MODEL
```

```
T4      IS USED FOR THE HEC-1 WEST TRIBUTARY WEIR INFLOW RATING CURVE.
T4      ************************************************************************
T4
T4      1. CROSS SECTION DATA DEVELOPED FROM ONE-FOOT CONTOUR AERIAL TOPOGRAPHIC
T4         MAPS (DMJM ENGINEERING/KENNEY AERIAL MAPPING) AND SUPPLEMENTAL SURVEY
T4         CONDUCTED BY SCI.  DATUM IS CITY OF PHOENIX.
T4
T4      2. CROSS SECTIONS ORIENTED LEFT TO RIGHT LOOKING DOWNSTREAM.
T4
T4      3. CROSS SECTION GR STATION 1000 CORRESPONDS TO CENTERLINE OF THE WASH.
T4
T4      4. THE ROUGHNESS COEFFICIENTS USED RANGE FROM "n"=0.020 TO "n"=0.100 FOR
T4         EXISTING CONDITIONS AND "n"=0.016 TO "n"=0.100 FOR PROPOSED
T4         CONDITIONS.
T4
T4      5. STARTING WATER SURFACE ELEVATION IS CALCULATED USING SLOPE AREA.
T4
T4

J1  ICHECK    INQ      NINV     IDIR     STRT     METRIC   HVINS    Q        WSEL     FQ

              2                         0.001                                1306.5

J2  NPROF     IPLOT    PRFVS    XSECV    XSECH    FN       ALLDC    IBW      CHNIM    ITRACE

     1                -1                                     -1


J3  VARIABLE CODES FOR SUMMARY PRINTOUT

    38       43        1        2       13       55       16       14       26       17
    15       56       18                38       43        1       25       42        8
    39       27       53       54       28        4       37                38       43
     1       68       50        3       61       27       21       23       24       22
    28

J5  LPRNT    NUMSEC                 ********REQUESTED SECTION NUMBERS********

   -10      -10

NC   0.100    0.045    0.025    0.2      0.4
QT       1     1000
X1    8.97        9      992   1007.5
X2                                                                                  15
X3                                                   1042
GR    1310      797     1309      938     1308      992     1305      997     1304     1000
GR    1305     1002     1308   1007.5     1309     1028     1310     1042
```

X1	9.35	9	992	1011	38	38	38			
X2										15
X3						1042				
GR	1310	816	1309	926	1308	992	1305	998	1304	1000
GR	1305	1002	1308	1009	1309	1011	1310	1043		
NC	0.020	0.020	0.020	0.1	0.3					
X1	10.00	16	807	1080	55	55	60			
GR	1311.0	673	1310.0	807	1309.0	877	1308.0	898	1307.0	924
GR	1306.0	950	1305.0	980	1305.0	1000	1305.0	1010	1306.0	1026
GR	1307.0	1040	1308.0	1052	1309.0	1065	1310.0	1080	1311.0	1100
GR	1312.0	1127								
NC	0.045	0.045	0.045	0.1	0.3					
X1	10.32	16	890	1064	25	36	32			
GR	1311.0	849	1310.0	890	1309.0	900	1308.0	930	1307.0	949
GR	1306.0	978	1305.0	996	1305.0	1000	1305.0	1002	1306.0	1011
GR	1307.0	1019	1308.0	1032	1309.0	1047	1310.0	1064	1311.0	1079
GR	1312.0	1111								
X1	11.42	18	968	1042	90	115	110			
GR	1313.0	965	1312.0	968	1311.0	971	1310.0	974	1309.0	977
GR	1308.0	982	1307.0	986	1306.0	989	1305.0	993	1304.0	1000
GR	1305.0	1007	1306.0	1015	1307.0	1021	1308.0	1027	1309.0	1033
GR	1310.0	1036	1311.0	1039	1312.0	1042				
NC	0.020	0.020	0.020	0.1	0.3					
X1	11.62	12	952	1080	20	20	20			
GR	1313.0	941	1312.0	952	1311.0	958	1310.0	963	1309.0	970
GR	1308.0	977	1307.5	1000	1308.0	1014	1309.0	1026	1310.0	1034
GR	1311.0	1041	1312.0	1080						
NC	0.045	0.045	0.045	0.1	0.3					
X1	11.82	14	966	1071	20	20	20			
GR	1313.0	963	1312.0	966	1311.0	969	1310.0	972	1309.0	977
GR	1308.0	983	1307.0	989	1307.0	1000	1307.0	1005	1308.0	1018
GR	1309.0	1025	1310.0	1033	1311.0	1049	1312.0	1071		
X1	13.77	21	959	1033	185	205	195			
GR	1315.0	956	1314.0	959	1313.0	962	1312.0	965	1311.0	968
GR	1310.0	971	1309.0	976	1308.0	980	1307.0	985	1306.0	993
GR	1306.0	1000	1306.0	1005	1307.0	1009	1308.0	1013	1309.0	1016
GR	1310.0	1020	1311.0	1023	1312.0	1026	1313.0	1029	1314.0	1033
GR	1315.0	1036								
X1	15.77	13	968	1060	195	205	200			
GR	1312.7	963	1312.6	968	1307.8	989	1307.8	1004	1310.8	1016.4
GR	1311.0	1017	1312.0	1023	1313.0	1035	1314.0	1040	1315.0	1047
GR	1316.0	1054	1317.0	1060	1318.0	1063				

QT	1	756								
X1	16.77	15	969	1053	92	115	100			
GR	1313.3	964	1313.2	969	1308.9	988	1308.9	1003	1309.6	1006
GR	1310.0	1008	1311.0	1012	1312.0	1016	1313.0	1020	1314.0	1024
GR	1315.0	1029	1316.0	1033	1317.0	1037	1318.0	1053	1319.0	1069
QT	1	512								
X1	17.77	14	969	1051	100	105	100			
GR	1314.7	964	1314.6	969	1310.7	991	1310.7	1006.6	1311.9	1012
GR	1313.0	1018	1314.0	1023	1315.0	1028	1316.0	1032	1317.0	1037
GR	1318.0	1041	1319.0	1045	1320.0	1048	1321.0	1051		
X1	18.61	17	915	1066	110	60	84			
GR	1320.0	874	1319.0	915	1318.0	936	1317.0	951	1316.0	963
GR	1315.0	985	1314.0	992	1313.1	998	1313.1	1000	1313.1	1001
GR	1314.0	1011	1315.0	1018	1316.0	1027	1317.0	1038	1318.0	1051
GR	1319.0	1066	1320.0	1081						

SECNO	DEPTH	CWSEL	CRIWS	WSELK	EG	HV	HL	OLOSS	L-BANK ELEV
Q	QLOB	QCH	QROB	ALOB	ACH	AROB	VOL	TWA	R-BANK ELEV
TIME	VLOB	VCH	VROB	XNL	XNCH	XNR	WTN	ELMIN	SSTA
SLOPE	XLOBL	XLCH	XLOBR	ITRIAL	IDC	ICONT	CORAR	TOPWID	ENDST

FLOW DISTRIBUTION FOR SECNO= 8.97 CWSEL= 1311.44

STA=	797.	938.	992.	1008.	1028.	1042.
PER Q=	20.0	15.4	47.5	13.0	4.1	
AREA=	273.6	158.8	86.6	60.3	27.2	
VEL=	.7	1.0	5.5	2.2	1.5	
DEPTH=	1.9	2.9	5.6	2.9	1.9	

FLOW DISTRIBUTION FOR SECNO= 9.35 CWSEL= 1311.47

STA=	816.	926.	992.	1011.	1042.
PER Q=	16.5	19.7	53.6	10.2	
AREA=	217.7	196.6	98.6	61.8	
VEL=	.8	1.0	5.4	1.7	
DEPTH=	2.0	3.0	5.2	2.0	

THIS RUN EXECUTED 08MAR95 18:56:58

****
HEC-2 WATER SURFACE PROFILES

Version 4.6.2; May 1991
****

NOTE- ASTERISK (*) AT LEFT OF CROSS-SECTION NUMBER INDICATES MESSAGE IN SUMMARY OF ERRORS LIST

MAIN STREAM SUBCRITICAL

SUMMARY PRINTOUT

	SECNO	Q	CWSEL	CRIWS	QLOB	VLOB	K*XNL	QCH	VCH	K*XNCH	QROB	VROB	K*XNR
	8.970	1000.00	1311.44	1310.33	353.62	.82	100.00	475.11	5.49	25.00	171.26	1.96	45.00
	9.350	1000.00	1311.47	1310.45	362.17	.87	100.00	535.62	5.43	25.00	102.21	1.65	45.00
*	10.000	1000.00	1311.74	1307.03	58.54	.35	20.00	931.53	.80	20.00	9.93	.31	20.00
*	10.320	1000.00	1311.73	1307.86	28.14	.56	45.00	959.30	1.29	45.00	12.55	.46	45.00
*	11.420	1000.00	1311.69	1308.36	.00	.00	.00	1000.00	3.12	45.00	.00	.00	.00
	11.620	1000.00	1311.66	1310.16	.00	.00	.00	1000.00	3.84	20.00	.00	.00	.00
*	11.820	1000.00	1311.68	1310.04	.00	.00	.00	1000.00	3.97	45.00	.00	.00	.00
	13.770	1000.00	1312.27	1309.68	.00	.00	.00	1000.00	3.94	45.00	.00	.00	.00
*	15.770	1000.00	1312.84	1311.49	.83	.86	45.00	999.16	5.30	45.00	.00	.00	.00
	16.770	756.00	1313.50	1312.04	1.14	.89	45.00	754.86	4.70	45.00	.00	.00	.00
*	17.770	512.00	1314.07	1313.15	.00	.00	.00	512.00	4.57	45.00	.00	.00	.00
*	18.610	512.00	1315.91	1315.91	.00	.00	.00	512.00	6.51	45.00	.00	.00	.00

MAIN STREAM SUBCRITICAL

SUMMARY PRINTOUT

	SECNO	Q	CWSEL	AREA	ELMIN	DEPTH	XLCH	STENCL	SSTA	ENDST	STENCR	TOPWID	TWA
	8.970	1000.00	1311.44	606.34	1304.00	7.44	.00	.00	797.00	1042.00	1042.00	245.00	.00
	9.350	1000.00	1311.47	574.65	1304.00	7.47	38.00	.00	816.00	1042.00	1042.00	226.00	.21
*	10.000	1000.00	1311.74	1359.36	1305.00	6.74	60.00	.00	673.00	1120.01	.00	447.01	.65
*	10.320	1000.00	1311.73	820.85	1305.00	6.73	32.00	.00	849.00	1102.41	.00	253.41	.89
*	11.420	1000.00	1311.69	320.44	1304.00	7.69	110.00	.00	968.93	1041.07	.00	72.15	1.30
	11.620	1000.00	1311.66	260.61	1307.50	4.16	20.00	.00	954.05	1066.67	.00	112.61	1.34
*	11.820	1000.00	1311.68	252.11	1307.00	4.68	20.00	.00	966.96	1063.95	.00	96.98	1.39
	13.770	1000.00	1312.27	253.81	1306.00	6.27	195.00	.00	964.21	1026.79	.00	62.58	1.75
*	15.770	1000.00	1312.84	189.54	1307.80	5.04	200.00	.00	963.00	1033.12	.00	70.12	2.05
	16.770	756.00	1313.50	161.75	1308.90	4.60	100.00	.00	964.00	1022.02	.00	58.02	2.20
*	17.770	512.00	1314.07	112.10	1310.70	3.37	100.00	.00	971.99	1023.35	.00	51.35	2.32
*	18.610	512.00	1315.91	78.63	1313.10	2.81	84.00	.00	965.03	1026.17	.00	61.14	2.43

MAIN STREAM SUBCRITICAL

SUMMARY PRINTOUT

	SECNO	Q	CWSEL	FRCH	DIFWSP	EG	DIFEG	STENCL	STCHL	XLBEL	RBEL	STCHR	STENCR
	8.970	1000.00	1311.44	.41	.00	1311.68	.00	.00	992.00	1308.00	1308.00	1007.50	1042.00
	9.350	1000.00	1311.47	.42	.00	1311.72	.00	.00	992.00	1308.00	1309.00	1011.00	1042.00
*	10.000	1000.00	1311.74	.07	.00	1311.75	.00	.00	807.00	1310.00	1310.00	1080.00	.00
*	10.320	1000.00	1311.73	.11	.00	1311.76	.00	.00	890.00	1310.00	1310.00	1064.00	.00
*	11.420	1000.00	1311.69	.26	.00	1311.84	.00	.00	968.00	1312.00	1312.00	1042.00	.00
	11.620	1000.00	1311.66	.44	.00	1311.89	.00	.00	952.00	1312.00	1312.00	1080.00	.00
*	11.820	1000.00	1311.68	.43	.00	1311.92	.00	.00	966.00	1312.00	1312.00	1071.00	.00
	13.770	1000.00	1312.27	.34	.00	1312.51	.00	.00	959.00	1314.00	1314.00	1033.00	.00
*	15.770	1000.00	1312.84	.55	.00	1313.28	.00	.00	968.00	1312.60	1317.00	1060.00	.00
	16.770	756.00	1313.50	.48	.00	1313.85	.00	.00	969.00	1313.20	1318.00	1053.00	.00
*	17.770	512.00	1314.07	.54	.00	1314.40	.00	.00	969.00	1314.60	1321.00	1051.00	.00
*	18.610	512.00	1315.91	1.01	.00	1316.57	.00	.00	915.00	1319.00	1319.00	1066.00	.00

SUMMARY OF ERRORS AND SPECIAL NOTES

```
WARNING SECNO=     10.000  PROFILE=  1  CONVEYANCE CHANGE OUTSIDE ACCEPTABLE RANGE

WARNING SECNO=     10.320  PROFILE=  1  CONVEYANCE CHANGE OUTSIDE ACCEPTABLE RANGE

WARNING SECNO=     11.420  PROFILE=  1  CONVEYANCE CHANGE OUTSIDE ACCEPTABLE RANGE

WARNING SECNO=     11.820  PROFILE=  1  CONVEYANCE CHANGE OUTSIDE ACCEPTABLE RANGE

WARNING SECNO=     15.770  PROFILE=  1  CONVEYANCE CHANGE OUTSIDE ACCEPTABLE RANGE

WARNING SECNO=     17.770  PROFILE=  1  CONVEYANCE CHANGE OUTSIDE ACCEPTABLE RANGE

CAUTION SECNO=     18.610  PROFILE=  1  CRITICAL DEPTH ASSUMED
CAUTION SECNO=     18.610  PROFILE=  1  MINIMUM SPECIFIC ENERGY
```

DETENTION BASIN RETAINING WALL

STANLEY CONSULTANTS

Computed by DRS Date MAR 95
Checked by KAS Date 3/95
Reviewed by _____ Date _____
Approved by _____ Date _____

Job No. _____ Page No. _____
Subject FCDMC
10TH STREET WASH
Sheet No. _____ of _____

FLOOD WALL ANALYSIS AND DESIGN

COMPUTER PROGRAM ST001 (STANLEY STANDARD)

CHECK 3 LOADING CONDITIONS ASSUMED TO ENVELOPE WORST CASES

	DRIVING SIDE	RESISTING SIDE
1.	OVERFULL BY 2 FT OF WATER	WASH SIDE EMBANKMENT INTACT (PASSIVE)
2.	FULL OF WATER	WASH SIDE EMBANKMENT REMOVED ABOVE BASE
3.	EMPTY, NEGLECT INT. FILL	WASH SIDE EMBANKMENT IMPARTING ACTIVE PR.

CASE 2 ; CHECK BASE FRICTION = 0.3 WITH PASSIVE @ BASE
= 0.4 WITHOUT PASSIVE @ BASE

WEIR 1318.3
TOE 1306.3

TRIAL PARAMETERS - CONCRETE

A	STEM @ TOP	1.0	
B	TOTAL HEIGHT	14.0	
C	BASE WIDTH	18.0 EST	19.0 FINAL
D	HEEL @ TIP	2.0	
E	HEEL TAPER	0	
F	TOE @ TIP	2.0	
G	TOE TAPER	0	
	BATTER	9.6	

USE SOIL PROPERTIES OF LAYER 2 TO SIMULATE WATER $\gamma = 0.0625$

$\phi = 0$ $K_A = \frac{1 - \sin\phi}{1 + \sin\phi} = 1.0$

SC 3004 R1 691

STANLEY CONSULTANTS

Computed by CRS Date MAR 95
Checked by KAS Date 3/95
Reviewed by _____ Date _____
Approved by _____ Date _____

Job No. _____ Page No. _____
Subject FLOOD WALL
10th
Sheet No. _____ of _____

FLOOD WALL ANALYSIS AND DESIGN

TRIAL PARAMETERS - SOILS

H	EXCESS STEM	0
I	LAYER 1	0
J	BACK SLOPE	1000
K	LAYER 4	2.0
L	LAYER 3	6.0 (±)

F/S	CODE (RESISTING / DRIVING)	0

CASE 1		ϕ	γ_{MOIST}	γ_{SAT}	K_A	K_P	COHESION
	1	0	0	0	0	-	-
	2	0	0.0625	0.0625	1.0	-	-
	3	0	0.125	0.125	-	2.0	-
	4	0	0.125	0.125	-	2.0	-
	5	17	-	-	-	-	0
CASE 2A							
	3	0	0.125	0.125	-	0	
	4	0	0.125	0.125	-	2.0	
	5	17°	-	-	-	-	0
CASE 2B							
	3	0	0.125	0.125	-	0	
	4	0	0.125	0.125	-	0	
	5	22°	-	-	-	-	0
CASE 3							
	2	0	0	0	-	0	
	3	0	0.125	0.125	-	0.28	
	4	0	0.125	0.125	-	0.28	
	5	17	-	-	-	-	0

STANLEY CONSULTANTS

Computed by DRS Date MAR 95
Checked by KAS Date 3/95
Reviewed by _____ Date _____
Approved by _____ Date _____

Job No. _____ Page No. _____
Subject FCDMC
10TH STREET [illegible]
Sheet No. _____ of _____

FLOOD WALL ANALYSIS AND DESIGN

LOAD CASE VARIABLES

	CASE 1	CASE 2	CASE 3
m	14	14	0
N	2	2	0
SURCH.	0.125	0	0
Q SAFE	2.0	2.0	2.0
RESULTANT	3	3	3
F.S. =	1.5	*	2.0

U = 1 WATER PRODUCES UPLIFT

EQ. = 0 NO EARTHQUAKE

* DESIGN CUTOFF WALL/SHEAR KEY TO RESIST DRIVING FORCES SINCE PROGRAM STOOL DOES NOT PERMIT SHEAR KEY INPUT (INSTEAD, IT INCREASES THE BASE WIDTH, DIM. "C")

PROGRAM ST001

R E T A I N I N G W A L L A N A L Y S I S

03/07/95
12:01:39

CASE 1 -- WSE = 1320.8 ; BASE FRICTION WITH PASSIVE LAYERS 3 & 4

INPUT VERIFICATION

```
STRUCTURE DIMENSIONS (FT)
     A=   1.000
     B=  14.000
     C=  18.000 (ORIGINAL ESTIMATE)
     D=   2.000
     E=    .000
     F=   2.000
     G=    .000
     BATTER= 1/  9.600

SOIL DIMENSIONS (FT)
     H=    .000
     I=    .000
     J=1000.000  LEVEL BACKFILL
     K=   2.000
     L=   6.000

NUMBER OF LOADING CASES=  1

SOIL LAYER PROPERTIES (DEGREES AND KIPS/FT**3)
     LAYER  1
          PHI=   .0000
          WTM=   .0000
          WTS=   .0000
          KA =   .0000
     LAYER  2
          PHI=   .0000
          WTM=   .0625
          WTS=   .0625
          KA =  1.0000
     LAYER  3
          PHI=   .0000
          WTM=   .1250
          WTS=   .1250
          KP =  2.0000
     LAYER  4
          PHI=   .0000
          WTM=   .1250
          WTS=   .1250
          KP =  2.0000
     LAYER  5
          PHI= 17.0000
          COH=   .0000

SLIDING STABILITY ANALYSIS TO BE BASED ON
     RESISTING FORCES/DRIVING FORCES
```

PROGRAM ST001 PAGE 2

R E T A I N I N G W A L L A N A L Y S I S 03/07/95 12:01:39

CASE 1 -- WSE = 1320.8 ; BASE FRICTION WITH PASSIVE LAYERS 3 & 4

RESULTS OF STABILITY ANALYSIS

LOADING CASE 1

UPLIFT ON BASE INCLUDED		EARTHQUAKE COEF.	= .00
WATER BEHIND	= 14.000	ALLOW. BEARING PRESS.	= 3.00
WATER IN FRONT	= 2.000 FT	RESULTANT IN MIDDLE	1/2.0
UNIFORM SURCHARGE	= .125 KSF	MIN. SLIDING F.S.	= 1.50

REQUIRED BASE WIDTH = 19.000

RESULTING LOAD AND MOMENTS(ABOUT TOE) (KIPS AND FT-KIPS)

		***** LOAD ***** VERT.	HORIZ	MOMENTS
CONCRETE	=	8.63		70.54
SOIL ON HEEL	=	9.47		120.17
SOIL AND WATER ON TOE	=	3.56		8.46
SURCHARGE ON HEEL	=	1.66		20.50
WATER AT HEEL	=		-6.13	-28.58
WATER AT TOE	=		.13	.08
UPLIFT ON BASE	=	-9.50		-112.81
ACTIVE SOIL	=	.00	-1.76	-12.32
PASSIVE SOIL	=		8.00	
		---	---	---
TOTALS	=	13.82	.24	66.03

ECCENTRICITY OF RESULTANT LOAD= 4.72 FT.

TOE SOIL BEARING PRESSURE = 1.93 KSF
HEEL SOIL BEARING PRESSURE = .00 KSF

F.S. SLIDING= 1.57

F.S. OVERTURNING = $\frac{\Sigma M_R}{\Sigma M_{OT}} = \frac{219.75}{153.71} = 1.43$ OK

R E T A I N I N G W A L L A N A L Y S I S

CASE 1 -- WSE = 1320.8 ; BASE FRICTION WITH PASSIVE LAYERS 3 & 4

STRUCTURAL ANALYSIS
****

STEM, MOMENTS(FT-KIPS) AND SHEARS(KIPS) AT QUARTER POINTS

MOMENTS	BOTTOM	1/4	1/2	3/4
CASE 1	27.00	12.66	4.50	.84
SHEARS				
CASE 1	6.00	3.66	1.88	.66

HEEL, MOMENTS AND SHEARS AT STEM AND HALF WAY TO HEEL

MOMENTS	STEM	1/2
CASE 1	24.19	6.79
SHEARS		
CASE 1	2.83	2.40

TOE, MOMENTS AND SHEARS AT STEM AND HALF WAY TO TOE

MOMENTS	STEM	1/2
CASE 1	-9.62	-2.62
SHEARS		
CASE 1	-3.69	-2.11

* * * PROGRAM ST001 - PROBLEM COMPLETE * * *

I

= MAXIMUM MOMENTS AND SHEARS FOR DESIGN

PROGRAM ST001

R E T A I N I N G W A L L A N A L Y S I S

CASE 2A -- WSE = 1318.3 ; BASE FRICTION WITH PASSIVE LAYER 4

INPUT VERIFICATION

```
STRUCTURE DIMENSIONS (FT)
     A=   1.000
     B=  14.000
     C=  18.000 (ORIGINAL ESTIMATE)
     D=   2.000
     E=    .000
     F=   2.000
     G=    .000
     BATTER= 1/  9.600

SOIL DIMENSIONS (FT)
     H=    .000
     I=    .000
     J=1000.000  LEVEL BACKFILL
     K=   2.000
     L=   6.000

NUMBER OF LOADING CASES=  1

SOIL LAYER PROPERTIES (DEGREES AND KIPS/FT**3)
     LAYER  1
          PHI=   .0000
          WTM=   .0000
          WTS=   .0000
          KA =   .0000
     LAYER  2
          PHI=   .0000
          WTM=   .0625
          WTS=   .0625
          KA =  1.0000
     LAYER  3
          PHI=   .0000
          WTM=   .1250
          WTS=   .1250
          KP =   .0000
     LAYER  4
          PHI=   .0000
          WTM=   .1250
          WTS=   .1250
          KP =  2.0000
     LAYER  5
          PHI= 17.0000
          COH=   .0000

SLIDING STABILITY ANALYSIS TO BE BASED ON
     RESISTING FORCES/DRIVING FORCES
```

CASE 2A -- WSE = 1318.3 ; BASE FRICTION WITH PASSIVE LAYER 4

RESULTS OF STABILITY ANALYSIS

LOADING CASE 1

UPLIFT ON BASE INCLUDED		EARTHQUAKE COEF.	= .00
WATER BEHIND	= 14.000	ALLOW. BEARING PRESS.	= 3.00
WATER IN FRONT	= 2.000 FT	RESULTANT IN MIDDLE	1/2.0
UNIFORM SURCHARGE	= .000 KSF	MIN. SLIDING F.S.	= .50

REQUIRED BASE WIDTH = 19.000

RESULTING LOAD AND MOMENTS(ABOUT TOE) (KIPS AND FT-KIPS)

		***** LOAD ***** VERT.	HORIZ	MOMENTS
CONCRETE	=	8.63		70.54
SOIL ON HEEL	=	9.47		120.17
SOIL AND WATER ON TOE	=	3.56		8.46
SURCHARGE ON HEEL	=	.00		.00
WATER AT HEEL	=		-6.13	-28.58
WATER AT TOE	=		.13	.08
UPLIFT ON BASE	=	-9.50		-112.81
ACTIVE SOIL	=	.00	-.01	-.08
PASSIVE SOIL	=		3.50	
		---	---	---
TOTALS	=	12.16	-2.51	57.77

ECCENTRICITY OF RESULTANT LOAD= 4.75 FT.

TOE SOIL BEARING PRESSURE = 1.71 KSF
HEEL SOIL BEARING PRESSURE = .00 KSF

F.S. SLIDING= 1.20

F.S. OVERTURNING = $\frac{\Sigma M_R}{\Sigma M_{OT}} = \frac{199.25}{141.47} = 1.41$ OK

CASE 2A -- WSE = 1318.3 ; BASE FRICTION WITH PASSIVE LAYER 4

STRUCTURAL ANALYSIS
****

STEM, MOMENTS(FT-KIPS) AND SHEARS(KIPS) AT QUARTER POINTS

MOMENTS	BOTTOM	1/4	1/2	3/4
CASE 1	18.00	7.59	2.25	.28
SHEARS				
CASE 1	4.50	2.53	1.13	.28

HEEL, MOMENTS AND SHEARS AT STEM AND HALF WAY TO HEEL

MOMENTS	STEM	1/2
CASE 1	16.40	4.54
SHEARS		
CASE 1	1.80	1.67

TOE, MOMENTS AND SHEARS AT STEM AND HALF WAY TO TOE

MOMENTS	STEM	1/2
CASE 1	-7.39	-2.03
SHEARS		
CASE 1	-2.81	-1.63

* * * PROGRAM ST001 - PROBLEM COMPLETE * * * I

PROGRAM ST001

R E T A I N I N G W A L L A N A L Y S I S

CASE 2B -- WSE = 1318.3 ; BASE FRICTION ONLY

INPUT VERIFICATION

```
STRUCTURE DIMENSIONS (FT)
     A=   1.000
     B=  14.000
     C=  18.000 (ORIGINAL ESTIMATE)
     D=   2.000
     E=    .000
     F=   2.000
     G=    .000
     BATTER= 1/  9.600

SOIL DIMENSIONS (FT)
     H=    .000
     I=    .000
     J=1000.000  LEVEL BACKFILL
     K=   2.000
     L=   6.000

NUMBER OF LOADING CASES=  1

SOIL LAYER PROPERTIES (DEGREES AND KIPS/FT**3)
     LAYER  1
          PHI=   .0000
          WTM=   .0000
          WTS=   .0000
          KA =   .0000
     LAYER  2
          PHI=   .0000
          WTM=   .0625
          WTS=   .0625
          KA =  1.0000
     LAYER  3
          PHI=   .0000
          WTM=   .1250
          WTS=   .1250
          KP =   .0000
     LAYER  4
          PHI=   .0000
          WTM=   .1250
          WTS=   .1250
          KP =   .0000
     LAYER  5
          PHI= 22.0000
          COH=   .0000

SLIDING STABILITY ANALYSIS TO BE BASED ON
     RESISTING FORCES/DRIVING FORCES
```

PROGRAM ST001

R E T A I N I N G W A L L A N A L Y S I S

03/07/95
12:01:58

CASE 2B -- WSE = 1318.3 ; BASE FRICTION ONLY

RESULTS OF STABILITY ANALYSIS

LOADING CASE 1

UPLIFT ON BASE INCLUDED		EARTHQUAKE COEF.	= .00
WATER BEHIND	= 14.000	ALLOW. BEARING PRESS.	= 3.00
WATER IN FRONT	= 2.000 FT	RESULTANT IN MIDDLE	1/2.0
UNIFORM SURCHARGE	= .000 KSF	MIN. SLIDING F.S.	= .50

REQUIRED BASE WIDTH = 19.000

RESULTING LOAD AND MOMENTS(ABOUT TOE) (KIPS AND FT-KIPS)

		***** LOAD ***** VERT.	HORIZ	MOMENTS
CONCRETE	=	8.63		70.54
SOIL ON HEEL	=	9.47		120.17
SOIL AND WATER ON TOE	=	3.56		8.46
SURCHARGE ON HEEL	=	.00		.00
WATER AT HEEL	=		-6.13	-28.58
WATER AT TOE	=		.13	.08
UPLIFT ON BASE	=	-9.50		-112.81
ACTIVE SOIL	=	.00	-.01	-.08
PASSIVE SOIL	=		.00	
		---	---	---
TOTALS	=	12.16	-6.01	57.77

ECCENTRICITY OF RESULTANT LOAD= 4.75 FT.

TOE SOIL BEARING PRESSURE = 1.71 KSF
HEEL SOIL BEARING PRESSURE = .00 KSF

F.S. SLIDING= .82

F.S. OVERTURNING $= \frac{\Sigma M_R}{\Sigma M_{OT}} = \frac{199.25}{141.47} = 1.41$ ok

CASE 2B -- WSE = 1318.3 ; BASE FRICTION ONLY

STRUCTURAL ANALYSIS
****

STEM, MOMENTS(FT-KIPS) AND SHEARS(KIPS) AT QUARTER POINTS

MOMENTS	BOTTOM	1/4	1/2	3/4
CASE 1	18.00	7.59	2.25	.28
SHEARS				
CASE 1	4.50	2.53	1.13	.28

HEEL, MOMENTS AND SHEARS AT STEM AND HALF WAY TO HEEL

MOMENTS	STEM	1/2
CASE 1	16.40	4.54
SHEARS		
CASE 1	1.80	1.67

TOE, MOMENTS AND SHEARS AT STEM AND HALF WAY TO TOE

MOMENTS	STEM	1/2
CASE 1	-7.39	-2.03
SHEARS		
CASE 1	-2.81	-1.63

* * * PROGRAM ST001 - PROBLEM COMPLETE * * * I

PROGRAM ST001

R E T A I N I N G W A L L A N A L Y S I S

03/07/95
12:02:10

CASE 3 -- BASIN EMPTY ; BASE FRICTION ONLY

INPUT VERIFICATION

```
STRUCTURE DIMENSIONS (FT)
     A=   1.000
     B=  14.000
     C=  18.000 (ORIGINAL ESTIMATE)
     D=   2.000
     E=    .000
     F=   2.000
     G=    .000
     BATTER= 1/  9.600

SOIL DIMENSIONS (FT)
     H=    .000
     I=    .000
     J=1000.000  LEVEL BACKFILL
     K=   2.000
     L=   6.000

NUMBER OF LOADING CASES=  1

SOIL LAYER PROPERTIES (DEGREES AND KIPS/FT**3)
     LAYER  1
          PHI=   .0000
          WTM=   .0000
          WTS=   .0000
          KA =   .0000
     LAYER  2
          PHI=   .0001
          WTM=   .0001
          WTS=   .0001
          KA =   .0000
     LAYER  3
          PHI=   .0000
          WTM=   .1250
          WTS=   .1250
          KP =   .2800
     LAYER  4
          PHI=   .0000
          WTM=   .1250
          WTS=   .1250
          KP =   .2800
     LAYER  5
          PHI= 17.0000
          COH=   .0000

SLIDING STABILITY ANALYSIS TO BE BASED ON
     RESISTING FORCES/DRIVING FORCES
```

PROGRAM ST001

R E T A I N I N G W A L L A N A L Y S I S

03/07/95
12:02:10

CASE 3 -- BASIN EMPTY ; BASE FRICTION ONLY

RESULTS OF STABILITY ANALYSIS

LOADING CASE 1

UPLIFT ON BASE INCLUDED		EARTHQUAKE COEF.	= .00
WATER BEHIND	= .000	ALLOW. BEARING PRESS.	= 3.00
WATER IN FRONT	= 2.000 FT	RESULTANT IN MIDDLE	1/3.0
UNIFORM SURCHARGE	= .000 KSF	MIN. SLIDING F.S.	= 2.00

REQUIRED BASE WIDTH = 18.000

RESULTING LOAD AND MOMENTS(ABOUT TOE) (KIPS AND FT-KIPS)

		***** LOAD ***** VERT.	HORIZ	MOMENTS
CONCRETE	=	8.33		64.26
SOIL ON HEEL	=	.01		.17
SOIL AND WATER ON TOE	=	3.38		7.59
SURCHARGE ON HEEL	=	.00		.00
WATER AT HEEL	=		.00	.00
WATER AT TOE	=		.13	.08
UPLIFT ON BASE	=	-1.13		-6.75
ACTIVE SOIL	=	.00	-.01	-.05
PASSIVE SOIL	=		1.12	
		---	---	---
TOTALS	=	10.59	1.24	65.31

ECCENTRICITY OF RESULTANT LOAD= 2.83 FT.

TOE SOIL BEARING PRESSURE = 1.14 KSF
HEEL SOIL BEARING PRESSURE = .03 KSF

F.S. SLIDING= 456.58 N.A. FOR "REVERSE" LOADING DIRECTION

F.S. OVERTURNING $= \frac{\Sigma M_R}{\Sigma M_{OT}} = \frac{72.10}{6.80} = 10.60$ OK

F.S. SLIDING $= \frac{0.3(10.59)}{0.13 + 1.12} = \frac{3.18}{1.25} = 2.54$ OK

$= \frac{\text{AVAILABLE BASE FRICTION}}{\text{DRIVING FORCE ON EXT. SIDE}}$

CASE 3 -- BASIN EMPTY ; BASE FRICTION ONLY

STRUCTURAL ANALYSIS
****

STEM, MOMENTS(FT-KIPS) AND SHEARS(KIPS) AT QUARTER POINTS

MOMENTS	BOTTOM	1/4	1/2	3/4
CASE 1	.03	.01	.00	.00
SHEARS				
CASE 1	.01	.00	.00	.00

HEEL, MOMENTS AND SHEARS AT STEM AND HALF WAY TO HEEL

MOMENTS	STEM	1/2
CASE 1	.69	2.21
SHEARS		
CASE 1	-1.33	.42

TOE, MOMENTS AND SHEARS AT STEM AND HALF WAY TO TOE

MOMENTS	STEM	1/2
CASE 1	-1.17	-.42
SHEARS		
CASE 1	-.29	-.32

* * * PROGRAM ST001 - PROBLEM COMPLETE * * * I

STANLEY CONSULTANTS

Computed by DRS Date MAR 95
Checked by KAS Date 3/95
Reviewed by _____ Date _____
Approved by _____ Date _____

Job No. 12183 Page No. _____
Subject FCDM
10TH STREET WASH
Sheet No. _____ of _____

DESIGN MOMENTS AND SHEARS

STEM @ BASE

M = 27.00
V = 6.00

STEM @ 1/4 HT

M = 12.66
V = 3.66

HEEL

M = 24.19
V = 2.83

TOE

M = -9.62
V = -3.69

USE WORKING STRESS DESIGN $f_s = 24$, $f_c' = 3$

STEM @ BASE

$$A_s = \frac{27.00}{1.76\,(27'' - 2'' - 1'')} = 0.64 \text{ in}^2/\text{FT}$$

USE # 6 @ 6"
0.88 > 0.64 OK

STEM @ 1/4 HT

$$A_s = \frac{12.66}{1.76\,(23.25 - 2 - 1)} = 0.36$$

USE # 6 @ 12"
0.44 > 0.36 OK

(DROP 50% @ 1/2 HT)

STANLEY CONSULTANTS

Computed by DRS Date MAR 95
Checked by KAS Date 3/95
Reviewed by _____ Date _____
Approved by _____ Date _____

Job No. 12183 Page No. _____
Subject FCDMC
10TH STREET WALL
Sheet No. _____ of _____

HEEL (TOP REINF)

$$A_s = \frac{24.19}{1.76(24-2-1)} = 0.65 \text{ in}^2/\text{FT}$$

USE #6 @ 6
TO MATCH VERTS
0.88 > 0.64 OK

TOE (BOTTOM REINF)

$$A_s = \frac{9.62}{1.76(24-3-1)} = 0.27 \text{ in}^2/\text{FT}$$

USE #5 @ 12
0.31 > 0.27 OK

OTHER REINFORCEMENT MINIMAL

STEM (WASH SIDE) VERT #4 @ 18
STEM E.F. HORIZ #4 @ 18

BASE TRANSVERSE: EXTEND HEEL TOP AND
TOE BOTT. REINF FULL WIDTH

BASE LONGITUDINAL 13T #4 @ 18 MAX
13B #4 @ 18 MAX

USE #6 EF @ TOP OF STEM

PER REF ADOT STD B-18.10

SC 3004 R1 691

STANLEY CONSULTANTS

Job No. 12183 Page No. _____

Computed by DRS Date MAR. 95 Subject FCDMC

Checked by KAS Date 3/95 10TH STREET WASH

Reviewed by _____ Date _____

Approved by _____ Date _____ Sheet No. _____ of _____

SHEAR KEY ("INLET" SIDE CUTOFF WALL)

TRY 6'-0 DEPTH
i.e. 4'-0 KEY ENGAGEMENT

USE 1'-6 WIDTH PER ADOT STD B-18.10

CHECK CASE 2B FOR
MAX DRIVING FORCE = 6.13 + 0.01 K/FT
= 6.14 K/FT

$$V = \frac{6140 \text{ LB}}{12'' \times 14''} = 37 \text{ PSI}$$ SMALL OK

AVAILABLE FRICTION = 0.30 (12.16 K/FT)
= 3.65 K/FT

AVAILABLE PASSIVE PRESSURE
ON END OF BASE AND SHEAR KEY

$$P = \frac{1}{2}(250 \text{ PSF/FT})(6 \text{ FT})^2 \frac{1}{1000}$$
$$= 4.50 \text{ K/FT}$$

$$F.S. = \frac{3.65 + 4.50}{6.14} = 1.33$$ OK

FLEXURE AND SHEAR SMALL

USE #4 @ 12" IN KEY
WITH 6 #4 LONGIT

PER ADOT STD B-18.10

SC 3004 R1 691

STANLEY CONSULTANTS

Computed by DRS Date
Checked by KAS Date 3/95
Reviewed by Date
Approved by Date

Job No. 12183 Page No.
Subject FCDMC
10TH STREET WASH
Sheet No. of

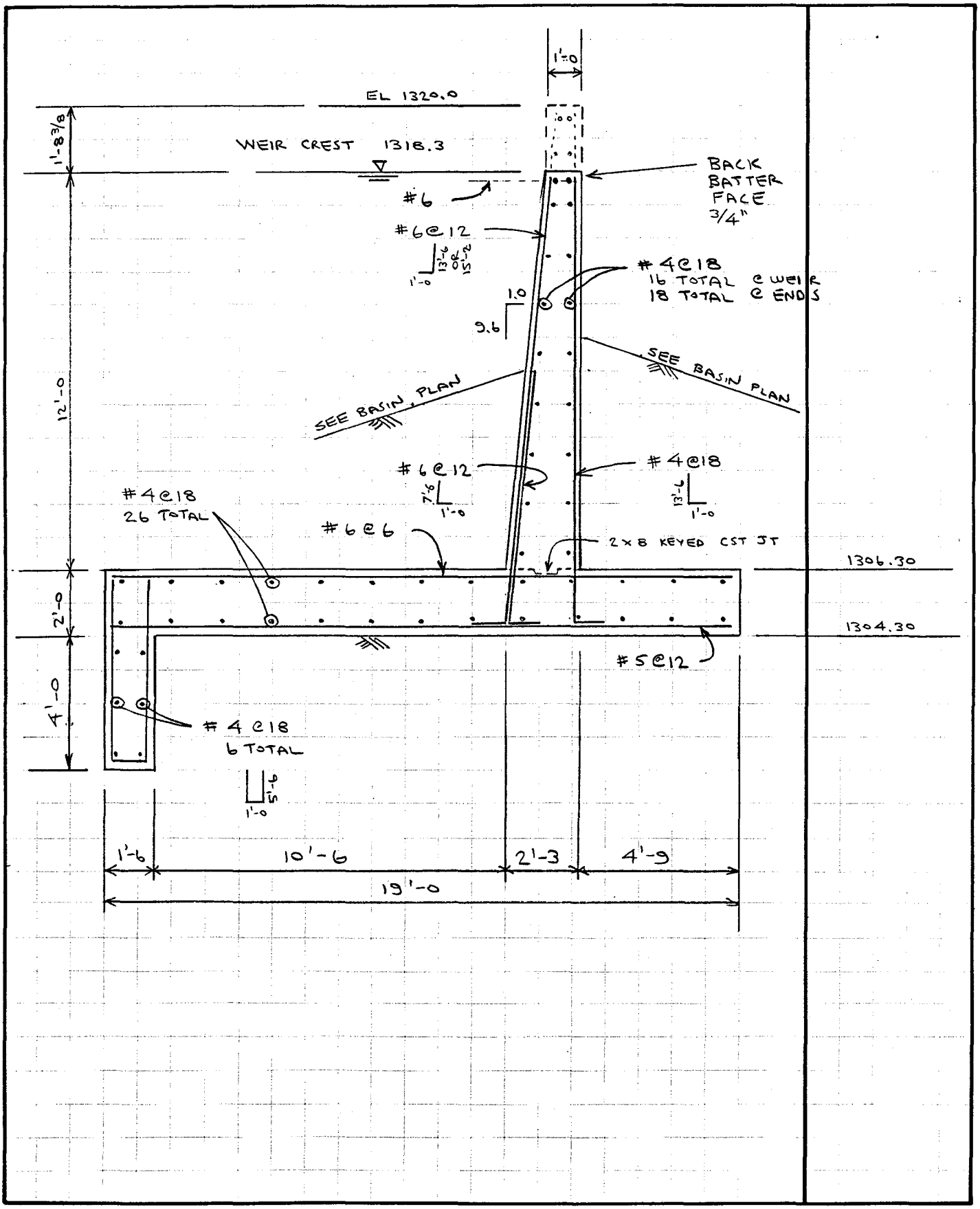

SC 3004 R1 691

STANLEY CONSULTANTS

Computed by DRS Date MAR 95
Checked by KAS Date 3/95
Reviewed by _____ Date _____
Approved by _____ Date _____

Job No. 12183 Page No. _____
Subject FCDMC
10TH STREET WASH
Sheet No. _____ of _____

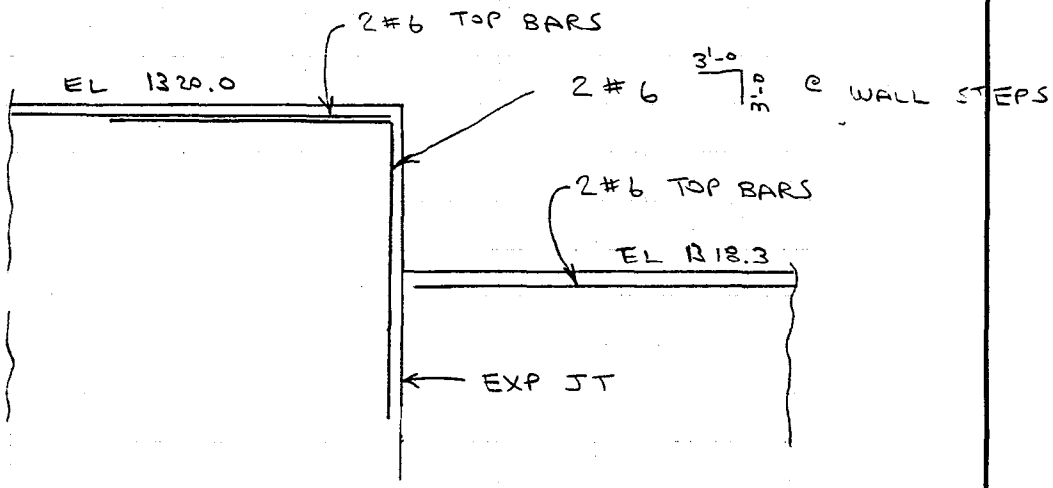

FOR CONSTRUCTION JOINT AND EXPANSION JOINT DETAILS, SEE ADOT STD B-18.10

STANLEY CONSULTANTS

Job No. 12187 Page No.

Computed by DRS Date MAR 95 Subject FCDMC

Checked by KAS Date 3/95 10TH STREET WALL

Reviewed by Date

Approved by Date Sheet No. of

FLOODWALL / RETAINING WALL

ALTERNATE COMPUTER PROGRAM
INDEPENDENT STRUCTURE STABILITY CHECK

ST058 CTWALL
(U.S. ARMY CORPS OF ENGINEERS)

********** Echoprint of Input Data **********

Date: 95/03/09 Time: 15.43.05

Structural geometry data:

Elevation of top of stem (ELTS)	=	18.50 ft
Height of stem (HTS)	=	12.00 ft
Thickness top of stem (TTS)	=	1.00 ft
Thickness bottom of stem (TBS)	=	2.25 ft
Dist. of batter at bot. of stem (TBSR)	=	.00 ft
Depth of heel (THEEL)	=	6.00 ft
Distance of batter for heel (BTRH)	=	.00 ft
Depth of toe (TTOE)	=	2.00 ft
Width of toe (TWIDTH)	=	4.75 ft
Distance of batter for toe (BTRT)	=	.00 ft
Width of base (BWIDTH)	=	19.00 ft
Depth of key (HK)	=	4.00 ft
Width of bottom of key (TK)	=	1.50 ft
Dist. of batter at bot. of key (BTRK)	=	.00 ft

Structure coordinates:

x (ft)	y (ft)
.00	.50
.00	6.50
12.00	6.50
13.25	18.50
14.25	18.50
14.25	6.50
19.00	6.50
19.00	4.50
1.50	4.50
1.50	.50

NOTE: X=0 is located at the left-hand side of the structure. The Y values correspond to the actual elevation used.

Structural property data:

Unit weight of concrete = .150 kcf

Driving side soil property data:

Phi (deg)	c (ksf)	Moist Unit wt. (kcf)	Saturated unit wt. (kcf)	Delta (deg)	Elev. soil (ft)
33.00	.000	.120	.120	.00	12.00

Driving side soil geometry:

Soil point	Batter (in:1ft)	Distance (ft)
1	.00	20.00
2	.00	.00
3	.00	500.00

Driving side soil profile:

Soil point	x (ft)	y (ft)
1	-1007.43	12.00
2	12.57	12.00

Resisting side soil property data:

Phi (deg)	c (ksf)	Moist Unit wt. (kcf)	Saturated unit wt. (kcf)	Elev. soil (ft)	Batter (in:1ft)
33.00	.000	.120	.120	12.00	.00

Resisting side soil profile:

Soil point	x (ft)	y (ft)
1	14.25	12.00
2	514.25	12.00

Foundation property data:

phi for soil-structure interface	=	33.00	(deg)
c for soil-structure interface	=	.000	(ksf)
phi for soil-soil interface	=	33.00	(deg)
c for soil-soil interface	=	.000	(ksf)

Water data:

Driving side elevation	=	18.50	ft
Resisting side elevation	=	5.00	ft
Unit weight of water	=	.0624	kcf

Seepage pressures computed by Line of Creep method.

Horizontal line load data:

Elevation (ft)	Force (kips)
18.50	.13
15.50	.13
12.50	.13
9.50	.13

Minimum required factors of safety:
  Sliding FS = 1.50
  Overturning = 100.00% base in compression

Crack options:
  o Crack depth is to be calculated
  o Computed cracks *will* be filled with water

All computed failure angles are based on 45+-(phi developed)/2
Note: Any wedge angles that are 'set' are not affected by this option.

Strength mobilization factor = .6670

At-rest pressures on the resisting side *are used*
in the overturning analysis.

Forces on the resisting side *are used* in the sliding analysis.

Do iterate in overturning analysis.

```
***** Summary of Results *****

***************     *** Satisfied ***
* Overturning *     Required base in comp. = 100.00 %
***************     Actual base in comp.   = 100.00 %
                    Overturning ratio      =   2.66

Xr (measured from toe) =   7.51 ft
Resultant ratio        =  .3953
Stem ratio             =  .2500
Base pressure at heel =     .4022 ksf
Base pressure at toe  =    1.7622 ksf

***********     *** Satisfied ***
* Sliding *     Min. Required =   1.50
***********     Actual FS     =   5.55
```

********** Output Results **********

Date: 95/03/09 Time: 15.43.05

```
***************************
**  Overturning Results  **
***************************
```

Solution converged in 1 iterations.

SMF used to calculate K's = .6670
Alpha for the SMF = -56.7100
Calculated earth pressure coefficients:
Driving side at rest K = .4312
Driving side at rest Kc = .6566
Resisting side at rest K = .4554
Resisting side at rest Kc = .6748
At-rest K's for resisting side calculated.

Depth of cracking = .00 ft

** Driving side pressures **

Water pressures:

Elevation (ft)	Pressure (ksf)
18.50	.0000
12.00	.4056
.50	.8148

Earth pressures:

Elevation (ft)	Pressure (ksf)
12.00	.0000
.50	.4186

** Resisting side pressures **

Water pressures:

Elevation (ft)	Pressure (ksf)
5.00	.0000
4.50	.0446
4.50	.7809
.50	.8148

Earth pressures:

Elevation (ft)	Pressure (ksf)
12.00	.0000
4.50	.3895

Balancing earth pressures:

Elevation (ft)	Pressure (ksf)
4.50	1.6448
.50	1.6448

** Uplift pressures **

Water pressures:

x-coord. (ft)	Pressure (ksf)
.00	.8148
1.50	.7809
1.50	.4407
19.00	.0446

** Forces and moments **

Part	Force (kips) Vert.	Force (kips) Horiz.	Mom. Arm (ft)	Moment (ft-k)
Structure:				
Structure weight.....	9.525		-9.13	-86.96
Structure, driving side:				
Moist soil.....	.000		.00	.00
Saturated soil.....	8.109		-12.86	-104.25
Water above structure.....	.000		.00	.00
Water above soil.....	5.237		-12.54	-65.69
External vertical loads....	.000		.00	.00
Ext. horz. pressure loads..		.000	.00	.00
Ext. horz. line loads.....		.500	9.50	4.75
Structure, resisting side:				
Moist soil.....	3.135		-2.38	-7.45
Saturated soil.....	.000		.00	.00
Water above structure.....	.000		.00	.00
Water above soil.....	.000		.00	.00
Driving side:				
Effective earth loads.....		2.407	-.17	-.40
Shear (due to delta).....	.000		.00	.00
Horiz. surcharge effects...		.000	.00	.00
Water loads.....		8.336	2.46	20.51
Resisting side:				
Effective earth loads.....		-1.461	2.50	-3.65
Balancing earth load.....		-6.579	-2.00	13.16
Water loads.....		-3.203	-2.01	6.43
Foundation:				
Vertical force on base.....	-20.562		-7.51	154.43
Uplift.....	-5.444		-12.70	69.12
** Statics Check ** SUMS =	.000	.000		.00

Angle of base = 11.89 degrees
Normal force on base = 21.477 kips
Shear force on base = 2.202 kips
Max. available shear force = 16.387 kips

Base pressure at heel = .4022 ksf
Base pressure at toe = 1.7622 ksf

Xr (measured from toe) = 7.51 ft
Resultant ratio = .3953
Stem ratio = .2500
Base in compression = 100.00 %
Overturning ratio = 2.66

Volume of concrete = 2.35 cubic yds/ft of wall

NOTE: The engineer shall verify that the computed bearing pressures below the wall do not exceed the allowable foundation bearing pressure, or, perform a bearing capacity analysis using the program CBEAR. Also, the engineer shall verify that the base pressures do not result in excessive differential settlement of the wall foundation.

```
***********************
**  Sliding Results  **
***********************
```

Solution converged. Summation of forces = 0.

Wedge Number	Horizontal Loads (kips)	Vertical Loads (kips)
1	.000	4.151
2	1.818	5.237
3	.000	.000

Water pressures on wedges:

Wedge number	Top press. (ksf)	Bottom press. (ksf)	x-coord. (ft)	press. (ksf)
1	.4056	.8148		
2			.0000	.8148
2			19.0000	.0446
3	.0000	.0446		

Points of sliding plane:
Point 1 (left), x = .00 ft, y = .50 ft
Point 2 (right), x = 19.00 ft, y = 4.50 ft

Depth of cracking = .00 ft

Wedge number	Failure angle (deg)	Total length (ft)	Weight of wedge (kips)	Submerged length (ft)	Uplift force (kips)
1	-48.335	15.394	7.061	15.394	9.394
2	11.889	19.416	24.609	19.416	8.344
3	41.665	11.282	3.793	.752	.017

Wedge number	Net force (kips)
1	-11.438
2	7.180
3	4.259
SUM =	.001

```
+-----------------------------+
| Factor of safety =    5.554 |
+-----------------------------+
```

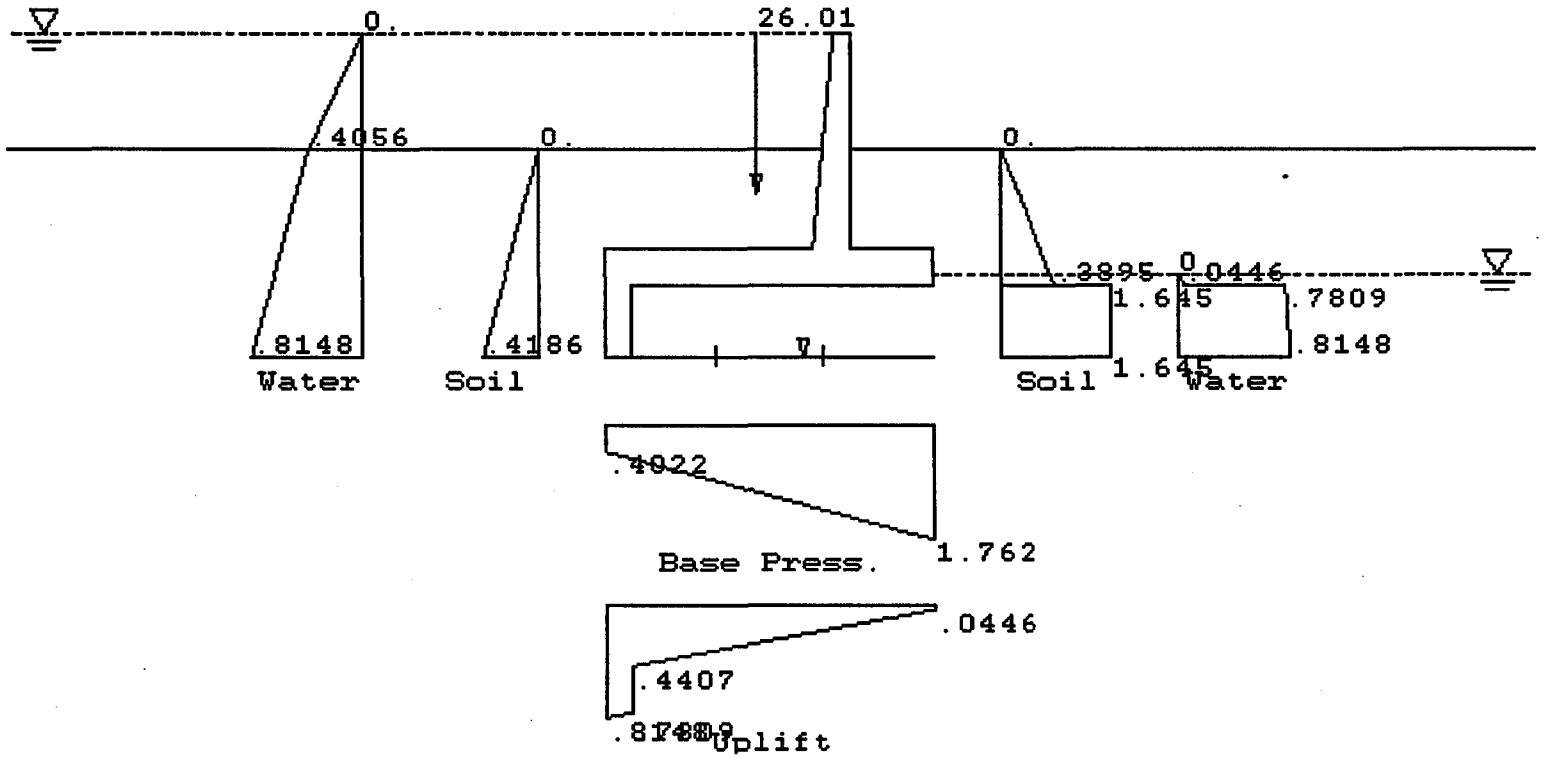
0.
26.01
.4056
0.
0.
.3895
0
.0446
1.645
.7809
.8148
.4186
.8148
1.645
Water
Soil
Soil
Water
.4022
1.762
Base Press.
.0446
.4407
.8148
.7809
Uplift

WEST TRIBUTARY INLET

STANLEY CONSULTANTS

Job No. [illegible] Page No. _____

Computed by DRS Date [illegible]

Checked by KAS Date 3/95

Reviewed by _____ Date _____

Approved by _____ Date _____

Subject [illegible]

10TH STREET [illegible]

Sheet No. _____ of _____

DESIGN CONSIDERATIONS

WALLS WHICH HAVE ONE SIDE AGAINST EARTH AND ONE SIDE DRY/WET SHALL BE DESIGNED FOR THE EMPTY CASE WITH EQUIVALENT FLUID PRESSURE. AS THE WSE RISES, IT IS ASSUMED THAT HYDROSTATIC PRESSURE INSIDE IS COUNTER-ACTED BY AT-REST AND/OR PASSIVE EARTH PRESSURE OUTSIDE.

WALLS WHICH HAVE TWO SIDES DRY/WET SHALL BE DESIGNED FOR THE WORST CASE DIFFERENTIAL HYDROSTATIC PRESSURE CASE.

BACKFILL SHALL BE GRANULAR AND FREE-DRAINING, AND WEEP HOLES SHALL BE PROVIDED TO PRECLUDE BUOYANCY/UPLIFT

STANLEY CONSULTANTS

Computed by DRS Date MAR95
Checked by KAS Date 3/95
Reviewed by _____ Date _____
Approved by _____ Date _____

Job No. 12183 Page No. _____
Subject FCDMC
10TH STREET WA'-
Sheet No. _____ of _____

WEST TRIBUTARY

CONSISTS OF 4 SEGMENTS
50' UPSTREAM TRANSITION TRAP-RECT.
20' RECT. U-CHANNEL
60' INLET WEIR BOX(ES)
40' DOWNSTREAM TRANSITION VAR DEPTH RECT.

UPSTREAM TRANSITION

BEGIN SECTION

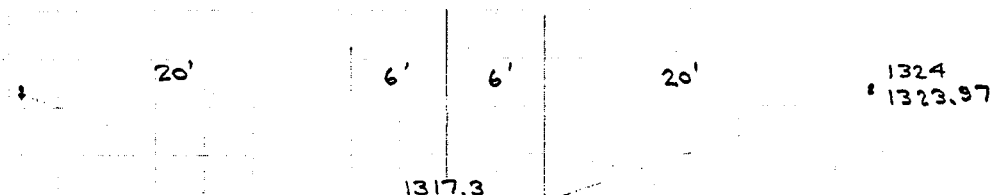

H = 0.03

MIDDLE SECTION

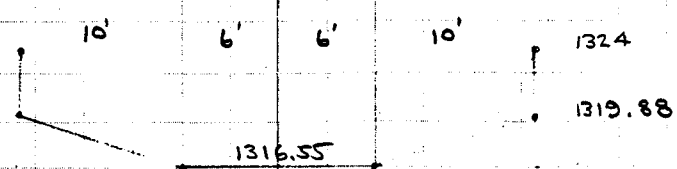

H = 4.12

END SECTION

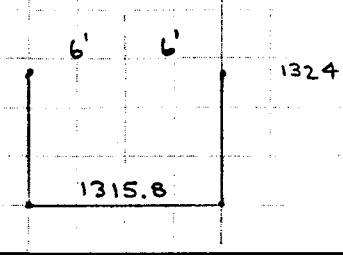

H = 8.20

SC 3004 R1 691

STANLEY CONSULTANTS

Job No. 12183 Page No. _____

Computed by DRS Date MAR 95 Subject FCDMC

Checked by KAS Date 3/95 16th STREET WALL

Reviewed by _____ Date _____

Approved by _____ Date _____ Sheet No. _____ of _____

WEST TRIBUTARY

UPSTREAM TRANSITION 50 FT LONG

DESIGN 25' @ H = 5

25' @ H = 9

ANTICIPATE SURCHARGE (FROM MAINTENANCE VEHICLE) AND LEVEL FILL

REF ADOT STD B-18.20 (CONCRETE DIM.)

MEET OR EXCEED REINF REQUIREMENTS

SECTION FIRST 25'

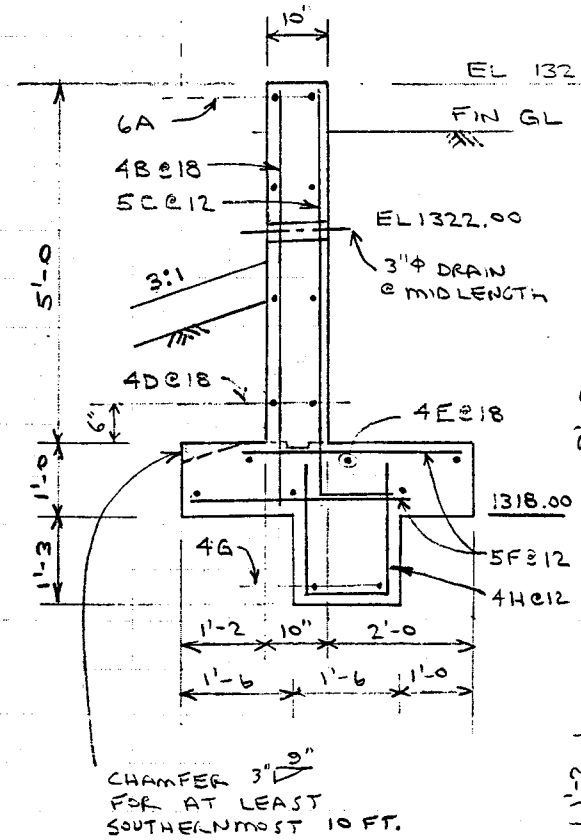

CHAMFER 3" 9" FOR AT LEAST SOUTHERNMOST 10 FT.

ALL LONGITUDINAL BARS L = 26'-6

SECTION SECOND 25'

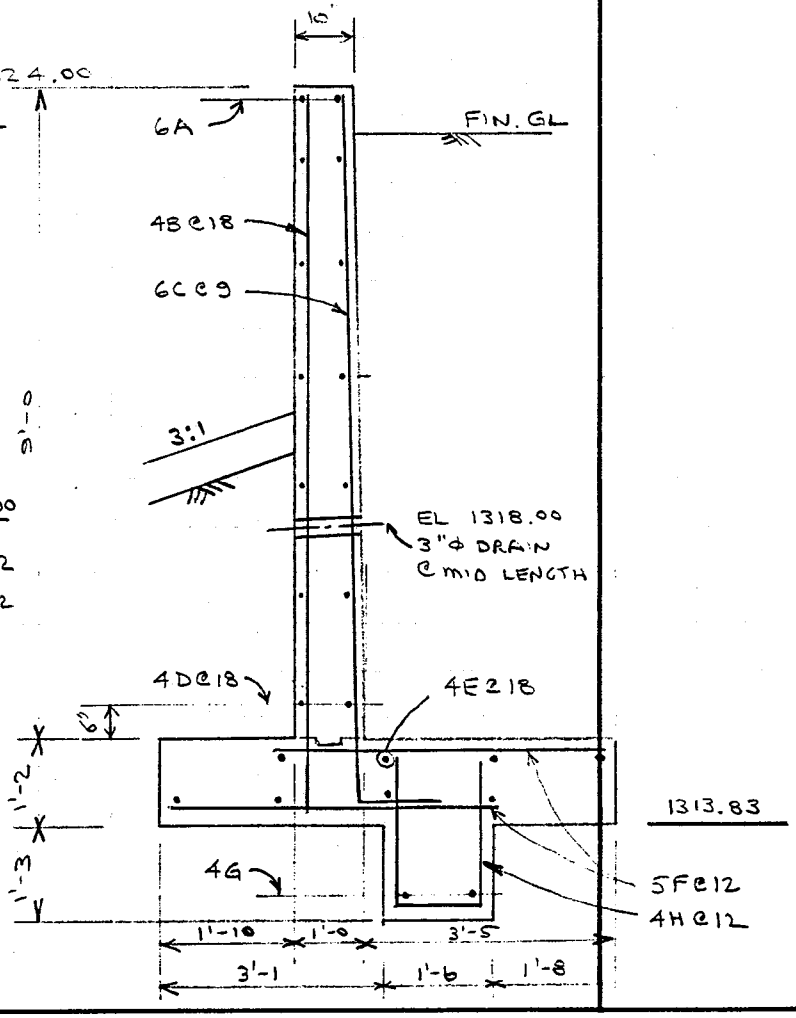

SC 3004 R1 691

STANLEY CONSULTANTS

Computed by DRS Date MAR 95
Checked by YAS Date 3/95
Reviewed by _____ Date _____
Approved by _____ Date _____

Job No. 12183 Page No. _____
Subject FCDMC
10TH STREET [illegible]
Sheet No. _____ of _____

WEST TRIBUTARY

UPSTREAM TRANSITION

CHECK MIN THICKNESS AVAILABLE FOR LINING

TOE ELEV = 1319.00
OFFSET ≈ 14.83

T.O. LINING ELEV

EL ≈ 1317.3 − 0.03 (25) + $\frac{1}{3}$ (14.83 − 6.00)
= 1319.49

AVAILABLE MIN THICKNESS = 5½"

ALLOW CHAMFER OF TOE 3" 9" LAST 10 FT

DRAIN ELEVATIONS

$\frac{1}{2}$ (1323.97 + 1319.88) = 1321.93
3" ϕ − USE ℄ @ 1322

$\frac{1}{2}$ (1319.88 + 1315.80) = 1317.84
3" ϕ − USE ℄ @ 1318

STANLEY CONSULTANTS

Computed by DRS Date
Checked by KAS Date 3/95
Reviewed by Date
Approved by Date

Job No. 12183 Page No.
Subject FCDMC
10TH STREET WASH
Sheet No. of

WEST TRIBUTARY

U-CHANNEL RECTANGULAR SECTION 20 FT LONG

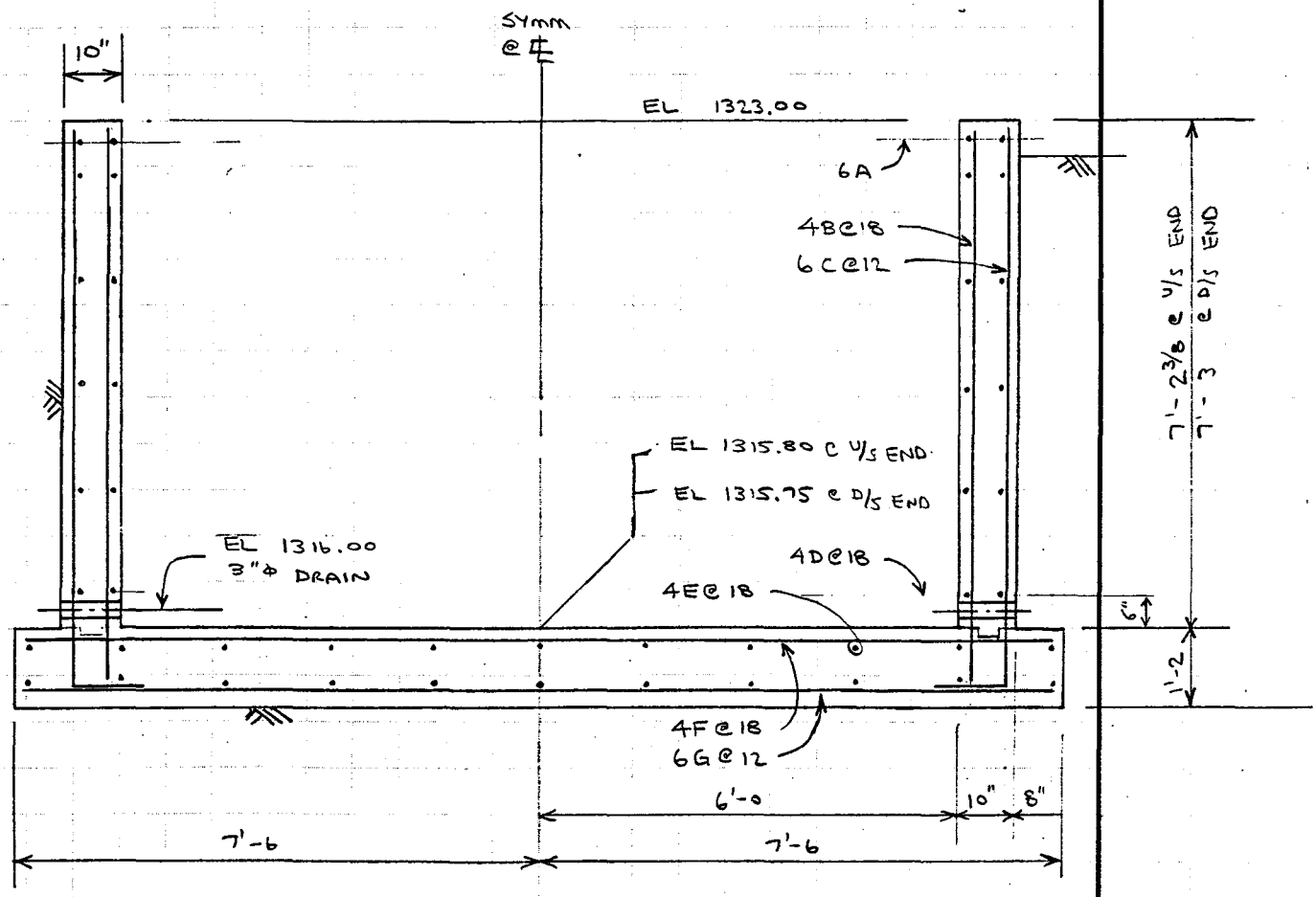

DESIGN METHOD: REF ADOT STD B-18.10 FOR STEM DESIGN AND PROVIDE BASE MOMENT CAPACITY AROUND THE CORNERS. NO SHEAR KEY REQUIRED DUE TO BALANCED LATERAL LOADING.

STANLEY CONSULTANTS

Job No. 12187 Page No. _____

Computed by DRS Date MAR 95

Checked by KAS Date 3/95

Reviewed by _____ Date _____

Approved by _____ Date _____

Subject FCDMC

10TH STREET WALL

Sheet No. _____ of _____

WEST TRIBUTARY

INLET WEIR BOXES 60 FEET LONG

SCHEMATIC DRAWING:

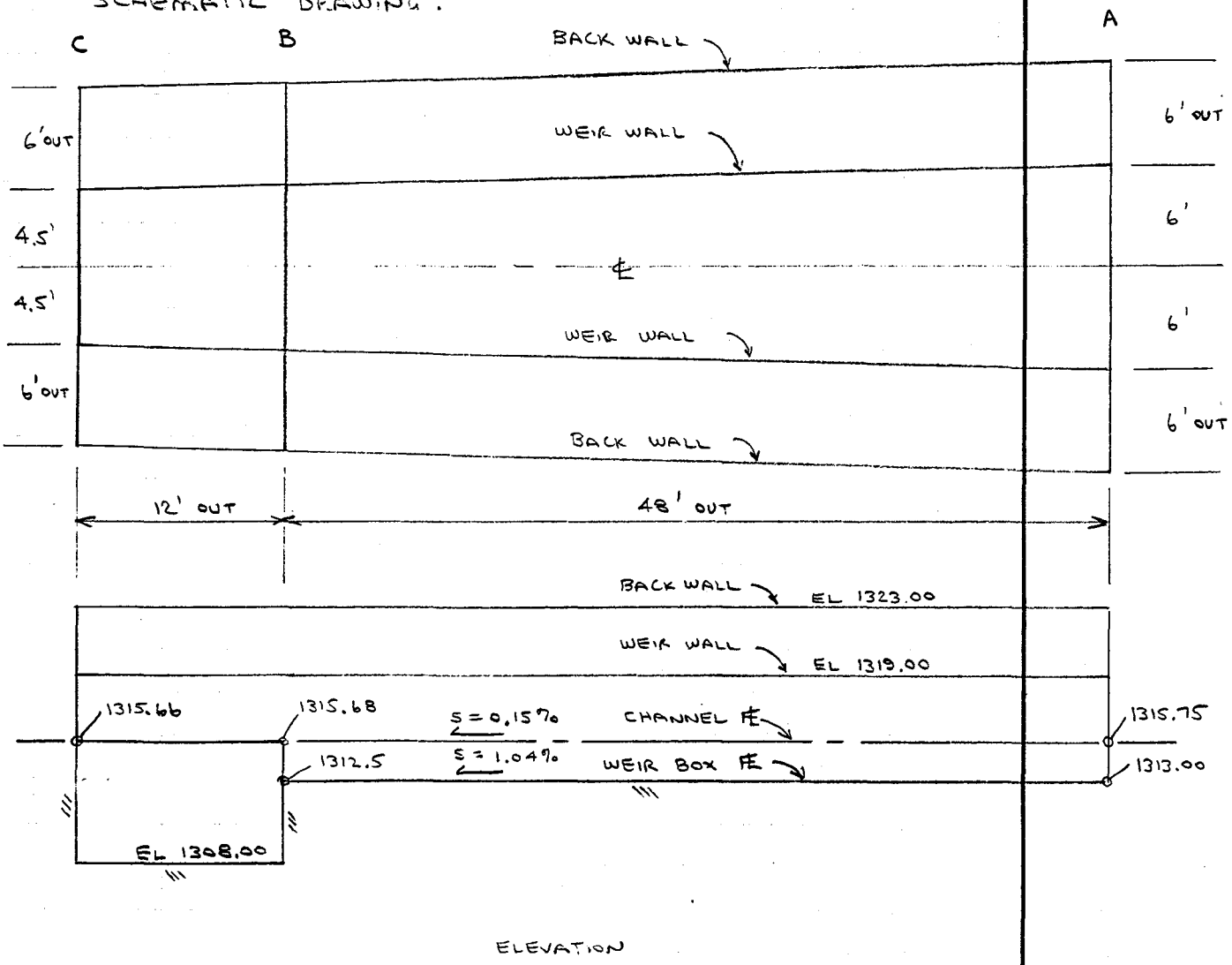

ELEVATION

SC 3004 R1 691

STANLEY CONSULTANTS

Job No. 12183 Page No. _____

Computed by DRShiosaki Date MAR 95 Subject FCDMC

Checked by KAS Date 3/95 10TH STREET WATER

Reviewed by _____ Date _____

Approved by _____ Date _____ Sheet No. _____ of _____

WEST TRIBUTARY

INLET WEIR BOXES

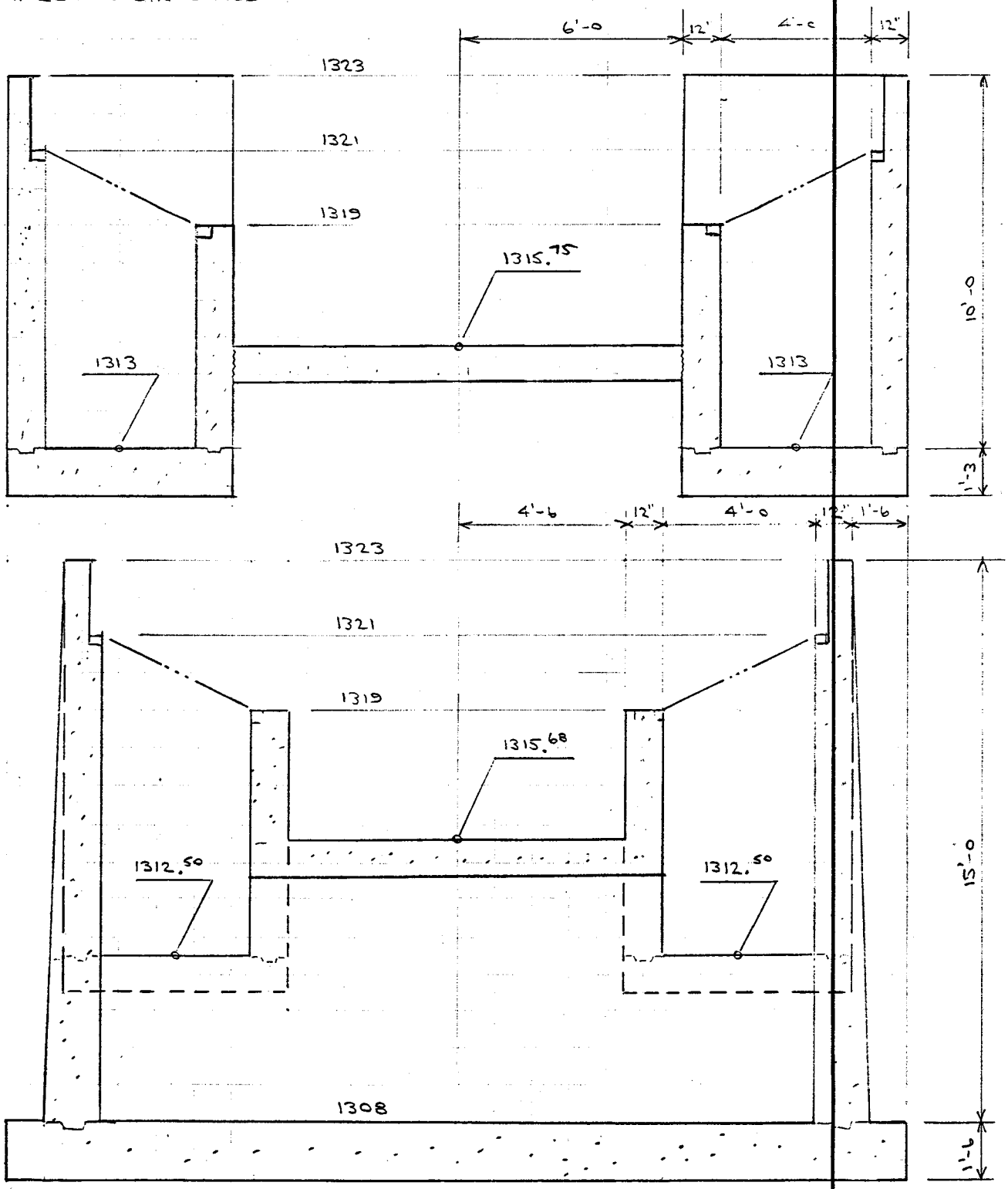

SC 3004 R1 691

STANLEY CONSULTANTS

Job No. 12183 Page No.

Computed by DRS Date MAR 95 Subject FCDMC

Checked by KAS Date 3/95 10TH STREET WR'S

Reviewed by Date

Approved by Date Sheet No. of

WEST TRIBUTARY

INLET WEIR BOXES

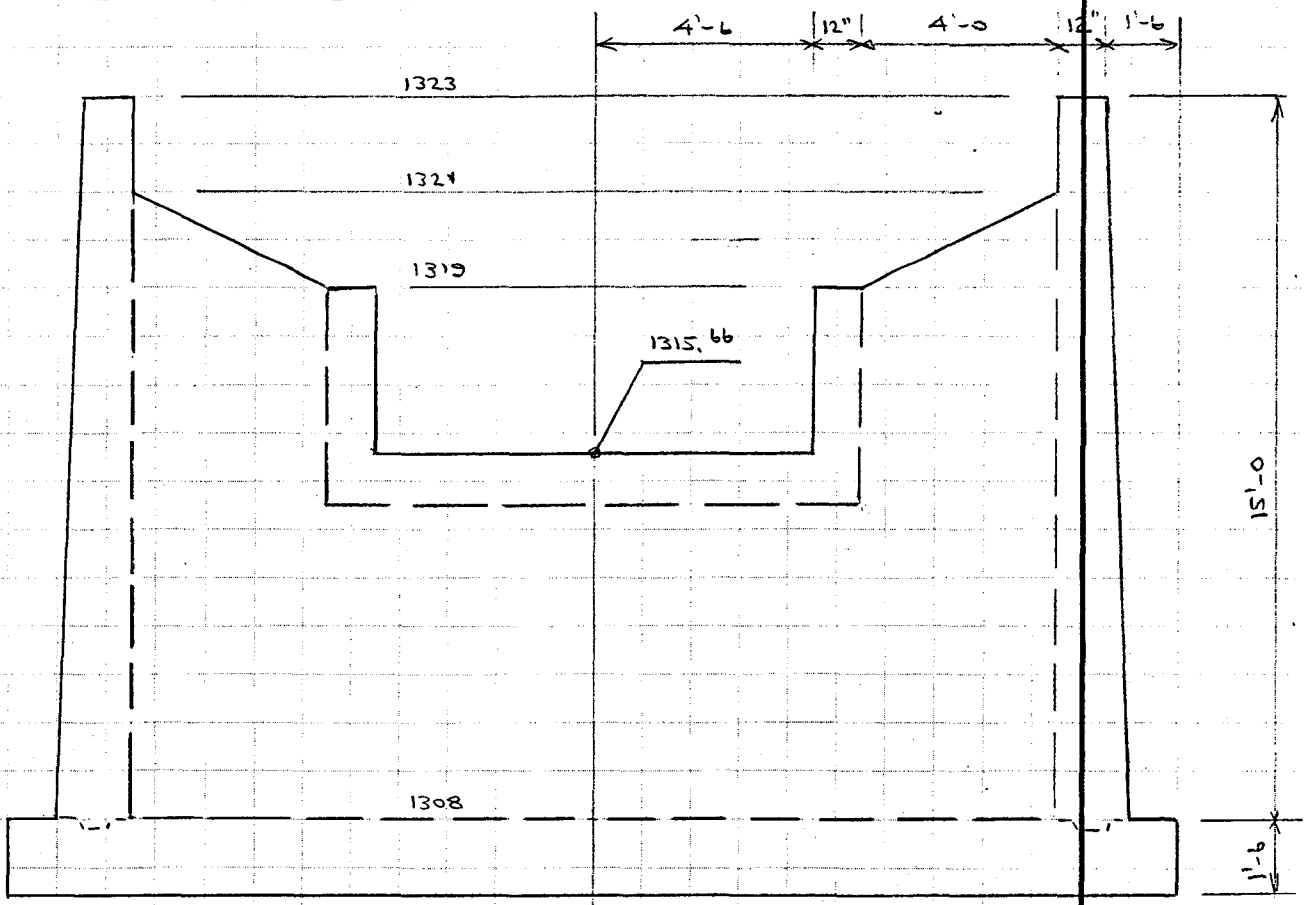

SC 3004 R1 691

STANLEY CONSULTANTS

Computed by DRS Date MAR 95
Checked by KAS Date 3/95
Reviewed by _____ Date _____
Approved by _____ Date _____

Job No. 12183 Page No. _____
Subject FCDMC
10TH STREET WASH
Sheet No. _____ of _____

WEST TRIBUTARY

INLET WEIR BOXES

NORTH BULKHEAD WALL

℄ - ℄ SPAN = 5 FT HORIZONTALLY

EQ. FL. PR = (10 FT)(35 PSF/FT) = 350 PSF

NEGLECT RESTRAINT OF BASE

$M = wL^2/8 = (0.035)(5')^2/8 = 1.09$ FT-K

SMALL OK

CHECK 4' "PROJECTION" ABOVE EL 1319 AS A VERTICAL CANTILEVER

$M = \frac{1}{6} wh^3 = \frac{1}{6}(0.035)(4)^3 = 0.37$ FT-K

SMALL OK

BACK WALLS (OUTSIDE WEIR BOXES)

USE ADOT STD B-18.10 FOR H = 10.5

CRITICAL BARS ARE S1/S2 BARS:

H = 10 S1,S2 = #7 @ 12 = 0.60
H = 11 S1,S2 = #6 @ 6 = 0.88
} AVG 0.74

0.31 + 0.44 = 0.75 { USE S1 PARTIAL HEIGHT #5 TO ELEV 1319; USE S2 FULL HEIGHT #6 TO ELEV 1323

CHECK REDUCED U-CHANNEL MOMENT @ OTHER CORNER

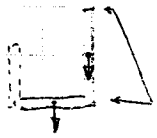

↺ $m \approx \frac{1}{6}(0.035)(13)^3 = 12.8$ FT-K

↻ $m = (11 \times 1 \times 0.15)(5') + (5 \times 1 \times 0.15)(2.5')$
$= 10.1$ FT-K NET M = 2.7 OK

SC 3004 R1 691

STANLEY CONSULTANTS

Computed by DRS Date MARCH
Checked by KAS Date 3/95
Reviewed by _____ Date _____
Approved by _____ Date _____

Job No. [illegible] Page No. _____
Subject FCDMC
10TH STREET [illegible]
Sheet No. _____ of _____

WEST TRIBUTARY
INLET WEIR BOXES

WEIR WALLS

ASSUME CHANNEL "OVER FULL" TO ELEV 1323
AND WEIR BOXES EMPTY

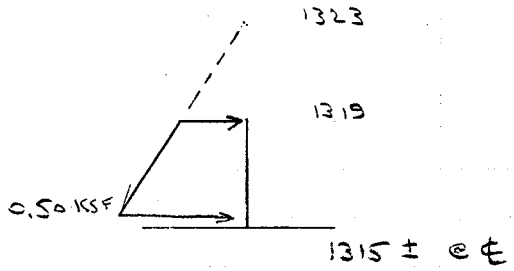

ACCOUNT FOR CREST OVERFLOW FORCES BY
USING FULL HYDROSTATIC FORCE TRIANGLE

$$M = \tfrac{1}{6}\gamma_w h^3 = \tfrac{1}{6}(0.0624)(8\text{ FT})^3$$
$$= 5.3 \text{ FT-K}$$

$$A_s = \frac{5.3}{1.76\,(9")} = 0.33 \text{ IN}^2/\text{FT}$$
$$\approx 0.31 \text{ IN}^2/\text{FT}$$

USE #5 @ 12 V E.F.

ALL OTHER REINF. MINIMAL BY INSPECTION

STANLEY CONSULTANTS

Job No. 12137 Page No. _____

Computed by DRS Date MARCH

Checked by KAS Date 3/95

Subject FCDMC

INTL STREET WA

Reviewed by _____ Date _____

Approved by _____ Date _____

Sheet No. _____ of _____

WEST TRIBUTARY

INLET WEIR BOXES

CHECK CHANNEL FLOOR AS STRUT FOR EARTH PRESSURES ON BOTH WEIR BOXES

NEGLECT OPPOSITE MOMENT FROM SELF WEIGHT

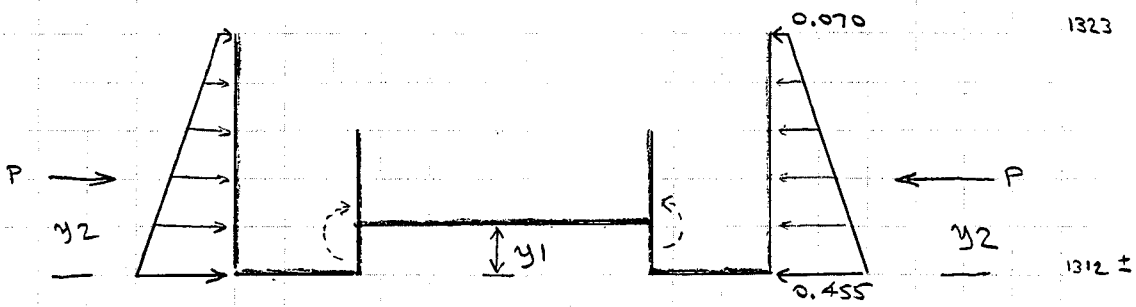

$$P = (0.070 \times 11) + (\tfrac{1}{2} \times 0.385 \times 11)$$
$$= 0.77 + 2.12$$
$$= 2.89 \text{ K}$$

$$y_2 = \frac{0.77(5.5) + 2.12(3.67)}{2.89}$$
$$= 4.16 \text{ FT}$$

$$y_1 = 2.75 \text{ FT} \pm$$

$$e = y_2 - y_1 = 1.41 \text{ FT}$$

$$M = Pe = (2.89 \text{ K})(1.41 \text{ FT}) = 4.08 \text{ FT-K}$$

$$A_s = \frac{4.08}{1.76(9'')} = 0.26 \text{ IN}^2/\text{FT} < 0.31$$

#5 @ 12 OK

TRANSVERSE FLOOR

BOTTOM FACE.

SC 3004 R1 691

STANLEY CONSULTANTS

Computed by DRS Date MAR 95
Checked by KAS Date 3/95
Reviewed by _____ Date _____
Approved by _____ Date _____

Job No. 12183 Page No. _____
Subject FCDMC
10TH STREET JIA
Sheet No. _____ of _____

WEST TRIBUTARY
INLET WEIR BOX

REINF SUMMARY.

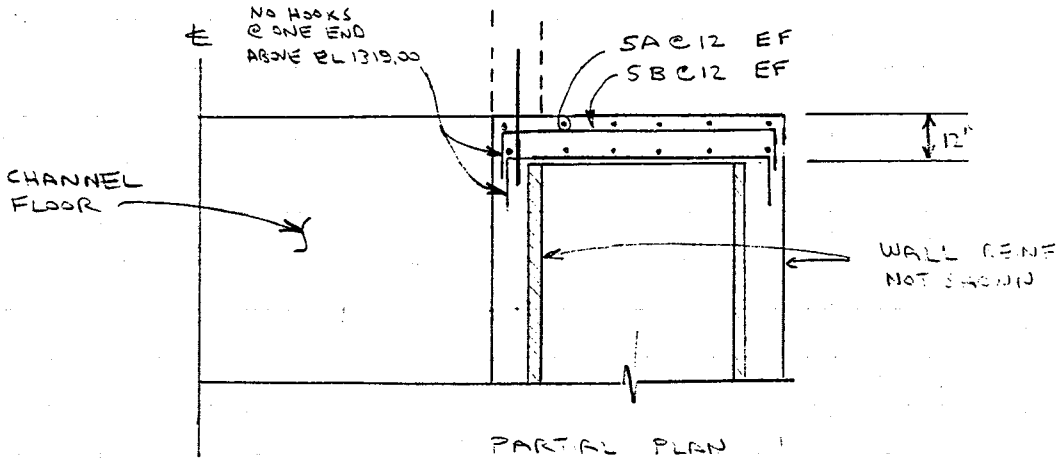

PARTIAL PLAN

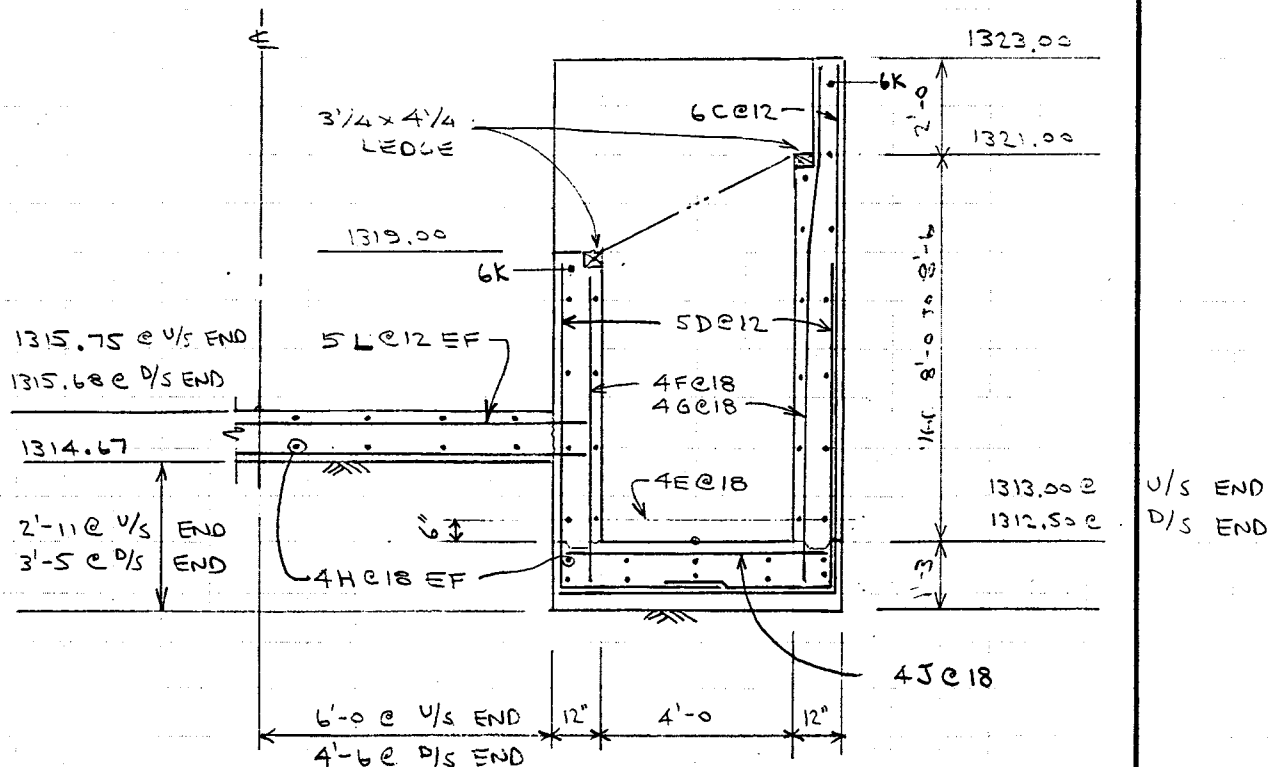

ALL LONGITUDINAL BARS EXTEND 10" INTO END WALLS
NO HOOKS REQUIRED

SC 3004 R1 691

STANLEY CONSULTANTS

Job No. 12183 Page No.

Computed by DRS Date MAR 95 Subject FLOOD

Checked by KAS Date 3/95 10TH STREET WALL

Reviewed by Date

Approved by Date Sheet No. of

1) Batter 3/8", 1/2"
See Note 1 - ?

2) Needs to Design that Slab for a Small ~~Vehicle~~ Cleanup Vehicle H-15

Sect. K 5-95
q. Placed as Shown?

TION DESIGN
OSS THE

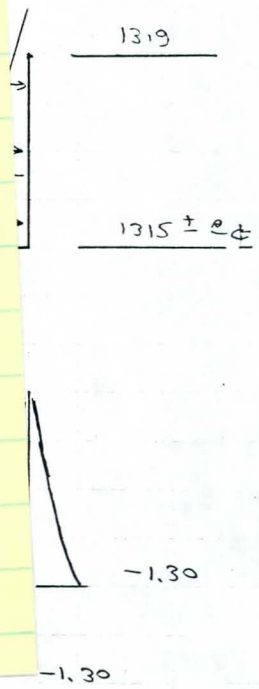

WALL (SINGLY REINF @ ℄)

$A_s = \frac{1.30}{1.76 \times 6''} = 0.12 \text{ IN}^2/\text{FT}$

FLOOR BOTT. FACE

$A_s = \frac{2.60}{1.76 \times 6} = 0.25 \text{ IN}^2/\text{FT}$

USE #6 @ 18 EW @ ℄
IN WALLS, AND
TRANSVERSELY IN FLOOR

SC 3004 R1 691

STANLEY CONSULTANTS

Job No. 12183 Page No.

Computed by DRS Date MAR 95 Subject FLOOD

Checked by KAS Date 3/95 10TH STREET WIA

Reviewed by Date

Approved by Date Sheet No. of

WEST TRIBUTARY

INLET WEIR BOXES

CHECK TRANSVERSE CROSS SECTION DESIGN OF CHANNEL "FLUME" ACROSS THE DISCHARGE BOX

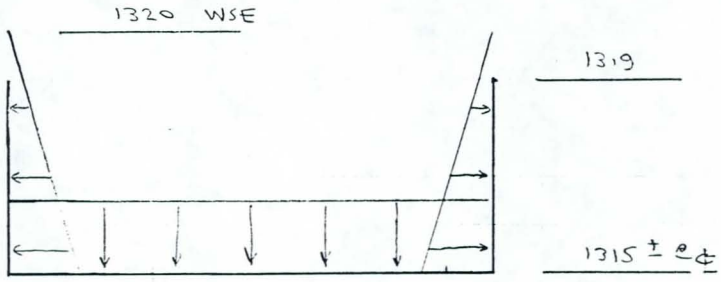

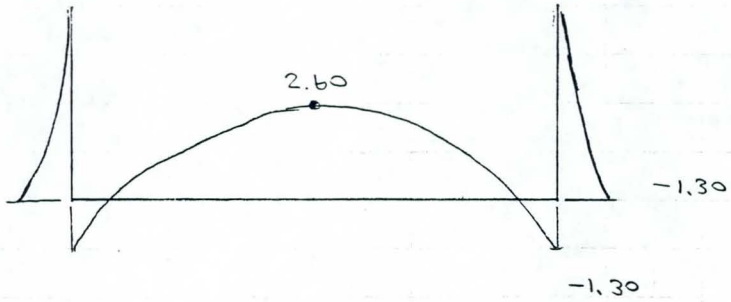

WALL (SINGLY REINF @ ℄)

$A_s = \frac{1.30}{1.76 \times 6''} = 0.12 \text{ IN}^2/\text{FT}$

FLOOR BOTT. FACE

$A_s = \frac{2.60}{1.76 \times 6} = 0.25 \text{ IN}^2/\text{FT}$

USE #6 @ 18 EW @ ℄ IN WALLS, AND TRANSVERSELY IN FLOOR

SC 3004 R1 691

STANLEY CONSULTANTS

Job No. 12183 Page No. _____

Computed by DRS Date MAR 95 Subject FCDMC

Checked by _____ Date _____ 10TH STREET WASH

Reviewed by _____ Date _____

Approved by _____ Date _____ Sheet No. _____ of _____

WEST TRIBUTARY

INLET WEIR BOXES

ASSUMED SECTION :

USE ℄ WALL - ℄ WALL

SPAN = 11 FT IN

LONGITUDINAL DIR.

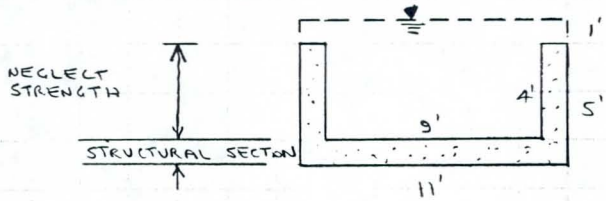

AREA CONCRETE = (11 x 5) - (9 x 4)

= 19 SQUARE FT

AREA WATER = (11 x 6) - 19

= 47 SQUARE FT

$W_c = 19(0.150) = 2.85$ KLF

$W_w = 47(0.0624) = 2.93$ KLF

5.78 KLF

$M = \frac{(5.78)(11)^2}{8} = 87.4$ FT-K

$A_s = \frac{87.4}{1.76(6")} = 8.28 \text{ IN}^2$

USE #6 @12"

TOTAL 22 BOT

$9.68 > 8.28 \text{ IN}^2$ OK

LEGS OF U-SHAPE IGNORED FOR STRENGTH

$V = 5.78(11)/2 = 32$ K

$V_{CONC} = 0.95(\sqrt{4000})(132 \times 6)\frac{1}{1000} = 48^K$ OK

SC 3004 R1 691

STANLEY CONSULTANTS

Computed by DRS Date MAR.95
Checked by KAS Date 3/95
Reviewed by _____ Date _____
Approved by _____ Date _____

Job No. 12183 Page No. _____
Subject FCDMC
10TH STREET
Sheet No. _____ of _____

WEST TRIBUTARY
INLET WEIR BOXES

HEAD WALL WHERE 2 - WEIR CHANNELS
DUMP INTO DISCHARGE BOX :

DESIGN THE WALL AS A CANTILEVER STEM
FROM EL 1308 TO EL 1314 WITH
SURCHARGE TO EL 1323 + 2 FT = 1325

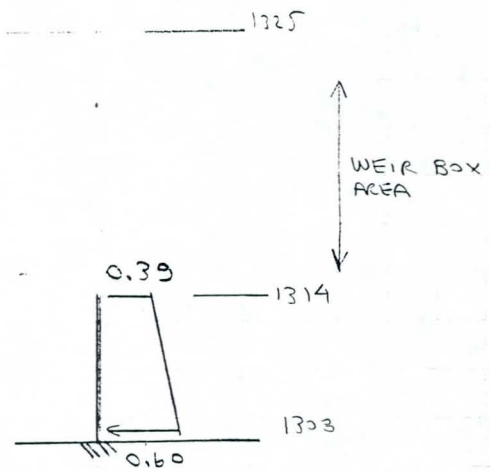

TRY T=

$$M = (0.39)(6)^2/2 + (0.21)(6)^3/6$$
$$= 14.58 \text{ FT-K}$$

$$A_s = \frac{14.58}{(1.76)(9")} = 0.92 \text{ in}^2$$

USE #5, #7 ALT. @ 6" VERT O.F.
0.91 ≈ 0.92 SAY OK

FOR REMAINING REINF IN END WALL,
COPY D/S END WALL DESIGN FOR SIMPLICITY OF CONSTR.
AND DETAILING

SC 3004 R1 691

STANLEY CONSULTANTS

Computed by DRS Date MAR 95
Checked by KAS Date 3/95
Reviewed by _____ Date _____
Approved by _____ Date _____

Job No. 12193 Page No. _____
Subject FCDMC
10TH STREET WALK
Sheet No. _____ of _____

WEST TRIBUTARY
INLET WEIR BOXES

DISCHARGE BOX

DEPTH = 15'
WIDTH = 19' INSIDES
LENGTH = 10 FT INSIDES

SINCE THE BOX IS ONLY 3-SIDED; MOSTLY OPEN AT THE U/S WALL END, AND PARTIALLY OPEN AT THE D/S WALL END, USE A 2-D DESIGN WITH SIDE WALLS AND FLOOR AS A U-CHANNEL (VERT CANTILEVER APPROACH).

H = 15 FT LEVEL FILL WITH SURCHARGE

SIMILARLY, DESIGN THE D/S END WALL ONE-WAY

H = 13 FT LEVEL FILL NO SURCHARGE
(SINCE SURCHARGE IS NOT ANTICIPATED ON THE 2:1 SLOPED AREAS)

SEE REBAR SUMMARIES NEXT SHEETS

STANLEY CONSULTANTS

Computed by DRS Date 13MAR95
Checked by KAS Date 3/95
Reviewed by _____ Date _____
Approved by _____ Date _____

Job No. 12183 Page No. _____
Subject FCDMC
10TH STREET WASH
Sheet No. _____ of _____

WEST TRIBUTARY
INLET WEIR BOXES

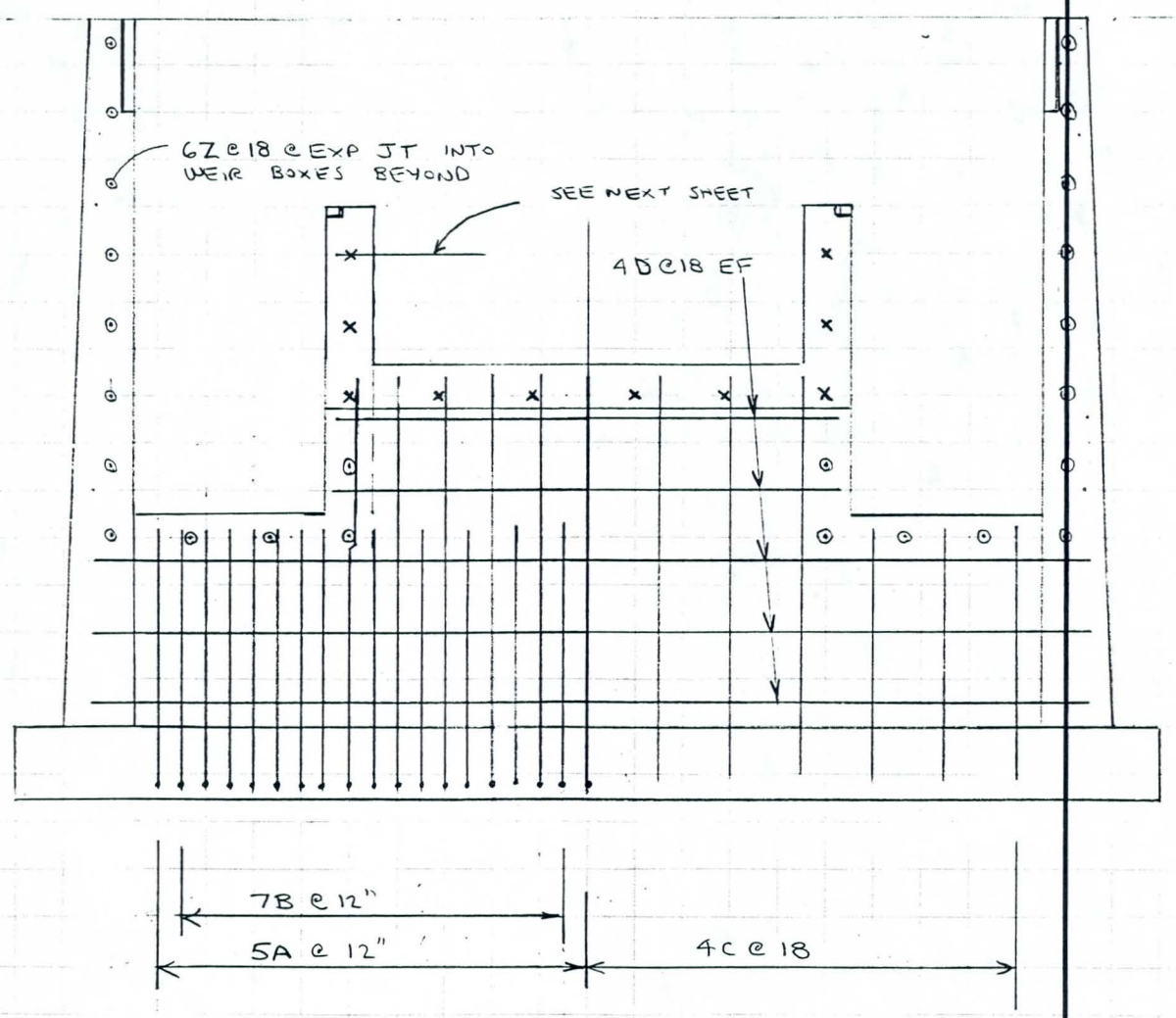

FAR (U/S) FACE REINF NEAR D/S FACE REINF

NORTH END WALL (12" THICK)

STANLEY CONSULTANTS

Job No. 12183 Page No.

Computed by DRS Date MAR 95 Subject FCDMC

Checked by KAS Date 3/95 10TH STREET WASH

Reviewed by Date

Approved by Date Sheet No. of

WEST TRIBUTARY

INLET WEIR BOXES

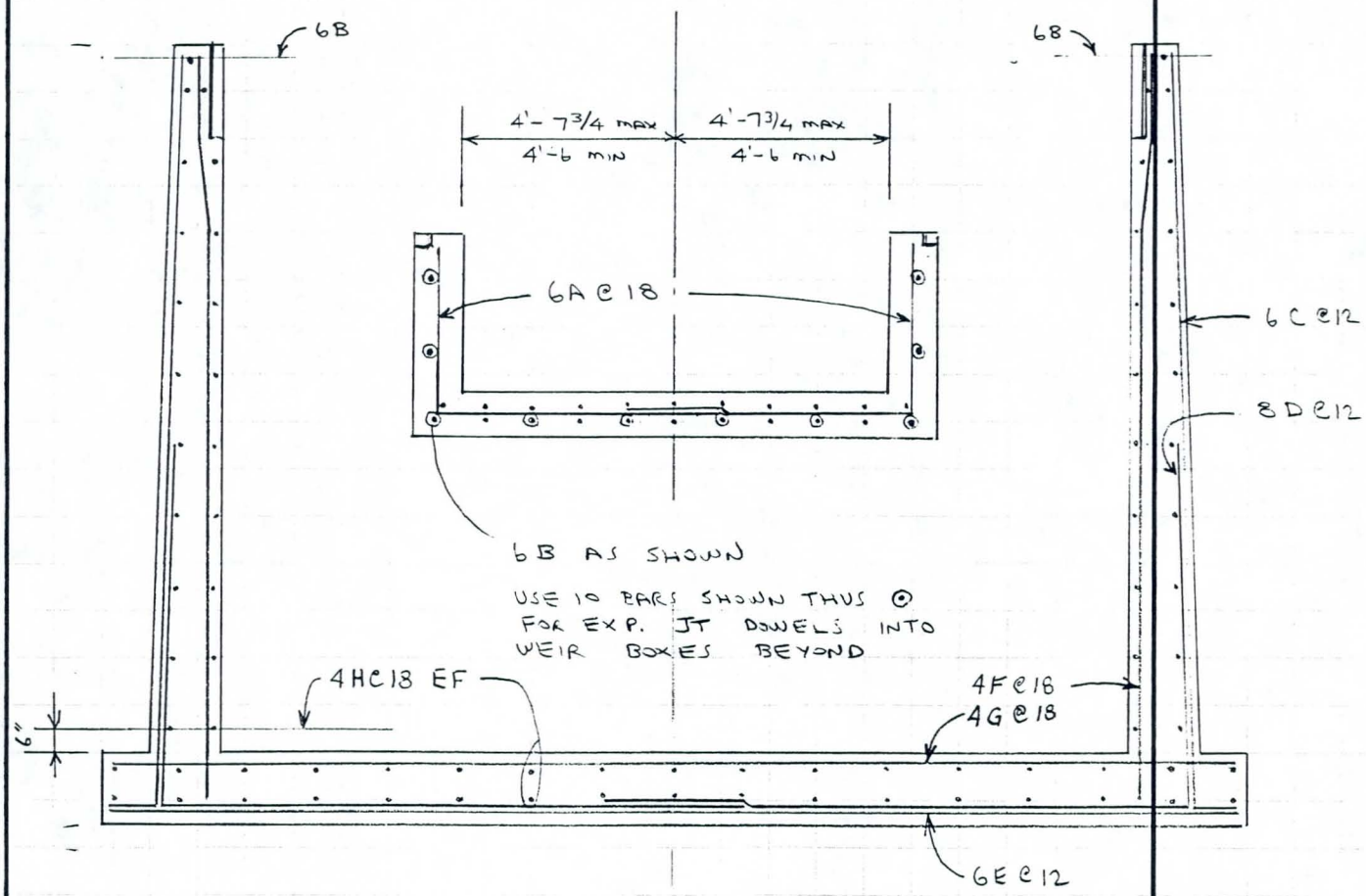

COLLECTION BOX U-CHANNEL

AND SUSPENDED FLUME

SC 3004 R1 691

STANLEY CONSULTANTS

Computed by DRS Date MAR 95
Checked by KAS Date 3/95
Reviewed by _____ Date _____
Approved by _____ Date _____

Job No. 12193 Page No. _____
Subject FCBMC
10TH STREET WALL
Sheet No. _____ of _____

WEST TRIBUTARY
INLET WEIR BOXES

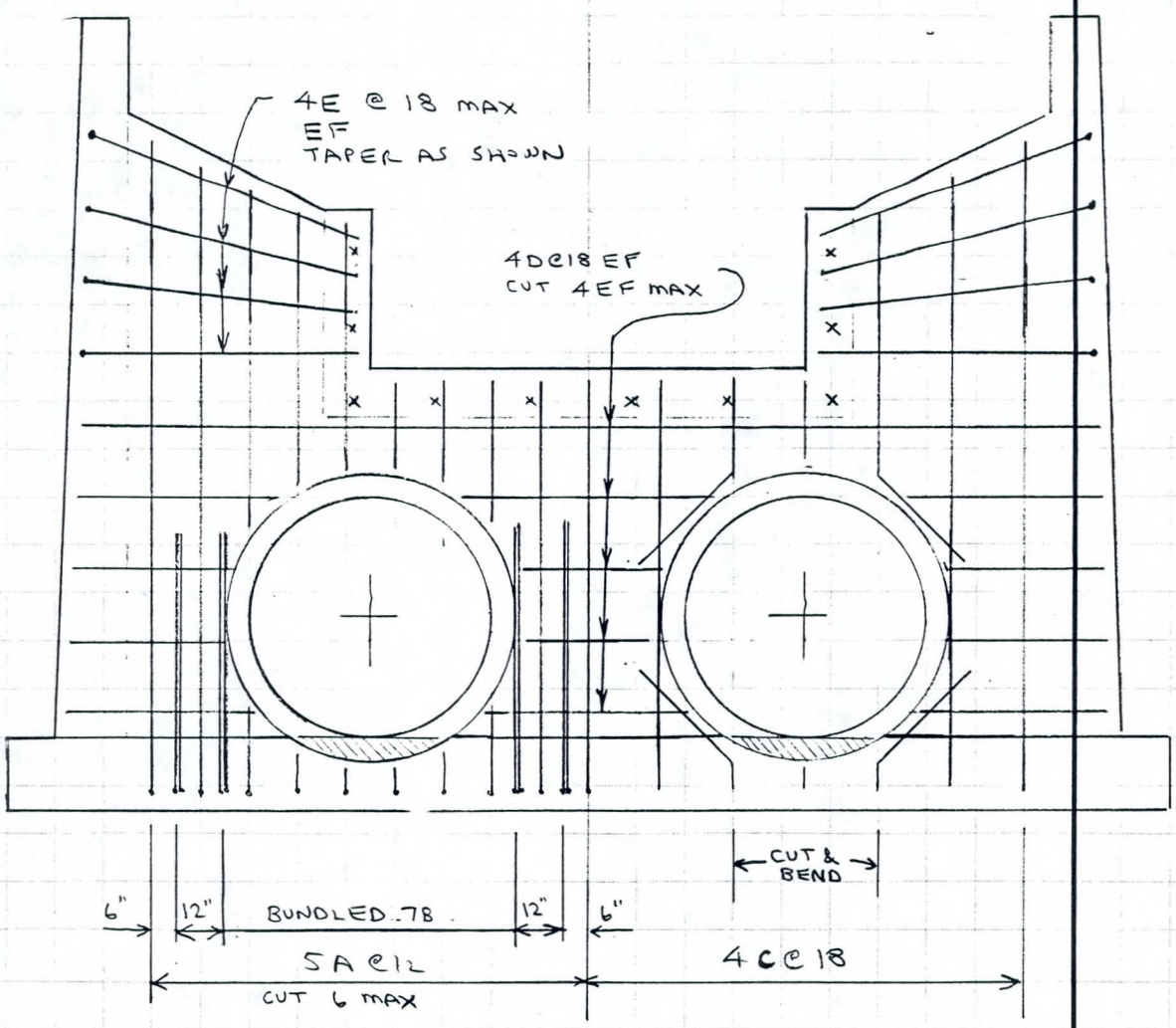

NEAR (D/S) FACE REINF FAR (U/S) FACE REINF

SOUTH END WALL (12" THICK)

STANLEY CONSULTANTS

Computed by DRS Date MAR 95
Checked by KAS Date 3/95
Reviewed by _____ Date _____
Approved by _____ Date _____

Job No. 12183 Page No. _____
Subject FCDMC
10TH STREET WASH
Sheet No. _____ of _____

WEST TRIBUTARY

DOWNSTREAM TRANSITION (40 FT LONG)

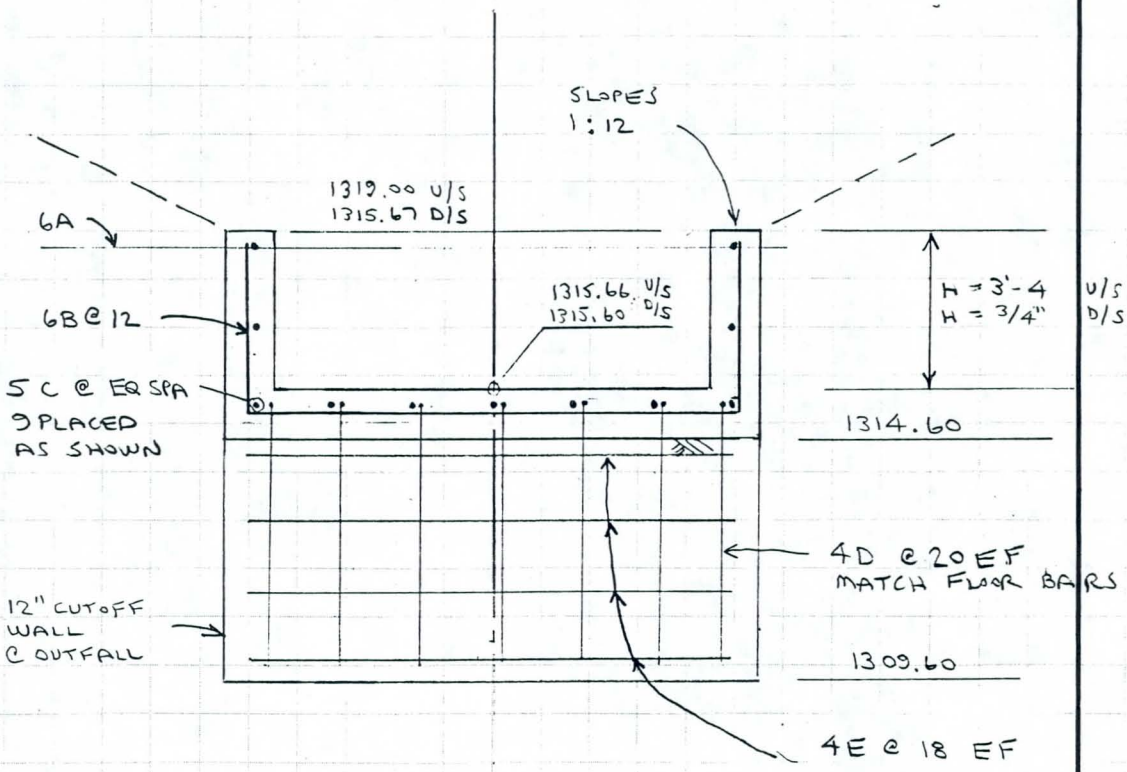

DESIGN BY COMPARISON TO ADOT B-18.30

H = 4' 2:1 SLOPING FILL

MAIN REINF = #5 @ 12

$M \approx 1.76 A_s d = 1.76(0.31)(9") = 4.91$

USE SINGLY REINF @ ℄

$A_s = \frac{4.91}{1.76(6")} = 0.46 \text{ in}^2 \approx 0.44$

USE #6 @ 12 TYP

SC 3004 R1 691

EAST TRIBUTARY INLET

STANLEY CONSULTANTS

Computed by DRS Date MAR95
Checked by KAS Date 3/95
Reviewed by _____ Date _____
Approved by _____ Date _____

Job No. 12182 Page No. _____
Subject FCDMC
10TH STREET WASH
Sheet No. _____ of _____

EAST TRIBUTARY

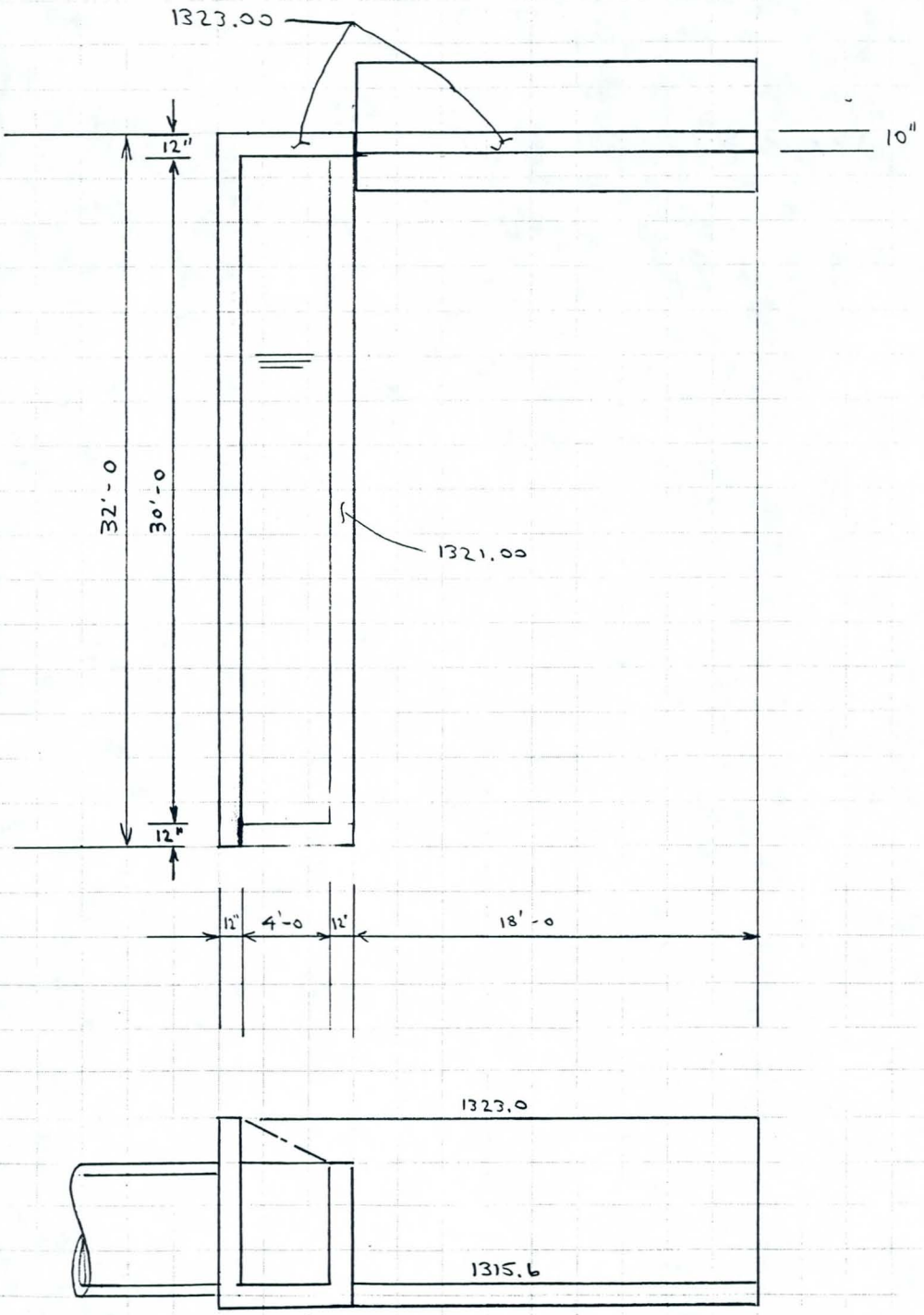

H = 7.4'
SAY 8'

SC 3004 R1 691

STANLEY CONSULTANTS

Computed by DRC Date
Checked by KAS Date 3/92
Reviewed by Date
Approved by Date

Job No. 12183 Page No.
Subject FCDMC
10TH STREET WASH
Sheet No. of

EAST TRIBUTARY

DESIGN AS CANTILEVER RETAINING WALL
AS WAS DONE FOR WEST TRIBUTARY
BACK WALL
H = 8 FT LEVEL FILL WITH SURCHARGE 1607.59 ok
SUBST #7@12 FOR #6@9 "S" BARS

FRONT WALL
H = 6 FT HYDROSTATIC PRESSURE TO 2'
OVER FULL CONDITION

$$M = \frac{1}{6}\gamma H^3$$
$$= \frac{1}{6}(0.0624)(6')^3$$
$$= 2.25 \text{ FT K}$$

$$A_s = \frac{2.25}{1.76(9')} = 0.14 \text{ IN}^2$$

USE # 5 @ 12

FLOOR : USE BACK WALL DESIGN FOR
U-CHANNEL APPROACH

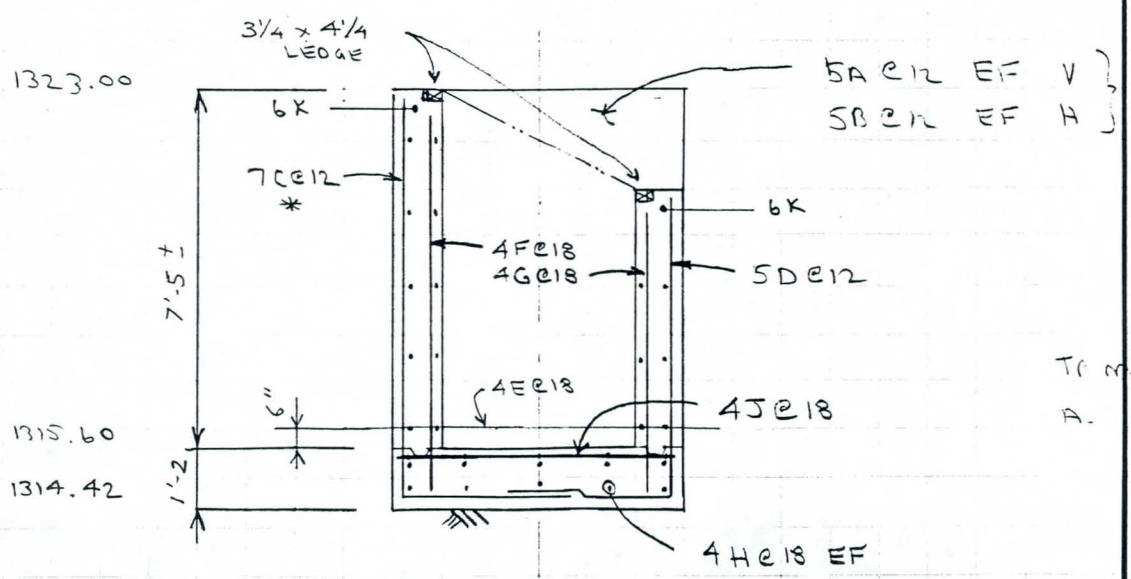

* ADJUST 7C AND 4F BARS TO CLEAR 60" ϕ RCP PIPES BY BUNDLING IN PAIRS WITHIN 3'-0 EACH SIDE OF PIPE

SC 3004 R1 691

STANLEY CONSULTANTS

Job No. 12187 Page No.

Computed by DRS Date MAR 95 Subject FCDMC

Checked by KAS Date 3/95 10TH STREET WALL

Reviewed by Date

Approved by Date Sheet No. of

EAST TRIBUTARY

CHECK SLIDING DUE TO BACK WALL EARTH PRESSURE

$$R = (0.035)(2\ FT) + \tfrac{1}{2}(0.035)(8\ FT)^2$$
$$= 0.07 + 1.12$$
$$= 1.2\ K/FT$$

NEGLECT PASSIVE PRESSURE — VERY CONSERVATIVE

FRICTION = 0.40 (DL)

$$DL \approx [1 \times 7.5 + 1 \times 5.5 + 1.17(6)]\ 0.150)$$
$$= 3.00\ K/FT$$

FRICTION = 0.40 (3.0) = 1.20 K/FT FRICTION

= 1.20 K/FT DRIVING F.

PASSIVE PRESSURE PROVIDES ADEQUATE F.S.

STANLEY CONSULTANTS

Computed by DRS Date MAR95
Checked by KAS Date 3/95
Reviewed by _____ Date _____
Approved by _____ Date _____

Job No. 12183 Page No. _____
Subject FCOMC
10TH STREET WASH
Sheet No. _____ of _____

EAST TRIBUTARY

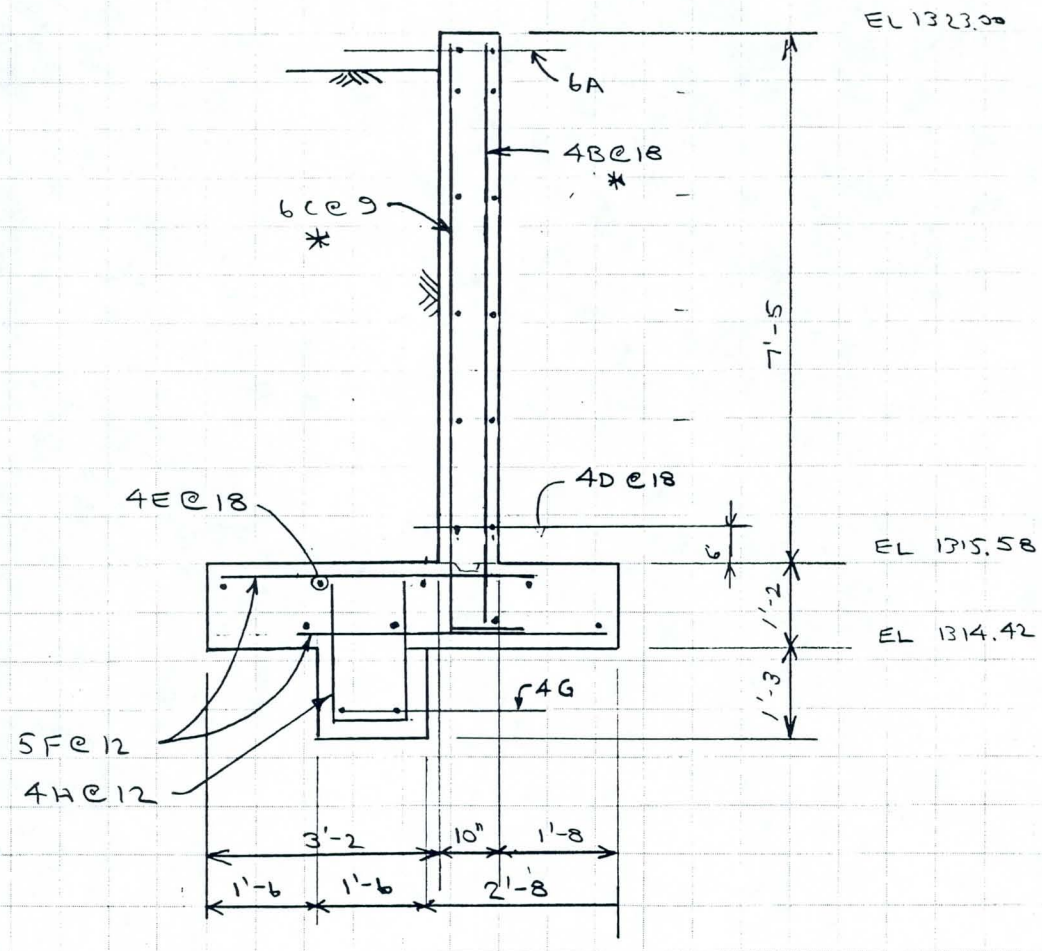

* ADJUST 6C AND 4B TO CLEAR EXIST. 30" CMP
PROVIDE 1/2" OPEN SPACE ALL AROUND CMP TO ALLOW BACKFILL TO DRAIN