ENGINEERING DIVISION
LIBRARY

SERGENT, HAUSKINS & BECKWITH CONSULTING GEOTECHNICAL ENGINEERS
SOIL & FOUNDATION ENGINEERING • ENGINEERING GEOLOGY • HYDROGEOLOGY
MATERIALS ENGINEERING • MATERIALS TESTING • ENVIRONMENTAL SERVICES

901.xxx
·015

August 29, 1989

Property of
Flood Control District of MC Library
Please Return to
2801 W. Durango
Phoenix, AZ 85009

T. Y. Lin International
Emerson Court
Suite 175
1817 North 7th Street
Phoenix, Arizona 85006

SHB Job No. E89-68
Addendum No. 1

Attention: Mitchell D. Smith, P.E.
Project Manager

RECEIVED
AUG 29 1989
TYLI PHOENIX

Re: ACDC Canal Bridge
Maryland Avenue & Arizona Canal
Phoenix, Arizona

Gentlemen:

This addendum to our Geotechnical Investigation Report presents corrected calculation sheets (Appendix C) for the settlement analysis of drilled, cast-in-place concrete piers. Anticipated settlements using the Vesic method have been corrected and a settlement analysis using the Schmertmann method, including a long-term evaluation, is also presented. It is our opinion that the Schmertmann analysis is too conservative for the soils involved and we recommend that the Vesic method be utilized for design. The corrected calculation sheets that are to replace those given in Appendix C of the original report are attached.

In reference to the requirement of a safety factor of 2.0 for the vertical slopes between the piers, it is our opinion that this falls under the definition of temporary structure and according to the NAVFAC documents, a safety factor of 1.3 is sufficient for design, which is lower than our minimum calculated safety factor of 1.8. Experience with similar soils on the Squaw Peak Parkway demonstrated that

A118.970

ENGINEERING DIVISION
LIBRARY

SERGENT, HAUSKINS & BECKWITH CONSULTING GEOTECHNICAL ENGINEERS
SOIL & FOUNDATION ENGINEERING • ENGINEERING GEOLOGY • HYDROGEOLOGY
MATERIALS ENGINEERING • MATERIALS TESTING • ENVIRONMENTAL SERVICES

901.xxx
.015

August 29, 1989

Property of
Flood Control District of MC Library
Please Return to
2801 W. Durango
Phoenix, AZ 85009

T. Y. Lin International
Emerson Court
Suite 175
1817 North 7th Street
Phoenix, Arizona 85006

SHB Job No. E89-68
Addendum No. 1

Attention: Mitchell D. Smith, P.E.
Project Manager

RECEIVED
AUG 29 1989
TYLI PHOENIX

Re: ACDC Canal Bridge
Maryland Avenue & Arizona Canal
Phoenix, Arizona

Gentlemen:

This addendum to our Geotechnical Investigation Report presents corrected calculation sheets (Appendix C) for the settlement analysis of drilled, cast-in-place concrete piers. Anticipated settlements using the Vesic method have been corrected and a settlement analysis using the Schmertmann method, including a long-term evaluation, is also presented. It is our opinion that the Schmertmann analysis is too conservative for the soils involved and we recommend that the Vesic method be utilized for design. The corrected calculation sheets that are to replace those given in Appendix C of the original report are attached.

In reference to the requirement of a safety factor of 2.0 for the vertical slopes between the piers, it is our opinion that this falls under the definition of temporary structure and according to the NAVFAC documents, a safety factor of 1.3 is sufficient for design, which is lower than our minimum calculated safety factor of 1.8. Experience with similar soils on the Squaw Peak Parkway demonstrated that

these soils were stable at a vertical slope for the anticipated heights without the added stability of the presence of the drilled piers.

The values of 0 = 30° and C = 300 psf were derived from our experience with the on-site soils. The soils were too hard to extract an undisturbed sample for testing to determine the above parameters, and therefore, no test results are available. However, our experience and test results from other projects in the area show that cohesion values range from 400 to 1500 psf and friction angles range from 32 to 40 degrees for similar soils. It is our opinion that the assumed values for cohesion and friction angle are conservative for the soils encountered.

This addendum should be attached to the original report and made a part thereof.

Should any questions arise concerning this addendum, we would be pleased to discuss them with you.

Respectfully submitted,

Sergent, Hauskins & Beckwith Engineers

By Gary N. Sheppard, E.I.T.

Reviewed by Norman H. Wetz, P.E.

Registered Professional Engineer
CERTIFICATE NO.
12176
NORMAN HAROLD
WETZ
Date Signed 8/29/89
ARIZONA, U.S.A.

Copies: Addressee (3)

tt/job1/8-28-89

DESIGN OF DRILLED, CAST IN PLACE,
CONCRETE PIERS FOR BRIDGE ABUTMENTS

SAFE DOWNWARD CAPACITY

A. CONSIDER END-BEARING ONLY

$$q_s = \frac{1}{9}\left(\frac{0.4\,\bar{N}\,D}{B}\right)$$

WHERE:

$\bar{N} = C_N \cdot N$

N = STANDARD PENETRATION RESISTANCE NEAR PIER TIP

$C_N = 0.77 \log_{10}(40/P)$ WHERE P = EFFECTIVE OVERBURDEN STRESS AT PIER TIP. (KSF)

D = DEPTH OF PIER TIP (FT)

B = DIAMETER OF PIER TIP (FT)

$$q_{SAFE} = \frac{0.044\,\bar{N}\,D}{\cancel{B}}\left(\frac{\pi B^{\cancel{2}}}{4}\right) = 0.0349(\bar{N})(D)(B)$$

B. CONSIDER SIDE SHEAR ONLY

$$f_s = 0.5\left(\frac{N}{50}\right)\left(\frac{1}{3}\right)(2) \text{ KSF}$$

$$= 0.0067\, N_{AVE}$$

$q_s = 0.0067\, N_{AVE}\,(D)(\pi)(B)$ N_{AVE} = 80 BLOWS/FT

WHERE D = DEPTH OF EMBEDMENT (FT)
B = PIER DIAMETER (FT)

$$q_{SAFE} = 1.675516\,(D)(B)$$

TABLE C-1

CALCULATION OF $\bar{N}$

$\bar{N} = N \cdot 0.77 \log_{10} 40/p$, p IN KSF

APPROX. ELEV. (FT)	DEPTH (FT)	N	p (KSF)	C_N	$\bar{N}$
1235	10	80	1.2	1.17	94
1225	20	80	2.4	0.94	75
1215	30	90	3.6	0.81	65
1205	40	90	4.8	0.71	57
1195	50	80	6.0	0.63	50
1185	60	90	7.2	0.57	46
1175	70	90	8.4	0.52	42

TABLE C-2

CALCULATION OF q_{SAFE} FOR END BEARING

$q_{SAFE} = 0.0349 (\bar{N})(D)(B)$ (KIPS)

APPROX. ELEV. (FT)	DEPTH (FT)	B=2.0	B=2.5	B=3.0	B=3.5	B=4.0	B=4.5	B=5.0
1235	10	66	82	98	115	131	148	164
1225	20	105	131	157	183	209	236	262
1215	30	136	170	204	238	272	306	340
1205	40	159	199	239	279	318	358	398
1195	50	175	218	262	305	349	393	436
1185	60	193	241	289	337	385	434	482
1175	70	205	257	308	359	411	462	513

TABLE C-3

CALCULATION OF q_{SAFE} FOR SIDE SHEAR

$q_s = 1.6755(D)(B)$ (KIPS)

PIER TIP ELEVATION	DEPTH OF EMBEDMENT FT.	B=2.0	B=2.5	B=3.0	B=3.5	B=4.0	B=4.5	B=5.0
1205	10	34	42	50	59	67	75	84
1195	20	67	84	101	117	134	151	168
1185	30	101	126	151	176	201	226	251
1175	40	134	168	201	235	268	302	335

SETTLEMENT ANALYSIS
(VESIC METHOD)*

FOR DRILLED PIERS GREATER THAN 24-INCHES IN DIAMETER, SETTLEMENT MAY CONTROL DESIGN.

CONSIDERING END-BEARING ONLY:

$$\text{SETTLEMENT} = Q_p \left(\frac{L}{A E_p} + \frac{C_p}{3 B q_s} \right) 12$$

WHERE:

Q_p = POINT LOAD AT PIER (KSF)

L = PILE LENGTH (FT.)

A = PILE CROSS SECTIONAL AREA (FT^2)

E_p = MODULUS OF ELASTICITY OF PIER FOR CONCRETE $E_p = 3 \times 10^6$ psi
$= 432 \times 10^6$ ksf

should be 0.432×10^6 ksf

C_p = EMPIRICAL COEFFICIENT FOR STIFF CLAY, $C_p = 0.03$

B = PILE DIAMETER (FT)

q_s = SAFE END-BEARING CAPACITY (KIP)

CALCULATION OF q_o:

$$q_o = 1/3 \left(\frac{0.4 \bar{N} D}{B} \right) \text{ FOR DRILLED PIERS}$$

WHERE:

$\bar{N} = C_N \cdot N$

$C_N = 0.77 \log_{10} 40/p$

p = EFFECTIVE OVERBURDEN STRESS AT PILE TIP (KSF)

D = PILE EMBEDMENT DEPTH (FT)

B = PILE DIAMETER AT TIP (FT)

* FROM NAVFAC DM-7.2 PGS 207-209

TABLE C-4

NORMALIZED SETTLEMENT IN INCHES/KIP $\times 10^{-4}$ VERTICAL LOAD FOR ABUTMENT PIERS (FINISHED GRADE = 1215 FT) ASSUMING END-BEARING ONLY

PIER TIP ELEVATION (FT)	PIER LENGTH (FT)	SETTLEMENT, INCHES/KIP $\times 10^{-4}$						
		B = 2.0	B = 2.5	B = 3.0	B = 3.5	B = 4.0	B = 4.5	B = 5.0
1205	40	4.13	2.64	1.83	1.34	1.03	0.82	0.66
1195	50	3.87	2.48	1.72	1.27	0.97	0.77	0.62
1185	60	3.64	2.33	1.62	1.19	0.91	0.72	0.58
1175	70	3.55	2.26	1.57	1.16	0.89	0.70	0.57

SERGENT, HAUSKINS & BECKWITH
CONSULTING GEOTECHNICAL ENGINEERS
PHOENIX • TUCSON • ALBUQUERQUE • SANTA FE • SALT LAKE CITY • EL PASO • RENO/SPARKS

Project ACDC CANAL BRIDGE
Job No: E89-63
Computed by: GDS Ckd. by: [illegible]
Date 9-30 Page 5 of 24

CONSIDERING SIDE SHEAR ONLY:

$$\text{SETTLEMENT} = Q_s\left(\frac{\alpha_s L}{A E_p} + \frac{C_s}{3 D q_s}\right)12$$

WHERE:

Q_s = SHAFT FRICTION LOAD (KIP)

L = PIER LENGTH (FT)

A = PIER CROSS SECTIONAL AREA (FT^2)

E_p = MODULUS OF ELASTICITY OF PIER FOR CONCRETE $E_p = 3 \times 10^6$ PSI $= 4.32 \times 10^6$ KSF

should be 0.432×10^6 ksf

$C_s = (0.93 + 0.16\, D/B)\, C_p$

D = DEPTH OF EMBEDMENT (FT)

q_s = SAFE END-BEARING CAPACITY (KSF)

α_s = 0.5 FOR PARABOLIC DISTRIBUTION

TABLE C-5

CALCULATION OF C_s

$$C_s = (0.93 + 0.16\, D/B)\, C_p$$

PIER TIP ELEVATION (FT)	EMBED. DEPTH (FT)	B=2.0	B=2.5	B=3.0	B=3.5	B=4.0	B=4.5	B=5.0
1205	10	0.05	0.05	0.04	0.04	0.04	0.04	0.04
1195	20	0.08	0.07	0.06	0.06	0.05	0.05	0.05
1185	30	0.10	0.09	0.08	0.07	0.06	0.06	0.06
1175	40	0.12	0.10	0.09	0.08	0.08	0.07	0.07

TABLE C-6

NORMALIZED SETTLEMENT IN INCHES/KIP $\times 10^{-4}$ VERTICAL LOAD FOR ABUTMENT PIERS (FINISHED GRADE = 1215 FT) ASSUMING SIDE SHEAR ONLY

PIER TIP ELEVATION (FT)	DEPTH BELOW FINISHED GRADE (FT)	SETTLEMENT, INCHES/KIP $\times 10^{-4}$						
		B=2.0	B=2.5	B=3.0	B=3.5	B=4.0	B=4.5	B=5.0
1205	10	6.26	4.58	3.58	2.87	2.42	2.09	1.81
1195	20	2.46	1.71	1.27	1.01	0.82	0.69	0.59
1185	30	1.56	1.06	0.78	0.60	0.49	0.40	0.34
1175	40	1.21	0.81	0.59	0.45	0.36	0.29	0.24

SERGENT, HAUSKINS & BECKWITH
CONSULTING GEOTECHNICAL ENGINEERS
PHOENIX • TUCSON • ALBUQUERQUE • SANTA FE • SALT LAKE CITY • EL PASO • RENO/SPARKS

Project ACDC CANAL BRIDGE
Job No: E89-68
Computed by: GNS Ckd. by: [illegible]
Date 9/1/90 Page 7 of 24

SETTLEMENT ANALYSIS
(SCHMERTMANN'S METHOD)

A. INSTANTANEOUS SETTLEMENTS*

$$\Delta H_i = \frac{2qB^2}{K_{vi}(B+1)^2}$$

*FROM NAVFAC DM-7.1 FIG. 6 PAGE 219

WHERE:

ΔH_i = IMMEDIATE SETTLEMENT OF PIER IN FT

q = PIER UNIT LOAD IN KSF

B = PIER DIAMETER IN FT

K_{vi} = MODULUS OF VERTICAL SUBGRADE REACTION IN $KIPS/FT^3$

TO PRESENT SETTLEMENT IN TERMS OF INCH/KIP VERT. LOAD

$$\Delta H_i(in)/KIP = \frac{2\left(q\ KIP/FT^2\right)\left(B^2\ FT^2\right)}{\left(K_{vi}\ KIP/FT^3\right)\left((B+1)^2\ FT^2\right)\left(\frac{\pi B^2}{4}\ FT^2\right)\left(\frac{12\ IN}{1\ FT}\right)}$$

$$= \frac{2q^2(12)(4)}{K_{vi}(B+1)^2\pi B^2} = \frac{30.56}{K_{vi}(B+1)^2}$$

$K_{vi} = 500\ KIPS/FT^3$ (FOR RELATIVE DENSITY = 90%)

$$\Delta H_i(\text{INCHES})/KIP = \frac{0.06112}{(B+1)^2}$$

B LONGTERM SETTLEMENTS*

$$\Delta H = C_1 C_2 \Delta P \sum_{0}^{2B} \left(\frac{I_z}{E_s}\right) \Delta z$$

* FROM NAVFAC DM-7.1 SCHMERTMANN'S METHOD PAGES 220-222

WHERE:

ΔH = TOTAL LONG-TERM SETTLEMENT (INCHES)

$C_1 = 1 - 0.5(P_o/\Delta P)$; $C_1 \geq 0.5$

$C_2 = 1 + 0.2 \log(10t)$

P_o = OVERBURDEN PRESSURE AT FOUNDATION LEVEL (KSF)

ΔP = NET FOUNDATION PRESSURE INCREASE (KSF)

t = ELAPSED TIME IN YEARS

ASSUMPTIONS

AVE. DEPTH OF PIER TIP = 40 FOOT
AVE. SOIL DENSITY = 120 PCF
$E_s/N = 12$ FOR SANDS & GRAVELS ; $N = 80$ BLOWS
$t = 10$ YEARS

A SAMPLE CALCULATION IS PRESENTED

A LAYERED SYSTEM DOES NOT EXIST FOR A DEPTH OF 2B BELOW THE PIER TIP, HOWEVER ANALYSIS WAS COMPLETED USING ONE-FOOT INCREMENTS FOR INCREASED ACCURACY. THE SAMPLE CALCULATION IS FOR A 4-FOOT DIAMETER PIER CARRYING A 1000 KIP LOAD.

SAMPLE CALCULATION - LONG TERM SETTLEMENTS

4 FOOT DIAM. PIER

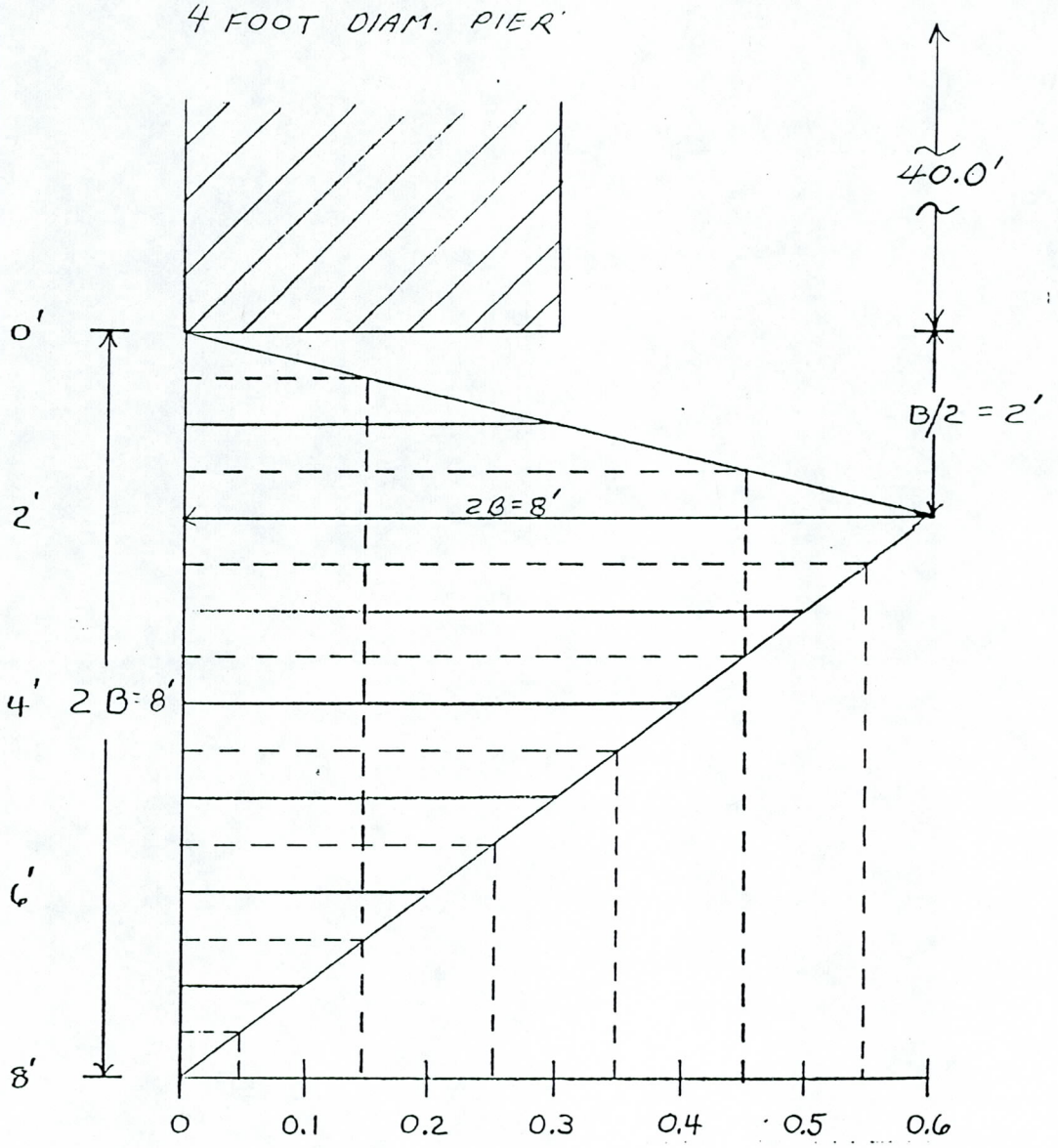

FOR A 1000 KIP LOAD:

LAYER	ΔZ (IN)	N	E_s/N	E_s (KSF)	Z_c (IN.)	I_z	$\frac{I_z}{E_s}\Delta Z$ (IN/KSF)
1	12	80	12	1920	6	0.15	0.00094
2	12	80	12	1920	18	0.45	0.00281
3	12	80	12	1920	30	0.55	0.00344
4	12	80	12	1920	42	0.45	0.00281
5	12	80	12	1920	54	0.35	0.00219
6	12	80	12	1920	66	0.25	0.00156
7	12	80	12	1920	78	0.15	0.00094
8	12	80	12	1920	90	0.05	0.00031
							0.01500

$P_o = 40(120) = 4.80$ KSF

$\Delta P = 1000/12.57 = 80$ KSF

$C_1 = 1 - 0.5\left(\frac{4.8}{80}\right) = 0.97$

$C_2 = 1 + 0.2 \log(10 \cdot 10)$
$= 1.4$

$\Delta H = (0.97)(1.4)(80)(0.015)$
$= \underline{1.6''}$

SERGENT, HAUSKINS & BECKWITH
CONSULTING GEOTECHNICAL ENGINEERS
PHOENIX · TUCSON · ALBUQUERQUE · SANTA FE · SALT LAKE CITY · EL PASO

Project ACOC CANAL BRIDGE
Job No: E89-68
Computed by: GNS Ckd. by:
Date 8/1/89 Page 10 of 24

TABLE C-7

NORMALIZED INSTANTANEOUS SETTLEMENT IN INCHES FOR A 140 KIP VERTICAL LOAD USING SCHMERTMANNS METHOD

PIER TIP ELEVATION (FT)	DEPTH BELOW FINISHED GRADE (FT)	INSTANTANEOUS SETTLEMENT, INCHES						
		B=2.0	B=2.5	B=3.0	B=3.5	B=4.0	B=4.5	B=5.0
1205	10	0.95	0.70	0.53	0.42	0.34	0.28	0.24
1195	20	0.95	0.70	0.53	0.42	0.34	0.28	0.24
1185	30	0.95	0.70	0.53	0.42	0.34	0.28	0.24
1175	40	0.95	0.70	0.53	0.42	0.34	0.28	0.24

SERGENT, HAUSKINS & BECKWITH
CONSULTING GEOTECHNICAL ENGINEERS
PHOENIX • TUCSON • ALBUQUERQUE • SANTA FE • SALT LAKE CITY • EL PASO • RENO/SPARKS

Project ACOC CANAL BRIDGE
Job No: E89-68
Computed by: GNS Ckd. by: [illegible]
Date 9/2/89 Page 11 of 24

SERGENT, HAUSKINS & BECKWITH
CONSULTING GEOTECHNICAL ENGINEERS
PHOENIX · TUCSON · ALBUQUERQUE · SANTA FE · SALT LAKE CITY · EL PASO · RENO/SPARKS

Project [illegible]
Job No: [illegible]
Computed by: [illegible] Ckd. by: [illegible]
Date [illegible] Page 12 of 24

TABLE C-8

NORMALIZED LONG-TERM SETTLEMENT IN INCHES FOR A 140-KIP VERTICAL LOAD USING SCHMERTMANN'S METHOD

PIER TIP ELEVATION (FT)	DEPTH BELOW FINISHED GRADE (FT)	LONG-TERM SETTLEMENT, INCHES						
		B=2.0	B=2.5	B=3.0	B=3.5	B=4.0	B=4.5	B=5.0
1205	10	0.45	0.42	0.29	0.23	0.19	0.16	0.14
1195	20	0.45	0.41	0.28	0.22	0.18	0.14	0.12
1185	30	0.44	0.40	0.27	0.21	0.17	0.13	0.10
1175	40	0.43	0.39	0.26	0.20	0.15	0.12	0.09

TABLE C-9

NORMALIZED TOTAL SETTLEMENT (INSTANTANEOUS + LONG-TERM) FOR A 140-KIP VERTICAL LOAD USING SCHMERTMANN'S METHOD

PIER TIP ELEVATION (FT)	DEPTH BELOW FINISHED GRADE (FT)	TOTAL SETTLEMENT, INCHES						
		B=2.0	B=2.5	B=3.0	B=3.5	B=4.0	B=4.5	B=5.0
1205	10	1.40	1.12	0.82	0.65	0.53	0.44	0.38
1195	20	1.40	1.11	0.81	0.64	0.52	0.42	0.36
1185	30	1.39	1.10	0.80	0.63	0.51	0.41	0.34
1175	40	1.38	1.09	0.79	0.62	0.49	0.40	0.33

SERGENT, HAUSKINS & BECKWITH
CONSULTING GEOTECHNICAL ENGINEERS
PHOENIX • TUCSON • ALBUQUERQUE • SANTA FE • SALT LAKE CITY • EL PASO • RENO/SPARKS

Project ACDC CANAL REVISE
Job No: E 99-69
Computed by: GMS Ckd. by: [illegible]
Date 9/12/80 Page 13 of 24

Stability Analysis (Soil Between Piers)

BASIC ASSUMPTIONS

$\gamma = 120$ PCF

$\phi = 30°$

$c = 300$ PSF

$w = 6$ ft.

CASE 1

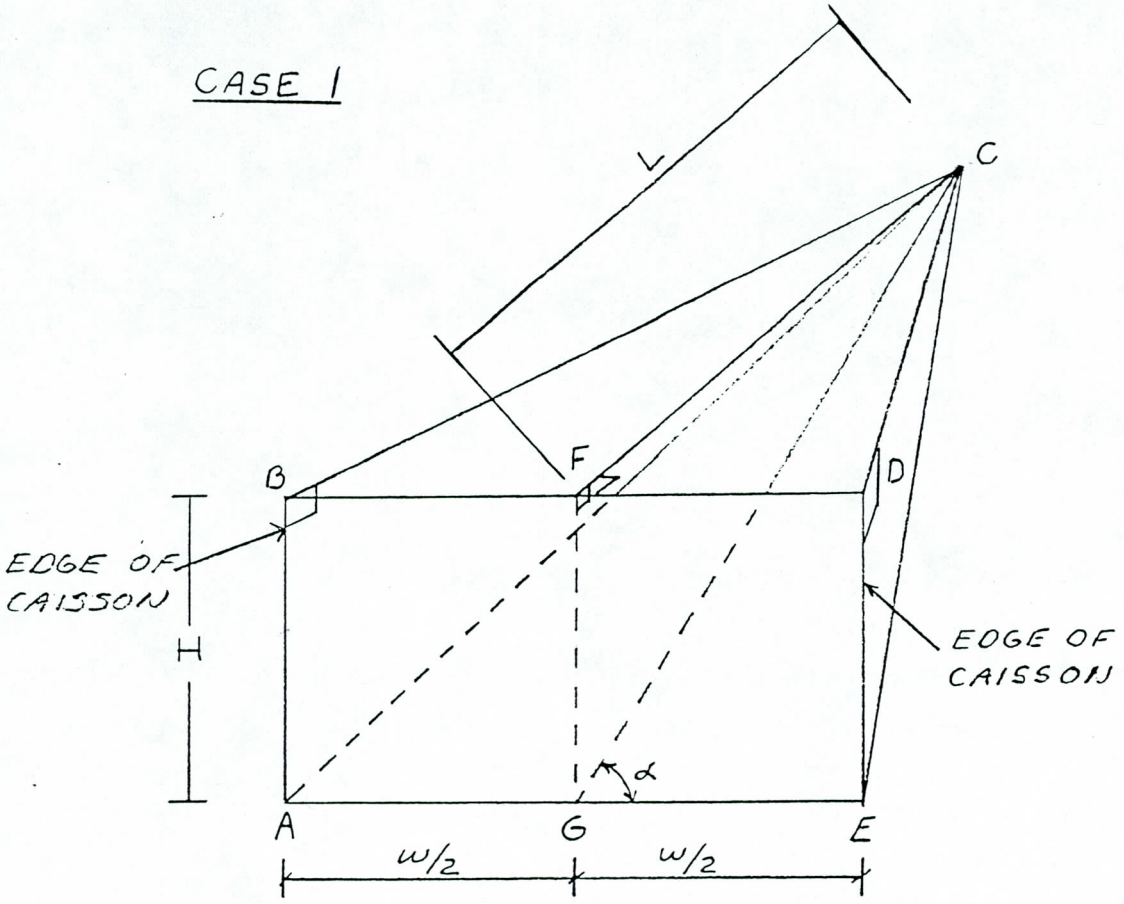

$\alpha = \tan^{-1}(H/L)$

LINE $\overline{CF} = L$

LINE $\overline{BC} = \sqrt{L^2 + (w/2)^2}$

LINE $\overline{CG} = \sqrt{L^2 + H^2}$

AREA $\overline{ABC} = 1/2\,(H)(\overline{BC})$

AREA $\overline{ACE} = 1/2(w)(\overline{CG})$

$\bar{W} = 1/3\,(H)(L)(w)\,\gamma$

$$F.S. = \frac{[2(\overline{ABC}) + \overline{ACE}]\,c + \bar{W}\cos\alpha\tan\phi}{\bar{W}\sin\alpha}$$

Stability Analysis
(Soil between Piers)
CASE 2

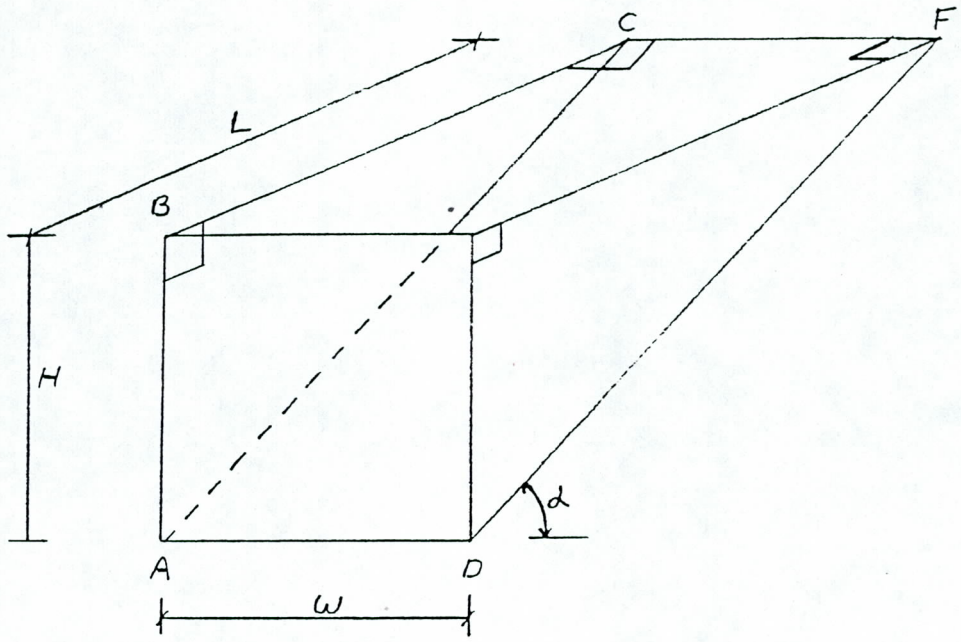

LINE $\overline{AC} = H^2 + L^2$

$\alpha = \tan^{-1}(H/L)$

AREA $\overline{ABC} = 1/2\,(H)(L)$

AREA $\overline{ACFD} = W(\overline{AC})$

$\overline{W} = (\overline{ABC})(W)(\gamma)$

$$F.S. = \frac{[2(\overline{ABC}) + \overline{ACFD}]C + \overline{W}\cos\alpha\tan\phi}{\overline{W}\sin\alpha}$$

STABILITY ANALYSIS

EXAMPLE CALCULATIONS

CASE 1

CONSIDER $H = 10'$, $L = 6'$, $W = 6'$

$\alpha = \tan^{-1}(H/L) = \tan^{-1}(10/6) = 59.0°$

$\overline{CF} = L = 6'$

$\overline{BC} = [L^2 + (W/2)^2]^{1/2} = [6^2 + (6/2)^2]^{1/2} = 6.71'$

$\overline{CG} = (L^2 + H^2)^{1/2} = (6^2 + 10^2)^{1/2} = 11.66'$

$\overline{ABC} = 1/2\, H\, \overline{BC} = 1/2\,(10)(6.71) = 33.54'^{\square}$

$\overline{ACE} = 1/2\, W\, \overline{CG} = 1/2\,(6)(11.66) = 34.98'^{\square}$

$\overline{W} = 1/3\, HLW\gamma = 1/3\,(10)(6)(6)120 = 14{,}400\ lb$

$$F.S. = [(2\overline{ABC} + \overline{ACE})C + \overline{W}\cos\alpha\tan\phi]/\overline{W}\sin\alpha$$

$$= \{[2(33.54) + 34.98]300 + [14{,}400\cos 59°\tan 30°]\}/14{,}400\sin 59°$$

$$= (30{,}618 + 4{,}282)/12{,}343 = \underline{\underline{2.83}}$$

CASE 2

CONSIDER $H = 20'$, $L = 8'$, $W = 6'$

$\alpha = \tan^{-1}(H/L) = \tan^{-1}(20/8) = 68.2°$

$\overline{AC} = (H^2 + L^2)^{1/2} = (20^2 + 8^2)^{1/2} = 21.54'$

$\overline{AGC} = 1/2\, HL = 1/2\,(20)(8) = 80.0'^{\square}$

$\overline{ACFD} = W\,\overline{AC} = 6(21.54) = 129.24'^{\square}$

$\overline{W} = \overline{ABC}\, W\gamma = (80)(6)(120) = 57{,}600\ lb.$

$$F.S. = [(2\overline{AGC} + \overline{ACFD})C + \overline{W}\cos\alpha\tan\phi]/\overline{W}\sin\alpha$$

$$= \{[2(80) + 129.24]300 + 57{,}600\cos 68.2°\tan 30°\}/57{,}600\sin 68.2°$$

$$= (86{,}772 + 12{,}350)/53{,}481 = \underline{\underline{1.85}}$$

CASE 1 ANALYSIS RESULTS

H (ft)	L (ft)	alpha (degree)	Weight (kips)	F.S.
5.00	0.50	84.29	0.60	15.27
5.00	1.00	78.69	1.20	8.05
5.00	1.50	73.30	1.80	5.82
5.00	2.00	68.20	2.40	4.83
5.00	2.50	63.43	3.00	4.35
5.00	3.00	59.04	3.60	4.11
5.00	3.50	55.01	4.20	4.01
5.00	4.00	51.34	4.80	4.00
5.00	4.50	48.01	5.40	4.05
5.00	5.00	45.00	6.00	4.14
5.00	5.50	42.27	6.60	4.26
5.00	6.00	39.81	7.20	4.40
5.00	6.50	37.57	7.80	4.56
5.00	7.00	35.54	8.40	4.73
5.00	7.50	33.69	9.00	4.92
5.00	8.00	32.00	9.60	5.11
5.00	8.50	30.47	10.20	5.31
5.00	9.00	29.05	10.80	5.52
5.00	9.50	27.76	11.40	5.73
5.00	10.00	26.57	12.00	5.95

H (ft)	L (ft)	alpha (degree)	Weight (kips)	F.S.
10.00	1.00	84.29	2.40	7.82
10.00	2.00	78.69	4.80	4.36
10.00	3.00	73.30	7.20	3.38
10.00	4.00	68.20	9.60	3.00
10.00	5.00	63.43	12.00	2.86
10.00	6.00	59.04	14.40	2.83
10.00	7.00	55.01	16.80	2.86
10.00	8.00	51.34	19.20	2.94
10.00	9.00	48.01	21.60	3.05
10.00	10.00	45.00	24.00	3.17
10.00	11.00	42.27	26.40	3.32
10.00	12.00	39.81	28.80	3.47
10.00	13.00	37.57	31.20	3.63
10.00	14.00	35.54	33.60	3.80
10.00	15.00	33.69	36.00	3.98
10.00	16.00	32.00	38.40	4.16
10.00	17.00	30.47	40.80	4.34
10.00	18.00	29.05	43.20	4.53
10.00	19.00	27.76	45.60	4.72
10.00	20.00	26.57	48.00	4.92

SERGENT, HAUSKINS & BECKWITH
CONSULTING GEOTECHNICAL ENGINEERS
PHOENIX · TUCSON
ALBUQUERQUE · SANTA FE · SALT LAKE CITY · EL PASO · RENO/SPARKS

CASE 1 ANALYSIS RESULTS cont.

H (ft)	L (ft)	alpha (degree)	Weight (kips)	F.S.
15.00	1.50	84.29	5.40	5.39
15.00	3.00	78.69	10.80	3.22
15.00	4.50	73.30	16.20	2.65
15.00	6.00	68.20	21.60	2.46
15.00	7.50	63.44	27.00	2.42
15.00	9.00	59.04	32.40	2.45
15.00	10.50	55.01	37.80	2.52
15.00	12.00	51.34	43.20	2.62
15.00	13.50	48.01	48.60	2.75
15.00	15.00	45.00	54.00	2.88
15.00	16.50	42.27	59.40	3.03
15.00	18.00	39.81	64.80	3.18
15.00	19.50	37.57	70.20	3.34
15.00	21.00	35.54	75.60	3.51
15.00	22.50	33.69	81.00	3.68
15.00	24.00	32.01	86.40	3.86
15.00	25.50	30.47	91.80	4.04
15.00	27.00	29.06	97.20	4.22
15.00	28.50	27.76	102.60	4.40
15.00	30.00	26.57	108.00	4.59

H (ft)	L (ft)	alpha (degree)	Weight (kips)	F.S.
20.00	2.00	84.29	9.60	4.22
20.00	4.00	78.69	19.20	2.68
20.00	6.00	73.30	28.80	2.31
20.00	8.00	68.20	38.40	2.21
20.00	10.00	63.43	48.00	2.22
20.00	12.00	59.04	57.60	2.27
20.00	14.00	55.01	67.20	2.36
20.00	16.00	51.34	76.80	2.48
20.00	18.00	48.01	86.40	2.60
20.00	20.00	45.00	96.00	2.74
20.00	22.00	42.27	105.60	2.89
20.00	24.00	39.81	115.20	3.04
20.00	26.00	37.57	124.80	3.20
20.00	28.00	35.54	134.40	3.37
20.00	30.00	33.69	144.00	3.54
20.00	32.00	32.01	153.60	3.71
20.00	34.00	30.47	163.20	3.89
20.00	38.00	27.76	182.40	4.24
20.00	40.00	26.57	192.00	4.43

SERGENT, HAUSKINS & BECKWITH
CONSULTING GEOTECHNICAL ENGINEERS
PHOENIX • TUCSON
ALBUQUERQUE • SANTA FE • SALT LAKE CITY • EL PASO • RENO/SPARKS

CASE 1 ANALYSIS RESULTS cont.

H (ft)	L (ft)	alpha (degree)	Weight (kips)	F.S.
25.00	2.50	84.29	15.00	3.54
25.00	5.00	78.69	30.00	2.38
25.00	7.50	73.30	45.00	2.12
25.00	10.00	68.20	60.00	2.07
25.00	12.50	63.44	75.00	2.10
25.00	15.00	59.04	90.00	2.17
25.00	17.50	55.01	105.00	2.27
25.00	20.00	51.34	120.00	2.39
25.00	22.50	48.01	135.00	2.52
25.00	25.00	45.00	150.00	2.66
25.00	27.50	42.27	165.00	2.81
25.00	30.00	39.81	180.00	2.96
25.00	32.50	37.57	195.00	3.12
25.00	35.00	35.54	210.00	3.28
25.00	37.50	33.69	225.00	3.45
25.00	40.00	32.01	240.00	3.62
25.00	42.50	30.47	255.00	3.80
25.00	45.00	29.06	270.00	3.97
25.00	47.50	27.76	285.00	4.15
25.00	50.00	26.57	300.00	4.33

SERGENT, HAUSKINS & BECKWITH
CONSULTING GEOTECHNICAL ENGINEERS
PHOENIX • TUCSON
ALBUQUERQUE • SANTA FE • SALT LAKE CITY • EL PASO • RENO/SPARKS

CASE 2 ANALYSIS RESULTS

H (ft)	L (ft)	alpha (degree)	Weight (kips)	F.S.
5.00	0.50	84.29	0.90	11.00
5.00	1.00	78.69	1.80	6.17
5.00	1.50	73.30	2.70	4.68
5.00	2.00	68.20	3.60	4.03
5.00	2.50	63.44	4.50	3.72
5.00	3.00	59.04	5.40	3.59
5.00	3.50	55.01	6.30	3.55
5.00	4.00	51.34	7.20	3.58
5.00	4.50	48.01	8.10	3.65
5.00	5.00	45.00	9.00	3.76
5.00	5.50	42.27	9.90	3.88
5.00	6.00	39.81	10.80	4.03
5.00	6.50	37.57	11.70	4.19
5.00	7.00	35.54	12.60	4.36
5.00	7.50	33.69	13.50	4.54
5.00	8.00	32.01	14.40	4.72
5.00	8.50	30.47	15.30	4.91
5.00	9.00	29.05	16.20	5.11
5.00	9.50	27.76	17.10	5.31
5.00	10.00	26.57	18.00	5.52

H (ft)	L (ft)	alpha (degree)	Weight (kips)	F.S.
10.00	1.00	84.29	3.60	5.95
10.00	2.00	78.69	7.20	3.57
10.00	3.00	73.30	10.80	2.86
10.00	4.00	68.20	14.40	2.58
10.00	5.00	63.43	18.00	2.47
10.00	6.00	59.04	21.60	2.45
10.00	7.00	55.01	25.20	2.49
10.00	8.00	51.34	28.80	2.55
10.00	9.00	48.01	32.40	2.65
10.00	10.00	45.00	36.00	2.76
10.00	11.00	42.27	39.60	2.88
10.00	12.00	39.81	43.20	3.01
10.00	13.00	37.57	46.80	3.15
10.00	14.00	35.54	50.40	3.30
10.00	15.00	33.69	54.00	3.45
10.00	16.00	32.01	57.60	3.61
10.00	17.00	30.47	61.20	3.78
10.00	18.00	29.05	64.80	3.93
10.00	19.00	27.76	68.40	4.10
10.00	20.00	26.57	72.00	4.27

SERGENT, HAUSKINS & BECKWITH
CONSULTING GEOTECHNICAL ENGINEERS
PHOENIX • TUCSON
ALBUQUERQUE • SANTA FE • SALT LAKE CITY • EL PASO • RENO/SPARKS

CASE 2 ANALYSIS RESULTS cont.

H (ft)	L (ft)	alpha (degree)	Weight (kips)	F.S.
15.00	1.50	84.29	8.10	4.26
15.00	3.00	78.69	16.20	2.70
15.00	4.50	73.30	24.30	2.25
15.00	6.00	68.20	32.40	2.10
15.00	7.50	63.43	40.50	2.05
15.00	9.00	59.04	48.60	2.07
15.00	10.50	55.01	56.70	2.13
15.00	12.00	51.34	64.80	2.21
15.00	13.50	48.01	72.90	2.31
15.00	15.00	45.00	81.00	2.42
15.00	16.50	42.27	89.10	2.54
15.00	18.00	39.81	97.20	2.67
15.00	19.50	37.57	105.30	2.81
15.00	21.00	35.54	113.40	2.95
15.00	22.50	33.69	121.50	3.09
15.00	24.00	32.01	129.60	3.24
15.00	25.50	30.47	137.70	3.39
15.00	27.00	29.05	145.80	3.54
15.00	28.50	27.76	153.90	3.70
15.00	30.00	26.57	162.00	3.85

H (ft)	L (ft)	alpha (degree)	Weight (kips)	F.S.
20.00	2.00	84.29	14.40	3.42
20.00	4.00	78.69	28.80	2.27
20.00	6.00	73.30	43.20	1.95
20.00	8.00	68.20	57.60	1.85
20.00	10.00	63.43	72.00	1.84
20.00	12.00	59.04	86.40	1.88
20.00	14.00	55.01	100.80	1.95
20.00	16.00	51.34	115.20	2.04
20.00	18.00	48.01	129.60	2.14
20.00	20.00	45.00	144.00	2.26
20.00	22.00	42.27	158.40	2.38
20.00	24.00	39.81	172.80	2.50
20.00	26.00	37.57	187.20	2.63
20.00	28.00	35.54	201.60	2.77
20.00	30.00	33.69	216.00	2.91
20.00	32.00	32.01	230.40	3.05
20.00	34.00	30.47	244.80	3.20
20.00	36.00	29.05	259.20	3.34
20.00	38.00	27.76	273.60	3.49
20.00	40.00	26.57	288.00	3.64

CASE 2 ANALYSIS RESULTS cont.

H (ft)	L (ft)	alpha (degree)	Weight (kips)	F.S.
25.00	2.50	84.29	22.50	2.92
25.00	5.00	78.69	45.00	2.01
25.00	7.50	73.30	67.50	1.77
25.00	10.00	68.20	90.00	1.71
25.00	12.50	63.43	112.50	1.72
25.00	15.00	59.04	135.00	1.77
25.00	17.50	55.01	157.50	1.85
25.00	20.00	51.34	180.00	1.94
25.00	22.50	48.01	202.50	2.04
25.00	25.00	45.00	225.00	2.16
25.00	27.50	42.27	247.50	2.28
25.00	30.00	39.81	270.00	2.40
25.00	32.50	37.57	292.50	2.53
25.00	35.00	35.54	315.00	2.66
25.00	37.50	33.69	337.50	2.80
25.00	40.00	32.01	360.00	2.94
25.00	42.50	30.47	382.50	3.08
25.00	45.00	29.05	405.00	3.23
25.00	47.50	27.76	427.50	3.37
25.00	50.00	26.57	450.00	3.52

APPROACH PAVEMENT DESIGN

FROM TRAFFIC ANALYSIS:

TOTAL 18-KIP EQUIVALENT LOADS OVER 20 YEARS = 69,400 FOR THE DESIGN LANE.

ASSUMPTIONS:

SERVICIBILITY INDEX = 2.5
RELIABILITY LEVEL = 90%
STANDARD DEVIATION = 0.4
SOIL RESILIENT MODULUS = 18,000 PSI
STRUCTURAL NUMBERS
ASPHALT (a_1) = 0.41
ABC (a_2) = 0.12
DRAINAGE COEFFICIENTS
m_2 = 1.25

DESIGN STRUCTURAL NUMBER

S_N = 1.7

ASSUME THICKNESS OF ASPHALT (D_1) = 3 INCHES

$S_N = 1.7 = a_1(D_1) + a_2(D_2)m_2$

$1.7 = 0.41(3) + 0.12(D_2)1.25$

$D_2 = 3.1''$ CITY OF PHOENIX REQUIRES 4" MINIMUM

SECTION IS 3" ASPHALT OVER 4" ABC

ASSUME $D_1 = 2''$

$S_N = 1.7 = 0.41(2) + 0.12(D_2)(1.25)$

$D_2 = 5.9''$ SAY 6"

SECTION IS 2" ASPHALT OVER 6" ABC

TRAFFIC LOADING CALCULATION SHEET

Street Name and Location

MARYLAND AVE. OVER ARIZONA CANAL

Street Type:	Current Year & A.D.T.	20th Year & A.D.T.
local commercial	1990 5,000	2010 5,000

Calculation of Mean, One-way Traffic (Thousands of Veh. per Day)

5,000/2 = 2.5

Notation for Type of Veh.	Proportion by Type of Vehicle		18^k Load by 1000 Vehicle	Equiv 18^k Load by Veh Dist
C	0.950		0.8	0.760
B	0.001		250	0.250
	Proportion Comm. Veh.	Proportion Type Com. Veh.		
2P	0.049	0.800	1.2	0.047
2S	0.049	0.150	5.8	0.043
2D	0.049	0.036	163.2	0.288
3D	0.049	0.005	598.7	0.147
2S1	0.049	0.005	408.2	0.100
2S2	0.049	0.004	956.5	0.187
3S2		neg.	514.3	
2-2		neg.	304.3	
3-2		neg.	936.8	
3-3		neg.	936.8	
2S1-2		neg.	846.7	
3S1-2		neg.	958.0	
		TOTAL OF EQUIV. 18^k loads per 1000 veh		1.822

Calculation of daily, 20 year mean equivalent 18^k single axle load applications for one-way traffic:

1.822 (2.5) = 4.56 = 4,560

Calculation of design lane loading:

20 YEARS (0.75) (4,560) = 68,400

by JNS 240 + 24