NPK

FLOOD CONTROL DISTRICT
RECEIVED

APR 21 '80

	CH ENG		HYDRO
	ASSD		LN &
	ADMIN		SUSP
	C & C		FLF
	ENGR		DESTROY
REMARKS			

RWCD FLOODWAY BRIDGES AT BASELINE ROAD AND ELLIOT ROAD STRUCTURAL DESIGN COMPUTATIONS

BRIDGES

Sverdrup

Sverdrup & Parcel and Associates, Inc.

SVERDRUP & PARCEL

JOB 6784 FCDMC-RWCD Floodway

COMPUTATIONS FOR

SHEET NO. 1 OF

DATE 4-21-80

BY JFF CHKD WEG

Property of
Flood Control District of Maricopa Co. Library
Please Return to
2801 W. Durango
Phoenix, AZ 85009

STRUCTURAL DESIGN COMPUTATIONS RWCD FLOODWAY BRIDGES AT BASELINE RD. & ELLIOT RD.

Prepared For

The Flood Control District of Maricopa County

April 21, 1980

Registered Land Surveyor
CERTIFICATE NO.
10646
WILLIAM EDWARD
GUSTAFSON
Date Signed 4/21/80
ARIZONA, U.S.A.

Submitted by

Sverdrup & Parcel and Associates, Inc.
Engineers - Architects
Tempe, Arizona

SVERDRUP & PARCEL

JOB 6784 FCDMC - RWCD Floodway SHEET NO. 2 OF

DATE 4-19-80

COMPUTATIONS FOR Baseline Rd. & Elliot Rd. Bridges BY JFF CHKD WEG

Table of Contents

	Sheet No.
Design Continuous Slab Superstr.	
Baseline Rd.	3-23
Elliot Rd.	24-39
Abutment Design	
Baseline Rd.	40-44
Elliot Rd.	45-46
Intermediate Pier Design	
Baseline Rd.	47-117
Elliot Rd.	118-170
Transverse Slab Reinf. @ Piers, Both Bridges	171
Pile Cap Reinf., Piers 2,3,5,&6, Both Bridges	172
Pile Cap Design, Pier 4, Both Bridges	173-175
Drilled Shafts, Piers 2,3,5,&6, Both Bridges	176-182

SVERDRUP & PARCEL

JOB 6784 FCDMC-RWCD Floodway

COMPUTATIONS FOR Baseline Rd. Br.

SHEET NO. 3 OF

DATE Feb21'80

BY JFF CHKD WEG

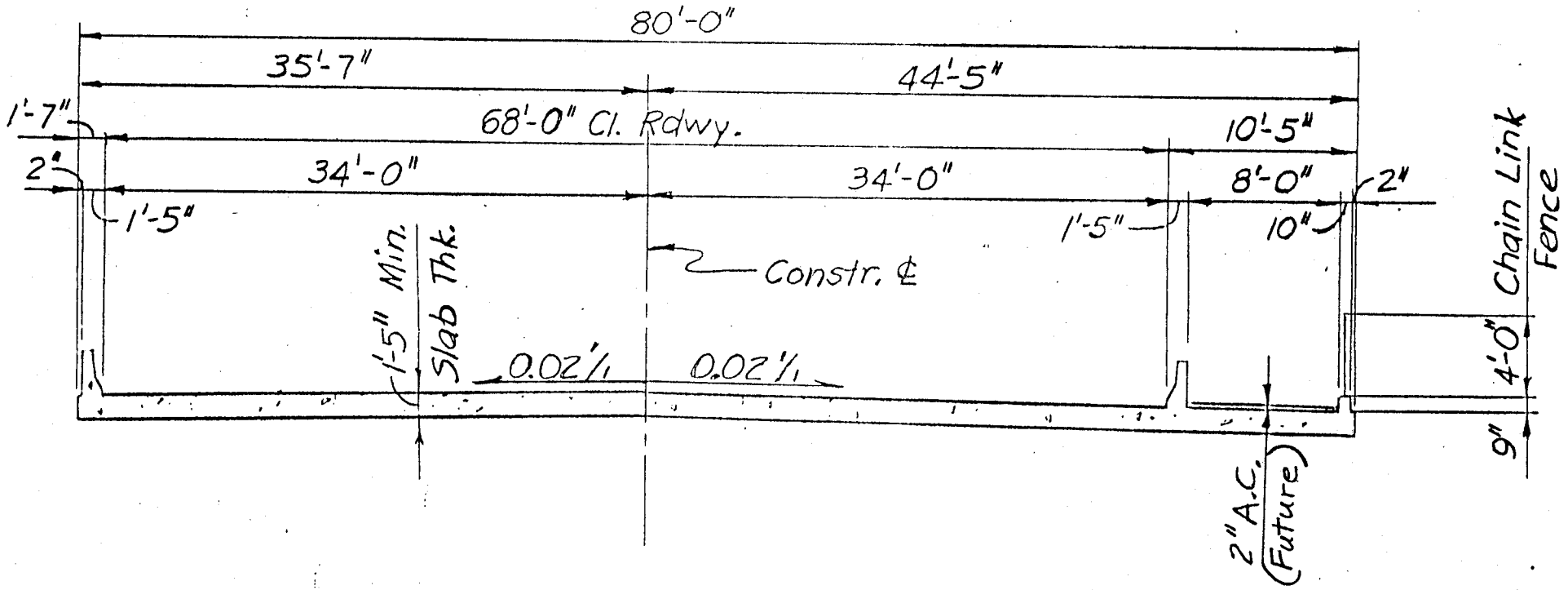

TYPICAL CROSS SECTION

Scale: 1" = 10'-0"

SVERDRUP & PARCEL

JOB 6784 FCDMC – RWCD Floodway

COMPUTATIONS FOR Baseline Rd. Bridge

SHEET NO. 4 OF

DATE 2-26-80

BY UFF CHKD WEG

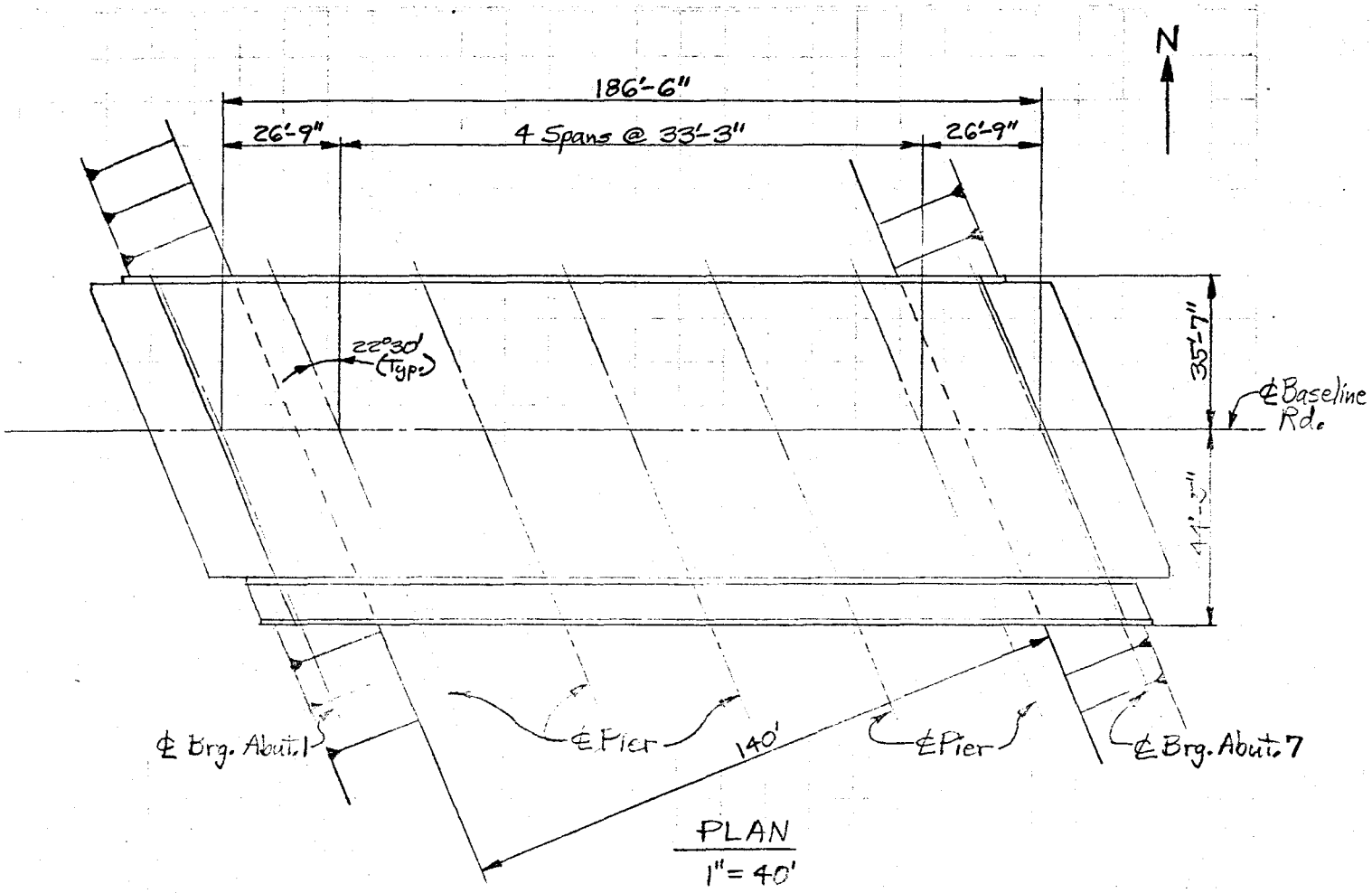

PLAN

1" = 40'

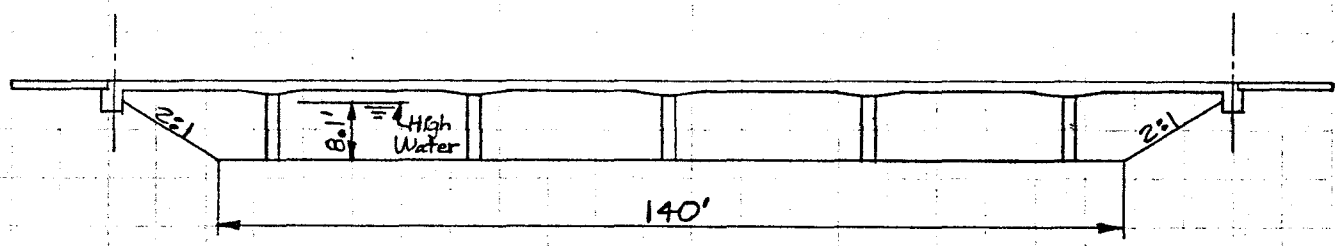

LONGIT. SECT. NORMAL TO ℄ FLOODWAY

1" = 30'

SVERDRUP & PARCEL

JOB 6784 FCDMC – RWCD Floodway

COMPUTATIONS FOR Baseline Rd. Bridge

SHEET NO. 5 OF

DATE 2-29-80

BY JFF CHKD WEG

Superstructure Dead Load

17" Slab – $\frac{17''}{12''} \times 150^{pcf} \times 80'$ = 17,000 #/1

÷ 80' = 213 psf

Superimposed Dead Load (SDL)

Concrete Barrier = 2 × 372 #/1 = 744 #/1

Concrete Curb = $\frac{9'' \times 10''}{144 \square''} \times 150$ pcf = 94

4' Chain Link Fence = Approx. 2 psf (incl. posts & hardware) × 4' = 8

2" A.C. on Sdwk. = 2" × 8' × 12.5 psf/in. = 200

1,046 #/1

÷ 80' = 13.1 psf

Future Wearing Surface (FWS)

25 psf × 68' = 1,700 #/1

÷ 80' = 21.3 psf

SDL + FWS = 13.1 + 21.3 = 34.4 psf

Additional Dead Load

7" Slab Haunches @ Piers

Average Thickness 3½" : $\frac{3\frac{1}{2}''}{12''} \times 150$ pcf = 43.8 psf

× 80' = 3,500 #/1

SVERDRUP & PARCEL

JOB 6784 FCDMC – RWCD Floodway

COMPUTATIONS FOR Baseline Rd. Bridge

SHEET NO. 6 OF

DATE 3-3-80

BY JFF CHKD WEG

Live Load

AASHTO Article 1.3.2 (C) Case B, HS20-44

$E = 4 + 0.06S \leq 7.0'$

ADOT uses S of end span.

$E = 4 + 0.06 \times 26.75' = 5.6'$

Live Load Distribution Factor = $D.F. = \frac{1}{5.6'} = 0.18$ Wheels/Ft. of Width

Hiking & Riding Path Live Load

AASHTO Article 1.2.11 (A) : 60 psf

Equivalent Section Properties For Computer Program Input

S&P Computer Program P7300 will be used to obtain continuous span moments, shears, and deflections.

Minimum element length = L/20.

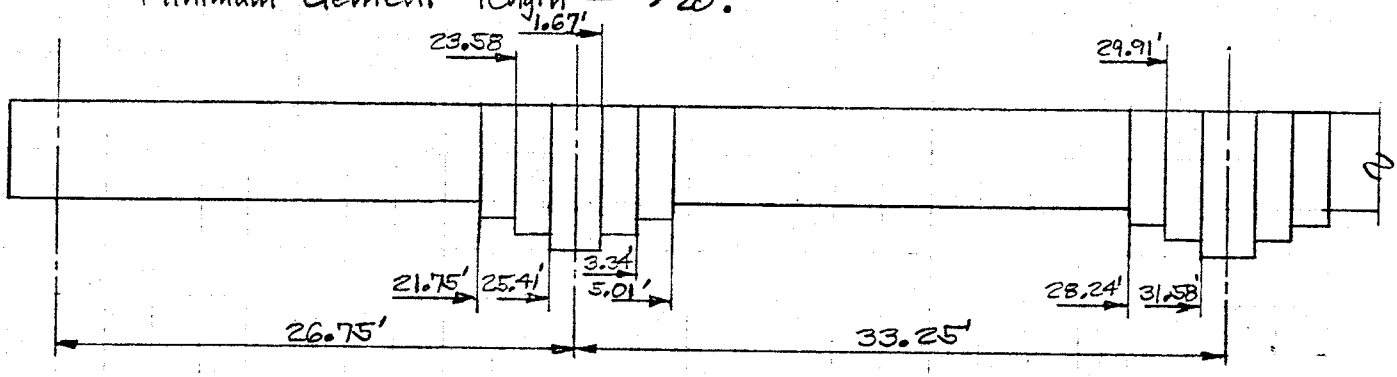

Range	Average Thickness	I of 1ft. Strip
0–21.75'	17"	4913 in^4
21.75'–23.58'	18.6"	6435
23.58'–25.41'	21.8"	10360
25.41'–26.75'	24"	13824

Range	Average Thickness	I of 1ft. Strip
0–1.67'	24"	13824 in^4
1.67'–3.34'	21.4	9800
3.34'–5.01'	18.4	6230
5.01'–28.24'	17	4913
28.24'–29.91'	18.4	6230
29.91'–31.58'	21.4	9800
31.58'–33.25'	24	13824

JOB NO.		PROGRAM P7300
PROBLEM NO.	BY	CHKD

CODE(1) (cols 4 5 6)

+1 PRINT DL MOMENT, SHEARS AND DEFLECTION

-1 SUPPRESS PRINTING

CODE(2) (cols 14 15 16)

+1 DESIGN (SERVICE LOAD OR LOAD FACTOR, SEE BELOW *)

+2 STRESS INVESTIGATION-FORM IIA MUST FOLLOW

-1 ANALYSIS ONLY

CODE(3) (cols 24 25 26)

+1 FORM IIA TO FOLLOW

-1 FORM IIB TO FOLLOW

CODE(4) (cols 34 35 36)

+1 PRINT STIFFNESS AND CARRY-OVER FACTORS

-1 SUPPRESS PRINTING

CODE(5) (cols 44 45 46)

+1 EXPANSION HINGE IN ONE OR MORE SPANS

-1 NO EXPANSION HINGES

CODE(6) (cols 54 55 56)

+1 PLOT MOMENT AND SHEAR ENVELOPES

-1 SUPPRESS PLOT

+2 DL MOMENTS, SHEARS, AND DEFLECTIONS ONLY. (1ST RUN FOR COMPOSITE GDR. ANALYSIS)

+3 TO BE USED FOR 2ND RUN FOR COMP. GDR. ANALY.

NOTE - FOR FORM IIB ONLY. 'LL COMPUTED'=0. FOR BOTH RUNS AND RUN BACK TO BACK.

(cols 61 62 63 64 65 66 67)

SDL FOR COMPOSITE GDR. USING FORM IIA WITH VARIABLE COMPOSITE I, OTHERWISE LEAVE BLANK AND ENTER UNDER FWS. (LBS/FT)

(cols 5 6) NO. OF SPANS

(cols 15 16) LIVE LOAD

H-15 =1.
HS-15=2.
H-20 =3.
HS-20=4.
HS-20 (INTERSTATE)=5.
SPECIAL LDG. (USE FORM IV) =6.

(cols 24 25 26) LL COMPUTED

0.=VARIABLE NON-COMP. I
-1.=USING CONSTANT I
+1.=USING VARIABLE COMPOSITE I (WITH FORM IIA ONLY)

(cols 34 35 36 37 38 39 40) 'LLR'

NO. OF WHEELS FROM SIMPLE BM. DISTRIBUTION OF SLAB REACTIONS TO BE USED FOR SUBSTR. DESIGN

(cols 41 42 43 44 45 46 47) SIDEWALK LL (LBS/FT)

(cols 51 52 53 54 55 56 57) FWS (LBS/FT)

(cols 63 64 65) $N=E_s/E_c$

(cols 68 69 70 71 72 73) SLAB THICKNESS (INCHES)

(cols 75 76 77 78 79 8…) DISTANCE FROM BOTTOM OF SLA… TO TOP OF WEB… (INCHES)

(cols 1 2 3 4 5 6) SPAN NO. OF FIRST SPAN. A NEGATIVE NO. WILL COUNT SPAN NO. BACKWARDS.

(cols 13 14 15 16 17 18 19 20) SLAB REINF. ACTIVE AT SUPPORT. IN^2/FT OF SLAB

(cols 24 25 26 27 28 29 30) POSITION OF REINFORCING (INCHES FROM TOP OF SLAB)

(cols 31 32 33 34 35) SHEAR D.F. DIVIDED BY D.F.

(cols 36 37 38 39 40) FATIGUE CASE (1.0, 1.1, 2.0, OR 3.0) IF 1.0, 11 OR 12 KSI IS USED FOR CAT.C. IF 1.1, 9 OR 10 KSI IS USED FOR CAT.C.

(cols 41 42 43 44 45) ENTER
1=REDUNDANT STRUCTURE
2=NONREDUNDANT STRUCTURE
(SEE COMMENTARY FOR AASHTO ART.1.7.3.)

(cols 46 47 48 49 50) ENTER
1=ONE LANE BRIDGE
2=MULTILANE BRIDGE

*** (cols 55 56 57 58 59 60)** F'_c (KSI)

ENTER ONLY IF LOAD FACTOR DESIGN IS DESIRED, OTHERWISE LEAVE BLANK.

Sht. No. 7

[redacted] O T[redacted]GHT[redacted]AN C[redacted]INU[redacted]GIRDER

ANALYSIS PROGRAM 7300

Input Form IIB

80-COLUMN CARD PUNCH FORMAT

SVERDRUP & PARCEL

JOB_____ DATE_____ BY_____ CHKD_____

SHEET 2 OF 3 _____ CARDS ON THIS SHEET

SPAN LENGTH ft. D.F. D.L. lbs/ft

SPAN #

RANGE I in^4

D.F. = Distribution factor. The fraction of the wheel load per AASHO.

RANGE: Distance in feet from start of span to change in moment of inertia. Must be greater than 1/20 span and changes in range must be greater than 1/20 span. Last range value must equal span length.

SPAN LENGTH ft. D.F. D.L. lbs/ft

SPAN #

RANGE I in^4

SPAN LENGTH ft. D.F. D.L. lbs/ft

SPAN#

RANGE I in^4

Sheet No. 8

TWO TO EIGHT SPAN CONTINUOUS GIRDER

PROGRAM 7300

Input Form III

80-COLUMN CARD PUNCH FORMAT

SVERDRUP & PARCEL

DATE _____ SHEET 3 OF 3

JOB _____ BY _____ CHKD _____ ____ CARDS ON THIS SHEET

HINGE & additional D.L. CARDS (1 req'd for each Span)

H1 (ft)	H2 (ft)	X1 (ft)	X2 (ft)	W1 (lbs/ft)	W2 (lbs/ft)	
.	.	.	.	.	.	SPAN 1
.	.	.	.	.	.	SPAN 2
.	.	.	.	.	.	SPAN 3
.	.	.	.	.	.	SPAN 4
.	.	.	.	.	.	SPAN 5
.	.	.	.	.	.	SPAN 6
.	.	.	.	.	.	SPAN 7
.	.	.	.	.	.	SPAN 8

NOTE: If all values are zero, it is only necessary to enter 0. in H1.

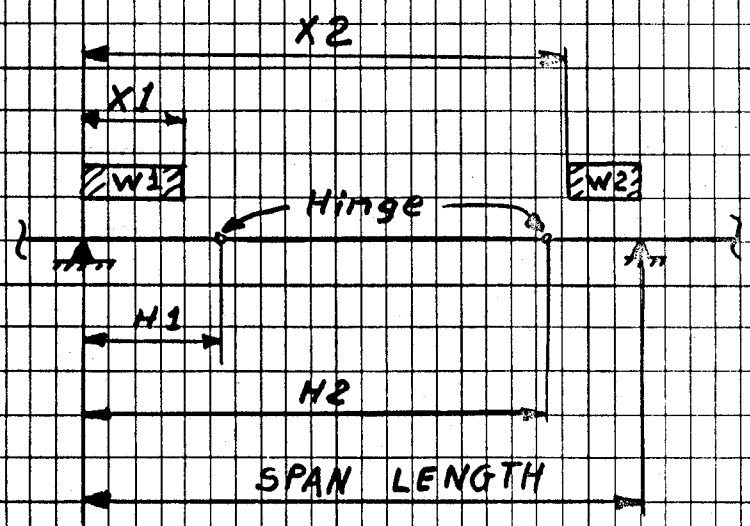

Sheet No. 9

80-COLUMN CARD PUNCH FORMAT

SVERDRUP & PARCEL

JOB 6784 FCDMC-RWCD Floodway

DATE 3-4-80

BY JFF CHKD WEG

SHEET 10 OF ___

29 CARDS ON THIS SHEET

```
JØB NØ. 6784 FCDMC - RWCD FLØØDWAY BRIDGES                    PRØGRAM P7300
PRØBLEM - BASELINE RØAD BRIDGE                                 BY        CHKD
   1.      -1.      -1.      -1.      -1.      -1.      0.
   6.       4.       0.      .18      60.     34.4     1.       0.       0.
   1.       0.       0.      1.       0.       0.       0.       0.
  26.75     .18     213.
  21.75    4913.
  23.58    6435.
  25.41   10360.
  26.75   13824.
  33.25     .18     213.
   1.67   13824.
   3.34    9800.
   5.01    6230.
  28.24    4913.
  29.91    6230.
  31.58    9800.
  33.25   13824.
  33.25     .18     213.
   1.67   13824.
   3.34    9800.
   5.01    6230.
  28.24    4913.
  29.91    6230.
  31.58    9800.
  33.25   13824.
99999.      .18     213.
99999.      .18     213.
99999.      .18     213.
```

80-COLUMN CARD PUNCH FORMAT

SVERDRUP & PARCEL

JOB 6784 FCDMC-RWCD Floodway

DATE 3-1-80

BY JFF CHKD WEG

SHEET 11 OF ____

6 CARDS ON THIS SHEET

0.	0.	0.	21.75	0.	43.8
0.	0.	5.	28.25	43.8	43.8
0.	0.	5.	28.25	43.8	43.8
0.	0.	5.	28.25	43.8	43.8
0.	0.	5.	28.25	43.8	43.8
0.	0.	5.	0.	43.8	0.

```
SVERDRUP & PARCEL AND ASSOCIATES, INC.          14:51 MAR 04,'80  PAGE  1
JOB NO. 6784 FCDMC - RWCD FLOODWAY BRIDGES                PROGRAM P7300
PROBLEM - BASELINE ROAD BRIDGE                      BY JFF   CHKD WEG
*****************************************************************************************************************
                                INPUT DATA
*****************************************************************************************************************
  CODE(1)   CODE(2)   CODE(3)   CODE(4)   CODE(5)   CODE(6)
    1.0000   -1.0000   -1.0000   -1.0000   -1.0000   -1.0000
  NO. SPANS LIVE LOAD  L.L.C.    L.L.R.   L.L.SDWK.  FWS.+(SDL) N=ES/EC SLAB THCK. DIST.SLAB TO WEB
    6.0000    4.0000     .0000     .1800   60.0000   34.4000    1.0000     .0000     .0000
  WORKING LOAD DESIGN
  SLAB REBARS INCL. IN COMP. DESIGN AT SUPP.=    .000 IN2/FT. AT    .000 INCH FROM TOP OF SLAB
RATIO SHEAR D.F./D.F.= 1.00      REDUNDANT STRUCTURE ASSUMED
  MULTILANE BRIDGE ASSUMED
  SPAN LENGTH   D.F.    DL.(SDL) EFF.SLAB WIDTH
   26.7500     .1800  213.0000     .0000     .0000
   RANGE        I
     21.75     4913.0
     23.58     6435.0
     25.41    10360.0
     26.75    13824.0
  SPAN LENGTH   D.F.    DL.(SDL) EFF.SLAB WIDTH
   33.2500     .1800  213.0000     .0000     .0000
   RANGE        I
      1.67    13824.0
      3.34     9800.0
      5.01     6230.0
     28.24     4913.0
     29.91     6230.0
     31.58     9800.0
     33.25    13824.0
```

Sht. No. 12

14:51 MAR 04,'80 PAGE 2 BY JH CHKD WEG

SPAN LENGTH	D.F.	DL.(SDL)	EFF.SLAB WIDTH	
33.2500	.1800	213.0000	.0000	.0000

RANGE	I
1.67	13824.0
3.34	9800.0
5.01	6230.0
28.24	4913.0
29.91	6230.0
31.58	9800.0
33.25	13824.0

SPAN LENGTH	D.F.	DL.(SDL)	EFF.SLAB WIDTH	
99999.0000	.1800	213.0000	.0000	.0000

SPAN LENGTH	D.F.	DL.(SDL)	EFF.SLAB WIDTH	
99999.0000	.1800	213.0000	.0000	.0000

SPAN LENGTH	D.F.	DL.(SDL)	EFF.SLAB WIDTH	
99999.0000	.1800	213.0000	.0000	.0000

H1	H2	X1	X2	W1	W2
.0000	.0000	.0000	21.7500	.0000	43.8000
.0000	.0000	5.0000	28.2500	43.8000	43.8000
.0000	.0000	5.0000	28.2500	43.8000	43.8000
.0000	.0000	5.0000	28.2500	43.8000	43.8000
.0000	.0000	5.0000	28.2500	43.8000	43.8000
.0000	.0000	5.0000	.0000	43.8000	.0000

Sht. No. 13

SVERDRUP & PARCEL AND ASSOCIATES, INC. 14:51 MAR 04,'80 PAGE 3

JOB NO. 6784 FCDMC - RMCD FLOODWAY BRIDGES PROGRAM P7300

PROBLEM - BASELINE ROAD BRIDGE BY JFF CHKD WPG

NUMBER OF SPANS 6

SPAN LENGTHS 26.75 33.25 33.25 99999.00 99999.00 99999.00

NOTE, 99999.00 INDICATES SYMMETRICAL SPANS

DEAD LOAD MOMENTS(FT-KIPS) AND SHEARS(KIPS) AT TENTH POINTS

POINT	MOMENT	SHEAR
SPAN 1		
0	.0	2.0
1	4.6	1.4
2	7.7	.9
3	9.3	.3
4	9.4	-.3
5	7.9	-.8
6	4.9	-1.4
7	.4	-2.0
8	-5.6	-2.5
9	-13.3	-3.2
10	-22.8	-3.9
SPAN 2		
0	-22.8	3.8
1	-11.7	2.9
2	-3.3	2.1
3	2.6	1.4
4	6.2	.7
5	7.5	.0
6	6.3	-.7
7	2.9	-1.4
8	-3.0	-2.1
9	-11.2	-2.9
10	-22.2	-3.7

Sht. No. 14

SVERDRUP & PARCEL AND ASSOCIATES, INC. 14:51 MAR 04,'80 PAGE 4

JOB NO. 6784 FCDMC - RMCD FLOODWAY BRIDGES PROGRAM P7300

PROBLEM - BASELINE ROAD BRIDGE BY JFF CHKD WEG

DEAD LOAD MOMENTS(FT-KIPS) AND SHEARS(KIPS) AT TENTH POINTS

POINT	MOMENT	SHEAR
SPAN 3		
0	-22.2	3.8
1	-11.2	2.9
2	-2.9	2.1
3	3.0	1.4
4	6.5	.7
5	7.6	-.0
6	6.4	-.7
7	2.9	-1.4
8	-3.0	-2.1
9	-11.4	-2.9
10	-22.5	-3.8

Sht. No. 15

SVERDRUP & PARCEL AND ASSOCIATES, INC. 14:51 MAR 04,'80 PAGE 5

JOB NO. 6784 FCDMC - RWCD FLOODWAY BRIDGES PROGRAM P7300

PROBLEM - BASELINE ROAD BRIDGE BY JFF CHKD WEG

MAXIMUM LIVE LOAD MOMENTS(FT-KIPS)AT TENTH POINTS

POINT	POSITIVE SDK LL	NEGATIVE SDK LL	LANE LOAD INCL.IMP. POSITIVE	LANE LOAD INCL.IMP. NEGATIVE	TRUCK LOAD INCL.IMP. POSITIVE	TRUCK LOAD INCL.IMP. NEGATIVE	FWS.+(SDL)
SPAN 1							
1	1.8	-.5	7.1	-1.4	11.4	-1.9	.7
2	3.1	-.9	12.2	-2.7	18.4	-3.8	1.2
3	4.0	-1.4	15.4	-4.1	21.6	-5.7	1.5
4	4.5	-1.8	16.8	-5.5	21.7	-7.6	1.5
5	4.5	-2.3	16.6	-6.8	19.4	-9.6	1.3
6	4.1	-2.8	14.9	-8.2	18.9	-11.5	.8
7	3.3	-3.2	11.9	-9.6	15.4	-13.4	.1
8	2.2	-3.8	8.0	-11.0	8.9	-15.3	-.9
9	1.6	-5.3	4.7	-15.9	.0	-17.6	-2.1
10	1.5	-7.7	4.2	-23.3	5.4	-25.4	-3.6
SPAN 2							
1	1.2	-4.5	4.7	-14.3	.0	-16.0	-1.9
2	1.6	-2.5	8.2	-8.4	10.4	-11.5	-.5
3	3.0	-2.2	12.4	-7.1	17.4	-9.4	.4
4	4.2	-2.4	15.5	-7.4	21.0	-7.4	1.0
5	4.7	-2.6	16.8	-7.7	21.7	-6.3	1.2
6	4.6	-2.7	16.1	-8.0	21.1	-8.8	1.0
7	3.8	-2.9	13.4	-8.3	17.6	-11.3	.5
8	2.6	-3.4	9.5	-9.9	10.7	-13.8	-.5
9	2.2	-5.3	6.0	-15.6	.4	-17.0	-1.8
10	2.4	-8.5	5.3	-24.6	5.3	-26.1	-3.5
SPAN 3							
1	2.0	-5.1	5.9	-15.5	.3	-17.0	-1.8
2	2.4	-3.1	9.2	-9.5	10.7	-13.7	-.4
3	3.6	-2.7	13.3	-8.1	17.6	-11.2	.5
4	4.7	-2.8	16.2	-8.2	21.2	-8.7	1.1
5	5.0	-2.8	17.3	-8.3	21.8	-6.3	1.3
6	4.7	-2.9	16.3	-8.3	21.2	-8.8	1.1
7	3.8	-2.9	13.5	-8.4	17.6	-11.3	.5
8	2.6	-3.4	9.5	-9.9	10.7	-13.7	-.5
9	2.2	-5.4	6.1	-15.8	.4	-17.0	-1.8
10	2.6	-8.7	5.5	-24.9	6.2	-26.1	-3.5

Sht. No. 16

SVERDRUP & PARCEL AND ASSOCIATES, INC. 14:51 MAR 04,'80 PAGE 6

JOB NO. 6784 FCDMC - RWCD FLOODWAY BRIDGES PROGRAM P7300

PROBLEM - BASELINE ROAD BRIDGE BY JFF CHKD

	LIVE LOAD SHEARS(KIPS) AT TENTH POINTS					LEFT SUPPORT REACTIONS(KIPS) ONE FULL LANE WIDTH			
						NO IMPACT		GIRDER REACT. INCL.IMP.(L.L.R)	
POINT	FWS,+(SOL)	POSITIVE SIDEWALK	NEGATIVE SIDEWALK	POS.LIVE LOAD+IMP.	NEG.LIVE LOAD+IMP.	LANE	TRUCK	LANE	TRUCK
SPAN 1						33.9	43.5	4.0	5.1
0	.3	.7	-.2	5.1	-.2				
1	.2	.6	-.2	4.2	-.6				
2	.1	.5	-.2	3.3	-1.1				
3	.0	.4	-.3	2.6	-1.5				
4	-.0	.3	-.3	1.9	-1.9				
5	-.1	.2	-.4	1.4	-2.4				
6	-.2	.1	-.5	1.0	-3.0				
7	-.3	.1	-.7	.7	-3.9				
8	-.4	.1	-.8	.5	-4.6				
9	-.5	.1	-.9	.2	-5.3				
10	-.6	.1	-1.1	.1	-5.9				
SPAN 2						50.3	60.8	5.9	7.1
0	.6	1.2	-.2	6.1	-.2				
1	.5	1.0	-.2	5.3	-.4				
2	.3	.8	-.2	4.5	-.7				
3	.2	.7	-.2	3.6	-1.1				
4	.1	.5	-.3	2.8	-1.5				
5	.0	.4	-.4	2.0	-2.0				
6	-.1	.3	-.5	1.6	-2.7				
7	-.2	.3	-.6	1.1	-3.6				
8	-.3	.2	-.8	.7	-4.4				
9	-.5	.2	-1.0	.5	-5.3				
10	-.6	.2	-1.2	.2	-6.1				
SPAN 3						51.4	61.1	6.0	7.2
0	.6	1.2	-.2	6.1	-.3				
1	.5	1.0	-.2	5.3	-.5				
2	.3	.8	-.2	4.5	-.8				
3	.2	.7	-.3	3.6	-1.2				
4	.1	.5	-.3	2.7	-1.6				
5	-.0	.4	-.4	2.1	-2.1				
6	-.1	.3	-.5	1.6	-2.7				
7	-.2	.3	-.7	1.2	-3.6				
8	-.3	.2	-.8	.8	-4.4				
9	-.5	.2	-1.0	.5	-5.3				
10	-.6	.2	-1.2	.3	-6.1				

Sht No. 17

SVERDRUP & PARCEL AND ASSOCIATES, INC. 14:51 MAR 04,'80 PAGE 7

JOB NO. 6784 FCDMC - RMCD FLOODWAY BRIDGES PROGRAM P7300

PROBLEM - BASELINE ROAD BRIDGE BY JFF CHKD WEG

	LIVE LOAD SHEARS(KIPS) AT TENTH POINTS				LEFT SUPPORT REACTIONS(KIPS)			
					ONE FULL LANE WIDTH		GIRDER REACT,	
		POSITIVE	NEGATIVE	POS.LIVE	NEG.LIVE	NO IMPACT		INCL.IMP.(L.L.R)	
POINT	FWS,+(SDL)	SIDEWALK	SIDEWALK	LOAD+IMP.	LOAD+IMP.	LANE	TRUCK	LANE	TRUCK
SPAN 4						51.9	61.1	6.1	7.1

Sht. No. 18

SVERDRUP & PARCEL

JOB 6784 FCDMC-RWCD Floodway

SHEET NO. 19 OF

DATE 3-5-80

COMPUTATIONS FOR Baseline Rd. Bridge

BY JFF CHKD WEG

Bending Moments Per Ft. of Slab Width (ft.-kips)*

Span	10th Point	DL	SDL	FWS	SDWK LL POS.	SDWK LL NEG.	VEH. L+I POS.	VEH. L+I NEG.	DESIGN M POS.	DESIGN M NEG.
1	0	0	0	0	0	0	0	0	0	
	1	4.6	.3	.4	1.8	-.5	11.4	-1.9	16.7	
	2	7.7	.5	.7	3.1	-.9	18.4	-3.8	27.3	
	3	9.3	.6	.9	4.0	-1.4	21.6	-5.7	32.4	
	4	9.4	.6	.9	4.5	-1.8	21.7	-7.6	32.6	
	5	7.9	.5	.8	4.5	-2.3	19.4	-9.6	28.6	-1.2
	6	4.9	.3	.5	4.1	-2.8	18.9	-11.5	24.6	-6.3
	7	.4	.1	.1	3.3	-3.2	15.4	-13.4	16.0	-12.9
	8	-5.6	-.3	-.6	2.2	-3.8	8.7	-15.3	3.0	-21.9
	9	-13.3	-.8	-1.3	1.6	-5.3	4.7	-17.6		-32.0
2	10 0	-22.8	-1.4	-2.2	1.5	-7.7	5.4	-20.4		-51.8
	1	-11.7	-.7	-1.2	1.2	-4.5	4.7	-16.0		-29.6
	2	-3.3	-.2	-.3	1.6	-2.5	10.4	-11.5	6.9	-15.3
	3	2.6	.2	.2	3.0	-2.2	17.4	-9.4	20.4	-6.6
	4	6.2	.4	.6	4.2	-2.4	21.0	-7.4	28.2	-.8
	5	7.5	.5	.7	4.7	-2.6	21.7	-7.7	30.4	
	6	6.3	.4	.6	4.6	-2.7	21.1	-8.8	28.4	-2.1
	7	2.9	.2	.3	3.8	-2.9	17.6	-11.3	21.0	-8.2
	8	-3.0	-.2	-.3	2.6	-3.4	10.7	-13.8	7.5	-17.3
	9	-11.2	-.7	-1.1	2.2	-5.3	6.0	-17.0		-30.0
3	10 0	-22.2	-1.3	-2.2	2.4	-8.5	5.3	-26.1		-51.8
	1	-11.2	-.7	-1.1	2.0	-5.1	5.9	-17.0		-30.0
	2	-2.9	-.2	-.2	2.4	-3.1	10.7	-13.7	7.6	-17.0
	3	3.0	.2	.3	3.6	-2.7	17.6	-11.2	21.1	-8.0
	4	6.5	.4	.7	4.7	-2.8	21.2	-8.7	28.8	-1.8
	5	7.6	.5	.8	5.0	-2.8	21.8	-8.3	30.7	-.2
	6	6.4	.4	.7	4.7	-2.9	21.2	-8.8	28.7	-2.0
	7	2.9	.2	.3	3.8	-2.9	17.6	-11.3	21.0	-8.2
	8	-3.0	-.2	-.3	2.6	-3.4	10.7	-13.7	7.5	-17.2
	9	-11.4	-.7	-1.1	2.2	-5.4	6.1	-17.0		-30.2
	10	-22.5	-1.3	-2.2	2.6	-8.7	6.2	-26.1		-52.1

*Note: Vehicle L+I governs over Sidewalk LL in all cases. FWS included only if it causes moment to be more positive or more negative.

SVERDRUP & PARCEL

JOB 6784 FCDMC - RWCD Floodway

COMPUTATIONS FOR Baseline Rd. Bridge

SHEET NO. 20 OF

DATE 3-5-80

BY JFF CHKD WEG

Slab Design

$f'_c = 3{,}000$ psi $\quad f_y = 40{,}000$ psi $\quad n = 9$

$f_c = 1{,}200$ psi $\quad f_s = 20{,}000$ psi

For balanced design: $k = 0.351 \quad p = 0.0105$

$j = 0.883 \quad np = 0.0945$

$b = 12''$

For estimating required A_s assume top bar $d = t - 2 - \frac{1.270}{2} = t - 2.64$

& bottom bar $d = 17 - 1 - \frac{1.270}{2} = 15.4''$

Reqd A_s Top Bars $= \frac{M}{f_s j d} = \frac{12''/1 \times M}{20\,ksi \times 0.883 \times (t-2.64)} = \frac{M}{1.47(t-2.64)}$ □"/'k

Bottom Bars $= \frac{12''/1 \times M}{20\,ksi \times 0.883 \times 15.4''} = \frac{M}{22.66}$ □"/'k

Actual $d = t - \text{cover} - \frac{\text{Bar } d}{2}$

SVERDRUP & PARCEL

JOB 6784 FCDMC - RWCD Floodway

SHEET NO. 21 OF

DATE 3-5-80

COMPUTATIONS FOR Baseline Rd. Bridge

BY JFF CHKD WEG

Slab Design (cont'd.) Top Bars For Neg. Moment Reinf.

Span	10th Point	Negative Design M ('k/ft.)	Slab t (in.)	Req'd A_s (□"/ft.)	Use A_s	Actual A_s (□"/ft.)	Actual d (in.)	$np=\frac{nA_s}{bd}$	$k=\sqrt{2np+(np)^2}-np$	$j=1-\frac{k}{3}$	$f_s=\frac{M\times12}{A_s jd}$ (ksi)	$f_c=\frac{f_s}{n}\times\frac{k}{1-k}$ (psi)
1	0		17.0	0	#6 @18"	.29	14.6					
	1		17.0	0		.29						
	2		17.0	0		.29						
	3		17.0	0		.29						
	4		17.0	0	#10@18"	.85	14.4	.0443	.257	.914		
	5	-1.2	17.0	.06		.85					1.3	49
	6	-6.3	17.0	.30		.85					6.8	260
	7	-12.9	17.0	.61		.85					13.8	532
	8	-21.8	17.0	1.03	#10 @ 9"	1.69	18.5	.0880	.341	.886	12.1	698
	9	-33.0	21.1	1.22		1.67		.0685	.308	.897	14.1	699
2	10	-51.8	24.0	1.65		1.67	21.4	.0592	.290	.903	19.0	864
	1	-29.6	19.9	1.17		1.69	17.3	.0733	.317	.894	13.6	701
	2	-15.3	17.0	.72		1.67		.0880	.341	.886	8.5	490
	3	-6.6	17.0	.31	#10 @18"	.85	14.4	.0443	.257	.914	7.1	272
	4	-.8	17.0	.04		.85					.9	33
	5		17.0	0		.85						
	6	-2.1	17.0	.10		.85					2.3	87
	7	-8.2	17.0	.39		.85					8.8	338
	8	-17.3	17.0	.82	#10 @ 9"	1.69	17.3	.0880	.341	.886	9.6	554
	9	-30.0	19.9	1.18		1.69		.0733	.317	.894	13.8	710
3	10	-51.8	24.0	1.65		1.69	21.4	.0592	.290	.903	19.0	864
	1	-30.0	19.9	1.18		1.69	17.3	.0733	.317	.894	13.8	710
	2	-17.0	17.0	.81		1.69		.0880	.341	.886	9.5	544
	3	-8.0	17.0	.38	#10 @18"	.85	14.4	.0443	.257	.914	8.6	330
	4	-1.8	17.0	.09		.85					1.9	74
	5	-.2	17.0	.01		.85					.2	8
	6	-2.0	17.0	.09		.85					2.1	82
	7	-8.2	17.0	.39		.85					8.8	338
	8	-17.2	17.0	.81	#10 @ 9"	1.69	17.3	.0880	.341	.886	9.6	550
	9	-30.2	19.9	1.19		1.69		.0733	.317	.894	13.9	715
4	10	-52.1	24.0	1.66		1.69	21.4	.0592	.290	.903	19.1	869
	1											
	2											

SVERDRUP & PARCEL

JOB 6784 FCDMC - RWCD Floodway

SHEET NO. 22 OF

DATE 3-6-80

COMPUTATIONS FOR Baseline Rd. Bridge

BY JFF CHKD WEG

Slab Design (cont'd.) Bottom Bars For Positive Moment Reinf.

Span	10th Point	Positive Design M ('k/ft.)	Req'd. A_s (□"/ft.)	Use A_s	Actual A_s (□"/ft.)	$np = \frac{nA_s}{bd}$	$k = \sqrt{2np + (np)^2} - np$	$j = 1 - \frac{k}{3}$	$f_s = \frac{12M}{A_s jd}$ (ksi)	$f_c = \frac{f_s}{n} \times \frac{k}{1-k}$ (psi)
1	0	0	0						0	0
	1	16.7	.74						8.7	478
	2	27.3	1.20						14.2	782
	3	32.4	1.43	#10@9"	1.69	.0823	.332	.889	16.8	928
	4	32.6	1.44						16.9	934
	5	28.6	1.26						14.8	819
	6	24.6	1.09						12.8	705
	7	16.0	.71						8.3	458
	8	3.0	.13						3.0	110
	9									
2	10			#10@18"	.85	.0414	.249	.917		
	1									
	2	6.9	.30						6.9	254
	3	20.4	.90						10.6	584
	4	28.2	1.24	#10@9"	1.69	.0823	.332	.889	14.6	808
	5	30.4	1.34						15.8	871
	6	28.4	1.25						14.7	813
	7	21.0	.93						10.9	601
	8	7.5	.33						7.5	276
	9									
3	10			#10@18"	.85	.0414	.249	.917		
	1									
	2	7.6	.34						7.6	280
	3	21.1	.93						10.9	604
	4	28.8	1.27	#10@9"	1.69	.0823	.332	.889	14.9	825
	5	30.7	1.35						15.9	879
	6	28.7	1.27						14.9	822
	7	21.0	.93						10.9	601
	8	7.5	.33						7.5	276
	9									
4	10			#10@18"	.85	.0414	.249	.917		
	1									
	2									

$d = 17 - 1 - 1.27/2 = 15.4"$

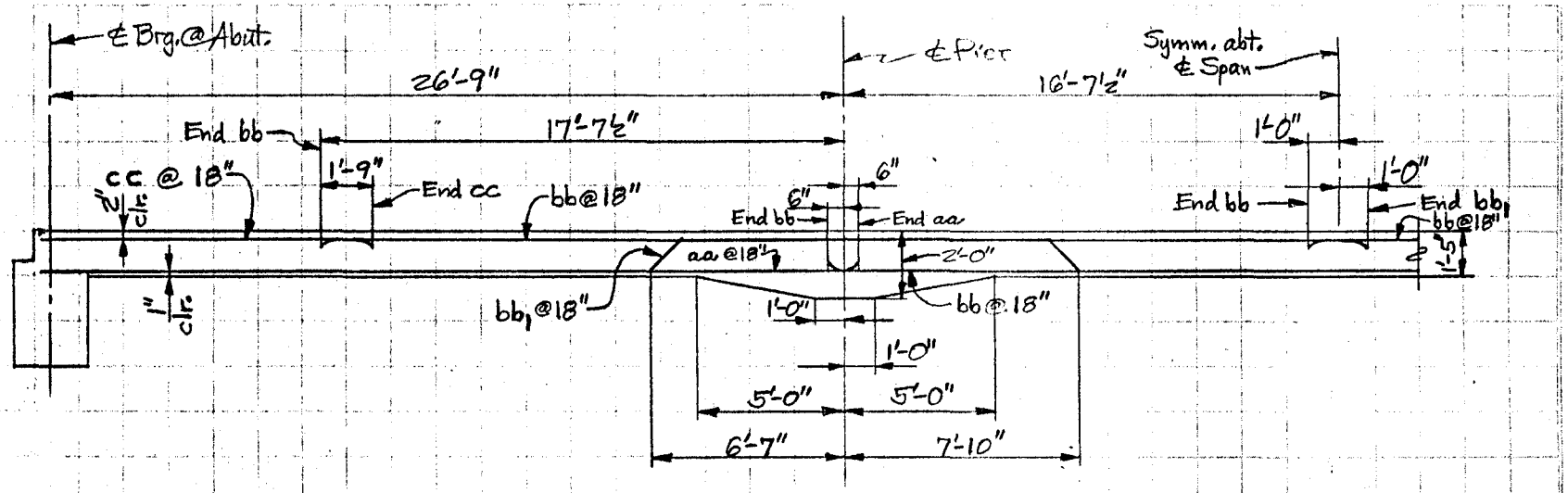

Note: Bar marks correspond to those on ADOT Standard No. CS-20.
Bars aa, bb, and bb₁ are #10 bars. Bars cc are #6.
Lengths and bend dimensions must be adjusted to agree with dimensions above.
Bend dimension B should be 1'-2".
Make transverse bars similar to those for 28'-6", 35'-0" spans, using same size and spacing but reducing total number.

Dead Load Camber -
ADOT Std. No. CS-20 gives DL cambers for L-L' of 28'-6", 35'-0" and 24'-6", 30'-0".
Interpolate between these values for 26'-9", 33'-3" at Baseline Rd. Bridge:

$$A = 0''$$

$$B = \frac{1}{8}'' + \frac{26.75 - 24.5}{28.5 - 24.5}\left(\frac{3}{16}'' - \frac{1}{8}''\right) = 0.1602'' \approx \frac{5}{32}''$$

$$C = \frac{5}{32}'' + \frac{2.25}{4.0}\left(\frac{7}{32}'' - \frac{5}{32}''\right) = 0.1914'' \approx \frac{3}{16}''$$

$$D = \frac{1}{16}'' + \frac{2.25}{4.0}\left(\frac{3}{32}'' - \frac{1}{16}''\right) = 0.0801'' \approx \frac{3}{32}''$$

$$E = 0''$$

$$F = \frac{3}{32}'' + \frac{33.25 - 30.0}{35.0 - 30.0}\left(\frac{3}{32}'' - \frac{3}{32}''\right) = \frac{3}{32}''$$

$$G = \frac{5}{32}'' + \frac{3.25}{5.0}\left(\frac{3}{16}'' - \frac{5}{32}''\right) = 0.1766'' \approx \frac{3}{16}''$$

SVERDRUP & PARCEL

JOB 6784 FCDMC - RWCD Floodway SHEET NO. 24 OF

DATE Feb 21 '80

COMPUTATIONS FOR Elliot Rd. Bridge BY JFF CHKD WEG

Elliot Rd.

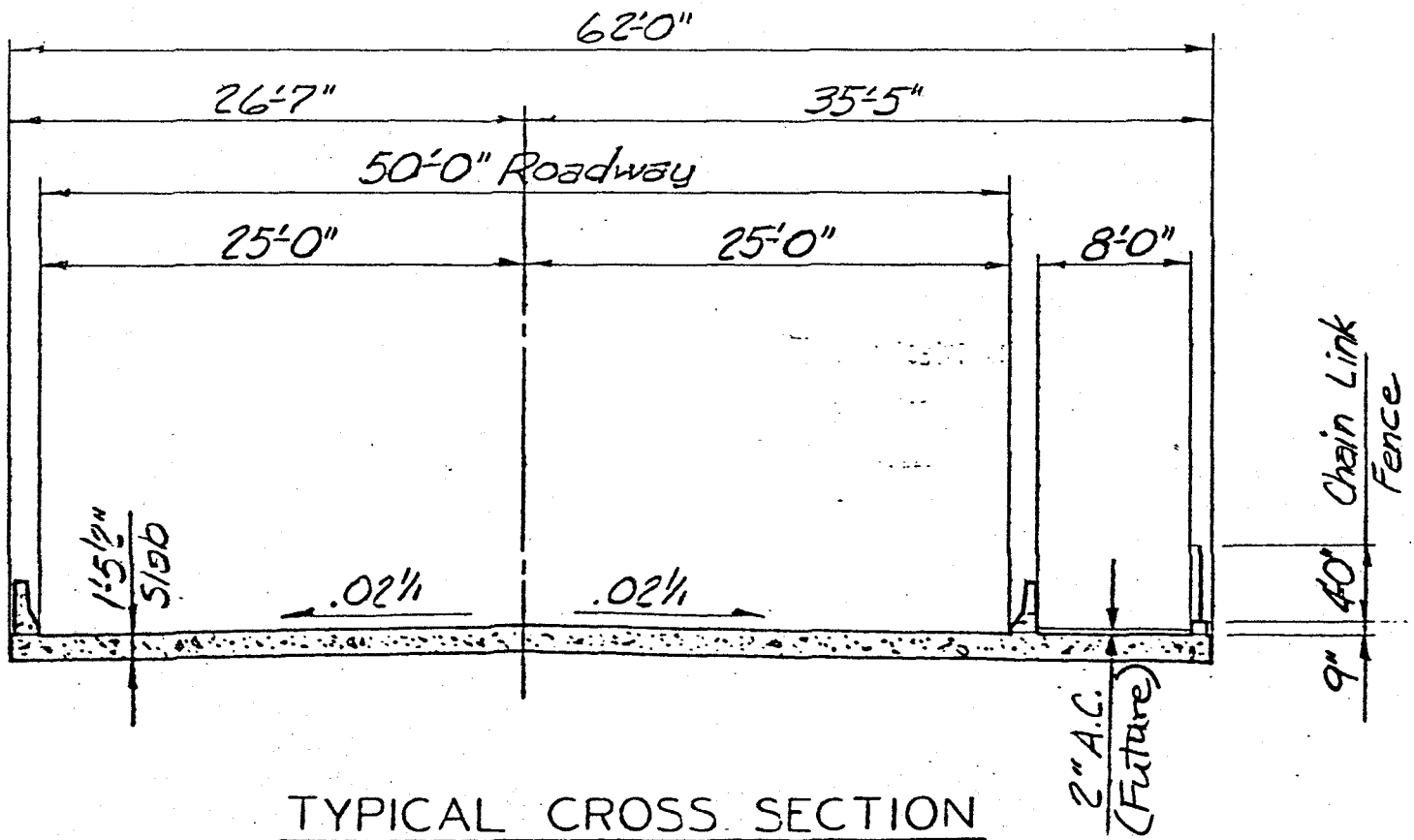

TYPICAL CROSS SECTION

Scale: 1"=10'

SVERDRUP & PARCEL

JOB 6784 FCDMC - RWCD Floodway

COMPUTATIONS FOR Elliot Rd. Br.

SHEET NO. 25 OF

DATE 3-7-80

BY JFF CHKD WEG

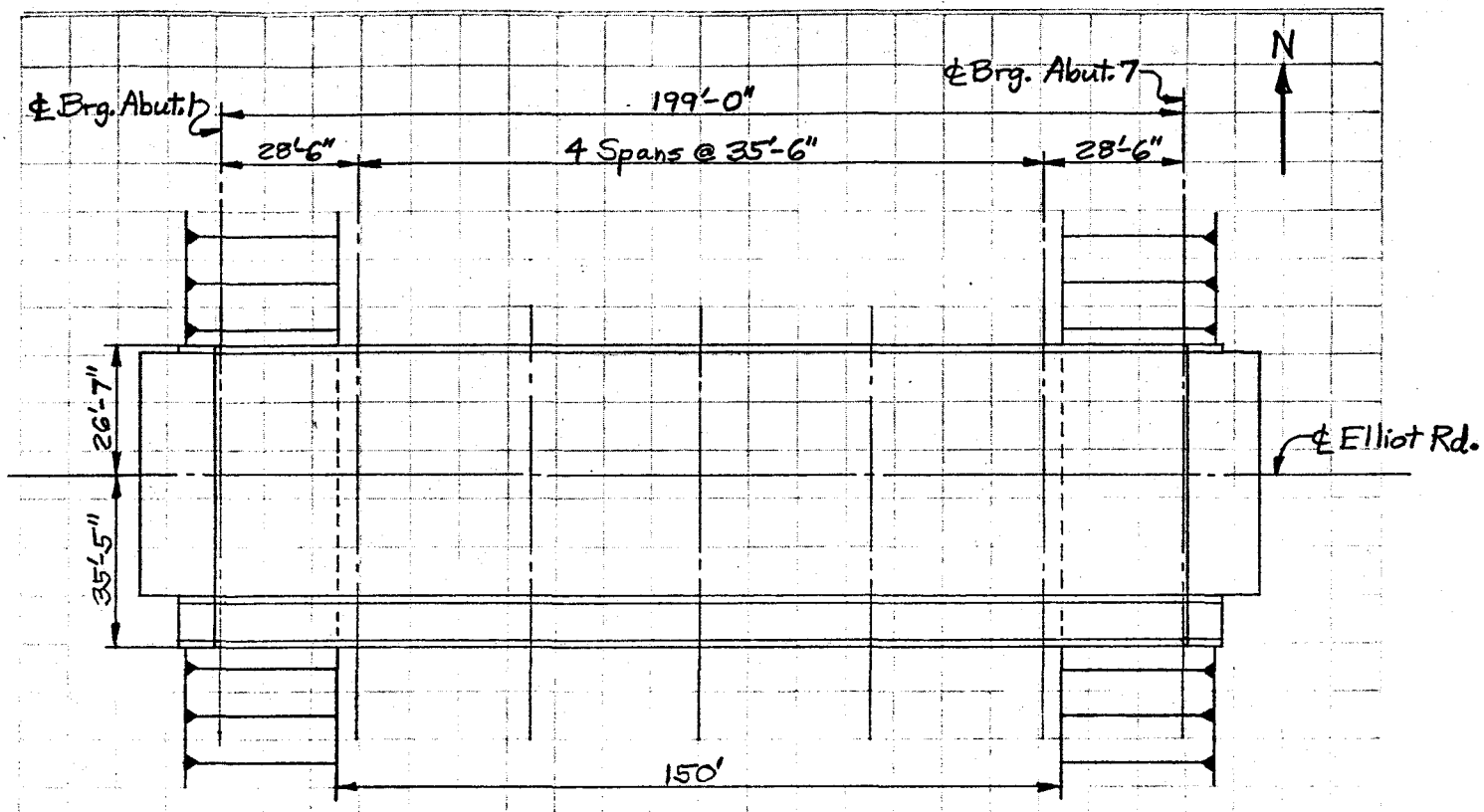

PLAN
1"=40'

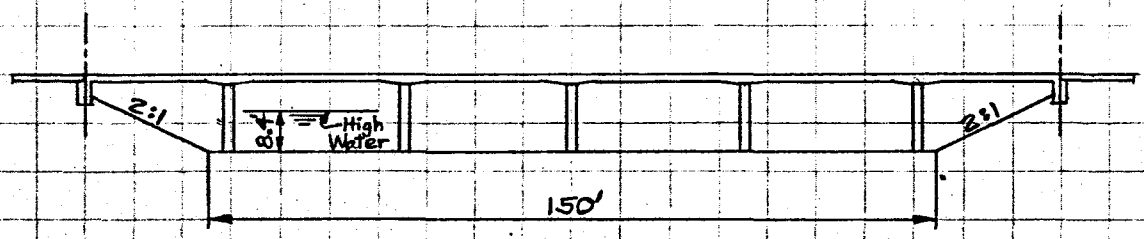

LONGIT. SECT.
1"=40'

SVERDRUP & PARCEL

JOB 6784 FCDMC - RWCD Floodway

COMPUTATIONS FOR Elliot Rd. Bridge

SHEET NO. 26 OF

DATE 3-7-80

BY JFF CHKD WEG

Superstructure Dead Load

17½" Slab – $\frac{17\frac{1}{2}''}{12''} \times 150$ pcf = 219 psf

× 62' = 13,600 #/'

Superimposed Dead Load (SDL)

From Baseline Rd. Bridge design = 1,046 #/'

÷ 62' = 16.9 psf

Future Wearing Surface (FWS)

25 psf × 50' = 1,250 #/'

÷ 62' = 20.2 psf

SDL + FWS = 16.9 + 20.2 = 37.1 psf

Additional Dead Load

6½" Slab Haunches @ Piers

Average Thickness 3¼": $\frac{3\frac{1}{4}''}{12''} \times 150$ pcf = 40.6 psf

× 62' = 2,520 #/'

Live Load

AASHTO Article 1.3.2 (C) Case B, HS20-44

$E = 4 + 0.06S \leq 7.0'$

ADOT uses S of end span.

$E = 4 + 0.06 \times 28.5' = 5.71'$

Live Load Distribution Factor = D.F. = $\frac{1}{E} = \frac{1}{5.71'} = 0.175$ Wheels/Ft. of Width

Hiking & Riding Path Live Load

AASHTO Article 1.2.11 (A): 60 psf

SVERDRUP & PARCEL

JOB 6784 FCDMC - RWCD Floodway

COMPUTATIONS FOR Elliot Rd. Bridge

SHEET NO. 27 OF

DATE 3-7-80

BY JFF CHKD WEG

Equivalent Section Properties For Computer Program Input

S&P Computer Program P7300 will be used to obtain continuous span moments and shears.

Minimum element length = L/20.

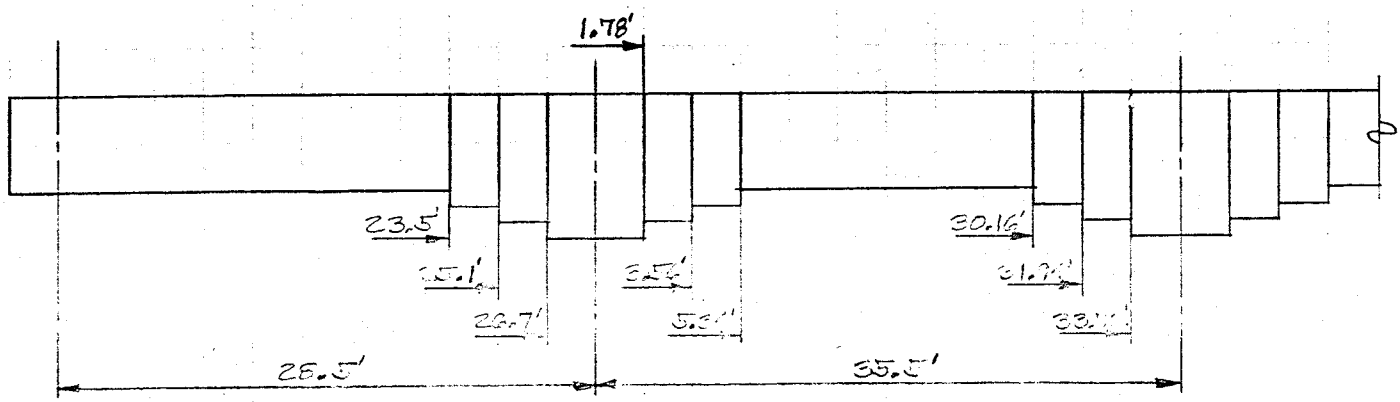

Range	Average Thickness	I of 1 ft. Strip
0 - 23.5'	17.5"	5359 in^4
23.5' - 25.1'	18.8	6645
25.1' - 26.7'	21.4	9800
26.7' - 28.5'	24	13824

Range	Average Thickness	I of 1 ft. Strip
0 - 1.78'	24"	13824 in^4
1.78' - 3.56'	21.3	9664
3.56' - 5.34'	18.4	6230
5.34' - 30.16'	17.5	5359
30.16' - 31.94'	18.4	6230
31.94' - 33.72'	21.3	9664
33.72' - 35.5'	24	13824

See Baseline Rd. Comps. for Input Definitions

80-COLUMN CARD PUNCH FORMAT

SVERDRUP & PARCEL

JOB 6784 FCDMC-RWCD Flooding

DATE 3-10-80

BY JFF CHKD WEG

SHEET 28 OF ___

29 CARDS ON THIS SHEET

```
JØB NØ. 6784 FCDMC - RWCD FLOODWAY BRIDGES                    PRØGRAM P7300
PRØBLEM - ELLIØT RØAD BRIDGE                                  BY        CHKD
    1.        -1.       -1.       -1.       -1.       -1.       0.
    6.         4.        0.        .175      0.       37.1      1.        0.        0.
    1.         0.        0.       1.         0.        0.       0.        0.
   28.5         .175     219.
   23.5        5359.
   25.1        6645.
   26.7        9800.
   28.5       13824.
   35.5         .175     219.
    1.78      13824.
    3.56       9664.
    5.34       6230.
   30.16       5359.
   31.94       6230.
   33.72       9664.
   35.5       13824.
   35.5         .175     219.
    1.78      13824.
    3.56       9664.
    5.34       6230.
   30.16       5359.
   31.94       6230.
   33.72       9664.
   35.5       13824.
99999.          .175     219.
99999.          .175     219.
99999.          .175     219.
```

80-COLUMN CARD PUNCH FORMAT

SVERDRUP & PARCEL

JOB 6784 FCDMC-RWCD Flooding

DATE 3-10-80

BY JFF CHKD WEG

SHEET 29 OF ___

6 CARDS ON THIS SHEET

1–6	7–8	9–16	17–18	19–26	27–28	29–34	35–36	37–38	39–40	41–46	47–48	49–50	51–56	57–58	59–60
	0.		0.		0.		23.		5		0.			40.	6
	0.		0.		5.		30.		5		40.	6		40.	6
	0.		0.		5.		30.		5		40.	6		40.	6
	0.		0.		5.		30.		5		40.	6		40.	6
	0.		0.		5.		30.		5		40.	6		40.	6
	0.		0.		5.		0.				40.	6		0.	

Sht. No. 30

SVERDRUP & PARCEL AND ASSOCIATES, INC. 11:56 MAR 10,'80 PAGE 1

JOB NO. 6784 FCDMC - RWCD FLOODWAY BRIDGES PROGRAM P7300

PROBLEM - ELLIOT ROAD BRIDGE BY JFF CHKD

****

INPUT DATA

****

CODE(1)	CODE(2)	CODE(3)	CODE(4)	CODE(5)	CODE(6)
1.0000	-1.0000	-1.0000	-1.0000	-1.0000	-1.0000

NO. SPANS	LIVE LOAD	L.L.C.	L.L.R.	L.L.SDWK.	FWS.+(SDL)	N=ES/EC	SLAB THCK.	DIST.SLAB TO NEB
6.0000	4.0000	.0000	.1750	60.0000	37.1000	1.0000	.0000	.0000

WORKING LOAD DESIGN

SLAB REBARS.INCL. IN COMP. DESIGN AT SUPP.= .000 IN2/FT. AT .000 INCH FROM TOP OF SLAB

RATIO SHEAR D.F./D.F.= 1.00 REDUNDANT STRUCTURE ASSUMED

MULTILANE BRIDGE ASSUMED

SPAN LENGTH	D.F.	DL.(SDL)	EFF.SLAB WIDTH
28.5000	.1750	219.0000	.0000 .0000

RANGE	I
23.50	5359.0
25.10	6645.0
26.70	9800.0
28.50	13824.0

SPAN LENGTH	D.F.	DL.(SDL)	EFF.SLAB WIDTH
35.5000	.1750	219.0000	.0000 .0000

RANGE	I
1.78	13824.0
3.56	9664.0
5.34	6230.0
30.16	5359.0
31.94	6230.0
33.72	9664.0
35.50	13824.0

SPAN LENGTH	D.F.	DL.(SDL)	EFF.SLAB WIDTH	
35.5000	.1750	219.0000	.0000	.0000

RANGE	I
1.78	13824.0
3.56	9664.0
5.34	6230.0
30.16	5359.0
31.94	6230.0
33.72	9664.0
35.50	13824.0

SPAN LENGTH	D.F.	DL.(SDL)	EFF.SLAB WIDTH	
99999.0000	.1750	219.0000	.0000	.0000

SPAN LENGTH	D.F.	DL.(SDL)	EFF.SLAB WIDTH	
99999.0000	.1750	219.0000	.0000	.0000

SPAN LENGTH	D.F.	DL.(SDL)	EFF.SLAB WIDTH	
99999.0000	.1750	219.0000	.0000	.0000

H1	H2	X1	X2	W1	W2
.0000	.0000	.0000	23.5000	.0000	40.6000
.0000	.0000	5.0000	30.5000	40.6000	40.6000
.0000	.0000	5.0000	30.5000	40.6000	40.6000
.0000	.0000	5.0000	30.5000	40.6000	40.6000
.0000	.0000	5.0000	30.5000	40.6000	40.6000
.0000	.0000	5.0000	.0000	40.6000	.0000

SVERDRUP & PARCEL AND ASSOCIATES, INC. 11:56 MAR 10,'80 PAGE 3

JOB NO. 6784 FCDMC - RMCD FLOODWAY BRIDGES PROGRAM P7300

PROBLEM - ELLIOT ROAD BRIDGE BY JFF CHKD

NUMBER OF SPANS 6

SPAN LENGTHS 28.50 35.50 35.50 99999.00 99999.00 99999.00

NOTE, 99999.00 INDICATES SYMMETRICAL SPANS

DEAD LOAD MOMENTS(FT-KIPS) AND SHEARS(KIPS) AT TENTH POINTS

POINT	MOMENT	SHEAR
SPAN 1		
0	.0	2.2
1	5.4	1.6
2	9.1	1.0
3	11.0	.3
4	11.1	-.3
5	9.4	-.9
6	5.9	-1.5
7	.7	-2.1
8	-6.3	-2.8
9	-15.2	-3.5
10	-26.2	-4.2
SPAN 2		
0	-26.2	4.1
1	-13.2	3.2
2	-3.4	2.4
3	3.6	1.6
4	7.8	.8
5	9.3	.0
6	8.0	-.8
7	3.9	-1.5
8	-2.9	-2.3
9	-12.5	-3.1
10	-25.3	-4.1

SVERDRUP & PARCEL AND ASSOCIATES, INC. 11:56 MAR 10,'80 PAGE 4

JOB NO. 6784 FCDMC - RACD FLOODWAY BRIDGES PROGRAM P7300

PROBLEM - ELLIOT ROAD BRIDGE BY JFF CHKD [illegible]

DEAD LOAD MOMENTS(FT-KIPS) AND SHEARS(KIPS) AT TENTH POINTS

POINT	MOMENT	SHEAR
SPAN 3		
0	-25.3	4.1
1	-12.5	3.2
2	-2.8	2.3
3	4.1	1.5
4	8.2	.8
5	9.5	-.0
6	8.1	-.8
7	3.9	-1.6
8	-3.0	-2.3
9	-12.7	-3.2
10	-25.7	-4.1

SVERDRUP & PARCEL AND ASSOCIATES, INC. 11:56 MAR 10,'80 PAGE 5

JOB NO. 6784 FCDMC - RMCD FLOODWAY BRIDGES PROGRAM P7300

PROBLEM - ELLIOT ROAD BRIDGE BY JFF CHKD

MAXIMUM LIVE LOAD MOMENTS(FT-KIPS)AT TENTH POINTS

POINT	POSITIVE SDK LL	NEGATIVE SDK LL	LANE LOAD INCL.IMP. POSITIVE	LANE LOAD INCL.IMP. NEGATIVE	TRUCK LOAD INCL.IMP. POSITIVE	TRUCK LOAD INCL.IMP. NEGATIVE	FWS.+(SDL)
SPAN 1							
1	2.0	-.5	7.5	-1.4	12.1	-2.1	.9
2	3.5	-1.0	13.0	-2.9	19.7	-4.2	1.5
3	4.6	-1.6	16.4	-4.3	23.2	-6.3	1.9
4	5.1	-2.1	17.9	-5.8	23.3	-8.3	1.9
5	5.2	-2.6	17.6	-7.2	20.6	-10.4	1.6
6	4.7	-3.1	15.8	-8.6	20.5	-12.5	1.0
7	3.8	-3.6	12.7	-10.1	16.6	-14.6	.1
8	2.5	-4.2	8.6	-11.6	9.5	-16.7	-1.1
9	1.7	-5.9	5.0	-16.7	.1	-18.8	-2.6
10	1.6	-8.7	4.3	-24.5	5.8	-26.2	-4.4
SPAN 2							
1	1.3	-5.0	5.0	-14.9	.0	-16.4	-2.3
2	1.8	-2.8	8.7	-8.7	11.1	-12.5	-.6
3	3.4	-2.5	13.2	-7.5	18.7	-10.2	.6
4	4.8	-2.7	16.6	-7.8	22.8	-8.0	1.3
5	5.4	-2.9	18.0	-8.1	23.6	-6.8	1.5
6	5.2	-3.1	17.2	-8.5	22.9	-9.5	1.3
7	4.3	-3.3	14.4	-8.8	19.0	-12.2	.6
8	3.0	-3.8	10.1	-10.4	11.6	-14.9	-.5
9	2.4	-5.8	6.3	-16.3	.5	-17.6	-2.1
10	2.7	-9.5	5.5	-25.8	5.6	-26.8	-4.2
SPAN 3							
1	2.3	-5.7	6.2	-16.1	.4	-17.4	-2.1
2	2.7	-3.5	9.8	-9.9	11.5	-14.7	-.5
3	4.2	-3.1	14.2	-8.6	19.0	-12.1	.7
4	5.3	-3.1	17.4	-8.7	23.0	-9.5	1.4
5	5.8	-3.2	18.5	-8.7	23.7	-6.9	1.6
6	5.4	-3.3	17.5	-8.8	23.0	-9.5	1.3
7	4.3	-3.3	14.5	-8.9	19.0	-12.2	.6
8	2.9	-3.8	10.1	-10.3	11.6	-14.9	-.5
9	2.5	-6.0	6.4	-16.4	.4	-17.5	-2.2
10	2.9	-9.8	5.7	-26.1	6.3	-26.8	-4.3

SVERDRUP & PARCEL AND ASSOCIATES, INC. 11:56 MAR 10,'80 PAGE 6

JOB NO. 6784 FCDMC - RWCD FLOODWAY BRIDGES PROGRAM P7300

PROBLEM - ELLIOT ROAD BRIDGE BY JFF CHKD [illegible]

	LIVE LOAD SHEARS(KIPS) AT TENTH POINTS					LEFT SUPPORT REACTIONS(KIPS) ONE FULL LANE WIDTH		GIRDER REACT. INCL.IMP.(L.L.R)	
	POINT	FWS.+(SDL)	POSITIVE SIDEWALK	NEGATIVE SIDEWALK	POS.LIVE LOAD+IMP.	NEG.LIVE LOAD+IMP.	NO IMPACT LANE	TRUCK	LANE	TRUCK
SPAN 1							34.4	44.9	3.9	5.1
	0	.4	.8	-.2	5.1	-.2				
	1	.3	.6	-.2	4.2	-.6				
	2	.2	.5	-.2	3.4	-1.0				
	3	.1	.4	-.3	2.6	-1.5				
	4	-.0	.3	-.4	1.9	-1.9				
	5	-.2	.2	-.5	1.4	-2.4				
	6	-.3	.1	-.6	1.0	-3.1				
	7	-.4	.1	-.7	.7	-3.9				
	8	-.5	.1	-.8	.4	-4.6				
	9	-.6	.1	-1.0	.2	-5.3				
	10	-.7	.1	-1.2	.1	-5.9				
SPAN 2							51.8	62.2	5.9	7.1
	0	.7	1.3	-.2	6.1	-.2				
	1	.5	1.1	-.2	5.3	-.4				
	2	.4	.9	-.2	4.5	-.7				
	3	.3	.7	-.3	3.6	-1.1				
	4	.1	.5	-.3	2.8	-1.5				
	5	.0	.4	-.4	2.0	-2.0				
	6	-.1	.3	-.5	1.5	-2.8				
	7	-.3	.3	-.7	1.1	-3.6				
	8	-.4	.2	-.9	.7	-4.5				
	9	-.5	.2	-1.0	.5	-5.3				
	10	-.7	.2	-1.2	.2	-6.1				
SPAN 3							53.0	62.3	6.0	7.1
	0	.7	1.3	-.2	6.1	-.3				
	1	.5	1.1	-.2	5.3	-.5				
	2	.4	.9	-.3	4.5	-.8				
	3	.3	.7	-.3	3.6	-1.1				
	4	.1	.6	-.4	2.8	-1.6				
	5	-.0	.5	-.5	2.0	-2.0				
	6	-.1	.4	-.6	1.6	-2.8				
	7	-.3	.3	-.7	1.1	-3.6				
	8	-.4	.3	-.9	.8	-4.5				
	9	-.5	.2	-1.1	.5	-5.3				
	10	-.7	.2	-1.3	.3	-6.1				

35

SVERDRUP & PARCEL AND ASSOCIATES, INC. 11:56 MAR 10,'80 PAGE 7

JOB NO. 6784 FCDMC - RACD FLOODWAY BRIDGES PROGRAM P7300

PROBLEM - ELLIOT ROAD BRIDGE BY JFF CHKD WLG

	LIVE LOAD SHEARS(KIPS) AT TENTH POINTS				LEFT SUPPORT REACTIONS(KIPS)			
					ONE FULL LANE WIDTH		GIRDER REACT.	
					NO IMPACT		INCL.IMP.(L.L.R)	
POINT	FWS.+(SDL)	POSITIVE SIDEWALK	NEGATIVE SIDEWALK	POS.LIVE LOAD+IMP.	NEG.LIVE LOAD+IMP.	LANE	TRUCK	LANE	TRUCK
SPAN	0					53.5	62.3	6.1	7.1

36

SVERDRUP & PARCEL

JOB 6784 FCDMC-RWCD Floodway

SHEET NO. 37 OF

DATE 3-11-80

COMPUTATIONS FOR Elliot Rd. Bridge

BY JFF CHKD WEG

Bending Moments Per Foot of Slab Width (ft.-kips)*

Span	10th Point	DL	SDL	FWS	SDWK LL POS.	SDWK LL NEG.	VEH. L+I POS.	VEH. L+I NEG.	DESIGN M POS.	DESIGN M NEG.
1	0	0	0	0	0	0	0	0	0	
	1	5.4	.4	.5	2.0	-.5	12.1	-2.1	18.4	
	2	9.1	.7	.8	3.5	-1.0	19.7	-4.2	30.3	
	3	11.0	.9	1.0	4.6	-1.6	23.2	-6.3	36.1	
	4	11.1	.9	1.0	5.1	-2.1	23.3	-8.3	36.3	
	5	9.4	.7	.9	5.2	-2.6	20.6	-10.4	31.6	-.3
	6	5.9	.5	.5	4.7	-3.1	20.5	-12.5	27.4	-6.1
	7	.7	.1	.1	3.8	-3.6	16.6	-14.6	17.5	-13.8
	8	-6.3	-.5	-.6	2.5	-4.2	9.5	-14.7	2.7	-24.1
	9	-15.2	-1.2	-1.4	1.7	-5.9	5.5	-16.8		-38.6
2	10	-26.3	-2.0	-2.4	1.6	-8.7	5.8	-26.2		-56.8
	1	-13.2	-1.0	-1.3	1.3	-5.0	5.0	-16.4		-31.9
	2	-3.4	-.3	-.3	1.8	-2.8	11.1	-12.5	7.4	-16.5
	3	3.6	.3	.3	3.4	-2.5	18.7	-10.2	22.9	-6.3
	4	7.8	.6	.7	4.8	-2.7	22.8	-8.0	31.9	
	5	9.3	.7	.8	5.4	-2.9	23.6	-8.1	34.4	
	6	8.0	.6	.7	5.2	-3.1	22.9	-9.5	32.2	-.9
	7	3.9	.3	.3	4.3	-3.3	19.0	-12.2	23.5	-8.0
	8	-2.9	-.2	-.3	3.0	-3.8	11.6	-14.9	8.5	-18.3
	9	-12.5	-1.0	-1.1	2.4	-5.8	6.3	-17.6		-32.2
3	10	-25.3	-1.9	-2.3	2.7	-9.5	5.6	-26.8		-56.3
	1	-12.5	-1.0	-1.1	2.3	-5.7	6.2	-17.4		-32.0
	2	-2.8	-.2	-.3	2.7	-3.5	11.5	-14.7	8.5	-18.0
	3	4.1	.3	.4	4.2	-3.1	19.0	-12.1	23.8	-7.7
	4	8.2	.6	.8	5.3	-3.1	23.0	-9.5	32.6	-.7
	5	9.5	.7	.9	5.8	-3.2	23.7	-8.7	34.8	
	6	8.1	.6	.7	5.4	-3.3	23.0	-9.5	32.4	-.8
	7	3.9	.3	.3	4.3	-3.3	19.0	-12.2	23.5	-8.0
	8	-3.0	-.2	-.3	2.9	-3.8	11.6	-14.9	8.4	-18.4
	9	-12.7	-1.0	-1.2	2.5	-6.0	6.4	-17.5		-32.4
	10	-25.7	-2.0	-2.3	2.9	-9.8	6.3	-26.8		-56.8

*Note: Vehicle L+I governs over Sidewalk LL in all cases. FWS included only if it causes moment to be more positive or more negative.

SVERDRUP & PARCEL

JOB 6784 FCDMC – RWCD Floodway

COMPUTATIONS FOR Elliot Rd. Bridge

SHEET NO. 38 OF

DATE 3-11-80

BY JFF CHKD WEG

Slab Design

$f'_c = 3{,}000$ psi $\quad f_y = 40{,}000$ psi $\quad n = 9$

$f_c = 1{,}200$ psi $\quad f_s = 20{,}000$ psi

Try reinf. used in ADOT Std. No. CS-20 for L-L' of 28'-6", 35'-0".

Top Bars – Max. Neg. Moment = -56.8 'k/ft.

$A_s = \#10 @ 9'' = 1.69$ □"/ft.

$d = 24'' - 2'' - \frac{1.270''}{2} = 21.4''$

$b = 12''$

$np = \frac{9 \times 1.69}{12 \times 21.4} = 0.0592 \quad k = 0.290 \quad j = 0.903$

$f_s = \frac{M}{A_s j d} = \frac{56.8 \times 12}{1.69 \times 0.903 \times 21.4} = 20.9$ ksi > 20 ksi, NG

$f_c = \frac{f_s}{n} \times \frac{k}{1-k} = \frac{20900}{9} \times \frac{0.290}{0.710} = 949$ psi $< 1{,}200$ psi, OK

Try $A_s = \#10 @ 8\frac{1}{2}'' = 1.79$ □"/ft.

$np = \frac{9 \times 1.79}{12 \times 21.4} = 0.0627 \quad k = 0.297 \quad j = 0.901$

$f_s = \frac{56.8 \times 12}{1.79 \times 0.901 \times 21.4} = 19.75$ ksi < 20 ksi, OK

$f_c = \frac{19{,}750}{9} \times \frac{0.297}{0.703} = 927$ psi $< 1{,}200$ psi, OK

Bottom Bars – Max. Pos. Moment = 36.3 'k/ft.

Try $A_s = \#10 @ 8\frac{1}{2}'' = 1.79$ □"/ft.

$d = 17\frac{1}{2}'' - 1'' - \frac{1.270''}{2} = 15.9''$

$np = \frac{9 \times 1.79}{12 \times 15.9} = 0.0844 \quad k = 0.335 \quad j = 0.888$

$f_s = \frac{36.3 \times 12}{1.79 \times 0.888 \times 15.9} = 17.24$ ksi < 20 ksi, OK

$f_c = \frac{17{,}240}{9} \times \frac{0.335}{0.665} = 965$ psi $< 1{,}200$ psi, OK

Use #10 @ 8½" Top & Bottom

SVERDRUP & PARCEL

JOB 6784 FCDMC - RWCD Floodway

COMPUTATIONS FOR Elliot Rd. Bridge

SHEET NO. 39 OF

DATE 3-11-80

BY JFF CHKD WEG

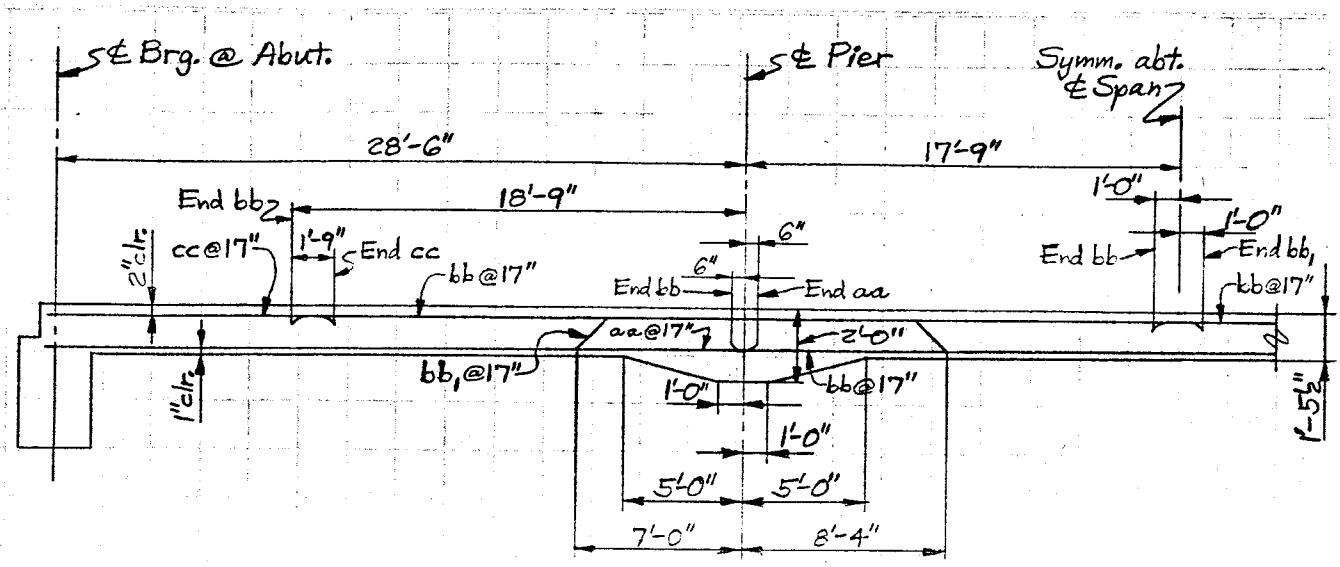

Note: Bar marks correspond to those on ADOT Std. No. CS-20. Bars aa, bb, and bb₁ are #10 bars. Bars cc are #6. Lengths and bend dimensions must be adjusted to agree with dimensions above.

Transverse bars not shown. Make transverse bars similar to those for 28'-6", 35'-0" spans, using same size and spacing but increasing total number for longer intermediate span length.

Dead Load Camber —

Use same as given in ADOT Std. No. CS-20 for L-L' of 28'-6", 35'-0".

SVERDRUP & PARCEL

JOB 6784 FCDMC - RWCD Floodway

COMPUTATIONS FOR Baseline Rd. Bridge

SHEET NO. 40 OF

DATE 4-11-80

BY JFF CHKD WEG

Abutment Design

Estimated Dead Load Abut. 1 -

Cap Beam

$87' \times 5.5' \times 2.5' \times .15^{kcf}$ $= 179.4^k$

Approach Slabs

$1' \times .15^{kcf} (5.5' \times 9.5' + 15' \times 68') \times 1/2$ $= 80.4$

Wingwalls

$\frac{7.25' + 2'}{2} \times 6' \times 1.58' \times .15^{kcf}$ $= 6.6$

$\frac{7.25' + 2'}{2} \times 4' \times 1' \times .15^{kcf}$ $= 2.8$

Safety Barriers, Fence, & Curb

From Superstr. design $= (74^{\#/'} + 8^{\#/'} + 94^{\#/'}) \times 7'$ $= 5.9$

275^k

Estimated Dead Load Abut. 7 -

Cap Beam

$87' \times 4.25' \times 2.5' \times .15^{kcf}$ $= 138.7^k$

Approach Slabs

$1' \times .15^{kcf} (6.5' \times 9.5' + 15' \times 68') \times 1/2$ $= 81.1$

Wingwalls

$\frac{5.25' + 2'}{2} \times 6' \times 1' \times .15^{kcf}$ $= 3.3$

$\frac{5.25' + 2'}{2} \times 4' \times 1.58' \times .15^{kcf}$ $= 3.4$

Safety Barriers, Fence, & Curb

same as above $= 5.9$

232^k

Abut. Design (cont'd.)

Superstructure Dead Load Reaction –

From superstr. design computer program output, program P7300, run 14:51 MAR 04,'80:

$(2.0^{k/'}\ DL + 0.3^{k/'}\ SDL+FWS) \times 80' \qquad = 184^k$

Live Load Reaction –

From above mentioned computer program:

$43.5^{k}/\text{Lane} \times 5\ \text{Lanes} \times 75\% \qquad = 163^k$

Total D+L $= 275^k + 184^k + 163^k \qquad = 622^k$ Abut. 1

$= 232^k + 184^k + 163^k \qquad = 579^k$ Abut. 7

Drilled Shafts

Try 7 – 24"ϕ @ 12'-6" Spcg., Tip Elev. 1308.00

From soils report by Halpert Assocs., Fig. No. 16, capacity = 170^k each

Total Capacity $= 7 \times 170^k = 1{,}190^k >> 622^k$, OK

Use min. reinf. 0.75%

$A_g = 452^{\square''}$

Min. Req'd. $A_s = 0.0075 \times 452 = 3.39^{\square''}$

Use 8-#6, A_s Furnished $= 3.52^{\square''} > 3.39^{\square''}$, OK

$f'_c = 3{,}000$ psi

$f_s = 20{,}000$ psi

$P = 0.8(0.225 \times 3 \times 452 + 3.52 \times 20) = 300^k >> 170^k$, OK

$\frac{\pi(24-6-1)}{8} = 6''\frac{1}{16}''$ c.to c. spcg. vert. bars

Use #4 ties @ 1'-0" spcg.

SVERDRUP & PARCEL

JOB 6784 FCDMC - RWCD Floodway

COMPUTATIONS FOR Baseline Rd. Bridge
Abut. Design (cont'd.)

SHEET NO. 42 OF

DATE 4-12-80

BY JFF CHKD WEG

24"φ Drilled Shafts @ Abuts. -

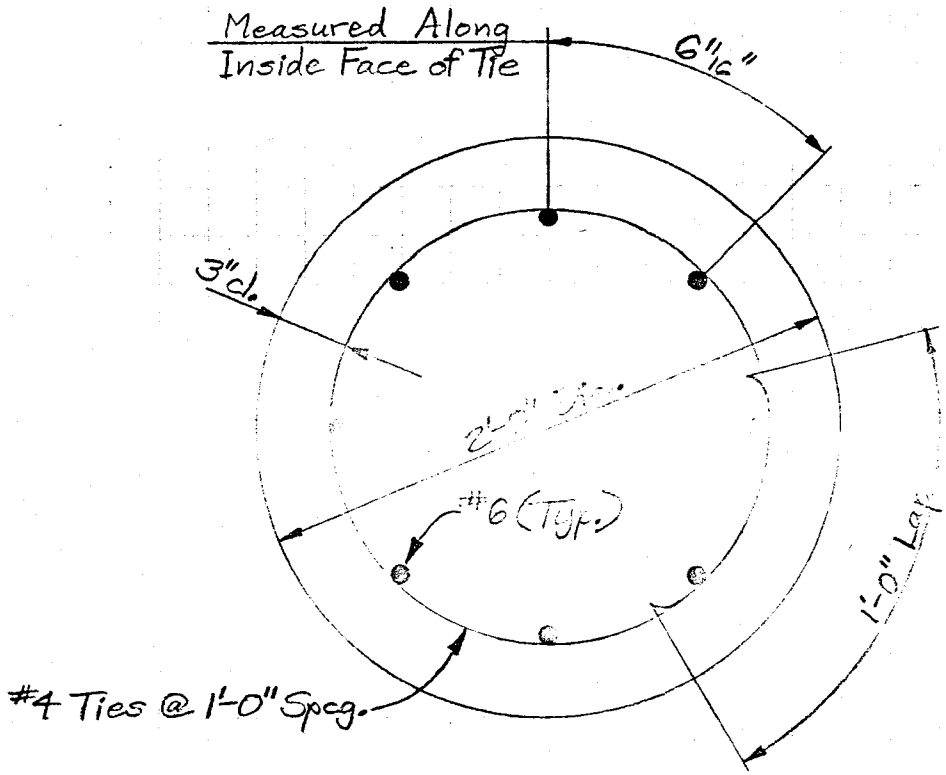

Abut. Design (cont'd.)

Pile Cap Beam Reinf. -

Abut. 1 - Total D+L = 622^k/87' = 7.15 k/'

Max. M = .12wL^2 = .12 × 7.15 × 12.5^2 = 134'k

Max. V = .62wL = .62 × 7.15 × 12.5 = 55.4^k

Min. Depth = 54" b=30"

d = 54" - 1" Jt. Filler - 2" Key - 2" Cover - 5/8" Stirrup - say 1/2" $\frac{\phi}{2}$ = 47.9"

Min. Reinf. = $\frac{200bd}{f_y}$ = $\frac{200 \times 30 \times 47.9}{40{,}000}$ = 7.19 □"

or = 133% Req'd. by Analysis (AASHTO 1.5.7(C))

Try 4-#8 A_s = 3.16 □", np = $\frac{9 \times 3.16}{30 \times 47.9}$ = 0.0198, k=0.180, j=0.940

$f_s = \frac{M}{A_s jd} = \frac{134 \times 12 \times 133\%}{3.16 \times 0.940 \times 47.9}$ = 15.1 ksi < 20, OK

$f_c = \frac{f_s}{n} \times \frac{k}{1-k} = \frac{15.1}{9} \times \frac{.180}{.820}$ = 370 psi < 1,200, OK

Use 4-#9 Top & Bottom (as noted by Abut. 7 below)

& 3-#5 @ 12" max. front & back faces

$v = \frac{55{,}400}{30 \times 47.9}$ = 39 psi < 52 psi, no stirrups req'd., but

Use Stirrups #5 @ 1'-0"

Abut. 7 - Total D+L = 579^k/87' = 6.66 k/'

Max. M = .12 × 6.66 × 12.5^2 = 125'k

Max. V = .62 × 6.66 × 12.5 = 51.6^k

Min. Depth = 39" b = 30"

d = 39" - 1" Jt. Filler - 2" Key - 2" Cover - 5/8" Stirrup - say 1/2" $\frac{\phi}{2}$ = 32.9"

Min. Reinf. = $\frac{200bd}{f_y}$ = $\frac{200 \times 30 \times 32.9}{40{,}000}$ = 4.94 □"

or = 133% Req'd. by analysis

Try 4-#9, A_s = 4.00 □", np = $\frac{9 \times 4.00}{30 \times 32.9}$ = 0.0365, k=0.236, j=0.921

$f_s = \frac{125 \times 12 \times 133\%}{4.00 \times 0.921 \times 32.9}$ = 16.5 ksi < 20, OK

$f_c = \frac{16{,}500}{9} \times \frac{.236}{.764}$ = 566 psi < 1,200, OK

Use 4-#9 Top & Bottom

& 2-#5 @ 12" max. front & back faces

$v = \frac{51{,}600}{30 \times 32.9}$ = 52 psi, no stirrups req'd, but

Use Stirrups #5 @ 1'-0" Spcg.

SVERDRUP & PARCEL

JOB 6784 FCDMC-RWCD Floodway

SHEET NO. 44 OF

DATE 7-14-80

COMPUTATIONS FOR Baseline Rd. Bridge

BY VFF CHKD WEG

Abut. Design (cont'd.)

Wingwall Reinf. —

Design for worst case, south wingwall Abut. 7.

Use equiv. fluid pressure 35psf/ft. & 2 ft. surcharge.

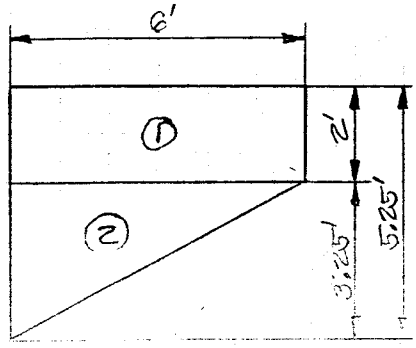

Surcharge

① $6' \times 2' \times 70\,psf = 840^{\#}$

② $\frac{1}{2} \times 6' \times 3.25' \times 70\,psf = 683$

$1{,}523^{\#}$

Equiv. Fluid Pressure

$\left(\frac{2+5.25}{2}\right)^2 \times \frac{35}{2} \times 6 = 1{,}325^{\#}$

c.g. ① & ② $= 6 - \frac{6(2 \times 3.25 + 2)}{3(3.25+2)}$

$= 2.55'$

$M = (1523^{\#} + 1325^{\#})(2.55') = 7{,}410'^{\#}$

$d = 12'' - 2''\,cover - \frac{3}{8}'' = 9.6''$

Try #5 @ 8"

$A_s = 0.46^{\square''}/'$

$np = \frac{9 \times .46}{12 \times 9.6} = 0.0359$, $k = 0.234$, $j = 0.922$

$f_s = \frac{7.41^{'k} \times 12''/5.25'}{.46^{\square''} \times .922 \times 9.6''} = 4.2^{ksi} << 20$, OK

Use Horiz. Bars #5 @ 8" Both Faces

Vert. Bars #5 @ 1'-0" Both Faces

SVERDRUP & PARCEL

JOB 6784 FCDMC-RWCD Floodway

COMPUTATIONS FOR Elliot Rd. Bridge

SHEET NO. 45 OF

DATE 4-14-80

BY JFF CHKD WEG

Abutment Design

Estimated Dead Load –

Cap Beam

$62' \times 4.25' \times 2.5' \times .15^{kcf}$ $= 98.8^k$

Approach Slabs

$1' \times .15^{kcf} (6.2' \times 9.5' + 15' \times 50') \times \frac{1}{2}$ $= 60.7$

Wingwalls

$\frac{5.0' + 2'}{2} \times 5.5' \times 1' \times .15^{kcf}$ $= 2.9$

$\frac{5.0' + 2'}{2} \times 5.5' \times 1.5' \times .15^{kcf}$ $= 4.3$

Safety Barriers, Fence, & Curb

From Superstr. design $= (744^{\#/'} + 8^{\#/'} + 94^{\#/'}) \times 7'$ $= 5.9$

173^k

Superstructure Dead Load Reaction –

From superstr. design computer program output, program P7300, run 11:56 MAR 10, '80:

$(2.2^{k/'} DL + 0.4^{k/'} SDL + FWS) \times 62'$ $= 161^k$

Live Load Reaction –

Also from above mentioned computer program:

$44.9^{k/Lane} \times 4$ Lanes $\times 75\%$ $= 135^k$

Total $D + L = 173^k + 161^k + 135^k$ $= 469^k$

SVERDRUP & PARCEL

JOB 6784 FCDMC-RWCD Floodway

SHEET NO. 46 OF

DATE 4-14-80

COMPUTATIONS FOR Elliot Rd. Bridge

BY JFF CHKD WEG

Abut. Design (cont'd.)

Drilled Shafts –

Try 5 – 24"ϕ @ 12'-6" Spcg. , Tip Elev. 1300.00

From soils report by Halpert Assocs., Fig. No. 17, capacity = 110^k each

Total Capacity = $5 \times 110^k = 550^k > 469^k$, OK

Use min. reinf. 0.75%

See abut. design for Baseline Rd. bridge.

Use 8 – #6 vert. steel with #4 ties @ 1'-0" spcg.

For cross-section details see abut. design for Baseline Rd.

Wingwall Reinf. –

Use same as for Baseline Rd. bridge.

Pile Cap Beam Reinf. –

Total D+L = $469^k / 62' = 7.56^{k/'}$

Max. $M = .12\,wL^2 = .12 \times 7.56 \times 12.5^2 = 142^{'k}$

Max. $V = .62\,wL = .62 \times 7.56 \times 12.5 = 58.6^k$

$b = 30''$

$d = 39'' - 1''$ Jt. Filler $- 2''$ Key $- 2''$ Cover $- \frac{5}{8}''$ Stirrup $-$ say $\frac{1.128''}{2} = 32.8''$

Min. reinf. $= \frac{200\,bd}{f_y} = \frac{200 \times 30 \times 32.8}{40{,}000} = 4.92\,\square''$ or 133% req'd. by analysis

Try 4 – #9 , $A_s = 4.00\,\square''$

$np = \frac{9 \times 4.00}{30 \times 32.8} = 0.0366$, $k = 0.236$, $j = 0.921$

$f_s = \frac{142 \times 12 \times 133\%}{4.00 \times 0.921 \times 32.8} = 18.8^{ksi} < 20$, OK

$f_c = \frac{18{,}800}{9} \times \frac{0.236}{0.764} = 645\,psi < 1{,}200$, OK

Use 4 – #9 Top & Bottom

& 2 – #5 @ 12" max. front & back faces

$v_c = .95\sqrt{3000} = 52\,psi$

$v = \frac{58{,}600}{30 \times 32.8} = 60\,psi > 52$, stirrups req'd.

$s = \frac{A_v f_s}{(v - v_c)\,b_w} = \frac{2 \times 1.31\,\square'' \times 20{,}000\,psi}{(60\,psi - 52\,psi) \times 30''} = 51''$

Use #5 Stirrups @ 1'-0" Spcg.

Intermediate Piers

Slab is thickened to 24" at piers to act as beam spanning between columns.

Dead Load reactions at piers per foot of slab width, from S&P computer program P7300, run 14:57 MAR 04, '80, ID=0960.
Live Load from same program, one full lane width without impact:

	Piers 2&6	Piers 3&5	Pier 4
DL	$7.7^{k/1}$	$7.5^{k/1}$	$7.6^{k/1}$
SDL+FWS	1.2	1.2	1.2
Total DL	$8.9^{k/1}$	$8.7^{k/1}$	$8.8^{k/1}$
Truck LL	60.8^{k}	61.1^{k}	61.1^{k}

Use DL $8.9^{k/1}$ for all piers, distribute along slab at piers:

$w_{DL} = 8.9^{k/1} \times \cos 22.5° = 8.22^{k/1}$

Use LL 61.1^{k} for all piers, +30% impact.

Read in uniform DL reaction from deck slab as four equivalent concentrated loads per cap beam span: $4 \times 8.22^{k/1} \times 12.5' = 25.7^{k}$/each

Cantilever DL moment @ face of column:

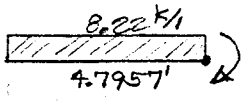

$M = \frac{8.22 \times 4.7957^2}{2} = 94.52'^{k}$

First equiv. conc. load is at 1.0957' from face of col.

Conc. load to cause same DL moment $= 94.52'^{k} / 1.0957' = 86.27^{k}$

Cantilever DL shear @ jt. 1 $= 8.22^{k/1} \times 5.7957' = 47.64^{k}$

Apply upward force @ face of col. to cancel out excess shear: $86.27 - 47.64 = 38.63$

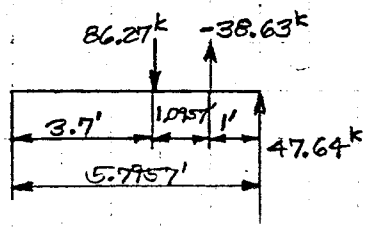

For analysis and design consider an effective rectangular cap beam cross-section 2' deep × 3' wide (1/4 Span) at top of 24"φ columns:

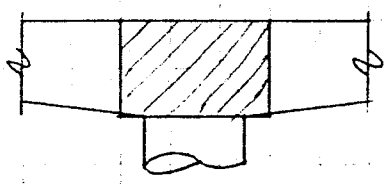

SVERDRUP & PARCEL

JOB 6784 FCDMC - RWCD Floodway

COMPUTATIONS FOR Baseline Rd. Bridge

Intermed. Piers (cont'd.)

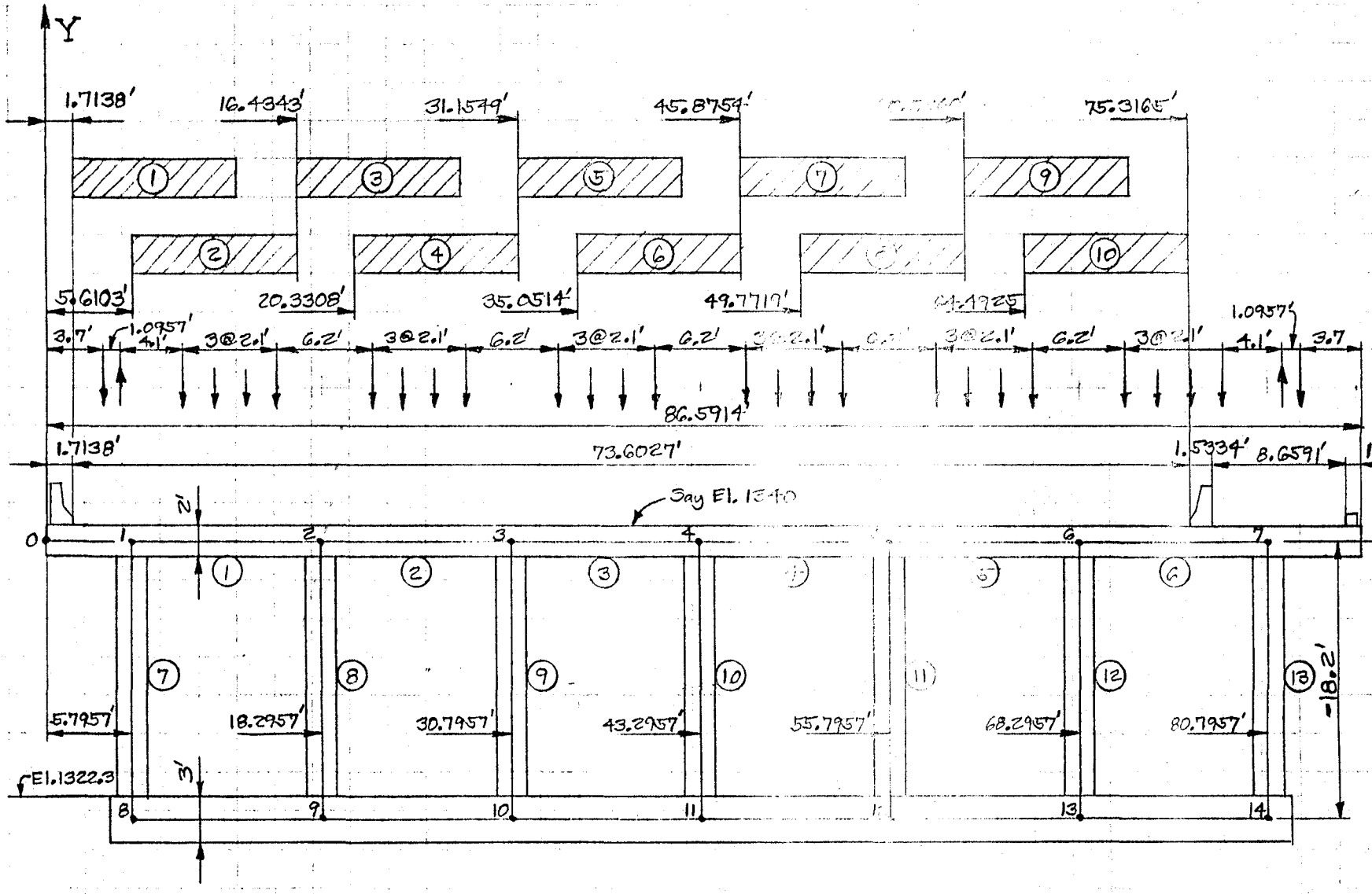

SHEET NO. 48 OF

DATE 4-3-80

BY JFF CHKD WEG

SVERDRUP & PARCEL

JOB 6784 FCDMC – RWCD Floodway

COMPUTATIONS FOR Baseline Rd. Bridge
Intermed. Piers (cont'd.)

SHEET NO. 49 OF

DATE 4-4-80

BY JFF CHKD WEG

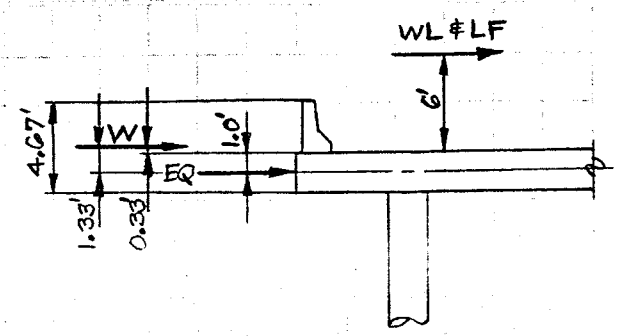

Horizontal Loads –

Computer program P7810 applies loads parallel to pier at centerline of cap beam, and loads normal to pier at top of cap beam. Compute factors to translate loads to proper point of application.

W_T & W_L	//	$\frac{1.33 + 18.2}{18.2} = 1.07$
	⊥	[illegible] = 1.[illegible]
EQ_T & EQ_L	//	$\frac{0 + 18.2}{18.2} = 1.00$
	⊥	$\frac{18.2 - 1.0}{18.2} = .95$
WL_T & WL_L & LF	//	$\frac{7 + 18.2}{18.2} = 1.38$
	⊥	$\frac{6 + 18.2}{18.2} = 1.33$

Plan View of Horiz. Loads

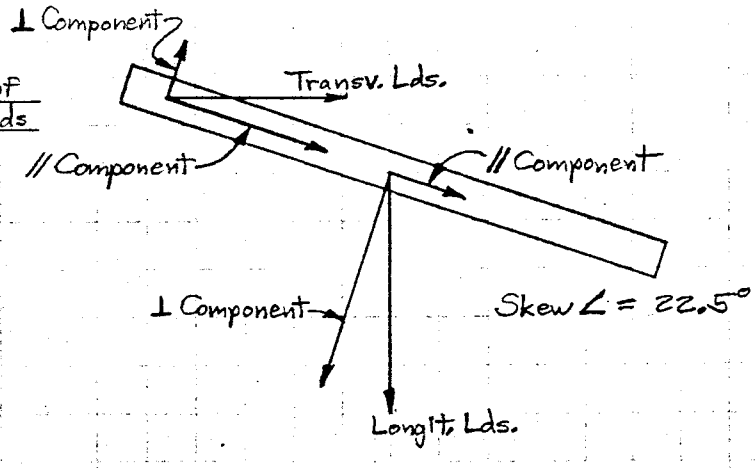

SVERDRUP & PARCEL

JOB 6784 FCDMC-RWCD Floodway

SHEET NO. 50 OF

DATE 4-5-80

COMPUTATIONS FOR Baseline Rd. Bridge

BY JFF CHKD WEG

Intermed. Piers (cont'd.)

Horizontal Loads (cont'd.)

W_T @ 50 psf on Superstr. $= 33.25' \times 4.2' \times .05^{ksf} = 7.0^k \begin{cases} \times \cos 22.5^\circ \times 1.07 = 6.9^k // \\ \times \sin 22.5^\circ \times 1.02 = 2.7^k \perp \end{cases}$

Translate force on col. to top of col. — Shape Factor

W_T @ 40 psf on Substr. $= 7 \times 10.7' \times 2' \times \frac{1}{2} \times \frac{2}{3} \times .04^{ksf} = 2.0^k \begin{cases} \times \cos 22.5^\circ = 1.8^k // \\ \times \sin 22.5^\circ = 0.8^k \perp \end{cases}$

WL_T @ $100^{\#/'}$ $= 33.25' \times 0.1^{k/'} = 3.3^k \begin{cases} \times \cos 22.5^\circ \times 1.38 = 4.5^k // \\ \times \sin 22.5^\circ \times 1.33 = 1.7^k \perp \end{cases}$

EQ_T (Assume C=0.06) Zone 2, A=.22g, Depth to Rock-Like Material 11'-80'

$EQ_T // = 0.06 \times 0.8 \times 1.00 \times 8.9^{k/'} \times 80' \times \cos 22.5^\circ = 31.6^k //$

$EQ_T \perp = 0.06 \times 1.0 \times .95 \times 8.9^{k/'} \times 80' \times \sin 22.5^\circ = 15.5^k \perp$

W_L @ 12psf on Superstr. $= 186.5' \times 4.2' \times .012^{ksf} = 9.4^k \begin{cases} \times \cos 22.5^\circ \times 1.07 = 8.7^k // \\ \times \sin 22.5^\circ \times 1.02 = 3.9^k \perp \end{cases}$

W_L @ 40psf on Substr. = same as W_T $= 2.0^k \begin{cases} \times \sin 22.5^\circ = 0.8^k // \\ \times \cos 22.5^\circ = 1.8^k \perp \end{cases}$

WL_L @ $40^{\#/'}$ $= 186.5' \times 0.04^{k/'} = 7.5^k \begin{cases} \times \sin 22.5^\circ \times 1.38 = 4.0^k // \\ \times \cos 22.5^\circ \times 1.33 = 9.2^k \perp \end{cases}$

LF (Assume 3 Lanes @ 90%) $= 3 \times .9 \times .05 (.64^{k/'} \times 186.5' + 18^k) = 18.5^k \begin{cases} \times \sin 22.5^\circ \times 1.38 = 9.8^k // \\ \times \cos 22.5^\circ \times 1.33 = 22.7^k \perp \end{cases}$

EQ_L (Refer to EQ_T above)

$EQ_L // = 0.06 \times 0.8 \times 1.00 \times 2 \times 80' \left(2.3^{k/'} + 8.9^{k/'} + 8.7^{k/'} + \frac{8.8^{k/'}}{2}\right) \times \sin 22.5^\circ = 71.4^k //$

$EQ_L \perp = 0.06 \times 1.0 \times .95 \times 2 \times 80' \left(2.3^k + 8.9^k + 8.7^k + \frac{8.8^k}{2}\right) \times \cos 22.5^\circ = 204.7^k \perp$

SVERDRUP & PARCEL

JOB 6784 FCDMC - RWCD Floodway

COMPUTATIONS FOR Baseline Rd. Bridge

SHEET NO. 51 OF

DATE 4-5-80

BY JFF CHKD WEG

Abutment Passive Pressure Capacity

$k_h = 48$ psf/ft. (assume poor material near surface)

Conservatively assume $\gamma = 100$ pcf

$k_p = \frac{2\gamma^2}{3k_h} = \frac{2 \times 100^2}{3 \times 48} = 139$ psf/ft.

$P_p = \frac{1}{2} k_p h^2 = \frac{1}{2} \times 139 \text{ psf/ft.} \times (5 \text{ ft.}) = 1{,}735 \text{ \#/ft.} = 1.74 \text{ k/ft.}$

$\times 80' = 139$ k/Abut.

Pier Passive Pressure Capacity

[illegible]

521 k/Pier

Anchor Pier Load ⊥ ℄ Pier

In spite of overwhelming capacity of structure to resist longitudinal horizontal loads with passive soil resistance, nevertheless provide an anchor pier to resist 50% of any forces ⊥ to ℄ pier, assuming combined capacity of all other units will be adequate to resist the remaining 50%.

From following sheet note that largest longitudinal load is due to EQ, and the abutment alone will be able to resist it.

Intermed. Piers (cont'd.)

Horizontal Force Group Loading Combinations -

Parallel to ℄ Pier:

Group II- W_T Superstr. // + W_T Substr. // + W_L Superstr. // + W_L Substr. //
$= 6.9 + 1.8 + 3.8 + 0.8 = 13.3^k$

Group III- 30% Group II // + WL_T // + WL_L // + LF //
$= 0.3 \times 13.3 + 4.2 + 4.0 + 9.8 = 22.0^k$

Group II- W_T Superstr. ⊥ + W_T Substr. ⊥ + W_L Superstr. ⊥ + W_L Substr. ⊥
$= 50\% (2.7 + 0.5 + 8.9 + 1.8) = 7.1^k$

Group III- 30% Group II ⊥ + WL_T ⊥ + WL_L ⊥ + LF ⊥
$= 0.3 \times 7.1 + 50\% (1.7 + 9.2 + 22.7) = 18.9^k$

Group VII- EQ_T ⊥ + EQ_L ⊥
$= 50\% (15.5 + 204.7) = 110.1^k$

Temperature Fall + Shrinkage

Shrinkage is read into computer program as equiv. temp. fall $= \frac{-.0002}{.000006} = -33.3°F$

Temp. Fall + Shrink. $= -40 - 33.3 = -73.3°F$

Temperature Rise $= 40\ °F$

P7310 BRIDGE PIER DESIGN

SVERDRUP AND PARCEL FORM 1 FORM ___ OF ___

JOB NO.	PROGRAM P7310
PROBLEM NO.	BY / CHKD

CODE(1)	CODE(2)	CODE(3)	CODE(4)	CODE(5)
.	0.	.	.	.

INPUT FORMS REQUIRED:

CODE(1)=1. PIER ANALYSIS AND DESIGN
2. FOOTING DESIGN ONLY (INDIVIDUAL FTGS.) . . . . . FORMS 1,10 THRU 13
(CONTINUOUS FTGS.) . . FORMS 1,10 THRU 12,14,15

CODE(2)=0.

CODE(3)=0. NO PRINT-OUT OF AASHTO LOADING COMBINATIONS
1. AASHTO LOADING COMBINATIONS PRINTED

CODE(4)=0. EXIT AFTER COMPLETE DESIGN . . . . . FORMS 1 THRU 11
2. EXIT AFTER PIER ANALYSIS . . . . . FORMS 1 THRU 8
3. EXIT AFTER DESIGN OF PIER CAP . . . . . FORMS 1 THRU 9
4. EXIT AFTER DESIGN OF COLUMNS . . . . . FORMS 1 THRU 9
5. EXIT AFTER DESIGN OF COLUMNS ONLY . . . . . FORMS 1 THRU 9
6. EXIT AFTER ANALYSIS FOR CAP BEAM ONLY (CONT. BEAM).FORMS 1 THRU 8

CODE(5)=1. SERVICE LOAD DESIGN (MUST BE 1.0 FOR FOOTING DESIGN)
2. ULTIMATE STRENGTH DESIGN (LOAD FACTOR) OF CAP BEAMS AND COLUMNS ONLY.

STRUCTURE PARAMETERS (CC1 THRU CC18 ONLY REQUIRED FOR CODE(1)=2.)

NO. CAP CANTI-LEVERS	NO.CONT. FTG. CANTI-LEVERS	NO. CAP BEAMS	NO. TIE BEAMS	NO.CONT. FTG. BEAMS	NO. COLS.	NO. JOINTS	NO. SUPPTS.	NO. REL'D. SUPPT. JOINTS	CONCRETE MODULUS OF ELASTICITY(KSF)
1 2 3	4 5 6	7 8 9	10 11 12	13 14 15	16 17 18	19 20 21	22 23 24	25 26 27	31 32 33 34 35 36 37 38 39 40
									.

NOTES:
1) PROGRAM P7310 IS INTENDED FOR USE WHEN COLUMNS HAVE ONLY A MINOR DEVIATION IN HEIGHT (FOR MULTIPLE- LEVEL COLUMNS) AND WHEN COLUMN INCLINATION IS SMALL
2) MAXIMUM NUMBER OF CANTILEVERS,4 (2 ON CAP, 2 ON CONT. FOOTING).
3) SUM OF CAP BEAMS AND TIE BEAMS, MAXIMUM 8.
4) MAXIMUM NUMBER OF CONTINUOUS FOOTING BEAMS,6.
5) MAXIMUM NUMBER OF COLUMNS,7.
6) MAXIMUM NUMBER OF JOINTS,14 (FREE ENDS OF CANTILEVERS NOT COUNTED AS JOINTS)
8) FOR CODE(1)=2. OTHER CODES NEED NOT BE SPECIFIED.
9) FRAMES WITH CONTINUOUS FTGS ARE ANALYSED AS IF FOOTING STIFFNESS WAS INFINITE

Sht No. 53

PIER STRUCTURE DESCRIPTION

JOINT COORDINATES (DIM. FT.) S FOR SUPPORT

1	2	3	5	7	8	9	10	11	12	13	14	15	17	19	20	21	22	23	24	25	26	27	29
		1	X					.					Y					.					
		2	X					.					Y					.					
		3	X					.					Y					.					
		4	X					.					Y					.					
		5	X					.					Y					.					
		6	X					.					Y					.					
		7	X					.					Y					.					
		8	X					.					Y					.					
		9	X					.					Y					.					
	1	0	X					.					Y					.					
	1	1	X					.					Y					.					
	1	2	X					.					Y					.					
	1	3	X					.					Y					.					
	1	4	X					.					Y					.					

SUPPORT JOINT RELEASES
(ENTER 1.0 FOR EACH RELEASE)

JT.			FORCE X								FORCE Y								MOMENT Z					
1	2	3	4	5	6	7	8	9	10	11	12	13	14	15	16	17	18	19	20	21	22	23	24
						.							.							.			
						.							.							.			
						.							.							.			
						.							.							.			
						.							.							.			
						.							.							.			
						.							.							.			
						.							.							.			
						.							.							.			
						.							.							.			

NOTES.

1) JOINTS AT TOP OF COLUMNS ARE TO BE NUMBERED FIRST FROM LEFT TO RIGHT, THEN JOINTS AT BOTTOM OF COLUMNS FROM LEFT TO RIGHT.
2) CAP BEAM MEMBERS ARE TO BE NUMBERED FIRST FROM LEFT TO RIGHT, THEN COLUMN MEMBERS FROM LEFT TO RIGHT, AND FINALLY CONTINUOUS FOOTING MEMBERS FROM LEFT TO RIGHT.
3) CANTILEVERS ARE NOT COUNTED AS BEAM MEMBERS AND DO NOT RECEIVE A MEMBER NUMBER.
4) MEMBER INCIDENCES (REFER TO FORM VII), BEGINNING JOINT IS AT LEFT END OF HORIZONTAL MEMBER, AT BOTTOM END OF COLUMN MEMBERS.
5) COLUMNS MAY BE SUBDIVIDED INTO MULTIPLE LEVELS WITH TIE BEAMS. IF THIS IS DONE, JOINT AND MEMBER NUMBERS SHOULD FOLLOW A LEFT-TO-RIGHT, TOP-TO-BOTTOM PATTERN AS SHOWN BELOW (STILL FOLLOWING GENERAL RULE OF BEAMS FIRST, THEN COLUMNS, THEN CONTINUOUS FOOTING BEAMS).
6) JOINTS ON CONTINUOUS FOOTING ARE CONSIDERED AS SUPPORT JOINTS, BUT NO JOINT RELEASES ARE REQUIRED.
7) TIE BEAMS ARE ASSUMED TO BE HORIZONTAL WHILE CAP BEAMS MAY BE SLOPED BUT ALL DISTANCES MUST BE GIVEN HORIZONTALLY.

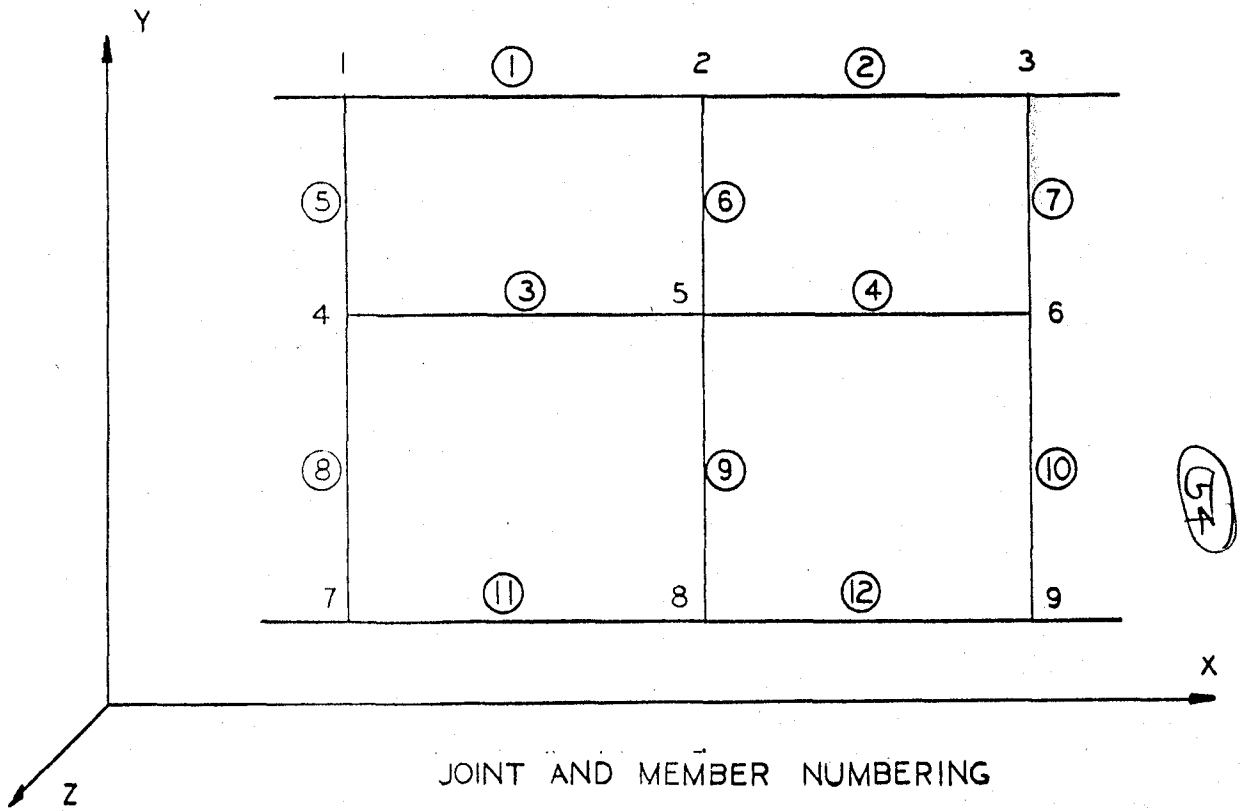

JOINT AND MEMBER NUMBERING

G7

P7310 BRIDGE PIER DESIGN

SVERDRUP AND PARCEL FORM III FORM ___ OF ___

1 2

NO. OF LONG SPAN BEAM SPACINGS TO FOLLOW (29MAX) - DIM. FT. (SEE FORM 4)

1 2

NO.OF SHORT SPAN BEAM SPACINGS TO FOLLOW (29MAX) - DIM.FT. (0 FOR CONT. GIRDERS)

LONG SPAN LENGTH (FT.) NEAR FACE	LONG SPAN LENGTH (FT.) FAR FACE	SHORT SPAN LENGTH (FT.) NEAR FACE	SHORT SPAN LENGTH (FT.) FAR FACE	CODE FOR AASHTO LIVE LOAD	(>1.0) IMPACT FACT.	SKEW DIM. FOR ONE LANE	REACTION FOR ONE LANE (K)

NOTES:

1) THE FIRST SEVEN NUMBERS ON THE LAST CARD ABOVE ARE REQUESTED IF SIMPLE SPAN SUPERSTRUCTURE. THE LAST THREE NUMBERS ARE REQUESTED IF CONTINUOUS SUPERSTRUCTURE. GIVE ONLY REQUESED INFORMATION.
2) SKEW DIMENSION IS WIDTH OF 10 FT. LANE MEASURED PARALLEL TO CENTERLINE OF PIER.
3) CODE FOR AASHTO LIVE LOAD = 1.00 = HS20-44 -1.00 = H20-44
   0.75 = HS15-44 -0.75 = H15-44
   -0.50 = H10-44
4) FOR SIMPLE SPAN SUPERSTRUCTURES SUM OF LONG SPAN BEAM SPACINGS AND SUM OF SHORT SPAN BEAM SPACINGS MUST AGREE WITHIN 0.01 FT.
5) IF BEAMS ARE ALIGNED THEIR DISTANCES FROM ORIGIN MUST AGREE WITHIN 0.01 FT.
6) IF MORE THAN SIX BEAM REACTIONS OCCUR IN ANY SPAN OF CAP, PAIRS OF BEAMS WHICH ARE CLOSEST TOGETHER MUST BE COMBINED AND TREATED AS ONE. SEE FORM VI
7) UP TO TWO BEAMS MAY BE PLACED ON A CANTILEVER.
8) DL AND LL REACTIONS TO BEAMS ARE COMPUTED ON THE BASIS OF SIMPLE SPAN SLABS BETWEEN BEAMS.

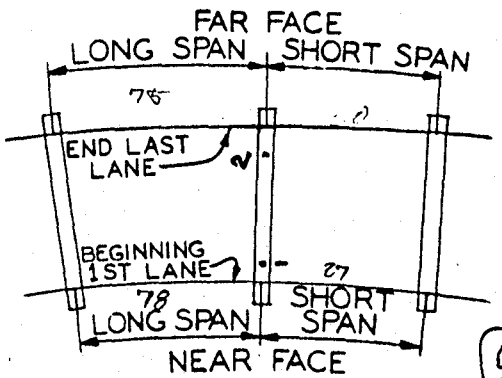

1 2

NO.OF 'C' DISTANCES FROM LOCAL ORIGIN TO BEGINNING OF LANE TO FOLLOW (16MAX)-DIM FT.
(DISTANCES MUST BE GIVEN IN ORDER OF INCREASING MAGNITUDE.)

1	2

NO. OF DL BEAM REACTIONS TO FOLLOW (29 MAX. EA. SPAN, 40 MAX. TOTAL) - DIM. KIPS
(DOWNWARD REACTION NO SIGN REQUIRED, UPWARD NEGATIVE)

NOTES:
1) IF BEAMS ARE ALIGNED THEIR DEAD LOAD REACTIONS MUST BE ADDED AND ENTERED AS ONE REACTION.
2) IF MORE THAN SIX BEAMS OCCUR IN ANY SPAN OF CAP THE DEAD LOAD REACTION OF PAIRS OF BEAMS WHICH ARE CLOSEST TOGETHER MUST BE ADDED AND ENTERED AS ONE REACTION. SEE FORM VI
3) DEAD LOAD BEAM REACTIONS ARE APPLIED IN ORDER FROM LEFT TO RIGHT, REGARDLESS OF WHICH SPAN THEY OCCUPY.

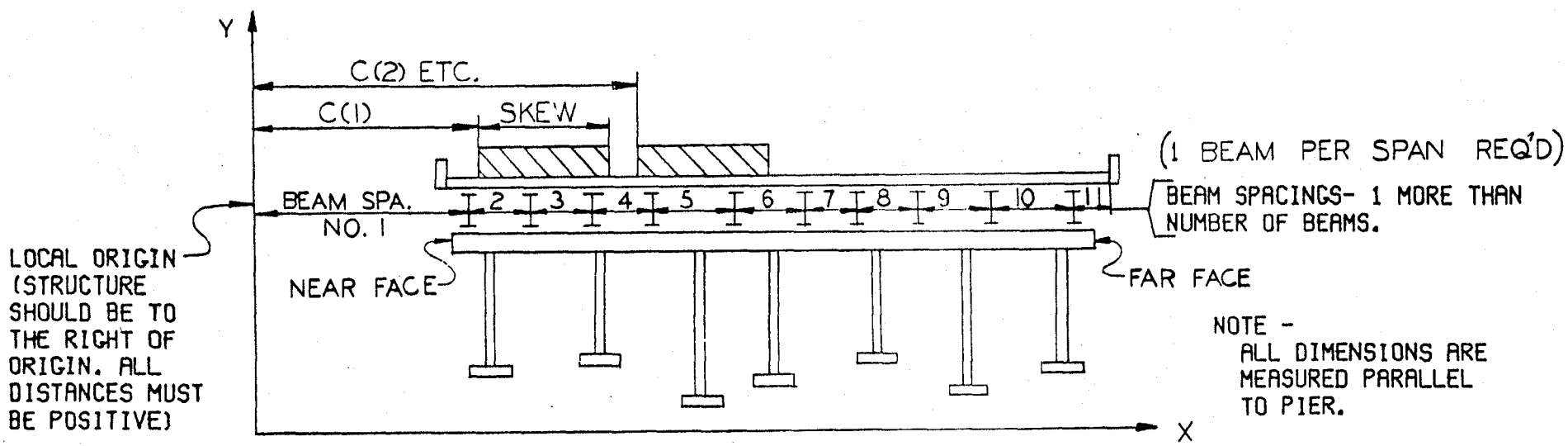

P7310 BRIDGE PIER DESIGN

SVERDRUP AND PARCEL FORM V FORM ___ OF ___

1	2

NO. OF LIVE LOAD COMBINATIONS TO FOLLOW (20 MAX.)

L.L. COMBINATION

1	2	3	4	5	6	7	8	9	10	11	12	13	14

NOTE:

EACH LL COMBINATION SPECIFIES A LOADING CASE CONSISTING OF A COMBINATION OF LL LANES WHICH ARE TO BE APPLIED TO THE STRUCTURE SIMULTANEOUSLY. LANES ARE IDENTIFIED BY LANE NUMBERS WHICH CORRESPOND TO SUBSCRIPTS OF 'C' DISTANCES ON FORM III. MAXIMUM OF 7 LANES PER COMBINATION. AASHTO REDUCTION FACTORS FOR MULTIPLE LANES ARE APPLIED. LANES MAY OVERLAP, BUT LANES INCLUDED IN A COMBINATION MAY NOT.
ALL INTEGER (NON-DECIMAL) NUMBERS MUST BE RIGHT JUSTIFIED.

[redacted] VER[redacted] AN[redacted] RCE[redacted] [redacted] RM [redacted] [redacted] OF [redacted]

A(1)	A(2)	A(3)	A(4)	A(5)	A(6)	CAP BEAM NO. (SPAN NO.) (1 CARD PER CAP BEAM)
						1
						2
						3
						4
						5
						6

HORIZONTAL LOADS (FORCE X -POSITIVE FROM LEFT TO RIGHT) -DIM. KIPS OR DEGREES (REQ'D)

GROUP II WIND	GROUP III LOAD	TEMP FALL+SHK.	TEMP. RISE	EARTHQUAKE FORCE	CENTRIFUGAL FORCE

HORIZONTAL LOADS NORMAL TO PIER (FORCE Z) - DIM. KIPS (REQ'D)

GROUP II WIND	GROUP III LOAD	EARTHQUAKE FORCE

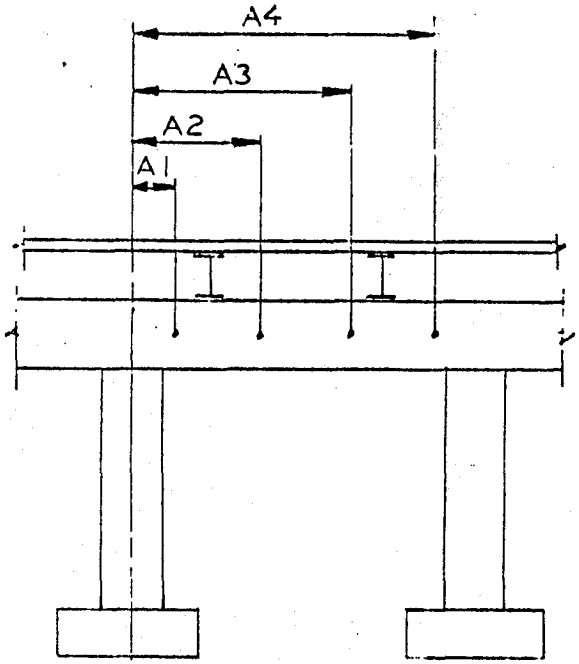

NOTES.

1) ENTER DIMENSION 'A' TO DESIGNATE ADDITIONAL POINTS AT WHICH MOMENTS AND SHEARS WILL BE OUTPUT. THE 'A' DIMENSION(FT.) IS MEASURED FROM LEFT MEMBER END TO THE POINT (SEE FIGURE). THE NUMBER OF 'A' DIMENSIONS AND BEAMS UPON EACH SPAN OF THE PIER CAP (EXCLUDING CANTILEVERS) MUST EQUAL 6. ENTER ONE CARD FOR EACH SPAN OF PIER CAP. ENTER '0' FOR 'A' VALUES NOT NEEDED.
2) TEMP FALL + SHK. MUST BE ENTERED WITH A NEGATIVE SIGN.
3) LOAD NORMAL TO PIER IS DISTRIBUTED TO COLUMNS IN PROPORTION TO I/L RATIOS.
4) LOADS DUE TO TEMPERATURE CHANGE ACT AS AXIAL FORCES APPLIED AT MEMBER ENDS.
5) TEMPERATURE FORCES ARE NOT APPLIED TO MEMBERS OF CONTINUOUS FOOTINGS.
6) HORIZONTAL LOADS PARALLEL TO PIER ARE APPLIED AT CENTERLINE OF CAP BEAM. HORIZONTAL LOADS NORMAL TO PIER ARE APPLIED AT TOP OF CAP BEAM.
7) GROUP II WIND FORCES ARE REQUIRED IF ANY HORIZONTAL FORCES ARE TO BE APPLIED TO THE PIER FRAME. ENTER AS A POSITIVE FORCE.

P7310 BRIDGE PIER DESIGN

SVERDRUP AND PARCEL

FORM VII

FORM ___ OF ___

MEMBER INCIDENCES

MEMB NO.	BEG. JT.	END JT.
1		
2		
3		
4		
5		
6		
7		
8		
9		
10		
11		
12		
13		

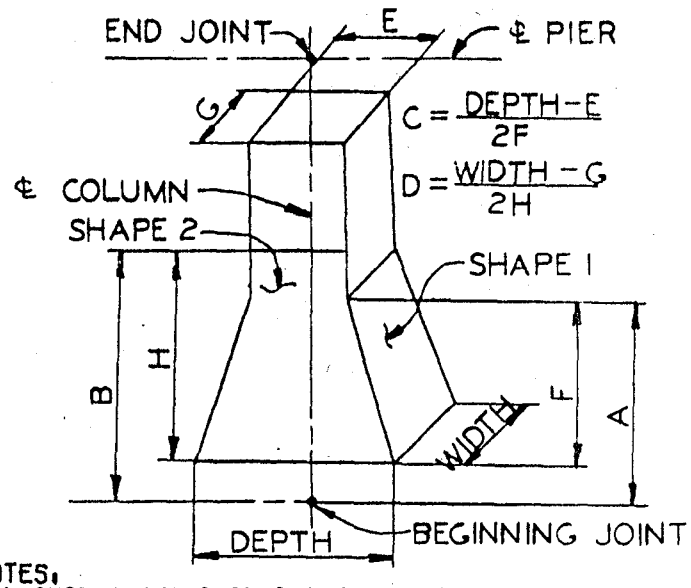

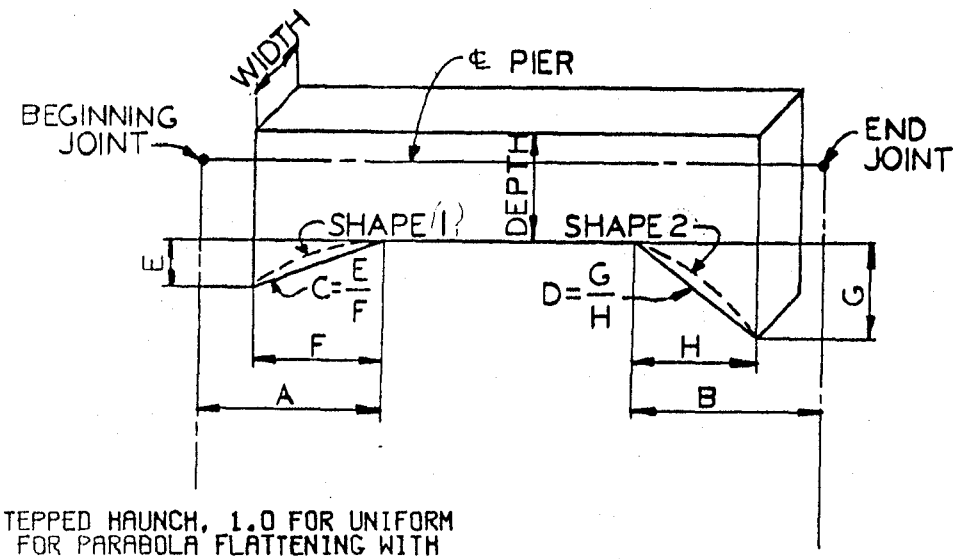

NOTES:
1) SHAPE1 AND SHAPE2 ARE 0.0 FOR NO HAUNCH OR STEPPED HAUNCH, 1.0 FOR UNIFORM STRAIGHT TAPER, 2.0 FOR PARABOLA, 3.0 TO 9.0 FOR PARABOLA FLATTENING WITH THE INCREASE.
2) FOR ROUND COLUMNS ENTER DIAMETER AS DEPTH, WIDTH AS ZERO, AND SHAPE2=-1.0.
3) VARIABLE COLUMN CROSS-SECTIONS ALLOWED FOR ANALYSIS ONLY. COLUMN DESIGN ASSUMES PRISMATIC MEMBER OF DIMENSIONS DEPTH(OR DIAM.)×WIDTH.

MEMBER PROPERTY DESCRIPTIONS (DIMENSIONS IN FT.)

MEM.NO.	DEPTH (DIA.)	WIDTH	A	B	C	D	SHAPE 1	SHAPE 2
1								
2								
3								
4								
5								
6								
7								
8								
9								
10								
11								
12								

CANTILEVER DESCRIPTION (DIMENSIONS IN FT.)
(NOT REQ'D IF NO. CANTILEVERS=0 FOR BOTH CAP AND FTG.)

JT. NO.	A	B	C	D	WIDTH(E)	F

NOTES.
1) DEFINITION OF 'D' SAME AS 'SHAPE1' AND 'SHAPE2' FOR BEAMS AND COLUMNS.
2) 'F' MUST BE NEGATIVE IF CANTILEVER PROJECTS LEFT FROM THE JOINT.

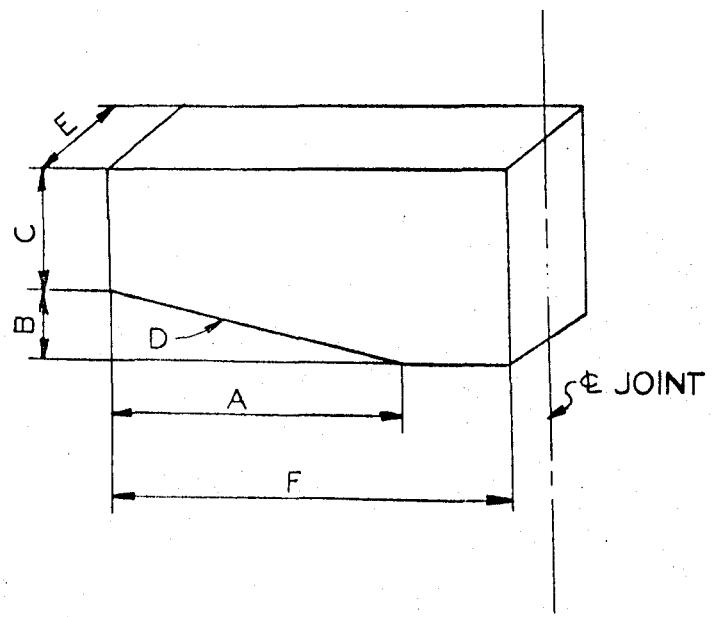

P7310 BRIDGE PIER DESIGN

SVERDRUP AND PARCEL FORM IX FORM ___ OF ___

CAP DESIGN DATA
(NOT REQUIRED FOR COLUMN DESIGN ONLY)

CONC. STRENGTH 28 DAYS F'C (PSI)	YIELD STRESS OF REINFORCEMENT (PSI)	ALPHA (DEC.)

MAX. AGGREGATE SIZE (IN.)	BAR COVER (IN.)

NOTES,
1) ALPHA IS THE ANGLE OF INCLINED STIRRUPS MEASURED FROM THE VERTICAL POSITION. 45 DEGREES IS THE MAXIMUM ANGLE ACCEPTED.
2) COLUMN TYPE
   CC2, 1=CIRCULAR CROSS SECTION WITH CIRCULAR REINFORCEMENT PATTERN
   2=RECTANGULAR CROSS SECTION WITH CIRCULAR REINFORCEMENT PATTERN
   3=RECTANGULAR CROSS SECTION WITH RECTANGULAR REINFORCEMENT PATTERN
   CC4, (NOT REQUIRED FOR RECTANGULAR REINFORCEMENT PATTERN)
   1=SPIRAL REINFORCEMENT
   2=TIED REINFORCEMENT
   TIED REINFORCEMENT IS ASSUMED WHEN A RECTANGULAR REINFORCEMENT PATTERN IS SPECIFIED.
3) THE TOTAL INCREASE IN COLUMN SIZE SHOULD NORMALLY BE LESS THAN 12 IN. THE DEPTH AND WIDTH INCREMENTS ARE SET INTERNALLY TO MINIMUM VALUES EQUAL TO 10 PERCENT OF THE COLUMN DIMENSIONS. LARGER VALUES ONLY SHOULD BE SPECIFIED.
4) FOR ROUND COLUMNS THE INCREMENTS FOR DEPTH AND WIDTH SHOULD HAVE THE SAME VALUE.
5) THE COLUMN DESIGNS ARE BASED ON 2 BAR SIZES ONLY, THE MAXIMUM BAR SIZE INPUT AND THE NEXT SIZE SMALLER.
6) THE PIER IS NOT REANALYZED WHEN THE COLUMN SIZES ARE INCREASED.
7) THE EFF. LENGTH FACTOR IS APPLIED IN THE LONGITUDINAL DIRECTION ONLY. IN THE TRANSVERSE DIRECTION K=1 IN ALL CASES.
8) SLENDERNESS AFFECTS ARE APPLIED IN THE LONGITUDINAL DIRECTION ONLY.

REINFORCING BAR COMBINATIONS (MAX.5)

	CHOICE 1	CHOICE 2	CHOICE 3	CHOICE 4	CHOICE 5
LONGITUDINAL BAR SIZE	2 3	3 4	4 5	5 6	6 7
STIRRUP BAR SIZE					

COLUMN DESIGN DATA (NOT REQUIRED FOR 'CAP DESIGN ONLY' OPTION)

COL. TYPE	MAX. PCT. STEEL	TOTAL INCREASE TO BE CONSIDERED IN DESIGN DEPTH (IN.)	WIDTH (IN.)	CONC. STRENGTH 28 DAYS F'C (PSI)	YIELD STRESS OF REINF. FY (PSI)	MIN. CLEAR SPACING OF REINF. (IN.)	COVER FOR REINF. (IN.)	DEPTH INCREMENT (IN.)	WIDTH INCREMENT (IN.)	LONGIT. EFF. LGTH. FACT. (K)	MAX. BAR SIZE
2											

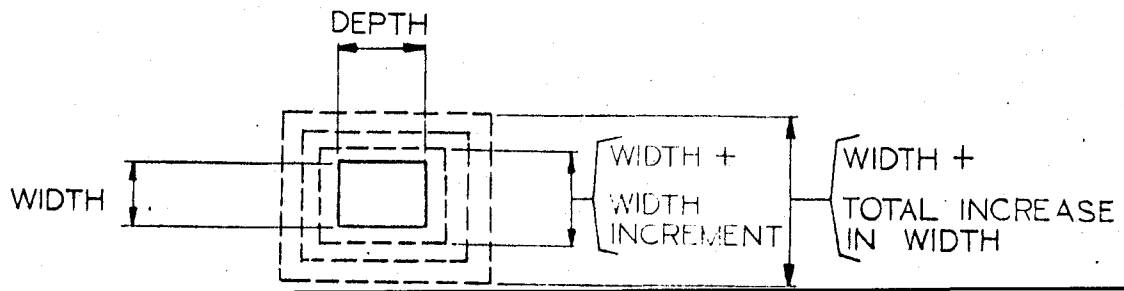

80-COLUMN CARD PUNCH FORMAT

SVERDRUP & PARCEL

JOB 6784 FCDMC - RWCD Flooding Brs. DATE 4-1-80 BY JFF CHKD WEG

SHEET 62 OF ____ 30 CARDS ON THIS SHEET

```
JØB NØ. 6784 - FCDMC - RWCD FLØØDWAY - BASELINE RD. BRIDGE - PRØGRAM P7310
PRØBLEM - PIER DESIGN                                    BY JFF          CHKD
   1.          0.          1.          4.          1.
  2  0  6  0  0  7 14  7  0          454000.
  1 X     5.7957 Y     0.
  2 X    18.2957 Y     0.
  3 X    30.7957 Y     0.
  4 X    43.2957 Y     0.
  5 X    55.7957 Y     0.
  6 X    68.2957 Y     0.
  7 X    80.7957 Y     0.
  8 X     5.7957 Y   -18.2       S
  9 X    18.2957 Y   -18.2       S
 10 X    30.7957 Y   -18.2       S
 11 X    43.2957 Y   -18.2       S
 12 X    55.7957 Y   -18.2       S
 13 X    68.2957 Y   -18.2       S
 14 X    80.7957 Y   -18.2       S
29
   3.7         1.0957      4.1         2.1         2.1         2.1         6.2         2.1
   2.1         2.1         6.2         2.1         2.1         2.1         6.2         2.1
   2.1         2.1         6.2         2.1         2.1         2.1         6.2         2.1
   2.1         2.1         4.1         1.0957      3.7
0
                                                                1.3         10.8239     61.1
10
   1.7138      5.6103     16.4343     20.3308     31.1549     35.0514     45.8754     49.7719
  60.5960     64.4925
28
  86.27       -38.63      25.7        25.7        25.7        25.7        25.7        25.7
```

80-COLUMN CARD PUNCH FORMAT **SVERDRUP & PARCEL**

JOB 6784 FCDMC - RWCD [illegible] Brs. DATE 4-4-80 BY JFF CHKD WEG SHEET 63 OF ___

30 CARDS ON THIS SHEET

```
   25.7      25.7      25.7      25.7      25.7      25.7      25.7      25.7
   25.7      25.7      25.7      25.7      25.7      25.7      25.7      25.7
   25.7      25.7     -38.63     86.27
20
 1
 2
 3
 4
 5
 6
 7
 8
 9
10
 2 3
 2 5
 4 5
 4 7
 5 7
 5 9
 2 3 7
 2 5 7
 4 5 7
 4 6 7
     .88     11.62
     .88     11.62
     .88     11.62
     .88     11.62
     .88     11.62
     .88     11.62
```

80-COLUMN CARD PUNCH FORMAT

SVERDRUP & PARCEL

JOB 6784 FCDMC-RWCD Fl[illegible] Brs.

DATE 4-5-80

BY JFF CHKD WEG

SHEET 64 OF ____

30 CARDS ON THIS SHEET

Cols 1–3	Cols 4–8	Cols 9–12	Cols 13–17	Cols 18–27	Cols 28–40	Cols 41–48	Cols 49–58	Cols 69–72
	13.3		22.0	-73.3	40.0	103.0	0.	
	7.1		18.9	110.1				
1	1	2						
2	2	3						
3	3	4						
4	4	5						
5	5	6						
6	6	7						
7	8	1						
8	9	2						
9	10	3						
10	11	4						
11	12	5						
12	13	6						
13	14	7						
1	2.		3.					
2	2.		3.					
3	2.		3.					
4	2.		3.					
5	2.		3.					
6	2.		3.					
7	2.							-1.
8	2.							-1.
9	2.							-1.
10	2.							-1.
11	2.							-1.
12	2.							-1.
13	2.							-1.
1	0.		0.	2.	0.	3.	-5.7957	
7	0.		0.	2.	0.	3.	5.7957	

80-COLUMN CARD PUNCH FORMAT

SVERDRUP & PARCEL

JOB 6784 FCDMC- RWCD Flea... Brs.

DATE 4-7-80

BY JFF CHKD WEG

SHEET 65 OF

5 CARDS ON THIS SHEET

```
         1         2         3         4         5         6         7         8
12345678901234567890123456789012345678901234567890123456789012345678901234567890
   3000.    40000.        0.
      1.        3.27
                             9
                             5
 1 28.      6.      6.   3000.  40000.      3.53    2.5     6.      6.   2.1  11
```

```
SVERDRUP & PARCEL AND ASSOCIATES, INC.        13133 APR 09,'80  PAGE  1
JOB NO. 6784 - FCDMC - RACD FLOODWAY - BASELINE RD. BRIDGE - PROGRAM P7310
PROBLEM - PIER DESIGN                                  BY JFF        CHKD WEA
  CODE(1)   CODE(2)   CODE(3)   CODE(4)   CODE(5)
   1.0000    .0000    1.0000    4.0000    1.0000
*****************************************************************************
                              INPUT DATA
*****************************************************************************
NO. OF CAP CANTILEVERS          = 2        NO. OF JOINTS              = 14
NO. OF CONT. FTG. CANTILEVERS   = 0        NO. OF SUPPORTS            =  7
NO. OF CAP BEAMS                = 6        NO. OF REL. SUPPORT JTS.   =  0
NO. OF TIE BEAMS                = 0        NO. OF SEGMENTS PER MEMBER = 10
NO. OF CONT. FTG. BEAMS         = 0        MODULUS OF ELASTICITY      = 454000.
NO.  OF COLUMNS                 = 7

JOINT COORDINATES
 1 X   5.7957 Y    .0000
 2 X  18.2957 Y    .0000
 3 X  30.7957 Y    .0000
 4 X  43.2957 Y    .0000
 5 X  55.7957 Y    .0000
 6 X  68.2957 Y    .0000
 7 X  80.7957 Y    .0000
 8 X   5.7957 Y  -18.2000 S
 9 X  18.2957 Y  -18.2000 S
10 X  30.7957 Y  -18.2000 S
11 X  43.2957 Y  -18.2000 S
12 X  55.7957 Y  -18.2000 S
13 X  68.2957 Y  -18.2000 S
14 X  80.7957 Y  -18.2000 S

29 LONG SPAN BEAM SPACINGS TO FOLLOW
  3.7000   1.0957   4.1000   2.1000   2.1000   2.1000   6.2000   2.1000
  2.1000   2.1000   6.2000   2.1000   2.1000   2.1000   6.2000   2.1000
  2.1000   2.1000   6.2000   2.1000   2.1000   2.1000   6.2000   2.1000
  2.1000   2.1000   4.1000   1.0957   3.7000

    SUPERSTRUCTURE IS CONTINUOUS OVER  PIER
IMP.FACT.  SKEW DIM.  REACTION FROM ONE LANE(MAX)
  1.3000   10.8239    61.1000

NO. OF LIVE LOAD LANE LOCATIONS TO FOLLOW IS 10
  1.7138   5.6103  16.4343  20.3303  31.1549  35.0514  45.8754  49.7719
 60.5960  64.4925

NO. OF DEAD LOAD BEAM REACTIONS TO FOLLOW IS 28
 86.2700 -38.6300  25.7000  25.7000  25.7000  25.7000  25.7000  25.7000
 25.7000  25.7000  25.7000  25.7000  25.7000  25.7000  25.7000  25.7000
 25.7000  25.7000  25.7000  25.7000  25.7000  25.7000  25.7000  25.7000
 25.7000  25.7000 -38.6300  86.2700

COLUMN DISTANCES FROM ORIGIN TO FOLLOW
  5.7957  18.2957  30.7957  43.2957  55.7957  68.2957  80.7957   .0000
```

Sht. No. 66

SVERDRUP & PARCEL AND ASSOCIATES, INC. 13:33 APR 09, '80 PAGE 2

JOB NO. 6784 - FCOMC - RACO FLOODWAY - BASELINE RD. BRIDGE - PROGRAM P7310

PROBLEM - PIER DESIGN BY JFF CHKD WEG

NO. OF LIVE LOAD COMBINATIONS TO FOLLOW IS 20

```
 1 0 0 0 0 0
 2 0 0 0 0 0
 3 0 0 0 0 0
 4 0 0 0 0 0
 5 0 0 0 0 0
 6 0 0 0 0 0
 7 0 0 0 0 0
 8 0 0 0 0 0
 9 0 0 0 0 0
10 0 0 0 0 0
 2 3 0 0 0 0
 2 5 0 0 0 0
 4 5 0 0 0 0
 4 7 0 0 0 0
 5 7 0 0 0 0
 5 9 0 0 0 0
 2 3 7 0 0 0
 2 5 7 0 0 0
 4 5 7 0 0 0
 4 6 7 0 0 0
```

A(1)	A(2)	A(3)	A(4)	A(5)	A(6)
.8800	11.6200	.0000	.0000	.0000	.0000
.8800	11.6200	.0000	.0000	.0000	.0000
.8800	11.6200	.0000	.0000	.0000	.0000
.8800	11.6200	.0000	.0000	.0000	.0000
.8800	11.6200	.0000	.0000	.0000	.0000
.8800	11.6200	.0000	.0000	.0000	.0000

HORIZONTAL LOADS (FORCE X - POSITIVE FROM LEFT TO RIGHT

GR.2 WIND	GR.3 LOAD	TEMP. F+S	TEMP.RISE	GR.7 EQ	CENT.FORCE
13.300	22.000	-73.300	40.000	103.000	.000

HORIZONTAL LOADS NORMAL TO PIER (FORCE Z)

GR.2 WIND	GR.3 LOAD	GR.7 EQ
7.100	18.900	110.100

MEMBER INCIDENCES

```
 1   1   2
 2   2   3
 3   3   4
 4   4   5
 5   5   6
 6   6   7
 7   8   1
 8   9   2
 9  10   3
10  11   4
11  12   5
12  13   6
13  14   7
```

MEMBER PROPERTY DESCRIPTIONS

67

13:33 APR 09, '80 PAGE

BY JFF CHKD WEG

MEM.	DEPTH	WIDTH	A	B	C	D	SHAPE1	SHAPE2
1	2.0000	3.0000	.0000	.0000	.0000	.0000	.0000	.0000
2	2.0000	3.0000	.0000	.0000	.0000	.0000	.0000	.0000
3	2.0000	3.0000	.0000	.0000	.0000	.0000	.0000	.0000
4	2.0000	3.0000	.0000	.0000	.0000	.0000	.0000	.0000
5	2.0000	3.0000	.0000	.0000	.0000	.0000	.0000	.0000
6	2.0000	3.0000	.0000	.0000	.0000	.0000	.0000	.0000
7	2.0000	.0000	.0000	.0000	.0000	.0000	.0000	-1.0000
8	2.0000	.0000	.0000	.0000	.0000	.0000	.0000	-1.0000
9	2.0000	.0000	.0000	.0000	.0000	.0000	.0000	-1.0000
10	2.0000	.0000	.0000	.0000	.0000	.0000	.0000	-1.0000
11	2.0000	.0000	.0000	.0000	.0000	.0000	.0000	-1.0000
12	2.0000	.0000	.0000	.0000	.0000	.0000	.0000	-1.0000
13	2.0000	.0000	.0000	.0000	.0000	.0000	.0000	-1.0000

CANTILEVER DESCRIPTION

JT.	A	B	C	D	WIDTH(E)	F
1	.0000	.0000	2.0000	.0000	3.0000	-5.7957
7	.0000	.0000	2.0000	.0000	3.0000	5.7957

SVERDRUP & PARCEL AND ASSOCIATES, INC. 13133 APR 09,'80 PAGE 4

JOB NO. 6784 - ECONC - RACD FLOODWAY - BASELINE RD. BRIDGE- PROGRAM P7310

PROBLEM - PIER DESIGN BY JFF CHKD. WEG

RIGID FRAME BRIDGE PIER
MAXIMUM POSITIVE VALUES

MEMBER END ACTIONS
THRUST AND SHEAR (K); MOMENTS (K-FT)

MEMBER NO.	THRUST	SHEAR	MOMENT	THRUST	SHEAR	MOMENT	
1 JOINT 1	1.999	91.203	216.021	.343	107.687	-144.298	JOINT 2
LOAD CASE	11	12	1	4	11	6	
2 JOINT 2	1.474	101.710	263.866	.538	103.247	-144.407	JOINT 3
LOAD CASE	11	11	11	1	13	2	
3 JOINT 3	1.654	101.413	266.512	.362	96.165	-144.089	JOINT 4
LOAD CASE	12	13	13	1	15	3	
4 JOINT 4	1.378	100.361	253.972	.297	96.529	-145.143	JOINT 5
LOAD CASE	17	20	15	1	14	13	
5 JOINT 5	1.013	85.339	209.866	.214	95.283	-147.829	JOINT 6
LOAD CASE	16	4	8	1	16	6	
6 JOINT 6	1.295	94.835	217.975	.230	70.730	-154.468	JOINT 7
LOAD CASE	10	10	10	8	10	8	
7 JOINT 8	186.463	.343	2.020	-106.981	1.999	4.217	JOINT 1
LOAD CASE	1	4	4	14	11	4	
8 JOINT 9	217.373	1.709	10.711	-109.697	1.519	20.391	JOINT 2
LOAD CASE	11	12	12	6	14	12	
9 JOINT 10	216.837	1.507	9.058	-109.629	1.479	18.377	JOINT 3
LOAD CASE	13	14	14	2	12	14	
10 JOINT 11	202.478	1.564	9.811	-110.034	1.467	18.897	JOINT 4
LOAD CASE	20	12	12	3	14	16	
11 JOINT 12	184.666	1.281	8.052	-110.203	1.196	15.576	JOINT 5
LOAD CASE	8	7	17	12	16	7	
12 JOINT 13	184.838	.774	4.575	-111.234	.720	9.503	JOINT 6
LOAD CASE	10	16	16	20	10	16	
13 JOINT 14	132.169	1.295	7.583	-109.136	.236	15.989	JOINT 7
LOAD CASE	10	10	10	8	6	10	

BEAM MOMENTS AND SHEARS

MEMBER NO. 1

DIST.FROM LT.SUPT.	.880	3.100	5.200	7.300	9.400	11.620
MOMENTS	-105.421	88.409	171.453	164.339	67.669	-95.249
LD.CASE	5	12	12	12	12	6
SHEARS	90.078	88.953	38.848	-.163	-28.113	-54.938
LD.CASE	12	12	12	6	6	6

MEMBER NO. 2

DIST.FROM LT.SUPT.	.880	3.100	5.200	7.300	9.400	11.620
MOMENTS	-96.194	79.027	159.922	165.218	68.357	-96.486
LD.CASE	6	3	14	14	14	7
SHEARS	100.585	99.460	44.757	2.802	-25.148	-51.973
LD.CASE	11	11	14	2	2	2

MEMBER NO. 3

69

BY JTF [illegible] WEG

DIST.FROM LT.SUPT.	.880	3.100	5.200	7.300	[illegible]	11.620
MOMENTS	-95.990	77.562	164.778	162.454	[illegible]	-96.791
LD.CASE	2	12	12	16	8	9
SHEARS	103.288	102.163	46.575	5.549	-25.52[illegible]	-52.345
LD.CASE	13	13	6	6	3	3

MEMBER NO. 4

DIST.FROM LT.SUPT.	.880	3.100	5.200	7.300	[illegible]	11.620
MOMENTS	-96.290	58.015	154.906	161.639	73.217	-96.341
LD.CASE	3	14	14	14	14	13
SHEARS	99.236	98.111	49.119	8.668	-25.489	-52.314
LD.CASE	20	20	15	8	5	5

MEMBER NO. 5

DIST.FROM LT.SUPT.	.880	3.100	5.200	7.300	9.400	11.620
MOMENTS	-96.837	52.064	133.413	149.388	75.207	-96.537
LD.CASE	12	8	16	16	16	6
SHEARS	84.714	83.589	45.141	6.832	-25.431	-53.673
LD.CASE	8	8	9	9	19	20

MEMBER NO. 6

DIST.FROM LT.SUPT.	.880	3.100	5.200	7.300	[illegible]	11.620
MOMENTS	-98.468	71.840	145.083	124.456	[illegible]	-104.992
LD.CASE	6	10	10	10	10	1
SHEARS	93.710	92.585	34.181	-.320	-24.33[illegible]	-55.155
LD.CASE	10	10	10	8	8	8

CANTILEVERS

NO.	JOINT	MOMENT	SHEAR
1	1	-157.282	90.516
2	7	157.273	52.856

SVERDRUP & PARCEL AND ASSOCIATES, INC. 13:33 APR 09,'80 PAGE 6

JOB NO. 6784 - ECDYC - PACO FLOODWAY - BASELINE RD. BRIDGE- PROGRAM P7310

PROBLEM - PIER DESIGN BY JFF CHKD WEG

RIGID FRAME BRIDGE PIER
MAXIMUM NEGATIVE VALUES

MEMBER END ACTIONS
THRUST AND SHEAR (K); MOMENTS (K-FT).

MEMBER NO.	THRUST	SHEAR	MOMENT	THRUST	SHEAR	MOMENT	
1 JOINT 1	-.343	54.125	153.065	-1.999	56.[illegible]3	-269.820	JOINT 2
LOAD CASE	4	14	4	11	6	11	
2 JOINT 2	-.538	53.634	143.105	-1.474	53.098	-265.769	JOINT 3
LOAD CASE	1	6	6	11	2	13	
3 JOINT 3	-.362	53.252	144.171	-1.654	53.47[illegible]	-254.827	JOINT 4
LOAD CASE	1	7	7	12	3	15	
4 JOINT 4	-.297	54.027	144.873	-1.378	53.433	-217.914	JOINT 5
LOAD CASE	1	9	9	17	5	7	
5 JOINT 5	-.214	56.739	146.480	-1.013	54.79[illegible]	-216.019	JOINT 6
LOAD CASE	1	12	12	16	20	16	
6 JOINT 6	-.230	56.316	147.794	-1.295	56.2[illegible]	-175.261	JOINT 7
LOAD CASE	8	11	6	10	4	10	
7 JOINT 8	115.558	-1.999	-11.696	-177.886	-.343	-24.678	JOINT 1
LOAD CASE	14	11	11	1	4	11	
8 JOINT 9	118.273	-1.519	-9.293	-208.797	-1.7[illegible]	-18.3[illegible]	JOINT 2
LOAD CASE	6	14	14	11	12	14	
9 JOINT 10	118.206	-1.479	-8.980	-208.261	-1.5[illegible]7	-18.292	JOINT 3
LOAD CASE	2	12	16	13	14	12	
10 JOINT 11	118.610	-1.447	-8.862	-193.902	-1.5[illegible]	-17.473	JOINT 4
LOAD CASE	3	14	14	20	12	14	
11 JOINT 12	118.780	-1.195	-7.357	-176.090	-1.281	-14.391	JOINT 5
LOAD CASE	12	16	16	8	7	16	
12 JOINT 13	119.810	-.720	-4.630	-176.261	-.778	-8.476	JOINT 6
LOAD CASE	20	10	10	10	16	10	
13 JOINT 14	117.713	-.230	-1.389	-123.592	-1.295	-2.804	JOINT 7
LOAD CASE	8	8	8	10	10	8	

BEAM MOMENTS AND SHEARS

MEMBER NO. 1

DIST.FROM LT.SUPT.	.880	3.100	5.200	7.300	9.400	11.620
MOMENTS	-139.422	10.547	62.253	56.164	-7.720	-175.069
LD.CASE	1	14	14	14	14	11
SHEARS	53.000	51.875	23.925	-4.395	-49.644	-105.962
LD.CASE	14	14	14	1	11	11

MEMBER NO. 2

DIST.FROM LT.SUPT.	.880	3.100	5.200	7.300	9.400	11.620
MOMENTS	-174.649	-14.518	45.125	46.973	-8.973	-174.670
LD.CASE	11	12	12	12	12	13
SHEARS	52.509	51.384	23.434	-6.364	-49.391	-102.723
LD.CASE	6	6	6	3	3	13

MEMBER NO. 3

17

DIST.FROM LT.SUPT.	.880	3.100	5.200	7.300	9.400	11.620
MOMENTS	-174.915	-4.889	50.804	47.942	-12.718	-170.476
LD.CASE	13	3	14	14	14	15
SHEARS	52.127	51.002	23.052	-5.805	-49.160	-95.080
LD.CASE	7	7	7	15	15	15

MEMBER NO. 4

DIST.FROM LT.SUPT.	.880	3.100	5.200	7.300	9.400	11.620
MOMENTS	-172.802	-9.983	49.090	50.367	-6.150	-135.594
LD.CASE	15	16	16	16	16	20
SHEARS	52.902	51.777	23.827	-4.123	-41.279	-95.704
LD.CASE	9	9	9	9	14	14

MEMBER NO. 5

DIST.FROM LT.SUPT.	.880	3.100	5.200	7.300	9.400	11.620
MOMENTS	-142.892	3.719	66.191	70.869	17.521	-134.130
LD.CASE	20	20	20	20	7	10
SHEARS	55.614	54.489	25.464	-7.536	-36.478	-94.158
LD.CASE	12	12	8	8	16	16

MEMBER NO. 6

DIST.FROM LT.SUPT.	.880	3.100	5.200	7.300	9.400	11.620
MOMENTS	-138.194	11.151	70.510	72.075	15.846	-111.300
LD.CASE	16	8	8	8	8	10
SHEARS	55.191	54.066	24.809	-9.043	-42.786	-69.611
LD.CASE	11	11	9	10	10	10

CANTILEVERS

NO.	JOINT	MOMENT	SHEAR
1	1	-215.317	52.856
2	7	157.273	52.856

SVERDRUP & PARCEL AND ASSOCIATES, INC. 13133 APR 09,'80 PAGE 8

JOB NO. 6784 - ECONC - PACO FLOODWAY - BASELINE RD. BRIDGE - PROGRAM P7510

PROBLEM - PIER DESIGN BY JFF CHKD WEG

RIGID FRAME BRIDGE PIER
LOADING CASE 21
DEAD LOAD ONLY

JOINT 7 HORIZONTAL FORCE .000 TEMPR.CHANGE .0 A.A.S.H.T.O. GROUP .000 -ELASTIC FACT. 1.000

JOINT	JOINT DISPLACEMENTS IN INCHES, ROT. IN RADIANS X	Y	R	JOINT REACTIONS X	Y	R
1	-.000014	-.017572	.000017	.000	.000	.000
2	-.000008	-.018011	-.000007	.000	.000	.000
3	-.000004	-.018144	.000001	.000	.000	.000
4	-.000000	-.018114	-.000000	.000	.000	.000
5	.000004	-.018144	-.000001	.000	.000	.000
6	.000008	-.018011	.000007	.000	.000	.000
7	.000014	-.017571	-.000017	.000	.000	.000
8	.000000	.000000	.000000	-.112	119.041	.676
9	.000000	.000000	.000000	.043	121.911	-.262
10	.000000	.000000	.000000	-.006	122.780	.037
11	.000000	.000000	.000000	.000	122.585	-.000
12	.000000	.000000	.000000	.006	122.780	-.037
13	.000000	.000000	.000000	-.043	121.912	.262
14	.000000	.000000	.000000	.112	119.039	-.675

MEMBER END ACTIONS
THRUST AND SHEAR (K); MOMENTS (K-FT)

MEMBER NO.		THRUST	SHEAR	MOMENT	THRUST	SHEAR	MOMENT	
1	JOINT 1	-.112	57.608	155.922	.112	56.392	-148.631	JOINT 2
2	JOINT 2	-.069	56.992	149.151	.069	57.157	-150.810	JOINT 3
3	JOINT 3	-.075	57.046	150.735	.075	57.004	-150.473	JOINT 4
4	JOINT 4	-.075	57.005	150.474	.075	57.045	-150.734	JOINT 5
5	JOINT 5	-.069	57.159	150.810	.069	56.991	-149.153	JOINT 6
6	JOINT 6	-.112	56.444	148.633	.112	57.608	-155.915	JOINT 7
7	JOINT 8	119.041	.112	.676	-110.964	-.112	1.360	JOINT 1
8	JOINT 9	121.911	-.043	-.262	-113.334	.043	-.520	JOINT 2
9	JOINT 10	122.780	.006	.037	-114.204	-.006	.076	JOINT 3
10	JOINT 11	122.585	-.000	-.000	-114.009	.000	-.000	JOINT 4
11	JOINT 12	122.780	-.006	-.037	-114.204	.006	-.076	JOINT 5
12	JOINT 13	121.912	.043	.262	-113.335	-.043	.519	JOINT 6
13	JOINT 14	119.039	-.112	-.675	-110.462	.112	-1.358	JOINT 7

MOMENTS AND SHEARS BEAM NO 1

DIST.FROM LT.SUPT.	.880	3.100	5.200	7.300	9.400	11.620	
MOMENTS	-105.514	18.501	77.521	78.746	22.175	-99.249	
SHEARS	56.483	55.358	27.408	-.542	-28.492	-55.517	

MOMENTS AND SHEARS BEAM NO 2

DIST.FROM LT.SUPT.	.880	3.100	5.200	7.300	9.400	11.620
MOMENTS	-99.373	23.052	80.568	80.290	22.218	-100.798
SHEARS	55.767	54.642	26.692	-1.258	-29.208	-56.033

MOMENTS AND SHEARS BEAM NO 3

73

DIST.FROM LT.SUPT.	.880	3.100	5.200	7.300	[illegible]	11.620
MOMENTS	-100.821	21.944	79.784	79.929	22.[illegible]	-100.997
SHEARS	55.921	54.796	26.846	-1.104	-2[illegible].[illegible]4	-55.879

MOMENTS AND SHEARS BEAM NO 4

DIST.FROM LT.SUPT.	.880	3.100	5.200	7.300	[illegible]	11.620
MOMENTS	-100.596	22.075	79.827	79.785	21.[illegible]	-100.821
SHEARS	55.880	54.755	26.805	-1.145	-2[illegible].[illegible]5	-55.920

MOMENTS AND SHEARS BEAM NO 5

DIST.FROM LT.SUPT.	.880	3.100	5.200	7.300	[illegible]	11.620
MOMENTS	-100.798	22.213	80.288	80.569	23.055	-99.374
SHEARS	56.034	54.909	26.959	-.991	-28.941	-55.766

MOMENTS AND SHEARS BEAM NO 6

DIST.FROM LT.SUPT.	.880	3.100	5.200	7.300	[illegible]	11.620
MOMENTS	-99.250	22.172	78.746	77.526	18.511	-105.508
SHEARS	55.319	54.194	26.244	-1.706	-2[illegible].[illegible]	-56.481

CANTILEVERS

NO.	JOINT	MOMENT	SHEAR
1	1	-157.282	52.856
2	7	157.273	52.856

SVERDRUP & PARCEL AND ASSOCIATES, INC. 13133 APR 09,'80 PAGE 10

JOB NO. 6784 - FCDMC - RACD FLOODWAY - BASELINE RD. BRIDGE - PROGRAM P7310

PROBLEM - PIER DESIGN BY JFF CHKD WGG

RIGID FRAME BRIDGE PIER
LOADING CASE 22
HORIZONTAL FORCE

JOINT 1 HORIZONTAL FORCE 13.300 TEMPR.CHANGE .0 A.A.S.H.T.O. GROUP .000 REDUCTION FACT. 1.000

JOINT	JOINT DISPLACEMENTS IN INCHES, ROT. IN RADIANS X	Y	R	JOINT REACTIONS X	Y	R
1	.036407	.000319	-.000051	.000	.000	.000
2	.035775	-.000120	-.000015	.000	.000	.000
3	.035255	.000015	-.000021	.000	.000	.000
4	.034842	-.000002	-.000020	.000	.000	.000
5	.034535	-.000018	-.000020	.000	.000	.000
6	.034334	.000108	-.000014	.000	.000	.000
7	.034239	-.000301	-.000048	.000	.000	.000
8	.000000	.000000	.000000	-1.826	-2.081	17.607
9	.000000	.000000	.000000	-2.020	.782	18.675
10	.000000	.000000	.000000	-1.952	-.096	18.165
11	.000000	.000000	.000000	-1.934	.015	17.986
12	.000000	.000000	.000000	-1.912	.116	17.795
13	.000000	.000000	.000000	-1.938	-.703	17.918
14	.000000	.000000	.000000	-1.718	1.967	16.567

MEMBER END ACTIONS
THRUST AND SHEAR (K); MOMENTS (K-FT)

MEMBER NO.		THRUST	SHEAR	MOMENT	THRUST	SHEAR	MOMENT	
1	JOINT 1	11.474	-2.081	-15.619	-11.474	2.081	-10.399	JOINT 2
2	JOINT 2	9.454	-1.300	-7.697	-9.454	1.300	-8.551	JOINT 3
3	JOINT 3	7.502	-1.396	-8.803	-7.502	1.396	-8.641	JOINT 4
4	JOINT 4	5.568	-1.380	-8.579	-5.568	1.380	-8.676	JOINT 5
5	JOINT 5	3.656	-1.264	-8.327	-3.656	1.264	-7.472	JOINT 6
6	JOINT 6	1.718	-1.967	-9.884	-1.718	1.967	-14.704	JOINT 7
7	JOINT 8	-2.081	1.826	17.607	2.081	-1.826	15.619	JOINT 1
8	JOINT 9	.782	2.020	18.675	-.782	-2.020	18.095	JOINT 2
9	JOINT 10	-.096	1.952	18.165	.096	-1.952	17.354	JOINT 3
10	JOINT 11	.015	1.934	17.986	-.015	-1.934	17.220	JOINT 4
11	JOINT 12	.116	1.912	17.795	-.116	-1.912	17.003	JOINT 5
12	JOINT 13	-.703	1.938	17.918	.703	-1.938	17.356	JOINT 6
13	JOINT 14	1.967	1.718	16.567	-1.967	-1.718	14.704	JOINT 7

MOMENTS AND SHEARS BEAM NO 1

DIST. FROM LT. SUPT.	.880	3.100	5.200	7.300	9.400	11.620
MOMENTS	13.788	9.167	4.796	.425	-3.966	-6.557
SHEARS	-2.081	-2.081	-2.081	-2.081	-2.081	-2.081

MOMENTS AND SHEARS BEAM NO 2

DIST. FROM LT. SUPT.	.880	3.100	5.200	7.300	9.400	11.620
MOMENTS	6.553	3.667	.938	-1.792	-4.522	-7.407
SHEARS	-1.300	-1.300	-1.300	-1.300	-1.300	-1.300

MOMENTS AND SHEARS BEAM NO 3

75

DIST.FROM LT.SUPT.	.880	3.100	5.200	7.300	9.400	11.620
MOMENTS	7.575	4.472	1.547	-1.384	-4.314	-7.413
SHEARS	-1.396	-1.396	-1.396	-1.396	-1.396	-1.396

MOMENTS AND SHEARS BEAM NO 4

DIST.FROM LT.SUPT.	.880	3.100	5.200	7.300	9.400	11.620
MOMENTS	7.364	4.300	1.401	-1.494	-4.396	-7.461
SHEARS	-1.380	-1.380	-1.380	-1.380	-1.380	-1.380

MOMENTS AND SHEARS BEAM NO 5

DIST.FROM LT.SUPT.	.880	3.100	5.200	7.300	9.400	11.620
MOMENTS	7.215	4.409	1.755	-.499	-3.553	-6.359
SHEARS	-1.264	-1.264	-1.264	-1.264	-1.264	-1.264

MOMENTS AND SHEARS BEAM NO 6

DIST.FROM LT.SUPT.	.880	3.100	5.200	7.300	9.400	11.620
MOMENTS	8.153	3.786	-.345	-4.475	-8.[illegible]	-12.973
SHEARS	-1.967	-1.967	-1.967	-1.967	-1.967	-1.967

CANTILEVERS

NO.	JOINT	MOMENT	SHEAR
1	1	.000	.000
2	7	.000	.000

SVERDRUP & PARCEL AND ASSOCIATES, INC. 13:33 APR 09,'80 PAGE 12

JOB NO. 6784 - FCDMC - RACD FLOODWAY - BASELINE RD. BRIDGE - PROGRAM P7313

PROBLEM - PIER DESIGN BY JFF CHKD WEG

RIGID FRAME BRIDGE PIER
LOADING CASE 23
TEMPERATURE CHANGE

JOINT 1 HORIZONTAL FORCE .000 TEMPR.CHANGE -73.3 A.A.S.H.T.O. GROUP .000 REDUCTION FACT. 1.000

JOINT	JOINT DISPLACEMENTS IN INCHES, ROT. IN RADIANS X	Y	R	JOINT REACTIONS X	Y	R
1	.195290	-.094474	-.000290	.000	.000	.000
2	.129854	-.097134	-.000041	.000	.000	.000
3	.064826	-.096339	-.000041	.000	.000	.000
4	-.000006	-.096470	.000000	.000	.000	.000
5	-.064839	-.096339	.000041	.000	.000	.000
6	-.129866	-.097134	.000041	.000	.000	.000
7	-.195304	-.094475	.000290	.000	.000	.000
8	.000000	.000000	.000000	-9.681	-10.305	93.766
9	.000000	.000000	.000000	-7.413	7.064	68.269
10	.000000	.000000	.000000	-3.570	1.874	33.290
11	.000000	.000000	.000000	.000	2.727	-.003
12	.000000	.000000	.000000	3.571	1.874	-33.297
13	.000000	.000000	.000000	7.414	7.066	-68.276
14	.000000	.000000	.000000	9.681	-10.303	-93.772

MEMBER END ACTIONS
THRUST AND SHEAR (K); MOMENTS (K-FT)

MEMBER NO.	THRUST	SHEAR	MOMENT	THRUST	SHEAR	MOMENT	
1 JOINT 1	-9.685	-10.303	-82.418	9.685	10.303	-46.369	JOINT 2
2 JOINT 2	-17.113	-3.238	-20.277	17.113	3.238	-20.197	JOINT 3
3 JOINT 3	-20.666	-1.364	-11.492	20.666	1.364	-5.555	JOINT 4
4 JOINT 4	-20.653	1.364	5.559	20.653	-1.364	11.495	JOINT 5
5 JOINT 5	-17.113	3.238	20.200	17.113	-3.238	20.280	JOINT 6
6 JOINT 6	-9.673	10.304	46.374	9.673	-10.304	82.426	JOINT 7
7 JOINT 8	-10.305	9.681	93.766	10.305	-9.681	82.421	JOINT 1
8 JOINT 9	7.064	7.413	68.269	-7.064	-7.413	66.646	JOINT 2
9 JOINT 10	1.874	3.570	33.290	-1.874	-3.570	31.669	JOINT 3
10 JOINT 11	2.727	-.000	-.003	-2.727	.000	-.003	JOINT 4
11 JOINT 12	1.874	-3.571	-33.297	-1.874	3.571	-31.696	JOINT 5
12 JOINT 13	7.066	-7.414	-68.276	-7.066	7.414	-66.553	JOINT 6
13 JOINT 14	-10.303	-9.681	-93.772	10.303	9.681	-82.426	JOINT 7

MOMENTS AND SHEARS BEAM NO 1

DIST. FROM LT. SUPT.	.880	3.100	5.200	7.300	9.400	11.620
MOMENTS	73.351	50.479	28.843	7.206	-14.150	-37.302
SHEARS	-10.303	-10.303	-10.303	-10.303	-10.303	-10.303

MOMENTS AND SHEARS BEAM NO 2

DIST. FROM LT. SUPT.	.880	3.100	5.200	7.300	9.400	11.620
MOMENTS	17.428	10.239	3.440	-3.360	-10.160	-17.348
SHEARS	-3.238	-3.238	-3.238	-3.238	-3.238	-3.238

MOMENTS AND SHEARS BEAM NO 3

DIST.FROM LT.SUPT.	.880	3.100	5.200	7.300	9.400	11.620
MOMENTS	10.292	7.264	4.400	1.537	-1.327	-4.355
SHEARS	-1.364	-1.364	-1.364	-1.364	-1.364	-1.364

MOMENTS AND SHEARS BEAM NO 4

DIST.FROM LT.SUPT.	.880	3.100	5.200	7.300	9.400	11.620
MOMENTS	-4.358	-1.330	1.535	4.401	7.2[illegible]	10.294
SHEARS	1.364	1.364	1.364	1.364	1.364	1.364

MOMENTS AND SHEARS BEAM NO 5

DIST.FROM LT.SUPT.	.880	3.100	5.200	7.300	9.400	11.620
MOMENTS	-17.350	-10.162	-3.361	3.440	10.24[illegible]	17.450
SHEARS	3.238	3.238	3.238	3.238	3.238	3.238

MOMENTS AND SHEARS BEAM NO 6

DIST.FROM LT.SUPT.	.880	3.100	5.200	7.300	9.400	11.620
MOMENTS	-37.307	-14.433	7.206	28.845	5[illegible]	73.3[illegible]
SHEARS	10.304	10.304	10.304	10.304	1[illegible]	10.304

CANTILEVERS

NO.	JOINT	MOMENT	SHEAR
1	1	.000	.000
2	7	.000	.000

SVERDRUP & PARCEL AND ASSOCIATES, INC. 13:33 APR 09,'80 PAGE 14

JOB NO. 6784 - FCDMC - RACD FLOODWAY - BASELINE RD. BRIDGE- PROGRAM P731

PROBLEM - PIER DESIGN BY JFF CHKD WWG

A.A.S.H.T.O. LOADING COMBINATIONS (CAP BEAMS)
M=MOMENT (K-FT); V=SHEAR (K); T=THRUST (K); D=DISTANCE (FT)
(NO ADJUSTMENT OF LOADS TO DESIGN LOADS)

GROUP I DL + 1.00LL + CF

MEM	1	JOINT 1	JOINT 2								
D	-2.35	.00	.00	.88	3.10	5.20	7.30	9.40	11.62	12.50	.00	.00
+M	.00	-157.28	-153.07	-105.42	88.41	171.45	164.34	67.07	-95.25	-144.30	.00	.00
-M	.00	-215.32	-216.02	-139.42	10.55	62.25	56.16	-7.72	-175.87	-269.82	.00	.00
V	-90.52	90.52	91.20	90.08	88.95	38.85	-8.39	-48.68	-105.96	107.09	.00	.00
T	2.00											

MEM	2	JOINT 2	JOINT 3								
D	.00	.00	.00	.88	3.10	5.20	7.30	9.40	11.62	12.50	.00	.00
+M	.00	.00	-143.11	-96.19	79.03	159.92	165.22	80.36	-96.49	-144.41	.00	.00
-M	.00	.00	-263.87	-174.65	-14.52	45.12	46.97	-8.97	-174.67	-265.77	.00	.00
V	.00	.00	101.71	100.58	99.46	44.76	-6.36	-49.39	-102.72	103.85	.00	.00
T	1.47											

MEM	3	JOINT 3	JOINT 4								
D	.00	.00	.00	.88	3.10	5.20	7.30	9.40	11.62	12.50	.00	.00
+M	.00	.00	-144.17	-95.99	77.56	164.78	162.45	76.67	-96.70	-144.09	.00	.00
-M	.00	.00	-266.51	-174.32	-4.89	50.80	47.94	-12.72	-174.47	-264.83	.00	.00
V	.00	.00	104.41	103.29	102.16	46.58	-5.81	-49.17	-95.96	96.18	.00	.00
T	1.65											

MEM	4	JOINT 4	JOINT 5								
D	.00	.00	.00	.88	3.10	5.20	7.30	9.40	11.62	12.50	.00	.00
+M	.00	.00	-144.87	-96.29	58.02	154.91	161.64	78.22	-98.34	-145.14	.00	.00
-M	.00	.00	-253.97	-172.80	-9.98	49.09	50.37	-6.15	-135.59	-217.91	.00	.00
V	.00	.00	100.36	99.24	98.11	49.12	8.67	-41.28	-95.70	96.83	.00	.00
T	1.38											

MEM	5	JOINT 5	JOINT 6								
D	.00	.00	.00	.88	3.10	5.20	7.30	9.40	11.62	12.50	.00	.00
+M	.00	.00	-146.48	-96.84	52.06	133.41	140.39	75.21	-94.51	-147.83	.00	.00
-M	.00	.00	-209.87	-142.69	3.72	66.19	70.87	17.52	-138.13	-216.02	.00	.00
V	.00	.00	85.84	84.71	83.59	45.14	-7.54	-36.88	-94.16	85.28	.00	.00
T	1.01											

MEM	6	JOINT 6	JOINT 7								
D	.00	.00	.00	.88	3.10	5.20	7.30	9.40	11.62	12.50	.00	2.94
+M	.00	.00	-147.79	-98.47	71.84	145.08	128.46	41.87	-104.99	-154.47	-157.27	.00
-M	.00	.00	-217.97	-138.19	11.15	70.51	72.08	15.85	-111.30	-173.26	-157.27	.00
V	.00	.00	94.84	93.71	92.59	34.18	-9.04	-42.79	-83.61	70.74	52.88	52.88
T	1.30											

GROUP II DL + W

MEM	1	JOINT 1	JOINT 2								
D	-2.35	.00	.00	.88	3.10	5.20	7.30	9.40	11.62	12.50	.00	.00

BY JEF CHKD WEG

+M	.00	-157.28	-140.30	-91.73	27.67	82.32	79.17	26.12	[illegible]	-138.23	.00	[illegible]
-M	.00	-157.28	-171.54	-119.30	9.33	72.73	78.32	18.23	[illegible]	-159.03	.00	[illegible]
V	-52.86	52.86	59.69	58.56	57.44	29.49	-2.62	-30.57	[illegible]	58.52	.00	[illegible]
T	11.59											

MEM	2	JOINT	2	JOINT	3							
D	.00	.00	.00	.88	3.10	5.20	7.30	9.40	11.62	12.50	.00	[illegible]
+M	.00	.00	-141.45	-92.82	26.72	81.51	82.08	26.74	-93.59	-142.26	.00	[illegible]
-M	.00	.00	-156.85	-105.73	19.38	79.63	78.50	17.70	[illegible]	-139.36	.00	[illegible]
V	.00	.00	58.19	57.07	55.94	27.99	-2.56	-30.51	-57.33	58.46	.00	.00
T	9.52											

MEM	3	JOINT	3	JOINT	4							
D	.00	.00	.00	.88	3.10	5.20	7.30	9.40	11.62	12.50	.00	.00
+M	.00	.00	-141.93	-93.25	26.42	81.33	81.21	26.39	-93.18	-141.83	.00	[illegible]
-M	.00	.00	-159.54	-108.40	17.47	78.24	78.44	17.76	-108.01	-159.11	.00	.00
V	.00	.00	58.44	57.32	56.19	28.24	-2.50	-30.45	-57.27	58.40	.00	.00
T	7.58											

MEM	4	JOINT	4	JOINT	5							
D	.00	.00	.00	.88	3.10	5.20	7.30	9.40	11.62	12.50	.00	[illegible]
+M	.00	.00	-141.89	-93.23	26.37	81.23	81.28	26.35	-93.36	-142.06	.00	[illegible]
-M	.00	.00	-159.05	-107.96	17.78	78.43	78.29	17.55	[illegible]	-159.41	.00	[illegible]
V	.00	.00	58.39	57.26	56.14	28.19	-2.53	-30.48	-57.30	58.43	.00	[illegible]
T	5.64											

MEM	5	JOINT	5	JOINT	6							
D	.00	.00	.00	.88	3.10	5.20	7.30	9.40	11.62	12.50	.00	[illegible]
+M	.00	.00	-142.48	-93.58	26.62	82.04	81.47	26.61	[illegible]	-141.58	.00	[illegible]
-M	.00	.00	-159.14	-108.01	17.80	78.53	79.67	19.50	[illegible]	-159.62	.00	[illegible]
V	.00	.00	58.42	57.30	56.17	28.22	-2.26	-30.21	[illegible]	58.16	.00	[illegible]
T	3.72											

MEM	6	JOINT	6	JOINT	7							
D	.00	.00	.00	.88	3.10	5.20	7.30	9.40	11.62	12.50	.00	2.98
+M	.00	.00	-138.75	-91.10	25.96	79.09	82.00	27.12	-92.53	-141.21	-157.27	.00
-M	.00	.00	-158.52	-107.40	18.39	78.40	73.05	9.90	-118.08	-170.62	-157.27	.00
V	.00	.00	58.41	57.29	56.16	28.21	-3.67	-31.62	-58.45	59.57	52.86	52.86
T	1.83											

GROUP III DL + LL + HORIZ. FORCES + CF

MEM	1	JOINT	1	JOINT	2							
D	-2.35	.00	.00	.88	3.10	5.20	7.30	9.40	11.62	12.50	.00	.00
+M	.00	-157.28	-127.23	-82.51	103.57	179.39	165.04	73.60	[illegible]	-127.10	.00	[illegible]
-M	.00	-215.32	-241.86	-162.23	-4.62	54.32	55.46	-14.25	[illegible]	-267.02	.00	[illegible]
V	-90.52	90.52	94.65	93.52	92.40	42.29	-11.84	-52.13	[illegible]	110.53	.00	[illegible]
T	20.98											

MEM	2	JOINT	2	JOINT	3							
D	.00	.00	.00	.88	3.10	5.20	7.30	9.40	11.62	12.50	.00	[illegible]
+M	.00	.00	-130.37	-85.35	85.09	161.47	168.18	87.84	[illegible]	-133.26	.00	[illegible]
-M	.00	.00	-276.60	-185.49	-20.58	43.57	44.01	-14.45	[illegible]	-279.91	.00	[illegible]
V	.00	.00	103.86	102.73	101.61	46.91	-8.51	-51.54	[illegible]	106.00	.00	[illegible]
T	17.11											

MEM	3	JOINT	3	JOINT	4							
D	.00	.00	.00	.88	3.10	5.20	7.30	9.40	11.62	12.50	.00	.00
+M	.00	.00	-129.61	-83.46	84.97	167.34	164.74	83.80	[illegible]	-129.80	.00	[illegible]
-M	.00	.00	-281.07	-187.45	-12.30	48.25	45.65	-19.85	[illegible]	-269.12	.00	[illegible]
V	.00	.00	106.72	105.60	104.47	49.88	-8.11	-51.47	[illegible]	94.49	.00	.00

T 14.06

MEM 4	JOINT 4		JOINT 5								
D .00	.00	.00	.88	3.10	5.20	7.30	9.40	11.62	12.50	.00	.00
+M .00	.00	-130.68	-84.11	65.13	157.22	164.12	85.49	[illegible]	-130.79	.00	.00
-M .00	.00	-268.16	-184.98	-17.10	46.77	47.89	-13.42	-147.84	-232.27	.00	.00
V .00	.00	102.64	101.52	100.39	51.40	10.95	-43.56	-97.03	99.11	.00	.00
T 10.59											

MEM 5	JOINT 5		JOINT 6								
D .00	.00	.00	.88	3.10	5.20	7.30	9.40	11.62	12.50	.00	.00
+M .00	.00	-132.71	-84.90	59.36	136.32	150.88	81.06	[illegible]	-135.47	.00	.00
-M .00	.00	-223.64	-154.83	-3.57	63.29	69.38	11.64	-145.65	-224.36	.00	.00
V .00	.00	87.93	86.80	85.68	47.23	-9.63	-38.97	-96.25	97.37	.00	.00
T 7.06											

MEM 6	JOINT 6		JOINT 7								
D .00	.00	.00	.88	3.10	5.20	7.30	9.40	11.62	12.50	.00	2.98
+M .00	.00	-131.44	-84.28	78.10	145.65	135.86	56.10	-83.53	-130.15	-157.27	.00
-M .00	.00	-234.32	-151.68	4.89	69.94	64.67	1.61	-132.76	-197.56	-157.27	.00
V .00	.00	98.09	96.96	95.84	37.44	-12.30	-46.04	-72.86	73.99	52.86	56.26
T 4.14											

GROUP IV OL + LL + (S+T) + CF

MEM 1	JOINT 1		JOINT 2								
D -2.35	.00	.00	.88	3.10	5.20	7.30	9.40	11.62	12.50	.00	.00
+M .00	-157.28	-70.65	-32.07	138.89	200.30	171.55	74.94	-74.89	-114.99	.00	.00
-M .00	-215.32	-261.00	-179.45	-17.00	46.51	52.23	-22.15	-213.17	-316.19	.00	.00
V -90.52	90.52	96.83	95.70	94.58	44.47	-18.70	-54.99	-116.22	117.39	.00	.00
T -11.68											

MEM 2	JOINT 2		JOINT 3								
D .00	.00	.00	.88	3.10	5.20	7.30	9.40	11.62	12.50	.00	.00
+M .00	.00	-122.83	-78.77	89.27	163.36	167.05	85.90	-87.02	-133.39	.00	.00
-M .00	.00	-274.93	-184.16	-20.11	43.25	43.61	-19.13	-192.02	-265.97	.00	.00
V .00	.00	103.48	102.35	101.23	46.52	-9.60	-52.63	-105.95	107.09	.00	.00
T 18.59											

MEM 3	JOINT 3		JOINT 4								
D .00	.00	.00	.88	3.10	5.20	7.30	9.40	11.62	12.50	.00	.00
+M .00	.00	-132.68	-85.70	84.83	169.18	163.99	77.39	-93.32	-141.06	.00	.00
-M .00	.00	-272.78	-180.53	-8.85	48.40	47.10	-14.04	-179.82	-260.38	.00	.00
V .00	.00	105.16	104.03	102.91	47.32	-7.17	-50.53	-96.42	97.55	.00	.00
T 22.32											

MEM 4	JOINT 4		JOINT 5								
D .00	.00	.00	.88	3.10	5.20	7.30	9.40	11.62	12.50	.00	.00
+M .00	.00	-141.84	-93.91	58.74	156.44	166.04	85.48	[illegible]	-135.65	.00	.00
-M .00	.00	-259.53	-177.16	-11.31	48.25	47.97	-10.11	-141.21	-224.19	.00	.00
V .00	.00	101.73	100.60	99.48	50.48	10.03	-42.02	-96.45	97.57	.00	.00
T 22.03											

MEM 5	JOINT 5		JOINT 6								
D .00	.00	.00	.88	3.10	5.20	7.30	9.40	11.62	12.50	.00	.00
+M .00	.00	-135.46	-87.37	57.61	135.25	152.83	85.45	-81.11	-127.55	.00	.00
-M .00	.00	-230.07	-160.24	-6.44	42.83	68.99	11.93	-147.54	-227.03	.00	.00
V .00	.00	89.08	87.95	86.83	48.38	-9.30	-38.65	-95.92	97.05	.00	.00
T 18.13											

MEM 6 JOINT 6 JOINT 7

BY JFF CHKD WEG

D	.00	.00	.00	.88	3.10	5.20	7.30	9.40	11.52	12.50	.00	2.96
+M	.00	.00	-122.49	-78.11	79.72	152.29	157.30	92.35	-31.53	-72.04	-157.27	.00
-M	.00	.00	-264.35	-175.50	-3.28	66.58	56.33	-11.70	-151.33	-219.24	-157.27	.00
V	.00	.00	105.14	104.01	102.89	44.49	-14.67	-48.41	-75.23	76.36	52.86	52.86
T	10.97											

GROUP V DL + W + (S+T)

MEM	1	JOINT	1	JOINT	2							
D	-2.35	.00	.00	.88	3.10	5.20	7.30	9.40	11.62	12.50	.00	.00
+M	.00	-157.28	-57.88	-18.37	78.15	111.16	86.38	34.00	-76.33	-112.93	.00	.00
-M	.00	-157.28	-216.52	-159.33	-18.21	56.99	74.39	3.80	-165.12	-205.40	.00	.00
V	-52.86	52.86	65.31	64.19	63.06	35.11	-12.93	-40.88	-67.79	64.83	.00	.00
T	21.27											

MEM	2	JOINT	2	JOINT	3							
D	.00	.00	.00	.88	3.10	5.20	7.30	9.40	11.52	12.50	.00	.00
+M	.00	.00	-121.18	-75.39	36.96	84.95	83.92	32.28	-83.92	-131.24	.00	.00
-M	.00	.00	-167.91	-115.44	13.80	77.75	75.14	7.54	-125.55	-179.56	.00	.00
V	.00	.00	59.96	58.33	57.71	29.76	-5.40	-33.75	-60.57	61.70	.00	.00
T	26.64											

MEM	3	JOINT	3	JOINT	4							
D	.00	.00	.00	.88	3.10	5.20	7.30	9.40	11.52	12.50	.00	.00
+M	.00	.00	-130.44	-82.95	33.69	85.73	82.75	27.12	-90.51	-138.80	.00	.00
-M	.00	.00	-165.81	-114.01	13.50	75.84	77.61	16.44	-112.36	-164.67	.00	.00
V	.00	.00	59.19	58.06	56.94	28.99	-3.86	-31.81	-58.63	59.78	.00	.00
T	28.24											

MEM	4	JOINT	4	JOINT	5							
D	.00	.00	.00	.88	3.10	5.20	7.30	9.40	11.62	12.50	.00	.00
+M	.00	.00	-138.86	-90.05	27.10	82.76	85.58	33.61	-83.37	-130.56	.00	.00
-M	.00	.00	-164.61	-112.32	16.45	77.59	75.89	13.59	-113.90	-165.56	.00	.00
V	.00	.00	59.75	58.62	57.50	29.55	-3.27	-31.22	-58.04	59.17	.00	.00
T	26.30											

MEM	5	JOINT	5	JOINT	6							
D	.00	.00	.00	.88	3.10	5.20	7.30	9.40	11.62	12.50	.00	.00
+M	.00	.00	-131.46	-84.11	32.17	83.88	84.91	36.85	-75.59	-121.40	.00	.00
-M	.00	.00	-179.34	-125.36	7.64	75.17	77.79	13.91	-115.25	-167.69	.00	.00
V	.00	.00	61.66	60.54	59.41	31.46	-4.02	-31.97	-58.80	59.92	.00	.00
T	20.84											

MEM	6	JOINT	6	JOINT	7							
D	.00	.00	.00	.88	3.10	5.20	7.30	9.40	11.62	12.50	.00	2.96
+M	.00	.00	-113.44	-70.74	33.83	86.30	110.85	77.60	-19.17	-58.78	-157.27	.00
-M	.00	.00	-204.89	-144.71	3.95	74.47	57.31	-17.64	-155.51	-215.60	-157.27	.00
V	.00	.00	68.71	67.59	66.46	38.51	-9.30	-37.25	-64.17	65.20	52.86	52.86
T	11.50											

GROUP VI DL + LL + HORIZ. FORCES + (S+T) + CF

MEM	1	JOINT	1	JOINT	2							
D	-2.35	.00	.00	.88	3.10	5.20	7.30	9.40	11.52	12.50	.00	.00
+M	.00	-157.28	-44.81	-9.26	154.05	208.23	172.25	81.47	-64.72	-101.79	.00	.00
-M	.00	-215.32	-286.83	-202.26	-32.16	38.58	51.53	-28.68	-227.34	-333.39	.00	.00
V	-90.52	90.52	100.27	99.14	98.02	47.91	-22.14	-62.43	-119.71	120.83	.00	.00
T	30.66											

MEM	2	JOINT	2	JOINT	3							
D	.00	.00	.00	.88	3.10	5.20	7.30	9.40	11.62	12.50	.00	.00

BY VFF CHKD WEG

+M	.00	.00	-110.10	-67.73	95.33	164.91	170.02	93.38	-74.77	-119.24	.00	.00
-M	.00	.00	-287.66	-195.30	-26.17	41.70	40.65	-24.61	-2[illegible].27	-3[illegible].11	.00	.00
V	.00	.00	105.63	104.50	103.38	48.87	-11.75	-54.78	-1[illegible].11	1[illegible].24	.00	.00
T	34.22											

MEM	3	JOINT	3	JOINT	4							
D	.00	.00	.00	.88	3.10	5.20	7.30	9.40	11.52	12.50	.00	.00
+M	.00	.00	-118.12	-73.17	92.23	171.74	166.28	84.53	-[illegible]	-126.77	.00	.00
-M	.00	.00	-287.34	-193.06	-16.26	45.84	44.81	-21.18	-1[illegible]	-274.67	.00	.00
V	.00	.00	107.47	106.34	105.22	49.63	-9.48	-52.84	-98.73	99.86	.00	.00
T	34.73											

MEM	4	JOINT	4	JOINT	5							
D	.00	.00	.00	.88	3.10	5.20	7.30	9.40	11.52	12.50	.00	.00
+M	.00	.00	-127.65	-81.73	65.85	158.76	168.52	92.75	-75.71	-119.30	.00	.00
-M	.00	.00	-273.72	-189.34	-18.42	45.93	45.49	-17.39	-153.55	-258.54	.00	.00
V	.00	.00	104.01	102.98	101.76	52.77	12.32	-44.31	-98.73	99.86	.00	.00
T	31.24											

MEM	5	JOINT	5	JOINT	6							
D	.00	.00	.00	.88	3.10	5.20	7.30	9.40	11.52	12.50	.00	.00
+M	.00	.00	-121.68	-75.43	64.90	138.15	154.32	91.32	-70.59	-115.19	.00	.00
-M	.00	.00	-243.84	-172.18	-13.74	59.93	67.50	6.05	-155.16	-239.44	.00	.00
V	.00	.00	91.17	90.04	88.92	50.47	-11.39	-40.74	-9[illegible].72	99.14	.00	.00
T	24.17											

MEM	6	JOINT	6	JOINT	7							
D	.00	.00	.00	.88	3.10	5.20	7.30	9.40	11.52	12.50	.00	2.98
+M	.00	.00	-106.14	-64.02	85.98	152.86	164.70	106.59	-1[illegible].17	-47.72	-157.27	.00
-M	.00	.00	-280.70	-188.99	-9.55	66.01	48.93	-25.94	-172.79	-242.57	-157.27	.00
V	.00	.00	108.39	107.27	106.14	47.74	-17.92	-51.66	-7[illegible].49	79.61	52.88	52.88
T	13.81											

SVERDRUP & PARCEL AND ASSOCIATES, INC. 13:33 APR 09,'80 PAGE 19

JOB NO. 6784 - FCDMC - RACD FLOODWAY - BASELINE RD. BRIDGE - PROGRAM P7310

PROBLEM - PIER DESIGN BY JEF CHKD WEGM

MAX. AND MIN. MOMENT ENVELOPES -- MAX. SHEAR AND AXIAL VALUES
(ALL VALUES ADJUSTED TO DESIGN LOADS)
M=MOMENT (K-FT); V=SHEAR (K); T=THRUST (K); D=DISTANCE FROM JOINT (FT)

MEM	1	JOINT 1		JOINT 2								
D	-2.35	.00	.00	.88	3.10	5.20	7.30	9.40	11.62	12.50	.00	.00
+M	.00	-112.34	-32.01	-6.52	111.11	171.45	164.34	67.07	-43.37	-72.71	.00	.00
-M	.00	-215.32	-216.02	-144.47	-22.97	27.56	36.81	-20.48	-175.47	-269.82	.00	.00
V	-90.52	90.52	91.20	90.08	88.95	38.85	-15.81	-48.68	-105.96	107.09	.00	.00
T	21.90											

MEM	2	JOINT 2		JOINT 3								
D	.00	.00	.00	.88	3.10	5.20	7.30	9.40	11.62	12.50	.00	.00
+M	.00	.00	-78.64	-48.52	79.03	159.92	165.22	80.36	-53.41	-85.17	.00	.00
-M	.00	.00	-263.87	-174.65	-18.69	29.78	29.03	-19.01	-174.67	-265.77	.00	.00
V	.00	.00	101.71	100.58	99.46	44.76	-8.39	-49.39	-102.72	103.85	.00	.00
T	24.45											

MEM	3	JOINT 3		JOINT 4								
D	.00	.00	.00	.88	3.10	5.20	7.30	9.40	11.62	12.50	.00	.00
+M	.00	.00	-84.37	-52.26	77.56	164.78	162.45	76.67	-54.02	-90.55	.00	.00
-M	.00	.00	-266.51	-174.92	-11.61	32.75	32.01	-15.88	-172.17	-254.83	.00	.00
V	.00	.00	104.41	103.29	102.16	46.58	-6.77	-49.17	-95.15	96.18	.00	.00
T	24.81											

MEM	4	JOINT 4		JOINT 5								
D	.00	.00	.00	.88	3.10	5.20	7.30	9.40	11.62	12.50	.00	.00
+M	.00	.00	-91.18	-58.38	58.02	154.91	161.64	78.22	-53.75	-85.21	.00	.00
-M	.00	.00	-253.97	-172.80	-13.68	32.81	32.49	-12.42	-135.59	-217.91	.00	.00
V	.00	.00	100.36	99.24	98.11	49.12	8.80	-41.28	-95.70	96.83	.00	.00
T	22.31											

MEM	5	JOINT 5		JOINT 6								
D	.00	.00	.00	.88	3.10	5.20	7.30	9.40	11.62	12.50	.00	.00
+M	.00	.00	-86.92	-53.48	52.06	133.41	149.39	75.21	-50.42	-82.28	.00	.00
-M	.00	.00	-209.87	-142.89	-9.81	42.81	48.22	4.32	-133.13	-216.02	.00	.00
V	.00	.00	85.84	84.71	83.59	45.14	-8.14	-36.88	-94.16	95.28	.00	.00
T	17.27											

MEM	6	JOINT 6		JOINT 7								
D	.00	.00	.00	.88	3.10	5.20	7.30	9.40	11.62	12.50	.00	5.00
+M	.00	.00	-75.81	-46.16	71.84	145.08	128.16	74.13	-7.27	-30.09	-112.34	.00
-M	.00	.00	-217.97	-140.40	-6.82	47.15	34.95	-18.53	-123.42	-174.59	-157.27	.00
V	.00	.00	94.84	93.71	92.59	35.59	-12.30	-42.79	-89.81	70.74	52.89	52.89
T	9.86											

(84)

CAP DESIGN INPUT DATA

F'C(PSI)	FY(PSI)	ALPH(DEG)	AGG.(IN)	CLEAR.
3000.00	40000.00	.00	1.00	3.27

CAP REINFORCING BAR COMBINATIONS- LONG. BARS 9 STIRRUPS 5

DESCRIPTION OF CAP DESIGN OUTPUT

IF THERE IS A CANTILEVER AT JOINT AT LEFT END OF CAP BEAM MEMBER, COLUMN 1 OF TABLE BELOW GIVES OUTPUT AT POINT OF LOAD ON CANTILEVER, COLUMN 2 GIVES OUTPUT AT JOINT AT FIXED END OF CANTILEVER.

COLUMN 3 OF TABLE GIVES OUTPUT AT JOINT AT LEFT END OF CAP BEAM MEMBER.

COLUMNS 4 THRU 9 OF TABLE GIVE OUTPUT AT SIX POINTS ALONG MEMBER. THESE SIX POINTS ARE LOCATED AT DISTANCE 'D' FROM LEFT END OF MEMBER. 'D' VALUES (GIVEN IN TABLE ABOVE) ARE POINTS OF BEAM REACTIONS ON CAP AND ADDITIONAL POINTS DESIGNATED BY 'A' DIMENSIONS IN INPUT DATA.

COLUMN 10 OF TABLE BELOW GIVES OUTPUT AT JOINT AT RIGHT END OF CAP BEAM MEMBER.

IF THERE IS A CANTILEVER AT JOINT AT RIGHT END OF CAP BEAM MEMBER, COLUMN 11 OF TABLE BELOW GIVES OUTPUT AT JOINT AT FIXED END OF CANTILEVER, COLUMN 12 GIVES OUTPUT AT POINT OF LOAD ON CANTILEVER.

DEP = DEPTH OF THE MEMBER AT THE SPECIFIED LOCATION(FT.)
M+ =POSITIVE MOMENT (K-FT)
M- =NEGATIVE MOMENT (K-FT)
VRS = SHEAR ON SECTION (K)
VSC = SHEAR CAPACITY OF CONCRETE SECTION (K)
BAS = REQUIRED AREA BOTTOM REINFORCING BARS (IN2)
BNO.= REQUIRED NUMBER BOTTOM REINFORCING BARS
SPH =HORIZ. BAR SPACING (IN)
TAS = REQUIRED AREA TOP REINFORCING BARS (IN2)
TNO.= REQUIRED NUMBER TOP REINFORCING BARS

ASV = REQUIRED AREA STEEL OF STIRRUPS (IN2/FT)
S = REQUIRED STIRRUP SPACING (IN)
WHERE STIRRUPS ARE REQUIRED FOR SHEAR, THE MAXIMUM SPACING IS LIMITED TO 1/2 THE BEAM DEPTH, BUT NOT MORE THAN 24 IN.

SVERDRUP & PARCEL AND ASSOCIATES, INC. 13:33 APR 09,'80 PAGE 21

JOB NO. 6784 - FCDMC - RACD FLOODWAY - BASELINE RD. BRIDGE - PROGRAM P7310

PROBLEM - PIER DESIGN BY JFF CHKD WEG

SERVICE LOAD DESIGN OF REINFORCEMENTS

REINFORCING BARS NO. 9 STIRRUPS NO. 5

AT SECTION 10 MEMBER 1 IS OVERSTRESSED FC= 1.38 KSI FS= 20.00 KSI

These stresses @ ℄ of column. Design is based on stresses @ face of equivalent square column.

MEM 1 JOINT 1 JOINT 2 SIMPLE BENDING

DEP	2.00	2.00	2.00	2.00	2.00	2.00	2.00	2.00	2.00	2.00	.00	.00
M+	.00	-112.34	-32.01	-6.62	111.11	171.45	164.34	67.07	-43.37	-72.71	.00	.00
M-	.00	-215.32	-216.02	-144.47	-22.97	27.56	36.81	-20.48	-175.87	-269.82	.00	.00
VRS	-90.52	90.52	91.20	90.08	88.95	38.85	-15.81	-48.68	-105.96	107.09	.00	.00
VSC	36.96	36.96	36.96	36.96	36.96	36.96	36.96	36.96	36.96	36.96	.00	.00
BAS	.00	.00	.00	.00	3.70	5.84	5.58	2.19	.00	.00	.00	.00
BNO.	0	0	0	0	4	6	6	3	0	0	0	0
SPH	.00	.00	.00	.00	9.38	5.63	5.63	14.13	.00	.00	.00	.00
TAS	.00	7.41	7.44	4.88	.73	.00	.00	.65	5.20	########	.00	.00
TNO.	0	8	8	5	1	0	0	1	6	##	0	0
SPH	.00	4.00	4.00	7.00	.00	.00	.00	.00	5.63	.00	.00	.00
ASV	1.63	1.63	1.65	1.62	1.58	.54	.00	.54	2.1[illegible]	2.13	.00	.00
S	4.57	4.57	4.51	4.61	4.71	9.87	.00	9.87	3.55	3.49	.00	[illegible]

13:33 APR 09,'80 PAGE 22

BY JFF CHKD WEG

AT SECTION 3 MEMBER 2 IS OVERSTRESSED FC= 1.36 KSI FS= 20.00 KSI

AT SECTION 10 MEMBER 2 IS OVERSTRESSED FC= 1.37 KSI FS= 20.00 KSI *

MEM 2 JOINT 2 JOINT 3 SIMPLE BENDING

DEP	.00	.00	2.00	2.00	2.00	2.00	2.00	2.00	2.00	2.00	.00	.00
M+	.00	.00	-78.64	-48.52	79.03	159.92	165.22	80.36	-53.41	-85.17	.00	.00
M-	.00	.00	-265.87	-174.65	-18.69	29.78	29.03	-19.01	-174.67	-265.77	.00	.00
VRS	.00	.00	101.71	100.58	99.46	44.76	-8.39	-49.39	-102.72	103.85	.00	.00
VSC	.00	.00	36.96	36.96	36.96	36.96	36.96	36.96	36.96	36.96	.00	.00
BAS	.00	.00	.00	.00	2.60	5.43	5.61	2.64	.00	.00	.00	.00
BNO.	0	0	0	0	3	6	6	3	0	0	0	0
SPH	.00	.00	.00	.00	14.13	5.63	5.63	14.13	.00	.00	.00	.00
TAS	.00	.00	**********	5.95	.59	.00	.00	.60	5.95	**********	.00	.00
TNO.	0	0	**	6	1	0	0	1	6	**	0	0
SPH	.00	.00	.00	5.63	.00	.00	.00	.00	5.63	.00	.00	.00
ASV	.00	.00	1.97	1.93	1.90	.54	.00	.54	2.00	2.03	.00	.00
S	.00	.00	3.78	3.85	3.91	9.87	.00	9.87	3.72	3.66	.00	.00

AT SECTION 3 MEMBER 3 IS OVERSTRESSED FC= 1.37 KSI FS= 20.00 KSI

AT SECTION 10 MEMBER 3 IS OVERSTRESSED FC= 1.33 KSI FS= 20.00 KSI *

MEM 3 JOINT 3 JOINT 4 SIMPLE BENDING

DEP	.00	.00	2.00	2.00	2.00	2.00	2.00	2.00	2.00	2.00	.00	.00
M+	.00	.00	-84.37	-52.26	77.56	164.78	162.45	76.67	-54.62	-90.55	.00	.00
M-	.00	.00	-266.51	-174.92	-11.61	32.75	32.01	-15.88	-170.47	-254.83	.00	.00
VRS	.00	.00	104.41	103.29	102.16	46.58	-6.77	-49.17	-95.96	96.18	.00	.00
VSC	.00	.00	36.96	36.96	36.96	36.96	36.96	36.96	36.96	36.96	.00	.00
BAS	.00	.00	.00	.00	2.55	5.60	5.52	2.52	.00	.00	.00	.00
BNO.	0	0	0	0	3	6	6	3	0	0	0	0
SPH	.00	.00	.00	.00	14.13	5.63	5.63	14.13	.00	.00	.00	.00
TAS	.00	.00	**********	5.96	.36	.00	.00	.50	5.96	**********	.00	.00
TNO.	0	0	**	6	1	0	0	1	6	**	0	0
SPH	.00	.00	.00	5.63	.00	.00	.00	.00	5.63	.00	.00	.00
ASV	.00	.00	2.05	2.02	1.98	.54	.00	.54	1.77	1.80	.00	.00
S	.00	.00	3.63	3.69	3.75	9.87	.00	9.87	4.21	4.13	.00	.00

* See note on Sht. No. 86 (PAGE 21)

13:33 APR 09,'80 PAGE 23
BY JFF CHKD WEG

AT SECTION 3 MEMBER 4 IS OVERSTRESSED FC= 1.33 KSI FS= 20.00 KSI

AT SECTION 10 MEMBER 4 IS OVERSTRESSED FC= 1.20 KSI FS= 20.00 KSI

See note on Sht. No. 86 (PAGE 21)

MEM 4 JOINT 4 JOINT 5 SIMPLE BENDING

DEP	.00	.00	2.00	2.00	2.00	2.00	2.00	2.00	2.00	2.00	.00	.00
M+	.00	.00	-91.18	-58.38	58.02	154.91	151.64	78.22	-54.[illegible]	-85.21	.00	.00
M-	.00	.00	-253.97	-172.40	-13.68	32.81	32.49	-12.42	-135.[illegible]	-217.41	.00	.00
VRS	.00	.00	100.36	99.24	98.11	49.12	8.80	-41.28	-85.7[illegible]	95.[illegible]3	.00	.00
VSC	.00	.00	36.96	36.96	36.96	36.96	36.96	36.96	36.96	36.96	.00	.00
BAS	.00	.00	.00	.00	1.89	5.25	5.49	2.57	.00	.00	.00	.00
BNO.	0	0	0	0	2	6	6	3	0	0	0	0
SPH	.00	.00	.00	.00	28.25	5.63	5.63	14.13	.00	.00	.00	.00
TAS	.00	.00	**********	5.88	.43	.00	.00	.39	4.56	**********	.00	.00
TNO.	0	0	**	6	1	0	0	1	5	**	0	0
SPH	.00	.00	.00	5.63	.00	.00	.00	.00	7.[illegible]	.00	.00	.00
ASV	.00	.00	1.93	1.39	1.86	.54	.00	.54	1.79	1.82	.00	.00
S	.00	.00	3.86	3.73	4.00	9.87	.00	9.87	4.15	4.09	.00	.00

MEM 5 JOINT 5 JOINT 6 SIMPLE BENDING

DEP	.00	.00	2.00	2.00	2.00	2.00	2.00	2.00	2.00	2.00	.00	.00
M+	.00	.00	-86.92	-53.48	52.06	133.41	149.39	75.21	-50.42	-82.28	.00	.00
M-	.00	.00	-209.87	-142.39	-9.81	42.81	48.22	4.32	-134.13	-216.02	.00	.00
VRS	.00	.00	85.84	84.71	83.59	45.14	-8.14	-36.88	-93.16	95.28	.00	.00
VSC	.00	.00	36.96	36.96	36.96	36.96	36.96	36.96	36.96	36.96	.00	.00
BAS	.00	.00	.00	.00	1.69	4.48	5.05	2.47	.00	.00	.00	.00
BNO.	0	0	0	0	2	5	6	3	0	0	0	0
SPH	.00	.00	.00	.00	28.25	7.00	5.63	14.13	.00	.00	.00	.00
TAS	.00	.00	7.22	4.82	.31	.00	.00	.00	4.65	7.44	.00	.00
TNO.	0	0	8	5	1	0	0	0	5	8	0	0
SPH	.00	.00	4.00	7.00	.00	.00	.00	.00	7.00	4.00	.00	.00
ASV	.00	.00	1.49	1.45	1.42	.54	.00	.54	1.74	1.77	.00	.00
S	.00	.00	5.01	5.12	5.25	9.87	.00	9.87	4.28	4.19	.00	.00

13:33 APR 09, 80 PAGE 24
BY JFF CHKD WEG

AT SECTION 3 MEMBER 6 IS OVERSTRESSED FC= 1.20 KSI FS= 20.00 KSI

See note on Sht. No. 86 (PAGE 21)

MEM 6 JOINT 6 JOINT 7 SIMPLE BENDING

DEP	.00	.00	2.00	2.00	2.00	2.00	2.00	2.00	2.00	2.00	2.00	2.00
M+	.00	.00	-75.81	-46.16	71.84	145.08	128.46	76.13	-7.27	-34.08	-112.34	.00
M-	.00	.00	-217.97	-140.40	-6.82	47.15	34.95	-18.53	-123.42	-174.59	-157.27	.00
VRS	.00	.00	94.84	93.71	92.59	35.59	-12.80	-42.79	-59.61	70.74	52.80	52.80
VSC	.00	.00	36.96	36.96	36.96	36.96	36.96	36.96	36.96	36.96	36.96	36.96
BAS	.00	.00	.00	.00	2.35	4.90	4.31	2.50	.00	.00	.00	.00
BNO.	0	0	0	0	3	5	5	3	0	0	0	0
SPW	.00	.00	.00	.00	14.13	7.00	7.00	14.13	.00	.00	.00	.00
TAS	.00	.00	**********	4.73	.21	.00	.00	.59	4.13	5.95	5.33	.00
TNO.	0	0	**	5	1	0	0	1	5	6	6	0
SPW	.00	.00	.00	7.00	.00	.00	.00	.00	7.00	5.63	5.63	.00
ASV	.00	.00	1.76	1.73	1.69	.54	.00	.54	.99	1.03	.54	.54
S	.00	.00	4.23	4.31	4.40	9.87	.00	9.87	7.49	7.24	9.87	9.87

89

SVERDRUP & PARCEL AND ASSOCIATES, INC. 13:33 APR 09, '80 PAGE 25

JOB NO. 6784 - FCDMC - RACD FLOODWAY - BASELINE RD. BRIDGE - PROGRAM P7310

PROBLEM - PIER DESIGN BY JFF CHKD WWEG

A.A.S.H.T.O. LOADING COMBINATIONS (COLUMNS)
ALL LOADINGS ARE NOT ADJUSTED TO DESIGN LOADS
DIMENSIONS: FORCES IN KIPS, MOMENTS IN KIP-FT

GROUP I DL+1.00LL+CF

MEM	JOINT	AXIAL	SHEAR	MOM(TRANS)	MOM(LONGI)	FORCE(LONGI)
7	8	115.56	-2.00	-11.70	.00	.00
8	9	118.27	1.71	10.71	.00	.00
9	10	118.21	1.51	9.06	.00	.00
10	11	118.61	1.56	9.81	.00	.00
11	12	118.78	1.28	8.05	.00	.00
12	13	119.81	.77	-4.63	.00	.00
13	14	117.71	1.30	7.58	.00	.00
7	8	186.46	-2.00	-11.70	.00	.00
8	9	217.37	1.71	10.71	.00	.00
9	10	216.84	1.51	9.06	.00	.00
10	11	202.48	1.56	9.81	.00	.00
11	12	184.67	1.28	8.05	.00	.00
12	13	184.84	.77	-4.63	.00	.00
13	14	132.17	1.30	7.58	.00	.00

GROUP II DL+W

MEM	JOINT	AXIAL	SHEAR	MOM(TRANS)	MOM(LONGI)	FORCE(LONGI)
7	8	116.96	1.94	18.28	19.47	1.01
8	9	122.69	1.98	18.41	19.47	1.01
9	10	122.68	1.96	18.20	19.47	1.01
10	11	122.60	1.93	17.99	19.47	1.01
11	12	122.90	1.91	17.76	19.47	1.01
12	13	121.21	1.98	18.18	19.47	1.01
13	14	121.01	1.61	15.89	19.47	1.01
7	8	121.12	-1.71	-16.93	19.47	1.01
8	9	121.13	-2.06	-18.94	19.47	1.01
9	10	122.88	-1.95	-18.13	19.47	1.01
10	11	122.57	-1.93	-17.99	19.47	1.01
11	12	122.66	-1.92	-17.83	19.47	1.01
12	13	122.61	-1.90	-17.66	19.47	1.01
13	14	117.07	-1.83	-17.24	19.47	1.01

GROUP III DL + LL + HORI. FORCES + CF

MEM	JOINT	AXIAL	SHEAR	MOM(TRANS)	MOM(LONGI)	FORCE(LONGI)

96

7	8	112.11	-5.02	-40.82	51.84	2.70
8	9	116.98	5.05	41.60	51.84	2.70
9	10	118.05	4.74	39.11	51.84	2.70
10	11	118.59	4.76	39.56	51.84	2.70
11	12	118.59	4.44	37.49	51.84	2.70
12	13	118.65	3.98	-34.27	51.84	2.70
13	14	114.46	4.14	34.99	51.84	2.70
7	8	189.91	-5.02	-40.82	51.84	2.70
8	9	215.67	5.05	41.60	51.84	2.70
9	10	217.00	4.74	39.11	51.84	2.70
10	11	202.50	4.76	39.56	51.84	2.70
11	12	184.86	4.44	37.49	51.84	2.70
12	13	186.00	3.98	-34.27	51.84	2.70
13	14	135.42	4.14	34.99	51.84	2.70

GROUP IV DL + LL + (S+T) + CF

MEM	JOINT	AXIAL	SHEAR	MOM(TRANS)	MOM(LONGI)	FORCE(LONGI)
7	8	105.25	7.68	82.07	.00	.00
8	9	114.42	9.12	78.98	.00	.00
9	10	117.18	5.08	42.35	.00	.00
10	11	117.12	1.56	9.81	.00	.00
11	12	117.76	3.23	26.22	.00	.00
12	13	115.95	-6.64	-72.91	.00	.00
13	14	107.41	-8.39	-86.19	.00	.00
7	8	192.09	7.68	82.07	.00	.00
8	9	224.44	9.12	78.98	.00	.00
9	10	218.71	5.08	42.35	.00	.00
10	11	205.21	1.56	9.81	.00	.00
11	12	186.54	3.23	26.22	.00	.00
12	13	191.90	-6.64	-72.91	.00	.00
13	14	137.79	-8.39	-86.19	.00	.00

GROUP V DL + W + (S+T)

MEM	JOINT	AXIAL	SHEAR	MOM(TRANS)	MOM(LONGI)	FORCE(LONGI)
7	8	106.65	11.62	112.05	19.47	1.91
8	9	117.27	9.39	86.68	19.47	1.91
9	10	121.66	5.53	51.49	19.47	1.91
10	11	121.08	-1.93	-17.99	19.47	1.91
11	12	121.64	-5.49	-51.13	19.47	1.91
12	13	117.35	-9.31	-85.93	19.47	1.91
13	14	106.77	-11.51	-111.01	19.47	1.91
7	8	126.75	11.62	112.05	19.47	1.91
8	9	129.76	9.39	86.68	19.47	1.91
9	10	124.75	5.53	51.49	19.47	1.91
10	11	125.33	-1.93	-17.99	19.47	1.91
11	12	124.77	-5.49	-51.13	19.47	1.91
12	13	129.68	-9.31	-85.93	19.47	1.91
13	14	126.63	-11.51	-111.01	19.47	1.91

GROUP VI DL + LL + HORI. FORCES + (S+T) + CF

MEM	JOINT	AXIAL	SHEAR	MOM(TRANS)	MOM(LONGI)	FORCE(LONGI)
7	8	101.81	-10.30	-91.99	51.84	2.70
8	9	113.13	12.46	109.87	51.84	2.70
9	10	117.02	8.31	72.40	51.84	2.70
10	11	117.10	4.76	39.56	51.84	2.70
11	12	117.56	6.39	55.66	51.84	2.70
12	13	114.79	8.03	-102.54	51.84	2.70
13	14	104.16	9.42	86.16	51.84	2.70
7	8	195.53	-10.30	-91.99	51.84	2.70
8	9	225.73	12.46	109.87	51.84	2.70
9	10	218.87	8.31	72.40	51.84	2.70
10	11	205.23	4.76	39.56	51.84	2.70
11	12	186.73	6.39	55.66	51.84	2.70
12	13	193.07	8.03	-102.54	51.84	2.70
13	14	141.05	9.42	86.16	51.84	2.70

GROUP VII DL+EQ

MEM	JOINT	AXIAL	SHEAR	MOM(TRANS)	MOM(LONGI)	FORCE(LONGI)
7	8	102.92	14.25	137.03	301.99	15.73
8	9	127.96	15.60	144.37	301.99	15.73
9	10	122.04	15.12	140.71	301.99	15.73
10	11	122.70	14.98	139.29	301.99	15.73
11	12	123.68	14.80	137.78	301.99	15.73
12	13	116.47	15.05	139.02	301.99	15.73
13	14	134.27	13.19	127.62	301.99	15.73
7	8	135.16	-14.03	-135.68	301.99	15.73
8	9	115.86	-15.69	-144.89	301.99	15.73
9	10	123.52	-15.11	-140.64	301.99	15.73
10	11	122.47	-14.98	-139.29	301.99	15.73
11	12	121.88	-14.81	-137.85	301.99	15.73
12	13	127.36	-14.97	-138.50	301.99	15.73
13	14	103.81	-13.42	-128.97	301.99	15.73

RATIO OF HORIZONTAL EARTHQUAKE FORCE TO HORIZONTAL FORCE LOADING CASE
TRANSVERSE EQ/GROUP II WIND = 7.7444
LONGITUDINAL EQ/GP. II WIND = 15.5070

SVERDRUP & PARCEL AND ASSOCIATES, INC. 13:33 APR 09, '80 PAGE 28

JOB NO. 6784 - FCDMC - RACD FLOODWAY - BASELINE RD. BRIDGE - PROGRAM P7310

PROBLEM - PIER DESIGN BY JFF CHKD WEG

A.A.S.H.T.O. LOADING COMBINATIONS (COLUMNS)
ALL LOADINGS ARE NOT ADJUSTED TO DESIGN LOADS
DIMENSIONS: FORCES IN KIPS, MOMENTS IN KIP-FT

GROUP I DL+1.00LL+CF

MEM	JOINT	AXIAL	SHEAR	MOM(TRANS)	MOM(LONGI)	FORCE(LONGI)
7	1	-106.98	2.00	-24.68	.00	.00
8	2	-109.70	-1.71	20.39	.00	.00
9	3	-109.63	-1.51	18.38	.00	.00
10	4	-110.03	-1.56	18.90	.00	.00
11	5	-110.20	-1.28	15.58	.00	.00
12	6	-111.23	-.77	9.50	.00	.00
13	7	-109.14	-1.30	15.99	.00	.00
7	1	-177.89	2.00	-24.68	.00	.00
8	2	-208.80	-1.71	20.39	.00	.00
9	3	-208.26	-1.51	18.38	.00	.00
10	4	-193.90	-1.56	18.90	.00	.00
11	5	-176.09	-1.28	15.58	.00	.00
12	6	-176.26	-.77	9.50	.00	.00
13	7	-123.59	-1.30	15.99	.00	.00

GROUP II DL+W

MEM	JOINT	AXIAL	SHEAR	MOM(TRANS)	MOM(LONGI)	FORCE(LONGI)
7	1	-108.38	-1.94	16.98	1.01	1.01
8	2	-114.12	-1.98	17.58	1.01	1.01
9	3	-114.11	-1.96	17.43	1.01	1.01
10	4	-114.02	-1.93	17.22	1.01	1.01
11	5	-114.32	-1.91	16.93	1.01	1.01
12	6	-112.63	-1.98	17.87	1.01	1.01
13	7	-112.43	-1.61	13.35	1.01	1.01
7	1	-112.55	1.71	-14.26	1.01	1.01
8	2	-112.55	2.06	-18.62	1.01	1.01
9	3	-114.30	1.95	-17.28	1.01	1.01
10	4	-113.99	1.93	-17.22	1.01	1.01
11	5	-114.09	1.92	-17.08	1.01	1.01
12	6	-114.04	1.90	-16.84	1.01	1.01
13	7	-108.50	1.83	-16.06	1.01	1.01

GROUP III DL + LL + MORI. FORCES + CF

MEM	JOINT	AXIAL	SHEAR	MOM(TRANS)	MOM(LONGI)	FORCE(LONGI)

7	1	-103.54	5.02	-50.51	2.70	2.70
8	2	-108.40	-5.05	50.32	2.70	2.70
9	3	-109.47	-4.74	47.08	2.70	2.70
10	4	-110.01	-4.76	47.38	2.70	2.70
11	5	-110.01	-4.44	43.70	2.70	2.70
12	6	-110.07	-3.98	38.21	2.70	2.70
13	7	-105.88	-4.14	40.31	2.70	2.70
7	1	-181.33	5.02	-50.51	2.70	2.70
8	2	-210.09	-5.05	50.32	2.70	2.70
9	3	-208.42	-4.74	47.08	2.70	2.70
10	4	-193.93	-4.76	47.38	2.70	2.70
11	5	-176.28	-4.44	43.70	2.70	2.70
12	6	-177.42	-3.98	38.21	2.70	2.70
13	7	-126.85	-4.14	40.31	2.70	2.70

GROUP IV DL + LL + (S+T) + CF

MEM	JOINT	AXIAL	SHEAR	MOM(TRANS)	MOM(LONGI)	FORCE(LONGI)
7	1	-96.68	-7.68	-69.65	.00	.00
8	2	-105.84	-9.12	87.04	.00	.00
9	3	-108.61	-5.08	50.07	.00	.00
10	4	-108.55	-1.56	18.90	.00	.00
11	5	-109.18	-3.23	32.87	.00	.00
12	6	-107.38	6.64	-57.15	.00	.00
13	7	-98.83	8.39	-66.44	.00	.00
7	1	-183.51	-7.68	-69.65	.00	.00
8	2	-215.86	-9.12	87.04	.00	.00
9	3	-210.13	-5.08	50.07	.00	.00
10	4	-196.63	-1.56	18.90	.00	.00
11	5	-177.96	-3.23	32.87	.00	.00
12	6	-183.33	6.64	-57.15	.00	.00
13	7	-129.21	8.39	-66.44	.00	.00

GROUP V DL + W + (S+T)

MEM	JOINT	AXIAL	SHEAR	MOM(TRANS)	MOM(LONGI)	FORCE(LONGI)
7	1	-98.08	-11.62	99.40	1.01	1.01
8	2	-108.70	-9.39	84.22	1.01	1.01
9	3	-113.09	-5.53	49.12	1.01	1.01
10	4	-112.50	1.93	-17.22	1.01	1.01
11	5	-113.06	5.49	-48.77	1.01	1.01
12	6	-108.78	9.31	-83.49	1.01	1.01
13	7	-98.19	11.51	-98.49	1.01	1.01
7	1	-118.17	-11.62	99.40	1.01	1.01
8	2	-121.18	-9.39	84.22	1.01	1.01
9	3	-116.17	-5.53	49.12	1.01	1.01
10	4	-116.75	1.93	-17.22	1.01	1.01
11	5	-116.19	5.49	-48.77	1.01	1.01
12	6	-121.10	9.31	-83.49	1.01	1.01
13	7	-118.05	11.51	-98.49	1.01	1.01

GROUP VI DL + LL + HORI. FORCES + (S+T) + CF

MEM	JOINT	AXIAL	SHEAR	MOM(TRANS)	MOM(LONGI)	FORCE(LONGI)
7	1	-93.23	10.30	-95.49	2.70	2.70
8	2	-104.55	-12.46	116.97	2.70	2.70
9	3	-108.45	-8.31	78.77	2.70	2.70
10	4	-108.52	-4.76	47.38	2.70	2.70
11	5	-108.99	-6.39	61.00	2.70	2.70
12	6	-106.21	-8.03	74.58	2.70	2.70
13	7	-95.58	-9.42	85.29	2.70	2.70
7	1	-186.95	10.30	-95.49	2.70	2.70
8	2	-217.15	-12.46	116.97	2.70	2.70
9	3	-210.29	-8.31	78.77	2.70	2.70
10	4	-196.65	-4.76	47.38	2.70	2.70
11	5	-178.16	-6.39	61.00	2.70	2.70
12	6	-184.49	-8.03	74.58	2.70	2.70
13	7	-132.47	-9.42	85.29	2.70	2.70

GROUP VII DL+EQ

MEM	JOINT	AXIAL	SHEAR	MOM(TRANS)	MOM(LONGI)	FORCE(LONGI)
7	1	-94.34	-14.25	122.32	15.73	15.73
8	2	-119.39	-15.60	139.62	15.73	15.73
9	3	-113.46	-15.12	134.47	15.73	15.73
10	4	-114.13	-14.98	133.36	15.73	15.73
11	5	-115.11	-14.80	131.60	15.73	15.73
12	6	-107.89	-15.05	134.93	15.73	15.73
13	7	-125.70	-13.19	112.52	15.73	15.73
7	1	-126.58	14.03	-119.60	15.73	15.73
8	2	-107.28	15.69	-140.66	15.73	15.73
9	3	-114.94	15.11	-134.32	15.73	15.73
10	4	-113.89	14.98	-133.36	15.73	15.73
11	5	-113.30	14.81	-131.75	15.73	15.73
12	6	-118.78	14.97	-133.89	15.73	15.73
13	7	-95.23	13.42	-115.23	15.73	15.73

RATIO OF HORIZONTAL EARTHQUAKE FORCE TO HORIZONTAL FORCE LOADING CASE
TRANSVERSE EQ/GROUP II WIND = 7.7444
LONGITUDINAL EQ/GP. II WIND = 15.5070

P7361 - REINFORCED CONCRETE COLUMN DESIGN WITH SLENDERNESS EFFECTS INCLUDED FOR ONE DIRECTION OF BENDING

FORM I

SVERDRUP AND PARCEL

FORM 1 OF 2

SHEET 96 OF

JOB 6784 - FCDMC - RWCD Floodway - Baseline Rd. Br.

DATE 4-14-80 BY JFF CHECKED BY WEG

JOB NO. 6784 - FCDMC - RWCD FLOODWAY - BASELINE RD. BRIDGE - PROGRAM P7361	
PROBLEM NO. - COLUMN DESIGN	BY JFF CHKD

COLUMN TYPE	TOTAL INCREASE TO BE CONSIDERED IN DESIGN DEPTH (IN.)	WIDTH (IN.)	CONC. STRENGTH 28 DAYS F'C (PSI)	YIELD STRESS OF REINF. FY (PSI)	MIN. CLEAR SPACING OF REINF. (IN.)	COVER FOR REINF. (IN.)	DEPTH INCREMENT (IN.)	WIDTH INCREMENT (IN.)
1	12.	12.	3000.	40000.	3.53	2.5	6.	6.

CODE	MAX. BAR SIZE	MINIMUM PERCENT STEEL	MAXIMUM PERCENT STEEL	NUMBER OF COLUMNS
1	11	1.	4.	2.

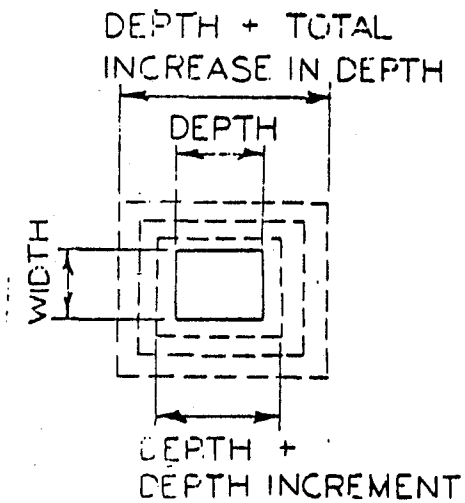

NOTES.

1) COLUMN TYPE
   (C2. 1=CIRCULAR CROSS SECTION WITH CIRCULAR REINFORCEMENT PATTERN
   2=RECTANGULAR CROSS SECTION WITH CIRCULAR REINFORCEMENT PATTERN
   3=RECTANGULAR CROSS SECTION WITH RECTANGULAR REINFORCEMENT PATTERN
   C4. (NOT REQUIRED FOR RECTANGULAR REINFORCEMENT PATTERN)
   1=SPIRAL REINFORCEMENT
   2=TIED REINFORCEMENT
   TIED REINFORCEMENT IS ASSUMED WHEN A RECTANGULAR REINFORCEMENT PATTERN IS SPECIFIED.
2) THE TOTAL INCREASE IN COLUMN SIZE SHOULD NORMALLY BE LESS THAN 12 IN. THE DEPTH AND WIDTH INCREMENTS ARE SET INTERNALLY TO MINIMUM VALUES EQUAL TO 10 PERCENT OF THE COLUMN DIMENSIONS. LARGER VALUES ONLY SHOULD BE SPECIFIED.
3) FOR ROUND COLUMNS THE INCREMENTS FOR DEPTH AND WIDTH SHOULD HAVE THE SAME VALUE.
4) THE COLUMN DESIGNS ARE BASED ON TWO BAR SIZES ONLY--THE MAXIMUM BAR SIZE INPUT, AND THE NEXT SIZE SMALLER.
5) THE EFF. LENGTH FACTOR IS APPLIED IN THE LONGITUDINAL DIRECTION ONLY. IN THE TRANSVERSE DIRECTION K=1 IN ALL CASES.
6) SLENDERNESS EFFECTS ARE APPLIED IN THE LONGITUDINAL DIRECTION ONLY.
7) CODE
   1=SERVICE LOAD DESIGN OF COLUMNS
   2=LOAD FACTOR DESIGN OF COLUMNS
8) DEFAULT VALUES FOR MAX. AND MIN. PERCENT STEEL ARE 5.0 AND 1.0
9) NO. LOC. CASES=NUMBER OF LOADING CASES FOR DESIGN (2 CASES PER CARD-15 MAX)
10) DEAD LOAD THRUST TO BE USED IN COMPUTATIONS FOR LONGITUDINAL MOMENT MAGNIFICATION FACTOR FOR SLENDERNESS EFFECTS.
11) COVER FOR REINF. IS COVER OVER PRINCIPAL REINFORCEMENT.

P7361 REINFORCED CONCRETE COLUMN DESIGN WITH SLENDERNESS EFFECTS INCLUDED FOR ONE DIRECTION OF BENDING — FORM II

SVERDRUP AND PARCEL

FORM 2 OF 2

SHEET 97 OF —

JOB 6784 FCDMC-RWCD Floodway - Baseline Rd. Br.

DATE 4-14-80 BY VFF CHECKED BY WEG

COL. NO.	JOINT NO.	NO. LOC. CASES	COLUMN DEPTH (IN.)	COLUMN WIDTH (IN.)	LONGIT. EFF. LGTH. FACT. (K)	DEAD LOAD THRUST (K)	COLUMN LENGTH (FT.)
7	8	15	24.	24.	2.1	119.04	18.2

THRUST (K)	TRANSV. MOM. (K-FT.)	LONGIT. MOM. (K-FT.)	THRUST (K)	TRANSV. MOM. (K-FT.)	LONGIT. MOM. (K-FT.)
115.56	11.70	0.	186.46	11.70	0.
93.57	14.62	15.58	96.90	13.57	15.58
89.69	32.66	41.47	151.93	32.66	41.47
84.20	65.66	0.	153.67	65.66	0.
76.18	80.04	13.91	90.54	80.04	13.91
72.72	65.71	37.03	139.66	65.71	37.03
77.19	102.77	0.	101.37	101.76	0.
89.28	.51	226.49			

COL. NO.	JOINT NO.	NO. LOC. CASES	COLUMN DIAM. OR DEPTH. (IN.)	COLUMN WIDTH (IN.)	LONGIT. EFF. LGTH. FACT. (K)	DEAD LOAD THRUST (K)	COLUMN LENGTH (FT.)
8	9	15	24.	24.	2.1	121.91	18.2

THRUST (K)	TRANSV. MOM. (K-FT.)	LONGIT. MOM. (K-FT.)	THRUST (K)	TRANSV. MOM. (K-FT.)	LONGIT. MOM. (K-FT.)
118.27	10.71	0.	217.37	10.71	0.
98.15	14.73	15.58	96.90	15.15	15.58
93.58	33.28	41.47	174.74	33.28	41.47
91.54	63.18	0.	179.55	63.18	0.
83.76	61.91	13.91	92.69	61.91	13.91
80.81	78.48	37.03	161.24	78.48	37.03
95.97	108.28	0.	86.90	108.67	0.
91.43	.20	226.49			

NOTE. REPEAT THE ABOVE SET OF CARDS FOR ADDITIONAL COLUMNS TO 20 MAX.
TRANSV. MOM. (HT)=MOMENT ABOUT AN AXIS PARALLEL WITH THE WIDTH OF SECTION
LONGIT. MOM. (WL)=MOMENT ABOUT AN AXIS PARALLEL WITH THE DEPTH OF SECTION

JOB NO. 6784 - FCDMC - RWCD FLOODWAY - BASELINE RD. BRIDGE- PROGRAM P7361

ROBLEM - COLUMN DESIGN BY JFF CHKD WEG

DESIGN OF ROUND R.C. COMPRESSION MEMBERS

[redacted]

TIED REINFORCEMENT ASSUMED FOR ALL MEMBERS

RECTANGULAR REINFORCEMENT PATTERN IS GIVEN BY NUMBER OF BARS PER ROW
OTHERWISE INDICATES A CIRCULAR REINFORCEMENT PATTERN.

TOTAL DEPTH INCREMENT =	12.00 IN	TOTAL WIDTH INCREMENT =	12.00 IN
DEPTH INCREMENT =	6.00 IN	WIDTH INCREMENT =	6.00 IN
MIN.CLEAR SPACING =	3.53 IN	BARS CONSIDERED	10 11
MIN. PERCENT STEEL =	1.00	MAX. PERCENT STEEL =	4.00

DEPTH IS IN THE TRANSVERSE DIRECTION

ML=MOMENT ABOUT AN AXIS PARALLEL WITH THE DEPTH
MT=MOMENT ABOUT AN AXIS PARALLEL WITH THE WIDTH

MEMBER 7 JOINT 8 DEPTH 24.00 IN WIDTH 24.00 IN
DL THRUST = 119.04 K COL. LTH.= 18.20 FT LONGIT. K = 2.10
TRANSV. K = 1.0

TH (K)	MT (K-FT)	ML (K-FT)	TH (K)	MT (K-FT)	ML (K-FT)
115.560	11.700	.000	186.460	11.700	.000
93.570	14.620	15.580	96.900	13.540	15.580
89.690	32.660	41.470	151.930	32.660	41.470
84.200	65.660	.000	153.670	65.660	.000
76.180	80.040	13.910	90.540	80.040	13.910
72.720	65.710	37.030	139.660	65.710	37.030
77.190	102.770	.000	101.370	101.760	.000
89.280	.510	226.490			

MEMBER 8 JOINT 9 DEPTH 24.00 IN WIDTH 24.00 IN
DL THRUST = 121.91 K COL. LTH.= 18.20 FT LONGIT. K = 2.10
TRANSV. K = 1.0

TH (K)	MT (K-FT)	ML (K-FT)	TH (K)	MT (K-FT)	ML (K-FT)
118.270	10.710	.000	217.370	10.710	.000
98.150	14.730	15.580	96.900	15.150	15.580
93.580	33.280	41.470	174.940	33.280	41.470
91.540	63.180	.000	179.550	63.180	.000
83.760	61.910	13.910	92.690	61.910	13.910
80.810	78.480	37.030	161.240	78.480	37.030
95.970	108.280	.000	86.900	108.670	.000
91.430	.200	226.490			

JOB NO. 6784 - FCDMC - RWCD FLOODWAY - BASELINE RD. BRIDGE- PROGRAM P7361

PROBLEM - COLUMN DESIGN BY JFF CHKD WEG

MEMBER 7 JOINT 8

DEPTH= 30.000 WIDTH= 30.000 FPC= 3.000 FY= 40.000

USE- 12 NO.10 AST= 15.24 SQ.IN. PCT.AS= 2.16 COVER= 2.50 IN.

PHIC= .35 PHIB= .45
BY SERVICE LOAD DESIGN OF COLUMNS

LOAD CASE	APPLIED LOADS AP	AMT	AML	COMPUTED STRENGTH UP	UMT	UML	UP/AP
1	115.6	28.9	35.3	529.3	132.3	161.7	4.580
2	186.5	46.6	57.0	528.2	132.7	162.1	2.835
3	93.6	23.4	28.6	529.3	132.3	161.7	5.657
4	96.9	24.2	29.6	529.3	132.3	161.7	5.462
5	89.7	32.7	50.7	387.5	141.4	219.3	4.323
6	151.9	38.0	50.7	514.8	129.3	172.5	3.391
7	84.2	65.7	25.7	328.6	256.5	100.5	3.904
8	153.7	65.7	46.9	454.8	194.7	139.2	2.961
9	76.2	80.0	23.3	254.1	267.6	77.8	3.340
10	90.5	80.0	27.7	298.0	263.5	91.0	3.292
11	72.7	65.7	45.2	254.2	229.6	158.1	3.495
12	139.7	65.7	45.2	431.9	203.5	140.1	3.094
13	77.2	102.8	23.6	202.8	270.0	62.0	2.627
14	101.4	101.8	31.0	265.2	267.2	81.3	2.621
15	89.3	22.3	276.7	88.5	22.1	274.2	.991

THE CRITICAL LOAD CASE IS NUMBER 15

AMT=MOMENT ABOUT THE LONGITUDINAL ROADWAY AXIS - MOM.(TRANS) K-FT
AML=MOMENT ABOUT THE TRANSVERSE ROADWAY AXIS - MOM.(LONG) K-FT

KL/R= 61.15 FOR LONGITUDINAL MOM. (AML)
KL/R= 29.12 FOR TRANSVERSE MOM. (AMT)

[redacted]

JOB NO. 6784 - FCDMC - RWCD FLOODWAY - BASELINE RD. BRIDGE- PROGRAM P7361

PROBLEM - COLUMN DESIGN BY JFF CHKD WEG

MEMBER 8 JOINT 9

DEPTH= 30.000 WIDTH= 30.000 FPC= 3.000 FY= 40.000

USE- 14 NO.10 AST= 17.78 SQ.IN. PCT.AS= 2.52 COVER= 2.50 IN.

PHIC= .35 PHIB= .45
BY SERVICE LOAD DESIGN OF COLUMNS

LOAD	APPLIED LOADS			COMPUTED STRENGTH			
CASE	AP	AMT	AML	UP	UMT	UML	UP/AP
1	118.3	29.6	38.5	540.6	135.6	176.5	4.573
2	217.4	54.3	70.7	540.9	135.5	176.4	2.489
3	98.1	24.5	31.9	540.5	135.6	176.5	5.510
4	96.9	24.2	31.5	540.5	135.6	176.5	5.581
5	93.6	33.3	54.0	405.7	144.5	234.3	4.337
6	174.9	43.7	56.9	540.9	135.5	176.4	3.093
7	91.5	63.2	29.8	372.5	257.5	121.4	4.072
8	179.6	63.2	58.4	500.3	176.4	163.1	2.787
9	83.8	61.9	27.2	357.3	264.6	116.4	4.266
10	92.7	61.9	30.2	379.8	254.1	123.8	4.100
11	80.8	78.5	48.2	263.1	255.4	156.8	3.255
12	161.2	78.5	52.5	445.8	217.4	145.3	2.766
13	96.0	108.3	31.2	255.5	288.2	83.1	2.662
14	86.9	108.7	28.3	230.8	288.6	75.1	2.656
15	91.4	22.9	294.7	94.0	23.5	303.6	1.030

THE CRITICAL LOAD CASE IS NUMBER 15

AMT=MOMENT ABOUT THE LONGITUDINAL ROADWAY AXIS - MOM.(TRANS) K-FT
AML=MOMENT ABOUT THE TRANSVERSE ROADWAY AXIS - MOM.(LONG) K-FT

KL/R= 61.15 FOR LONGITUDINAL MOM. (AML)
KL/R= 29.12 FOR TRANSVERSE MOM. (AMT)

[redacted]

SVERDRUP & PARCEL

JOB 6784 FCDMC - RWCD Floodway

SHEET NO. 101 OF

DATE 4-14-80

COMPUTATIONS FOR Baseline Rd. Bridge

BY JFF CHKD WEG

Intermed. Piers (cont'd.)

Column Bar Cut-off Point

Column Member #8 governs, Longit. EQ governs, Ldg. Case 15.

Moment @ Top = 0

Moment @ Bottom = 226.49'k

Moment varies linearly, interpolate for various distances from bottom:

Distance (Ft.) From Bottom	Longit. Mom. ('k)
1	214
2	202
3	189
4	177
5	164
6	152
7	139
8	127
9	114
10	102
18.2	0

Read these values into P7361 along with previously used DL axial load in Ldg. Case 15 = 91.43^k & Mom. Transv. = .2'k

80-COLUMN CARD PUNCH FORMAT

SVERDRUP & PARCEL

JOB 6784 FCDMC - RWCD Floodway Brs. DATE 4-15-80 BY JFF CHKD. WEG

SHEET 102 OF ____ 36 CARDS ON THIS SHEET

```
JØB NØ. 6784 - FCDMC - RWCD FLØØDWAY - BASELINE RD. BRIDGE- PRØGRAM P7361
PRØBLEM - CØLUMN BAR CUT-ØFF PØINT                    BY JFF          CHKD
  1  2        0.        0.      3000.     40000.          3.53      2.5       0.        0.
  1  1  1     1.        4.        11.
  8  9  1       30.       30.       2.1     121.91     18.2
             91.43        .20     226.49
  8  9  1       30.       30.       2.1     121.91     18.2
             91.43        .20     214.
  8  9  1       30.       30.       2.1     121.91     18.2
             91.43        .20     202.
  8  9  1       30.       30.       2.1     121.91     18.2
             91.43        .20     189.
  8  9  1       30.       30.       2.1     121.91     18.2
             91.43        .20     177.
  8  9  1       30.       30.       2.1     121.91     18.2
             91.43        .20     164.
  8  9  1       30.       30.       2.1     121.91     18.2
             91.43        .20     152.
  8  9  1       30.       30.       2.1     121.91     18.2
             91.43        .20     139.
  8  9  1       30.       30.       2.1     121.91     18.2
             91.43        .20     127.
  8  9  1       30.       30.       2.1     121.91     18.2
             91.43        .20     114.
  8  9  1       30.       30.       2.1     121.91     18.2
             91.43        .20     102.
```

SVERDRUP & PARCEL AND ASSOCIATES, INC. 13:26 APR 15,'80 PAGE 1

JOB NO. 6784 - FCDMC - RWCD FLOODWAY - BASELINE RD. BRIDGE- PROGRAM P7361

PROBLEM - COLUMN BAR CUT-OFF POINT BY JFF CHKD WEG

DESIGN OF ROUND R.C. COMPRESSION MEMBERS

[redacted]

TIED REINFORCEMENT ASSUMED FOR ALL MEMBERS

RECTANGULAR REINFORCEMENT PATTERN IS GIVEN BY NUMBER OF BARS PER ROW
OTHERWISE INDICATES A CIRCULAR REINFORCEMENT PATTERN.

TOTAL DEPTH INCREMENT	=	.00 IN	TOTAL WIDTH INCREMENT	=	.00 IN
DEPTH INCREMENT	=	.00 IN	WIDTH INCREMENT	=	.00 IN
MIN.CLEAR SPACING	=	3.53 IN	BARS CONSIDERED	10	11
MIN. PERCENT STEEL	=	1.00	MAX. PERCENT STEEL	=	4.00

DEPTH IS IN THE TRANSVERSE DIRECTION

ML=MOMENT ABOUT AN AXIS PARALLEL WITH THE DEPTH
MT=MOMENT ABOUT AN AXIS PARALLEL WITH THE WIDTH

MEMBER 8 JOINT 9 DEPTH 30.00 IN WIDTH 30.00 IN
DL THRUST = 121.91 K COL. LTH.= 16.20 FT LONGIT. K = 2.10
TRANSV. K = 1.0

TH (K)	MT (K-FT)	ML (K-FT)	TH (K)	MT (K-FT)	ML (K-FT)
91.430	.200	226.490			

MEMBER 8 JOINT 9 DEPTH 30.00 IN WIDTH 30.00 IN
DL THRUST = 121.91 K COL. LTH.= 18.20 FT LONGIT. K = 2.10
TRANSV. K = 1.0

TH (K)	MT (K-FT)	ML (K-FT)	TH (K)	MT (K-FT)	ML (K-FT)
91.430	.200	214.000			

MEMBER 8 JOINT 9 DEPTH 30.00 IN WIDTH 30.00 IN
DL THRUST = 121.91 K COL. LTH.= 18.20 FT LONGIT. K = 2.10
TRANSV. K = 1.0

TH (K)	MT (K-FT)	ML (K-FT)	TH (K)	MT (K-FT)	ML (K-FT)
91.430	.200	202.000			

MEMBER 8 JOINT 9 DEPTH 30.00 IN WIDTH 30.00 IN
DL THRUST = 121.91 K COL. LTH.= 18.20 FT LONGIT. K = 2.10
TRANSV. K = 1.0

TH (K)	MT (K-FT)	ML (K-FT)	TH (K)	MT (K-FT)	ML (K-FT)
91.430	.200	189.000			

MEMBER 8 JOINT 9 DEPTH 30.00 IN WIDTH 30.00 IN
DL THRUST = 121.91 K COL. LTH.= 18.20 FT LONGIT. K = 2.10

```
TRANSV. K = 1.0

TH (K)     MT (K-FT)    ML (K-FT)      TH (K)     MT (K-FT)    ML (K-FT)
 91.430        .200      177.000

MEMBER  8   JOINT  9   DEPTH   30.00 IN   WIDTH   30.00 IN
DL THRUST =     121.91 K   COL. LTH.= 18.20 FT    LONGIT. K =  2.10
TRANSV. K = 1.0

TH (K)     MT (K-FT)    ML (K-FT)      TH (K)     MT (K-FT)    ML (K-FT)
 91.430        .200      164.000

MEMBER  8   JOINT  9   DEPTH   30.00 IN   WIDTH   30.00 IN
DL THRUST =     121.91 K   COL. LTH.= 18.20 FT    LONGIT. K =  2.10
TRANSV. K = 1.0

TH (K)     MT (K-FT)    ML (K-FT)      TH (K)     MT (K-FT)    ML (K-FT)
 91.430        .200      152.000

MEMBER  8   JOINT  9   DEPTH   30.00 IN   WIDTH   30.00 IN
DL THRUST =     121.91 K   COL. LTH.= 18.20 FT    LONGIT. K =  2.10
TRANSV. K = 1.0

TH (K)     MT (K-FT)    ML (K-FT)      TH (K)     MT (K-FT)    ML (K-FT)
 91.430        .200      139.000

MEMBER  8   JOINT  9   DEPTH   30.00 IN   WIDTH   30.00 IN
DL THRUST =     121.91 K   COL. LTH.= 18.20 FT    LONGIT. K =  2.10
TRANSV. K = 1.0

TH (K)     MT (K-FT)    ML (K-FT)      TH (K)     MT (K-FT)    ML (K-FT)
 91.430        .200      127.000

MEMBER  8   JOINT  9   DEPTH   30.00 IN   WIDTH   30.00 IN
DL THRUST =     121.91 K   COL. LTH.= 18.20 FT    LONGIT. K =  2.10
TRANSV. K = 1.0

TH (K)     MT (K-FT)    ML (K-FT)      TH (K)     MT (K-FT)    ML (K-FT)
 91.430        .200      114.000

MEMBER  8   JOINT  9   DEPTH   30.00 IN   WIDTH   30.00 IN
DL THRUST =     121.91 K   COL. LTH.= 18.20 FT    LONGIT. K =  2.10
TRANSV. K = 1.0

TH (K)     MT (K-FT)    ML (K-FT)      TH (K)     MT (K-FT)    ML (K-FT)
 91.430        .200      102.000
```

JOB NO. 6784 - FCDMC - RWCD FLOODWAY - BASELINE RD. BRIDGE- PROGRAM P7361

PROBLEM - COLUMN BAR CUT-OFF POINT BY JFF CHKD WEG

MEMBER 8 JOINT 9

DEPTH= 30.000 WIDTH= 30.000 FPC= 3.000 FY= 40.000

USE- 11 NO.10 AST= 13.97 SQ.IN. PCT.AS= 1.98 COVER= 2.50 IN.

PHIC= .35 PHIB= .45
BY SERVICE LOAD DESIGN OF COLUMNS

LOAD	APPLIED LOADS			COMPUTED STRENGTH			
CASE	AP	AMT	AML	UP	UMT	UML	UP/AP
1	91.4	22.9	260.2	90.9	22.7	258.6	.994

THE CRITICAL LOAD CASE IS NUMBER 1

AMT=MOMENT ABOUT THE LONGITUDINAL ROADWAY AXIS - MOM.(TRANS) K-FT
AML=MOMENT ABOUT THE TRANSVERSE ROADWAY AXIS - MOM.(LONG) K-FT

KL/R= 61.15 FOR LONGITUDINAL MOM. (AML)
KL/R= 29.12 FOR TRANSVERSE MOM. (AMT)

[redacted]

JOB NO. 6784 - FCDMC - RWCD FLOODWAY - BASELINE RD. BRIDGE- PROGRAM P7361

PROBLEM - COLUMN BAR CUT-OFF POINT BY JFF CHKD WEG

MEMBER 8 JOINT 9

DEPTH= 30.000 WIDTH= 30.000 FPC= 3.000 FY= 40.000

USE- 10 NO.10 AST= 12.70 SQ.IN. PCT.AS= 1.80 COVER= 2.50 IN.

PHIC= .35 PHIB= .45
BY SERVICE LOAD DESIGN OF COLUMNS

LOAD	APPLIED LOADS			COMPUTED STRENGTH			
CASE	AP	AMT	AML	UP	UMT	UML	UP/AP
1	91.4	22.9	246.6	91.0	22.8	245.6	.996

THE CRITICAL LOAD CASE IS NUMBER 1

AMT=MOMENT ABOUT THE LONGITUDINAL ROADWAY AXIS - MOM.(TRANS) K-FT
AML=MOMENT ABOUT THE TRANSVERSE ROADWAY AXIS - MOM.(LONG) K-FT

KL/R= 61.15 FOR LONGITUDINAL MOM. (AML)
KL/R= 29.12 FOR TRANSVERSE MOM. (AMT)

[redacted]

JOB NO. 6784 - FCDMC - RWCD FLOODWAY - BASELINE RD. BRIDGE- PROGRAM P7361

PROBLEM - COLUMN BAR CUT-OFF POINT BY JFF CHKD WEG

MEMBER 8 JOINT 9

DEPTH= 30.000 WIDTH= 30.000 FPC= 3.000 FY= 40.000

USE- 10 NO.10 AST= 12.70 SQ.IN. PCT.AS= 1.80 COVER= 2.50 IN.

PHIC= .35 PHIB= .45
BY SERVICE LOAD DESIGN OF COLUMNS

LOAD	APPLIED LOADS			COMPUTED STRENGTH			
CASE	AP	AMT	AML	UP	UMT	UML	UP/AP
1	91.4	22.9	239.1	93.9	23.6	246.5	1.030

THE CRITICAL LOAD CASE IS NUMBER 1

AMT=MOMENT ABOUT THE LONGITUDINAL ROADWAY AXIS - MOM.(TRANS) K-FT
AML=MOMENT ABOUT THE TRANSVERSE ROADWAY AXIS - MOM.(LONG) K-FT

KL/R= 61.15 FOR LONGITUDINAL MOM. (AML)
KL/R= 29.12 FOR TRANSVERSE MOM. (AMT)

[redacted]

JOB NO. 6784 - FCDMC - RWCD FLOODWAY - BASELINE RD. BRIDGE- PROGRAM P7361

PROBLEM - COLUMN BAR CUT-OFF POINT BY JFF CHKD WEG

MEMBER 8 JOINT 9

DEPTH= 30.000 WIDTH= 30.000 FPC= 3.000 FY= 40.000

USE- 9 NO.10 AST= 11.43 SQ.IN. PCT.AS= 1.62 COVER= 2.50 IN.

PHIC= .35 PHIB= .45
BY SERVICE LOAD DESIGN OF COLUMNS

LOAD	APPLIED LOADS			COMPUTED STRENGTH			
CASE	AP	AMT	AML	UP	UMT	UML	UP/AP
1	91.4	22.9	225.4	93.2	23.4	230.3	1.021

THE CRITICAL LOAD CASE IS NUMBER 1

AMT=MOMENT ABOUT THE LONGITUDINAL ROADWAY AXIS - MOM.(TRANS) K-FT
AML=MOMENT ABOUT THE TRANSVERSE ROADWAY AXIS - MOM.(LONG) K-FT

KL/R= 61.15 FOR LONGITUDINAL MOM. (AML)
KL/R= 29.12 FOR TRANSVERSE MOM. (AMT)

[redacted]

JOB NO. 6784 - FCDMC - RWCD FLOODWAY - BASELINE RD. BRIDGE- PROGRAM P7361

PROBLEM - COLUMN BAR CUT-OFF POINT BY JFF CHKD WEG

MEMBER 8 JOINT 9

DEPTH= 30.000 WIDTH= 30.000 FPC= 3.000 FY= 40.000

USE- 8 NO.10 AST= 10.16 SQ.IN. PCT.AS= 1.44 COVER= 2.50 IN.

PHIC= .35 PHIB= .45
BY SERVICE LOAD DESIGN OF COLUMNS

LOAD	APPLIED LOADS			COMPUTED STRENGTH			
CASE	AP	AMT	AML	UP	UMT	UML	UP/AP
1	91.4	22.9	212.8	93.0	23.3	217.2	1.020

THE CRITICAL LOAD CASE IS NUMBER 1

AMT=MOMENT ABOUT THE LONGITUDINAL ROADWAY AXIS - MOM.(TRANS) K-FT
AML=MOMENT ABOUT THE TRANSVERSE ROADWAY AXIS - MOM.(LONG) K-FT

KL/R= 61.15 FOR LONGITUDINAL MOM. (AML)
KL/R= 29.12 FOR TRANSVERSE MOM. (AMT)

[redacted]

JOB NO. 6784 - FCDMC - RWCD FLOODWAY - BASELINE RD. BRIDGE- PROGRAM P7361

PROBLEM - COLUMN BAR CUT-OFF POINT BY JFF CHKD WEG

MEMBER 8 JOINT 9

DEPTH= 30.000 WIDTH= 30.000 FPC= 3.000 FY= 40.000

USE- 7 NO.10 AST= 8.89 SQ.IN. PCT.AS= 1.26 COVER= 2.50 IN.

PHIC= .35 PHIB= .45
BY SERVICE LOAD DESIGN OF COLUMNS

LOAD	APPLIED LOADS			COMPUTED STRENGTH			
CASE	AP	AMT	AML	UP	UMT	UML	UP/AP
1	91.4	22.9	198.9	91.7	22.9	199.5	1.003

THE CRITICAL LOAD CASE IS NUMBER 1

AMT=MOMENT ABOUT THE LONGITUDINAL ROADWAY AXIS - MOM.(TRANS) K-FT
AML=MOMENT ABOUT THE TRANSVERSE ROADWAY AXIS - MOM.(LONG) K-FT

KL/R= 61.15 FOR LONGITUDINAL MOM. (AML)
KL/R= 29.12 FOR TRANSVERSE MOM. (AMT)

[redacted]

JOB NO. 6784 - FCDMC - RWCD FLOODWAY - BASELINE RD. BRIDGE- PROGRAM P7361

PROBLEM - COLUMN BAR CUT-OFF POINT BY JFF CHKD WEG

MEMBER 8 JOINT 9

DEPTH= 30.000 WIDTH= 30.000 FPC= 3.000 FY= 40.000

USE- 6 NO.10 AST= 7.62 SQ.IN. PCT.AS= 1.08 COVER= 2.50 IN.

PHIC= .35 PHIB= .45
BY SERVICE LOAD DESIGN OF COLUMNS

LOAD	APPLIED LOADS			COMPUTED STRENGTH			
CASE	AP	AMT	AML	UP	UMT	UML	UP/AP
1	91.4	22.9	177.8	99.2	24.8	192.7	1.084

THE CRITICAL LOAD CASE IS NUMBER 1

AMT=MOMENT ABOUT THE LONGITUDINAL ROADWAY AXIS - MOM.(TRANS) K-FT
AML=MOMENT ABOUT THE TRANSVERSE ROADWAY AXIS - MOM.(LONG) K-FT

KL/R= 61.15 FOR LONGITUDINAL MOM. (AML)
KL/R= 29.12 FOR TRANSVERSE MOM. (AMT)

[redacted]

JOB NO. 6784 - FCDMC - RWCD FLOODWAY - BASELINE RD. BRIDGE- PROGRAM P7361

PROBLEM - COLUMN BAR CUT-OFF POINT BY JFF CHKD WEG

MEMBER 8 JOINT 9

DEPTH= 30.000 WIDTH= 30.000 FPC= 3.000 FY= 40.000

USE- 6 NO.10 AST= 7.62 SQ.IN. PCT.AS= 1.08 COVER= 2.50 IN.

PHIC= .35 PHIB= .45
BY SERVICE LOAD DESIGN OF COLUMNS

LOAD	APPLIED LOADS			COMPUTED STRENGTH			
CASE	AP	AMT	AML	UP	UMT	UML	UP/AP
1	91.4	22.9	162.6	111.1	27.8	197.4	1.214

THE CRITICAL LOAD CASE IS NUMBER 1

AMT=MOMENT ABOUT THE LONGITUDINAL ROADWAY AXIS - MOM.(TRANS) K-FT
AML=MOMENT ABOUT THE TRANSVERSE ROADWAY AXIS - MOM.(LONG) K-FT

KL/R= 61.15 FOR LONGITUDINAL MOM. (AML)
KL/R= 29.12 FOR TRANSVERSE MOM. (AMT)

[redacted]

JOB NO. 6784 - FCDMC - RWCD FLOODWAY - BASELINE RD. BRIDGE- PROGRAM P7361

PROBLEM - COLUMN BAR CUT-OFF POINT BY JFF CHKD WEG

MEMBER 8 JOINT 9

DEPTH= 30.000 WIDTH= 30.000 FPC= 3.000 FY= 40.000

USE- 6 NO.10 AST= 7.62 SQ.IN. PCT.AS= 1.08 COVER= 2.50 IN.

PHIC= .35 PHIB= .45
BY SERVICE LOAD DESIGN OF COLUMNS

LOAD	APPLIED LOADS			COMPUTED STRENGTH			
CASE	AP	AMT	AML	UP	UMT	UML	UP/AP
1	91.4	22.9	148.6	124.5	31.0	201.7	1.358

THE CRITICAL LOAD CASE IS NUMBER 1

AMT=MOMENT ABOUT THE LONGITUDINAL ROADWAY AXIS - MOM.(TRANS) K-FT
AML=MOMENT ABOUT THE TRANSVERSE ROADWAY AXIS - MOM.(LONG) K-FT

KL/R= 61.15 FOR LONGITUDINAL MOM. (AML)
KL/R= 29.12 FOR TRANSVERSE MOM. (AMT)

[redacted]

JOB NO. 6784 - FCDMC - RWCD FLOODWAY - BASELINE RD. BRIDGE- PROGRAM P7361

PROBLEM - COLUMN BAR CUT-OFF POINT BY JFF CHKD WEG

MEMBER 8 JOINT 9

DEPTH= 30.000 WIDTH= 30.000 FPC= 3.000 FY= 40.000

USE- 6 NO.10 AST= 7.62 SQ.IN. PCT.AS= 1.08 COVER= 2.50 IN.

PHIC= .35 PHIB= .45
BY SERVICE LOAD DESIGN OF COLUMNS

LOAD	APPLIED LOADS			COMPUTED STRENGTH			
CASE	AP	AMT	AML	UP	UMT	UML	UP/AP
1	91.4	22.9	133.4	139.4	34.8	203.3	1.525

THE CRITICAL LOAD CASE IS NUMBER 1

AMT=MOMENT ABOUT THE LONGITUDINAL ROADWAY AXIS - MOM.(TRANS) K-FT
AML=MOMENT ABOUT THE TRANSVERSE ROADWAY AXIS - MOM.(LONG) K-FT

KL/R= 61.15 FOR LONGITUDINAL MOM. (AML)
KL/R= 29.12 FOR TRANSVERSE MOM. (AMT)

[redacted]

JOB NO. 6784 - FCDMC - RWCD FLOODWAY - BASELINE RD. BRIDGE- PROGRAM P7361

PROBLEM - COLUMN BAR CUT-OFF POINT BY JFF CHKD WEG

MEMBER 8 JOINT 9

DEPTH= 30.000 WIDTH= 30.000 FPC= 3.000 FY= 40.000

USE- 6 NO.10 AST= 7.62 SQ.IN. PCT.AS= 1.08 COVER= 2.50 IN.

PHIC= .35 PHIB= .45
BY SERVICE LOAD DESIGN OF COLUMNS

LOAD	APPLIED LOADS			COMPUTED STRENGTH			
CASE	AP	AMT	AML	UP	UMT	UML	UP/AP
1	91.4	22.9	119.3	156.9	39.2	204.7	1.716

THE CRITICAL LOAD CASE IS NUMBER 1

AMT=MOMENT ABOUT THE LONGITUDINAL ROADWAY AXIS - MOM.(TRANS) K-FT
AML=MOMENT ABOUT THE TRANSVERSE ROADWAY AXIS - MOM.(LONG) K-FT

KL/R= 61.15 FOR LONGITUDINAL MOM. (AML)
KL/R= 29.12 FOR TRANSVERSE MOM. (AMT)

[redacted]

SVERDRUP & PARCEL

JOB 6784 FCDMC-RWCD Floodway

SHEET NO. 116 OF

DATE 4-15-80

COMPUTATIONS FOR Baseline Rd. Bridge

BY JFF CHKD WEG

Intermed. Piers (cont'd.)

Column Reinf.

The P7361 computer program for bar cut-offs indicates that half of the bars can be cut-off 6' above centerline of pile cap. Extend bars embedment length beyond that points

$(3'-1'') + (6'-0'') - (1'-6'') = 7'-7''$, say $8'-0''$

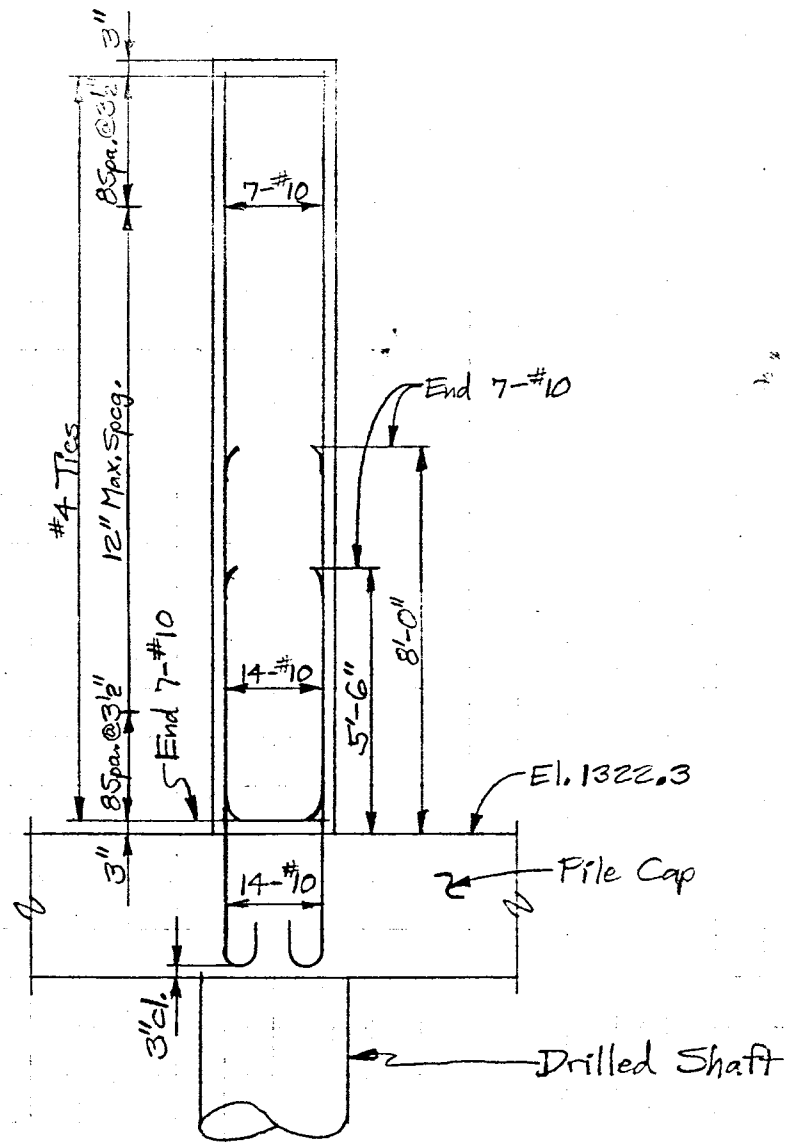

SVERDRUP & PARCEL

JOB 6784 FCDMC-RWCD Floodway

COMPUTATIONS FOR Baseline Rd. Bridge

Intermed. Piers (cont'd.)

Column Reinf. (cont'd.)

SHEET NO. 117 OF

DATE 4-15-80

BY JFF CHKD WEG

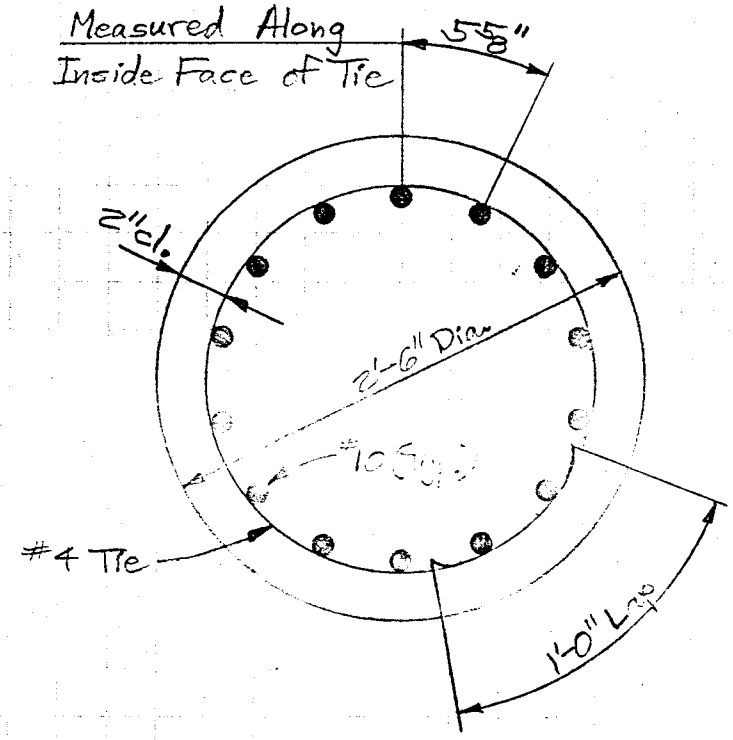

SVERDRUP & PARCEL

JOB 6784 FCDMC - RWCD Floodway

COMPUTATIONS FOR Elliot Rd. Bridge

SHEET NO. 118 OF

DATE 4-9-80

BY JFF CHKD WEG

Intermediate Piers

Slab is thickened to 24" at piers to act as beam spanning between columns. For analysis and design consider this beam to have an effective rectangular cross-section 2' deep × 3' wide (~4 Span of 12.5' c.to c. cols.).

Dead Load reactions at supports per foot of slab width, and Live Load reactions for one full lane width without impact, from S&P computer program P7300, run 11:56 MAR 10,'80, ID=OC14:

	Abuts. 1&7	Piers 2&6	Piers 3&5	Pier 4
DL	2.2 k/'	8.3 k/'	8.2 k/'	8.2 k/'
SDL+FWS	.4	1.4	1.4	1.4
Total DL	2.6 k/'	9.7 k/'	9.6 k/'	9.6 k/'
Truck LL	44.9 k	62.2 k	62.3 k	62.3 k

Use DL 9.7 k/' for all piers.
Use LL 62.3 k for all piers, +30% impact.

Read in uniform DL reaction from deck slab as four equivalent concentrated loads per cap beam span: $4 \times 9.7^{k/'} \times 12.5' = 30.3^k$/each

Cantilever DL moment @ face of equiv. square column:

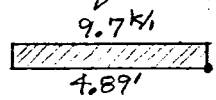

$M = \frac{1}{2} \times 9.7^{k/'} \times 4.89^2 = 116'^k$

First equiv. concentrated load is at 1.31' from face of col.
Conc. load to cause same DL moment $= 116'^k / 1.31' = 88.55^k$
Cantilever DL shear @ Jt. 1 $= 9.7^{k/'} \times 6' = 58.2^k$
Apply upward force @ 2nd concentrated load to cancel out the excess shear $= 88.55^k - 58.2^k = 30.35^k \uparrow$

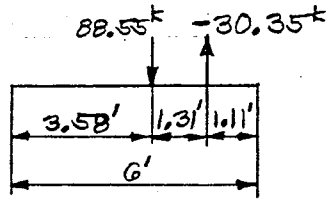

SVERDRUP & PARCEL

JOB 6784 FCDMC - RWCD Floodway

COMPUTATIONS FOR Elliot Rd. Bridge

Intermed. Piers (cont'd.)

SHEET NO. 119 OF

DATE 4-9-80

BY JFF CHKD WEG

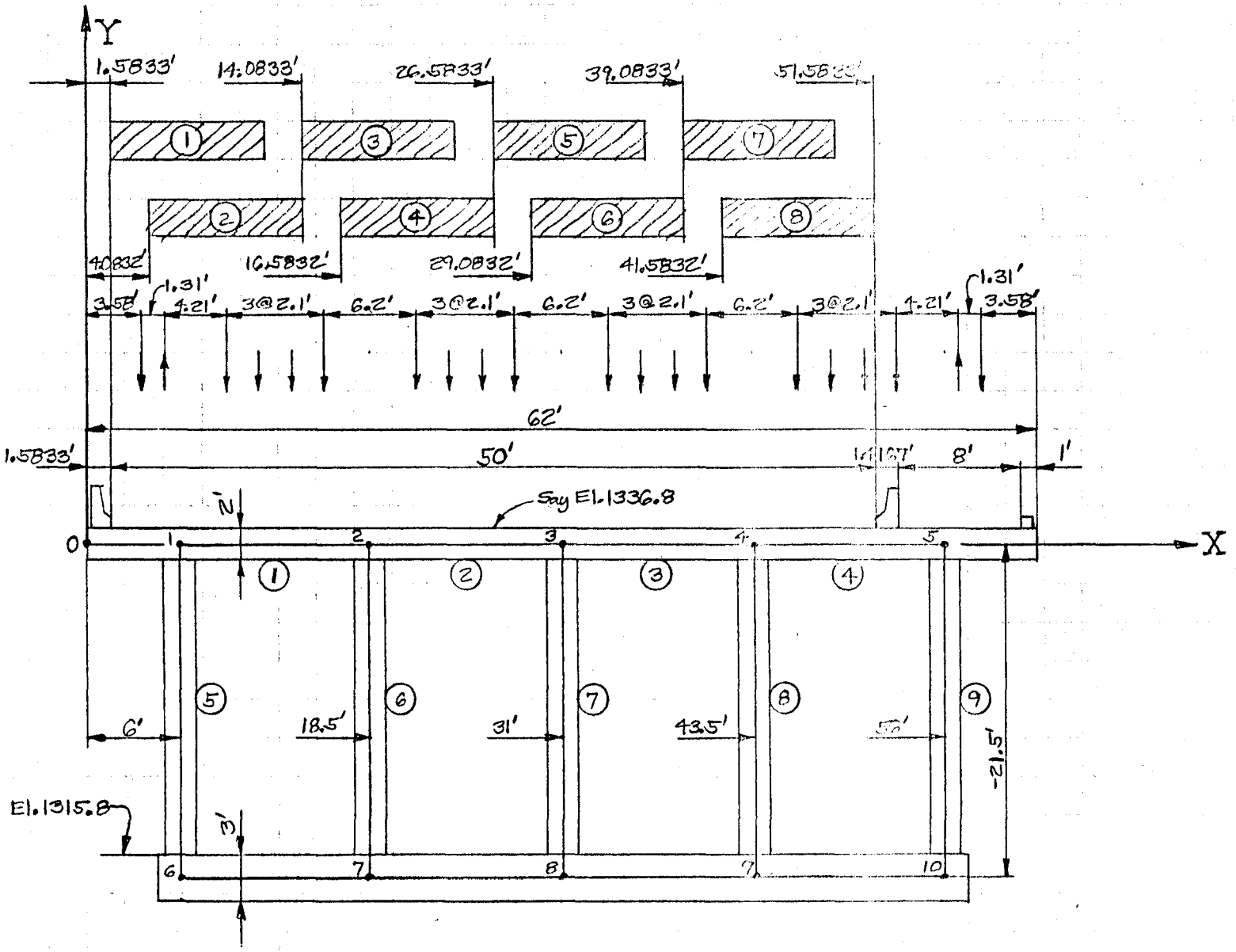

SVERDRUP & PARCEL

JOB 6784 FCDMC - RWCD Floodway

COMPUTATIONS FOR Elliot Rd. Bridge
Intermed. Piers (cont'd.)

SHEET NO. 120 OF

DATE 4-9-80

BY JFF CHKD WEG

Horizontal Loads -

Compute factors to translate loads to proper point of application. See note & sketch in pier design comps. for bridge @ Baseline Rd.

W_T & W_L	//	$\frac{1.33+21.5}{21.5} = 1.06$
	⊥	$\frac{0.33+21.5}{21.5} = 1.02$
EQ_T & EQ_L	//	$\frac{0+21.5}{21.5} = 1.00$
	⊥	$\frac{21.5-1.0}{21.5} = .95$
WL_T & WL_L & LF	//	$\frac{7+21.5}{21.5} = 1.33$
	⊥	$\frac{0+21.5}{21.5} = 1.28$

W_T @ 50 psf on Superstr. = $35.5' \times 4.2' \times .05^{ksf} \times 1.06$ = 7.9^k //

Translate Force on Col. to Top of Col. — Shape Factor

W_T @ 40 psf on Substr. = $5 \times 14' \times 2' \times \frac{1}{2} \times \frac{2}{3} \times .04^{ksf}$ = 1.9^k //

WL_T @ $100^{\#/'}$ = $35.5' \times 0.1^{k/'} \times 1.33$ = 4.7^k //

EQ_T (Assume C=0.06) Zone 2, A=.22g, Depth to Rock-Like Material 11'-80'

EQ_T // = $0.06 \times 0.8 \times 9.7^{k/'} \times 62' \times 1.00$ = 28.9^k //

W_L @ 12 psf on Superstr. = $199' \times 4.2' \times .012^{ksf} \times 1.02$ = 10.2^k ⊥

W_L @ 40 psf on Substr. = same as W_T = 1.9^k ⊥

WL_L @ $40^{\#/'}$ = $199' \times 0.04^{k/'} \times 1.28$ = 10.2^k ⊥

LF (Assume 3 Lanes @ 90%) = $3 \times .9 \times .05(.64^{k/'} \times 199' + 18^k) \times 1.28$ = 25.1^k ⊥

EQ_L (Refer to EQ_T above)

EQ_L ⊥ = $0.06 \times 1.0 \times 2 \times 62'\left(2.6^{k/'} + 9.7^{k/'} + 9.6^{k/'} + \frac{9.6^{k/'}}{2}\right) \times .95$ = 188.7^k ⊥

SVERDRUP & PARCEL

JOB 6784 FCDMC - RWCD Floodway

SHEET NO. 121 OF

DATE 4-10-80

COMPUTATIONS FOR Elliot Rd. Bridge

BY JFF CHKD WEG

Intermed. Piers (cont'd.)

Horizontal Loads (cont'd.)

Abutment Passive Pressure Capacity -

k_h = 48 psf/ft. (assume poor material near surface)

Conservatively assume $\gamma = 100$ pcf

$k_p = \frac{2\gamma^2}{3k_h} = \frac{2 \times 100^2}{3 \times 48} = 139$ psf/ft.

$P_p = \frac{1}{2} k_p h^2 = \frac{1}{2} \times 139 \text{ psf/ft.} \times (5 \text{ ft.})^2 = 1{,}738$ #/ft. = 1.74 k/ft.

$\times 62' = 108$ k/Abut.

Pier Passive Pressure Capacity -

From soils report by Hulpert Assocs., lateral capacity of 30"φ drilled shaft @ Elliot Rd. = 42k each, × 5 shafts = 210 k/Pier

Passive pressure on pile cap = 139 psf/ft. × 3' × 53' × 6.5'/1000 = 144

354 k/Pier

Anchor Pier Load ⊥ ℄ Pier -

Because of passive pressure capacities calculated above, assume combined capacity of all other substructure units will be adequate to resist 50% of total longitudinal forces and provide an anchor pier capable of resisting the remaining 50%.

SVERDRUP & PARCEL

JOB 6784 FCDMC – RWCD Floodway

SHEET NO. 122 OF

DATE 4-10-80

COMPUTATIONS FOR Elliot Rd. Bridge

BY JFF CHKD WEG

Intermed. Piers (cont'd.)

Horizontal Force Group Loading Combinations –
Refer to Baseline Rd. Br. pier design for loads included in each Group.
Parallel to ℄ Pier:

Group II – 7.9 + 1.9 = 9.8^k

Group III – 0.3 × 9.8 + 4.7 = 7.6^k

Group VII – 28.9^k

Normal to ℄ Pier:

Group II – 50% (10.2 + 1.9) = 6.1^k

Group III – 0.3 × 6.1 + 50% (10.2 + 25.1) = 19.5^k

Group VII – 50% × 188.7 = 94.4^k

Temperature Fall + Shrinkage –
same as for Baseline Rd. = −73.3°F

Temperature Rise = 40 °F

80-COLUMN CARD PUNCH FORMAT

SVERDRUP & PARCEL

JOB 6784 FCDMC-RWCD Floodway Brs. DATE 4-10-80 BY JFF CHKD WEG

SHEET 123 OF ___ 30 CARDS ON THIS SHEET

```
JØB NØ. 6784 - FCDMC - RWCD FLØØDWAY - ELLIØT RD. BRIDGE - PRØGRAM P7310
PRØBLEM - PIER DESIGN                                  BY JFF          CHKD
      1.          0.          1.          4.          1.
  2   0   4   0   0   5  10   5   0      454000.
  1   X      6.      Y      0.
  2   X     18.5     Y      0.
  3   X     31.      Y      0.
  4   X     43.5     Y      0.
  5   X     56.      Y      0.
  6   X      6.      Y    -21.5     S
  7   X     18.5     Y    -21.5     S
  8   X     31.      Y    -21.5     S
  9   X     43.5     Y    -21.5     S
 10   X     56.      Y    -21.5     S
21
      3.58        1.31        4.21        2.1         2.1         2.1         6.2         2.1
      2.1         2.1         6.2         2.1         2.1         2.1         6.2         2.1
      2.1         2.1         4.21        1.31        3.58
 0
                                                                1.3         10.         62.3
 8
      1.5833      4.0832      14.0833     16.5832     26.5833     29.0832     39.0833     41.5832
20
     88.55      -30.35       30.3        30.3        30.3        30.3        30.3        30.3
     30.3        30.3        30.3        30.3        30.3        30.3        30.3        30.3
     30.3        30.3       -30.35       88.55
18
 1
 2
 3
```

80-COLUMN CARD PUNCH FORMAT

SVERDRUP & PARCEL

JOB 6784 FCDMC-RWCD Floodway Brs.

DATE 4-10-80

BY JFF CHKD WEG

SHEET 124 OF

30 CARDS ON THIS SHEET

```
 4
 5
 6
 7
 8
 2 3
 2 4
 4 5
 4 6
 6 7
 6 8
 1 6 7
 1 6 8
 2 3 8
 2 4 8
    1.11     11.39
    1.11     11.39
    1.11     11.39
    1.11     11.39
    9.8       7.6     -73.3      40.0      28.9       0.
    6.1      19.5      94.4
  1   1   2
  2   2   3
  3   3   4
  4   4   5
  5   6   1
  6   7   2
  7   8   3
  8   9   4
  9  10   5
```

80-COLUMN CARD PUNCH FORMAT

SVERDRUP & PARCEL

JOB 6784 FCDMC-RWCD Floodway Brs.

DATE 4-10-80

BY JFF CHKD. WEG

SHEET 125 OF ___

16 CARDS ON THIS SHEET

```
  1   2.       3.
  2   2.       3.
  3   2.       3.
  4   2.       3.
  5   2.5                                                           -1.
  6   2.5                                                           -1.
  7   2.5                                                           -1.
  8   2.5                                                           -1.
  9   2.5                                                           -1.
  1   0.       0.       2.       0.       3.      -6.
  5   0.       0.       2.       0.       3.       6.
   3000.   40000.         0.
      1.        3.27
                             9
                             5
 1 28.      6.      6.   3000.  40000.      3.53    2.5     6.      6.    2.1 11
```

```
SVERDRUP & PARCEL AND ASSOCIATES, INC.          08:03 APR 11,'80  PAGE  1

JOB NO. 6754 - FCD 'C' - RACO FLOODWAY - ELLIOT RD. BRIDGE -  PROGRAM P7310

PROBLEM - PIER DESIGN                                  BY JFF        CHKD WEG

  CODE(1)   CODE(2)   CODE(3)   CODE(4)   CODE(5)

   1.0000     .0000    1.0000    4.0000    1.0000

*****************************************************************************************

                              INPUT DATA

*****************************************************************************************

NO. OF CAP CANTILEVERS          =  2        NO. OF JOINTS              = 10
NO. OF CONT. FTG. CANTILEVERS   =  0        NO. OF SUPPORTS            =  5
NO. OF CAP BEAMS                =  4        NO. OF REL. SUPPORT JTS.   =  0
NO. OF TIE BEAMS                =  0        NO. OF SEGMENTS PER MEMBER = 10
NO. OF CONT. FTG. BEAMS         =  0        MODULUS OF ELASTICITY      =   454000.
NO.  OF COLUMNS                 =  5

JOINT COORDINATES
  1 X    6.0000 Y     .0000
  2 X   18.5000 Y     .0000
  3 X   31.0000 Y     .0000
  4 X   43.5000 Y     .0000
  5 X   56.0000 Y     .0000
  6 X    6.0000 Y  -21.5000 S
  7 X   18.5000 Y  -21.5000 S
  8 X   31.0000 Y  -21.5000 S
  9 X   43.5000 Y  -21.5000 S
 10 X   56.0000 Y  -21.5000 S

21 LONG SPAN BEAM SPACINGS TO FOLLOW
   3.5800    1.3100    4.2100    2.1000    2.1000    2.1000    6.2000    2.1000
   2.1000    2.1000    6.2000    2.1000    2.1000    2.1000    6.2000    2.1000
   2.1000    2.1000    4.2100    1.3100    3.5800

    SUPERSTRUCTURE IS CONTINUOUS OVER  PIER
IMP.FACT. SKEW DIM. REACTION FROM ONE LANE(MAX)
   1.3000   10.0000   62.3000

 NO. OF LIVE LOAD LANE LOCATIONS TO FOLLOW IS  8
   1.5833    4.0832   14.0833   16.5832   26.5833   29.0832   39.0833   41.5832

 NO. OF DEAD LOAD BEAM REACTIONS TO FOLLOW IS 20
  88.5500  -30.3500   30.3000   30.3000   30.3000   30.3000   30.3000   30.3000
  30.3000   30.3000   30.3000   30.3000   30.3000   30.3000   30.3000   30.3000
  30.3000   30.3000  -30.3500   88.5500

 COLUMN DISTANCES FROM ORIGIN TO FOLLOW
   6.0000   18.5000   31.0000   43.5000   56.0000     .0000     .0000     .0000
```

SHT. No. 126

JOB NO. 6784 - FCDMC - RACO FLOODWAY - ELLIOT RD. BRIDGE - PROGRAM P7310

PROBLEM - PIER DESIGN BY JFF CHKD WEG

NO. OF LIVE LOAD COMBINATIONS TO FOLLOW IS 19

1	0	0	0	0	0
2	0	0	0	0	0
3	0	0	0	0	0
4	0	0	0	0	0
5	0	0	0	0	0
6	0	0	0	0	0
7	0	0	0	0	0
8	0	0	0	0	0
2	3	0	0	0	0
2	4	0	0	0	0
4	5	0	0	0	0
4	6	0	0	0	0
6	7	0	0	0	0
6	8	0	0	0	0
1	6	7	0	0	0
1	6	8	0	0	0
2	3	8	0	0	0
2	4	8	0	0	0

A(1)	A(2)	A(3)	A(4)	A(5)	A(6)
1.1100	11.3900	.0000	.0000	.0000	.0000
1.1100	11.3900	.0000	.0000	.0000	.0000
1.1100	11.3900	.0000	.0000	.0000	.0000
1.1100	11.3900	.0000	.0000	.0000	.0000

HORIZONTAL LOADS (FORCE X - POSITIVE FROM LEFT TO RIGHT

GR.2 WIND	GR.3 LOAD	TEMP. F+S	TEMP.RISE	GR.7 EQ	CENT.FORCE
9.800	7.600	-73.300	40.000	28.900	.000

HORIZONTAL LOADS NORMAL TO PIER (FORCE Z)

GR.2 WIND	GR.3 LOAD	GR.7 EQ
6.100	19.500	94.400

MEMBER INCIDENCES

1	1	2
2	2	3
3	3	4
4	4	5
5	6	1
6	7	2
7	8	3
8	9	4
9	10	5

MEMBER PROPERTY DESCRIPTIONS

MEM.	DEPTH	WIDTH	A	B	C	D	SHAPE1	SHAPE2
1	2.0000	3.0000	.0000	.0000	.0000	.0000	.0000	.0000
2	2.0000	3.0000	.0000	.0000	.0000	.0000	.0000	.0000
3	2.0000	3.0000	.0000	.0000	.0000	.0000	.0000	.0000
4	2.0000	3.0000	.0000	.0000	.0000	.0000	.0000	.0000
5	2.0000	.0000	.0000	.0000	.0000	.0000	.0000	-1.0000
6	2.0000	.0000	.0000	.0000	.0000	.0000	.0000	-1.0000

121

7	2.0000	.0000	.0000	.0000	.0000	.0000	.0000	-1.0000
8	2.0000	.0000	.0000	.0000	.0000	.0000	.0000	-1.0000
9	2.0000	.0000	.0000	.0000	.0000	.0000	.0000	-1.0000

CANTILEVER DESCRIPTION.

JT.	A	B	C	D	WIDTH(E)	F
1	.0000	.0000	2.0000	.0000	3.0000	-6.0000
5	.0000	.0000	2.0000	.0000	3.0000	6.0000

JOB NO. 6784 - FCD-C - RICO FLOODWAY - ELLIOT RD. BRIDGE - PROGRAM P7310

PROBLEM - PIER DESIGN BY JFF CHKD WEG

RIGID FRAME BRIDGE PIER
MAXIMUM POSITIVE VALUES

MEMBER END ACTIONS
THRUST AND SHEAR (K); MOMENTS (K-FT)

MEMBER NO.	THRUST	SHEAR	MOMENT	THRUST	SHEAR	MOMENT	
1 JOINT 1	1,248	107,590	264,607	,584	118,038	-168,128	JOINT 2
LOAD CASE	9	9	1	1	9	7	
2 JOINT 2	,972	114,198	277,469	,760	118,574	-170,428	JOINT 3
LOAD CASE	11	11	10	1	11	2	
3 JOINT 3	1,112	114,706	280,696	,539	118,066	-166,191	JOINT 4
LOAD CASE	13	13	12	1	13	4	
4 JOINT 4	1,119	112,402	281,901	,471	87,782	-189,934	JOINT 5
LOAD CASE	8	14	14	6	8	6	
5 JOINT 6	215,367	,584	3,570	-129,918	1,249	8,979	JOINT 1
LOAD CASE	1	1	1	11	9	1	
6 JOINT 7	232,013	,890	6,514	-128,587	1,234	12,630	JOINT 2
LOAD CASE	9	2	2	7	11	2	
7 JOINT 8	233,071	,956	6,989	-129,155	1,320	13,567	JOINT 3
LOAD CASE	11	4	4	2	15	4	
8 JOINT 9	232,031	1,043	7,591	-126,468	,977	14,839	JOINT 4
LOAD CASE	13	6	6	4	8	6	
9 JOINT 10	161,514	1,119	7,617	-128,357	,471	16,449	JOINT 5
LOAD CASE	8	8	8	6	6	8	

BEAM MOMENTS AND SHEARS

MEMBER NO. 1

DIST.FROM LT.SUPT.	1,110	3,100	5,200	7,300	9,400	11,390
MOMENTS	-117,116	85,480	186,142	183,633	77,952	-97,378
LD.CASE	6	9	9	9	9	7
SHEARS	106,465	105,340	47,238	5,885	-30,009	-63,104
LD.CASE	9	9	9	3	3	7

MEMBER NO. 2

DIST.FROM LT.SUPT.	1,110	3,100	5,200	7,300	9,400	11,390
MOMENTS	-98,311	90,592	188,512	184,877	78,073	-100,830
LD.CASE	7	4	11	11	11	1
SHEARS	113,073	111,948	46,702	5,140	-30,457	-61,882
LD.CASE	11	11	11	5	2	2

MEMBER NO. 3

DIST.FROM LT.SUPT.	1,110	3,100	5,200	7,300	9,400	11,390
MOMENTS	-98,799	88,933	187,094	184,526	78,789	-97,511
LD.CASE	2	6	13	13	13	4
SHEARS	113,581	112,456	47,210	5,652	-29,815	-61,240
LD.CASE	13	13	13	7	4	4

MEMBER NO. 4

08:03 APR 11,'80 PAGE 5
BY JFF CHKD WEG

DIST.FROM LT.SUPT.	1.110	3.100	5.200	7.300	9.400	11.390
MOMENTS	-95.690	89.971	179.053	164.965	54.726	-116.135
LD.CASE	4	8	8	8	8	1
SHEARS	111.277	110.152	44.906	.343	-32.207	-63.632
LD.CASE	14	14	14	6	6	6

CANTILEVERS

NO.	JOINT	MOMENT	SHEAR
1	1	-196.802	107.429
2	5	196.796	63.600

130

SVERDRUP & PARCEL AND ASSOCIATES, INC. , 08:03 APR 11,'80 PAGE 6

JOB NO. 6784 - FCDMC - PACO FLOODWAY - ELLIOT RD. BRIDGE - PROGRAM P7310

PROBLEM - PIER DESIGN BY JFF CHKD WEG

RIGID FRAME BRIDGE PIER
MAXIMUM NEGATIVE VALUES

MEMBER END ACTIONS
THRUST AND SHEAR (K); MOMENTS (K-FT)

MEMBER NO.	THRUST	SHEAR	MOMENT	THRUST	SHEAR	MOMENT	
1 JOINT 1	-.584	66.318	190.830	-1.248	64.229	-283.803	JOINT 2
LOAD CASE	1	11	5	9	7	9	
2 JOINT 2	-.760	64.358	169.202	-.972	63.007	-285.349	JOINT 3
LOAD CASE	1	7	7	11	2	11	
3 JOINT 3	-.539	66.148	171.678	-1.112	62.365	-283.062	JOINT 4
LOAD CASE	1	2	2	13	4	13	
4 JOINT 4	-.471	64.093	166.299	-1.119	64.756	-213.245	JOINT 5
LOAD CASE	6	10	4	8	6	8	
5 JOINT 6	140.049	-1.249	-8.572	-205.236	-.584	-18.271	JOINT 1
LOAD CASE	11	9	9	1	1	9	
6 JOINT 7	138.719	-1.234	-8.671	-221.881	-.890	-17.865	JOINT 2
LOAD CASE	7	11	11	9	2	11	
7 JOINT 8	139.287	-1.320	-10.142	-222.940	-.956	-18.233	JOINT 3
LOAD CASE	2	15	15	11	4	15	
8 JOINT 9	136.600	-.977	-7.401	-221.899	-1.043	-13.609	JOINT 4
LOAD CASE	4	8	8	13	6	8	
9 JOINT 10	138.488	-.471	-3.912	-151.382	-1.119	-6.862	JOINT 5
LOAD CASE	6	6	1	8	8	6	

BEAM MOMENTS AND SHEARS

MEMBER NO. 1

DIST.FROM LT.SUPT.	1.110	3.100	5.200	7.300	9.400	11.390
MOMENTS	-156.588	8.213	75.863	76.057	8.797	-163.759
LD.CASE	1	11	11	11	11	10
SHEARS	65.193	64.068	31.518	-7.793	-54.008	-116.913
LD.CASE	11	11	11	10	10	9

MEMBER NO. 2

DIST.FROM LT.SUPT.	1.110	3.100	5.200	7.300	9.400	11.390
MOMENTS	-157.541	.462	74.674	77.242	9.965	-165.978
LD.CASE	9	2	2	15	13	12
SHEARS	63.233	62.108	29.558	-12.010	-55.685	-117.449
LD.CASE	7	7	7	3	4	11

MEMBER NO. 3

DIST.FROM LT.SUPT.	1.110	3.100	5.200	7.300	9.400	11.390
MOMENTS	-158.908	-1.858	71.951	78.305	17.205	-165.714
LD.CASE	11	18	18	18	18	14
SHEARS	65.023	63.898	31.348	-11.430	-55.099	-116.941
LD.CASE	2	2	2	5	14	13

MEMBER NO. 4

131

DIST.FROM LT.SUPT.	1.110	3.100	5.200	7.300	9.400	11.390
MOMENTS	-157.863	-2.597	67.941	71.026	6.655	-121.162
LD.CASE	13	6	6	6	6	13
SHEARS	62.968	61.843	29.293	-11.635	-54.049	-86.657
LD.CASE	10	10	10	7	8	8

CANTILEVERS

NO.	JOINT	MOMENT	SHEAR
1	1	-273.586	63.600
2	5	196.796	63.600

JOB NO. 6784 - ECONC - RACO FLOODWAY - ELLIOT RD. BRIDGE - PROGRAM P7310

PROBLEM - PIER DESIGN BY JFF CHKD WEG

RIGID FRAME BRIDGE PIER
LOADING CASE 19
DEAD LOAD ONLY

JOINT 5 HORIZONTAL FORCE .000 TEMPR.CHANGE .0 A.A.S.H.T.O. GROUP .000 REDUCTION FACT. 1.000

JOINT	JOINT DISPLACEMENTS IN INCHES,ROT.IN RADIANS X	Y	R	JOINT REACTIONS X	Y	R
1	-.000031	-.024711	.000069	.000	.000	.000
2	-.000013	-.024502	-.000017	.000	.000	.000
3	-.000000	-.025002	-.000000	.000	.000	.000
4	.000013	-.024502	.000017	.000	.000	.000
5	.000030	-.024710	-.000069	.000	.000	.000
6	.000000	.000000	.000000	-.317	141.672	2.267
7	.000000	.000000	.000000	.078	140.516	-.560
8	.000000	.000000	.000000	.000	143.282	-.000
9	.000000	.000000	.000000	-.078	140.517	.559
10	.000000	.000000	.000000	.317	141.671	-2.266

MEMBER END ACTIONS
THRUST AND SHEAR (K), MOMENTS (K-FT)

MEMBER NO.		THRUST	SHEAR	MOMENT	THRUST	SHEAR	MOMENT	
1	JOINT 1	-.317	67.940	192.257	.317	64.510	-170.817	JOINT 2
2	JOINT 2	-.239	65.875	171.931	.239	66.575	-176.308	JOINT 3
3	JOINT 3	-.239	66.576	176.308	.239	65.874	-171.932	JOINT 4
4	JOINT 4	-.317	64.511	170.819	.317	67.939	-192.252	JOINT 5
5	JOINT 6	141.672	.317	2.267	-131.540	-.317	4.545	JOINT 1
6	JOINT 7	140.516	-.078	-.560	-130.385	.078	-1.114	JOINT 2
7	JOINT 8	143.282	-.000	-.000	-133.150	.000	-.000	JOINT 3
8	JOINT 9	140.517	.078	.559	-130.385	-.078	1.113	JOINT 4
9	JOINT 10	141.671	-.317	-2.266	-131.539	.317	-4.544	JOINT 5

MOMENTS AND SHEARS BEAM NO 1

DIST.FROM LT.SUPT.	1.110	3.100	5.200	7.300	9.400	11.390
MOMENTS	-117.389	14.195	85.252	88.854	25.001	-99.756
SHEARS	66.815	65.690	33.140	.590	-31.960	-63.385

MOMENTS AND SHEARS BEAM NO 2

DIST.FROM LT.SUPT.	1.110	3.100	5.200	7.300	9.400	11.390
MOMENTS	-99.356	28.118	94.838	94.104	25.914	-102.955
SHEARS	64.750	63.625	31.075	-1.475	-34.025	-65.450

MOMENTS AND SHEARS BEAM NO 3

DIST.FROM LT.SUPT.	1.110	3.100	5.200	7.300	9.400	11.390
MOMENTS	-102.955	25.911	94.102	94.839	28.121	-99.356
SHEARS	65.451	64.326	31.776	-.774	-33.324	-64.749

MOMENTS AND SHEARS BEAM NO 4

DIST.FROM LT.SUPT.	1.110	3.100	5.200	7.300	9.400	11.390

133

MOMENTS	-99,757	24,999	88,855	85,256	14,203	-117,385
SHEARS	63,386	62,261	29,711	-2,839	-35,389	-66,814

CANTILEVERS

NO.	JOINT	MOMENT	SHEAR
1	1	-196,802	63,600
2	5	196,796	63,600

JOB NO. 6784 - FCDMC - RACO FLOODWAY - ELLIOT RD. BRIDGE - PROGRAM P7310

PROBLEM - PIER DESIGN BY JEF CHKD WEG

RIGID FRAME BRIDGE PIER
LOADING CASE 20
HORIZONTAL FORCE

JOINT 1 HORIZONTAL FORCE 9,800 TEMPR.CHANGE .0 A.A.S.H.T.O. GROUP .000 REDUCTION FACT. 1.000

JOINT	JOINT DISPLACEMENTS IN INCHES,ROT.IN RADIANS X	Y	R	JOINT REACTIONS X	Y	R
1	.060069	.000455	-.000063	.000	.000	.000
2	.059632	-.000166	-.000018	.000	.000	.000
3	.059309	-.000001	-.000026	.000	.000	.000
4	.059095	.000160	-.000018	.000	.000	.000
5	.058995	-.000448	-.000062	.000	.000	.000
6	.000000	.000000	.000000	-1.865	-2.516	21.085
7	.000000	.000000	.000000	-2.058	.918	22.414
8	.000000	.000000	.000000	-2.008	.005	22.013
9	.000000	.000000	.000000	-2.039	-.884	22.209
10	.000000	.000000	.000000	-1.832	2.476	20.712

MEMBER END ACTIONS
THRUST AND SHEAR (K); MOMENTS (K-FT)

MEMBER NO.		THRUST	SHEAR	MOMENT	THRUST	SHEAR	MOMENT	
1	JOINT 1	7.936	-2.516	-19.003	-7.936	2.516	-12.446	JOINT 2
2	JOINT 2	5.878	-1.598	-9.382	-5.878	1.598	-10.589	JOINT 3
3	JOINT 3	3.869	-1.593	-10.564	-3.869	1.593	-9.345	JOINT 4
4	JOINT 4	1.831	-2.476	-12.282	-1.831	2.476	-18.671	JOINT 5
5	JOINT 6	-2.516	1.865	21.085	2.516	-1.865	19.003	JOINT 1
6	JOINT 7	.918	2.058	22.414	-.918	-2.058	21.828	JOINT 2
7	JOINT 8	.005	2.008	22.013	-.005	-2.008	21.152	JOINT 3
8	JOINT 9	-.884	2.039	22.209	.884	-2.039	21.627	JOINT 4
9	JOINT 10	2.476	1.832	20.712	-2.476	-1.832	18.671	JOINT 5

MOMENTS AND SHEARS BEAM NO 1

DIST.FROM LT.SUPT.	1.110	3.100	5.200	7.300	9.400	11.390
MOMENTS	16.210	11.203	5.920	.637	-4.647	-9.654
SHEARS	-2.516	-2.516	-2.516	-2.516	-2.516	-2.516

MOMENTS AND SHEARS BEAM NO 2

DIST.FROM LT.SUPT.	1.110	3.100	5.200	7.300	9.400	11.390
MOMENTS	7.608	4.429	1.074	-2.281	-5.635	-8.815
SHEARS	-1.598	-1.598	-1.598	-1.598	-1.598	-1.598

MOMENTS AND SHEARS BEAM NO 3

DIST.FROM LT.SUPT.	1.110	3.100	5.200	7.300	9.400	11.390
MOMENTS	8.796	5.626	2.282	-1.063	-4.407	-7.577
SHEARS	-1.593	-1.593	-1.593	-1.593	-1.593	-1.593

MOMENTS AND SHEARS BEAM NO 4

DIST.FROM LT.SUPT.	1.110	3.100	5.200	7.300	9.400	11.390

MOMENTS	9,533	4,606	-,594	-5,794	-10,994	-15,922
SHEARS	-2,476	-2,476	-2,476	-2,476	-2,476	-2,476

CANTILEVERS

NO.	JOINT	MOMENT	SHEAR
1	1	.000	.000
2	5	.000	.000

SVERDRUP & PARCEL AND ASSOCIATES, INC. 08103 APR 11,'80 PAGE 12

JOB NO. 6784 - FCDMC - PACO FLOODWAY - ELLIOT RD. BRIDGE - PROGRAM P7310

PROBLEM - PIER DESIGN BY JEF CHKD WEG

RIGID FRAME BRIDGE PIER
LOADING CASE 21
TEMPERATURE CHANGE

JOINT 1 HORIZONTAL FORCE .000 TEMPR.CHANGE -73.3 A.A.S.H.T.O. GROUP .000 REDUCTION FACT. 1.000

JOINT	JOINT DISPLACEMENTS IN INCHES,ROT.IN RADIANS X	Y	R	JOINT REACTIONS X	Y	R
1	.131367	-.112589	-.000151	.000	.000	.000
2	.065614	-.114238	-.000010	.000	.000	.000
3	-.000011	-.113688	.000000	.000	.000	.000
4	-.065629	-.114238	.000010	.000	.000	.000
5	-.131376	-.112589	.000151	.000	.000	.000
6	.000000	.000000	.000000	-4.013	-4.861	45.649
7	.000000	.000000	.000000	-2.307	4.252	24.972
8	.000000	.000000	.000000	.000	1.213	-.004
9	.000000	.000000	.000000	2.308	4.252	-24.978
10	.000000	.000000	.000000	4.013	-4.860	-45.652

MEMBER END ACTIONS
THRUST AND SHEAR (K); MOMENTS (K-FT)

MEMBER NO.		THRUST	SHEAR	MOMENT	THRUST	SHEAR	MOMENT	
1	JOINT 1	-3.944	-4.860	-40.630	3.944	4.860	-20.115	JOINT 2
2	JOINT 2	-6.262	-.607	-4.523	6.262	.607	-3.060	JOINT 3
3	JOINT 3	-6.392	.607	3.062	6.392	-.607	4.526	JOINT 4
4	JOINT 4	-4.048	4.860	20.118	4.048	-4.860	40.635	JOINT 5
5	JOINT 6	-4.861	4.013	45.649	4.861	-4.013	40.631	JOINT 1
6	JOINT 7	4.252	2.307	24.972	-4.252	-2.307	24.638	JOINT 2
7	JOINT 8	1.213	-.000	-.004	-1.213	.000	-.004	JOINT 3
8	JOINT 9	4.252	-2.308	-24.978	-4.252	2.308	-24.644	JOINT 4
9	JOINT 10	-4.860	-4.013	-45.652	4.860	4.013	-40.634	JOINT 5

MOMENTS AND SHEARS BEAM NO 1

DIST.FROM LT.SUPT.	1.110	3.100	5.200	7.300	9.400	11.390
MOMENTS	35.235	25.565	15.360	5.155	-5.050	-14.721
SHEARS	-4.860	-4.860	-4.860	-4.860	-4.860	-4.860

MOMENTS AND SHEARS BEAM NO 2

DIST.FROM LT.SUPT.	1.110	3.100	5.200	7.300	9.400	11.390
MOMENTS	3.850	2.643	1.369	.095	-1.179	-2.386
SHEARS	-.607	-.607	-.607	-.607	-.607	-.607

MOMENTS AND SHEARS BEAM NO 3

DIST.FROM LT.SUPT.	1.110	3.100	5.200	7.300	9.400	11.390
MOMENTS	-2.388	-1.180	.094	1.369	2.644	3.852
SHEARS	.607	.607	.607	.607	.607	.607

MOMENTS AND SHEARS BEAM NO 4

DIST.FROM LT.SUPT.	1.110	3.100	5.200	7.300	9.400	11.390

137

BY JEF CHIDWEG

MOMENTS	-14.724	-5.052	5.154	15.361	25.567	35.240
SHEARS	4.860	4.860	4.860	4.860	4.860	4.860

CANTILEVERS

NO.	JOINT	MOMENT	SHEAR
1	1	.000	.000
2	5	.000	.000

SVERDRUP & PARCEL AND ASSOCIATES, INC. 08:03 APR 11,'80 PAGE H

JOB NO. 6784 - FCD'C - PACO FLOODWAY - ELLIOT RD. BRIDGE - PROGRAM P7310

PROBLEM - PIER DESIGN BY JFF CHKD WEG

A.A.S.H.T.O. LOADING COMBINATIONS (CAP BEAMS)
M=MOMENT (K-FT); V=SHEAR (K); T=THRUST (K); D=DISTANCE (FT)
(NO ADJUSTMENT OF LOADS TO DESIGN LOADS)

GROUP I DL + 1.0LL + CF

MEM	1	JOINT 1		JOINT 2								
D	-2.52	.00	.00	1.11	3.10	5.20	7.30	9.40	11.39	12.50	.00	.00
+M	.00	-196.80	-190.83	-117.12	85.48	186.14	183.63	77.95	-97.38	-168.13	.00	.00
-M	.00	-273.59	-264.61	-156.59	8.21	75.86	76.06	8.80	-163.76	-283.80	.00	.00
V	-107.45	107.45	107.59	106.47	105.34	47.24	-7.79	-54.01	-116.91	118.04	.00	.00
T	1.25											

MEM	2	JOINT 2		JOINT 3								
D	.00	.00	.00	1.11	3.10	5.20	7.30	9.40	11.39	12.50	.00	.00
+M	.00	.00	-169.20	-98.31	90.59	188.51	184.88	78.07	-100.83	-170.43	.00	.00
-M	.00	.00	-277.47	-157.54	.46	74.67	77.24	9.96	-165.98	-285.35	.00	.00
V	.00	.00	114.20	113.07	111.95	46.70	-12.01	-55.69	-117.45	118.57	.00	.00
T	.97											

MEM	3	JOINT 3		JOINT 4								
D	.00	.00	.00	1.11	3.10	5.20	7.30	9.40	11.39	12.50	.00	.00
+M	.00	.00	-171.68	-98.80	88.93	187.09	184.55	78.79	-97.51	-166.19	.00	.00
-M	.00	.00	-280.70	-158.91	-1.86	71.95	78.31	17.21	-165.71	-283.06	.00	.00
V	.00	.00	114.71	113.58	112.46	47.21	-11.43	-55.10	-116.94	118.07	.00	.00
T	1.11											

MEM	4	JOINT 4		JOINT 5								
D	.00	.00	.00	1.11	3.10	5.20	7.30	9.40	11.39	12.50	.00	3.10
+M	.00	.00	-169.30	-95.69	89.97	179.05	164.96	54.73	-116.14	-189.93	-196.80	.00
-M	.00	.00	-281.90	-157.66	-2.60	67.94	71.03	6.66	-121.16	-213.25	-196.80	.00
V	.00	.00	112.40	111.28	110.15	44.91	-11.64	-54.05	-86.66	87.78	63.60	63.60
T	1.12											

GROUP II DL + W

MEM	1	JOINT 1		JOINT 2								
D	-2.52	.00	.00	1.11	3.10	5.20	7.30	9.40	11.39	12.50	.00	.00
+M	.00	-196.80	-173.25	-101.18	25.40	91.17	89.49	29.65	-90.10	-158.37	.00	.00
-M	.00	-196.80	-211.26	-133.60	2.99	79.33	88.22	20.35	-109.41	-183.26	.00	.00
V	-43.60	63.60	70.46	69.33	68.21	35.66	3.11	-34.48	-65.90	67.03	.00	.00
T	8.25											

MEM	2	JOINT 2		JOINT 3								
D	.00	.00	.00	1.11	3.10	5.20	7.30	9.40	11.39	12.50	.00	.00
+M	.00	.00	-162.55	-91.75	32.55	95.91	96.38	31.55	-94.14	-165.72	.00	.00
-M	.00	.00	-181.31	-106.96	23.69	93.76	91.82	20.28	-111.77	-186.90	.00	.00
V	.00	.00	67.47	66.35	65.22	32.67	-3.07	-35.62	-67.05	68.17	.00	.00
T	6.12											

MEM	3	JOINT 3		JOINT 4								
D	.00	.00	.00	1.11	3.10	5.20	7.30	9.40	11.39	12.50	.00	.00

139

BY JFF CHKD WEG

+M	.00	.00	-165.74	-94.16	31.54	96.38	95.90	32.53	-91.78	-162.59	.00	.00
-M	.00	.00	-186.97	-111.75	20.28	91.82	93.78	23.71	-106.93	-181.28	.00	.00
V	.00	.00	68.17	67.04	65.92	33.37	-2.37	-34.92	-66.34	67.47	.00	.00
T	4.11											

MEM 4 JOINT 4 JOINT 5

D	.00	.00	.00	1.11	3.10	5.20	7.30	9.40	11.39	12.50	.00	3.10
+M	.00	.00	-158.54	-90.22	29.60	89.45	91.05	25.20	-101.46	-173.58	-196.80	.00
-M	.00	.00	-183.10	-109.29	20.39	88.26	79.46	3.21	-133.31	-210.92	-196.80	.00
V	.00	.00	66.99	65.86	64.74	32.19	-5.32	-37.87	-69.29	70.41	63.60	63.60
T	2.15											

GROUP III DL + LL + HORIZ. FORCES + CF

MEM 1 JOINT 1 JOINT 2

D	-2.52	.00	.00	1.11	3.10	5.20	7.30	9.40	11.39	12.50	.00	.00
+M	.00	-196.80	-176.09	-104.55	94.17	190.73	184.13	81.56	-89.89	-158.48	.00	.00
-M	.00	-273.59	-279.34	-169.16	-.48	71.27	75.56	5.19	-171.25	-293.46	.00	.00
V	-107.43	107.43	109.54	108.42	107.29	49.19	-9.74	-55.96	-118.86	119.99	.00	.00
T	7.40											

MEM 2 JOINT 2 JOINT 3

D	.00	.00	.00	1.11	3.10	5.20	7.30	9.40	11.39	12.50	.00	.00
+M	.00	.00	-161.93	-92.41	94.03	189.34	186.65	82.44	-93.99	-162.22	.00	.00
-M	.00	.00	-284.74	-163.44	-2.97	73.84	75.47	5.59	-172.81	-293.56	.00	.00
V	.00	.00	115.44	114.31	113.19	47.94	-13.25	-56.92	-118.69	119.81	.00	.00
T	5.53											

MEM 3 JOINT 3 JOINT 4

D	.00	.00	.00	1.11	3.10	5.20	7.30	9.40	11.39	12.50	.00	.00
+M	.00	.00	-163.49	-91.98	93.30	188.86	185.35	82.21	-91.63	-158.94	.00	.00
-M	.00	.00	-288.89	-165.73	-6.22	70.18	77.48	13.79	-171.59	-290.31	.00	.00
V	.00	.00	115.94	114.82	113.69	48.45	-12.66	-56.33	-118.18	119.30	.00	.00
T	4.11											

MEM 4 JOINT 4 JOINT 5

D	.00	.00	.00	1.11	3.10	5.20	7.30	9.40	11.39	12.50	.00	3.10
+M	.00	.00	-156.77	-88.30	93.54	179.51	169.46	63.25	-103.79	-175.46	-196.80	.00
-M	.00	.00	-291.43	-165.26	-6.17	67.48	66.53	-1.87	-133.51	-227.72	-196.80	.00
V	.00	.00	114.32	113.20	112.07	46.83	-13.56	-55.97	-88.58	89.70	63.60	63.60
T	2.54											

GROUP IV DL + LL + (S+T) + CF

MEM 1 JOINT 1 JOINT 2

D	-2.52	.00	.00	1.11	3.10	5.20	7.30	9.40	11.39	12.50	.00	.00
+M	.00	-196.80	-150.20	-81.88	111.04	201.50	188.79	80.71	-89.34	-157.15	.00	.00
-M	.00	-273.59	-286.78	-175.82	-5.74	67.48	73.24	3.75	-178.48	-303.92	.00	.00
V	-107.43	107.43	110.24	109.12	107.99	49.89	-12.65	-58.87	-121.77	122.90	.00	.00
T	5.19											

MEM 2 JOINT 2 JOINT 3

D	.00	.00	.00	1.11	3.10	5.20	7.30	9.40	11.39	12.50	.00	.00
+M	.00	.00	-164.69	-94.46	93.23	189.88	184.97	78.72	-99.53	-168.76	.00	.00
-M	.00	.00	-279.94	-159.64	-.98	73.93	77.19	8.79	-168.36	-288.41	.00	.00
V	.00	.00	114.53	113.40	112.28	47.03	-12.62	-56.29	-118.06	119.18	.00	.00
T	7.23											

MEM 3 JOINT 3 JOINT 4

D	.00	.00	.00	1.11	3.10	5.20	7.30	9.40	11.39	12.50	.00	.00
+M	.00	.00	-170.01	-97.50	89.58	187.19	185.90	81.43	-93.66	-161.67	.00	.00

-M	.00	.00	-283.76	-161.30	-3.04	71.90	77.56	15.76	-167.82	-285.53	.00	.00
V	.00	.00	115.31	114.19	113.06	47.82	-11.76	-55.43	-117.27	118.40	.00	.00
T	7.50											

MEM	4	JOINT	4	JOINT	5							
D	.00	.00	.00	1.11	3.10	5.20	7.30	9.40	11.39	12.50	.00	3.10
+M	.00	.00	-155.32	-87.65	92.73	184.21	180.33	80.29	-80.90	-149.30	-196.80	.00
-M	.00	.00	-302.02	-172.59	-7.65	65.13	62.64	-7.30	-140.39	-235.42	-196.80	.00
V	.00	.00	117.26	116.14	115.01	49.77	-14.29	-56.70	-89.31	90.43	63.60	63.60
T	5.17											

GROUP V DL + + + (S+T)

MEM	1	JOINT	1	JOINT	2							
D	-2.52	.00	.00	1.11	3.10	5.20	7.30	9.40	11.39	12.50	.00	.00
+M	.00	-196.80	-132.62	-65.94	50.96	106.53	94.65	32.40	-82.07	-147.39	.00	.00
-M	.00	-196.80	-233.43	-152.83	-10.96	70.95	85.40	15.30	-124.13	-203.38	.00	.00
V	-63.60	63.60	73.11	71.98	70.86	38.31	5.76	-39.34	-70.76	71.89	.00	.00
T	12.20											

MEM	2	JOINT	2	JOINT	3							
D	.00	.00	.00	1.11	3.10	5.20	7.30	9.40	11.39	12.50	.00	.00
+M	.00	.00	-158.03	-87.90	35.19	97.28	96.48	32.19	-92.84	-164.05	.00	.00
-M	.00	.00	-183.78	-109.06	22.25	93.02	91.77	19.10	-114.16	-189.96	.00	.00
V	.00	.00	67.30	66.68	65.55	33.00	-3.68	-36.23	-67.65	68.78	.00	.00
T	12.38											

MEM	3	JOINT	3	JOINT	4							
D	.00	.00	.00	1.11	3.10	5.20	7.30	9.40	11.39	12.50	.00	.00
+M	.00	.00	-164.07	-92.96	32.18	96.48	97.27	35.17	-87.93	-158.06	.00	.00
-M	.00	.00	-189.93	-114.14	19.10	91.77	93.03	22.27	-109.04	-183.75	.00	.00
V	.00	.00	68.78	67.65	66.53	33.98	-2.70	-35.25	-66.67	67.80	.00	.00
T	10.50											

MEM	4	JOINT	4	JOINT	5							
D	.00	.00	.00	1.11	3.10	5.20	7.30	9.40	11.39	12.50	.00	3.10
+M	.00	.00	-147.56	-82.19	32.36	94.60	106.41	50.76	-66.22	-132.95	-196.80	.00
-M	.00	.00	-203.22	-124.01	15.34	85.45	71.08	-10.74	-152.54	-233.10	-196.80	.00
V	.00	.00	71.85	70.72	69.60	37.05	-7.97	-40.52	-71.94	73.07	63.60	63.60
T	6.20											

GROUP VI DL + LL + HORIZ. FORCES + (S+T) + CF

MEM	1	JOINT	1	JOINT	2							
D	-2.52	.00	.00	1.11	3.10	5.20	7.30	9.40	11.39	12.50	.00	.00
+M	.00	-196.80	-135.46	-69.31	119.73	206.09	189.28	84.31	-81.86	-147.30	.00	.00
-M	.00	-273.59	-301.52	-188.39	-14.43	62.89	72.75	.14	-185.97	-313.57	.00	.00
V	-107.43	107.43	112.19	111.07	109.94	51.84	-14.60	-60.82	-123.72	124.85	.00	.00
T	11.35											

MEM	2	JOINT	2	JOINT	3							
D	.00	.00	.00	1.11	3.10	5.20	7.30	9.40	11.39	12.50	.00	.00
+M	.00	.00	-157.40	-88.56	96.67	190.71	186.74	83.09	-92.69	-160.55	.00	.00
-M	.00	.00	-287.21	-165.54	-4.41	73.09	75.42	4.42	-175.20	-296.82	.00	.00
V	.00	.00	115.77	114.64	113.52	48.27	-13.86	-57.53	-119.29	120.42	.00	.00
T	11.79											

MEM	3	JOINT	3	JOINT	4							
D	.00	.00	.00	1.11	3.10	5.20	7.30	9.40	11.39	12.50	.00	.00
+M	.00	.00	-161.81	-90.67	93.94	188.96	186.72	84.85	-87.78	-154.42	.00	.00
-M	.00	.00	-291.95	-168.12	-7.40	70.13	76.73	12.34	-173.69	-292.78	.00	.00

08:03 APR 11,'80 PAGE 17

BY JEF CHKD WEG

V	.00	.00	116.55	115.42	114.30	49.05	-13.00	-56.66	-118.51	119.63	.00	.00
T	10.50											

MEM	4	JOINT	4	JOINT	5							
D	.00	.00	.00	1.11	3.10	5.20	7.30	9.40	11.39	12.50	.00	3.10
+M	.00	.00	-145.30	-80.26	96.30	184.67	164.82	88.82	-68.55	-134.82	-196.80	.00
-M	.00	.00	-311.54	-179.94	-11.22	64.67	58.15	-15.82	-152.74	-249.90	-196.80	.00
V	.00	.00	119.18	118.06	116.93	51.69	-14.21	-58.62	-91.23	92.35	63.60	63.60
T	6.59											

142

JOB NO. 8784 - FCWC - ROCD FLOODWAY - ELLIOT RD. BRIDGE - PROGRAM P7310

PROBLEM - PIER DESIGN BY JEF CHKD WEU

MAX. AND MIN. MOMENT ENVELOPES -- MAX. SHEAR AND AXIAL VALUES
(ALL VALUES ADJUSTED TO DESIGN LOADS)
M=MOMENT (K-FT); V=SHEAR (K); T=THRUST (K); D=DISTANCE FROM JOINT (FT)

MEM	1	JOINT 1		JOINT 2								
D	-2.52	.00	.00	1.11	3.10	5.20	7.30	9.40	11.39	12.50	.00	.00
+M	.00	-140.57	-94.73	-47.10	88.84	186.14	183.63	77.95	-58.47	-105.28	.00	.00
-M	.00	-273.59	-264.61	-156.59	-10.30	44.92	51.96	.10	-163.76	-283.80	.00	.00
V	-107.43	107.43	107.59	106.47	105.34	47.24	-10.43	-54.01	-116.91	118.04	.00	.00
T	8.71											

MEM	2	JOINT 2		JOINT 3								
D	.00	.00	.00	1.11	3.10	5.20	7.30	9.40	11.39	12.50	.00	.00
+M	.00	.00	-112.43	-62.78	90.59	188.51	184.88	78.07	-66.21	-114.68	.00	.00
-M	.00	.00	-277.47	-157.54	-3.15	52.21	53.87	3.15	-165.98	-285.35	.00	.00
V	.00	.00	111.20	113.07	111.95	46.70	-12.01	-55.69	-117.45	118.57	.00	.00
T	8.84											

MEM	3	JOINT 3		JOINT 4								
D	.00	.00	.00	1.11	3.10	5.20	7.30	9.40	11.39	12.50	.00	.00
+M	.00	.00	-115.58	-64.77	88.93	187.09	184.53	78.79	-62.70	-110.30	.00	.00
-M	.00	.00	-280.70	-158.91	-5.29	50.09	54.81	8.82	-165.71	-283.06	.00	.00
V	.00	.00	114.71	113.58	112.46	47.21	-11.43	-55.10	-116.94	118.07	.00	.00
T	7.50											

MEM	4	JOINT 4		JOINT 5								
D	.00	.00	.00	1.11	3.10	5.20	7.30	9.40	11.39	12.50	.00	3.10
+M	.00	.00	-104.14	-57.33	89.97	179.05	164.96	64.23	-47.30	-94.96	-140.57	.00
-M	.00	.00	-281.90	-157.86	-8.02	46.19	41.54	-11.30	-121.16	-213.25	-196.80	.00
V	.00	.00	112.40	111.28	110.15	44.91	-11.64	-54.05	-86.66	87.78	63.60	63.60
T	4.71											

JOB NO. 6784 - ECONC - RACO FLOODWAY - ELLIOT RD. BRIDGE - PROGRAM P7310

PROBLEM - PIER DESIGN BY JEF CHKD WEG

CAP DESIGN INPUT DATA

F'C(PSI)	FY(PSI)	ALPH(DEG)	AGG.(IN)	CLEAR.
3000.00	40000.00	.00	1.00	3.27

CAP REINFORCING BAR COMBINATIONS- LONG. BARS 9 STIRRUPS 5

6-#9 & 7-#9 in following output changed to 6-#10 for ease of installation.

DESCRIPTION OF CAP DESIGN OUTPUT

IF THERE IS A CANTILEVER AT JOINT AT LEFT END OF CAP BEAM MEMBER, COLUMN 1 OF TABLE BELOW GIVES OUTPUT AT POINT OF LOAD ON CANTILEVER, COLUMN 2 GIVES OUTPUT AT JOINT AT FIXED END OF CANTILEVER.

COLUMN 3 OF TABLE GIVES OUTPUT AT JOINT AT LEFT END OF CAP BEAM MEMBER.

COLUMNS 4 THRU 9 OF TABLE GIVE OUTPUT AT SIX POINTS ALONG MEMBER. THESE SIX POINTS ARE LOCATED AT DISTANCE 'D' FROM LEFT END OF MEMBER. 'D' VALUES (GIVEN IN TABLE ABOVE) ARE POINTS OF BEAM REACTIONS ON CAP AND ADDITIONAL POINTS DESIGNATED BY 'AA' DIMENSIONS IN INPUT DATA.

COLUMN 10 OF TABLE BELOW GIVES OUTPUT AT JOINT AT RIGHT END OF CAP BEAM MEMBER.

IF THERE IS A CANTILEVER AT JOINT AT RIGHT END OF CAP BEAM MEMBER, COLUMN 11 OF TABLE BELOW GIVES OUTPUT AT JOINT AT FIXED END OF CANTILEVER, COLUMN 12 GIVES OUTPUT AT POINT OF LOAD ON CANTILEVER.

DEP = DEPTH OF THE MEMBER AT THE SPECIFIED LOCATION(FT.)
M+ =POSITIVE MOMENT (K-FT)
M- =NEGATIVE MOMENT (K-FT)
VRS = SHEAR ON SECTION (K)
VSC = SHEAR CAPACITY OF CONCRETE SECTION (K)
BAS = REQUIRED AREA BOTTOM REINFORCING BARS (IN2)
BNO.= REQUIRED NUMBER BOTTOM REINFORCING BARS
SPH =HORIZ. BAR SPACING (IN)
TAS = REQUIRED AREA TOP REINFORCING BARS (IN2)
TNO.= REQUIRED NUMBER TOP REINFORCING BARS

ASV = REQUIRED AREA STEEL OF STIRRUPS (IN2/FT)
S = REQUIRED STIRRUP SPACING (IN)
WHERE STIRRUPS ARE REQUIRED FOR SHEAR, THE MAXIMUM SPACING IS LIMITED TO 1/2 THE BEAM DEPTH, BUT NOT MORE THAN 24 IN.

144

SVERDRUP & PARCEL AND ASSOCIATES, INC. 08:03 APR 11,'80 PAGE 20

JOB NO. 6784 - FCDMC - RACO FLOODWAY - ELLIOT RD. BRIDGE - PROGRAM P7310

PROBLEM - PIER DESIGN BY JEF CHKD WEG

SERVICE LOAD DESIGN OF REINFORCEMENTS — see note on Sht. No. 144 (PAGE 19)

REINFORCING BARS NO. 9 STIRRUPS NO. 5

AT SECTION 2 MEMBER 1 IS OVERSTRESSED FC= 1.39 KSI FS= 20.00 KSI

AT SECTION 3 MEMBER 1 IS OVERSTRESSED FC= 1.36 KSI FS= 20.00 KSI

AT SECTION 10 MEMBER 1 IS OVERSTRESSED FC= 1.43 KSI FS= 20.00 KSI

These stresses @ ℄ of column. Design is based on stresses @ face of equivalent square column.

MEM 1 JOINT 1 JOINT 2 SIMPLE BENDING

DEP	2.00	2.00	2.00	2.00	2.00	2.00	2.00	2.00	2.00	2.00	.00	.00
M+	.00	-140.57	-94.73	-47.10	88.84	186.14	183.63	77.95	-58.47	-105.28	.00	.00
M-	.00	-273.59	-264.01	-156.59	-10.30	44.92	51.96	.10	-163.76	-283.80	.00	.00
VRS	-107.43	107.43	107.59	106.47	105.34	47.24	-10.43	-54.01	-116.91	118.04	.00	.00
VSC	36.96	36.96	36.96	36.96	36.96	36.96	36.96	36.96	36.96	36.96	.00	.00
BAS	.00	.00	.00	.00	2.93	6.36	6.27	2.56	.00	.00	.00	.00
BNO.	0	0	0	0	3	7	7	3	0	0	0	0
SPH	.00	.00	.00	.00	14.13	4.63	4.63	14.13	.00	.00	.00	.00
TAS	.00	**********	**********	5.31	.32	.00	.00	.00	5.56	**********	.00	.00
TNO.	0	**	**	6	1	0	0	0	6	**	0	0
SPH	.00	.00	.00	5.63	.00	.00	.00	.00	5.63	.00	.00	.00
ASV	2.14	2.14	2.15	2.11	2.08	.54	.00	.54	2.43	2.47	.00	.00
S	3.47	3.47	3.46	3.52	3.58	9.87	.00	9.87	3.06	3.02	.00	.00

145

08:03 APR 11,'80 PAGE 21

BY JFF CHKD WEG

AT SECTION 3 MEMBER 2 IS OVERSTRESSED FC= 1.41 KSI FS= 20.00 KSI

AT SECTION 10 MEMBER 2 IS OVERSTRESSED FC= 1.43 KSI FS= 20.00 KSI

MEM 2 JOINT 2 JOINT 3 SIMPLE BENDING

DEP	.00	.00	2.00	2.00	2.00	2.00	2.00	2.00	2.00	2.00	.00	.00
M+	.00	.00	-112.43	-62.78	90.59	188.51	184.88	78.07	-66.21	-114.68	.00	.00
M-	.00	.00	-277.47	-157.54	-3.15	52.21	53.87	3.15	-165.98	-285.35	.00	.00
VRS	.00	.00	114.20	113.67	111.95	46.70	-12.01	-55.69	-117.45	118.57	.00	.00
VSC	.00	.00	36.96	36.96	36.96	36.96	36.96	36.96	36.96	36.96	.00	.00
RAS	.00	.00	.00	.00	2.99	6.45	6.32	2.57	.00	.00	.00	.00
RNO.	0	0	0	0	3	7	7	3	0	0	0	0
SPH	.00	.00	.00	.00	14.13	4.63	4.63	14.13	.00	.00	.00	.00
TAS	.00	.00	**********	5.34	.10	.00	.00	.00	5.64	**********	.00	.00
TNO.	0	0	**	6	1	0	0	0	6	**	0	0
SPH	.00	.00	.00	5.63	.00	.00	.00	.00	5.63	.00	.00	.00
ASV	.00	.00	2.35	2.31	2.28	.54	.00	.57	2.45	2.48	.00	.00
S	.00	.00	3.17	3.21	3.26	9.87	.00	9.87	3.04	3.00	.00	.00

AT SECTION 3 MEMBER 3 IS OVERSTRESSED FC= 1.42 KSI FS= 20.00 KSI

AT SECTION 10 MEMBER 3 IS OVERSTRESSED FC= 1.43 KSI FS= 20.00 KSI

MEM 3 JOINT 3 JOINT 4 SIMPLE BENDING

DEP	.00	.00	2.00	2.00	2.00	2.00	2.00	2.00	2.00	2.00	.00	.00
M+	.00	.00	-115.58	-64.77	88.93	187.09	184.53	78.79	-62.70	-110.30	.00	.00
M-	.00	.00	-280.70	-158.91	-5.29	50.09	54.81	8.82	-165.71	-283.06	.00	.00
VRS	.00	.00	114.71	113.58	112.46	47.21	-11.43	-55.10	-116.94	118.07	.00	.00
VSC	.00	.00	36.96	36.96	36.96	36.96	36.96	36.96	36.96	36.96	.00	.00
RAS	.00	.00	.00	.00	2.94	6.40	6.30	2.59	.00	.00	.00	.00
RNO.	0	0	0	0	3	7	7	3	0	0	0	0
SPH	.00	.00	.00	.00	14.13	4.63	4.63	14.13	.00	.00	.00	.00
TAS	.00	.00	**********	5.39	.16	.00	.00	.00	5.63	**********	.00	.00
TNO.	0	0	**	6	1	0	0	0	6	**	0	0
SPH	.00	.00	.00	5.63	.00	.00	.00	.00	5.63	.00	.00	.00
ASV	.00	.00	2.36	2.33	2.30	.54	.00	.55	2.43	2.47	.00	.00
S	.00	.00	3.15	3.19	3.24	9.87	.00	9.87	3.06	3.02	.00	.00

* See note on (PAGE 20) Sht. No. 145

146

08:03 APR 11,'80 PAGE 22
BY JFF CHKD. WEG

AT SECTION 3 MEMBER 4 IS OVERSTRESSED FC= 1.42 KSI FS= 20.00 KSI } See note on Sht. No. 145 (PAGE 20)

MEM 4 JOINT 4 JOINT 5 SIMPLE BENDING

DEP	.00	.00	2.00	2.00	2.00	2.00	2.00	2.00	2.00	2.00	2.00	2.00
M+	.00	.00	-104.14	-57.33	89.47	179.05	164.96	64.23	-47.30	-94.96	-140.57	.00
M-	.00	.00	-241.90	-157.86	-8.02	44.19	41.54	-11.30	-121.16	-213.25	-196.80	.00
VRS	.00	.00	112.40	111.28	110.15	44.91	-11.64	-54.05	-86.66	87.78	63.60	63.60
VSC	.00	.00	36.96	36.96	36.96	36.96	36.96	36.96	36.96	36.96	36.96	36.96
BAS	.00	.00	.00	.00	2.97	6.11	5.60	2.10	.00	.00	.00	.00
BNO.	0	0	0	0	3	7	6	3	0	0	0	0
SPH	.00	.00	.00	.00	14.13	4.63	5.63	14.13	.00	.00	.00	.00
TAS	.00	.00	**********	5.35	.25	.00	.00	.35	4.05	7.34	6.74	.00
TNO.	0	0	**	6	1	0	0	1	5	8	7	0
SPH	.00	.00	.00	5.63	.00	.00	.00	.00	7.00	4.00	4.63	.00
ASV	.00	.00	2.29	2.26	2.23	.54	.00	.54	1.51	1.55	.81	.81
S	.00	.00	3.24	3.29	3.34	9.87	.00	9.87	4.92	4.81	9.18	9.18

147

JOB NO. 6784 - FCDMC - RACO FLOODWAY - ELLIOT RD. BRIDGE - PROGRAM P7310

PROBLEM - PIER DESIGN BY JEF CHKD WEG

A.A.S.H.T.O. LOADING COMBINATIONS (COLUMNS)
ALL LOADINGS ARE NOT ADJUSTED TO DESIGN LOADS
DIMENSIONS: FORCES IN KIPS, MOMENTS IN KIP-FT

GROUP I DL+1.2LL+CF

MEM	JOINT	AXIAL	SHEAR	MOM(TRANS)	MOM(LONGI)	FORCE(LONGI)
5	6	140.05	-1.25	-8.57	.00	.00
6	7	138.72	-1.23	-8.67	.00	.00
7	8	139.29	-1.32	-10.14	.00	.00
8	9	136.60	1.04	7.59	.00	.00
9	10	138.49	1.12	7.62	.00	.00
5	6	215.37	-1.25	-8.57	.00	.00
6	7	232.01	-1.23	-8.67	.00	.00
7	8	233.07	-1.32	-10.14	.00	.00
8	9	232.03	1.04	7.59	.00	.00
9	10	161.51	1.12	7.62	.00	.00

GROUP II DL+

MEM	JOINT	AXIAL	SHEAR	MOM(TRANS)	MOM(LONGI)	FORCE(LONGI)
5	6	139.16	2.18	23.35	27.45	1.22
6	7	141.83	1.96	21.85	27.45	1.22
7	8	143.29	2.01	22.01	27.45	1.22
8	9	139.63	2.12	22.77	27.45	1.22
9	10	144.15	1.51	18.45	27.45	1.22
5	6	144.19	-1.55	-18.82	27.45	1.22
6	7	139.60	-2.14	-22.97	27.45	1.22
7	8	143.28	-2.01	-22.01	27.45	1.22
8	9	141.40	-1.96	-21.65	27.45	1.22
9	10	139.19	-2.15	-22.98	27.45	1.22

GROUP III DL + LL + HORI. FORCES + CF

MEM	JOINT	AXIAL	SHEAR	MOM(TRANS)	MOM(LONGI)	FORCE(LONGI)
5	6	138.10	-2.69	-24.92	87.75	3.90
6	7	138.01	-2.83	-26.05	87.75	3.90
7	8	139.28	-2.88	-27.21	87.75	3.90
8	9	135.91	2.62	24.81	87.75	3.90
9	10	136.57	2.54	23.68	87.75	3.90
5	6	217.32	-2.69	-24.92	87.75	3.90

148

BY JFF CHKD WEG

6	7	232.72	-2.83	-26.05	87.75	3.90
7	8	233.08	-2.88	-27.21	87.75	3.90
8	9	232.72	2.52	24.81	87.75	3.90
9	10	163.43	2.54	23.68	87.75	3.90

GROUP IV DL + LL + (S+T) + CF

MEM	JOINT	AXIAL	SHEAR	MOM(TRANS)	MOM(LONGI)	FORCE(LONGI)
5	6	135.19	-3.44	37.08	.00	.00
6	7	136.40	-2.49	-22.30	.00	.00
7	8	138.62	-1.32	-10.15	.00	.00
8	9	139.28	2.30	21.22	.00	.00
9	10	133.63	3.31	-38.04	.00	.00
5	6	218.02	-3.44	37.08	.00	.00
6	7	236.26	-2.49	-22.30	.00	.00
7	8	234.28	-1.32	-10.15	.00	.00
8	9	236.28	2.30	21.22	.00	.00
9	10	164.17	3.31	-38.04	.00	.00

GROUP V DL + [illegible] + (S+T)

MEM	JOINT	AXIAL	SHEAR	MOM(TRANS)	MOM(LONGI)	FORCE(LONGI)
5	6	134.30	6.19	69.00	27.45	1.22
6	7	137.28	4.29	46.83	27.45	1.22
7	8	142.61	-2.01	-22.02	27.45	1.22
8	9	137.31	-4.27	-46.63	27.45	1.22
9	10	134.33	-6.16	-68.63	27.45	1.22
5	6	146.84	6.19	69.00	27.45	1.22
6	7	145.69	4.29	46.83	27.45	1.22
7	8	144.50	-2.01	-22.02	27.45	1.22
8	9	145.65	-4.27	-46.63	27.45	1.22
9	10	146.20	-6.16	-68.63	27.45	1.22

GROUP VI DL + LL + MORI. FORCES + (S+T) + CF

MEM	JOINT	AXIAL	SHEAR	MOM(TRANS)	MOM(LONGI)	FORCE(LONGI)
5	6	133.24	-4.88	-49.83	87.75	3.90
6	7	135.69	-4.09	-39.68	87.75	3.90
7	8	138.62	-2.88	-27.22	87.75	3.90
8	9	133.59	3.88	38.45	87.75	3.90
9	10	131.71	4.73	48.59	87.75	3.90
5	6	219.97	-4.88	-49.83	87.75	3.90
6	7	236.98	-4.09	-39.68	87.75	3.90
7	8	234.29	-2.88	-27.22	87.75	3.90
8	9	236.97	3.88	38.45	87.75	3.90
9	10	166.09	4.73	48.59	87.75	3.90

08:03 APR 11, '80 PAGE 25

BY JFF CHKD WEG

GROUP	VII MEM	CL+EQ JOINT	AXIAL	SHEAR	MOM(TRANS)	MOM(LONGI)	FORCE(LONGI)
	5	6	134.25	5.82	64.45	424.80	18.88
	6	7	143.22	5.99	65.54	424.80	18.88
	7	8	143.30	5.92	64.92	424.80	18.88
	8	9	137.91	5.09	66.05	424.80	18.88
	9	10	148.97	5.09	58.81	424.80	18.88
	5	6	143.09	-5.18	-59.91	424.80	18.88
	6	7	137.81	-6.15	-60.66	424.80	18.88
	7	8	143.27	-5.92	-64.92	424.80	18.88
	8	9	143.12	-5.93	-64.94	424.80	18.88
	9	10	134.37	-5.72	-63.35	424.80	18.88

RATIO OF HORIZONTAL EARTHQUAKE FORCE TO HORIZONTAL FORCE LOADING CASE
TRANSVERSE EQ/GROUP II WIND = 2.9490
LONGITUDINAL EQ/GP. II WIND = 15.4754

150

JOB NO. 4734 - FCDMC - RACO FLOODWAY - ELLIOT RD. BRIDGE - PROGRAM P7310

PROBLEM - PIER DESIGN BY JFF CHKD WEG

A.A.S.H.T.O. LOADING COMBINATIONS (COLUMNS)
ALL LOADINGS ARE NOT ADJUSTED TO DESIGN LOADS
DIMENSIONS: FORCES IN KIPS, MOMENTS IN KIP-FT

GROUP I DL+1.00LL+CF

MEM	JOINT	AXIAL	SHEAR	MOM(TRANS)	MOM(LONGI)	FORCE(LONGI)
5	1	-129.92	1.25	-18.27	.00	.00
6	2	-128.59	1.23	-17.86	.00	.00
7	3	-129.16	1.32	-18.23	.00	.00
8	4	-126.47	-1.04	14.84	.00	.00
9	5	-128.36	-1.12	16.45	.00	.00
5	1	-205.24	1.25	-18.27	.00	.00
6	2	-221.98	1.23	-17.86	.00	.00
7	3	-222.94	1.32	-18.23	.00	.00
8	4	-221.90	-1.04	14.84	.00	.00
9	5	-151.38	-1.12	16.45	.00	.00

GROUP II DL+...

MEM	JOINT	AXIAL	SHEAR	MOM(TRANS)	MOM(LONGI)	FORCE(LONGI)
5	1	-129.02	-2.18	23.55	1.22	1.22
6	2	-131.30	-1.98	20.71	1.22	1.22
7	3	-133.16	-2.01	21.15	1.22	1.22
8	4	-129.50	-2.12	22.74	1.22	1.22
9	5	-134.02	-1.51	14.13	1.22	1.22
5	1	-134.06	1.55	-14.46	1.22	1.22
6	2	-129.47	2.14	-22.94	1.22	1.22
7	3	-133.15	2.01	-21.15	1.22	1.22
8	4	-131.27	1.96	-20.51	1.22	1.22
9	5	-129.06	2.15	-23.21	1.22	1.22

GROUP III DL + LL + HORI. FORCES + CF

MEM	JOINT	AXIAL	SHEAR	MOM(TRANS)	MOM(LONGI)	FORCE(LONGI)
5	1	-127.97	2.69	-33.01	3.90	3.90
6	2	-127.48	2.83	-34.79	3.90	3.90
7	3	-129.15	2.88	-34.64	3.90	3.90
8	4	-125.78	-2.62	31.61	3.90	3.90
9	5	-126.44	-2.54	30.93	3.90	3.90
5	1	-207.19	2.69	-33.01	3.90	3.90

5

BY JFF CHKD WEG

6	2	-222.59	2.83	-34.79	3.90	3.90
7	3	-222.94	2.88	-34.64	3.90	3.90
8	4	-222.58	-2.62	31.61	3.90	3.90
9	5	-153.30	-2.54	30.93	3.90	3.90

GROUP IV DL + LL + (S+T) + CF

MEM	JOINT	AXIAL	SHEAR	MOM(TRANS)	MOM(LONGI)	FORCE(LONGI)
5	1	-125.06	3.44	-40.44	.00	.00
6	2	-126.27	2.49	-31.31	.00	.00
7	3	-128.49	1.32	-18.24	.00	.00
8	4	-124.15	-2.30	28.29	.00	.00
9	5	-123.50	-3.31	38.62	.00	.00
5	1	-207.99	3.44	-40.44	.00	.00
6	2	-226.13	2.49	-31.31	.00	.00
7	3	-224.15	1.32	-18.24	.00	.00
8	4	-226.15	-2.30	28.29	.00	.00
9	5	-154.03	-3.31	38.62	.00	.00

GROUP V DL + [illegible] + (S+T)

MEM	JOINT	AXIAL	SHEAR	MOM(TRANS)	MOM(LONGI)	FORCE(LONGI)
5	1	-124.16	-6.19	64.18	1.22	1.22
6	2	-127.15	-4.29	45.35	1.22	1.22
7	3	-132.48	2.01	-21.16	1.22	1.22
8	4	-127.18	4.27	-45.16	1.22	1.22
9	5	-124.20	6.16	-63.85	1.22	1.22
5	1	-136.71	-6.19	64.18	1.22	1.22
6	2	-135.55	-4.29	45.35	1.22	1.22
7	3	-134.37	2.01	-21.16	1.22	1.22
8	4	-135.52	4.27	-45.16	1.22	1.22
9	5	-136.67	6.16	-63.85	1.22	1.22

GROUP VI DL + LL + HORI. FORCES + (S+T) + CF

MEM	JOINT	AXIAL	SHEAR	MOM(TRANS)	MOM(LONGI)	FORCE(LONGI)
5	1	-123.11	4.88	-55.18	3.90	3.90
6	2	-125.55	4.09	-48.24	3.90	3.90
7	3	-128.49	2.88	-34.64	3.90	3.90
8	4	-123.96	-3.88	45.06	3.90	3.90
9	5	-121.58	-4.73	53.10	3.90	3.90
5	1	-209.84	4.88	-55.18	3.90	3.90
6	2	-226.85	4.09	-48.24	3.90	3.90
7	3	-224.15	2.88	-34.64	3.90	3.90
8	4	-226.84	-3.88	45.06	3.90	3.90
9	5	-155.95	-4.73	53.10	3.90	3.90

08:03 APR 11,'80 PAGE 28

BY JFF CHKD WEG

GROUP	VII MEM	DLEG JOINT	AXIAL	SHEAR	MOM(TRANS)	MOM(LONGI)	FORCE(LONGI)
	5	1	-124.12	-5.82	60.58	18.88	18.88
	6	2	-133.29	-5.99	63.26	18.88	18.88
	7	3	-133.17	-5.92	62.38	18.88	18.88
	8	4	-127.78	-6.09	64.89	18.88	18.88
	9	5	-138.84	-5.09	50.52	18.88	18.88
	5	1	-138.96	5.18	-51.49	18.88	18.88
	6	2	-127.68	6.15	-65.48	18.88	18.88
	7	3	-133.14	5.92	-62.38	18.88	18.88
	8	4	-132.99	5.93	-62.66	18.88	18.88
	9	5	-124.24	5.72	-59.60	18.88	18.88

RATIO OF HORIZONTAL EARTHQUAKE FORCE TO HORIZONTAL FORCE LOADING CASE
TRANSVERSE EQ/GROUP II WIND = 2.9490
LONGITUDINAL EQ/GR. II WIND = 15.9754

153

P7361 - REINFORCED CONCRETE COLUMN DESIGN WITH SLENDERNESS EFFECTS INCLUDED FOR ONE DIRECTION OF BENDING

FORM I

SVERDRUP AND PARCEL

FORM 1 OF 2

SHEET 154 OF —

JOB 6784-FCDMC-RWCD Floodway - Elliot Rd. Bridge

DATE 4-16-80 BY JFF CHECKED BY WEG

JOB NO. 6784 - FCDMC - RWCD FLOODWAY - ELLIOT RD. BRIDGE - PROGRAM P7361	
PROBLEM NO. - COLUMN DESIGN	BY JFF CHKD

COLUMN TYPE	TOTAL INCREASE TO BE CONSIDERED IN DESIGN DEPTH (IN.)	WIDTH (IN.)	CONC. STRENGTH 28 DAYS F'C (PSI)	YIELD STRESS OF REINF. FY (PSI)	MIN. CLEAR SPACING OF REINF. (IN.)	COVER FOR REINF. (IN.)	DEPTH INCREMENT (IN.)	WIDTH INCREMENT (IN.)
1	2	12.	12.	3000.	40000.	3.37	2.5	6.	6.

CODE	MAX. BAR SIZE	MINIMUM PERCENT STEEL	MAXIMUM PERCENT STEEL	NUMBER OF COLUMNS
1	11	1.	5.	2.

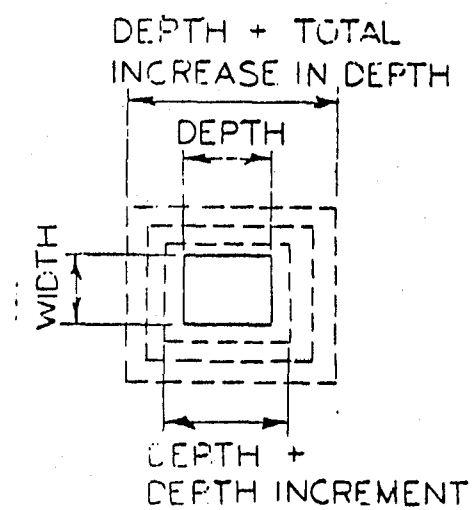

NOTES.

1) COLUMN TYPE
   (C2. 1=CIRCULAR CROSS SECTION WITH CIRCULAR REINFORCEMENT PATTERN
   2=RECTANGULAR CROSS SECTION WITH CIRCULAR REINFORCEMENT PATTERN
   3=RECTANGULAR CROSS SECTION WITH RECTANGULAR REINFORCEMENT PATTERN
   C4. (NOT REQUIRED FOR RECTANGULAR REINFORCEMENT PATTERN)
   1=SPIRAL REINFORCEMENT
   2=TIED REINFORCEMENT
   TIED REINFORCEMENT IS ASSUMED WHEN A RECTANGULAR REINFORCEMENT PATTERN IS SPECIFIED.
2) THE TOTAL INCREASE IN COLUMN SIZE SHOULD NORMALLY BE LESS THAN 12 IN. THE DEPTH AND WIDTH INCREMENTS ARE SET INTERNALLY TO MINIMUM VALUES EQUAL TO 10 PERCENT OF THE COLUMN DIMENSIONS. LARGER VALUES ONLY SHOULD BE SPECIFIED.
3) FOR ROUND COLUMNS THE INCREMENTS FOR DEPTH AND WIDTH SHOULD HAVE THE SAME VALUE.
4) THE COLUMN DESIGNS ARE BASED ON TWO BAR SIZES ONLY--THE MAXIMUM BAR SIZE INPUT, AND THE NEXT SIZE SMALLER.
5) THE EFF. LENGTH FACTOR IS APPLIED IN THE LONGITUDINAL DIRECTION ONLY. IN THE TRANSVERSE DIRECTION K=1 IN ALL CASES.
6) SLENDERNESS EFFECTS ARE APPLIED IN THE LONGITUDINAL DIRECTION ONLY.
7) CODE
   1=SERVICE LOAD DESIGN OF COLUMNS
   2=LOAD FACTOR DESIGN OF COLUMNS
8) DEFAULT VALUES FOR MAX. AND MIN. PERCENT STEEL ARE 5.0 AND 1.0
9) NO. LOC. CASES=NUMBER OF LOADING CASES FOR DESIGN (2 CASES PER CARD-15 MAX)
10) DEAD LOAD THRUST TO BE USED IN COMPUTATIONS FOR LONGITUDINAL MOMENT MAGNIFICATION FACTOR FOR SLENDERNESS EFFECTS.
11) COVER FOR REINF. IS COVER OVER PRINCIPAL REINFORCEMENT.

P7361 REINFORCED CONCRETE COLUMN DESIGN WITH SLENDERNESS EFFECTS INCLUDED FOR ONE DIRECTION OF BENDING FORM II

SVERDRUP AND PARCEL

FORM 2 OF 2

SHEET 155 OF ___

JOB 6784 FCDMC-RWCD Floodway - Elliot Rd. Bridge

DATE 4-16-80 BY JFF CHECKED BY WEG

COL. NO.	JOINT NO.	NO. LOC. CASES	COLUMN DEPTH (IN.)	COLUMN WIDTH (IN.)	LONGIT. EFF. LGTH. FACT. (K)	DEAD LOAD THRUST (K)	COLUMN LENGTH (FT.)
5	6	15	30.	30.	2.1	141.67	21.5

THRUST (K)	TRANSV. MOM. (K-FT.)	LONGIT. MOM. (K-FT.)	THRUST (K)	TRANSV. MOM. (K-FT.)	LONGIT. MOM. (K-FT.)
140.05	8.57	0.	215.37	8.57	0.
111.33	18.68	21.96	115.35	15.06	21.96
110.48	19.94	70.20	173.86	19.94	70.20
108.15	29.66	0.	174.42	29.66	0.
95.93	49.29	19.61	101.89	49.29	19.61
95.17	35.59	62.68	157.12	35.59	62.68
100.69	48.34	0.	111.82	44.93	0.
106.25	1.70	318.60			

COL. NO.	JOINT NO.	NO. LOC. CASES	COLUMN DIAM. OR DEPTH. (IN.)	COLUMN WIDTH (IN.)	LONGIT. EFF. LGTH. FACT. (K)	DEAD LOAD THRUST (K)	COLUMN LENGTH (FT.)
6	7	15	30.	30.	2.1	140.52	21.5

THRUST (K)	TRANSV. MOM. (K-FT.)	LONGIT. MOM. (K-FT.)	THRUST (K)	TRANSV. MOM. (K-FT.)	LONGIT. MOM. (K-FT.)
138.72	8.67	0.	232.01	8.67	0.
113.14	17.48	21.96	111.68	18.38	21.96
110.41	20.84	70.20	186.18	20.84	70.20
109.12	17.84	0.	189.01	17.84	0.
98.06	33.45	19.61	104.06	33.45	19.61
96.92	28.34	62.68	169.27	28.34	62.68
107.42	49.16	0.	103.36	50.00	0.
105.39	.42	318.60			

NOTE. REPEAT THE ABOVE SET OF CARDS FOR ADDITIONAL COLUMNS TO 20 MAX.
TRANSV. MOM. (MT)=MOMENT ABOUT AN AXIS PARALLEL WITH THE WIDTH OF SECTION
LONGIT. MOM. (MT)=MOMENT ABOUT AN AXIS PARALLEL WITH THE DEPTH OF SECTION

```
HONEYWELL CP-V AT YOUR SERVICE - SNP019
15:27 APR 16,'80   USER# 2A    LINE# E
PROCESSING NOW AVAILABLE
LOGON PLEASE:

 AT 15:28 APR 16,'80
 JOB 01E4
COMPLETED

!PLATEN 81

!C JFFOUTCOL1 TO ME
1SVERDRUP & PARCEL AND ASSOCIATES, INC.          15:08 APR 16,'80  PAGE 1
0JOB NO. 6784 - FCDMC - RWCD FLOODWAY - ELLIOT RD. BRIDGE -  PROGRAM P7361
0PROBLEM - COLUMN DESIGN                                BY JFF        CHKD WEG
```

Sht. No. 156

DESIGN OF ROUND R.C. COMPRESSION MEMBERS

[redacted]

TIED REINFORCEMENT ASSUMED FOR ALL MEMBERS

RECTANGULAR REINFORCEMENT PATTERN IS GIVEN BY NUMBER OF BARS PER ROW
OTHERWISE INDICATES A CIRCULAR REINFORCEMENT PATTERN.

TOTAL DEPTH INCREMENT =	12.00 IN	TOTAL WIDTH INCREMENT =	12.00 I
DEPTH INCREMENT =	6.00 IN	WIDTH INCREMENT =	6.00 I
MIN.CLEAR SPACING =	3.37 IN	BARS CONSIDERED	10 11
MIN. PERCENT STEEL =	1.00	MAX. PERCENT STEEL =	5.00

DEPTH IS IN THE TRANSVERSE DIRECTION

ML=MOMENT ABOUT AN AXIS PARALLEL WITH THE DEPTH
MT=MOMENT ABOUT AN AXIS PARALLEL WITH THE WIDTH

MEMBER 5 JOINT 6 DEPTH 30.00 IN WIDTH 30.00 IN
DL THRUST = 141.67 K COL. LTH.= 21.50 FT LONGIT. K = 2.10
TRANSV. K = 1.0

TH (K)	MT (K-FT)	ML (K-FT)	TH (K)	MT (K-FT)	ML (K-FT)
140.050	8.570	.000	215.370	8.570	.000
111.330	18.680	21.960	115.350	15.060	21.960
110.480	19.940	70.200	173.860	19.940	70.200
108.150	29.660	.000	174.420	29.660	.000
95.930	49.290	19.610	104.890	49.290	19.610
95.170	35.590	62.680	157.120	35.590	62.680
100.690	48.340	.000	111.820	44.930	.000
106.250	1.700	318.600			

MEMBER 6 JOINT 7 DEPTH 30.00 IN WIDTH 30.00 IN
DL THRUST = 140.52 K COL. LTH.= 21.50 FT LONGIT. K = 2.10
TRANSV. K = 1.0

TH (K)	MT (K-FT)	ML (K-FT)	TH (K)	MT (K-FT)	ML (K-FT)
138.720	8.670	.000	232.010	8.670	.000
113.140	17.480	21.960	111.680	18.380	21.960
110.410	20.840	70.200	186.180	20.840	70.200
109.120	17.840	.000	189.010	17.840	.000
98.060	33.450	19.610	104.060	33.450	19.610
96.920	28.340	62.680	169.270	28.340	62.680
107.420	49.160	.000	103.360	50.000	.000
105.390	.420	318.600			

157

1SVERDRUP & PARCEL AND ASSOCIATES, INC. 15:08 APR 16,'80 PAGE 2
0JOB NO. 6784 - FCDMC - RWCD FLOODWAY - ELLIOT RD. BRIDGE - PROGRAM P7361
0PROBLEM - COLUMN DESIGN BY JFF CHKD WEG

MEMBER 5 JOINT 6

DEPTH= 36.000 WIDTH= 36.000 FPC= 3.000 FY= 40.000

USE- 12 NO.10 AST= 15.24 SQ.IN. PCT.AS= 1.50 COVER= 2.50 IN.

PHIC= .35 PHIB= .45
BY SERVICE LOAD DESIGN OF COLUMNS

LOAD	APPLIED LOADS			COMPUTED STRENGTH			
CASE	AP	AMT	AML	UP	UMT	UML	UP/AP
1	140.1	42.0	48.8	716.1	214.9	249.4	5.114
2	215.4	64.6	75.0	716.2	214.9	249.4	3.325
3	111.3	33.4	38.8	716.1	214.9	249.5	6.433
4	115.4	34.6	40.2	716.1	214.9	249.5	6.209
5	110.5	33.1	81.5	515.6	155.3	381.7	4.674
6	173.9	52.2	81.5	650.8	195.3	305.1	3.744
7	108.1	32.4	37.7	716.1	214.9	249.5	6.622
8	174.4	52.3	60.7	716.2	214.9	249.4	4.106
9	95.9	49.3	33.4	609.1	314.3	213.0	6.357
10	104.9	49.3	36.5	632.8	297.4	220.4	6.033
11	95.2	35.6	72.8	489.8	184.0	376.1	5.157
12	157.1	47.1	72.8	653.9	196.2	302.8	4.162
13	100.7	48.3	35.1	627.6	301.4	218.6	6.234
14	111.8	44.9	38.9	667.1	268.1	232.3	5.966
15	106.3	31.9	369.8	108.0	32.5	376.6	1.018

THE CRITICAL LOAD CASE IS NUMBER 15

AMT=MOMENT ABOUT THE LONGITUDINAL ROADWAY AXIS - MOM.(TRANS) K-FT
AML=MOMENT ABOUT THE TRANSVERSE ROADWAY AXIS - MOM.(LONG) K-FT

KL/R= 60.20 FOR LONGITUDINAL MOM. (AML)
KL/R= 28.67 FOR TRANSVERSE MOM. (AMT)

[redacted]

1SVERDRUP & PARCEL AND ASSOCIATES, INC. 15:08 APR 16,'80 PAGE 3
0JOB NO. 6784 - FCDMC - RWCD FLOODWAY - ELLIOT RD. BRIDGE - PROGRAM P7361
0PROBLEM - COLUMN DESIGN BY JFF CHKD WEG

MEMBER 6 JOINT 7

DEPTH= 36.000 WIDTH= 36.000 FPC= 3.000 FY= 40.000

USE- 12 NO.10 AST= 15.24 SQ.IN. PCT.AS= 1.50 COVER= 2.50 IN.

PHIC= .35 PHIB= .45
BY SERVICE LOAD DESIGN OF COLUMNS

LOAD CASE	APPLIED LOADS AP	AMT	AML	COMPUTED STRENGTH UP	UMT	UML	UP/AP
1	138.7	41.6	48.8	714.1	214.3	251.4	5.148
2	232.0	69.6	81.6	714.2	214.3	251.4	3.078
3	113.1	33.9	39.8	714.1	214.3	251.4	6.312
4	111.7	33.5	39.3	714.1	214.3	251.4	6.395
5	110.4	33.1	82.3	511.9	154.2	383.3	4.644
6	186.2	55.9	82.3	665.2	199.6	294.2	3.573
7	109.1	32.7	38.4	714.1	214.3	251.4	6.545
8	189.0	56.7	66.5	714.2	214.3	251.4	3.779
9	98.1	33.4	34.5	694.9	237.2	244.6	7.087
10	104.1	33.4	36.6	704.2	226.5	247.9	6.768
11	96.9	29.1	73.5	506.4	152.6	385.8	5.234
12	169.3	50.8	73.5	669.5	200.9	290.8	3.955
13	107.4	49.2	37.8	637.6	291.9	224.4	5.936
14	103.4	50.0	36.4	624.4	302.1	219.8	6.042
15	105.4	31.6	373.7	105.8	31.8	375.5	1.005

THE CRITICAL LOAD CASE IS NUMBER 15

AMT=MOMENT ABOUT THE LONGITUDINAL ROADWAY AXIS - MOM.(TRANS) K-FT
AML=MOMENT ABOUT THE TRANSVERSE ROADWAY AXIS - MOM.(LONG) K-FT

KL/R= 60.20 FOR LONGITUDINAL MOM. (AML)
KL/R= 28.67 FOR TRANSVERSE MOM. (AMT)

[redacted]

1END OF JOB

!BYE

CPU = .0423 CON= 00:05:00 INT = 5 CHG = 338

HONEYWELL CP-V AT YOUR SERVICE - SNP019
15:33 APR 16,'80 USER# 15 LINE# E
PROCESSING NOW AVAILABLE
LOGON PLEASE:

SVERDRUP & PARCEL

JOB 6784 FCDMC - RWCD Floodway

SHEET NO. 159 OF

DATE 4-17-80

COMPUTATIONS FOR Elliot Rd. Bridge

BY UFF CHKD WEG

Intermed. Piers (cont'd.)

Column Bar Cut-off Point -

Column Member No. 6 governs

Ldg. Case 15 Longit. EQ + DL governs reinf.

Moment @ Top of Col. = 0

Moment @ Bottom of Col. = 318.6 'k

DL axial load = 105.39 k

Transv. Moment MT = .42 'k

Longit. Moment ML varies linearly between top & bottom of col.

Interpolate for various distances from bottom:

Distance (ft.) From Bottom of Col. (ft. ?)	Applied Longit. Moment ML ('k)
0	318.6
1	304
2	289
3	274
4	259
5	245
6	230
21.5	0

Read these values into computer program P736l.

80-COLUMN CARD PUNCH FORMAT

SVERDRUP & PARCEL

JOB 6784 FCDMC-RWCD Floodway Brs. DATE 4-17-80 BY JFF CHKD WEG

SHEET 160 OF ____ ____ CARDS ON THIS SHEET

```
JØB NØ. 6784 - FCDMC - RWCD FLØØDWAY - ELLIOT RD. BRIDGE - PRØGRAM P7361
PRØBLEM - COLUMN BAR CUT-ØFF PØINT                    BY JFF          CHKD
  1  2        0.        0.      3000.     40000.        3.53      2.5      0.      0.
  111        1.        4.        6.
  6  7  1       36.      36.       2.1     140.52     21.5
             105.39      .42     304.
  6  7  1       36.      36.       2.1     140.52     21.5
             105.39      .42     289.
  6  7  1       36.      36.       2.1     140.52     21.5
             105.39      .42     274.
  6  7  1       36.      36.       2.1     140.52     21.5
             105.39      .42     259.
  6  7  1       36.      36.       2.1     140.52     21.5
             105.39      .42     245.
  6  7  1       36.      36.       2.1     140.52     21.5
             105.39      .42     230.
```

Sht. No. 161

```
HONEYWELL CP-V AT YOUR SERVICE - SMP019
15:11 APR 17,'80  USER# 20    LINE# 12
PROCESSING NOW AVAILABLE
LOGON PLEASE:

ON AT 15:11 APR 17,'80
!JOB 0221
COMPLETED

!PLATEN 81

!C JFFOUTCOL2 TO ME
1SVERDRUP & PARCEL AND ASSOCIATES, INC.          09:19 APR 17,'80  PAGE 1
0JOB NO. 6784 - FCDMC - RWCD FLOODWAY - ELLIOT RD. BRIDGE -  PROGRAM P7361
0PROBLEM - COLUMN BAR CUT-OFF POINT                  BY JFF          CHKD WEG

     DESIGN OF ROUND R.C. COMPRESSION MEMBERS

     [redacted]

     TIED REINFORCEMENT ASSUMED FOR ALL MEMBERS

     RECTANGULAR REINFORCEMENT PATTERN IS GIVEN BY NUMBER OF BARS PER ROW
      OTHERWISE INDICATES A CIRCULAR REINFORCEMENT PATTERN.

     TOTAL DEPTH INCREMENT =      .00 IN    TOTAL WIDTH INCREMENT =      .00 I

     DEPTH INCREMENT       =      .00 IN    WIDTH INCREMENT       =      .00 I

     MIN.CLEAR SPACING     =     3.53 IN    BARS CONSIDERED        10      11
     MIN. PERCENT STEEL    =     1.00       MAX. PERCENT STEEL    =     4.00

     DEPTH IS IN THE TRANSVERSE DIRECTION

     ML=MOMENT ABOUT AN AXIS PARALLEL WITH THE DEPTH
     MT=MOMENT ABOUT AN AXIS PARALLEL WITH THE WIDTH
```

MEMBER 6 JOINT 7 DEPTH 36.00 IN WIDTH 36.00 IN
DL THRUST = 140.52 K COL. LTH.= 21.50 FT LONGIT. K = 2.10
TRANSV. K = 1.0

TH (K)	MT (K-FT)	ML (K-FT)	TH (K)	MT (K-FT)	ML (K-FT)
105.390	.420	304.000			

MEMBER 6 JOINT 7 DEPTH 36.00 IN WIDTH 36.00 IN
DL THRUST = 140.52 K COL. LTH.= 21.50 FT LONGIT. K = 2.10
TRANSV. K = 1.0

TH (K)	MT (K-FT)	ML (K-FT)	TH (K)	MT (K-FT)	ML (K-FT)
105.390	.420	289.000			

MEMBER 6 JOINT 7 DEPTH 36.00 IN WIDTH 36.00 IN
DL THRUST = 140.52 K COL. LTH.= 21.50 FT LONGIT. K = 2.10
TRANSV. K = 1.0

TH (K)	MT (K-FT)	ML (K-FT)	TH (K)	MT (K-FT)	ML (K-FT)
105.390	.420	274.000			

MEMBER 6 JOINT 7 DEPTH 36.00 IN WIDTH 36.00 IN
DL THRUST = 140.52 K COL. LTH.= 21.50 FT LONGIT. K = 2.10
TRANSV. K = 1.0

TH (K)	MT (K-FT)	ML (K-FT)	TH (K)	MT (K-FT)	ML (K-FT)
105.390	.420	259.000			

MEMBER 6 JOINT 7 DEPTH 36.00 IN WIDTH 36.00 IN
DL THRUST = 140.52 K COL. LTH.= 21.50 FT LONGIT. K = 2.10
TRANSV. K = 1.0

TH (K)	MT (K-FT)	ML (K-FT)	TH (K)	MT (K-FT)	ML (K-FT)
105.390	.420	245.000			

MEMBER 6 JOINT 7 DEPTH 36.00 IN WIDTH 36.00 IN
DL THRUST = 140.52 K COL. LTH.= 21.50 FT LONGIT. K = 2.10
TRANSV. K = 1.0

TH (K)	MT (K-FT)	ML (K-FT)	TH (K)	MT (K-FT)	ML (K-FT)
105.390	.420	230.000			

MEMBER 6 JOINT 7

DEPTH= 36.000 WIDTH= 36.000 FPC= 3.000 FY= 40.000

USE- 11 NO.10 AST= 13.97 SQ.IN. PCT.AS= 1.37 COVER= 2.50 IN.

PHIC= .35 PHIB= .45
BY SERVICE LOAD DESIGN OF COLUMNS

LOAD CASE	APPLIED LOADS AP	AMT	AML	COMPUTED STRENGTH UP	UMT	UML	UP/AP
1	105.4	31.6	341.6	110.5	33.1	358.1	1.048

THE CRITICAL LOAD CASE IS NUMBER 1

AMT=MOMENT ABOUT THE LONGITUDINAL ROADWAY AXIS - MOM.(TRANS) K-FT
AML=MOMENT ABOUT THE TRANSVERSE ROADWAY AXIS - MOM.(LONG) K-FT

KL/R= 60.20 FOR LONGITUDINAL MOM. (AML)
KL/R= 28.67 FOR TRANSVERSE MOM. (AMT)

[redacted]

1SVERDRUP & PARCEL AND ASSOCIATES, INC. 09:19 APR 17,'80 PAGE 4
0JOB NO. 6784 - FCDMC - RWCD FLOODWAY - ELLIOT RD. BRIDGE - PROGRAM P7361
0PROBLEM - COLUMN BAR CUT-OFF POINT BY JFF CHKD WEG

MEMBER 6 JOINT 7

DEPTH= 36.000 WIDTH= 36.000 FPC= 3.000 FY= 40.000

USE- 10 NO.10 AST= 12.70 SQ.IN. PCT.AS= 1.25 COVER= 2.50 IN.

PHIC= .35 PHIB= .45
BY SERVICE LOAD DESIGN OF COLUMNS

LOAD	APPLIED LOADS			COMPUTED STRENGTH			
CASE	AP	AMT	AML	UP	UMT	UML	UP/AP
1	105.4	31.6	325.4	109.3	32.8	337.6	1.037

THE CRITICAL LOAD CASE IS NUMBER 1

AMT=MOMENT ABOUT THE LONGITUDINAL ROADWAY AXIS - MOM.(TRANS) K-FT
AML=MOMENT ABOUT THE TRANSVERSE ROADWAY AXIS - MOM.(LONG) K-FT

KL/R= 60.20 FOR LONGITUDINAL MOM. (AML)
KL/R= 28.67 FOR TRANSVERSE MOM. (AMT)

[redacted]

1SVERDRUP & PARCEL AND ASSOCIATES, INC. 09:19 APR 17,'80 PAGE 5
0JOB NO. 6784 - FCDMC - RWCD FLOODWAY - ELLIOT RD. BRIDGE - PROGRAM P7361
0PROBLEM - COLUMN BAR CUT-OFF POINT BY JFF CHKD WEG

MEMBER 6 JOINT 7

DEPTH= 36.000 WIDTH= 36.000 FPC= 3.000 FY= 40.000

USE- 9 NO.10 AST= 11.43 SQ.IN. PCT.AS= 1.12 COVER= 2.50 IN.

PHIC= .35 PHIB= .45
BY SERVICE LOAD DESIGN OF COLUMNS

LOAD	APPLIED LOADS			COMPUTED STRENGTH			
CASE	AP	AMT	AML	UP	UMT	UML	UP/AP
1	105.4	31.6	309.2	108.5	32.5	318.3	1.029

THE CRITICAL LOAD CASE IS NUMBER 1

AMT=MOMENT ABOUT THE LONGITUDINAL ROADWAY AXIS - MOM.(TRANS) K-FT
AML=MOMENT ABOUT THE TRANSVERSE ROADWAY AXIS - MOM.(LONG) K-FT

KL/R= 60.20 FOR LONGITUDINAL MOM. (AML)
KL/R= 28.67 FOR TRANSVERSE MOM. (AMT)

[redacted]

1SVERDRUP & PARCEL AND ASSOCIATES, INC. 09:19 APR 17,'80 PAGE 6
0JOB NO. 6784 - FCDMC - RWCD FLOODWAY - ELLIOT RD. BRIDGE - PROGRAM P7361
0PROBLEM - COLUMN BAR CUT-OFF POINT BY JFF CHKD WEG

MEMBER 6 JOINT 7

DEPTH= 36.000 WIDTH= 36.000 FPC= 3.000 FY= 40.000

USE- 8 NO.10 AST= 10.16 SQ.IN. PCT.AS= 1.00 COVER= 2.50 IN.

PHIC= .35 PHIB= .45
BY SERVICE LOAD DESIGN OF COLUMNS

WARNING - PERCENT STEEL = .998 IS LESS THAN 1.0

LOAD	APPLIED LOADS			COMPUTED STRENGTH			
CASE	AP	AMT	AML	UP	UMT	UML	UP/AP
1	105.4	31.6	292.3	106.5	32.0	296.1	1.013

THE CRITICAL LOAD CASE IS NUMBER 1

AMT=MOMENT ABOUT THE LONGITUDINAL ROADWAY AXIS - MOM.(TRANS) K-FT
AML=MOMENT ABOUT THE TRANSVERSE ROADWAY AXIS - MOM.(LONG) K-FT

KL/R= 60.20 FOR LONGITUDINAL MOM. (AML)
KL/R= 28.67 FOR TRANSVERSE MOM. (AMT)

[redacted]

1SVERDRUP & PARCEL AND ASSOCIATES, INC. 09:19 APR 17,'80 PAGE 7
0JOB NO. 6784 - FCDMC - RWCD FLOODWAY - ELLIOT RD. BRIDGE - PROGRAM P7361
0PROBLEM - COLUMN BAR CUT-OFF POINT BY JFF CHKD WEG

MEMBER 6 JOINT 7

DEPTH= 36.000 WIDTH= 36.000 FPC= 3.000 FY= 40.000

USE- 8 NO.10 AST= 10.16 SQ.IN. PCT.AS= 1.00 COVER= 2.50 IN.

PHIC= .35 PHIB= .45
BY SERVICE LOAD DESIGN OF COLUMNS

WARNING - PERCENT STEEL = .998 IS LESS THAN 1.0

LOAD	APPLIED LOADS			COMPUTED STRENGTH			
CASE	AP	AMT	AML	UP	UMT	UML	UP/AP
1	105.4	31.6	276.5	115.1	34.5	301.8	1.092

THE CRITICAL LOAD CASE IS NUMBER 1

AMT=MOMENT ABOUT THE LONGITUDINAL ROADWAY AXIS - MOM.(TRANS) K-FT
AML=MOMENT ABOUT THE TRANSVERSE ROADWAY AXIS - MOM.(LONG) K-FT

KL/R= 60.20 FOR LONGITUDINAL MOM. (AML)
KL/R= 28.67 FOR TRANSVERSE MOM. (AMT)

[redacted]

1SVERDRUP & PARCEL AND ASSOCIATES, INC. 09:19 APR 17,'80 PAGE 8
0JOB NO. 6784 - FCDMC - RWCD FLOODWAY - ELLIOT RD. BRIDGE - PROGRAM P7361
0PROBLEM - COLUMN BAR CUT-OFF POINT BY JFF CHKD WEG

MEMBER 6 JOINT 7

DEPTH= 36.000 WIDTH= 36.000 FPC= 3.000 FY= 40.000

USE- 8 NO.10 AST= 10.16 SQ.IN. PCT.AS= 1.00 COVER= 2.50 IN.

PHIC= .35 PHIB= .45
BY SERVICE LOAD DESIGN OF COLUMNS

WARNING - PERCENT STEEL = .998 IS LESS THAN 1.0

LOAD	APPLIED LOADS			COMPUTED STRENGTH			
CASE	AP	AMT	AML	UP	UMT	UML	UP/AP
1	105.4	31.6	259.5	125.3	37.6	308.5	1.189

THE CRITICAL LOAD CASE IS NUMBER 1

AMT=MOMENT ABOUT THE LONGITUDINAL ROADWAY AXIS - MOM.(TRANS) K-FT
AML=MOMENT ABOUT THE TRANSVERSE ROADWAY AXIS - MOM.(LONG) K-FT

KL/R= 60.20 FOR LONGITUDINAL MOM. (AML)
KL/R= 28.67 FOR TRANSVERSE MOM. (AMT)

[redacted]

1END OF JOB

!BYE

CPU = .0625 CON= 00:08:00 INT = 5 CHG = 533

HONEYWELL CP-V AT YOUR SERVICE - SNP019
15:19 APR 17,'80 USER# 3B LINE# 12
PROCESSING NOW AVAILABLE
LOGON PLEASE:

SVERDRUP & PARCEL

JOB 6784 FCDMC-RWCD Floodway

COMPUTATIONS FOR Elliot Rd. Bridge
Intermed. Piers (cont'd.)

SHEET NO. 169 OF

DATE 4-17-80

BY JFF CHKD WEG

Column Reinf.

The P7361 computer program for bar cut-offs indicates that 1% reinf. is adequate 4' above centerline of pile cap. Extend bars embedment length beyond that point:

$(3'-1'') + (4'-0'') - (1'-6'') = 5'-7''$, say $6'-0''$

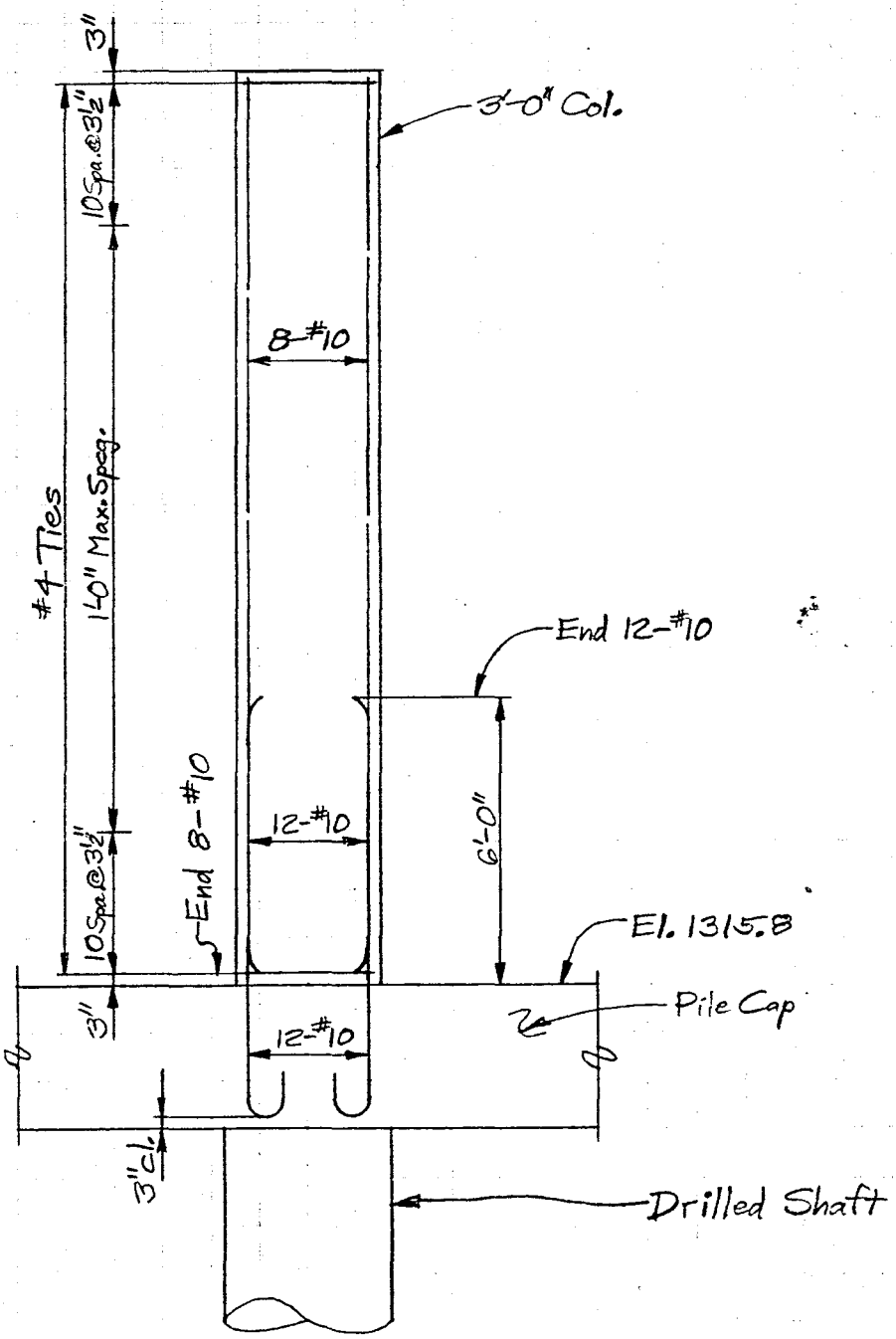

SVERDRUP & PARCEL

JOB 6784 FCDMC-RWCD Floodway

COMPUTATIONS FOR Elliot Rd. Bridge

Intermed. Piers (cont'd.)

Column Reinf. (cont'd.)

SHEET NO. 170 OF

DATE 4-17-80

BY JFF CHKD WEG

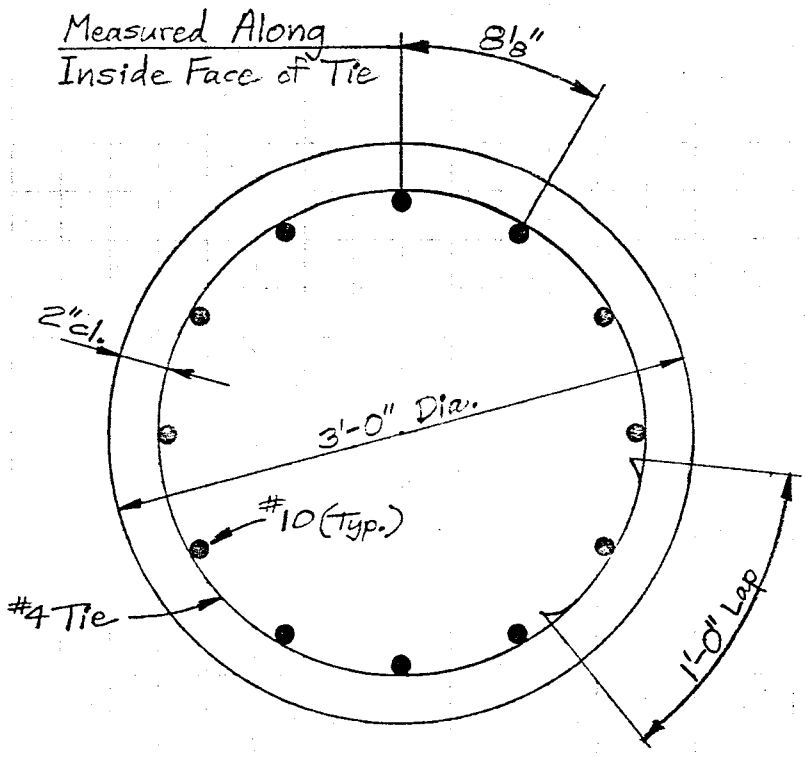

$\frac{\pi(36-4-1)}{12} = 8.1158'' = 8\frac{1}{8}''$ c. to c. spcg. vert. bars measured along inside face of tie.

SVERDRUP & PARCEL

JOB 6784 FCDMC-RWCD Floodway
COMPUTATIONS FOR Baseline Rd. & Elliot Rd. Bridges

SHEET NO. 171 OF
DATE 4-12-80
BY JFF CHKD WEG

Transv. Slab Reinf. in Cap Beams

From S&P computer program P7310 output.
Substitute equiv. no. of #10's for Elliot Rd. only.
Use double #5 stirrups & double req'd. spcg.
Stirrups to be placed parallel to ℄ rdwy.

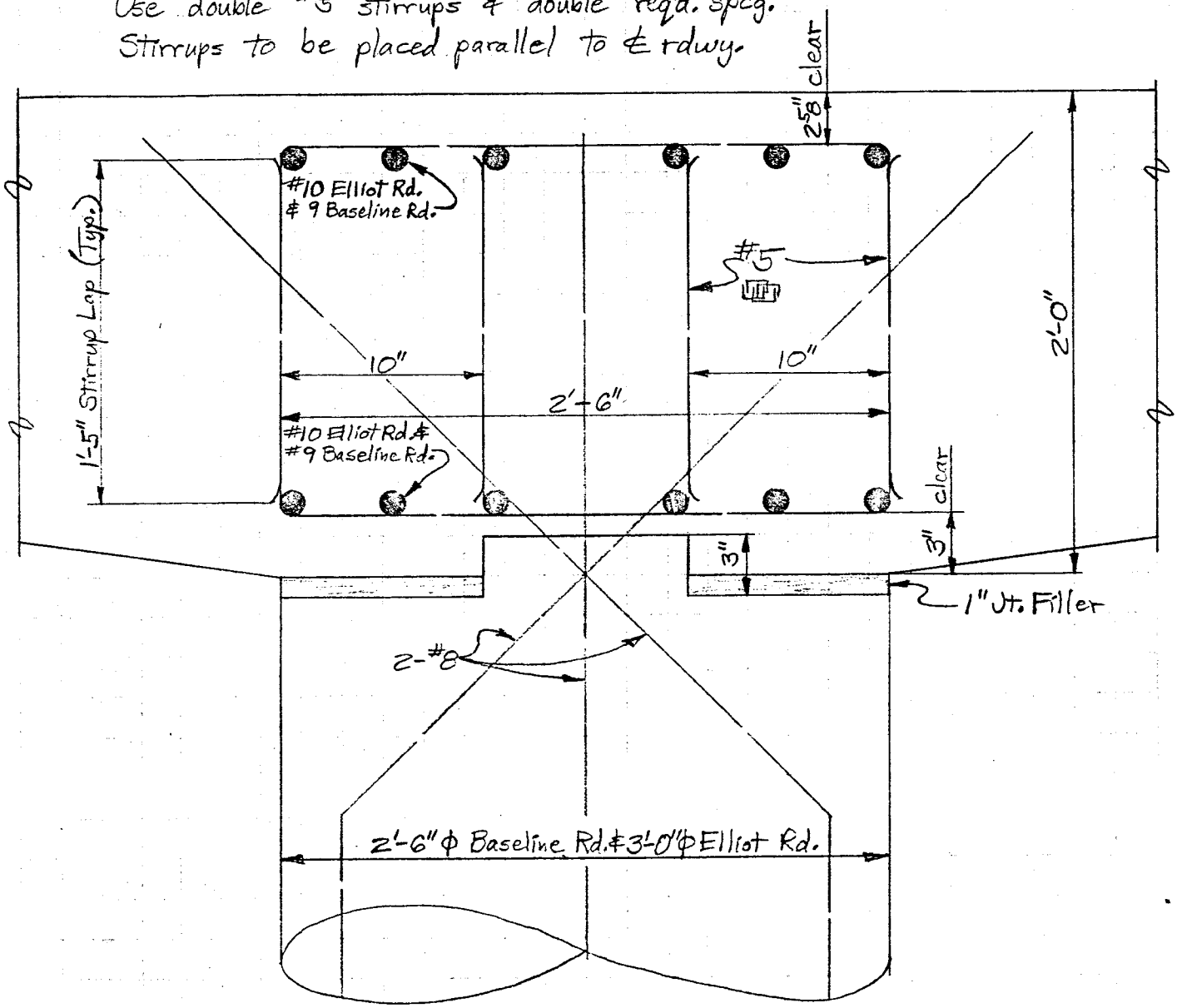

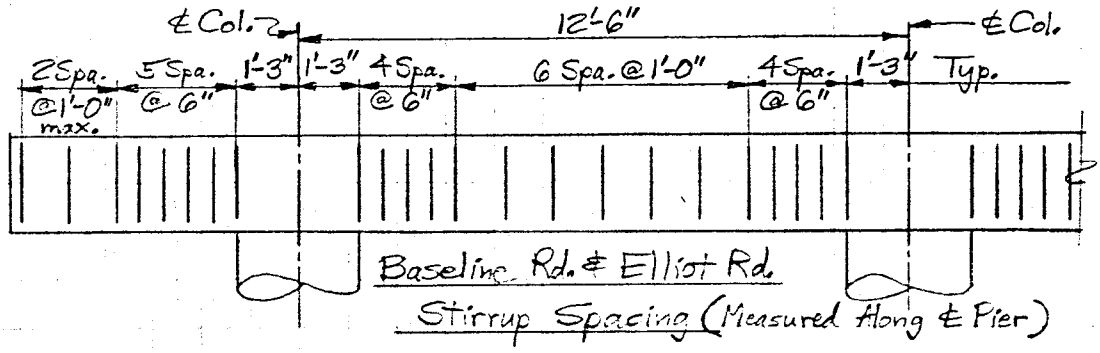

Baseline Rd. & Elliot Rd.
Stirrup Spacing (Measured Along ℄ Pier)

SVERDRUP & PARCEL

JOB 6784 FCDMC-RWCD Floodway

COMPUTATIONS FOR Baseline Rd. & Elliot Rd. Bridges

SHEET NO. 172 OF

DATE 4-17-80

BY JFF CHKD WEG

Pile Cap Reinf. Piers 2, 3, 5, & 6

Use min. reinf. $p = 0.002$ each face.

$A_s = 0.002 \times 12'' \times 16'' = 0.384 \, \square''/1$ = #4 @ 6¼" max.

SCS requirement

or #5 @ 9 1/16" max.

or #6 @ 13¾" max.

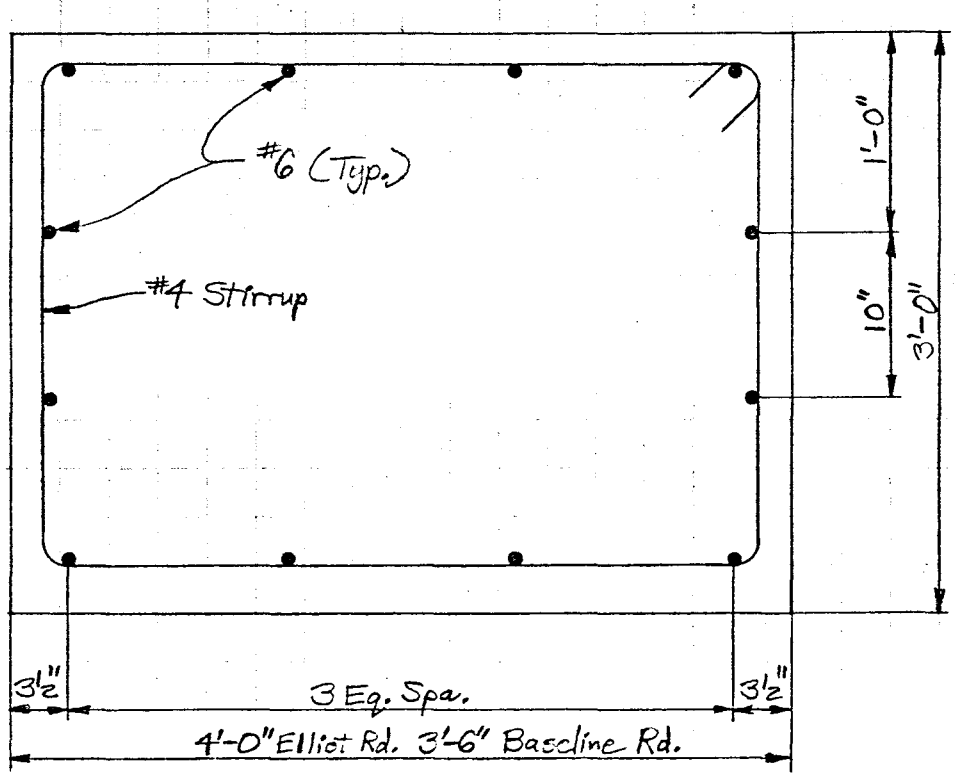

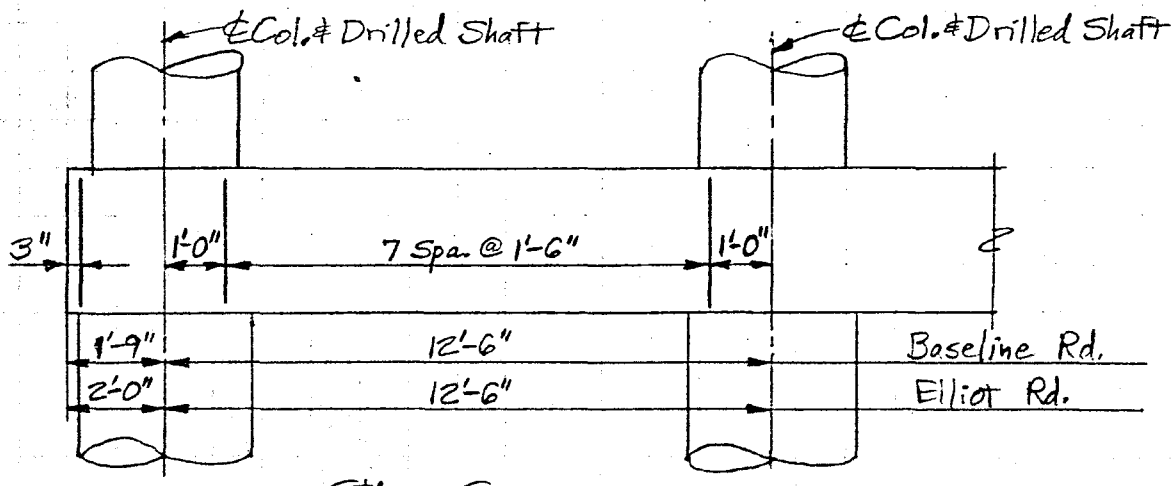

Stirrup Spacing

SVERDRUP & PARCEL

JOB 6784 FCDMC - RWCD Floodway

SHEET NO. 173 OF

DATE 4-18-80

COMPUTATIONS FOR Baseline Rd. & Elliot Rd. Bridges

BY JFF CHKD WEG

Anchor Pier Pile Cap

Use 2'-0" Drilled Shafts

Design pile cap to be the same for both bridges.

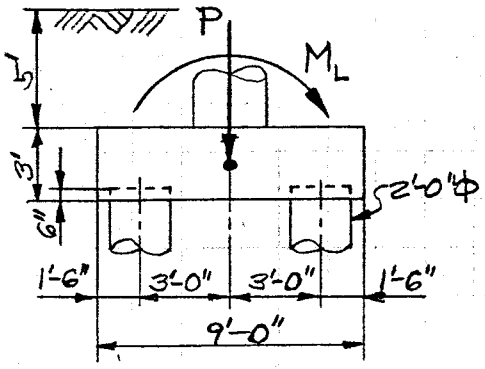

Cap DL = 3' × 9' × 12.5' × .15 kcf = 50.6 k

Soil DL = 5' × 9' × 12.5' × .10 kcf = 56.3

106.9 k

$I_L = 2 \times 3^2 = 18$ pile·ft²

$S_L = \frac{18}{3} = 6$ pile·ft

		P7310 Ldg. Case	AASHTO Group	%NUS	Col. P (kips)	Fig.+ Soil DL (kips)	Total P (kips)	M_L (ft·kips)	Drilled Shaft Loads (kips) P/No. Shafts	±M_L/S_L	Max.	Min.
Baseline Rd.	Mem. 7 Jt. 8	2	I	100	186.5	106.9	293.4	0	146.7	0	146.7	146.7
		5	III	125	89.7	85.5	175.2	41.5	87.6	6.9	94.5	80.7
		6	III	125	151.9	85.5	237.4	41.5	118.7	6.9	125.6	111.8
		15	VII	133	89.3	80.2	169.5	226.5	84.8	37.8	122.6	47.0
	Mem. 8 Jt. 9	2	I	100	217.4	106.9	324.3	0	162.2	0	162.2	162.2
		5	III	125	93.6	85.5	179.1	41.5	89.6	6.9	96.5	82.7
		6	III	125	174.9	85.5	260.4	41.5	130.2	6.9	137.1	123.3
		15	VII	133	91.4	80.2	171.6	226.5	85.8	37.8	123.6	48.0
Elliot Rd.	Mem. 5 Jt. 6	2	I	100	215.4	106.9	322.3	0	161.2	0	161.2	161.2
		5	III	125	110.5	85.5	196.0	70.2	98.0	11.7	109.7	86.3
		6	III	125	173.9	85.5	259.4	70.2	129.7	11.7	141.4	118.0
		15	VII	133	106.3	80.2	186.5	318.6	93.3	53.1	146.4	40.2
	Mem. 6 Jt. 7	2	I	100	232.0	106.9	338.9	0	169.5	0	169.5	169.5
		5	III	125	110.4	85.5	195.9	70.2	98.0	11.7	109.7	86.3
		6	III	125	186.2	85.5	271.7	70.2	135.9	11.7	147.6	124.2
		15	VII	133	105.4	80.2	185.6	318.6	92.8	53.1	145.9	39.7

2'-0" Drilled Shafts : Baseline Rd. – Top El. 1319.8 } 11.8'
(Reinf. same as abuts.) Tip El. 1308.0
(170k Capacity) Elliot Rd. – Top El. 1313.3 } 25.3'
Tip El. 1288.0

SVERDRUP & PARCEL

JOB 5784 FCDMC - RWCD Floodway

COMPUTATIONS FOR Baseline Rd. & Elliot Rd. Bridges

SHEET NO. 174 OF

DATE 4-18-80

BY JFF CHKD WEG

Anchor Pier Pile Cap (cont'd.)

Steel Reinf. —

Parallel to ℄ Pier

Temp. & Shrinkage reinf., use same as other piers, $A_s = 0.384^{\square''}/'$
$= \#6 @ 13\frac{3}{4}''$ max.
Top & Bottom

Normal to ℄ Pier

Use max. drilled shaft load minus soil & ftg. DL $= 170 - \frac{106.9}{2} = 117^k$

Use Baseline Rd. col. $\phi = 2'\text{-}6''$, equiv. square col. $= 2.22' \times 2.22'$

Moment @ Face of Equiv. Sq. Col. $= 117^k \times \left(3' - \frac{2.22'}{2}\right) = 221'^k$

$d = 36'' - 6'' - 3'' = 27'' = 2.25'$

Eff. Beam Width $b = 2.22' + 2 \times 2.25' = 6.72' = 80.6''$

Try #6 @ 6", $A_s = 0.88^{\square''}/'$

$p = \frac{0.88^{\square''}}{12'' \times 27''} = 0.00272 \qquad np = 9 \times .00272 = 0.0244$

$k = 0.198 \qquad j = 0.934$

$f_s = \frac{221 \times 12''^k/'}{6.72' \times 0.88^{\square''}/' \times 0.934 \times 27''} = 17.8^{ksi} < 20, \underline{OK}$

$f_c = \frac{17{,}800}{9} \times \frac{.198}{.802} = 488\,psi < 1{,}200, \underline{OK}$

Bottom Bars: Use 14-#6 @ 6" spcg. @ Each Col.
Increase spcg. to 1'-0" between cols.

Top Bars: Use 9-#6 @ 1'-0" spcg. @ Each Col.
Increase spcg. to 1'-6" between cols.

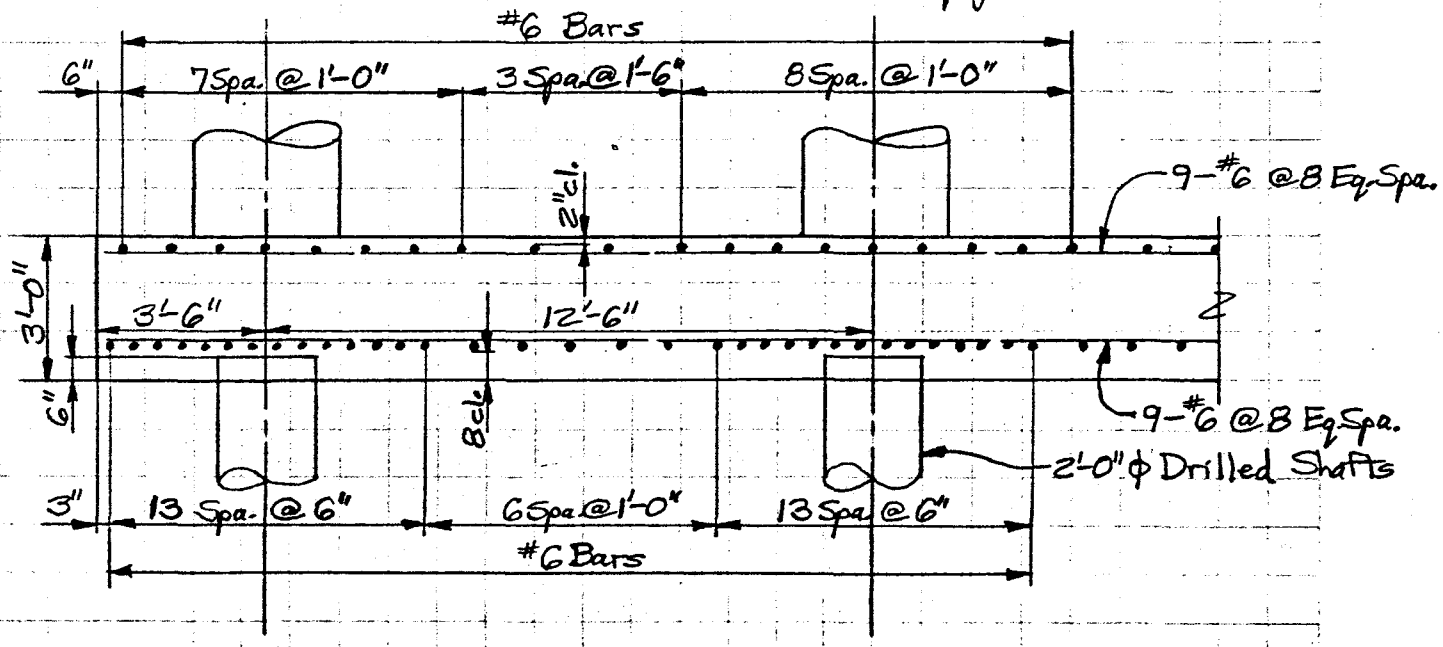

Anchor Pier Pile Cap (cont'd.)

Shear:

Around Col. -

Baseline Rd. - Max. Col. Ld. = 217.4^k (P7310 Group I Ldg. Case 2, Mem. 8 Jt. 9)

$d = 27''$

Circumference of circle @ $\frac{d}{2}$ from face of col. $= \pi(30'' + 27'') = 179''$

$v = 217{,}400 / 179 \times 27 = 45\ psi < 52$, OK

Elliot Rd. - Max. Col. Ld. = 232.0^k (P7310 Group I Ldg. Case 2, Mem. 6 Jt. 7)

$d = 27''$

Circumference of circle @ $\frac{d}{2}$ from face of col. $= \pi(36'' + 27'') = 198''$

$v = 232{,}000 / 198 \times 27 = 43\ psi < 52$, OK

Around Drilled Shaft -

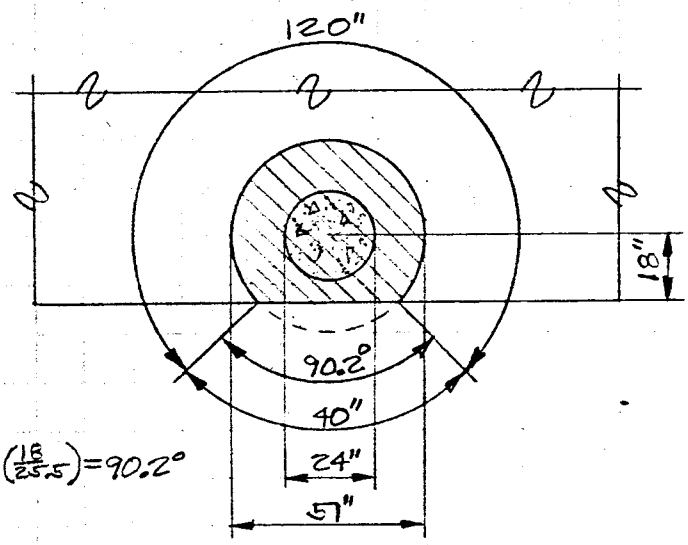

$2\,\text{Arccos}\left(\frac{18}{25.5}\right) = 90.2°$

$d = 27''$

dia. of circle @ $\frac{d}{2} = 24'' + 27'' = 57''$

Net Circumference $\approx \pi \times 57 - 40 = 120''$

Net Area $\approx 12.9^{\square'}$

Area Shaft $= \pi \times 12^2 / 144 = 3.14^{\square'}$

Max. Shaft Load $= 169.5^k$

Soil DL $= (12.9^{\square'} - 3.14^{\square'}) \times 5' \times .10^{kcf} = -4.9$

Cap DL $= 12.9^{\square'} \times 3' \times .15^{kcf} = -5.8$

159^k

$v = 159{,}000 / 120 \times 27 = 49\ psi < 52$, OK

Bar Development -

Req'd. Embedment For Anchorage of #6 = 13"

Length of bars beyond critical section for bending $= 52'' - 13'' = 39'' > 13$, OK

SVERDRUP & PARCEL

JOB 6784 FCDMC – RWCD Floodway

COMPUTATIONS FOR Baseline Rd. & Elliot Rd. Bridges

SHEET NO. 176 OF

DATE 4-19-80

BY JFF CHKD WEG

3'-0" & 3'-6" Drilled Shafts

Re-run column design computer program P7361 for the axial loads and transverse moments used for the column designs, applying the loads & moments to the drilled shaft cross-section with 0.75% minimum reinforcement. The anchor piers & abutments will resist the longitudinal forces.

Computer program on following pages indicates that min. reinf. is more than adequate. Use 10–#8 in 3'-0" drilled shafts and 12–#9 in 3'-6" drilled shafts.

Baseline Rd.

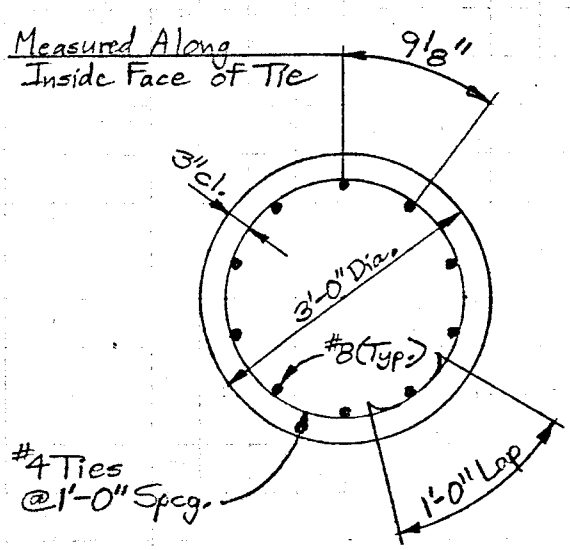

$\frac{\pi(36-6-1)}{10} = 9.1106" = 9\frac{1}{8}"$

#8 bars embedded 1'-7" into pile cap.

Drilled shaft tip El. 1308.0

Capacity $330^k > 217$, OK

Elliot Rd.

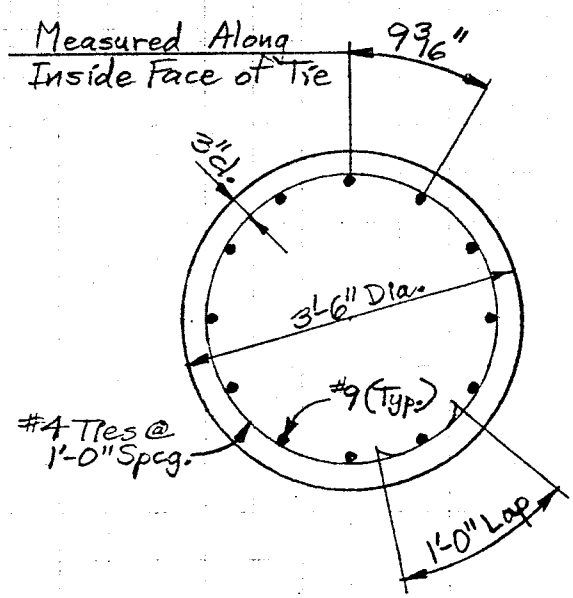

$\frac{\pi(42-6-1)}{12} = 9.1630" \doteq 9\frac{3}{16}"$

#9 bars embedded 2'-0" into pile cap.

Drilled shaft tip El. 1300.0

Capacity $264^k > 232$, OK

Sht. No. 177

DESIGN OF ROUND R.C. COMPRESSION MEMBERS

[redacted]

TIED REINFORCEMENT ASSUMED FOR ALL MEMBERS

RECTANGULAR REINFORCEMENT PATTERN IS GIVEN BY NUMBER OF BARS PER ROW
OTHERWISE INDICATES A CIRCULAR REINFORCEMENT PATTERN.

TOTAL DEPTH INCREMENT	=	.00 IN	TOTAL WIDTH INCREMENT	=	.00 I
DEPTH INCREMENT	=	.00 IN	WIDTH INCREMENT	=	.00 I
MIN.CLEAR SPACING	=	3.53 IN	BARS CONSIDERED	8	9
MIN. PERCENT STEEL	=	.75	MAX. PERCENT STEEL	=	8.00

DEPTH IS IN THE TRANSVERSE DIRECTION

ML=MOMENT ABOUT AN AXIS PARALLEL WITH THE DEPTH
MT=MOMENT ABOUT AN AXIS PARALLEL WITH THE WIDTH

MEMBER 7 JOINT 8 DEPTH 36.00 IN WIDTH 36.00 IN
DL THRUST = 119.04 K COL. LTH.= 1.00 FT LONGIT. K = 1.00
TRANSV. K = 1.0

TH (K)	MT (K-FT)	ML (K-FT)	TH (K)	MT (K-FT)	ML (K-FT)
115.560	11.700	.000	186.460	11.700	.000
93.570	14.620	.000	96.900	13.540	.000
89.690	32.660	.000	151.930	32.660	.000
84.200	65.660	.000	153.670	65.660	.000
76.180	80.040	.000	90.540	80.040	.000
72.720	65.710	.000	139.660	65.710	.000
77.190	102.770	.000	101.370	101.760	.000
89.280	.510	.000			

MEMBER 8 JOINT 9 DEPTH 36.00 IN WIDTH 36.00 IN
DL THRUST = 121.91 K COL. LTH.= 1.00 FT LONGIT. K = 1.00
TRANSV. K = 1.0

TH (K)	MT (K-FT)	ML (K-FT)	TH (K)	MT (K-FT)	ML (K-FT)
118.270	10.710	.000	217.370	10.710	.000
98.150	14.730	.000	96.900	15.150	.000
93.580	33.280	.000	174.940	33.280	.000
91.540	63.180	.000	179.550	63.180	.000
83.760	61.910	.000	92.690	61.910	.000
80.810	78.480	.000	161.240	78.480	.000
95.970	108.280	.000	86.900	108.670	.000
91.430	.200	.000			

MEMBER 5 JOINT 6 DEPTH 42.00 IN WIDTH 42.00 IN
DL THRUST = 141.67 K COL. LTH.= 1.00 FT LONGIT. K = 1.00
TRANSV. K = 1.0

TH (K)	MT (K-FT)	ML (K-FT)	TH (K)	MT (K-FT)	ML (K-FT)
140.050	8.570	.000	215.370	8.570	.000
111.330	18.680	.000	115.350	15.060	.000
110.480	19.940	.000	173.860	19.940	.000
108.150	29.660	.000	174.420	29.660	.000
95.930	49.290	.000	104.890	49.290	.000
95.170	35.590	.000	157.120	35.590	.000
100.690	48.340	.000	111.820	44.930	.000
106.250	1.700	.000			

MEMBER 6 JOINT 7 DEPTH 42.00 IN WIDTH 42.00 IN
DL THRUST = 140.52 K COL. LTH.= 1.00 FT LONGIT. K = 1.00
TRANSV. K = 1.0

TH (K)	MT (K-FT)	ML (K-FT)	TH (K)	MT (K-FT)	ML (K-FT)
138.720	8.670	.000	232.010	8.670	.000
113.140	17.480	.000	111.680	18.380	.000
110.410	20.840	.000	186.180	20.840	.000
109.120	17.840	.000	189.010	17.840	.000
98.060	33.450	.000	104.060	33.450	.000
96.920	28.340	.000	169.270	28.340	.000
107.420	49.160	.000	103.360	50.000	.000
105.390	.420	.000			

1SVERDRUP & PARCEL AND ASSOCIATES, INC.
0JOB NO. 6784 - FCDMC - RWCD FLOODWAY -
0PROBLEM - DRILLED SHAFT DESIGN

MEMBER 7 JOINT 8

DEPTH= 36.000 WIDTH= 36.000 FPC= 3.000 FY= 40.000

USE- 10 NO. 8 AST= 7.90 SQ.IN. PCT.AS= .78 COVER= 3.50 IN.

PHIC= .35 PHIB= .45
BY SERVICE LOAD DESIGN OF COLUMNS

[redacted]

LOAD CASE	APPLIED LOADS AP	AMT	AML	COMPUTED STRENGTH UP	UMT	UML	UP/AP
1	115.6	34.7	34.7	665.5	200.0	200.0	5.760
2	186.5	55.9	55.9	665.7	199.9	199.9	3.571
3	93.6	28.1	28.1	665.3	200.0	200.0	7.113
4	96.9	29.1	29.1	665.3	200.0	200.0	6.868
5	89.7	32.7	26.9	631.6	230.3	189.7	7.043
6	151.9	45.6	45.6	665.6	199.9	199.9	4.382
7	84.2	65.7	25.3	417.3	326.4	125.6	4.963
8	153.7	65.7	46.1	597.6	255.4	179.3	3.889
9	76.2	80.0	22.9	306.7	320.6	91.5	4.015
10	90.5	80.0	27.2	370.3	327.5	111.1	4.091
11	72.7	65.7	21.8	361.7	327.0	108.6	4.975
12	139.7	65.7	41.9	574.0	270.1	172.3	4.110
13	77.2	102.8	23.2	238.4	317.6	71.6	3.090
14	101.4	101.8	30.4	321.5	322.8	96.5	3.172
15	89.3	26.8	26.8	665.3	200.0	200.0	7.454

THE CRITICAL LOAD CASE IS NUMBER 13

AMT=MOMENT ABOUT THE LONGITUDINAL ROADWAY AXIS - MOM.(TRANS) K-FT
AML=MOMENT ABOUT THE TRANSVERSE ROADWAY AXIS - MOM.(LONG) K-FT

KL/R= 1.33 FOR LONGITUDINAL MOM. (AML)
KL/R= 1.33 FOR TRANSVERSE MOM. (AMT)

1SVERDRUP & PARCEL AND ASSOCIATES, INC. 11:33 APR 19,'80 PAGE 4
0JOB NO. 6784 - FCDMC - RWCD FLOODWAY - PROGRAM P7361
0PROBLEM - DRILLED SHAFT DESIGN BY JFF CHKD WEG

MEMBER 8 JOINT 9

DEPTH= 36.000 WIDTH= 36.000 FPC= 3.000 FY= 40.000

USE- 10 NO. 8 AST= 7.90 SQ.IN. PCT.AS= .78 COVER= 3.50 IN.

PHIC= .35 PHIB= .45
BY SERVICE LOAD DESIGN OF COLUMNS

[redacted]

LOAD CASE	APPLIED LOADS AP	AMT	AML	COMPUTED STRENGTH UP	UMT	UML	UP/AP
1	118.3	35.5	35.5	665.5	200.0	200.0	5.628
2	217.4	65.2	65.2	665.8	199.9	199.9	3.063
3	98.1	29.4	29.4	665.3	200.0	200.0	6.781
4	96.9	29.1	29.1	665.3	200.0	200.0	6.868
5	93.6	33.3	28.1	636.1	226.5	191.1	6.799
6	174.9	52.5	52.5	665.7	199.9	199.9	3.806
7	91.5	63.2	27.5	459.5	318.3	138.4	5.026
8	179.6	63.2	53.9	638.4	224.7	191.6	3.556
9	83.8	61.9	25.1	436.4	323.5	131.3	5.216
10	92.7	61.9	27.8	472.0	315.4	141.6	5.093
11	80.8	78.5	24.2	333.9	324.3	100.2	4.132
12	161.2	78.5	48.4	565.2	275.2	169.6	3.505
13	96.0	108.3	28.8	285.5	322.6	85.8	2.977
14	86.9	108.7	26.1	256.8	321.2	77.1	2.956
15	91.4	27.4	27.4	665.3	200.0	200.0	7.279

THE CRITICAL LOAD CASE IS NUMBER 14

AMT=MOMENT ABOUT THE LONGITUDINAL ROADWAY AXIS - MOM.(TRANS) K-FT
AML=MOMENT ABOUT THE TRANSVERSE ROADWAY AXIS - MOM.(LONG) K-FT

KL/R= 1.33 FOR LONGITUDINAL MOM. (AML)
KL/R= 1.33 FOR TRANSVERSE MOM. (AMT)

1SVERDRUP & PARCEL AND ASSOCIATES, INC.
0JOB NO. 6784 - FCDMC - RWCD FLOODWAY -
0PROBLEM - DRILLED SHAFT DESIGN

PROGRAM P7361
BY JFF CHKD WEG

MEMBER 5 JOINT 6

DEPTH= 42.000 WIDTH= 42.000 FPC= 3.000 FY= 40.000

USE- 13 NO. 8 AST= 10.27 SQ.IN. PCT.AS= .74 COVER= 3.50 IN.

PHIC= .35 PHIB= .45
BY SERVICE LOAD DESIGN OF COLUMNS

[redacted]

LOAD CASE	APPLIED LOADS AP	AMT	AML	COMPUTED STRENGTH UP	UMT	UML	UP/AP
1	140.1	49.0	49.0	904.3	317.1	317.1	6.459
2	215.4	75.4	75.4	904.6	317.0	317.0	4.201
3	111.3	39.0	39.0	904.1	317.2	317.2	8.125
4	115.4	40.4	40.4	904.1	317.2	317.2	7.842
5	110.5	38.7	38.7	904.1	317.2	317.2	8.187
6	173.9	60.9	60.9	904.5	317.1	317.1	5.204
7	108.1	37.9	37.9	904.0	317.2	317.2	8.363
8	174.4	61.0	61.0	904.5	317.1	317.1	5.187
9	95.9	49.3	33.6	803.3	413.1	281.4	8.376
10	104.9	49.3	36.7	830.8	390.9	291.1	7.923
11	95.2	35.6	33.3	889.6	333.4	312.1	9.352
12	157.1	55.0	55.0	904.4	317.1	317.1	5.758
13	100.7	48.3	35.2	824.4	396.3	288.9	8.190
14	111.8	44.9	39.1	873.0	351.4	306.1	7.810
15	106.3	37.2	37.2	904.0	317.2	317.2	8.513

THE CRITICAL LOAD CASE IS NUMBER 2

AMT=MOMENT ABOUT THE LONGITUDINAL ROADWAY AXIS - MOM.(TRANS) K-FT
AML=MOMENT ABOUT THE TRANSVERSE ROADWAY AXIS - MOM.(LONG) K-FT

KL/R= 1.14 FOR LONGITUDINAL MOM. (AML)
KL/R= 1.14 FOR TRANSVERSE MOM. (AMT)

MEMBER 6 JOINT 7

DEPTH= 42.000 WIDTH= 42.000 FPC= 3.000 FY= 40.000

USE- 13 NO. 8 AST= 10.27 SQ.IN. PCT.AS= .74 COVER= 3.50 IN.

PHIC= .35 PHIB= .45
BY SERVICE LOAD DESIGN OF COLUMNS

[redacted]

LOAD CASE	APPLIED LOADS AP	AMT	AML	COMPUTED STRENGTH UP	UMT	UML	UP/AP
1	138.7	48.6	48.6	904.3	317.1	317.1	6.521
2	232.0	81.2	81.2	904.7	317.0	317.0	3.900
3	113.1	39.6	39.6	904.1	317.2	317.2	7.995
4	111.7	39.1	39.1	904.1	317.2	317.2	8.099
5	110.4	38.6	38.6	904.1	317.2	317.2	8.192
6	186.2	65.2	65.2	904.5	317.0	317.0	4.860
7	109.1	38.2	38.2	904.1	317.2	317.2	8.289
8	189.0	66.2	66.2	904.5	317.0	317.0	4.787
9	98.1	34.3	34.3	904.0	317.3	317.3	9.223
10	104.1	36.4	36.4	904.0	317.2	317.2	8.692
11	96.9	33.9	33.9	903.9	317.3	317.3	9.332
12	169.3	59.2	59.2	904.4	317.1	317.1	5.345
13	107.4	49.2	37.6	838.5	384.2	293.8	7.808
14	103.4	50.0	36.2	822.1	398.2	288.1	7.956
15	105.4	36.9	36.9	904.0	317.2	317.2	8.582

THE CRITICAL LOAD CASE IS NUMBER 2

AMT=MOMENT ABOUT THE LONGITUDINAL ROADWAY AXIS - MOM.(TRANS) K-FT
AML=MOMENT ABOUT THE TRANSVERSE ROADWAY AXIS - MOM.(LONG) K-FT

KL/R= 1.14 FOR LONGITUDINAL MOM. (AML)
KL/R= 1.14 FOR TRANSVERSE MOM. (AMT)
1END OF JOB

!BYE

CPU = .0914 CON= 00:12:00 INT = 8 CHG = 796

HONEYWELL CP-V AT YOUR SERVICE - SNP019
11:59 APR 19,'80 USER# E LINE# 8
PROCESSING NOW AVAILABLE
LOGON PLEASE: