DESIGN CALCULATIONS FOR APACHE-HIGLEY ROADS BOX CULVERT

DESIGN CALCULATIONS FOR APACHE-HIGLEY ROADS AND BOX CULVERT

Mathews Kessler & Associates, Inc.
Engineers Architects Planners

A121.804

Property of
Flood Control District of MC Library
Please Return to
2801 W. Durango
Phoenix, AZ 85009

DESIGN CALCULATIONS

FOR

APACHE-HIGLEY ROADS BOX CULVERT

PROJECT NO. FCD 84-40

POSTED
MAY 9 1986

BY:

MATHEWS KESSLER & ASSOCIATES, INC.

3333 N. 44TH STREET

PHOENIX, ARIZONA 85018

(602) 840-0575

SUMMARY OF HYDRAULIC DESIGN

1. THE 8' X 6' R.C.B.C.:

This drainage structure was designed to accomodate the following stringent design constraints.

A. 100 year water surface in the proposed RWCD Floodway.
B. Provide outlet for proposed 72" RCP carrying 300± cfs.

The tailwater from the RWCD Floodway was taken into account in the backwater computations. The box size itself was influenced by the need to service the proposed 72" RCP. The design could have reflected a shallower depth with a subsequent widening of the box width, but this would have rendered the proposed 72" RCP ineffective. Several computations were performed to determine a realistic flow for the 72" RCP. It was determined that the 72" RCP could carry only about 220 cfs if the hydraulic gradeline was limited to the height of the edge of the pavement.

2. THE 10' TRAPEZOIDAL CHANNEL:

Like the 8' X 6' box culvert, the channel was influenced by the need to accomodate a 100 year tailwater in the RWCD Channel. The design flow for this channel is 500 cfs, 300 cfs crossing Apache Boulevard and 200 cfs entering the channel from the south side of Apache Boulevard. The channel was sized to minimize the tailwater for the 8' X 6' R.C.B.C. while providing an adequate bottom width to allow access for maintenance within an existing 30' easement.

The 200 cfs entering the trapezoidal channel from the south side of Apache Boulevard will outlet to the channel via a rip-rap transition apron with a 4.7 to 1 slope. This apron should be traversable by truck for maintenance access.

3. SPILLWAY DESIGN:

At the intersection of Apache Boulevard and Higley Road, design requirements dictated terminating 730 cfs into the channel. This was accomplished by replacing about 342' of the existing curb and sidewalk with ribbon curb and sidewalk and sloping the ground from the gutter down to the channel at a 3% slope. Computations show that a depth of about 0.55± is required to convey the design flow of 730 cfs. None of the 730 cfs will inundate Apache Boulevard.

4. HIGLEY ROAD 72" RCP:

This design size was established by the size of the 72" RCP proposed by the City of Mesa. The City design presently terminates north of Apache Boulevard and this segment would continue from that terminal point across the intersection, to the downstream RWCD wingwall of the box culverts. However, because of present ground level at the downstream end of the culverts we suggest that this section of the 72" RCP crossing the Apache-Higley intersection be bulkheaded until final joining with the Higley Road 72" RCP.

5. APACHE-HIGLEY BOX CULVERT:

At this crossing of the RWCD channel, the Soil Conservation Service provided this firm with the following parameters:

A. Design flow of 1900 cfs.
B. Intersection alignment.
C. 5 - 10' X 7' R.C.B.C.

These parameters were central to the overall site layout. Inlet and outlet structures were designed to minimize expansion and contraction losses while meeting the channel inverts as set in the channel design.

STRUCTURAL CALCULATIONS

APACHE BLVD. + HIGLEY RD. 1

5-14x7 RCB

MB

3-20-86

Chk. GAH 4/17/8

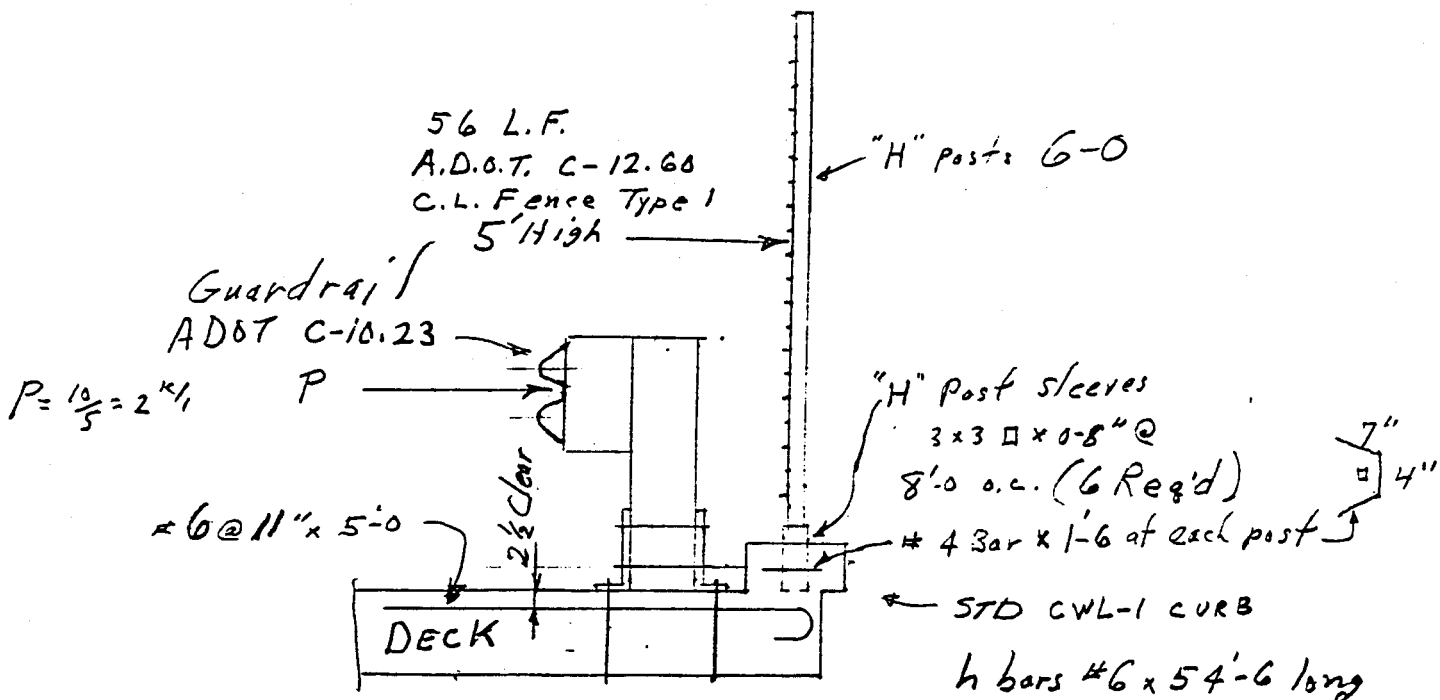

$M = Ph = 2 \times 2.58 = 5.16$ 'K/1

$A_s = \frac{M}{ad} = \frac{5.16}{1.44 \times 7.5} = 0.48\square''$

Use #6 @ 11" = 0.48□"

ELEVATION

DETAIL "A"

6 of

APACHE BLVD. + HIGLEY RD.
5-10x7 RCB

MB 2

H-3-1 + SIDEWALK, CURB + GUTTER
5-10x7 Box

chk GAH 3-20-86
4/17/86

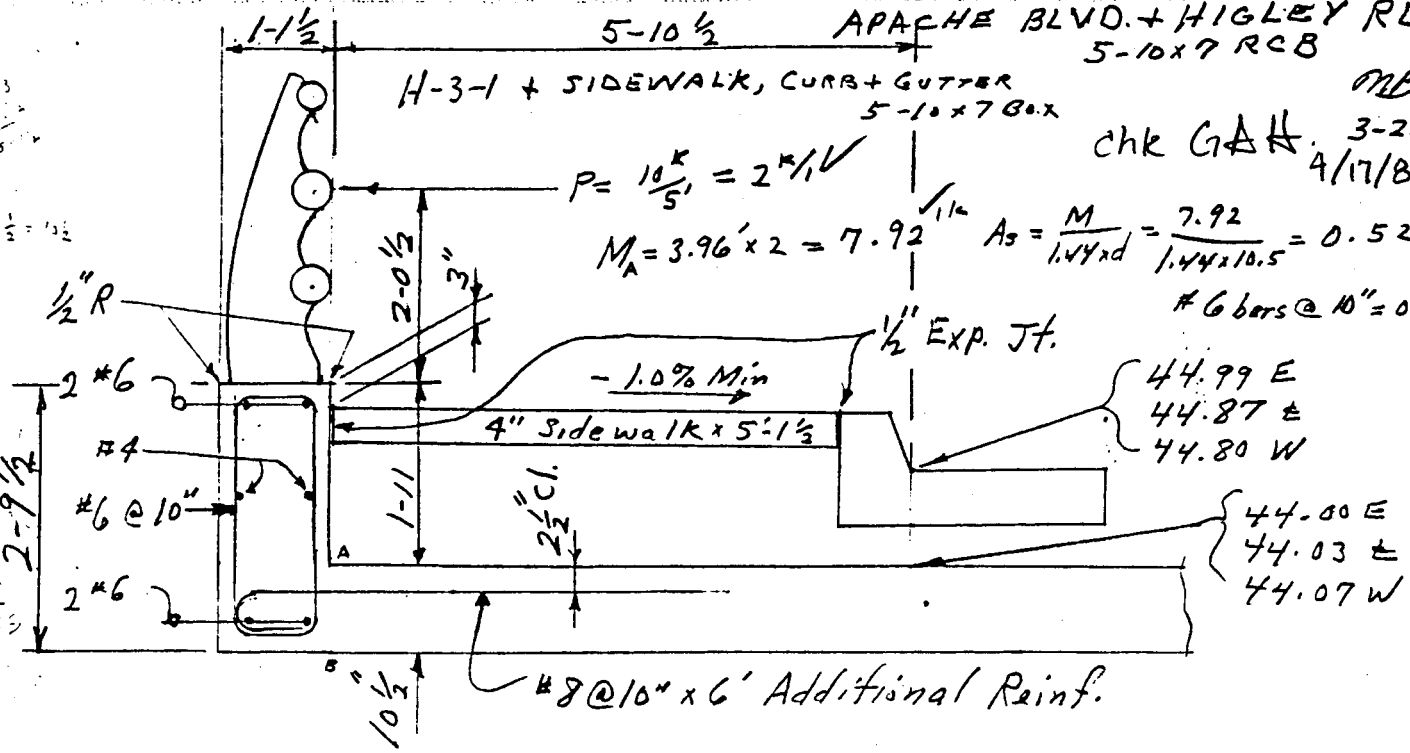

$A_s = \frac{M}{1.44 \times d} = \frac{7.92}{1.44 \times 10.5} = 0.52 \square''$

#6 bars @ 10" = 0.53 □"

$M_B = Ph = 2 \times 4.83 = 9.66 'K$ $A_s = \frac{M}{1.44 \times d} = \frac{9.66}{1.44 \times 7.5} = 0.89 \square''$

#8 bars @ 10" = 0.95 □"

$p = \frac{A_s}{bd} = \frac{0.95}{12 \times 7.5} = .0106$ $n = 9$

$k = .352$ $j = .883$

$f_s = \frac{M \times 12}{A_s j d} = \frac{9.66 \times 12}{0.95 \times .883 \times 7.5} = 18.4$ ksi Allow = 20.0 ok

$f_c = \frac{f_s}{n} \times \frac{k}{1-k} = \frac{18.4}{9} \times \frac{.352}{.648} = 1.11$ ksi Allow = 1.2 ok

Chk GAH 4·17·86

MB 3

APACHE BLVD + HIGLEY RD 3-21-86
STA 107+ x 127'-0
Exist. 2-8 x 5 RCB SK 37° ± Lt
RWCD CANAL

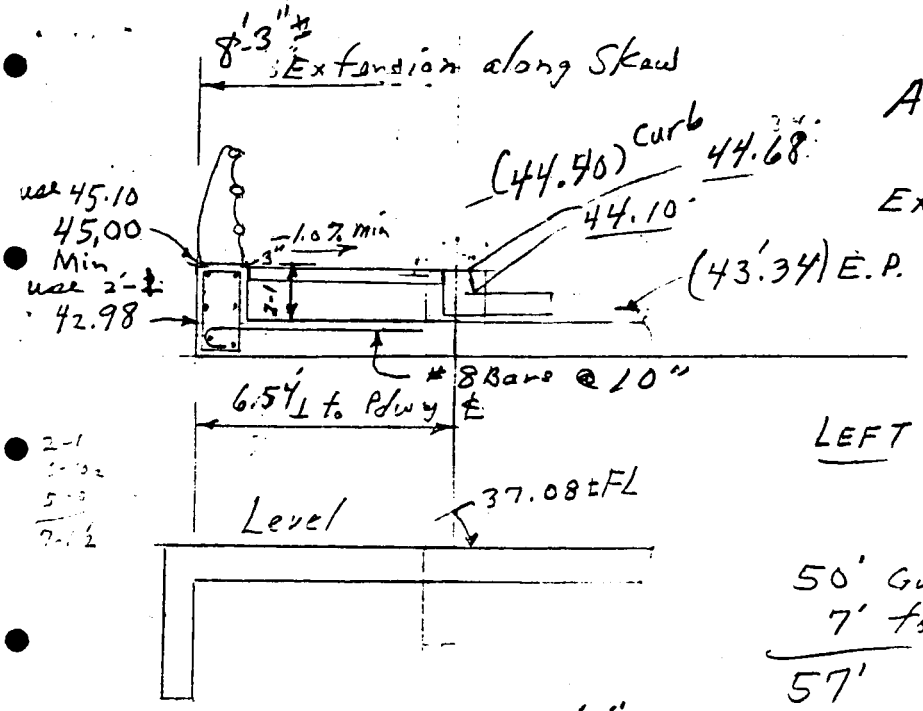

Remove existing curb + wings as necessary for new Constr.

LEFT

50' Gutter to Pdwy ℄
7' to outer Hdwall
57'

5 + .75 = 5.75 = 7'-3"
37°17'30"

57'/cos 37°17'30" = 71.65 ✓ Left

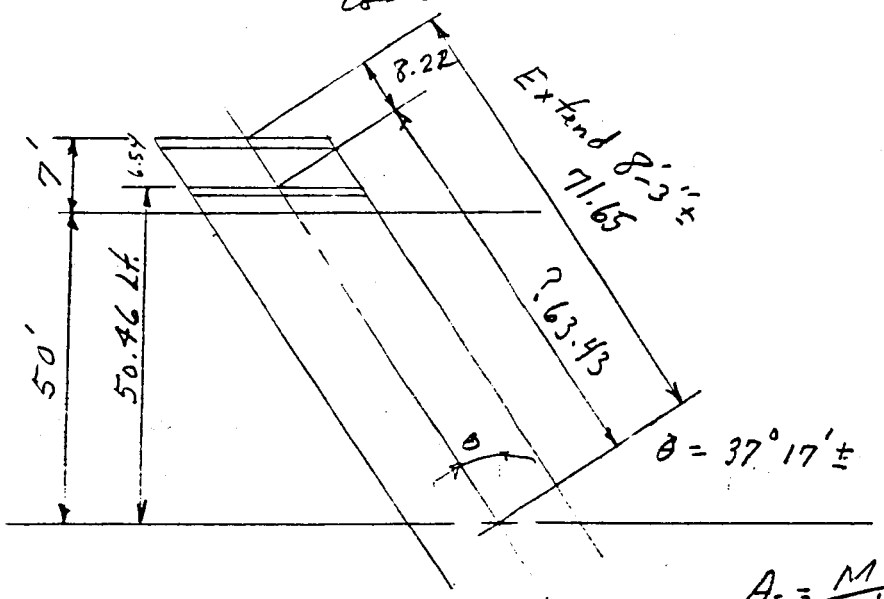

7.75/cos
9-9
4-6
14-3

$A_s = \frac{M}{a \times d}$

$M_B = Ph_o = 2 \times 5 = 10.00$ ✓ $A_s = \frac{10.00}{1.44 \times 7.5} = 0.926$ ✓ □"

Use # 8 bars @ 10" = 0.95 □"

$p = \frac{A_s}{bd} = \frac{0.95}{12 \times 7.5} = .0106$ ✓ $n = 9$

$K = .352$ $j = .883$

$f_s = \frac{M \times 12}{A_s j d} = \frac{9.66 \times 12}{0.95 \times .883 \times 7.5} = 18.4$ ✓ ksi Allow = 20.0 ok

$f_c = \frac{f_s}{n} \times \frac{k}{1-k} = \frac{18.4}{9} \times \frac{.352}{.648} = 1.11$ ✓ ksi Allow = 1.2 ok

Chk ~~GAH~~ 4/17/86

APACHE BLVD + HIGLEY RD.

MB 4
3-21-86

STA 107+
Exist. 2-8x5 RCB sk 37°± Lt.

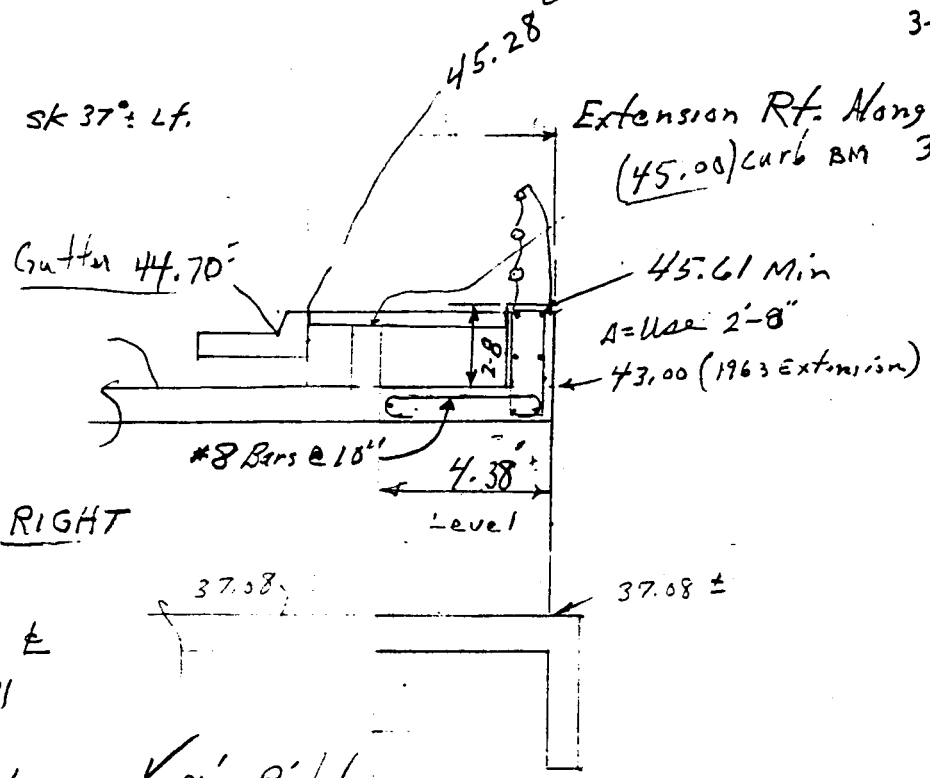

2-8
0-10½
5-0
8-6½

48' Gutter to Rdwy ℄
7' to outer Hdwall
55'

55/cos 37°27' = 69.28' Right

Total = 71.65 Lt
69.28 Rt
140.93

118
+9
127

= −127.00± in place
13.93± Total Extension Lt + Rt.

3.55
4-6

$\gamma d = \frac{7}{8} \times 7.75 = 6.78/12 = 0.56$

2.04
2.66
0.57
Arm 5.27 x 2 k/' = 10.54

$\frac{10.54}{1.44 \times 7.75} = 0.94$ □"

Use #8 bars @ 10" = 0.95

$\frac{0.95}{12 \times 7.75} = .0102$ n = 9

$\epsilon = .346$ $\zeta = .885$

$f_s = \frac{M \times 12}{A_s \zeta d} = \frac{10.54 \times 12}{0.95 \times .885 \times 7.75} = 19.41$ ok

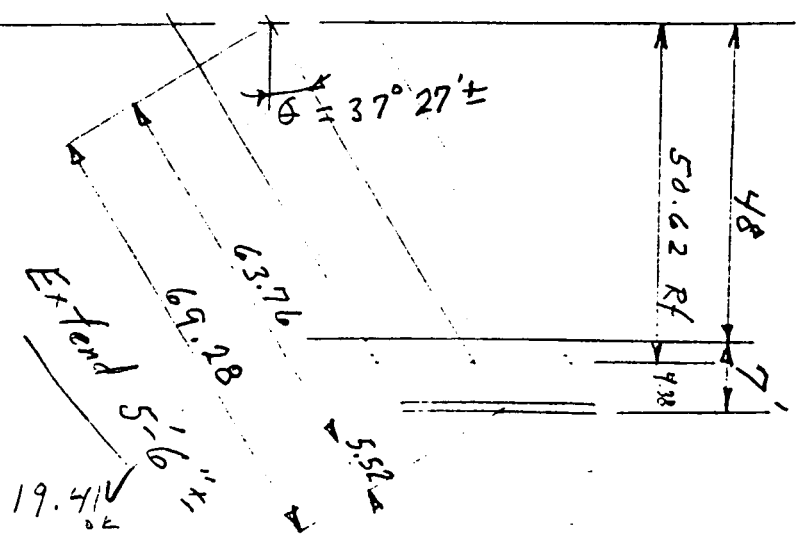

2.41 .346 = 1.14

MKA #4029 CHR GAIT 4/17/86

STD CB-5 5-10x7 BOX CULV. McFCO # 84-40 1

LIGHT POLE, TYPE "R", STD T.S. 4-13

AB 4-8-86

FROM JOHN MUESCH - AMERON 8/19/85

DATA FOR BASE OF POLE

AXIAL = 1770 # MOMENT = 51,572 '#

TORSION = 41,300 '# SHEAR = 2,023 #

BOLT LOAD (SINGLE) = 33,860 #

CONCRETE PAD - 5' x 5' x 1' F'_c = 3000 psi

MOMENT = 51,572 '#, TORSION = 41,300 '#

$[(51,572)^2 + (41,300)^2]^{1/2} = 66,070$ '# ✓

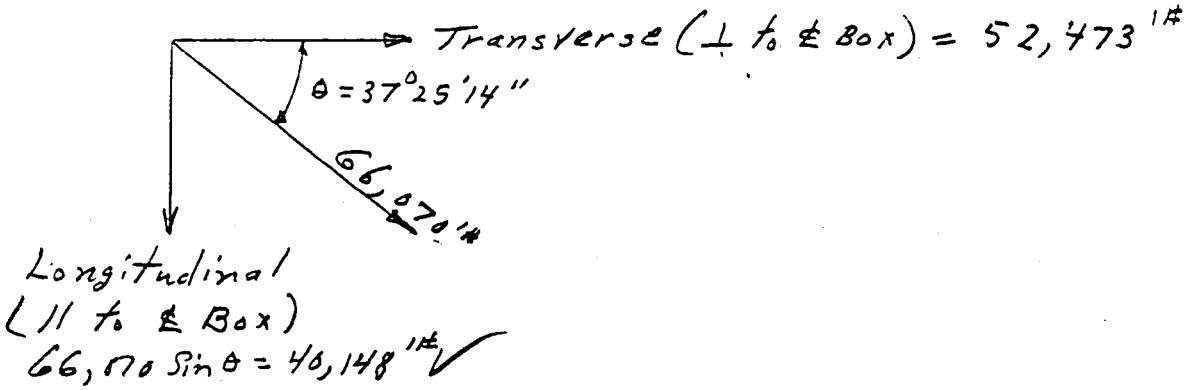

MCFCD JOB # 84-40

Chk GAH 4/17/86

STD T.S. 4-13 TYPE "R" POLE
45' ARM ON STD CB-5
~~F-5-10x7 BOX CULV~~

NB
4-8-8

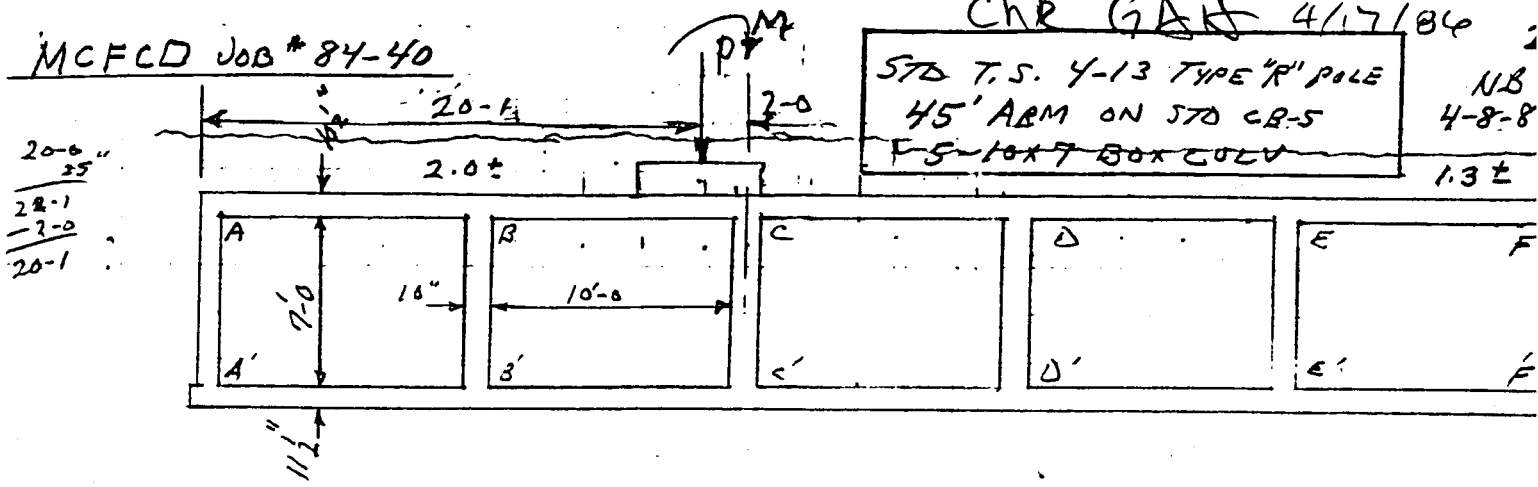

stiffness, $k = \frac{4EI}{L}$; E is Constant, Use $k = \frac{I}{L}$

$I_{slab} \propto t^3$, $t^3 = (.875)^3 = .670$ ✓

$I_{wall} \propto w^3$, $w^3 = (.833)^3 = .578$ ✓

Distribution: Pt. A; $K_{AB} = \frac{I}{L} = \frac{.670}{10.83} = .06186$ ✓

$K_{AA'} = \frac{I}{H} = \frac{.578}{7.875} = .07340$ ✓

$D_{AB} = \frac{K_{AB}}{K_{AB} + K_{AA'}} = \frac{.06186}{.06186 + .07340} = 0.46$ ✓

.13526

$D_{AA'} = \frac{K_{AA'}}{\quad} = \frac{.07340}{.13526} = 0.54$

$\Sigma = 1.00$ check ✓

Pt B $K_{BA} = K_{BC} = K_{AB} = .06186$

$K_{BB'} = K_{AA'} = .07340$

$D_{BB'} = \frac{K_{BB'}}{K_{BB'} + K_{BA} + K_{BC}} = \frac{.07340}{.07340 + 2(.06186)} = 0.38$ ✓

.19712

$D_{BA} = D_{BC} = \frac{.06186}{.19712} = 0.31$

0.31
0.31
1.00 check ✓

ChR GAH 4/17/86

3
2B
4-8-86

UNIFORM LOADS - SOIL + CONCRETE

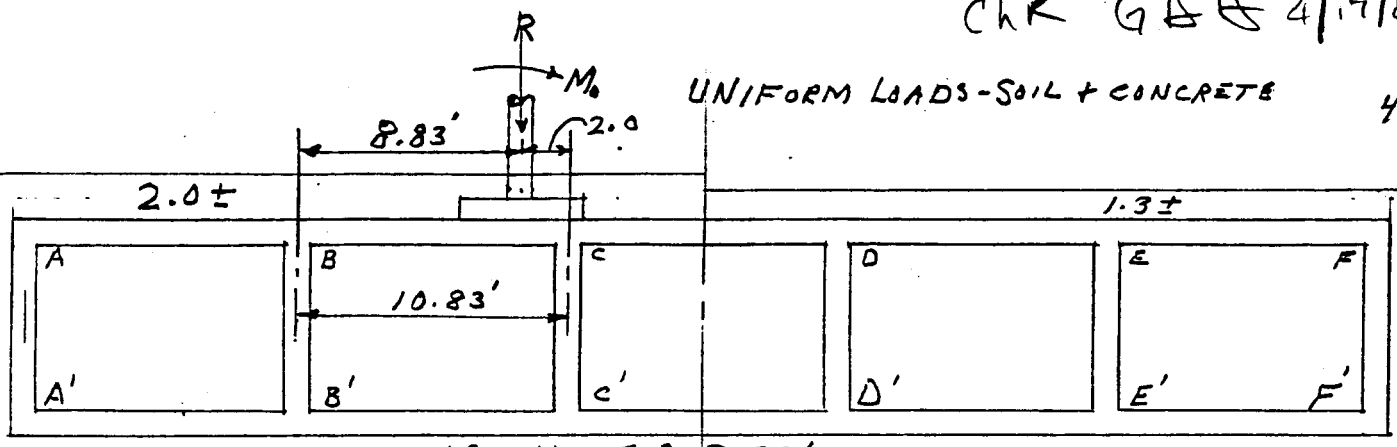

DOWNWARD LOADING ON TOP DECK

FILL - 2.0'± $W_1 = 2.0 \times 84 = 168$ #/LF. ✓ FILL - 1.3'± $W_2 = 1.3 \times 84 = 109$ #/LF ✓

$FM_{AB,\,BA,\,BC,\,CB} = \frac{W_1 L^2}{12} = \frac{168(10.83)^2}{12} = 1642$ '# ✓ $FM_{DE,\,ED,\,EF,\,FE} = \frac{W_2 L^2}{12} = \frac{109 \times (10.83)^2}{12} = 1065$ '# ✓

$FM_{CD} = \frac{11}{192} W_1 L^2 + \frac{5}{192} W_2 L^2$ $FM_{DC} = \frac{11}{192} W_2 L^2 + \frac{5}{192} W_1 L^2$

$= \frac{(10.83)^2}{192}(11 \times 168 + 5 \times 109) = 1462$ '# ✓ $= \frac{(10.83)^2}{192}(11 \times 109 + 5 \times 168) = 1246$ '# ✓

CONCRETE - TOP DECK $W = \frac{10.5}{12} \times 150 = 131.25$ #/LF ✓

$FM_{AB\,to\,FE} = \frac{WL^2}{12} = \frac{131.25(10.83)^2}{12} = 1283$ '# ✓

UPWARD LOADING ON BOTTOM FLOOR

TO SIMPLIFY CALCULATIONS USE 2'± FOR FILL - CONSERVATIVE

$W = 2' \times 84 = 168$ For Fill, $W = (150 \times 7' \times 6 \text{ walls} \times \frac{10}{12}) \div 55' = 95.50$ ✓

$W = 131.25$ Top Deck
$\quad\;\; 95.50$

$394.75 \times \frac{(10.83)^2}{12} = 3858$ '# ✓ $= FM_{A'B'}$ to $F'E'$

R LOAD - Distributed over say 6'

$FM_{BC} = \frac{R}{6} \times \frac{b^2 a}{L^2} = \frac{R}{6} \times \frac{(2.0)^2 8.83}{(10.83)^2} = \frac{0.301R}{6} = 0.05(1770) = 89$ '# ✓

$FM_{CB} = \frac{R}{6} \frac{a^2 b}{L^2} = \frac{R}{6} \frac{(8.83)^2 2}{(10.83)^2} = 0.2215R = .22(1770) = 392$ '# ✓

0.38

0.54 | 0.46 | 0.31 | 0.31

UNIFORM DL LOADING ON BOX

		−245		−56		−57		+216		
		−245		+12		+12		+216		
				−68		−69				
	A		B		C		D		E	F
	−2925	+2925	−2925	+2925	−2745	+2529	−2348	+2348	−2348	+2348
+1580	+1345	0	0	−56	−56	−56	−56	0	0	−1086	−1268
−1042	0	+673	−28	0	−28	−28	0	−28	−540	0	+1042
+563	+479	−200	−200	+8	+8	+8	+8	+176	+176	−479	−563
+1101	−1101	+3398	−3153	+2877	−2821	+2453	−2396	+2496	−2712	+789	−789
−1719	+1719	−4471	+4133	−3848	+3868	−3848	+3868	−4133	+4471	−1791	+1791
−426	−364	+275	+275					+275	+275	+292	−342
+790	0	+888	0	+10	+10	+10	+10	0	+888	0	+634
−2083	+1775	0	0	0	0	0	0	0	0	+1775	+2083
	+3858	+3858	+3858	−3858	+3858	−3858	+3858	−3858	+3858	−3858	
				−34		−34					
		+338		+14		+14		−338			
		+338		−20		−20		−338			

OK

CWC GAK 4/18/86

4-8-86

Chk GAH 4/18/86
5
MB
4-8-86

B SIDE LOAD – Assume 2' ± soil + 2' surcharge

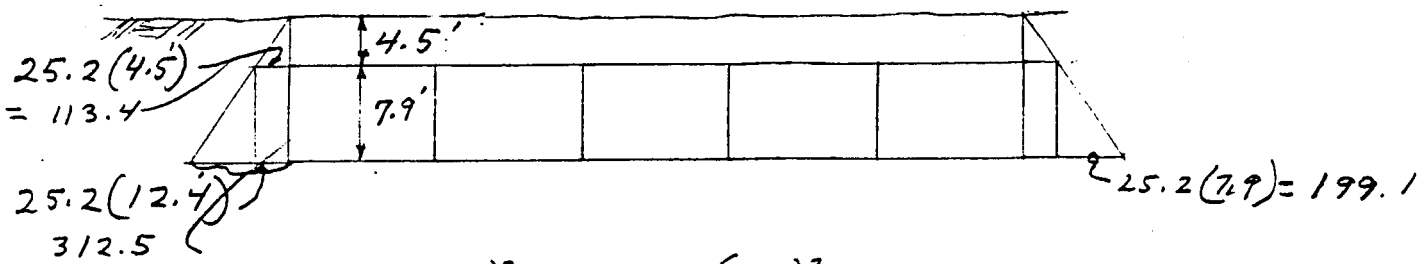

$$M_{AA'} = \frac{113.4}{12}(7.9)^2 + \frac{199.1(7.9)^2}{30} = 590 + 414 = 1004 \text{ '\#}$$

$$M_{A'A} = \frac{113.4}{12}(7.9)^2 + \frac{199.1(7.9)^2}{20} = 590 + 622 = 1212 \text{ '\#}$$

SIDE LOADING

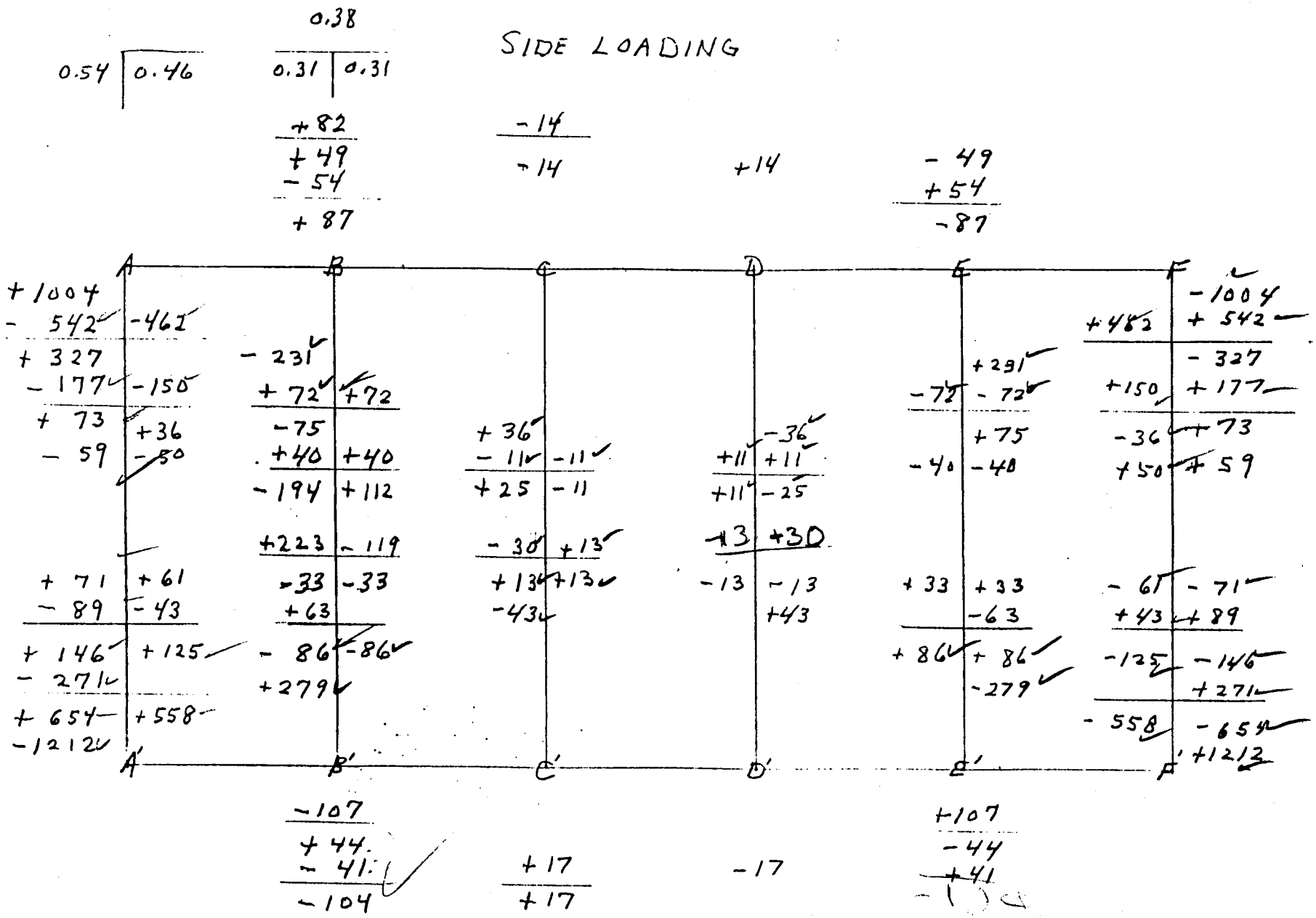

Chk G ~~A~~ 6
4/18/86
GHB
4-8-86

CHR GAH 2
4/18/86 and
4-8-86

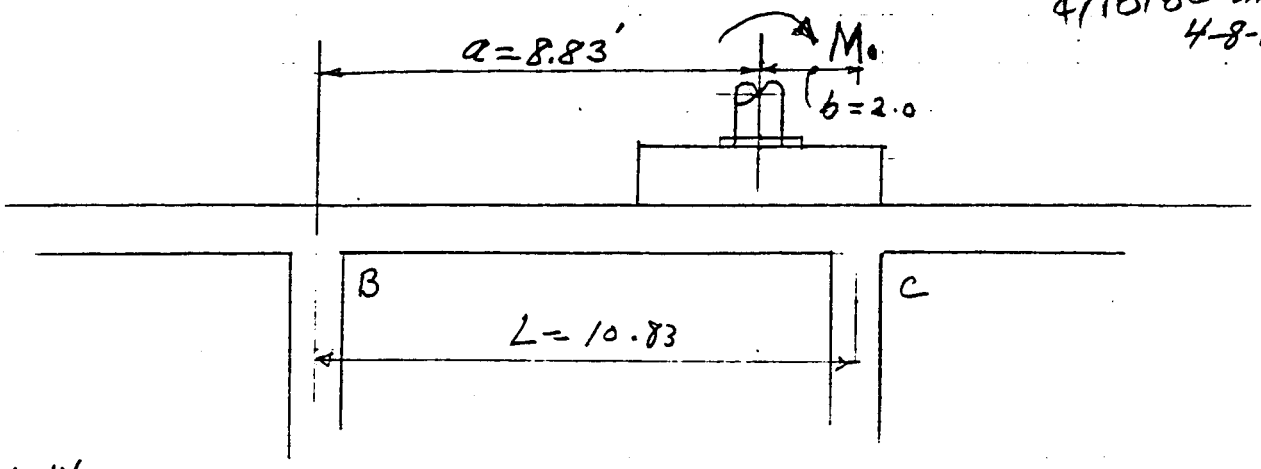

P8.1-14
DESIGN OF WELDED STRUCTURES
by Omer W. Blodgett AUG 1967

$M_o = 52{,}473/6' = 8746'^{\#}$

$$M_{BC} = -\frac{M_o b}{L^2}(L-3a) \qquad M_{CB} = -\frac{M_o a}{L^2}(2L-3a)$$

$$= \frac{-M_o \times 2.0}{(10.83)^2}(\overset{26.49}{10.83-3\times 8.83}) \qquad = \frac{-M_o \times 8.83}{(10.83)^2}(\overset{21.66}{2\times 10.83-3\times 8.83})$$

$$= +0.267\,M_o \qquad = +0.364\,M_o$$

$$= +0.267(8746) = 2335'^{\#} \qquad = +0.364(8746) = 3183'$$

$$M_x = -\frac{M_o}{L^2}\left[\frac{6abx}{L} + b(L-3a)\right]$$

$$(LT)\ M_a = -\frac{M_o}{(10.83)^2}\left[\overset{86.39}{6\times\frac{2.0\times(8.83)^2}{10.83}} + 2.0(\overset{31.32}{10.83-3\times 8.83})\right] = -\frac{M_o \times 55.07}{(10.83)^2} = -0.47M_o$$

$+0.53M_o$

$$-0.47(8746) = -4111'^{\#}$$

$$+0.53(8746) = +4635'^{\#}$$

$$R_B = -\frac{6M_o ab}{L^3} = -\frac{6M_o(8.83)2.0}{(10.83)^3} = -.0834M_o$$

$$-.0834(8746) = -729^{\#}\downarrow$$

$$R_C = -R_B = 729^{\#}\uparrow$$

CHR GAH 4/18/86g
NB
4-8-8

R POLE LOAD $FM_{BC} = -89'^{\#}$ $FM_{CB} = +392'^{\#}$

Δ PAD $= -128$ $+211$

MOMENT $+2335$ $+3183$

$+2118'^{\#}$ $+3786'^{\#}$

$\theta = 37°25'14''$

UPWARD PRESSURE

$R = (1770 + 66 \times 5 \times 5) \div 6' = 3420/6 = 570^{\#}$

$M_T = (51572 \cos\theta) \div 6 = 40958/6^{\#} = 6826'^{\#}$

$f = \frac{R}{BL}\left(1 \pm \frac{6e}{L}\right)$ where $e = \frac{M}{R} = \frac{6826}{570} = 11.98$

$f = \frac{570}{55}\left(1 \pm \frac{6 \times 11.98}{55}\right) = 10.36\,(1 \pm 1.31)$

$= 24$ or -3 use 0

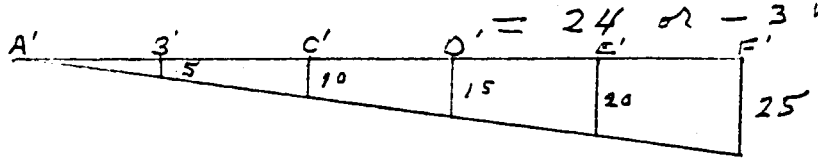

$FM_{A'B'} = \frac{W_1 L^2}{30} = \frac{5(10.83)^2}{30} = 20'^{\#}$, $FM_{B'A'} = \frac{W_1 L^2}{20} = \frac{5(10.83)^2}{20} = 30'^{\#}$

$FM_{B'C'} = \frac{W_1 L^2}{12} + \frac{W_2 L^2}{30} = \frac{5(10.83)^2}{12} + 20 = 69'^{\#}$ (49) $FM_{C'B'} = 49 + 30 = 79'^{\#}$

$FM_{C'D'} = \frac{10(10.83)^2}{12} + 20 = 118'^{\#}$ $FM_{D'C'} = 98 + 30 = 128'^{\#}$

$FM_{D'E'} = \frac{15(10.83)^2}{12} + 20 = 147 + 20 = 167'^{\#}$, $FM_{E'D'} = 147 + 30 = 177'^{\#}$

$FM_{E'F'} = \frac{20(10.83)^2}{12} + 20 = 195 + 20 = 215'^{\#}$, $FM_{F'E'} = 195 + 30 = 225'^{\#}$

0.38

0.31 | 0.31

PAD, R LOAD + MOMENT

0.54 | 0.46

A	B	C	D	E	F
	−587	−1302	+200	−44	
	−79	−123	−21	−31	
	+79	+139	+2	−9	
	+227	+128	+227	+3	
	−8	−8	−8	−7	
	−806	−1438			

A		B		C		D		E		F	
	−328		+2118	+3786							
		−656	−656	−1174	−1174						
		0	−587	−328	0	−587					
+177	+151	+184	+184	+104	+104	+184	+184	+2	+2		
+2	+92	+76	+52	+92	+92	+52	+1	+92	0	+1	+2
−51	−43	−64	−64	−100	−100	−17	−17	−26	−26	−1	−2
+128	−128	−460	+1047	+2380	−1078	−368	+168	+68	−24	0	0

A		B		C		D		E		F	
−2	+2	+12	+222	+154	+289			−209	+241	−129	+129
−83	−70	−71	−71	−40	−40	−69	−69	−2	−2	+3	+4
+89	+64	+2	+114	+64	+2	+114	−7	+2	+2	−7	0
+3	+3	+128	+128	+227	+227	+4	+4	−14	−14	+3	+3
0	−6	−5	−6	−6	−6	−6	−6	−6	+52	−6	0
−11	−9	−12	−12	−12	−12	−12	−12	−12	−12	+103	+122
	+20	−30	+68	−79	+118	−128	+167	−177	+215	−225	

−15	−15	−15	−14
−403	−719	0	0
+158	+277	+4	−18
+114	+64	+114	+2
−88	−50	−83	−2
−234	−443	+20	−32

CHK GAH
4/18/86
9
4-8-86

Chk GAH 10
4/18/86 ARB 4-8-86

LIVE LOAD

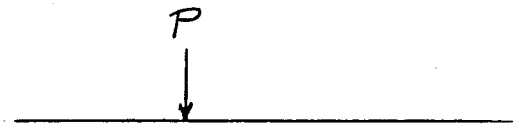

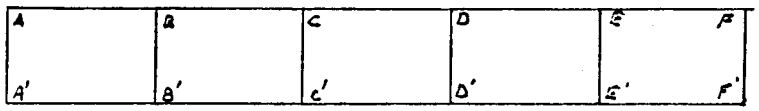

$P = \frac{Wheel}{B}$; $B = 1.75 \times FILL = 1.75 \times 2.0 = 3.50'$

$P = \frac{16000 \times 1.20}{B} = \frac{19200^{\#}}{3.50} = 5486^{\#}$

$M_{\substack{DE \\ ED}} = \frac{PL}{8} = \frac{5486(10.83)}{8} = 7427^{'\#}$

UPWARD PRESSURE

$f = \frac{P}{L}\left(1 \pm \frac{6e}{L}\right)$ where $L = 55'$ $e = 10.83'$

$= \frac{5486}{55}\left(1 \pm \frac{6 \times 10.83}{55}\right) = 100(1 \pm 1.18) = 218$ or -18 say 0

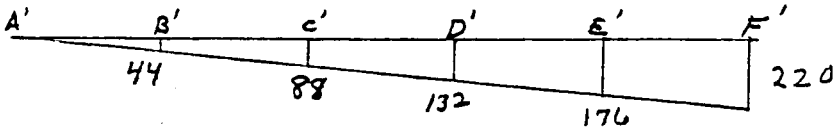

$FM_{A'B'} = \frac{W.L^2}{30} = \frac{44(10.83)^2}{30} = 172$ $FM_{B'A'} = \frac{44(10.83)^2}{20} = 258'^{\#}$

$FM_{B'C'} = \frac{W.L^2}{12} + \frac{W.L^2}{30} = \frac{44(10.83)^2}{12} + \frac{44(10.83)^2}{30} = 430 + 172 = 602'^{\#}$

$FM_{C'B'} = 430 + 258 = 688'^{\#}$

$FM_{C'D'} = \frac{88(10.83)^2}{12} + 172 = 860 + 172 = 1032'^{\#}$, $FM_{D'C'} = 860 + 258 = 1118'^{\#}$

$FM_{D'E'} = \frac{132(10.83)^2}{12} + 172 = 1290 + 172 = 1462'^{\#}$, $FM_{E'D'} = 1290 + 258 = 1548'^{\#}$

$FM_{E'F'} = \frac{176(10.83)^2}{12} + 172 = 1720 + 172 = 1892'^{\#}$, $FM_{F'E'} = 1720 + 258 = 1978'^{\#}$

LIVE LOAD - In center of Span DE

NOTE: A Live load in Span DE would not add much to the stresses in Span BC

0.54	0.46	0.31	0.31								
		+32		-532		+3193					
		+54		-76		+222					
		+18		+21		-248		-343			
		+25		-412		+462		+412			
		-65		-65		-65		-65			
						+2822		-2822			
A		B		C		D		E		F	
							-7427	+7427			
						+2302	+2302	-2302	-2302		
-47					+1151		-1151	+1151		+1151	+534
+25	+22	+20	+20	-337	-337	+377	+377	-337	-337	+284	+333
+15	+10	+11	-169	+10	+169	-169	-169	+169	+142	-169	+15
		+43	+43	-62	-62	+182	+182				
		+74	-106	-389	+921	+2692	-5886				
		-376	+474	-679	+824	-1656	+628				
		-13	-13	+122	+122	+10	+10				
+13	+15	+13	+17	+15	-202	+17	-279	-202	+13	-279	+167
+29	+25	+29	+29	+33	+33	-404	-404	-558	-558	+25	+29
0	-54	-40	-54	-54	-54	-54	-54	-54	+455	-54	0
-93	-79	-107	-107	-107	-107	-107	-107	-107	-107	+910	+1068
A	+172	-258	+602	-688	+1032	-1118	+1462	-1548	+1892	-1978	F
		-130		-130		-130		-130			
		0		0		+1411		+1411			
		+36		+42		-495		-685			
		+13		-206		+231		+206			
		-17		+149		+11					
		-98		-145		+1028					

chk GAH 4/18/86

4-8-86

Σ MOMENTS

	AB	BA	BC	CB	CD	DC	DE	BB'	CC'
Pg 4 Unif DL	-1101	+3398	-3153	+2877	-2821	+2453	-2396	-245	-56
Pg 6 Sides	-50	-194	+112	+25	-11	+11	-25	+82	-14
Pg 9 R Pole	-128	-460	+1047	+2380	-1078	-368	+168	-587	-1302
Σ	-1279	+2744	-1994	+5282	-3910	+2096	-2253	-750	-1372
W/½ sides	-25	-97	+56	+12 13	-6	+5 6	-12 13	+41	-7
Σ	-1254	2841	-2050	+5270	-3904	+2091	-2241	-791	-1365
W/ LL @ & DE	+10	+74	-106	-389	+921	+2692	-5886	+32	-532
Σ	-1269	+2818	-2106	+4893	-2989	+4788	-8139	-718	-1904

chk 4/12/86

12
mB
4-8-8

ChR GAH
4/18/86 13
2B
4-8-86

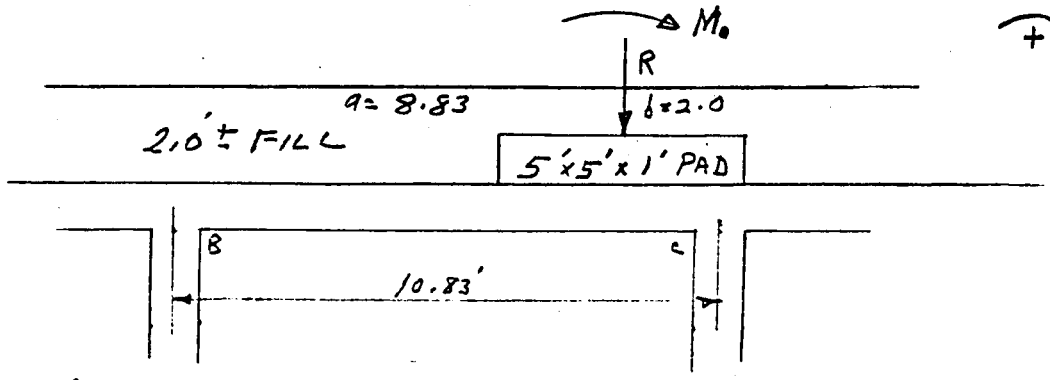

POS. MOMENTS

$M_x = \frac{wx}{2}(L-x)$ @ R = 1483

2.0' FILL Max Pos $= \frac{wL^2}{8} = \frac{(2\times84)(10.83)^2}{8} = 2463'^{\#}$ — 910# ~~910~~

$V = \frac{wL}{2} = \frac{168(10.83)}{2}$ 909.7

R LOAD Max Under R $= \frac{Rab}{L} = \frac{1770(8.83\times2)}{10.83} = (@R)$ 2886'#

$(@\frac{L}{2}) = 1771'^{\#}$

$V_B = \frac{Rb}{L} = \frac{1770\times2}{10.83} = 327^{\#}$ — 327# 144

$V_C = \frac{Ra}{L} = \frac{1770\times8.83}{10.83} = 1443^{\#}$

M_o (See Page 7)

$M_{x=a(\text{left side})} = -4111'^{\#}$ — 729# -729

$M_{x=a(\text{right side})} = +4635'^{\#}$

TOP CONCRETE SLAB $- \frac{wL^2}{8} = \left(150\times\frac{10.5}{12}\right)\frac{(10.83)^2}{8} =$ (131.25) 1924'#

$M_x = \frac{wx}{2}(L-x)$ @R = 583'#

$V = \frac{wL}{2} = \frac{131.25(10.83)}{2} = 711$ — 711# 711

CONCRETE PAD

AISC 2-199(5)

150 − 84 = 66#/LF Difference

$V_B = \frac{66\times(4.5)^2}{2(10.83)} = 62$ — 62# 235

$V_C = \frac{66\times4.5}{2(10.83)}(2\times10.83-4.5) = 235$ (17.16) — 2739 2570

$M_{max}\left(x=\frac{V_c}{w}\right) = \frac{(V_c)^2}{2w} = \frac{(235)^2}{2\times66} = 418'^{\#}$ — 418'#

M_x (X From C) $(X<4.5) = V_c X - \frac{wX^2}{2}$

@ R $M_x = 235(2.0) - \frac{66(2.0)^2}{2} = 338'^{\#}$

SHEARS + SIMPLE MOMENTS

2.0' FILL $\frac{wL}{2} = V_B = V_C = \frac{168(10.83)}{2} = 910^{\#}$

CONCRETE DECK $\frac{wL}{2} = \frac{131.25(10.83)}{2} = 711^{\#}$

$1621^{\#}$

$M = \frac{1}{2} \times 1621 \times \frac{10.83}{2} = 4388^{'\#}$

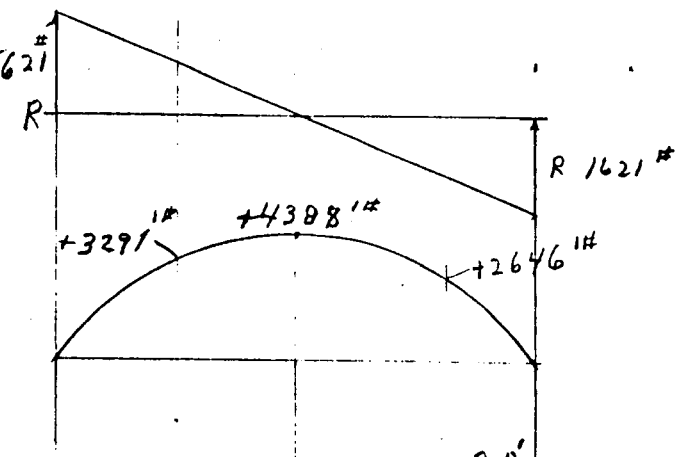

.185
.815

R LOAD $V_B = 327^{\#}$ $V_C = 1443^{\#}$

$M = 327 \times 8.83 = 2887^{'\#}$

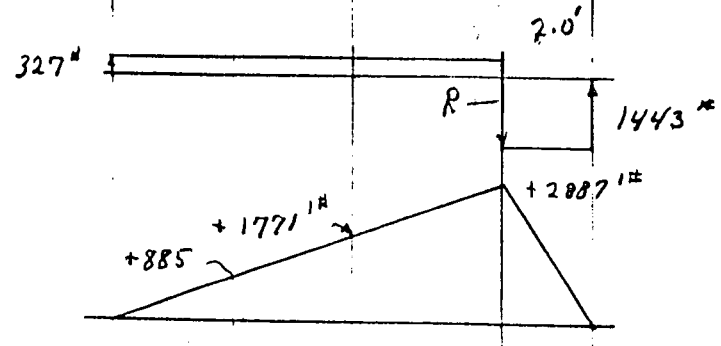

CONCRETE PAD $V_B = 62^{\#}$, $V_C = 235^{\#}$

$M_{max} = 418^{'\#}$ @ $x = 7.27'$

$M_{@R} = 338^{'\#}$

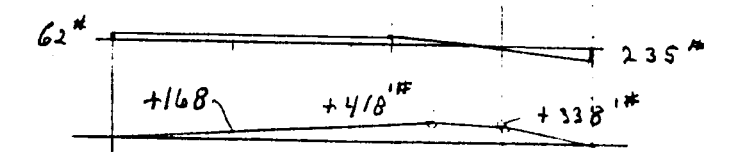

$M_o = 8746^{'\#}$ $V_B = -\frac{M_o}{L} = -807.5$

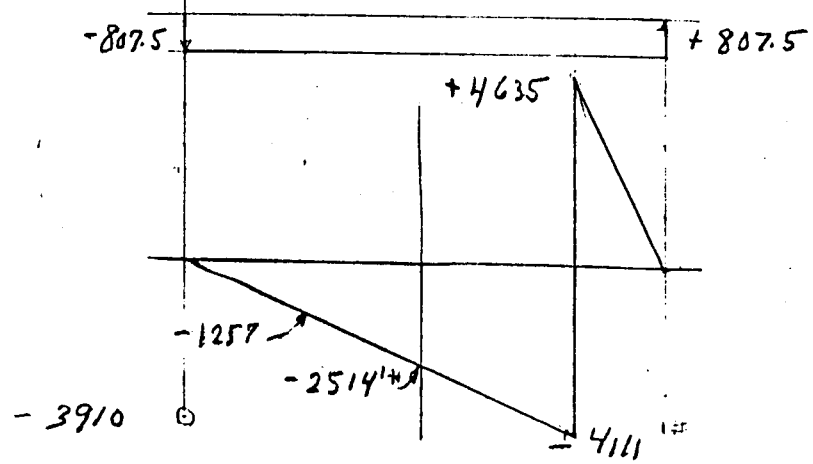

CHK GAH 4/18/86
4-8-86

FINAL MOMENTS - SPAN BC

+M @ L/2

2' FILL 2463 '#
Top Slab 1924 '# } 4387
R LOAD 1771 '#
CONC PAD 418 '#
M_o -2514 '#
+4062 '#

+M @ R

2' FILL	+2646	+2646
Top Slab	+2887	+2887
	+338	+338
	+4635	-4111
	+10506	+1760

+M @ L/4

+3291
+885
+168
-1257
+3087

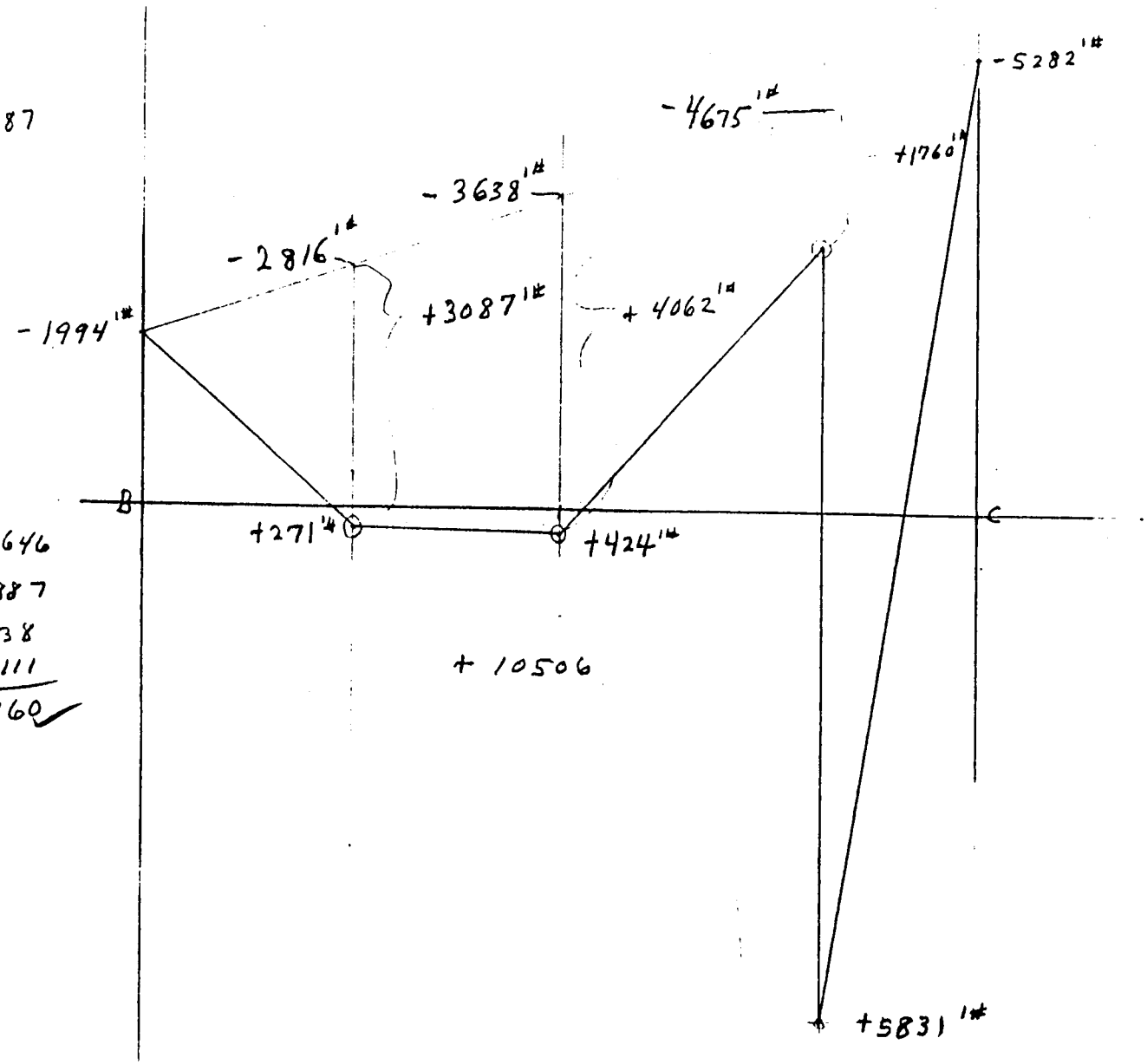

chk G&H 4/18/86
15
4-8-86

chk GAB 4/10/86
16
MB
4-8-86

10" WALLS 66 bars #5 @ 6½" = 0.57□"

$A_s = \frac{M}{ad}$ ∴ $M_{ALLOW} = A_s a d = 1.44 A_s d$; $d = 10" - 1 - \frac{5}{16} = 8.68"$

$M_{ALLOW} = 1.44(0.57) \times 8.68 = 7.124^{'k} = 7124^{'\#}$

The largest M (in walls) = $-791^{'\#}$ (in BB')

aa bars #4 @ 13" = 0.18 □"
hh bars #5 @ 6½" = 0.57 □"

The moments in span AB or AA' due to R pile + pad are negligible (see page 12)

10½" DEck

Top Bars { ff bars #7 @ 13", A_s = 0.55□" } = 0.96 □" or 0.55 □"
Bot. Bars { dd bars #6 @ 13, A_s = 0.41□" } = 0.82 □" or 0.41 □"
{ ee bars #6 @ 13, A_s = 0.41□" }

$d_{Top} = 10\frac{1}{2} - 1\frac{1}{2} - 7/16 = 8.56"$
$d_{Bot} = 10\frac{1}{2} - 1 - 3/8 = 9.12"$

Top Bars ; $M_A = A_s a d = 0.96 \times 1.44 \times 8.56 = 11.830^{'k} = 11830^{'\#}$
or $M_A = 0.55 \times 1.44 \times 8.56 = 6.780^{'k} = 6780^{'\#}$

From Page 15, The largest M = $-5282^{'\#}$ ok

Bottom Bars $M_A = 0.82 \times 1.44 \times 9.12 = 10.770^{'k} = 10,770^{'\#}$ or $5,385^{'\#}$

From Page 15, The largest M = $+5831^{'\#}$ Vs $10,770^{'\#}$ Allowable

other Moments are negligible.

NOTE: M = $+5831^{'\#}$ is a GROUP II CONDITION
$5831 \div 1.25 = 4665^{'\#}$ Vs Allow = $5385^{'\#}$ ok

However - for a small increase in steel, a much better design is achieved. Use 20 # ee bars, 10 top + 10 bottom of Top Deck in place of 10 dd bars All std. length of 33'-3"

Chk GAH 4/18/86

17
AB
4-8-86

SHEAR $r = \frac{V}{bjd}$ $d =$ $r = 1.4\sqrt{f'c} = 1.4\sqrt{3000} = 76.7$ psi

Top Deck $V_{allow} = r\,bjd = 76.7 \times 12 \times 7/8 \times 8.56 = 6893^{\#}$ Allowed

The largest shear from page 13 is 2739# OK without reduction to a distance from face of wall = slab thickness.

Chk GAH 4/18/8

MB

18

4-8-86

5-10x7 Box Longitudinal Direction

TOP SLAB

$M_{Long.} = 40,148$ '#

$A_s = \frac{M}{1.44d} = \frac{40.148}{1.44 \times 8.56} = 3.26$ □"

3 #4 = $= -0.60$

2.66 Use 6 #6 = *2.64 □" Top + Bottom of Slab

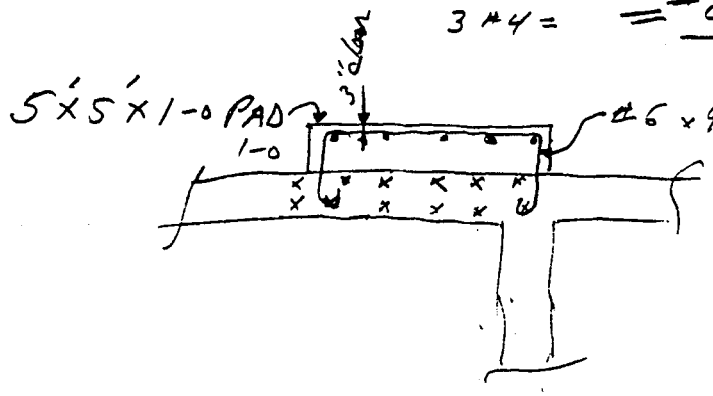

* Pad bars help top steel + Bottom bars have a larger d = 9.12" not 8.56"

TRANSVERSE MOMENT

5'x5'x1-0 PAD $M_T = 52,473$ '#

$A_s = \frac{M}{1.44d} = \frac{52.473}{1.44 \times 19.0} = 1.92$ □"

d = 22.5 − 3.5 = 19.0"

5 #6 bars = 2.20 □" Use #6 bars @ 13" both ways (10 Req'd)

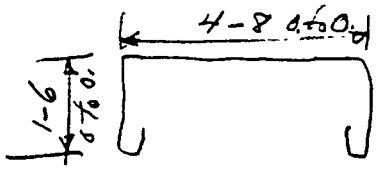

22.5 − 3 − 1 = 18½

SPILLWAY DESIGN

MKA-4029

5-2-86 BSB

SPILLWAY (INTERIM)

NOTE: DUE TO TAILWATER (1341.40), THE 72" RCP $HW/d = 0.98$. THEREFORE IT IS RECOMMENDED TO PLUG THE STORM DRAIN TILL IT IS CONNECTED WITH THE FUTURE 72" RCP.

TO AID IN THE SPILLWAY DESIGN, THE EXISTING CURB & GUTTER AND SIDEWALK FROM STA. 10+58 TO STA. 14+00 SHOULD BE REPLACED WITH RIBBON CURB AND SIDEWALK.

$\frac{45.20 + 44.00}{2} = 44.60$	$55/398 = 0.138$
$\frac{44.00 + 44.12}{2} = 44.06$	$43/398 = 0.108$
$\frac{44.12 + 44.41}{2} = 44.27$	$100/398 = 0.251$
$\frac{44.41 + 44.78}{2} = 44.60$	$100/398 = 0.251$
$\frac{44.78 + 45.20}{2} = 44.99$	$100/398 = 0.251$

WEIGHTED MEAN ELEV = 44.51 (EXIST. CURB ELEV.)

DEPTH OF FLOW

$$\begin{array}{r} 45.20 \\ -\ 44.51 \\ \hline 0.69 \end{array}$$

SPILLWAY CAPACITY

$Q = CLH^{3/2}$

$Q = 3.087(398)(0.69)^{3/2}$

$Q = 959$ cfs

MKA 4029

5-2-86

SPILLWAY

TRAP. CHANNEL , DEPTH = 2'

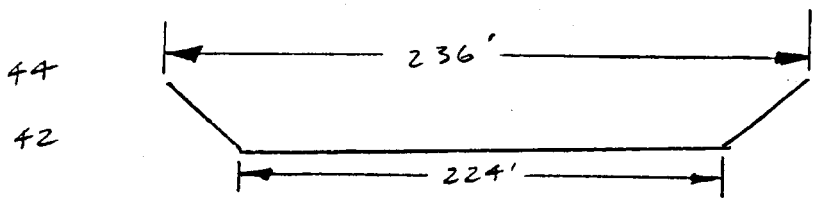

$$Q = \frac{1.486}{.03}(460)(1.94)^{2/3}(.03)^{1/2}$$

$$Q = 6135 \text{ cfs}$$

DEPTH = 1'

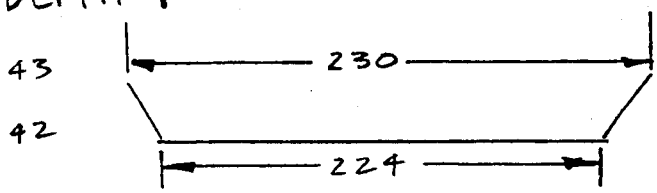

$$Q = \frac{1.486}{.03}(227)(.99)^{2/3}(.03)^{1/2}$$

$$Q = 1934 \text{ cfs}$$

DEPTH = 0.5'

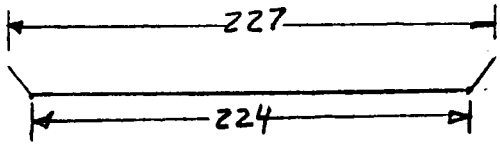

$$Q = \frac{1.486}{.03}(113)(.496)^{2/3}(.03)^{1/2}$$

$$= 607 \text{ cfs}$$

CURB INLET DESIGN

PROJ. MKA-4029

3-4-86

1-3

CATCH BASIN DESIGN

APACHE STA. 113+00, 52' RT

$T_c = 10$ MIN.

$i = 5.5$ IN/HR (100 YR. FREQUENCY)

$Q = CiA$

$Q = 0.95(5.5)\left(\frac{257 \times 48}{43560}\right)$

$Q = 1.48$ cfs

$Q = 0.56\left(\frac{z}{n}\right) S^{1/2} Y^{8/3}$

$1.48 = 0.56\left(\frac{65}{.015}\right)(.006)^{1/2} Y^{8/3}$

$Y = 0.163$ FT

SPREAD $= \frac{0.163}{.015}$

$= 10.8$ FT

$\frac{Q_a}{L_a} = 0.30 = \frac{Q}{L}$

$L = \frac{1.48}{0.30}$

$L = 4.93$ FT

$L = 4.93 \times 1.25$ (SAFETY FACTOR)

$= 6.16$ FT

USE: ADOT STD DTL C-15.20, TYPE 3, L=6'

PROJECT: MRA -4029

3-4-86

2-3

CATCH BASIN DESIGN CONT.

APACHE STA 111+30, 50.5' LT.

$T_c = 10$ MIN.

$i = 5.5$ IN/HR (100 YR FREQUENCY)

$Q = CiA$

$Q = 0.95(5.5)\left(\frac{220 \times 48}{43560}\right)$

$Q = 1.26$ cfs

$Q = 0.56\left(\frac{z}{n}\right) S^{1/2} Y^{8/3}$

$1.26 = 0.56\left(\frac{65}{.015}\right)(.006)^{1/2} Y^{8/3}$

$Y = 0.153$ FT

$\text{SPREAD} = \frac{0.153 \text{ FT}}{0.015}$

$= 10.20$ FT

$\frac{Q_a}{L_a} = 0.27$

$L = \frac{1.26}{0.27}$

$= 4.66$

$L = 4.66 \times 1.25$ (SAFETY FACTOR)

$= 5.83$ FT

USE: A.D.O.T. STD. DTL. C-15.20 TYPE-3, L=6'

CATCH BASIN DESIGN CONT.

APACHE STA 111+21, 48' RT

$T_c = 10$ MIN.

$i = 5.5$ IN./HR. (100 YR. FREQUENCY)

$Q = CiA$

$= 0.95(5.5)\left(\frac{197 \times 48}{43560}\right)$

$= 1.13$ cfs

$Q = 0.56\left(\frac{z}{n}\right) S^{1/2} Y^{8/3}$

$1.13 = 0.56\left(\frac{65}{.015}\right)(.006)^{1/2} Y^{8/3}$

$Y = 0.147$ FT.

SPREAD $= \frac{0.147}{0.015}$

$= 9.80$ FT.

$\frac{Q_a}{L_a} = 0.25$

$L = \frac{1.13}{0.25}$

$L = 4.52$ FT

$L = 4.52 \times 1.25$ (SAFETY FACTOR)

$L = 5.65$ FT.

USE: ADOT. STD DTL. C-15.20 TYPE 3, L=6'

PROJECT ~~[illegible]~~ APACHE-HIGLEY

SUBJECT HEADWATER COMPUTATIONS

COMP. RSB CHECK SKM

ACC. NO. FCD 84-40

SHEET NO. 1 OF 1

DATE MAY 7 1986

CONT. NO.

CONNECTOR PIPES FOR CLRB INLETS

LINE SEGMENT	Q IN SYSTEM (CFS)	PIPE SIZE	INLET CONTROL HW/D	INLET CONTROL HEADWATER	OUTLET CONTROL K_e	OUTLET CONTROL $H=\left[1+K_e-\frac{29n^2L}{R^{1.33}}\right]\frac{V^2}{2g}$	OUTLET CONTROL d_c	OUTLET CONTROL $\frac{d_c+D}{2}$	OUTLET CONTROL TAILWATER	OUTLET CONTROL h_o	OUTLET CONTROL $L(S_o)$	OUTLET CONTROL HEADWATER	CONTROLLING HEADWATER	HEADWATER ELEVATION	GRATE (RIM) ELEVATION
														OUTLET INV. EL = 40.66	
1	2	3	4	5	6	7	8	9	10	11	12	13	14	15	16
	3.69	18"	0.71	1.07	0.5	0.04	.65	1.08	1.68	1.68	0.06	1.66	1.66	42.32	46.95
											170 x .003			OUTLET IE = 40.72	
	2.21	18"	0.53	0.80	0.5	0.04	0.60	1.05	1.60	1.60	0.51	1.13	1.13	41.85	45.9
											100 x .003			OUTLET IE = 41.23	
	1.08	24"	<.5	<1.0	0.5	0.11	<.75	<1.37	0.62	1.37	0.30	1.18	1.18	42.41	45.5

GRAPHIC SOLUTION OF:

$$\frac{Q_a}{L_a} = 0.7\,(a+Y)^{3/2}\left[1-\left(1-\frac{Y}{a+Y}\right)^{3/2}\right]$$

AND $Q_a = 0.56\left(\frac{z}{n}\right) S^{1/2}\, Y^{8/3}$

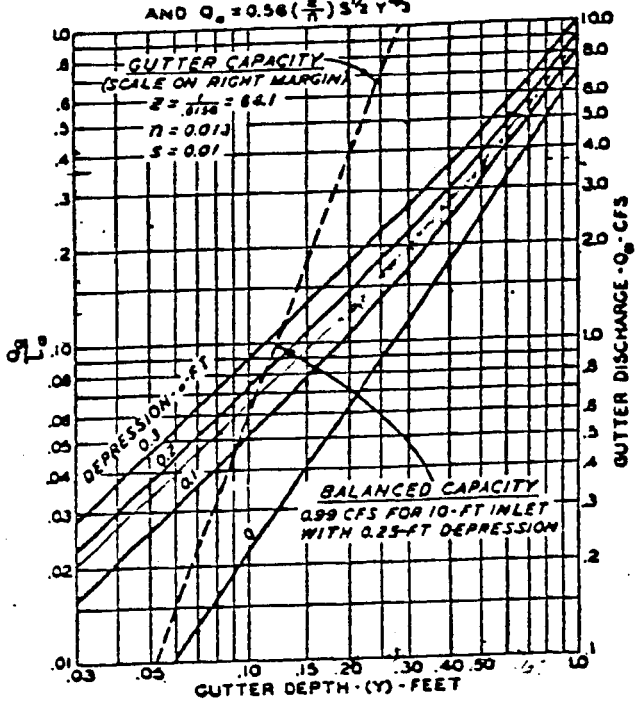

a.- CAPACITY OF CURB OPENING INLET IN CUBIC FEET PER SECOND PER FOOT OF LENGTH, DEPENDING UPON DEPTH IN APPROACH GUTTER (Y) IN FEET, AND DEPRESSION OF GUTTER FLOW LINE (a) IN FEET WHEN INTERCEPTING 100% OF GUTTER FLOW.

GRAPHIC SOLUTION OF:

$$\frac{Q}{Q_a} = \frac{\left(\frac{a}{Y}+1\right)^{3/2} - \left(\frac{a}{Y}+1-\frac{L}{L_a}\right)^{3/2}}{\left(\frac{a}{Y}+1\right)^{3/2} - \left(\frac{a}{Y}\right)^{3/2}}$$

L = ACTUAL LENGTH OF INLET
L_a = REQUIRED LENGTH TO INTERCEPT ENTIRE FLOW, Q_a, IN GUTTER.

TOP CURVE IS APPROXIMATE INTERCEPTION RATIO FOR INLET GRATING IF L/L_a IS TAKEN AS RATIO OF WIDTH OF GRATE TO TOTAL WIDTH OF FLOW IN GUTTER.

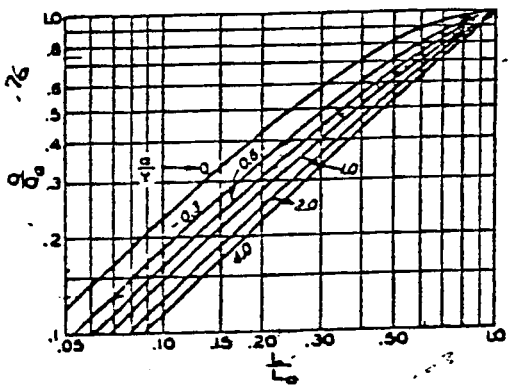

b.- PARTIAL INTERCEPTION RATIO FOR CURB OPENING INLETS.

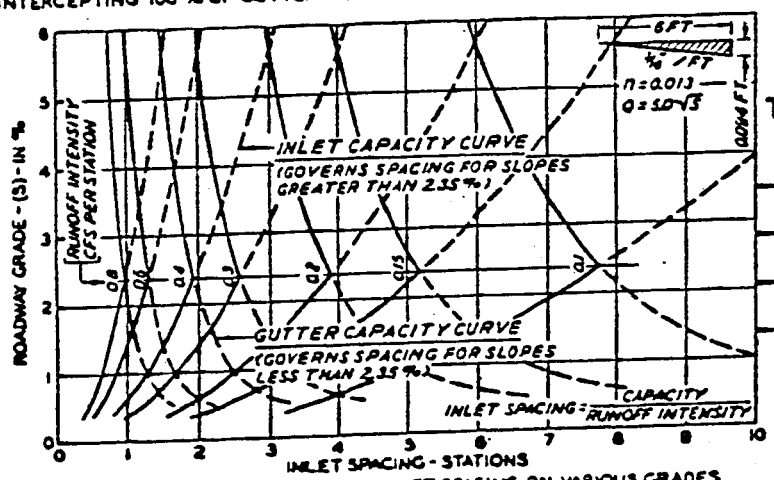

TYPE	WIDTH OF GRATE
"F"	2.12
"E"	1.25
"D"	2.12

C.- SAMPLE DESIGN CHART FOR INLET SPACING ON VARIOUS GRADES (CHART IS APPLICABLE ONLY TO A 10-FT INLET WITH A 0.25-FT DEPRESSION AND GUTTER CROSS SECTION AS INDICATED).

CURB INLETS
DESIGN CHARTS

PREPARED BY
BUREAU OF PUBLIC ROADS

Figure 12

For definition of terms
see "INLET DESIGN"
pt, G 3.

COMPUTED FROM MANNING'S FORMULA
n = 0.012

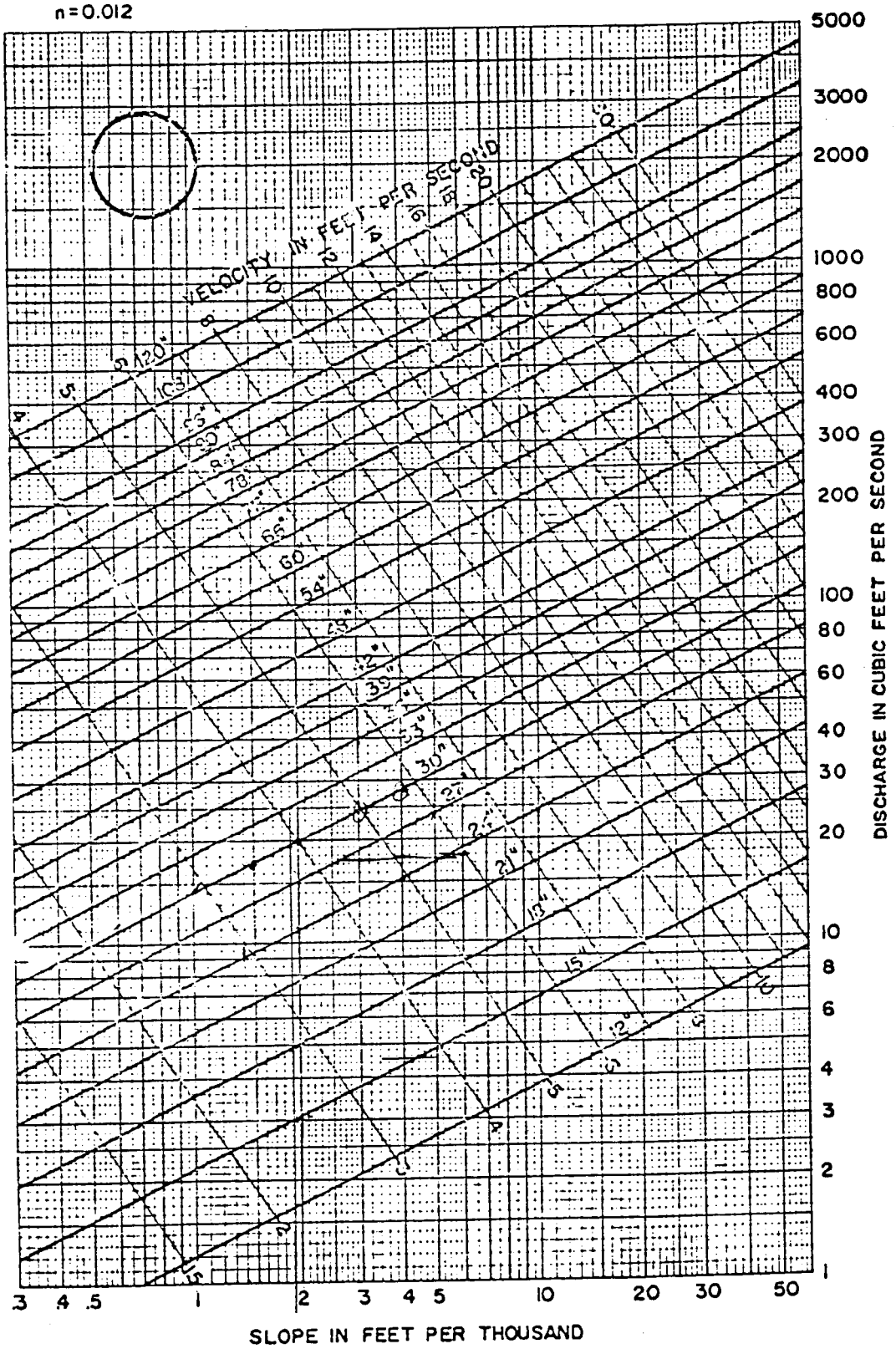

PIPE CAPACITIES FLOWING FULL

8'x6' R.C.B.

PROJECT [redacted]

SUBJECT HEADWATER COMPUTATIONS

APACHE - HIGHLEY

COMP. SKM CHECK

ACC. NO. 4029

SHEET NO. 1 OF

DATE 5/5 1986

CONT. NO.

LINE SEGMENT	Q IN SYSTEM (CFS)	PIPE SIZE	INLET CONTROL HW/D	INLET CONTROL HEADWATER	OUTLET CONTROL HW = H+h$_o$-L(S$_o$) K_e	H	d_c	$\frac{d_c + D}{2}$	TAILWATER	h_o	L (S$_o$)	HEADWATER	CONTROLLING HEADWATER	HEADWATER ELEVATION	GRATE (RIM) ELEVATION
1	2	3	4	5	6	7	8	9	10	11	12	13	14	15	16
														1339.5	8'x6' INV.
	300	8'x6'	0.92	5.52	0.5	1.3	3.5	4.75	2.4	4.75	0.6	5.45	5.52	1345.02	
		NOTE: 6' DEPTH USED TO ACCOMODATE PROPOSED											72" TIE IN.		
													USE 100' @ 0.005%		
														1340.0	INV
	300	72"	1.45	8.7	0.5	3.0	4.75	5.4	5.52	5.52	.5	8.0	8.7	1348.7	
		NOTE: THIS IS TYPICAL HEAD NEEDED FOR											72" RCP		
				TO	CARRY 300 cfs.								USE 100' @ 0.005%		
														1340.0	INV.
	220	72"	1.1	6.6	.5	1.7	4.0	5.0	5.52	5.52	.5	6.72	6.72	1346.7	
		NOTE: THIS FLOW ALLOWS FLOODING TO													
				EDGE OF PAVEMENT.											

10' TRAPEZOIDAL CHANNEL

DEPTH	AREA	W.P.	$R^{2/3}$	$S^{1/2}$	n	Q cfs
2	24	15.66	1.33	.071	.018	187.1
3	39	18.48	1.65	"	"	377.2
4	56	21.3	1.91	"	"	627.0

$Q = \frac{1.486}{n} A R^{2/3} S^{1/2}$

$n = 0.018$ [GUNITE]

$S = 0.005$ [HYDRAULIC HEAD]

$Q = 5.86 A R^{2/3}$

NOTE: ACTUAL WATER SURFACE is PROBABLY AROUND D = 3.5± FOR DESIGN FLOW

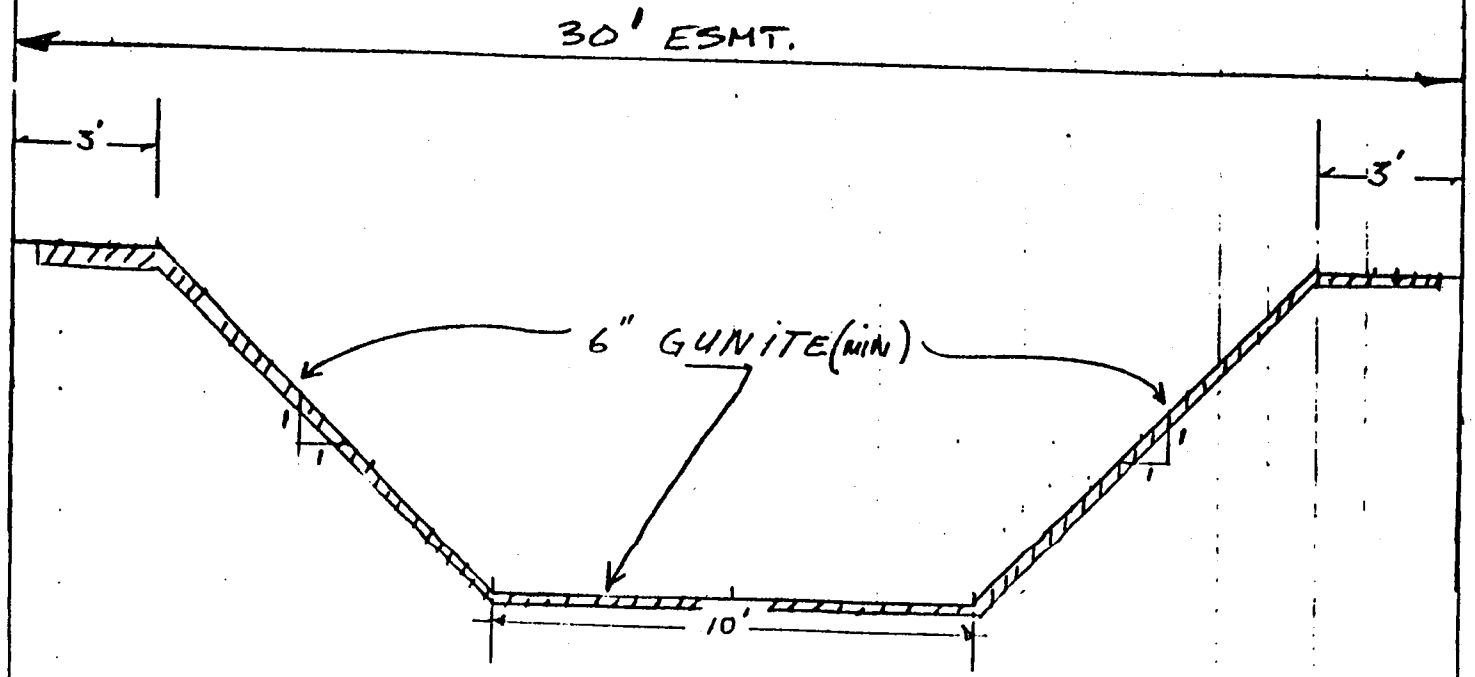

HEC-2 FOR CHANNEL
PROVIDED BY
GREINER ENGR.

Greiner Engineering

Greiner Engineering Sciences, Inc.

Tucson 602 327-3413
Phoenix 602 275-5400

Job RWCD Reach 6 E101012

Description Equations for benchmarks

Calculated by M. Shapiro Date 1/28/86 Sheet No. 1

Checked by _____ Date _____ of 1

Minus 0.05 ft from "Mathew - Kessler's Plans" to get on SCS datum for RWCD Reach 6

Minus 1.05 ft from "Greiner's Higley Road Plans" to get on SCS datum for RWCD Reach 6

SCS - DOM PARKS

GREINER ENGINEERING

WATER SURFACE PROFILE PROGRAM
VERSION 03.01

INPUT FILE : QA2T18.DAT

DATE : 25-JAN-86
TIME : 11:07:46

WATER SURFACE PROFILE LISTING

~~SCS RWCD REACH 6 COMPARATIVE DESIGN STUDIES ALTERNATE NO.2~~

TRIAL NO. 18 ** PRELIMINARY GRADE FOR MOD. NO. 3

01-25-86 ** 100 YEAR Q

STATION	INVERT ELEV	DEPTH OF FLOW	W.S. ELEV	Q	VEL	VEL HEAD	ENERGY GRD.EL.	SUPER ELEV	CRITICAL DEPTH	HGT/ DIA	BASE/ ID NO.	ZL	NO PIER	AVSPR
L/ELEM	SO					SF AVE	HF		NORM DEPTH			ZR		
TRANS STR	0.00169					.000335	0.00							
10591.84 155+38.16	31.93	8.304	40.234	2400.0	6.34	0.624	40.858	0.00	4.874	9.50	36.38	1.22	0	0.00
TRANS STR	0.00117					.000155	0.03					1.00		
10780.00 153+50.00	32.15	8.686	40.836	2400.0	2.58	0.103	40.939	0.01	2.901	9.50	81.00	3.00	0	0.00
200.00	0.00115					.000155	0.03		4.336			3.00		
10980.00 151+50.00	32.38	8.480	40.860	2400.0	2.66	0.110	40.970	0.00	2.901	9.50	81.00	3.00	0	0.00
TRANS STR	0.00117					.000190	0.22					3.00		
12130.00 140+00.00	33.72	7.340	41.060	2400.0	2.92	0.132	41.192	0.00	2.720	9.50	90.00	3.00	0	0.00
296.15	0.00116					.000235	0.07		4.555			3.00		
12426.15 137+03.85	34.06	7.053	41.117	2400.0	3.06	0.146	41.263	0.00	2.720	9.50	90.00	3.00	0	0.00
295.54	0.00116					.000270	0.08		4.555			3.00		
12721.69 134+08.31	34.41	6.775	41.183	2400.0	3.21	0.160	41.343	0.00	2.720	9.50	90.00	3.00	0	0.00
296.96	0.00116					.000315	0.09		4.555			3.00		
13018.65 131+11.35	34.75	6.507	41.260	2400.0	3.37	0.176	41.436	0.00	2.720	9.50	90.00	3.00	0	0.00
221.98	0.00116					.000355	0.08		4.555			3.00		
13240.63 128+89.37	35.01	6.315	41.325	2400.0	3.49	0.189	41.514	0.00	2.720	9.50	90.00	3.00	0	0.00
JUNCT STR	0.00000					.000425	0.00					3.00		
13245.63 128+84.37	35.01	6.463	41.473	1900.0	2.69	0.112	41.585	0.00	2.338	9.50	90.00	3.00	0	0.00
5.00	0.00200					.000220	0.00		3.393			3.00		
13250.63 128+79.37	35.02	6.454	41.474	1900.0	2.69	0.113	41.587	0.00	2.338	9.50	90.00	3.00	0	0.00
TRANS STR	0.00150													

GREINER ENGINEERING

WATER SURFACE PROFILE PROGRAM
VERSION 03.01

DATE : 25-JAN-86
TIME : 11:07:46

INPUT FILE : QA2T18.DAT

WATER SURFACE PROFILE LISTING

SCS RWCD REACH 6 COMPARATIVE DESIGN STUDIES ALTERNATE NO.2

TRIAL NO. 18 ** PRELIMINARY GRADE FOR MOD. NO. 3

01-25-86 ** 100 YEAR Q

STATION / L/ELEM	INVERT ELEV / SO	DEPTH OF FLOW	W.S. ELEV	Q	VEL	VEL HEAD / SF AVE	ENERGY GRD.EL. / HF	SUPER ELEV	CRITICAL DEPTH / NORM DEPTH	HGT/ DIA	BASE/ ID NO.	ZL / ZR	NO PIER	AVBPR
13270.63	35.05	6.432	41.472	1900.0	2.79	0.121	41.593	0.00	2.375	8.25	88.00	2.83	0	0.00
128+89.37												2.83		
TRANS STR	0.00188					.000235	0.02							
13345.07	35.19	6.264	41.454	1900.0	2.27	0.166	41.620	0.00	2.541	8.25	80.00	2.05	0	0.00
127+84.93												2.05		
TRANS STR	0.00185					.000410	0.05							
13458.75	35.40	5.980	41.380	1900.0	1.52	0.317	41.697	0.00	2.956	8.25	64.39	1.00	0	0.00
126+71.25												1.00		
TRANS STR	0.00000					.000195	0.00							
13458.76	35.40	5.926	41.326	1900.0	1.98	0.385	41.711	0.00	3.002	8.25	64.39	0.00	0	0.00
126+71.24												0.00		
TRANS STR	0.00158					.000295	0.03							
13553.54	35.55	5.647	41.197	1900.0	6.12	0.581	41.778	0.00	3.335	7.88	55.00	0.00	0	0.00
125+76.46												0.00		
WALL EXIT	Proposed five barrel 10'x7' box culvert at Apache/Higley													
13553.54	35.55	5.648	41.198	1900.0	6.73	0.703	41.901	0.00	3.553	7.00	53.33	0.00	4	0.83
125+76.46									0.000			0.00		
0.01	0.00000					.000940	0.00							
13553.55	35.55	5.648	41.198	1900.0	6.73	0.703	41.901	0.00	3.553	7.00	53.33	0.00	4	0.83
125+76.45									4.415			0.00		
236.66	0.00182					.001005	0.24							
13790.21	35.98	5.385	41.366	1900.0	7.05	0.773	42.139	0.00	3.553	7.00	53.33	0.00	4	0.83
123+39.79									4.415			0.00		
115.07	0.00182					.001100	0.13							
13905.28	36.19	5.268	41.458	1900.0	7.21	0.808	42.266	0.00	3.553	7.00	53.33	0.00	4	0.83
122+24.72												0.00		
TRANS STR	0.00205					.000880	0.02							

WATER SURFACE PROFILE LISTING

SCS RWCD REACH 6 COMPARATIVE DESIGN STUDIES ALTERNATE NO.2

TRIAL NO. 18 ** PRELIMINARY GRADE FOR MOD. NO. 3

01-25-86 ** 100 YEAR Q

STATION / L/ELEM	INVERT ELEV / SO	DEPTH OF FLOW	W.S. ELEV	Q	VEL	VEL HEAD / SF AVE	ENERGY GRD.EL. / HF	SUPER ELEV	CRITICAL DEPTH / NORM DEPTH	HGT/ DIA	BASE/ ID NO.	ZL / ZR	NO PIER	AVEFR
WALL ENTRANCE														
13924.29 122+05.21	36.33	5.759	41.988	1900.0	5.16	0.413	42.401		3.014		18		0	0.00
19.49	0.00154					.000250	0.00			3.230				
13944.28 121+85.72	36.26	5.729	41.989	1900.0	5.18	0.417	42.406		3.014		18		0	0.00
TRANS STR	0.00179					.000210	0.02							
14016.95 121+13.05	36.39	5.748	42.138	1900.0	4.36	0.296	42.434	0.00	2.694	8.25	75.77	0.00	0	0.00
TRANS STR	0.00000					.000485	0.00					0.00		
14016.96 121+13.04	36.39	5.798	42.188	1900.0	4.02	0.251	42.439	0.00	2.662	8.25	75.77	1.00	0	0.00
TRANS STR	0.00192					.000390	0.02					1.00		
14058.55 120+71.45	36.47	5.794	42.264	1900.0	3.56	0.197	42.461	0.00	2.480	8.25	84.00	1.39	0	0.00
TRANS STR	0.00152					.000295	0.03					1.39		
14144.02 119+85.98	36.60	5.752	42.352	1900.0	3.00	0.140	42.492	0.00	2.233	8.25	98.00	2.08	0	0.00
TRANS STR	0.00144					.000230	0.02					2.08		
14227.28 119+02.72	36.72	5.677	42.397	1900.0	2.74	0.117	42.514	0.00	2.112	8.25	106.00	2.33	0	0.00
TRANS STR	0.00148					.000245	0.01					2.83		
14254.28 118+75.72	36.76	5.653	42.413	1900.0	2.65	0.109	42.522	0.00	2.061	9.50	110.00	3.00	0	0.00
JUNCT STR	0.00000					.000330	0.00					3.00		
14259.28 118+70.72	36.76	5.669	42.429	1840.0	2.56	0.101	42.530	0.00	2.018	9.50	110.00	3.00	0	0.00
5.00	0.00000					.000220	0.00			0.000		3.00		