CRSS

Property of
Flood Control District of MC Library
2801 W.
Phoenix, AZ 85009

ALTERNATIVE ANALYSIS

SOUTHERN PACIFIC BRIDGE NO. 726.25

OVER THE SALT RIVER

TEMPE, ARIZONA

Prepared By

CRSS COMMERCIAL GROUP, INC.
4041 N. Central Avenue, #650
Phoenix, Arizona 85012

For
City of Tempe
Tempe, Arizona

Registered Professional Engineer (Civil)
CERTIFICATE NO.
21573
JIRI
VITEK
Date Signed 6/20/90
ARIZONA, U.S.A.

June 1990

City of Tempe
P.O. Box 5002
31 East Fifth Street
Tempe, AZ 85280
602-350-8371

Tempe

Public Works
Department

FLOOD CONTROL DISTRICT
RECEIVED
JUN 25 1990

Please Return to ZELICK

June 21, 1990

D. Patrick Jumper
Senior Public Projects Engineer
Southern Pacific Transportation Co.
One Market Plaza Room 1001
San Francisco, CA 94105

RE: ALTERNATIVE ANALYSIS SOUTHERN PACIFIC BRIDGE
NO. 726.25 OVER THE SALT RIVER TEMPE, ARIZONA

Dear Pat:

This letter is to formally transmit the above referenced report. The report has been prepared by CRSS with extensive work being done by Jerry Iwinski, S.E. and Jiri Vitek, P.E. Copies are also being mailed to Monterey Park (Attn: Bob Prince) and to Doug Pfeifer in Tucson.

The scheduled advertising date for the proposed ADOT Freeway project and channelization is August 24. If you have not received the 90% channelization plan submittal please call me.

It is imperative that your review and comments are received as soon as possible so that our consultants may finalize the design. Tempe agrees with the recommended alternative(s).

Thank you for your prompt attention to this pressing matter. We look forward to successful completion of this project.

Sincerely,

CITY OF TEMPE

Thomas D. Ankeny, P.E.
Senior Civil Engineer

cc: Jim Jones
Howard Hargis
Steve Neilsen
Dick Perrault, MCFCD
Bob Prince, SPTC
Douglas Pfeifer, SPTC

SOUTHERN PACIFIC RAILROAD

BRIDGE NO. 726.25

OVER THE SALT RIVER

TEMPE, ARIZONA

ALTERNATIVE ANALYSIS

This analysis is an addition to and a refinement of the preliminary report previously submitted.

Three potential problems with this structure were found when analyzed for the design condition. This condition consists of a ~~2500~~ 250,000 cfs flow rate and scour to bedrock within the channel. The Problems are:

1. BRACING The piers each consist of two concrete-filled steel cylinders. There is inadequate bracing to make the cylinders work as a single unit when all surrounding material is scoured away. With the two piers acting individually they are not stable in resistance to overturning. By tying them together the resistance is increased to a point where they will be stable.

2. PIERS 6 THROUGH 8 While the caissons of Piers 6 through 8 were placed nominally to bedrock the as-builts indicate many of them were placed on a bed of grouted aggregate as a leveling surface. We have concerns about the stability of this material under the design scour conditions. Analysis indicates that there is a sufficient factor of safety against overturning and sliding of these piers if there is a stable base.

3. PIERS 3 THROUGH 5 These piers are placed on timber piles. These piles do not go to bedrock at Pier 3 and are shown to bedrock at Piers 4 and 5. With timber piles in this material however it would not be uncommon for piles to be stopped on large material just short of bedrock. Stability cannot be assured for any of these piers in the design scour condition.

   At Pier 2 the bottom of the existing cylinder is above the proposed flow line. As a result the existing piles would be exposed. The proposed ground block would be above the flow line as a result of this.

Several alternative solutions were considered for each of these problems. These solutions have been discussed with the soils engineers as well as a number of contractors to determine their validity and cost.

BRACING

Two configurations were considered to increase the bracing between the two cylinders:

1. The addition of another level of steel bracing below the existing.

   The addition of a bottom strut makes this system much more efficient than the existing system and will adequately make the two cylinders act as a unit for overturning. This greatly increases the stability of the piers.

2. Placement of a reinforced concrete ground block.

   This block would encase the cylinder piers at the ground line and create the required connection between them to make them act as a unit.

PIERS 6 THROUGH 8

Two alternatives were considered to protect the base of the cylinders where they bear on the bedrock:

1. Excavation to the bedrock at the base of the pier and casting of a base of concrete around the cylinders.

   This would provide a shield for the connection of the cylinder to the rock. This method would require the excavation of a large amount of material through this granular soil. In addition the railroad indicated that they would not consider this a safe condition and would not allow the excavation with the bridge under traffic.

2. Placing of injection pipes around the cylinder to bedrock and pressure grouting of the river base to consolidate it into a homogeneous mass.

   This method would not require the excavation of the river bottom. The soil borings do not indicate a significant amount of fines in the river bottom material below the top 10 feet. This would indicate that it should be possible to get good grout dispersion into the soil. However, it is not possible to determine the exact dispersion of the grout below the soil, so it will not be possible to have complete confidence in the protection of the base of the cylinders.

PIERS 3 THROUGH 5

Three solutions were evaluated to provide bearing to bedrock for these piers:

1. Install 8 steel pipe piles to bedrock around the cylinders. Weld shear studs to the steel cylinder shells and encase the cylinders and piles with a reinforced concrete ground block..This ground block will transfer the load from the cylinders to the new piles.

   The ground block will also serve the bracing function described above.

   Due to the nature of the river bottom drilling the holes necessary to place the piles will be difficult. It appears that the best method of placing these holes would be to use a percussive drill. The maximum hole size for this would be 24" diameter. When under the bridge the restricted overhead clearances will prohibit the use of the machinery required to advance the 24 inch pipe. In this case the pipe size would be limited to 18".

   The casing used in the advancement of the hole would be a steel pipe. It appears that the most economical solution would be to leave this casing behind and fill the center with concrete. This would create a large diameter pipe pile.

2. Place 6 caissons 4'-0" in diameter around the existing cylinders. As in the alternative above a reinforced concrete ground block will be used to transfer the load from the cylinders to the caissons.

   The caissons would also require socketing into the bedrock and a hole augured through the river bottom. However there would be 6 larger holes required rather than the 12 slightly smaller holes. The large rock in the river bottom would require the use of a 4 foot minimum diameter caisson in order to assure getting the hole to rock. There are machines able to advance a caisson of this diameter below the bridge but its availability is limited.

   There is a possibility that the auguring of these caissons could cause some settlement of the existing foundations where they are not on bedrock. This only occurs at Pier No. 3 according to the plans of the original foundations.

3. This alternative consists of grouting the area around the pier and between the existing timber piles to provide a solid mass that will not scour out and will be capable of carrying the entire load of the pier. Injection pipes would be placed around the pier and between the piles and the entire area pressure grouted.

This alternate is the least expensive. It also provides the least positive protection. As noted above it will be impossible to have complete assurance of the coverage of the grout. There has been a considerable difference of opinion between the grouting contractors, drilling contractors and soil engineers contacted on the ability of the river bottom to accept the grout. These opinions have ranged from the alluvium being too tight to accept grout to being too open to be able to control the flow of the grout. In fact both problems could exist simultaneously. Layers or pockets of fine materials could prove impermeable to cement grout, while other areas are very open graded and carry grout out of the desired area. This could be particularly a problem around the piers where eddy currents have formed and velocities have been different than the rest of the river. There are methods available, such as the sleeve pipe method of grout placement, which will increase the control of the grouting operation, enabling the contractor to direct the grout to each level individually. In addition, chemical grouts can be used where cement grouts will not penetrate as they have a much lower viscosity, however, their cost is much greater. An additional possible problem is that the placing of the grout pipe could compact and decrease the permeability of the soil around the pipe.

RECOMMENDATIONS

PIERS 6 THROUGH 8

As these piers are basically stable and the only needs are to provide additional bracing and to protect the foundation from additional scour, the least cost alternatives are recommended. These are the additional steel bracing and the grouting of the base of the cylinders. The bearings at rock should be sound, but the additional protection would provide a measure of safety against any deterioration at the interface between the foundation and the rock.

PIERS 3 THROUGH 5

The recommended alternative is the pile placement. This provides a positive bearing to the rock. While the grouting method is much less expensive, the uncertainties involved make this method unsuitable for these conditions. The pile cap also provides the required bracing eliminating the need for the additional steel.

COST ESTIMATE
SOUTHERN PACIFIC BRIDGE NO. 726.25
OVER THE SALT RIVER
TEMPE, ARIZONA

PIERS 6 THROUGH 8
BRACING ALTERNATIVE 1 - STEEL BRACING

ITEM	UNIT	QUANTITY	ESTIMATED UNIT PRICE	ESTIMATED COST
STRUCTURAL STEEL	LB.	11,100	$5	$55,500
STRUCTURE EXCAVATION	C.Y.	96	$15	$1,440
		SUBTOTAL		$55,500
		15% CONTINGENCY		$8,325
		TOTAL		**$63,825**
		SAY		**$64,000**

PIERS 6 THROUGH 8
BRACING ALTERNATIVE 2 - GROUND BLOCK

ITEM	UNIT	QUANTITY	ESTIMATED UNIT PRICE	ESTIMATED COST
CONCRETE	C.Y.	170	$180	$30,600
REINFORCING	LB.	33,700	$0.40	$13,480
WELDED STUDS	EACH	216	$75	$16,200
STRUCTURE EXCAVATION	C.Y.	720	$15	$10,800
		SUBTOTAL		$71,080
		15% CONTINGENCY		$10,662
		TOTAL		**$81,742**
		SAY		**$82,000**

COST ESTIMATE
SOUTHERN PACIFIC BRIDGE NO. 726.25
OVER THE SALT RIVER
TEMPE, ARIZONA

PIERS 6 THROUGH 8
FOUNDATION ALTERNATIVE 1 - GROUT

ITEM	UNIT	QUANTITY	ESTIMATED UNIT PRICE	ESTIMATED COST
MOBILIZATION	L.S.	1	$5,000	$5,000
GROUT PIPES	L.F.	660	$26	$17,160
GROUT	C.F. OF SOIL	10,800	$1	$10,800
		SUBTOTAL		$32,960
		15% CONTINGENCY		$4,944
		TOTAL		$37,904
		SAY		$38,000

PIERS 6 THROUGH 8
FOUNDATION ALTERNATIVE 2 -EXCAVATION & CONCRETE

ITEM	UNIT	QUANTITY	ESTIMATED UNIT PRICE	ESTIMATED COST
MOBILIZATION	L.S.	1	$10,000	$10,000
CONCRETE	C.Y.	140	$50	$7,000
STRUCTURE EXCAVATION	C.Y.	6,500	$14	$91,000
		SUBTOTAL		$108,000
		15% CONTINGENCY		$16,200
		TOTAL		$124,200
		SAY		$124,000

COST ESTIMATE
SOUTHERN PACIFIC BRIDGE NO. 726.25
OVER THE SALT RIVER
TEMPE, ARIZONA

PIERS 3 THROUGH 5
ALTERNATIVE 1 - CONCRETE CAISSONS

ITEM	UNIT	QUANTITY	ESTIMATED UNIT PRICE	ESTIMATED COST
MOBILIZATION	L.S.	1	$40,000	$40,000
CONCRETE	C.Y.	540	$180	$97,200
REINFORCING	LB.	71,500	$0.40	$28,600
CAISSONS (4' DIA.)	L.F.	396	$450	$178,200
WELDED STUDS	EACH	288	$75	$21,600
STRUCTURE EXCAVATION	C.Y.	1,500	$15	$22,500
		SUBTOTAL		$388,100
		15% CONTINGENCY		$58,215
		TOTAL		**$446,315**
		SAY		**$446,000**

PIERS 3 THROUGH 5
ALTERNATIVE 2 - STEEL PILES

ITEM	UNIT	QUANTITY	ESTIMATED UNIT PRICE	ESTIMATED COST
MOBILIZATION	L.S.	1	$30,000	$30,000
CONCRETE	C.Y.	540	$180	$97,200
REINFORCING	LB.	71,500	$0.40	$28,600
24" DIA. PILING	L.F.	288	$200	$57,600
18" DIA. PILING	L.F.	288	$150	$43,200
WELDED STUDS	EACH	288	$75	$21,600
STRUCTURE EXCAVATION	C.Y.	1,500	$15	$22,500
		SUBTOTAL		$300,700
		15% CONTINGENCY		$45,105
		TOTAL		**$345,805**
		SAY		**$346,000**

COST ESTIMATE
SOUTHERN PACIFIC BRIDGE NO. 726.25
OVER THE SALT RIVER
TEMPE, ARIZONA

PIERS 3 THROUGH 5
ALTERNATIVE 3 - GROUTING

ITEM	UNIT	QUANTITY	ESTIMATED UNIT PRICE	ESTIMATED COST
MOBILIZATION	L.S.	1	$20,000	$20,000
GROUT PIPES	L.F.	660	$26	$17,160
GROUT	C.F. OF SOIL	43,200	$1.50	$64,800
		SUBTOTAL		$101,960
		15% CONTINGENCY		$15,294
		TOTAL		**$117,254**
		SAY		**$117,000**

COST ESTIMATE
SOUTHERN PACIFIC BRIDGE NO. 726.25
OVER THE SALT RIVER
TEMPE, ARIZONA

RECOMMENDATIONS

ITEM	UNIT	QUANTITY	ESTIMATED UNIT PRICE	ESTIMATED COST
PIERS 3 THROUGH 5				
ALTERNATIVE 2 - STEEL PILES				
MOBILIZATION	L.S.	1	$30,000	$30,000
CONCRETE	C.Y.	540	$180	$97,200
REINFORCING	LB.	71500	$0.40	$28,600
24" DIA. PILING	L.F.	288	$200	$57,600
18" DIA. PILING	L.F.	288	$150	$43,200
WELDED STUDS	EACH	288	$75	$21,600
STRUCTURE EXCAVATION	C.Y.	1500	$15	$22,500
		SUBTOTAL		$300,700
		15% CONTINGENCY		$45,105
		TOTAL		**$345,805**
PIERS 6 THROUGH 8				
BRACING ALTERNATIVE 2 - STEEL BRACING				
STRUCTURAL STEEL	LB.	11,100	$5	$55,500
STRUCTURE EXCAVATION	C.Y.	96	$15	$1,440
		SUBTOTAL		$55,500
		15% CONTINGENCY		$8,325
		TOTAL		**$63,825**
PIERS 6 THROUGH 8				
FOUNDATION ALTERNATIVE 2 - GROUT				
MOBILIZATION	L.S.	1	$5,000	$5,000
GROUT PIPES	L.F.	660	$26	$17,160
GROUT	C.F. OF SOIL	10,800	$1	$10,800
		SUBTOTAL		$32,960
		15% CONTINGENCY		**$4,944**
		TOTAL		**$37,904**
TOTAL WORK=				**$447,534**
			SAY	**$450,000**

CRSS			
PROJECT: S.P.R.R. OVER SALT RIVER	JOB NO.: R10IN		NO.: 18
CLIENT: CITY OF TEMPE	DESIGNED BY: LRT	DATE: 6-13-90	
SUBJECT: PIERS 6, 7, AND 8 – ALTERNATE 1	CHECKED BY: SAW	DATE: 6-14-90	OF

STEEL DESIGN FOR NEW BRACING

Loads in Exist. Bracing Condition

2 L's 6×6×1/2

Assuming A36 steel

Assume Angles are 6×6×1/2 pairs

$F_y = 30{,}000$ psi $K = .8F_y$

$l_u = \sqrt{102^2+92^2}/2 = 6.72' = 80.64''$ (Considered Braced in both directions @ ctr)

$A = 11.5\ in^2$ $r_x = 1.86in$

Total Compressive Stress in Diagonal Bracing Member (Pier 8) $= 14.5k + 47.6k = 62.1k$

$\frac{kl}{r} = \frac{3/4(80.64)}{1.86} = 32.5''$

Allowable Compressive Stress for Axially Loaded Member $= 1.091K - \frac{K\sqrt{F_y}}{37{,}300}\frac{kl}{r}$

AREA 15-7.3.4.3

$K = .8(30{,}000) = 24{,}000$ psi

$F_a = 1.091(24{,}000) - \frac{24{,}000\sqrt{30{,}000}}{37{,}300} \times 32.5'' = 22{,}562$ psi

Use $F_a = 22.6$ ksi $\times 1.25 = 28$ ksi 25% for including wind

$f_a = \frac{62.1K}{11.50in^2} = 5.4$ ksi < 28 ksi

Bracing would not fail under maximum load condition

CRSS	PROJECT: I.P.R.R. OVER SALT RIVER	JOB NO.: RIOIN		NO.
	CLIENT: CITY OF TEMPE	DESIGNED BY: LRT	DATE: 6-13-90	A
	SUBJECT: PIERS 6, 7, AND 8 - ALTERNATE 1	CHECKED BY: SAW	DATE: 6-14-90	OF

NEW BRACING CONDITION

Check for Pier 8 $h = 41'$

Because of increased bracing treat bracing as being very stiff

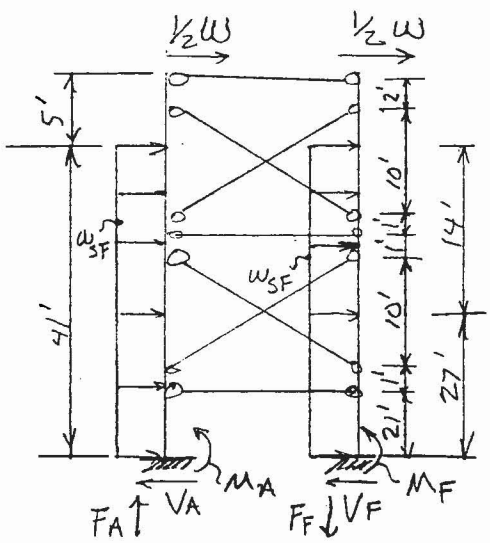

Actual Model

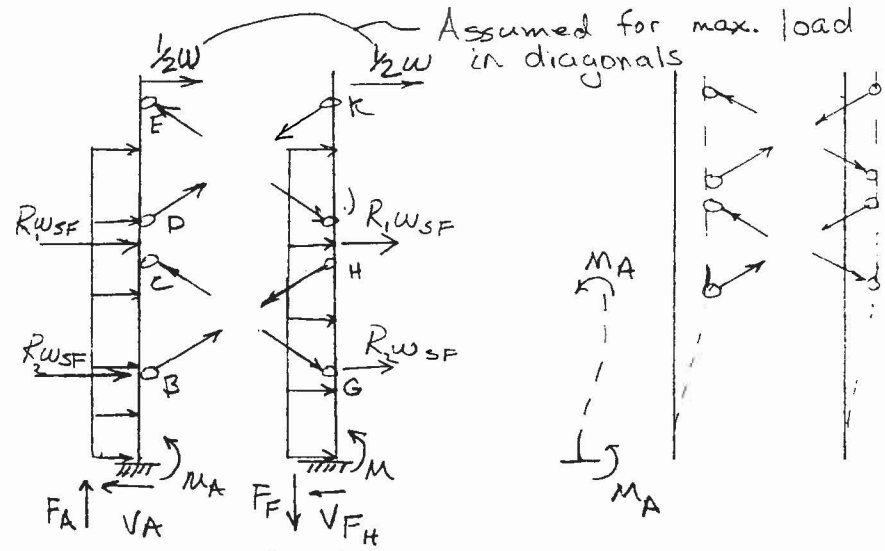

Model for Computing Forces

$\frac{1}{2}W = 91.5/2/2 = 23.0\,K$

$R_1 w_{SF} = .77\,K/'(14) = 10.8\,K$

$R_2 w_{SF} = .77\,K/'(27) = 20.8\,K$

$V_A = V_E = 54.6\,K$

$M_A = M_F = 54.6\,K(21')/2 = 573.3'\,K$

$CG_x = BH_x = 23.0 + 10.8 = 33.8\,K$

$CG = BH = 33.8\,(13.5/9) = 50.7\,K$

Use 2 ∠'s 6×6×½ as indicated by previous calculations

$F_A = 607.1 - 21.5 - 70.6 - 128.4 = 386.6\,K$

Min. Vert. Stress = 386.6/50 = 7.7 ksf

Max. Bend. Stress = 573 (4.0) / 201 = 11.4 ksf

Resultant location = 2.2' from end - Inside the middle ½

Stress in Bracing = $\frac{50.7}{11.5} = 4.4\,ksi$

CRSS	PROJECT: S.P.R.R. OVER SALT RIVER	JOB NO.: RIDIN	NO.: 20
	CLIENT: CITY OF TEMPE	DESIGNED BY: LRT / DATE: 6-13-90	
	SUBJECT: PIERS 5,7 AND 8 ALTERNATE 1	CHECKED BY: SAW / DATE: 6-14-90	OF

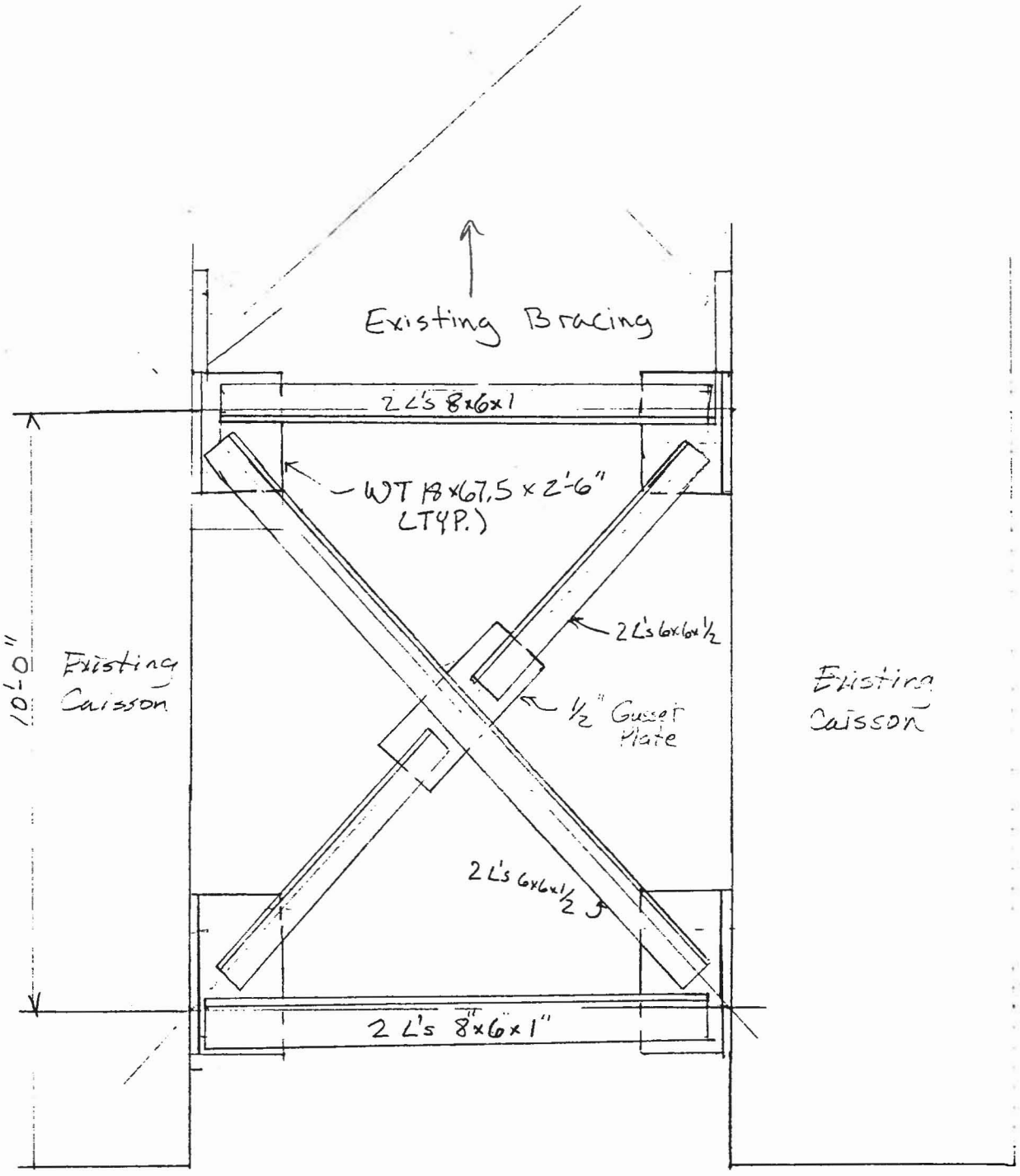

NEW BRACING STEEL

CRSS	PROJECT: S.P.R.R. OVER SALT RIVER	JOB NO.: R10IN	NO. 21
	CLIENT: CITY OF TEMPE	DESIGNED BY: LRT / DATE: 6-13-90	
	SUBJECT: PIERS 6,7, AND 8 - ALTERNATE 2	CHECKED BY: SAW / DATE: 6-14-90	OF

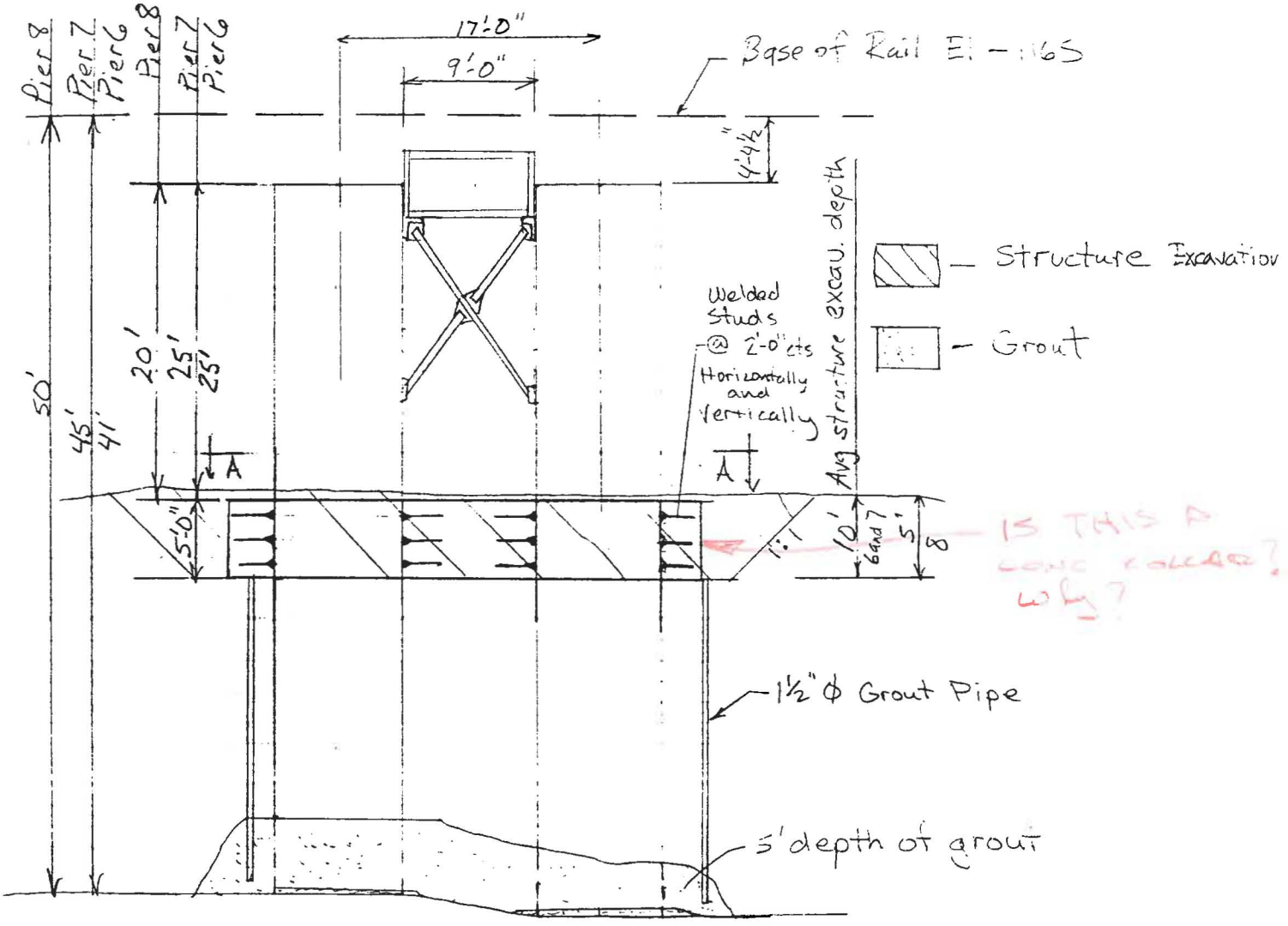

ELEVATION

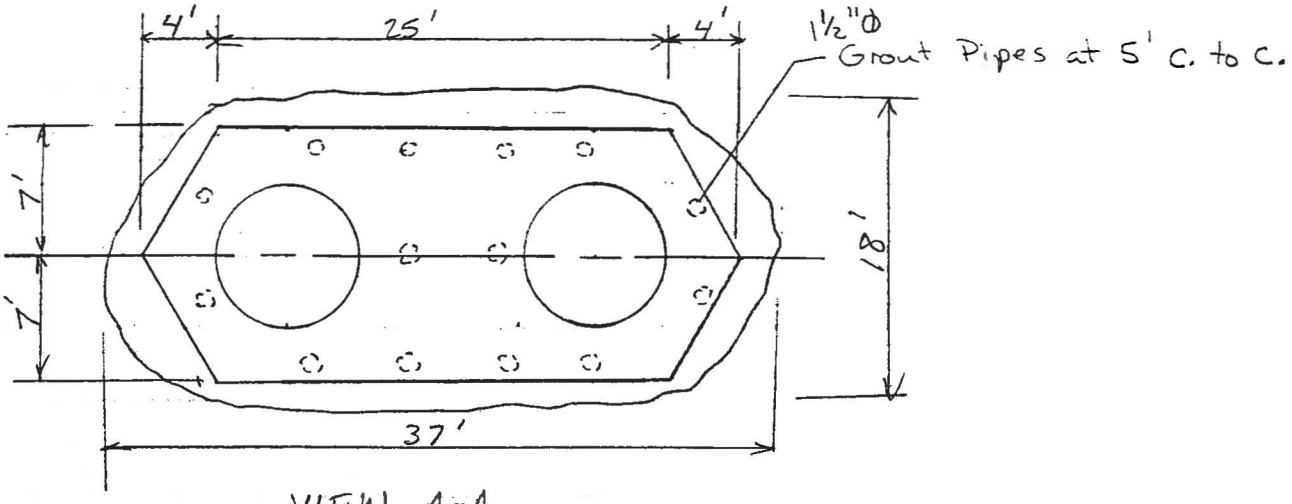

VIEW A-A

CRSS			
PROJECT: S.P.R.R. OVER SALT RIVER	JOB NO.: RIDIN		NO.: 22
CLIENT: CITY OF TEMPE	DESIGNED BY: LRT	DATE: 6-13-90	
SUBJECT: PIERS 6,7,8	CHECKED BY: SAW	DATE: 6-14-90	OF

Determine Thickness of Concrete Collar
Providing Similar Adequacy as Steel Bracing

Axial Load in Steel Bracing is approx. 25% of allowable as calculated

Determine thickness of concrete for an uncracked concrete condition. Concrete will be reinforced. Therefore condition is conservative with relation to the bracing

Try 5' depth

Moment in Collar = 54.6k × 23'/2 = 628'k

Min cracking stress = .21 fr = .21 × 7.5$\sqrt{3500}$ = 93.2 psi
not considering reinfor. (AASHTO

Use width = 12' $\quad S = \frac{12 \times 5^2}{6} = 50.0\ ft^3 = 86{,}400\ in^3$

$$\frac{M}{S} = \frac{628 \times 12 \times 1000}{86{,}400} = 87.2\ psi < 93.2\ psi$$

Thickness required for uncracked concrete - use 5'-0" depth

CRSS			
PROJECT: S.P.R.R. OVER SALT RIVER	JOB NO.: RIDIN		NO.: 23
CLIENT: CITY OF TEMPE	DESIGNED BY: LRT	DATE: 8-3-90	
SUBJECT: PIERS 3, 4, AND 5 ALTERNATE 1	CHECKED BY: [illegible]	DATE: [illegible]	OF

H-Pile Redesign

Consider HP-14×89 $A = 26.1\ in^2$ $S_x = 131\ in^3$

D+L - No sidesway

Pier 3 - 355 + 463 + 652 = ~~1442~~ 1470

Assume 6 piles / caisson

Load / Caisson = ~~1442~~ 1470 / 6 = ~~235.3~~ 245 K

Note: Due to stiffn of cap bending should not be transferred to the piles

K = .65 No sidesway

$$\frac{Kl}{r_y} = \frac{.65 \times 16 \times 12}{3.53} = 35.3$$

$F_a = 21{,}500 - 100(35.3) = 17{,}970$ psi Use 18.0 ksi

$f_a = P/A = \frac{245}{26.1} = 9.4$ ksi < 18.0 ksi OK

Piers 4 and 5 - 283 + 503 + 652 = 1438K

Load / caisson = 1438/6 = 240K ← 125 Ton Pile

$$\frac{Kl}{r_y} = \frac{.65 \times 10 \times 12}{3.53} = 22.1$$

$F_a = 21{,}500 - 100(22.1) = 19{,}290$ psi = 19.3 ksi

$f_a = 252/26.1 = 9.7$ ksi 9.7 < 19.3 OK

CRSS

PROJECT: S.P.R.R. OVER SALT RIVER	JOB NO.: R10IN		NO. 24
CLIENT: CITY OF TEMPE	DESIGNED BY: LRT	DATE: 6-13-90	
SUBJECT: PIERS 3, 4, AND 5 ALTERNATE 2	CHECKED BY: [illegible]	DATE: [illegible]	OF

Allowable Load

Factor of Safety must not be less than 2.0 for [illegible]. Slenderness consideration and lateral bending treats the section as a column

Group I - D+L+SF+B

Area of Cap $= 31 \times 16 - 2\pi(4^2) - 2(4)(3) - 2(3^2) = 353\,SF$ 177 SF / Caisson

$\gamma = 62.4$ lb/cf

Weight of Water on Cap during High Water

Pier 3 (Caisson) $d = 14'$ 190K

Piers 4 and 5 (Caisson) $d = 20'$ 271 K

wt / Cap

$177(10) + 38(3) = 1884$ CF

$wt = 1884(.15) = 283$ K

Bouyancy = 141.6K for Cap

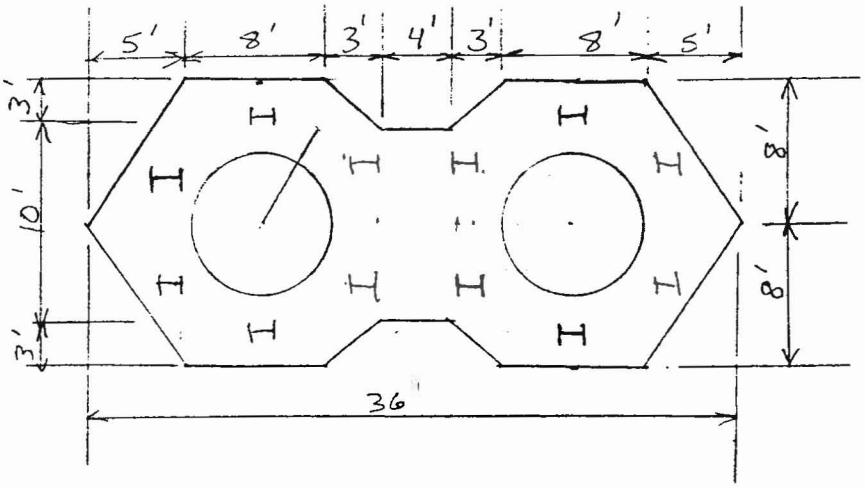

Section Properties of Pile Group around Caisson

$\Sigma d^2_{Y-Y/caisson} = 4(6^2) = 144$ pile ft²

Pier 3 - Max Loads / Pile

$P = 283 + 463 + 652 + 2.5 + 190 - 185.5 = \cancel{1377}\ 1406$ K

$P/n = \frac{\cancel{1377}\ 1406}{6} = \cancel{235}\ 234$ K/Pile $\quad \frac{Md}{\Sigma d^2} = \frac{64(6)}{144} = 2.7$ K/Pile

Max Pile Load $= 235 + 3 = \cancel{238}\ 237$ K

Mom @ Base $= 16.6/6 \times 16/2 = 22'$K

Stress/Pile $= \frac{\cancel{238}\ 237}{26.1} + \frac{22(12)}{131} = 11.1$ ksi

$11.1 < 15.0$ OK

Allowable Axial Stress

Sidesway - $K = 1.2$ $\quad \frac{kl}{r_y} = \frac{1.2 \times 16 \times 12}{3.53} = 65.3$

$F_a = 21{,}500 - 100(65.3) = 14{,}970$ psi $= 15.0$ ksi OK

CRSS				
PROJECT: S.P.R.R. OVER SALT RIVER	JOB NO. R10IN		NO. 25	
CLIENT: CITY OF TEMPE	DESIGNED BY LRT	DATE 6-13-90		
SUBJECT: PIERS 3, 4, AND 5 ALTERNATE 2	CHECKED BY SAW	DATE 6-14-90	OF	

Pier 4 - Max Loads / Pile
and 5

$P = 283 + 503 + 652 + 5.2 - 204.3 + 271 = 1510K$ $\quad P/n = \frac{1510}{6} = 252K$

$M = 64 + 360 = 424'K$ $\quad Md/\Sigma d^2 = 131(6)/144 = 6K$

Max. Pile Load = 252 + 6 = 258 K

Mom @ Base = 21.2K/6 × 10/2 = 18 'K

Stress / Pile = $258/26.1 + \frac{18(12)}{131} = 11.5$ ksi

$Kl/r_y = \frac{1.2 \times 10 \times 12}{3.53} = 40.8$ $\quad F_a = 21{,}500 - 100(40.8) = 17{,}420 = 17.4$ ksi

11.5 ksi < 17.4 ksi

Group III - D+L+SF+WL+B

Pier 3 - Max Loads / Pile

$P = 283 + 463 + 652 + 2.5 + 34.4 + 190 - 185.5 = 1439.4$ K

$P/n = \frac{1440}{6} = 240K$ $\quad \frac{Md}{\Sigma d^2} = \frac{424(6)}{144} = 18K$

Max Pile Load = 258K

Mom @ Base = 42.1/6 × 16/2 = 56 'K

Stress / Pile = $258/26.1 + \frac{56(12)}{131} = 14.8$ ksi

Allowable Stress = 15.0 × 1.25 = 18.8 ksi $\quad$ 14.8 ksi < 18.8 ksi ✗

Piers 4 and 5

P = 1555 K $\quad P/n = 259K$

$M = 131 + 470 = 601'K$ $\quad M/s = \frac{601(6)}{144} = 25K$

Max. Pile Load = 259 + 25 = 284 K

Mom @ Base = 46.7/6 × 10/2 = 39 'K

Stress / Pile = 284/26.1 + 39(12)/131 = 14.5 ksi

Allowable = 17.4 × 1.25 = 21.8 ksi $\quad$ 14.5 ksi < 21.8 ksi

Because of 2.0 F.S. Reqt - Use HP14×117 Piles

CRSS

PROJECT: S.P.R.R. OVER SALT RIVER	JOB NO.: RIOIN		NO.: 25A
CLIENT: CITY OF TEMPE	DESIGNED BY: LRT	DATE: 6-13-90	
SUBJECT: PIERS 3, 4, AND 5 - ALTERNATE 2	CHECKED BY:	DATE:	OF

HP 4×117 Piles $A = 34.4\ in^2$ $S_x = 72\ in^3$

$r_y = 3.53$

Check for Pier 3 - Group I

$$\text{Stress/Pile} = \frac{237}{34.4} + \frac{22(12)}{172} = 8.4\ \text{ksi}$$

$$Kl/r_y = \frac{1.2 \times 16 \times 12}{3.56} = 64.7 \qquad F_a = 21{,}500 - 100(64.7) = 15.0\ \text{ksi}$$

$$F.S. = 15/8.4 = 1.8$$

Check for Piers 4 and 5 - Group I

$$\text{Stress/Pile} = 258/34.4 + \frac{18(12)}{172} = 8.8\ \text{ksi}$$

$$F_a = 17.5\ \text{ksi} \qquad F.S. = 17.5/8.8 = 2.0$$

Check for Pier 3 - Group III

$$\text{Stress/Pile} = 258/34.4 + \frac{56(12)}{172} = 11.4\ \text{ksi}$$

Allowable Stress = 15 × 1.25 = 18.8 ksi

$$F.S. = 18.8\ \text{ksi}/11.4\ \text{ksi} = 1.65$$

Check for Piers 4 and 5 - Group III

$$\text{Stress/Pile} = 284/34.4 + 39(12)/172 = 11.0\ \text{ksi}$$

$$F.S. = 21.8\ \text{ksi} / 11.0\ \text{ksi} = 2.0$$

CRSS

PROJECT: S.P.R.R. OVER SALT RIVER	JOB NO. 4IOIN		NO. 25B
CLIENT: CITY OF TEMPE	DESIGNED BY: LRT	DATE: 6-12-90	
SUBJECT: PIERS 3,4 AND 5 - ALTERNATE 7	CHECKED BY: DCK	DATE: 6/18/90	OF

STEEL H-PILE REPLACED BY CONCRETE FILLED PIPE PILE

Consideration made due to necessity for driving pipe

12 PILE ARRANGEMENT

Assume 1400 K / Caisson Vertical Load - D+L

$f'_c = 3500$ psi $n = 8$ for steel pipe

1" thick steel pipe

$\frac{1400}{6 \text{ piles}} = 233$ K/pile

$A_{c_g} = \pi(9^2) = 254.5 \text{ in}^2$

$A_{steel} = 8(\pi(10^2 - 9^2)) = 477.5 \text{ in}^2$
(composite)

$A_{comp} = 254.5 + 477.5 = 732.0 \text{ in}^2$

$f_c = P/A = 233/732 = .32$ ksi

Allowable max. compressive stress $= .25 f'_c = .25 \times 3500 = 875$ psi

.32 ksi < .875 ksi F.S. = .875 / .32 = 2.7

2.7 > 2.0 OK Use 6 Conc. filled Pipe piles

Check Group III - Bending Applied

Max. Pile Load = 1440/6 + 18K = 258K M = 56'K

I_{xx} of composite beam

$I_{x\ steel} = \frac{1}{4}\pi(10^4 - 9^4) = 2700 \text{ in}^4$ $S_x = 2700/10 = 270 \text{ in}^3$

Assume 1/3 steel used for tension $nA_s f_c(jd) = M$

Assume jd = 12" $f_b = \frac{56(12)}{12 \times 8 \times 20} = .35$ ksi

Max comp stress = .32 + .35 = .67 ksi < .875 ksi × 1.25 OK

CRSS			
PROJECT: S.P.R.R. OVER SALT RIVER	JOB NO. RIDIN		NO. 25
CLIENT: CITY OF TEMPE	DESIGNED BY LRT	DATE 6-18-90	
SUBJECT: PIERS 3 & 4 ANDS - ALTERNATE 2	CHECKED BY DCK	DATE 6/18/90	OF

Alternate 8 mixed Piles Arrangement

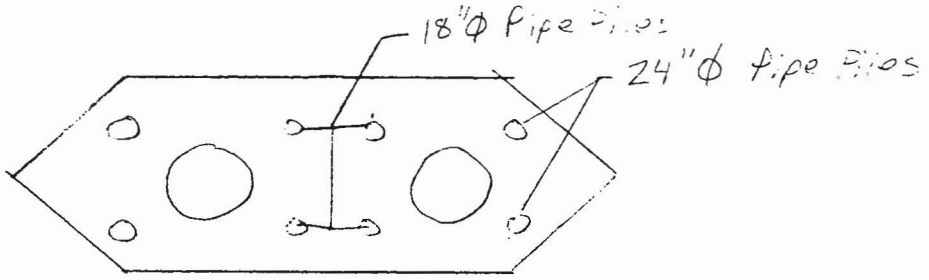

Because of larger exterior piles the interior 18"Φ piles control.

The interior 4 piles resist ½ the total vertical load of the pier

Max. Vertical Load = $\frac{381 + 503 - 652}{4}$ + 8K/pile = 392k/pile

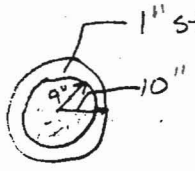

$A_{cg} = \pi(9^2) = 255 in^2$

$A_{steel} = 8(\pi(10^2 - 9^2)) = 478 in^2$

$f_c = P/A = 392/732 = .54$ ksi < .875 ksi - .25 f'c
1.05 ksi - .3f'c

Check for Group III

$M = 56 \times \frac{12}{8} = 84'k$ Use Max pile Load = 392k/pile

Assume ⅓ steel used for tension

$M = nA_s f_c jd$ jd = 12" (cons. assumed)

$f_c = \frac{84(12)}{12 \times 8 \times 20} = .525$ ksi

Max. comp. stress = .54 + .53 = 1.07k

Allowable stress = .875 × 1.25 = 1.09 ksi

This analysis assumes no extra capacity aquired from 24" piles. -(Conservative) OK.

Assume Bearing Pressure = 40 TSF at base of piles

CRSS			
PROJECT: S.P.R.R. OVER SALT RIVER	JOB NO.: RIDIN		NO.: 26
CLIENT: CITY OF TEMPE	DESIGNED BY: LRT	DATE: 6-13-90	
SUBJECT: PIERS 3,4,5 STABILIZATION WORK — ALTERNATE 1	CHECKED BY: SAW	DATE: [illegible]	OF

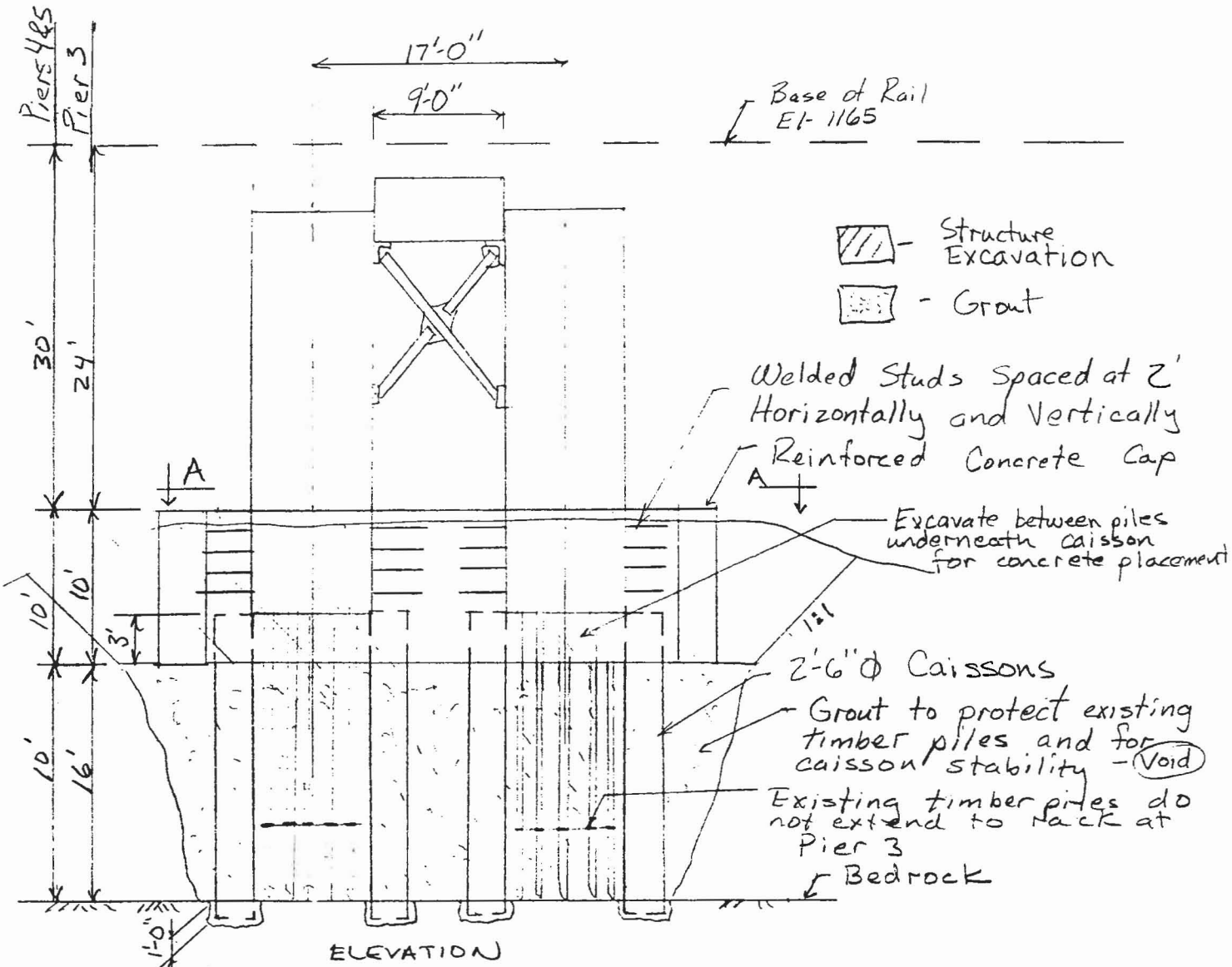

ELEVATION

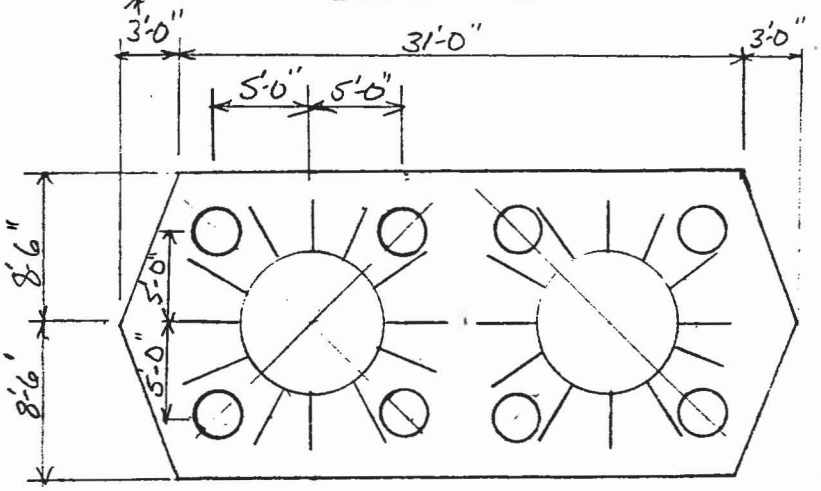

VIEW A-A

CRSS			
PROJECT: S.P.R.R OVER SALT RIVER	JOB NO. R10IN		NO. 27
CLIENT: CITY OF TEMPE	DESIGNED BY LRT	DATE 6-13-90	
SUBJECT: PIERS 3,4, AND 5 STABILIZATION WORK — ALTERNATE 1	CHECKED BY SAW	DATE 6-14-90	OF

CAISSON LOADS

Section Properties of Caisson Group around Individual Caisson

Σd^2_{y-y} / Caisson $= 4(5^2) = 100$ caisson-ft^2 (Neglecting

A / Caisson $= \pi(2.5^2)/4 = 4.91$ sq ft I / caisson $= \frac{1}{4}\pi(.15)^4 = \cancel{39760}$ 3474.

Weight / Caisson Pier 3 - $4.91(11)(.15) = 8.1$ K / Caisson

Piers 4 & 5 - $4.91(17)(.15) = 12.5$ K / Caisson

Bouyancy for Stream Flow Pier 3 - $4.91(10)(.0624) = -3.1$ K / Caisson

Piers 4 & 5 - $4.91(16)(.0624) = -4.9$ K / Caisson

New Cap - ½ Pier $= [((15.5\times17 + \tfrac{1}{2}\times3\times17)(10) - \pi(4^2)(7)].15 = 381$ K

Weight of Water on Cap Pier 3 - 190 K; Piers 4 and 5 - 271 K

Group I - D+L - $\frac{381+503+652}{4} + 8.1 = 392.1$ K / Caisson

Assume for size $f_c = .25 f'_c$ - AREA calls for $.3 f'_c$

$f_c = .25(3500) = 875$ psi $= .875$ ksi
allowable

$f_c = \frac{392.1}{4.91\times144} = .554$ ksi $.554 < .875$ OK

Group I - D+L+SF+B - Piers 4 and 5

$P/n + \frac{Md}{\Sigma d^2} = \frac{381+503+652+5.2+12.5+271-231.7-4.9}{4} + \frac{131(5)}{100} = 403.6$K

Moment @ Top of Caisson $= 21.5$K$/4 \times 10' = 54'$K

Assuming No Reinforcement
Check stress in Caisson $f_c = \frac{403.6}{4.91\times144} + \frac{54\times12\times18}{39760} = .86$ ksi OK $.86 < .875$ close
slenderness not consid

Group III - $\frac{381+503+652+5.2+44.6+12.5+271-232.7-4.9}{4} + \frac{(131+470)(5)}{100} = 438.0$K

Moment @ Top of Caisson $= 47.3/4 \times 10 = 118'$K

$f_c = \frac{438.0}{4.91\times144} + \frac{118\times12\times15}{39760} = 1.15$ ksi > 1.09 ksi Use 3'-0" ϕ Caisson

CRSS

PROJECT: S.P.R.R. OVER SALT RIVER	JOB NO.: RIVIN		NO. 27A
CLIENT: CITY OF TEMPE	DESIGNED BY: LRT	DATE: 6-13-90	
SUBJECT: PIERS 3, 4, AND 5 - ALTERNATE 1	CHECKED BY: [illegible]	DATE: [illegible]	OF

CAISSON LOADS

Due to Soil Make-Up

Caisson Arrangement changed to 6-4'-0"ϕ Caissons

Caissons are socketed into rock 5'-0"

(This reduces the moments by 1/2)

$A/\text{caisson} = \pi(4^2)/4 = 12.6\ ft^2$

$I/\text{caisson} = \frac{1}{4}\pi(2)^4 = 12.6\ ft^4$

Assume 2 new caissons / Existing Caisson Load

Group I - D+L $\quad \dfrac{381 + 503 + 652 + 22}{2 \text{ new caissons}} = 779\ K$

$f_c = \dfrac{779}{12.6 \times 144} = .429\ ksi \qquad .429 < .875$

Despite the reduction in the number of caissons, there is increased stiffness overall and because the caissons are socketed into rock 5' the moments and moment magnification factors are reduced overall

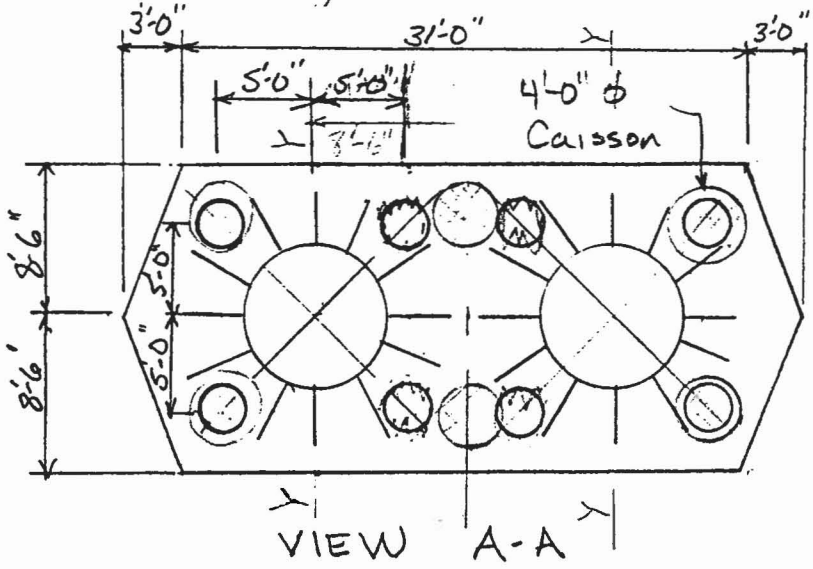

VIEW A-A

CRSS

PROJECT: S.P.R.R. OVER SALT RIVER	JOB NO. [illegible]		NO. 29
CLIENT: CITY OF TEMPE	DESIGNED BY: [illegible]	DATE: 6-13-90	
SUBJECT: PIERS 3, 4, AND 5 ALTERNATIVE 2	CHECKED BY: [illegible]	DATE: [illegible]	OF

QUANTITIES

Concrete

$$\frac{(31\times16 - 2\times4\times3 - 2\times3^2 \times 10 + 2\pi(4^2)(10) + 2\pi(4')(1)(3)}{27} = 133.7 \text{ CY/Pier}$$

= 420 CY/3 Piers

Use 140 CY depending on more concrete under caisson

Reinforcement

1% of the Volume .01 × 140 × 27 × 490 = 18,522 lb/Pier

55,600 lb/3 Piers

Structure Excavation

Same as computed previously 1431 CY/3 = 477 CY/Pier

1431 CY/3 Piers

Steel Concrete Filled Pipe Piles

Lineal Ft = 24"ø - 12 × 22' avg = 264'
12"ø - 12 × 22' avg = 264'

Use 288' for possible increase in vertical length

Welded Studs

48 × 2 = 96 studs/pier 288 studs/3 Piers

Concrete (Revised)

Same concrete as Alternative 1 - 540 CY

Quantities were revised to reflect the latest changes. Alternative 1 and Alternative 2 caps are the same

CRSS			
PROJECT: C.P.R.R. OVER SALT RIVER	JOB NO.: RIOIN		NO.: 29
CLIENT: CITY OF TEMPE	DESIGNED BY: LRT	DATE: 6-13-90	
SUBJECT: PIERS 3, 4 AND 5 STABILIZATION ALTERNATIVE 1	CHECKED BY: SAW	DATE: 6-[illegible]-90	OF

PIERS 3, 4, AND 5
QUANTITIES

Concrete - $\frac{[34 \times 17 - 2\pi(4^2)]10 - 6(\pi)(2^2)(3) + 2(2\pi(4)(1)(3))}{27}$ = 179.5 CY/Pier

Use 530 CY/3 Piers

Reinforcement - .01 × 540 × 27 × 490 = 71,500 LB

Structure Excavation - 551 / 526 × 1431 = 1500 CY

Caissons - 4'-0"Ø (Lineal Feet)

Concrete - 16 × 14' × π × 3.0²/4 / 27 = ~~58.2~~ CY 55.6

See revision 8 × 20' × π × 3.0²/4 / 27 = ~~41.5~~ CY 41.8

~~99.7~~ CY 100.4

Reinforcement - Assume 2% of the concrete volume

.02 × 99.7 × 27 × 490 = 26,400 LB

Consider $400/CY for excavating hole + concrete

$.40/LB for rebar

400 × 100 + .40 × 26,400 = $50,560

Lineal Ft of 2'-6"Ø Caisson - 16(14) + 8(20) = 384 L.F.

Cost/L.F. = $132/LF $85/LF was priced

Welded Studs - 3' long

Number = 288 Studs

Caissons - 6-4'-0"Ø Caissons used

3' embedment into cap
5' embedment into rock

Piers 3 - 10' unbraced length
Pier 4 and 5 - 16' unbraced length

3 Piers × 6 caissons × 22' avg length = 396 lin ft

CRSS				
PROJECT: S.R.P.M.C. OVER SALT RIVER	JOB NO. RIDIN		NO. 30	
CLIENT: CITY OF TEMPE	DESIGNED BY LRT	DATE 6-13-90		
SUBJECT: PIERS 2 + AND 5 - ALTERNATE 3	CHECKED BY SMW	DATE 6-14-90	OF	

QUANTITIES

ALTERNATIVE 3

GROUT - Assume Grouted Area 40'×18'

14 pipes - 20' depth - $6/LF = 14×20×6 = $1,680

Assume 8% voids in area

Volume to Grout = 40'×18'×20' − 2π4²×20 = 12,390

.08 × 12,390 = 991 CF

991 CF × $50/CF = $49,550

Use $51,230 /Pier

3 Piers × $51,230 = $153,690

Use $160,000 for the 3 piers

Revised Grout Quantities

Length of Pipe - 11 pipes × 20'/pipe × 3 piers = 660 lin ft

Volume of Soil = 60 × 36 × 20 = 43,200 CF

Area of Caissons not taken into consideration. This considered due to possible widening of grout

CRSS			
PROJECT: S.P. R.R. OVER SALT RIVER	JOB NO.		NO.
CLIENT: CITY OF TEMPE	DESIGNED BY: CRT	DATE: 6-13-90	51
SUBJECT: PIERS 6,7,8 ALTERNATIVE 1	CHECKED BY: SAW	DATE: [illegible]	OF

QUANTITIES

Steel Bracing Addition
Furnishing and Erecting — Determine Weight

Tee connections – 4 Tees × 67.5 × 2.5 = 675 lb
Top and Bottom – 2 × 8.67' × 88.4 lb/l = 1533 lb
Diagonals – 2 × 13.5' × 39.2 lb/l = 1058 lb
Gusset PL – 4' × 1' × .042' × 490 lb/CF = 82 lb

3348 lb
Add 10% 335 lb
3683 lb

Use 3700 lb / Pier
11,100 lb / 3 Piers

Structure Excavation for Bracing Placement

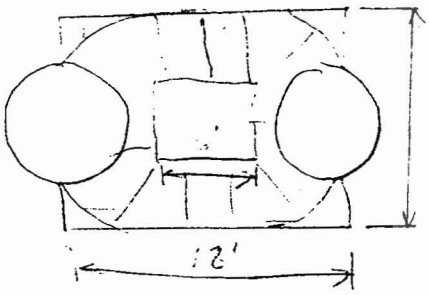

6' deep

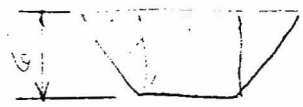

Volume

$\frac{12 \times 12 \times 6}{27}$ = 32 CY / Pier 96 CY / 3 Piers

Grout – Grout Pipe – 14 pipes × 20' × $6/LF = $1680

Volume to Grout 40' × 18' × 5' − 2π4²×5' = ~~3500~~ CF 3097.6
08 × 3100 = ~~110~~ CF ~~124 CF~~ 248
248 CF × $50/CF = ~~$7000~~ ~~$6200~~ 12,400

Total / Pier = $14080 / Pier Use $15,000 / Pier

Use $45,000 for 3 Piers

Grout – Revised – Length of Pipe = 600 ft
Soil 60 × 36 × 5 = 10,800 CF

CRSS			
PROJECT: S.P.R.R. OVER SALT RIVER	JOB NO.: 81031N		NO.
CLIENT: CITY OF TEMPE	DESIGNED BY: LRT	DATE: 6-13-90	
SUBJECT: PIERS 6, 7, 8 - ALTERNATIVE 2	CHECKED BY: DAW	DATE:	OF

QUANTITIES

Concrete

$$\frac{29 \times 14 \times 5 - 2\pi(4^2)5}{27} = 56.5 \text{ CY}$$

Ground Block

$56.5 \times 3 = 170$ CY / 3 Piers

170 CY/3 Piers - Base Block

Reinforcement - Ground Block Only

Consider 1.5% the Volume is the Reinforcement Quantity

$.015 \times 56.5 \times 27 = 22.9$ CF

$22.9 \text{ CF} \times 490 \text{ lb/CF} = 11221 \text{ lb} - 11{,}220 \text{ lb/Pier}$

33,660 lb
3 Piers

Structure Excavation for Collar Placement

$$\frac{(29+5) \times (14+5) \times 5'}{27} - 2\pi(4^2)5 = 101 \text{ CY} - \text{Pier 8}$$

$$\frac{(29+10) \times (14+10) \times 10'}{27} - 2\pi(4^2)10 = 309 \text{ CY} \times 2 = 619 \text{ CY} - \text{Piers 7+6}$$

720 CY Piers 6 thru 8

Welded Studs

$12 \times 3 \times 2 = 72$ studs/pier $\quad 72 \times 3 = 216$ studs/3 piers

Grout - Same as Alternative 1

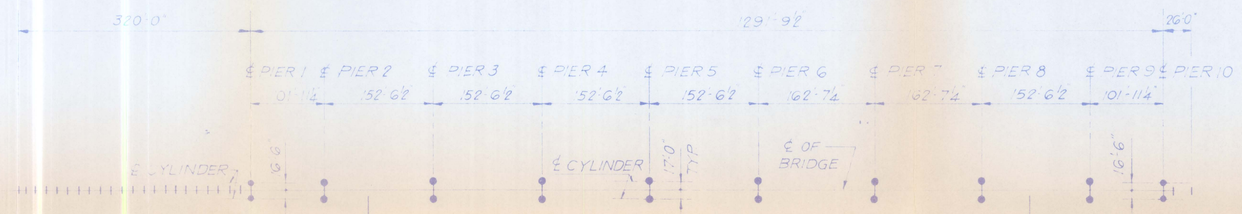

EXISTING PLAN

SCALE 1" = 50'

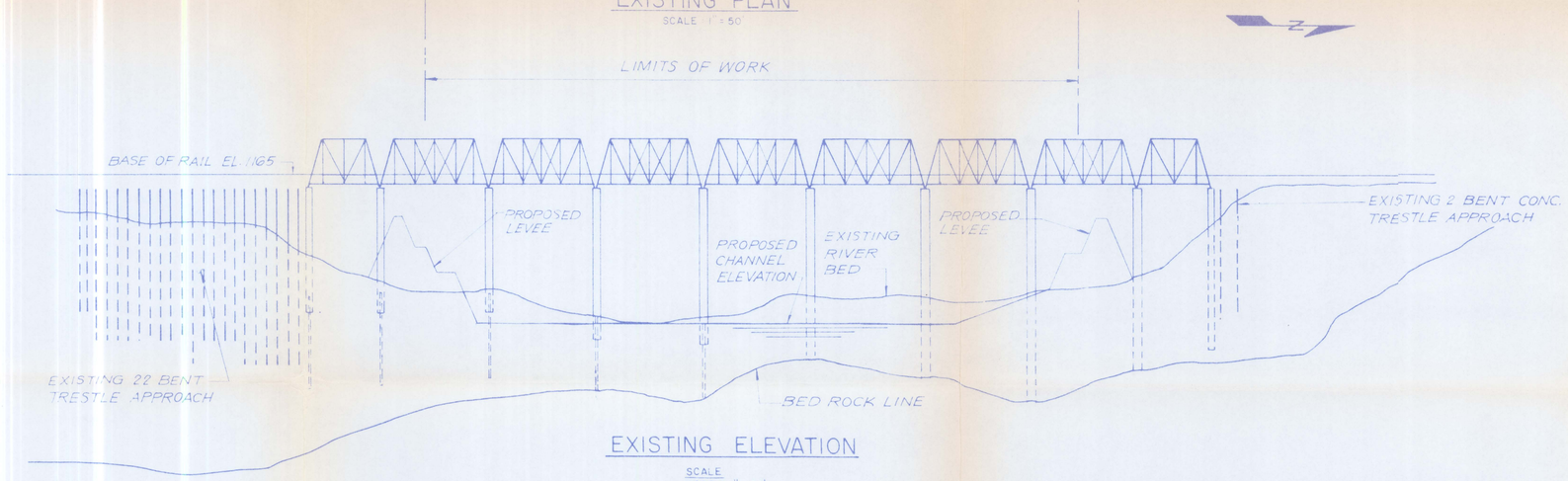

EXISTING ELEVATION

SCALE
HORZ. 1" = 50'
VERT. 1" = 15'

CONSTRUCTION NOTES

NO.	DATE	DESCRIPTION	APPROVAL
3			
2			
1			

REVISIONS

CRSS, INC.
PHOENIX, ARIZONA

RIO SALADO
CHANNEL DESIGN

DEPARTMENT OF PUBLIC WORKS
CITY OF TEMPE
DIVISION OF ENGINEERING
P.O. BOX 5002 TEMPE, ARIZONA

DESIGNED:
DRAWN:
APPROVED:
SCALE:

PLAN AND ELEVATION
EXISTING STRUCTURE

DATE
PROJECT NO.
SHT. 1 OF 3

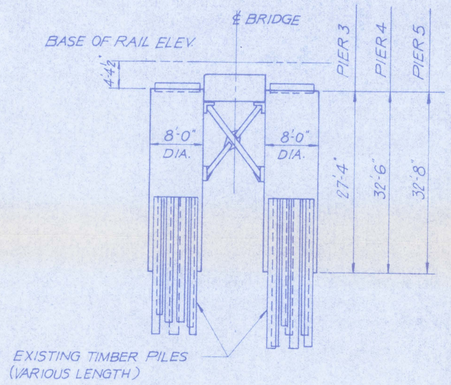

EXISTING ELEVATION

PIERS NO. 3, 4 & 5

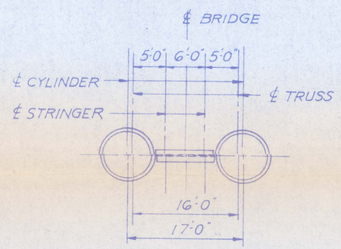

EXISTING PLAN

PIERS NO. 3, 4 & 5

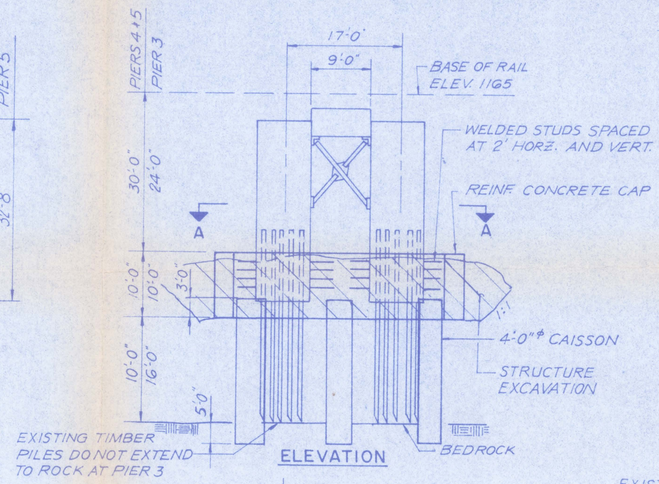

ELEVATION

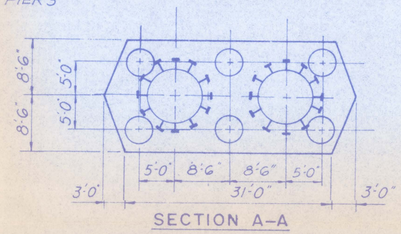

SECTION A-A

ALTERNATIVE NO. 1

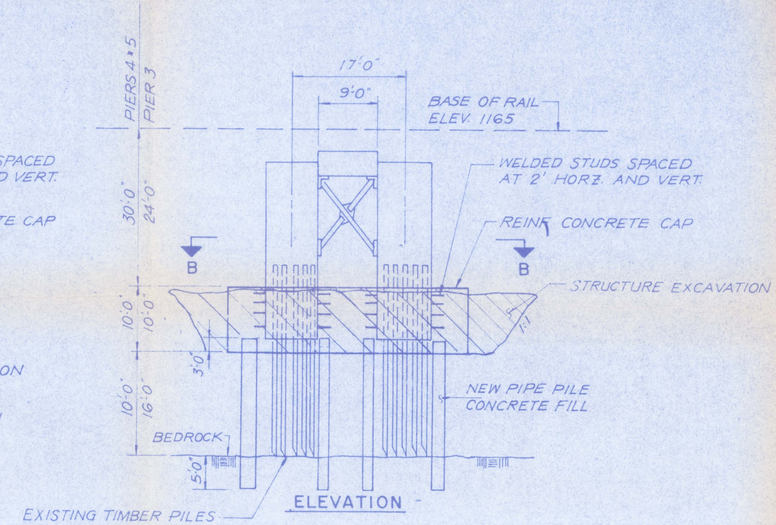

ELEVATION

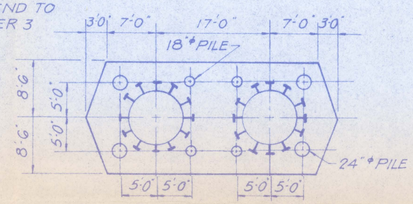

SECTION B-B

ALTERNATIVE NO. 2

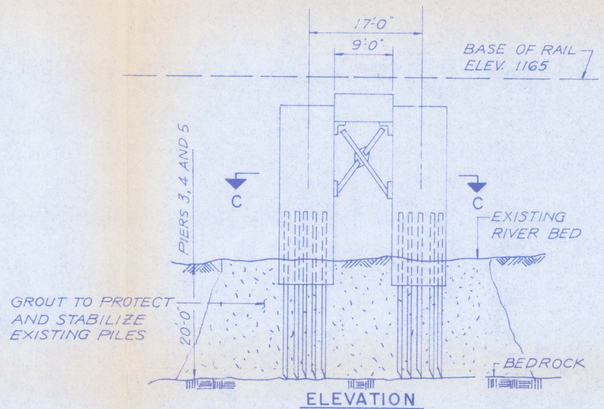

ELEVATION

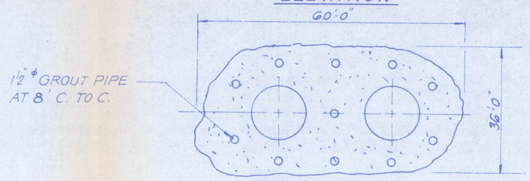

SECTION C-C

ALTERNATIVE NO. 3

CONSTRUCTION NOTES

1. EXISTING PILES AT PIER 3 DO NOT EXTEND TO BEDROCK. PILE LENGTHS ARE NOT ALL THE SAME LENGTH AT EACH PIER. THIS INDICATES THAT SOME PILES DO NOT EXTEND TO BEDROCK AT PIERS 4 AND 5.

2. WELDED STUDS SHALL BE STAGGERED VERTICALLY. REINFORCEMENT SHALL BE PLACED AROUND THE EXISTING CAISSONS TIEING THE STUDS WITH THE SURROUNDING REINFORCEMENT.

NO.	DATE	DESCRIPTION	APPROVAL
3			
2			
1			

REVISIONS

CRSS, INC.
PHOENIX, ARIZONA

RIO SALADO CHANNEL DESIGN

DEPARTMENT OF PUBLIC WORKS
CITY OF TEMPE
DIVISION OF ENGINEERING
P.O. BOX 5002 TEMPE, ARIZONA

DESIGNED:
DRAWN:
APPROVED:
SCALE:

PIERS 3, 4 AND 5
FOUNDATION ALTERNATIVE

DATE
PROJECT NO.
SHT 2 OF 3

COPYRIGHT CRS SIRINE, INC.

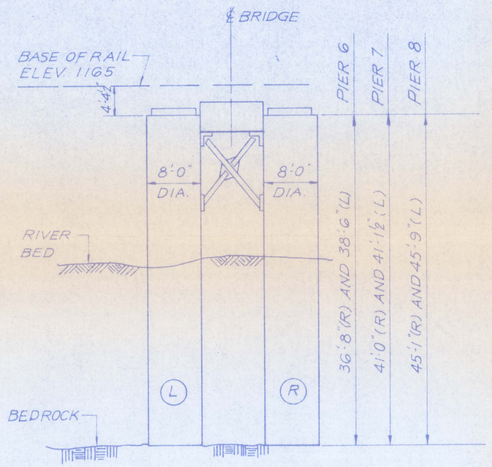

EXISTING ELEVATION

PIERS NO. 6, 7 & 8

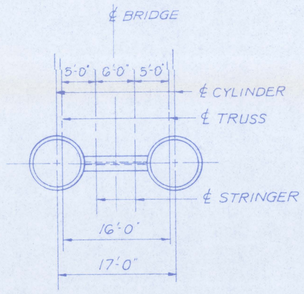

EXISTING PLAN

PIERS NO. 6, 7 & 8

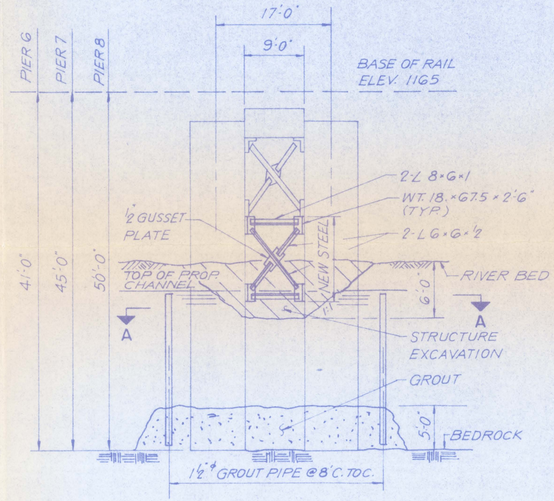

ELEVATION

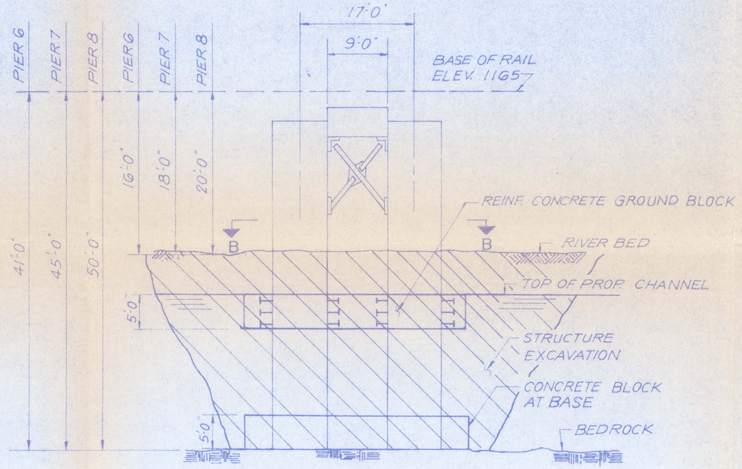

ELEVATION

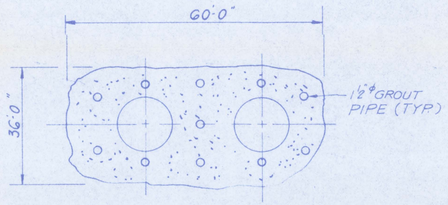

SECTION A-A

ALTERNATIVE NO. 1

(BRACING ALTERNATIVE 1 - STEEL)

(FOUNDATION ALTERNATIVE 1 - GROUT)

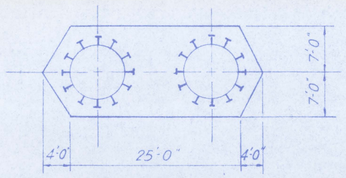

SECTION B-B

ALTERNATIVE NO. 2

(BRACING ALTERNATIVE 2 - CONCRETE)

(FOUNDATION ALTERNATIVE 2 - CONCRETE)

CONSTRUCTION NOTES

NO.	DATE	DESCRIPTION	APPROVAL
3			
2			
1			

REVISIONS

CRSS, INC.
PHOENIX ARIZONA

RIO SALADO
CHANNEL DESIGN

DEPARTMENT OF PUBLIC WORKS
CITY OF TEMPE
DIVISION OF ENGINEERING
P.O. BOX 5002 TEMPE, ARIZONA

DESIGNED:	PIERS 6, 7 AND 8 FOUNDATION ALTERNATIVE	DATE
DRAWN:		PROJECT NO.
APPROVED:		
SCALE:		SHT 3 OF 3