DESIGN REPORT

GOLDEN EAGLE PARK DAM MODIFICATION PRE-DESIGN

CONTRACT NO. FCD 97-44

FOR:

FLOOD CONTROL DISTRICT OF MARICOPA COUNTY
TOWN OF FOUNTAIN HILLS
FOUNTAIN HILLS UNIFIED SCHOOL DISTRICT
AND
ARIZONA DEPARTMENT OF WATER RESOURCES

SEPTEMBER 1999

Stantec

DESIGN REPORT

Property of
Flood Control District of MC Library
Please Return to
2801 W. Durango
Phoenix, AZ 85009

GOLDEN EAGLE PARK DAM
MODIFICATION PRE-DESIGN

CONTRACT NO. FCD 97-44

FOR:

FLOOD CONTROL DISTRICT OF MARICOPA COUNTY
TOWN OF FOUNTAIN HILLS
FOUNTAIN HILLS UNIFIED SCHOOL DISTRICT
AND
ARIZONA DEPARTMENT OF WATER RESOURCES

SEPTEMBER 1999

Registered Professional Engineer (Civil)
CERTIFICATE NO.
17928
GEORGE V.
SABOL
Date Signed 9-27-99
ARIZONA, U.S.A.

Stantec

Table of Contents

	Page
INTRODUCTION	**1**
General	1
Purpose	1
Scope of Report	2
BACKGROUND	**3**
General	3
Description of Dam	3
Previous Studies	9
Survey & Mapping	12
ALTERATIONS TO THE DAM	**14**
Embankment Raise	14
Emergency Spillway	14
Auxiliary Spillway	15
Principal Spillway	16
GEOTECHNICAL CONSIDERATIONS	**17**
FLOOD HYDROLOGY	**18**
General	18
Consideration of the Three Upstream Dams	18
IDF Hydrology	19
10-Year & 100-Year Flood Hydrology	19
RESERVOIR AREA & STORAGE CAPACITY RELATION	**20**
SPILLWAY HYDRAULICS	**23**
Emergency Spillway	23
Auxiliary Spillway	27
Principal Spillway	27
Spillway Capacity Rating Table	28
RESERVOIR ROUTING	**29**
DEWATERING PLAN	**33**
General	33
Geotechnical Investigation	33
Dewatering Plan	33
Permits	34
Damage	34

SURFACE WATER DIVERSION PLAN **35**
General 35
Streamflow Characteristics 35
Selection of Diversion Flood 35
Methods of Diversion 36
Specification Requirements 37
Damage 38

CONSTRUCTION QUALITY ASSURANCE PLAN **39**

REFERENCES **40**

List of Tables

	Page
TABLE 1	
Pertinent Data for Existing Golden Eagle Park Dam	**8**
TABLE 2	
Area and Storage Capacity Relations	**21**
TABLE 3	
Spillway Capacity Table	**24**
TABLE 4	
Results of Flood Routings through GEP Dam with Alterations	**32**

List of Figures

	Page
FIGURE 1	
Location of GEP Dam and the Three Upstream Dams in the Town of Fountain Hills	**4**
FIGURE 2	
GEP Dam Watershed Including Upstream Dams and Fountain Hills High School	**5**
FIGURE 3	
Sketch of Critical Features of GEP Dam	**7**
FIGURE 4	
GEP Dam Storage Capacity Relation	**10**
FIGURE 5	
GEP Dam Stage-Capacity Relation as of 1999	**22**
FIGURE 6	
GEP Dam Stage-Area Relation as of 1999	**22**
FIGURE 7	
GEP Dam Discharge Capacity Relation	**25**
FIGURE 8	
GEP Dam Inflow and Outflow Hydrographs under the two IDF Design Floods	**30**
FIGURE 9	
GEP Dam Inflow and Outflow Hydrographs (100-year future, 100-year existing and 10-year future condition floods)	**31**

List of Appendices

APPENDIX A

IDF Hydrology Memo, 4 March 1999

APPENDIX B

Flood Hydrology (HEC-1)

APPENDIX C

Flood Routing Models (HEC-1)

APPENDIX D

Hydraulic Analyses of Emergency, Principal & Auxiliary Spillways

APPENDIX E

Hydraulic Analyses of Trashracks for Principal & Auxiliary Spillways

APPENDIX F

Hydraulic Analyses of Auxiliary Spillway Energy Dissipator

APPENDIX G

Hydraulic Analysis of Access Barrier for Auxiliary Spillway

APPENDIX H

Report on Structural Analysis of Principal Spillway conduits by T.Y. Lin International, Inc.

APPENDIX I

Sample Construction Quality Assurance Plan

APPENDIX J

Electronic Files of HEC-1 Models for Flood Hydrology & Flood Routing through the Modified Dam

INTRODUCTION

GENERAL

Deficiency with the Golden Eagle Park Dam (GEP Dam) principal spillway and related flood hazards to the Fountain Hills High School were originally identified in the Fountain Hills (North) Floodplain Delineation Study (Contract FCD 92-04) that was performed by George V. Sabol Consulting Engineers, Inc. (GVSCE, 1994). That study identified that the principal spillway could not pass the 100-year flood without causing the emergency spillway to operate. Flow through the emergency spillway (which was originally designed to operate only for floods of magnitudes greater than the 100-year flood) resulted in flood hazard to the high school buildings and discharge onto and through the athletic field. That problem, which was discovered in 1994, was exacerbated in 1991 when a sewer line was placed through the principal spillway reducing the area of that spillway by 25 percent.

Deficiency with the emergency spillway, and the resultant dam safety issue was identified in a dam break study of GEP Dam and four other dams that was performed by GVSCE (1996a). That study identified that the emergency spillway could not pass a 0.5 probable maximum flood (PMF) inflow design flood without overtopping the earthen embankment of the dam. The consequences are that it is reasonable to assume that the dam could be overtopped and fail during a severe storm event. Significant property loss and hazard to the Town of Fountain Hills could result from such a failure. Subsequently, the dam was classified as unsafe, non-emergency by the Arizona Department of Water Resources (ADWR).

PURPOSE

The primary purpose of the project is to design alterations to the dam and spillway to meet ADWR dam safety requirements. A secondary purpose is to diminish flood hazard to the Fountain Hills High School that is located immediately to the south (right abutment) of the dam and emergency spillway, and to the high school athletic field that is located immediately below the emergency spillway.

SCOPE OF REPORT

This design report presents the results of analyses that were performed for the alterations of GEP Dam and documentation relative to those alterations. The report is to correspond to 30 percent design plans as of September 1999. The design report will be expanded and modified, as appropriate, upon completion of the final design. The design report is to present major design issues, to the extent reasonable, for the purpose of design review and to present design conditions and assumptions. Supporting material is contained in appendices. Design drawings, specifications and special provisions are contained in separate submittals and are an essential part of the design report by reference. A separate geotechnical report, as a supplement to this design report, is submitted by AGRA Earth & Environmental, Inc. (AEE).

BACKGROUND

GENERAL

Golden Eagle Park Dam, previously known as Dam 4, is generally situated 600 feet east of Golden Eagle Boulevard, between Palisades Boulevard and Bainbridge Avenue. Fountain Hills High School is located immediately east and south of the dam. The upstream impoundment area between the dam embankment and Golden Eagle Boulevard is Golden Eagle Park with softball fields, tennis and volleyball courts, concession and equipment storage buildings, bathroom facilities, a playground area and parking lots. An approximate 7.13 square mile watershed comprised of natural desert, urban development and golf courses is tributary to the dam. Situated within that watershed are three other dams named Aspen Dam (Dam 6), North Heights Dam (Dam 11), and SunRidge Canyon Dam (Dam 7) which are constructed at various upstream locations west of GEP Dam.

Figure 1 is a map of the Town of Fountain Hills showing the location of GEP Dam and the three upstream dams. The land surface slope is generally from west to east and, as illustrated by Figure 1, failure of GEP Dam would cause a significant flood hazard to the densely developed area to the east (downslope) of GEP Dam.

Figure 2 is a map of the contributing watershed to GEP Dam. The location of the three upstream dams are identified as well as the 1.38 square mile drainage area to GEP Dam that is not controlled by any of the three upstream dams. That map also shows the location of the Fountain Hills High School adjacent to and downstream of GEP Dam.

DESCRIPTION OF DAM

Golden Eagle Park Dam was designed by Trico International, Inc. (Trico) and constructed by McCulloch Properties, Inc. (1970 – 1974). Construction of the dam and preparation of as-built drawings was completed in late 1974 to early 1975. GEP Dam is presently owned and maintained by the Town of Fountain Hills and the Fountain Hills Unified School District.

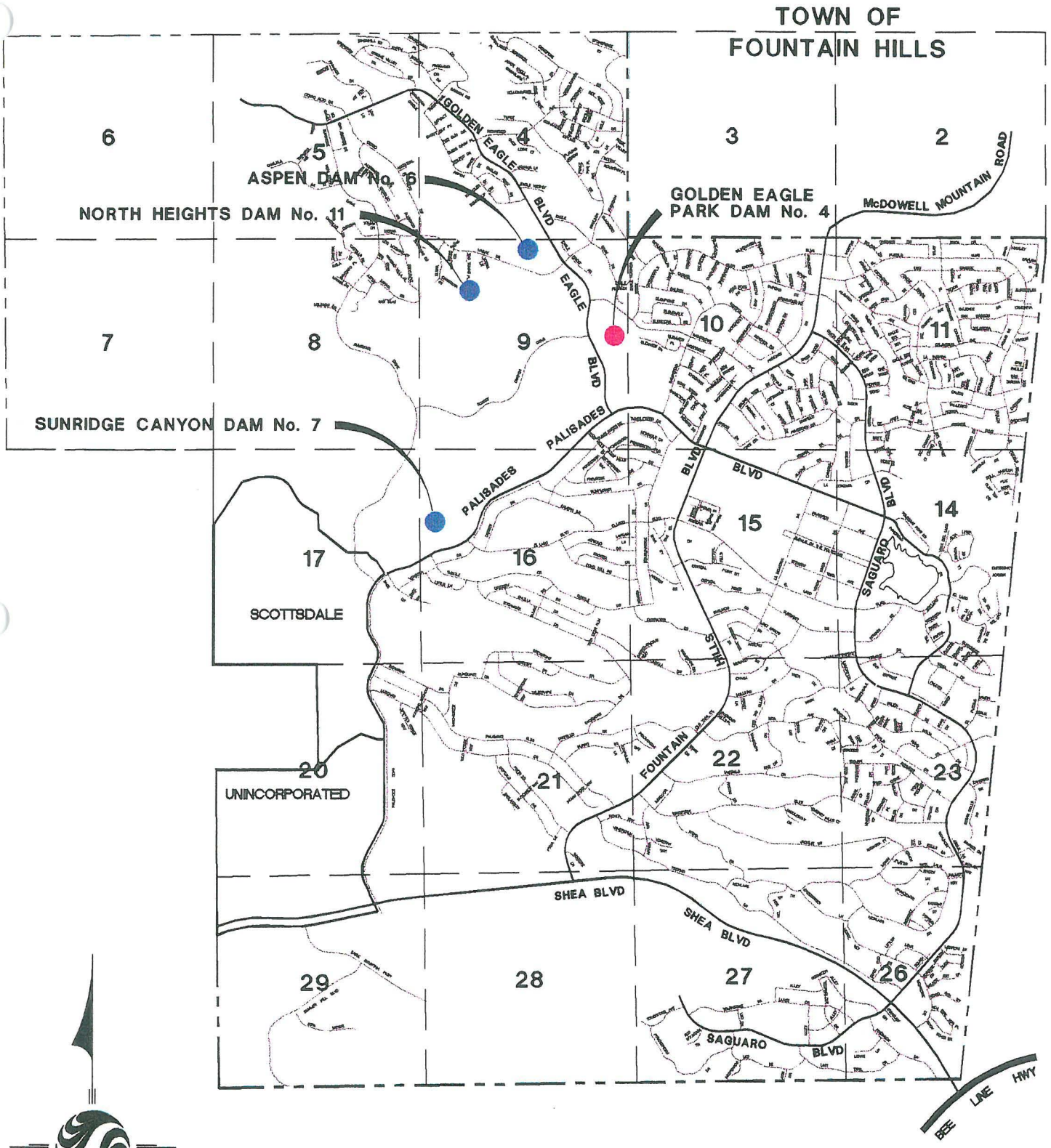

FIGURE 1
LOCATION OF GOLDEN EAGLE PARK DAM
AND THE THREE UPSTREAM DAMS
IN THE TOWN OF FOUNTAIN HILLS

FIGURE 2

GOLDEN EAGLE PARK DAM WATERSHED INCLUDING UPSTREAM DAMS AND FOUNTAIN HILLS HIGH SCHOOL

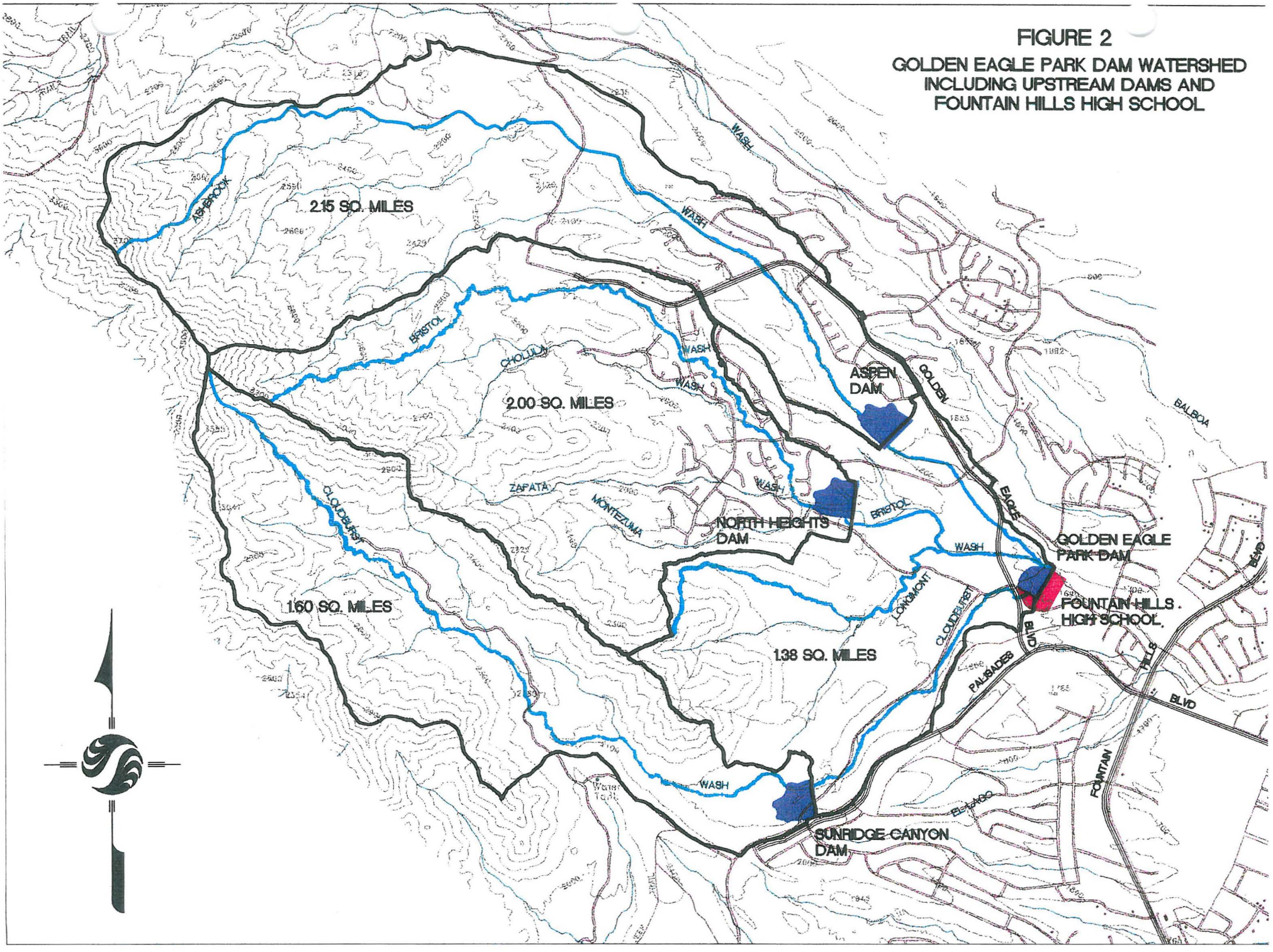

Information concerning the physical characteristics of GEP Dam and geotechnical properties of the earthen embankment are obtained from file data of the dam's design and construction, the Phase I Inspection Reports under the National Dam Safety Program by the Arizona Water Commission (presently ADWR), the three previous GVSCE studies of GEP Dam, the recent AGRA Earth & Environmental, Inc. (AEE) studies, and field reconnaissance.

Golden Eagle Park Dam is a zoned earthen embankment with a central inner core and upstream and downstream shells. According to available information, the inner core is generally comprised of fine, high percentage clay material, while the outer zones are coarser material with higher percentages of gravel and some cobble. The dam is equipped with an uncontrolled principal spillway and an emergency spillway in the right abutment (see Figure 3 for a sketch of critical features of the dam and spillways). The principal spillway is comprised of two 60-inch reinforced concrete pipes (RCP) located at the maximum embankment section near the left abutment. The conduits discharge to a concrete stilling basin with an end sill for an energy dissipater. Wooden piles at the inlet serve as a trashrack to prevent large debris such as trees, from entering the conduit. Smaller debris is allowed to pass through the conduit. In 1991, a 14-inch ductile iron pipe (DIP) sanitary sewer line was installed at the flowline of one of the principal spillway pipes. A concrete encasement was poured around the 14-inch DIP pipeline resulting in an approximate 25 percent reduction of the principal spillway capacity (see Table 1). The impact of that modification was analyzed and reported by Anderson-Nelson, Inc., and accepted by ADWR. Recent structural analysis of the principal spillway conduits indicates that the conduits are structurally sound as designed.

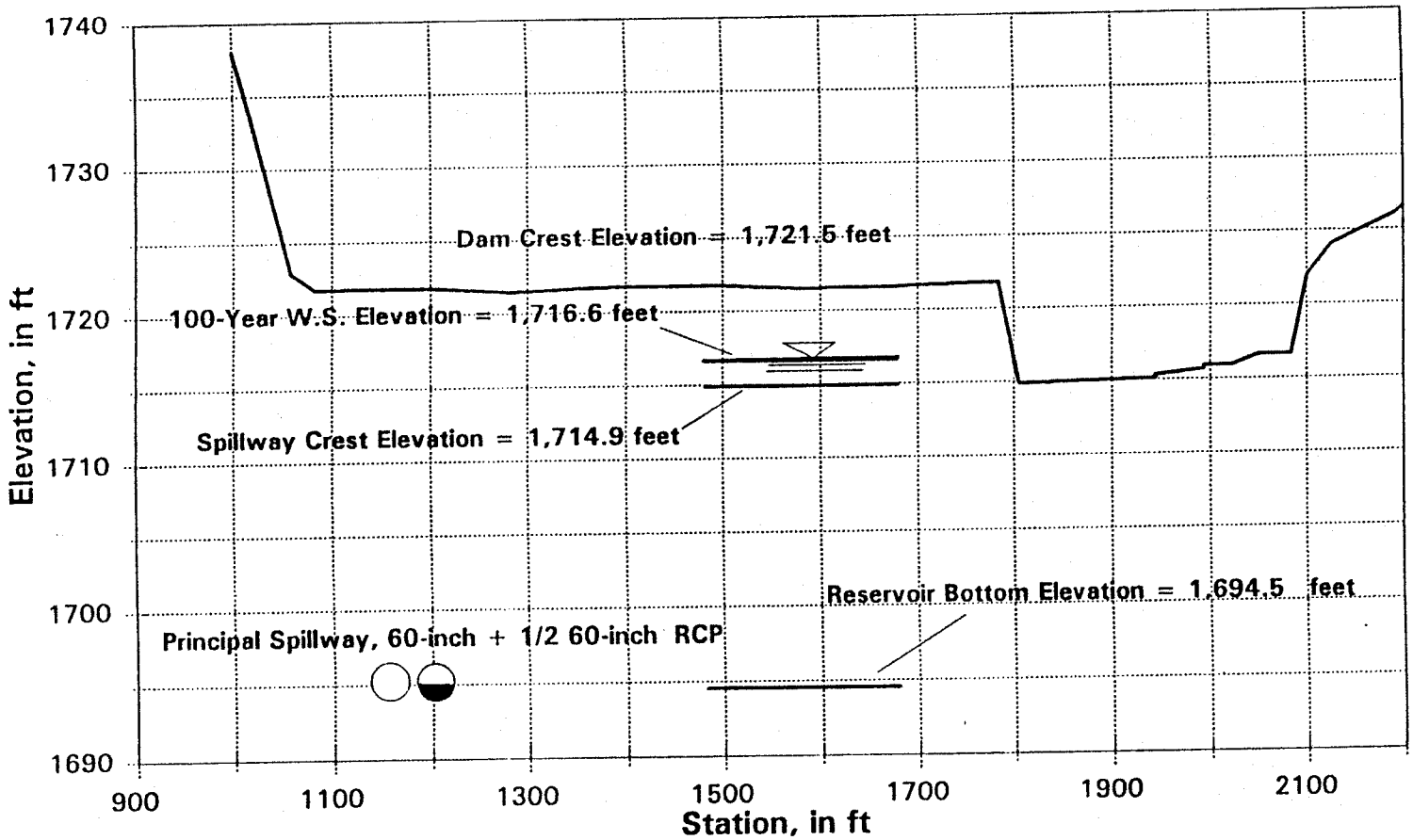

FIGURE 3
Sketch of critical features of Golden Eagle Park Dam (No. 4)

TABLE 1
Pertinent Data for Existing Golden Eagle Park Dam

Item	Description
(1)	(2)
Dam Type	Zoned Earthfill
Dam Crest Length	660 Feet
Dam Slopes	1V:2H upstream; 1V:2H downstream
Dam Height (Max)	26.8 feet
Dam Crest Elevation (MSL)	1721.47 feet
Dam Crest Width	12 Feet
Drainage Area	7.13 square miles
Storage at Emergency Spillway Crest	95.8 acre-feet
Emergency Spillway Type	Unlined earth w/ concrete sill
Emergency Spillway Width	266 feet
Emergency Spillway Capacity at Dam Crest	12,750 cfs
Emergency Spillway Side Slopes	3:1
Emergency Spillway Crest Elevation	1714.86 feet
Principal Spillway	2-60 inch diameter RCP's, uncontrolled
Principal Spillway Capacity at Dam Crest	955 cfs **, 750 cfs*
*With sewer line in place	
**Full capacity, no sewer line	

The emergency spillway is an earthen trapezoidal section with a concrete sill and is constructed at the southern (right) abutment of the dam. Flows over the emergency spillway discharge directly to the Fountain Hills High School athletic field. The less frequent, higher peak discharges will attain depths that may cause a significant portion of the flows to also spill southeasterly past the high school cafeteria and into the campus area. Table 1 summarizes the various physical characteristics of GEP Dam.

A pressure transducer type water level recorder was installed at the inlet side of the principal spillway in December 1996 by the Flood Control District of Maricopa County (FCDMC) as part of the Fountain Hills Flood Warning System. A piezometer was installed at the downstream toe of the dam in 1998 to monitor ground water levels under the dam. There are no other instrumentation or monitoring data for the dam.

The bleachers in the athletic field are not a part of the existing dam or the alterations to the dam; however, the existence of the bleachers below the enlargement of the emergency spillway is considered in regard to potential impacts to spillway operation. Presently, the emergency spillway discharges to the south of the bleachers and the bleachers are not in the direct flow path of the spillway. However, the emergency spillway expansion, as designed, would result in emergency spillway discharge upstream of a portion of the bleachers. Some spillway discharge would impact the backside of the bleachers, pass through and around the bleachers in route to returning those flows to Ashbrook Wash. A cross section of the bleachers and the existing embankment is shown in Figure 4. Also shown in that figure is the crest elevation of the enlarged emergency spillway. The bleachers are about 54 feet downstream of the crest of the spillway and there is about a 5.6-foot elevation differential from the spillway crest to the back of the bleachers. Therefore, the bleachers would have no significant adverse impact on the hydraulic performance of the enlarged emergency spillway.

PREVIOUS STUDIES

The most recent study of GEP Dam is the Design Issues & Alternatives Report (Stantec, 1999). That report presents the evaluation of seven alternatives for achieving resolution of the dam safety and related flood hazard problems of GEP Dam. The report also addresses design issues that are largely reflective of conditions and desires relative to the Town's Golden Eagle Park and the Fountain Hills Unified School District's flooding issues for the school. That report recommended Alternative F be selected for design, and this design report provides engineering analyses and design information for the selected alternative.

In addition to the Stantec report, as described above, three recent studies of the Fountain Hills area document flooding and dam safety issues for GEP Dam. The first is a floodplain delineation study of the northern Fountain Hills area conducted by GVSCE (1994). The results of the Fountain Hills (North) FDS indicate that for existing watershed conditions, the emergency spillway operates for about 5.3 hours with a peak discharge of about 320 cfs during the 100-year flood. Under future watershed conditions, the emergency spillway will discharge about 480 cfs during the 100-year flood and will also operate during lesser floods such as the 10-year. It is obvious from the Fountain Hills (North) FDS that the existing principal spillway of

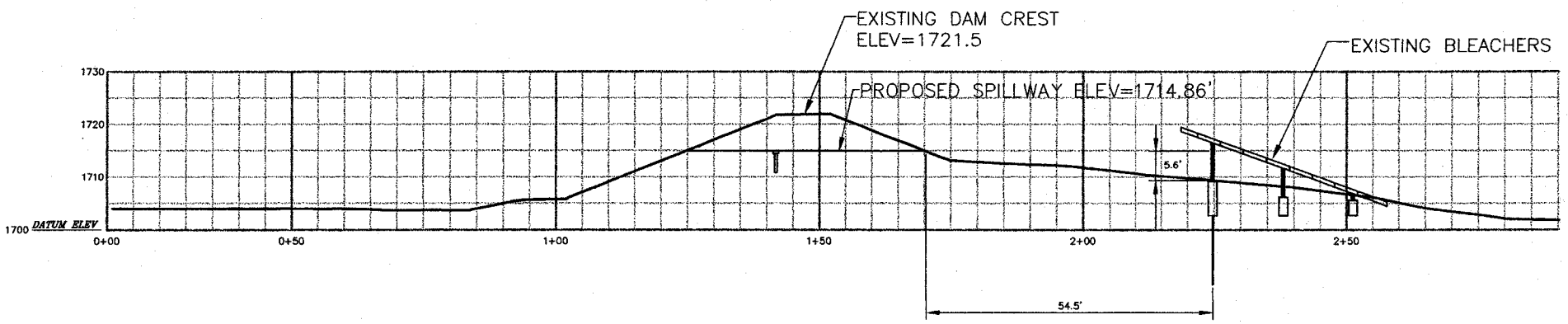

FIGURE 4

ATHLETIC FIELD BLEACHERS IN RELATION TO ENLARGED EMERGENCY SPILLWAY

GEP Dam does not have adequate capacity to convey the 100-year flood, and in fact the 10-year flood under future conditions, without forcing flow over the emergency spillway. Operation of the emergency spillway may result in flooding of the adjacent high school campus and athletic field. That condition, especially for the more frequent floods, is undesirable.

The second study is a dam break analysis conducted by GVSCE, under contract with Anderson-Nelson, Inc., for five dams within the Town of Fountain Hills. The report documenting the results of that study is entitled; Town of Fountain Hills Dam Break Analysis for Golden Eagle Park Dam, Hesperus Wash Dam, Aspen Dam, North Heights Dam and SunRidge Dam, (GVSCE, 1996a). The purpose of the study was to prepare an Emergency Action Plan for each of the five dams, including dam break inundation mapping. The dam breach analysis indicates that GEP Dam is overtopped by about 3.9 feet during a 0.5 PMF inflow flood. The inflow design flood (IDF) used in that analysis is a result of 0.5 PMF spillway releases from Aspen Dam (Dam 6) and SunRidge Canyon Dam (Dam 7), inflow from an assumed piping breach of North Heights Dam (Dam 11) and the 0.5 PMF runoff from the intermediate 1.38 square mile subbasin between GEP Dam and the upstream dams. The assumption that North Heights Dam fails by piping, although reasonable for a dam break analysis, is considered too severe a spillway design criteria for use in designing modifications to GEP Dam. A third study, described below, estimated the 0.5 PMF spillway design flood without the assumption of a piping breach of any of the three upstream dams. The analysis without the North Heights Dam breach results in 2.4 feet of overtopping of GEP Dam. Therefore, prudent assumptions for flood hydrology indicate that GEP Dam will be overtopped by a spillway design flood resulting in likely dam breach.

The third study is reported in the Reconnaissance Study and Alternative Evaluation for Golden Eagle Park Dam, Interim Report (GVSCE, 1996b) and the Fountain Hills ADMP, Final Report (GVSCE, 1997). The reconnaissance level study evaluated five alternatives:

Alternative No. 1 – Do nothing.

Alternative No. 2 – Remove GEP Dam.

Alternative No. 3 – Modify the upstream dams.

Alternative No. 4 – Construct an additional upstream dam.

Alternative No. 5 – Modify GEP Dam.

The reconnaissance level study recommended Alternative No. 5, and two options for modifying GEP Dam were presented.

The feasibility level design for modifications to GEP Dam and supplemental information for the recommended alternative are presented in the Final Report. The recommended modifications included enlarging the principal spillway by adding a 7-foot wide by 8-foot high box culvert parallel to the existing principal spillway and leaving that spillway in place thus avoiding the relocation of the sewer line. It was recommended that the emergency spillway be modified by increasing the crest length from its existing 266 feet to about 570 feet. The spillway crest elevation is maintained throughout the enlargement. The crest of the earthen embankment was to be raised about 1.5 feet. This proposed modification, or any modification to the dam, will require ADWR review and approval. The proposed modification provides 1.5 feet of residual freeboard which is less than the "normal" ADWR minimum of 3 feet, therefore "other considerations" would need to be made by ADWR for approval of that proposed modification, or the embankment would need to be raised an additional 1.5 feet to obtain 3 feet of residual freeboard.

AEE recently completed the dam safety inspection (AEE, 1998b) and geotechnical investigation (AEE, 1998a) for the dam. Based on those studies, it is AEE's opinion that there are no significant geotechnical deficiencies in the dam or its spillway, that the foundation and embankment of the dam are functioning properly and that the dam is safe. The geotechnical work that is associated with the planned modifications to increase the height of the dam, to modify existing spillways, and to add an auxiliary spillway are reported in the separate AEE geotechnical report.

SURVEY & MAPPING

Mapping for the hydrology studies is described in the Fountain Hills (North) Floodplain Delineation Study (GVSCE, 1994). Mapping of the impoundment area is based on September 1996 aerial photography that was obtained as part of the Fountain Hills Area Drainage Master Study, (GVSCE, 1997). Surveying was conducted as part of the present study to verify elevations in the ball field areas of the 1996 map.

Field surveys were conducted during February through April 1999 to obtain data to map the area of the dam, its appurtenant structures, park facilities that are not represented in the 1996 map, and certain features in the athletic field. The map that is generated from those survey data used for design purposes. The 1999 mapping of the dam and vicinity is integrated into the 1996 map as a composite for the impoundment area.

ALTERATIONS TO THE DAM

EMBANKMENT RAISE

The earthen embankment of the dam will be raised 5 feet from elevation 1721.5 feet to elevation 1726.5 feet. The existing dam has 1V:2H slopes on both the upstream and downstream embankment, and has a 12-foot crest width. The raise will be accomplished on the upstream slope, maintaining the 1V:2H slope and the 12-foot crest width.

Due to enlargement of the emergency spillway, 120 feet of embankment, starting from the left abutment of the emergency spillway, will be lowered 6.6 feet from elevation 1721.5 feet to elevation 1714.9 feet. The alterations to the existing emergency spillway and its enlargement are discussed in the next section.

Rainfall induced erosion of the downstream slope will be repaired by earthen fill and compaction. The upstream slope will be cleared and grubbed and appropriately dressed prior to raising the embankment. All trees and deep-rooted brush will be cleared from the slopes prior to construction.

The raise of the embankment is to achieve increased surcharge head on the emergency spillway during the inflow design flood, and to maintain a minimum of 3 feet of residual freeboard for the inflow design flood.

The hydraulic height of the dam, measured as the vertical distance from the lowest elevation of the outside limit of the downstream toe of the embankment at its intersection with the natural ground surface to the emergency spillway crest elevation, remains unchanged as a result of the dam alterations.

EMERGENCY SPILLWAY

The emergency spillway, constructed in the right abutment of the dam, is enlarged 120 feet from a crest length of 266 feet to 386 feet. The enlargement is achieved by removing the top 6.6 feet of existing embankment fill in the 120 feet of spillway enlargement. The existing spillway has a 4-foot deep concrete cutoff extending along the 266 feet of spillway crest. The existing concrete cutoff will be extended the full length of the 120 feet of spillway enlargement.

The right end of the embankment where it forms the left side of the emergency spillway will be protected by a concrete slope that is tied to the concrete cutoff. The right side of the emergency spillway, adjacent to the school grounds, will be equipped with a concrete floodway that extends from the sidewalk access to the amphitheater upstream transitioning into an earthen berm. The floodwall and berm will provide protection to the school grounds during spillway discharges. *The height of the earthen berm and concrete floodwall will be determined in conjunction with the School District during the 30% design review and value engineering workshop. Those facilities are not within the purview of ADWR in regard to dam safety, and therefore, those facilities will be designed to achieve the desired level of flood protection to the school for infrequent floods.*

Erosion protection of the emergency spillway chute downstream of the concrete cutoff wall will be provided. *The 30% design plans show one of the recommended methods for spillway erosion protection. That design element needs to be coordinated with the School District in regard to the desires of the school for the amphitheater. That coordination and selection of spillway erosion protection and amphitheater reconstruction will be performed during the 30% design review and value engineering workshop.*

AUXILIARY SPILLWAY

An auxiliary spillway is added to the dam to provide increased discharges capacity for the more frequent floods (100-year and more frequent), but it also provides supplemental capacity for the enlarged emergency spillway. The auxiliary spillway is a concrete box culvert structure installed in the embankment about 90 feet to the right of the existing principal spillway. The box culvert is 4 feet high by 8 feet wide and is 109 feet long. The auxiliary spillway includes upstream headwalls and steel trashrack. The spillway discharges to a concrete energy dissipator and into an excavated channel that returns flow to Ashbrook Wash downstream of the principal spillway.

Installation of the auxiliary spillway requires excavation of the earthen embankment at near its maximum section. The embankment is rebuilt to conform to the raised embankment section. Placement of embankment fill is discussed in the geotechnical report. A sand diaphragm around the auxiliary spillway is used for seepage control.

A downstream access barrier on the box culvert is not installed, but hydraulic analysis indicates that an appropriately designed barrier could be installed without adversely impacting the hydraulic performance (see Appendix G).

PRINCIPAL SPILLWAY

A structural analysis of the principal spillway conduits was performed by T.Y. Lin International, Inc. assuming a 7-foot raise of the embankment. The analysis indicates that an acceptable factor of safety is available for that load condition. The actual raise is 5 feet, thus the factor of safety is higher than calculated for the design condition. Documentation for the structural analysis is provided in Appendix H. The existing principal spillway with its energy dissipator are left intact. New concrete headwalls are installed to accommodate the upstream embankment raise. The existing timber trashrack is removed and a steel trashrack is incorporated into the new inlet headwalls.

The existing principal spillway, in conjunction with the auxiliary spillway, have adequate capacity to route the 100-year, future (full build-out condition) flood through the impoundment and spillways without initiating flow through the emergency spillway. The auxiliary and principal spillways provide some relatively small discharge capacity during large floods, such as the inflow design flood.

GEOTECHNICAL CONSIDERATIONS

A separate geotechnical report is provided as a supplement to the design report. The geotechnical report is prepared by AGRA Earth & Environmental (AEE) and is titled Geotechnical Investigation Report & Engineering Analysis (September 1999). The geotechnical report addresses the following topics:

- Embankment raise, including stability analyses and seismic hazard and earthquake design.
- Seepage analysis.
- Excavation of the embankment for construction of the auxiliary spillway and reconstruction of the embankment.
- Seepage control (sand diaphragm) for the auxiliary spillway.
- Geotechnical investigations for erosion protection at the emergency spillway.

FLOOD HYDROLOGY

GENERAL

Alterations to GEP Dam are required to meet current State of Arizona dam safety regulations as administered by ADWR. The inflow design flood (IDF) requirement for GEP Dam based on its size and hazard classification is the 0.5 probable maximum flood (0.5 PMF). Alterations to the principal spillway and installation of an auxiliary spillway are based on the 100-year, future condition flood (full build-out condition in the watershed). The 100-year, future condition flood is also considered in regard to cumulative impacts to the floodplain of Ashbrook Wash as a consequence of GEP Dam alterations, modifications to Ashbrook Wash, and urbanization in the watershed. The 100-year, existing condition flood (using 1994 watershed conditions) is used to evaluate floodplain impacts to Ashbrook Wash as a result of alterations to GEP Dam. The 10-year, future condition flood is used to evaluate flood impacts to Golden Eagle Park, and also for floodplain impact evaluation.

The determination of the various hydrologic flood evaluations is described in the following sections and referenced appendices.

CONSIDERATION OF THE THREE UPSTREAM DAMS

Three urban flood control dams, SunRidge Canyon, North Heights and Aspen Dams, exist in the contributing drainage area upstream of GEP Dam. Those dams were designed using the same criteria as GEP Dam and were constructed during the same general time period. Those dams provide urban flood attenuation via storage. Although dam safety studies do not indicate that any of those three dams is expected to be overtopped during the inflow design flood (0.5 PMF), those dams do not necessarily meet current dam safety requirements of ADWR. Specifically, less than 3 feet of residual freeboard is available when routing the inflow design flood (IDF). Additionally, failure of one or more of the three upstream dams by piping during the GEP Dam inflow design flood would be an extremely unusual but potential event. Therefore, consideration of reasonably prudent conditions for the three upstream dams needs to be considered when analyzing and designing the modifications to GEP Dam. Considerations of the three upstream dams and the recommended approach is presented in the IDF Hydrology section. Other then the potential impact of the three

upstream dams on the magnitude of the IDF for GEP Dam, there are no other interrelated design issues between those dams and GEP Dam.

IDF HYDROLOGY

The recommended selection of the IDF for GEP Dam is presented in a memorandum of 4 March 1999 (Appendix A). Two IDF's are recommended for use in designing the spillway. IDF1 assumes concurrent piping breach of North Heights Dam during the 0.5 PMF event for GEP Dam. IDF2 is based on the same 0.5 PMF event but without concurrent upstream dam break. Assumptions and documentation of the two IDF's are provided in Appendix A.

Modifications to GEP Dam are analyzed and designed based on routing IDF2 through the modified dam and enlarged spillways while maintaining a minimum of 3 feet of residual freeboard. IDF1 is then used to check the performance of the modified dam while allowing encroachment into the 3 feet of residual freeboard.

10-YEAR & 100-YEAR FLOOD HYDROLOGY

Flood hydrology, other than IDF hydrology as previously discussed, is needed for the analysis and design of alterations to GEP Dam. The following additional flood hydrology are needed:

<u>100-year, future condition</u> – for design of the principal and/or auxiliary spillway, and evaluation of the impact of spillway modifications on the Ashbrook Wash floodplain.

<u>100-year, existing condition</u> – for evaluation of spillway modifications to the existing (1994) Fountain Hills (North) FDS and current FEMA flood insurance rate maps.

<u>10-year, future condition</u> – for evaluation of spillway modifications on recent roadway crossing improvements and for evaluation of more frequent flooding impacts on park facilities.

The 10-year and 100-year flood hydrology are obtained from HEC-1 models that were developed during the Fountain Hills (North) FDS (GVSCE, 1994). Appendix B contains the HEC-1 files that are used to estimate the three floods as defined above. Those hydrologic models contain watershed parameter input as prepared for the Fountain Hills (North) FDS. Electronic files of all HEC-1 models are provided in Appendix J.

RESERVOIR AREA & STORAGE CAPACITY RELATION

The Town of Fountain Hills developed Golden Eagle Park within the storage impoundment area of the dam. That development occurred since the dam was constructed, and for the most part, since completion of the floodplain delineation study (GVSCE, 1994). As part of this study, the park area was field surveyed for the purpose of verifying mapping (September 1996) that is used to establish the storage capacity relation for the dam. The field survey verified the adequacy of the mapping within normal mapping standards. The storage capacity was calculated based on the 1996 mapping and current (1999) field survey of the dam. That relation is shown in Figure 5 along with the storage capacity relation from the floodplain delineation study (GVSCE, 1994). The current and previous storage capacity relations agree indicating that park development was accomplished with no significant importation or removal of soil within the park and that sedimentation of the impoundment is not a factor at this time. The current storage capacity relation as listed in Table 2 is used in all flood routing analyses.

The corresponding reservoir area capacity relation is shown in Figure 6 and listed in Table 2. The area and storage capacity relations for GEP Dam as of 1999 are shown in the design drawings.

Table 2

Golden Eagle Park Dam

Stage-Area and Stage-Capacity Relations as of 1999

Elevation feet (1)	Area acres (2)	Volume acre-feet (3)
1694.50	0.00	0.00
1697.00	0.01	0.00
1698.00	0.02	0.02
1699.00	0.10	0.08
1700.00	0.23	0.24
1702.00	0.47	0.93
1704.00	0.91	2.29
1706.00	4.40	7.17
1708.00	7.46	18.89
1710.00	9.78	36.80
1712.00	12.61	58.41
1714.00	15.43	86.41
1714.80	16.60	99.21
1715.20	17.18	105.97
1715.60	17.76	112.96
1716.00	18.34	120.18
1716.40	18.75	127.60
1717.40	19.78	146.86
1717.80	20.20	154.86
1718.00	20.40	158.92
1720.00	21.44	200.75
1722.00	21.55	243.75
1724.00	21.97	287.27
1726.00	22.93	332.16
1728.00	23.19	378.27

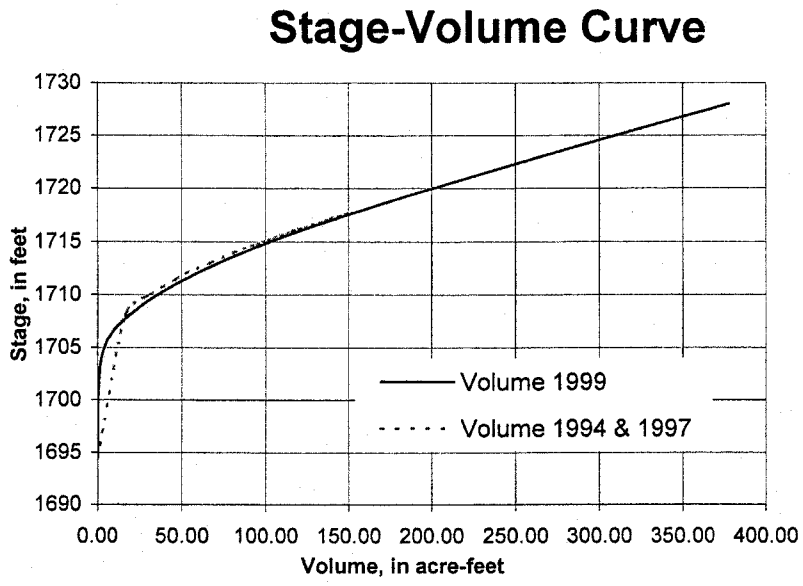

Figure 5
Golden Eagle Park Dam Stage-Capacity Relation as of 1999

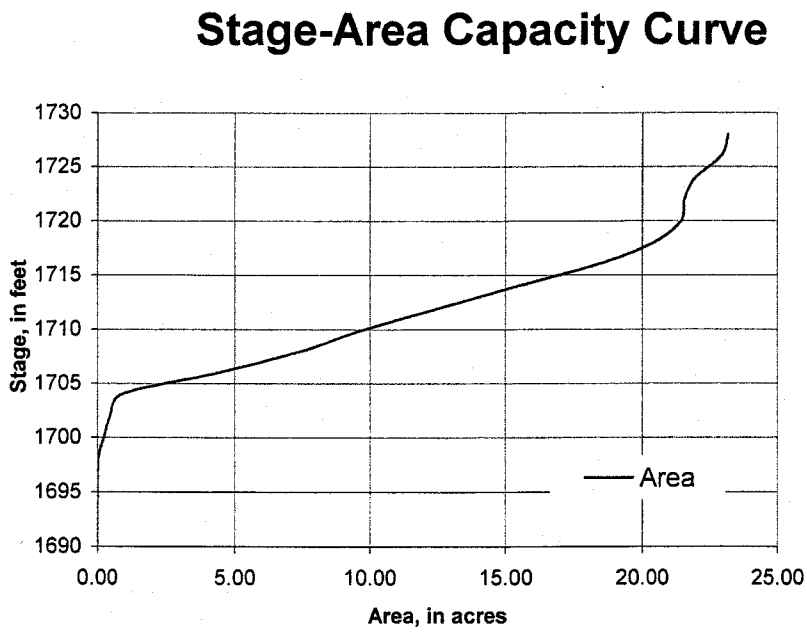

Figure 6
Golden Eagle Park Dam Stage-Area Relation as of 1999

SPILLWAY HYDRAULICS

EMERGENCY SPILLWAY

Hydraulic capacity of the emergency spillway is analyzed by the weir equation, $Q = CLH^{3/2}$. The enlarged emergency spillway will consist of the existing emergency spillway with a crest length (L) of 266 feet (measured along the length of the concrete cutoff wall), and the expanded portion with a crest length (L) of 120 feet. The hydraulic head is measured from the crest of the concrete cutoff wall (elevation 1714.86 feet) to the water surface elevation in the impoundment sufficiently upstream of the crest such that the velocity head is essentially zero. The discharge coefficient (C) is selected as 2.6 for the enlarged portion of the emergency spillway (see Figure 4 for a typical section through the enlarged portion of the emergency spillway). That portion of the spillway acts hydraulically as a broadcrested weir for which a coefficient of 2.6 is reasonable. For the existing portion of the emergency spillway, field observation indicates that development of facilities within the park and regrading of the land surface within the approach to the spillway could affect the discharge capacity of the existing portion of the emergency spillway. The park facilities in this area were surveyed as part of this project and the 1996 mapping was revised to represent the regraded land surface and the park facilities. Those facilities include vertical block retaining walls for volleyball courts, ramadas with picnic tables, a bridge across Cloudburst Wash within the park, a parking lot, landscaping, etc. Those facilities, constructed since the dam was built and after the 1994 floodplain delineation study could result in reduced hydraulic capacity of the emergency spillway due to flow obstructions, reduction in flow momentum, etc. An unobstructed broadcrested weir would have a discharge coefficient of about 2.6 in the weir hydraulics equation,$Q = CLH^{3/2}$. However, due to the recently constructed park facilities, a weir coefficient of 2.4 is used to analyze the discharge capacity of the existing emergency spillway, and this results in about an 8 percent discharge capacity reduction as compared to an equivalent, unobstructed spillway.

Calculation of the emergency spillway capacity is presented in Table 3 and is shown in Figure 7. For the inflow design flood (IDF2), the maximum discharge through the emergency spillway is about 24,000 cfs. Using a total crest length of 386 feet (266 feet plus 120 feet), the unit discharge is 62 cfs/ft. At peak discharge, the hydraulic head on the spillway is about 8.6 feet (1,723.45 feet minus 1,714.86 feet) for which

Table 3

Golden Eagle Park Dam
Spillway Capacity Table (with alterations to spillways)

Reservoir Water Surface Elevation (feet)	Discharge, in cfs					
	Existing Emergency Spillway	Enlarged Emergency Spillway	Combined Emergency Spillway	Auxiliary Spillway	Principal Spillway	Total of all Spillways
(1)	(2)	(3)	(4)	(5)	(6)	(7)
1694.60[a]	0	0	0	0	0	0
1700.00	0	0	0	228	215	443
1706.00	0	0	0	462	446	907
1712.00	0	0	0	609	590	1199
1714.86[b]	0	0	0	664	650	1314
1717.50	2738	1338	4077	713	698	5488
1722.00	12180	5953	18132	787	763	19683
1724.00	17641	8621	26262	818	788	27868
1726.50[c]	25353	12390	37743	854	815	39413

a = Principal spillway crest elevation
b = Emergency spillway crest elevation
c = Embankment spillway crest elevation

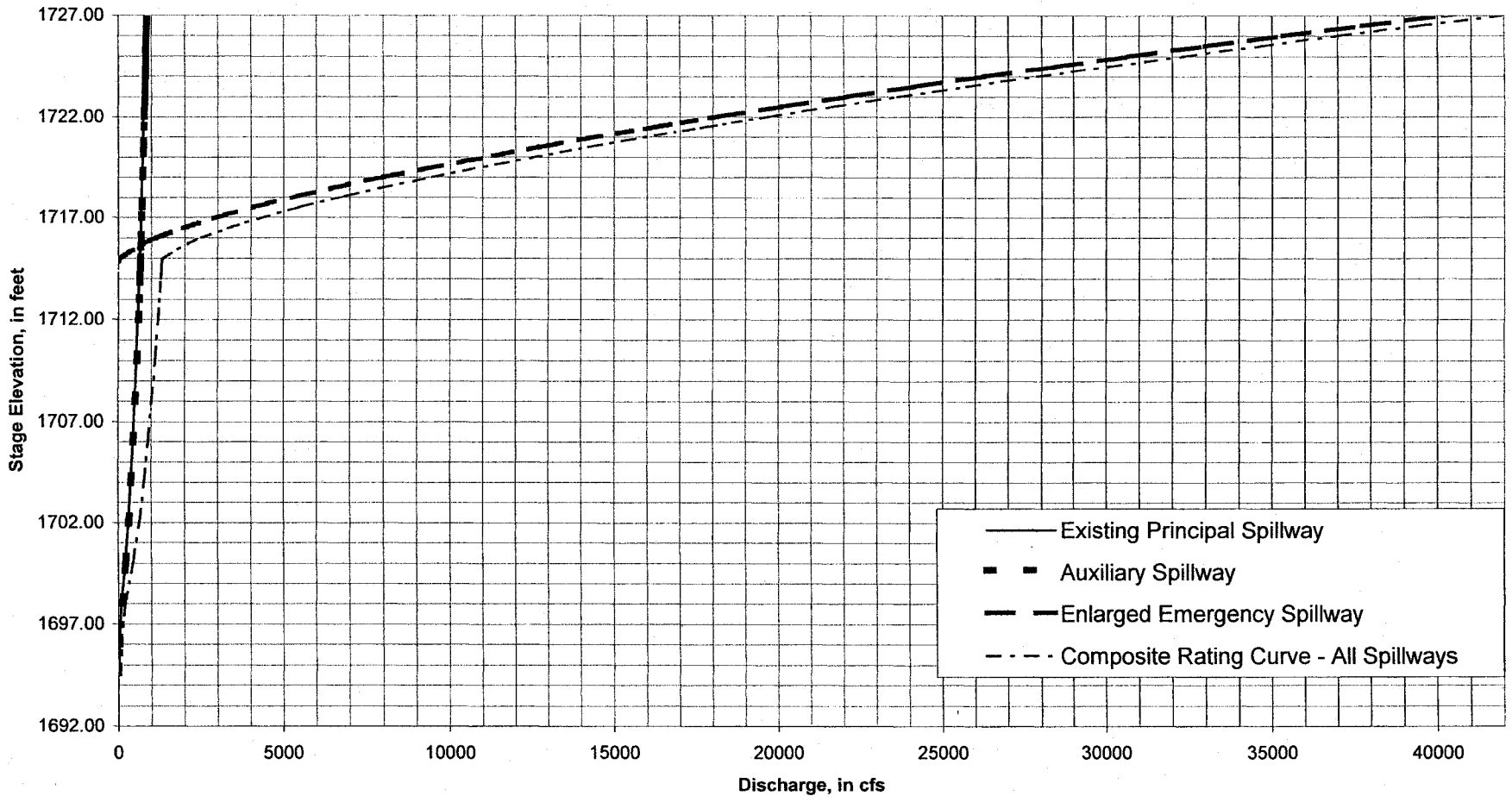

Figure 7

Golden Eagle Park Dam Spillway
Discharge - Capacity Relation

critical depth is about 5.7 feet, and the flow velocity at critical depth is about 13.6 fps. At the break of the horizontal crest of the spillway and the downstream slope of the spillway chute the flow depth is estimated at 0.7 critical depth or about 4 feet, and the flow velocity over the spillway chute is about 20 fps at the top of the chute and accelerating down the chute with maximum velocities of about 25 fps at the toe of the chute. Such flow depths and velocities are erosive to earthen spillways and chutes.

Based on anticipated spillway hydraulics, the need for spillway erosion protection was evaluated. This consisted of field exploration of conditions in the existing emergency spillway. Excavation of test pits in the crest and amphitheater area under the direction of AEE was conducted (see the AEE geotechnical report). Although the spillway was originally designed and presumably constructed with a grouted riprap spillway crest and chutes, such erosion protection does not currently exist. Furthermore, the masonry amphitheater steps will not withstand even moderate flows much less the spillway design flows. Therefore, the spillway will experience erosion during spillway operation. Further consideration of spillway erosion potential indicates the following:

1. Although spillway flows are erosive to the earthen structure, the duration of spillway flows are expected to be short (see Figure 8). Therefore, there will be limited opportunity for erosion to propagate through the earthen structure to cause breach of the impounded waters below elevation 1714.86 feet.
2. The likely erosion path through the existing emergency spillway is quite long and would require a massive headcut through that earthen section to breach the dam.
3. The shortest erosion path is where the spillway is being enlarged and some portion of that erosion path is through embankment fill.

Based on those considerations and evaluation of alternatives for erosion protection, the recommended spillway erosion protection will consist of rock-filled gabions and Reno mattress on the crest and chute of the enlarged portion of the emergency spillway and extending some distance into the existing portion of the emergency spillway. *Extent of erosion protection and design details will be determined during final design.*

The need for replacement and/or reconstruction of the amphitheater steps and other aesthetic factors concerning the emergency spillway area will be addressed during the 30% design review and value engineering analysis to be performed prior to final design.

AUXILIARY SPILLWAY

The auxiliary spillway is to be a 4-foot high by 8-foot wide box culvert section with a drop inlet. The hydraulic capacity of the auxiliary spillway is analyzed by Hydraulic Design of Highway Culverts (Federal Highway Administration, 1985) as implemented with the HY8 program. Hydraulic calculations are provided in Appendix D.

The auxiliary spillway is provided with an inclined, steel bar trashrack within the headwalls of the inlet. The trashrack is designed to provide its full capacity under the assumption of 50 percent clogging of the trashrack area due to debris. Analysis of the trashrack is provided in Appendix E. An access barrier for the outlet of the box structure was determined to not be desired. Hydraulic analysis was conducted to determine if an access barrier, if installed at a later time, would adversely affect the hydraulic performance of the auxiliary spillway. It is determined that an access barrier of same physical configuration as the trashrack would not impede the design hydraulic performance of the structure (see Appendix G). Installation of an access barrier would require appropriate hydraulic analysis depending upon the actual configuration of that structure.

A concrete hydraulic jump energy dissipator is designed for 100-year discharge (see Appendix F). The hydraulic jump is contained on the apron of the basin and the conjugate depth downstream of the jump coincides with the tailwater depth in the return channel to Ashbrook Wash.

PRINCIPAL SPILLWAY

The existing principal spillway will be maintained with the only alterations being removal of the existing timber trashrack and installation of new concrete headwalls and an inclined, steel bar trashrack. The culverts of the spillway were analyzed for structural integrity of the increased load from raising the embankment (see Appendix H) and an adequate factor of safety is determined. The trashrack is designed to provide full discharge capacity with 50 percent clogging due to debris (see Appendix

E). The outlet and energy dissipator of the principal spillway are not altered. The existing 14 inch concrete encased DIP sewer line is to be left in place within one of the 60 inch culvert sections, and the hydraulic capacity of the principal spillway is calculated to account for that loss of flow area.

The hydraulic capacity of the principal spillway is analyzed by Hydraulic Design of Highway Culverts (Federal Highway Administration, 1985) as implemented with the HY8 program. Hydraulic calculations are provided in Appendix D.

SPILLWAY CAPACITY RATING TABLE

The spillway capacity of the emergency spillway, auxiliary spillway, and principal spillway are shown in Table 3 and illustrated in Figure 7. That combined spillway capacity relation is used in the HEC-1 routings of the various design floods through the reservoir and spillways.

RESERVOIR ROUTING

Routing of the two inflow design floods (IDF1 and IDF2) and the other two design floods (100-year future condition, and 10-year future condition) were performed using the flood hydrology, as previously defined, and the spillway capacity and storage capacity relations for the enlarged spillway capacity and raised embankment. Routing was performed using HEC-1 and model output is provided in Appendix C.

Comparison of the inflow and outflow for the two IDF's are shown in Figure 8, and a similar comparison for the other three design floods of more frequent return period are shown in Figure 9. The inflow and outflow hydrographs for the 100-year, existing condition flood is shown in Figure 9 for reference purposes only. That hydrologic condition is not used for design. Maximum water surface elevation for each flood along with peak discharges in each of the dam's spillways are listed in Table 4. The crest elevation of the raised dam embankment is 1726.5 feet. IDF2 is used to set the design of the emergency spillway and the height of the embankment raise. The residual freeboard for IDF2 is 3 feet. For IDF1, the residual freeboard is 0.44 feet.

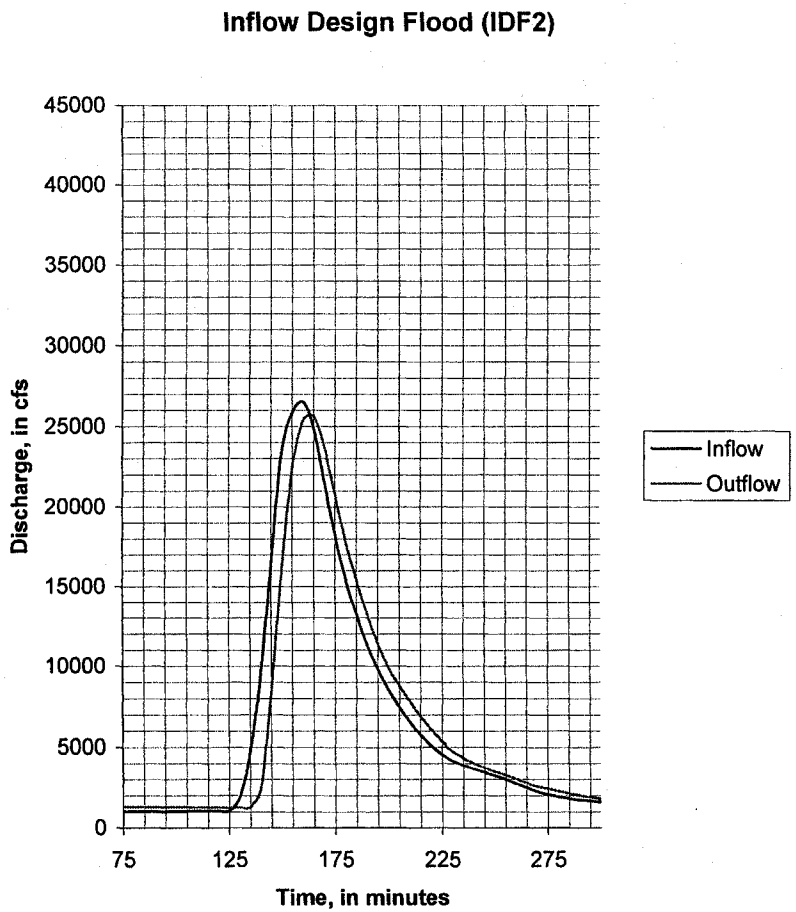

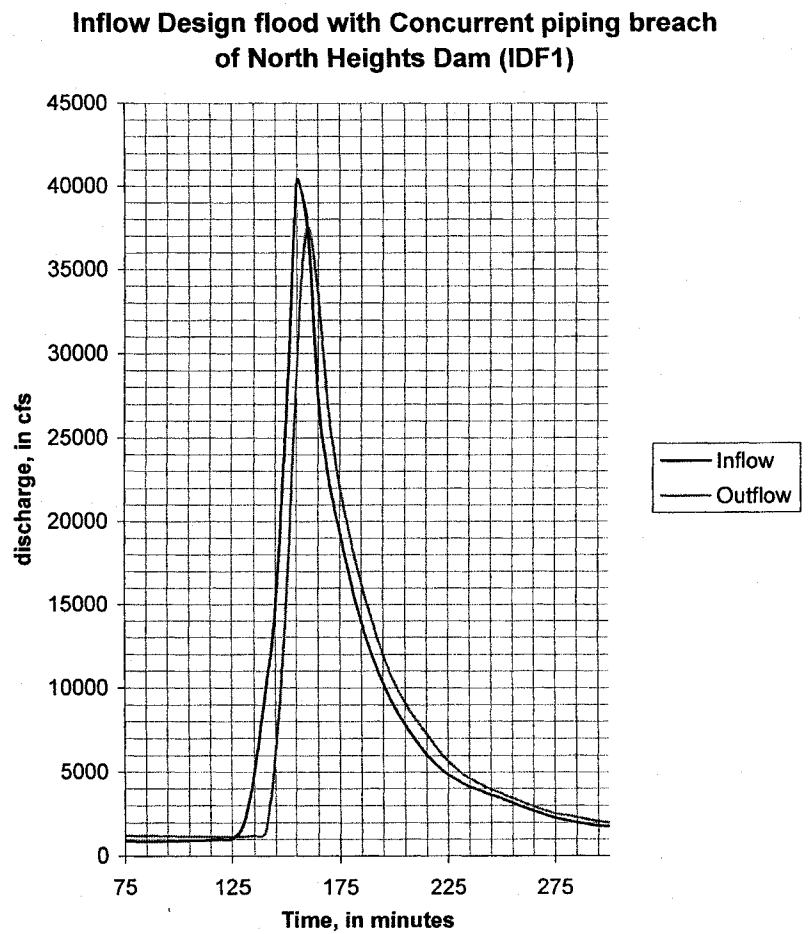

Figure 8

Inflow and outflow hydrographs under the two Inflow Design Floods for Golden Eagle Park Dam with alterations (Inflow Design Floods - IDF2 and IDF1)

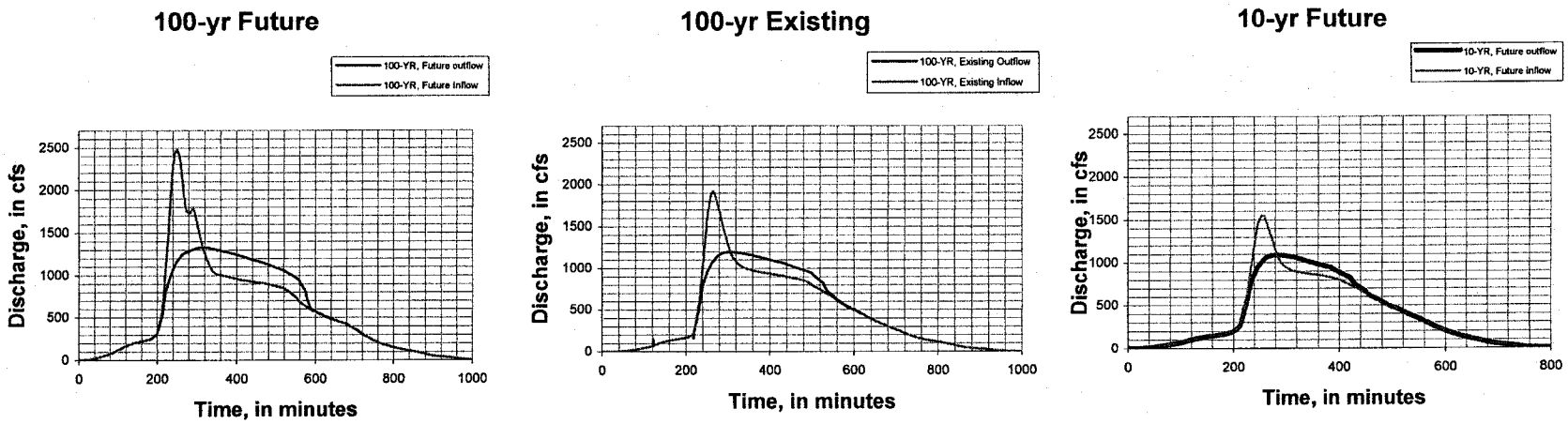

Figure 9

Inflow and outflow hydrographs for Golden Eagle Park Dam with alterations (100-year future, 100-yr existing and 10-yr future condition floods)

Table 4

Golden Eagle Park Dam

Results of Reservoir Flood Routings (with alterations to dam)

	IDF2 (1)	IDF1 (2)	100-year Future (3)	10-year Future (4)
Maximum Water Surface Elevation, ft	1723.47	1726.06	1714.39	1708.97
Peak Discharges, cfs				
Principal Spillway	782	811	640	523
Auxiliary Spillway	810	849	656	541
Emergency Spillway	24054	35732	0	0
Combined Spillways	25646	37392	1296	1064

DEWATERING PLAN

GENERAL

Dewatering is required to allow construction of the proposed auxiliary spillway reinforced concrete box culvert, sand diaphragm, subdrain system, and backfill and the inlet structure for the principal spillway on firm dry ground. Construction on a saturated subgrade or under water will not be allowed.

GEOTECHNICAL INVESTIGATION

The Geotechnical Investigation Report (AEE 1998) identifies water in three borings through the dam embankment. An artesian aquiclude was encountered in Boring No. 3 at an elevation of 1679.0 feet. The water level eventually stabilized at elevation 1691.5 feet. Boring No. 2 also had water at elevation 1695.4 feet. Boring No. 1 was dry to a depth of 45 feet or elevation 1677.0. Boring No. 1 is located approximately at the existing principal spillway outlet, Boring No. 2 is located in the vicinity of the proposed auxiliary spillway outlet and Boring No. 3 is located south of the proposed auxiliary spillway outlet, closer to the emergency spillway. Estimated levels of groundwater in the general project site vicinity, based on maps presented by Hammett and Heather (1995), varies from elevation 1324 to 1338 which is approximately 350 feet lower than the levels measured in the borings. The water encountered in the borings is most likely a perched water table due to irrigation of the park and possibly from the golf course and lake upgradient from the dam. Nevertheless, some level of dewatering will be required.

DEWATERING PLAN

The Contractor is required to prepare plans for surface water diversion and dewatering during construction and to take responsibility for the plan. The dewatering plan must address the handling and removal of water from all sources including groundwater. A proposed plan for dewatering will not be prepared by the Engineer, and design, construction, implementation, and operation of the dewatering plan is the sole responsibility of the Contractor.

Water must be removed so work can be performed in the dry without damage to foundation soils. Prior to beginning any work on dewatering the worksite excavations and foundations, the Contractor must submit the plan for approval by the Engineer.

The plan must show the proposed method for dewatering; and removal of water from excavation and foundations. The Contractor must construct and maintain all necessary cutoffs, cofferdams, channels, dikes, berms, flumes, drains, sumps, pumps, erosion control measures and/or other temporary diversion and protection works necessary for dewatering during construction. The Contractor must furnish, install, maintain, and operate all necessary pumps, equipment, and other facilities for dewatering and removal of water from the various parts of the project and for maintaining the foundations, excavations, and embankment free from water as necessary for constructing each part of the project in the dry.

The Contractor must drain or otherwise positively dewater borrow areas, embankment areas, structural excavations, trenches, and other areas as necessary to permit satisfactory construction at all times. When an excavation extends below the water table, dewatering must be accomplished in a manner that will maintain stability of the excavated slopes and bottom of the excavation, and will result in all construction operations being performed in the dry. The use of a sufficient number of properly screened sumps, wells, or other equivalent methods may be necessary for dewatering. During the excavating, placing, and compacting of the embankment materials and concrete, trench excavation, placing pipe, trench backfill, or structural excavation, the water level at every point in the excavation must be maintained below the bottom of the excavation.

PERMITS

It is not anticipated that a permit will be required for the dewatering, however, the Contractor must familiarize himself with, and comply with, all applicable codes, ordinances, and statutes and bear sole responsibility for penalties imposed for noncompliance.

DAMAGE

The Contractor will be responsible for, and must repair at his expense, any damage to the embankments, foundations, structures, or any other part of the project caused by excessive groundwater. In the event the construction area is flooded or otherwise damaged by water, Contractor must clean up and repair the damage, dry out or remove material in foundations and embankments deemed too wet, weakened, or contaminated for proper foundation or fill material by the Engineer, all at the Contractor's expense.

SURFACE WATER DIVERSION PLAN

GENERAL

Diversion of surface water from Ashbrook Wash and Cloudburst Wash as well as local runoff is required to allow construction of the proposed auxiliary spillway reinforced concrete box culvert, sand diaphragm, subdrain system, and backfill and the inlet structure for the principal spillway on firm dry ground and to prevent damage to the existing embankment or overtopping of the emergency spillway.

The diversion plan selected will represent a compromise between the cost of the diversion facilities and the amount of risk involved. The diversion plan must minimize the potential for serious flood damage to the work in progress at a minimum of expense. The following factors should be considered in a study to determine the best diversion plan:

1. Streamflow characteristics such as frequency, duration and magnitude of runoff
2. Size and frequency of the desired diversion flood
3. Methods of diversion
4. Specifications requirements

STREAMFLOW CHARACTERISTICS

Streamflow records provide the most reliable information regarding streamflow characteristics and should be considered in developing the diversion plan. The District operates an Alert station at the dam and will provide data on streamflow and reservoir levels that have been recorded at this station. However, this data is limited since the Alert station was installed only recently. It is doubtful that any other streamflow data is available for the watershed. A statistical method of predicting the streamflow using standard hydrology methods is recommended. Use of previously performed 10-year flood estimation is also recommended.

SELECTION OF DIVERSION FLOOD

It is not economically feasible to divert the largest flood that is expected to occur at the site and consequently a lesser requirement is used. The cost of the diversion

works must be less than or equal to the anticipated damage that would occur if a flood occurred during construction. Additionally, a smaller diversion works will cause less damage downstream and pose a smaller safety threat if it fails due to a larger event. It is recommended that at the minimum, the diversion works should safely divert flows from the average annual runoff event. Additionally, if the diversion works can be built larger to handle the 5 or 10 year event with minimal increase in cost over the average annual event, the decreased risk (both monetary and safety) may be desirable to both the Contractor and the District.

METHODS OF DIVERSION

Common methods for diverting streams during construction involve one or more of the following provisions: an embankment or cofferdam upstream of the dam with provisions to outlet the water through tunnels driven through the abutments, conduits through or under the dam, temporary channels through the dam.

Alternative A - A cofferdam is constructed upstream of both the principal and auxiliary spillways. A pipe or channel drains the cofferdam through the dam next to the auxiliary spillway conduit. An advantage of this diversion is that it allows construction to proceed simultaneously on both the auxiliary and principal spillway. A disadvantage is that failure of this diversion will result in potentially a large flow downstream and increased damage to the dam and downstream due to this higher flow. The design of the cofferdam should be such that this flow is limited to less than the 100-year runoff. This method is also more costly as it requires a higher cofferdam and construction of the pipe or channel outlet works.

Alternative B - Since the principal spillway for the dam is already in place, diversion of runoff can be directed by berms and dikes to the principal spillway during construction of the auxiliary spillway. During, construction of the new inlet structure on the principal spillway, a second diversion is required to direct the runoff to the completed auxiliary spillway. The advantages of this method are that it is less expensive and easy to construct since it requires no temporary conduits or channels. It also poses less of a threat of damage to the dam or downstream since less water is impounded and the flow through the spillway is no higher than it normally would be without the diversion. A disadvantage is that it does require that the construction be phased and the diversion be moved from the principal to the auxiliary spillway after construction is finished on the auxiliary spillway. This may result in an increase in construction time.

SPECIFICATION REQUIREMENTS

The Contractor is required to prepare plans for diversion and care of water during construction and to take responsibility for the plan. The plan must address the handling and removal of water from all sources including surface and groundwater. A proposed plan for diversion has been prepared and will be part of the bid package. However, final design, construction, implementation, and operation of the diversion and care of water plan is the sole responsibility of the Contractor.

Water must be removed so work can be performed in the dry without damage to foundation soils. Prior to beginning any work on diverting and dewatering the worksite excavations and foundations, the Contractor must submit the plan for approval by the Engineer. The plan must show the proposed method for diversion of surface water from around the construction site and protection of the site from surface water and all other water during construction; dewatering; and removal of water from excavation and foundations. The Contractor must construct and maintain all necessary cutoffs, cofferdams, channels, dikes, berms, flumes, drains, sumps, pumps, erosion control measures and/or other temporary diversion and protection works necessary for diversion and care of all water during construction, and until project is completed. The Contractor must furnish, install, maintain, and operate all necessary pumps, equipment, and other facilities for dewatering and removal of water from the various parts of the project and for maintaining the foundations, excavations, and embankment free from water as necessary for constructing each part of the project in the dry.

The Contractor must drain or otherwise positively dewater borrow areas, embankment areas, structural excavations, trenches, and other areas as necessary to permit satisfactory construction at all times. When an excavation extends below the water table, dewatering must be accomplished in a manner that will maintain stability of the excavated slopes and bottom of the excavation, and will result in all construction operations being performed in the dry. The use of a sufficient number of properly screened sumps, wells, or other equivalent methods may be necessary for dewatering. During the excavating, placing, and compacting of the embankment materials and concrete, trench excavation, placing pipe, trench backfill, or structural excavation, the water level at every point in the excavation must be maintained below the bottom of the excavation.

DAMAGE

The Contractor will be responsible for, and must repair at his expense, any damage to the embankments, foundations, structures, or any other part of the project caused by surface water, groundwater, or failure of any part of the diversion or protective works. In the event the construction area is flooded or otherwise damaged by water, Contractor must clean up and repair the damage, dry out or remove material in foundations and embankments deemed too wet, weakened, or contaminated for proper foundation or fill material by the Engineer, all at the Contractor's expense. The Contractor will be responsible for, and must repair at his expense, any damage to areas downstream of the construction site caused by failure of any part of the diversion or protective work. The Contractor must inspect, monitor, and repair cofferdam and other diversion works to maintain them in a safe condition. Erosion damage to any fills must be repaired using materials and methods approved by the Engineer. Contractor shall repair all erosion damage to a condition that existed prior to erosion occurring. The only exception to this is in the event damage to the work is caused by a storm, flood, or earthquake which constitutes an "Occurrence," the Contractor may apply in writing to the Engineer for the District to pay or participate in the cost of repairing damage to the work from such cause or, in lieu thereof, and at the sole discretion of the District, terminate the contract and relieve the Contractor of further obligation to perform the work. See Sections 107.19 and 107.20 of the Supplementary General Conditions.

CONSTRUCTION QUALITY ASSURANCE PLAN

The Construction Quality Assurance (CQA) plan is presented in manual form and the manual provides the general policy and guidance for establishing quality management procedures in the construction of the improvements to the dam.

The objective of the manual is to provide a plan to verify that proper materials, construction techniques, and procedures are followed by the contractor and the contract administrator and that the completed structure meets the requirements and intent of the plans and specifications.

An example of a CQA plan which was written recently for Lynx Lake Dam and is a similar type of project is presented in Appendix I. A manual will be prepared for the dam using the Lynx Lake Dam plan as a template, and modifying for this project.

REFERENCES

1. AGRA Earth & Environmental, Inc., 1998a, Geotechnical Investigation Report, Golden Eagle Park Dam, Assignment No. 5 near Golden Eagle Boulevard and Palisades Boulevard, Fountain Hills, Arizona: for Flood Control District of Maricopa County.

2. AGRA Earth & Environmental, Inc., 1998b, Dam Safety Inspection, Golden Eagle Park Dam, Assignment No. 5 near Golden Eagle Boulevard and Palisades Boulevard, Fountain Hills, Arizona: for Flood Control District of Maricopa County.

3. Federal Highway Administration, 1985, Hydraulic Design of Highway Culverts.

4. George V. Sabol Consulting Engineers, Inc., 1994, Fountain Hills (North) Floodplain Delineation Study: for Flood Control District of Maricopa County, Phoenix, Arizona.

5. George V. Sabol Consulting Engineers, Inc., 1996a, Fountain Hills Dam Break Analysis for Golden Eagle Park Dam, Hesperus Dam, Aspen Dam, North Heights Dam, SunRidge Canyon Dam: for Anderson-Nelson, Inc., Phoenix, Arizona.

6. George V. Sabol Consulting Engineers, Inc., 1996b, Fountain Hills Area Drainage Master Plan, Interim Report, Reconnaissance Study and Alternative Evaluation for Golden Eagle Park Dam: for Flood Control District of Maricopa County.

7. George V. Sabol Consulting Engineers, Inc., 1997, Final Report, Part B: Golden Eagle Park Dam, Feasibility Study: for Flood Control District of Maricopa County.

8. Hammet, B.A. and Heather, R.L., 1995, Maps showing Groundwater Conditions in the Phoenix Active Management Area, Maricopa, Pinal and Yavapai Counties, Arizona – 1992, Department of Water Resources, Hydrologic Map Series Report Number 27, Phoenix, Arizona, July.

9. Stantec, 1999, Design Issues & Alternatives Report, Golden Eagle Park Dam Modification Pre-Design: for Flood Control District of Maricopa County.

APPENDIX A

IDF HYDROLOGY MEMO, 4 MARCH 1999

Memo

Stantec

To: Tom Renckly, FCDMC
Kathryn Gross, FCDMC
Jim Leubner, Town of Fountain Hills
Rich Dobson, Ftn. Hills Unified School Dist.
Larry Lambert, ADWR

From: George Sabol

File: 28900095

Date: 04 March 1999

Re: Golden Eagle Park Dam – Selection of IDF

Background

The scope of work (3.5.1) requires selection of two inflow design floods (IDF). One IDF (IDF1) is to be based on the assumption of breach of one of the three upstream dams. The other (IDF2) is to be based on other assumptions. Those two IDF's will be used in developing and evaluating various alternatives for dam modification.

Review of Hydrology Studies

Inflow floods for Golden Eagle Park Dam (GEP Dam) were defined in previous studies by George V. Sabol Consulting Engineers, Inc. (GVSCE). Those are summarized as follows:

1. Fountain Hills (North) Floodplain Delineation Study (Fountain Hills FDS) performed by GVSCE and completed in 1994 for the Flood Control District of Maricopa County (FCD 92-04).

   100-year existing (1993) and future condition hydrographs were developed based on watershed parameters as documented in that report.

2. Town of Fountain Hills Dam Break Analysis for Golden Eagle Park Dam, Hesperus Wash Dam, Aspen Dam, North Heights Dam and Sunridge Canyon Dam performed by GVSCE and completed in 1996 for Anderson-Nelson, Inc.

   Dam break analysis of GEP Dam was performed using a 0.5 PMF inflow based on the following assumptions:

   a. Storm producing a 0.5 PMF event over the entire watershed including the watersheds to the three upstream dams.

   b. 0.5 PMF spillway releases from both Sunridge Canyon and Aspen Dams.

   c. Combined 0.5 PMF spillway release and piping breach of North Heights Dam.

3. Fountain Hills Area Drainage Master Plan (Fountain Hills ADMP) performed by GVSCE and completed in 1997 for the Flood Control District of Maricopa County (FCD 94-16).

   IDF for GEP Dam was developed based on the same hydrologic model as the dam break analysis except that concurrent breach of the North Heights Dam was not assumed.

ADWR reviewed the Fountain Hills ADMP report and provided comments regarding certain assumptions and spillway hydraulics. Based on those comments and previous GVSCE reports, the District analyzed numerous hydraulic conditions and assumptions in evaluating IDF's for GEP Dam. Those results are presented in Development of Inflow Design Floods for use in Alternatives Analysis Studies (FCDMC, January 1999).

For the present study, Stantec is to review the previous hydrology by GVSCE and the District, and to recommend the two IDF's that are to be used. This District report (January 1999) uses the hydrologic models developed by GVSCE with modifications for various additional assumptions and conditions, and the results are presented in Tables 1.1, 1.2 and 1.3 of the District report. Each table is based on the use of a weir coefficient for emergency spillway hydraulics for all four dams in the study area. Those coefficients being 3.0, 2.63 and 2.60, respectively. A summary of the various assumptions and conditions evaluated by the District is shown in Table 1.

Evaluation of the IDF results presented by the District in Tables 1.1, 1.2 and 1.3 are summarized as follows:

A. The assumption of emergency spillway weir coefficient (3.0, 2.63 or 2.60) is not sensitive to the estimated magnitude of the IDF at GEP Dam. A "C" coefficient of 2.60 is reasonable and the District's results presented in Table 1.3 are adopted.

B. The assumption of clogged principal spillways (Sunridge Canyon and Aspen Dams) (IDF1A and IDF2A) result in only a 5 - 6% increase in the IDF at GEP Dam. In view of the error and uncertainty in PMF hydrology, spillway hydraulics, and dam breach analysis, such small increases in IDF results is not considered relevant.

C. The assumption of inflow equals outflow at Sunridge Canyon Dam (IDF1B and IDF2B) results in only a 1 – 2% increase in the IDF at GEP Dam. That increase is not relevant, nor is the assumption justified.

D. The assumption that the Sunridge Canyon and Aspen Dam reservoirs are empty at the onset of the IDF storm (IDF1C) results in a 10% reduction in the IDF at GEP Dam for the with breach at North Heights Dam condition. That assumption coupled with the assumption of breach of North heights Dam due to piping (and a full reservoir) is hydrologically inconsistent, somewhat unconservative, and not in line with usual dam safety practices for upstream dams.

E. The assumption that all three reservoirs are empty at the onset of the IDF storm (IDF2C) results in a 29% reduction in the IDF at GEP Dam. That assumption is not in line with usual dam safety practices for upstream dams.

TABLE 1

Summary of assumptions and conditions analyzed by the District (January 1999)

North Heights Dam								
Assumptions	**IDF1**	**IDF1A**	**IDF1B**	**IDF1C**	**IDF2**	**IDF2A**	**IDF2B**	**IDF2C**
Piping Breach	YES	YES	YES	YES	NO	NO	NO	NO
Initial WSE	100-YEAR	100-YEAR	100-YEAR	100-YEAR	100-YEAR	100-YEAR	100-YEAR	EMPTY
Principal Spillway	CLOGGED	CLOGGED	CLOGGED	CLOGGED	OPEN	CLOGGED	CLOGGED	OPEN
Sunridge Canyon & Aspen Dams								
Assumptions	**IDF1**	**IDF1A**	**IDF1B**	**IDF1C**	**IDF2**	**IDF2A**	**IDF2B**	**IDF2C**
Breach	NO	NO	NO	NO	NO	NO	NO	NO
Initial WSE	100-YEAR	100-YEAR	100-YEAR	EMPTY	100-YEAR	100-YEAR	100-YEAR	EMPTY
Principal Spillway	OPEN	CLOGGED	CLOGGED	OPEN	OPEN	CLOGGED	CLOGGED	OPEN
Reservoir Routing at Aspen	YES	YES	YES	YES	YES	YES	YES	YES
Reservoir Routing at Sunridge	YES	YES	NO*	YES	YES	YES	NO*	YES

*Inflow to Sunridge Canyon Dam is set to equal outflow (no reservoir routing)

Recommended IDF's

Therefore, based on the results presented by the District (January 1999) and the summary and discussion presented herein, the two recommended IDF's for GEP Dam are IDF1 for the with upstream dam breach and IDF2 for no upstream dam breach. Those IDF hydrographs are shown in Figures 1 and 2, respectively.

Description of Hydrologic Models for the Recommended IDF's

A brief description of the hydrologic modeling for IDF1 and IDF2 is presented. Complete model development including parameter estimation is provided in the three previously referenced GVSCE reports.

In developing the GEP Dam IDF hydrologic models, the following were performed:

1. Watershed mapping and parameter estimation was adopted from the Fountain Hills FDS study. An HEC-1 model for future (full build-out conditions) was developed. Multiple subbasins are used in that model so as to define 100-year discharges at numerous flow concentration points for purposes of floodplain delineation.
2. Using information from the Fountain Hills FDS, an HEC-1 model was developed wherein the multiple subbasin model was converted to single basins for each of the four dams. The simplified HEC-1 model was demonstrated to reproduce 100-year discharges at the dams as compared to the more complex multiple subbasin model of the Fountain Hills FDS. Those results are reported in the 1996 dam break report.
3. Dam breach during 0.5 PMF storm events were developed for each of the four dams and those are reported in the 1996 dam break report. For GEP Dam, it was assumed that for the purpose of dam break analysis, one of the three upstream dams would fail concurrently with the 0.5 PMF event. It was determined that piping breach of North Heights Dam constituted the most severe flood at GEP Dam. The timing of the peak outflow due to piping breach was adjusted to coincide with the peak spillway outflow from North Heights Dam so as to produce the largest combined outflow hydrograph from North Heights Dam. That dam breach hydrograph is incorporated into IDF1, as recommended herein.

4. The North Heights Dam breach (QI records in IDF1) is based on the following:
    - Plugged principal spillway.

- Initial 100-year (future condition) water surface elevation with flow passing over the emergency spillway.
- Piping breach during 0.5 PMF to maximize the North Heights Dam peak discharge.

5. For the purpose of reconnaissance and feasibility level studies for GEP Dam as part of the Fountain Hills ADMP, an IDF was developed from the previous dam break modeling. The IDF does not assume that any of the three upstream dams fail during the 0.5 PMF. That assumption is consistent with IDF2, as reported herein. Background and hydrologic modeling information in regard to the development of the IDF models are presented in Appendices A and B. Appendix A is from the GVSCE (November 1996) Fountain Hills ADMP report, and it includes a watershed map, PMP estimation worksheets, and discussion of parameter estimation. Appendix B is from the GVSCE (July 1997) Fountain Hills ADMP report, and it provides the HEC-1 file that the District revised in performing its study.

6. Based on ADWR comments, the District modified the previous IDF's as prepared by GVSCE, and analyzed various conditions and assumptions as shown in Table 1. Four IDF's were defined for a with dam breach (North Heights Dam) condition, and four for a without dam breach condition.

7. As discussed, herein, Stantec reviewed the previous GVSCE and District models and recommended IDF1 (with dam breach) and IDF2 (without dam breach).

The HEC-1 files that were developed by the District in developing IDF1 and IDF2 are provided in Appendices C and D, respectively. Stantec provided additional editorial comments to the District provided files to document the development of those models. A diskette of the HEC-1 files for IDF1 and IDF2 is attached. That diskette contains the following files:

	FILE	COMMENT
A.	DAM4-PMF.IH1	HEC-1 file by GVSCE (July 1997) used to develop IDF for GEP Dam for reconnaisance and feasibility level studies. This file does not include upstream dam break, and is the file that the District modified for its studies (Jan. 1999). This file is shown in Appendix B.

	FILE	COMMENT
B.	DAM11-RT.IH1/OH1	Dam break analysis (piping breach) as developed by GVSCE (Jan. 1996) for North Heights Dam. This breach outflow hydrograph is used to develop the QI record in IDF1.
C.	DAM11P.OUT	HEC-1 file as developed by GVSCE (Jan. 1996) of the emergency spillway release from North Heights Dam prior to and concurrent with the piping breach. This hydrograph is added to the piping breach hydrograph to develop North Heights Dam QI record in IDF1.
D.	QI.xls	Spreadsheet development of QI record in IDF1.
E.	IDF1.OUT	HEC-1 file for GEP Dam IDF1 (with North Heights Dam breach). Basic HEC-1 file was originally developed by GVSCE (DAM4-PMF.IH1) and subsequently modified by the District (addition of QI record). Stantec added editorial comments to the District's file.
F.	IDF2.OUT	HEC-1 file for GEP Dam IDF2 (without upstream dam break). File was developed by GVSCE (DAM4-PMF.IH1) and used by the District in its January 1999 analysis. Stantec added editorial comments.

STANTEC CONSULTING INC.

George V. Sabol, PhD, PE
Senior Associate
gsabol@stantec.com

c. Jon Benoist, ADWR
John Linkswiler, ADWR
Randy Harrell, TOFH
Norm Wetz, AEE

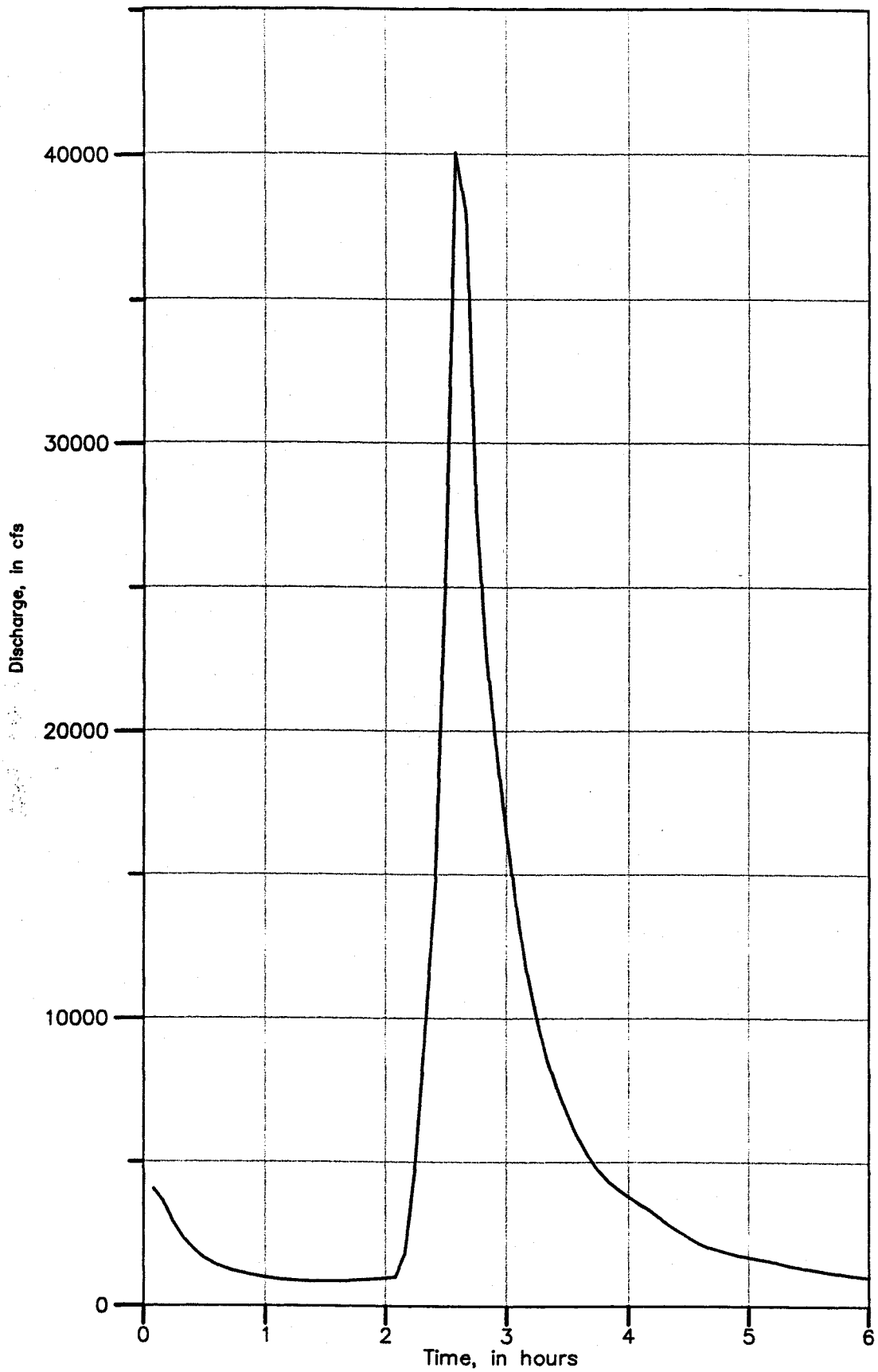

FIGURE 1

IDF1 for Golden Eagle Park Dam
With North Heights Dam Break

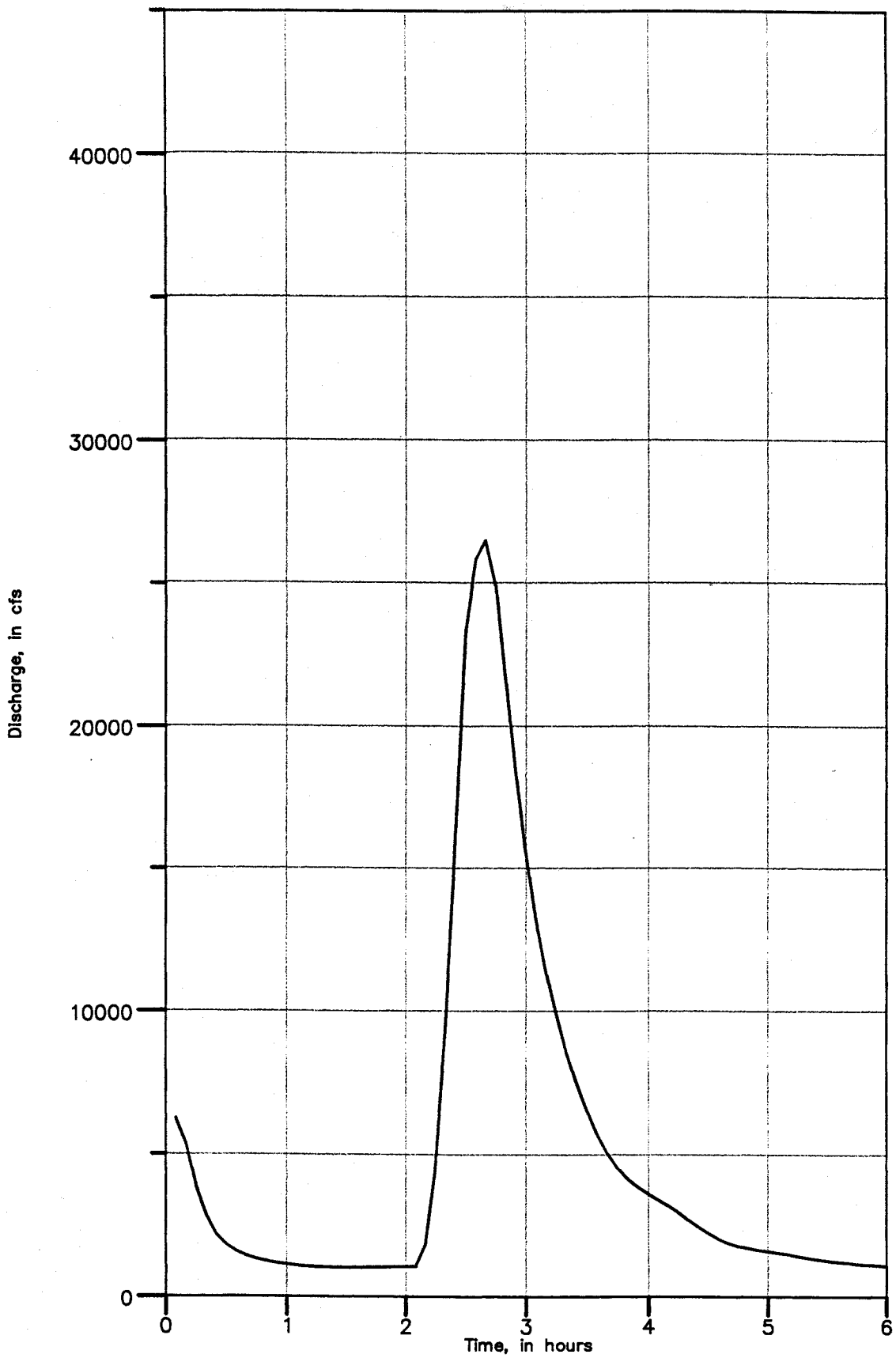

FIGURE 2

IDF2 for Golden Eagle Park Dam
Without Upstream Dam Break

Appendix A

Hydrologic model information from the Fountain Hills ADMP Report
(GVSCE, November 1996)

FLOOD CONTROL DISTRICT OF MARICOPA COUNTY
PHOENIX, ARIZONA

FOUNTAIN HILLS AREA DRAINAGE MASTER PLAN FCD 94-16

RECONNAISSANCE STUDY
and
ALTERNATIVE EVALUATION

for

GOLDEN EAGLE PARK DAM

INTERIM REPORT

George V. Sabol Consulting Engineers, Inc.
Scottsdale, Arizona

NOVEMBER 1996

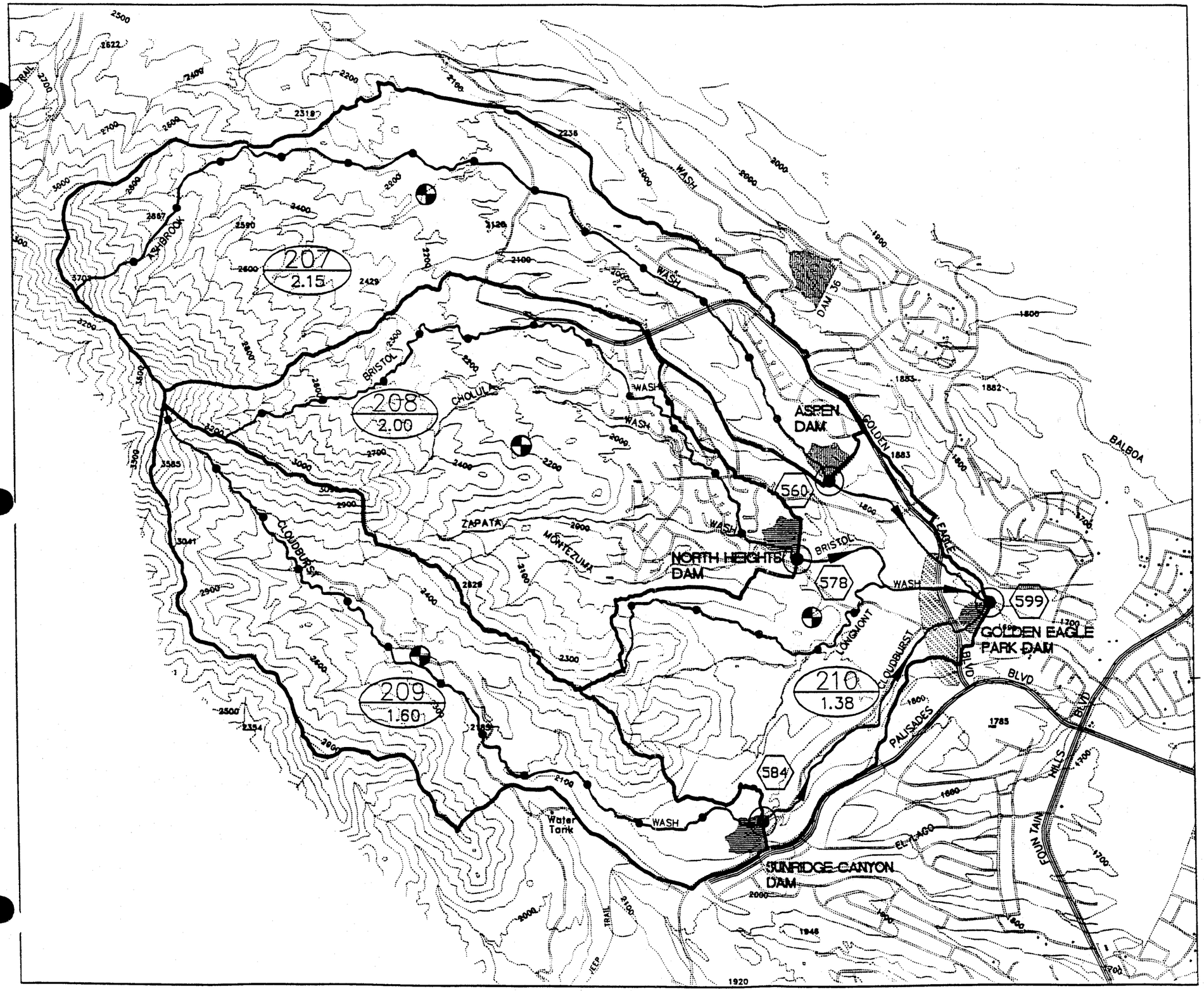

FLOOD CONTROL DISTRICT OF MARICOPA COUNTY

FOUNTAIN HILLS ADMP

F.C.D. CONTRACT NO. 94-16

LEGEND

- Major Basin ID / Area in Square Miles (207 / 2.15)
- Major Road
- HEC-1 Concentration Point (560)
- Basin Centroid
- Lag Flow Path
- HEC-1 Routing Path
- Minor Road
- Major Subbasin Boundary
- Existing Dam
- Proposed Dam

SCALE: 1"=2000'

CONTOUR INTERVAL = 100'

FIGURE 1

WATERSHED DRAINAGE MAP

George V. Sabol Consulting Engineers, Inc.

BASE TOPOGRAPHY COMPILED FROM USGS QUADRANGLE MAPS

FLOOD HYDROLOGY

Existing Hydrology Models

The existing Ftn Hills FDS HEC-1 models developed by GVSCE for the Flood Control District of Maricopa County (Contract FCD 92-04) are used and modified as required to provide inflow design hydrographs for the study alternatives. Those models were developed using the HEC-1 Flood Hydrology Program, version 4.0.1E, dated May 1991 (U.S. Army Corps of Engineers, 1991), and the methodology contained in the FCDMC Design Manual. The 100-year precipitation, distribution and areal reduction factors were obtained from the FCDMC Design Manual and modeled using JD Records. Rainfall losses were estimated using the Green and Ampt infiltration equation with an estimate for surface retention and effective imperviousness. Hydrographs were generated using Clark unit hydrograph methodology. Channel routing was accomplished using the Modified Puls method with the normal depth option. Reservoir routing through the various detention areas was accomplished using the Modified Puls method with the level pool option. The Ftn Hills FDS models were also verified by indirect methods and those verifications provided no reason to reject the modeling results. Based on a review of that modeling and the verification results, the Ftn Hills FDS watershed hydrology modeling is adopted for use in this study.

As previously referenced, the results of the Ftn Hills FDS existing condition watershed hydrology is summarized in a three volume report and the future condition hydrology is bound separately as a fourth document. Unless otherwise noted, all references made in this report to the Ftn Hills FDS watershed hydrology and/or modeling, specifically refer to the Fountain Hills North Floodplain Delineation Study, Technical Data Notebook-Hydrology, Future Conditions (GVSCE, 1994). Excerpts from that report (and others where applicable) are included herein as appendices when considered pertinent or required.

Multiple Basin Models

Major Basins 207, 208, 209 and 210 are extracted from the overall Ftn Hills FDS multiple basin model to facilitate generation of the single basin models as discussed below. A separate multiple basin model for Major Basin 210 is developed without the inclusion of the routed hydrographs from Aspen, North Heights, and SunRidge Canyon Dams, in order to provide a runoff hydrograph for development of the single basin model for this area. Printouts of the HEC-1 output files for each multiple basin model are provided in Appendix B.

Single Basin Model Generation

General

The Ftn Hills FDS hydrology models were developed for the 100-year, 6-hour and 24-hour storms. Those models include extensive detail in the form of numerous subbasins, concentration points, flowsplits, channel and storage routing. Although that level of detail is normal for the identification of peak discharges at frequent locations along a floodplain delineation reach, it results in large and tedious computer models, especially with respect to the requirements of this study. In order to simplify the 100-year hydrology modeling effort and facilitate a conversion of those models to generate 0.5 PMF inflow hydrographs, it is desirable to develop single basin hydrology models for the respective areas tributary to Aspen, North Heights, and SunRidge Canyon Dams, and the intermediate area between the upstream dams and GEPD. Those drainage basins are shown on Figure 1 and are respectively identified from the Ftn Hills FDS report as Major Basins 207, 208, 209 and 210. Single basin models of those major basins can then be more efficiently combined and routed as required for evaluation of the alternatives.

The procedure for generation of the single basin 100-year and PMF models is to first develop 100-year models that duplicate the Ftn Hills FDS multiple basin model runoff hydrographs at the desired locations (concentration points) using the methodology in the FCDMC Design Manual and parameters from the Ftn Hills FDS. The PMF models are then developed from the 100-year single basin models by replacement of the 100-year precipitation with the probable maximum precipitation (PMP) and distribution, and modification of the unit hydrograph lag parameter to reflect a PMF magnitude runoff. Those procedures are presented with more detail in the following sections.

100-Year Models

Precipitation Data - Precipitation and rainfall distributions are coded per the original Ftn Hills FDS models with appropriate areal reduction factors directly applied and the JD records removed. According to the Ftn Hills FDS results, 100-year, 6-hour storms controlled the peak discharges for the study basins. The combined inflow to GEPD, however, is controlled by the 100-year, 24-hour storm, therefore, both 6- and 24-hour single basin models are developed.

Basin Areas - Basin areas for the single basin models are estimated by summing the areas of Ftn Hills FDS subbasins encompassed by the major basin boundary. Refer to Exhibits "A" and "D" in Appendix A for detailed delineations of each subbasin and their relation to the major basin boundary. The single basin (referred to herein as study basin) boundaries are indicated on Figure 1 and correspond to the major basin boundaries of Exhibits "A" and "D". The composite areas for each study basin are summarized in Table 2. The individual subbasin areas as reported in the Ftn Hills FDS are summarized in Tables C1, C2, C3 and C4 of Appendix C, which respectively correspond to Study Basins 207, 208, 209 and 210.

Rainfall Loss Parameters - Rainfall losses are estimated by the Green and Ampt method, assuming that the watershed is fully developed. Green and Ampt rainfall loss parameters developed for the individual subbasins reported in the Ftn Hills FDS future condition hydrology report are composited for each study basin. The procedures used for compositing those values are summarized as follows:

1. **IA, RTIMP, DTHETA, Vegetative Cover** - The surface retention loss (IA), percentage of effective impervious area (RTIMP) and the antecedent volumetric soil moisture deficit (DTHETA) parameters are all estimated by area averaging the individual Ftn Hills FDS values for the subbasins encompassed by the study basin. The composite vegetative cover percentage is also estimated by area averaging the individual subbasin values.

2. **Bare Ground XKSAT** - The composite bare ground XKSAT value for each study basin is obtained by log-averaging the individual Ftn Hills FDS subbasin bare ground XKSAT values.

3. **PSIF** - The wetting front capillary suction (PSIF) is assigned based on the composite bare ground XKSAT value. That assignment is made using Figure 4.3 of the FCDMC Design Manual.

4. **Vegetation Adjusted XKSAT** - The composite bare ground XKSAT is adjusted for the effects of vegetation by the curve in Figure 4.4 of the FCDMC Design Manual. The composite vegetative cover percentage is used for that adjustment.

Table C1 in Appendix C, summarizes the Ftn Hills FDS individual parameter values for each subbasin included in Study Basin 207. Tables C2, C3 and C4 provide similar summaries for Study Basins 208, 209 and 210, respectively. The composite values for each study basin are summarized at the bottom of those tables and in Table 2. Excerpts of the supporting parameter calculation worksheets and tables from the Ftn Hills FDS hydrology report are also provided in Appendix C for reference.

TABLE 2

Summary of area and composite rainfall loss parameters for each study basin

Study Basin ID (1)	Area sq. miles (2)	Rainfall Loss Parameters: IA inches (3)	DTHETA (4)	PSIF inches (5)	Adjusted XKSAT in/hr (6)	RTIMP % (7)
207	2.149	0.17	0.31	4.90	0.29	31.55
208	2.000	0.10	0.25	4.80	0.28	50.48
209	1.603	0.13	0.28	4.62	0.32	41.50
210	1.382	0.09	0.24	5.61	0.19	24.82

Unit Hydrographs - The unit hydrographs for the single basin models are developed using the S-graph methodology outlined in the FCDMC Design Manual. The Phoenix Mountain S-graph is selected for modeling each study basin and the U.S. Army Corps of Engineers' lag equation is used. The lag equation physical parameters (except Kn) are measured from Figure 1 with guidance from the reach data summarized in the Ftn Hills FDS. Exhibits "A" and "D" were also referenced for verification of elevations and lengths. The basin hydraulic roughness value, Kn, is used as a calibration parameter in defining the unit hydrograph shape. That calibration process is accomplished by first assuming a reasonable value for Kn using the references provided in the FCDMC Design Manual and running the single basin model. The resulting runoff hydrograph from that run is then compared to the Ftn Hills FDS multiple basin runoff hydrograph at the same location, and the Kn value is adjusted accordingly. By reasonably varying the Kn value, the unit hydrograph is calibrated to produce a runoff hydrograph that closely approximates its target hydrograph from the Ftn Hills FDS multiple basin hydrology model. Table 3 summarizes the final unit hydrograph lag parameters developed for each study subbasin, including the calibrated Kn value.

TABLE 3

Summary of unit hydrograph lag parameters for each study basin for the 100-yr and PMF storms

Study Basin ID (1)	Area sq. miles (2)	Length miles (3)	Lca miles (4)	Slope ft/mi (5)	100-year Kn (6)	100-year Lag hours (7)	PMF Kn (8)	PMF Lag hours (9)
207	2.149	3.890	2.160	464.7	0.038	0.64	0.030	0.51
208	2.000	2.980	1.610	488.9	0.022	0.30	0.018	0.24
209	1.603	3.240	1.730	582.3	0.024	0.33	0.019	0.27
210	1.382	1.930	0.852	360.7	0.030	0.28	0.024	0.23

Final Results

Table 4 summarizes a comparison of the 100-year, 6-hour multiple basin versus single basin modeling results. Data reported for the Ftn Hills FDS multiple basin model is taken from the last HEC-1 operation. Table 5 provides a similar comparison of the 100-year, 24-hour results. Plots of the single basin versus Ftn Hills FDS multiple basin runoff hydrographs for each of the four study basin concentration point locations, are provided in Appendix D for inspection and comparison of the hydrograph shapes. Printouts of both sets of the HEC-1 single basin output files are also included in Appendix D. Plots and printouts for both the 100-year, 6- and 24-hour models are included.

PMF Models

Precipitation Data - The probable maximum precipitation (PMP) and temporal distribution for each study basin is estimated using the methods in Hydrometeorological Report No. 49 (HMR 49) (Hansen and others, 1984). The local, 6-hour PMP is the critical storm for all of the study basins. Worksheets for PMP estimation are provided in Appendix E.

Rainfall Loss Parameters - Rainfall loss parameters for the PMF modeling are the same as those used for the 100-year models. See Table 2 for those values.

TABLE 4

Comparison of single basin and multiple basin HEC-1 model results for the 100-year, 6-hour storm for each study basin

Study Basin ID (1)	Multiple Basin Conc. Pt ID (2)	Area sq. miles (3)	Multiple Basin Peak Discharge cfs (4)	Multiple Basin Time to Peak hours (5)	Multiple Basin Rainfall Excess inches (6)	Multiple Basin Runoff Volume acre-ft (7)	Single Basin Peak Discharge cfs (8)	Single Basin Time to Peak hours (9)	Single Basin Rainfall Excess inches (10)	Single Basin Runoff Volume acre-ft (11)
207	C560I	2.149	2,201	4.37	1.97	226	2,225	4.42	1.99	228
208	C578I	2.000	3,351	4.08	2.40	256	3,241	4.08	2.39	255
209	C584I	1.603	2,615	4.17	2.21	189	2,565	4.17	2.20	188
210	C210I	1.382	2,576	4.08	2.16	159	2,602	4.08	2.24	165

TABLE 5

Comparison of single basin and multiple basin HEC-1 model results for the 100-year, 24-hour storm for each study basin

Study Basin ID (1)	Multiple Basin Conc. Pt ID (2)	Area sq. miles (3)	Multiple Basin Peak Discharge cfs (4)	Multiple Basin Time to Peak hours (5)	Multiple Basin Rainfall Excess inches (6)	Multiple Basin Runoff Volume acre-ft (7)	Single Basin Peak Discharge cfs (8)	Single Basin Time to Peak hours (9)	Single Basin Rainfall Excess inches (10)	Single Basin Runoff Volume acre-ft (11)
207	C560I	2.149	1,871	12.33	2.14	245	2,012	12.25	2.13	244
208	C578I	2.000	3,011	12.08	2.73	291	3,049	12.08	2.71	289
209	C584I	1.603	2,166	12.17	2.44	208	2,025	12.08	2.43	208
210	C210I	1.382	2,141	12.08	2.14	157	2,121	12.08	2.13	157

Unit Hydrographs - It is documented in literature that Kn does not remain constant for all magnitudes of discharge (Cudworth, 1989). Rather, it decreases in value due to increased hydraulic efficiency associated with larger magnitude discharges. For the PMF, the Kn value is estimated as 80 percent of the 100-year Kn value, in order to account for the larger flows associated with that event. Those reduced values and resultant lag times are reported in Table 3 for each of the study basins.

Final Results - The final single basin PMF results for each study basin are presented in Table 6. Printouts of the HEC-1 model output for each PMF model are provided in Appendix E.

TABLE 6

Summary of single basin HEC-1 model results for the PMF by study basin

Study Basin (1)	HEC-1 Concentration Point (2)	Drainage Area sq. miles (3)	Single Basin PMF Results: Peak Discharge cfs (4)	Time to Peak hours (5)	Rainfall Excess inches (6)	Runoff Volume acre-feet (7)
207	C560I	2.15	17,974	2.58	12.57	1,440
208	C578I	2.00	26,969	2.33	13.28	1,416
209	C584I	1.60	20,238	2.33	13.20	1,125
210	C599I	1.38	19,580	2.33	13.22	971

Golden Eagle Park Dam Inflow Hydrographs

General

The 100-year, 6-hour, 100-year, 24-hour and PMF inflow hydrographs to Golden Eagle Park Dam and the proposed dam of Alternative No. 4, are developed by creating an HEC-1 routing model that hydrologically routes and combines each of the previously discussed single basin models. That modeling is accomplished by first reservoir routing hydrographs from Study Basins 207, 208 and 209 through each of their respective dams, channel routing those outflow hydrographs to GEPD, and combining the resultant hydrographs with the single basin hydrograph for Study Basin 210. Point precipitation

values are adjusted according to the total watershed area (7.13 square miles) that is tributary to GEPD. Storage routing methodologies and parameter estimations are summarized in the following sections.

Physical Data

Ftn Hills FDS Data - The physical data used in the routing analyses for existing facilities are taken directly from the Ftn Hills FDS, which were gathered by performing field surveys of the dams, and by extraction from the project mapping. Those data are presented in the form of stage versus storage and stage versus discharge relations for each dam, and cross section geometry for the channel reaches. In some cases, additional reservoir and channel route data are required to expand the capacities of those relations to correspond to the magnitudes of flow associated with a PMF event. Additional area data for use in the dams' stage versus storage relations are obtained by planimetering the project mapping. Additional cross section geometry information for channel routing are obtained by lateral extension of the representative cross sections on the project mapping and adding the new information to the cross section data set.

Physical Data for Alternatives - Physical data representing the proposed improvements for each alternative are taken from Plates 1 through 12, which as previously discussed, are generated using the project mapping. Ponded surface area data are obtained by use of a planimeter.

Reservoir Routes

Reservoir routing through each of the dams is accomplished using the Modified Puls, level pool option of HEC-1. Stage versus storage relations are derived using the data previously discussed, with the storage volumes estimated by the conic method. Stage versus discharge relations are developed based on the principal and emergency spillway data and the use of the following programs:

HY-8 Program - The stage versus discharge relations for the ungated principal spillway conduits are determined by use of the HY-8 computer program, version 4.1, which is based on the Federal Highway Administration's Hydraulic Design Series No. 5.

Uneven Weir Program - This program is used to analyze the emergency spillway and one dimensional dam overtopping hydraulics. The program is based on uneven weir methodology and employs weir discharge coefficient rating curves developed by the Army Corps of Engineers. The results of this program are used to generate stage versus discharge relations for the emergency spillway and dam overtopping flow segments.

The results from each of the above programs are combined to generate an overall stage versus discharge relation for the subject dam. Pre-alternative condition tabular and graphic summaries of the stage versus discharge and stage versus storage relations for each of Aspen, North Heights, SunRidge Canyon and Golden Eagle Park Dams are provided in Appendix F. Pertinent HY-8 and Uneven Weir program output are also provided in Appendix F.

Channel Routes

Channel routing is accomplished using the Modified Puls, normal depth channel option of HEC-1 and a single cross section that is considered representative of the study reach. That cross section is based on a review of the cross sections documented in the Ftn Hills FDS for that study reach, and selection of the one that best represents the routing reach. In some cases, the channel cross section is augmented, as previously discussed, to provide adequate capacity for the PMF flows. Physical data (Table G1) and cross section plots for each routing reach are provided in Appendix G. Tables G2, G3, and G4 respectively summarize the reach route hydraulic data calculated by HEC-1 for the PMF and 100-year, 6- and 24-hour models.

Final Results

Table 7 summarizes the GEPD inflow hydrograph results from the single basin hydrologic routing models for each of the 100-year, 6- and 24-hour, and PMF storms. Comparative plots of the routed single basin GEPD inflow hydrographs versus the Ftn Hills FDS multiple basin results (HEC-1 operation C5991), and HEC-1 output for each routing model and design storm, are provided in Appendix H.

TABLE 7

Summary of GEPD single basin routing model results for the 100-year, 6- and 24-hour, and PMF storms

Storm (1)	Peak Discharge cfs (2)	Time to Peak hours (3)	Rainfall Excess inches (4)	Runoff Volume acre-feet (5)
100-year, 6-hour	2,444	4.17	1.99	758
100-year, 24-hour	2,697	12.08	2.30	874
PMF	58,754	2.50	13.24	5,033

Summary and Conclusions

By inspection of the graphical hydrograph comparisons and direct comparison of modeling results, it is demonstrated that the single basin models reasonably reproduce the Ftn Hills FDS report results. Differences between results are much less than five percent in all cases, and the single basin modeling technique provides a much simpler tool for evaluation of the various alternatives, therefore, the single basin models are used for this study.

179

Table 6.3A.--Local-storm PMP computation, Colorado River, Great Basin and California drainages. For drainage average depth PMP. Go to table 6.3B if areal variation is required.

Drainage GOLDEN EAGLE PARK (# 4) Area 7.13 mi^2 (km^2)
Latitude 33° 35' Longitude 111° 45' Minimum Elevation 1706 ft (m)

Steps correspond to those in sec. 6.3A.

1. Average 1-hr 1-mi^2 (2.6-km^2) PMP for drainage [fig. 4.5]. 11.5 in. (mm)

2. a. Reduction for elevation. [No adjustment for elevations up to 5,000 feet (1,524 m): 5% decrease per 1,000 feet (305 m) above 5,000 feet (1,524 m)]. 100 %

   b. Multiply step 1 by step 2a. 11.5 in. (mm)

3. Average 6/1-hr ratio for drainage [fig. 4.7]. 1.3

	Duration (hr)									
	1/4	1/2	3/4	1	2	3	4	5	6	
4. Durational variation for 6/1-hr ratio of step 3 [table 4.4].	74	89	95	100	114	121	125	128	130	%
5. 1-mi^2 (2.6-km^2) PMP for indicated durations [step 2b X step 4].	8.5	10.2	10.9	11.5	13.1	13.9	14.4	14.7	15.0	in. (mm)
6. Areal reduction [fig. 4.9].	78	83	85	86	88	89	90	90	91	%
7. Areal reduced PMP [steps 5 X 6].	6.6	8.5	9.3	9.9	11.5	12.4	13.0	13.2	13.7	in. (mm)
8. Incremental PMP [successive subtraction in step 7].				9.9	1.6	0.9	0.6	0.2	0.5	in. (mm)
	6.6	1.9	0.8	0.6	} 15-min. increments					

9. Time sequence of incremental PMP according to:

Hourly increments [table 4.7].	0.5	0.9	9.9	1.6	0.6	0.2	in. (mm)
Four largest 15-min. increments [table 4.8].	6.6	1.9	0.8	0.6			in. (mm)

Table 6.3A.--Local-storm PMP computation, Colorado River, Great Basin and California drainages. For drainage average depth PMP. Go to table 6.3B if areal variation is required.

Drainage DRAINAGE AREA ABOVE DAM #4 Area 1.38 mi^2 (km^2)
Latitude 33°35' Longitude 111°45 Minimum Elevation 1706 ft (m)

Steps correspond to those in sec. 6.3A.

1. Average 1-hr 1-mi^2 (2.6-km^2) PMP for drainage [fig. 4.5]. 11.5 in. (mm)

2. a. Reduction for elevation. [No adjustment for elevations up to 5,000 feet (1,524 m): 5% decrease per 1,000 feet (305 m) above 5,000 feet (1,524 m)]. 100 %

   b. Multiply step 1 by step 2a. 11.5 in. (mm)

3. Average 6/1-hr ratio for drainage [fig. 4.7]. 1.9

	Duration (hr)									
	1/4	1/2	3/4	1	2	3	4	5	6	
4. Durational variation for 6/1-hr ratio of step 3 [table 4.4].	74	89	95	100	114	121	125	128	130	%
5. 1-mi^2 (2.6-km^2) PMP for indicated durations [step 2b X step 4].	8.5	10.2	10.9	11.5	13.1	13.9	14.4	14.7	15.0	in. (mm)
6. Areal reduction [fig. 4.9].	98	99	99	99	99.5	99.5	99.5	99.5	100	%
7. Areal reduced PMP [steps 5 X 6].	8.3	10.1	10.8	11.4	13.0	13.8	14.3	14.6	15.0	in. (mm)
8. Incremental PMP [successive subtraction in step 7].				11.4	1.6	0.8	0.5	0.3	0.4	in. (mm)
	8.3	1.8	0.7	0.6	} 15-min. increments					
9. Time sequence of incremental PMP according to:										
Hourly increments [table 4.7].				0.4	0.8	11.4	1.6	0.5	0.3	in. (mm)
Four largest 15-min. increments [table 4.8].				8.3	1.8	0.7	0.6			in. (mm)

Table 6.3A.--Local-storm PMP computation, Colorado River, Great Basin and California drainages. For drainage average depth PMP. Go to table 6.33 if areal variation is required.

Drainage NORTH HEIGHTS (DAM # 11) Area 2.0 mi^2 (km^2)
Latitude 33°35' Longitude 111°45' Minimum Elevation ____ ft (m)

Steps correspond to those in sec. 6.3A.

1. Average 1-hr 1-mi^2 (2.6-km^2) PMP for drainage [fig. 4.5]. 11.5 in. (mm)

2. a. Reduction for elevation. [No adjustment for elevations up to 5,000 feet (1,524 m): 5% decrease per 1,000 feet (305 m) above 5,000 feet (1,524 m)]. 100 %

   b. Multiply step 1 by step 2a. 11.5 in. (mm)

3. Average 6/1-hr ratio for drainage [fig. 4.7]. 1.3

	Duration (hr)									
	1/4	1/2	3/4	1	2	3	4	5	6	
4. Durational variation for 6/1-hr ratio of step 3 [table 4.4].	74	87	95	100	114	121	125	135	130	%
5. 1-mi^2 (2.6-km^2) PMP for indicated durations [step 2b X step 4].	8.5	10.2	10.9	11.5	13.1	12.9	14.4	14.7	15.0	in. (mm)
6. Areal reduction [fig. 4.9].	94	96	96	97	97	97	98	98	98	%
7. Areal reduced PMP [steps 5 X 6].	8.0	9.8	10.5	11.2	12.7	12.5	14.1	14.4	14.7	in. (mm)
8. Incremental PMP [successive subtraction in step 7].				11.2	1.5	0.8	0.6	0.3	0.3	in. (mm)
	8.0	1.8	0.7	0.7	} 15-min. increments					
9. Time sequence of incremental PMP according to:										
Hourly increments [table 4.7].				0.3	0.8	11.2	1.5	0.6	0.3	in. (mm)
Four largest 15-min. increments [table 4.8].				8.0	1.8	0.7	0.7			in. (mm)

DAM 6 - ASPEN DAM

Table 6.3A.--Local-storm PMP computation, Colorado River, Great Basin and California drainages. For drainage average depth PMP. Go to table 6.3B if areal variation is required.

Drainage ASPEN DAM - DAM # 6 Area 2.15 mi^2 (km^2)
Latitude 33°35' Longitude 111°45' Minimum Elevation 1310 ft (m)

Steps correspond to those in sec. 6.3A.

1. Average 1-hr 1-mi^2 (2.6-km^2) PMP for drainage [fig. 4.5]. 11.5 in. (mm)

2. a. Reduction for elevation. [No adjustment for elevations up to 5,000 feet (1,524 m): 5% decrease per 1,000 feet (305 m) above 5,000 feet (1,524 m)]. 100 %

   b. Multiply step 1 by step 2a. 11.5 in. (mm)

3. Average 6/1-hr ratio for drainage [fig. 4.7]. 1.3

	Duration (hr)									
	1/4	1/2	3/4	1	2	3	4	5	6	
4. Durational variation for 6/1-hr ratio of step 3 [table 4.4].	74	89	95	100	114	121	125	128	130	%
5. 1-mi^2 (2.6-km^2) PMP for indicated durations [step 2b X step 4].	8.5	10.2	10.9	11.5	13.1	13.9	14.4	14.7	15.0	in. (mm)
6. Areal reduction [fig. 4.9].	94	96	96	96	97	97	97	98	98	%
7. Areal reduced PMP [steps 5 X 6].	8.0	9.8	10.5	11.0	12.7	13.5	14.0	14.4	14.7	in. (mm)
8. Incremental PMP [successive subtraction in step 7].				11.0	1.7	0.8	0.5	0.4	0.3	in. (mm)
	8	1.8	0.7	0.5	} 15-min. increments					
9. Time sequence of incremental PMP according to:										
Hourly increments [table 4.7].				0.4	0.8	11.0	1.7	0.5	0.3	in. (mm)
Four largest 15-min. increments [table 4.8].	8	1.8	0.7	0.5						in. (mm)

DAM 7 - SUNRIDGE CANYON DAM

Table 6.3A.--Local-storm PMP computation, Colorado River, Great Basin and California drainages. For drainage average depth PMP. Go to table 6.3B if areal variation is required.

Drainage SUNRIDGE CANYON (DAM #7) Area 1.6 mi^2 (km

Latitude 33°25' Longitude 111°45' Minimum Elevation ____ ft (

Steps correspond to those in sec. 6.3A.

1. Average 1-hr 1-mi^2 (2.6-km^2) PMP for drainage [fig. 4.5]. 11.5 in. (mm

2. a. Reduction for elevation. [No adjustment for elevations up to 5,000 feet (1,524 m): 5% decrease per 1,000 feet (305 m) above 5,000 feet (1,524 m)]. 100 %

   b. Multiply step 1 by step 2a. 11.5 in. (mm)

3. Average 6/1-hr ratio for drainage [fig. 4.7]. 1.3

	Duration (hr)									
	1/4	1/2	3/4	1	2	3	4	5	6	
4. Durational variation for 6/1-hr ratio of step 3 [table 4.4].	74	89	95	100	114	121	125	128	130	%
5. 1-mi^2 (2.6-km^2) PMP for indicated durations [step 2b X step 4].	8.5	10.2	10.9	11.5	13.1	13.9	14.4	14.7	15.0	in. (mm
6. Areal reduction [fig. 4.9].	97	98	98	99	99	99	[illegible]	100	100	%
7. Areal reduced PMP [steps 5 X 6].	8.2	10.0	10.7	11.4	13.0	13.8	[illegible]	14.7	15	in. (mm
8. Incremental PMP [successive subtraction in step 7].				11.4	1.6	0.8	0.6	0.2	0.3	in. (mm
	8.2	1.8	0.7	0.7	} 15-min. increments					

9. Time sequence of incremental PMP according to:

Hourly increments [table 4.7].	0.3	0.8	11.4	1.6	0.6	0.3	in. (mm)
Four largest 15-min. increments [table 4.8].	8.2	1.8	0.7	0.7			in. (mm)

Appendix B

HEC-1 model for Golden Eagle Park Dam from the Fountain Hills ADMP Report
(GVSCE, July 1997)

FLOOD CONTROL DISTRICT OF MARICOPA COUNTY
PHOENIX, ARIZONA

FOUNTAIN HILLS AREA DRAINAGE MASTER PLAN FCD 94-16

FINAL REPORT

Part A: Project Summary

Part B: Golden Eagle Park Dam, Feasibility Study

Registered Professional Engineer (Civil)
CERTIFICATE NO.
17928
GEORGE V.
SABOL
Date 30 July 97
Signed.....
ARIZONA, U.S.A.

George V. Sabol Consulting Engineers, Inc.
Scottsdale, Arizona

JULY 1997

```
1*************************************
*                                   *
*   FLOOD HYDROGRAPH PACKAGE  (HEC-1)*
*            MAY   1991             *
*          VERSION 4.0.1E           *
*                                   *
*  RUN DATE  10/15/96  TIME  11:46:31*
*                                   *
*************************************
```

```
*************************************
*                                   *
*   U.S. ARMY CORPS OF ENGINEERS    *
*   HYDROLOGIC ENGINEERING CENTER   *
*         609 SECOND STREET         *
*      DAVIS, CALIFORNIA 95616      *
*          (916) 551-1748           *
*                                   *
*************************************
```

```
X     X  XXXXXXX   XXXXX          X
X     X  X        X     X        XX
X     X  X        X              X
XXXXXXX  XXXX     X        XXXXX X
X     X  X        X              X
X     X  X        X     X        X
X     X  XXXXXXX   XXXXX        XXX
```

THIS PROGRAM REPLACES ALL PREVIOUS VERSIONS OF HEC-1 KNOWN AS HEC1 (JAN 73), HEC1GS, HEC1DB, AND HEC1KW.

THE DEFINITIONS OF VARIABLES -RTIMP- AND -RTIOR- HAVE CHANGED FROM THOSE USED WITH THE 1973-STYLE INPUT STRUCTURE.
THE DEFINITION OF -AMSKK- ON RM-CARD WAS CHANGED WITH REVISIONS DATED 28 SEP 81. THIS IS THE FORTRAN77 VERSION
NEW OPTIONS: DAMBREAK OUTFLOW SUBMERGENCE , SINGLE EVENT DAMAGE CALCULATION, DSS:WRITE STAGE FREQUENCY,
DSS:READ TIME SERIES AT DESIRED CALCULATION INTERVAL LOSS RATE:GREEN AND AMPT INFILTRATION
KINEMATIC WAVE: NEW FINITE DIFFERENCE ALGORITHM

1 HEC-1 INPUT PAGE 1

```
LINE          ID.......1.......2.......3.......4.......5.......6.......7.......8.......9......10

  1           ID        FOUNTAIN HILLS ADMP
  2           ID        Model for the Computation of PMF for Dam 4      FILE NAME: DAM4-PMF.IH1
  3           ID        ****************************************************************
  4           ID        Analytical Considerations:
  5           ID            Single Basin Models
  6           ID            This model considers areal reduction method.
  7           ID        ****************************************************************
              *DIAGRAM
  8           IT       5       0       0     200
  9           IO       5
 10           IN      15
              *
 11           JD   15.00    0.01
 12           PI   0.075   0.075   0.075   0.075     0.2     0.2     0.2     0.2     8.2     1.8
 13           PI     0.7     0.7     0.4     0.4     0.4     0.4    0.15    0.15    0.15    0.15
 14           PI   0.075   0.075   0.075   0.075
 15           JD   15.00   1.603
 16           PI   0.075   0.075   0.075   0.075     0.2     0.2     0.2     0.2     8.2     1.8
 17           PI     0.7     0.7     0.4     0.4     0.4     0.4    0.15    0.15    0.15    0.15
 18           PI   0.075   0.075   0.075   0.075
 19           JD   14.70   2.000
 20           PI     0.1     0.1     0.1     0.1     0.2     0.2     0.2     0.2     8.0     1.8
 21           PI     0.7     0.5   0.425   0.425   0.425   0.425   0.125   0.125   0.125   0.125
 22           PI   0.075   0.075   0.075   0.075
 23           JD   14.70   2.150
 24           PI     0.1     0.1     0.1     0.1     0.2     0.2     0.2     0.2     8.0     1.8
 25           PI     0.7     0.5   0.425   0.425   0.425   0.425   0.125   0.125   0.125   0.125
 26           PI   0.075   0.075   0.075   0.075
 27           JD   13.70   7.150
 28           PI   0.075   0.075   0.075   0.075     0.2     0.2     0.2     0.2     8.0     1.8
 29           PI     0.7     0.7   0.375   0.375   0.375   0.375    0.15    0.15    0.15    0.15
 30           PI   0.075   0.075   0.075   0.075

 31           KK   C560I
 32           KM        BASIN S207
 33           KM        THE FOLLOWING PARAMETERS WERE PROVIDED FOR THIS BASIN
 34           KM        L=      3.9  Lca=      2.2   S=  464.7  Kn= .030  LAG=  30.6
 35           KM        PHOENIX MOUNTAIN S-GRAPH WAS USED FOR THIS BASIN
 36           BA    2.15
 37           LG     .17     .31    4.90    0.29   31.55
 38           UI    237.    523.   1170.   1651.   2163.   2377.   1509.   1274.   1082.    897.
 39           UI    699.    573.    507.    374.    299.    259.    198.    131.    119.    116.
 40           UI    111.     45.     45.     45.     45.     45.     45.     45.      0.      0.
 41           UI      0.      0.      0.      0.      0.      0.      0.      0.      0.      0.
 42           UI      0.      0.      0.      0.      0.      0.      0.      0.      0.      0.
              *

 43           KK   C5600
 44           KM       Reservoir route at C560 (Dam 6).
 45           RS       1    ELEV 1835.36
```

```
 46          SV    0.00    7.09   34.65   75.98  135.64  191.44  208.31  226.53  246.00  266.28
 47          SV  289.00  310.81  336.00  360.88  389.00  416.30  446.00  476.39  509.00  540.78
 48          SE  1808.8 1814.00 1820.00 1826.00 1832.00 1836.00 1837.00 1838.00 1839.00 1840.00
 49          SE  1841.0 1842.00 1843.00 1844.00 1845.00 1846.00 1847.00 1848.00 1849.00 1850.00
 50          SQ       0     102     184     242     285     429    1239    2559    4265    6311
1                                          HEC-1 INPUT                                          PAGE  2

LINE         ID.......1.......2.......3.......4.......5.......6.......7.......8.......9......10

 51          SQ    8674   11339   14292   18440   25207   33643   43471   54561   66835   80241
             *

 52          KK  560599
 53          KM      Normal depth channel route
 54          RS       1    FLOW      -1
 55          RC   0.050   0.025   0.050  3127.0  0.0272
 56          RX  9850.4  9950.4  9974.4 10000.0 10035.5 10059.8 10080.4 10104.4
 57          RY  1772.0  1771.7  1765.3  1765.3  1765.9  1768.5  1773.3  1773.7
             *

 58          KK   C578I
 59          KM        BASIN S208
 60          KM        THE FOLLOWING PARAMETERS WERE PROVIDED FOR THIS BASIN
 61          KM        L=      3.0  Lca=      1.6   S=  488.9  Kn= .018  LAG=  14.2
 62          KM        PHOENIX MOUNTAIN S-GRAPH WAS USED FOR THIS BASIN
 63          BA    2.00
 64          LG     .10     .25    4.80     .28   50.48
 65          UI    837.   3038.   4371.   2543.   1714.   1106.    677.    446.    282.    192.
 66          UI     91.     91.     91.      0.      0.      0.      0.      0.      0.      0.
 67          UI      0.      0.      0.      0.      0.      0.      0.      0.      0.      0.
             *

 68          KK   C578O
 69          KM      Reservoir route at C578 (Dam 11).
 70          KO       5
 71          RS       1    ELEV 1812.29
 72          SV    0.00    2.77   16.38   41.49   84.39  133.00  154.47  171.00  187.43  205.00
 73          SV  223.03  242.00  261.38  282.00  302.00  324.00  345.87  370.00  394.23  419.79
 74          SE  1779.2 1788.00 1794.00 1800.00 1806.00  1810.5 1812.00 1813.00 1814.00 1815.00
 75          SE  1816.0 1817.00 1818.00 1819.00 1820.00 1821.00 1822.00 1823.00 1824.00 1825.00
 76          SQ       0     160     221     269     305     327     799    1888    3383    5222
 77          SQ    7376    9826   12563   15670   21045   28479   37392   47596   58989   71509
 78          SE  1779.2 1788.00 1794.00 1800.00 1806.00  1810.5 1812.00 1813.00 1814.00 1815.00
 79          SE  1816.0 1817.00 1818.00 1819.00 1820.00 1821.00 1822.00 1823.00 1824.00 1825.00
             *

 80          KK  578599
 81          KM      Normal depth channel route
 82          RS       1    FLOW      -1
 83          RC   0.055   0.045   0.055  3762.0 0.01624
 84          RX  9928.9  9945.0  9963.1  9990.6 10012.2 10035.4 10052.8 10069.6
 85          RY  1755.7  1746.3  1746.1  1741.7  1743.3  1743.7  1744.6  1755.7
             *

 86          KK   C584I
 87          KM        BASIN S209
 88          KM        THE FOLLOWING PARAMETERS WERE PROVIDED FOR THIS BASIN
 89          KM        L=      1.2  Lca=      1.7   S=  582.3  Kn= .019  LAG=  15.9
 90          KM        PHOENIX MOUNTAIN S-GRAPH WAS USED FOR THIS BASIN
 91          BA    1.60
 92          LG     .13     .28    4.62     .32   41.50
 93          UI    515.   1951.   3289.   2104.   1510.    997.    702.    442.    308.    202.
 94          UI    154.     65.     65.     65.      0.      0.      0.      0.      0.      0.
 95          UI      0.      0.      0.      0.      0.      0.      0.      0.      0.      0.
             *
1                                          HEC-1 INPUT                                          PAGE  3

LINE         ID.......1.......2.......3.......4.......5.......6.......7.......8.......9......10

 96          KK   C584O
 97          KM      Reservoir route at C584 (Dam 7).
 98          RS       1    ELEV 1926.31
 99          SV    0.00    0.60    4.30   11.27   23.74   46.29   86.65   96.00  104.90  126.25
100          SV  151.07  165.00  179.50  195.00  211.23  229.00  246.62  266.00  285.59  306.14
101          SE  1884.8 1894.00 1900.00 1906.00 1912.00 1918.00 1924.00 1925.00 1926.00 1928.00
102          SE  1930.0 1931.00 1932.00 1933.00 1934.00 1935.00 1936.00 1937.00 1938.00 1939.00
103          SQ       0     163     223     272     307     333     355     363     690    2921
104          SQ    6650    9013   11702   14897   19772   25998   33315   41618   50847   60966
105          SE  1884.8 1894.00 1900.00 1906.00 1912.00 1918.00 1924.00 1925.00 1926.00 1928.00
106          SE  1930.0 1931.00 1932.00 1933.00 1934.00 1935.00 1936.00 1937.00 1938.00 1939.00
             *

107          KK  584599
108          KM      Normal depth channel route
109          RS       1    FLOW      -1
110          RC   0.065   0.050   0.065  6526.0 0.02571
111          RX  9927.6  9939.8  9951.9  9985.3 10036.0 10067.5 10119.2 10188.7
```

```
112          RY  1796.3  1791.2  1788.3  1784.1  1784.9  1788.0  1790.2  1786.4
             *

113          KK   C210
114          KM        BASIN S210
115          KM        THE FOLLOWING PARAMETERS WERE PROVIDED FOR THIS BASIN
116          KM        L=       1.9  Lca=        .9   S=  360.7  Kn= .024  LAG=  13.6
117          KM        PHOENIX MOUNTAIN S-GRAPH WAS USED FOR THIS BASIN
118          BA    1.38
119          LG     .09      .24     5.61      .19    24.82
120          UI    634.    2291.    3040.    1739.    1122.     723.     433.     286.     170.      96.
121          UI     66.      66.      0.       0.       0.       0.       0.       0.       0.       0.
122          UI      0.       0.      0.       0.       0.       0.       0.       0.       0.       0.
             *

123          KK   C599I
124          KO       1                                   21
125          KM      Hydrograph combine C584O + C560O + C578O + C599
126          HC       4
127          ZZ
```

1

SCHEMATIC DIAGRAM OF STREAM NETWORK

```
INPUT
 LINE      (V) ROUTING          (--->) DIVERSION OR PUMP FLOW

  NO.      (.) CONNECTOR        (<---) RETURN OF DIVERTED OR PUMPED FLOW

   31       C560I
                V
                V
   43       C560O
                V
                V
   52      560599
                .
                .
   58           .       C578I
                .           V
                .           V
   68           .       C578O
                .           V
                .           V
   80           .      578599
                .           .
                .           .
   86           .           .       C584I
                .           .           V
                .           .           V
   96           .           .       C584O
                .           .           V
                .           .           V
  107           .           .      584599
                .           .           .
                .           .           .
  113           .           .           .        C210
                .           .           .          .
                .           .           .          .
  123       C599I.................................
```

(***) RUNOFF ALSO COMPUTED AT THIS LOCATION

```
1*************************************
*                                   *
*   FLOOD HYDROGRAPH PACKAGE  (HEC-1)*
*              MAY   1991           *
*            VERSION 4.0.1E         *
*                                   *
*  RUN DATE  10/15/96  TIME  11:46:31*
*                                   *
*************************************
```

```
*************************************
*                                   *
*   U.S. ARMY CORPS OF ENGINEERS    *
*   HYDROLOGIC ENGINEERING CENTER   *
*         609 SECOND STREET         *
*      DAVIS, CALIFORNIA 95616      *
*          (916) 551-1748           *
*                                   *
*************************************
```

```
FOUNTAIN HILLS ADMP
Model for the Computation of PMF for Dam 4      FILE NAME: DAM4-PMF.IH1
*************************************************************
Analytical Considerations:
    Single Basin Models
    This model considers areal reduction method.
*************************************************************

  9 IO        OUTPUT CONTROL VARIABLES
                 IPRNT          5  PRINT CONTROL
                 IPLOT          0  PLOT CONTROL
                 QSCAL         0.  HYDROGRAPH PLOT SCALE

    IT        HYDROGRAPH TIME DATA
```

```
          NMIN          5  MINUTES IN COMPUTATION INTERVAL
         IDATE     1    0  STARTING DATE
         ITIME        0000  STARTING TIME
            NQ         200  NUMBER OF HYDROGRAPH ORDINATES
        NDDATE     1    0  ENDING DATE
        NDTIME        1635  ENDING TIME
         ICENT          19  CENTURY MARK

     COMPUTATION INTERVAL     0.08 HOURS
          TOTAL TIME BASE    16.58 HOURS

ENGLISH UNITS
     DRAINAGE AREA          SQUARE MILES
     PRECIPITATION DEPTH    INCHES
     LENGTH, ELEVATION      FEET
     FLOW                   CUBIC FEET PER SECOND
     STORAGE VOLUME         ACRE-FEET
     SURFACE AREA           ACRES
     TEMPERATURE            DEGREES FAHRENHEIT

11 JD      INDEX STORM NO. 1
              STRM       15.00  PRECIPITATION DEPTH
              TRDA        0.01  TRANSPOSITION DRAINAGE AREA

12 PI        PRECIPITATION PATTERN
              0.03       0.03       0.02       0.03       0.03       0.02       0.03       0.03       0.02       0.02
              0.03       0.03       0.07       0.07       0.07       0.07       0.07       0.07       0.07       0.07
              0.07       0.07       0.07       0.07       2.73       2.73       2.73       0.60       0.60       0.60
              0.23       0.23       0.23       0.23       0.23       0.23       0.13       0.13       0.13       0.13
              0.13       0.13       0.13       0.13       0.13       0.13       0.13       0.13       0.05       0.05
              0.05       0.05       0.05       0.05       0.05       0.05       0.05       0.05       0.05       0.05
              0.02       0.03       0.02       0.02       0.03       0.02       0.02       0.03       0.02       0.02
              0.03       0.02

15 JD      INDEX STORM NO. 2
              STRM       15.00  PRECIPITATION DEPTH
              TRDA        1.60  TRANSPOSITION DRAINAGE AREA

16 PI        PRECIPITATION PATTERN
              0.03       0.03       0.02       0.03       0.03       0.02       0.03       0.03       0.02       0.02
              0.03       0.03       0.07       0.07       0.07       0.07       0.07       0.07       0.07       0.07
              0.07       0.07       0.07       0.07       2.73       2.73       2.73       0.60       0.60       0.60
              0.23       0.23       0.23       0.23       0.23       0.23       0.13       0.13       0.13       0.13
              0.13       0.13       0.13       0.13       0.13       0.13       0.13       0.13       0.05       0.05
              0.05       0.05       0.05       0.05       0.05       0.05       0.05       0.05       0.05       0.05
              0.02       0.03       0.02       0.02       0.03       0.02       0.02       0.03       0.02       0.02
              0.03       0.02

19 JD      INDEX STORM NO. 3
              STRM       14.70  PRECIPITATION DEPTH
              TRDA        2.00  TRANSPOSITION DRAINAGE AREA

20 PI        PRECIPITATION PATTERN
              0.03       0.03       0.03       0.03       0.03       0.03       0.03       0.03       0.03       0.03
              0.03       0.03       0.07       0.07       0.07       0.07       0.07       0.07       0.07       0.07
              0.07       0.07       0.07       0.07       2.67       2.67       2.67       0.60       0.60       0.60
              0.23       0.23       0.23       0.17       0.17       0.17       0.14       0.14       0.14       0.14
              0.14       0.14       0.14       0.14       0.14       0.14       0.14       0.14       0.04       0.04
              0.04       0.04       0.04       0.04       0.04       0.04       0.04       0.04       0.04       0.04
              0.02       0.03       0.02       0.02       0.03       0.02       0.02       0.03       0.02       0.02
              0.03       0.02

23 JD      INDEX STORM NO. 4
              STRM       14.70  PRECIPITATION DEPTH
              TRDA        2.15  TRANSPOSITION DRAINAGE AREA

24 PI        PRECIPITATION PATTERN
              0.03       0.03       0.03       0.03       0.03       0.03       0.03       0.03       0.03       0.03
              0.03       0.03       0.07       0.07       0.07       0.07       0.07       0.07       0.07       0.07
              0.07       0.07       0.07       0.07       2.67       2.67       2.67       0.60       0.60       0.60
              0.23       0.23       0.23       0.17       0.17       0.17       0.14       0.14       0.14       0.14
              0.14       0.14       0.14       0.14       0.14       0.14       0.14       0.14       0.04       0.04
              0.04       0.04       0.04       0.04       0.04       0.04       0.04       0.04       0.04       0.04
              0.02       0.03       0.02       0.02       0.03       0.02       0.02       0.03       0.02       0.02
              0.03       0.02

27 JD      INDEX STORM NO. 5
              STRM       13.70  PRECIPITATION DEPTH
              TRDA        7.15  TRANSPOSITION DRAINAGE AREA

28 PI        PRECIPITATION PATTERN
              0.03       0.03       0.02       0.03       0.03       0.02       0.03       0.03       0.02       0.02
              0.03       0.03       0.07       0.07       0.07       0.07       0.07       0.07       0.07       0.07
              0.07       0.07       0.07       0.07       2.67       2.67       2.67       0.60       0.60       0.60
              0.23       0.23       0.23       0.23       0.23       0.23       0.13       0.13       0.13       0.13
              0.13       0.13       0.13       0.13       0.13       0.13       0.13       0.13       0.05       0.05
              0.05       0.05       0.05       0.05       0.05       0.05       0.05       0.05       0.05       0.05
              0.02       0.03       0.02       0.02       0.03       0.02       0.02       0.03       0.02       0.02
```

```
                0.03      0.02

 70 KO        OUTPUT CONTROL VARIABLES
                    IPRNT          5  PRINT CONTROL
                    IPLOT          0  PLOT CONTROL
                    QSCAL         0.  HYDROGRAPH PLOT SCALE


*** *** *** *** *** *** *** *** *** *** *** *** *** *** *** *** *** *** *** *** *** *** *** *** *** *** *** *** *** *** *** *** *** *** *** *** ***


          **************
          *            *
123 KK    *     C599I  *
          *            *
          **************

124 KO        OUTPUT CONTROL VARIABLES
                    IPRNT          1  PRINT CONTROL
                    IPLOT          0  PLOT CONTROL
                    QSCAL         0.  HYDROGRAPH PLOT SCALE
                    IPNCH          0  PUNCH COMPUTED HYDROGRAPH
                     IOUT         21  SAVE HYDROGRAPH ON THIS UNIT
                    ISAV1          1  FIRST ORDINATE PUNCHED OR SAVED
                    ISAV2        200  LAST ORDINATE PUNCHED OR SAVED
                   TIMINT      0.083  TIME INTERVAL IN HOURS

                     Hydrograph combine C5840 + C5600 + C5780 + C599

126 HC        HYDROGRAPH COMBINATION
                    ICOMP          4  NUMBER OF HYDROGRAPHS TO COMBINE

                                                  ***

*****************************************************************************************************************************
```

HYDROGRAPH AT C599I
TRANSPOSITION AREA 0.0 SQ MI

DA	MON	HRMN	ORD	FLOW	DA	MON	HRMN	ORD	FLOW	DA	MON	HRMN	ORD	FLOW	DA	MON	HRMN	ORD	FLOW
1		0000	1	2557.	1		0410	51	6634.	1		0820	101	894.	1		1230	151	250.
1		0005	2	2392.	1		0415	52	6085.	1		0825	102	888.	1		1235	152	237.
1		0010	3	2091.	1		0420	53	5555.	1		0830	103	880.	1		1240	153	226.
1		0015	4	1842.	1		0425	54	4994.	1		0835	104	873.	1		1245	154	217.
1		0020	5	1640.	1		0430	55	4438.	1		0840	105	865.	1		1250	155	210.
1		0025	6	1506.	1		0435	56	3918.	1		0845	106	857.	1		1255	156	204.
1		0030	7	1408.	1		0440	57	3456.	1		0850	107	848.	1		1300	157	199.
1		0035	8	1327.	1		0445	58	3105.	1		0855	108	838.	1		1305	158	196.
1		0040	9	1261.	1		0450	59	2850.	1		0900	109	827.	1		1310	159	192.
1		0045	10	1206.	1		0455	60	2639.	1		0905	110	814.	1		1315	160	188.
1		0050	11	1164.	1		0500	61	2463.	1		0910	111	801.	1		1320	161	183.
1		0055	12	1135.	1		0505	62	2301.	1		0915	112	785.	1		1325	162	179.
1		0100	13	1115.	1		0510	63	2118.	1		0920	113	767.	1		1330	163	174.
1		0105	14	1108.	1		0515	64	1930.	1		0925	114	745.	1		1335	164	170.
1		0110	15	1121.	1		0520	65	1775.	1		0930	115	710.	1		1340	165	166.
1		0115	16	1145.	1		0525	66	1646.	1		0935	116	673.	1		1345	166	163.
1		0120	17	1157.	1		0530	67	1529.	1		0940	117	643.	1		1350	167	159.
1		0125	18	1171.	1		0535	68	1425.	1		0945	118	618.	1		1355	168	155.
1		0130	19	1193.	1		0540	69	1348.	1		0950	119	598.	1		1400	169	152.
1		0135	20	1221.	1		0545	70	1299.	1		0955	120	580.	1		1405	170	149.
1		0140	21	1251.	1		0550	71	1259.	1		1000	121	565.	1		1410	171	145.
1		0145	22	1286.	1		0555	72	1224.	1		1005	122	552.	1		1415	172	142.
1		0150	23	1324.	1		0600	73	1195.	1		1010	123	543.	1		1420	173	139.
1		0155	24	1362.	1		0605	74	1173.	1		1015	124	535.	1		1425	174	136.
1		0200	25	1400.	1		0610	75	1146.	1		1020	125	528.	1		1430	175	134.
1		0205	26	3162.	1		0615	76	1117.	1		1025	126	521.	1		1435	176	131.
1		0210	27	9986.	1		0620	77	1097.	1		1030	127	514.	1		1440	177	128.
1		0215	28	23393.	1		0625	78	1082.	1		1035	128	508.	1		1445	178	125.
1		0220	29	43113.	1		0630	79	1070.	1		1040	129	502.	1		1450	179	123.
1		0225	30	60927.	1		0635	80	1059.	1		1045	130	496.	1		1455	180	120.
1		0230	31	65342.	1		0640	81	1050.	1		1050	131	489.	1		1500	181	118.
1		0235	32	61517.	1		0645	82	1041.	1		1055	132	483.	1		1505	182	115.
1		0240	33	55043.	1		0650	83	1032.	1		1100	133	476.	1		1510	183	113.
1		0245	34	47603.	1		0655	84	1024.	1		1105	134	470.	1		1515	184	111.
1		0250	35	39951.	1		0700	85	1015.	1		1110	135	463.	1		1520	185	108.
1		0255	36	33485.	1		0705	86	1007.	1		1115	136	456.	1		1525	186	106.
1		0300	37	28766.	1		0710	87	999.	1		1120	137	449.	1		1530	187	103.
1		0305	38	24596.	1		0715	88	992.	1		1125	138	441.	1		1535	188	98.
1		0310	39	21131.	1		0720	89	985.	1		1130	139	433.	1		1540	189	91.
1		0315	40	18187.	1		0725	90	977.	1		1135	140	425.	1		1545	190	83.
1		0320	41	15851.	1		0730	91	969.	1		1140	141	416.	1		1550	191	78.
1		0325	42	13827.	1		0735	92	961.	1		1145	142	408.	1		1555	192	73.
1		0330	43	12145.	1		0740	93	952.	1		1150	143	400.	1		1600	193	67.
1		0335	44	10840.	1		0745	94	944.	1		1155	144	393.	1		1605	194	62.

1	0340	45	9786.	1	0750	95	935.	1	1200	145	379.	1	1610	195	57.
1	0345	46	8967.	1	0755	96	927.	1	1205	146	357.	1	1615	196	52.
1	0350	47	8378.	1	0800	97	919.	1	1210	147	331.	1	1620	197	47.
1	0355	48	7888.	1	0805	98	912.	1	1215	148	306.	1	1625	198	43.
1	0400	49	7474.	1	0810	99	906.	1	1220	149	283.	1	1630	199	39.
1	0405	50	7096.	1	0815	100	900.	1	1225	150	265.	1	1635	200	35.

PEAK FLOW (CFS)	TIME (HR)		MAXIMUM AVERAGE FLOW 6-HR	24-HR	72-HR	16.58-HR
65342.	2.50	(CFS)	10238.	4023.	4023.	4023.
		(INCHES)	13.351	14.498	14.498	14.498
		(AC-FT)	5077.	5513.	5513.	5513.

CUMULATIVE AREA = 7.13 SQ MI

HYDROGRAPH AT C599I
TRANSPOSITION AREA 1.6 SQ MI

DA	MON	HRMN	ORD	FLOW	DA	MON	HRMN	ORD	FLOW	DA	MON	HRMN	ORD	FLOW	DA	MON	HRMN	ORD	FLOW
1		0000	1	2557.	1		0410	51	6634.	1		0820	101	894.	1		1230	151	250.
1		0005	2	2392.	1		0415	52	6085.	1		0825	102	888.	1		1235	152	237.
1		0010	3	2091.	1		0420	53	5555.	1		0830	103	880.	1		1240	153	226.
1		0015	4	1842.	1		0425	54	4994.	1		0835	104	873.	1		1245	154	217.
1		0020	5	1640.	1		0430	55	4438.	1		0840	105	865.	1		1250	155	210.
1		0025	6	1506.	1		0435	56	3918.	1		0845	106	857.	1		1255	156	204.
1		0030	7	1408.	1		0440	57	3456.	1		0850	107	848.	1		1300	157	199.
1		0035	8	1327.	1		0445	58	3105.	1		0855	108	838.	1		1305	158	196.
1		0040	9	1261.	1		0450	59	2850.	1		0900	109	827.	1		1310	159	192.
1		0045	10	1206.	1		0455	60	2639.	1		0905	110	814.	1		1315	160	188.
1		0050	11	1164.	1		0500	61	2463.	1		0910	111	801.	1		1320	161	183.
1		0055	12	1135.	1		0505	62	2301.	1		0915	112	785.	1		1325	162	179.
1		0100	13	1115.	1		0510	63	2118.	1		0920	113	767.	1		1330	163	174.
1		0105	14	1108.	1		0515	64	1930.	1		0925	114	745.	1		1335	164	170.
1		0110	15	1121.	1		0520	65	1775.	1		0930	115	710.	1		1340	165	166.
1		0115	16	1145.	1		0525	66	1646.	1		0935	116	673.	1		1345	166	163.
1		0120	17	1157.	1		0530	67	1529.	1		0940	117	643.	1		1350	167	159.
1		0125	18	1171.	1		0535	68	1425.	1		0945	118	618.	1		1355	168	155.
1		0130	19	1193.	1		0540	69	1348.	1		0950	119	598.	1		1400	169	152.
1		0135	20	1221.	1		0545	70	1299.	1		0955	120	580.	1		1405	170	149.
1		0140	21	1251.	1		0550	71	1259.	1		1000	121	565.	1		1410	171	145.
1		0145	22	1286.	1		0555	72	1224.	1		1005	122	552.	1		1415	172	142.
1		0150	23	1324.	1		0600	73	1195.	1		1010	123	543.	1		1420	173	139.
1		0155	24	1362.	1		0605	74	1173.	1		1015	124	535.	1		1425	174	136.
1		0200	25	1400.	1		0610	75	1146.	1		1020	125	528.	1		1430	175	134.
1		0205	26	3162.	1		0615	76	1117.	1		1025	126	521.	1		1435	176	131.
1		0210	27	9986.	1		0620	77	1097.	1		1030	127	514.	1		1440	177	128.
1		0215	28	23393.	1		0625	78	1082.	1		1035	128	508.	1		1445	178	125.
1		0220	29	43113.	1		0630	79	1070.	1		1040	129	502.	1		1450	179	123.
1		0225	30	60927.	1		0635	80	1059.	1		1045	130	496.	1		1455	180	120.
1		0230	31	65342.	1		0640	81	1050.	1		1050	131	489.	1		1500	181	118.
1		0235	32	61517.	1		0645	82	1041.	1		1055	132	483.	1		1505	182	115.
1		0240	33	55043.	1		0650	83	1032.	1		1100	133	476.	1		1510	183	113.
1		0245	34	47603.	1		0655	84	1024.	1		1105	134	470.	1		1515	184	111.
1		0250	35	39951.	1		0700	85	1015.	1		1110	135	463.	1		1520	185	108.
1		0255	36	33485.	1		0705	86	1007.	1		1115	136	456.	1		1525	186	106.
1		0300	37	28766.	1		0710	87	999.	1		1120	137	449.	1		1530	187	103.
1		0305	38	24596.	1		0715	88	992.	1		1125	138	441.	1		1535	188	98.
1		0310	39	21131.	1		0720	89	985.	1		1130	139	433.	1		1540	189	91.
1		0315	40	18187.	1		0725	90	977.	1		1135	140	425.	1		1545	190	83.
1		0320	41	15851.	1		0730	91	969.	1		1140	141	416.	1		1550	191	78.
1		0325	42	13827.	1		0735	92	961.	1		1145	142	408.	1		1555	192	73.
1		0330	43	12145.	1		0740	93	952.	1		1150	143	400.	1		1600	193	67.
1		0335	44	10840.	1		0745	94	944.	1		1155	144	393.	1		1605	194	62.
1		0340	45	9786.	1		0750	95	935.	1		1200	145	379.	1		1610	195	57.
1		0345	46	8967.	1		0755	96	927.	1		1205	146	357.	1		1615	196	52.
1		0350	47	8378.	1		0800	97	919.	1		1210	147	331.	1		1620	197	47.
1		0355	48	7888.	1		0805	98	912.	1		1215	148	306.	1		1625	198	43.
1		0400	49	7474.	1		0810	99	906.	1		1220	149	283.	1		1630	199	39.
1		0405	50	7096.	1		0815	100	900.	1		1225	150	265.	1		1635	200	35.

PEAK FLOW (CFS)	TIME (HR)		MAXIMUM AVERAGE FLOW 6-HR	24-HR	72-HR	16.58-HR
65342.	2.50	(CFS)	10238.	4023.	4023.	4023.
		(INCHES)	13.351	14.498	14.498	14.498

(AC-FT) 5077. 5513. 5513. 5513.

CUMULATIVE AREA = 7.13 SQ MI

HYDROGRAPH AT C599I
TRANSPOSITION AREA 2.0 SQ MI

DA	MON	HRMN	ORD	FLOW	DA	MON	HRMN	ORD	FLOW	DA	MON	HRMN	ORD	FLOW	DA	MON	HRMN	ORD	FLOW
1		0000	1	2557.	1		0410	51	6866.	1		0820	101	885.	1		1230	151	239.
1		0005	2	2393.	1		0415	52	6272.	1		0825	102	878.	1		1235	152	228.
1		0010	3	2098.	1		0420	53	5688.	1		0830	103	870.	1		1240	153	219.
1		0015	4	1857.	1		0425	54	5055.	1		0835	104	862.	1		1245	154	211.
1		0020	5	1662.	1		0430	55	4418.	1		0840	105	854.	1		1250	155	205.
1		0025	6	1533.	1		0435	56	3837.	1		0845	106	845.	1		1255	156	199.
1		0030	7	1441.	1		0440	57	3328.	1		0850	107	834.	1		1300	157	196.
1		0035	8	1366.	1		0445	58	2947.	1		0855	108	822.	1		1305	158	192.
1		0040	9	1306.	1		0450	59	2660.	1		0900	109	809.	1		1310	159	187.
1		0045	10	1257.	1		0455	60	2420.	1		0905	110	794.	1		1315	160	183.
1		0050	11	1218.	1		0500	61	2213.	1		0910	111	777.	1		1320	161	178.
1		0055	12	1185.	1		0505	62	2034.	1		0915	112	759.	1		1325	162	174.
1		0100	13	1159.	1		0510	63	1865.	1		0920	113	730.	1		1330	163	170.
1		0105	14	1144.	1		0515	64	1699.	1		0925	114	690.	1		1335	164	166.
1		0110	15	1149.	1		0520	65	1564.	1		0930	115	657.	1		1340	165	162.
1		0115	16	1168.	1		0525	66	1449.	1		0935	116	630.	1		1345	166	158.
1		0120	17	1190.	1		0530	67	1362.	1		0940	117	607.	1		1350	167	155.
1		0125	18	1223.	1		0535	68	1306.	1		0945	118	589.	1		1355	168	151.
1		0130	19	1263.	1		0540	69	1264.	1		0950	119	574.	1		1400	169	148.
1		0135	20	1303.	1		0545	70	1228.	1		0955	120	560.	1		1405	170	145.
1		0140	21	1343.	1		0550	71	1199.	1		1000	121	549.	1		1410	171	142.
1		0145	22	1380.	1		0555	72	1179.	1		1005	122	542.	1		1415	172	139.
1		0150	23	1416.	1		0600	73	1165.	1		1010	123	534.	1		1420	173	136.
1		0155	24	1449.	1		0605	74	1151.	1		1015	124	527.	1		1425	174	133.
1		0200	25	1481.	1		0610	75	1129.	1		1020	125	521.	1		1430	175	130.
1		0205	26	3194.	1		0615	76	1102.	1		1025	126	514.	1		1435	176	128.
1		0210	27	9901.	1		0620	77	1084.	1		1030	127	508.	1		1440	177	125.
1		0215	28	23058.	1		0625	78	1070.	1		1035	128	501.	1		1445	178	122.
1		0220	29	42115.	1		0630	79	1059.	1		1040	129	495.	1		1450	179	120.
1		0225	30	59467.	1		0635	80	1048.	1		1045	130	489.	1		1455	180	117.
1		0230	31	63996.	1		0640	81	1039.	1		1050	131	483.	1		1500	181	115.
1		0235	32	60363.	1		0645	82	1030.	1		1055	132	476.	1		1505	182	113.
1		0240	33	54212.	1		0650	83	1022.	1		1100	133	470.	1		1510	183	110.
1		0245	34	46934.	1		0655	84	1013.	1		1105	134	463.	1		1515	184	108.
1		0250	35	39384.	1		0700	85	1005.	1		1110	135	457.	1		1520	185	106.
1		0255	36	32884.	1		0705	86	997.	1		1115	136	449.	1		1525	186	103.
1		0300	37	27789.	1		0710	87	990.	1		1120	137	442.	1		1530	187	97.
1		0305	38	23307.	1		0715	88	983.	1		1125	138	434.	1		1535	188	89.
1		0310	39	19712.	1		0720	89	975.	1		1130	139	425.	1		1540	189	82.
1		0315	40	16841.	1		0725	90	967.	1		1135	140	417.	1		1545	190	77.
1		0320	41	14710.	1		0730	91	959.	1		1140	141	409.	1		1550	191	72.
1		0325	42	12886.	1		0735	92	951.	1		1145	142	401.	1		1555	192	66.
1		0330	43	11484.	1		0740	93	942.	1		1150	143	393.	1		1600	193	61.
1		0335	44	10391.	1		0745	94	933.	1		1155	144	382.	1		1605	194	56.
1		0340	45	9527.	1		0750	95	925.	1		1200	145	362.	1		1610	195	51.
1		0345	46	8874.	1		0755	96	917.	1		1205	146	337.	1		1615	196	46.
1		0350	47	8409.	1		0800	97	910.	1		1210	147	311.	1		1620	197	42.
1		0355	48	8004.	1		0805	98	904.	1		1215	148	288.	1		1625	198	38.
1		0400	49	7668.	1		0810	99	899.	1		1220	149	268.	1		1630	199	35.
1		0405	50	7335.	1		0815	100	892.	1		1225	150	253.	1		1635	200	31.

PEAK FLOW (CFS)	TIME (HR)		MAXIMUM AVERAGE FLOW 6-HR	24-HR	72-HR	16.58-HR
		(CFS)				
63996.	2.50		10002.	3931.	3931.	3931.
		(INCHES)	13.043	14.166	14.166	14.166
		(AC-FT)	4960.	5387.	5387.	5387.

CUMULATIVE AREA = 7.13 SQ MI

HYDROGRAPH AT C599I
TRANSPOSITION AREA 2.2 SQ MI

DA	MON	HRMN	ORD	FLOW	DA	MON	HRMN	ORD	FLOW	DA	MON	HRMN	ORD	FLOW	DA	MON	HRMN	ORD	FLOW
1		0000	1	2557.	1		0410	51	6866.	1		0820	101	885.	1		1230	151	239.

1	0005	2	2393.	1	0415	52	6272.	1	0825	102	878.	1	1235	152	228.
1	0010	3	2098.	1	0420	53	5688.	1	0830	103	870.	1	1240	153	219.
1	0015	4	1857.	1	0425	54	5055.	1	0835	104	862.	1	1245	154	211.
1	0020	5	1662.	1	0430	55	4418.	1	0840	105	854.	1	1250	155	205.
1	0025	6	1533.	1	0435	56	3837.	1	0845	106	845.	1	1255	156	199.
1	0030	7	1441.	1	0440	57	3328.	1	0850	107	834.	1	1300	157	196.
1	0035	8	1366.	1	0445	58	2947.	1	0855	108	822.	1	1305	158	192.
1	0040	9	1306.	1	0450	59	2660.	1	0900	109	809.	1	1310	159	187.
1	0045	10	1257.	1	0455	60	2420.	1	0905	110	794.	1	1315	160	183.
1	0050	11	1218.	1	0500	61	2213.	1	0910	111	777.	1	1320	161	178.
1	0055	12	1185.	1	0505	62	2034.	1	0915	112	759.	1	1325	162	174.
1	0100	13	1159.	1	0510	63	1865.	1	0920	113	730.	1	1330	163	170.
1	0105	14	1144.	1	0515	64	1699.	1	0925	114	690.	1	1335	164	166.
1	0110	15	1149.	1	0520	65	1564.	1	0930	115	657.	1	1340	165	162.
1	0115	16	1168.	1	0525	66	1449.	1	0935	116	630.	1	1345	166	158.
1	0120	17	1190.	1	0530	67	1362.	1	0940	117	607.	1	1350	167	155.
1	0125	18	1223.	1	0535	68	1306.	1	0945	118	589.	1	1355	168	151.
1	0130	19	1263.	1	0540	69	1264.	1	0950	119	574.	1	1400	169	148.
1	0135	20	1303.	1	0545	70	1228.	1	0955	120	560.	1	1405	170	145.
1	0140	21	1343.	1	0550	71	1199.	1	1000	121	549.	1	1410	171	142.
1	0145	22	1380.	1	0555	72	1179.	1	1005	122	542.	1	1415	172	139.
1	0150	23	1416.	1	0600	73	1165.	1	1010	123	534.	1	1420	173	136.
1	0155	24	1449.	1	0605	74	1151.	1	1015	124	527.	1	1425	174	133.
1	0200	25	1481.	1	0610	75	1129.	1	1020	125	521.	1	1430	175	130.
1	0205	26	3194.	1	0615	76	1102.	1	1025	126	514.	1	1435	176	128.
1	0210	27	9901.	1	0620	77	1084.	1	1030	127	508.	1	1440	177	125.
1	0215	28	23058.	1	0625	78	1070.	1	1035	128	501.	1	1445	178	122.
1	0220	29	42115.	1	0630	79	1059.	1	1040	129	495.	1	1450	179	120.
1	0225	30	59467.	1	0635	80	1048.	1	1045	130	489.	1	1455	180	117.
1	0230	31	63996.	1	0640	81	1039.	1	1050	131	483.	1	1500	181	115.
1	0235	32	60363.	1	0645	82	1030.	1	1055	132	476.	1	1505	182	113.
1	0240	33	54212.	1	0650	83	1022.	1	1100	133	470.	1	1510	183	110.
1	0245	34	46934.	1	0655	84	1013.	1	1105	134	463.	1	1515	184	108.
1	0250	35	39384.	1	0700	85	1005.	1	1110	135	457.	1	1520	185	106.
1	0255	36	32884.	1	0705	86	997.	1	1115	136	449.	1	1525	186	103.
1	0300	37	27789.	1	0710	87	990.	1	1120	137	442.	1	1530	187	97.
1	0305	38	23307.	1	0715	88	983.	1	1125	138	434.	1	1535	188	89.
1	0310	39	19712.	1	0720	89	975.	1	1130	139	425.	1	1540	189	82.
1	0315	40	16841.	1	0725	90	967.	1	1135	140	417.	1	1545	190	77.
1	0320	41	14710.	1	0730	91	959.	1	1140	141	409.	1	1550	191	72.
1	0325	42	12886.	1	0735	92	951.	1	1145	142	401.	1	1555	192	66.
1	0330	43	11484.	1	0740	93	942.	1	1150	143	393.	1	1600	193	61.
1	0335	44	10391.	1	0745	94	933.	1	1155	144	382.	1	1605	194	56.
1	0340	45	9527.	1	0750	95	925.	1	1200	145	362.	1	1610	195	51.
1	0345	46	8874.	1	0755	96	917.	1	1205	146	337.	1	1615	196	46.
1	0350	47	8409.	1	0800	97	910.	1	1210	147	311.	1	1620	197	42.
1	0355	48	8004.	1	0805	98	904.	1	1215	148	288.	1	1625	198	38.
1	0400	49	7668.	1	0810	99	899.	1	1220	149	268.	1	1630	199	35.
1	0405	50	7335.	1	0815	100	892.	1	1225	150	253.	1	1635	200	31.

PEAK FLOW (CFS)	TIME (HR)		MAXIMUM AVERAGE FLOW 6-HR	24-HR	72-HR	16.58-HR
63996.	2.50	(CFS)	10002.	3931.	3931.	3931.
		(INCHES)	13.043	14.166	14.166	14.166
		(AC-FT)	4960.	5387.	5387.	5387.

CUMULATIVE AREA = 7.13 SQ MI

HYDROGRAPH AT C599I
TRANSPOSITION AREA 7.2 SQ MI

DA	MON	HRMN	ORD	FLOW	DA	MON	HRMN	ORD	FLOW	DA	MON	HRMN	ORD	FLOW	DA	MON	HRMN	ORD	FLOW
1		0000	1	2557.	1		0410	51	5740.	1		0820	101	888.	1		1230	151	239.
1		0005	2	2391.	1		0415	52	5247.	1		0825	102	880.	1		1235	152	228.
1		0010	3	2090.	1		0420	53	4786.	1		0830	103	873.	1		1240	153	219.
1		0015	4	1839.	1		0425	54	4319.	1		0835	104	865.	1		1245	154	211.
1		0020	5	1635.	1		0430	55	3859.	1		0840	105	857.	1		1250	155	205.
1		0025	6	1500.	1		0435	56	3423.	1		0845	106	848.	1		1255	156	200.
1		0030	7	1401.	1		0440	57	3063.	1		0850	107	838.	1		1300	157	196.
1		0035	8	1319.	1		0445	58	2791.	1		0855	108	827.	1		1305	158	192.
1		0040	9	1251.	1		0450	59	2565.	1		0900	109	814.	1		1310	159	188.
1		0045	10	1196.	1		0455	60	2375.	1		0905	110	801.	1		1315	160	183.
1		0050	11	1155.	1		0500	61	2209.	1		0910	111	785.	1		1320	161	179.
1		0055	12	1127.	1		0505	62	2062.	1		0915	112	766.	1		1325	162	174.
1		0100	13	1108.	1		0510	63	1898.	1		0920	113	744.	1		1330	163	170.
1		0105	14	1101.	1		0515	64	1733.	1		0925	114	709.	1		1335	164	166.
1		0110	15	1113.	1		0520	65	1604.	1		0930	115	673.	1		1340	165	162.
1		0115	16	1134.	1		0525	66	1491.	1		0935	116	642.	1		1345	166	159.

1	0120	17	1144.	1	0530	67	1399.	1	0940	117	618.	1	1350	167	155.
1	0125	18	1150.	1	0535	68	1334.	1	0945	118	597.	1	1355	168	152.
1	0130	19	1158.	1	0540	69	1286.	1	0950	119	580.	1	1400	169	148.
1	0135	20	1171.	1	0545	70	1246.	1	0955	120	565.	1	1405	170	145.
1	0140	21	1192.	1	0550	71	1212.	1	1000	121	552.	1	1410	171	142.
1	0145	22	1214.	1	0555	72	1185.	1	1005	122	544.	1	1415	172	139.
1	0150	23	1238.	1	0600	73	1167.	1	1010	123	536.	1	1420	173	136.
1	0155	24	1267.	1	0605	74	1152.	1	1015	124	529.	1	1425	174	133.
1	0200	25	1298.	1	0610	75	1129.	1	1020	125	522.	1	1430	175	131.
1	0205	26	2898.	1	0615	76	1103.	1	1025	126	515.	1	1435	176	128.
1	0210	27	8998.	1	0620	77	1085.	1	1030	127	509.	1	1440	177	125.
1	0215	28	20729.	1	0625	78	1072.	1	1035	128	502.	1	1445	178	123.
1	0220	29	37579.	1	0630	79	1060.	1	1040	129	496.	1	1450	179	120.
1	0225	30	53555.	1	0635	80	1050.	1	1045	130	490.	1	1455	180	118.
1	0230	31	58742.	1	0640	81	1040.	1	1050	131	483.	1	1500	181	115.
1	0235	32	55827.	1	0645	82	1032.	1	1055	132	477.	1	1505	182	113.
1	0240	33	50573.	1	0650	83	1023.	1	1100	133	471.	1	1510	183	111.
1	0245	34	43762.	1	0655	84	1015.	1	1105	134	464.	1	1515	184	108.
1	0250	35	36833.	1	0700	85	1007.	1	1110	135	457.	1	1520	185	106.
1	0255	36	31126.	1	0705	86	999.	1	1115	136	450.	1	1525	186	103.
1	0300	37	26524.	1	0710	87	991.	1	1120	137	442.	1	1530	187	98.
1	0305	38	22645.	1	0715	88	984.	1	1125	138	434.	1	1535	188	90.
1	0310	39	19477.	1	0720	89	977.	1	1130	139	426.	1	1540	189	82.
1	0315	40	16714.	1	0725	90	969.	1	1135	140	418.	1	1545	190	77.
1	0320	41	14531.	1	0730	91	961.	1	1140	141	410.	1	1550	191	72.
1	0325	42	12595.	1	0735	92	952.	1	1145	142	402.	1	1555	192	67.
1	0330	43	11015.	1	0740	93	944.	1	1150	143	394.	1	1600	193	62.
1	0335	44	9741.	1	0745	94	935.	1	1155	144	382.	1	1605	194	56.
1	0340	45	8722.	1	0750	95	927.	1	1200	145	363.	1	1610	195	51.
1	0345	46	7988.	1	0755	96	919.	1	1205	146	337.	1	1615	196	47.
1	0350	47	7401.	1	0800	97	912.	1	1210	147	311.	1	1620	197	42.
1	0355	48	6907.	1	0805	98	906.	1	1215	148	288.	1	1625	198	39.
1	0400	49	6511.	1	0810	99	900.	1	1220	149	268.	1	1630	199	35.
1	0405	50	6157.	1	0815	100	894.	1	1225	150	253.	1	1635	200	32.

PEAK FLOW (CFS)	TIME (HR)		MAXIMUM AVERAGE FLOW 6-HR	24-HR	72-HR	16.58-HR
58742.	2.50	(CFS)	9284.	3672.	3672.	3672.
		(INCHES)	12.106	13.234	13.234	13.234
		(AC-FT)	4604.	5032.	5032.	5032.

CUMULATIVE AREA = 7.13 SQ MI

INTERPOLATED HYDROGRAPH AT C599I

DA	MON	HRMN	ORD	FLOW	DA	MON	HRMN	ORD	FLOW	DA	MON	HRMN	ORD	FLOW	DA	MON	HRMN	ORD	FLOW
1		0000	1	2557.	1		0410	51	5743.	1		0820	101	888.	1		1230	151	239.
1		0005	2	2391.	1		0415	52	5250.	1		0825	102	880.	1		1235	152	228.
1		0010	3	2090.	1		0420	53	4788.	1		0830	103	873.	1		1240	153	219.
1		0015	4	1839.	1		0425	54	4320.	1		0835	104	865.	1		1245	154	211.
1		0020	5	1635.	1		0430	55	3861.	1		0840	105	857.	1		1250	155	205.
1		0025	6	1501.	1		0435	56	3424.	1		0845	106	848.	1		1255	156	200.
1		0030	7	1401.	1		0440	57	3064.	1		0850	107	838.	1		1300	157	196.
1		0035	8	1319.	1		0445	58	2792.	1		0855	108	827.	1		1305	158	192.
1		0040	9	1252.	1		0450	59	2565.	1		0900	109	814.	1		1310	159	188.
1		0045	10	1196.	1		0455	60	2375.	1		0905	110	801.	1		1315	160	183.
1		0050	11	1155.	1		0500	61	2209.	1		0910	111	785.	1		1320	161	179.
1		0055	12	1127.	1		0505	62	2062.	1		0915	112	766.	1		1325	162	174.
1		0100	13	1109.	1		0510	63	1898.	1		0920	113	744.	1		1330	163	170.
1		0105	14	1101.	1		0515	64	1733.	1		0925	114	709.	1		1335	164	166.
1		0110	15	1113.	1		0520	65	1604.	1		0930	115	673.	1		1340	165	162.
1		0115	16	1134.	1		0525	66	1491.	1		0935	116	642.	1		1345	166	159.
1		0120	17	1144.	1		0530	67	1399.	1		0940	117	618.	1		1350	167	155.
1		0125	18	1151.	1		0535	68	1334.	1		0945	118	597.	1		1355	168	152.
1		0130	19	1158.	1		0540	69	1286.	1		0950	119	580.	1		1400	169	148.
1		0135	20	1172.	1		0545	70	1246.	1		0955	120	565.	1		1405	170	145.
1		0140	21	1192.	1		0550	71	1212.	1		1000	121	552.	1		1410	171	142.
1		0145	22	1214.	1		0555	72	1185.	1		1005	122	544.	1		1415	172	139.
1		0150	23	1239.	1		0600	73	1167.	1		1010	123	536.	1		1420	173	136.
1		0155	24	1267.	1		0605	74	1152.	1		1015	124	529.	1		1425	174	133.
1		0200	25	1298.	1		0610	75	1129.	1		1020	125	522.	1		1430	175	131.
1		0205	26	2898.	1		0615	76	1103.	1		1025	126	515.	1		1435	176	128.
1		0210	27	9000.	1		0620	77	1085.	1		1030	127	509.	1		1440	177	125.
1		0215	28	20735.	1		0625	78	1072.	1		1035	128	502.	1		1445	178	123.
1		0220	29	37590.	1		0630	79	1060.	1		1040	129	496.	1		1450	179	120.
1		0225	30	53569.	1		0635	80	1050.	1		1045	130	490.	1		1455	180	118.
1		0230	31	58754.	1		0640	81	1040.	1		1050	131	483.	1		1500	181	115.
1		0235	32	55837.	1		0645	82	1032.	1		1055	132	477.	1		1505	182	113.

1	0240	33	50581.	*	1	0650	83	1023.	*	1	1100	133	471.	*	1	1510	183	111.
1	0245	34	48769.	*	1	0655	84	1015.	*	1	1105	134	464.	*	1	1515	184	108.
1	0250	35	46839.	*	1	0700	85	1007.	*	1	1110	135	457.	*	1	1520	185	106.
1	0255	36	31131.	*	1	0705	86	999.	*	1	1115	136	450.	*	1	1525	186	103.
1	0300	37	26527.	*	1	0710	87	991.	*	1	1120	137	442.	*	1	1530	187	98.
1	0305	38	22646.	*	1	0715	88	984.	*	1	1125	138	434.	*	1	1535	188	90.
1	0310	39	19477.	*	1	0720	89	977.	*	1	1130	139	426.	*	1	1540	189	82.
1	0315	40	16714.	*	1	0725	90	969.	*	1	1135	140	418.	*	1	1545	190	77.
1	0320	41	14532.	*	1	0730	91	961.	*	1	1140	141	410.	*	1	1550	191	72.
1	0325	42	12596.	*	1	0735	92	952.	*	1	1145	142	402.	*	1	1555	192	67.
1	0330	43	11016.	*	1	0740	93	944.	*	1	1150	143	394.	*	1	1600	193	62.
1	0335	44	9743.	*	1	0745	94	935.	*	1	1155	144	382.	*	1	1605	194	56.
1	0340	45	8724.	*	1	0750	95	927.	*	1	1200	145	363.	*	1	1610	195	51.
1	0345	46	7991.	*	1	0755	96	919.	*	1	1205	146	337.	*	1	1615	196	47.
1	0350	47	7404.	*	1	0800	97	912.	*	1	1210	147	311.	*	1	1620	197	42.
1	0355	48	6910.	*	1	0805	98	906.	*	1	1215	148	288.	*	1	1625	198	39.
1	0400	49	6514.	*	1	0810	99	900.	*	1	1220	149	268.	*	1	1630	199	35.
1	0405	50	6160.	*	1	0815	100	894.	*	1	1225	150	253.	*	1	1635	200	32.
				*					*					*				

****

PEAK FLOW (CFS)	TIME (HR)		MAXIMUM AVERAGE FLOW 6-HR	24-HR	72-HR	16.58-HR
58754.	2.50	(CFS)	9286.	3673.	3673.	3673.
		(INCHES)	12.108	13.236	13.236	13.236
		(AC-FT)	4604.	5033.	5033.	5033.

CUMULATIVE AREA = 7.13 SQ MI

1

RUNOFF SUMMARY
FLOW IN CUBIC FEET PER SECOND
TIME IN HOURS, AREA IN SQUARE MILES

OPERATION	STATION	PEAK FLOW	TIME OF PEAK	AVERAGE FLOW FOR MAXIMUM PERIOD 6-HOUR	24-HOUR	72-HOUR	BASIN AREA	MAXIMUM STAGE	TIME OF MAX STAGE
HYDROGRAPH AT	C560I	17974.	2.58	2897.	1051.	1051.	2.15		
ROUTED TO	C560O	16821.	2.67	2891.	1183.	1183.	2.15		
ROUTED TO	560599	16460.	2.67	2891.	1185.	1185.	2.15		
HYDROGRAPH AT	C578I	26969.	2.33	2850.	1033.	1033.	2.00		
ROUTED TO	C578O	26375.	2.42	2903.	1149.	1149.	2.00		
ROUTED TO	578599	24197.	2.42	2920.	1160.	1160.	2.00		
HYDROGRAPH AT	C584I	20238.	2.33	2265.	821.	821.	1.60		
ROUTED TO	C584O	20283.	2.42	2311.	899.	899.	1.60		
ROUTED TO	584599	17009.	2.50	2335.	916.	916.	1.60		
HYDROGRAPH AT	C210	19580.	2.33	1956.	708.	708.	1.38		
4 COMBINED AT	C599I	58754.	2.50	9286.	3673.	3673.	7.13		

*** NORMAL END OF HEC-1 ***

Appendix C

HEC-1 File for IDF1

```
*****************************************
*                                       *
*   FLOOD HYDROGRAPH PACKAGE  (HEC-1)   *
*             MAY   1991                *
*          VERSION 4.0.1E               *
*    Lahey F77L-EM/32 version 5.01      *
*      Dodson & Associates, Inc.        *
*      DATE  03/02/99  TIME  16:00:49   *
*****************************************
```

```
*****************************************
*                                       *
*    U.S. ARMY CORPS OF ENGINEERS       *
*    HYDROLOGIC ENGINEERING CENTER      *
*          609 SECOND STREET            *
*       DAVIS, CALIFORNIA 95616         *
*           (916) 551-1748              *
*                                       *
*****************************************
```

```
X     X  XXXXXXX   XXXXX           X
X     X  X        X     X         XX
X     X  X        X                X
XXXXXXX  XXXX     X        XXXXX   X
X     X  X        X                X
X     X  X        X     X          X
X     X  XXXXXXX   XXXXX          XXX
```

THIS PROGRAM REPLACES ALL PREVIOUS VERSIONS OF HEC-1 KNOWN AS HEC1 (JAN 73), HEC1GS, HEC1DB, AND HEC1KW.

THE DEFINITIONS OF VARIABLES -RTIMP- AND -RTIOR- HAVE CHANGED FROM THOSE USED WITH THE 1973-STYLE INPUT STRUCTURE.
THE DEFINITION OF -AMSKK- ON RM-CARD WAS CHANGED WITH REVISIONS DATED 28 SEP 81. THIS IS THE FORTRAN77 VERSION
NEW OPTIONS: DAMBREAK OUTFLOW SUBMERGENCE , SINGLE EVENT DAMAGE CALCULATION, DSS:WRITE STAGE FREQUENCY,
DSS:READ TIME SERIES AT DESIRED CALCULATION INTERVAL LOSS RATE:GREEN AND AMPT INFILTRATION
KINEMATIC WAVE: NEW FINITE DIFFERENCE ALGORITHM

```
LINE          ID.......1.......2.......3.......4.......5.......6.......7.......8.......9......10

  1           ID        Golden Eagle Park Dam (FCD 97-44)
  2           ID        IDF1 Model for the Computation of IDF for Golden Eagle Park Dam
  3           ID        ****************************************************************
  4           ID        Analytical Considerations:
  5           ID            Includes Breach of North Heights Dam
  6           ID            Single Basin Model
  7           ID            This model considers areal reduction method.
  8           ID        ****************************************************************
  9           ID
 10           ID      FILE:  IDF1.DAT
 11           ID      DATE: OCTOBER 1998 (by FCDMC)
 12           ID      Modified by Stantec - February 1999
 13           ID
 14           ID     THIS MODEL WAS ALTERED BY FCDMC FROM THE ORIGINAL MODEL- GEPD-PMF.DAT
 15           ID     FROM THE GOLDEN EAGLE PARK DAM FEASIBILITY STUDY DONE BY GEORGE V.
 16           ID     SABOL CONSULTING ENGINEERS, INC. (GVSCE), JULY 1997
 17           ID
 18           ID    THE MODEL HAS THE FOLLOWING ADJUSTMENTS (BY FCDMC):FROM THE ORIGINAL
 19           ID     1.)  THE SINGLE BASIN FOR THE NORTH HEIGHTS DAM WATERSHED HAS BEEN
 20           ID          REMOVED.  IN ITS PLACE ARE QI CARDS TAKEN FROM THE DAM BREACH
 21           ID          HEC-1 FOR NORTH HEIGHTS DAM (GVSCE, JANUARY 1996).
 22           ID     2.)  BEFORE EACH WATERSHED IS ROUTED THROUGH ITS RESPECTIVE DAM,
 23           ID          HALF OF THE FLOW IS DIVERTED OUT TO REFLECT THE HALF PMF EVENT.
 24           ID          THE SAME WAS ALSO DONE ON THE WATERSHED (BASIN S210) BETWEEN THE THREE
 25           ID          UPPER DAMS AND GEPD.THE BREACH HYDROGRAPH ALREADY IS HALF PMF.
 26           ID     3.)  THE RATING CURVES FOR ASPEN AND SUNRIDGE CANYON DAMS WERE ALTERED
 27           ID          THE NEW RATING CURVES WERE DEVELOPED USING THE EQUATION Q=CLH3/2.
 28           ID          THE RATING CURVES WERE ALTERED TO MAKE THE SPILLWAY LENGTH LONG
 29           ID          ENOUGH TO PASS THE HALF PMF THROUGH THE DAM WITH THE REQUIRED
 30           ID          THREE FEET OF FREEBOARD.
 31           ID          C = 2.6
 32           ID     4.)  IN THIS MODEL THE PRINCIPLE SPILLWAYS OF ASPEN AND SUNRIDGE CANYON DAM
 33           ID          ARE UNCLOGGED.
 34           ID     5.)  THE INITIAL WATER SURFACE ELEVATION FOR EACH OF THE DAMS WAS
 35           ID          SET TO THE WSEL OF THE 100 YEAR EVENT
 36           ID     NOTE:MODIFICATIONS BY STANTEC ARE EDITORIAL ONLY.  THE ORIGINAL GVSCE MODEL
 37           ID          AND REVISIONS BY FCDMC ARE ACCEPTED.  THE ROUTING (BY FCDMC) OF THE
 38           ID          IDF1 HYDROGRAPH THROUGH THE EXISTING GEP DAM IS DELETED.
              *DIAGRAM
 39           IT       5 02JUN98             210
 40           IO       4
 41           IN      15
              *
 42           JD   15.00    0.01
 43           PI   0.075   0.075   0.075   0.075     0.2     0.2     0.2     0.2     8.2     1.8
 44           PI     0.7     0.7     0.4     0.4     0.4     0.4    0.15    0.15    0.15    0.15
 45           PI   0.075   0.075   0.075   0.075
 46           JD   15.00   1.603
 47           PI   0.075   0.075   0.075   0.075     0.2     0.2     0.2     0.2     8.2     1.8
 48           PI     0.7     0.7     0.4     0.4     0.4     0.4    0.15    0.15    0.15    0.15
 49           PI   0.075   0.075   0.075   0.075
 50           JD   14.70   2.000
 51           PI     0.1     0.1     0.1     0.1     0.2     0.2     0.2     0.2     8.0     1.8
 52           PI     0.7     0.5   0.425   0.425   0.425   0.425   0.125   0.125   0.125   0.125
 53           PI   0.075   0.075   0.075   0.075
```

```
LINE          ID.......1.......2.......3.......4.......5.......6.......7.......8.......9......10

  54          JD   14.70   2.150
  55          PI     0.1     0.1     0.1     0.1     0.2     0.2     0.2     0.2     8.0     1.8
  56          PI     0.7     0.5   0.425   0.425   0.425   0.425   0.125   0.125   0.125   0.125
  57          PI   0.075   0.075   0.075   0.075
  58          JD   13.70   7.150
  59          PI   0.075   0.075   0.075   0.075     0.2     0.2     0.2     0.2     8.0     1.8
  60          PI     0.7     0.7   0.375   0.375   0.375   0.375    0.15    0.15    0.15    0.15
  61          PI   0.075   0.075   0.075   0.075

  62          KK   C560I
  63          KM        BASIN S207 (ASPEN DAM)
  64          KM        THE FOLLOWING PARAMETERS WERE PROVIDED FOR THIS BASIN
  65          KM        L=       3.9  Lca=       2.2   S=  464.7  Kn= .030  LAG=  30.6
  66          KM        PHOENIX MOUNTAIN S-GRAPH WAS USED FOR THIS BASIN
  67          BA    2.15
  68          LG     .17     .31    4.90    0.29   31.55
  69          UI    237.    523.   1170.   1651.   2163.   2377.   1509.   1274.   1082.    897.
  70          UI    699.    573.    507.    374.    299.    259.    198.    181.    119.    116.
  71          UI    111.     45.     45.     45.     45.     45.     45.     45.      0.      0.
  72          UI      0.      0.      0.      0.      0.      0.      0.      0.      0.      0.
  73          UI      0.      0.      0.      0.      0.      0.      0.      0.      0.      0.

  74          KK   0.5PMF
  75          KM    THIS DIVERT IS USED TO REMOVE HALF THE FLOWS BEFORE ROUTING THROUGH
  76          KM    THE DAM
  77          DT   .5PMF
  78          DI       0      50     100   10000
  79          DQ       0      25      50    5000
              *

  80          KK   C560O
  81          KM      Reservoir route at C560 (ASPEN DAM).
  82          KM    THE SQ CARDS HAVE BEEN ALTERED FROM THE ORIGINAL MODEL (GEPD-PMF.DAT) FROM
  83          KM    THE GEPD FEASIBILITY STUDY (GVSCE, 1997)
  84          KM     SEE COMMENT NUMBER 3 ABOVE
  85          RS       1    ELEV 1835.36
  86          SV    0.00    7.09   34.65   75.98  135.64  191.44  208.31  226.53  246.00  266.28
  87          SV  289.00  310.81  336.00
  88          SE  1808.8 1814.00 1820.00 1826.00 1832.00 1836.00 1837.00 1838.00 1839.00 1840.00
  89          SE  1841.0 1842.00 1843.00
  90          SQ       0     102     184     242     285     907    1913    3718    5913    8428
  91          SQ   11432   14486   17540
              *

  92          KK  560599
  93          KM      Normal depth channel route (ASPEN DAM TO GEP DAM)
  94          RS       1    FLOW      -1
  95          RC   0.050   0.025   0.050  3127.0  0.0272
  96          RX  9850.4  9950.4  9974.4 10000.0 10035.5 10059.8 10080.4 10104.4
  97          RY  1772.0  1771.7  1765.3  1765.3  1765.9  1768.5  1773.3  1773.7
              *
```

```
LINE          ID.......1.......2.......3.......4.......5.......6.......7.......8.......9......10

 98           KK  DAMFLO
 99           KM    OUTFLOW FROM DAM BREACH OF NORTH HEIGHTS DAM
100           KM    THESE OUTFLOWS WERE TAKEN FROM THE DAM BREAK ANALYSIS STUDY (GVSCE, JANUARY
101           KM    FOR THE FOUNTAIN HILLS DAMS.  THE NUMBERS WERE TAKEN FROM THE DAM BREAK MODE
102           KM    FOR GOLDEN EAGLE PARK DAM
103           IN       5
104           KO       1
105           BA    2.02
106           QI     781     493     408     353     306     267     235     210     189     172
107           QI     159     148     140     134     131     133     140     153     170     190
108           QI     212     234     254     274     292     415    1175    3086  6860.3   21573
109           QI   29206 13111.4  7068.4  6196.2  5139.0  4067.1  3127.9    2838    2412    2076
110           QI    1801    1569    1410    1275    1172    1092    1029     983     951     922
111           QI     887     841     779     707     631     560     499     460     444     429
112           QI     414     399     384     369     352     334     314     294     275     257
113           QI     241     226     212     199     187     175     163     150     138     126
114           QI     115     104      94      84      75      68      60      54      48      43
115           QI      38      34      30      27      23      21      18      16      14      12
116           QI      11      10       8       7       6       6       5       4       4       3
117           QI       3       3       2       2       2       2       1       1       1       1
118           QI       1       1       1       1       1       1       1       1       1       1
119           QI       1

120           KK  578599
121           KM      Normal depth channel route (North Heights Dam to GEP Dam)
122           RS       1    FLOW      -1
123           RC   0.055   0.045   0.055  3762.0 0.01624
124           RX  9928.9  9945.0  9963.1  9990.6 10012.2 10035.4 10052.8 10069.6
125           RY  1755.7  1746.3  1746.1  1741.7  1743.3  1743.7  1744.6  1755.7
              *

126           KK   C584I
127           KM        BASIN S209 (Sunridge Canyon Dam)
128           KM        THE FOLLOWING PARAMETERS WERE PROVIDED FOR THIS BASIN
129           KM        L=       3.2  Lca=      1.7   S=  582.3  Kn= .019  LAG=  15.9
130           KM        PHOENIX MOUNTAIN S-GRAPH WAS USED FOR THIS BASIN
131           BA    1.60
132           LG     .13     .28    4.62     .32   41.50
133           UI    515.   1951.   3289.   2104.   1510.    997.    702.    442.    308.    202.
134           UI    154.     65.     65.     65.      0.      0.      0.      0.      0.      0.
135           UI      0.      0.      0.      0.      0.      0.      0.      0.      0.      0.

136           KK   0.5PMF
137           KM    THIS DIVERT REMOVES HALF THE PMF FLOWS CREATING THE .5 PMF BEFORE
138           KM    BEING ROUTED THROUGH THE DAM
139           DT   .5PMF
140           DI       0      50     100   10000
141           DQ       0      25      50    5000
              *
```

```
LINE          ID.......1.......2.......3.......4.......5.......6.......7.......8.......9......10

 142          KK   C584O
 143          KM      Reservoir route at C584 (Sunridge Canyon Dam).
 144          KM    THE SQ CARDS HAVE BEEN ALTERED FROM THE ORIGINAL MODEL (GEPD-PMF.DAT) FROM
 145          KM    THE GEPD FEASIBILITY STUDY (GVSCE, JULY 1997)
 146          KM    PLEASE SEE COMMENT NUMBER 3 ABOVE
 147          RS       1    ELEV 1926.31
 148          SV    0.00     0.60     4.30    11.27    23.74    46.29    86.65    96.00   104.90   126.25
 149          SV  151.07   165.00   179.50
 150          SE  1884.8 1894.00 1900.00 1906.00 1912.00 1918.00 1924.00 1925.00 1926.00 1928.00
 151          SE  1930.0 1931.00 1932.00
 152          SQ       0      163      223      272      307      333      355      959     1762     6368
 153          SQ   12373    16175    20178
 154          SE  1884.8 1894.00 1900.00 1906.00 1912.00 1918.00 1924.00 1925.00 1926.00 1928.00
 155          SE  1930.0 1931.00 1932.00
              *

 156          KK  584599
 157          KM      Normal depth channel route (Sunridge Canyon Dam to GEP Dam)
 158          RS       1    FLOW      -1
 159          RC   0.065    0.050    0.065   6526.0 0.02571
 160          RX  9927.6   9939.8   9951.9   9985.3 10036.0 10067.5 10119.2 10188.7
 161          RY  1796.3   1791.2   1788.3   1784.1  1784.9  1788.0  1790.2  1796.4
              *

 162          KK    C210
 163          KM        BASIN S210 (GOLDEN EAGLE PARK DAM)
 164          KM        THE FOLLOWING PARAMETERS WERE PROVIDED FOR THIS BASIN
 165          KM        L=       1.9  Lca=        .9   S=  360.7  Kn= .024  LAG=  13.6
 166          KM        PHOENIX MOUNTAIN S-GRAPH WAS USED FOR THIS BASIN
 167          BA    1.38
 168          LG     .09      .24     5.61      .19    24.82
 169          UI    634.    2291.    3040.    1739.    1122.     723.     433.     286.     170.      96.
 170          UI     66.      66.       0.       0.       0.       0.       0.       0.       0.       0.
 171          UI      0.       0.       0.       0.       0.       0.       0.       0.       0.       0.

 172          KK  0.5PMF
 173          KM    THIS DIVERT REMOVES HALF THE FLOWS FROM THIS AREA TO CREATE THE .5PMF
 174          DT  0.5PMF
 175          DI       0       50      100    10000
 176          DQ       0       25       50     5000
              *

 177          KK   C599I
 178          KO       1        2                        21
 179          KM      Hydrograph combine C584O + C560O + C578O + C599
 180          HC       4
 181          ZZ
```

```
                SCHEMATIC DIAGRAM OF STREAM NETWORK
INPUT
 LINE      (V) ROUTING          (--->) DIVERSION OR PUMP FLOW

  NO.      (.) CONNECTOR        (<---) RETURN OF DIVERTED OR PUMPED FLOW

   62       C560I
                .
                .
   77           .-------->   .5PMF
   74       0.5PM
                V
                V
   80       C560O
                V
                V
   92      560599
                .
                .
   98           .      DAMFLO
                .           V
                .           V
  120           .      578599
                .           .
                .           .
  126           .           .       C584I
                .           .           .
                .           .           .
  139           .           .           .-------->   .5PMF
  136           .           .       0.5PM
                .           .           V
                .           .           V
  142           .           .       C584O
                .           .           V
                .           .           V
  156           .           .      584599
                .           .           .
                .           .           .
  162           .           .           .        C210
                .           .           .           .
                .           .           .           .
  174           .           .           .           .-------->  0.5PMF
  172           .           .           .      0.5PMF
                .           .           .           .
                .           .           .           .
  177       C599I.................................
```

(***) RUNOFF ALSO COMPUTED AT THIS LOCATION

```
*****************************************
*                                       *
*   FLOOD HYDROGRAPH PACKAGE  (HEC-1)   *
*              MAY   1991               *
*            VERSION 4.0.1E             *
*     Lahey F77L-EM/32 version 5.01     *
*        Dodson & Associates, Inc.      *
*        DATE  03/02/99  TIME  16:00:49 *
*****************************************
```

```
*****************************************
*                                       *
*    U.S. ARMY CORPS OF ENGINEERS       *
*    HYDROLOGIC ENGINEERING CENTER      *
*          609 SECOND STREET            *
*       DAVIS, CALIFORNIA 95616         *
*           (916) 551-1748              *
*                                       *
*****************************************
```

```
Golden Eagle Park Dam (FCD 97-44)
IDF1 Model for the Computation of IDF for Golden Eagle Park Dam
*****************************************************************
Analytical Considerations:
    Includes Breach of North Heights Dam
    Single Basin Model
    This model considers areal reduction method.
*****************************************************************

FILE:  IDF1.DAT
DATE: OCTOBER 1998 (by FCDMC)
Modified by Stantec - February 1999

THIS MODEL WAS ALTERED BY FCDMC FROM THE ORIGINAL MODEL- GEPD-PMF.DAT
FROM THE GOLDEN EAGLE PARK DAM FEASIBILITY STUDY DONE BY GEORGE V.
SABOL CONSULTING ENGINEERS, INC. (GVSCE), JULY 1997

THE MODEL HAS THE FOLLOWING ADJUSTMENTS (BY FCDMC):FROM THE ORIGINAL
 1.)  THE SINGLE BASIN FOR THE NORTH HEIGHTS DAM WATERSHED HAS BEEN
      REMOVED.  IN ITS PLACE ARE QI CARDS TAKEN FROM THE DAM BREACH
      HEC-1 FOR NORTH HEIGHTS DAM (GVSCE, JANUARY 1996).
 2.)  BEFORE EACH WATERSHED IS ROUTED THROUGH ITS RESPECTIVE DAM,
      HALF OF THE FLOW IS DIVERTED OUT TO REFLECT THE HALF PMF EVENT.
      THE SAME WAS ALSO DONE ON THE WATERSHED (BASIN S210) BETWEEN THE THREE
      UPPER DAMS AND GEPD.THE BREACH HYDROGRAPH ALREADY IS HALF PMF.
 3.)  THE RATING CURVES FOR ASPEN AND SUNRIDGE CANYON DAMS WERE ALTERED
      THE NEW RATING CURVES WERE DEVELOPED USING THE EQUATION Q=CLH3/2.
      THE RATING CURVES WERE ALTERED TO MAKE THE SPILLWAY LENGTH LONG
      ENOUGH TO PASS THE HALF PMF THROUGH THE DAM WITH THE REQUIRED
      THREE FEET OF FREEBOARD.
      C = 2.6
 4.)  IN THIS MODEL THE PRINCIPLE SPILLWAYS OF ASPEN AND SUNRIDGE CANYON DAM
      ARE UNCLOGGED.
 5.)  THE INITIAL WATER SURFACE ELEVATION FOR EACH OF THE DAMS WAS
      SET TO THE WSEL OF THE 100 YEAR EVENT
NOTE:MODIFICATIONS BY STANTEC ARE EDITORIAL ONLY.  THE ORIGINAL GVSCE MODEL
     AND REVISIONS BY FCDMC ARE ACCEPTED.  THE ROUTING (BY FCDMC) OF THE
     IDF1 HYDROGRAPH THROUGH THE EXISTING GEP DAM IS DELETED.

40 IO        OUTPUT CONTROL VARIABLES
                   IPRNT          4  PRINT CONTROL
                   IPLOT          0  PLOT CONTROL
                   QSCAL         0.  HYDROGRAPH PLOT SCALE

41 IN        TIME DATA FOR INPUT TIME SERIES
                   JXMIN         15  TIME INTERVAL IN MINUTES
                  JXDATE     2JUN98  STARTING DATE
                  JXTIME          0  STARTING TIME

   IT        HYDROGRAPH TIME DATA
                    NMIN          5  MINUTES IN COMPUTATION INTERVAL
                   IDATE     2JUN98  STARTING DATE
                   ITIME       0000  STARTING TIME
                      NQ        210  NUMBER OF HYDROGRAPH ORDINATES
                  NDDATE     2JUN98  ENDING DATE
                  NDTIME       1725  ENDING TIME
                   ICENT         19  CENTURY MARK

             COMPUTATION INTERVAL    0.08 HOURS
                  TOTAL TIME BASE   17.42 HOURS

      ENGLISH UNITS
           DRAINAGE AREA          SQUARE MILES
           PRECIPITATION DEPTH    INCHES
```

```
LENGTH, ELEVATION      FEET
FLOW                   CUBIC FEET PER SECOND
STORAGE VOLUME         ACRE-FEET
SURFACE AREA           ACRES
TEMPERATURE            DEGREES FAHRENHEIT

42 JD        INDEX STORM NO. 1
                 STRM       15.00  PRECIPITATION DEPTH
                 TRDA        0.01  TRANSPOSITION DRAINAGE AREA

43 PI          PRECIPITATION PATTERN
                 0.03       0.03       0.02       0.03       0.03       0.02       0.03       0.03       0.02       0.02
                 0.03       0.03       0.07       0.07       0.07       0.07       0.07       0.07       0.07       0.07
                 0.07       0.07       0.07       0.07       2.73       2.73       2.73       0.60       0.60       0.60
                 0.23       0.23       0.23       0.23       0.23       0.23       0.13       0.13       0.13       0.13
                 0.13       0.13       0.13       0.13       0.13       0.13       0.13       0.13       0.05       0.05
                 0.05       0.05       0.05       0.05       0.05       0.05       0.05       0.05       0.05       0.05
                 0.02       0.03       0.02       0.02       0.03       0.02       0.02       0.03       0.02       0.02
                 0.03       0.02

46 JD        INDEX STORM NO. 2
                 STRM       15.00  PRECIPITATION DEPTH
                 TRDA        1.60  TRANSPOSITION DRAINAGE AREA

47 PI          PRECIPITATION PATTERN
                 0.03       0.03       0.02       0.03       0.03       0.02       0.03       0.03       0.02       0.02
                 0.03       0.03       0.07       0.07       0.07       0.07       0.07       0.07       0.07       0.07
                 0.07       0.07       0.07       0.07       2.73       2.73       2.73       0.60       0.60       0.60
                 0.23       0.23       0.23       0.23       0.23       0.23       0.13       0.13       0.13       0.13
                 0.13       0.13       0.13       0.13       0.13       0.13       0.13       0.13       0.05       0.05
                 0.05       0.05       0.05       0.05       0.05       0.05       0.05       0.05       0.05       0.05
                 0.02       0.03       0.02       0.02       0.03       0.02       0.02       0.03       0.02       0.02
                 0.03       0.02

50 JD        INDEX STORM NO. 3
                 STRM       14.70  PRECIPITATION DEPTH
                 TRDA        2.00  TRANSPOSITION DRAINAGE AREA

51 PI          PRECIPITATION PATTERN
                 0.03       0.03       0.03       0.03       0.03       0.03       0.03       0.03       0.03       0.03
                 0.03       0.03       0.07       0.07       0.07       0.07       0.07       0.07       0.07       0.07
                 0.07       0.07       0.07       0.07       2.67       2.67       2.67       0.60       0.60       0.60
                 0.23       0.23       0.23       0.17       0.17       0.17       0.14       0.14       0.14       0.14
                 0.14       0.14       0.14       0.14       0.14       0.14       0.14       0.14       0.04       0.04
                 0.04       0.04       0.04       0.04       0.04       0.04       0.04       0.04       0.04       0.04
                 0.02       0.03       0.02       0.02       0.03       0.02       0.02       0.03       0.02       0.02
                 0.03       0.02

54 JD        INDEX STORM NO. 4
                 STRM       14.70  PRECIPITATION DEPTH
                 TRDA        2.15  TRANSPOSITION DRAINAGE AREA

55 PI          PRECIPITATION PATTERN
                 0.03       0.03       0.03       0.03       0.03       0.03       0.03       0.03       0.03       0.03
                 0.03       0.03       0.07       0.07       0.07       0.07       0.07       0.07       0.07       0.07
                 0.07       0.07       0.07       0.07       2.67       2.67       2.67       0.60       0.60       0.60
                 0.23       0.23       0.23       0.17       0.17       0.17       0.14       0.14       0.14       0.14
                 0.14       0.14       0.14       0.14       0.14       0.14       0.14       0.14       0.04       0.04
                 0.04       0.04       0.04       0.04       0.04       0.04       0.04       0.04       0.04       0.04
                 0.02       0.03       0.02       0.02       0.03       0.02       0.02       0.03       0.02       0.02
                 0.03       0.02

58 JD        INDEX STORM NO. 5
                 STRM       13.70  PRECIPITATION DEPTH
                 TRDA        7.15  TRANSPOSITION DRAINAGE AREA

59 PI          PRECIPITATION PATTERN
                 0.03       0.03       0.02       0.03       0.03       0.02       0.03       0.03       0.02       0.02
                 0.03       0.03       0.07       0.07       0.07       0.07       0.07       0.07       0.07       0.07
                 0.07       0.07       0.07       0.07       2.67       2.67       2.67       0.60       0.60       0.60
                 0.23       0.23       0.23       0.23       0.23       0.23       0.13       0.13       0.13       0.13
                 0.13       0.13       0.13       0.13       0.13       0.13       0.13       0.13       0.05       0.05
                 0.05       0.05       0.05       0.05       0.05       0.05       0.05       0.05       0.05       0.05
                 0.02       0.03       0.02       0.02       0.03       0.02       0.02       0.03       0.02       0.02
                 0.03       0.02
```

```
*** *** *** *** *** *** *** *** *** *** *** *** *** *** *** *** *** *** *** *** *** *** *** *** *** *** *** *** *** *** *** *** *** ***

          **************
          *            *
 62 KK    *     C560I  *
          *            *
          **************
                          BASIN S207 (ASPEN DAM)
                          THE FOLLOWING PARAMETERS WERE PROVIDED FOR THIS BASIN
                          L=      3.9  Lca=      2.2   S=  464.7  Kn= .030  LAG=  30.6
                          PHOENIX MOUNTAIN S-GRAPH WAS USED FOR THIS BASIN

            SUBBASIN RUNOFF DATA

 67 BA        SUBBASIN CHARACTERISTICS
                    TAREA        2.15  SUBBASIN AREA

 68 LG        GREEN AND AMPT LOSS RATE
                    STRTL        0.17  STARTING LOSS
                      DTH        0.31  MOISTURE DEFICIT
                     PSIF        4.90  WETTING FRONT SUCTION
                    XKSAT        0.29  HYDRAULIC CONDUCTIVITY
                    RTIMP       31.55  PERCENT IMPERVIOUS AREA

 63 UI        INPUT UNITGRAPH,  28 ORDINATES,  VOLUME = 1.00
                 237.0     523.0    1170.0    1651.0    2163.0    2377.0    1509.0    1274.0    1082.0     897.0
                 699.0     573.0     507.0     374.0     299.0     259.0     198.0     181.0     119.0     116.0
                 111.0      45.0      45.0      45.0      45.0      45.0      45.0      45.0
                                                                   ***

*** *** *** *** *** *** *** *** *** *** *** *** *** *** *** *** *** *** *** *** *** *** *** *** *** *** *** *** *** *** *** *** *** ***

          **************
          *            *
 74 KK    *     0.5PM  *     F
          *            *
          **************
                          THIS DIVERT IS USED TO REMOVE HALF THE FLOWS BEFORE ROUTING THROUGH
                          THE DAM

   DT         DIVERSION
                    ISTAD       .5PMF  DIVERSION HYDROGRAPH IDENTIFICATION

   DI            INFLOW        0.00     50.00    100.00  10000.00

   DQ      DIVERTED FLOW       0.00     25.00     50.00   5000.00
                                                                   ***

*** *** *** *** *** *** *** *** *** *** *** *** *** *** *** *** *** *** *** *** *** *** *** *** *** *** *** *** *** *** *** *** *** ***

          **************
          *            *
 80 KK    *     C560O  *
          *            *
          **************
                           Reservoir route at C560 (ASPEN DAM).
                          THE SQ CARDS HAVE BEEN ALTERED FROM THE ORIGINAL MODEL (GEPD-PMF.DAT) FROM
                          THE GEPD FEASIBILITY STUDY (GVSCE, 1997)
                           SEE COMMENT NUMBER 3 ABOVE

            HYDROGRAPH ROUTING DATA

 85 RS        STORAGE ROUTING
                    NSTPS           1  NUMBER OF SUBREACHES
                     ITYP        ELEV  TYPE OF INITIAL CONDITION
                   RSVRIC     1835.36  INITIAL CONDITION
                        X        0.00 WORKING R AND D COEFFICIENT

 86 SV          STORAGE         0.0       7.1      34.7      76.0     135.6     191.4     208.3     226.5     246.0     266.3
```

```
                                289.0     310.8     336.0

 88 SE          ELEVATION     1808.80   1814.00   1820.00   1826.00   1832.00   1836.00   1837.00   1838.00   1839.00   1840.00
                              1841.00   1842.00   1843.00

 90 SQ          DISCHARGE          0.      102.      184.      242.      285.      907.     1913.     3718.     5913.     8428.
                                11432.    14486.    17540.

                                                          ***

*** *** *** *** *** *** *** *** *** *** *** *** *** *** *** *** *** *** *** *** *** *** *** *** *** *** *** *** *** *** *** *** ***


          **************
          *            *
 92 KK    *    560599  *
          *            *
          **************
                          Normal depth channel route (ASPEN DAM TO GEP DAM)

             HYDROGRAPH ROUTING DATA

 94 RS          STORAGE ROUTING
                      NSTPS           1  NUMBER OF SUBREACHES
                       ITYP        FLOW  TYPE OF INITIAL CONDITION
                     RSVRIC       -1.00  INITIAL CONDITION
                          X        0.00 WORKING R AND D COEFFICIENT

 95 RC          NORMAL DEPTH CHANNEL
                        ANL       0.050  LEFT OVERBANK N-VALUE
                       ANCH       0.025  MAIN CHANNEL N-VALUE
                        ANR       0.050  RIGHT OVERBANK N-VALUE
                      RLNTH       3127.  REACH LENGTH
                        SEL      0.0272  ENERGY SLOPE
                      ELMAX         0.0  MAX. ELEV. FOR STORAGE/OUTFLOW CALCULATION

                                      CROSS-SECTION DATA
                        --- LEFT OVERBANK --- + ------ MAIN CHANNEL ------- + --- RIGHT OVERBANK ---
 97 RY        ELEVATION   1772.00   1771.70   1765.30   1765.30   1765.90   1768.50   1773.30   1773.70
 96 RX        DISTANCE    9850.40   9950.40   9974.40  10000.00  10035.50  10059.80  10080.40  10104.40

                                                          ***

                                      COMPUTED STORAGE-OUTFLOW-ELEVATION DATA

          STORAGE       0.00      1.25      3.25      5.47      7.87     10.46     13.23     16.19     19.31     22.54
          OUTFLOW       0.00     80.98    338.67    762.45   1326.75   2026.43   2859.90   3827.44   5030.18   6405.37
        ELEVATION    1765.30   1765.74   1766.18   1766.63   1767.07   1767.51   1767.95   1768.40   1768.84   1769.28

          STORAGE      25.89     29.35     32.92     36.60     40.40     44.95     52.04     59.24     66.51     74.15
          OUTFLOW    7919.95   9571.50  11358.09  13278.22  15330.69  17050.24  19574.03  22392.59  25434.73  28542.28
        ELEVATION    1769.72   1770.16   1770.61   1771.05   1771.49   1771.93   1772.37   1772.82   1773.26   1773.70


*** WARNING *** MODIFIED PULS ROUTING MAY BE NUMERICALLY UNSTABLE FOR OUTFLOWS BETWEEN     2026. TO    28542.
                THE ROUTED HYDROGRAPH SHOULD BE EXAMINED FOR OSCILLATIONS OR OUTFLOWS GREATER THAN PEAK INFLOWS.
                THIS CAN BE CORRECTED BY DECREASING THE TIME INTERVAL OR INCREASING STORAGE (USE A LONGER REACH.)


*** *** *** *** *** *** *** *** *** *** *** *** *** *** *** *** *** *** *** *** *** *** *** *** *** *** *** *** *** *** *** *** ***


          **************
          *            *
 98 KK    *    DAMFLO  *
          *            *
          **************
                          OUTFLOW FROM DAM BREACH OF NORTH HEIGHTS DAM
                          THESE OUTFLOWS WERE TAKEN FROM THE DAM BREAK ANALYSIS STUDY (GVSCE, JANUARY
                          FOR THE FOUNTAIN HILLS DAMS.  THE NUMBERS WERE TAKEN FROM THE DAM BREAK MODE
                          FOR GOLDEN EAGLE PARK DAM

104 KO          OUTPUT CONTROL VARIABLES
                      IPRNT           1  PRINT CONTROL
                      IPLOT           0  PLOT CONTROL
```

QSCAL 0. HYDROGRAPH PLOT SCALE

103 IN TIME DATA FOR INPUT TIME SERIES
JXMIN 5 TIME INTERVAL IN MINUTES
JXDATE 2JUN98 STARTING DATE
JXTIME 0 STARTING TIME

SUBBASIN RUNOFF DATA

105 BA SUBBASIN CHARACTERISTICS
TAREA 2.02 SUBBASIN AREA

***

HYDROGRAPH AT DAMFLO
TRANSPOSITION AREA 0.0 SQ MI

DA	MON	HRMN	ORD	FLOW	DA	MON	HRMN	ORD	FLOW	DA	MON	HRMN	ORD	FLOW	DA	MON	HRMN	ORD	FLOW
2	JUN	0000	1	781.	2	JUN	0425	54	707.	2	JUN	0850	107	5.	2	JUN	1315	160	1.
2	JUN	0005	2	493.	2	JUN	0430	55	631.	2	JUN	0855	108	4.	2	JUN	1320	161	1.
2	JUN	0010	3	408.	2	JUN	0435	56	560.	2	JUN	0900	109	4.	2	JUN	1325	162	1.
2	JUN	0015	4	353.	2	JUN	0440	57	499.	2	JUN	0905	110	3.	2	JUN	1330	163	1.
2	JUN	0020	5	306.	2	JUN	0445	58	460.	2	JUN	0910	111	3.	2	JUN	1335	164	1.
2	JUN	0025	6	267.	2	JUN	0450	59	444.	2	JUN	0915	112	3.	2	JUN	1340	165	1.
2	JUN	0030	7	235.	2	JUN	0455	60	429.	2	JUN	0920	113	2.	2	JUN	1345	166	1.
2	JUN	0035	8	210.	2	JUN	0500	61	414.	2	JUN	0925	114	2.	2	JUN	1350	167	1.
2	JUN	0040	9	189.	2	JUN	0505	62	399.	2	JUN	0930	115	2.	2	JUN	1355	168	1.
2	JUN	0045	10	172.	2	JUN	0510	63	384.	2	JUN	0935	116	2.	2	JUN	1400	169	1.
2	JUN	0050	11	159.	2	JUN	0515	64	369.	2	JUN	0940	117	1.	2	JUN	1405	170	1.
2	JUN	0055	12	148.	2	JUN	0520	65	352.	2	JUN	0945	118	1.	2	JUN	1410	171	1.
2	JUN	0100	13	140.	2	JUN	0525	66	334.	2	JUN	0950	119	1.	2	JUN	1415	172	1.
2	JUN	0105	14	134.	2	JUN	0530	67	314.	2	JUN	0955	120	1.	2	JUN	1420	173	1.
2	JUN	0110	15	131.	2	JUN	0535	68	294.	2	JUN	1000	121	1.	2	JUN	1425	174	1.
2	JUN	0115	16	133.	2	JUN	0540	69	275.	2	JUN	1005	122	1.	2	JUN	1430	175	1.
2	JUN	0120	17	140.	2	JUN	0545	70	257.	2	JUN	1010	123	1.	2	JUN	1435	176	1.
2	JUN	0125	18	153.	2	JUN	0550	71	241.	2	JUN	1015	124	1.	2	JUN	1440	177	1.
2	JUN	0130	19	170.	2	JUN	0555	72	226.	2	JUN	1020	125	1.	2	JUN	1445	178	1.
2	JUN	0135	20	190.	2	JUN	0600	73	212.	2	JUN	1025	126	1.	2	JUN	1450	179	1.
2	JUN	0140	21	212.	2	JUN	0605	74	199.	2	JUN	1030	127	1.	2	JUN	1455	180	1.
2	JUN	0145	22	234.	2	JUN	0610	75	187.	2	JUN	1035	128	1.	2	JUN	1500	181	1.
2	JUN	0150	23	254.	2	JUN	0615	76	175.	2	JUN	1040	129	1.	2	JUN	1505	182	1.
2	JUN	0155	24	274.	2	JUN	0620	77	163.	2	JUN	1045	130	1.	2	JUN	1510	183	1.
2	JUN	0200	25	292.	2	JUN	0625	78	150.	2	JUN	1050	131	1.	2	JUN	1515	184	1.
2	JUN	0205	26	415.	2	JUN	0630	79	138.	2	JUN	1055	132	1.	2	JUN	1520	185	1.
2	JUN	0210	27	1175.	2	JUN	0635	80	126.	2	JUN	1100	133	1.	2	JUN	1525	186	1.
2	JUN	0215	28	3086.	2	JUN	0640	81	115.	2	JUN	1105	134	1.	2	JUN	1530	187	1.
2	JUN	0220	29	6860.	2	JUN	0645	82	104.	2	JUN	1110	135	1.	2	JUN	1535	188	1.
2	JUN	0225	30	21573.	2	JUN	0650	83	94.	2	JUN	1115	136	1.	2	JUN	1540	189	1.
2	JUN	0230	31	29206.	2	JUN	0655	84	84.	2	JUN	1120	137	1.	2	JUN	1545	190	1.
2	JUN	0235	32	13111.	2	JUN	0700	85	75.	2	JUN	1125	138	1.	2	JUN	1550	191	1.
2	JUN	0240	33	7068.	2	JUN	0705	86	68.	2	JUN	1130	139	1.	2	JUN	1555	192	1.
2	JUN	0245	34	6196.	2	JUN	0710	87	60.	2	JUN	1135	140	1.	2	JUN	1600	193	1.
2	JUN	0250	35	5139.	2	JUN	0715	88	54.	2	JUN	1140	141	1.	2	JUN	1605	194	1.
2	JUN	0255	36	4067.	2	JUN	0720	89	48.	2	JUN	1145	142	1.	2	JUN	1610	195	1.
2	JUN	0300	37	3128.	2	JUN	0725	90	43.	2	JUN	1150	143	1.	2	JUN	1615	196	1.
2	JUN	0305	38	2838.	2	JUN	0730	91	38.	2	JUN	1155	144	1.	2	JUN	1620	197	1.
2	JUN	0310	39	2412.	2	JUN	0735	92	34.	2	JUN	1200	145	1.	2	JUN	1625	198	1.
2	JUN	0315	40	2076.	2	JUN	0740	93	30.	2	JUN	1205	146	1.	2	JUN	1630	199	1.
2	JUN	0320	41	1801.	2	JUN	0745	94	27.	2	JUN	1210	147	1.	2	JUN	1635	200	1.
2	JUN	0325	42	1569.	2	JUN	0750	95	23.	2	JUN	1215	148	1.	2	JUN	1640	201	1.
2	JUN	0330	43	1410.	2	JUN	0755	96	21.	2	JUN	1220	149	1.	2	JUN	1645	202	1.
2	JUN	0335	44	1275.	2	JUN	0800	97	18.	2	JUN	1225	150	1.	2	JUN	1650	203	1.
2	JUN	0340	45	1172.	2	JUN	0805	98	16.	2	JUN	1230	151	1.	2	JUN	1655	204	1.
2	JUN	0345	46	1092.	2	JUN	0810	99	14.	2	JUN	1235	152	1.	2	JUN	1700	205	1.
2	JUN	0350	47	1029.	2	JUN	0815	100	12.	2	JUN	1240	153	1.	2	JUN	1705	206	1.
2	JUN	0355	48	983.	2	JUN	0820	101	11.	2	JUN	1245	154	1.	2	JUN	1710	207	1.
2	JUN	0400	49	951.	2	JUN	0825	102	10.	2	JUN	1250	155	1.	2	JUN	1715	208	1.
2	JUN	0405	50	922.	2	JUN	0830	103	8.	2	JUN	1255	156	1.	2	JUN	1720	209	1.
2	JUN	0410	51	887.	2	JUN	0835	104	7.	2	JUN	1300	157	1.	2	JUN	1725	210	1.
2	JUN	0415	52	841.	2	JUN	0840	105	6.	2	JUN	1305	158	1.					
2	JUN	0420	53	779.	2	JUN	0845	106	6.	2	JUN	1310	159	1.					

PEAK FLOW (CFS)	TIME (HR)		MAXIMUM AVERAGE FLOW 6-HR	24-HR	72-HR	17.42-HR
29206.	2.50	(CFS)	1896.	665.	665.	665.
		(INCHES)	8.729	8.882	8.882	8.882
		(AC-FT)	940.	957.	957.	957.

CUMULATIVE AREA = 2.02 SQ MI

HYDROGRAPH AT DAMFLO
TRANSPOSITION AREA 1.6 SQ MI

DA MON HRMN	ORD	FLOW	DA MON HRMN	ORD	FLOW	DA MON HRMN	ORD	FLOW	DA MON HRMN	ORD	FLOW
2 JUN 0000	1	781.	2 JUN 0425	54	707.	2 JUN 0850	107	5.	2 JUN 1315	160	1.
2 JUN 0005	2	493.	2 JUN 0430	55	631.	2 JUN 0855	108	4.	2 JUN 1320	161	1.
2 JUN 0010	3	408.	2 JUN 0435	56	560.	2 JUN 0900	109	4.	2 JUN 1325	162	1.
2 JUN 0015	4	353.	2 JUN 0440	57	499.	2 JUN 0905	110	3.	2 JUN 1330	163	1.
2 JUN 0020	5	306.	2 JUN 0445	58	460.	2 JUN 0910	111	3.	2 JUN 1335	164	1.
2 JUN 0025	6	267.	2 JUN 0450	59	444.	2 JUN 0915	112	3.	2 JUN 1340	165	1.
2 JUN 0030	7	235.	2 JUN 0455	60	429.	2 JUN 0920	113	2.	2 JUN 1345	166	1.
2 JUN 0035	8	210.	2 JUN 0500	61	414.	2 JUN 0925	114	2.	2 JUN 1350	167	1.
2 JUN 0040	9	189.	2 JUN 0505	62	399.	2 JUN 0930	115	2.	2 JUN 1355	168	1.
2 JUN 0045	10	172.	2 JUN 0510	63	384.	2 JUN 0935	116	2.	2 JUN 1400	169	1.
2 JUN 0050	11	159.	2 JUN 0515	64	369.	2 JUN 0940	117	1.	2 JUN 1405	170	1.
2 JUN 0055	12	148.	2 JUN 0520	65	352.	2 JUN 0945	118	1.	2 JUN 1410	171	1.
2 JUN 0100	13	140.	2 JUN 0525	66	334.	2 JUN 0950	119	1.	2 JUN 1415	172	1.
2 JUN 0105	14	134.	2 JUN 0530	67	314.	2 JUN 0955	120	1.	2 JUN 1420	173	1.
2 JUN 0110	15	131.	2 JUN 0535	68	294.	2 JUN 1000	121	1.	2 JUN 1425	174	1.
2 JUN 0115	16	133.	2 JUN 0540	69	275.	2 JUN 1005	122	1.	2 JUN 1430	175	1.
2 JUN 0120	17	140.	2 JUN 0545	70	257.	2 JUN 1010	123	1.	2 JUN 1435	176	1.
2 JUN 0125	18	153.	2 JUN 0550	71	241.	2 JUN 1015	124	1.	2 JUN 1440	177	1.
2 JUN 0130	19	170.	2 JUN 0555	72	226.	2 JUN 1020	125	1.	2 JUN 1445	178	1.
2 JUN 0135	20	190.	2 JUN 0600	73	212.	2 JUN 1025	126	1.	2 JUN 1450	179	1.
2 JUN 0140	21	212.	2 JUN 0605	74	199.	2 JUN 1030	127	1.	2 JUN 1455	180	1.
2 JUN 0145	22	234.	2 JUN 0610	75	187.	2 JUN 1035	128	1.	2 JUN 1500	181	1.
2 JUN 0150	23	254.	2 JUN 0615	76	175.	2 JUN 1040	129	1.	2 JUN 1505	182	1.
2 JUN 0155	24	274.	2 JUN 0620	77	163.	2 JUN 1045	130	1.	2 JUN 1510	183	1.
2 JUN 0200	25	292.	2 JUN 0625	78	150.	2 JUN 1050	131	1.	2 JUN 1515	184	1.
2 JUN 0205	26	415.	2 JUN 0630	79	138.	2 JUN 1055	132	1.	2 JUN 1520	185	1.
2 JUN 0210	27	1175.	2 JUN 0635	80	126.	2 JUN 1100	133	1.	2 JUN 1525	186	1.
2 JUN 0215	28	3086.	2 JUN 0640	81	115.	2 JUN 1105	134	1.	2 JUN 1530	187	1.
2 JUN 0220	29	6860.	2 JUN 0645	82	104.	2 JUN 1110	135	1.	2 JUN 1535	188	1.
2 JUN 0225	30	21573.	2 JUN 0650	83	94.	2 JUN 1115	136	1.	2 JUN 1540	189	1.
2 JUN 0230	31	29206.	2 JUN 0655	84	84.	2 JUN 1120	137	1.	2 JUN 1545	190	1.
2 JUN 0235	32	13111.	2 JUN 0700	85	75.	2 JUN 1125	138	1.	2 JUN 1550	191	1.
2 JUN 0240	33	7068.	2 JUN 0705	86	68.	2 JUN 1130	139	1.	2 JUN 1555	192	1.
2 JUN 0245	34	6196.	2 JUN 0710	87	60.	2 JUN 1135	140	1.	2 JUN 1600	193	1.
2 JUN 0250	35	5139.	2 JUN 0715	88	54.	2 JUN 1140	141	1.	2 JUN 1605	194	1.
2 JUN 0255	36	4067.	2 JUN 0720	89	48.	2 JUN 1145	142	1.	2 JUN 1610	195	1.
2 JUN 0300	37	3128.	2 JUN 0725	90	43.	2 JUN 1150	143	1.	2 JUN 1615	196	1.
2 JUN 0305	38	2838.	2 JUN 0730	91	38.	2 JUN 1155	144	1.	2 JUN 1620	197	1.
2 JUN 0310	39	2412.	2 JUN 0735	92	34.	2 JUN 1200	145	1.	2 JUN 1625	198	1.
2 JUN 0315	40	2076.	2 JUN 0740	93	30.	2 JUN 1205	146	1.	2 JUN 1630	199	1.
2 JUN 0320	41	1801.	2 JUN 0745	94	27.	2 JUN 1210	147	1.	2 JUN 1635	200	1.
2 JUN 0325	42	1569.	2 JUN 0750	95	23.	2 JUN 1215	148	1.	2 JUN 1640	201	1.
2 JUN 0330	43	1410.	2 JUN 0755	96	21.	2 JUN 1220	149	1.	2 JUN 1645	202	1.
2 JUN 0335	44	1275.	2 JUN 0800	97	18.	2 JUN 1225	150	1.	2 JUN 1650	203	1.
2 JUN 0340	45	1172.	2 JUN 0805	98	16.	2 JUN 1230	151	1.	2 JUN 1655	204	1.
2 JUN 0345	46	1092.	2 JUN 0810	99	14.	2 JUN 1235	152	1.	2 JUN 1700	205	1.
2 JUN 0350	47	1029.	2 JUN 0815	100	12.	2 JUN 1240	153	1.	2 JUN 1705	206	1.
2 JUN 0355	48	983.	2 JUN 0820	101	11.	2 JUN 1245	154	1.	2 JUN 1710	207	1.
2 JUN 0400	49	951.	2 JUN 0825	102	10.	2 JUN 1250	155	1.	2 JUN 1715	208	1.
2 JUN 0405	50	922.	2 JUN 0830	103	8.	2 JUN 1255	156	1.	2 JUN 1720	209	1.
2 JUN 0410	51	887.	2 JUN 0835	104	7.	2 JUN 1300	157	1.	2 JUN 1725	210	1.
2 JUN 0415	52	841.	2 JUN 0840	105	6.	2 JUN 1305	158	1.			
2 JUN 0420	53	779.	2 JUN 0845	106	6.	2 JUN 1310	159	1.			

PEAK FLOW (CFS)	TIME (HR)		MAXIMUM AVERAGE FLOW 6-HR	24-HR	72-HR	17.42-HR
29206.	2.50	(CFS)	1896.	665.	665.	665.

(INCHES)	8.729	8.882	8.882	8.882
(AC-FT)	940.	957.	957.	957.

CUMULATIVE AREA = 2.02 SQ MI

HYDROGRAPH AT DAMFLO
TRANSPOSITION AREA 2.0 SQ MI

DA MON HRMN	ORD	FLOW	DA MON HRMN	ORD	FLOW	DA MON HRMN	ORD	FLOW	DA MON HRMN	ORD	FLOW
2 JUN 0000	1	781.	2 JUN 0425	54	707.	2 JUN 0850	107	5.	2 JUN 1315	160	1.
2 JUN 0005	2	493.	2 JUN 0430	55	631.	2 JUN 0855	108	4.	2 JUN 1320	161	1.
2 JUN 0010	3	408.	2 JUN 0435	56	560.	2 JUN 0900	109	4.	2 JUN 1325	162	1.
2 JUN 0015	4	353.	2 JUN 0440	57	499.	2 JUN 0905	110	3.	2 JUN 1330	163	1.
2 JUN 0020	5	306.	2 JUN 0445	58	460.	2 JUN 0910	111	3.	2 JUN 1335	164	1.
2 JUN 0025	6	267.	2 JUN 0450	59	444.	2 JUN 0915	112	3.	2 JUN 1340	165	1.
2 JUN 0030	7	235.	2 JUN 0455	60	429.	2 JUN 0920	113	2.	2 JUN 1345	166	1.
2 JUN 0035	8	210.	2 JUN 0500	61	414.	2 JUN 0925	114	2.	2 JUN 1350	167	1.
2 JUN 0040	9	189.	2 JUN 0505	62	399.	2 JUN 0930	115	2.	2 JUN 1355	168	1.
2 JUN 0045	10	172.	2 JUN 0510	63	384.	2 JUN 0935	116	2.	2 JUN 1400	169	1.
2 JUN 0050	11	159.	2 JUN 0515	64	369.	2 JUN 0940	117	1.	2 JUN 1405	170	1.
2 JUN 0055	12	148.	2 JUN 0520	65	352.	2 JUN 0945	118	1.	2 JUN 1410	171	1.
2 JUN 0100	13	140.	2 JUN 0525	66	334.	2 JUN 0950	119	1.	2 JUN 1415	172	1.
2 JUN 0105	14	134.	2 JUN 0530	67	314.	2 JUN 0955	120	1.	2 JUN 1420	173	1.
2 JUN 0110	15	131.	2 JUN 0535	68	294.	2 JUN 1000	121	1.	2 JUN 1425	174	1.
2 JUN 0115	16	133.	2 JUN 0540	69	275.	2 JUN 1005	122	1.	2 JUN 1430	175	1.
2 JUN 0120	17	140.	2 JUN 0545	70	257.	2 JUN 1010	123	1.	2 JUN 1435	176	1.
2 JUN 0125	18	153.	2 JUN 0550	71	241.	2 JUN 1015	124	1.	2 JUN 1440	177	1.
2 JUN 0130	19	170.	2 JUN 0555	72	226.	2 JUN 1020	125	1.	2 JUN 1445	178	1.
2 JUN 0135	20	190.	2 JUN 0600	73	212.	2 JUN 1025	126	1.	2 JUN 1450	179	1.
2 JUN 0140	21	212.	2 JUN 0605	74	199.	2 JUN 1030	127	1.	2 JUN 1455	180	1.
2 JUN 0145	22	234.	2 JUN 0610	75	187.	2 JUN 1035	128	1.	2 JUN 1500	181	1.
2 JUN 0150	23	254.	2 JUN 0615	76	175.	2 JUN 1040	129	1.	2 JUN 1505	182	1.
2 JUN 0155	24	274.	2 JUN 0620	77	163.	2 JUN 1045	130	1.	2 JUN 1510	183	1.
2 JUN 0200	25	292.	2 JUN 0625	78	150.	2 JUN 1050	131	1.	2 JUN 1515	184	1.
2 JUN 0205	26	415.	2 JUN 0630	79	138.	2 JUN 1055	132	1.	2 JUN 1520	185	1.
2 JUN 0210	27	1175.	2 JUN 0635	80	126.	2 JUN 1100	133	1.	2 JUN 1525	186	1.
2 JUN 0215	28	3086.	2 JUN 0640	81	115.	2 JUN 1105	134	1.	2 JUN 1530	187	1.
2 JUN 0220	29	6860.	2 JUN 0645	82	104.	2 JUN 1110	135	1.	2 JUN 1535	188	1.
2 JUN 0225	30	21573.	2 JUN 0650	83	94.	2 JUN 1115	136	1.	2 JUN 1540	189	1.
2 JUN 0230	31	29206.	2 JUN 0655	84	84.	2 JUN 1120	137	1.	2 JUN 1545	190	1.
2 JUN 0235	32	13111.	2 JUN 0700	85	75.	2 JUN 1125	138	1.	2 JUN 1550	191	1.
2 JUN 0240	33	7068.	2 JUN 0705	86	68.	2 JUN 1130	139	1.	2 JUN 1555	192	1.
2 JUN 0245	34	6196.	2 JUN 0710	87	60.	2 JUN 1135	140	1.	2 JUN 1600	193	1.
2 JUN 0250	35	5139.	2 JUN 0715	88	54.	2 JUN 1140	141	1.	2 JUN 1605	194	1.
2 JUN 0255	36	4067.	2 JUN 0720	89	48.	2 JUN 1145	142	1.	2 JUN 1610	195	1.
2 JUN 0300	37	3128.	2 JUN 0725	90	43.	2 JUN 1150	143	1.	2 JUN 1615	196	1.
2 JUN 0305	38	2838.	2 JUN 0730	91	38.	2 JUN 1155	144	1.	2 JUN 1620	197	1.
2 JUN 0310	39	2412.	2 JUN 0735	92	34.	2 JUN 1200	145	1.	2 JUN 1625	198	1.
2 JUN 0315	40	2076.	2 JUN 0740	93	30.	2 JUN 1205	146	1.	2 JUN 1630	199	1.
2 JUN 0320	41	1801.	2 JUN 0745	94	27.	2 JUN 1210	147	1.	2 JUN 1635	200	1.
2 JUN 0325	42	1569.	2 JUN 0750	95	23.	2 JUN 1215	148	1.	2 JUN 1640	201	1.
2 JUN 0330	43	1410.	2 JUN 0755	96	21.	2 JUN 1220	149	1.	2 JUN 1645	202	1.
2 JUN 0335	44	1275.	2 JUN 0800	97	18.	2 JUN 1225	150	1.	2 JUN 1650	203	1.
2 JUN 0340	45	1172.	2 JUN 0805	98	16.	2 JUN 1230	151	1.	2 JUN 1655	204	1.
2 JUN 0345	46	1092.	2 JUN 0810	99	14.	2 JUN 1235	152	1.	2 JUN 1700	205	1.
2 JUN 0350	47	1029.	2 JUN 0815	100	12.	2 JUN 1240	153	1.	2 JUN 1705	206	1.
2 JUN 0355	48	983.	2 JUN 0820	101	11.	2 JUN 1245	154	1.	2 JUN 1710	207	1.
2 JUN 0400	49	951.	2 JUN 0825	102	10.	2 JUN 1250	155	1.	2 JUN 1715	208	1.
2 JUN 0405	50	922.	2 JUN 0830	103	8.	2 JUN 1255	156	1.	2 JUN 1720	209	1.
2 JUN 0410	51	887.	2 JUN 0835	104	7.	2 JUN 1300	157	1.	2 JUN 1725	210	1.
2 JUN 0415	52	841.	2 JUN 0840	105	6.	2 JUN 1305	158	1.			
2 JUN 0420	53	779.	2 JUN 0845	106	6.	2 JUN 1310	159	1.			

PEAK FLOW (CFS)	TIME (HR)		MAXIMUM AVERAGE FLOW 6-HR	24-HR	72-HR	17.42-HR
[illegible]6.	2.50	(CFS)	1896.	665.	665.	665.
		(INCHES)	8.729	8.882	8.882	8.882
		(AC-FT)	940.	957.	957.	957.

CUMULATIVE AREA = 2.02 SQ MI

HYDROGRAPH AT DAMFLO
TRANSPOSITION AREA 2.2 SQ MI

DA MON HRMN	ORD	FLOW	DA MON HRMN	ORD	FLOW	DA MON HRMN	ORD	FLOW	DA MON HRMN	ORD	FLOW
2 JUN 0000	1	781.	2 JUN 0425	54	707.	2 JUN 0850	107	5.	2 JUN 1315	160	1.
2 JUN 0005	2	493.	2 JUN 0430	55	631.	2 JUN 0855	108	4.	2 JUN 1320	161	1.
2 JUN 0010	3	408.	2 JUN 0435	56	560.	2 JUN 0900	109	4.	2 JUN 1325	162	1.
2 JUN 0015	4	353.	2 JUN 0440	57	499.	2 JUN 0905	110	3.	2 JUN 1330	163	1.
2 JUN 0020	5	306.	2 JUN 0445	58	460.	2 JUN 0910	111	3.	2 JUN 1335	164	1.
2 JUN 0025	6	267.	2 JUN 0450	59	444.	2 JUN 0915	112	3.	2 JUN 1340	165	1.
2 JUN 0030	7	235.	2 JUN 0455	60	429.	2 JUN 0920	113	2.	2 JUN 1345	166	1.
2 JUN 0035	8	210.	2 JUN 0500	61	414.	2 JUN 0925	114	2.	2 JUN 1350	167	1.
2 JUN 0040	9	189.	2 JUN 0505	62	399.	2 JUN 0930	115	2.	2 JUN 1355	168	1.
2 JUN 0045	10	172.	2 JUN 0510	63	384.	2 JUN 0935	116	2.	2 JUN 1400	169	1.
2 JUN 0050	11	159.	2 JUN 0515	64	369.	2 JUN 0940	117	1.	2 JUN 1405	170	1.
2 JUN 0055	12	148.	2 JUN 0520	65	352.	2 JUN 0945	118	1.	2 JUN 1410	171	1.
2 JUN 0100	13	140.	2 JUN 0525	66	334.	2 JUN 0950	119	1.	2 JUN 1415	172	1.
2 JUN 0105	14	134.	2 JUN 0530	67	314.	2 JUN 0955	120	1.	2 JUN 1420	173	1.
2 JUN 0110	15	131.	2 JUN 0535	68	294.	2 JUN 1000	121	1.	2 JUN 1425	174	1.
2 JUN 0115	16	133.	2 JUN 0540	69	275.	2 JUN 1005	122	1.	2 JUN 1430	175	1.
2 JUN 0120	17	140.	2 JUN 0545	70	257.	2 JUN 1010	123	1.	2 JUN 1435	176	1.
2 JUN 0125	18	153.	2 JUN 0550	71	241.	2 JUN 1015	124	1.	2 JUN 1440	177	1.
2 JUN 0130	19	170.	2 JUN 0555	72	226.	2 JUN 1020	125	1.	2 JUN 1445	178	1.
2 JUN 0135	20	190.	2 JUN 0600	73	212.	2 JUN 1025	126	1.	2 JUN 1450	179	1.
2 JUN 0140	21	212.	2 JUN 0605	74	199.	2 JUN 1030	127	1.	2 JUN 1455	180	1.
2 JUN 0145	22	234.	2 JUN 0610	75	187.	2 JUN 1035	128	1.	2 JUN 1500	181	1.
2 JUN 0150	23	254.	2 JUN 0615	76	175.	2 JUN 1040	129	1.	2 JUN 1505	182	1.
2 JUN 0155	24	274.	2 JUN 0620	77	163.	2 JUN 1045	130	1.	2 JUN 1510	183	1.
2 JUN 0200	25	292.	2 JUN 0625	78	150.	2 JUN 1050	131	1.	2 JUN 1515	184	1.
2 JUN 0205	26	415.	2 JUN 0630	79	138.	2 JUN 1055	132	1.	2 JUN 1520	185	1.
2 JUN 0210	27	1175.	2 JUN 0635	80	126.	2 JUN 1100	133	1.	2 JUN 1525	186	1.
2 JUN 0215	28	3086.	2 JUN 0640	81	115.	2 JUN 1105	134	1.	2 JUN 1530	187	1.
2 JUN 0220	29	6860.	2 JUN 0645	82	104.	2 JUN 1110	135	1.	2 JUN 1535	188	1.
2 JUN 0225	30	21573.	2 JUN 0650	83	94.	2 JUN 1115	136	1.	2 JUN 1540	189	1.
2 JUN 0230	31	29206.	2 JUN 0655	84	84.	2 JUN 1120	137	1.	2 JUN 1545	190	1.
2 JUN 0235	32	13111.	2 JUN 0700	85	75.	2 JUN 1125	138	1.	2 JUN 1550	191	1.
2 JUN 0240	33	7068.	2 JUN 0705	86	68.	2 JUN 1130	139	1.	2 JUN 1555	192	1.
2 JUN 0245	34	6196.	2 JUN 0710	87	60.	2 JUN 1135	140	1.	2 JUN 1600	193	1.
2 JUN 0250	35	5139.	2 JUN 0715	88	54.	2 JUN 1140	141	1.	2 JUN 1605	194	1.
2 JUN 0255	36	4067.	2 JUN 0720	89	48.	2 JUN 1145	142	1.	2 JUN 1610	195	1.
2 JUN 0300	37	3128.	2 JUN 0725	90	43.	2 JUN 1150	143	1.	2 JUN 1615	196	1.
2 JUN 0305	38	2838.	2 JUN 0730	91	38.	2 JUN 1155	144	1.	2 JUN 1620	197	1.
2 JUN 0310	39	2412.	2 JUN 0735	92	34.	2 JUN 1200	145	1.	2 JUN 1625	198	1.
2 JUN 0315	40	2076.	2 JUN 0740	93	30.	2 JUN 1205	146	1.	2 JUN 1630	199	1.
2 JUN 0320	41	1801.	2 JUN 0745	94	27.	2 JUN 1210	147	1.	2 JUN 1635	200	1.
2 JUN 0325	42	1569.	2 JUN 0750	95	23.	2 JUN 1215	148	1.	2 JUN 1640	201	1.
2 JUN 0330	43	1410.	2 JUN 0755	96	21.	2 JUN 1220	149	1.	2 JUN 1645	202	1.
2 JUN 0335	44	1275.	2 JUN 0800	97	18.	2 JUN 1225	150	1.	2 JUN 1650	203	1.
2 JUN 0340	45	1172.	2 JUN 0805	98	16.	2 JUN 1230	151	1.	2 JUN 1655	204	1.
2 JUN 0345	46	1092.	2 JUN 0810	99	14.	2 JUN 1235	152	1.	2 JUN 1700	205	1.
2 JUN 0350	47	1029.	2 JUN 0815	100	12.	2 JUN 1240	153	1.	2 JUN 1705	206	1.
2 JUN 0355	48	983.	2 JUN 0820	101	11.	2 JUN 1245	154	1.	2 JUN 1710	207	1.
2 JUN 0400	49	951.	2 JUN 0825	102	10.	2 JUN 1250	155	1.	2 JUN 1715	208	1.
2 JUN 0405	50	922.	2 JUN 0830	103	8.	2 JUN 1255	156	1.	2 JUN 1720	209	1.
2 JUN 0410	51	887.	2 JUN 0835	104	7.	2 JUN 1300	157	1.	2 JUN 1725	210	1.
2 JUN 0415	52	841.	2 JUN 0840	105	6.	2 JUN 1305	158	1.			
2 JUN 0420	53	779.	2 JUN 0845	106	6.	2 JUN 1310	159	1.			

PEAK FLOW (CFS)	TIME (HR)		MAXIMUM AVERAGE FLOW 6-HR	24-HR	72-HR	17.42-HR
29206.	2.50	(CFS)	1896.	665.	665.	665.
		(INCHES)	8.729	8.882	8.882	8.882
		(AC-FT)	940.	957.	957.	957.

CUMULATIVE AREA = 2.02 SQ MI

HYDROGRAPH AT DAMFLO
TRANSPOSITION AREA 7.2 SQ MI

DA MON HRMN	ORD	FLOW	DA MON HRMN	ORD	FLOW	DA MON HRMN	ORD	FLOW	DA MON HRMN	ORD	FLOW
[illegible]UN 0000	1	781.	2 JUN 0425	54	707.	2 JUN 0850	107	5.	2 JUN 1315	160	1.
2 JUN 0005	2	493.	2 JUN 0430	55	631.	2 JUN 0855	108	4.	2 JUN 1320	161	1.
2 JUN 0010	3	408.	2 JUN 0435	56	560.	2 JUN 0900	109	4.	2 JUN 1325	162	1.
2 JUN 0015	4	353.	2 JUN 0440	57	499.	2 JUN 0905	110	3.	2 JUN 1330	163	1.
2 JUN 0020	5	306.	2 JUN 0445	58	460.	2 JUN 0910	111	3.	2 JUN 1335	164	1.
2 JUN 0025	6	267.	2 JUN 0450	59	444.	2 JUN 0915	112	3.	2 JUN 1340	165	1.
2 JUN 0030	7	235.	2 JUN 0455	60	429.	2 JUN 0920	113	2.	2 JUN 1345	166	1.
2 JUN 0035	8	210.	2 JUN 0500	61	414.	2 JUN 0925	114	2.	2 JUN 1350	167	1.
2 JUN 0040	9	189.	2 JUN 0505	62	399.	2 JUN 0930	115	2.	2 JUN 1355	168	1.
2 JUN 0045	10	172.	2 JUN 0510	63	384.	2 JUN 0935	116	2.	2 JUN 1400	169	1.
2 JUN 0050	11	159.	2 JUN 0515	64	369.	2 JUN 0940	117	1.	2 JUN 1405	170	1.
2 JUN 0055	12	148.	2 JUN 0520	65	352.	2 JUN 0945	118	1.	2 JUN 1410	171	1.
2 JUN 0100	13	140.	2 JUN 0525	66	334.	2 JUN 0950	119	1.	2 JUN 1415	172	1.
2 JUN 0105	14	134.	2 JUN 0530	67	314.	2 JUN 0955	120	1.	2 JUN 1420	173	1.
2 JUN 0110	15	131.	2 JUN 0535	68	294.	2 JUN 1000	121	1.	2 JUN 1425	174	1.
2 JUN 0115	16	133.	2 JUN 0540	69	275.	2 JUN 1005	122	1.	2 JUN 1430	175	1.
2 JUN 0120	17	140.	2 JUN 0545	70	257.	2 JUN 1010	123	1.	2 JUN 1435	176	1.
2 JUN 0125	18	153.	2 JUN 0550	71	241.	2 JUN 1015	124	1.	2 JUN 1440	177	1.
2 JUN 0130	19	170.	2 JUN 0555	72	226.	2 JUN 1020	125	1.	2 JUN 1445	178	1.
2 JUN 0135	20	190.	2 JUN 0600	73	212.	2 JUN 1025	126	1.	2 JUN 1450	179	1.
2 JUN 0140	21	212.	2 JUN 0605	74	199.	2 JUN 1030	127	1.	2 JUN 1455	180	1.
2 JUN 0145	22	234.	2 JUN 0610	75	187.	2 JUN 1035	128	1.	2 JUN 1500	181	1.
2 JUN 0150	23	254.	2 JUN 0615	76	175.	2 JUN 1040	129	1.	2 JUN 1505	182	1.
2 JUN 0155	24	274.	2 JUN 0620	77	163.	2 JUN 1045	130	1.	2 JUN 1510	183	1.
2 JUN 0200	25	292.	2 JUN 0625	78	150.	2 JUN 1050	131	1.	2 JUN 1515	184	1.
2 JUN 0205	26	415.	2 JUN 0630	79	138.	2 JUN 1055	132	1.	2 JUN 1520	185	1.
2 JUN 0210	27	1175.	2 JUN 0635	80	126.	2 JUN 1100	133	1.	2 JUN 1525	186	1.
2 JUN 0215	28	3086.	2 JUN 0640	81	115.	2 JUN 1105	134	1.	2 JUN 1530	187	1.
2 JUN 0220	29	6860.	2 JUN 0645	82	104.	2 JUN 1110	135	1.	2 JUN 1535	188	1.
2 JUN 0225	30	21573.	2 JUN 0650	83	94.	2 JUN 1115	136	1.	2 JUN 1540	189	1.
2 JUN 0230	31	29206.	2 JUN 0655	84	84.	2 JUN 1120	137	1.	2 JUN 1545	190	1.
2 JUN 0235	32	13111.	2 JUN 0700	85	75.	2 JUN 1125	138	1.	2 JUN 1550	191	1.
[illegible]UN 0240	33	7068.	2 JUN 0705	86	68.	2 JUN 1130	139	1.	2 JUN 1555	192	1.
[illegible]UN 0245	34	6196.	2 JUN 0710	87	60.	2 JUN 1135	140	1.	2 JUN 1600	193	1.
[illegible]UN 0250	35	5139.	2 JUN 0715	88	54.	2 JUN 1140	141	1.	2 JUN 1605	194	1.
2 JUN 0255	36	4067.	2 JUN 0720	89	48.	2 JUN 1145	142	1.	2 JUN 1610	195	1.
2 JUN 0300	37	3128.	2 JUN 0725	90	43.	2 JUN 1150	143	1.	2 JUN 1615	196	1.
2 JUN 0305	38	2838.	2 JUN 0730	91	38.	2 JUN 1155	144	1.	2 JUN 1620	197	1.
2 JUN 0310	39	2412.	2 JUN 0735	92	34.	2 JUN 1200	145	1.	2 JUN 1625	198	1.
2 JUN 0315	40	2076.	2 JUN 0740	93	30.	2 JUN 1205	146	1.	2 JUN 1630	199	1.
2 JUN 0320	41	1801.	2 JUN 0745	94	27.	2 JUN 1210	147	1.	2 JUN 1635	200	1.
2 JUN 0325	42	1569.	2 JUN 0750	95	23.	2 JUN 1215	148	1.	2 JUN 1640	201	1.
2 JUN 0330	43	1410.	2 JUN 0755	96	21.	2 JUN 1220	149	1.	2 JUN 1645	202	1.
2 JUN 0335	44	1275.	2 JUN 0800	97	18.	2 JUN 1225	150	1.	2 JUN 1650	203	1.
2 JUN 0340	45	1172.	2 JUN 0805	98	16.	2 JUN 1230	151	1.	2 JUN 1655	204	1.
2 JUN 0345	46	1092.	2 JUN 0810	99	14.	2 JUN 1235	152	1.	2 JUN 1700	205	1.
2 JUN 0350	47	1029.	2 JUN 0815	100	12.	2 JUN 1240	153	1.	2 JUN 1705	206	1.
2 JUN 0355	48	983.	2 JUN 0820	101	11.	2 JUN 1245	154	1.	2 JUN 1710	207	1.
2 JUN 0400	49	951.	2 JUN 0825	102	10.	2 JUN 1250	155	1.	2 JUN 1715	208	1.
2 JUN 0405	50	922.	2 JUN 0830	103	8.	2 JUN 1255	156	1.	2 JUN 1720	209	1.
2 JUN 0410	51	887.	2 JUN 0835	104	7.	2 JUN 1300	157	1.	2 JUN 1725	210	1.
2 JUN 0415	52	841.	2 JUN 0840	105	6.	2 JUN 1305	158	1.			
2 JUN 0420	53	779.	2 JUN 0845	106	6.	2 JUN 1310	159	1.			

PEAK FLOW (CFS)	TIME (HR)		MAXIMUM AVERAGE FLOW 6-HR	24-HR	72-HR	17.42-HR
29206.	2.50	(CFS)	1896.	665.	665.	665.
		(INCHES)	8.729	8.882	8.882	8.882
		(AC-FT)	940.	957.	957.	957.

CUMULATIVE AREA = 2.02 SQ MI

INTERPOLATED HYDROGRAPH AT DAMFLO

DA	MON	HRMN	ORD	FLOW	DA	MON	HRMN	ORD	FLOW	DA	MON	HRMN	ORD	FLOW	DA	MON	HRMN	ORD	FLOW
2	JUN	0000	1	781.	2	JUN	0425	54	707.	2	JUN	0850	107	5.	2	JUN	1315	160	1.
2	JUN	0005	2	493.	2	JUN	0430	55	631.	2	JUN	0855	108	4.	2	JUN	1320	161	1.
2	JUN	0010	3	408.	2	JUN	0435	56	560.	2	JUN	0900	109	4.	2	JUN	1325	162	1.
2	JUN	0015	4	353.	2	JUN	0440	57	499.	2	JUN	0905	110	3.	2	JUN	1330	163	1.
2	JUN	0020	5	306.	2	JUN	0445	58	460.	2	JUN	0910	111	3.	2	JUN	1335	164	1.
2	JUN	0025	6	267.	2	JUN	0450	59	444.	2	JUN	0915	112	3.	2	JUN	1340	165	1.
2	JUN	0030	7	235.	2	JUN	0455	60	429.	2	JUN	0920	113	2.	2	JUN	1345	166	1.
2	JUN	0035	8	210.	2	JUN	0500	61	414.	2	JUN	0925	114	2.	2	JUN	1350	167	1.
2	JUN	0040	9	189.	2	JUN	0505	62	399.	2	JUN	0930	115	2.	2	JUN	1355	168	1.
2	JUN	0045	10	172.	2	JUN	0510	63	384.	2	JUN	0935	116	2.	2	JUN	1400	169	1.
2	JUN	0050	11	159.	2	JUN	0515	64	369.	2	JUN	0940	117	1.	2	JUN	1405	170	1.
2	JUN	0055	12	148.	2	JUN	0520	65	352.	2	JUN	0945	118	1.	2	JUN	1410	171	1.
2	JUN	0100	13	140.	2	JUN	0525	66	334.	2	JUN	0950	119	1.	2	JUN	1415	172	1.
2	JUN	0105	14	134.	2	JUN	0530	67	314.	2	JUN	0955	120	1.	2	JUN	1420	173	1.
2	JUN	0110	15	131.	2	JUN	0535	68	294.	2	JUN	1000	121	1.	2	JUN	1425	174	1.
2	JUN	0115	16	133.	2	JUN	0540	69	275.	2	JUN	1005	122	1.	2	JUN	1430	175	1.
2	JUN	0120	17	140.	2	JUN	0545	70	257.	2	JUN	1010	123	1.	2	JUN	1435	176	1.
2	JUN	0125	18	153.	2	JUN	0550	71	241.	2	JUN	1015	124	1.	2	JUN	1440	177	1.
2	JUN	0130	19	170.	2	JUN	0555	72	226.	2	JUN	1020	125	1.	2	JUN	1445	178	1.
2	JUN	0135	20	190.	2	JUN	0600	73	212.	2	JUN	1025	126	1.	2	JUN	1450	179	1.
2	JUN	0140	21	212.	2	JUN	0605	74	199.	2	JUN	1030	127	1.	2	JUN	1455	180	1.
2	JUN	0145	22	234.	2	JUN	0610	75	187.	2	JUN	1035	128	1.	2	JUN	1500	181	1.
2	JUN	0150	23	254.	2	JUN	0615	76	175.	2	JUN	1040	129	1.	2	JUN	1505	182	1.
2	JUN	0155	24	274.	2	JUN	0620	77	163.	2	JUN	1045	130	1.	2	JUN	1510	183	1.
2	JUN	0200	25	292.	2	JUN	0625	78	150.	2	JUN	1050	131	1.	2	JUN	1515	184	1.
2	JUN	0205	26	415.	2	JUN	0630	79	138.	2	JUN	1055	132	1.	2	JUN	1520	185	1.
2	JUN	0210	27	1175.	2	JUN	0635	80	126.	2	JUN	1100	133	1.	2	JUN	1525	186	1.
2	JUN	0215	28	3086.	2	JUN	0640	81	115.	2	JUN	1105	134	1.	2	JUN	1530	187	1.
2	JUN	0220	29	6860.	2	JUN	0645	82	104.	2	JUN	1110	135	1.	2	JUN	1535	188	1.
2	JUN	0225	30	21573.	2	JUN	0650	83	94.	2	JUN	1115	136	1.	2	JUN	1540	189	1.
2	JUN	0230	31	29206.	2	JUN	0655	84	84.	2	JUN	1120	137	1.	2	JUN	1545	190	1.
2	JUN	0235	32	13111.	2	JUN	0700	85	75.	2	JUN	1125	138	1.	2	JUN	1550	191	1.
2	JUN	0240	33	7068.	2	JUN	0705	86	68.	2	JUN	1130	139	1.	2	JUN	1555	192	1.
2	JUN	0245	34	6196.	2	JUN	0710	87	60.	2	JUN	1135	140	1.	2	JUN	1600	193	1.
2	JUN	0250	35	5139.	2	JUN	0715	88	54.	2	JUN	1140	141	1.	2	JUN	1605	194	1.
2	JUN	0255	36	4067.	2	JUN	0720	89	48.	2	JUN	1145	142	1.	2	JUN	1610	195	1.
2	JUN	0300	37	3128.	2	JUN	0725	90	43.	2	JUN	1150	143	1.	2	JUN	1615	196	1.
2	JUN	0305	38	2838.	2	JUN	0730	91	38.	2	JUN	1155	144	1.	2	JUN	1620	197	1.
2	JUN	0310	39	2412.	2	JUN	0735	92	34.	2	JUN	1200	145	1.	2	JUN	1625	198	1.
2	JUN	0315	40	2076.	2	JUN	0740	93	30.	2	JUN	1205	146	1.	2	JUN	1630	199	1.
2	JUN	0320	41	1801.	2	JUN	0745	94	27.	2	JUN	1210	147	1.	2	JUN	1635	200	1.
2	JUN	0325	42	1569.	2	JUN	0750	95	23.	2	JUN	1215	148	1.	2	JUN	1640	201	1.
2	JUN	0330	43	1410.	2	JUN	0755	96	21.	2	JUN	1220	149	1.	2	JUN	1645	202	1.
2	JUN	0335	44	1275.	2	JUN	0800	97	18.	2	JUN	1225	150	1.	2	JUN	1650	203	1.
2	JUN	0340	45	1172.	2	JUN	0805	98	16.	2	JUN	1230	151	1.	2	JUN	1655	204	1.
2	JUN	0345	46	1092.	2	JUN	0810	99	14.	2	JUN	1235	152	1.	2	JUN	1700	205	1.
2	JUN	0350	47	1029.	2	JUN	0815	100	12.	2	JUN	1240	153	1.	2	JUN	1705	206	1.
2	JUN	0355	48	983.	2	JUN	0820	101	11.	2	JUN	1245	154	1.	2	JUN	1710	207	1.
2	JUN	0400	49	951.	2	JUN	0825	102	10.	2	JUN	1250	155	1.	2	JUN	1715	208	1.
2	JUN	0405	50	922.	2	JUN	0830	103	8.	2	JUN	1255	156	1.	2	JUN	1720	209	1.
2	JUN	0410	51	887.	2	JUN	0835	104	7.	2	JUN	1300	157	1.	2	JUN	1725	210	1.
2	JUN	0415	52	841.	2	JUN	0840	105	6.	2	JUN	1305	158	1.					
2	JUN	0420	53	779.	2	JUN	0845	106	6.	2	JUN	1310	159	1.					

****

PEAK FLOW (CFS)	TIME (HR)		MAXIMUM AVERAGE FLOW 6-HR	24-HR	72-HR	17.42-HR
29206.	2.50	(CFS)	1896.	665.	665.	665.
		(INCHES)	8.729	8.882	8.882	8.882
		(AC-FT)	940.	957.	957.	957.

CUMULATIVE AREA = 2.02 SQ MI

*** ***

```
            **************
            *            *
120 KK      *    578599  *
            *            *
            **************
```

Normal depth channel route (North Heights Dam to GEP Dam)

HYDROGRAPH ROUTING DATA

```
122 RS        STORAGE ROUTING
                   NSTPS          1  NUMBER OF SUBREACHES
                    ITYP       FLOW  TYPE OF INITIAL CONDITION
                  RSVRIC      -1.00  INITIAL CONDITION
                       X       0.00 WORKING R AND D COEFFICIENT

123 RC        NORMAL DEPTH CHANNEL
                     ANL      0.055  LEFT OVERBANK N-VALUE
                    ANCH      0.045  MAIN CHANNEL N-VALUE
                     ANR      0.055  RIGHT OVERBANK N-VALUE
                   RLNTH      3762.  REACH LENGTH
                     SEL     0.0162  ENERGY SLOPE
                   ELMAX        0.0  MAX. ELEV. FOR STORAGE/OUTFLOW CALCULATION

                                  CROSS-SECTION DATA
                      --- LEFT OVERBANK --- + ------ MAIN CHANNEL ------- + --- RIGHT OVERBANK ---
125 RY     ELEVATION  1755.70  1746.30  1746.10  1741.70  1743.30  1743.70  1744.60  1755.70
124 RX     DISTANCE   9928.90  9945.00  9963.10  9990.60 10012.20 10035.40 10052.80 10069.60

                                          ***

                                  COMPUTED STORAGE-OUTFLOW-ELEVATION DATA

        STORAGE      0.00      0.46      1.85      4.81      9.40     14.71     20.40     27.33     34.55     41.91
        OUTFLOW      0.00     11.58     73.53    223.88    591.07   1135.72   1841.12   2800.82   3956.89   5289.59
      ELEVATION   1741.70   1742.44   1743.17   1743.91   1744.65   1745.38   1746.12   1746.86   1747.59   1748.33

        STORAGE     49.43     57.10     64.91     72.88     81.01     89.28     97.70    106.28    115.00    123.88
        OUTFLOW   6789.08   8448.74  10263.80  12230.66  14346.52  16609.22  19017.04  21568.64  24262.94  27099.13
      ELEVATION   1749.07   1749.80   1750.54   1751.28   1752.02   1752.75   1753.49   1754.23   1754.96   1755.70

*** WARNING *** MODIFIED PULS ROUTING MAY BE NUMERICALLY UNSTABLE FOR OUTFLOWS BETWEEN    19017. TO    27099.
               THE ROUTED HYDROGRAPH SHOULD BE EXAMINED FOR OSCILLATIONS OR OUTFLOWS GREATER THAN PEAK INFLOWS.
               THIS CAN BE CORRECTED BY DECREASING THE TIME INTERVAL OR INCREASING STORAGE (USE A LONGER REACH.)

*** *** *** *** *** *** *** *** *** *** *** *** *** *** *** *** *** *** *** *** *** *** *** *** *** *** *** *** *** *** *** *** *** ***

          **************
          *            *
126 KK    *     C584I  *
          *            *
          **************
                          BASIN S209 (Sunridge Canyon Dam)
                          THE FOLLOWING PARAMETERS WERE PROVIDED FOR THIS BASIN
                          L=      3.2  Lca=      1.7   S=  582.3  Kn= .019  LAG=  15.9
                          PHOENIX MOUNTAIN S-GRAPH WAS USED FOR THIS BASIN

            SUBBASIN RUNOFF DATA

131 BA        SUBBASIN CHARACTERISTICS
                   TAREA       1.60  SUBBASIN AREA

132 LG        GREEN AND AMPT LOSS RATE
                  STRTL       0.13  STARTING LOSS
                    DTH       0.28  MOISTURE DEFICIT
                   PSIF       4.62  WETTING FRONT SUCTION
                  XKSAT       0.32  HYDRAULIC CONDUCTIVITY
                  RTIMP      41.50  PERCENT IMPERVIOUS AREA

127 UI        INPUT UNITGRAPH,  14 ORDINATES,  VOLUME = 1.00
                 515.0    1951.0    3289.0    2104.0    1510.0     997.0     702.0     442.0     308.0     202.0
                 154.0      65.0      65.0      65.0

                                          ***

** *** *** *** *** *** *** *** *** *** *** *** *** *** *** *** *** *** *** *** *** *** *** *** *** *** *** *** *** *** *** *** ***

          **************
```

```
          *            *
136 KK    *     0.5PM  *     F
          *            *
          **************
                         THIS DIVERT REMOVES HALF THE PMF FLOWS CREATING THE .5 PMF BEFORE
                         BEING ROUTED THROUGH THE DAM

   DT          DIVERSION
                    ISTAD       .5PMF  DIVERSION HYDROGRAPH IDENTIFICATION

   DI             INFLOW        0.00     50.00    100.00  10000.00

   DQ      DIVERTED FLOW        0.00     25.00     50.00   5000.00

                                                          ***


*** *** *** *** *** *** *** *** *** *** *** *** *** *** *** *** *** *** *** *** *** *** *** *** *** *** *** *** *** *** *** *** *** *** ***


          **************
          *            *
142 KK    *     C584O  *
          *            *
          **************
                           Reservoir route at C584 (Sunridge Canyon Dam).
                         THE SQ CARDS HAVE BEEN ALTERED FROM THE ORIGINAL MODEL (GEPD-PMF.DAT) FROM
                         THE GEPD FEASIBILITY STUDY (GVSCE, JULY 1997)
                         PLEASE SEE COMMENT NUMBER 3 ABOVE

            HYDROGRAPH ROUTING DATA

147 RS        STORAGE ROUTING
                   NSTPS           1  NUMBER OF SUBREACHES
                    ITYP        ELEV  TYPE OF INITIAL CONDITION
                  RSVRIC     1926.31  INITIAL CONDITION
                       X        0.00 WORKING R AND D COEFFICIENT

148 SV          STORAGE         0.0       0.6       4.3      11.3      23.7      46.3      86.7      96.0     104.9     126.3
                              151.1     165.0     179.5

150 SE        ELEVATION     1884.80   1894.00   1900.00   1906.00   1912.00   1918.00   1924.00   1925.00   1926.00   1928.00
                            1930.00   1931.00   1932.00

152 SQ        DISCHARGE          0.       163.      223.      272.      307.      333.      355.      959.     1762.     6368.
                             12373.    16175.    20178.

154 SE        ELEVATION     1884.80   1894.00   1900.00   1906.00   1912.00   1918.00   1924.00   1925.00   1926.00   1928.00
                            1930.00   1931.00   1932.00

                                                          ***

                                      COMPUTED STORAGE-OUTFLOW-ELEVATION DATA

          STORAGE       0.00      0.60      4.30     11.27     23.74     46.29     86.65     96.00    104.90    126.25
          OUTFLOW       0.00    163.00    223.00    272.00    307.00    333.00    355.00    959.00   1762.00   6368.00
        ELEVATION    1884.80   1894.00   1900.00   1906.00   1912.00   1918.00   1924.00   1925.00   1926.00   1928.00

          STORAGE     151.07    165.00    179.50
          OUTFLOW   12373.00  16175.00  20178.00
        ELEVATION    1930.00   1931.00   1932.00


*** *** *** *** *** *** *** *** *** *** *** *** *** *** *** *** *** *** *** *** *** *** *** *** *** *** *** *** *** *** *** *** *** ***


          **************
          *            *
156 KK    *    584599  *
          *            *
          **************
                         Normal depth channel route (Sunridge Canyon Dam to GEP Dam)

            HYDROGRAPH ROUTING DATA

158 RS        STORAGE ROUTING
```

```
                NSTPS          1  NUMBER OF SUBREACHES
                 ITYP       FLOW  TYPE OF INITIAL CONDITION
                RSVRIC      -1.00  INITIAL CONDITION
                     X       0.00 WORKING R AND D COEFFICIENT

159 RC        NORMAL DEPTH CHANNEL
                  ANL      0.065  LEFT OVERBANK N-VALUE
                 ANCH      0.050  MAIN CHANNEL N-VALUE
                  ANR      0.065  RIGHT OVERBANK N-VALUE
                RLNTH      6526.  REACH LENGTH
                  SEL     0.0257  ENERGY SLOPE
                ELMAX        0.0  MAX. ELEV. FOR STORAGE/OUTFLOW CALCULATION

                                  CROSS-SECTION DATA
                      --- LEFT OVERBANK --- + ------ MAIN CHANNEL ------- + --- RIGHT OVERBANK ---
161 RY      ELEVATION   1796.30   1791.20   1788.30   1784.10   1784.90   1788.00   1790.20   1796.40
160 RX      DISTANCE    9927.60   9939.80   9951.90   9985.30  10036.00  10067.50  10119.20  10188.70

                                                  ***

                                  COMPUTED STORAGE-OUTFLOW-ELEVATION DATA

        STORAGE       0.00      2.24      7.98     14.95     23.06     32.31     42.69     54.58     68.23     83.62
        OUTFLOW       0.00     33.64    220.33    562.36   1053.96   1702.52   2517.57   3657.11   5058.06   6692.23
      ELEVATION    1784.10   1784.75   1785.39   1786.04   1786.69   1787.34   1787.98   1788.63   1789.28   1789.93

        STORAGE     100.62    118.65    137.59    157.39    178.03    199.54    221.89    245.10    269.16    294.08
        OUTFLOW    8585.16  10733.76  13130.79  15770.61  18653.94  21782.37  25158.02  28783.38  32661.21  36801.66
      ELEVATION    1790.57   1791.22   1791.87   1792.52   1793.16   1793.81   1794.46   1795.10   1795.75   1796.40


*** *** *** *** *** *** *** *** *** *** *** *** *** *** *** *** *** *** *** *** *** *** *** *** *** *** *** *** *** *** *** *** *** *** ***


          **************
          *            *
162 KK    *     C210   *
          *            *
          **************
                          BASIN S210 (GOLDEN EAGLE PARK DAM)
                          THE FOLLOWING PARAMETERS WERE PROVIDED FOR THIS BASIN
                          L=      1.9  Lca=       .9   S=  360.7  Kn= .024  LAG=  13.6
                          PHOENIX MOUNTAIN S-GRAPH WAS USED FOR THIS BASIN

            SUBBASIN RUNOFF DATA

167 BA        SUBBASIN CHARACTERISTICS
                TAREA        1.38  SUBBASIN AREA

168 LG        GREEN AND AMPT LOSS RATE
                STRTL        0.09  STARTING LOSS
                  DTH        0.24  MOISTURE DEFICIT
                 PSIF        5.61  WETTING FRONT SUCTION
                XKSAT        0.19  HYDRAULIC CONDUCTIVITY
                RTIMP       24.82  PERCENT IMPERVIOUS AREA

163 UI        INPUT UNITGRAPH,  12 ORDINATES,  VOLUME = 1.00
                634.0    2291.0    3040.0    1739.0    1122.0     723.0     433.0     286.0     170.0      96.0
                 66.0      66.0

                                                  ***


*** *** *** *** *** *** *** *** *** *** *** *** *** *** *** *** *** *** *** *** *** *** *** *** *** *** *** *** *** *** *** *** *** *** ***


          **************
          *            *
172 KK    *   0.5PMF   *
          *            *
          **************
                          THIS DIVERT REMOVES HALF THE FLOWS FROM THIS AREA TO CREATE THE .5PMF

  DT        DIVERSION
                ISTAD      0.5PMF  DIVERSION HYDROGRAPH IDENTIFICATION
```

```
   DI              INFLOW        0.00      50.00     100.00  10000.00

   DQ       DIVERTED FLOW        0.00      25.00      50.00   5000.00

                                                                  ***

*** *** *** *** *** *** *** *** *** *** *** *** *** *** *** *** *** *** *** *** *** *** *** *** *** *** *** *** *** *** *** *** *** ***

            **************
            *            *
177 KK      *     C599I  *
            *            *
            **************

178 KO          OUTPUT CONTROL VARIABLES
                      IPRNT           1  PRINT CONTROL
                      IPLOT           2  PLOT CONTROL
                      QSCAL          0.  HYDROGRAPH PLOT SCALE
                      IPNCH           0  PUNCH COMPUTED HYDROGRAPH
                       IOUT          21  SAVE HYDROGRAPH ON THIS UNIT
                      ISAV1           1  FIRST ORDINATE PUNCHED OR SAVED
                      ISAV2         210  LAST ORDINATE PUNCHED OR SAVED
                     TIMINT       0.083  TIME INTERVAL IN HOURS

                            Hydrograph combine C5840 + C5600 + C5780 + C599

180 HC          HYDROGRAPH COMBINATION
                      ICOMP           4  NUMBER OF HYDROGRAPHS TO COMBINE

                                                                  ***

*****************************************************************************************************************************************

                                                HYDROGRAPH AT     C599I
                                          TRANSPOSITION AREA       0.0 SQ MI

*****************************************************************************************************************************************
```

DA MON HRMN	ORD	FLOW	DA MON HRMN	ORD	FLOW	DA MON HRMN	ORD	FLOW	DA MON HRMN	ORD	FLOW
2 JUN 0000	1	4065.	2 JUN 0425	54	2727.	2 JUN 0850	107	352.	2 JUN 1315	160	126.
2 JUN 0005	2	3648.	2 JUN 0430	55	2476.	2 JUN 0855	108	331.	2 JUN 1320	161	124.
2 JUN 0010	3	2909.	2 JUN 0435	56	2254.	2 JUN 0900	109	314.	2 JUN 1325	162	121.
2 JUN 0015	4	2363.	2 JUN 0440	57	2091.	2 JUN 0905	110	300.	2 JUN 1330	163	119.
2 JUN 0020	5	1962.	2 JUN 0445	58	1976.	2 JUN 0910	111	289.	2 JUN 1335	164	116.
2 JUN 0025	6	1678.	2 JUN 0450	59	1881.	2 JUN 0915	112	281.	2 JUN 1340	165	114.
2 JUN 0030	7	1469.	2 JUN 0455	60	1802.	2 JUN 0920	113	276.	2 JUN 1345	166	112.
2 JUN 0035	8	1323.	2 JUN 0500	61	1735.	2 JUN 0925	114	270.	2 JUN 1350	167	110.
2 JUN 0040	9	1210.	2 JUN 0505	62	1671.	2 JUN 0930	115	265.	2 JUN 1355	168	107.
2 JUN 0045	10	1121.	2 JUN 0510	63	1589.	2 JUN 0935	116	260.	2 JUN 1400	169	105.
2 JUN 0050	11	1053.	2 JUN 0515	64	1501.	2 JUN 0940	117	255.	2 JUN 1405	170	100.
2 JUN 0055	12	994.	2 JUN 0520	65	1430.	2 JUN 0945	118	251.	2 JUN 1410	171	92.
2 JUN 0100	13	944.	2 JUN 0525	66	1367.	2 JUN 0950	119	246.	2 JUN 1415	172	85.
2 JUN 0105	14	905.	2 JUN 0530	67	1309.	2 JUN 0955	120	242.	2 JUN 1420	173	79.
2 JUN 0110	15	884.	2 JUN 0535	68	1254.	2 JUN 1000	121	239.	2 JUN 1425	174	74.
2 JUN 0115	16	871.	2 JUN 0540	69	1201.	2 JUN 1005	122	235.	2 JUN 1430	175	69.
2 JUN 0120	17	861.	2 JUN 0545	70	1152.	2 JUN 1010	123	232.	2 JUN 1435	176	63.
2 JUN 0125	18	863.	2 JUN 0550	71	1105.	2 JUN 1015	124	228.	2 JUN 1440	177	58.
2 JUN 0130	19	876.	2 JUN 0555	72	1060.	2 JUN 1020	125	225.	2 JUN 1445	178	53.
2 JUN 0135	20	897.	2 JUN 0600	73	1018.	2 JUN 1025	126	222.	2 JUN 1450	179	48.
2 JUN 0140	21	921.	2 JUN 0605	74	978.	2 JUN 1030	127	219.	2 JUN 1455	180	44.
2 JUN 0145	22	948.	2 JUN 0610	75	938.	2 JUN 1035	128	217.	2 JUN 1500	181	40.
2 JUN 0150	23	975.	2 JUN 0615	76	897.	2 JUN 1040	129	214.	2 JUN 1505	182	37.
2 JUN 0155	24	1001.	2 JUN 0620	77	864.	2 JUN 1045	130	211.	2 JUN 1510	183	33.
2 JUN 0200	25	1034.	2 JUN 0625	78	831.	2 JUN 1050	131	209.	2 JUN 1515	184	30.
2 JUN 0205	26	1932.	2 JUN 0630	79	804.	2 JUN 1055	132	206.	2 JUN 1520	185	27.
2 JUN 0210	27	5211.	2 JUN 0635	80	784.	2 JUN 1100	133	204.	2 JUN 1525	186	25.
2 JUN 0215	28	10285.	2 JUN 0640	81	767.	2 JUN 1105	134	202.	2 JUN 1530	187	23.
2 JUN 0220	29	15886.	2 JUN 0645	82	751.	2 JUN 1110	135	199.	2 JUN 1535	188	21.
2 JUN 0225	30	27630.	2 JUN 0650	83	736.	2 JUN 1115	136	197.	2 JUN 1540	189	19.
2 JUN 0230	31	42264.	2 JUN 0655	84	721.	2 JUN 1120	137	195.	2 JUN 1545	190	17.
2 JUN 0235	32	40271.	2 JUN 0700	85	707.	2 JUN 1125	138	193.	2 JUN 1550	191	16.
2 JUN 0240	33	29538.	2 JUN 0705	86	694.	2 JUN 1130	139	191.	2 JUN 1555	192	14.
2 JUN 0245	34	24219.	2 JUN 0710	87	681.	2 JUN 1135	140	189.	2 JUN 1600	193	13.

2 JUN 0250	35	20739.	*	2 JUN 0715	88	669.	*	2 JUN 1140	141	186.	*	2 JUN 1605	194	12.
2 JUN 0255	36	17568.	*	2 JUN 0720	89	658.	*	2 JUN 1145	142	183.	*	2 JUN 1610	195	11.
2 JUN 0300	37	14842.	*	2 JUN 0725	90	647.	*	2 JUN 1150	143	180.	*	2 JUN 1615	196	10.
2 JUN 0305	38	12671.	*	2 JUN 0730	91	637.	*	2 JUN 1155	144	176.	*	2 JUN 1620	197	9.
2 JUN 0310	39	10956.	*	2 JUN 0735	92	626.	*	2 JUN 1200	145	172.	*	2 JUN 1625	198	8.
2 JUN 0315	40	9497.	*	2 JUN 0740	93	615.	*	2 JUN 1205	146	169.	*	2 JUN 1630	199	8.
2 JUN 0320	41	8337.	*	2 JUN 0745	94	604.	*	2 JUN 1210	147	165.	*	2 JUN 1635	200	7.
2 JUN 0325	42	7364.	*	2 JUN 0750	95	593.	*	2 JUN 1215	148	162.	*	2 JUN 1640	201	6.
2 JUN 0330	43	6523.	*	2 JUN 0755	96	583.	*	2 JUN 1220	149	159.	*	2 JUN 1645	202	6.
2 JUN 0335	44	5829.	*	2 JUN 0800	97	572.	*	2 JUN 1225	150	155.	*	2 JUN 1650	203	5.
2 JUN 0340	45	5241.	*	2 JUN 0805	98	559.	*	2 JUN 1230	151	152.	*	2 JUN 1655	204	5.
2 JUN 0345	46	4784.	*	2 JUN 0810	99	545.	*	2 JUN 1235	152	149.	*	2 JUN 1700	205	5.
2 JUN 0350	47	4459.	*	2 JUN 0815	100	532.	*	2 JUN 1240	153	146.	*	2 JUN 1705	206	4.
2 JUN 0355	48	4206.	*	2 JUN 0820	101	516.	*	2 JUN 1245	154	143.	*	2 JUN 1710	207	4.
2 JUN 0400	49	3977.	*	2 JUN 0825	102	498.	*	2 JUN 1250	155	140.	*	2 JUN 1715	208	4.
2 JUN 0405	50	3754.	*	2 JUN 0830	103	479.	*	2 JUN 1255	156	137.	*	2 JUN 1720	209	3.
2 JUN 0410	51	3491.	*	2 JUN 0835	104	448.	*	2 JUN 1300	157	134.	*	2 JUN 1725	210	3.
2 JUN 0415	52	3211.	*	2 JUN 0840	105	409.	*	2 JUN 1305	158	132.	*			
2 JUN 0420	53	2970.	*	2 JUN 0845	106	378.	*	2 JUN 1310	159	129.	*			
			*				*				*			

****

PEAK FLOW (CFS)	TIME (HR)		MAXIMUM AVERAGE FLOW 6-HR	24-HR	72-HR	17.42-HR
42264.	2.50	(CFS)	5743.	2149.	2149.	2149.
		(INCHES)	7.468	8.113	8.113	8.113
		(AC-FT)	2848.	3094.	3094.	3094.

CUMULATIVE AREA = 7.15 SQ MI

****

HYDROGRAPH AT C599I
TRANSPOSITION AREA 1.6 SQ MI

****

DA MON HRMN	ORD	FLOW	*	DA MON HRMN	ORD	FLOW	*	DA MON HRMN	ORD	FLOW	*	DA MON HRMN	ORD	FLOW
2 JUN 0000	1	4065.	*	2 JUN 0425	54	2727.	*	2 JUN 0850	107	352.	*	2 JUN 1315	160	126.
2 JUN 0005	2	3648.	*	2 JUN 0430	55	2476.	*	2 JUN 0855	108	331.	*	2 JUN 1320	161	124.
2 JUN 0010	3	2909.	*	2 JUN 0435	56	2254.	*	2 JUN 0900	109	314.	*	2 JUN 1325	162	121.
2 JUN 0015	4	2363.	*	2 JUN 0440	57	2091.	*	2 JUN 0905	110	300.	*	2 JUN 1330	163	119.
2 JUN 0020	5	1962.	*	2 JUN 0445	58	1976.	*	2 JUN 0910	111	289.	*	2 JUN 1335	164	116.
2 JUN 0025	6	1678.	*	2 JUN 0450	59	1881.	*	2 JUN 0915	112	281.	*	2 JUN 1340	165	114.
2 JUN 0030	7	1469.	*	2 JUN 0455	60	1802.	*	2 JUN 0920	113	276.	*	2 JUN 1345	166	112.
2 JUN 0035	8	1323.	*	2 JUN 0500	61	1735.	*	2 JUN 0925	114	270.	*	2 JUN 1350	167	110.
2 JUN 0040	9	1210.	*	2 JUN 0505	62	1671.	*	2 JUN 0930	115	265.	*	2 JUN 1355	168	107.
2 JUN 0045	10	1121.	*	2 JUN 0510	63	1589.	*	2 JUN 0935	116	260.	*	2 JUN 1400	169	105.
2 JUN 0050	11	1053.	*	2 JUN 0515	64	1501.	*	2 JUN 0940	117	255.	*	2 JUN 1405	170	100.
2 JUN 0055	12	994.	*	2 JUN 0520	65	1430.	*	2 JUN 0945	118	251.	*	2 JUN 1410	171	92.
2 JUN 0100	13	944.	*	2 JUN 0525	66	1367.	*	2 JUN 0950	119	246.	*	2 JUN 1415	172	85.
2 JUN 0105	14	905.	*	2 JUN 0530	67	1309.	*	2 JUN 0955	120	242.	*	2 JUN 1420	173	79.
2 JUN 0110	15	884.	*	2 JUN 0535	68	1254.	*	2 JUN 1000	121	239.	*	2 JUN 1425	174	74.
2 JUN 0115	16	871.	*	2 JUN 0540	69	1201.	*	2 JUN 1005	122	235.	*	2 JUN 1430	175	69.
2 JUN 0120	17	861.	*	2 JUN 0545	70	1152.	*	2 JUN 1010	123	232.	*	2 JUN 1435	176	63.
2 JUN 0125	18	863.	*	2 JUN 0550	71	1105.	*	2 JUN 1015	124	228.	*	2 JUN 1440	177	58.
2 JUN 0130	19	876.	*	2 JUN 0555	72	1060.	*	2 JUN 1020	125	225.	*	2 JUN 1445	178	53.
2 JUN 0135	20	897.	*	2 JUN 0600	73	1018.	*	2 JUN 1025	126	222.	*	2 JUN 1450	179	48.
2 JUN 0140	21	921.	*	2 JUN 0605	74	978.	*	2 JUN 1030	127	219.	*	2 JUN 1455	180	44.
2 JUN 0145	22	948.	*	2 JUN 0610	75	938.	*	2 JUN 1035	128	217.	*	2 JUN 1500	181	40.
2 JUN 0150	23	975.	*	2 JUN 0615	76	897.	*	2 JUN 1040	129	214.	*	2 JUN 1505	182	37.
2 JUN 0155	24	1001.	*	2 JUN 0620	77	864.	*	2 JUN 1045	130	211.	*	2 JUN 1510	183	33.
2 JUN 0200	25	1034.	*	2 JUN 0625	78	831.	*	2 JUN 1050	131	209.	*	2 JUN 1515	184	30.
2 JUN 0205	26	1932.	*	2 JUN 0630	79	804.	*	2 JUN 1055	132	206.	*	2 JUN 1520	185	27.
2 JUN 0210	27	5211.	*	2 JUN 0635	80	784.	*	2 JUN 1100	133	204.	*	2 JUN 1525	186	25.
2 JUN 0215	28	10285.	*	2 JUN 0640	81	767.	*	2 JUN 1105	134	202.	*	2 JUN 1530	187	23.
2 JUN 0220	29	15886.	*	2 JUN 0645	82	751.	*	2 JUN 1110	135	199.	*	2 JUN 1535	188	21.
2 JUN 0225	30	27630.	*	2 JUN 0650	83	736.	*	2 JUN 1115	136	197.	*	2 JUN 1540	189	19.
2 JUN 0230	31	42264.	*	2 JUN 0655	84	721.	*	2 JUN 1120	137	195.	*	2 JUN 1545	190	17.
2 JUN 0235	32	40271.	*	2 JUN 0700	85	707.	*	2 JUN 1125	138	193.	*	2 JUN 1550	191	16.
2 JUN 0240	33	29538.	*	2 JUN 0705	86	694.	*	2 JUN 1130	139	191.	*	2 JUN 1555	192	14.
2 JUN 0245	34	24219.	*	2 JUN 0710	87	681.	*	2 JUN 1135	140	189.	*	2 JUN 1600	193	13.
2 JUN 0250	35	20739.	*	2 JUN 0715	88	669.	*	2 JUN 1140	141	186.	*	2 JUN 1605	194	12.
2 JUN 0255	36	17568.	*	2 JUN 0720	89	658.	*	2 JUN 1145	142	183.	*	2 JUN 1610	195	11.
2 JUN 0300	37	14842.	*	2 JUN 0725	90	647.	*	2 JUN 1150	143	180.	*	2 JUN 1615	196	10.
2 JUN 0305	38	12671.	*	2 JUN 0730	91	637.	*	2 JUN 1155	144	176.	*	2 JUN 1620	197	9.

DA MON HRMN	ORD	FLOW	DA MON HRMN	ORD	FLOW	DA MON HRMN	ORD	FLOW	DA MON HRMN	ORD	FLOW
2 JUN 0310	39	10956.	2 JUN 0735	92	626.	2 JUN 1200	145	172.	2 JUN 1625	198	8.
2 JUN 0315	40	9497.	2 JUN 0740	93	615.	2 JUN 1205	146	169.	2 JUN 1630	199	8.
2 JUN 0320	41	8337.	2 JUN 0745	94	604.	2 JUN 1210	147	165.	2 JUN 1635	200	7.
2 JUN 0325	42	7364.	2 JUN 0750	95	593.	2 JUN 1215	148	162.	2 JUN 1640	201	6.
2 JUN 0330	43	6523.	2 JUN 0755	96	583.	2 JUN 1220	149	159.	2 JUN 1645	202	6.
2 JUN 0335	44	5829.	2 JUN 0800	97	572.	2 JUN 1225	150	155.	2 JUN 1650	203	5.
2 JUN 0340	45	5241.	2 JUN 0805	98	559.	2 JUN 1230	151	152.	2 JUN 1655	204	5.
2 JUN 0345	46	4784.	2 JUN 0810	99	545.	2 JUN 1235	152	149.	2 JUN 1700	205	5.
2 JUN 0350	47	4459.	2 JUN 0815	100	532.	2 JUN 1240	153	146.	2 JUN 1705	206	4.
2 JUN 0355	48	4206.	2 JUN 0820	101	516.	2 JUN 1245	154	143.	2 JUN 1710	207	4.
2 JUN 0400	49	3977.	2 JUN 0825	102	498.	2 JUN 1250	155	140.	2 JUN 1715	208	4.
2 JUN 0405	50	3754.	2 JUN 0830	103	479.	2 JUN 1255	156	137.	2 JUN 1720	209	3.
2 JUN 0410	51	3491.	2 JUN 0835	104	448.	2 JUN 1300	157	134.	2 JUN 1725	210	3.
2 JUN 0415	52	3211.	2 JUN 0840	105	409.	2 JUN 1305	158	132.			
2 JUN 0420	53	2970.	2 JUN 0845	106	378.	2 JUN 1310	159	129.			

PEAK FLOW (CFS)	TIME (HR)		MAXIMUM AVERAGE FLOW 6-HR	24-HR	72-HR	17.42-HR
42264.	2.50	(CFS)	5743.	2149.	2149.	2149.
		(INCHES)	7.468	8.113	8.113	8.113
		(AC-FT)	2848.	3094.	3094.	3094.

CUMULATIVE AREA = 7.15 SQ MI

HYDROGRAPH AT C599I
TRANSPOSITION AREA 2.0 SQ MI

DA MON HRMN	ORD	FLOW	DA MON HRMN	ORD	FLOW	DA MON HRMN	ORD	FLOW	DA MON HRMN	ORD	FLOW
2 JUN 0000	1	4065.	2 JUN 0425	54	2739.	2 JUN 0850	107	327.	2 JUN 1315	160	124.
2 JUN 0005	2	3648.	2 JUN 0430	55	2467.	2 JUN 0855	108	311.	2 JUN 1320	161	122.
2 JUN 0010	3	2912.	2 JUN 0435	56	2230.	2 JUN 0900	109	298.	2 JUN 1325	162	119.
2 JUN 0015	4	2371.	2 JUN 0440	57	2056.	2 JUN 0905	110	287.	2 JUN 1330	163	117.
2 JUN 0020	5	1972.	2 JUN 0445	58	1936.	2 JUN 0910	111	281.	2 JUN 1335	164	115.
2 JUN 0025	6	1688.	2 JUN 0450	59	1837.	2 JUN 0915	112	276.	2 JUN 1340	165	112.
2 JUN 0030	7	1481.	2 JUN 0455	60	1754.	2 JUN 0920	113	270.	2 JUN 1345	166	110.
2 JUN 0035	8	1336.	2 JUN 0500	61	1684.	2 JUN 0925	114	265.	2 JUN 1350	167	108.
2 JUN 0040	9	1224.	2 JUN 0505	62	1618.	2 JUN 0930	115	260.	2 JUN 1355	168	106.
2 JUN 0045	10	1136.	2 JUN 0510	63	1542.	2 JUN 0935	116	255.	2 JUN 1400	169	101.
2 JUN 0050	11	1068.	2 JUN 0515	64	1463.	2 JUN 0940	117	251.	2 JUN 1405	170	94.
2 JUN 0055	12	1011.	2 JUN 0520	65	1397.	2 JUN 0945	118	247.	2 JUN 1410	171	86.
2 JUN 0100	13	962.	2 JUN 0525	66	1336.	2 JUN 0950	119	243.	2 JUN 1415	172	80.
2 JUN 0105	14	922.	2 JUN 0530	67	1280.	2 JUN 0955	120	239.	2 JUN 1420	173	75.
2 JUN 0110	15	899.	2 JUN 0535	68	1226.	2 JUN 1000	121	235.	2 JUN 1425	174	70.
2 JUN 0115	16	886.	2 JUN 0540	69	1174.	2 JUN 1005	122	232.	2 JUN 1430	175	64.
2 JUN 0120	17	878.	2 JUN 0545	70	1125.	2 JUN 1010	123	229.	2 JUN 1435	176	59.
2 JUN 0125	18	884.	2 JUN 0550	71	1079.	2 JUN 1015	124	225.	2 JUN 1440	177	54.
2 JUN 0130	19	899.	2 JUN 0555	72	1035.	2 JUN 1020	125	222.	2 JUN 1445	178	49.
2 JUN 0135	20	919.	2 JUN 0600	73	995.	2 JUN 1025	126	220.	2 JUN 1450	179	45.
2 JUN 0140	21	942.	2 JUN 0605	74	955.	2 JUN 1030	127	217.	2 JUN 1455	180	41.
2 JUN 0145	22	966.	2 JUN 0610	75	916.	2 JUN 1035	128	214.	2 JUN 1500	181	37.
2 JUN 0150	23	991.	2 JUN 0615	76	880.	2 JUN 1040	129	212.	2 JUN 1505	182	34.
2 JUN 0155	24	1016.	2 JUN 0620	77	846.	2 JUN 1045	130	209.	2 JUN 1510	183	31.
2 JUN 0200	25	1047.	2 JUN 0625	78	818.	2 JUN 1050	131	207.	2 JUN 1515	184	28.
2 JUN 0205	26	1922.	2 JUN 0630	79	797.	2 JUN 1055	132	204.	2 JUN 1520	185	25.
2 JUN 0210	27	5124.	2 JUN 0635	80	779.	2 JUN 1100	133	202.	2 JUN 1525	186	23.
2 JUN 0215	28	10103.	2 JUN 0640	81	763.	2 JUN 1105	134	200.	2 JUN 1530	187	21.
2 JUN 0220	29	15643.	2 JUN 0645	82	747.	2 JUN 1110	135	198.	2 JUN 1535	188	19.
2 JUN 0225	30	27312.	2 JUN 0650	83	732.	2 JUN 1115	136	195.	2 JUN 1540	189	17.
2 JUN 0230	31	41900.	2 JUN 0655	84	717.	2 JUN 1120	137	193.	2 JUN 1545	190	16.
2 JUN 0235	32	39858.	2 JUN 0700	85	703.	2 JUN 1125	138	191.	2 JUN 1550	191	14.
2 JUN 0240	33	29183.	2 JUN 0705	86	689.	2 JUN 1130	139	189.	2 JUN 1555	192	13.
2 JUN 0245	34	23936.	2 JUN 0710	87	677.	2 JUN 1135	140	187.	2 JUN 1600	193	12.
2 JUN 0250	35	20500.	2 JUN 0715	88	665.	2 JUN 1140	141	184.	2 JUN 1605	194	11.
2 JUN 0255	36	17282.	2 JUN 0720	89	653.	2 JUN 1145	142	180.	2 JUN 1610	195	10.
2 JUN 0300	37	14453.	2 JUN 0725	90	642.	2 JUN 1150	143	176.	2 JUN 1615	196	9.
2 JUN 0305	38	12191.	2 JUN 0730	91	630.	2 JUN 1155	144	173.	2 JUN 1620	197	8.
2 JUN 0310	39	10504.	2 JUN 0735	92	619.	2 JUN 1200	145	169.	2 JUN 1625	198	8.
2 JUN 0315	40	9094.	2 JUN 0740	93	608.	2 JUN 1205	146	166.	2 JUN 1630	199	7.
2 JUN 0320	41	7987.	2 JUN 0745	94	597.	2 JUN 1210	147	162.	2 JUN 1635	200	7.
2 JUN 0325	42	7049.	2 JUN 0750	95	585.	2 JUN 1215	148	159.	2 JUN 1640	201	6.

2 JUN 0330	43	6269.	*	2 JUN 0755	96	573.	*	2 JUN 1220	149	156.	*	2 JUN 1645	202	6.
2 JUN 0335	44	5637.	*	2 JUN 0800	97	560.	*	2 JUN 1225	150	153.	*	2 JUN 1650	203	5.
2 JUN 0340	45	5116.	*	2 JUN 0805	98	546.	*	2 JUN 1230	151	150.	*	2 JUN 1655	204	5.
2 JUN 0345	46	4727.	*	2 JUN 0810	99	531.	*	2 JUN 1235	152	146.	*	2 JUN 1700	205	4.
2 JUN 0350	47	4445.	*	2 JUN 0815	100	514.	*	2 JUN 1240	153	143.	*	2 JUN 1705	206	4.
2 JUN 0355	48	4218.	*	2 JUN 0820	101	495.	*	2 JUN 1245	154	141.	*	2 JUN 1710	207	4.
2 JUN 0400	49	4015.	*	2 JUN 0825	102	473.	*	2 JUN 1250	155	138.	*	2 JUN 1715	208	3.
2 JUN 0405	50	3809.	*	2 JUN 0830	103	438.	*	2 JUN 1255	156	135.	*	2 JUN 1720	209	3.
2 JUN 0410	51	3544.	*	2 JUN 0835	104	401.	*	2 JUN 1300	157	132.	*	2 JUN 1725	210	3.
2 JUN 0415	52	3249.	*	2 JUN 0840	105	371.	*	2 JUN 1305	158	129.	*			
2 JUN 0420	53	2997.	*	2 JUN 0845	106	347.	*	2 JUN 1310	159	127.	*			
			*				*				*			

****

PEAK FLOW (CFS)	TIME (HR)		MAXIMUM AVERAGE FLOW 6-HR	24-HR	72-HR	17.42-HR
41900.	2.50	(CFS)	5662.	2117.	2117.	2117.
		(INCHES)	7.362	7.993	7.993	7.993
		(AC-FT)	2807.	3048.	3048.	3048.

CUMULATIVE AREA = 7.15 SQ MI

****

HYDROGRAPH AT CS99I
TRANSPOSITION AREA 2.2 SQ MI

****

DA MON HRMN	ORD	FLOW	*	DA MON HRMN	ORD	FLOW	*	DA MON HRMN	ORD	FLOW	*	DA MON HRMN	ORD	FLOW
2 JUN 0000	1	4065.	*	2 JUN 0425	54	2739.	*	2 JUN 0850	107	327.	*	2 JUN 1315	160	124.
2 JUN 0005	2	3648.	*	2 JUN 0430	55	2467.	*	2 JUN 0855	108	311.	*	2 JUN 1320	161	122.
2 JUN 0010	3	2912.	*	2 JUN 0435	56	2230.	*	2 JUN 0900	109	298.	*	2 JUN 1325	162	119.
2 JUN 0015	4	2371.	*	2 JUN 0440	57	2056.	*	2 JUN 0905	110	287.	*	2 JUN 1330	163	117.
2 JUN 0020	5	1972.	*	2 JUN 0445	58	1936.	*	2 JUN 0910	111	281.	*	2 JUN 1335	164	115.
2 JUN 0025	6	1688.	*	2 JUN 0450	59	1837.	*	2 JUN 0915	112	276.	*	2 JUN 1340	165	112.
2 JUN 0030	7	1481.	*	2 JUN 0455	60	1754.	*	2 JUN 0920	113	270.	*	2 JUN 1345	166	110.
2 JUN 0035	8	1336.	*	2 JUN 0500	61	1684.	*	2 JUN 0925	114	265.	*	2 JUN 1350	167	108.
2 JUN 0040	9	1224.	*	2 JUN 0505	62	1618.	*	2 JUN 0930	115	260.	*	2 JUN 1355	168	106.
2 JUN 0045	10	1136.	*	2 JUN 0510	63	1542.	*	2 JUN 0935	116	255.	*	2 JUN 1400	169	101.
2 JUN 0050	11	1068.	*	2 JUN 0515	64	1463.	*	2 JUN 0940	117	251.	*	2 JUN 1405	170	94.
2 JUN 0055	12	1011.	*	2 JUN 0520	65	1397.	*	2 JUN 0945	118	247.	*	2 JUN 1410	171	86.
2 JUN 0100	13	962.	*	2 JUN 0525	66	1336.	*	2 JUN 0950	119	243.	*	2 JUN 1415	172	80.
2 JUN 0105	14	922.	*	2 JUN 0530	67	1280.	*	2 JUN 0955	120	239.	*	2 JUN 1420	173	75.
2 JUN 0110	15	899.	*	2 JUN 0535	68	1226.	*	2 JUN 1000	121	235.	*	2 JUN 1425	174	70.
2 JUN 0115	16	886.	*	2 JUN 0540	69	1174.	*	2 JUN 1005	122	232.	*	2 JUN 1430	175	64.
2 JUN 0120	17	878.	*	2 JUN 0545	70	1125.	*	2 JUN 1010	123	229.	*	2 JUN 1435	176	59.
2 JUN 0125	18	884.	*	2 JUN 0550	71	1079.	*	2 JUN 1015	124	225.	*	2 JUN 1440	177	54.
2 JUN 0130	19	899.	*	2 JUN 0555	72	1035.	*	2 JUN 1020	125	222.	*	2 JUN 1445	178	49.
2 JUN 0135	20	919.	*	2 JUN 0600	73	995.	*	2 JUN 1025	126	220.	*	2 JUN 1450	179	45.
2 JUN 0140	21	942.	*	2 JUN 0605	74	955.	*	2 JUN 1030	127	217.	*	2 JUN 1455	180	41.
2 JUN 0145	22	966.	*	2 JUN 0610	75	916.	*	2 JUN 1035	128	214.	*	2 JUN 1500	181	37.
2 JUN 0150	23	991.	*	2 JUN 0615	76	880.	*	2 JUN 1040	129	212.	*	2 JUN 1505	182	34.
2 JUN 0155	24	1016.	*	2 JUN 0620	77	846.	*	2 JUN 1045	130	209.	*	2 JUN 1510	183	31.
2 JUN 0200	25	1047.	*	2 JUN 0625	78	818.	*	2 JUN 1050	131	207.	*	2 JUN 1515	184	28.
2 JUN 0205	26	1922.	*	2 JUN 0630	79	797.	*	2 JUN 1055	132	204.	*	2 JUN 1520	185	25.
2 JUN 0210	27	5124.	*	2 JUN 0635	80	779.	*	2 JUN 1100	133	202.	*	2 JUN 1525	186	23.
2 JUN 0215	28	10103.	*	2 JUN 0640	81	763.	*	2 JUN 1105	134	200.	*	2 JUN 1530	187	21.
2 JUN 0220	29	15643.	*	2 JUN 0645	82	747.	*	2 JUN 1110	135	198.	*	2 JUN 1535	188	19.
2 JUN 0225	30	27312.	*	2 JUN 0650	83	732.	*	2 JUN 1115	136	195.	*	2 JUN 1540	189	17.
2 JUN 0230	31	41900.	*	2 JUN 0655	84	717.	*	2 JUN 1120	137	193.	*	2 JUN 1545	190	16.
2 JUN 0235	32	39858.	*	2 JUN 0700	85	703.	*	2 JUN 1125	138	191.	*	2 JUN 1550	191	14.
2 JUN 0240	33	29183.	*	2 JUN 0705	86	689.	*	2 JUN 1130	139	189.	*	2 JUN 1555	192	13.
2 JUN 0245	34	23936.	*	2 JUN 0710	87	677.	*	2 JUN 1135	140	187.	*	2 JUN 1600	193	12.
2 JUN 0250	35	20500.	*	2 JUN 0715	88	665.	*	2 JUN 1140	141	184.	*	2 JUN 1605	194	11.
2 JUN 0255	36	17282.	*	2 JUN 0720	89	653.	*	2 JUN 1145	142	180.	*	2 JUN 1610	195	10.
2 JUN 0300	37	14453.	*	2 JUN 0725	90	642.	*	2 JUN 1150	143	176.	*	2 JUN 1615	196	9.
2 JUN 0305	38	12191.	*	2 JUN 0730	91	630.	*	2 JUN 1155	144	173.	*	2 JUN 1620	197	8.
2 JUN 0310	39	10504.	*	2 JUN 0735	92	619.	*	2 JUN 1200	145	169.	*	2 JUN 1625	198	8.
2 JUN 0315	40	9094.	*	2 JUN 0740	93	608.	*	2 JUN 1205	146	166.	*	2 JUN 1630	199	7.
2 JUN 0320	41	7987.	*	2 JUN 0745	94	597.	*	2 JUN 1210	147	162.	*	2 JUN 1635	200	7.
2 JUN 0325	42	7049.	*	2 JUN 0750	95	585.	*	2 JUN 1215	148	159.	*	2 JUN 1640	201	6.
2 JUN 0330	43	6269.	*	2 JUN 0755	96	573.	*	2 JUN 1220	149	156.	*	2 JUN 1645	202	6.
2 JUN 0335	44	5637.	*	2 JUN 0800	97	560.	*	2 JUN 1225	150	153.	*	2 JUN 1650	203	5.
2 JUN 0340	45	5116.	*	2 JUN 0805	98	546.	*	2 JUN 1230	151	150.	*	2 JUN 1655	204	5.
2 JUN 0345	46	4727.	*	2 JUN 0810	99	531.	*	2 JUN 1235	152	146.	*	2 JUN 1700	205	4.

2 JUN 0350	47	4445.	*	2 JUN 0815	100	514.	*	2 JUN 1240	153	143.	*	2 JUN 1705	206	4.
2 JUN 0355	48	4218.	*	2 JUN 0820	101	495.	*	2 JUN 1245	154	141.	*	2 JUN 1710	207	4.
2 JUN 0400	49	4015.	*	2 JUN 0825	102	473.	*	2 JUN 1250	155	138.	*	2 JUN 1715	208	3.
2 JUN 0405	50	3809.	*	2 JUN 0830	103	438.	*	2 JUN 1255	156	135.	*	2 JUN 1720	209	3.
2 JUN 0410	51	3544.	*	2 JUN 0835	104	401.	*	2 JUN 1300	157	132.	*	2 JUN 1725	210	3.
2 JUN 0415	52	3249.	*	2 JUN 0840	105	371.	*	2 JUN 1305	158	129.	*			
2 JUN 0420	53	2997.	*	2 JUN 0845	106	347.	*	2 JUN 1310	159	127.	*			
			*				*				*			

****

PEAK FLOW (CFS)	TIME (HR)		MAXIMUM AVERAGE FLOW 6-HR	24-HR	72-HR	17.42-HR
41900.	2.50	(CFS)	5662.	2117.	2117.	2117.
		(INCHES)	7.362	7.993	7.993	7.993
		(AC-FT)	2807.	3048.	3048.	3048.

CUMULATIVE AREA = 7.15 SQ MI

****

HYDROGRAPH AT C599I
TRANSPOSITION AREA 7.2 SQ MI

****

DA MON HRMN	ORD	FLOW	*	DA MON HRMN	ORD	FLOW	*	DA MON HRMN	ORD	FLOW	*	DA MON HRMN	ORD	FLOW
2 JUN 0000	1	4065.	*	2 JUN 0425	54	2469.	*	2 JUN 0850	107	329.	*	2 JUN 1315	160	124.
2 JUN 0005	2	3647.	*	2 JUN 0430	55	2280.	*	2 JUN 0855	108	312.	*	2 JUN 1320	161	121.
2 JUN 0010	3	2908.	*	2 JUN 0435	56	2132.	*	2 JUN 0900	109	299.	*	2 JUN 1325	162	119.
2 JUN 0015	4	2362.	*	2 JUN 0440	57	2000.	*	2 JUN 0905	110	288.	*	2 JUN 1330	163	116.
2 JUN 0020	5	1960.	*	2 JUN 0445	58	1896.	*	2 JUN 0910	111	281.	*	2 JUN 1335	164	114.
2 JUN 0025	6	1676.	*	2 JUN 0450	59	1806.	*	2 JUN 0915	112	275.	*	2 JUN 1340	165	112.
2 JUN 0030	7	1467.	*	2 JUN 0455	60	1734.	*	2 JUN 0920	113	270.	*	2 JUN 1345	166	109.
2 JUN 0035	8	1321.	*	2 JUN 0500	61	1670.	*	2 JUN 0925	114	265.	*	2 JUN 1350	167	107.
2 JUN 0040	9	1208.	*	2 JUN 0505	62	1607.	*	2 JUN 0930	115	260.	*	2 JUN 1355	168	104.
2 JUN 0045	10	1118.	*	2 JUN 0510	63	1530.	*	2 JUN 0935	116	255.	*	2 JUN 1400	169	99.
2 JUN 0050	11	1050.	*	2 JUN 0515	64	1447.	*	2 JUN 0940	117	250.	*	2 JUN 1405	170	92.
2 JUN 0055	12	991.	*	2 JUN 0520	65	1380.	*	2 JUN 0945	118	246.	*	2 JUN 1410	171	84.
2 JUN 0100	13	941.	*	2 JUN 0525	66	1320.	*	2 JUN 0950	119	242.	*	2 JUN 1415	172	79.
2 JUN 0105	14	901.	*	2 JUN 0530	67	1264.	*	2 JUN 0955	120	238.	*	2 JUN 1420	173	74.
2 JUN 0110	15	879.	*	2 JUN 0535	68	1211.	*	2 JUN 1000	121	235.	*	2 JUN 1425	174	68.
2 JUN 0115	16	865.	*	2 JUN 0540	69	1161.	*	2 JUN 1005	122	231.	*	2 JUN 1430	175	63.
2 JUN 0120	17	855.	*	2 JUN 0545	70	1113.	*	2 JUN 1010	123	228.	*	2 JUN 1435	176	58.
2 JUN 0125	18	853.	*	2 JUN 0550	71	1067.	*	2 JUN 1015	124	225.	*	2 JUN 1440	177	53.
2 JUN 0130	19	859.	*	2 JUN 0555	72	1025.	*	2 JUN 1020	125	222.	*	2 JUN 1445	178	48.
2 JUN 0135	20	873.	*	2 JUN 0600	73	984.	*	2 JUN 1025	126	219.	*	2 JUN 1450	179	44.
2 JUN 0140	21	894.	*	2 JUN 0605	74	945.	*	2 JUN 1030	127	216.	*	2 JUN 1455	180	40.
2 JUN 0145	22	919.	*	2 JUN 0610	75	909.	*	2 JUN 1035	128	214.	*	2 JUN 1500	181	36.
2 JUN 0150	23	946.	*	2 JUN 0615	76	873.	*	2 JUN 1040	129	211.	*	2 JUN 1505	182	33.
2 JUN 0155	24	972.	*	2 JUN 0620	77	841.	*	2 JUN 1045	130	208.	*	2 JUN 1510	183	30.
2 JUN 0200	25	1005.	*	2 JUN 0625	78	815.	*	2 JUN 1050	131	206.	*	2 JUN 1515	184	27.
2 JUN 0205	26	1826.	*	2 JUN 0630	79	796.	*	2 JUN 1055	132	204.	*	2 JUN 1520	185	25.
2 JUN 0210	27	4826.	*	2 JUN 0635	80	778.	*	2 JUN 1100	133	201.	*	2 JUN 1525	186	22.
2 JUN 0215	28	9464.	*	2 JUN 0640	81	762.	*	2 JUN 1105	134	199.	*	2 JUN 1530	187	20.
2 JUN 0220	29	14562.	*	2 JUN 0645	82	747.	*	2 JUN 1110	135	197.	*	2 JUN 1535	188	19.
2 JUN 0225	30	25783.	*	2 JUN 0650	83	732.	*	2 JUN 1115	136	195.	*	2 JUN 1540	189	17.
2 JUN 0230	31	40111.	*	2 JUN 0655	84	717.	*	2 JUN 1120	137	193.	*	2 JUN 1545	190	15.
2 JUN 0235	32	37985.	*	2 JUN 0700	85	703.	*	2 JUN 1125	138	191.	*	2 JUN 1550	191	14.
2 JUN 0240	33	27674.	*	2 JUN 0705	86	689.	*	2 JUN 1130	139	189.	*	2 JUN 1555	192	13.
2 JUN 0245	34	22673.	*	2 JUN 0710	87	677.	*	2 JUN 1135	140	186.	*	2 JUN 1600	193	12.
2 JUN 0250	35	19451.	*	2 JUN 0715	88	664.	*	2 JUN 1140	141	183.	*	2 JUN 1605	194	11.
2 JUN 0255	36	16481.	*	2 JUN 0720	89	653.	*	2 JUN 1145	142	179.	*	2 JUN 1610	195	10.
2 JUN 0300	37	13950.	*	2 JUN 0725	90	642.	*	2 JUN 1150	143	175.	*	2 JUN 1615	196	9.
2 JUN 0305	38	11905.	*	2 JUN 0730	91	631.	*	2 JUN 1155	144	172.	*	2 JUN 1620	197	8.
2 JUN 0310	39	10317.	*	2 JUN 0735	92	619.	*	2 JUN 1200	145	168.	*	2 JUN 1625	198	8.
2 JUN 0315	40	8927.	*	2 JUN 0740	93	608.	*	2 JUN 1205	146	165.	*	2 JUN 1630	199	7.
2 JUN 0320	41	7849.	*	2 JUN 0745	94	597.	*	2 JUN 1210	147	161.	*	2 JUN 1635	200	6.
2 JUN 0325	42	6892.	*	2 JUN 0750	95	586.	*	2 JUN 1215	148	158.	*	2 JUN 1640	201	6.
2 JUN 0330	43	6081.	*	2 JUN 0755	96	573.	*	2 JUN 1220	149	155.	*	2 JUN 1645	202	5.
2 JUN 0335	44	5400.	*	2 JUN 0800	97	560.	*	2 JUN 1225	150	152.	*	2 JUN 1650	203	5.
2 JUN 0340	45	4842.	*	2 JUN 0805	98	546.	*	2 JUN 1230	151	149.	*	2 JUN 1655	204	5.
2 JUN 0345	46	4440.	*	2 JUN 0810	99	532.	*	2 JUN 1235	152	146.	*	2 JUN 1700	205	4.
2 JUN 0350	47	4128.	*	2 JUN 0815	100	515.	*	2 JUN 1240	153	143.	*	2 JUN 1705	206	4.
2 JUN 0355	48	3862.	*	2 JUN 0820	101	496.	*	2 JUN 1245	154	140.	*	2 JUN 1710	207	4.
2 JUN 0400	49	3626.	*	2 JUN 0825	102	475.	*	2 JUN 1250	155	137.	*	2 JUN 1715	208	3.
2 JUN 0405	50	3408.	*	2 JUN 0830	103	442.	*	2 JUN 1255	156	134.	*	2 JUN 1720	209	3.

2 JUN 0410	51	3165.	*	2 JUN 0835	104	404.	*	2 JUN 1300	157	131.	*	2 JUN 1725	210	3.
2 JUN 0415	52	2905.	*	2 JUN 0840	105	373.	*	2 JUN 1305	158	129.	*			
2 JUN 0420	53	2683.	*	2 JUN 0845	106	349.	*	2 JUN 1310	159	126.	*			

PE[illegible]LOW	TIME		MAXIMUM AVERAGE FLOW			
[illegible])	(HR)		6-HR	24-HR	72-HR	17.42-HR
40111.	2.50	(CFS)	5407.	2029.	2029.	2029.
		(INCHES)	7.031	7.660	7.660	7.660
		(AC-FT)	2681.	2921.	2921.	2921.

CUMULATIVE AREA = 7.15 SQ MI

INTERPOLATED HYDROGRAPH AT C599I

DA MON HRMN	ORD	FLOW	DA MON HRMN	ORD	FLOW	DA MON HRMN	ORD	FLOW	DA MON HRMN	ORD	FLOW
2 JUN 0000	1	4065.	2 JUN 0425	54	2469.	2 JUN 0850	107	329.	2 JUN 1315	160	124.
2 JUN 0005	2	3647.	2 JUN 0430	55	2280.	2 JUN 0855	108	312.	2 JUN 1320	161	121.
2 JUN 0010	3	2908.	2 JUN 0435	56	2132.	2 JUN 0900	109	299.	2 JUN 1325	162	119.
2 JUN 0015	4	2362.	2 JUN 0440	57	2000.	2 JUN 0905	110	288.	2 JUN 1330	163	116.
2 JUN 0020	5	1960.	2 JUN 0445	58	1896.	2 JUN 0910	111	281.	2 JUN 1335	164	114.
2 JUN 0025	6	1676.	2 JUN 0450	59	1806.	2 JUN 0915	112	275.	2 JUN 1340	165	112.
2 JUN 0030	7	1467.	2 JUN 0455	60	1734.	2 JUN 0920	113	270.	2 JUN 1345	166	109.
2 JUN 0035	8	1321.	2 JUN 0500	61	1670.	2 JUN 0925	114	265.	2 JUN 1350	167	107.
2 JUN 0040	9	1208.	2 JUN 0505	62	1607.	2 JUN 0930	115	260.	2 JUN 1355	168	104.
2 JUN 0045	10	1118.	2 JUN 0510	63	1530.	2 JUN 0935	116	255.	2 JUN 1400	169	99.
2 JUN 0050	11	1050.	2 JUN 0515	64	1447.	2 JUN 0940	117	250.	2 JUN 1405	170	92.
2 JUN 0055	12	991.	2 JUN 0520	65	1380.	2 JUN 0945	118	246.	2 JUN 1410	171	84.
2 JUN 0100	13	941.	2 JUN 0525	66	1320.	2 JUN 0950	119	242.	2 JUN 1415	172	79.
2 JUN 0105	14	901.	2 JUN 0530	67	1264.	2 JUN 0955	120	238.	2 JUN 1420	173	74.
2 JUN 0110	15	879.	2 JUN 0535	68	1211.	2 JUN 1000	121	235.	2 JUN 1425	174	68.
2 JUN 0115	16	865.	2 JUN 0540	69	1161.	2 JUN 1005	122	231.	2 JUN 1430	175	63.
2 JUN 0120	17	855.	2 JUN 0545	70	1113.	2 JUN 1010	123	228.	2 JUN 1435	176	58.
[illegible]UN 0125	18	853.	2 JUN 0550	71	1067.	2 JUN 1015	124	225.	2 JUN 1440	177	53.
[illegible]UN 0130	19	859.	2 JUN 0555	72	1025.	2 JUN 1020	125	222.	2 JUN 1445	178	48.
2 JUN 0135	20	873.	2 JUN 0600	73	984.	2 JUN 1025	126	219.	2 JUN 1450	179	44.
2 JUN 0140	21	894.	2 JUN 0605	74	945.	2 JUN 1030	127	216.	2 JUN 1455	180	40.
2 JUN 0145	22	919.	2 JUN 0610	75	909.	2 JUN 1035	128	214.	2 JUN 1500	181	36.
2 JUN 0150	23	946.	2 JUN 0615	76	873.	2 JUN 1040	129	211.	2 JUN 1505	182	33.
2 JUN 0155	24	972.	2 JUN 0620	77	841.	2 JUN 1045	130	208.	2 JUN 1510	183	30.
2 JUN 0200	25	1005.	2 JUN 0625	78	815.	2 JUN 1050	131	206.	2 JUN 1515	184	27.
2 JUN 0205	26	1826.	2 JUN 0630	79	796.	2 JUN 1055	132	204.	2 JUN 1520	185	25.
2 JUN 0210	27	4826.	2 JUN 0635	80	778.	2 JUN 1100	133	201.	2 JUN 1525	186	22.
2 JUN 0215	28	9464.	2 JUN 0640	81	762.	2 JUN 1105	134	199.	2 JUN 1530	187	20.
2 JUN 0220	29	14562.	2 JUN 0645	82	747.	2 JUN 1110	135	197.	2 JUN 1535	188	19.
2 JUN 0225	30	25783.	2 JUN 0650	83	732.	2 JUN 1115	136	195.	2 JUN 1540	189	17.
2 JUN 0230	31	40111.	2 JUN 0655	84	717.	2 JUN 1120	137	193.	2 JUN 1545	190	15.
2 JUN 0235	32	37985.	2 JUN 0700	85	703.	2 JUN 1125	138	191.	2 JUN 1550	191	14.
2 JUN 0240	33	27674.	2 JUN 0705	86	689.	2 JUN 1130	139	189.	2 JUN 1555	192	13.
2 JUN 0245	34	22673.	2 JUN 0710	87	677.	2 JUN 1135	140	186.	2 JUN 1600	193	12.
2 JUN 0250	35	19451.	2 JUN 0715	88	664.	2 JUN 1140	141	183.	2 JUN 1605	194	11.
2 JUN 0255	36	16481.	2 JUN 0720	89	653.	2 JUN 1145	142	179.	2 JUN 1610	195	10.
2 JUN 0300	37	13950.	2 JUN 0725	90	642.	2 JUN 1150	143	175.	2 JUN 1615	196	9.
2 JUN 0305	38	11905.	2 JUN 0730	91	631.	2 JUN 1155	144	172.	2 JUN 1620	197	8.
2 JUN 0310	39	10317.	2 JUN 0735	92	619.	2 JUN 1200	145	168.	2 JUN 1625	198	8.
2 JUN 0315	40	8927.	2 JUN 0740	93	608.	2 JUN 1205	146	165.	2 JUN 1630	199	7.
2 JUN 0320	41	7849.	2 JUN 0745	94	597.	2 JUN 1210	147	161.	2 JUN 1635	200	6.
2 JUN 0325	42	6892.	2 JUN 0750	95	586.	2 JUN 1215	148	158.	2 JUN 1640	201	6.
2 JUN 0330	43	6081.	2 JUN 0755	96	573.	2 JUN 1220	149	155.	2 JUN 1645	202	5.
2 JUN 0335	44	5400.	2 JUN 0800	97	560.	2 JUN 1225	150	152.	2 JUN 1650	203	5.
2 JUN 0340	45	4842.	2 JUN 0805	98	546.	2 JUN 1230	151	149.	2 JUN 1655	204	5.
2 JUN 0345	46	4440.	2 JUN 0810	99	532.	2 JUN 1235	152	146.	2 JUN 1700	205	4.
2 JUN 0350	47	4128.	2 JUN 0815	100	515.	2 JUN 1240	153	143.	2 JUN 1705	206	4.
2 JUN 0355	48	3862.	2 JUN 0820	101	496.	2 JUN 1245	154	140.	2 JUN 1710	207	4.
2 JUN 0400	49	3626.	2 JUN 0825	102	475.	2 JUN 1250	155	137.	2 JUN 1715	208	3.
2 JUN 0405	50	3408.	2 JUN 0830	103	442.	2 JUN 1255	156	134.	2 JUN 1720	209	3.
2 JUN 0410	51	3165.	2 JUN 0835	104	404.	2 JUN 1300	157	131.	2 JUN 1725	210	3.
[illegible]UN 0415	52	2905.	2 JUN 0840	105	373.	2 JUN 1305	158	129.			
[illegible]JUN 0420	53	2683.	2 JUN 0845	106	349.	2 JUN 1310	159	126.			

PEAK FLOW (CFS)	TIME (HR)		MAXIMUM AVERAGE FLOW 6-HR	24-HR	72-HR	17.42-HR
40111.	2.50	(CFS)	5407.	2029.	2029.	2029.
		(INCHES)	7.031	7.660	7.660	7.660
		(AC-FT)	2681.	2921.	2921.	2921.

CUMULATIVE AREA = 7.15 SQ MI

STATION C599I

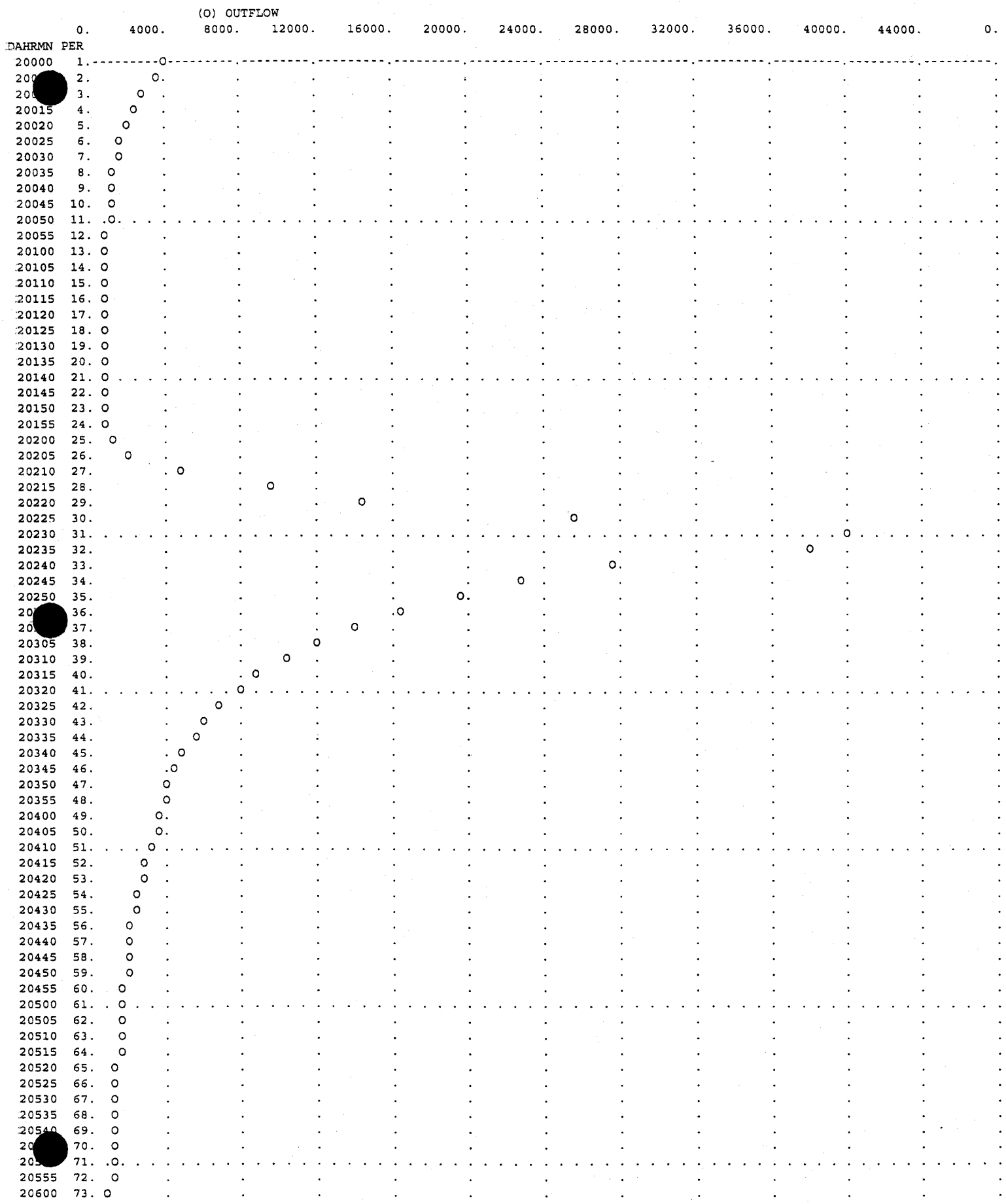

20605 74. O
20610 75. O
20615 76. O
20620 77. O
20625 78. O
20630 79. O
20635 80. O
20640 81. O
20645 82. O
20650 83. O
20655 84. O
20700 85. O
20705 86. O
20710 87. O
20715 88. O
20720 89. O
20725 90. O
20730 91. O
20735 92. O
20740 93. O
20745 94.O
20750 95.O
20755 96.O
20800 97.O
20805 98.O
20810 99.O
20815 100.O
20820 101.O.
20825 102.O
20830 103.O
20835 104.O
20840 105.O
20845 106.O
20850 107.O
20855 108.O
20900 109.O
20905 110.O
20910 111.O.
20915 112.O
20920 113.O
20925 114.O
20930 115.O
20935 116.O
20940 117.O
20945 118.O
20950 119.O
20955 120.O
21000 121.O.
21005 122.O
21010 123.O
21015 124.O
21020 125.O
21025 126.O
21030 127.O
21035 128.O
21040 129.O
21045 130.O
21050 131.O.
21055 132.O
21100 133.O
21105 134O
21110 135O
21115 136O
21120 137O
21125 138O
21130 139O
21135 140O
21140 141O
21145 142O
21150 143O
21155 144O
21200 145O
21205 146O
21210 147O
21215 148O
21220 149O
21225 150O
21230 151O

21235 1520
21240 1530
21245 1540
21250 1550
21255 1560
21300 1570
21[illegible]1580
21[illegible]1590
21315 1600
21320 1610
21325 1620
21330 1630
21335 1640
21340 1650
21345 1660
21350 1670
21355 1680
21400 1690
21405 1700
21410 1710
21415 1720
21420 1730
21425 1740
21430 1750
21435 1760
21440 1770
21445 1780
21450 1790
21455 1800
21500 1810
21505 1820
21510 1830
21515 1840
21520 1850
21525 1860
21530 1870
21535 1880
21540 1890
21545 1900
21550 1910
21[illegible]1920
21[illegible]1930
21605 1940
21610 1950
21615 1960
21620 1970
21625 1980
21630 1990
21635 2000
21640 2010
21645 2020
21650 2030
21655 2040
21700 2050
21705 2060
21710 2070
21715 2080
21720 2090
21725 2100

RUNOFF SUMMARY
FLOW IN CUBIC FEET PER SECOND
TIME IN HOURS, AREA IN SQUARE MILES

OPERATION	STATION	PEAK FLOW	TIME OF PEAK	AVERAGE FLOW FOR MAXIMUM PERIOD 6-HOUR	24-HOUR	72-HOUR	BASIN AREA	MAXIMUM STAGE	TIME OF MAX STAGE
HYDROGRAPH AT	C560I	17974.	2.58	2897.	1001.	1001.	2.15		
DIVERSION TO	.5PMF	8987.	2.58	1449.	500.	500.	2.15		
HYDROGRAPH AT	0.5PM	8987.	2.58	1449.	500.	500.	2.15		
ROUTED TO	C560O	7963.	2.67	1525.	627.	627.	2.15		
ROUTED TO	560599	7909.	2.75	1529.	631.	631.	2.15		
HYDROGRAPH AT	DAMFLO	29206.	2.50	1896.	665.	665.	2.02		
ROUTED TO	578599	25366.	2.50	1909.	673.	673.	2.02		
HYDROGRAPH AT	C584I	20238.	2.33	2265.	781.	781.	1.60		
DIVERSION TO	.5PMF	10119.	2.33	1132.	391.	391.	1.60		
HYDROGRAPH AT	0.5PM	10119.	2.33	1132.	391.	391.	1.60		
ROUTED TO	C584O	9855.	2.42	1229.	466.	466.	1.60		
ROUTED TO	584599	7907.	2.58	1293.	495.	495.	1.60		
HYDROGRAPH AT	C210	19580.	2.33	1956.	674.	674.	1.38		
DIVERSION TO	0.5PMF	9790.	2.33	978.	337.	337.	1.38		
HYDROGRAPH AT	0.5PMF	9790.	2.33	978.	337.	337.	1.38		
4 COMBINED AT	C599I	40111.	2.50	5407.	2029.	2029.	7.15		

*** NORMAL END OF HEC-1 ***

Appendix D

HEC-1 file for IDF2

```
****************************************
*                                      *
*   FLOOD HYDROGRAPH PACKAGE  (HEC-1)  *
*              MAY   1991              *
*           VERSION 4.0.1E             *
*     Lahey F77L-EM/32 version 5.01    *
*      Dodson & Associates, Inc.       *
*      DATE  02/18/99  TIME  14:40:32  *
****************************************
```

```
****************************************
*                                      *
*    U.S. ARMY CORPS OF ENGINEERS      *
*    HYDROLOGIC ENGINEERING CENTER     *
*          609 SECOND STREET           *
*       DAVIS, CALIFORNIA 95616        *
*           (916) 551-1748             *
*                                      *
****************************************
```

```
X     X  XXXXXXX   XXXXX           X
X     X  X        X     X         XX
X     X  X        X                X
XXXXXXX  XXXX     X        XXXXX   X
X     X  X        X                X
X     X  X        X     X          X
X     X  XXXXXXX   XXXXX          XXX
```

THIS PROGRAM REPLACES ALL PREVIOUS VERSIONS OF HEC-1 KNOWN AS HEC1 (JAN 73), HEC1GS, HEC1DB, AND HEC1KW.

THE DEFINITIONS OF VARIABLES -RTIMP- AND -RTIOR- HAVE CHANGED FROM THOSE USED WITH THE 1973-STYLE INPUT STRUCTURE.
THE DEFINITION OF -AMSKK- ON RM-CARD WAS CHANGED WITH REVISIONS DATED 28 SEP 81. THIS IS THE FORTRAN77 VERSION
NEW OPTIONS: DAMBREAK OUTFLOW SUBMERGENCE , SINGLE EVENT DAMAGE CALCULATION, DSS:WRITE STAGE FREQUENCY,
DSS:READ TIME SERIES AT DESIRED CALCULATION INTERVAL LOSS RATE:GREEN AND AMPT INFILTRATION
KINEMATIC WAVE: NEW FINITE DIFFERENCE ALGORITHM

```
LINE          ID.......1.......2.......3.......4.......5.......6.......7.......8.......9......10

  1           ID        GOLDEN EAGLE PARK DAM (FCD 97-44)
  2           ID        IDF2 Model for the Computation of IDF for Golden Eagle Park Dam
  3           ID        ****************************************************************
  4           ID        Analytical Considerations:
  5           ID            Without Upstream Dam Breach
  6           ID            Single Basin Models
  7           ID            This model considers areal reduction method.
  8           ID        ****************************************************************
  9           ID
 10           ID    FILE: IDF2.DAT (by FCDMC)
 11           ID    DATE: OCTOBER 1998
 12           ID    MODIFIED BY STANTEC - FEBRUARY 1999
 13           ID
 14           ID    THIS MODEL WAS ALTERED BY FCDMC FROM THE ORIGINAL MODEL- GEPD-PMF.DAT
 15           ID    FROM THE GOLDEN EAGLE PARK DAM FEASIBILITY STUDY DONE BY GEORGE V.
 16           ID    SABOL CONSULTING ENGINEERS, INC. (GVSCE), JULY 1997
 17           ID
 18           ID       THIS MODEL HAS UNDERGONE THE FOLLOWING ADJUSTMENTS (BY FCDMC):
 19           ID          1.)  NORTH HEIGHTS DAM IN THIS MODEL DOES NOT BREACH
 20           ID          2.)  BEFORE THE FLOW FROM EACH WATERSHED IS ROUTED THROUGH THEIR
 21           ID               RESPECTIVE DAMS,  HALF THE FLOW IS DIVERTED OUT TO REFLECT
 22           ID               THE HALF PMF EVENT.
 23           ID               THE FLOWS FROM BETWEEN THE UPPER DAMS AND GEPD HAS ALSO BEEN
 24           ID               HALVED
 25           ID          3.)  THE RATING CURVES FOR THE DAMS WERE ALTERED USING THE
 26           ID               EQUATION Q=CLH3/2 TO INCREASE THE LENGTH OF THE SPILLWAY
 27           ID               SO THAT THE HALF PMF WILL PASS THROUGH THE SPILLWAY WITH
 28           ID               THE REQUIRED THREE FEET OF FREEBOARD
 29           ID               C = 2.6
 30           ID          4.)  THE PRINCIPLE SPILLWAYS WERE MODELED AS UNCLOGGED
 31           ID          5.)  THE INITIAL WATER SURFACE ELEVATION WAS SET TO THE
 32           ID               HEIGHT OF THE 100 YEAR EVENT WSEL
 33           ID          NOTE:MODIFICATIONS BY STANTEC ARE EDITORIAL ONLY. THE ORIGINAL GVSCE
 34           ID               MODEL AND REVISIONS BY FCDMC ARE ACCEPTED. THE ROUTING (BY FCDMC)
 35           ID               OF THE IDF2 HYDROGRAPH THROUGH THE EXISTING GEP DAM IS DELETED.
              *DIAGRAM
 36           IT       5 02JUN98             200
 37           IO       4
 38           IN      15
              *
 39           JD   15.00    0.01
 40           PI   0.075   0.075   0.075   0.075     0.2     0.2     0.2     0.2     8.2     1.8
 41           PI     0.7     0.7     0.4     0.4     0.4     0.4    0.15    0.15    0.15    0.15
 42           PI   0.075   0.075   0.075   0.075
 43           JD   15.00   1.603
 44           PI   0.075   0.075   0.075   0.075     0.2     0.2     0.2     0.2     8.2     1.8
 45           PI     0.7     0.7     0.4     0.4     0.4     0.4    0.15    0.15    0.15    0.15
 46           PI   0.075   0.075   0.075   0.075
 47           JD   14.70   2.000
 48           PI     0.1     0.1     0.1     0.1     0.2     0.2     0.2     0.2     8.0     1.8
 49           PI     0.7     0.5   0.425   0.425   0.425   0.425   0.125   0.125   0.125   0.125
 50           PI   0.075   0.075   0.075   0.075
 51           JD   14.70   2.150
 52           PI     0.1     0.1     0.1     0.1     0.2     0.2     0.2     0.2     8.0     1.8
 53           PI     0.7     0.5   0.425   0.425   0.425   0.425   0.125   0.125   0.125   0.125
```

```
LINE          ID.......1.......2.......3.......4.......5.......6.......7.......8.......9......10

  54          PI   0.075   0.075   0.075   0.075
  55          JD   13.70   7.150
  56          PI   0.075   0.075   0.075   0.075     0.2     0.2     0.2     0.2     8.0     1.8
  57          PI     0.7     0.7   0.375   0.375   0.375   0.375    0.15    0.15    0.15    0.15
  58          PI   0.075   0.075   0.075   0.075

  59          KK   C560I (ASPEN DAM)
  60          KM        BASIN S207
  61          KM        THE FOLLOWING PARAMETERS WERE PROVIDED FOR THIS BASIN
  62          KM        L=       3.9  Lca=       2.2   S=  464.7  Kn= .030  LAG=  30.6
  63          KM        PHOENIX MOUNTAIN S-GRAPH WAS USED FOR THIS BASIN
  64          BA    2.15
  65          LG     .17     .31    4.90    0.29   31.55
  66          UI    237.    523.   1170.   1651.   2163.   2377.   1509.   1274.   1082.    897.
  67          UI    699.    573.    507.    374.    299.    259.    198.    181.    119.    116.
  68          UI    111.     45.     45.     45.     45.     45.     45.     45.      0.      0.
  69          UI      0.      0.      0.      0.      0.      0.      0.      0.      0.      0.
  70          UI      0.      0.      0.      0.      0.      0.      0.      0.      0.      0.

  71          KK  0.5PMF
  72          KM    THIS DIVERT IS USED TO REMOVE HALF THE FLOWS BEFORE ROUTING THROUGH
  73          KM    THE DAM
  74          DT  0.5PMF
  75          DI       0      50     100   10000
  76          DQ       0      25      50    5000
              *

  77          KK   C560O
  78          KM      Reservoir route at C560 (Aspen Dam).
  79          KM    THE SQ CARDS HAVE BEEN ALTERED FROM THE ORIGINAL MODEL (GEPD - PMF.DAT) FROM
  80          KM    THE GEPD FEASIBILITY STUDY (GVSCE, JULY 1997)
  81          RS       1    ELEV 1835.36
  82          SV    0.00    7.09   34.65   75.98  135.64  191.44  208.31  226.53  246.00  266.28
  83          SV  289.00  310.81  336.00
  84          SE  1808.8 1814.00 1820.00 1826.00 1832.00 1836.00 1837.00 1838.00 1839.00 1840.00
  85          SE  1841.0 1842.00 1843.00
  86          SQ       0     102     184     242     285     907    1913    3718    5913    8428
  87          SQ   11432   14486   17540
              *

  88          KK  560599
  89          KM      Normal depth channel route (Aspen Dam to GEP Dam)
  90          RS       1    FLOW      -1
  91          RC   0.050   0.025   0.050  3127.0  0.0272
  92          RX  9850.4  9950.4  9974.4 10000.0 10035.5 10059.8 10080.4 10104.4
  93          RY  1772.0  1771.7  1765.3  1765.3  1765.9  1768.5  1773.3  1773.7
              *

  94          KK   C578I
  95          KM        BASIN S208 (NORTH HEIGHTS DAM)
  96          KM        THE FOLLOWING PARAMETERS WERE PROVIDED FOR THIS BASIN
  97          KM        L=       3.0  Lca=       1.6   S=  488.9  Kn= .018  LAG=  14.2
  98          KM        PHOENIX MOUNTAIN S-GRAPH WAS USED FOR THIS BASIN
  99          BA    2.00
 100          LG     .10     .25    4.80     .28   50.48
```

```
LINE          ID.......1.......2.......3.......4.......5.......6.......7.......8.......9......10

 101          UI    837.   3038.   4371.   2543.   1714.   1106.    677.    446.    282.    192.
 102          UI     91.     91.     91.      0.      0.      0.      0.      0.      0.      0.
 103          UI      0.      0.      0.      0.      0.      0.      0.      0.      0.      0.

 104          KK  0.5PMF
 105          KM    THIS DIVERT REMOVES HALF THE FLOWS TO REPRESENT THE .5 PMF BEFORE BEING
 106          KM    ROUTED THROUGH THE DAM
 107          DT  0.5PMF
 108          DI       0      50     100   10000
 109          DQ       0      25      50    5000
              *

 110          KK   C578O
 111          KM      Reservoir route at C578 (North Heights Dam).
 112          KM    THE SQ CARDS HAVE BEEN ALTERED FROM THE ORIGINAL MODEL (GEPD-PMF.DAT) FROM
 113          KM    THE GEPD FEASIBILITY STUDY (GVSCE, JULY 1997)
 114          KO       3
 115          RS       1    ELEV 1812.29
 116          SV    0.00    2.77   16.38   41.49   84.39  133.00  154.47  171.00  187.43    205.
 117          SV  223.03  242.00  261.38
 118          SE  1779.2 1788.00 1794.00 1800.00 1806.00  1810.5 1812.00 1813.00 1814.00   1815.
 119          SE  1816.0 1817.00 1818.00
 120          SQ       0     160     221     269     305     327    2323    4539    8141   12045
 121          SQ   16339   21352   26505
 122          SE  1779.2 1788.00 1794.00 1800.00 1806.00  1810.5 1812.00 1813.00 1814.00   1815.
 123          SE  1816.0 1817.00 1818.00
              *

 124          KK  578599
 125          KM      Normal depth channel route (North Heights Dam to GEP Dam)
 126          RS       1    FLOW      -1
 127          RC   0.055   0.045   0.055  3762.0 0.01624
 128          RX  9928.9  9945.0  9963.1  9990.6 10012.2 10035.4 10052.8 10069.6
 129          RY  1755.7  1746.3  1746.1  1741.7  1743.3  1743.7  1744.6  1755.7
              *

 130          KK   C584I
 131          KM        BASIN S209 (SUNRIDGE CANYON DAM)
 132          KM        THE FOLLOWING PARAMETERS WERE PROVIDED FOR THIS BASIN
 133          KM        L=      3.2  Lca=      1.7   S=  582.3  Kn= .019  LAG=  15.9
 134          KM        PHOENIX MOUNTAIN S-GRAPH WAS USED FOR THIS BASIN
 135          BA    1.60
 136          LG     .13     .28    4.62     .32   41.50
 137          UI    515.   1951.   3289.   2104.   1510.    997.    702.    442.    308.    202.
 138          UI    154.     65.     65.     65.      0.      0.      0.      0.      0.      0.
 139          UI      0.      0.      0.      0.      0.      0.      0.      0.      0.      0.

 140          KK  0.5PMF
 141          KM    THIS DIVERT REMOVES HALF THE PMF FLOWS CREATING THE .5 PMF BEFORE
 142          KM    BEING ROUTED THROUGH THE DAM
 143          DT  0.5PMF
 144          DI       0      50     100   10000
 145          DQ       0      25      50    5000
              *
```

```
LINE          ID.......1.......2.......3.......4.......5.......6.......7.......8.......9......10

  146         KK   C584O
  147         KM      Reservoir route at C584. (Sunridge Canyon Dam)
  148         KM    THE SQ CARDS HAVE BEEN ALTERED FROM THE ORIGINAL MODEL (GEPD-PMF.DAT) FROM
  149         KM    THE GEPD FEASIBILITY STUDY (GVSCE, JULY 1997)
  150         RS       1    ELEV 1926.31
  151         SV    0.00     0.60     4.30    11.27    23.74    46.29    86.65    96.00   104.90   126.25
  152         SV  151.07   165.00   179.50
  153         SE  1884.8 1894.00 1900.00 1906.00 1912.00 1918.00 1924.00 1925.00 1926.00 1928.00
  154         SE  1930.0 1931.00 1932.00
  155         SQ       0      163      223      272      307      333      355      959     1762     6368
  156         SQ   12373    16175    20178
  157         SE  1884.8 1894.00 1900.00 1906.00 1912.00 1918.00 1924.00 1925.00 1926.00 1928.00
  158         SE  1930.0 1931.00 1932.00
              *

  159         KK  584599
  160         KM      Normal depth channel route (Sunridge Canyon Dam to GEP Dam)
  161         RS       1    FLOW      -1
  162         RC   0.065    0.050    0.065   6526.0 0.02571
  163         RX  9927.6   9939.8   9951.9   9985.3 10036.0 10067.5 10119.2 10188.7
  164         RY  1796.3   1791.2   1788.3   1784.1  1784.9  1788.0  1790.2  1796.4
              *

  165         KK    C210
  166         KM        BASIN S210 (GOLDEN EAGLE PARK DAM)
  167         KM        THE FOLLOWING PARAMETERS WERE PROVIDED FOR THIS BASIN
  168         KM        L=       1.9  Lca=        .9   S=  360.7  Kn= .024  LAG=  13.6
  169         KM        PHOENIX MOUNTAIN S-GRAPH WAS USED FOR THIS BASIN
  170         BA    1.38
  171         LG     .09      .24     5.61      .19    24.82
  172         UI    634.    2291.    3040.    1739.    1122.     723.     433.     286.     170.      96.
  173         UI     66.      66.       0.       0.       0.       0.       0.       0.       0.       0.
  174         UI      0.       0.       0.       0.       0.       0.       0.       0.       0.       0.

  175         KK  0.5PMF
  176         KM    THIS DIVERT REMOVES HALF THE FLOWS FROM THIS AREA TO CREATE THE .5PMF
  177         DT  0.5PMF
  178         DI       0       50      100    10000
  179         DQ       0       25       50     5000
              *

  180         KK   C599I
  181         KO       1        2                        21
  182         KM      Hydrograph combine C584O + C560O + C578O + C599
  183         HC       4
  184         ZZ
```

SCHEMATIC DIAGRAM OF STREAM NETWORK

```
INPUT
 LINE      (V) ROUTING          (--->) DIVERSION OR PUMP FLOW

 NO.       (.) CONNECTOR        (<---) RETURN OF DIVERTED OR PUMPED FLOW

  59        C560I
                .
                .
  74            .-------->  0.5PMF
  71       0.5PMF
                V
                V
  77        C560O
                V
                V
  88       560599
                .
                .
  94            .       C578I
                .           .
                .           .
 107            .           .-------->  0.5PMF
 104            .      0.5PMF
                .           V
                .           V
 110            .       C578O
                .           V
                .           V
 124            .      578599
                .           .
                .           .
 130            .           .       C584I
                .           .           .
                .           .           .
 143            .           .           .-------->  0.5PMF
 140            .           .      0.5PMF
                .           .           V
                .           .           V
 146            .           .       C584O
                .           .           V
                .           .           V
 159            .           .      584599
                .           .           .
                .           .           .
 165            .           .           .        C210
                .           .           .           .
                .           .           .           .
 177            .           .           .           .-------->  0.5PMF
 175            .           .           .      0.5PMF
                .           .           .           .
                .           .           .           .
 180        C599I.................................
```

(***) RUNOFF ALSO COMPUTED AT THIS LOCATION

```
****************************************
*                                      *
*   FLOOD HYDROGRAPH PACKAGE  (HEC-1)  *
*             MAY   1991               *
*          VERSION 4.0.1E              *
*    Lahey F77L-EM/32 version 5.01     *
*      Dodson & Associates, Inc.       *
*     DATE  02/18/99  TIME  14:40:32   *
****************************************
```

```
****************************************
*                                      *
*    U.S. ARMY CORPS OF ENGINEERS      *
*    HYDROLOGIC ENGINEERING CENTER     *
*          609 SECOND STREET           *
*       DAVIS, CALIFORNIA 95616        *
*           (916) 551-1748             *
*                                      *
****************************************
```

```
GOLDEN EAGLE PARK DAM (FCD 97-44)
IDF2 Model for the Computation of IDF for Golden Eagle Park Dam
*******************************************************************
Analytical Considerations:
    Without Upstream Dam Breach
    Single Basin Models
    This model considers areal reduction method.
*******************************************************************

FILE: IDF2.DAT (by FCDMC)
DATE: OCTOBER 1998
MODIFIED BY STANTEC - FEBRUARY 1999

THIS MODEL WAS ALTERED BY FCDMC FROM THE ORIGINAL MODEL- GEPD-PMF.DAT
FROM THE GOLDEN EAGLE PARK DAM FEASIBILITY STUDY DONE BY GEORGE V.
SABOL CONSULTING ENGINEERS, INC. (GVSCE), JULY 1997

THIS MODEL HAS UNDERGONE THE FOLLOWING ADJUSTMENTS (BY FCDMC):
   1.)  NORTH HEIGHTS DAM IN THIS MODEL DOES NOT BREACH
   2.)  BEFORE THE FLOW FROM EACH WATERSHED IS ROUTED THROUGH THEIR
        RESPECTIVE DAMS,  HALF THE FLOW IS DIVERTED OUT TO REFLECT
        THE HALF PMF EVENT.
        THE FLOWS FROM BETWEEN THE UPPER DAMS AND GEPD HAS ALSO BEEN
        HALVED
   3.)  THE RATING CURVES FOR THE DAMS WERE ALTERED USING THE
        EQUATION Q=CLH3/2 TO INCREASE THE LENGTH OF THE SPILLWAY
        SO THAT THE HALF PMF WILL PASS THROUGH THE SPILLWAY WITH
        THE REQUIRED THREE FEET OF FREEBOARD
        C = 2.6
   4.)  THE PRINCIPLE SPILLWAYS WERE MODELED AS UNCLOGGED
   5.)  THE INITIAL WATER SURFACE ELEVATION WAS SET TO THE
        HEIGHT OF THE 100 YEAR EVENT WSEL
  NOTE:MODIFICATIONS BY STANTEC ARE EDITORIAL ONLY.  THE ORIGINAL GVSCE
        AND REVISIONS BY FCDMC ARE ACCEPTED.  THE ROUTING (BY FCDMC)
        OF THE IDF2 HYDROGRAPH THROUGH THE EXISTING GEP DAM IS DELETED.

37 IO        OUTPUT CONTROL VARIABLES
                 IPRNT          4  PRINT CONTROL
                 IPLOT          0  PLOT CONTROL
                 QSCAL         0.  HYDROGRAPH PLOT SCALE

38 IN        TIME DATA FOR INPUT TIME SERIES
                 JXMIN         15  TIME INTERVAL IN MINUTES
                JXDATE     2JUN98  STARTING DATE
                JXTIME          0  STARTING TIME

   IT        HYDROGRAPH TIME DATA
                  NMIN          5  MINUTES IN COMPUTATION INTERVAL
                 IDATE     2JUN98  STARTING DATE
                 ITIME       0000  STARTING TIME
                    NQ        200  NUMBER OF HYDROGRAPH ORDINATES
                NDDATE     2JUN98  ENDING DATE
                NDTIME       1635  ENDING TIME
                 ICENT         19  CENTURY MARK

            COMPUTATION INTERVAL    0.08 HOURS
                 TOTAL TIME BASE   16.58 HOURS

      ENGLISH UNITS
           DRAINAGE AREA          SQUARE MILES
           PRECIPITATION DEPTH    INCHES
           LENGTH, ELEVATION      FEET
           FLOW                   CUBIC FEET PER SECOND
           STORAGE VOLUME         ACRE-FEET
```

SURFACE AREA ACRES
TEMPERATURE DEGREES FAHRENHEIT

39 JD INDEX STORM NO. 1
STRM 15.00 PRECIPITATION DEPTH
TRDA 0.01 TRANSPOSITION DRAINAGE AREA

40 PI PRECIPITATION PATTERN

0.03	0.03	0.02	0.03	0.03	0.02	0.03	0.03	0.02	0.02
0.03	0.03	0.07	0.07	0.07	0.07	0.07	0.07	0.07	0.07
0.07	0.07	0.07	0.07	2.73	2.73	2.73	0.60	0.60	0.60
0.23	0.23	0.23	0.23	0.23	0.23	0.13	0.13	0.13	0.13
0.13	0.13	0.13	0.13	0.13	0.13	0.13	0.13	0.05	0.05
0.05	0.05	0.05	0.05	0.05	0.05	0.05	0.05	0.05	0.05
0.02	0.03	0.02	0.02	0.03	0.02	0.02	0.03	0.02	0.02
0.03	0.02								

43 JD INDEX STORM NO. 2
STRM 15.00 PRECIPITATION DEPTH
TRDA 1.60 TRANSPOSITION DRAINAGE AREA

44 PI PRECIPITATION PATTERN

0.03	0.03	0.02	0.03	0.03	0.02	0.03	0.03	0.02	0.02
0.03	0.03	0.07	0.07	0.07	0.07	0.07	0.07	0.07	0.07
0.07	0.07	0.07	0.07	2.73	2.73	2.73	0.60	0.60	0.60
0.23	0.23	0.23	0.23	0.23	0.23	0.13	0.13	0.13	0.13
0.13	0.13	0.13	0.13	0.13	0.13	0.13	0.13	0.05	0.05
0.05	0.05	0.05	0.05	0.05	0.05	0.05	0.05	0.05	0.05
0.02	0.03	0.02	0.02	0.03	0.02	0.02	0.03	0.02	0.02
0.03	0.02								

47 JD INDEX STORM NO. 3
STRM 14.70 PRECIPITATION DEPTH
TRDA 2.00 TRANSPOSITION DRAINAGE AREA

48 PI PRECIPITATION PATTERN

0.03	0.03	0.03	0.03	0.03	0.03	0.03	0.03	0.03	0.03
0.03	0.03	0.07	0.07	0.07	0.07	0.07	0.07	0.07	0.07
0.07	0.07	0.07	0.07	2.67	2.67	2.67	0.60	0.60	0.60
0.23	0.23	0.23	0.17	0.17	0.17	0.14	0.14	0.14	0.14
0.14	0.14	0.14	0.14	0.14	0.14	0.14	0.14	0.04	0.04
0.04	0.04	0.04	0.04	0.04	0.04	0.04	0.04	0.04	0.04
0.02	0.03	0.02	0.02	0.03	0.02	0.02	0.03	0.02	0.02
0.03	0.02								

51 JD INDEX STORM NO. 4
STRM 14.70 PRECIPITATION DEPTH
TRDA 2.15 TRANSPOSITION DRAINAGE AREA

52 PI PRECIPITATION PATTERN

0.03	0.03	0.03	0.03	0.03	0.03	0.03	0.03	0.03	0.03
0.03	0.03	0.07	0.07	0.07	0.07	0.07	0.07	0.07	0.07
0.07	0.07	0.07	0.07	2.67	2.67	2.67	0.60	0.60	0.60
0.23	0.23	0.23	0.17	0.17	0.17	0.14	0.14	0.14	0.14
0.14	0.14	0.14	0.14	0.14	0.14	0.14	0.14	0.04	0.04
0.04	0.04	0.04	0.04	0.04	0.04	0.04	0.04	0.04	0.04
0.02	0.03	0.02	0.02	0.03	0.02	0.02	0.03	0.02	0.02
0.03	0.02								

55 JD INDEX STORM NO. 5
STRM 13.70 PRECIPITATION DEPTH
TRDA 7.15 TRANSPOSITION DRAINAGE AREA

56 PI PRECIPITATION PATTERN

0.03	0.03	0.02	0.03	0.03	0.02	0.03	0.03	0.02	0.02
0.03	0.03	0.07	0.07	0.07	0.07	0.07	0.07	0.07	0.07
0.07	0.07	0.07	0.07	2.67	2.67	2.67	0.60	0.60	0.60
0.23	0.23	0.23	0.23	0.23	0.23	0.13	0.13	0.13	0.13
0.13	0.13	0.13	0.13	0.13	0.13	0.13	0.13	0.05	0.05
0.05	0.05	0.05	0.05	0.05	0.05	0.05	0.05	0.05	0.05
0.02	0.03	0.02	0.02	0.03	0.02	0.02	0.03	0.02	0.02
0.03	0.02								

*** ***

```
              **************
              *            *
59 KK         *     C560I  *      (ASPEN DAM)
              *            *
              **************
                                  BASIN S207
                                  THE FOLLOWING PARAMETERS WERE PROVIDED FOR THIS BASIN
                                  L=      3.9  Lca=      2.2   S=  464.7  Kn= .030  LAG=  30.6
                                  PHOENIX MOUNTAIN S-GRAPH WAS USED FOR THIS BASIN

                SUBBASIN RUNOFF DATA

64 BA             SUBBASIN CHARACTERISTICS
                        TAREA        2.15  SUBBASIN AREA

65 LG             GREEN AND AMPT LOSS RATE
                        STRTL        0.17  STARTING LOSS
                          DTH        0.31  MOISTURE DEFICIT
                         PSIF        4.90  WETTING FRONT SUCTION
                        XKSAT        0.29  HYDRAULIC CONDUCTIVITY
                        RTIMP       31.55  PERCENT IMPERVIOUS AREA

60 UI             INPUT UNITGRAPH,  28 ORDINATES,  VOLUME = 1.00
                    237.0     523.0    1170.0    1651.0    2163.0    2377.0    1509.0    1274.0    1082.0     897.0
                    699.0     573.0     507.0     374.0     299.0     259.0     198.0     181.0     119.0     116.0
                    111.0      45.0      45.0      45.0      45.0      45.0      45.0      45.0
                                                                      ***

*** *** *** *** *** *** *** *** *** *** *** *** *** *** *** *** *** *** *** *** *** *** *** *** *** *** *** *** *** *** *** *** *** *** ***

              **************
              *            *
71 KK         *    0.5PMF  *
              *            *
              **************
                                  THIS DIVERT IS USED TO REMOVE HALF THE FLOWS BEFORE ROUTING THROUGH
                                  THE DAM

   DT             DIVERSION
                        ISTAD      0.5PMF  DIVERSION HYDROGRAPH IDENTIFICATION

   DI                 INFLOW        0.00     50.00    100.00  10000.00

   DQ          DIVERTED FLOW        0.00     25.00     50.00   5000.00
                                                                      ***

*** *** *** *** *** *** *** *** *** *** *** *** *** *** *** *** *** *** *** *** *** *** *** *** *** *** *** *** *** *** *** *** *** *** ***

              **************
              *            *
77 KK         *     C560O  *
              *            *
              **************
                                    Reservoir route at C560 (Aspen Dam).
                                  THE SQ CARDS HAVE BEEN ALTERED FROM THE ORIGINAL MODEL (GEPD - PMF.DAT) FROM
                                  THE GEPD FEASIBILITY STUDY (GVSCE, JULY 1997)

                HYDROGRAPH ROUTING DATA

81 RS             STORAGE ROUTING
                         NSTPS          1  NUMBER OF SUBREACHES
                          ITYP       ELEV  TYPE OF INITIAL CONDITION
                        RSVRIC    1835.36  INITIAL CONDITION
                             X       0.00 WORKING R AND D COEFFICIENT

82 SV               STORAGE          0.0       7.1      34.7      76.0     135.6     191.4     208.3     226.5     246.0     266.3
                                   289.0     310.8     336.0

84 SE             ELEVATION     1808.80   1814.00   1820.00   1826.00   1832.00   1836.00   1837.00   1838.00   1839.00   1840.00
                                1841.00   1842.00   1843.00
```

```
 86 SQ          DISCHARGE          0.      102.      184.      242.      285.      907.     1913.     3718.     5913.     8428.
                               11432.    14486.    17540.

                                                        ***

*** *** *** *** *** *** *** *** *** *** *** *** *** *** *** *** *** *** *** *** *** *** *** *** *** *** *** *** *** *** *** *** ***


            **************
            *            *
 88 KK      *    560599  *
            *            *
            **************
                                Normal depth channel route (Aspen Dam to GEP Dam)

              HYDROGRAPH ROUTING DATA

 90 RS          STORAGE ROUTING
                      NSTPS           1  NUMBER OF SUBREACHES
                       ITYP        FLOW  TYPE OF INITIAL CONDITION
                     RSVRIC       -1.00  INITIAL CONDITION
                          X        0.00 WORKING R AND D COEFFICIENT

 91 RC          NORMAL DEPTH CHANNEL
                        ANL       0.050  LEFT OVERBANK N-VALUE
                       ANCH       0.025  MAIN CHANNEL N-VALUE
                        ANR       0.050  RIGHT OVERBANK N-VALUE
                      RLNTH       3127.  REACH LENGTH
                        SEL      0.0272  ENERGY SLOPE
                      ELMAX         0.0  MAX. ELEV. FOR STORAGE/OUTFLOW CALCULATION

                                          CROSS-SECTION DATA
                        --- LEFT OVERBANK --- + ------ MAIN CHANNEL ------- + --- RIGHT OVERBANK ---
 93 RY        ELEVATION   1772.00   1771.70   1765.30   1765.30   1765.90   1768.50   1773.30   1773.70
 92 RX        DISTANCE    9850.40   9950.40   9974.40  10000.00  10035.50  10059.80  10080.40  10104.40

                                                        ***

                                          COMPUTED STORAGE-OUTFLOW-ELEVATION DATA

          STORAGE       0.00      1.25      3.25      5.47      7.87     10.46     13.23     16.19     19.31     22.54
          OUTFLOW       0.00     80.98    338.67    762.45   1326.75   2026.43   2859.90   3827.44   5030.18   6405.37
        ELEVATION    1765.30   1765.74   1766.18   1766.63   1767.07   1767.51   1767.95   1768.40   1768.84   1769.28

          STORAGE      25.89     29.35     32.92     36.60     40.40     44.95     52.04     59.24     66.51     74.15
          OUTFLOW    7919.95   9571.50  11358.09  13278.22  15330.69  17050.24  19574.03  22392.59  25434.73  28542.28
        ELEVATION    1769.72   1770.16   1770.61   1771.05   1771.49   1771.93   1772.37   1772.82   1773.26   1773.70


*** WARNING *** MODIFIED PULS ROUTING MAY BE NUMERICALLY UNSTABLE FOR OUTFLOWS BETWEEN     2026. TO    28542.
                THE ROUTED HYDROGRAPH SHOULD BE EXAMINED FOR OSCILLATIONS OR OUTFLOWS GREATER THAN PEAK INFLOWS.
                THIS CAN BE CORRECTED BY DECREASING THE TIME INTERVAL OR INCREASING STORAGE (USE A LONGER REACH.)


*** *** *** *** *** *** *** *** *** *** *** *** *** *** *** *** *** *** *** *** *** *** *** *** *** *** *** *** *** *** *** *** ***


            **************
            *            *
 94 KK      *     C578I  *
            *            *
            **************
                                BASIN S208 (NORTH HEIGHTS DAM)
                                THE FOLLOWING PARAMETERS WERE PROVIDED FOR THIS BASIN
                                L=      3.0  Lca=      1.6   S=  488.9  Kn= .018  LAG=  14.2
                                PHOENIX MOUNTAIN S-GRAPH WAS USED FOR THIS BASIN

              SUBBASIN RUNOFF DATA

 99 BA          SUBBASIN CHARACTERISTICS
                      TAREA        2.00  SUBBASIN AREA

100 LG          GREEN AND AMPT LOSS RATE
                      STRTL        0.10  STARTING LOSS
```

```
                DTH        0.25  MOISTURE DEFICIT
               PSIF        4.80  WETTING FRONT SUCTION
              XKSAT        0.28  HYDRAULIC CONDUCTIVITY
              RTIMP       50.48  PERCENT IMPERVIOUS AREA

95 UI        INPUT UNITGRAPH,  13 ORDINATES,  VOLUME = 1.00
                837.0    3038.0    4371.0    2543.0    1714.0    1106.0     677.0     446.0     282.0     192.0
                 91.0      91.0      91.0
                                                          ***

*** *** *** *** *** *** *** *** *** *** *** *** *** *** *** *** *** *** *** *** *** *** *** *** *** *** *** *** *** *** *** *** ***

          **************
          *            *
104 KK    *    0.5PMF  *
          *            *
          **************
                         THIS DIVERT REMOVES HALF THE FLOWS TO REPRESENT THE .5 PMF BEFORE BEING
                         ROUTED THROUGH THE DAM

   DT          DIVERSION
                    ISTAD      0.5PMF  DIVERSION HYDROGRAPH IDENTIFICATION

   DI             INFLOW        0.00     50.00    100.00  10000.00

   DQ      DIVERTED FLOW        0.00     25.00     50.00   5000.00
                                                          ***

*** *** *** *** *** *** *** *** *** *** *** *** *** *** *** *** *** *** *** *** *** *** *** *** *** *** *** *** *** *** *** *** ***

          **************
          *            *
1         *     C578O  *
          *            *
          **************
                           Reservoir route at C578 (North Heights Dam).
                         THE SQ CARDS HAVE BEEN ALTERED FROM THE ORIGINAL MODEL (GEPD-PMF.DAT) FROM
                         THE GEPD FEASIBILITY STUDY (GVSCE, JULY 1997)

114 KO        OUTPUT CONTROL VARIABLES
                   IPRNT           3  PRINT CONTROL
                   IPLOT           0  PLOT CONTROL
                   QSCAL          0.  HYDROGRAPH PLOT SCALE

            HYDROGRAPH ROUTING DATA

115 RS        STORAGE ROUTING
                   NSTPS           1  NUMBER OF SUBREACHES
                    ITYP        ELEV  TYPE OF INITIAL CONDITION
                  RSVRIC     1812.29  INITIAL CONDITION
                       X        0.00 WORKING R AND D COEFFICIENT

116 SV          STORAGE         0.0       2.8      16.4      41.5      84.4     133.0     154.5     171.0     187.4     205.0
                              223.0     242.0     261.4

118 SE        ELEVATION     1779.20   1788.00   1794.00   1800.00   1806.00   1810.50   1812.00   1813.00   1814.00   1815.00
                            1816.00   1817.00   1818.00

120 SQ        DISCHARGE          0.       160.      221.      269.      305.      327.     2323.     4539.     8141.    12045.
                             16339.    21352.    26505.

122 SE        ELEVATION     1779.20   1788.00   1794.00   1800.00   1806.00   1810.50   1812.00   1813.00   1814.00   1815.00
                            1816.00   1817.00   1818.00
                                                          ***

                                        COMPUTED STORAGE-OUTFLOW-ELEVATION DATA

          STORAGE       0.00      2.77     16.38     41.49     84.39    133.00    154.47    171.00    187.43    205.00
          OUTFLOW       0.00    160.00    221.00    269.00    305.00    327.00   2323.00   4539.00   8141.00  12045.00
```

ELEVATION	1779.20	1788.00	1794.00	1800.00	1806.00	1810.50	1812.00	1813.00	1814.00	1815.00

STORAGE	223.03	242.00	261.38
OUTFLOW	16339.00	21352.00	26505.00
ELEVATION	1816.00	1817.00	1818.00

*** *** *** *** ***

HYDROGRAPH AT STATION C5780
TRANSPOSITION AREA 0.0 SQ MI

PEAK FLOW (CFS)	TIME (HR)		MAXIMUM AVERAGE FLOW 6-HR	24-HR	72-HR	16.58-HR
13136.	2.42	(CFS)	1544.	645.	645.	645.
		(INCHES)	7.179	8.292	8.292	8.292
		(AC-FT)	766.	884.	884.	884.

PEAK STORAGE (AC-FT)	TIME (HR)	MAXIMUM AVERAGE STORAGE 6-HR	24-HR	72-HR	16.58-HR
210.	2.42	137.	67.	67.	67.

PEAK STAGE (FEET)	TIME (HR)	MAXIMUM AVERAGE STAGE 6-HR	24-HR	72-HR	16.58-HR
1815.25	2.42	1810.57	1797.46	1797.46	1797.46

CUMULATIVE AREA = 2.00 SQ MI

*** *** *** *** ***

HYDROGRAPH AT STATION C5780
TRANSPOSITION AREA 1.6 SQ MI

PEAK FLOW (CFS)	TIME (HR)		MAXIMUM AVERAGE FLOW 6-HR	24-HR	72-HR	16.58-HR
13136.	2.42	(CFS)	1544.	645.	645.	645.
		(INCHES)	7.179	8.292	8.292	8.292
		(AC-FT)	766.	884.	884.	884.

PEAK STORAGE (AC-FT)	TIME (HR)	MAXIMUM AVERAGE STORAGE 6-HR	24-HR	72-HR	16.58-HR
210.	2.42	137.	67.	67.	67.

PEAK STAGE (FEET)	TIME (HR)	MAXIMUM AVERAGE STAGE 6-HR	24-HR	72-HR	16.58-HR
1815.25	2.42	1810.57	1797.46	1797.46	1797.46

CUMULATIVE AREA = 2.00 SQ MI

*** *** *** *** ***

HYDROGRAPH AT STATION C5780
TRANSPOSITION AREA 2.0 SQ MI

PEAK FLOW (CFS)	TIME (HR)		MAXIMUM AVERAGE FLOW 6-HR	24-HR	72-HR	16.58-HR
12828.	2.42	(CFS)	1517.	633.	633.	633.
		(INCHES)	7.051	8.129	8.129	8.129
		(AC-FT)	752.	867.	867.	867.

PEAK STORAGE (AC-FT)	TIME (HR)	MAXIMUM AVERAGE STORAGE 6-HR	24-HR	72-HR	16.58-HR
208.	2.42	136.	66.	66.	66.

PEAK STAGE (FEET)	TIME (HR)	MAXIMUM AVERAGE STAGE 6-HR	24-HR	72-HR	16.58-HR
1815.18	2.42	1810.55	1797.20	1797.20	1797.20

CUMULATIVE AREA = 2.00 SQ MI

*** *** *** *** ***

HYDROGRAPH AT STATION C5780
TRANSPOSITION AREA 2.2 SQ MI

PEAK FLOW TIME MAXIMUM AVERAGE FLOW

(CFS)	(HR)		6-HR	24-HR	72-HR	16.58-HR
12828.	2.42	(CFS)	1517.	633.	633.	633.
		(INCHES)	7.051	8.129	8.129	8.129
		(AC-FT)	752.	867.	867.	867.

PEAK STORAGE (AC-FT)	TIME (HR)	MAXIMUM AVERAGE STORAGE 6-HR	24-HR	72-HR	16.58-HR
[illegible]8.	2.42	136.	66.	66.	66.

PEAK STAGE (FEET)	TIME (HR)	MAXIMUM AVERAGE STAGE 6-HR	24-HR	72-HR	16.58-HR
1815.18	2.42	1810.55	1797.20	1797.20	1797.20

CUMULATIVE AREA = 2.00 SQ MI

*** *** *** *** ***

HYDROGRAPH AT STATION C578O
TRANSPOSITION AREA 7.2 SQ MI

PEAK FLOW (CFS)	TIME (HR)	MAXIMUM AVERAGE FLOW 6-HR	24-HR	72-HR	16.58-HR
11872.	2.42 (CFS)	1412.	596.	596.	596.
	(INCHES)	6.565	7.655	7.655	7.655
	(AC-FT)	700.	816.	816.	816.

PEAK STORAGE (AC-FT)	TIME (HR)	MAXIMUM AVERAGE STORAGE 6-HR	24-HR	72-HR	16.58-HR
204.	2.42	135.	66.	66.	66.

PEAK STAGE (FEET)	TIME (HR)	MAXIMUM AVERAGE STAGE 6-HR	24-HR	72-HR	16.58-HR
1814.96	2.42	1810.46	1797.25	1797.25	1797.25

CUMULATIVE AREA = 2.00 SQ MI

*** *** *** *** ***

INTERPOLATED HYDROGRAPH AT C578O

PEAK FLOW (CFS)	TIME (HR)	MAXIMUM AVERAGE FLOW 6-HR	24-HR	72-HR	16.58-HR
12828.	2.42 (CFS)	1517.	633.	633.	633.
	(INCHES)	7.051	8.129	8.129	8.129
	(AC-FT)	752.	867.	867.	867.

CUMULATIVE AREA = 2.00 SQ MI

*** ***

```
            **************
            *            *
124 KK      *    578599  *
            *            *
            **************
```

Normal depth channel route (North Heights Dam to GEP Dam)

HYDROGRAPH ROUTING DATA

```
126 RS        STORAGE ROUTING
                    NSTPS          1  NUMBER OF SUBREACHES
                     ITYP       FLOW  TYPE OF INITIAL CONDITION
                   RSVRIC      -1.00  INITIAL CONDITION
                        X       0.00 WORKING R AND D COEFFICIENT

127 RC        NORMAL DEPTH CHANNEL
                      ANL      0.055  LEFT OVERBANK N-VALUE
                     ANCH      0.045  MAIN CHANNEL N-VALUE
                      ANR      0.055  RIGHT OVERBANK N-VALUE
                    RLNTH      3762.  REACH LENGTH
                      SEL     0.0162  ENERGY SLOPE
```

ELMAX 0.0 MAX. ELEV. FOR STORAGE/OUTFLOW CALCULATION

CROSS-SECTION DATA

		--- LEFT OVERBANK ---			+ ------ MAIN CHANNEL -------			+ --- RIGHT OVERBANK ---	
129 RY	ELEVATION	1755.70	1746.30	1746.10	1741.70	1743.30	1743.70	1744.60	1755.70
128 RX	DISTANCE	9928.90	9945.00	9963.10	9990.60	10012.20	10035.40	10052.80	10069.60

***

COMPUTED STORAGE-OUTFLOW-ELEVATION DATA

STORAGE	0.00	0.46	1.85	4.81	9.40	14.71	20.40	27.33	34.55	41.91
OUTFLOW	0.00	11.58	73.53	223.88	591.07	1135.72	1841.12	2800.82	3956.89	5289.59
ELEVATION	1741.70	1742.44	1743.17	1743.91	1744.65	1745.38	1746.12	1746.86	1747.59	1748.33
STORAGE	49.43	57.10	64.91	72.88	81.01	89.28	97.70	106.28	115.00	123.88
OUTFLOW	6789.08	8448.74	10263.80	12230.66	14346.52	16609.22	19017.04	21568.64	24262.94	27099.13
ELEVATION	1749.07	1749.80	1750.54	1751.28	1752.02	1752.75	1753.49	1754.23	1754.96	1755.70

*** WARNING *** MODIFIED PULS ROUTING MAY BE NUMERICALLY UNSTABLE FOR OUTFLOWS BETWEEN 19017. TO 27099.
THE ROUTED HYDROGRAPH SHOULD BE EXAMINED FOR OSCILLATIONS OR OUTFLOWS GREATER THAN PEAK INFLOWS.
THIS CAN BE CORRECTED BY DECREASING THE TIME INTERVAL OR INCREASING STORAGE (USE A LONGER REACH.)

*** ***

```
              **************
              *            *
130 KK        *    C584I   *
              *            *
              **************
```

BASIN S209 (SUNRIDGE CANYON DAM)
THE FOLLOWING PARAMETERS WERE PROVIDED FOR THIS BASIN
L= 3.2 Lca= 1.7 S= 582.3 Kn= .019 LAG= 15.9
PHOENIX MOUNTAIN S-GRAPH WAS USED FOR THIS BASIN

SUBBASIN RUNOFF DATA

135 BA SUBBASIN CHARACTERISTICS

TAREA	1.60	SUBBASIN AREA

136 LG GREEN AND AMPT LOSS RATE

STRTL	0.13	STARTING LOSS
DTH	0.28	MOISTURE DEFICIT
PSIF	4.62	WETTING FRONT SUCTION
XKSAT	0.32	HYDRAULIC CONDUCTIVITY
RTIMP	41.50	PERCENT IMPERVIOUS AREA

131 UI INPUT UNITGRAPH, 14 ORDINATES, VOLUME = 1.00

515.0	1951.0	3289.0	2104.0	1510.0	997.0	702.0	442.0	308.0	202.0
154.0	65.0	65.0	65.0						

***

*** ***

```
              **************
              *            *
140 KK        *   0.5PMF   *
              *            *
              **************
```

THIS DIVERT REMOVES HALF THE PMF FLOWS CREATING THE .5 PMF BEFORE
BEING ROUTED THROUGH THE DAM

DT DIVERSION

ISTAD	0.5PMF	DIVERSION HYDROGRAPH IDENTIFICATION

DI	INFLOW	0.00	50.00	100.00 10000.00
DQ	DIVERTED FLOW	0.00	25.00	50.00 5000.00

***

```
*** *** *** *** *** *** *** *** *** *** *** *** *** *** *** *** *** *** *** *** *** *** *** *** *** *** *** *** *** *** *** *** *** *** ***

          **************
          *            *
146 KK    *     C584O  *
          *            *
          **************
                          Reservoir route at C584. (Sunridge Canyon Dam)
                         THE SQ CARDS HAVE BEEN ALTERED FROM THE ORIGINAL MODEL (GEPD-PMF.DAT) FROM
                         THE GEPD FEASIBILITY STUDY (GVSCE, JULY 1997)

            HYDROGRAPH ROUTING DATA

150 RS        STORAGE ROUTING
                   NSTPS          1  NUMBER OF SUBREACHES
                    ITYP       ELEV  TYPE OF INITIAL CONDITION
                  RSVRIC    1926.31  INITIAL CONDITION
                       X       0.00 WORKING R AND D COEFFICIENT

151 SV          STORAGE        0.0       0.6       4.3      11.3      23.7      46.3      86.7      96.0     104.9     126.3
                             151.1     165.0     179.5

153 SE        ELEVATION     1884.80   1894.00   1900.00   1906.00   1912.00   1918.00   1924.00   1925.00   1926.00   1928.00
                            1930.00   1931.00   1932.00

155 SQ        DISCHARGE          0.      163.      223.      272.      307.      333.      355.      959.     1762.     6368.
                            12373.    16175.    20178.

157 SE        ELEVATION     1884.80   1894.00   1900.00   1906.00   1912.00   1918.00   1924.00   1925.00   1926.00   1928.00
                            1930.00   1931.00   1932.00

                                                      ***

                                      COMPUTED STORAGE-OUTFLOW-ELEVATION DATA

        STORAGE       0.00      0.60      4.30     11.27     23.74     46.29     86.65     96.00    104.90    126.25
        OUTFLOW       0.00    163.00    223.00    272.00    307.00    333.00    355.00    959.00   1762.00   6368.00
      ELEVATION    1884.80   1894.00   1900.00   1906.00   1912.00   1918.00   1924.00   1925.00   1926.00   1928.00

        STORAGE     151.07    165.00    179.50
        OUTFLOW   12373.00  16175.00  20178.00
      ELEVATION    1930.00   1931.00   1932.00


*** *** *** *** *** *** *** *** *** *** *** *** *** *** *** *** *** *** *** *** *** *** *** *** *** *** *** *** *** *** *** *** *** *** ***

          **************
          *            *
159 KK    *    584599  *
          *            *
          **************
                          Normal depth channel route (Sunridge Canyon Dam to GEP Dam)

            HYDROGRAPH ROUTING DATA

161 RS        STORAGE ROUTING
                   NSTPS          1  NUMBER OF SUBREACHES
                    ITYP       FLOW  TYPE OF INITIAL CONDITION
                  RSVRIC      -1.00  INITIAL CONDITION
                       X       0.00 WORKING R AND D COEFFICIENT

162 RC        NORMAL DEPTH CHANNEL
                     ANL      0.065  LEFT OVERBANK N-VALUE
                    ANCH      0.050  MAIN CHANNEL N-VALUE
                     ANR      0.065  RIGHT OVERBANK N-VALUE
                   RLNTH      6526.  REACH LENGTH
                     SEL     0.0257  ENERGY SLOPE
                   ELMAX        0.0  MAX. ELEV. FOR STORAGE/OUTFLOW CALCULATION

                                      CROSS-SECTION DATA
                          --- LEFT OVERBANK --- + ------ MAIN CHANNEL ------- + --- RIGHT OVERBANK ---
164 RY        ELEVATION   1796.30   1791.20   1788.30   1784.10   1784.90   1788.00   1790.20   1796.40
```

```
163 RX        DISTANCE    9927.60    9939.80    9951.90    9985.30   10036.00   10067.50   10119.20   10188.70
```

***

COMPUTED STORAGE-OUTFLOW-ELEVATION DATA

STORAGE	0.00	2.24	7.98	14.95	23.06	32.31	42.69	54.58	68.23	83.62
OUTFLOW	0.00	33.64	220.33	562.36	1053.96	1702.52	2517.57	3657.11	5058.06	6692.23
ELEVATION	1784.10	1784.75	1785.39	1786.04	1786.69	1787.34	1787.98	1788.63	1789.28	1789.93
STORAGE	100.62	118.65	137.59	157.39	178.03	199.54	221.89	245.10	269.16	294.08
OUTFLOW	8585.16	10733.76	13130.79	15770.61	18653.94	21782.37	25158.02	28783.38	32661.21	36801.66
ELEVATION	1790.57	1791.22	1791.87	1792.52	1793.16	1793.81	1794.46	1795.10	1795.75	1796.40

*** ***

```
            **************
            *            *
165 KK      *     C210   *
            *            *
            **************
                          BASIN S210 (GOLDEN EAGLE PARK DAM)
                          THE FOLLOWING PARAMETERS WERE PROVIDED FOR THIS BASIN
                          L=      1.9  Lca=       .9   S=  360.7  Kn= .024  LAG=  13.6
                          PHOENIX MOUNTAIN S-GRAPH WAS USED FOR THIS BASIN

              SUBBASIN RUNOFF DATA

170 BA          SUBBASIN CHARACTERISTICS
                      TAREA        1.38  SUBBASIN AREA

171 LG          GREEN AND AMPT LOSS RATE
                      STRTL        0.09  STARTING LOSS
                        DTH        0.24  MOISTURE DEFICIT
                       PSIF        5.61  WETTING FRONT SUCTION
                      XKSAT        0.19  HYDRAULIC CONDUCTIVITY
                      RTIMP       24.82  PERCENT IMPERVIOUS AREA

166 UI          INPUT UNITGRAPH,  12 ORDINATES,  VOLUME = 1.00
                    634.0    2291.0    3040.0    1739.0    1122.0     723.0     433.0     286.0     170.0      96.0
                     66.0      66.0
```

***

*** ***

```
            **************
            *            *
175 KK      *   0.5PMF   *
            *            *
            **************
                          THIS DIVERT REMOVES HALF THE FLOWS FROM THIS AREA TO CREATE THE .5PMF

    DT          DIVERSION
                     ISTAD      0.5PMF  DIVERSION HYDROGRAPH IDENTIFICATION

    DI             INFLOW        0.00     50.00    100.00  10000.00

    DQ      DIVERTED FLOW        0.00     25.00     50.00   5000.00
```

***

*** ***

```
            **************
            *            *
180 KK      *    C599I   *
            *            *
```

****

181 KO OUTPUT CONTROL VARIABLES

IPRNT	1	PRINT CONTROL
IPLOT	2	PLOT CONTROL
QSCAL	0.	HYDROGRAPH PLOT SCALE
IPNCH	0	PUNCH COMPUTED HYDROGRAPH
IOUT	21	SAVE HYDROGRAPH ON THIS UNIT
ISAV1	1	FIRST ORDINATE PUNCHED OR SAVED
ISAV2	200	LAST ORDINATE PUNCHED OR SAVED
TIMINT	0.083	TIME INTERVAL IN HOURS

Hydrograph combine C5840 + C5600 + C5780 + C599

183 HC HYDROGRAPH COMBINATION

ICOMP	4	NUMBER OF HYDROGRAPHS TO COMBINE

***

****

HYDROGRAPH AT C599I
TRANSPOSITION AREA 0.0 SQ MI

****

DA	MON	HRMN	ORD	FLOW	DA	MON	HRMN	ORD	FLOW	DA	MON	HRMN	ORD	FLOW	DA	MON	HRMN	ORD	FLOW
2	JUN	0000	1	6249.	2	JUN	0410	51	3440.	2	JUN	0820	101	785.	2	JUN	1230	151	159.
2	JUN	0005	2	5380.	2	JUN	0415	52	3148.	2	JUN	0825	102	768.	2	JUN	1235	152	154.
2	JUN	0010	3	3896.	2	JUN	0420	53	2871.	2	JUN	0830	103	749.	2	JUN	1240	153	150.
2	JUN	0015	4	2853.	2	JUN	0425	54	2588.	2	JUN	0835	104	718.	2	JUN	1245	154	147.
2	JUN	0020	5	2196.	2	JUN	0430	55	2313.	2	JUN	0840	105	679.	2	JUN	1250	155	143.
2	JUN	0025	6	1817.	2	JUN	0435	56	2091.	2	JUN	0845	106	647.	2	JUN	1255	156	139.
2	JUN	0030	7	1580.	2	JUN	0440	57	1933.	2	JUN	0850	107	620.	2	JUN	1300	157	136.
2	JUN	0035	8	1430.	2	JUN	0445	58	1822.	2	JUN	0855	108	599.	2	JUN	1305	158	133.
2	JUN	0040	9	1325.	2	JUN	0450	59	1739.	2	JUN	0900	109	581.	2	JUN	1310	159	130.
2	JUN	0045	10	1245.	2	JUN	0455	60	1674.	2	JUN	0905	110	566.	2	JUN	1315	160	127.
2	JUN	0050	11	1184.	2	JUN	0500	61	1621.	2	JUN	0910	111	553.	2	JUN	1320	161	124.
2	JUN	0055	12	1135.	2	JUN	0505	62	1571.	2	JUN	0915	112	544.	2	JUN	1325	162	121.
2	JUN	0100	13	1095.	2	JUN	0510	63	1504.	2	JUN	0920	113	536.	2	JUN	1330	163	119.
2	JUN	0105	14	1064.	2	JUN	0515	64	1431.	2	JUN	0925	114	528.	2	JUN	1335	164	116.
2	JUN	0110	15	1052.	2	JUN	0520	65	1375.	2	JUN	0930	115	520.	2	JUN	1340	165	114.
2	JUN	0115	16	1044.	2	JUN	0525	66	1328.	2	JUN	0935	116	513.	2	JUN	1345	166	111.
2	JUN	0120	17	1037.	2	JUN	0530	67	1287.	2	JUN	0940	117	505.	2	JUN	1350	167	109.
2	JUN	0125	18	1037.	2	JUN	0535	68	1250.	2	JUN	0945	118	498.	2	JUN	1355	168	107.
2	JUN	0130	19	1045.	2	JUN	0540	69	1215.	2	JUN	0950	119	490.	2	JUN	1400	169	104.
2	JUN	0135	20	1056.	2	JUN	0545	70	1184.	2	JUN	0955	120	483.	2	JUN	1405	170	99.
2	JUN	0140	21	1068.	2	JUN	0550	71	1154.	2	JUN	1000	121	477.	2	JUN	1410	171	92.
2	JUN	0145	22	1079.	2	JUN	0555	72	1126.	2	JUN	1005	122	470.	2	JUN	1415	172	84.
2	JUN	0150	23	1088.	2	JUN	0600	73	1099.	2	JUN	1010	123	464.	2	JUN	1420	173	78.
2	JUN	0155	24	1097.	2	JUN	0605	74	1073.	2	JUN	1015	124	458.	2	JUN	1425	174	73.
2	JUN	0200	25	1104.	2	JUN	0610	75	1042.	2	JUN	1020	125	452.	2	JUN	1430	175	68.
2	JUN	0205	26	1956.	2	JUN	0615	76	1011.	2	JUN	1025	126	445.	2	JUN	1435	176	62.
2	JUN	0210	27	5059.	2	JUN	0620	77	988.	2	JUN	1030	127	439.	2	JUN	1440	177	57.
2	JUN	0215	28	10561.	2	JUN	0625	78	965.	2	JUN	1035	128	433.	2	JUN	1445	178	52.
2	JUN	0220	29	18641.	2	JUN	0630	79	949.	2	JUN	1040	129	425.	2	JUN	1450	179	48.
2	JUN	0225	30	26592.	2	JUN	0635	80	940.	2	JUN	1045	130	418.	2	JUN	1455	180	43.
2	JUN	0230	31	29150.	2	JUN	0640	81	933.	2	JUN	1050	131	410.	2	JUN	1500	181	39.
2	JUN	0235	32	29679.	2	JUN	0645	82	928.	2	JUN	1055	132	402.	2	JUN	1505	182	36.
2	JUN	0240	33	27459.	2	JUN	0650	83	923.	2	JUN	1100	133	394.	2	JUN	1510	183	32.
2	JUN	0245	34	23698.	2	JUN	0655	84	918.	2	JUN	1105	134	387.	2	JUN	1515	184	29.
2	JUN	0250	35	19963.	2	JUN	0700	85	914.	2	JUN	1110	135	379.	2	JUN	1520	185	26.
2	JUN	0255	36	16840.	2	JUN	0705	86	909.	2	JUN	1115	136	371.	2	JUN	1525	186	24.
2	JUN	0300	37	14395.	2	JUN	0710	87	904.	2	JUN	1120	137	357.	2	JUN	1530	187	22.
2	JUN	0305	38	12328.	2	JUN	0715	88	900.	2	JUN	1125	138	334.	2	JUN	1535	188	20.
2	JUN	0310	39	10674.	2	JUN	0720	89	895.	2	JUN	1130	139	308.	2	JUN	1540	189	18.
2	JUN	0315	40	9266.	2	JUN	0725	90	890.	2	JUN	1135	140	283.	2	JUN	1545	190	16.
2	JUN	0320	41	8133.	2	JUN	0730	91	884.	2	JUN	1140	141	260.	2	JUN	1550	191	15.
2	JUN	0325	42	7174.	2	JUN	0735	92	877.	2	JUN	1145	142	242.	2	JUN	1555	192	13.
2	JUN	0330	43	6321.	2	JUN	0740	93	870.	2	JUN	1150	143	225.	2	JUN	1600	193	12.
2	JUN	0335	44	5626.	2	JUN	0745	94	862.	2	JUN	1155	144	211.	2	JUN	1605	194	11.
2	JUN	0340	45	5053.	2	JUN	0750	95	854.	2	JUN	1200	145	200.	2	JUN	1610	195	10.
2	JUN	0345	46	4631.	2	JUN	0755	96	846.	2	JUN	1205	146	189.	2	JUN	1615	196	9.
2	JUN	0350	47	4335.	2	JUN	0800	97	836.	2	JUN	1210	147	181.	2	JUN	1620	197	8.
2	JUN	0355	48	4102.	2	JUN	0805	98	825.	2	JUN	1215	148	173.	2	JUN	1625	198	7.
2	JUN	0400	49	3896.	2	JUN	0810	99	813.	2	JUN	1220	149	168.	2	JUN	1630	199	7.
2	JUN	0405	50	3693.	2	JUN	0815	100	800.	2	JUN	1225	150	163.	2	JUN	1635	200	6.

PEAK FLOW (CFS)	TIME (HR)		MAXIMUM AVERAGE FLOW 6-HR	24-HR	72-HR	16.58-HR
29679.	2.58	(CFS)	5423.	2217.	2217.	2217.
		(INCHES)	7.072	7.989	7.989	7.989
		(AC-FT)	2689.	3038.	3038.	3038.

CUMULATIVE AREA = 7.13 SQ MI

HYDROGRAPH AT C599I
TRANSPOSITION AREA 1.6 SQ MI

DA MON HRMN	ORD	FLOW	DA MON HRMN	ORD	FLOW	DA MON HRMN	ORD	FLOW	DA MON HRMN	ORD	FLOW
2 JUN 0000	1	6249.	2 JUN 0410	51	3440.	2 JUN 0820	101	785.	2 JUN 1230	151	159.
2 JUN 0005	2	5380.	2 JUN 0415	52	3148.	2 JUN 0825	102	768.	2 JUN 1235	152	154.
2 JUN 0010	3	3896.	2 JUN 0420	53	2871.	2 JUN 0830	103	749.	2 JUN 1240	153	150.
2 JUN 0015	4	2853.	2 JUN 0425	54	2588.	2 JUN 0835	104	718.	2 JUN 1245	154	147.
2 JUN 0020	5	2196.	2 JUN 0430	55	2313.	2 JUN 0840	105	679.	2 JUN 1250	155	143.
2 JUN 0025	6	1817.	2 JUN 0435	56	2091.	2 JUN 0845	106	647.	2 JUN 1255	156	139.
2 JUN 0030	7	1580.	2 JUN 0440	57	1933.	2 JUN 0850	107	620.	2 JUN 1300	157	136.
2 JUN 0035	8	1430.	2 JUN 0445	58	1822.	2 JUN 0855	108	599.	2 JUN 1305	158	133.
2 JUN 0040	9	1325.	2 JUN 0450	59	1739.	2 JUN 0900	109	581.	2 JUN 1310	159	130.
2 JUN 0045	10	1245.	2 JUN 0455	60	1674.	2 JUN 0905	110	566.	2 JUN 1315	160	127.
2 JUN 0050	11	1184.	2 JUN 0500	61	1621.	2 JUN 0910	111	553.	2 JUN 1320	161	124.
2 JUN 0055	12	1135.	2 JUN 0505	62	1571.	2 JUN 0915	112	544.	2 JUN 1325	162	121.
2 JUN 0100	13	1095.	2 JUN 0510	63	1504.	2 JUN 0920	113	536.	2 JUN 1330	163	119.
2 JUN 0105	14	1064.	2 JUN 0515	64	1431.	2 JUN 0925	114	528.	2 JUN 1335	164	116.
2 JUN 0110	15	1052.	2 JUN 0520	65	1375.	2 JUN 0930	115	520.	2 JUN 1340	165	114.
2 JUN 0115	16	1044.	2 JUN 0525	66	1328.	2 JUN 0935	116	513.	2 JUN 1345	166	111.
2 JUN 0120	17	1037.	2 JUN 0530	67	1287.	2 JUN 0940	117	505.	2 JUN 1350	167	109.
2 JUN 0125	18	1037.	2 JUN 0535	68	1250.	2 JUN 0945	118	498.	2 JUN 1355	168	107.
2 JUN 0130	19	1045.	2 JUN 0540	69	1215.	2 JUN 0950	119	490.	2 JUN 1400	169	104.
2 JUN 0135	20	1056.	2 JUN 0545	70	1184.	2 JUN 0955	120	483.	2 JUN 1405	170	99.
2 JUN 0140	21	1068.	2 JUN 0550	71	1154.	2 JUN 1000	121	477.	2 JUN 1410	171	92.
2 JUN 0145	22	1079.	2 JUN 0555	72	1126.	2 JUN 1005	122	470.	2 JUN 1415	172	84.
2 JUN 0150	23	1088.	2 JUN 0600	73	1099.	2 JUN 1010	123	464.	2 JUN 1420	173	78.
2 JUN 0155	24	1097.	2 JUN 0605	74	1073.	2 JUN 1015	124	458.	2 JUN 1425	174	73.
2 JUN 0200	25	1104.	2 JUN 0610	75	1042.	2 JUN 1020	125	452.	2 JUN 1430	175	68.
2 JUN 0205	26	1956.	2 JUN 0615	76	1011.	2 JUN 1025	126	445.	2 JUN 1435	176	62.
2 JUN 0210	27	5059.	2 JUN 0620	77	988.	2 JUN 1030	127	439.	2 JUN 1440	177	57.
2 JUN 0215	28	10561.	2 JUN 0625	78	965.	2 JUN 1035	128	433.	2 JUN 1445	178	52.
2 JUN 0220	29	18641.	2 JUN 0630	79	949.	2 JUN 1040	129	425.	2 JUN 1450	179	48.
2 JUN 0225	30	26592.	2 JUN 0635	80	940.	2 JUN 1045	130	418.	2 JUN 1455	180	43.
2 JUN 0230	31	29150.	2 JUN 0640	81	933.	2 JUN 1050	131	410.	2 JUN 1500	181	39.
2 JUN 0235	32	29679.	2 JUN 0645	82	928.	2 JUN 1055	132	402.	2 JUN 1505	182	36.
2 JUN 0240	33	27459.	2 JUN 0650	83	923.	2 JUN 1100	133	394.	2 JUN 1510	183	32.
2 JUN 0245	34	23698.	2 JUN 0655	84	918.	2 JUN 1105	134	387.	2 JUN 1515	184	29.
2 JUN 0250	35	19963.	2 JUN 0700	85	914.	2 JUN 1110	135	379.	2 JUN 1520	185	26.
2 JUN 0255	36	16840.	2 JUN 0705	86	909.	2 JUN 1115	136	371.	2 JUN 1525	186	24.
2 JUN 0300	37	14395.	2 JUN 0710	87	904.	2 JUN 1120	137	357.	2 JUN 1530	187	22.
2 JUN 0305	38	12328.	2 JUN 0715	88	900.	2 JUN 1125	138	334.	2 JUN 1535	188	20.
2 JUN 0310	39	10674.	2 JUN 0720	89	895.	2 JUN 1130	139	308.	2 JUN 1540	189	18.
2 JUN 0315	40	9266.	2 JUN 0725	90	890.	2 JUN 1135	140	283.	2 JUN 1545	190	16.
2 JUN 0320	41	8133.	2 JUN 0730	91	884.	2 JUN 1140	141	260.	2 JUN 1550	191	15.
2 JUN 0325	42	7174.	2 JUN 0735	92	877.	2 JUN 1145	142	242.	2 JUN 1555	192	13.
2 JUN 0330	43	6321.	2 JUN 0740	93	870.	2 JUN 1150	143	225.	2 JUN 1600	193	12.
2 JUN 0335	44	5626.	2 JUN 0745	94	862.	2 JUN 1155	144	211.	2 JUN 1605	194	11.
2 JUN 0340	45	5053.	2 JUN 0750	95	854.	2 JUN 1200	145	200.	2 JUN 1610	195	10.
2 JUN 0345	46	4631.	2 JUN 0755	96	846.	2 JUN 1205	146	189.	2 JUN 1615	196	9.
2 JUN 0350	47	4335.	2 JUN 0800	97	836.	2 JUN 1210	147	181.	2 JUN 1620	197	8.
2 JUN 0355	48	4102.	2 JUN 0805	98	825.	2 JUN 1215	148	173.	2 JUN 1625	198	7.
2 JUN 0400	49	3896.	2 JUN 0810	99	813.	2 JUN 1220	149	168.	2 JUN 1630	199	7.
2 JUN 0405	50	3693.	2 JUN 0815	100	800.	2 JUN 1225	150	163.	2 JUN 1635	200	6.

PEAK FLOW (CFS)	TIME (HR)		MAXIMUM AVERAGE FLOW 6-HR	24-HR	72-HR	16.58-HR
29679.	2.58	(CFS)	5423.	2217.	2217.	2217.
		(INCHES)	7.072	7.989	7.989	7.989

(AC-FT) 2689. 3038. 3038. 3038.

CUMULATIVE AREA = 7.13 SQ MI

HYDROGRAPH AT C599I
TRANSPOSITION AREA 2.0 SQ MI

DA MON HRMN	ORD	FLOW	DA MON HRMN	ORD	FLOW	DA MON HRMN	ORD	FLOW	DA MON HRMN	ORD	FLOW
2 JUN 0000	1	6249.	2 JUN 0410	51	3546.	2 JUN 0820	101	762.	2 JUN 1230	151	154.
2 JUN 0005	2	5381.	2 JUN 0415	52	3234.	2 JUN 0825	102	740.	2 JUN 1235	152	150.
2 JUN 0010	3	3900.	2 JUN 0420	53	2933.	2 JUN 0830	103	706.	2 JUN 1240	153	147.
2 JUN 0015	4	2863.	2 JUN 0425	54	2618.	2 JUN 0835	104	669.	2 JUN 1245	154	143.
2 JUN 0020	5	2209.	2 JUN 0430	55	2304.	2 JUN 0840	105	638.	2 JUN 1250	155	140.
2 JUN 0025	6	1829.	2 JUN 0435	56	2053.	2 JUN 0845	106	613.	2 JUN 1255	156	136.
2 JUN 0030	7	1593.	2 JUN 0440	57	1881.	2 JUN 0850	107	593.	2 JUN 1300	157	133.
2 JUN 0035	8	1443.	2 JUN 0445	58	1771.	2 JUN 0855	108	576.	2 JUN 1305	158	130.
2 JUN 0040	9	1339.	2 JUN 0450	59	1688.	2 JUN 0900	109	562.	2 JUN 1310	159	127.
2 JUN 0045	10	1260.	2 JUN 0455	60	1622.	2 JUN 0905	110	550.	2 JUN 1315	160	125.
2 JUN 0050	11	1200.	2 JUN 0500	61	1567.	2 JUN 0910	111	541.	2 JUN 1320	161	122.
2 JUN 0055	12	1152.	2 JUN 0505	62	1516.	2 JUN 0915	112	534.	2 JUN 1325	162	119.
2 JUN 0100	13	1113.	2 JUN 0510	63	1455.	2 JUN 0920	113	526.	2 JUN 1330	163	117.
2 JUN 0105	14	1083.	2 JUN 0515	64	1391.	2 JUN 0925	114	518.	2 JUN 1335	164	114.
2 JUN 0110	15	1067.	2 JUN 0520	65	1340.	2 JUN 0930	115	510.	2 JUN 1340	165	112.
2 JUN 0115	16	1060.	2 JUN 0525	66	1295.	2 JUN 0935	116	503.	2 JUN 1345	166	109.
2 JUN 0120	17	1055.	2 JUN 0530	67	1256.	2 JUN 0940	117	495.	2 JUN 1350	167	107.
2 JUN 0125	18	1059.	2 JUN 0535	68	1220.	2 JUN 0945	118	488.	2 JUN 1355	168	105.
2 JUN 0130	19	1069.	2 JUN 0540	69	1186.	2 JUN 0950	119	481.	2 JUN 1400	169	100.
2 JUN 0135	20	1079.	2 JUN 0545	70	1155.	2 JUN 0955	120	475.	2 JUN 1405	170	93.
2 JUN 0140	21	1089.	2 JUN 0550	71	1127.	2 JUN 1000	121	468.	2 JUN 1410	171	85.
2 JUN 0145	22	1098.	2 JUN 0555	72	1099.	2 JUN 1005	122	462.	2 JUN 1415	172	79.
2 JUN 0150	23	1106.	2 JUN 0600	73	1074.	2 JUN 1010	123	456.	2 JUN 1420	173	74.
2 JUN 0155	24	1112.	2 JUN 0605	74	1048.	2 JUN 1015	124	450.	2 JUN 1425	174	69.
2 JUN 0200	25	1118.	2 JUN 0610	75	1019.	2 JUN 1020	125	444.	2 JUN 1430	175	63.
2 JUN 0205	26	1947.	2 JUN 0615	76	992.	2 JUN 1025	126	437.	2 JUN 1435	176	58.
2 JUN 0210	27	5009.	2 JUN 0620	77	968.	2 JUN 1030	127	430.	2 JUN 1440	177	53.
2 JUN 0215	28	10453.	2 JUN 0625	78	950.	2 JUN 1035	128	422.	2 JUN 1445	178	48.
2 JUN 0220	29	18327.	2 JUN 0630	79	940.	2 JUN 1040	129	415.	2 JUN 1450	179	44.
2 JUN 0225	30	26000.	2 JUN 0635	80	933.	2 JUN 1045	130	407.	2 JUN 1455	180	40.
2 JUN 0230	31	28517.	2 JUN 0640	81	927.	2 JUN 1050	131	399.	2 JUN 1500	181	36.
2 JUN 0235	32	29072.	2 JUN 0645	82	922.	2 JUN 1055	132	391.	2 JUN 1505	182	33.
2 JUN 0240	33	26982.	2 JUN 0650	83	917.	2 JUN 1100	133	383.	2 JUN 1510	183	30.
2 JUN 0245	34	23334.	2 JUN 0655	84	913.	2 JUN 1105	134	376.	2 JUN 1515	184	27.
2 JUN 0250	35	19672.	2 JUN 0700	85	908.	2 JUN 1110	135	364.	2 JUN 1520	185	24.
2 JUN 0255	36	16499.	2 JUN 0705	86	903.	2 JUN 1115	136	343.	2 JUN 1525	186	22.
2 JUN 0300	37	13909.	2 JUN 0710	87	898.	2 JUN 1120	137	318.	2 JUN 1530	187	20.
2 JUN 0305	38	11686.	2 JUN 0715	88	894.	2 JUN 1125	138	293.	2 JUN 1535	188	18.
2 JUN 0310	39	10025.	2 JUN 0720	89	888.	2 JUN 1130	139	270.	2 JUN 1540	189	16.
2 JUN 0315	40	8646.	2 JUN 0725	90	882.	2 JUN 1135	140	250.	2 JUN 1545	190	15.
2 JUN 0320	41	7591.	2 JUN 0730	91	875.	2 JUN 1140	141	234.	2 JUN 1550	191	13.
2 JUN 0325	42	6707.	2 JUN 0735	92	867.	2 JUN 1145	142	219.	2 JUN 1555	192	12.
2 JUN 0330	43	5956.	2 JUN 0740	93	859.	2 JUN 1150	143	206.	2 JUN 1600	193	11.
2 JUN 0335	44	5367.	2 JUN 0745	94	851.	2 JUN 1155	144	196.	2 JUN 1605	194	10.
2 JUN 0340	45	4902.	2 JUN 0750	95	843.	2 JUN 1200	145	187.	2 JUN 1610	195	9.
2 JUN 0345	46	4572.	2 JUN 0755	96	833.	2 JUN 1205	146	179.	2 JUN 1615	196	8.
2 JUN 0350	47	4337.	2 JUN 0800	97	821.	2 JUN 1210	147	172.	2 JUN 1620	197	7.
2 JUN 0355	48	4146.	2 JUN 0805	98	809.	2 JUN 1215	148	167.	2 JUN 1625	198	7.
2 JUN 0400	49	3976.	2 JUN 0810	99	796.	2 JUN 1220	149	163.	2 JUN 1630	199	6.
2 JUN 0405	50	3798.	2 JUN 0815	100	780.	2 JUN 1225	150	158.	2 JUN 1635	200	6.

PEAK FLOW (CFS)	TIME (HR)		MAXIMUM AVERAGE FLOW 6-HR	24-HR	72-HR	16.58-HR
29072.	2.58	(CFS)	5314.	2171.	2171.	2171.
		(INCHES)	6.930	7.823	7.823	7.823
		(AC-FT)	2635.	2975.	2975.	2975.

CUMULATIVE AREA = 7.13 SQ MI

HYDROGRAPH AT C599I
TRANSPOSITION AREA 2.2 SQ MI

DA MON HRMN	ORD	FLOW	DA MON HRMN	ORD	FLOW	DA MON HRMN	ORD	FLOW	DA MON HRMN	ORD	FLOW
2 JUN 0000	1	6249.	2 JUN 0410	51	3546.	2 JUN 0820	101	762.	2 JUN 1230	151	154.
2 JUN 0005	2	5381.	2 JUN 0415	52	3234.	2 JUN 0825	102	740.	2 JUN 1235	152	150.
2 JUN 0010	3	3900.	2 JUN 0420	53	2933.	2 JUN 0830	103	706.	2 JUN 1240	153	147.
2 JUN 0015	4	2863.	2 JUN 0425	54	2618.	2 JUN 0835	104	669.	2 JUN 1245	154	143.
2 JUN 0020	5	2209.	2 JUN 0430	55	2304.	2 JUN 0840	105	638.	2 JUN 1250	155	140.
2 JUN 0025	6	1829.	2 JUN 0435	56	2053.	2 JUN 0845	106	613.	2 JUN 1255	156	136.
2 JUN 0030	7	1593.	2 JUN 0440	57	1881.	2 JUN 0850	107	593.	2 JUN 1300	157	133.
2 JUN 0035	8	1443.	2 JUN 0445	58	1771.	2 JUN 0855	108	576.	2 JUN 1305	158	130.
2 JUN 0040	9	1339.	2 JUN 0450	59	1688.	2 JUN 0900	109	562.	2 JUN 1310	159	127.
2 JUN 0045	10	1260.	2 JUN 0455	60	1622.	2 JUN 0905	110	550.	2 JUN 1315	160	125.
2 JUN 0050	11	1200.	2 JUN 0500	61	1567.	2 JUN 0910	111	541.	2 JUN 1320	161	122.
2 JUN 0055	12	1152.	2 JUN 0505	62	1516.	2 JUN 0915	112	534.	2 JUN 1325	162	119.
2 JUN 0100	13	1113.	2 JUN 0510	63	1455.	2 JUN 0920	113	526.	2 JUN 1330	163	117.
2 JUN 0105	14	1083.	2 JUN 0515	64	1391.	2 JUN 0925	114	518.	2 JUN 1335	164	114.
2 JUN 0110	15	1067.	2 JUN 0520	65	1340.	2 JUN 0930	115	510.	2 JUN 1340	165	112.
2 JUN 0115	16	1060.	2 JUN 0525	66	1295.	2 JUN 0935	116	503.	2 JUN 1345	166	109.
2 JUN 0120	17	1055.	2 JUN 0530	67	1256.	2 JUN 0940	117	495.	2 JUN 1350	167	107.
2 JUN 0125	18	1059.	2 JUN 0535	68	1220.	2 JUN 0945	118	488.	2 JUN 1355	168	105.
2 JUN 0130	19	1069.	2 JUN 0540	69	1186.	2 JUN 0950	119	481.	2 JUN 1400	169	100.
2 JUN 0135	20	1079.	2 JUN 0545	70	1155.	2 JUN 0955	120	475.	2 JUN 1405	170	93.
2 JUN 0140	21	1089.	2 JUN 0550	71	1127.	2 JUN 1000	121	468.	2 JUN 1410	171	85.
2 JUN 0145	22	1098.	2 JUN 0555	72	1099.	2 JUN 1005	122	462.	2 JUN 1415	172	79.
2 JUN 0150	23	1106.	2 JUN 0600	73	1074.	2 JUN 1010	123	456.	2 JUN 1420	173	74.
2 JUN 0155	24	1112.	2 JUN 0605	74	1048.	2 JUN 1015	124	450.	2 JUN 1425	174	69.
2 JUN 0200	25	1118.	2 JUN 0610	75	1019.	2 JUN 1020	125	444.	2 JUN 1430	175	63.
2 JUN 0205	26	1947.	2 JUN 0615	76	992.	2 JUN 1025	126	437.	2 JUN 1435	176	58.
2 JUN 0210	27	5009.	2 JUN 0620	77	968.	2 JUN 1030	127	430.	2 JUN 1440	177	53.
2 JUN 0215	28	10453.	2 JUN 0625	78	950.	2 JUN 1035	128	422.	2 JUN 1445	178	48.
2 JUN 0220	29	18327.	2 JUN 0630	79	940.	2 JUN 1040	129	415.	2 JUN 1450	179	44.
2 JUN 0225	30	26000.	2 JUN 0635	80	933.	2 JUN 1045	130	407.	2 JUN 1455	180	40.
2 JUN 0230	31	28517.	2 JUN 0640	81	927.	2 JUN 1050	131	399.	2 JUN 1500	181	36.
2 JUN 0235	32	29072.	2 JUN 0645	82	922.	2 JUN 1055	132	391.	2 JUN 1505	182	33.
2 JUN 0240	33	26982.	2 JUN 0650	83	917.	2 JUN 1100	133	383.	2 JUN 1510	183	30.
2 JUN 0245	34	23334.	2 JUN 0655	84	913.	2 JUN 1105	134	376.	2 JUN 1515	184	27.
2 JUN 0250	35	19672.	2 JUN 0700	85	908.	2 JUN 1110	135	364.	2 JUN 1520	185	24.
2 JUN 0255	36	16499.	2 JUN 0705	86	903.	2 JUN 1115	136	343.	2 JUN 1525	186	22.
2 JUN 0300	37	13909.	2 JUN 0710	87	898.	2 JUN 1120	137	318.	2 JUN 1530	187	20.
2 JUN 0305	38	11686.	2 JUN 0715	88	894.	2 JUN 1125	138	293.	2 JUN 1535	188	18.
2 JUN 0310	39	10025.	2 JUN 0720	89	888.	2 JUN 1130	139	270.	2 JUN 1540	189	16.
2 JUN 0315	40	8646.	2 JUN 0725	90	882.	2 JUN 1135	140	250.	2 JUN 1545	190	15.
2 JUN 0320	41	7591.	2 JUN 0730	91	875.	2 JUN 1140	141	234.	2 JUN 1550	191	13.
2 JUN 0325	42	6707.	2 JUN 0735	92	867.	2 JUN 1145	142	219.	2 JUN 1555	192	12.
2 JUN 0330	43	5956.	2 JUN 0740	93	859.	2 JUN 1150	143	206.	2 JUN 1600	193	11.
2 JUN 0335	44	5367.	2 JUN 0745	94	851.	2 JUN 1155	144	196.	2 JUN 1605	194	10.
2 JUN 0340	45	4902.	2 JUN 0750	95	843.	2 JUN 1200	145	187.	2 JUN 1610	195	9.
2 JUN 0345	46	4572.	2 JUN 0755	96	833.	2 JUN 1205	146	179.	2 JUN 1615	196	8.
2 JUN 0350	47	4337.	2 JUN 0800	97	821.	2 JUN 1210	147	172.	2 JUN 1620	197	7.
2 JUN 0355	48	4146.	2 JUN 0805	98	809.	2 JUN 1215	148	167.	2 JUN 1625	198	7.
2 JUN 0400	49	3976.	2 JUN 0810	99	796.	2 JUN 1220	149	163.	2 JUN 1630	199	6.
2 JUN 0405	50	3798.	2 JUN 0815	100	780.	2 JUN 1225	150	158.	2 JUN 1635	200	6.

PEAK FLOW (CFS)	TIME (HR)		MAXIMUM AVERAGE FLOW 6-HR	24-HR	72-HR	16.58-HR
29072.	2.58	(CFS)	5314.	2171.	2171.	2171.
		(INCHES)	6.930	7.823	7.823	7.823
		(AC-FT)	2635.	2975.	2975.	2975.

CUMULATIVE AREA = 7.13 SQ MI

HYDROGRAPH AT C599I
TRANSPOSITION AREA 7.2 SQ MI

DA MON HRMN	ORD	FLOW	DA MON HRMN	ORD	FLOW	DA MON HRMN	ORD	FLOW	DA MON HRMN	ORD	FLOW

2 JUN 0000	1	6249.	*	2 JUN 0410	51	2986.	*	2 JUN 0820	101	764.	*	2 JUN 1230	151	154.
2 JUN 0005	2	5380.	*	2 JUN 0415	52	2720.	*	2 JUN 0825	102	743.	*	2 JUN 1235	152	150.
2 JUN 0010	3	3895.	*	2 JUN 0420	53	2475.	*	2 JUN 0830	103	710.	*	2 JUN 1240	153	146.
2 JUN 0015	4	2851.	*	2 JUN 0425	54	2242.	*	2 JUN 0835	104	672.	*	2 JUN 1245	154	142.
2 JUN 0020	5	2194.	*	2 JUN 0430	55	2050.	*	2 JUN 0840	105	641.	*	2 JUN 1250	155	139.
2 JUN 0025	6	1815.	*	2 JUN 0435	56	1908.	*	2 JUN 0845	106	616.	*	2 JUN 1255	156	136.
2 JUN 0030	7	1578.	*	2 JUN 0440	57	1797.	*	2 JUN 0850	107	595.	*	2 JUN 1300	157	133.
2 JUN 0035	8	1428.	*	2 JUN 0445	58	1714.	*	2 JUN 0855	108	578.	*	2 JUN 1305	158	130.
2 JUN 0040	9	1322.	*	2 JUN 0450	59	1649.	*	2 JUN 0900	109	563.	*	2 JUN 1310	159	127.
2 JUN 0045	10	1242.	*	2 JUN 0455	60	1597.	*	2 JUN 0905	110	551.	*	2 JUN 1315	160	124.
2 JUN 0050	11	1181.	*	2 JUN 0500	61	1551.	*	2 JUN 0910	111	543.	*	2 JUN 1320	161	121.
2 JUN 0055	12	1131.	*	2 JUN 0505	62	1504.	*	2 JUN 0915	112	535.	*	2 JUN 1325	162	119.
2 JUN 0100	13	1091.	*	2 JUN 0510	63	1443.	*	2 JUN 0920	113	527.	*	2 JUN 1330	163	116.
2 JUN 0105	14	1061.	*	2 JUN 0515	64	1376.	*	2 JUN 0925	114	519.	*	2 JUN 1335	164	114.
2 JUN 0110	15	1047.	*	2 JUN 0520	65	1324.	*	2 JUN 0930	115	511.	*	2 JUN 1340	165	111.
2 JUN 0115	16	1038.	*	2 JUN 0525	66	1280.	*	2 JUN 0935	116	504.	*	2 JUN 1345	166	109.
2 JUN 0120	17	1030.	*	2 JUN 0530	67	1241.	*	2 JUN 0940	117	497.	*	2 JUN 1350	167	106.
2 JUN 0125	18	1027.	*	2 JUN 0535	68	1206.	*	2 JUN 0945	118	489.	*	2 JUN 1355	168	104.
2 JUN 0130	19	1027.	*	2 JUN 0540	69	1174.	*	2 JUN 0950	119	483.	*	2 JUN 1400	169	98.
2 JUN 0135	20	1032.	*	2 JUN 0545	70	1144.	*	2 JUN 0955	120	476.	*	2 JUN 1405	170	91.
2 JUN 0140	21	1040.	*	2 JUN 0550	71	1116.	*	2 JUN 1000	121	469.	*	2 JUN 1410	171	83.
2 JUN 0145	22	1050.	*	2 JUN 0555	72	1089.	*	2 JUN 1005	122	463.	*	2 JUN 1415	172	78.
2 JUN 0150	23	1059.	*	2 JUN 0600	73	1064.	*	2 JUN 1010	123	457.	*	2 JUN 1420	173	73.
2 JUN 0155	24	1067.	*	2 JUN 0605	74	1039.	*	2 JUN 1015	124	451.	*	2 JUN 1425	174	67.
2 JUN 0200	25	1074.	*	2 JUN 0610	75	1013.	*	2 JUN 1020	125	445.	*	2 JUN 1430	175	62.
2 JUN 0205	26	1849.	*	2 JUN 0615	76	986.	*	2 JUN 1025	126	439.	*	2 JUN 1435	176	57.
2 JUN 0210	27	4635.	*	2 JUN 0620	77	963.	*	2 JUN 1030	127	432.	*	2 JUN 1440	177	52.
2 JUN 0215	28	9372.	*	2 JUN 0625	78	948.	*	2 JUN 1035	128	425.	*	2 JUN 1445	178	47.
2 JUN 0220	29	16208.	*	2 JUN 0630	79	939.	*	2 JUN 1040	129	417.	*	2 JUN 1450	179	43.
2 JUN 0225	30	23343.	*	2 JUN 0635	80	933.	*	2 JUN 1045	130	409.	*	2 JUN 1455	180	39.
2 JUN 0230	31	25844.	*	2 JUN 0640	81	927.	*	2 JUN 1050	131	401.	*	2 JUN 1500	181	35.
2 JUN 0235	32	26510.	*	2 JUN 0645	82	922.	*	2 JUN 1055	132	393.	*	2 JUN 1505	182	32.
2 JUN 0240	33	24920.	*	2 JUN 0650	83	918.	*	2 JUN 1100	133	386.	*	2 JUN 1510	183	29.
2 JUN 0245	34	21636.	*	2 JUN 0655	84	913.	*	2 JUN 1105	134	378.	*	2 JUN 1515	184	26.
2 JUN 0250	35	18320.	*	2 JUN 0700	85	908.	*	2 JUN 1110	135	370.	*	2 JUN 1520	185	24.
2 JUN 0255	36	15490.	*	2 JUN 0705	86	903.	*	2 JUN 1115	136	355.	*	2 JUN 1525	186	21.
2 JUN 0300	37	13276.	*	2 JUN 0710	87	899.	*	2 JUN 1120	137	331.	*	2 JUN 1530	187	19.
2 JUN 0305	38	11363.	*	2 JUN 0715	88	894.	*	2 JUN 1125	138	305.	*	2 JUN 1535	188	18.
2 JUN 0310	39	9871.	*	2 JUN 0720	89	889.	*	2 JUN 1130	139	280.	*	2 JUN 1540	189	16.
2 JUN 0315	40	8547.	*	2 JUN 0725	90	883.	*	2 JUN 1135	140	258.	*	2 JUN 1545	190	14.
2 JUN 0320	41	7506.	*	2 JUN 0730	91	876.	*	2 JUN 1140	141	240.	*	2 JUN 1550	191	13.
2 JUN 0325	42	6568.	*	2 JUN 0735	92	868.	*	2 JUN 1145	142	224.	*	2 JUN 1555	192	12.
2 JUN 0330	43	5744.	*	2 JUN 0740	93	860.	*	2 JUN 1150	143	210.	*	2 JUN 1600	193	11.
2 JUN 0335	44	5065.	*	2 JUN 0745	94	852.	*	2 JUN 1155	144	198.	*	2 JUN 1605	194	10.
2 JUN 0340	45	4537.	*	2 JUN 0750	95	844.	*	2 JUN 1200	145	188.	*	2 JUN 1610	195	9.
2 JUN 0345	46	4162.	*	2 JUN 0755	96	834.	*	2 JUN 1205	146	180.	*	2 JUN 1615	196	8.
2 JUN 0350	47	3875.	*	2 JUN 0800	97	823.	*	2 JUN 1210	147	173.	*	2 JUN 1620	197	7.
2 JUN 0355	48	3628.	*	2 JUN 0805	98	811.	*	2 JUN 1215	148	167.	*	2 JUN 1625	198	7.
2 JUN 0400	49	3415.	*	2 JUN 0810	99	797.	*	2 JUN 1220	149	163.	*	2 JUN 1630	199	6.
2 JUN 0405	50	3217.	*	2 JUN 0815	100	782.	*	2 JUN 1225	150	158.	*	2 JUN 1635	200	5.
			*				*				*			

****

PEAK FLOW (CFS)	TIME (HR)		MAXIMUM AVERAGE FLOW 6-HR	24-HR	72-HR	16.58-HR
26510.	2.58	(CFS)	4956.	2041.	2041.	2041.
		(INCHES)	6.462	7.357	7.357	7.357
		(AC-FT)	2457.	2798.	2798.	2798.

CUMULATIVE AREA = 7.13 SQ MI

****

INTERPOLATED HYDROGRAPH AT C599I

****

DA MON HRMN	ORD	FLOW	*	DA MON HRMN	ORD	FLOW	*	DA MON HRMN	ORD	FLOW	*	DA MON HRMN	ORD	FLOW
2 JUN 0000	1	6249.	*	2 JUN 0410	51	2987.	*	2 JUN 0820	101	764.	*	2 JUN 1230	151	154.
2 JUN 0005	2	5380.	*	2 JUN 0415	52	2721.	*	2 JUN 0825	102	743.	*	2 JUN 1235	152	150.
2 JUN 0010	3	3895.	*	2 JUN 0420	53	2477.	*	2 JUN 0830	103	710.	*	2 JUN 1240	153	146.
2 JUN 0015	4	2851.	*	2 JUN 0425	54	2242.	*	2 JUN 0835	104	672.	*	2 JUN 1245	154	142.
2 JUN 0020	5	2194.	*	2 JUN 0430	55	2051.	*	2 JUN 0840	105	641.	*	2 JUN 1250	155	139.
2 JUN 0025	6	1815.	*	2 JUN 0435	56	1908.	*	2 JUN 0845	106	616.	*	2 JUN 1255	156	136.
2 JUN 0030	7	1578.	*	2 JUN 0440	57	1797.	*	2 JUN 0850	107	595.	*	2 JUN 1300	157	133.
2 JUN 0035	8	1428.	*	2 JUN 0445	58	1714.	*	2 JUN 0855	108	578.	*	2 JUN 1305	158	130.

2 JUN 0040	9	1322.	*	2 JUN 0450	59	1649.	*	2 JUN 0900	109	563.	*	2 JUN 1310	159	127.
2 JUN 0045	10	1242.	*	2 JUN 0455	60	1597.	*	2 JUN 0905	110	551.	*	2 JUN 1315	160	124.
2 JUN 0050	11	1181.	*	2 JUN 0500	61	1551.	*	2 JUN 0910	111	543.	*	2 JUN 1320	161	121.
2 JUN 0055	12	1131.	*	2 JUN 0505	62	1504.	*	2 JUN 0915	112	535.	*	2 JUN 1325	162	119.
2 JUN 0100	13	1091.	*	2 JUN 0510	63	1443.	*	2 JUN 0920	113	527.	*	2 JUN 1330	163	116.
2 JUN 0105	14	1061.	*	2 JUN 0515	64	1376.	*	2 JUN 0925	114	519.	*	2 JUN 1335	164	114.
2 JUN 0110	15	1047.	*	2 JUN 0520	65	1324.	*	2 JUN 0930	115	511.	*	2 JUN 1340	165	111.
2 JUN 0115	16	1038.	*	2 JUN 0525	66	1280.	*	2 JUN 0935	116	504.	*	2 JUN 1345	166	109.
2 JUN 0120	17	1030.	*	2 JUN 0530	67	1241.	*	2 JUN 0940	117	497.	*	2 JUN 1350	167	106.
2 JUN 0125	18	1027.	*	2 JUN 0535	68	1206.	*	2 JUN 0945	118	489.	*	2 JUN 1355	168	104.
2 JUN 0130	19	1028.	*	2 JUN 0540	69	1174.	*	2 JUN 0950	119	483.	*	2 JUN 1400	169	98.
2 JUN 0135	20	1032.	*	2 JUN 0545	70	1144.	*	2 JUN 0955	120	476.	*	2 JUN 1405	170	91.
2 JUN 0140	21	1041.	*	2 JUN 0550	71	1116.	*	2 JUN 1000	121	469.	*	2 JUN 1410	171	83.
2 JUN 0145	22	1050.	*	2 JUN 0555	72	1089.	*	2 JUN 1005	122	463.	*	2 JUN 1415	172	78.
2 JUN 0150	23	1059.	*	2 JUN 0600	73	1064.	*	2 JUN 1010	123	457.	*	2 JUN 1420	173	73.
2 JUN 0155	24	1067.	*	2 JUN 0605	74	1039.	*	2 JUN 1015	124	451.	*	2 JUN 1425	174	67.
2 JUN 0200	25	1074.	*	2 JUN 0610	75	1013.	*	2 JUN 1020	125	445.	*	2 JUN 1430	175	62.
2 JUN 0205	26	1849.	*	2 JUN 0615	76	986.	*	2 JUN 1025	126	439.	*	2 JUN 1435	176	57.
2 JUN 0210	27	4636.	*	2 JUN 0620	77	963.	*	2 JUN 1030	127	432.	*	2 JUN 1440	177	52.
2 JUN 0215	28	9374.	*	2 JUN 0625	78	948.	*	2 JUN 1035	128	425.	*	2 JUN 1445	178	47.
2 JUN 0220	29	16212.	*	2 JUN 0630	79	939.	*	2 JUN 1040	129	417.	*	2 JUN 1450	179	43.
2 JUN 0225	30	23350.	*	2 JUN 0635	80	933.	*	2 JUN 1045	130	409.	*	2 JUN 1455	180	39.
2 JUN 0230	31	25850.	*	2 JUN 0640	81	927.	*	2 JUN 1050	131	401.	*	2 JUN 1500	181	35.
2 JUN 0235	32	26516.	*	2 JUN 0645	82	922.	*	2 JUN 1055	132	393.	*	2 JUN 1505	182	32.
2 JUN 0240	33	24925.	*	2 JUN 0650	83	918.	*	2 JUN 1100	133	386.	*	2 JUN 1510	183	29.
2 JUN 0245	34	21640.	*	2 JUN 0655	84	913.	*	2 JUN 1105	134	378.	*	2 JUN 1515	184	26.
2 JUN 0250	35	18324.	*	2 JUN 0700	85	908.	*	2 JUN 1110	135	370.	*	2 JUN 1520	185	24.
2 JUN 0255	36	15492.	*	2 JUN 0705	86	903.	*	2 JUN 1115	136	355.	*	2 JUN 1525	186	21.
2 JUN 0300	37	13277.	*	2 JUN 0710	87	899.	*	2 JUN 1120	137	331.	*	2 JUN 1530	187	19.
2 JUN 0305	38	11364.	*	2 JUN 0715	88	894.	*	2 JUN 1125	138	304.	*	2 JUN 1535	188	18.
2 JUN 0310	39	9872.	*	2 JUN 0720	89	889.	*	2 JUN 1130	139	280.	*	2 JUN 1540	189	16.
2 JUN 0315	40	8548.	*	2 JUN 0725	90	883.	*	2 JUN 1135	140	258.	*	2 JUN 1545	190	14.
2 JUN 0320	41	7506.	*	2 JUN 0730	91	876.	*	2 JUN 1140	141	240.	*	2 JUN 1550	191	13.
2 JUN 0325	42	6569.	*	2 JUN 0735	92	868.	*	2 JUN 1145	142	224.	*	2 JUN 1555	192	12.
2 JUN 0330	43	5744.	*	2 JUN 0740	93	860.	*	2 JUN 1150	143	210.	*	2 JUN 1600	193	11.
2 JUN 0335	44	5066.	*	2 JUN 0745	94	852.	*	2 JUN 1155	144	198.	*	2 JUN 1605	194	10.
2 JUN 0340	45	4538.	*	2 JUN 0750	95	844.	*	2 JUN 1200	145	188.	*	2 JUN 1610	195	9.
2 JUN 0345	46	4163.	*	2 JUN 0755	96	834.	*	2 JUN 1205	146	180.	*	2 JUN 1615	196	8.
2 JUN 0350	47	3877.	*	2 JUN 0800	97	823.	*	2 JUN 1210	147	173.	*	2 JUN 1620	197	7.
2 JUN 0355	48	3630.	*	2 JUN 0805	98	811.	*	2 JUN 1215	148	167.	*	2 JUN 1625	198	7.
2 JUN 0400	49	3416.	*	2 JUN 0810	99	797.	*	2 JUN 1220	149	163.	*	2 JUN 1630	199	6.
2 JUN 0405	50	3218.	*	2 JUN 0815	100	782.	*	2 JUN 1225	150	158.	*	2 JUN 1635	200	5.
			*				*				*			

****

PEAK FLOW (CFS)	TIME (HR)		MAXIMUM AVERAGE FLOW 6-HR	24-HR	72-HR	16.58-HR
26516.	2.58	(CFS)	4956.	2042.	2042.	2042.
		(INCHES)	6.463	7.358	7.358	7.358
		(AC-FT)	2458.	2798.	2798.	2798.

CUMULATIVE AREA = 7.13 SQ MI

STATION C599I

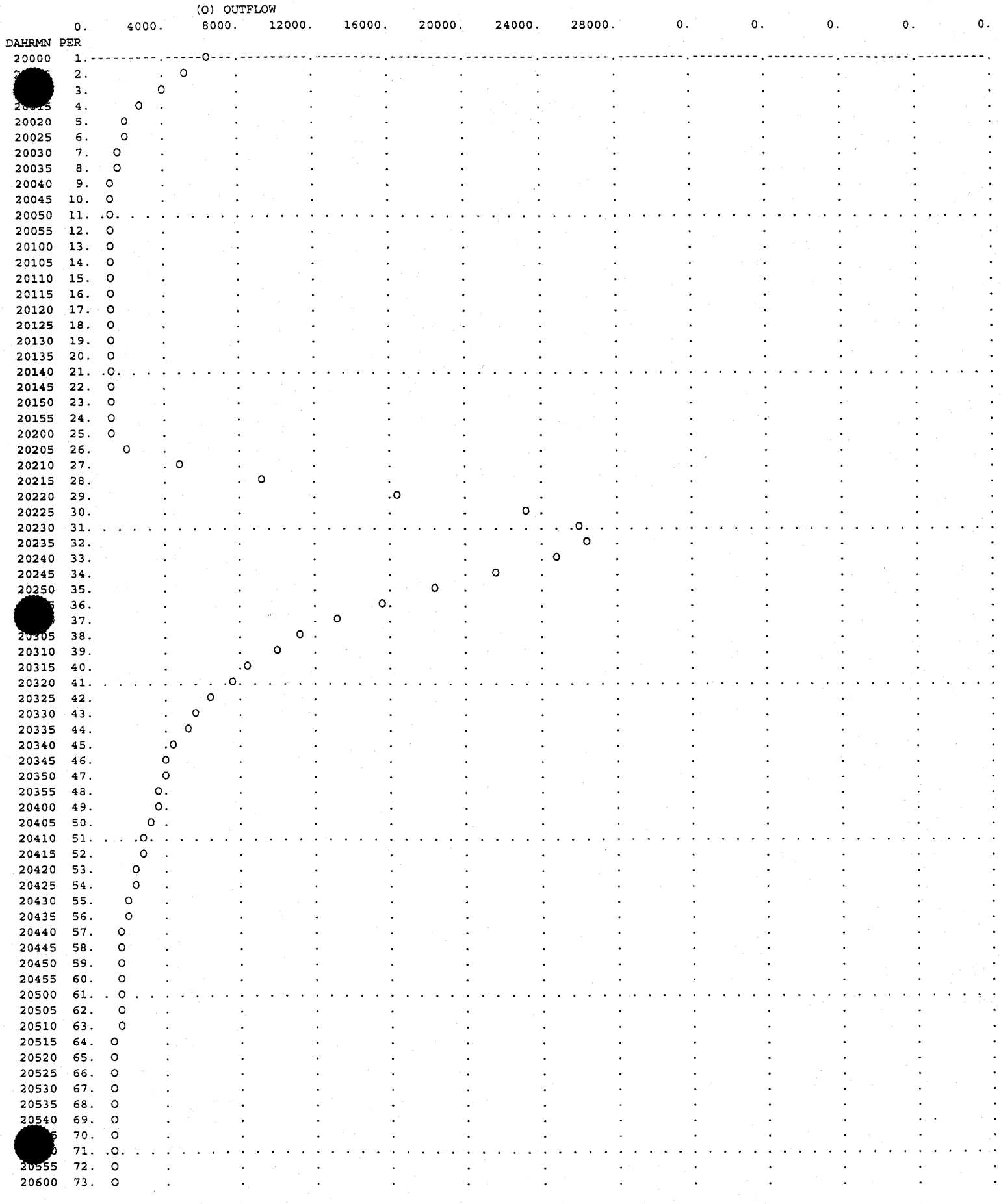

20605 74. O
20610 75. O
20615 76. O
20620 77. O
20625 78. O
20630 79. O
20635 80. O
20640 81. O
20645 82. O
20650 83. O
20655 84. O
20700 85. O
20705 86. O
20710 87. O
20715 88. O
20720 89. O
20725 90. O
20730 91. O
20735 92. O
20740 93. O
20745 94. O
20750 95. O
20755 96. O
20800 97. O
20805 98. O
20810 99. O
20815 100. O
20820 101. O
20825 102. O
20830 103. O
20835 104. O
20840 105. O
20845 106. O
20850 107.O
20855 108.O
20900 109.O
20905 110.O
20910 111.O.
20915 112.O
20920 113.O
20925 114.O
20930 115.O
20935 116.O
20940 117.O
20945 118.O
20950 119.O
20955 120.O
21000 121.O.
21005 122.O
21010 123.O
21015 124.O
21020 125.O
21025 126.O
21030 127.O
21035 128.O
21040 129.O
21045 130.O
21050 131.O.
21055 132.O
21100 133.O
21105 134.O
21110 135.O
21115 136.O
21120 137.O
21125 138.O
21130 139.O
21135 140.O
21140 141.O.
21145 142.O
21150 143.O
21155 144O
21200 145O
21205 146O
21210 147O
21215 148O
21220 149O
21225 150O
21230 151O

21235 1520
21240 1530
21245 1540
21250 1550
21255 1560
21300 1570
[illegible] 1580
[illegible] 1590
[illegible] 1600
21320 1610
21325 1620
21330 1630
21335 1640
21340 1650
21345 1660
21350 1670
21355 1680
21400 1690
21405 1700
21410 1710
21415 1720
21420 1730
21425 1740
21430 1750
21435 1760
21440 1770
21445 1780
21450 1790
21455 1800
21500 1810
21505 1820
21510 1830
21515 1840
21520 1850
21525 1860
21530 1870
21535 1880
21540 1890
21545 1900
21550 1910
[illegible] 1920
[illegible] 1930
21605 1940
21610 1950
21615 1960
21620 1970
21625 1980
21630 1990
21635 2000

RUNOFF SUMMARY
FLOW IN CUBIC FEET PER SECOND
TIME IN HOURS, AREA IN SQUARE MILES

OPERATION	STATION	PEAK FLOW	TIME OF PEAK	AVERAGE FLOW FOR MAXIMUM PERIOD 6-HOUR	24-HOUR	72-HOUR	BASIN AREA	MAXIMUM STAGE	TIME OF MAX STAGE
HYDROGRAPH AT	C560I	17974.	2.58	2897.	1051.	1051.	2.15		
DIVERSION TO	0.5PMF	8987.	2.58	1449.	525.	525.	2.15		
HYDROGRAPH AT	0.5PMF	8987.	2.58	1449.	525.	525.	2.15		
ROUTED TO	C560O	7963.	2.67	1525.	658.	658.	2.15		
ROUTED TO	560599	7909.	2.75	1529.	662.	662.	2.15		
HYDROGRAPH AT	C578I	26969.	2.33	2850.	1033.	1033.	2.00		
DIVERSION TO	0.5PMF	13484.	2.33	1425.	516.	516.	2.00		
HYDROGRAPH AT	0.5PMF	13484.	2.33	1425.	516.	516.	2.00		
ROUTED TO	C578O	12828.	2.42	1517.	633.	633.	2.00		
ROUTED TO	578599	11984.	2.50	1562.	653.	653.	2.00		
HYDROGRAPH AT	C584I	20238.	2.33	2265.	821.	821.	1.60		
DIVERSION TO	0.5PMF	10119.	2.33	1132.	410.	410.	1.60		
HYDROGRAPH AT	0.5PMF	10119.	2.33	1132.	410.	410.	1.60		
ROUTED TO	C584O	9855.	2.42	1229.	489.	489.	1.60		
ROUTED TO	584599	7907.	2.58	1293.	520.	520.	1.60		
HYDROGRAPH AT	C210	19580.	2.33	1956.	708.	708.	1.38		
DIVERSION TO	0.5PMF	9790.	2.33	978.	354.	354.	1.38		
HYDROGRAPH AT	0.5PMF	9790.	2.33	978.	354.	354.	1.38		
4 COMBINED AT	C599I	26516.	2.58	4956.	2042.	2042.	7.13		

*** NORMAL END OF HEC-1 ***

APPENDIX B

FLOOD HYDROLOGY (HEC-1)

100-YEAR, EXISTING CONDITION (6-HOUR)

100-YEAR, FUTURE CONDITION (6-HOUR)

10-YEAR, FUTURE CONDITION (6-HOUR)

NOTES:

1.) ELECTRONIC FILES CONTAINED IN APPENDIX J.

2.) THE 6-HOUR SOTRM PRODUCES DESIGN DISCHARGES. HEC-1 MODELS FOR THE 24-HOUR STORM ARE PROVIDED IN APPENDIX J.

100-Year, Existing Condition (6-Hour)

```
1****************************************
*                                      *
*   FLOOD HYDROGRAPH PACKAGE  (HEC-1)  *
*             MAY   1991               *
*           VERSION 4.0.1E             *
*     Lahey F77L-EM/32 version 5.01    *
*       Dodson & Associates, Inc.      *
*  RUN DATE  09/13/99  TIME  14:43:33  *
****************************************
```

```
****************************************
*                                      *
*    U.S. ARMY CORPS OF ENGINEERS      *
*    HYDROLOGIC ENGINEERING CENTER     *
*          609 SECOND STREET           *
*       DAVIS, CALIFORNIA 95616        *
*           (916) 551-1748             *
*                                      *
****************************************
```

```
X     X  XXXXXXX   XXXXX          X
X     X  X        X     X        XX
X     X  X        X              X
XXXXXXX  XXXX     X        XXXXX X
X     X  X        X              X
X     X  X        X     X        X
X     X  XXXXXXX   XXXXX        XXX
```

THIS PROGRAM REPLACES ALL PREVIOUS VERSIONS OF HEC-1 KNOWN AS HEC1 (JAN 73), HEC1GS, HEC1DB, AND HEC1KW.

THE DEFINITIONS OF VARIABLES -RTIMP- AND -RTIOR- HAVE CHANGED FROM THOSE USED WITH THE 1973-STYLE INPUT STRUCTURE.
THE DEFINITION OF -AMSKK- ON RM-CARD WAS CHANGED WITH REVISIONS DATED 28 SEP 81. THIS IS THE FORTRAN77 VERSION
NEW OPTIONS: DAMBREAK OUTFLOW SUBMERGENCE , SINGLE EVENT DAMAGE CALCULATION, DSS:WRITE STAGE FREQUENCY,
DSS:READ TIME SERIES AT DESIRED CALCULATION INTERVAL LOSS RATE:GREEN AND AMPT INFILTRATION
KINEMATIC WAVE: NEW FINITE DIFFERENCE ALGORITHM

```
1                                    HEC-1 INPUT                                                    PAGE  1

  LINE          ID.......1.......2.......3.......4.......5.......6.......7.......8.......9......10

    1           ID   Golden Eagle Park Dam Modifications
    2           ID        by Stantec: Proj. No. 28900095                    File: EX100-6.IH1
    3           ID        for FCDMC:  FCD                                   Date:03-29-99     mcg
    4           ID                                                        Revised:
    5           ID
    6           ID   100-year, 6-hour existing condition watershed model for Ashbrook Wash
    7           ID   upstream of the Fort McDowell Indian Reservation boundary.
    8           ID        This model is a portion of the original Fountain Hills North FDS
    9           ID        watershed model conducted by GVSCE, 1994.  The title cards from that
   10           ID        model are included for reference.
   11           ID
   12           ID   Fountain Hills North Floodplain Delineation Study
   13           ID        FCD 92-04        by GVSCE                        File:  EX100-6.IH1
   14           ID     Existing Condition                                  Date:    02-25-94   trl
   15           ID     100-Year 6-Hour Storm, Clark Unit Hydrograph      Revised:    09-14-94   trl
                *
   16           IT       1                    1080
   17           IO       5
   18           IN      15
                *DIAGRAM
                *
   19           JD    3.30    0.01
   20           PC   0.000   0.008   0.016   0.025   0.033   0.041   0.050   0.058   0.066   0.074
   21           PC   0.087   0.099   0.118   0.138   0.216   0.377   0.834   0.911   0.931   0.950
   22           PC   0.962   0.972   0.983   0.991   1.000
   23           JD    3.28    0.50
   24           JD    3.23    2.80
   25           PC   0.000   0.009   0.016   0.025   0.034   0.042   0.051   0.059   0.067   0.076
   26           PC   0.087   0.100   0.120   0.163   0.252   0.451   0.694   0.837   0.900   0.938
   27           PC   0.950   0.963   0.975   0.988   1.000
   28           JD    3.04    16.0
   29           PC   0.000   0.015   0.020   0.030   0.048   0.063   0.076   0.090   0.105   0.119
   30           PC   0.135   0.152   0.175   0.222   0.304   0.472   0.670   0.796   0.868   0.912
   31           PC   0.946   0.960   0.973   0.987   1.000
   32           JD    2.67    90.0
   33           PC   0.000   0.021   0.035   0.051   0.071   0.087   0.105   0.125   0.143   0.160
   34           PC   0.179   0.201   0.232   0.281   0.364   0.500   0.658   0.773   0.841   0.888
   35           PC   0.927   0.945   0.964   0.982   1.000
                *

   36           KK    204A
   37           KM   Sub-Basin   204A
   38           KM
   39           KM      The Clark Unit Hydrograph is used for this basin.
   40           KM          The Natural time-area relation is used for this basin.
   41           KM
   42           KM      Time of Concentration for this sub-basin is based on the following:
   43           KM          6-Hour Rainfall, Pattern No.  1.00
   44           KM          An rainfall areal reduction factor of 0.999
   45           KM
   46           KM        EXCESS RAINFALL VALUES EXCEEDED IN 5-MINUTE INTERVALS
   47           KM     5  10  15  20  25  30  35  40  45  50  55  60  65  70  75  80  85  90
   48           KM   .45 .44 .44 .13 .10 .09 .04 .03 .03 .00 .00 .00 .00 .00 .00 .00 .00 .00
   49           KM
   50           KM          L=   0.687 miles, S=  175 feet/mile, Kb= .10
1                                    HEC-1 INPUT                                                    PAGE  2

  LINE          ID.......1.......2.......3.......4.......5.......6.......7.......8.......9......10

   51           KM
   52           BA   0.108
   53           LG    0.15    0.39    5.80    0.19    0.00
   54           UC   0.325   0.280
```

```
 55          UA       0       3       5       8      12      20      43      75      90      96
 56          UA     100
             *

 57          KK  522523
 58          KM      Normal depth channel route from C522 to C523
 59          KM      Source:  200 Scale Mapping
 60          RS      10    FLOW     -1
 61          RC   0.060   0.050   0.060  3275.0  0.0197
 62          RX  1000.0  1020.0  1035.0  1065.0  1080.0  1120.0  1160.0  1185.0
 63          RY  1678.0  1676.0  1674.0  1672.0  1672.0  1674.0  1676.0  1678.0
             *

 64          KK    204B
 65          KM   Sub-Basin   204B
 66          KM
 67          KM      The Clark Unit Hydrograph is used for this basin.
 68          KM          The Natural time-area relation is used for this basin.
 69          KM
 70          KM      Time of Concentration for this sub-basin is based on the following:
 71          KM          6-Hour Rainfall, Pattern No.  1.00
 72          KM          An rainfall areal reduction factor of 0.998
 73          KM
 74          KM       EXCESS RAINFALL VALUES EXCEEDED IN 5-MINUTE INTERVALS
 75          KM     5  10  15  20  25  30  35  40  45  50  55  60  65  70  75  80  85  90
 76          KM   .44 .44 .43 .13 .09 .08 .03 .03 .03 .00 .00 .00 .00 .00 .00 .00 .00 .00
 77          KM
 78          KM          L=   0.775 miles, S=  128 feet/mile, Kb= .10
 79          KM
 80          BA   0.126
 81          LG    0.15    0.39    5.80    0.21    0.20
 82          UC   0.408   0.364
 83          UA       0       3       5       8      12      20      43      75      90      96
 84          UA     100
             *

 85          KK   C523I
 86          KM      Hydrograph combine 522523 + 204B at C523I
 87          HC       2
             *

 88          KK   C523O
 89          KM      Reservoir route at C523.
 90          RS       1    ELEV  1650.3
 91          SV    0.00    0.01    0.12    0.71    2.23    2.50    2.80    3.10    3.20    3.40
 92          SV    3.70    4.00    4.30    4.60    4.90    5.20    5.50
 93          SE  1650.3  1652.0  1654.0  1656.0  1658.0  1658.2  1658.4  1658.6  1658.7  1658.8
 94          SE  1659.0  1659.2  1659.4  1659.6  1659.8  1660.0  1660.2
 95          SQ       0      22      78     144     209     214     220     224     226     232
 96          SQ     239     249     288     384     529     726     960
             *
```



```
LINE         ID.......1.......2.......3.......4.......5.......6.......7.......8.......9......10

 97          KK   D523L
 98          KM      Hydrograph diversion at C523.  Main flow continues in the left branch.
 99          KM      Diverted flow is in the right branch.
100          DT   D523R
101          DI       0      22      78     144     209     214     220     224     226     232
102          DI     239     249     288     384     529     726     960
103          DQ       0       0       0       0       0       0       0       0       0       3
104          DQ       5      10      20      37      61      96     139
             *

105          KK    205A
106          KM   Sub-Basin   205A
107          KM
108          KM      The Clark Unit Hydrograph is used for this basin.
109          KM          The Natural time-area relation is used for this basin.
110          KM
111          KM      Time of Concentration for this sub-basin is based on the following:
112          KM          6-Hour Rainfall, Pattern No.  1.00
113          KM          An rainfall areal reduction factor of 0.998
114          KM
115          KM       EXCESS RAINFALL VALUES EXCEEDED IN 5-MINUTE INTERVALS
116          KM     5  10  15  20  25  30  35  40  45  50  55  60  65  70  75  80  85  90
117          KM   .45 .44 .44 .13 .09 .08 .04 .04 .03 .03 .03 .03 .01 .01 .01 .01 .01 .01
118          KM
119          KM          L=   0.870 miles, S=  378 feet/mile, Kb= .14
120          KM
121          BA   0.118
122          LG    0.25    0.35    4.35    0.40   35.00
123          UC   0.350   0.350
124          UA       0       3       5       8      12      20      43      75      90      96
125          UA     100
             *

126          KK    205B
127          KM   Sub-Basin   205B
128          KM
129          KM      The Clark Unit Hydrograph is used for this basin.
130          KM          The Natural time-area relation is used for this basin.
131          KM
132          KM      Time of Concentration for this sub-basin is based on the following:
133          KM          6-Hour Rainfall, Pattern No.  1.00
134          KM          An rainfall areal reduction factor of 0.997
135          KM
136          KM       EXCESS RAINFALL VALUES EXCEEDED IN 5-MINUTE INTERVALS
137          KM     5  10  15  20  25  30  35  40  45  50  55  60  65  70  75  80  85  90
```

```
138          KM   .45 .44 .44 .13 .09 .08 .04 .04 .03 .03 .03 .03 .01 .01 .01 .01 .01 .01
139          KM
140          KM          L=   0.759 miles, S=  373 feet/mile, Kb= .14
141          KM
142          BA   0.211
143          LG    0.25    0.35    4.35    0.40   35.00
144          UC   0.321   0.204
145          UA       0       3       5       8      12      20      43      75      90      96
146          UA     100
             *
1                                          HEC-1 INPUT                                          PAGE  4

LINE         ID.......1.......2.......3.......4.......5.......6.......7.......8.......9......10

147          KK    C528
148          KM      Hydrograph combine 205A + 205B at C528
149          HC       2
             *

150          KK  528530
151          KM      Normal depth channel route from C528 to C530
152          KM      Source:  Hydrology Field Reconnaissance
153          RS       2    FLOW     -1
154          RC   0.060   0.043   0.060  2594.0  0.0709
155          RX  1000.0  1018.0  1031.0  1042.0  1052.0  1066.0  1093.0  1107.0
156          RY    96.3    92.2    89.9    85.9    85.7    91.5    91.2    96.3
             *

157          KK    205C
158          KM   Sub-Basin   205C
159          KM
160          KM      The Clark Unit Hydrograph is used for this basin.
161          KM          The Natural time-area relation is used for this basin.
162          KM
163          KM      Time of Concentration for this sub-basin is based on the following:
164          KM          6-Hour Rainfall, Pattern No.  1.00
165          KM          An rainfall areal reduction factor of 0.999
166          KM
167          KM        EXCESS RAINFALL VALUES EXCEEDED IN 5-MINUTE INTERVALS
168          KM     5  10  15  20  25  30  35  40  45  50  55  60  65  70  75  80  85  90
169          KM   .45 .44 .44 .13 .09 .08 .04 .04 .03 .03 .03 .03 .01 .01 .01 .01 .01 .01
170          KM
171          KM          L=   0.618 miles, S=  331 feet/mile, Kb= .15
172          KM
173          BA   0.059
174          LG    0.25    0.35    4.35    0.41   35.00
175          UC   0.308   0.343
176          UA       0       3       5       8      12      20      43      75      90      96
177          UA     100
             *

178          KK   C530R
179          KM      Hydrograph combine 528530 + 205C at C530 right branch
180          HC       2
             *

181          KK    205D
182          KM   Sub-Basin   205D
183          KM
184          KM      The Clark Unit Hydrograph is used for this basin.
185          KM          The Natural time-area relation is used for this basin.
186          KM
187          KM      Time of Concentration for this sub-basin is based on the following:
188          KM          6-Hour Rainfall, Pattern No.  1.00
189          KM          An rainfall areal reduction factor of 0.996
190          KM
191          KM        EXCESS RAINFALL VALUES EXCEEDED IN 5-MINUTE INTERVALS
192          KM     5  10  15  20  25  30  35  40  45  50  55  60  65  70  75  80  85  90
1                                          HEC-1 INPUT                                          PAGE  5

LINE         ID.......1.......2.......3.......4.......5.......6.......7.......8.......9......10

193          KM   .45 .44 .44 .13 .09 .08 .04 .04 .03 .03 .03 .03 .01 .01 .01 .01 .01 .01
194          KM
195          KM          L=   1.020 miles, S=  361 feet/mile, Kb= .13
196          KM
197          BA   0.319
198          LG    0.25    0.35    4.35    0.40   35.00
199          UC   0.379   0.246
200          UA       0       3       5       8      12      20      43      75      90      96
201          UA     100
             *

202          KK    205E
203          KM   Sub-Basin   205E
204          KM
205          KM      The Clark Unit Hydrograph is used for this basin.
206          KM          The Natural time-area relation is used for this basin.
207          KM
208          KM      Time of Concentration for this sub-basin is based on the following:
209          KM          6-Hour Rainfall, Pattern No.  1.00
210          KM          An rainfall areal reduction factor of 0.997
211          KM
212          KM        EXCESS RAINFALL VALUES EXCEEDED IN 5-MINUTE INTERVALS
213          KM     5  10  15  20  25  30  35  40  45  50  55  60  65  70  75  80  85  90
214          KM   .45 .44 .44 .13 .09 .08 .04 .04 .03 .03 .03 .03 .01 .01 .01 .01 .01 .01
215          KM
216          KM          L=   1.357 miles, S=  358 feet/mile, Kb= .14
217          KM
218          BA   0.218
```

```
219          LG    0.25    0.35    4.35    0.40   35.00
220          UC   0.488   0.508
221          UA       0       3       5       8      12      20      43      75      90      96
222          UA     100
             *

223          KK    C529
224          KM      Hydrograph combine 205D + 205E at C529
225          HC       2
             *
             * *
             * * NOTE:  529530 too short to route
             * *
             *

226          KK    C530
227          KM      Hydrograph combine C529 + C530R at C530
228          HC       2
             *

229          KK  530531
230          KM      Normal depth channel route from C530 to C531
231          KM      Source:  Hydrology Field Reconnaissance
232          RS       3    FLOW      -1
233          RC   0.060   0.059   0.060  2426.0  0.0404
234          RX  1000.0  1035.0  1050.0  1060.0  1075.0  1081.0  1088.0  1094.0
235          RY    95.9    86.5    86.2    83.1    84.0    90.2    95.6    99.3
             *
1                                          HEC-1 INPUT                                                    PAGE  6

LINE         ID.......1.......2.......3.......4.......5.......6.......7.......8.......9......10

236          KK    205F
237          KM   Sub-Basin   205F
238          KM
239          KM      The Clark Unit Hydrograph is used for this basin.
240          KM          The Natural time-area relation is used for this basin.
241          KM
242          KM      Time of Concentration for this sub-basin is based on the following:
243          KM          6-Hour Rainfall, Pattern No.  1.00
244          KM          An rainfall areal reduction factor of 0.998
245          KM
246          KM       EXCESS RAINFALL VALUES EXCEEDED IN 5-MINUTE INTERVALS
247          KM     5  10  15  20  25  30  35  40  45  50  55  60  65  70  75  80  85  90
248          KM   .45 .44 .44 .13 .09 .08 .04 .04 .03 .03 .03 .03 .01 .01 .01 .01 .01 .01
249          KM
250          KM          L=   0.786 miles, S=  326 feet/mile, Kb= .14
251          KM
252          BA   0.161
253          LG    0.25    0.35    4.35    0.41   35.00
254          UC   0.350   0.269
255          UA       0       3       5       8      12      20      43      75      90      96
256          UA     100
             *

257          KK    C531
258          KM      Hydrograph combine 530531 + 205F at C531
259          HC       2
             *

260          KK  531532
261          KM      Normal depth channel route from C531 to C532
262          KM      Source:  Hydrology Field Reconnaissance
263          RS       4    FLOW      -1
264          RC   0.060   0.065   0.060  3391.0  0.0463
265          RX  1000.0  1012.0  1022.0  1032.0  1050.0  1056.0  1068.0  1092.0
266          RY    98.8    93.8    89.1    86.4    86.5    89.1    91.0    97.6
             *

267          KK    205G
268          KM   Sub-Basin   205G
269          KM
270          KM      The Clark Unit Hydrograph is used for this basin.
271          KM          The Natural time-area relation is used for this basin.
272          KM
273          KM      Time of Concentration for this sub-basin is based on the following:
274          KM          6-Hour Rainfall, Pattern No.  1.00
275          KM          An rainfall areal reduction factor of 0.998
276          KM
277          KM       EXCESS RAINFALL VALUES EXCEEDED IN 5-MINUTE INTERVALS
278          KM     5  10  15  20  25  30  35  40  45  50  55  60  65  70  75  80  85  90
279          KM   .45 .44 .44 .13 .09 .07 .03 .03 .03 .03 .03 .03 .01 .01 .01 .01 .01 .01
280          KM
281          KM          L=   0.924 miles, S=  338 feet/mile, Kb= .13
282          KM
283          BA   0.185
1                                          HEC-1 INPUT                                                    PAGE  7

LINE         ID.......1.......2.......3.......4.......5.......6.......7.......8.......9......10

284          LG    0.24    0.35    4.50    0.40   31.20
285          UC   0.367   0.298
286          UA       0       3       5       8      12      20      43      75      90      96
287          UA     100
             *

288          KK   C532L
289          KM      Hydrograph combine 531532 + 205G at C532 left branch
290          HC       2
             *
```

```
291          KK    205H
292          KM   Sub-Basin   205H
293          KM
294          KM      The Clark Unit Hydrograph is used for this basin.
295          KM          The Natural time-area relation is used for this basin.
296          KM
297          KM      Time of Concentration for this sub-basin is based on the following:
298          KM          6-Hour Rainfall, Pattern No.  1.00
299          KM          An rainfall areal reduction factor of 0.997
300          KM
301          KM       EXCESS RAINFALL VALUES EXCEEDED IN 5-MINUTE INTERVALS
302          KM     5  10  15  20  25  30  35  40  45  50  55  60  65  70  75  80  85  90
303          KM   .45 .44 .44 .13 .09 .08 .04 .03 .03 .03 .03 .03 .01 .01 .01 .01 .01 .01
304          KM
305          KM          L=   1.464 miles, S=  325 feet/mile, Kb= .13
306          KM
307          BA   0.261
308          LG    0.24    0.35    4.50    0.39   31.60
309          UC   0.513   0.514
310          UA       0       3       5       8      12      20      43      75      90      96
311          UA     100
             *

312          KK    C532
313          KM      Hydrograph combine C532L + 205H at C532
314          HC       2
             *

315          KK  532533
316          KM      Normal depth channel route from C532 to C533
317          KM      Source:  Hydrology Field Reconnaissance
318          RS       1    FLOW     -1
319          RC   0.060   0.045   0.060  1555.0  0.0283
320          RX  1000.0  1020.0  1030.0  1048.0  1065.0  1077.0  1092.0  1119.0
321          RY    98.0    89.4    88.1    85.6    85.9    92.2    93.8    97.0
             *

322          KK    205I
323          KM   Sub-Basin   205I
324          KM
325          KM      The Clark Unit Hydrograph is used for this basin.
326          KM          The Natural time-area relation is used for this basin.
327          KM
328          KM      Time of Concentration for this sub-basin is based on the following:
```



```
LINE         ID.......1.......2.......3.......4.......5.......6.......7.......8.......9......10

329          KM          6-Hour Rainfall, Pattern No.  1.00
330          KM          An rainfall areal reduction factor of 0.995
331          KM
332          KM       EXCESS RAINFALL VALUES EXCEEDED IN 5-MINUTE INTERVALS
333          KM     5  10  15  20  25  30  35  40  45  50  55  60  65  70  75  80  85  90
334          KM   .44 .44 .43 .13 .09 .08 .03 .03 .03 .01 .01 .01 .00 .00 .00 .00 .00 .00
335          KM
336          KM          L=   1.487 miles, S=  326 feet/mile, Kb= .11
337          KM
338          BA   0.354
339          LG    0.20    0.37    5.20    0.28   15.20
340          UC   0.458   0.386
341          UA       0       3       5       8      12      20      43      75      90      96
342          UA     100
             *

343          KK    C533
344          KM      Hydrograph combine 532533 + 205I at C533
345          HC       2
             *

346          KK  533534
347          KM      Normal depth channel route from C533 to C534
348          KM      Source:  Hydrology Field Reconnaissance
349          RS      10    FLOW     -1
350          RC   0.060   0.046   0.060  7145.0  0.0241
351          RX  1000.0  1010.0  1060.0  1073.0  1160.0  1181.0  1223.0  1237.0
352          RY    97.8    93.7    94.7    90.8    89.9    92.4    94.0    96.8
             *

353          KK    205J
354          KM   Sub-Basin   205J
355          KM
356          KM      The Clark Unit Hydrograph is used for this basin.
357          KM          The Natural time-area relation is used for this basin.
358          KM
359          KM      Time of Concentration for this sub-basin is based on the following:
360          KM          6-Hour Rainfall, Pattern No.  1.00
361          KM          An rainfall areal reduction factor of 0.995
362          KM
363          KM       EXCESS RAINFALL VALUES EXCEEDED IN 5-MINUTE INTERVALS
364          KM     5  10  15  20  25  30  35  40  45  50  55  60  65  70  75  80  85  90
365          KM   .44 .43 .42 .12 .08 .06 .03 .02 .02 .00 .00 .00 .00 .00 .00 .00 .00 .00
366          KM
367          KM          L=   1.633 miles, S=  243 feet/mile, Kb= .08
368          KM
369          BA   0.369
370          LG    0.21    0.35    4.90    0.30    3.50
371          UC   0.450   0.398
372          UA       0       3       5       8      12      20      43      75      90      96
373          UA     100
             *
```

```
LINE          ID.......1.......2.......3.......4.......5.......6.......7.......8.......9......10

 374          KK   C534R
 375          KM      Hydrograph combine 533534 + 205J at C534 right branch
 376          HC       2
              *

 377          KK    205K
 378          KM   Sub-Basin   205K
 379          KM
 380          KM      The Clark Unit Hydrograph is used for this basin.
 381          KM          The Natural time-area relation is used for this basin.
 382          KM
 383          KM      Time of Concentration for this sub-basin is based on the following:
 384          KM          6-Hour Rainfall, Pattern No.  1.00
 385          KM          An rainfall areal reduction factor of 0.997
 386          KM
 387          KM       EXCESS RAINFALL VALUES EXCEEDED IN 5-MINUTE INTERVALS
 388          KM     5  10  15  20  25  30  35  40  45  50  55  60  65  70  75  80  85  90
 389          KM   .44 .44 .43 .13 .09 .08 .03 .03 .03 .00 .00 .00 .00 .00 .00 .00 .00 .00
 390          KM
 391          KM          L=   1.772 miles, S=  249 feet/mile, Kb= .10
 392          KM
 393          BA   0.245
 394          LG    0.16    0.38    5.60    0.22    1.50
 395          UC   0.546   0.665
 396          UA       0       3       5       8      12      20      43      75      90      96
 397          UA     100
              *

 398          KK    C534
 399          KM      Hydrograph combine C534R + 205K at C534
 400          HC       2
              *

 401          KK  534535
 402          KM      Normal depth channel route from C534 to C535
 403          KM      Source:  Hydrology Field Reconnaissance
 404          RS       3    FLOW      -1
 405          RC   0.065   0.046   0.065  2037.0  0.0221
 406          RX  1000.0  1010.0  1016.0  1075.0  1150.0  1162.0  1174.0  1182.0
 407          RY    97.1    93.4    91.6    89.6    86.9    90.8    92.2    92.3
              *

 408          KK    205L
 409          KM   Sub-Basin   205L
 410          KM
 411          KM      The Clark Unit Hydrograph is used for this basin.
 412          KM          The Natural time-area relation is used for this basin.
 413          KM
 414          KM      Time of Concentration for this sub-basin is based on the following:
 415          KM          6-Hour Rainfall, Pattern No.  1.00
 416          KM          An rainfall areal reduction factor of 0.998
 417          KM
 418          KM       EXCESS RAINFALL VALUES EXCEEDED IN 5-MINUTE INTERVALS
 419          KM     5  10  15  20  25  30  35  40  45  50  55  60  65  70  75  80  85  90
```



```
LINE          ID.......1.......2.......3.......4.......5.......6.......7.......8.......9......10

 420          KM   .44 .43 .42 .12 .08 .06 .02 .02 .02 .00 .00 .00 .00 .00 .00 .00 .00 .00
 421          KM
 422          KM          L=   0.701 miles, S=  284 feet/mile, Kb= .09
 423          KM
 424          BA   0.118
 425          LG    0.19    0.36    5.00    0.29    0.00
 426          UC   0.254   0.206
 427          UA       0       3       5       8      12      20      43      75      90      96
 428          UA     100
              *

 429          KK    C535
 430          KM      Hydrograph combine 534535 + 205L at C535
 431          HC       2
              *

 432          KK  535536
 433          KM      Normal depth channel route from C535 to C536
 434          KM      Source:  HEC-2 Cross Section: HE 3.275
 435          RS       8    FLOW      -1
 436          RC   0.075   0.050   0.075  2975.0  0.0236
 437          RX  9852.8  9871.5  9957.7 10000.0 10015.6 10052.4 10142.4 10183.6
 438          RY  1911.6  1904.3  1906.9  1900.8  1900.8  1905.4  1905.2  1912.6
              *

 439          KK    205M
 440          KM   Sub-Basin   205M
 441          KM
 442          KM      The Clark Unit Hydrograph is used for this basin.
 443          KM          The HEC-1 time-area relation is used for this basin.
 444          KM
 445          KM      Time of Concentration for this sub-basin is based on the following:
 446          KM          6-Hour Rainfall, Pattern No.  1.00
 447          KM          An rainfall areal reduction factor of 0.998
 448          KM
 449          KM       EXCESS RAINFALL VALUES EXCEEDED IN 5-MINUTE INTERVALS
 450          KM     5  10  15  20  25  30  35  40  45  50  55  60  65  70  75  80  85  90
 451          KM   .46 .46 .45 .15 .11 .11 .05 .05 .04 .02 .02 .02 .00 .00 .00 .00 .00 .00
```

```
452          KM
453          KM          L=   0.839 miles, S=  230 feet/mile, Kb= .06
454          KM
455          BA   0.139
456          LG    0.15    0.33    5.40    0.22   21.00
457          UC   0.233   0.197
             *

458          KK   C536R
459          KM      Hydrograph combine 535536 + 205M at C536 right branch
460          HC       2
             *
1                                        HEC-1 INPUT                                                    PAGE 11

LINE         ID.......1.......2.......3.......4.......5.......6.......7.......8.......9......10

461          KK    205N
462          KM   Sub-Basin   205N
463          KM
464          KM      The Clark Unit Hydrograph is used for this basin.
465          KM          The HEC-1 time-area relation is used for this basin.
466          KM
467          KM      Time of Concentration for this sub-basin is based on the following:
468          KM          6-Hour Rainfall, Pattern No.  1.00
469          KM          An rainfall areal reduction factor of 0.998
470          KM
471          KM       EXCESS RAINFALL VALUES EXCEEDED IN 5-MINUTE INTERVALS
472          KM     5  10  15  20  25  30  35  40  45  50  55  60  65  70  75  80  85  90
473          KM   .45 .44 .44 .13 .09 .08 .03 .03 .03 .00 .00 .00 .00 .00 .00 .00 .00 .00
474          KM
475          KM          L=   1.183 miles, S=  245 feet/mile, Kb= .10
476          KM
477          BA   0.156
478          LG    0.15    0.39    5.70    0.21    0.80
479          UC   0.413   0.457
             *

480          KK   C536I
481          KM      Hydrograph combine C536R + 205N at C536I
482          HC       2
             *
             * *
             * * C536I is the total flow in Hesperus Wash upstream of Dam 36
             * *
             *

483          KK   C536O
484          KM      Reservoir route at C536 (Dam 36).
485          RS       1    ELEV  1852.1
486          SV    0.00   14.41   35.94   67.64  108.61  158.07  218.14  276.00  280.00  289.00
487          SV  298.02  308.00  317.00  327.00  337.00  346.95  358.00  374.00
488          SE  1852.1  1866.0  1870.0  1874.0  1878.0  1882.0  1886.0  1889.0  1889.2  1889.6
489          SE  1890.0  1890.4  1890.8  1891.2  1891.6  1892.0  1892.4  1893.0
490          SQ       0     108     168     211     245     276     301     320     338     347
491          SQ     356     459     679     995    1408    1905    2477    3119    3826    5009
492          SE  1852.1  1858.0  1862.0  1866.0  1870.0  1874.0  1878.0  1882.0  1886.0  1889.0
493          SE  1889.2  1889.6  1890.0  1890.4  1890.8  1891.2  1891.6  1892.0  1892.4  1893.0
494          RL                   0.17
             *
             * *
             * * End Basin 205.  Start Basin 206
             * *
             *

495          KK  536537
496          KM      Normal depth channel route from C536 to C537
497          KM      Source:  HEC-2 Cross Section: HE 2.729
498          RS       3    FLOW      -1
499          RC   0.075   0.050   0.075  1480.0  0.0209
500          RX  9900.0  9912.0  9947.3  9979.3 10025.0 10044.5 10051.0 10060.0
1                                        HEC-1 INPUT                                                    PAGE 12

LINE         ID.......1.......2.......3.......4.......5.......6.......7.......8.......9......10

501          RY  1846.5  1845.4  1843.1  1834.3  1833.6  1840.5  1843.3  1843.5
             *

502          KK    206A
503          KM   Sub-Basin   206A
504          KM
505          KM      The Clark Unit Hydrograph is used for this basin.
506          KM          The Urban time-area relation is used for this basin.
507          KM
508          KM      Time of Concentration for this sub-basin is based on the following:
509          KM          6-Hour Rainfall, Pattern No.  1.00
510          KM          An rainfall areal reduction factor of 0.998
511          KM
512          KM       EXCESS RAINFALL VALUES EXCEEDED IN 5-MINUTE INTERVALS
513          KM     5  10  15  20  25  30  35  40  45  50  55  60  65  70  75  80  85  90
514          KM   .47 .46 .46 .16 .13 .12 .05 .05 .05 .04 .03 .03 .01 .01 .01 .01 .01 .01
515          KM
516          KM          L=   0.631 miles, S=  256 feet/mile, Kb= .04
517          KM
518          BA   0.128
519          LG    0.13    0.28    5.30    0.23   32.80
520          UC   0.158   0.107
521          UA       0       5      16      30      65      77      84      90      94      97
522          UA     100
             *
```

```
523          KK    C537
524          KM      Hydrograph combine 536537 + 206A at C537
525          HC       2
             *

526          KK  537538
527          KM      Normal depth channel route from C537 to C538
528          KM      Source:  HEC-2 Cross Section: HE 2.493
529          RS       3    FLOW      -1
530          RC   0.075   0.050   0.075  2155.0  0.0210
531          RX  9946.0  9957.6  9984.8  9994.8 10000.0 10036.5 10070.1 10107.3
532          RY  1817.0  1815.2  1807.4  1803.2  1803.2  1805.5  1814.3  1815.4
             *

533          KK    206B
534          KM   Sub-Basin   206B
535          KM
536          KM      The Clark Unit Hydrograph is used for this basin.
537          KM          The Urban time-area relation is used for this basin.
538          KM
539          KM      Time of Concentration for this sub-basin is based on the following:
540          KM          6-Hour Rainfall, Pattern No.  1.00
541          KM          An rainfall areal reduction factor of 0.999
542          KM
543          KM       EXCESS RAINFALL VALUES EXCEEDED IN 5-MINUTE INTERVALS
544          KM     5  10  15  20  25  30  35  40  45  50  55  60  65  70  75  80  85  90
545          KM   .48 .47 .47 .17 .13 .13 .06 .06 .05 .05 .04 .04 .01 .01 .01 .01 .01 .01
546          KM
547          KM          L=   0.570 miles, S=  139 feet/mile, Kb= .03
```



```
LINE         ID.......1.......2.......3.......4.......5.......6.......7.......8.......9......10

548          KM
549          BA   0.095
550          LG    0.10    0.26    5.20    0.23   41.30
551          UC   0.154   0.113
552          UA       0       5      16      30      65      77      84      90      94      97
553          UA     100
             *

554          KK   C538I
555          KM      Hydrograph combine 537538 + 206B at C538I
556          HC       2
             *

557          KK   C538O
558          KM      Reservoir route at C538.
559          RS       1    ELEV  1778.2
560          SV    0.00    0.10    0.57    1.69    2.60    2.70    2.90    3.00    3.20    3.38
561          SV    3.60    3.90    4.10    4.30    4.60    5.10    5.60    6.10    7.10    8.10
562          SE  1778.2  1782.0  1784.0  1786.0  1787.1  1787.2  1787.4  1787.6  1787.8  1788.0
563          SE  1788.2  1788.4  1788.6  1788.8  1789.0  1789.4  1789.8  1790.2  1790.8  1791.4
564          SQ       0      82     133     185     207     208     212     218     226     235
565          SQ     249     265     286     310     338     400     482     611     942    1439
             *

566          KK  538540
567          KM      Normal depth channel route from C538 to C540
568          KM      Source:  HEC-2 Cross Section: HE 1.990
569          RS       5    FLOW      -1
570          RC   0.075   0.050   0.075  2176.0  0.0210
571          RX  9907.7  9931.8  9978.4 10000.0 10041.1 10056.9 10143.7 10164.9
572          RY  1767.5  1754.9  1755.2  1753.2  1753.1  1755.1  1757.3  1769.4
             *

573          KK    206C
574          KM   Sub-Basin   206C
575          KM
576          KM      The Clark Unit Hydrograph is used for this basin.
577          KM          The HEC-1 time-area relation is used for this basin.
578          KM
579          KM      Time of Concentration for this sub-basin is based on the following:
580          KM          6-Hour Rainfall, Pattern No.  1.00
581          KM          An rainfall areal reduction factor of 1.000
582          KM
583          KM       EXCESS RAINFALL VALUES EXCEEDED IN 5-MINUTE INTERVALS
584          KM     5  10  15  20  25  30  35  40  45  50  55  60  65  70  75  80  85  90
585          KM   .44 .43 .42 .12 .08 .06 .02 .02 .02 .01 .01 .01 .00 .00 .00 .00 .00 .00
586          KM
587          KM          L=   0.427 miles, S=  138 feet/mile, Kb= .07
588          KM
589          BA   0.024
590          LG    0.21    0.32    4.35    0.40   12.40
591          UC   0.217   0.289
             *
```



```
LINE         ID.......1.......2.......3.......4.......5.......6.......7.......8.......9......10

592          KK   C540R
593          KM      Hydrograph combine 538540 + 206C at C540 right branch
594          HC       2
             *

595          KK    206D
596          KM   Sub-Basin   206D
597          KM
598          KM      The Clark Unit Hydrograph is used for this basin.
599          KM          The Urban time-area relation is used for this basin.
```

```
600          KM
601          KM      Time of Concentration for this sub-basin is based on the following:
602          KM          6-Hour Rainfall, Pattern No.  1.00
603          KM          An rainfall areal reduction factor of 0.999
604          KM
605          KM       EXCESS RAINFALL VALUES EXCEEDED IN 5-MINUTE INTERVALS
606          KM     5  10  15  20  25  30  35  40  45  50  55  60  65  70  75  80  85  90
607          KM   .48 .48 .47 .17 .14 .13 .06 .06 .06 .05 .05 .04 .01 .01 .01 .01 .01 .01
608          KM
609          KM          L=   0.531 miles, S=  236 feet/mile, Kb= .04
610          KM
611          BA   0.062
612          LG    0.08    0.26    5.70    0.18   41.20
613          UC   0.146   0.129
614          UA       0       5      16      30      65      77      84      90      94      97
615          UA     100
             *

616          KK  539540
617          KM      Normal depth channel route from C539 to C540
618          KM      Source:  200 Scale Mapping
619          RS       4    FLOW      -1
620          RC   0.060   0.050   0.055  1872.0  0.0256
621          RX  1000.0  1007.0  1016.0  1036.0  1046.0  1080.0  1150.0  1210.0
622          RY  1750.0  1748.0  1746.0  1744.0  1744.0  1746.0  1748.0  1750.0
             *

623          KK    206E
624          KM   Sub-Basin   206E
625          KM
626          KM      The Clark Unit Hydrograph is used for this basin.
627          KM          The HEC-1 time-area relation is used for this basin.
628          KM
629          KM      Time of Concentration for this sub-basin is based on the following:
630          KM          6-Hour Rainfall, Pattern No.  1.00
631          KM          An rainfall areal reduction factor of 1.000
632          KM
633          KM       EXCESS RAINFALL VALUES EXCEEDED IN 5-MINUTE INTERVALS
634          KM     5  10  15  20  25  30  35  40  45  50  55  60  65  70  75  80  85  90
635          KM   .42 .42 .41 .10 .06 .04 .01 .01 .01 .00 .00 .00 .00 .00 .00 .00 .00 .00
636          KM
637          KM          L=   0.343 miles, S=  175 feet/mile, Kb= .09
638          KM
639          BA   0.023
```



```
LINE         ID.......1.......2.......3.......4.......5.......6.......7.......8.......9......10

640          LG    0.23    0.35    4.30    0.40    1.70
641          UC   0.208   0.238
             *

642          KK   C540L
643          KM      Hydrograph combine 539540 + 206E at C540 left branch
644          HC       2
             *

645          KK    C540
646          KM      Hydrograph combine C540R + C540L at C540
647          HC       2
             *
             * *
             * * C540 is the end of Hesperus Wash and the start of Balboa Wash
             * *
             *

648          KK  540541
649          KM      Normal depth channel route from C540 to C541
650          KM      Source:  HEC-2 Cross Section: BA 1.645
651          RS      12    FLOW      -1
652          RC   0.065   0.035   0.065  4207.0  0.0204
653          RX  9960.8  9968.0  9975.1  9975.7  9993.2 10018.2 10297.5 10343.9
654          RY  1725.2  1721.8  1718.4  1716.2  1716.4  1718.4  1719.8  1730.5
             *

655          KK    206F
656          KM   Sub-Basin   206F
657          KM
658          KM      The Clark Unit Hydrograph is used for this basin.
659          KM          The HEC-1 time-area relation is used for this basin.
660          KM
661          KM      Time of Concentration for this sub-basin is based on the following:
662          KM          6-Hour Rainfall, Pattern No.  1.00
663          KM          An rainfall areal reduction factor of 0.998
664          KM
665          KM       EXCESS RAINFALL VALUES EXCEEDED IN 5-MINUTE INTERVALS
666          KM     5  10  15  20  25  30  35  40  45  50  55  60  65  70  75  80  85  90
667          KM   .43 .42 .42 .11 .07 .06 .02 .02 .01 .00 .00 .00 .00 .00 .00 .00 .00 .00
668          KM
669          KM          L=   0.975 miles, S=  217 feet/mile, Kb= .08
670          KM
671          BA   0.157
672          LG    0.21    0.35    4.60    0.35    5.10
673          UC   0.333   0.308
             *

674          KK    C541
675          KM      Hydrograph combine 540541 + 206F at C541
676          HC       2
             *
```

```
LINE          ID.......1.......2.......3.......4.......5.......6.......7.......8.......9......10

677           KK  541548
678           KM      Normal depth channel route from C541 to C548
679           KM      Source:  HEC-2 Cross Section: BA 0.905
680           RS       1    FLOW      -1
681           RC   0.060   0.045   0.060  1138.0  0.0316
682           RX  9761.7  9936.7  9955.2  9986.9  9994.7 10039.2 10065.3 10066.0
683           RY  1647.4  1644.1  1638.1  1637.3  1636.2  1637.5  1652.9  1653.0
              *

684           KK    206G
685           KM   Sub-Basin   206G
686           KM
687           KM      The Clark Unit Hydrograph is used for this basin.
688           KM          The HEC-1 time-area relation is used for this basin.
689           KM
690           KM      Time of Concentration for this sub-basin is based on the following:
691           KM          6-Hour Rainfall, Pattern No.  1.00
692           KM          An rainfall areal reduction factor of 0.999
693           KM
694           KM       EXCESS RAINFALL VALUES EXCEEDED IN 5-MINUTE INTERVALS
695           KM     5  10  15  20  25  30  35  40  45  50  55  60  65  70  75  80  85  90
696           KM   .45 .44 .44 .13 .10 .09 .04 .04 .03 .01 .01 .01 .00 .00 .00 .00 .00 .00
697           KM
698           KM          L=   0.950 miles, S=  132 feet/mile, Kb= .09
699           KM
700           BA   0.089
701           LG    0.16    0.35    5.20    0.25   12.50
702           UC   0.425   0.544
              *

703           KK  BB523R
704           KM      Retrieve previously diverted hydrograph at C523 in the right branch.
705           DR   D523R
              *

706           KK  523548
707           KM      Normal depth channel route from C523 to C548
708           KM      Source:  200 Scale Mapping
709           RS      15    FLOW      -1
710           RC   0.040   0.018   0.040  2680.0  0.0189
711           RX  1000.0  1040.0  1090.0  1130.0  1170.0  1171.2  1181.2  1196.2
712           RY  1646.0  1645.0  1643.8  1644.7  1644.0  1644.4  1646.0  1648.0
              *

713           KK   C548L
714           KM      Hydrograph combine 541548 + 206G + BB523R at C548 left branch
715           HC       3    3.72
              *
              * *
              * * C548L is the total flow in Balboa Wash above confluence with Oxford Wash
              * *
              *
```



```
LINE          ID.......1.......2.......3.......4.......5.......6.......7.......8.......9......10

716           KK    206H
717           KM   Sub-Basin   206H
718           KM
719           KM      The Clark Unit Hydrograph is used for this basin.
720           KM          The Urban time-area relation is used for this basin.
721           KM
722           KM      Time of Concentration for this sub-basin is based on the following:
723           KM          6-Hour Rainfall, Pattern No.  1.00
724           KM          An rainfall areal reduction factor of 0.999
725           KM
726           KM       EXCESS RAINFALL VALUES EXCEEDED IN 5-MINUTE INTERVALS
727           KM     5  10  15  20  25  30  35  40  45  50  55  60  65  70  75  80  85  90
728           KM   .47 .46 .46 .16 .13 .12 .05 .05 .05 .04 .03 .02 .01 .01 .01 .01 .01 .01
729           KM
730           KM          L=   0.515 miles, S=  183 feet/mile, Kb= .07
731           KM
732           BA   0.059
733           LG    0.11    0.31    5.70    0.19   26.10
734           UC   0.213   0.196
735           UA       0       5      16      30      65      77      84      90      94      97
736           UA     100
              *

737           KK  542543
738           KM      Normal depth channel route from C542 to C543
739           KM      Source:  HEC-2 Cross Section: OX 0.931
740           RS       1    FLOW      -1
741           RC   0.075   0.040   0.050   686.0  0.0066
742           RX  9846.9  9881.6  9967.5  9983.2 10010.0 10025.0 10033.8 10039.6
743           RY  1732.3  1723.5  1724.1  1717.8  1717.0  1724.0  1728.2  1730.7
              *

744           KK    206I
745           KM   Sub-Basin   206I
746           KM
747           KM      The Clark Unit Hydrograph is used for this basin.
748           KM          The HEC-1 time-area relation is used for this basin.
749           KM
750           KM      Time of Concentration for this sub-basin is based on the following:
751           KM          6-Hour Rainfall, Pattern No.  1.00
```

```
752          KM          An rainfall areal reduction factor of 1.000
753          KM
754          KM       EXCESS RAINFALL VALUES EXCEEDED IN 5-MINUTE INTERVALS
755          KM     5  10  15  20  25  30  35  40  45  50  55  60  65  70  75  80  85  90
756          KM   .47 .47 .47 .16 .13 .12 .06 .06 .05 .04 .04 .03 .01 .01 .01 .01 .01 .01
757          KM
758          KM          L=   0.232 miles, S=  286 feet/mile, Kb= .08
759          KM
760          BA   0.021
761          LG    0.11    0.32    5.70    0.19   35.70
762          UC   0.133   0.112
             *
1                                    HEC-1 INPUT                                          PAGE 18

LINE         ID.......1.......2.......3.......4.......5.......6.......7.......8.......9......10

763          KK    C543
764          KM      Hydrograph combine 542543 + 206I at C543
765          HC       2
             *

766          KK   D543L
767          KM      Hydrograph diversion at C543.  Main flow continues in the left branch.
768          KM      Diverted flow is in the right branch.
769          DT   D543R
770          DI       0      38      45      50      65      85      97     122     141     162
771          DI     194     350     395     432     475     522     570     612
772          DQ       0      38      45      50      65      85      97     122     141     162
773          DQ     194     350     395     425     460     500     540     575
             *

774          KK  543544
775          KM      Normal depth channel route from C543 to C544
776          KM      Source:  200 Scale Mapping & Hydrology Field Reconnaissance
777          RS       1    FLOW      -1
778          RC   0.040   0.018   0.040   597.0  0.0277
779          RX  1000.0  1020.0  1045.0  1075.0  1105.0  1106.2  1146.2  1266.2
780          RY  1720.0  1718.0  1712.0  1712.3  1712.0  1712.4  1714.0  1720.0
             *

781          KK    206K
782          KM   Sub-Basin   206K
783          KM
784          KM      The Clark Unit Hydrograph is used for this basin.
785          KM          The HEC-1 time-area relation is used for this basin.
786          KM
787          KM      Time of Concentration for this sub-basin is based on the following:
788          KM          6-Hour Rainfall, Pattern No.  1.00
789          KM          An rainfall areal reduction factor of 0.999
790          KM
791          KM       EXCESS RAINFALL VALUES EXCEEDED IN 5-MINUTE INTERVALS
792          KM     5  10  15  20  25  30  35  40  45  50  55  60  65  70  75  80  85  90
793          KM   .45 .44 .44 .13 .10 .09 .04 .03 .03 .00 .00 .00 .00 .00 .00 .00 .00 .00
794          KM
795          KM          L=   0.615 miles, S=  255 feet/mile, Kb= .11
796          KM
797          BA   0.056
798          LG    0.15    0.38    5.70    0.21    5.60
799          UC   0.275   0.310
             *

800          KK    C544
801          KM      Hydrograph combine 543544 + 206K at C544
802          HC       2
             *
1                                    HEC-1 INPUT                                          PAGE 19

LINE         ID.......1.......2.......3.......4.......5.......6.......7.......8.......9......10

803          KK  544545
804          KM      Normal depth channel route from C544 to C545
805          KM      Source:  200 Scale Mapping & Hydrology Field Reconnaissance
806          RS       2    FLOW      -1
807          RC   0.040   0.018   0.040   985.0  0.0234
808          RX  1000.0  1008.0  1018.0  1048.0  1078.0  1079.2  1089.2  1109.2
809          RY  1690.0  1688.0  1686.0  1686.3  1686.0  1686.4  1688.0  1689.0
             *

810          KK   D545L
811          KM      Hydrograph diversion at C545.  Main flow continues in the left branch.
812          KM      Diverted flow is in the right branch.
813          DT   D545R
814          DI       0      50     100     200     400     800    1600    3200    5000
815          DQ       0      25      50     100     200     400     800    1600    2500
             *

816          KK  545546
817          KM      Normal depth channel route from C545 to C546
818          KM      Source:  200 Scale Mapping & Hydrology Field Reconnaissance
819          RS       2    FLOW      -1
820          RC   0.040   0.018   0.040   428.0  0.0164
821          RX  1000.0  1020.0  1050.0  1080.0  1110.0  1111.2  1121.2  1151.2
822          RY  1680.0  1678.0  1676.0  1676.3  1676.0  1676.4  1678.0  1678.5
             *

823          KK    206L
824          KM   Sub-Basin   206L
825          KM
826          KM      The Clark Unit Hydrograph is used for this basin.
```

```
827          KM          The HEC-1 time-area relation is used for this basin.
828          KM
829          KM      Time of Concentration for this sub-basin is based on the following:
830          KM          6-Hour Rainfall, Pattern No.  1.00
831          KM          An rainfall areal reduction factor of 0.999
832          KM
833          KM       EXCESS RAINFALL VALUES EXCEEDED IN 5-MINUTE INTERVALS
834          KM     5  10  15  20  25  30  35  40  45  50  55  60  65  70  75  80  85  90
835          KM   .45 .45 .45 .14 .10 .09 .04 .04 .03 .01 .01 .01 .00 .00 .00 .00 .00 .00
836          KM
837          KM          L=   0.546 miles, S=  231 feet/mile, Kb= .11
838          KM
839          BA   0.060
840          LG    0.14     0.39     5.80     0.21    14.70
841          UC   0.263    0.258
             *

842          KK    C546
843          KM      Hydrograph combine 545546 + 206L at C546
844          HC       2
             *
```



```
LINE         ID.......1.......2.......3.......4.......5.......6.......7.......8.......9......10

845          KK  546547
846          KM      Normal depth channel route from C546 to C547
847          KM      Source:  200 Scale Mapping
848          RS       1    FLOW      -1
849          RC   0.040   0.018   0.040   749.0  0.0327
850          RX  1000.0  1005.0  1011.0  1013.0  1029.0  1047.0  1052.0  1057.0
851          RY  1666.0  1664.0  1662.0  1661.9  1662.4  1662.0  1664.0  1666.0
             *

852          KK  BB543R
853          KM      Retrieve previously diverted hydrograph at C543 in the right branch.
854          DR   D543R
             *

855          KK  543547
856          KM      Normal depth channel route from C543 to C547
857          KM      Source:  HEC-2 Cross Section: OX 0.638
858          RS       5    FLOW      -1
859          RC   0.075   0.040   0.050  2395.0  0.0278
860          RX  9720.9  9769.0  9970.7  9985.5 10020.0 10038.1 10097.0 10102.0
861          RY  1690.4  1681.2  1683.1  1676.2  1677.0  1687.1  1687.4  1690.0
             *

862          KK  BB545R
863          KM      Retrieve previously diverted hydrograph at C545 in the right branch.
864          DR   D545R
             *

865          KK  545547
866          KM      Normal depth channel route from C545 to C547
867          KM      Source:  HEC-2 Cross Section: OX 0.542
868          RS       4    FLOW      -1
869          RC   0.075   0.040   0.050  1216.0  0.0259
870          RX  9668.2  9778.4  9957.9  9986.0 10012.7 10043.6 10067.6 10163.4
871          RY  1674.1  1674.1  1673.3  1662.1  1662.2  1680.4  1680.9  1681.1
             *

872          KK    206J
873          KM   Sub-Basin   206J
874          KM
875          KM      The Clark Unit Hydrograph is used for this basin.
876          KM          The Urban time-area relation is used for this basin.
877          KM
878          KM      Time of Concentration for this sub-basin is based on the following:
879          KM          6-Hour Rainfall, Pattern No.  1.00
880          KM          An rainfall areal reduction factor of 0.999
881          KM
882          KM       EXCESS RAINFALL VALUES EXCEEDED IN 5-MINUTE INTERVALS
883          KM     5  10  15  20  25  30  35  40  45  50  55  60  65  70  75  80  85  90
884          KM   .48 .48 .48 .17 .14 .14 .06 .06 .06 .05 .05 .05 .01 .01 .01 .01 .01 .01
885          KM
886          KM          L=   0.502 miles, S=  214 feet/mile, Kb= .03
887          KM
888          BA   0.060
```



```
LINE         ID.......1.......2.......3.......4.......5.......6.......7.......8.......9......10

889          LG    0.08     0.25     5.70     0.18    44.60
890          UC   0.125    0.105
891          UA       0        5       16       30       65       77       84       90       94       97
892          UA     100
             *

893          KK    C547
894          KM      Hydrograph combine 546547 + 543547 + 545547 + 206J at C547
895          HC       4     0.26
             *

896          KK  547548
897          KM      Normal depth channel route from C547 to C548
898          KM      Source:  HEC-2 Cross Section: OX 0.235
899          RS       4    FLOW      -1
900          RC   0.075   0.040   0.050  2165.0  0.0182
901          RX  9910.0  9911.4  9968.5  9987.6 10017.4 10032.3 10077.4 10080.0
```

```
902          RY  1639.0  1638.9  1637.9  1635.7  1635.8  1641.7  1642.9  1643.0
             *

903          KK    206M
904          KM   Sub-Basin   206M
905          KM
906          KM      The Clark Unit Hydrograph is used for this basin.
907          KM          The Urban time-area relation is used for this basin.
908          KM
909          KM      Time of Concentration for this sub-basin is based on the following:
910          KM          6-Hour Rainfall, Pattern No.  1.00
911          KM          An rainfall areal reduction factor of 0.999
912          KM
913          KM       EXCESS RAINFALL VALUES EXCEEDED IN 5-MINUTE INTERVALS
914          KM     5  10  15  20  25  30  35  40  45  50  55  60  65  70  75  80  85  90
915          KM   .48 .47 .47 .17 .14 .13 .06 .06 .06 .05 .05 .04 .01 .01 .01 .01 .01 .01
916          KM
917          KM          L=   0.465 miles, S=  166 feet/mile, Kb= .03
918          KM
919          BA   0.060
920          LG    0.08    0.25    5.20    0.23   46.20
921          UC   0.133   0.107
922          UA       0       5      16      30      65      77      84      90      94      97
923          UA     100
             *

924          KK   C548R
925          KM      Hydrograph combine 547548 + 206M at C548 right branch
926          HC       2
             *
             * *
             * * C548R is the total flow in Oxford Wash above confluence with Balboa Wash
             * *
             *
```



```
LINE         ID.......1.......2.......3.......4.......5.......6.......7.......8.......9......10

927          KK    C548
928          KM      Hydrograph combine C548L + C548R at C548
929          HC       2
             *
             * *
             * * C548 is the total flow in Balboa Wash below the confluence of Balboa Wash
             * * and Oxford Wash
             * *
             *

930          KK  548549
931          KM      Normal depth channel route from C548 to C549
932          KM      Source:  HEC-2 Cross Section: BA0.246
933          RS       9    FLOW     -1
934          RC   0.070   0.080   0.070  3258.0  0.0172
935          RX  9889.1  9912.5  9940.2  9960.0 10026.1 10046.8 10067.8 10079.3
936          RY  1586.2  1585.7  1577.5  1573.6  1573.2  1579.5  1585.7  1586.2
             *

937          KK    206N
938          KM   Sub-Basin   206N
939          KM
940          KM      The Clark Unit Hydrograph is used for this basin.
941          KM          The Urban time-area relation is used for this basin.
942          KM
943          KM      Time of Concentration for this sub-basin is based on the following:
944          KM          6-Hour Rainfall, Pattern No.  1.00
945          KM          An rainfall areal reduction factor of 0.998
946          KM
947          KM       EXCESS RAINFALL VALUES EXCEEDED IN 5-MINUTE INTERVALS
948          KM     5  10  15  20  25  30  35  40  45  50  55  60  65  70  75  80  85  90
949          KM   .48 .47 .47 .17 .13 .13 .06 .06 .06 .05 .04 .04 .01 .01 .01 .01 .01 .01
950          KM
951          KM          L=   0.767 miles, S=  120 feet/mile, Kb= .03
952          KM
953          BA   0.152
954          LG    0.12    0.27    4.65    0.29   51.60
955          UC   0.188   0.137
956          UA       0       5      16      30      65      77      84      90      94      97
957          UA     100
             *

958          KK   C549L
959          KM      Hydrograph combine 548549 + 206N at C549 left branch
960          HC       2
             *
             * *
             * * C549L is the total flow in Balboa Wash above confluence with Ashbrook Wash
             * *
             * * End Basin 206.  Start Basin 207
             * *
             *
```



```
LINE         ID.......1.......2.......3.......4.......5.......6.......7.......8.......9......10

961          KK    207A
962          KM   Sub-Basin   207A
963          KM
964          KM      The Clark Unit Hydrograph is used for this basin.
965          KM          The Natural time-area relation is used for this basin.
```

```
966          KM
967          KM      Time of Concentration for this sub-basin is based on the following:
968          KM          6-Hour Rainfall, Pattern No.  1.00
969          KM          An rainfall areal reduction factor of 0.997
970          KM
971          KM       EXCESS RAINFALL VALUES EXCEEDED IN 5-MINUTE INTERVALS
972          KM     5  10  15  20  25  30  35  40  45  50  55  60  65  70  75  80  85  90
973          KM   .45 .44 .44 .13 .09 .08 .04 .03 .03 .03 .03 .03 .01 .01 .01 .01 .01 .01
974          KM
975          KM          L=   1.356 miles, S=  351 feet/mile, Kb= .13
976          KM
977          BA   0.256
978          LG    0.24    0.35    4.55    0.37   29.80
979          UC   0.467   0.440
980          UA       0       3       5       8      12      20      43      75      90      96
981          UA     100
             *

982          KK    207B
983          KM   Sub-Basin   207B
984          KM
985          KM      The Clark Unit Hydrograph is used for this basin.
986          KM          The Natural time-area relation is used for this basin.
987          KM
988          KM      Time of Concentration for this sub-basin is based on the following:
989          KM          6-Hour Rainfall, Pattern No.  1.00
990          KM          An rainfall areal reduction factor of 0.997
991          KM
992          KM       EXCESS RAINFALL VALUES EXCEEDED IN 5-MINUTE INTERVALS
993          KM     5  10  15  20  25  30  35  40  45  50  55  60  65  70  75  80  85  90
994          KM   .45 .44 .44 .13 .09 .08 .04 .04 .03 .03 .03 .03 .01 .01 .01 .01 .01 .01
995          KM
996          KM          L=   1.312 miles, S=  359 feet/mile, Kb= .13
997          KM
998          BA   0.208
999          LG    0.24    0.35    4.45    0.38   32.40
1000         UC   0.450   0.463
1001         UA       0       3       5       8      12      20      43      75      90      96
1002         UA     100
             *

1003         KK    C550
1004         KM      Hydrograph combine 207A + 207B at C550
1005         HC       2
             *
```



```
LINE         ID.......1.......2.......3.......4.......5.......6.......7.......8.......9......10

1006         KK  550552
1007         KM      Normal depth channel route from C550 to C552
1008         KM      Source:  Hydrology Field Reconnaissance
1009         RS       4    FLOW      -1
1010         RC   0.050   0.045   0.050  4410.0  0.0528
1011         RX  1000.0  1005.0  1018.0  1028.0  1038.0  1043.0  1048.0  1055.0
1012         RY  2188.0  2184.0  2180.0  2176.0  2176.0  2180.0  2184.0  2188.0
             *

1013         KK    207C
1014         KM   Sub-Basin   207C
1015         KM
1016         KM      The Clark Unit Hydrograph is used for this basin.
1017         KM          The Natural time-area relation is used for this basin.
1018         KM
1019         KM      Time of Concentration for this sub-basin is based on the following:
1020         KM          6-Hour Rainfall, Pattern No.  1.00
1021         KM          An rainfall areal reduction factor of 0.998
1022         KM
1023         KM       EXCESS RAINFALL VALUES EXCEEDED IN 5-MINUTE INTERVALS
1024         KM     5  10  15  20  25  30  35  40  45  50  55  60  65  70  75  80  85  90
1025         KM   .45 .44 .44 .13 .09 .08 .03 .03 .03 .01 .01 .01 .00 .00 .00 .00 .00 .00
1026         KM
1027         KM          L=   0.974 miles, S=  297 feet/mile, Kb= .11
1028         KM
1029         BA   0.173
1030         LG    0.19    0.37    5.30    0.26   13.70
1031         UC   0.354   0.311
1032         UA       0       3       5       8      12      20      43      75      90      96
1033         UA     100
             *

1034         KK   C552L
1035         KM      Hydrograph combine 550552 + 207C at C552 left branch
1036         HC       2
             *

1037         KK    207D
1038         KM   Sub-Basin   207D
1039         KM
1040         KM      The Clark Unit Hydrograph is used for this basin.
1041         KM          The Natural time-area relation is used for this basin.
1042         KM
1043         KM      Time of Concentration for this sub-basin is based on the following:
1044         KM          6-Hour Rainfall, Pattern No.  1.00
1045         KM          An rainfall areal reduction factor of 0.997
1046         KM
1047         KM       EXCESS RAINFALL VALUES EXCEEDED IN 5-MINUTE INTERVALS
1048         KM     5  10  15  20  25  30  35  40  45  50  55  60  65  70  75  80  85  90
1049         KM   .45 .44 .44 .13 .09 .08 .04 .04 .03 .03 .03 .03 .01 .01 .01 .01 .01 .01
1050         KM
```

```
1051        KM          L=   1.036 miles, S=  373 feet/mile, Kb= .14
1052        KM
1053        BA   0.197
                                        HEC-1 INPUT                                                    PAGE 25

LINE        ID.......1.......2.......3.......4.......5.......6.......7.......8.......9......10

1054        LG    0.25    0.35    4.35    0.40   35.00
1055        UC   0.396   0.343
1056        UA      0       3       5       8      12      20      43      75      90      96
1057        UA    100
            *

1058        KK  551552
1059        KM      Normal depth channel route from C551 to C552
1060        KM      Source:  100 Scale 4' CI Mapping.
1061        RS       5    FLOW      -1
1062        RC   0.050   0.045   0.050  4410.0  0.0528
1063        RX  1000.0  1005.0  1018.0  1028.0  1038.0  1043.0  1048.0  1055.0
1064        RY  2188.0  2184.0  2180.0  2176.0  2176.0  2180.0  2184.0  2188.0
            *

1065        KK    207E
1066        KM   Sub-Basin   207E
1067        KM
1068        KM      The Clark Unit Hydrograph is used for this basin.
1069        KM          The Natural time-area relation is used for this basin.
1070        KM
1071        KM      Time of Concentration for this sub-basin is based on the following:
1072        KM          6-Hour Rainfall, Pattern No.  1.00
1073        KM          An rainfall areal reduction factor of 0.998
1074        KM
1075        KM       EXCESS RAINFALL VALUES EXCEEDED IN 5-MINUTE INTERVALS
1076        KM     5  10  15  20  25  30  35  40  45  50  55  60  65  70  75  80  85  90
1077        KM   .45 .44 .44 .13 .09 .08 .04 .03 .03 .03 .03 .03 .01 .01 .01 .01 .01 .01
1078        KM
1079        KM          L=   1.366 miles, S=  315 feet/mile, Kb= .14
1080        KM
1081        BA   0.157
1082        LG    0.25    0.35    4.35    0.42   35.00
1083        UC   0.521   0.663
1084        UA      0       3       5       8      12      20      43      75      90      96
1085        UA    100
            *

1086        KK   C552R
1087        KM      Hydrograph combine 551552 + 207E at C552 right branch
1088        HC       2
            *

1089        KK    C552
1090        KM      Hydrograph combine C552L + C552R at C552
1091        HC       2
            *

1092        KK  552553
1093        KM      Normal depth channel route from C552 to C553
1094        KM      Source:  Hydrology Field Reconnaissance
1095        RS       2    FLOW      -1
1096        RC   0.060   0.050   0.060  1336.0  0.0337
1097        RX   993.0  1010.0  1055.0  1061.0  1082.0  1096.0  1105.0  1127.0
1098        RY    98.0    94.3    94.4    94.0    94.3    94.5    96.2    98.0
            *
1                                       HEC-1 INPUT                                                    PAGE 26

LINE        ID.......1.......2.......3.......4.......5.......6.......7.......8.......9......10

1099        KK    207F
1100        KM   Sub-Basin   207F
1101        KM
1102        KM      The Clark Unit Hydrograph is used for this basin.
1103        KM          The HEC-1 time-area relation is used for this basin.
1104        KM
1105        KM      Time of Concentration for this sub-basin is based on the following:
1106        KM          6-Hour Rainfall, Pattern No.  1.00
1107        KM          An rainfall areal reduction factor of 0.998
1108        KM
1109        KM       EXCESS RAINFALL VALUES EXCEEDED IN 5-MINUTE INTERVALS
1110        KM     5  10  15  20  25  30  35  40  45  50  55  60  65  70  75  80  85  90
1111        KM   .45 .44 .44 .13 .09 .08 .04 .03 .03 .03 .03 .03 .01 .01 .01 .01 .01 .01
1112        KM
1113        KM          L=   0.794 miles, S=  296 feet/mile, Kb= .14
1114        KM
1115        BA   0.126
1116        LG    0.25    0.35    4.40    0.41   33.70
1117        UC   0.367   0.329
            *

1118        KK    C553
1119        KM      Hydrograph combine 552553 + 207F at C553
1120        HC       2
            *

1121        KK  553556
1122        KM      Normal depth channel route from C553 to C556
1123        KM      Source:  HEC-2 Cross Section: AS 6.118
1124        RS       3    FLOW      -1
1125        RC   0.055   0.045   0.060  2393.0  0.0255
1126        RX  9904.4  9945.9  9974.0  9987.4  9994.9 10008.6 10027.0 10045.3
1127        RY  2004.2  2003.9  1991.7  1990.4  1987.9  1988.2  1997.5  2006.7
```

```
                *
1128            KK    207G
1129            KM   Sub-Basin   207G
1130            KM
1131            KM      The Clark Unit Hydrograph is used for this basin.
1132            KM          The Natural time-area relation is used for this basin.
1133            KM
1134            KM      Time of Concentration for this sub-basin is based on the following:
1135            KM          6-Hour Rainfall, Pattern No.  1.00
1136            KM          An rainfall areal reduction factor of 0.997
1137            KM
1138            KM       EXCESS RAINFALL VALUES EXCEEDED IN 5-MINUTE INTERVALS
1139            KM     5  10  15  20  25  30  35  40  45  50  55  60  65  70  75  80  85  90
1140            KM   .45 .44 .44 .13 .09 .08 .03 .03 .03 .01 .01 .01 .00 .00 .00 .00 .00 .00
1141            KM
1142            KM          L=   1.467 miles, S=  198 feet/mile, Kb= .10
1143            KM
1144            BA   0.236
1145            LG    0.17    0.38    5.60    0.23    8.30
1146            UC   0.525   0.560
```



```
LINE            ID.......1.......2.......3.......4.......5.......6.......7.......8.......9......10

1147            UA       0       3       5       8      12      20      43      75      90      96
1148            UA     100
                *

1149            KK   C556L
1150            KM      Hydrograph combine 553556 + 207G at C556 left branch
1151            HC       2
                *

1152            KK    207H
1153            KM   Sub-Basin   207H
1154            KM
1155            KM      The Clark Unit Hydrograph is used for this basin.
1156            KM          The Natural time-area relation is used for this basin.
1157            KM
1158            KM      Time of Concentration for this sub-basin is based on the following:
1159            KM          6-Hour Rainfall, Pattern No.  1.00
1160            KM          An rainfall areal reduction factor of 0.998
1161            KM
1162            KM       EXCESS RAINFALL VALUES EXCEEDED IN 5-MINUTE INTERVALS
1163            KM     5  10  15  20  25  30  35  40  45  50  55  60  65  70  75  80  85  90
1164            KM   .45 .44 .44 .13 .09 .08 .04 .04 .03 .03 .03 .03 .01 .01 .01 .01 .01 .01
1165            KM
1166            KM          L=   1.044 miles, S=  371 feet/mile, Kb= .14
1167            KM
1168            BA   0.124
1169            LG    0.25    0.35    4.35    0.40   35.00
1170            UC   0.400   0.454
1171            UA       0       3       5       8      12      20      43      75      90      96
1172            UA     100
                *

1173            KK  554555
1174            KM      Normal depth channel route from C554 to C555
1175            KM      Source:  100 Scale 4' CI Mapping.
1176            RS       4    FLOW      -1
1177            RC   0.050   0.045   0.050  2497.0  0.0649
1178            RX  1000.0  1025.0  1080.0  1100.0  1120.0  1130.0  1140.0  1155.0
1179            RY  2192.0  2188.0  2186.0  2184.0  2184.0  2188.0  2192.0  2194.0
                *

1180            KK    207I
1181            KM   Sub-Basin   207I
1182            KM
1183            KM      The Clark Unit Hydrograph is used for this basin.
1184            KM          The Natural time-area relation is used for this basin.
1185            KM
1186            KM      Time of Concentration for this sub-basin is based on the following:
1187            KM          6-Hour Rainfall, Pattern No.  1.00
1188            KM          An rainfall areal reduction factor of 0.999
1189            KM
1190            KM       EXCESS RAINFALL VALUES EXCEEDED IN 5-MINUTE INTERVALS
1191            KM     5  10  15  20  25  30  35  40  45  50  55  60  65  70  75  80  85  90
1192            KM   .45 .44 .44 .13 .09 .08 .04 .04 .03 .03 .03 .03 .01 .01 .01 .01 .01 .01
1193            KM
```



```
LINE            ID.......1.......2.......3.......4.......5.......6.......7.......8.......9......10

1194            KM          L=   0.810 miles, S=  320 feet/mile, Kb= .15
1195            KM
1196            BA   0.073
1197            LG    0.25    0.35    4.40    0.40   35.00
1198            UC   0.375   0.468
1199            UA       0       3       5       8      12      20      43      75      90      96
1200            UA     100
                *

1201            KK    C555
1202            KM      Hydrograph combine 554555 + 207I at C555
1203            HC       2
                *

1204            KK  555556
1205            KM      Normal depth channel route from C555 to C556
1206            KM      Source:  200 Scale Mapping
```

```
1207          RS       8    FLOW      -1
1208          RC   0.050   0.050   0.055  3353.0  0.0480
1209          RX  1000.0  1050.0  1090.0  1095.0  1130.0  1150.0  1160.0  1185.0
1210          RY  2020.0  2016.5  2006.0  2004.0  2005.0  2006.0  2010.0  2020.0
              *

1211          KK    207J
1212          KM   Sub-Basin   207J
1213          KM
1214          KM      The Clark Unit Hydrograph is used for this basin.
1215          KM          The HEC-1 time-area relation is used for this basin.
1216          KM
1217          KM      Time of Concentration for this sub-basin is based on the following:
1218          KM          6-Hour Rainfall, Pattern No.  1.00
1219          KM          An rainfall areal reduction factor of 0.999
1220          KM
1221          KM       EXCESS RAINFALL VALUES EXCEEDED IN 5-MINUTE INTERVALS
1222          KM     5  10  15  20  25  30  35  40  45  50  55  60  65  70  75  80  85  90
1223          KM   .45 .45 .45 .14 .10 .09 .04 .04 .03 .03 .03 .03 .01 .01 .01 .01 .01 .01
1224          KM
1225          KM          L=   0.714 miles, S=  248 feet/mile, Kb= .13
1226          KM
1227          BA   0.093
1228          LG    0.22    0.33    4.40    0.39   37.00
1229          UC   0.346   0.337
              *

1230          KK   C556R
1231          KM      Hydrograph combine 555556 + 207J at C556 right branch
1232          HC       2
              *

1233          KK    C556
1234          KM      Hydrograph combine C556L + C556R at C556
1235          HC       2
              *
```



```
LINE          ID.......1.......2.......3.......4.......5.......6.......7.......8.......9......10

1236          KK  556557
1237          KM      Normal depth channel route from C556 to C557
1238          KM      Source:  HEC-2 Cross Section: AS 5.765
1239          RS       3    FLOW      -1
1240          RC   0.055   0.045   0.060  2298.0  0.0260
1241          RX  9957.1  9995.6 10000.0 10010.0 10040.4 10084.4 10104.2 10180.7
1242          RY  1949.3  1935.9  1935.8  1936.7  1936.7  1938.2  1947.1  1949.9
              *

1243          KK    207K
1244          KM   Sub-Basin   207K
1245          KM
1246          KM      The Clark Unit Hydrograph is used for this basin.
1247          KM          The HEC-1 time-area relation is used for this basin.
1248          KM
1249          KM      Time of Concentration for this sub-basin is based on the following:
1250          KM          6-Hour Rainfall, Pattern No.  1.00
1251          KM          An rainfall areal reduction factor of 0.998
1252          KM
1253          KM       EXCESS RAINFALL VALUES EXCEEDED IN 5-MINUTE INTERVALS
1254          KM     5  10  15  20  25  30  35  40  45  50  55  60  65  70  75  80  85  90
1255          KM   .47 .46 .46 .15 .12 .11 .05 .05 .05 .03 .03 .03 .01 .01 .01 .01 .01 .01
1256          KM
1257          KM          L=   0.859 miles, S=  294 feet/mile, Kb= .09
1258          KM
1259          BA   0.130
1260          LG    0.15    0.33    5.40    0.22   31.70
1261          UC   0.275   0.251
              *

1262          KK   C557R
1263          KM      Hydrograph combine 556557 + 207K at C557
1264          HC       2
              *

1265          KK    207L
1266          KM   Sub-Basin   207L
1267          KM
1268          KM      The Clark Unit Hydrograph is used for this basin.
1269          KM          The Urban time-area relation is used for this basin.
1270          KM
1271          KM      Time of Concentration for this sub-basin is based on the following:
1272          KM          6-Hour Rainfall, Pattern No.  1.00
1273          KM          An rainfall areal reduction factor of 0.999
1274          KM
1275          KM       EXCESS RAINFALL VALUES EXCEEDED IN 5-MINUTE INTERVALS
1276          KM     5  10  15  20  25  30  35  40  45  50  55  60  65  70  75  80  85  90
1277          KM   .47 .47 .47 .16 .13 .12 .06 .06 .05 .04 .03 .03 .01 .01 .01 .01 .01 .01
1278          KM
1279          KM          L=   0.667 miles, S=  236 feet/mile, Kb= .07
1280          KM
1281          BA   0.080
1282          LG    0.11    0.32    6.00    0.17   29.60
1283          UC   0.221   0.211
```



```
LINE          ID.......1.......2.......3.......4.......5.......6.......7.......8.......9......10

1284          UA       0       5      16      30      65      77      84      90      94      97
1285          UA     100
```

```
                *
1286            KK    C557
1287            KM      Hydrograph combine C557R + 207L at C557
1288            HC       2
                *
                * *
                * * C557 is the total flow in Ashbrook Wash downstream of Golden Eagle Blvd.
                * * at fire station
                * *
                *

1289            KK  557558
1290            KM      Normal depth channel route from C557 to C558
1291            KM      Source:  HEC-2 Cross Section: AS 5.254
1292            RS       4    FLOW      -1
1293            RC   0.055   0.045   0.060  2652.0  0.0242
1294            RX  9662.0  9965.0  9967.0 10000.0 10072.0 10095.0 10122.0 10175.0
1295            RY  1890.0  1885.9  1884.0  1878.0  1880.0  1886.0  1888.0  1890.0
                *

1296            KK    207M
1297            KM   Sub-Basin   207M
1298            KM
1299            KM      The Clark Unit Hydrograph is used for this basin.
1300            KM          The HEC-1 time-area relation is used for this basin.
1301            KM
1302            KM      Time of Concentration for this sub-basin is based on the following:
1303            KM          6-Hour Rainfall, Pattern No.  1.00
1304            KM          An rainfall areal reduction factor of 0.998
1305            KM
1306            KM       EXCESS RAINFALL VALUES EXCEEDED IN 5-MINUTE INTERVALS
1307            KM     5  10  15  20  25  30  35  40  45  50  55  60  65  70  75  80  85  90
1308            KM   .45 .44 .44 .13 .10 .09 .04 .04 .03 .00 .00 .00 .00 .00 .00 .00 .00 .00
1309            KM
1310            KM          L=   0.636 miles, S=  295 feet/mile, Kb= .10
1311            KM
1312            BA   0.116
1313            LG    0.15    0.40    6.00    0.19    4.50
1314            UC   0.250   0.189
                *

1315            KK    C558
1316            KM      Hydrograph combine 557558 + 207M at C558
1317            HC       2
                *

1318            KK  558560
1319            KM      Normal depth channel route from C558 to C560
1320            KM      Source:  HEC-2 Cross Section: AS 4.839
1321            RS       2    FLOW      -1
1322            RC   0.055   0.045   0.060  1986.0  0.0185
1323            RX  9777.0  9897.0  9933.1  9970.6 10042.2 10063.4 10121.6 10204.9
```



```
LINE            ID.......1.......2.......3.......4.......5.......6.......7.......8.......9......10

1324            RY  1840.3  1837.3  1836.3  1824.3  1822.7  1828.5  1827.7  1842.7
                *

1325            KK    207O
1326            KM   Sub-Basin   207O
1327            KM
1328            KM      The Clark Unit Hydrograph is used for this basin.
1329            KM          The Natural time-area relation is used for this basin.
1330            KM
1331            KM      Time of Concentration for this sub-basin is based on the following:
1332            KM          6-Hour Rainfall, Pattern No.  1.00
1333            KM          An rainfall areal reduction factor of 0.998
1334            KM
1335            KM       EXCESS RAINFALL VALUES EXCEEDED IN 5-MINUTE INTERVALS
1336            KM     5  10  15  20  25  30  35  40  45  50  55  60  65  70  75  80  85  90
1337            KM   .45 .44 .44 .13 .09 .08 .04 .03 .03 .01 .01 .01 .00 .00 .00 .00 .00 .00
1338            KM
1339            KM          L=   0.643 miles, S=  275 feet/mile, Kb= .09
1340            KM
1341            BA   0.131
1342            LG    0.17    0.38    5.60    0.23    9.20
1343            UC   0.242   0.171
1344            UA       0       3       5       8      12      20      43      75      90      96
1345            UA     100
                *

1346            KK   C560R
1347            KM      Hydrograph combine 558560 + 207O at C560 right branch
1348            HC       2
                *

1349            KK    207N
1350            KM   Sub-Basin   207N
1351            KM
1352            KM      The Clark Unit Hydrograph is used for this basin.
1353            KM          The HEC-1 time-area relation is used for this basin.
1354            KM
1355            KM      Time of Concentration for this sub-basin is based on the following:
1356            KM          6-Hour Rainfall, Pattern No.  1.00
1357            KM          An rainfall areal reduction factor of 0.999
1358            KM
1359            KM       EXCESS RAINFALL VALUES EXCEEDED IN 5-MINUTE INTERVALS
1360            KM     5  10  15  20  25  30  35  40  45  50  55  60  65  70  75  80  85  90
1361            KM   .45 .44 .44 .13 .09 .08 .04 .03 .03 .02 .02 .02 .00 .00 .00 .00 .00 .00
```

```
1362          KM
1363          KM          L=   0.431 miles, S=  190 feet/mile, Kb= .10
1364          KM
1365          BA   0.049
1366          LG    0.19    0.35    4.80    0.32   21.60
1367          UC   0.238   0.213
              *
1                                        HEC-1 INPUT                                                    PAGE 32

LINE          ID.......1.......2.......3.......4.......5.......6.......7.......8.......9......10


1368          KK  559560
1369          KM      Normal depth channel route from C559 to C560
1370          KM      Source:  200 Scale Mapping
1371          RS       7    FLOW     -1
1372          RC   0.050   0.045   0.050  2170.0  0.0230
1373          RX  1000.0  1050.0  1080.0  1100.0  1110.0  1140.0  1170.0  1205.0
1374          RY  1854.0  1852.0  1850.0  1848.0  1848.0  1850.0  1852.0  1854.0
              *

1375          KK   C560I
1376          KM      Hydrograph combine C560R + 559560 at C560I
1377          HC       2
              *
              * *
              * * C560I is the total flow in Ashbrook Wash upstream of Dam 6
              * *
              *

1378          KK   C560O
1379          KM      Reservoir route at C560 (Dam 6).
1380          RS       1    ELEV  1808.8
1381          SV    0.00    1.71   14.81   34.65   60.43   93.47  135.64  183.00  186.00  191.44
1382          SV  197.00  205.00  212.00  219.00  226.40  234.00  242.00  246.00  250.00  254.00
1383          SE  1808.8  1812.0  1816.0  1820.0  1824.0  1828.0  1832.0  1835.4  1835.6  1836.0
1384          SE  1836.4  1836.8  1837.2  1837.6  1838.0  1838.4  1838.8  1839.0  1839.2  1839.4
1385          SQ       0      57     136     184     224     257     285     303     319     440
1386          SQ     691    1055    1500    2018    2600    3243    3944    4315    4699    5097
1387          RL                    0.40
              *
              * *
              * * End Basin 207.  Start Basin 210 temporarily
              * *
              *

1388          KK  560585
1389          KM      Normal depth channel route from C560 to C585
1390          KM      Source:  HEC-2 Cross Section: AS4.311
1391          RS       6    FLOW     -1
1392          RC   0.050   0.025   0.050  3127.0  0.0272
1393          RX  9850.4  9950.4  9974.4 10000.0 10035.5 10059.8 10080.4 10104.4
1394          RY  1772.0  1771.7  1765.3  1765.3  1765.9  1768.5  1773.3  1773.7
              *

1395          KK    210A
1396          KM   Sub-Basin   210A
1397          KM
1398          KM      The Clark Unit Hydrograph is used for this basin.
1399          KM          The Natural time-area relation is used for this basin.
1400          KM
1401          KM      Time of Concentration for this sub-basin is based on the following:
1402          KM          6-Hour Rainfall, Pattern No.  1.00
1403          KM          An rainfall areal reduction factor of 0.998
1404          KM
1405          KM       EXCESS RAINFALL VALUES EXCEEDED IN 5-MINUTE INTERVALS
1                                        HEC-1 INPUT                                                    PAGE 33

LINE          ID.......1.......2.......3.......4.......5.......6.......7.......8.......9......10

1406          KM     5  10  15  20  25  30  35  40  45  50  55  60  65  70  75  80  85  90
1407          KM   .44 .44 .43 .12 .09 .07 .03 .03 .02 .00 .00 .00 .00 .00 .00 .00 .00 .00
1408          KM
1409          KM          L=   0.631 miles, S=  233 feet/mile, Kb= .09
1410          KM
1411          BA   0.123
1412          LG    0.20    0.36    5.00    0.27    5.50
1413          UC   0.254   0.185
1414          UA       0       3       5       8      12      20      43      75      90      96
1415          UA     100
              *

1416          KK    C585
1417          KM      Hydrograph combine 560585 + 210A at C585
1418          HC       2
              *
              * *
              * * C585 is the total flow in Ashbrook Wash at Golden Eagle Blvd. just
              * * upstream of DAM 4
              * *
              * * Temporarily stop Basin 210.  Start Basin 208
              * *
              * * Start Bristol Wash
              * *
              *

1419          KK    208A
1420          KM   Sub-Basin   208A
1421          KM
1422          KM      The Clark Unit Hydrograph is used for this basin.
1423          KM          The Natural time-area relation is used for this basin.
```

```
KM
KM      Time of Concentration for this sub-basin is based on the following:
KM          6-Hour Rainfall, Pattern No.  1.00
KM          An rainfall areal reduction factor of 0.998
KM
KM       EXCESS RAINFALL VALUES EXCEEDED IN 5-MINUTE INTERVALS
KM     5  10  15  20  25  30  35  40  45  50  55  60  65  70  75  80  85  90
KM   .45 .44 .44 .13 .09 .08 .04 .04 .03 .03 .03 .03 .01 .01 .01 .01 .01 .01
KM
KM          L=   0.626 miles, S=  366 feet/mile, Kb= .14
KM
BA   0.139
LG    0.25    0.35    4.35    0.40   35.00
UC   0.283   0.194
UA       0       3       5       8      12      20      43      75      90      96
UA     100
*

KK  561563
KM      Normal depth channel route from C561 to C563
KM      Source:  100 Scale 4'CI Mapping
RS       3    FLOW      -1
RC   0.050   0.045   0.050  2335.0  0.0856
RX  1000.0  1004.0  1009.0  1019.0  1037.0  1045.0  1060.0  1075.0
```



```
LINE        ID.......1.......2.......3.......4.......5.......6.......7.......8.......9......10

RY  2280.0  2276.0  2272.0  2268.0  2268.0  2272.0  2274.0  2276.0
*

KK    208B
KM   Sub-Basin   208B
KM
KM      The Clark Unit Hydrograph is used for this basin.
KM          The Natural time-area relation is used for this basin.
KM
KM      Time of Concentration for this sub-basin is based on the following:
KM          6-Hour Rainfall, Pattern No.  1.00
KM          An rainfall areal reduction factor of 1.000
KM
KM       EXCESS RAINFALL VALUES EXCEEDED IN 5-MINUTE INTERVALS
KM     5  10  15  20  25  30  35  40  45  50  55  60  65  70  75  80  85  90
KM   .45 .44 .44 .13 .09 .08 .04 .03 .03 .03 .03 .03 .01 .01 .01 .01 .01 .01
KM
KM          L=   0.491 miles, S=  325 feet/mile, Kb= .16
KM
BA   0.027
LG    0.25    0.35    4.35    0.42   35.00
UC   0.279   0.399
UA       0       3       5       8      12      20      43      75      90      96
UA     100
*

KK   C563R
KM      Hydrograph combine 561563 + 206B at C563 right branch
HC       2
*

KK    208C
KM   Sub-Basin   208C
KM
KM      The Clark Unit Hydrograph is used for this basin.
KM          The Natural time-area relation is used for this basin.
KM
KM      Time of Concentration for this sub-basin is based on the following:
KM          6-Hour Rainfall, Pattern No.  1.00
KM          An rainfall areal reduction factor of 0.999
KM
KM       EXCESS RAINFALL VALUES EXCEEDED IN 5-MINUTE INTERVALS
KM     5  10  15  20  25  30  35  40  45  50  55  60  65  70  75  80  85  90
KM   .45 .44 .44 .13 .10 .08 .04 .04 .03 .03 .03 .03 .01 .01 .01 .01 .01 .01
KM
KM          L=   0.639 miles, S=  387 feet/mile, Kb= .15
KM
BA   0.066
LG    0.25    0.35    4.35    0.40   35.00
UC   0.296   0.314
UA       0       3       5       8      12      20      43      75      90      96
UA     100
*
```



```
LINE        ID.......1.......2.......3.......4.......5.......6.......7.......8.......9......10

KK  562563
KM      Normal depth channel route from C562 to C563
KM      Source:  100 Scale 4' CI Mapping
RS       4    FLOW      -1
RC   0.050   0.045   0.050  3745.0  0.1106
RX  1000.0  1007.0  1012.0  1017.0  1022.0  1027.0  1044.0  1064.0
RY  2420.0  2416.0  2412.0  2411.8  2411.8  2412.0  2416.0  2420.0
*

KK    208D
KM   Sub-Basin   208D
KM
KM      The Clark Unit Hydrograph is used for this basin.
KM          The Natural time-area relation is used for this basin.
KM
```

```
1505          KM      Time of Concentration for this sub-basin is based on the following:
1506          KM          6-Hour Rainfall, Pattern No.  1.00
1507          KM          An rainfall areal reduction factor of 0.999
1508          KM
1509          KM       EXCESS RAINFALL VALUES EXCEEDED IN 5-MINUTE INTERVALS
1510          KM     5  10  15  20  25  30  35  40  45  50  55  60  65  70  75  80  85  90
1511          KM   .45 .44 .44 .13 .09 .08 .04 .03 .03 .03 .03 .03 .01 .01 .01 .01 .01 .01
1512          KM
1513          KM          L=   0.772 miles, S=  327 feet/mile, Kb= .15
1514          KM
1515          BA   0.075
1516          LG    0.25    0.35    4.35    0.42   35.00
1517          UC   0.363   0.428
1518          UA       0       3       5       8      12      20      43      75      90      96
1519          UA     100
              *

1520          KK   C563L
1521          KM      Hydrograph combine 562563 + 208D at C563 left branch
1522          HC       2
              *

1523          KK    C563
1524          KM      Hydrograph combine C563R + C563L at C563
1525          HC       2
              *

1526          KK  563564
1527          KM      Normal depth channel route from C563 to C564
1528          KM      Source:  HEC-2 Cross Section: BR 2.667
1529          RS       3    FLOW     -1
1530          RC   0.080   0.080   0.080  2762.0  0.0540
1531          RX  9947.0  9980.4  9986.4  9995.5 10000.0 10005.8 10021.9 10037.2
1532          RY  2103.4  2089.5  2089.2  2084.5  2084.4  2084.3  2098.5  2100.6
              *
```



```
LINE          ID.......1.......2.......3.......4.......5.......6.......7.......8.......9......10

1533          KK    208E
1534          KM   Sub-Basin   208E
1535          KM
1536          KM      The Clark Unit Hydrograph is used for this basin.
1537          KM          The Natural time-area relation is used for this basin.
1538          KM
1539          KM      Time of Concentration for this sub-basin is based on the following:
1540          KM          6-Hour Rainfall, Pattern No.  1.00
1541          KM          An rainfall areal reduction factor of 0.999
1542          KM
1543          KM       EXCESS RAINFALL VALUES EXCEEDED IN 5-MINUTE INTERVALS
1544          KM     5  10  15  20  25  30  35  40  45  50  55  60  65  70  75  80  85  90
1545          KM   .45 .44 .44 .13 .09 .08 .04 .04 .03 .03 .03 .03 .01 .01 .01 .01 .01 .01
1546          KM
1547          KM          L=   0.644 miles, S=  306 feet/mile, Kb= .15
1548          KM
1549          BA   0.062
1550          LG    0.25    0.35    4.35    0.41   35.00
1551          UC   0.329   0.370
1552          UA       0       3       5       8      12      20      43      75      90      96
1553          UA     100
              *

1554          KK   C564R
1555          KM      Hydrograph combine 563564 + 208E at C564 right branch
1556          HC       2
              *

1557          KK    208F
1558          KM   Sub-Basin   208F
1559          KM
1560          KM      The Clark Unit Hydrograph is used for this basin.
1561          KM          The Natural time-area relation is used for this basin.
1562          KM
1563          KM      Time of Concentration for this sub-basin is based on the following:
1564          KM          6-Hour Rainfall, Pattern No.  1.00
1565          KM          An rainfall areal reduction factor of 0.999
1566          KM
1567          KM       EXCESS RAINFALL VALUES EXCEEDED IN 5-MINUTE INTERVALS
1568          KM     5  10  15  20  25  30  35  40  45  50  55  60  65  70  75  80  85  90
1569          KM   .45 .44 .44 .13 .09 .08 .04 .04 .03 .03 .03 .03 .01 .01 .01 .01 .01 .01
1570          KM
1571          KM          L=   0.582 miles, S=  293 feet/mile, Kb= .15
1572          KM
1573          BA   0.069
1574          LG    0.25    0.35    4.35    0.41   35.00
1575          UC   0.313   0.303
1576          UA       0       3       5       8      12      20      43      75      90      96
1577          UA     100
              *
```



```
LINE          ID.......1.......2.......3.......4.......5.......6.......7.......8.......9......10

1578          KK    C564
1579          KM      Hydrograph combine C564R + 208F at C564
1580          HC       2
              *

1581          KK  564565
```

```
1582        KM      Normal depth channel route from C564 to C565
1583        KM      Source:  HEC-2 Cross Section: BR 2.236
1584        RS       6    FLOW      -1
1585        RC   0.080   0.080   0.080  3243.0  0.0398
1586        RX  9937.7  9965.8  9985.5 10000.0 10008.6 10016.4 10037.5 10054.4
1587        RY  1998.7  1998.1  1988.9  1988.8  1989.0  1990.4  1990.6  1999.1
            *

1588        KK    208G
1589        KM   Sub-Basin   208G
1590        KM
1591        KM      The Clark Unit Hydrograph is used for this basin.
1592        KM          The HEC-1 time-area relation is used for this basin.
1593        KM
1594        KM      Time of Concentration for this sub-basin is based on the following:
1595        KM          6-Hour Rainfall, Pattern No.  1.00
1596        KM          An rainfall areal reduction factor of 0.998
1597        KM
1598        KM       EXCESS RAINFALL VALUES EXCEEDED IN 5-MINUTE INTERVALS
1599        KM     5  10  15  20  25  30  35  40  45  50  55  60  65  70  75  80  85  90
1600        KM   .46 .45 .45 .14 .10 .09 .04 .04 .04 .03 .03 .03 .01 .01 .01 .01 .01 .01
1601        KM
1602        KM          L=   0.772 miles, S=  299 feet/mile, Kb= .13
1603        KM
1604        BA   0.129
1605        LG    0.22    0.34    4.60    0.34   34.30
1606        UC   0.338   0.289
            *

1607        KK    C565
1608        KM      Hydrograph combine 564565 + 208G at C565
1609        HC       2
            *

1610        KK  565568
1611        KM      Normal depth channel route from C565 to C568
1612        KM      Source:  HEC-2 Cross Section: BR 1.853
1613        RS       3    FLOW      -1
1614        RC   0.050   0.060   0.045  2254.0  0.0333
1615        RX  9966.2  9975.6  9985.0 10000.0 10017.9 10027.6 10040.1 10052.5
1616        RY  1929.1  1924.5  1919.8  1918.3  1918.4  1919.6  1925.2  1930.8
            *
```



```
LINE        ID.......1.......2.......3.......4.......5.......6.......7.......8.......9......10

1617        KK    208H
1618        KM   Sub-Basin   208H
1619        KM
1620        KM      The Clark Unit Hydrograph is used for this basin.
1621        KM          The Natural time-area relation is used for this basin.
1622        KM
1623        KM      Time of Concentration for this sub-basin is based on the following:
1624        KM          6-Hour Rainfall, Pattern No.  1.00
1625        KM          An rainfall areal reduction factor of 0.999
1626        KM
1627        KM       EXCESS RAINFALL VALUES EXCEEDED IN 5-MINUTE INTERVALS
1628        KM     5  10  15  20  25  30  35  40  45  50  55  60  65  70  75  80  85  90
1629        KM   .45 .44 .44 .13 .09 .08 .03 .03 .03 .01 .01 .01 .00 .00 .00 .00 .00 .00
1630        KM
1631        KM          L=   0.632 miles, S=  283 feet/mile, Kb= .12
1632        KM
1633        BA   0.043
1634        LG    0.17    0.38    5.60    0.23    8.60
1635        UC   0.288   0.387
1636        UA       0       3       5       8      12      20      43      75      90      96
1637        UA     100
            *

1638        KK   C568L
1639        KM      Hydrograph combine 565568 + 208H at C568 left branch
1640        HC       2
            *
            * *
            * * Start Cholula Wash
            * *
            *

1641        KK    208I
1642        KM   Sub-Basin   208I
1643        KM
1644        KM      The Clark Unit Hydrograph is used for this basin.
1645        KM          The Natural time-area relation is used for this basin.
1646        KM
1647        KM      Time of Concentration for this sub-basin is based on the following:
1648        KM          6-Hour Rainfall, Pattern No.  1.00
1649        KM          An rainfall areal reduction factor of 0.998
1650        KM
1651        KM       EXCESS RAINFALL VALUES EXCEEDED IN 5-MINUTE INTERVALS
1652        KM     5  10  15  20  25  30  35  40  45  50  55  60  65  70  75  80  85  90
1653        KM   .45 .44 .44 .13 .09 .08 .04 .03 .03 .03 .03 .03 .01 .01 .01 .01 .01 .01
1654        KM
1655        KM          L=   0.823 miles, S=  363 feet/mile, Kb= .14
1656        KM
1657        BA   0.117
1658        LG    0.25    0.35    4.35    0.42   35.00
1659        UC   0.346   0.331
1660        UA       0       3       5       8      12      20      43      75      90      96
1661        UA     100
            *
```

```
LINE          ID.......1.......2.......3.......4.......5.......6.......7.......8.......9......10

1662          KK    208J
1663          KM   Sub-Basin   208J
1664          KM
1665          KM      The Clark Unit Hydrograph is used for this basin.
1666          KM          The Natural time-area relation is used for this basin.
1667          KM
1668          KM      Time of Concentration for this sub-basin is based on the following:
1669          KM          6-Hour Rainfall, Pattern No.  1.00
1670          KM          An rainfall areal reduction factor of 0.999
1671          KM
1672          KM        EXCESS RAINFALL VALUES EXCEEDED IN 5-MINUTE INTERVALS
1673          KM     5  10  15  20  25  30  35  40  45  50  55  60  65  70  75  80  85  90
1674          KM   .45 .44 .44 .13 .09 .08 .04 .03 .03 .03 .03 .03 .01 .01 .01 .01 .01 .01
1675          KM
1676          KM          L=   0.974 miles, S=  353 feet/mile, Kb= .15
1677          KM
1678          BA   0.081
1679          LG    0.25    0.35    4.35    0.42   35.00
1680          UC   0.413   0.568
1681          UA       0       3       5       8      12      20      43      75      90      96
1682          UA     100
              *

1683          KK    C566
1684          KM      Hydrograph combine 208I + 208J at C566
1685          HC       2
              *

1686          KK  566567
1687          KM      Normal depth channel route from C566 to C567
1688          KM      Source:  HEC-2 Cross Section: CH 0.766
1689          RS       4    FLOW      -1
1690          RC   0.080   0.080   0.080  1463.0  0.0410
1691          RX  9925.3  9949.0  9965.7  9988.3 10000.0 10016.2 10029.5 10042.7
1692          RY  2047.9  2043.7  2035.3  2033.3  2031.4  2033.0  2040.1  2047.2
              *

1693          KK    208K
1694          KM   Sub-Basin   208K
1695          KM
1696          KM      The Clark Unit Hydrograph is used for this basin.
1697          KM          The Natural time-area relation is used for this basin.
1698          KM
1699          KM      Time of Concentration for this sub-basin is based on the following:
1700          KM          6-Hour Rainfall, Pattern No.  1.00
1701          KM          An rainfall areal reduction factor of 0.999
1702          KM
1703          KM        EXCESS RAINFALL VALUES EXCEEDED IN 5-MINUTE INTERVALS
1704          KM     5  10  15  20  25  30  35  40  45  50  55  60  65  70  75  80  85  90
1705          KM   .45 .44 .44 .13 .09 .07 .04 .03 .03 .03 .03 .03 .01 .01 .01 .01 .01 .01
1706          KM
1707          KM          L=   0.431 miles, S=  317 feet/mile, Kb= .16
1708          KM
1709          BA   0.048
```



```
LINE          ID.......1.......2.......3.......4.......5.......6.......7.......8.......9......10

1710          LG    0.25    0.35    4.35    0.42   35.00
1711          UC   0.258   0.238
1712          UA       0       3       5       8      12      20      43      75      90      96
1713          UA     100
              *

1714          KK   C567L
1715          KM      Hydrograph combine 566567 + 208K at C567 left branch
1716          HC       2
              *

1717          KK    208L
1718          KM   Sub-Basin   208L
1719          KM
1720          KM      The Clark Unit Hydrograph is used for this basin.
1721          KM          The Natural time-area relation is used for this basin.
1722          KM
1723          KM      Time of Concentration for this sub-basin is based on the following:
1724          KM          6-Hour Rainfall, Pattern No.  1.00
1725          KM          An rainfall areal reduction factor of 0.999
1726          KM
1727          KM        EXCESS RAINFALL VALUES EXCEEDED IN 5-MINUTE INTERVALS
1728          KM     5  10  15  20  25  30  35  40  45  50  55  60  65  70  75  80  85  90
1729          KM   .45 .44 .44 .13 .09 .07 .03 .03 .03 .03 .03 .03 .01 .01 .01 .01 .01 .01
1730          KM
1731          KM          L=   0.655 miles, S=  334 feet/mile, Kb= .15
1732          KM
1733          BA   0.059
1734          LG    0.25    0.35    4.40    0.43   35.00
1735          UC   0.321   0.375
1736          UA       0       3       5       8      12      20      43      75      90      96
1737          UA     100
              *

1738          KK    C567
1739          KM      Hydrograph combine C567L + 208L at C567
1740          HC       2
              *
```

```
1741          KK  567568
1742          KM      Normal depth channel route from C567 to C568
1743          KM      Source:  HEC-2 Cross Section: CH 0.129
1744          RS       6    FLOW      -1
1745          RC   0.050   0.060   0.045  3650.0  0.0389
1746          RX  9945.7  9958.4  9989.8 10000.0 10016.4 10028.3 10045.4 10059.8
1747          RY  1912.1  1905.9  1899.0  1899.3  1898.9  1899.5  1907.1  1911.9
              *

1748          KK    208M
1749          KM   Sub-Basin   208M
1750          KM
1751          KM      The Clark Unit Hydrograph is used for this basin.
1752          KM          The Natural time-area relation is used for this basin.
1753          KM
1754          KM      Time of Concentration for this sub-basin is based on the following:
```



```
LINE          ID.......1.......2.......3.......4.......5.......6.......7.......8.......9......10

1755          KM          6-Hour Rainfall, Pattern No.  1.00
1756          KM          An rainfall areal reduction factor of 0.998
1757          KM
1758          KM       EXCESS RAINFALL VALUES EXCEEDED IN 5-MINUTE INTERVALS
1759          KM     5  10  15  20  25  30  35  40  45  50  55  60  65  70  75  80  85  90
1760          KM   .45 .44 .44 .13 .09 .08 .04 .03 .03 .03 .03 .03 .01 .01 .01 .01 .01 .01
1761          KM
1762          KM          L=   1.031 miles, S=  321 feet/mile, Kb= .14
1763          KM
1764          BA   0.159
1765          LG    0.25    0.35    4.40    0.42   35.50
1766          UC   0.425   0.418
1767          UA       0       3       5       8      12      20      43      75      90      96
1768          UA     100
              *

1769          KK   C568R
1770          KM      Hydrograph combine 567568 + 208M at C568 right branch
1771          HC       2
              *

1772          KK    C568
1773          KM      Hydrograph combine C568L + C568R at C568
1774          HC       2
              *

1775          KK  568573
1776          KM      Normal depth channel route from C568 to C573
1777          KM      Source:  HEC-2 Cross Section: BR 1.340
1778          RS       4    FLOW      -1
1779          RC   0.098   0.075   0.075  2067.0  0.0324
1780          RX  9921.8  9954.1  9968.9  9991.3 10000.0 10006.9 10025.2 10050.4
1781          RY  1843.8  1840.4  1835.1  1834.7  1832.7  1833.3  1838.1  1854.0
              *

1782          KK    208N
1783          KM   Sub-Basin   208N
1784          KM
1785          KM      The Clark Unit Hydrograph is used for this basin.
1786          KM          The Natural time-area relation is used for this basin.
1787          KM
1788          KM      Time of Concentration for this sub-basin is based on the following:
1789          KM          6-Hour Rainfall, Pattern No.  1.00
1790          KM          An rainfall areal reduction factor of 0.999
1791          KM
1792          KM       EXCESS RAINFALL VALUES EXCEEDED IN 5-MINUTE INTERVALS
1793          KM     5  10  15  20  25  30  35  40  45  50  55  60  65  70  75  80  85  90
1794          KM   .47 .46 .46 .16 .12 .12 .05 .05 .05 .03 .03 .03 .01 .01 .01 .01 .01 .01
1795          KM
1796          KM          L=   0.589 miles, S=  160 feet/mile, Kb= .11
1797          KM
1798          BA   0.047
1799          LG    0.15    0.39    6.20    0.17   34.00
1800          UC   0.317   0.386
1801          UA       0       3       5       8      12      20      43      75      90      96
```



```
LINE          ID.......1.......2.......3.......4.......5.......6.......7.......8.......9......10

1802          UA     100
              *

1803          KK   C573L
1804          KM      Hydrograph combine 568573 + 208N at C573 left branch
1805          HC       2
              *
              * *
              * * C573L is the total flow in Bristol Wash upstream of the confluence with
              * * Zapata Wash
              * *
              * * Start Zapata Wash
              * *
              *

1806          KK    208O
1807          KM   Sub-Basin   208O
1808          KM
1809          KM      The Clark Unit Hydrograph is used for this basin.
1810          KM          The Natural time-area relation is used for this basin.
1811          KM
```

```
1812          KM      Time of Concentration for this sub-basin is based on the following:
1813          KM          6-Hour Rainfall, Pattern No.  1.00
1814          KM          An rainfall areal reduction factor of 0.997
1815          KM
1816          KM       EXCESS RAINFALL VALUES EXCEEDED IN 5-MINUTE INTERVALS
1817          KM     5  10  15  20  25  30  35  40  45  50  55  60  65  70  75  80  85  90
1818          KM   .45 .44 .44 .13 .10 .08 .04 .04 .03 .03 .03 .03 .01 .01 .01 .01 .01 .01
1819          KM
1820          KM          L=   1.174 miles, S=  347 feet/mile, Kb= .13
1821          KM
1822          BA   0.230
1823          LG    0.23    0.35    4.60    0.37   33.50
1824          UC   0.425   0.376
1825          UA       0       3       5       8      12      20      43      75      90      96
1826          UA     100
              *

1827          KK  569570
1828          KM      Normal depth channel route from C569 to C570
1829          KM      Source:  HEC-2 Cross Section: ZA 0.493
1830          RS       2    FLOW      -1
1831          RC   0.050   0.035   0.055  1696.0  0.0404
1832          RX  9965.3  9985.5  9998.4 10000.0 10010.6 10019.1 10038.5 10038.5
1833          RY  1919.3  1912.3  1908.1  1907.8  1905.2  1908.1  1920.1  1920.1
              *

1834          KK    208P
1835          KM   Sub-Basin   208P
1836          KM
1837          KM      The Clark Unit Hydrograph is used for this basin.
1838          KM          The Natural time-area relation is used for this basin.
1839          KM
1840          KM      Time of Concentration for this sub-basin is based on the following:
1841          KM          6-Hour Rainfall, Pattern No.  1.00
```



```
LINE          ID.......1.......2.......3.......4.......5.......6.......7.......8.......9......10

1842          KM          An rainfall areal reduction factor of 0.999
1843          KM
1844          KM       EXCESS RAINFALL VALUES EXCEEDED IN 5-MINUTE INTERVALS
1845          KM     5  10  15  20  25  30  35  40  45  50  55  60  65  70  75  80  85  90
1846          KM   .46 .46 .45 .15 .11 .10 .05 .05 .04 .02 .02 .02 .01 .01 .01 .01 .01 .01
1847          KM
1848          KM          L=   0.471 miles, S=  312 feet/mile, Kb= .12
1849          KM
1850          BA   0.058
1851          LG    0.18    0.39    5.70    0.21   27.90
1852          UC   0.229   0.199
1853          UA       0       3       5       8      12      20      43      75      90      96
1854          UA     100
              *

1855          KK   C570R
1856          KM      Hydrograph combine 569570 + 208P at C570 right branch
1857          HC       2
              *

1858          KK    208Q
1859          KM   Sub-Basin   208Q
1860          KM
1861          KM      The Clark Unit Hydrograph is used for this basin.
1862          KM          The Natural time-area relation is used for this basin.
1863          KM
1864          KM      Time of Concentration for this sub-basin is based on the following:
1865          KM          6-Hour Rainfall, Pattern No.  1.00
1866          KM          An rainfall areal reduction factor of 0.999
1867          KM
1868          KM       EXCESS RAINFALL VALUES EXCEEDED IN 5-MINUTE INTERVALS
1869          KM     5  10  15  20  25  30  35  40  45  50  55  60  65  70  75  80  85  90
1870          KM   .46 .45 .45 .14 .11 .10 .04 .04 .04 .03 .03 .03 .01 .01 .01 .01 .01 .01
1871          KM
1872          KM          L=   0.823 miles, S=  324 feet/mile, Kb= .13
1873          KM
1874          BA   0.094
1875          LG    0.21    0.36    5.00    0.28   31.50
1876          UC   0.338   0.364
1877          UA       0       3       5       8      12      20      43      75      90      96
1878          UA     100
              *

1879          KK    C570
1880          KM      Hydrograph combine C570R + 208Q at C570
1881          HC       2
              *
              * *
              * * NOTE: 570572 is too short to route
              * *
              *
```



```
LINE          ID.......1.......2.......3.......4.......5.......6.......7.......8.......9......10

1882          KK    208R
1883          KM   Sub-Basin   208R
1884          KM
1885          KM      The Clark Unit Hydrograph is used for this basin.
1886          KM          The Natural time-area relation is used for this basin.
1887          KM
1888          KM      Time of Concentration for this sub-basin is based on the following:
```

```
1889        KM          6-Hour Rainfall, Pattern No.  1.00
1890        KM          An rainfall areal reduction factor of 1.000
1891        KM
1892        KM       EXCESS RAINFALL VALUES EXCEEDED IN 5-MINUTE INTERVALS
1893        KM     5  10  15  20  25  30  35  40  45  50  55  60  65  70  75  80  85  90
1894        KM   .47 .46 .46 .15 .12 .11 .05 .05 .04 .03 .02 .02 .01 .01 .01 .01 .01 .01
1895        KM
1896        KM          L=   0.238 miles, S=  327 feet/mile, Kb= .13
1897        KM
1898        BA   0.010
1899        LG    0.15    0.39    6.20    0.17   25.30
1900        UC   0.167   0.216
1901        UA       0       3       5       8      12      20      43      75      90      96
1902        UA     100
            *

1903        KK  571572
1904        KM      Normal depth channel route from C571 to C572
1905        KM      Source:  200 Scale Mapping
1906        RS       3    FLOW      -1
1907        RC   0.040   0.020   0.055  1379.0  0.0566
1908        RX  1000.0  1020.0  1040.0  1090.0  1122.0  1125.0  1135.0  1140.0
1909        RY  1894.0  1893.0  1892.0  1891.0  1891.0  1892.0  1894.0  1896.0
            *

1910        KK    C572
1911        KM      Hydrograph combine C570 + 571572 at C572
1912        HC       2
            *

1913        KK  572573
1914        KM      Normal depth channel route from C572 to C573
1915        KM      Source:  HEC-2 Cross Section: ZA 0.142
1916        RS       1    FLOW      -1
1917        RC   0.050   0.035   0.055  1285.0  0.0335
1918        RX  9961.8  9976.8  9982.5  9987.0 10009.5 10014.3 10022.1 10029.3
1919        RY  1840.3  1832.1  1831.2  1829.5  1829.2  1830.6  1831.2  1835.6
            *

1920        KK    208S
1921        KM   Sub-Basin   208S
1922        KM
1923        KM      The Clark Unit Hydrograph is used for this basin.
1924        KM          The Natural time-area relation is used for this basin.
1925        KM
1926        KM      Time of Concentration for this sub-basin is based on the following:
1927        KM          6-Hour Rainfall, Pattern No.  1.00
```



```
LINE        ID.......1.......2.......3.......4.......5.......6.......7.......8.......9......10

1928        KM          An rainfall areal reduction factor of 0.999
1929        KM
1930        KM       EXCESS RAINFALL VALUES EXCEEDED IN 5-MINUTE INTERVALS
1931        KM     5  10  15  20  25  30  35  40  45  50  55  60  65  70  75  80  85  90
1932        KM   .47 .47 .47 .16 .13 .12 .06 .06 .05 .04 .03 .03 .01 .01 .01 .01 .01 .01
1933        KM
1934        KM          L=   0.568 miles, S=  234 feet/mile, Kb= .11
1935        KM
1936        BA   0.068
1937        LG    0.14    0.39    6.20    0.17   38.30
1938        UC   0.263   0.246
1939        UA       0       3       5       8      12      20      43      75      90      96
1940        UA     100
            *

1941        KK   C573R
1942        KM      Hydrograph combine 572573 + 208S at C573 right branch
1943        HC       2
            *

1944        KK    C573
1945        KM      Hydrograph combine C573L + C573R at C573
1946        HC       2
            *
            * *
            * * NOTE: 573577 is too short to route
            * *
            * * C573 is the total flow in Bristol Wash upstream of the confluence
            * * with Montezuna Wash
            * *
            * * Start Montezuna Wash
            * *
            *

1947        KK    208T
1948        KM   Sub-Basin   208T
1949        KM
1950        KM      The Clark Unit Hydrograph is used for this basin.
1951        KM          The Natural time-area relation is used for this basin.
1952        KM
1953        KM      Time of Concentration for this sub-basin is based on the following:
1954        KM          6-Hour Rainfall, Pattern No.  1.00
1955        KM          An rainfall areal reduction factor of 0.998
1956        KM
1957        KM       EXCESS RAINFALL VALUES EXCEEDED IN 5-MINUTE INTERVALS
1958        KM     5  10  15  20  25  30  35  40  45  50  55  60  65  70  75  80  85  90
1959        KM   .46 .45 .45 .14 .11 .09 .04 .04 .04 .03 .03 .03 .01 .01 .01 .01 .01 .01
1960        KM
1961        KM          L=   0.787 miles, S=  340 feet/mile, Kb= .12
1962        KM
```

```
1963          BA   0.132
1964          LG    0.20    0.37    5.20    0.27   29.80
1965          UC   0.304   0.259
1966          UA       0       3       5       8      12      20      43      75      90      96
1967          UA     100
              *
```



```
LINE          ID.......1.......2.......3.......4.......5.......6.......7.......8.......9......10

1968          KK    208U
1969          KM   Sub-Basin   208U
1970          KM
1971          KM      The Clark Unit Hydrograph is used for this basin.
1972          KM          The Natural time-area relation is used for this basin.
1973          KM
1974          KM      Time of Concentration for this sub-basin is based on the following:
1975          KM          6-Hour Rainfall, Pattern No.  1.00
1976          KM          An rainfall areal reduction factor of 0.998
1977          KM
1978          KM       EXCESS RAINFALL VALUES EXCEEDED IN 5-MINUTE INTERVALS
1979          KM     5  10  15  20  25  30  35  40  45  50  55  60  65  70  75  80  85  90
1980          KM   .46 .45 .45 .14 .11 .10 .04 .04 .04 .03 .03 .03 .01 .01 .01 .01 .01 .01
1981          KM
1982          KM          L=   0.507 miles, S=  360 feet/mile, Kb= .12
1983          KM
1984          BA   0.134
1985          LG    0.19    0.37    5.30    0.26   29.20
1986          UC   0.229   0.132
1987          UA       0       3       5       8      12      20      43      75      90      96
1988          UA     100
              *

1989          KK    C574
1990          KM      Hydrograph combine 208T + 208U at C574
1991          HC       2
              *

1992          KK  574575
1993          KM      Normal depth channel route from C574 to C575
1994          KM      Source:  HEC-2 Cross Section: MO 0.587
1995          RS       1    FLOW      -1
1996          RC   0.070   0.050   0.055   823.0  0.0365
1997          RX  9945.0  9970.6  9986.7  9995.9 10002.3 10019.0 10036.7 10055.5
1998          RY  1932.6  1928.5  1922.9  1917.8  1917.7  1924.0  1931.1  1934.1
              *

1999          KK    208V
2000          KM   Sub-Basin   208V
2001          KM
2002          KM      The Clark Unit Hydrograph is used for this basin.
2003          KM          The Natural time-area relation is used for this basin.
2004          KM
2005          KM      Time of Concentration for this sub-basin is based on the following:
2006          KM          6-Hour Rainfall, Pattern No.  1.00
2007          KM          An rainfall areal reduction factor of 1.000
2008          KM
2009          KM       EXCESS RAINFALL VALUES EXCEEDED IN 5-MINUTE INTERVALS
2010          KM     5  10  15  20  25  30  35  40  45  50  55  60  65  70  75  80  85  90
2011          KM   .47 .46 .46 .15 .12 .11 .05 .05 .04 .02 .02 .02 .01 .01 .01 .01 .01 .01
2012          KM
2013          KM          L=   0.354 miles, S=  319 feet/mile, Kb= .12
2014          KM
2015          BA   0.028
```



```
LINE          ID.......1.......2.......3.......4.......5.......6.......7.......8.......9......10

2016          LG    0.15    0.38    6.40    0.17   25.00
2017          UC   0.196   0.203
2018          UA       0       3       5       8      12      20      43      75      90      96
2019          UA     100
              *

2020          KK    C575
2021          KM      Hydrograph combine 574575 + 208V at C575
2022          HC       2
              *

2023          KK  575576
2024          KM      Normal depth channel route from C575 to C576
2025          KM      Source:  HEC-2 Cross Section: MO 0.307
2026          RS       2    FLOW      -1
2027          RC   0.070   0.050   0.055  2342.0  0.0423
2028          RX  9973.7  9974.0  9986.7 10000.0 10000.5 10009.7 10026.7 10037.3
2029          RY  1861.6  1861.5  1855.0  1853.0  1853.1  1854.8  1863.0  1867.1
              *

2030          KK    208W
2031          KM   Sub-Basin   208W
2032          KM
2033          KM      The Clark Unit Hydrograph is used for this basin.
2034          KM          The Natural time-area relation is used for this basin.
2035          KM
2036          KM      Time of Concentration for this sub-basin is based on the following:
2037          KM          6-Hour Rainfall, Pattern No.  1.00
2038          KM          An rainfall areal reduction factor of 0.999
2039          KM
2040          KM       EXCESS RAINFALL VALUES EXCEEDED IN 5-MINUTE INTERVALS
2041          KM     5  10  15  20  25  30  35  40  45  50  55  60  65  70  75  80  85  90
```

```
2042        KM   .46 .46 .45 .15 .11 .11 .05 .05 .04 .02 .02 .02 .01 .01 .01 .01 .01 .01
2043        KM
2044        KM          L=   0.475 miles, S=  288 feet/mile, Kb= .11
2045        KM
2046        BA   0.050
2047        LG    0.15    0.39    6.20    0.18   22.70
2048        UC   0.225   0.214
2049        UA       0       3       5       8      12      20      43      75      90      96
2050        UA     100
            *

2051        KK    C576
2052        KM      Hydrograph combine 575576 + 208W at C576
2053        HC       2
            *

2054        KK  576577
2055        KM      Normal depth channel route from C576 to C577
2056        KM      Source:  HEC-2 Cross Section: MO 0.116
2057        RS       1    FLOW      -1
2058        RC   0.070   0.050   0.055   740.0  0.0338
2059        RX  9915.1  9960.0  9985.5 10000.0 10000.1 10007.0 10023.3 10023.4
2060        RY  1826.5  1826.4  1814.5  1812.3  1812.3  1814.8  1830.3  1830.4
            *
            * *
            * * 576577 is the total flow in Montezuna Wash just upstream of the confluence
            * * with Bristol Wash
            * *
            *
```



```
LINE        ID.......1.......2.......3.......4.......5.......6.......7.......8.......9......10

2061        KK    C577
2062        KM      Hydrograph combine C577L + 576577 at C570
2063        HC       2
            *
            * *
            * * C577 is the total flow in Bristol Wash downstream of the confluence
            * * with Montezuma Wash
            * *
            *

2064        KK  577578
2065        KM      Normal depth channel route from C577 to C578
2066        KM      Source:  HEC-2 Cross Section: BR 1.099
2067        RS       2    FLOW      -1
2068        RC   0.055   0.045   0.055  1078.0  0.0147
2069        RX  9865.3  9956.6  9991.1 10010.2 10034.3 10063.4 10139.7 10201.7
2070        RY  1821.8  1810.8  1793.2  1792.5  1795.5  1796.1  1813.8  1822.8
            *

2071        KK    208X
2072        KM   Sub-Basin   208X
2073        KM
2074        KM      The Clark Unit Hydrograph is used for this basin.
2075        KM          The Natural time-area relation is used for this basin.
2076        KM
2077        KM      Time of Concentration for this sub-basin is based on the following:
2078        KM          6-Hour Rainfall, Pattern No.  1.00
2079        KM          An rainfall areal reduction factor of 0.999
2080        KM
2081        KM       EXCESS RAINFALL VALUES EXCEEDED IN 5-MINUTE INTERVALS
2082        KM     5  10  15  20  25  30  35  40  45  50  55  60  65  70  75  80  85  90
2083        KM   .46 .45 .45 .14 .11 .10 .04 .04 .04 .02 .02 .02 .01 .01 .01 .01 .01 .01
2084        KM
2085        KM          L=   0.417 miles, S=  223 feet/mile, Kb= .10
2086        KM
2087        BA   0.075
2088        LG    0.17    0.38    5.60    0.23   23.90
2089        UC   0.217   0.147
2090        UA       0       3       5       8      12      20      43      75      90      96
2091        UA     100
            *

2092        KK   C578I
2093        KM      Hydrograph combine 577578 + 208X at C578I
2094        HC       2
            *
            * *
            * * C578I is the total flow in Bristol Wash upstream of Dam 11
            * *
            *
```



```
LINE        ID.......1.......2.......3.......4.......5.......6.......7.......8.......9......10

2095        KK   C578O
2096        KM      Reservoir route at C578 (Dam 11).
2097        RS       1    ELEV  1779.2
2098        SV    0.00   16.38   31.30   53.65   84.39  126.17  138.00  143.00  147.00  154.47
2099        SV  161.00  167.00  174.00  181.00  187.43  194.00  202.00  205.00
2100        SE  1779.2  1794.0  1798.0  1802.0  1806.0  1810.0  1810.8  1811.2  1811.6  1812.0
2101        SE  1812.4  1812.8  1813.2  1813.6  1814.0  1814.4  1814.8  1815.0
2102        SQ       0     131     181     221     254     283     305     325     328     366
2103        SQ     522     812    1194    1651    2176    2763    3406    4104    4855    5250
2104        SE  1779.2  1786.0  1790.0  1794.0  1798.0  1802.0  1806.0  1810.0  1810.8  1811.2
2105        SE  1811.6  1812.0  1812.4  1812.8  1813.2  1813.6  1814.0  1814.4  1814.8  1815.0
2106        RL                   0.97
```

```
                 *
                 * *
                 * * End Basin 208.  Rejoin Basin 210
                 * *
                 *

2107             KK  578587
2108             KM      Normal depth channel route from C578 to C587
2109             KM      Source:  HEC-2 Cross Section: BR 0.697
2110             RS       3    FLOW      -1
2111             RC   0.055   0.045   0.055  1628.0  0.0191
2112             RX  9926.4  9949.5  9960.1  9984.7 10000.0 10014.1 10031.5 10049.4
2113             RY  1763.0  1762.6  1761.8  1757.0  1757.1  1756.9  1761.4  1768.1
                 *

2114             KK    210B
2115             KM   Sub-Basin   210B
2116             KM
2117             KM      The Clark Unit Hydrograph is used for this basin.
2118             KM          The HEC-1 time-area relation is used for this basin.
2119             KM
2120             KM      Time of Concentration for this sub-basin is based on the following:
2121             KM          6-Hour Rainfall, Pattern No.  1.00
2122             KM          An rainfall areal reduction factor of 0.999
2123             KM
2124             KM       EXCESS RAINFALL VALUES EXCEEDED IN 5-MINUTE INTERVALS
2125             KM     5  10  15  20  25  30  35  40  45  50  55  60  65  70  75  80  85  90
2126             KM   .45 .45 .44 .14 .10 .09 .04 .04 .03 .01 .01 .01 .00 .00 .00 .00 .00 .00
2127             KM
2128             KM          L=   0.930 miles, S=  251 feet/mile, Kb= .10
2129             KM
2130             BA   0.107
2131             LG    0.15    0.39    5.80    0.20    9.50
2132             UC   0.342   0.379
                 *

2133             KK   C586O
2134             KM      Reservoir route at C586.
2135             RS       1    ELEV  1804.4
2136             SV    0.00    0.05    0.36    1.09    2.45    4.45    7.00    9.50    9.60   10.00
2137             SV   10.34   10.70   11.20   11.60   12.10   12.50
2138             SE  1804.4  1806.0  1808.0  1810.0  1812.0  1814.0  1816.0 1817.55  1817.6  1817.8
```



```
LINE             ID.......1.......2.......3.......4.......5.......6.......7.......8.......9......10

2139             SE  1818.0  1818.2  1818.4  1818.6  1818.8  1819.0
2140             SQ       0      37     130     219     284     322     353     375     377     393
2141             SQ     432     492     574     680     808     959
                 *

2142             KK  586587
2143             KM      Normal depth channel route from C586 to C587
2144             KM      Source:  200 Scale Mapping
2145             RS       3    FLOW      -1
2146             RC   0.040   0.035   0.040  1905.0  0.0313
2147             RX  1000.0  1020.0  1050.0  1055.0  1065.0  1070.0  1130.0  1150.0
2148             RY  1782.0  1780.0  1772.0  1771.0  1771.0  1772.0  1778.0  1782.0
                 *

2149             KK    C587
2150             KM      Hydrograph combine 578587 + 586587 at C578
2151             HC       2
                 *

2152             KK  587595
2153             KM      Normal depth channel route from C587 to C595
2154             KM      Source:  HEC-2 Cross Section: BR 0.533
2155             RS       2    FLOW      -1
2156             RC   0.055   0.045   0.055  1039.0  0.0173
2157             RX  9977.2  9980.4  9983.6  9989.9 10009.9 10020.3 10028.8 10037.3
2158             RY  1745.2  1744.0  1742.8  1740.3  1740.3  1742.4  1743.0  1743.6
                 *

2159             KK    210C
2160             KM   Sub-Basin   210C
2161             KM
2162             KM      The Clark Unit Hydrograph is used for this basin.
2163             KM          The Natural time-area relation is used for this basin.
2164             KM
2165             KM      Time of Concentration for this sub-basin is based on the following:
2166             KM          6-Hour Rainfall, Pattern No.  1.00
2167             KM          An rainfall areal reduction factor of 0.999
2168             KM
2169             KM       EXCESS RAINFALL VALUES EXCEEDED IN 5-MINUTE INTERVALS
2170             KM     5  10  15  20  25  30  35  40  45  50  55  60  65  70  75  80  85  90
2171             KM   .44 .43 .43 .12 .08 .06 .03 .02 .02 .01 .01 .01 .00 .00 .00 .00 .00 .00
2172             KM
2173             KM          L=   0.637 miles, S=  198 feet/mile, Kb= .09
2174             KM
2175             BA   0.082
2176             LG    0.21    0.35    4.80    0.32    7.00
2177             UC   0.275   0.257
2178             UA       0       3       5       8      12      20      43      75      90      96
2179             UA     100
                 *
```



```
LINE             ID.......1.......2.......3.......4.......5.......6.......7.......8.......9......10
```

```
2180          KK   C595L
2181          KM      Hydrograph combine 587595 + 210C at C595 left branch
2182          HC       2
              *
              * *
              * * C595L is the total flow in Bristol Wash upstream of the confluence
              * * with Longmont Wash
              * *
              * * Start Longmont Wash Left Branch
              * *
              *

2183          KK    210D
2184          KM   Sub-Basin   210D
2185          KM
2186          KM      The Clark Unit Hydrograph is used for this basin.
2187          KM          The Natural time-area relation is used for this basin.
2188          KM
2189          KM      Time of Concentration for this sub-basin is based on the following:
2190          KM          6-Hour Rainfall, Pattern No.  1.00
2191          KM          An rainfall areal reduction factor of 0.998
2192          KM
2193          KM       EXCESS RAINFALL VALUES EXCEEDED IN 5-MINUTE INTERVALS
2194          KM     5  10  15  20  25  30  35  40  45  50  55  60  65  70  75  80  85  90
2195          KM   .46 .45 .45 .14 .11 .10 .04 .04 .04 .02 .02 .02 .00 .00 .00 .00 .00 .00
2196          KM
2197          KM          L=   0.832 miles, S=  325 feet/mile, Kb= .11
2198          KM
2199          BA   0.140
2200          LG    0.18     0.39     5.80     0.20    18.70
2201          UC   0.300    0.258
2202          UA       0        3        5        8       12       20       43       75       90       96
2203          UA     100
              *

2204          KK  588590
2205          KM      Normal depth channel route from C588 to C590
2206          KM      Source:  HEC-2 Cross Section: LO-LB1 0.128
2207          RS       2    FLOW      -1
2208          RC   0.065    0.050    0.060  1117.0  0.0340
2209          RX  9931.7   9960.6   9984.9 10005.7 10019.1 10033.8 10151.6 10172.9
2210          RY  1839.3   1833.5   1825.9  1824.7  1825.9  1828.8  1832.9  1838.0
              *

2211          KK    210E
2212          KM   Sub-Basin   210E
2213          KM
2214          KM      The Clark Unit Hydrograph is used for this basin.
2215          KM          The Natural time-area relation is used for this basin.
2216          KM
2217          KM      Time of Concentration for this sub-basin is based on the following:
2218          KM          6-Hour Rainfall, Pattern No.  1.00
2219          KM          An rainfall areal reduction factor of 1.000
2220          KM
```



```
LINE          ID.......1.......2.......3.......4.......5.......6.......7.......8.......9......10

2221          KM       EXCESS RAINFALL VALUES EXCEEDED IN 5-MINUTE INTERVALS
2222          KM     5  10  15  20  25  30  35  40  45  50  55  60  65  70  75  80  85  90
2223          KM   .46 .45 .45 .14 .11 .10 .04 .04 .04 .02 .01 .00 .00 .00 .00 .00 .00 .00
2224          KM
2225          KM          L=   0.339 miles, S=  151 feet/mile, Kb= .12
2226          KM
2227          BA   0.028
2228          LG    0.15     0.36     6.80     0.14     0.00
2229          UC   0.246    0.254
2230          UA       0        3        5        8       12       20       43       75       90       96
2231          UA     100
              *

2232          KK   C590L
2233          KM      Hydrograph combine 588590 + 210E at C590 left branch
2234          HC       2
              *
              * *
              * * C590L is the total flow in Longmont Wash Left Branch upstream of the
              * * confluence with Longmont Wash
              * *
              * * Start Longmont Wash
              * *
              *

2235          KK    210F
2236          KM   Sub-Basin   210F
2237          KM
2238          KM      The Clark Unit Hydrograph is used for this basin.
2239          KM          The Natural time-area relation is used for this basin.
2240          KM
2241          KM      Time of Concentration for this sub-basin is based on the following:
2242          KM          6-Hour Rainfall, Pattern No.  1.00
2243          KM          An rainfall areal reduction factor of 0.999
2244          KM
2245          KM       EXCESS RAINFALL VALUES EXCEEDED IN 5-MINUTE INTERVALS
2246          KM     5  10  15  20  25  30  35  40  45  50  55  60  65  70  75  80  85  90
2247          KM   .45 .44 .44 .13 .10 .08 .04 .04 .03 .03 .03 .03 .01 .01 .01 .01 .01 .01
2248          KM
2249          KM          L=   0.668 miles, S=  349 feet/mile, Kb= .15
2250          KM
2251          BA   0.093
2252          LG    0.25     0.35     4.40     0.39    34.40
```

```
2253          UC   0.317   0.290
2254          UA       0       3       5       8      12      20      43      75      90      96
2255          UA     100
              *

2256          KK  589590
2257          KM      Normal depth channel route from C589 to C590
2258          KM      Source:  HEC-2 Cross Section: LO 0.813
2259          RS       2    FLOW      -1
2260          RC   0.065   0.050   0.060  1751.0  0.0423
2261          RX  9957.0  9963.5  9984.5  9996.1 10008.8 10017.4 10040.1 10060.8
2262          RY  1843.8  1842.9  1837.0  1831.2  1830.6  1836.1  1838.3  1842.1
              *
```



```
LINE          ID.......1.......2.......3.......4.......5.......6.......7.......8.......9......10

2263          KK    210G
2264          KM   Sub-Basin   210G
2265          KM
2266          KM      The Clark Unit Hydrograph is used for this basin.
2267          KM          The Natural time-area relation is used for this basin.
2268          KM
2269          KM      Time of Concentration for this sub-basin is based on the following:
2270          KM          6-Hour Rainfall, Pattern No.  1.00
2271          KM          An rainfall areal reduction factor of 0.998
2272          KM
2273          KM       EXCESS RAINFALL VALUES EXCEEDED IN 5-MINUTE INTERVALS
2274          KM     5  10  15  20  25  30  35  40  45  50  55  60  65  70  75  80  85  90
2275          KM   .45 .45 .45 .14 .10 .09 .04 .04 .04 .02 .02 .02 .01 .01 .01 .01 .01 .01
2276          KM
2277          KM          L=   0.969 miles, S=  333 feet/mile, Kb= .13
2278          KM
2279          BA   0.162
2280          LG    0.22    0.37    5.30    0.25   24.20
2281          UC   0.375   0.343
2282          UA       0       3       5       8      12      20      43      75      90      96
2283          UA     100
              *

2284          KK   C590R
2285          KM      Hydrograph combine 589590 + 210G at C590 right branch
2286          HC       2
              *
              * * NOTE: 590593 is too short to route
              * *
              * * C590R is the total flow in Longmont Wash upstream of the confluence
              * * with Longmont Wash Left Branch
              * *
              *

2287          KK    C590
2288          KM      Hydrograph combine C590L + C590R at C590
2289          HC       2
              *
              * * C590 is the total flow in Longmont Wash upstream of the confluence
              * * Longmont Wash Right Branch
              * *
              * * Start Longmont Wash Right Branch
              * *
              *

2290          KK    210H
2291          KM   Sub-Basin   210H
2292          KM
2293          KM      The Clark Unit Hydrograph is used for this basin.
2294          KM          The Natural time-area relation is used for this basin.
2295          KM
2296          KM      Time of Concentration for this sub-basin is based on the following:
2297          KM          6-Hour Rainfall, Pattern No.  1.00
2298          KM          An rainfall areal reduction factor of 0.999
```



```
LINE          ID.......1.......2.......3.......4.......5.......6.......7.......8.......9......10

2299          KM
2300          KM       EXCESS RAINFALL VALUES EXCEEDED IN 5-MINUTE INTERVALS
2301          KM     5  10  15  20  25  30  35  40  45  50  55  60  65  70  75  80  85  90
2302          KM   .45 .44 .44 .13 .10 .09 .04 .04 .03 .01 .01 .01 .00 .00 .00 .00 .00 .00
2303          KM
2304          KM          L=   0.565 miles, S=  340 feet/mile, Kb= .11
2305          KM
2306          BA   0.070
2307          LG    0.16    0.39    6.20    0.19    6.70
2308          UC   0.238   0.217
2309          UA       0       3       5       8      12      20      43      75      90      96
2310          UA     100
              *

2311          KK  592593
2312          KM      Normal depth channel route from C592 to C593
2313          KM      Source:  HEC-2 Cross Section: LO-RB1 0.027
2314          RS       3    FLOW      -1
2315          RC   0.065   0.050   0.060  2062.0  0.0412
2316          RX  9920.6  9964.0  9984.7  9996.1 10003.9 10025.4 10041.1 10057.9
2317          RY  1820.0  1804.5  1801.2  1797.3  1797.3  1808.5  1818.3  1820.1
              *
              * *
              * * 592593 is the total flow in Longmont Wash Right Branch upstream
              * * of the confluence with Longmont Wash
```

```
                * *
                *

2318            KK    C593
2319            KM      Hydrograph combine C590 + C593R at C593
2320            HC       2
                *
                * *
                * * C593 is the total flow in Longmont Wash below the confluence with
                * * Longmont Wash Right Branch
                * *
                *

2321            KK  593594
2322            KM      Normal depth channel route from C593 to C594
2323            KM      Source:  HEC-2 Cross Section: LO0.413
2324            RS       2    FLOW      -1
2325            RC   0.065   0.050   0.060   988.0  0.0202
2326            RX  9937.2  9958.5  9981.7  9992.8 10007.7 10024.4 10041.9 10067.8
2327            RY  1783.6  1773.5  1773.9  1771.3  1771.2  1774.5  1778.7  1788.7
                *

2328            KK    210I
2329            KM   Sub-Basin   210I
2330            KM
2331            KM      The Clark Unit Hydrograph is used for this basin.
2332            KM          The Natural time-area relation is used for this basin.
2333            KM
2334            KM      Time of Concentration for this sub-basin is based on the following:
2335            KM          6-Hour Rainfall, Pattern No.  1.00
```



```
LINE            ID.......1.......2.......3.......4.......5.......6.......7.......8.......9......10

2336            KM          An rainfall areal reduction factor of 0.999
2337            KM
2338            KM       EXCESS RAINFALL VALUES EXCEEDED IN 5-MINUTE INTERVALS
2339            KM     5  10  15  20  25  30  35  40  45  50  55  60  65  70  75  80  85  90
2340            KM   .47 .46 .46 .15 .12 .11 .05 .05 .04 .03 .02 .01 .00 .00 .00 .00 .00 .00
2341            KM
2342            KM          L=   0.634 miles, S=  250 feet/mile, Kb= .11
2343            KM
2344            BA   0.049
2345            LG    0.15    0.32    7.60    0.11    0.00
2346            UC   0.279   0.347
2347            UA       0       3       5       8      12      20      43      75      90      96
2348            UA     100
                *

2349            KK    C594
2350            KM      Hydrograph combine 593594 + 210I at C594
2351            HC       2
                *

2352            KK  594595
2353            KM      Normal depth channel route from C594 to C595
2354            KM      Source:  HEC-2 Cross Section: LO 0.184
2355            RS       6    FLOW      -1
2356            RC   0.065   0.050   0.060  2093.0  0.0201
2357            RX  9814.0  9836.5  9878.5  9988.2  9994.1 10010.9 10030.4 10030.5
2358            RY  1769.3  1766.6  1752.8  1750.6  1747.9  1749.2  1770.5  1770.6
                *

2359            KK    210J
2360            KM   Sub-Basin   210J
2361            KM
2362            KM      The Clark Unit Hydrograph is used for this basin.
2363            KM          The Natural time-area relation is used for this basin.
2364            KM
2365            KM      Time of Concentration for this sub-basin is based on the following:
2366            KM          6-Hour Rainfall, Pattern No.  1.00
2367            KM          An rainfall areal reduction factor of 0.999
2368            KM
2369            KM       EXCESS RAINFALL VALUES EXCEEDED IN 5-MINUTE INTERVALS
2370            KM     5  10  15  20  25  30  35  40  45  50  55  60  65  70  75  80  85  90
2371            KM   .46 .45 .45 .14 .11 .10 .04 .04 .04 .01 .00 .00 .00 .00 .00 .00 .00 .00
2372            KM
2373            KM          L=   0.684 miles, S=  187 feet/mile, Kb= .10
2374            KM
2375            BA   0.103
2376            LG    0.15    0.37    6.60    0.15    0.00
2377            UC   0.313   0.274
2378            UA       0       3       5       8      12      20      43      75      90      96
2379            UA     100
                *
```



```
LINE            ID.......1.......2.......3.......4.......5.......6.......7.......8.......9......10

2380            KK   C595R
2381            KM      Hydrograph combine 594595 + 210J at C595
2382            HC       2
                *
                * *
                * * C595R is the total flow in Longmont Wash upstream of the confluence
                * * with Bristol Wash
                * *
                *

2383            KK    C595
```

```
2384        KM      Hydrograph combine C595L + C595R at C595
2385        HC       2
            *
            * *
            * * C595 is the total flow in Bristol Wash just downstream of the
            * * confluence with Longmont Wash
            * *
            *

2386        KK  595596
2387        KM      Normal depth channel route from C595 to C596
2388        KM      Source:  HEC-2 Cross Section: BR0.290
2389        RS       3    FLOW      -1
2390        RC   0.055   0.045   0.055  1095.0  0.0110
2391        RX  9886.8  9904.8  9948.0 10000.0 10032.4 10081.5 10107.3 10130.4
2392        RY  1727.2  1724.1  1725.9  1720.2  1725.6  1725.3  1721.3  1731.4
            *

2393        KK    210K
2394        KM   Sub-Basin   210K
2395        KM
2396        KM      The Clark Unit Hydrograph is used for this basin.
2397        KM          The Natural time-area relation is used for this basin.
2398        KM
2399        KM      Time of Concentration for this sub-basin is based on the following:
2400        KM          6-Hour Rainfall, Pattern No.  1.00
2401        KM          An rainfall areal reduction factor of 0.999
2402        KM
2403        KM       EXCESS RAINFALL VALUES EXCEEDED IN 5-MINUTE INTERVALS
2404        KM     5  10  15  20  25  30  35  40  45  50  55  60  65  70  75  80  85  90
2405        KM   .46 .45 .45 .14 .11 .10 .04 .04 .04 .01 .00 .00 .00 .00 .00 .00 .00 .00
2406        KM
2407        KM          L=   0.425 miles, S=  207 feet/mile, Kb= .10
2408        KM
2409        BA   0.077
2410        LG    0.18    0.37    6.60    0.15    0.10
2411        UC   0.225   0.154
2412        UA       0       3       5       8      12      20      43      75      90      96
2413        UA     100
            *
```



```
LINE        ID.......1.......2.......3.......4.......5.......6.......7.......8.......9......10

2414        KK    C596
2415        KM      Hydrograph combine 595596 + 210K at C596
2416        HC       2
            *
            * *
            * * C596 is the total flow in Bristol Wash at Golden Eagle Blvd.
            * * upstream of DAM 4
            * *
            * * Leave Basin 210 temporarily and move to Basin 209
            * *
            * * Start Cloudburst Wash
            *

2417        KK    209A
2418        KM   Sub-Basin   209A
2419        KM
2420        KM      The Clark Unit Hydrograph is used for this basin.
2421        KM          The Natural time-area relation is used for this basin.
2422        KM
2423        KM      Time of Concentration for this sub-basin is based on the following:
2424        KM          6-Hour Rainfall, Pattern No.  1.00
2425        KM          An rainfall areal reduction factor of 0.995
2426        KM
2427        KM       EXCESS RAINFALL VALUES EXCEEDED IN 5-MINUTE INTERVALS
2428        KM     5  10  15  20  25  30  35  40  45  50  55  60  65  70  75  80  85  90
2429        KM   .45 .44 .44 .13 .09 .08 .04 .04 .03 .03 .03 .03 .01 .01 .01 .01 .01 .01
2430        KM
2431        KM          L=   1.028 miles, S=  367 feet/mile, Kb= .13
2432        KM
2433        BA   0.368
2434        LG    0.25    0.35    4.35    0.40   35.00
2435        UC   0.379   0.228
2436        UA       0       3       5       8      12      20      43      75      90      96
2437        UA     100
            *

2438        KK  579580
2439        KM      Normal depth channel route from C579 to C580
2440        KM      Source:  100 Scale 4' CI Mapping
2441        RS       2    FLOW      -1
2442        RC   0.050   0.045   0.050  1751.0  0.0600
2443        RX  1000.0  1010.0  1025.0  1030.0  1035.0  1040.0  1045.0  1048.0
2444        RY  2336.0  2332.0  2328.0  2327.5  2327.5  2328.0  2332.0  2336.0
            *

2445        KK    209C
2446        KM   Sub-Basin   209C
2447        KM
2448        KM      The Clark Unit Hydrograph is used for this basin.
2449        KM          The Natural time-area relation is used for this basin.
2450        KM
2451        KM      Time of Concentration for this sub-basin is based on the following:
2452        KM          6-Hour Rainfall, Pattern No.  1.00
2453        KM          An rainfall areal reduction factor of 0.999
```

```
LINE          ID.......1.......2.......3.......4.......5.......6.......7.......8.......9......10

2454          KM
2455          KM       EXCESS RAINFALL VALUES EXCEEDED IN 5-MINUTE INTERVALS
2456          KM     5  10  15  20  25  30  35  40  45  50  55  60  65  70  75  80  85  90
2457          KM   .45 .44 .44 .13 .10 .08 .04 .04 .03 .03 .03 .03 .01 .01 .01 .01 .01 .01
2458          KM
2459          KM          L=   0.723 miles, S=  342 feet/mile, Kb= .15
2460          KM
2461          BA   0.064
2462          LG    0.25    0.35    4.35    0.40   35.00
2463          UC   0.338   0.410
2464          UA      0       3       5       8      12      20      43      75      90      96
2465          UA    100
              *

2466          KK   C580R
2467          KM      Hydrograph combine 579580 + 209C at C580 right branch
2468          HC       2
              *

2469          KK    209B
2470          KM   Sub-Basin   209B
2471          KM
2472          KM      The Clark Unit Hydrograph is used for this basin.
2473          KM          The Natural time-area relation is used for this basin.
2474          KM
2475          KM      Time of Concentration for this sub-basin is based on the following:
2476          KM          6-Hour Rainfall, Pattern No.  1.00
2477          KM          An rainfall areal reduction factor of 0.999
2478          KM
2479          KM       EXCESS RAINFALL VALUES EXCEEDED IN 5-MINUTE INTERVALS
2480          KM     5  10  15  20  25  30  35  40  45  50  55  60  65  70  75  80  85  90
2481          KM   .45 .44 .44 .13 .09 .08 .04 .04 .03 .03 .03 .03 .01 .01 .01 .01 .01 .01
2482          KM
2483          KM          L=   0.716 miles, S=  403 feet/mile, Kb= .15
2484          KM
2485          BA   0.083
2486          LG    0.25    0.35    4.35    0.40   35.00
2487          UC   0.313   0.321
2488          UA      0       3       5       8      12      20      43      75      90      96
2489          UA    100
              *

2490          KK    C580
2491          KM      Hydrograph combine 580R + 209B at C580
2492          HC       2
              *

2493          KK  580581
2494          KM      Normal depth channel route from C580 to C581
2495          KM      Source:  100 Scale 4' CI Mapping
2496          RS       3    FLOW      -1
2497          RC   0.050   0.045   0.050  2339.0  0.0440
2498          RX  1000.0  1010.0  1025.0  1030.0  1040.0  1045.0  1070.0  1075.0
2499          RY  2452.0  2448.0  2444.0  2443.5  2443.5  2444.0  2448.0  2452.0
              *
```



```
LINE          ID.......1.......2.......3.......4.......5.......6.......7.......8.......9......10

2500          KK    209D
2501          KM   Sub-Basin   209D
2502          KM
2503          KM      The Clark Unit Hydrograph is used for this basin.
2504          KM          The Natural time-area relation is used for this basin.
2505          KM
2506          KM      Time of Concentration for this sub-basin is based on the following:
2507          KM          6-Hour Rainfall, Pattern No.  1.00
2508          KM          An rainfall areal reduction factor of 0.997
2509          KM
2510          KM       EXCESS RAINFALL VALUES EXCEEDED IN 5-MINUTE INTERVALS
2511          KM     5  10  15  20  25  30  35  40  45  50  55  60  65  70  75  80  85  90
2512          KM   .45 .44 .44 .13 .09 .08 .04 .03 .03 .03 .03 .03 .01 .01 .01 .01 .01 .01
2513          KM
2514          KM          L=   0.800 miles, S=  354 feet/mile, Kb= .13
2515          KM
2516          BA   0.244
2517          LG    0.25    0.35    4.35    0.42   35.00
2518          UC   0.325   0.199
2519          UA      0       3       5       8      12      20      43      75      90      96
2520          UA    100
              *

2521          KK   C581R
2522          KM      Hydrograph combine 580581 + 209D at C581 right branch
2523          HC       2
              *

2524          KK    209E
2525          KM   Sub-Basin   209E
2526          KM
2527          KM      The Clark Unit Hydrograph is used for this basin.
2528          KM          The Natural time-area relation is used for this basin.
2529          KM
2530          KM      Time of Concentration for this sub-basin is based on the following:
2531          KM          6-Hour Rainfall, Pattern No.  1.00
2532          KM          An rainfall areal reduction factor of 0.998
2533          KM
2534          KM       EXCESS RAINFALL VALUES EXCEEDED IN 5-MINUTE INTERVALS
```

```
2535          KM     5  10  15  20  25  30  35  40  45  50  55  60  65  70  75  80  85  90
2536          KM   .45 .44 .44 .13 .09 .08 .04 .04 .03 .03 .03 .03 .01 .01 .01 .01 .01 .01
2537          KM
2538          KM          L=   1.018 miles, S=  341 feet/mile, Kb= .14
2539          KM
2540          BA   0.149
2541          LG    0.25    0.35    4.35    0.40   35.00
2542          UC   0.408   0.411
2543          UA       0       3       5       8      12      20      43      75      90      96
2544          UA     100
              *
1                                          HEC-1 INPUT                                          PAGE 60

LINE          ID.......1.......2.......3.......4.......5.......6.......7.......8.......9......10


2545          KK    C581
2546          KM      Hydrograph combine 581R + 209E at C581
2547          HC       2
              *

2548          KK  581582
2549          KM      Normal depth channel route from C581 to C582
2550          KM      Source:  100 Scale 4' CI Mapping
2551          RS       3    FLOW      -1
2552          RC   0.050   0.045   0.050  4012.0  0.0459
2553          RX  1000.0  1010.0  1025.0  1030.0  1035.0  1040.0  1050.0  1065.0
2554          RY  2100.0  2096.0  2092.0  2091.5  2091.5  2092.0  2096.0  2100.0
              *

2555          KK    209F
2556          KM   Sub-Basin   209F
2557          KM
2558          KM      The Clark Unit Hydrograph is used for this basin.
2559          KM          The Natural time-area relation is used for this basin.
2560          KM
2561          KM      Time of Concentration for this sub-basin is based on the following:
2562          KM          6-Hour Rainfall, Pattern No.  1.00
2563          KM          An rainfall areal reduction factor of 0.997
2564          KM
2565          KM       EXCESS RAINFALL VALUES EXCEEDED IN 5-MINUTE INTERVALS
2566          KM     5  10  15  20  25  30  35  40  45  50  55  60  65  70  75  80  85  90
2567          KM   .45 .44 .44 .13 .09 .07 .03 .03 .03 .03 .03 .03 .01 .01 .01 .01 .01 .01
2568          KM
2569          KM          L=   1.191 miles, S=  332 feet/mile, Kb= .13
2570          KM
2571          BA   0.226
2572          LG    0.24    0.35    4.50    0.39   30.90
2573          UC   0.438   0.397
2574          UA       0       3       5       8      12      20      43      75      90      96
2575          UA     100
              *

2576          KK   C582R
2577          KM      Hydrograph combine 581582 + 209F at C582 right branch
2578          HC       2
              *

2579          KK    209G
2580          KM   Sub-Basin   209G
2581          KM
2582          KM      The Clark Unit Hydrograph is used for this basin.
2583          KM          The Natural time-area relation is used for this basin.
2584          KM
2585          KM      Time of Concentration for this sub-basin is based on the following:
2586          KM          6-Hour Rainfall, Pattern No.  1.00
2587          KM          An rainfall areal reduction factor of 0.997
2588          KM
2589          KM       EXCESS RAINFALL VALUES EXCEEDED IN 5-MINUTE INTERVALS
2590          KM     5  10  15  20  25  30  35  40  45  50  55  60  65  70  75  80  85  90
1                                          HEC-1 INPUT                                          PAGE 61

LINE          ID.......1.......2.......3.......4.......5.......6.......7.......8.......9......10

2591          KM   .45 .44 .44 .13 .09 .08 .04 .04 .03 .03 .03 .03 .01 .01 .01 .01 .01 .01
2592          KM
2593          KM          L=   1.050 miles, S=  306 feet/mile, Kb= .14
2594          KM
2595          BA   0.204
2596          LG    0.25    0.35    4.35    0.40   35.00
2597          UC   0.438   0.381
2598          UA       0       3       5       8      12      20      43      75      90      96
2599          UA     100
              *

2600          KK    C582
2601          KM      Hydrograph combine C582R + 209G at C582
2602          HC       2
              *

2603          KK  582583
2604          KM      Normal depth channel route from C582 to C583
2605          KM      Source:  100 Scale 4' CI Mapping.
2606          RS       2    FLOW      -1
2607          RC   0.060   0.050   0.060  1725.0  0.0232
2608          RX   960.0  1020.0  1035.0  1040.0  1050.0  1055.0  1065.0  1073.0
2609          RY  2024.0  2018.0  2016.0  2015.5  2015.5  2016.0  2020.0  2024.0
              *

2610          KK    209H
2611          KM   Sub-Basin   209H
```

```
2612          KM
2613          KM      The Clark Unit Hydrograph is used for this basin.
2614          KM          The Natural time-area relation is used for this basin.
2615          KM
2616          KM      Time of Concentration for this sub-basin is based on the following:
2617          KM          6-Hour Rainfall, Pattern No.  1.00
2618          KM          An rainfall areal reduction factor of 0.999
2619          KM
2620          KM       EXCESS RAINFALL VALUES EXCEEDED IN 5-MINUTE INTERVALS
2621          KM     5  10  15  20  25  30  35  40  45  50  55  60  65  70  75  80  85  90
2622          KM   .45 .45 .44 .13 .10 .09 .04 .04 .03 .02 .02 .02 .00 .00 .00 .00 .00 .00
2623          KM
2624          KM          L=   0.542 miles, S=  343 feet/mile, Kb= .12
2625          KM
2626          BA   0.083
2627          LG    0.18    0.38    5.60    0.24   18.30
2628          UC   0.242   0.193
2629          UA       0       3       5       8      12      20      43      75      90      96
2630          UA     100
              *

2631          KK    C583
2632          KM      Hydrograph combine 582583 + 209H at C583
2633          HC       2
              *
```



```
LINE          ID.......1.......2.......3.......4.......5.......6.......7.......8.......9......10

2634          KK  583584
2635          KM      Normal depth channel route from C583 to C584
2636          KM      Source:  HEC-2 Cross Section: CL 1.664
2637          RS       4    FLOW      -1
2638          RC   0.055   0.070   0.055  3107.0  0.0356
2639          RX  9859.8  9910.3  9933.5  9995.6 10021.7 10051.0 10083.0 10127.8
2640          RY  1948.3  1944.2  1943.7  1930.9  1932.4  1941.6  1937.3  1945.2
              *

2641          KK    209I
2642          KM   Sub-Basin   209I
2643          KM
2644          KM      The Clark Unit Hydrograph is used for this basin.
2645          KM          The Natural time-area relation is used for this basin.
2646          KM
2647          KM      Time of Concentration for this sub-basin is based on the following:
2648          KM          6-Hour Rainfall, Pattern No.  1.00
2649          KM          An rainfall areal reduction factor of 0.998
2650          KM
2651          KM       EXCESS RAINFALL VALUES EXCEEDED IN 5-MINUTE INTERVALS
2652          KM     5  10  15  20  25  30  35  40  45  50  55  60  65  70  75  80  85  90
2653          KM   .45 .45 .44 .14 .10 .09 .04 .04 .03 .01 .00 .00 .00 .00 .00 .00 .00 .00
2654          KM
2655          KM          L=   0.691 miles, S=  347 feet/mile, Kb= .10
2656          KM
2657          BA   0.182
2658          LG    0.15    0.40    6.00    0.18    5.30
2659          UC   0.246   0.153
2660          UA       0       3       5       8      12      20      43      75      90      96
2661          UA     100
              *

2662          KK   C584I
2663          KM      Hydrograph combine 583584 + 209I at C584I
2664          HC       2
              *
              * *
              * * C584I is the total flow in Cloudburst Wash upstream of Dam 7
              * *
              *

2665          KK   C584O
2666          KM      Reservoir route at C584 (Dam 7).
2667          RS       1    ELEV  1884.8
2668          SV    0.00   14.55   37.17   57.52   86.65   94.00   97.00  101.00  104.90  109.00
2669          SV  113.00  118.00  122.00  126.25  131.00  133.00  136.00  139.00
2670          SE  1884.8  1908.0  1916.0  1920.0  1924.0  1924.8  1925.2  1925.6  1926.0  1926.4
2671          SE  1926.8  1927.2  1927.6  1928.0  1928.4  1928.6  1928.8  1929.0
2672          SQ       0     135     223     285     326     341     355     358     385     493
2673          SQ     704    1007    1394    1852    2374    2956    3596    3937    4292    4661
2674          SE  1884.8  1892.0  1900.0  1908.0  1916.0  1920.0  1924.0  1924.8  1925.2  1925.6
2675          SE  1926.0  1926.4  1926.8  1927.2  1927.6  1928.0  1928.4  1928.6  1928.8  1929.0
2676          RL                    0.15
              *
              * *
              * * End Basin 209.  Rejoin Basin 210
              * *
              *
```



```
LINE          ID.......1.......2.......3.......4.......5.......6.......7.......8.......9......10

2677          KK  584597
2678          KM      Normal depth channel route from C584 to C597
2679          KM      Source:  HEC-2 Cross Section: CL 1.032
2680          RS       8    FLOW      -1
2681          RC   0.065   0.050   0.065  3704.0  0.0261
2682          RX  9902.1  9923.0  9938.7  9984.6 10049.3 10056.0 10091.7 10120.0
2683          RY  1839.1  1830.1  1826.6  1824.1  1824.9  1826.7  1828.5  1838.8
              *
```

```
2684        KK    210L
2685        KM   Sub-Basin   210L
2686        KM
2687        KM      The Clark Unit Hydrograph is used for this basin.
2688        KM          The HEC-1 time-area relation is used for this basin.
2689        KM
2690        KM      Time of Concentration for this sub-basin is based on the following:
2691        KM          6-Hour Rainfall, Pattern No.  1.00
2692        KM          An rainfall areal reduction factor of 0.998
2693        KM
2694        KM       EXCESS RAINFALL VALUES EXCEEDED IN 5-MINUTE INTERVALS
2695        KM     5  10  15  20  25  30  35  40  45  50  55  60  65  70  75  80  85  90
2696        KM   .43 .43 .42 .11 .08 .06 .02 .02 .02 .00 .00 .00 .00 .00 .00 .00 .00 .00
2697        KM
2698        KM          L=   0.820 miles, S=  251 feet/mile, Kb= .09
2699        KM
2700        BA   0.137
2701        LG    0.18    0.37    5.20    0.28    0.00
2702        UC   0.300   0.257
            *

2703        KK    C597
2704        KM      Hydrograph combine 584597 + 210L at C597
2705        HC       2
            *

2706        KK  597598
2707        KM      Normal depth channel route from C597 to C598
2708        KM      Source:  HEC-2 Cross Section: CL 0.328
2709        RS       5    FLOW      -1
2710        RC   0.065   0.050   0.065  2822.0  0.0252
2711        RX  9961.0  9961.9  9969.1  9986.3 10018.5 10082.6 10155.2 10278.8
2712        RY  1740.2  1740.2  1738.1  1731.6  1732.3  1737.1  1740.0  1740.8
            *

2713        KK    210M
2714        KM   Sub-Basin   210M
2715        KM
2716        KM      The Clark Unit Hydrograph is used for this basin.
2717        KM          The Natural time-area relation is used for this basin.
2718        KM
2719        KM      Time of Concentration for this sub-basin is based on the following:
2720        KM          6-Hour Rainfall, Pattern No.  1.00
2721        KM          An rainfall areal reduction factor of 0.998
2722        KM
```



```
LINE        ID.......1.......2.......3.......4.......5.......6.......7.......8.......9......10

2723        KM       EXCESS RAINFALL VALUES EXCEEDED IN 5-MINUTE INTERVALS
2724        KM     5  10  15  20  25  30  35  40  45  50  55  60  65  70  75  80  85  90
2725        KM   .45 .44 .44 .13 .09 .08 .03 .03 .03 .00 .00 .00 .00 .00 .00 .00 .00 .00
2726        KM
2727        KM          L=   1.022 miles, S=  232 feet/mile, Kb= .09
2728        KM
2729        BA   0.162
2730        LG    0.18    0.39    5.80    0.20    0.10
2731        UC   0.354   0.335
2732        UA       0       3       5       8      12      20      43      75      90      96
2733        UA     100
            *

2734        KK    C598
2735        KM      Hydrograph combine 597598 + 210M at C598
2736        HC       2
            *
            * *
            * * C598 is the total flow in Cloudburst Wash at Golden Eagle Blvd.
            * * upstream of DAM 4
            * *
            *

2737        KK    210N
2738        KM   Sub-Basin   210N
2739        KM
2740        KM      The Clark Unit Hydrograph is used for this basin.
2741        KM          The Natural time-area relation is used for this basin.
2742        KM
2743        KM      Time of Concentration for this sub-basin is based on the following:
2744        KM          6-Hour Rainfall, Pattern No.  1.00
2745        KM          An rainfall areal reduction factor of 0.999
2746        KM
2747        KM       EXCESS RAINFALL VALUES EXCEEDED IN 5-MINUTE INTERVALS
2748        KM     5  10  15  20  25  30  35  40  45  50  55  60  65  70  75  80  85  90
2749        KM   .42 .42 .41 .10 .06 .04 .01 .01 .01 .01 .01 .01 .00 .00 .00 .00 .00 .00
2750        KM
2751        KM          L=   0.309 miles, S=  178 feet/mile, Kb= .08
2752        KM
2753        BA   0.049
2754        LG    0.26    0.35    4.10    0.46   10.40
2755        UC   0.183   0.123
2756        UA       0       3       5       8      12      20      43      75      90      96
2757        UA     100
            *

2758        KK   C599I
2759        KM      Hydrograph combine C585 + C596 + C598 + 210N at C599I
2760        HC       4
            *
            * *
```

```
                 * * C599I is the total flow in Ashbrook Wash upstream of DAM 4
                 * *
                 *
1                                          HEC-1 INPUT                                                    PAGE 65

LINE             ID.......1.......2.......3.......4.......5.......6.......7.......8.......9......10

2761             KK   C599O
2762             KM      Reservoir route at C599 (Dam 4).
2763             RS       1    ELEV  1694.7
2764             SV    0.00   16.85   31.66   52.71   80.85   95.00   98.00  102.00  105.00  109.00
2765             SV  113.00  116.14  120.00  124.00  128.00  136.00  139.00  144.00  148.00  152.00
2766             SE  1694.7  1708.0  1710.0  1712.0  1714.0  1714.8  1715.0  1715.2  1715.4  1715.6
2767             SE  1715.8  1716.0  1716.2  1716.4  1716.6  1717.0  1717.2  1717.4  1717.6  1717.8
2768             SQ       0      38     214     312     384     443     497     543     587     628
2769             SQ     642     754     957    1262    1665    2182    2483    2811    3164    3540
2770             SE  1694.7  1696.0  1700.0  1702.0  1704.0  1706.0  1708.0  1710.0  1712.0  1714.0
2771             SE  1714.8  1715.4  1715.8  1716.2  1716.6  1717.0  1717.2  1717.4  1717.6  1717.8
2772             RL                    0.97
                 *
                 * * End Basin 210.  Start Basin 211
                 * *
                 *

2773             KK  599608
2774             KM      Normal depth channel route from C599 to C608
2775             KM      Source:  HEC-2 Cross Section: AS 3.621
2776             RS       3    FLOW      -1
2777             RC   0.055   0.045   0.025  1476.0  0.0148
2778             RX  9675.4  9726.8  9929.0  9990.7 10005.9 10033.3 10061.9 10082.2
2779             RY  1691.3  1687.2  1685.5  1678.6  1678.1  1682.1  1689.8  1691.8
                 *

2780             KK    211K
2781             KM   Sub-Basin   211K
2782             KM
2783             KM      The Clark Unit Hydrograph is used for this basin.
2784             KM          The HEC-1 time-area relation is used for this basin.
2785             KM
2786             KM      Time of Concentration for this sub-basin is based on the following:
2787             KM          6-Hour Rainfall, Pattern No.  1.00
2788             KM          An rainfall areal reduction factor of 0.999
2789             KM
2790             KM       EXCESS RAINFALL VALUES EXCEEDED IN 5-MINUTE INTERVALS
2791             KM     5  10  15  20  25  30  35  40  45  50  55  60  65  70  75  80  85  90
2792             KM   .46 .45 .45 .15 .11 .10 .05 .04 .04 .02 .02 .02 .00 .00 .00 .00 .00 .00
2793             KM
2794             KM          L=   0.376 miles, S=  157 feet/mile, Kb= .08
2795             KM
2796             BA   0.102
2797             LG    0.18    0.38    6.00    0.18   17.80
2798             UC   0.204   0.107
                 *

2799             KK   C608L
2800             KM      Hydrograph combine 599608 + 211K at C608 left branch
2801             HC       2
                 *
1                                          HEC-1 INPUT                                                    PAGE 66

LINE             ID.......1.......2.......3.......4.......5.......6.......7.......8.......9......10

2802             KK    211G
2803             KM   Sub-Basin   211G
2804             KM
2805             KM      The Clark Unit Hydrograph is used for this basin.
2806             KM          The Urban time-area relation is used for this basin.
2807             KM
2808             KM      Time of Concentration for this sub-basin is based on the following:
2809             KM          6-Hour Rainfall, Pattern No.  1.00
2810             KM          An rainfall areal reduction factor of 1.000
2811             KM
2812             KM       EXCESS RAINFALL VALUES EXCEEDED IN 5-MINUTE INTERVALS
2813             KM     5  10  15  20  25  30  35  40  45  50  55  60  65  70  75  80  85  90
2814             KM   .50 .50 .50 .19 .16 .16 .08 .08 .08 .08 .08 .08 .02 .02 .02 .02 .02 .02
2815             KM
2816             KM          L=   0.448 miles, S=  190 feet/mile, Kb= .04
2817             KM
2818             BA   0.008
2819             LG    0.06    0.25    5.70    0.18   90.00
2820             UC   0.142   0.359
2821             UA       0       5      16      30      65      77      84      90      94      97
2822             UA     100
                 *

2823             KK  604606
2824             KM      Normal depth channel route from C604 to C606
2825             KM      Source:  200 Scale Mapping
2826             RS      11    FLOW      -1
2827             RC   0.040   0.018   0.040  2784.0  0.0647
2828             RX  1000.0  1040.0  1060.0  1076.0  1092.0  1093.2  1098.2  1113.2
2829             RY  1814.0  1811.0  1810.8  1811.1  1810.8  1811.2  1812.0  1816.0
                 *

2830             KK    211I
2831             KM   Sub-Basin   211I
2832             KM
2833             KM      The Clark Unit Hydrograph is used for this basin.
2834             KM          The Natural time-area relation is used for this basin.
```

```
2835          KM
2836          KM      Time of Concentration for this sub-basin is based on the following:
2837          KM          6-Hour Rainfall, Pattern No.  1.00
2838          KM          An rainfall areal reduction factor of 0.999
2839          KM
2840          KM        EXCESS RAINFALL VALUES EXCEEDED IN 5-MINUTE INTERVALS
2841          KM     5  10  15  20  25  30  35  40  45  50  55  60  65  70  75  80  85  90
2842          KM   .47 .46 .46 .16 .12 .11 .05 .05 .05 .03 .03 .03 .01 .01 .01 .01 .01 .01
2843          KM
2844          KM          L=   0.626 miles, S=  257 feet/mile, Kb= .11
2845          KM
2846          BA   0.041
2847          LG    0.13    0.39    5.70    0.20   35.00
2848          UC   0.271   0.370
2849          UA       0       3       5       8      12      20      43      75      90      96
2850          UA     100
              *
1                                          HEC-1 INPUT                                          PAGE 67

LINE          ID.......1.......2.......3.......4.......5.......6.......7.......8.......9......10


2851          KK   C606R
2852          KM      Hydrograph combine 604606 + 211I at C606 right branch
2853          HC       2
              *

2854          KK    211H
2855          KM   Sub-Basin   211H
2856          KM
2857          KM      The Clark Unit Hydrograph is used for this basin.
2858          KM          The Natural time-area relation is used for this basin.
2859          KM
2860          KM      Time of Concentration for this sub-basin is based on the following:
2861          KM          6-Hour Rainfall, Pattern No.  1.00
2862          KM          An rainfall areal reduction factor of 0.999
2863          KM
2864          KM        EXCESS RAINFALL VALUES EXCEEDED IN 5-MINUTE INTERVALS
2865          KM     5  10  15  20  25  30  35  40  45  50  55  60  65  70  75  80  85  90
2866          KM   .45 .45 .44 .14 .10 .09 .04 .04 .03 .00 .00 .00 .00 .00 .00 .00 .00 .00
2867          KM
2868          KM          L=   0.501 miles, S=  289 feet/mile, Kb= .11
2869          KM
2870          BA   0.073
2871          LG    0.15    0.40    6.00    0.18    3.40
2872          UC   0.233   0.187
2873          UA       0       3       5       8      12      20      43      75      90      96
2874          UA     100
              *

2875          KK   C605O
2876          KM      Reservoir route at C605.
2877          RS       1    ELEV  1722.5
2878          SV    0.00    0.20    0.20    0.20    0.20    0.30    0.30    0.30    0.40    0.60
2879          SV    0.70    0.90    1.00    1.20    1.40    1.60    1.90    2.80    3.40    4.10
2880          SE  1722.5  1726.8  1727.0  1727.2  1727.4  1727.6  1727.8  1728.0  1728.2  1728.4
2881          SE  1728.6  1728.8  1729.0  1729.2  1729.4  1729.6  1730.0  1730.4  1730.7  1731.0
2882          SQ       0       0       5      10      20      43      63      73      78      85
2883          SQ      91      96     101     105     109     113     122     130     136     200
              *

2884          KK    C606
2885          KM      Hydrograph combine C606R + C605O at C606
2886          HC       2
              *

2887          KK  606607
2888          KM      Normal depth channel route from C606 to C607
2889          KM      Source:  200 Scale Mapping
2890          RS       2    FLOW     -1
2891          RC   0.020   0.055   0.035  1061.0  0.0286
2892          RX  1000.0  1032.0  1082.0  1095.0  1105.0  1117.0  1123.0  1153.0
2893          RY  1704.3  1704.0  1703.5  1700.0  1700.0  1703.0  1704.0  1706.0
              *
1                                          HEC-1 INPUT                                          PAGE 68

LINE          ID.......1.......2.......3.......4.......5.......6.......7.......8.......9......10


2894          KK    211J
2895          KM   Sub-Basin   211J
2896          KM
2897          KM      The Clark Unit Hydrograph is used for this basin.
2898          KM          The HEC-1 time-area relation is used for this basin.
2899          KM
2900          KM      Time of Concentration for this sub-basin is based on the following:
2901          KM          6-Hour Rainfall, Pattern No.  1.00
2902          KM          An rainfall areal reduction factor of 1.000
2903          KM
2904          KM        EXCESS RAINFALL VALUES EXCEEDED IN 5-MINUTE INTERVALS
2905          KM     5  10  15  20  25  30  35  40  45  50  55  60  65  70  75  80  85  90
2906          KM   .47 .46 .46 .16 .12 .12 .05 .05 .05 .03 .03 .03 .01 .01 .01 .01 .01 .01
2907          KM
2908          KM          L=   0.249 miles, S=  166 feet/mile, Kb= .11
2909          KM
2910          BA   0.015
2911          LG    0.13    0.37    6.20    0.18   32.40
2912          UC   0.192   0.215
              *

2913          KK    C607
```

```
2914        KM      Hydrograph combine 606607 + 211J at C607
2915        HC       2
            *

2916        KK  607608
2917        KM      Normal depth channel route from C607 to C608
2918        KM      Source:  200 Scale Mapping
2919        RS       2    FLOW      -1
2920        RC   0.040   0.050   0.035  1008.0  0.0145
2921        RX  1000.0  1060.0  1070.0  1082.0  1083.0  1095.0  1115.0  1133.0
2922        RY  1688.0  1686.0  1684.0  1681.0  1681.0  1684.0  1685.0  1685.4
            *

2923        KK    C608
2924        KM      Hydrograph combine C608L + 607608 at C608
2925        HC       2
            *

2926        KK  608613
2927        KM      Normal depth channel route from C608 to C613
2928        KM      Source:  HEC-2 Cross Section: AS 3.421
2929        RS       2    FLOW      -1
2930        RC   0.100   0.045   0.100  1338.0  0.0202
2931        RX  9885.0  9887.9  9957.3  9986.7 10012.9 10054.7 10086.3 10122.2
2932        RY  1670.2  1670.1  1668.0  1660.0  1659.9  1661.6  1669.9  1670.8
            *
            * *
            * * Move to the top of Sunflower Wash
            * *
            *
```



```
LINE        ID.......1.......2.......3.......4.......5.......6.......7.......8.......9......10

2933        KK    211M
2934        KM   Sub-Basin   211M
2935        KM
2936        KM      The Clark Unit Hydrograph is used for this basin.
2937        KM          The Natural time-area relation is used for this basin.
2938        KM
2939        KM      Time of Concentration for this sub-basin is based on the following:
2940        KM          6-Hour Rainfall, Pattern No.  1.00
2941        KM          An rainfall areal reduction factor of 0.999
2942        KM
2943        KM       EXCESS RAINFALL VALUES EXCEEDED IN 5-MINUTE INTERVALS
2944        KM     5  10  15  20  25  30  35  40  45  50  55  60  65  70  75  80  85  90
2945        KM   .46 .46 .46 .15 .12 .11 .05 .05 .04 .03 .03 .03 .01 .01 .01 .01 .01 .01
2946        KM
2947        KM          L=   0.541 miles, S=  266 feet/mile, Kb= .11
2948        KM
2949        BA   0.081
2950        LG    0.13    0.39    5.70    0.21   30.30
2951        UC   0.246   0.199
2952        UA       0       3       5       8      12      20      43      75      90      96
2953        UA     100
            *

2954        KK  610611
2955        KM      Normal depth channel route from C610 to 1611
2956        KM      Source:  HEC-2 Cross Section: SU 0.216
2957        RS       2    FLOW      -1
2958        RC   0.050   0.045   0.050  1090.0  0.0211
2959        RX  9911.9  9948.1  9973.6  9988.6 10007.1 10027.0 10049.8 10143.7
2960        RY  1699.3  1691.7  1686.3  1680.1  1679.7  1686.6  1687.3  1698.6
            *

2961        KK    211N
2962        KM   Sub-Basin   211N
2963        KM
2964        KM      The Clark Unit Hydrograph is used for this basin.
2965        KM          The HEC-1 time-area relation is used for this basin.
2966        KM
2967        KM      Time of Concentration for this sub-basin is based on the following:
2968        KM          6-Hour Rainfall, Pattern No.  1.00
2969        KM          An rainfall areal reduction factor of 1.000
2970        KM
2971        KM       EXCESS RAINFALL VALUES EXCEEDED IN 5-MINUTE INTERVALS
2972        KM     5  10  15  20  25  30  35  40  45  50  55  60  65  70  75  80  85  90
2973        KM   .46 .45 .45 .15 .11 .10 .05 .04 .04 .02 .02 .02 .00 .00 .00 .00 .00 .00
2974        KM
2975        KM          L=   0.261 miles, S=  235 feet/mile, Kb= .12
2976        KM
2977        BA   0.020
2978        LG    0.14    0.39    5.70    0.20   20.20
2979        UC   0.188   0.181
            *
```



```
LINE        ID.......1.......2.......3.......4.......5.......6.......7.......8.......9......10

2980        KK   C611R
2981        KM      Hydrograph combine 610611 + 211N at C611 right branch
2982        HC       2
            *

2983        KK    211O
2984        KM   Sub-Basin   211O
2985        KM
2986        KM      The Clark Unit Hydrograph is used for this basin.
```

```
2987          KM          The HEC-1 time-area relation is used for this basin.
2988          KM
2989          KM      Time of Concentration for this sub-basin is based on the following:
2990          KM          6-Hour Rainfall, Pattern No.  1.00
2991          KM          An rainfall areal reduction factor of 0.999
2992          KM
2993          KM       EXCESS RAINFALL VALUES EXCEEDED IN 5-MINUTE INTERVALS
2994          KM     5  10  15  20  25  30  35  40  45  50  55  60  65  70  75  80  85  90
2995          KM   .47 .46 .46 .15 .12 .11 .05 .05 .05 .03 .03 .03 .01 .01 .01 .01 .01 .01
2996          KM
2997          KM          L=   0.371 miles, S=  257 feet/mile, Kb= .11
2998          KM
2999          BA   0.041
3000          LG    0.13    0.39    5.70    0.20   34.60
3001          UC   0.204   0.177
              *

3002          KK   C609O
3003          KM      Reservoir route at C609.
3004          RS       1    ELEV  1694.0
3005          SV    0.00    0.10    0.21    0.50    0.86    1.40    1.93    2.60    3.10    3.20
3006          SV    3.39    3.60    3.80    4.00    4.10    4.30    4.50    4.70    4.90    5.10
3007          SE  1694.0  1695.0  1696.0  1697.0  1698.0  1699.0  1700.0  1701.0  1701.6  1701.8
3008          SE  1702.0  1702.2  1702.4  1702.6  1702.8  1703.0  1703.2  1703.4  1703.6  1703.8
3009          SQ       0       6      16      33      48      59      68      75      79      85
3010          SQ     108     149     209     289     390     512     658     829    1025    1247
              *

3011          KK  609611
3012          KM      Normal depth channel route from C609 to C611
3013          KM      Source:  200 Scale Mapping
3014          RS       2    FLOW      -1
3015          RC   0.035   0.050   0.035   470.0  0.0200
3016          RX  1000.0  1025.0  1050.0  1054.0  1064.0  1068.0  1088.0  1103.0
3017          RY  1690.0  1688.0  1684.0  1682.0  1682.0  1684.0  1688.0  1690.0
              *

3018          KK   C611I
3019          KM      Hydrograph combine 609611 + C611R at C611I
3020          HC       2
              *
```

1 HEC-1 INPUT PAGE 71

```
LINE          ID.......1.......2.......3.......4.......5.......6.......7.......8.......9......10

3021          KK   C611O
3022          KM      Reservoir route at C611.
3023          RS       1    ELEV  1668.4
3024          SV    0.00    0.41    1.10    2.49    4.34    6.64    6.72    6.81    6.89    6.97
3025          SV    7.06    7.14    7.22    7.31    7.39    7.47    7.56    7.64    7.72    7.81
3026          SE  1674.0  1676.0  1678.0  1680.0  1682.0  1684.0  1684.2  1684.4  1684.6  1684.8
3027          SE  1685.0  1685.2  1685.4  1685.6  1685.8  1686.0  1686.2  1686.4  1686.6  1686.8
3028          SQ       0       0      86     117     141     162     164     170     181     199
3029          SQ     225     262     313     378     460     558     673     807     958    1118
              *

3030          KK   D611L
3031          KM      Hydrograph diversion at C611.  Main flow continues in the left branch.
3032          KM      Diverted flow is in the right branch.
3033          DT   D611R
3034          DI       0       0      86     117     141     162     164     170     181     199
3035          DI     225     262     313     378     460     558     673     807     958    1118
3036          DQ       0       0      86     117     141     162     164     165     167     169
3037          DQ     171     173     175     176     178     180     182     183     185     187
              *

3038          KK  611612
3039          KM      Normal depth channel route from C611 to C612
3040          KM      Source:  200 Scale Mapping
3041          RS       1    FLOW      -1
3042          RC   0.040   0.018   0.040   925.0  0.0270
3043          RX  1000.0  1020.0  1023.0  1041.0  1059.0  1060.2  1071.2  1136.2
3044          RY  1666.0  1664.0  1663.5  1663.9  1663.5  1663.9  1664.0  1666.0
              *

3045          KK    211P
3046          KM   Sub-Basin   211P
3047          KM
3048          KM      The Clark Unit Hydrograph is used for this basin.
3049          KM          The Urban time-area relation is used for this basin.
3050          KM
3051          KM      Time of Concentration for this sub-basin is based on the following:
3052          KM          6-Hour Rainfall, Pattern No.  1.00
3053          KM          An rainfall areal reduction factor of 1.000
3054          KM
3055          KM       EXCESS RAINFALL VALUES EXCEEDED IN 5-MINUTE INTERVALS
3056          KM     5  10  15  20  25  30  35  40  45  50  55  60  65  70  75  80  85  90
3057          KM   .49 .49 .49 .18 .15 .15 .07 .07 .07 .07 .07 .07 .01 .01 .01 .01 .01 .01
3058          KM
3059          KM          L=   0.307 miles, S=  192 feet/mile, Kb= .03
3060          KM
3061          BA   0.033
3062          LG    0.08    0.15    7.00    0.11   44.90
3063          UC   0.100   0.077
3064          UA       0       5      16      30      65      77      84      90      94      97
3065          UA     100
              *
```

1 HEC-1 INPUT PAGE 72

```
LINE          ID.......1.......2.......3.......4.......5.......6.......7.......8.......9......10
```

```
3066          KK    C612
3067          KM      Hydrograph combine 611612 + 211P at C612
3068          HC       2
              *
              * *
              * * NOTE: 612613 is too short to route
              * *
              *

3069          KK    C613
3070          KM      Hydrograph combine 608613 + C612 at C613
3071          HC       2
              *

3072          KK  613621
3073          KM      Normal depth channel route from C613 to C621
3074          KM      Source:  HEC-2 Cross Section: AS 3.241
3075          RS       2    FLOW      -1
3076          RC   0.100   0.045   0.100   718.0  0.0251
3077          RX  9695.4  9884.0  9985.0  9991.1 10033.8 10062.8 10097.5 10165.1
3078          RY  1655.5  1647.5  1645.8  1641.1  1640.6  1642.1  1648.7  1654.3
              *

3079          KK    211L
3080          KM   Sub-Basin   211L
3081          KM
3082          KM      The Clark Unit Hydrograph is used for this basin.
3083          KM          The Urban time-area relation is used for this basin.
3084          KM
3085          KM      Time of Concentration for this sub-basin is based on the following:
3086          KM          6-Hour Rainfall, Pattern No.  1.00
3087          KM          An rainfall areal reduction factor of 0.999
3088          KM
3089          KM       EXCESS RAINFALL VALUES EXCEEDED IN 5-MINUTE INTERVALS
3090          KM     5  10  15  20  25  30  35  40  45  50  55  60  65  70  75  80  85  90
3091          KM   .46 .46 .46 .15 .12 .11 .05 .05 .04 .03 .03 .03 .01 .01 .01 .01 .01 .01
3092          KM
3093          KM          L=   0.508 miles, S=  181 feet/mile, Kb= .04
3094          KM
3095          BA   0.096
3096          LG    0.16    0.28    4.35    0.36   37.80
3097          UC   0.158   0.106
3098          UA       0       5      16      30      65      77      84      90      94      97
3099          UA     100
              *

3100          KK   C621L
3101          KM      Hydrograph combine 613621 + 211L at C621 left branch
3102          HC       2
              *
              * *
              * * Move to the top of Arrow Wash
              * *
              *
```



```
LINE          ID.......1.......2.......3.......4.......5.......6.......7.......8.......9......10

3103          KK    211Q
3104          KM   Sub-Basin   211Q
3105          KM
3106          KM      The Clark Unit Hydrograph is used for this basin.
3107          KM          The HEC-1 time-area relation is used for this basin.
3108          KM
3109          KM      Time of Concentration for this sub-basin is based on the following:
3110          KM          6-Hour Rainfall, Pattern No.  1.00
3111          KM          An rainfall areal reduction factor of 1.000
3112          KM
3113          KM       EXCESS RAINFALL VALUES EXCEEDED IN 5-MINUTE INTERVALS
3114          KM     5  10  15  20  25  30  35  40  45  50  55  60  65  70  75  80  85  90
3115          KM   .45 .45 .45 .14 .10 .09 .04 .04 .03 .01 .01 .01 .00 .00 .00 .00 .00 .00
3116          KM
3117          KM          L=   0.255 miles, S=  295 feet/mile, Kb= .12
3118          KM
3119          BA   0.021
3120          LG    0.14    0.38    5.70    0.20    8.50
3121          UC   0.171   0.157
              *

3122          KK  616617
3123          KM      Normal depth channel route from C616 to C617
3124          KM      Source:  200 Scale Mapping
3125          RS       4    FLOW      -1
3126          RC   0.070   0.060   0.070  1131.0  0.0553
3127          RX  1000.0  1008.0  1015.0  1045.0  1050.0  1080.0  1100.0  1110.0
3128          RY  1834.0  1832.0  1830.0  1826.0  1826.0  1830.0  1834.0  1836.0
              *

3129          KK    211R
3130          KM   Sub-Basin   211R
3131          KM
3132          KM      The Clark Unit Hydrograph is used for this basin.
3133          KM          The HEC-1 time-area relation is used for this basin.
3134          KM
3135          KM      Time of Concentration for this sub-basin is based on the following:
3136          KM          6-Hour Rainfall, Pattern No.  1.00
3137          KM          An rainfall areal reduction factor of 0.999
3138          KM
```

```
3139    KM       EXCESS RAINFALL VALUES EXCEEDED IN 5-MINUTE INTERVALS
3140    KM     5  10  15  20  25  30  35  40  45  50  55  60  65  70  75  80  85  90
3141    KM   .46 .46 .45 .15 .11 .11 .05 .05 .04 .02 .02 .02 .01 .01 .01 .01 .01 .01
3142    KM
3143    KM          L=   0.572 miles, S=  271 feet/mile, Kb= .10
3144    KM
3145    BA   0.084
3146    LG    0.13    0.38    5.70    0.20   22.00
3147    UC   0.242   0.200
        *
```



```
LINE    ID.......1.......2.......3.......4.......5.......6.......7.......8.......9......10

3148    KK   C617L
3149    KM      Hydrograph combine 616617 + 211R at C617 left branch
3150    HC       2
        *

3151    KK    211U
3152    KM   Sub-Basin   211U
3153    KM
3154    KM      The Clark Unit Hydrograph is used for this basin.
3155    KM          The Urban time-area relation is used for this basin.
3156    KM
3157    KM      Time of Concentration for this sub-basin is based on the following:
3158    KM          6-Hour Rainfall, Pattern No.  1.00
3159    KM          An rainfall areal reduction factor of 1.000
3160    KM
3161    KM       EXCESS RAINFALL VALUES EXCEEDED IN 5-MINUTE INTERVALS
3162    KM     5  10  15  20  25  30  35  40  45  50  55  60  65  70  75  80  85  90
3163    KM   .49 .49 .49 .18 .15 .15 .07 .07 .07 .07 .06 .06 .02 .02 .02 .02 .02 .02
3164    KM
3165    KM          L=   0.831 miles, S=  214 feet/mile, Kb= .04
3166    KM
3167    BA   0.027
3168    LG    0.07    0.26    5.70    0.18   65.50
3169    UC   0.188   0.386
3170    UA       0       5      16      30      65      77      84      90      94      97
3171    UA     100
        *

3172    KK   D614L
3173    KM      Hydrograph diversion at C614.  Main flow continues in the left branch.
3174    KM      Diverted flow is in the right branch.
3175    DT   D614R
3176    DI       0     4.3     8.5    20.0    49.0    85.5
3177    DQ       0     2.5     5.0    13.5    35.0    60.0
        *

3178    KK    C617
3179    KM      Hydrograph combine C617L + D614L at C617
3180    HC       2
        *

3181    KK  617618
3182    KM      Normal depth channel route from C617 to C618
3183    KM      Source:  HEC-2 Cross Section: AR 0.836
3184    RS       5    FLOW      -1
3185    RC   0.070   0.060   0.070  1912.0  0.0345
3186    RX  9983.3  9987.2  9989.2  9991.1 10031.5 10053.5 10070.6 10097.7
3187    RY  1766.5  1762.3  1760.2  1758.1  1757.8  1760.8  1764.2  1770.6
        *
```



```
LINE    ID.......1.......2.......3.......4.......5.......6.......7.......8.......9......10

3188    KK    211S
3189    KM   Sub-Basin   211S
3190    KM
3191    KM      The Clark Unit Hydrograph is used for this basin.
3192    KM          The HEC-1 time-area relation is used for this basin.
3193    KM
3194    KM      Time of Concentration for this sub-basin is based on the following:
3195    KM          6-Hour Rainfall, Pattern No.  1.00
3196    KM          An rainfall areal reduction factor of 0.999
3197    KM
3198    KM       EXCESS RAINFALL VALUES EXCEEDED IN 5-MINUTE INTERVALS
3199    KM     5  10  15  20  25  30  35  40  45  50  55  60  65  70  75  80  85  90
3200    KM   .46 .46 .46 .15 .12 .11 .05 .05 .04 .03 .02 .02 .01 .01 .01 .01 .01 .01
3201    KM
3202    KM          L=   0.445 miles, S=  272 feet/mile, Kb= .10
3203    KM
3204    BA   0.050
3205    LG    0.13    0.36    5.70    0.20   26.10
3206    UC   0.213   0.190
        *

3207    KK   C618I
3208    KM      Hydrograph combine 617618 + 211S at C618I
3209    HC       2
        *

3210    KK   C618O
3211    KM      Reservoir route at C618.
3212    RS       1    ELEV  1730.6
3213    SV    0.00    0.01    0.06    0.24    0.50    0.75    1.20    1.66    2.30    2.94
3214    SV    3.20    3.30    3.40    3.60    3.80    3.90    4.10    4.30    4.50    4.65
3215    SE  1730.6  1734.0  1736.0  1738.0  1739.0  1740.0  1741.0  1742.0  1743.0  1744.0
```

```
3216          SE  1744.3  1744.4  1744.6  1744.8  1745.0  1745.2  1745.4  1745.6  1745.8  1746.0
3217          SQ       0     2.2     2.6     3.0     3.1     3.2     3.3     3.5     3.6     3.7
3218          SQ     3.7     3.8       8      21      48      88     143     212     295     390
              *

3219          KK  BB614R
3220          KM      Retrieve previously diverted hydrograph at C614 in the right branch.
3221          DR   D614R
              *

3222          KK  614615
3223          KM      Normal depth channel route from C614 to C615
3224          KM      Source:  Hydrology Field Reconnaissance
3225          RS       3    FLOW      -1
3226          RC   0.040   0.018   0.040  1114.0  0.0397
3227          RX  1000.0  1020.0  1025.0  1059.0  1091.0  1093.0  1098.0  1103.0
3228          RY  1828.0  1822.0  1821.5  1822.2  1821.8  1822.0  1824.0  1826.0
              *
1                                          HEC-1 INPUT                                          PAGE 76

LINE          ID.......1.......2.......3.......4.......5.......6.......7.......8.......9......10

3229          KK    211V
3230          KM   Sub-Basin   211V
3231          KM
3232          KM      The Clark Unit Hydrograph is used for this basin.
3233          KM          The Urban time-area relation is used for this basin.
3234          KM
3235          KM      Time of Concentration for this sub-basin is based on the following:
3236          KM          6-Hour Rainfall, Pattern No.  1.00
3237          KM          An rainfall areal reduction factor of 1.000
3238          KM
3239          KM       EXCESS RAINFALL VALUES EXCEEDED IN 5-MINUTE INTERVALS
3240          KM     5  10  15  20  25  30  35  40  45  50  55  60  65  70  75  80  85  90
3241          KM   .50 .50 .50 .19 .16 .16 .08 .08 .08 .08 .08 .08 .02 .02 .02 .02 .02 .02
3242          KM
3243          KM          L=   0.222 miles, S=  212 feet/mile, Kb= .04
3244          KM
3245          BA   0.005
3246          LG    0.06    0.25    5.80    0.18   90.00
3247          UC   0.096   0.170
3248          UA       0       5      16      30      65      77      84      90      94      97
3249          UA     100
              *

3250          KK    C615
3251          KM      Hydrograph combine 614615 + 211V at C615
3252          HC       2    0.03
              *

3253          KK   D615L
3254          KM      Hydrograph diversion at C615.  Main flow continues in the left branch.
3255          KM      Diverted flow is in the right branch.
3256          DT   D615R
3257          DI       0     1.3     2.5     5.3     8.6    14.2    23.0    36.8    55.5    77.5
3258          DQ       0       0       0     1.3     2.6     4.2     7.0    12.8    19.5    29.5
              *

3259          KK  615618
3260          KM      Normal depth channel route from C615 to C618
3261          KM      Source:  Hydrology Field Reconnaissance
3262          RS       1    FLOW      -1
3263          RC   0.040   0.018   0.040   499.0  0.1338
3264          RX  1000.0  1008.0  1009.2  1013.2  1027.2  1028.4  1036.4  1045.4
3265          RY  1800.4  1799.6  1799.2  1798.8  1798.3  1798.7  1798.9  1800.4
              *

3266          KK    C618
3267          KM      Hydrograph combine C618O + 615618 at C618
3268          HC       2    0.19
              *
1                                          HEC-1 INPUT                                          PAGE 77

LINE          ID.......1.......2.......3.......4.......5.......6.......7.......8.......9......10

3269          KK  618619
3270          KM      Normal depth channel route from C618 to C619
3271          KM      Source:  HEC-2 Cross Section: AR 0.441
3272          RS       4    FLOW      -1
3273          RC   0.070   0.060   0.070  1837.0  0.0285
3274          RX  9870.6  9928.6  9957.1  9996.9 10004.9 10022.1 10062.0 10116.4
3275          RY  1709.2  1700.9  1698.8  1690.0  1689.8  1699.6  1700.3  1711.3
              *

3276          KK    211T
3277          KM   Sub-Basin   211T
3278          KM
3279          KM      The Clark Unit Hydrograph is used for this basin.
3280          KM          The HEC-1 time-area relation is used for this basin.
3281          KM
3282          KM      Time of Concentration for this sub-basin is based on the following:
3283          KM          6-Hour Rainfall, Pattern No.  1.00
3284          KM          An rainfall areal reduction factor of 0.999
3285          KM
3286          KM       EXCESS RAINFALL VALUES EXCEEDED IN 5-MINUTE INTERVALS
3287          KM     5  10  15  20  25  30  35  40  45  50  55  60  65  70  75  80  85  90
3288          KM   .46 .46 .45 .15 .11 .11 .05 .05 .04 .02 .02 .02 .00 .00 .00 .00 .00 .00
3289          KM
3290          KM          L=   0.488 miles, S=  250 feet/mile, Kb= .10
```

```
3291          KM
3292          BA   0.066
3293          LG    0.13     0.37     5.70     0.20    21.00
3294          UC   0.229    0.191
              *

3295          KK   C619L
3296          KM      Hydrograph combine 618619 + 211T at C619 left branch
3297          HC       2
              *

3298          KK  BB615R
3299          KM      Retrieve previously diverted hydrograph at C615 in the right branch.
3300          DR   D615R
              *

3301          KK  615619
3302          KM      Normal depth channel route from C615 to C619
3303          KM      Source:  Hydrology Field Reconnaissance
3304          RS       5    FLOW     -1
3305          RC   0.045   0.024   0.025  2444.0  0.0493
3306          RX  1000.0  1009.3  1018.5  1037.0  1039.3  1053.0  1065.0  1065.0
3307          RY  1727.2  1726.5  1725.8  1724.4  1724.6  1725.8  1725.9  1725.9
              *
```



```
LINE          ID.......1.......2.......3.......4.......5.......6.......7.......8.......9......10

3308          KK   C619I
3309          KM      Hydrograph combine C619L + 615619 at C619I
3310          HC       2    0.25
              *

3311          KK   C619O
3312          KM      Reservoir route at C619.
3313          RS       1    ELEV  1675.6
3314          SV    0.00    1.72    2.98    4.70    7.00    7.08    7.17    7.26    7.34    7.43
3315          SV    7.51    7.60    7.69    7.77    7.86
3316          SE  1675.6  1686.0  1688.0  1690.0  1692.0  1692.2  1692.4  1692.6  1692.8  1693.0
3317          SE  1693.2  1693.4  1693.6  1693.8  1694.0
3318          SQ       0       4      25      72     128     155     163     172     178     187
3319          SQ     195     213     238     273     318     374     441     518     606     706
3320          SE  1675.6  1676.0  1678.0  1680.0  1682.0  1684.0  1686.0  1688.0  1690.0  1692.0
3321          SE  1692.2  1692.4  1692.6  1692.8  1693.0  1693.2  1693.4  1693.6  1693.8  1694.0
              *

3322          KK   D619R
3323          KM      Hydrograph diversion at C619.  Main flow continues in the right branch.
3324          KM      Diverted flow is in the left branch.
3325          DT   D619L
3326          DI       0       4      25      72     128     155     163     172     178     187
3327          DI     195     213     238     273     318     374     441     518     606     706
3328          DQ       0       0       0       0       0       0       0       0       0       0
3329          DQ       8      24      49      83     128     182     249     326     412     512
              *

3330          KK  619620
3331          KM                  Lag route through Palisades Plaza storm drain
3332          RT       0                1
              *

3333          KK  BB619L
3334          KM      Retrieve previously diverted hydrograph at C619 in the left branch.
3335          DR   D619L
              *

3336          KK  619620
3337          KM   Normal depth channel route from C619 to C620 in Fountain Hills Blvd.
3338          KM   Source:  200 Scale Mapping. Similiar to 523548
3339          RS       1    FLOW     -1
3340          RC   0.040   0.024   0.040   800.0  0.0288
3341          RX   918.0   940.0   960.0  1000.0  1040.0  1040.1  1044.1  1088.1
3342          RY  1648.0  1645.8  1643.8  1644.7  1644.0  1644.5  1644.5  1648.0
              *

3343          KK    211W
3344          KM   Sub-Basin   211W
3345          KM
3346          KM      The Clark Unit Hydrograph is used for this basin.
3347          KM          The Urban time-area relation is used for this basin.
3348          KM
3349          KM      Time of Concentration for this sub-basin is based on the following:
```



```
LINE          ID.......1.......2.......3.......4.......5.......6.......7.......8.......9......10

3350          KM          6-Hour Rainfall, Pattern No.  1.00
3351          KM          An rainfall areal reduction factor of 1.000
3352          KM
3353          KM       EXCESS RAINFALL VALUES EXCEEDED IN 5-MINUTE INTERVALS
3354          KM     5  10  15  20  25  30  35  40  45  50  55  60  65  70  75  80  85  90
3355          KM   .49 .49 .49 .18 .15 .15 .07 .07 .07 .07 .07 .06 .02 .02 .02 .02 .02 .02
3356          KM
3357          KM          L=   0.289 miles, S=  173 feet/mile, Kb= .04
3358          KM
3359          BA   0.030
3360          LG    0.07     0.27     5.70     0.18    69.90
3361          UC   0.117    0.094
3362          UA       0       5      16      30      65      77      84      90      94      97
3363          UA     100
```

```
                 *
3364             KK   C620R
3365             KM      Hydrograph combine 619620 + R619L + 211W at C620 right branch
3366             HC       3    0.28
                 *
3367             KK  BB611R
3368             KM      Retrieve previously diverted hydrograph at C611 in the right branch.
3369             DR   D611R
                 *
3370             KK  611620
3371             KM                 Lag route through Palisades Plaza storm drain
3372             RT       0               1
                 *
3373             KK    C620
3374             KM      Hydrograph combine 611620 + C620R at C620
3375             HC       2    0.42
                 *
3376             KK  620621
3377             KM      Normal depth channel route from C620 to C621
3378             KM      Source:  HEC-2 Cross Section: AR 0.081
3379             RS       2    FLOW      -1
3380             RC   0.050   0.050   0.050   915.0  0.0394
3381             RX  9790.0  9790.1  9972.2  9994.8 10004.9 10029.7 10048.6 10125.0
3382             RY  1657.9  1657.5  1656.4  1646.8  1646.8  1657.8  1657.0  1657.9
                 *
3383             KK    C621
3384             KM      Hydrograph combine C621L + 620621 at C621
3385             HC       2    7.93
                 *
1                                          HEC-1 INPUT                                                    PAGE 80

LINE             ID.......1.......2.......3.......4.......5.......6.......7.......8.......9......10

3386             KK  621622
3387             KM      Normal depth channel route from C621 to C622
3388             KM      Source:  HEC-2 Cross Section: AS 2.785
3389             RS       6    FLOW      -1
3390             RC   0.100   0.045   0.100  3830.0  0.0144
3391             RX  9827.3  9922.9  9951.0 10000.0 10002.7 10044.7 10071.6 10076.8
3392             RY  1615.2  1611.0  1604.1  1600.8  1601.5  1601.6  1611.0  1613.9
                 *
3393             KK    211X
3394             KM   Sub-Basin   211X
3395             KM
3396             KM      The Clark Unit Hydrograph is used for this basin.
3397             KM          The HEC-1 time-area relation is used for this basin.
3398             KM
3399             KM      Time of Concentration for this sub-basin is based on the following:
3400             KM          6-Hour Rainfall, Pattern No.  1.00
3401             KM          An rainfall areal reduction factor of 0.997
3402             KM
3403             KM       EXCESS RAINFALL VALUES EXCEEDED IN 5-MINUTE INTERVALS
3404             KM     5  10  15  20  25  30  35  40  45  50  55  60  65  70  75  80  85  90
3405             KM   .47 .47 .46 .16 .13 .12 .06 .05 .05 .04 .04 .04 .01 .01 .01 .01 .01 .01
3406             KM
3407             KM          L=   0.929 miles, S=  111 feet/mile, Kb= .05
3408             KM
3409             BA   0.214
3410             LG    0.16    0.30    4.90    0.27   43.20
3411             UC   0.288   0.211
                 *
3412             KK   C622R
3413             KM      Hydrograph combine 621622 + 211X at C622 right branch
3414             HC       2
                 *
                 * *
                 * * Move to the top of Tulip Wash
                 * *
                 *
3415             KK    211A
3416             KM   Sub-Basin   211A
3417             KM
3418             KM      The Clark Unit Hydrograph is used for this basin.
3419             KM          The HEC-1 time-area relation is used for this basin.
3420             KM
3421             KM      Time of Concentration for this sub-basin is based on the following:
3422             KM          6-Hour Rainfall, Pattern No.  1.00
3423             KM          An rainfall areal reduction factor of 0.998
3424             KM
3425             KM       EXCESS RAINFALL VALUES EXCEEDED IN 5-MINUTE INTERVALS
3426             KM     5  10  15  20  25  30  35  40  45  50  55  60  65  70  75  80  85  90
3427             KM   .45 .45 .45 .14 .10 .10 .04 .04 .03 .01 .01 .01 .00 .00 .00 .00 .00 .00
3428             KM
3429             KM          L=   0.820 miles, S=  248 feet/mile, Kb= .10
1                                          HEC-1 INPUT                                                    PAGE 81

LINE             ID.......1.......2.......3.......4.......5.......6.......7.......8.......9......10

3430             KM
3431             BA   0.143
3432             LG    0.14    0.38    5.70    0.21   13.80
```

```
3433          UC   0.313    0.263
              *

3434          KK   C6000
3435          KM      Reservoir route at C600.
3436          RS       1     ELEV  1754.0
3437          SV    0.00     0.14     0.62     1.52     2.95     5.06     7.98    11.80    16.61    22.67
3438          SV   30.07    38.71    40.50    40.60    41.60    42.70    43.70    44.60    45.70
3439          SE  1754.0   1756.0   1758.0   1760.0   1762.0   1764.0   1766.0   1768.0   1770.0   1772.0
3440          SE  1774.0   1776.0  1776.36   1776.4   1776.6   1776.8   1777.0   1777.2   1777.4
3441          SQ       0       55      183      320      427      513      570      620      665      709
3442          SQ     750      789      795      795      812      849      906      984     1084
              *

3443          KK  600601
3444          KM      Normal depth channel route from C600 to C601
3445          KM      Source:  HEC-2 Cross Section: TU 1.538
3446          RS       4     FLOW      -1
3447          RC   0.040    0.025    0.040   2406.0   0.0176
3448          RX  9945.6   9959.4   9968.3   9985.9 10000.0 10017.2 10038.7 10058.8
3449          RY  1734.5   1732.3   1727.9   1726.2   1725.0   1727.7   1735.2   1736.0
              *

3450          KK    211B
3451          KM   Sub-Basin   211B
3452          KM
3453          KM      The Clark Unit Hydrograph is used for this basin.
3454          KM          The HEC-1 time-area relation is used for this basin.
3455          KM
3456          KM      Time of Concentration for this sub-basin is based on the following:
3457          KM          6-Hour Rainfall, Pattern No.  1.00
3458          KM          An rainfall areal reduction factor of 0.999
3459          KM
3460          KM       EXCESS RAINFALL VALUES EXCEEDED IN 5-MINUTE INTERVALS
3461          KM     5  10  15  20  25  30  35  40  45  50  55  60  65  70  75  80  85  90
3462          KM   .45 .45 .45 .14 .11 .10 .04 .04 .03 .01 .01 .01 .00 .00 .00 .00 .00 .00
3463          KM
3464          KM          L=   0.618 miles, S=  244 feet/mile, Kb= .10
3465          KM
3466          BA   0.109
3467          LG    0.14     0.37     5.80     0.21    13.40
3468          UC   0.263    0.202
              *

3469          KK    C601
3470          KM      Hydrograph combine 600601 + 211B at C601
3471          HC       2
              *
```



```
LINE          ID.......1.......2.......3.......4.......5.......6.......7.......8.......9......10

3472          KK  601602
3473          KM      Normal depth channel route from C601 to C602
3474          KM      Source:  HEC-2 Cross Section: TU 1.102
3475          RS       3     FLOW      -1
3476          RC   0.065    0.040    0.055   1765.0   0.0146
3477          RX  9916.9   9959.1   9965.8   9980.2 10004.0 10019.5 10047.3 10094.1
3478          RY  1699.9   1699.8   1696.4   1689.8   1688.9   1695.7   1698.2   1698.4
              *

3479          KK    211C
3480          KM   Sub-Basin   211C
3481          KM
3482          KM      The Clark Unit Hydrograph is used for this basin.
3483          KM          The Urban time-area relation is used for this basin.
3484          KM
3485          KM      Time of Concentration for this sub-basin is based on the following:
3486          KM          6-Hour Rainfall, Pattern No.  1.00
3487          KM          An rainfall areal reduction factor of 0.999
3488          KM
3489          KM       EXCESS RAINFALL VALUES EXCEEDED IN 5-MINUTE INTERVALS
3490          KM     5  10  15  20  25  30  35  40  45  50  55  60  65  70  75  80  85  90
3491          KM   .48 .48 .48 .17 .14 .14 .06 .06 .06 .05 .05 .05 .01 .01 .01 .01 .01 .01
3492          KM
3493          KM          L=   0.479 miles, S=  154 feet/mile, Kb= .03
3494          KM
3495          BA   0.043
3496          LG    0.08     0.25     5.70     0.18    44.50
3497          UC   0.138    0.137
3498          UA       0        5       16       30       65       77       84       90       94       97
3499          UA     100
              *

3500          KK   C602L
3501          KM      Hydrograph combine 601602 + 211C at C602 left branch
3502          HC       2
              *

3503          KK    211D
3504          KM   Sub-Basin   211D
3505          KM
3506          KM      The Clark Unit Hydrograph is used for this basin.
3507          KM          The Urban time-area relation is used for this basin.
3508          KM
3509          KM      Time of Concentration for this sub-basin is based on the following:
3510          KM          6-Hour Rainfall, Pattern No.  1.00
3511          KM          An rainfall areal reduction factor of 0.999
3512          KM
3513          KM       EXCESS RAINFALL VALUES EXCEEDED IN 5-MINUTE INTERVALS
```

```
3514          KM     5  10  15  20  25  30  35  40  45  50  55  60  65  70  75  80  85  90
3515          KM   .44 .44 .43 .13 .09 .07 .03 .03 .02 .02 .02 .02 .01 .01 .01 .01 .01 .01
3516          KM
3517          KM          L=   0.686 miles, S=  115 feet/mile, Kb= .04
3518          KM
3519          BA   0.071
```



```
LINE          ID.......1.......2.......3.......4.......5.......6.......7.......8.......9......10

3520          LG    0.21    0.30    3.85    0.49   28.30
3521          UC   0.217   0.227
3522          UA       0       5      16      30      65      77      84      90      94      97
3523          UA     100
              *

3524          KK    C602
3525          KM      Hydrograph combine C602L + 211D at C602
3526          HC       2
              *

3527          KK  602603
3528          KM      Normal depth channel route from C602 to C603
3529          KM      Source:  HEC-2 Cross Section: LE 0.672
3530          RS       4    FLOW      -1
3531          RC   0.060   0.045   0.060  2610.0  0.0211
3532          RX  9891.9  9963.9  9986.5 10000.0 10012.7 10023.8 10085.0 10176.4
3533          RY  1653.5  1653.5  1644.4  1644.1  1645.0  1649.8  1651.7  1656.7
              *

3534          KK    211E
3535          KM   Sub-Basin   211E
3536          KM
3537          KM      The Clark Unit Hydrograph is used for this basin.
3538          KM          The Urban time-area relation is used for this basin.
3539          KM
3540          KM      Time of Concentration for this sub-basin is based on the following:
3541          KM          6-Hour Rainfall, Pattern No.  1.00
3542          KM          An rainfall areal reduction factor of 0.998
3543          KM
3544          KM       EXCESS RAINFALL VALUES EXCEEDED IN 5-MINUTE INTERVALS
3545          KM     5  10  15  20  25  30  35  40  45  50  55  60  65  70  75  80  85  90
3546          KM   .47 .47 .47 .16 .13 .13 .06 .06 .05 .04 .04 .04 .01 .01 .01 .01 .01 .01
3547          KM
3548          KM          L=   0.609 miles, S=  118 feet/mile, Kb= .03
3549          KM
3550          BA   0.156
3551          LG    0.11    0.27    5.10    0.24   42.20
3552          UC   0.171   0.101
3553          UA       0       5      16      30      65      77      84      90      94      97
3554          UA     100
              *

3555          KK    C603
3556          KM      Hydrograph combine 602603 + 211E at C603
3557          HC       2
              *

3558          KK  603622
3559          KM      Normal depth channel route from C603 to C622
3560          KM      Source:  HEC-2 Cross Section: LE 0.287
3561          RS       5    FLOW      -1
3562          RC   0.060   0.045   0.060  2745.0  0.0204
3563          RX  9883.0  9929.7  9967.3  9991.6 10042.2 10073.6 10177.6 10194.5
3564          RY  1619.4  1618.7  1611.8  1602.1  1603.3  1609.4  1610.5  1610.6
              *
```



```
LINE          ID.......1.......2.......3.......4.......5.......6.......7.......8.......9......10

3565          KK    211F
3566          KM   Sub-Basin   211F
3567          KM
3568          KM      The Clark Unit Hydrograph is used for this basin.
3569          KM          The Urban time-area relation is used for this basin.
3570          KM
3571          KM      Time of Concentration for this sub-basin is based on the following:
3572          KM          6-Hour Rainfall, Pattern No.  1.00
3573          KM          An rainfall areal reduction factor of 0.999
3574          KM
3575          KM       EXCESS RAINFALL VALUES EXCEEDED IN 5-MINUTE INTERVALS
3576          KM     5  10  15  20  25  30  35  40  45  50  55  60  65  70  75  80  85  90
3577          KM   .48 .48 .48 .17 .14 .14 .06 .06 .06 .05 .05 .05 .01 .01 .01 .01 .01 .01
3578          KM
3579          KM          L=   0.770 miles, S=  134 feet/mile, Kb= .03
3580          KM
3581          BA   0.113
3582          LG    0.08    0.25    4.30    0.36   62.70
3583          UC   0.183   0.158
3584          UA       0       5      16      30      65      77      84      90      94      97
3585          UA     100
              *

3586          KK   C622L
3587          KM      Hydrograph combine 603622 + 211F at C622 left branch
3588          HC       2
              *

3589          KK    C622
3590          KM      Hydrograph combine C622R + C622L at C622
```

```
3591          HC       2
              *

3592          KK  622549
3593          KM      Normal depth channel route from C622 to C549
3594          KM      Source:  HEC-2 Cross Section: AS 2.279
3595          RS       6    FLOW      -1
3596          RC   0.113   0.125   0.120  1697.0  0.0118
3597          RX  9847.1  9851.0  9857.5  9862.8 10052.6 10062.8 10075.6 10084.6
3598          RY  1573.5  1571.3  1567.2  1564.6  1565.1  1566.7  1573.7  1573.9
              *

3599          KK    211Y
3600          KM   Sub-Basin   211Y
3601          KM
3602          KM      The Clark Unit Hydrograph is used for this basin.
3603          KM          The HEC-1 time-area relation is used for this basin.
3604          KM
3605          KM      Time of Concentration for this sub-basin is based on the following:
3606          KM          6-Hour Rainfall, Pattern No.  1.00
3607          KM          An rainfall areal reduction factor of 0.999
3608          KM
3609          KM       EXCESS RAINFALL VALUES EXCEEDED IN 5-MINUTE INTERVALS
3610          KM     5  10  15  20  25  30  35  40  45  50  55  60  65  70  75  80  85  90
```



```
LINE          ID.......1.......2.......3.......4.......5.......6.......7.......8.......9......10

3611          KM   .47 .47 .46 .16 .13 .12 .05 .05 .05 .04 .03 .02 .00 .00 .00 .00 .00 .00
3612          KM
3613          KM          L=   0.606 miles, S=  147 feet/mile, Kb= .07
3614          KM
3615          BA   0.089
3616          LG    0.13    0.30    6.60    0.14   16.80
3617          UC   0.246   0.207
              *

3618          KK   C549R
3619          KM      Hydrograph combine 622549 + 211Y at C549 right branch
3620          HC       2
              *

3621          KK    C549
3622          KM      Hydrograph combine C549L + C549R at C549
3623          HC       2
              *

3624          KK  549626
3625          KM      Normal depth channel route from C549 to C626
3626          KM      Source:  HEC-2 Cross Section: AS 1.855
3627          RS       5    FLOW      -1
3628          RC   0.113   0.125   0.120  2044.0  0.0171
3629          RX  9943.2  9963.0  9985.6  9994.1 10007.6 10029.2 10150.5 10171.3
3630          RY  1539.3  1534.5  1531.2  1528.3  1528.2  1531.7  1532.5  1537.4
              *

3631          KK    211Z
3632          KM   Sub-Basin   211Z
3633          KM
3634          KM      The Clark Unit Hydrograph is used for this basin.
3635          KM          The Urban time-area relation is used for this basin.
3636          KM
3637          KM      Time of Concentration for this sub-basin is based on the following:
3638          KM          6-Hour Rainfall, Pattern No.  1.00
3639          KM          An rainfall areal reduction factor of 0.999
3640          KM
3641          KM       EXCESS RAINFALL VALUES EXCEEDED IN 5-MINUTE INTERVALS
3642          KM     5  10  15  20  25  30  35  40  45  50  55  60  65  70  75  80  85  90
3643          KM   .46 .46 .46 .15 .12 .11 .05 .05 .04 .03 .03 .03 .01 .01 .01 .01 .01 .01
3644          KM
3645          KM          L=   0.509 miles, S=  147 feet/mile, Kb= .04
3646          KM
3647          BA   0.083
3648          LG    0.14    0.27    4.50    0.34   34.40
3649          UC   0.171   0.126
3650          UA       0       5      16      30      65      77      84      90      94      97
3651          UA     100
              *
```



```
LINE          ID.......1.......2.......3.......4.......5.......6.......7.......8.......9......10

3652          KK   C626C
3653          KM      Hydrograph combine 549626 + 211Z at C626 main branch
3654          HC       2
              *

3655          KK   211AA
3656          KM   Sub-Basin  211AA
3657          KM
3658          KM      The Clark Unit Hydrograph is used for this basin.
3659          KM          The Urban time-area relation is used for this basin.
3660          KM
3661          KM      Time of Concentration for this sub-basin is based on the following:
3662          KM          6-Hour Rainfall, Pattern No.  1.00
3663          KM          An rainfall areal reduction factor of 1.000
3664          KM
3665          KM       EXCESS RAINFALL VALUES EXCEEDED IN 5-MINUTE INTERVALS
3666          KM     5  10  15  20  25  30  35  40  45  50  55  60  65  70  75  80  85  90
3667          KM   .48 .48 .48 .17 .14 .14 .07 .06 .06 .06 .05 .05 .01 .01 .01 .01 .01 .01
```

```
3668          KM
3669          KM          L=   0.480 miles, S=   85 feet/mile, Kb= .06
3670          KM
3671          BA   0.034
3672          LG    0.09    0.24    6.60    0.14   38.80
3673          UC   0.238   0.287
3674          UA       0       5      16      30      65      77      84      90      94      97
3675          UA     100
              *

3676          KK  625626
3677          KM      Normal depth channel route from C625 to C626
3678          KM      Source:  200 Scale Mapping
3679          RS       3    FLOW      -1
3680          RC   0.040   0.018   0.040  1350.0  0.0252
3681          RX  1000.0  1020.0  1021.2  1055.2  1089.2  1090.4  1100.4  1105.4
3682          RY  1527.0  1526.0  1525.6  1526.3  1525.6  1526.0  1528.0  1530.0
              *

3683          KK   211AB
3684          KM   Sub-Basin  211AB
3685          KM
3686          KM      The Clark Unit Hydrograph is used for this basin.
3687          KM          The Urban time-area relation is used for this basin.
3688          KM
3689          KM      Time of Concentration for this sub-basin is based on the following:
3690          KM          6-Hour Rainfall, Pattern No.  1.00
3691          KM          An rainfall areal reduction factor of 0.999
3692          KM
3693          KM       EXCESS RAINFALL VALUES EXCEEDED IN 5-MINUTE INTERVALS
3694          KM     5  10  15  20  25  30  35  40  45  50  55  60  65  70  75  80  85  90
3695          KM   .48 .47 .47 .17 .13 .13 .06 .06 .06 .05 .04 .04 .01 .01 .01 .01 .01 .01
3696          KM
3697          KM          L=   0.293 miles, S=  321 feet/mile, Kb= .07
3698          KM
3699          BA   0.040
```



```
LINE          ID.......1.......2.......3.......4.......5.......6.......7.......8.......9......10

3700          LG    0.11    0.26    6.80    0.13   23.10
3701          UC   0.133   0.093
3702          UA       0       5      16      30      65      77      84      90      94      97
3703          UA     100
              *

3704          KK  623624
3705          KM      Normal depth channel route from C623 to C624
3706          KM      Source:  200 Scale Mapping
3707          RS       1    FLOW      -1
3708          RC   0.040   0.018   0.040   701.0  0.0114
3709          RX  1000.0  1010.0  1011.2  1027.2  1043.2  1044.4  1059.4  1074.4
3710          RY  1534.0  1532.0  1531.6  1531.9  1531.6  1532.0  1532.5  1533.0
              *

3711          KK   211AC
3712          KM   Sub-Basin  211AC
3713          KM
3714          KM      The Clark Unit Hydrograph is used for this basin.
3715          KM          The Urban time-area relation is used for this basin.
3716          KM
3717          KM      Time of Concentration for this sub-basin is based on the following:
3718          KM          6-Hour Rainfall, Pattern No.  1.00
3719          KM          An rainfall areal reduction factor of 1.000
3720          KM
3721          KM       EXCESS RAINFALL VALUES EXCEEDED IN 5-MINUTE INTERVALS
3722          KM     5  10  15  20  25  30  35  40  45  50  55  60  65  70  75  80  85  90
3723          KM   .49 .49 .49 .19 .16 .15 .08 .08 .07 .07 .07 .07 .01 .01 .01 .01 .01 .01
3724          KM
3725          KM          L=   0.306 miles, S=   82 feet/mile, Kb= .03
3726          KM
3727          BA   0.027
3728          LG    0.08    0.15    8.40    0.07   44.80
3729          UC   0.133   0.119
3730          UA       0       5      16      30      65      77      84      90      94      97
3731          UA     100
              *

3732          KK    C624
3733          KM      Hydrograph combine 623624 + 211AC at C624
3734          HC       2
              *

3735          KK  624626
3736          KM      Normal depth channel route from C624 to C626
3737          KM      Source:  HEC-2 Cross Section: AS 1.727
3738          RS       2    FLOW      -1
3739          RC   0.080   0.060   0.080   637.0  0.0235
3740          RX  9872.9  9881.0  9893.9  9902.2  9967.6  9976.4 10076.1 10084.3
3741          RY  1526.3  1524.6  1521.7  1520.0  1520.7  1521.6  1520.7  1526.2
              *
```



```
LINE          ID.......1.......2.......3.......4.......5.......6.......7.......8.......9......10

3742          KK   211AD
3743          KM   Sub-Basin  211AD
3744          KM
3745          KM      The Clark Unit Hydrograph is used for this basin.
3746          KM          The Urban time-area relation is used for this basin.
```

```
3747          KM
3748          KM      Time of Concentration for this sub-basin is based on the following:
3749          KM          6-Hour Rainfall, Pattern No.  1.00
3750          KM          An rainfall areal reduction factor of 0.999
3751          KM
3752          KM        EXCESS RAINFALL VALUES EXCEEDED IN 5-MINUTE INTERVALS
3753          KM     5  10  15  20  25  30  35  40  45  50  55  60  65  70  75  80  85  90
3754          KM   .49 .49 .49 .18 .15 .15 .07 .07 .07 .07 .07 .07 .01 .01 .01 .01 .01 .01
3755          KM
3756          KM          L=   0.489 miles, S=  280 feet/mile, Kb= .04
3757          KM
3758          BA   0.041
3759          LG    0.08    0.16    8.00    0.08   42.40
3760          UC   0.133   0.137
3761          UA       0       5      16      30      65      77      84      90      94      97
3762          UA     100
              *

3763          KK   C626R
3764          KM      Hydrograph combine 624626 + 211AD at C626 right branch
3765          HC       2
              *

3766          KK    C626
3767          KM      Hydrograph combine C626C + 625626 at C626R
3768          HC       3
              *

3769          KK  626627
3770          KM      Normal depth channel route from C626 to C627
3771          KM      Source:  HEC-2 Cross Section: AS 1.602
3772          RS       1    FLOW      -1
3773          RC   0.080   0.060   0.080   625.0  0.0208
3774          RX  9889.8  9941.2  9963.0 10011.6 10074.8 10083.9 10191.7 10210.4
3775          RY  1517.6  1516.9  1508.1  1506.6  1508.6  1511.7  1513.1  1518.8
              *

3776          KK   211AE
3777          KM   Sub-Basin  211AE
3778          KM
3779          KM      The Clark Unit Hydrograph is used for this basin.
3780          KM          The Urban time-area relation is used for this basin.
3781          KM
3782          KM      Time of Concentration for this sub-basin is based on the following:
3783          KM          6-Hour Rainfall, Pattern No.  1.00
3784          KM          An rainfall areal reduction factor of 1.000
3785          KM
3786          KM        EXCESS RAINFALL VALUES EXCEEDED IN 5-MINUTE INTERVALS
3787          KM     5  10  15  20  25  30  35  40  45  50  55  60  65  70  75  80  85  90
```



```
LINE          ID.......1.......2.......3.......4.......5.......6.......7.......8.......9......10

3788          KM   .48 .48 .48 .17 .14 .13 .06 .06 .06 .05 .05 .05 .01 .01 .01 .01 .01 .01
3789          KM
3790          KM          L=   0.313 miles, S=  153 feet/mile, Kb= .04
3791          KM
3792          BA   0.034
3793          LG    0.12    0.24    6.40    0.15   38.20
3794          UC   0.129   0.103
3795          UA       0       5      16      30      65      77      84      90      94      97
3796          UA     100
              *

3797          KK    C627
3798          KM      Hydrograph combine 626627 + 211AE at C627
3799          HC       2
              *
              * *
              * * C627 is the total flow in Ashbrook Wash at the Study boundary
              * *
              *
3800          ZZ
```

1

SCHEMATIC DIAGRAM OF STREAM NETWORK

```
INPUT
 LINE     (V) ROUTING          (--->) DIVERSION OR PUMP FLOW

  NO.     (.) CONNECTOR        (<---) RETURN OF DIVERTED OR PUMPED FLOW

   36       204A
               V
               V
   57     522523
               .
               .
   64          .        204B
               .           .
               .           .
   85      C523I............
               V
               V
   88      C523O
               .
               .
  100          .-------->   D523R
   97      D523L
               .
               .
  105          .        205A
               .           .
```

```
126          .          .
             .          .       205B
             .          .          .
147          .       C528...........
             .          V
             .          V
150          .     528530
             .          .
             .          .
157          .          .       205C
             .          .          .
             .          .          .
178          .      C530R..........
             .          .
             .          .
181          .          .       205D
             .          .          .
             .          .          .
202          .          .          .       205E
             .          .          .          .
             .          .          .          .
223          .          .       C529...........
             .          .          .
             .          .          .
226          .       C530...........
             .          V
             .          V
229          .     530531
             .          .
             .          .
236          .          .       205F
             .          .          .
             .          .          .
257          .       C531...........
             .          V
             .          V
260          .     531532
             .          .
             .          .
267          .          .       205G
             .          .          .
             .          .          .
288          .      C532L..........
             .          .
             .          .
291          .          .       205H
             .          .          .
             .          .          .
312          .       C532...........
             .          V
             .          V
315          .     532533
             .          .
             .          .
322          .          .       205I
             .          .          .
             .          .          .
343          .       C533...........
             .          V
             .          V
346          .     533534
             .          .
             .          .
353          .          .       205J
             .          .          .
             .          .          .
374          .      C534R..........
             .          .
             .          .
377          .          .       205K
             .          .          .
             .          .          .
398          .       C534...........
             .          V
             .          V
401          .     534535
             .          .
             .          .
408          .          .       205L
             .          .          .
             .          .          .
429          .       C535...........
             .          V
             .          V
432          .     535536
             .          .
             .          .
439          .          .       205M
             .          .          .
             .          .          .
458          .      C536R..........
             .          .
             .          .
461          .          .       205N
             .          .          .
             .          .          .
480          .      C536I..........
             .          V
             .          V
483          .      C536O
```

```
                 .          V
                 .          V
495              .     536537
                 .          .
                 .          .
502              .          .        206A
                 .          .          .
                 .          .          .
523              .      C537............
                 .          V
                 .          V
526              .     537538
                 .          .
                 .          .
533              .          .        206B
                 .          .          .
                 .          .          .
554              .     C538I............
                 .          V
                 .          V
557              .     C538O
                 .          V
                 .          V
566              .     538540
                 .          .
                 .          .
573              .          .        206C
                 .          .          .
                 .          .          .
592              .     C540R............
                 .          .
                 .          .
595              .          .        206D
                 .          .          V
                 .          .          V
616              .          .     539540
                 .          .          .
                 .          .          .
623              .          .          .        206E
                 .          .          .          .
                 .          .          .          .
642              .          .    C540L............
                 .          .          .
                 .          .          .
645              .      C540............
                 .          V
                 .          V
648              .     540541
                 .          .
                 .          .
655              .          .        206F
                 .          .          .
                 .          .          .
674              .      C541............
                 .          V
                 .          V
677              .     541548
                 .          .
                 .          .
684              .          .        206G
                 .          .          .
                 .          .          .
705              .          .          .          .<-------   D523R
703              .          .          .     BB523R
                 .          .          .          V
                 .          .          .          V
706              .          .          .     523548
                 .          .          .          .
                 .          .          .          .
713              .     C548L.......................
                 .          .
                 .          .
716              .          .        206H
                 .          .          V
                 .          .          V
737              .          .     542543
                 .          .          .
                 .          .          .
744              .          .          .        206I
                 .          .          .          .
                 .          .          .          .
763              .          .        C543............
                 .          .          .
                 .          .          .
769              .          .          .------->   D543R
766              .          .    D543L
                 .          .          V
                 .          .          V
774              .          .     543544
                 .          .          .
                 .          .          .
781              .          .          .        206K
                 .          .          .          .
                 .          .          .          .
800              .          .        C544............
                 .          .          V
                 .          .          V
803              .          .     544545
                 .          .          .
                 .          .          .
813              .          .          .------->   D545R
```

```
810          .          .      D545L
             .          .          V
             .          .          V
816          .          .     545546
             .          .          .
             .          .          .
823          .          .          .        206L
             .          .          .          .
             .          .          .          .
842          .          .      C546............
             .          .          V
             .          .          V
845          .          .     546547
             .          .          .
             .          .          .
854          .          .          .<-------   D543R
852          .          .     BB543R
             .          .          V
             .          .          V
855          .          .     543547
             .          .          .
             .          .          .
864          .          .          .          .<-------   D545R
862          .          .          .     BB545R
             .          .          .          V
             .          .          .          V
865          .          .          .     545547
             .          .          .          .
             .          .          .          .
872          .          .          .          .        206J
             .          .          .          .          .
             .          .          .          .          .
893          .          .      C547.................................
             .          .          V
             .          .          V
896          .          .     547548
             .          .          .
             .          .          .
903          .          .          .        206M
             .          .          .          .
             .          .          .          .
924          .          .      C548R............
             .          .          .
             .          .          .
927          .       C548............
             .          V
             .          V
930          .     548549
             .          .
             .          .
937          .          .      206N
             .          .          .
             .          .          .
958          .     C549L............
             .          .
             .          .
961          .          .      207A
             .          .          .
             .          .          .
982          .          .          .        207B
             .          .          .          .
             .          .          .          .
1003         .          .      C550............
             .          .          V
             .          .          V
1006         .          .     550552
             .          .          .
             .          .          .
1013         .          .          .        207C
             .          .          .          .
             .          .          .          .
1034         .          .      C552L............
             .          .          .
             .          .          .
1037         .          .          .        207D
             .          .          .          V
             .          .          .          V
1058         .          .          .     551552
             .          .          .          .
             .          .          .          .
1065         .          .          .          .        207E
             .          .          .          .          .
             .          .          .          .          .
1086         .          .          .     C552R............
             .          .          .          .
             .          .          .          .
1089         .          .      C552............
             .          .          V
             .          .          V
1092         .          .     552553
             .          .          .
             .          .          .
1099         .          .          .        207F
             .          .          .          .
             .          .          .          .
1118         .          .      C553............
             .          .          V
             .          .          V
1121         .          .     553556
             .          .          .
             .          .          .
```

```
1128 . . . 207G
         . . .
1149 . . C556L...........
         . . .
1152 . . . 207H
         . . . V
         . . . V
1173 . . . 554555
         . . .
1180 . . . . . 207I
         . . . . .
1201 . . . C555...........
         . . . V
         . . . V
1204 . . . 555556
         . . .
1211 . . . . . 207J
         . . . . .
1230 . . . C556R...........
         . . .
1233 . . C556...........
         . . V
         . . V
1236 . . 556557
         . . .
1243 . . . 207K
         . . .
1262 . . C557R...........
         . . .
1265 . . . 207L
         . . .
1286 . . C557...........
         . . V
         . . V
1289 . . 557558
         . . .
1296 . . . 207M
         . . .
1315 . . C558...........
         . . V
         . . V
1318 . . 558560
         . . .
1325 . . . 207O
         . . .
1346 . . C560R...........
         . . .
1349 . . . 207N
         . . . V
         . . . V
1368 . . . 559560
         . . .
1375 . . C560I...........
         . . V
         . . V
1378 . . C560O
         . . V
         . . V
1388 . . 560585
         . . .
1395 . . . 210A
         . . .
1416 . . C585...........
         . . .
1419 . . . 208A
         . . . V
         . . . V
1440 . . . 561563
         . . .
1447 . . . . . 208B
         . . . . .
1468 . . . C563R...........
         . . .
1471 . . . . . 208C
         . . . . . V
         . . . . . V
1492 . . . . . 562563
         . . . . .
```

```
1499                                                  208D
                                                        .
1520                                        C563L.......
                                                        .
1523                                  C563.......
                                         V
                                         V
1526                                563564
                                         .
1533                                         208E
                                                        .
1554                                 C564R.......
                                         .
1557                                         208F
                                                        .
1578                                  C564.......
                                         V
                                         V
1581                                564565
                                         .
1588                                         208G
                                                        .
1607                                  C565.......
                                         V
                                         V
1610                                565568
                                         .
1617                                         208H
                                                        .
1638                                 C568L.......
                                         .
1641                                         208I
                                                        .
                                                        .
1662                                                  208J
                                                        .
1683                                         C566.......
                                                V
                                                V
1686                                      566567
                                                        .
                                                        .
1693                                                  208K
                                                        .
                                                        .
1714                                        C567L.......
                                                        .
                                                        .
1717                                                  208L
                                                        .
                                                        .
1738                                         C567.......
                                                V
                                                V
1741                                      567568
                                                        .
                                                        .
1748                                                  208M
                                                        .
                                                        .
1769                                        C568R.......
                                                        .
                                                        .
1772                                  C568.......
                                         V
                                         V
1775                                568573
                                         .
1782                                         208N
                                                        .
                                                        .
1803                                 C573L.......
                                         .
1806                                         208O
                                                V
                                                V
1827                                      569570
                                                        .
                                                        .
1834                                                  208P
                                                        .
                                                        .
1855                                        C570R.......
                                                        .
                                                        .
1858                                                  208Q
```

```
1879                C570............
1882                                208R
                                       V
1903                               571572
1910                C572............
                       V
1913              572573
1920                                208S
1941                C573R...........
1944          C573............
1947                208T
1968                                208U
1989                C574............
                       V
1992              574575
1999                                208V
2020                C575............
                       V
2023              575576
2030                                208W
2051                C576............
                       V
2054              576577
2061          C577............
                 V
                 V
2064          577578
2071                208X
2092          C578I...........
                 V
                 V
2095          C578O
                 V
                 V
2107          578587
2114                210B
                       V
                       V
2133              C586O
                       V
                       V
2142              586587
2149          C587............
                 V
                 V
2152          587595
2159                210C
2180          C595L...........
2183                210D
                       V
                       V
2204              588590
```

```
2211                                                  210E
                                                        .
                                                        .
2232                                          C590L.........
                                                        .
                                                        .
2235                                                  210F
                                                        V
                                                        V
2256                                                589590
                                                        .
                                                        .
2263                                                    .          210G
                                                        .            .
                                                        .            .
2284                                                C590R.........
                                                        .
                                                        .
2287                                            C590.........
                                                        .
                                                        .
2290                                                  210H
                                                        V
                                                        V
2311                                                592593
                                                        .
                                                        .
2318                                            C593.........
                                                      V
                                                      V
2321                                          593594
                                                        .
                                                        .
2328                                                  210I
                                                        .
                                                        .
2349                                            C594.........
                                                      V
                                                      V
2352                                          594595
                                                        .
                                                        .
2359                                                  210J
                                                        .
                                                        .
2380                                          C595R.........
                                                        .
                                                        .
2383                                      C595.........
                                                V
                                                V
2386                                      595596
                                                .
                                                .
2393                                            210K
                                                  .
                                                  .
2414                                      C596.........
                                                .
                                                .
2417                                            209A
                                                  V
                                                  V
2438                                          579580
                                                  .
                                                  .
2445                                                  209C
                                                        .
                                                        .
2466                                          C580R.........
                                                        .
                                                        .
2469                                                  209B
                                                        .
                                                        .
2490                                            C580.........
                                                      V
                                                      V
2493                                          580581
                                                        .
                                                        .
2500                                                  209D
                                                        .
                                                        .
2521                                          C581R.........
                                                        .
                                                        .
2524                                                  209E
                                                        .
                                                        .
2545                                            C581.........
                                                      V
                                                      V
2548                                          581582
                                                        .
                                                        .
2555                                                  209F
                                                        .
                                                        .
2576                                          C582R.........
                                                        .
```

```
2579                                                                  209G
2600                                                        C582............
                                                               V
                                                               V
2603                                                        582583
2610                                                                  209H
2631                                                        C583............
                                                               V
                                                               V
2634                                                        583584
2641                                                                  209I
2662                                                        C584I...........
                                                               V
                                                               V
2665                                                        C584O
                                                               V
                                                               V
2677                                                        584597
2684                                                                  210L
2703                                                        C597............
                                                               V
                                                               V
2706                                                        597598
2713                                                                  210M
2734                                                        C598............
2737                                                                  210N
2758                                  C599I..................................
                                         V
                                         V
2761                                  C599O
                                         V
                                         V
2773                                  599608
2780                                          211K
2799                                  C608L...........
2802                                          211G
                                                 V
                                                 V
2823                                          604606
2830                                                        211I
2851                                          C606R...........
2854                                                        211H
                                                               V
                                                               V
2875                                                        C605O
2884                                          C606............
                                                 V
                                                 V
2887                                          606607
2894                                                        211J
2913                                          C607............
                                                 V
                                                 V
2916                                          607608
2923                                  C608............
                                         V
                                         V
2926                                  608613
```

```
                 .          .          .
                 .          .          .
2933             .          .       211M
                 .          .          V
                 .          .          V
2954             .          .     610611
                 .          .          .
                 .          .          .
2961             .          .          .       211N
                 .          .          .          .
                 .          .          .          .
2980             .          .      C611R...........
                 .          .          .
                 .          .          .
2983             .          .          .       211O
                 .          .          .          V
                 .          .          .          V
3002             .          .          .      C609O
                 .          .          .          V
                 .          .          .          V
3011             .          .          .     609611
                 .          .          .          .
                 .          .          .          .
3018             .          .      C611I...........
                 .          .          V
                 .          .          V
3021             .          .      C611O
                 .          .          .
                 .          .          .
3033             .          .          .-------->   D611R
3030             .          .      D611L
                 .          .          V
                 .          .          V
3038             .          .     611612
                 .          .          .
                 .          .          .
3045             .          .          .       211P
                 .          .          .          .
                 .          .          .          .
3066             .          .       C612...........
                 .          .          .
                 .          .          .
3069             .          .   C613...........
                 .          .      V
                 .          .      V
3072             .          .  613621
                 .          .      .
                 .          .      .
3079             .          .       211L
                 .          .          .
                 .          .          .
3100             .          .  C621L...........
                 .          .      .
                 .          .      .
3103             .          .       211Q
                 .          .          V
                 .          .          V
3122             .          .     616617
                 .          .          .
                 .          .          .
3129             .          .          .       211R
                 .          .          .          .
                 .          .          .          .
3148             .          .      C617L...........
                 .          .          .
                 .          .          .
3151             .          .          .       211U
                 .          .          .          .
                 .          .          .          .
3175             .          .          .          .-------->   D614R
3172             .          .          .      D614L
                 .          .          .          .
                 .          .          .          .
3178             .          .       C617...........
                 .          .          V
                 .          .          V
3181             .          .     617618
                 .          .          .
                 .          .          .
3188             .          .          .       211S
                 .          .          .          .
                 .          .          .          .
3207             .          .      C618I...........
                 .          .          V
                 .          .          V
3210             .          .      C618O
                 .          .          .
                 .          .          .
3221             .          .          .          .<--------   D614R
3219             .          .          .     BB614R
                 .          .          .          V
                 .          .          .          V
3222             .          .          .     614615
                 .          .          .          .
                 .          .          .          .
3229             .          .          .          .        211V
                 .          .          .          .          .
                 .          .          .          .          .
3250             .          .          .       C615...........
                 .          .          .          .
                 .          .          .          .
```

```
3256                                                  .------->   D615R
3253                                        D615L
                                                         V
                                                         V
3259                                        615618
                                                         .
                                                         .
3266                                  C618............
                                         V
                                         V
3269                                618619
                                         .
                                         .
3276                                            211T
                                                         .
                                                         .
3295                                 C619L............
                                         .
                                         .
3300                                                  .<-------   D615R
3298                                        BB615R
                                                         V
                                                         V
3301                                        615619
                                                         .
                                                         .
3308                                 C619I............
                                         V
                                         V
3311                                 C619O
                                         .
                                         .
3325                                     .------->   D619L
3322                                 D619R
                                         V
                                         V
3330                                619620
                                         .
                                         .
3335                                                  .<-------   D619L
3333                                        BB619L
                                                         V
                                                         V
3336                                        619620
                                                         .
                                                         .
3343                                                     .        211W
                                                         .          .
                                                         .          .
3364                                 C620R......................
                                         .
                                         .
3369                                                  .<-------   D611R
3367                                        BB611R
                                                         V
                                                         V
3370                                        611620
                                                         .
                                                         .
3373                                  C620............
                                         V
                                         V
3376                                620621
                                         .
                                         .
3383                            C621............
                                   V
                                   V
3386                            621622
                                         .
                                         .
3393                                  211X
                                         .
                                         .
3412                            C622R............
                                         .
                                         .
3415                                  211A
                                         V
                                         V
3434                                 C600O
                                         V
                                         V
3443                                600601
                                         .
                                         .
3450                                            211B
                                                         .
                                                         .
3469                                  C601............
                                         V
                                         V
3472                                601602
                                         .
                                         .
3479                                            211C
                                                         .
                                                         .
3500                                 C602L............
                                         .
                                         .
```

```
3503          .          .          .          .       211D
              .          .          .          .          .
              .          .          .          .          .
3524          .          .          .      C602...........
              .          .          .         V
              .          .          .         V
3527          .          .          .     602603
              .          .          .          .
              .          .          .          .
3534          .          .          .          .       211E
              .          .          .          .          .
              .          .          .          .          .
3555          .          .          .      C603...........
              .          .          .         V
              .          .          .         V
3558          .          .          .     603622
              .          .          .          .
              .          .          .          .
3565          .          .          .          .       211F
              .          .          .          .          .
              .          .          .          .          .
3586          .          .          .     C622L...........
              .          .          .          .
              .          .          .          .
3589          .          .       C622...........
              .          .          V
              .          .          V
3592          .          .     622549
              .          .          .
              .          .          .
3599          .          .          .      211Y
              .          .          .          .
              .          .          .          .
3618          .          .      C549R...........
              .          .          .
              .          .          .
3621          .       C549...........
              .          V
              .          V
3624          .     549626
              .          .
              .          .
3631          .          .       211Z
              .          .          .
              .          .          .
3652          .      C626C...........
              .          .
              .          .
3655          .          .      211AA
              .          .          V
              .          .          V
3676          .          .     625626
              .          .          .
              .          .          .
3683          .          .          .     211AB
              .          .          .         V
              .          .          .         V
3704          .          .          .     623624
              .          .          .          .
              .          .          .          .
3711          .          .          .          .       211AC
              .          .          .          .          .
              .          .          .          .          .
3732          .          .          .      C624...........
              .          .          .         V
              .          .          .         V
3735          .          .          .     624626
              .          .          .          .
              .          .          .          .
3742          .          .          .          .       211AD
              .          .          .          .          .
              .          .          .          .          .
3763          .          .          .     C626R...........
              .          .          .          .
              .          .          .          .
3766          .       C626......................
              .          V
              .          V
3769          .     626627
              .          .
              .          .
3776          .          .      211AE
              .          .          .
              .          .          .
3797          .       C627...........
```

(***) RUNOFF ALSO COMPUTED AT THIS LOCATION

```
1****************************************
*                                      *
*   FLOOD HYDROGRAPH PACKAGE  (HEC-1)  *
*              MAY   1991              *
*            VERSION 4.0.1E            *
*     Lahey F77L-EM/32 version 5.01    *
*       Dodson & Associates, Inc.      *
*  RUN DATE  09/13/99  TIME  14:43:33  *
****************************************
```

```
****************************************
*                                      *
*    U.S. ARMY CORPS OF ENGINEERS      *
*    HYDROLOGIC ENGINEERING CENTER     *
*          609 SECOND STREET           *
*        DAVIS, CALIFORNIA 95616       *
*            (916) 551-1748            *
*                                      *
****************************************
```

```
                    Golden Eagle Park Dam Modifications
                         by Stantec: Proj. No. 28900095                    File: EX100-6.IH1
                         for FCDMC:  FCD                                   Date:03-29-99     mcg
                                                                         Revised:

                    100-year, 6-hour existing condition watershed model for Ashbrook Wash
                    upstream of the Fort McDowell Indian Reservation boundary.
                         This model is a portion of the original Fountain Hills North FDS
                         watershed model conducted by GVSCE, 1994.  The title cards from that
                         model are included for reference.

                    Fountain Hills North Floodplain Delineation Study
                         FCD 92-04       by GVSCE                          File:  EX100-6.IH1
                      Existing Condition                                   Date:    02-25-94   trl
                      100-Year 6-Hour Storm, Clark Unit Hydrograph       Revised:   09-14-94   trl

17 IO          OUTPUT CONTROL VARIABLES
                     IPRNT          5  PRINT CONTROL
                     IPLOT          0  PLOT CONTROL
                     QSCAL         0.  HYDROGRAPH PLOT SCALE

   IT          HYDROGRAPH TIME DATA
                      NMIN          1  MINUTES IN COMPUTATION INTERVAL
                     IDATE      1    0  STARTING DATE
                     ITIME       0000  STARTING TIME
                        NQ       1080  NUMBER OF HYDROGRAPH ORDINATES
                    NDDATE      1    0  ENDING DATE
                    NDTIME       1759  ENDING TIME
                     ICENT         19  CENTURY MARK

               COMPUTATION INTERVAL    0.02 HOURS
                    TOTAL TIME BASE   17.98 HOURS

        ENGLISH UNITS
             DRAINAGE AREA          SQUARE MILES
             PRECIPITATION DEPTH    INCHES
             LENGTH, ELEVATION      FEET
             FLOW                   CUBIC FEET PER SECOND
             STORAGE VOLUME         ACRE-FEET
             SURFACE AREA           ACRES
             TEMPERATURE            DEGREES FAHRENHEIT

19 JD          INDEX STORM NO. 1
                      STRM       3.30  PRECIPITATION DEPTH
                      TRDA       0.01  TRANSPOSITION DRAINAGE AREA

20 PI            PRECIPITATION PATTERN
                 0.00      0.00      0.00      0.00      0.00      0.00      0.00      0.00      0.00      0.00
                 0.00      0.00      0.00      0.00      0.00      0.00      0.00      0.00      0.00      0.00
                 0.00      0.00      0.00      0.00      0.00      0.00      0.00      0.00      0.00      0.00
                 0.00      0.00      0.00      0.00      0.00      0.00      0.00      0.00      0.00      0.00
                 0.00      0.00      0.00      0.00      0.00      0.00      0.00      0.00      0.00      0.00
                 0.00      0.00      0.00      0.00      0.00      0.00      0.00      0.00      0.00      0.00
                 0.00      0.00      0.00      0.00      0.00      0.00      0.00      0.00      0.00      0.00
                 0.00      0.00      0.00      0.00      0.00      0.00      0.00      0.00      0.00      0.00
                 0.00      0.00      0.00      0.00      0.00      0.00      0.00      0.00      0.00      0.00
                 0.00      0.00      0.00      0.00      0.00      0.00      0.00      0.00      0.00      0.00
                 0.00      0.00      0.00      0.00      0.00      0.00      0.00      0.00      0.00      0.00
                 0.00      0.00      0.00      0.00      0.00      0.00      0.00      0.00      0.00      0.00
                 0.00      0.00      0.00      0.00      0.00      0.00      0.00      0.00      0.00      0.00
                 0.00      0.00      0.00      0.00      0.00      0.00      0.00      0.00      0.00      0.00
                 0.00      0.00      0.00      0.00      0.00      0.00      0.00      0.00      0.00      0.00
                 0.00      0.00      0.00      0.00      0.00      0.00      0.00      0.00      0.00      0.00
                 0.00      0.00      0.00      0.00      0.00      0.00      0.00      0.00      0.00      0.00
                 0.00      0.00      0.00      0.00      0.00      0.00      0.00      0.00      0.00      0.00
                 0.00      0.00      0.00      0.00      0.00      0.00      0.00      0.00      0.00      0.00
                 0.00      0.00      0.00      0.00      0.00      0.01      0.01      0.01      0.01      0.01
                 0.01      0.01      0.01      0.01      0.01      0.01      0.01      0.01      0.01      0.01
                 0.01      0.01      0.01      0.01      0.01      0.01      0.01      0.01      0.01      0.01
                 0.01      0.01      0.01      0.01      0.01      0.03      0.03      0.03      0.03      0.03
                 0.03      0.03      0.03      0.03      0.03      0.03      0.03      0.03      0.03      0.03
                 0.01      0.01      0.01      0.01      0.01      0.01      0.01      0.01      0.01      0.01
                 0.01      0.01      0.01      0.01      0.01      0.00      0.00      0.00      0.00      0.00
                 0.00      0.00      0.00      0.00      0.00      0.00      0.00      0.00      0.00      0.00
                 0.00      0.00      0.00      0.00      0.00      0.00      0.00      0.00      0.00      0.00
                 0.00      0.00      0.00      0.00      0.00      0.00      0.00      0.00      0.00      0.00
                 0.00      0.00      0.00      0.00      0.00      0.00      0.00      0.00      0.00      0.00
                 0.00      0.00      0.00      0.00      0.00      0.00      0.00      0.00      0.00      0.00
                 0.00      0.00      0.00      0.00      0.00      0.00      0.00      0.00      0.00      0.00
                 0.00      0.00      0.00      0.00      0.00      0.00      0.00      0.00      0.00      0.00
                 0.00      0.00      0.00      0.00      0.00      0.00      0.00      0.00      0.00      0.00
                 0.00      0.00      0.00      0.00      0.00      0.00      0.00      0.00      0.00      0.00
                 0.00      0.00      0.00      0.00      0.00      0.00      0.00      0.00      0.00      0.00

23 JD          INDEX STORM NO. 2
                      STRM       3.28  PRECIPITATION DEPTH
                      TRDA       0.50  TRANSPOSITION DRAINAGE AREA

 0 PI            PRECIPITATION PATTERN
                 0.00      0.00      0.00      0.00      0.00      0.00      0.00      0.00      0.00      0.00
                 0.00      0.00      0.00      0.00      0.00      0.00      0.00      0.00      0.00      0.00
                 0.00      0.00      0.00      0.00      0.00      0.00      0.00      0.00      0.00      0.00
                 0.00      0.00      0.00      0.00      0.00      0.00      0.00      0.00      0.00      0.00
                 0.00      0.00      0.00      0.00      0.00      0.00      0.00      0.00      0.00      0.00
                 0.00      0.00      0.00      0.00      0.00      0.00      0.00      0.00      0.00      0.00
                 0.00      0.00      0.00      0.00      0.00      0.00      0.00      0.00      0.00      0.00
                 0.00      0.00      0.00      0.00      0.00      0.00      0.00      0.00      0.00      0.00
                 0.00      0.00      0.00      0.00      0.00      0.00      0.00      0.00      0.00      0.00
                 0.00      0.00      0.00      0.00      0.00      0.00      0.00      0.00      0.00      0.00
                 0.00      0.00      0.00      0.00      0.00      0.00      0.00      0.00      0.00      0.00
                 0.00      0.00      0.00      0.00      0.00      0.00      0.00      0.00      0.00      0.00
```

0.00	0.00	0.00	0.00	0.00	0.00	0.00	0.00	0.00	0.00
0.00	0.00	0.00	0.00	0.00	0.00	0.00	0.00	0.00	0.00
0.00	0.00	0.00	0.00	0.00	0.00	0.00	0.00	0.00	0.00
0.00	0.00	0.00	0.00	0.00	0.00	0.00	0.00	0.00	0.00
0.00	0.00	0.00	0.00	0.00	0.00	0.00	0.00	0.00	0.00
0.00	0.00	0.00	0.00	0.00	0.00	0.00	0.00	0.00	0.00
0.00	0.00	0.00	0.00	0.00	0.00	0.00	0.00	0.00	0.00
0.00	0.00	0.00	0.00	0.00	0.01	0.01	0.01	0.01	0.01
0.01	0.01	0.01	0.01	0.01	0.01	0.01	0.01	0.01	0.01
0.01	0.01	0.01	0.01	0.01	0.01	0.01	0.01	0.01	0.01
0.01	0.01	0.01	0.01	0.01	0.03	0.03	0.03	0.03	0.03
0.03	0.03	0.03	0.03	0.03	0.03	0.03	0.03	0.03	0.03
0.01	0.01	0.01	0.01	0.01	0.01	0.01	0.01	0.01	0.01
0.01	0.01	0.01	0.01	0.01	0.00	0.00	0.00	0.00	0.00
0.00	0.00	0.00	0.00	0.00	0.00	0.00	0.00	0.00	0.00
0.00	0.00	0.00	0.00	0.00	0.00	0.00	0.00	0.00	0.00
0.00	0.00	0.00	0.00	0.00	0.00	0.00	0.00	0.00	0.00
0.00	0.00	0.00	0.00	0.00	0.00	0.00	0.00	0.00	0.00
0.00	0.00	0.00	0.00	0.00	0.00	0.00	0.00	0.00	0.00
0.00	0.00	0.00	0.00	0.00	0.00	0.00	0.00	0.00	0.00
0.00	0.00	0.00	0.00	0.00	0.00	0.00	0.00	0.00	0.00
0.00	0.00	0.00	0.00	0.00	0.00	0.00	0.00	0.00	0.00
0.00	0.00	0.00	0.00	0.00	0.00	0.00	0.00	0.00	0.00

24 JD INDEX STORM NO. 3

STRM 3.23 PRECIPITATION DEPTH

TRDA 2.80 TRANSPOSITION DRAINAGE AREA

25 PI PRECIPITATION PATTERN

0.00	0.00	0.00	0.00	0.00	0.00	0.00	0.00	0.00	0.00
0.00	0.00	0.00	0.00	0.00	0.00	0.00	0.00	0.00	0.00
0.00	0.00	0.00	0.00	0.00	0.00	0.00	0.00	0.00	0.00
0.00	0.00	0.00	0.00	0.00	0.00	0.00	0.00	0.00	0.00
0.00	0.00	0.00	0.00	0.00	0.00	0.00	0.00	0.00	0.00
0.00	0.00	0.00	0.00	0.00	0.00	0.00	0.00	0.00	0.00
0.00	0.00	0.00	0.00	0.00	0.00	0.00	0.00	0.00	0.00
0.00	0.00	0.00	0.00	0.00	0.00	0.00	0.00	0.00	0.00
0.00	0.00	0.00	0.00	0.00	0.00	0.00	0.00	0.00	0.00
0.00	0.00	0.00	0.00	0.00	0.00	0.00	0.00	0.00	0.00
0.00	0.00	0.00	0.00	0.00	0.00	0.00	0.00	0.00	0.00
0.00	0.00	0.00	0.00	0.00	0.00	0.00	0.00	0.00	0.00
0.00	0.00	0.00	0.00	0.00	0.00	0.00	0.00	0.00	0.00
0.00	0.00	0.00	0.00	0.00	0.00	0.00	0.00	0.00	0.00
0.00	0.00	0.00	0.00	0.00	0.00	0.00	0.00	0.00	0.00
0.00	0.00	0.00	0.00	0.00	0.00	0.00	0.00	0.00	0.00
0.00	0.00	0.00	0.00	0.00	0.00	0.00	0.00	0.00	0.00
0.00	0.00	0.00	0.00	0.00	0.00	0.00	0.00	0.00	0.00
0.00	0.00	0.00	0.00	0.00	0.00	0.00	0.00	0.00	0.00
0.00	0.00	0.00	0.00	0.00	0.00	0.00	0.00	0.00	0.00
0.00	0.00	0.00	0.00	0.00	0.00	0.00	0.00	0.00	0.00
0.00	0.00	0.00	0.00	0.00	0.01	0.01	0.01	0.01	0.01
0.01	0.01	0.01	0.01	0.01	0.01	0.01	0.01	0.01	0.01
0.01	0.01	0.01	0.01	0.01	0.01	0.01	0.01	0.01	0.01
0.01	0.01	0.01	0.01	0.01	0.02	0.02	0.02	0.02	0.02
0.02	0.02	0.02	0.02	0.02	0.02	0.02	0.02	0.02	0.02
0.01	0.01	0.01	0.01	0.01	0.01	0.01	0.01	0.01	0.01
0.01	0.01	0.01	0.01	0.01	0.00	0.00	0.00	0.00	0.00
0.00	0.00	0.00	0.00	0.00	0.00	0.00	0.00	0.00	0.00
0.00	0.00	0.00	0.00	0.00	0.00	0.00	0.00	0.00	0.00
0.00	0.00	0.00	0.00	0.00	0.00	0.00	0.00	0.00	0.00
0.00	0.00	0.00	0.00	0.00	0.00	0.00	0.00	0.00	0.00
0.00	0.00	0.00	0.00	0.00	0.00	0.00	0.00	0.00	0.00
0.00	0.00	0.00	0.00	0.00	0.00	0.00	0.00	0.00	0.00
0.00	0.00	0.00	0.00	0.00	0.00	0.00	0.00	0.00	0.00
0.00	0.00	0.00	0.00	0.00	0.00	0.00	0.00	0.00	0.00
0.00	0.00	0.00	0.00	0.00	0.00	0.00	0.00	0.00	0.00

28 JD INDEX STORM NO. 4

STRM 3.04 PRECIPITATION DEPTH

TRDA 16.00 TRANSPOSITION DRAINAGE AREA

29 PI PRECIPITATION PATTERN

0.00	0.00	0.00	0.00	0.00	0.00	0.00	0.00	0.00	0.00
0.00	0.00	0.00	0.00	0.00	0.00	0.00	0.00	0.00	0.00
0.00	0.00	0.00	0.00	0.00	0.00	0.00	0.00	0.00	0.00
0.00	0.00	0.00	0.00	0.00	0.00	0.00	0.00	0.00	0.00
0.00	0.00	0.00	0.00	0.00	0.00	0.00	0.00	0.00	0.00
0.00	0.00	0.00	0.00	0.00	0.00	0.00	0.00	0.00	0.00
0.00	0.00	0.00	0.00	0.00	0.00	0.00	0.00	0.00	0.00
0.00	0.00	0.00	0.00	0.00	0.00	0.00	0.00	0.00	0.00
0.00	0.00	0.00	0.00	0.00	0.00	0.00	0.00	0.00	0.00
0.00	0.00	0.00	0.00	0.00	0.00	0.00	0.00	0.00	0.00
0.00	0.00	0.00	0.00	0.00	0.00	0.00	0.00	0.00	0.00
0.00	0.00	0.00	0.00	0.00	0.00	0.00	0.00	0.00	0.00
0.00	0.00	0.00	0.00	0.00	0.00	0.00	0.00	0.00	0.00
0.00	0.00	0.00	0.00	0.00	0.00	0.00	0.00	0.00	0.00
0.00	0.00	0.00	0.00	0.00	0.00	0.00	0.00	0.00	0.00
0.00	0.00	0.00	0.00	0.00	0.00	0.00	0.00	0.00	0.00
0.00	0.00	0.00	0.00	0.00	0.00	0.00	0.00	0.00	0.00
0.00	0.00	0.00	0.00	0.00	0.00	0.00	0.00	0.00	0.00
0.00	0.00	0.00	0.00	0.00	0.00	0.00	0.00	0.00	0.00
0.00	0.00	0.00	0.00	0.00	0.00	0.00	0.00	0.00	0.00
0.00	0.00	0.00	0.00	0.00	0.00	0.00	0.00	0.00	0.00
0.00	0.00	0.00	0.00	0.00	0.01	0.01	0.01	0.01	0.01
0.01	0.01	0.01	0.01	0.01	0.01	0.01	0.01	0.01	0.01
0.01	0.01	0.01	0.01	0.01	0.01	0.01	0.01	0.01	0.01
0.01	0.01	0.01	0.01	0.01	0.01	0.01	0.01	0.01	0.01
0.01	0.01	0.01	0.01	0.01	0.01	0.01	0.01	0.01	0.01
0.01	0.01	0.01	0.01	0.01	0.00	0.00	0.00	0.00	0.00
0.00	0.00	0.00	0.00	0.00	0.00	0.00	0.00	0.00	0.00
0.00	0.00	0.00	0.00	0.00	0.00	0.00	0.00	0.00	0.00
0.00	0.00	0.00	0.00	0.00	0.00	0.00	0.00	0.00	0.00

```
                0.00      0.00      0.00      0.00      0.00      0.00      0.00      0.00      0.00      0.00
                0.00      0.00      0.00      0.00      0.00      0.00      0.00      0.00      0.00      0.00
                0.00      0.00      0.00      0.00      0.00      0.00      0.00      0.00      0.00      0.00
                0.00      0.00      0.00      0.00      0.00      0.00      0.00      0.00      0.00      0.00
                0.00      0.00      0.00      0.00      0.00      0.00      0.00      0.00      0.00      0.00
                0.00      0.00      0.00      0.00      0.00      0.00      0.00      0.00      0.00      0.00
                0.00      0.00      0.00      0.00      0.00      0.00      0.00      0.00      0.00      0.00

32 JD        INDEX STORM NO. 5
                STRM        2.67  PRECIPITATION DEPTH
                TRDA       90.00  TRANSPOSITION DRAINAGE AREA

33 PI         PRECIPITATION PATTERN
                0.00      0.00      0.00      0.00      0.00      0.00      0.00      0.00      0.00      0.00
                0.00      0.00      0.00      0.00      0.00      0.00      0.00      0.00      0.00      0.00
                0.00      0.00      0.00      0.00      0.00      0.00      0.00      0.00      0.00      0.00
                0.00      0.00      0.00      0.00      0.00      0.00      0.00      0.00      0.00      0.00
                0.00      0.00      0.00      0.00      0.00      0.00      0.00      0.00      0.00      0.00
                0.00      0.00      0.00      0.00      0.00      0.00      0.00      0.00      0.00      0.00
                0.00      0.00      0.00      0.00      0.00      0.00      0.00      0.00      0.00      0.00
                0.00      0.00      0.00      0.00      0.00      0.00      0.00      0.00      0.00      0.00
                0.00      0.00      0.00      0.00      0.00      0.00      0.00      0.00      0.00      0.00
                0.00      0.00      0.00      0.00      0.00      0.00      0.00      0.00      0.00      0.00
                0.00      0.00      0.00      0.00      0.00      0.00      0.00      0.00      0.00      0.00
                0.00      0.00      0.00      0.00      0.00      0.00      0.00      0.00      0.00      0.00
                0.00      0.00      0.00      0.00      0.00      0.00      0.00      0.00      0.00      0.00
                0.00      0.00      0.00      0.00      0.00      0.00      0.00      0.00      0.00      0.00
                0.00      0.00      0.00      0.00      0.00      0.00      0.00      0.00      0.00      0.00
                0.00      0.00      0.00      0.00      0.00      0.00      0.00      0.00      0.00      0.00
                0.00      0.00      0.00      0.00      0.00      0.00      0.00      0.00      0.00      0.00
                0.00      0.00      0.00      0.00      0.00      0.00      0.00      0.00      0.00      0.00
                0.00      0.00      0.00      0.00      0.00      0.01      0.01      0.01      0.01      0.01
                0.01      0.01      0.01      0.01      0.01      0.01      0.01      0.01      0.01      0.01
                0.01      0.01      0.01      0.01      0.01      0.01      0.01      0.01      0.01      0.01
                0.01      0.01      0.01      0.01      0.01      0.01      0.01      0.01      0.01      0.01
                0.01      0.01      0.01      0.01      0.01      0.01      0.01      0.01      0.01      0.01
                0.01      0.01      0.01      0.01      0.01      0.01      0.01      0.01      0.01      0.01
                0.01      0.01      0.01      0.01      0.01      0.00      0.00      0.00      0.00      0.00
                0.00      0.00      0.00      0.00      0.00      0.00      0.00      0.00      0.00      0.00
                0.00      0.00      0.00      0.00      0.00      0.00      0.00      0.00      0.00      0.00
                0.00      0.00      0.00      0.00      0.00      0.00      0.00      0.00      0.00      0.00
                0.00      0.00      0.00      0.00      0.00      0.00      0.00      0.00      0.00      0.00
                0.00      0.00      0.00      0.00      0.00      0.00      0.00      0.00      0.00      0.00
                0.00      0.00      0.00      0.00      0.00      0.00      0.00      0.00      0.00      0.00
                0.00      0.00      0.00      0.00      0.00      0.00      0.00      0.00      0.00      0.00
                0.00      0.00      0.00      0.00      0.00      0.00      0.00      0.00      0.00      0.00
                0.00      0.00      0.00      0.00      0.00      0.00      0.00      0.00      0.00      0.00
                0.00      0.00      0.00      0.00      0.00      0.00      0.00      0.00      0.00      0.00
        WARNING EXCESS AT PONDING LESS THAN ZERO FOR PERIOD. EXCESS SET TO ZERO
        WARNING EXCESS AT PONDING LESS THAN ZERO FOR PERIOD. EXCESS SET TO ZERO
        WARNING EXCESS AT PONDING LESS THAN ZERO FOR PERIOD. EXCESS SET TO ZERO
```

RUNOFF SUMMARY
FLOW IN CUBIC FEET PER SECOND
TIME IN HOURS, AREA IN SQUARE MILES

	OPERATION	STATION	PEAK FLOW	TIME OF PEAK	AVERAGE FLOW FOR MAXIMUM PERIOD 6-HOUR	24-HOUR	72-HOUR	BASIN AREA	MAXIMUM STAGE	TIME OF MAX STAGE
+	HYDROGRAPH AT	204A	214.	4.20	20.	7.	7.	0.11		
+	ROUTED TO	522523	201.	4.37	20.	7.	7.	0.11		
+	HYDROGRAPH AT	204B	208.	4.27	23.	8.	8.	0.13		
+	2 COMBINED AT	C523I	386.	4.33	43.	14.	14.	0.23		
+	ROUTED TO	C523O	286.	4.52	43.	14.	14.	0.23		
+	DIVERSION TO	D523R	19.	4.52	1.	0.	0.	0.23		
+	HYDROGRAPH AT	D523L	266.	4.52	42.	14.	14.	0.23		
+	HYDROGRAPH AT	205A	210.	4.22	26.	9.	9.	0.12		
+	HYDROGRAPH AT	205B	486.	4.18	47.	16.	16.	0.21		
+	2 COMBINED AT	C528	690.	4.20	73.	25.	25.	0.33		
+	ROUTED TO	528530	680.	4.23	73.	25.	25.	0.33		
+	HYDROGRAPH AT	205C	107.	4.20	13.	4.	4.	0.06		
+	2 COMBINED AT	C530R	785.	4.22	86.	29.	29.	0.39		
	HYDROGRAPH AT									

+	205D	665.	4.23	71.	24.	24.	0.32
+ HYDROGRAPH AT	205E	301.	4.33	48.	16.	16.	0.22
+ 2 COMBINED AT	C529	917.	4.25	119.	40.	40.	0.54
+ 2 COMBINED AT	C530	1472.	4.23	197.	66.	66.	0.93
+ ROUTED TO	530531	1455.	4.28	197.	66.	66.	0.93
+ HYDROGRAPH AT	205F	325.	4.22	36.	12.	12.	0.16
+ 2 COMBINED AT	C531	1639.	4.27	228.	77.	77.	1.09
+ ROUTED TO	531532	1619.	4.33	228.	77.	77.	1.09
+ HYDROGRAPH AT	205G	349.	4.23	40.	13.	13.	0.19
+ 2 COMBINED AT	C532L	1791.	4.32	262.	88.	88.	1.27
+ HYDROGRAPH AT	205H	350.	4.35	56.	19.	19.	0.26
+ 2 COMBINED AT	C532	1970.	4.33	310.	104.	104.	1.53
+ ROUTED TO	532533	1956.	4.35	310.	104.	104.	1.53
+ HYDROGRAPH AT	205I	559.	4.30	70.	23.	23.	0.35
+ 2 COMBINED AT	C533	2232.	4.35	367.	123.	123.	1.89
+ ROUTED TO	533534	2189.	4.52	367.	123.	123.	1.89
+ HYDROGRAPH AT	205J	551.	4.28	65.	22.	22.	0.37
+ 2 COMBINED AT	C534R	2392.	4.50	416.	140.	140.	2.25
+ HYDROGRAPH AT	205K	266.	4.38	45.	15.	15.	0.25
+ 2 COMBINED AT	C534	2507.	4.52	450.	151.	151.	2.50
+ ROUTED TO	534535	2495.	4.55	450.	151.	151.	2.50
+ HYDROGRAPH AT	205L	263.	4.15	20.	7.	7.	0.12
+ 2 COMBINED AT	C535	2520.	4.55	465.	156.	156.	2.62
+ ROUTED TO	535536	2496.	4.68	464.	156.	156.	2.62
+ HYDROGRAPH AT	205M	335.	4.10	31.	10.	10.	0.14
+ 2 COMBINED AT	C536R	2516.	4.67	489.	165.	165.	2.76
+ HYDROGRAPH AT	205N	211.	4.25	29.	10.	10.	0.16
+ 2 COMBINED AT	C536I	2586.	4.67	510.	172.	172.	2.91
+ ROUTED TO	C536O	326.	6.03	312.	172.	172.	2.91
+ ROUTED TO	536537	326.	6.08	312.	172.	172.	2.91
+ HYDROGRAPH AT	206A	408.	4.03	31.	10.	10.	0.13
+ 2 COMBINED AT	C537	344.	4.28	317.	181.	181.	3.04
+ ROUTED TO	537538	339.	4.33	316.	181.	181.	3.04
+ HYDROGRAPH AT	206B	304.	4.03	25.	8.	8.	0.09

+ 2 COMBINED AT	C538I	463.	4.08	329.	188.	188.	3.14
ROUTED TO	C538O	434.	4.28	327.	188.	188.	3.14
+ ROUTED TO	538540	433.	4.37	327.	188.	188.	3.14
+ HYDROGRAPH AT	206C	45.	4.10	4.	1.	1.	0.02
+ 2 COMBINED AT	C540R	452.	4.35	329.	189.	189.	3.16
+ HYDROGRAPH AT	206D	195.	4.03	17.	6.	6.	0.06
+ ROUTED TO	539540	185.	4.10	17.	6.	6.	0.06
+ HYDROGRAPH AT	206E	45.	4.08	4.	1.	1.	0.02
+ 2 COMBINED AT	C540L	230.	4.10	20.	7.	7.	0.09
+ 2 COMBINED AT	C540	545.	4.30	341.	194.	194.	3.24
+ ROUTED TO	540541	541.	4.50	340.	194.	194.	3.24
+ HYDROGRAPH AT	206F	259.	4.17	27.	9.	9.	0.16
+ 2 COMBINED AT	C541	651.	4.43	357.	200.	200.	3.40
+ ROUTED TO	541548	649.	4.45	357.	200.	200.	3.40
+ HYDROGRAPH AT	206G	112.	4.27	18.	6.	6.	0.09
+ HYDROGRAPH AT	BB523R	19.	4.52	1.	0.	0.	0.23
+ ROUTED TO	523548	16.	4.77	1.	0.	0.	0.23
3 COMBINED AT	C548L	713.	4.45	369.	203.	203.	3.72
+ HYDROGRAPH AT	206H	153.	4.07	14.	5.	5.	0.06
+ ROUTED TO	542543	149.	4.08	14.	5.	5.	0.06
+ HYDROGRAPH AT	206I	67.	4.03	5.	2.	2.	0.02
+ 2 COMBINED AT	C543	210.	4.07	19.	6.	6.	0.08
+ DIVERSION TO	D543R	210.	4.07	19.	6.	6.	0.08
+ HYDROGRAPH AT	D543L	0.	0.02	0.	0.	0.	0.08
+ ROUTED TO	543544	0.	0.02	0.	0.	0.	0.08
+ HYDROGRAPH AT	206K	103.	4.13	11.	4.	4.	0.06
+ 2 COMBINED AT	C544	102.	4.13	11.	4.	4.	0.14
+ ROUTED TO	544545	102.	4.17	11.	4.	4.	0.14
+ DIVERSION TO	D545R	51.	4.17	5.	2.	2.	0.14
+ HYDROGRAPH AT	D545L	51.	4.17	5.	2.	2.	0.14
+ ROUTED TO	545546	51.	4.18	5.	2.	2.	0.14
+ HYDROGRAPH AT	206L	123.	4.12	12.	4.	4.	0.06
+ 2 COMBINED AT	C546	171.	4.15	18.	6.	6.	0.20
ROUTED TO	546547	170.	4.17	18.	6.	6.	0.20

+	HYDROGRAPH AT	BB543R	210.	4.07	19.	6.	6.	0.08
+	ROUTED TO	543547	202.	4.15	19.	6.	6.	0.08
+	HYDROGRAPH AT	BB545R	51.	4.17	5.	2.	2.	0.14
+	ROUTED TO	545547	50.	4.23	5.	2.	2.	0.14
+	HYDROGRAPH AT	206J	200.	4.02	16.	5.	5.	0.06
+	4 COMBINED AT	C547	525.	4.10	59.	20.	20.	0.26
+	ROUTED TO	547548	521.	4.17	59.	20.	20.	0.26
+	HYDROGRAPH AT	206M	198.	4.02	16.	5.	5.	0.06
+	2 COMBINED AT	C548R	635.	4.12	75.	25.	25.	0.32
+	2 COMBINED AT	C548	1038.	4.30	421.	224.	224.	4.04
+	ROUTED TO	548549	1028.	4.45	421.	224.	224.	4.04
+	HYDROGRAPH AT	206N	458.	4.05	41.	14.	14.	0.15
+	2 COMBINED AT	C549L	1128.	4.40	443.	235.	235.	4.19
+	HYDROGRAPH AT	207A	382.	4.30	55.	18.	18.	0.26
+	HYDROGRAPH AT	207B	306.	4.30	46.	15.	15.	0.21
+	2 COMBINED AT	C550	687.	4.30	101.	34.	34.	0.46
+	ROUTED TO	550552	675.	4.37	100.	34.	34.	0.46
+	HYDROGRAPH AT	207C	321.	4.22	34.	11.	11.	0.17
+	2 COMBINED AT	C552L	878.	4.35	132.	44.	44.	0.64
+	HYDROGRAPH AT	207D	349.	4.25	44.	15.	15.	0.20
+	ROUTED TO	551552	341.	4.33	44.	15.	15.	0.20
+	HYDROGRAPH AT	207E	180.	4.37	34.	12.	12.	0.16
+	2 COMBINED AT	C552R	518.	4.33	78.	26.	26.	0.35
+	2 COMBINED AT	C552	1244.	4.35	202.	68.	68.	0.99
+	ROUTED TO	552553	1236.	4.38	202.	68.	68.	0.99
+	HYDROGRAPH AT	207F	213.	4.20	28.	9.	9.	0.13
+	2 COMBINED AT	C553	1345.	4.37	226.	76.	76.	1.12
+	ROUTED TO	553556	1338.	4.42	226.	76.	76.	1.12
+	HYDROGRAPH AT	207G	294.	4.35	45.	15.	15.	0.24
+	2 COMBINED AT	C556L	1513.	4.40	264.	89.	89.	1.35
+	HYDROGRAPH AT	207H	188.	4.27	28.	9.	9.	0.12
+	ROUTED TO	554555	184.	4.33	28.	9.	9.	0.12
+	HYDROGRAPH AT	207I	109.	4.25	16.	5.	5.	0.07
	2 COMBINED AT							

+	C555	285.	4.32	44.	15.	15.	0.20
+ ROUTED TO	555556	279.	4.45	44.	15.	15.	0.20
+ HYDROGRAPH AT	207J	162.	4.18	21.	7.	7.	0.09
+ 2 COMBINED AT	C556R	385.	4.40	65.	22.	22.	0.29
+ 2 COMBINED AT	C556	1752.	4.42	319.	108.	108.	1.64
+ ROUTED TO	556557	1744.	4.47	319.	108.	108.	1.64
+ HYDROGRAPH AT	207K	283.	4.13	31.	10.	10.	0.13
+ 2 COMBINED AT	C557R	1833.	4.45	346.	117.	117.	1.77
+ HYDROGRAPH AT	207L	203.	4.07	20.	7.	7.	0.08
+ 2 COMBINED AT	C557	1879.	4.43	363.	122.	122.	1.85
+ ROUTED TO	557558	1871.	4.50	363.	122.	122.	1.85
+ HYDROGRAPH AT	207M	270.	4.10	22.	7.	7.	0.12
+ 2 COMBINED AT	C558	1918.	4.48	381.	128.	128.	1.97
+ ROUTED TO	558560	1908.	4.52	381.	128.	128.	1.97
+ HYDROGRAPH AT	207O	330.	4.13	26.	9.	9.	0.13
+ 2 COMBINED AT	C560R	1953.	4.52	401.	135.	135.	2.10
+ HYDROGRAPH AT	207N	109.	4.10	10.	3.	3.	0.05
+ ROUTED TO	559560	106.	4.22	10.	3.	3.	0.05
+ 2 COMBINED AT	C560I	1989.	4.50	409.	138.	138.	2.15
+ ROUTED TO	C560O	287.	5.93	264.	138.	138.	2.15
+ ROUTED TO	560585	287.	6.03	264.	138.	138.	2.15
+ HYDROGRAPH AT	210A	294.	4.13	23.	8.	8.	0.12
+ 2 COMBINED AT	C585	295.	4.18	270.	144.	144.	2.27
+ HYDROGRAPH AT	208A	331.	4.15	31.	10.	10.	0.14
+ ROUTED TO	561563	327.	4.20	31.	10.	10.	0.14
+ HYDROGRAPH AT	208B	45.	4.18	6.	2.	2.	0.03
+ 2 COMBINED AT	C563R	372.	4.18	37.	12.	12.	0.17
+ HYDROGRAPH AT	208C	127.	4.18	15.	5.	5.	0.07
+ ROUTED TO	562563	123.	4.25	15.	5.	5.	0.07
+ HYDROGRAPH AT	208D	118.	4.23	17.	6.	6.	0.08
+ 2 COMBINED AT	C563L	240.	4.25	31.	10.	10.	0.14
+ 2 COMBINED AT	C563	599.	4.22	68.	23.	23.	0.31
+ ROUTED TO	563564	584.	4.27	68.	23.	23.	0.31
+ HYDROGRAPH AT	208E	107.	4.22	14.	5.	5.	0.06

+	2 COMBINED AT	C564R	684.	4.27	82.	27.	27.	0.37
+	HYDROGRAPH AT	208F	133.	4.18	15.	5.	5.	0.07
+	2 COMBINED AT	C564	804.	4.25	97.	33.	33.	0.44
+	ROUTED TO	564565	783.	4.35	97.	33.	33.	0.44
+	HYDROGRAPH AT	208G	244.	4.17	30.	10.	10.	0.13
+	2 COMBINED AT	C565	938.	4.33	125.	42.	42.	0.57
+	ROUTED TO	565568	927.	4.38	125.	42.	42.	0.57
+	HYDROGRAPH AT	208H	72.	4.18	8.	3.	3.	0.04
+	2 COMBINED AT	C568L	961.	4.38	133.	45.	45.	0.61
+	HYDROGRAPH AT	208I	213.	4.22	26.	9.	9.	0.12
+	HYDROGRAPH AT	208J	106.	4.28	18.	6.	6.	0.08
+	2 COMBINED AT	C566	313.	4.23	43.	15.	15.	0.20
+	ROUTED TO	566567	308.	4.30	43.	15.	15.	0.20
+	HYDROGRAPH AT	208K	106.	4.15	11.	4.	4.	0.05
+	2 COMBINED AT	C567L	383.	4.27	54.	18.	18.	0.25
+	HYDROGRAPH AT	208L	101.	4.20	13.	4.	4.	0.06
+	2 COMBINED AT	C567	478.	4.25	67.	22.	22.	0.31
+	ROUTED TO	567568	468.	4.35	67.	22.	22.	0.31
+	HYDROGRAPH AT	208M	249.	4.28	35.	12.	12.	0.16
+	2 COMBINED AT	C568R	701.	4.33	102.	34.	34.	0.46
+	2 COMBINED AT	C568	1428.	4.37	224.	75.	75.	1.07
+	ROUTED TO	568573	1420.	4.43	224.	75.	75.	1.07
+	HYDROGRAPH AT	208N	86.	4.20	11.	4.	4.	0.05
+	2 COMBINED AT	C573L	1460.	4.43	234.	79.	79.	1.12
+	HYDROGRAPH AT	208O	386.	4.27	51.	17.	17.	0.23
+	ROUTED TO	569570	382.	4.30	51.	17.	17.	0.23
+	HYDROGRAPH AT	208P	145.	4.13	13.	4.	4.	0.06
+	2 COMBINED AT	C570R	467.	4.28	64.	22.	22.	0.29
+	HYDROGRAPH AT	208Q	169.	4.22	21.	7.	7.	0.09
+	2 COMBINED AT	C570	628.	4.25	86.	29.	29.	0.38
+	HYDROGRAPH AT	208R	25.	4.10	2.	1.	1.	0.01
+	ROUTED TO	571572	24.	4.15	2.	1.	1.	0.01
+	2 COMBINED AT	C572	647.	4.25	88.	29.	29.	0.39
+	ROUTED TO	572573	644.	4.27	88.	29.	29.	0.39

+	HYDROGRAPH AT 208S	160.	4.15	17.	6.	6.	0.07
+	2 COMBINED AT C573R	772.	4.23	105.	35.	35.	0.46
+	2 COMBINED AT C573	1872.	4.40	325.	110.	110.	1.58
+	HYDROGRAPH AT 208T	283.	4.18	30.	10.	10.	0.13
+	HYDROGRAPH AT 208U	379.	4.12	30.	10.	10.	0.13
+	2 COMBINED AT C574	643.	4.13	60.	20.	20.	0.27
+	ROUTED TO 574575	638.	4.15	60.	20.	20.	0.27
+	HYDROGRAPH AT 208V	71.	4.12	6.	2.	2.	0.03
+	2 COMBINED AT C575	704.	4.15	66.	22.	22.	0.29
+	ROUTED TO 575576	691.	4.18	66.	22.	22.	0.29
+	HYDROGRAPH AT 208W	122.	4.13	11.	4.	4.	0.05
+	2 COMBINED AT C576	803.	4.17	77.	26.	26.	0.34
+	ROUTED TO 576577	800.	4.18	77.	26.	26.	0.34
+	2 COMBINED AT C577	2187.	4.37	391.	132.	132.	1.92
+	ROUTED TO 577578	2184.	4.40	391.	132.	132.	1.92
+	HYDROGRAPH AT 208X	206.	4.12	17.	6.	6.	0.08
+	2 COMBINED AT C578I	2231.	4.38	405.	136.	136.	2.00
+	ROUTED TO C578O	381.	5.15	310.	136.	136.	2.00
+	ROUTED TO 578587	381.	5.20	310.	136.	136.	2.00
+	HYDROGRAPH AT 210B	172.	4.18	21.	7.	7.	0.11
+	ROUTED TO C586O	162.	4.27	21.	7.	7.	0.11
+	ROUTED TO 586587	161.	4.32	21.	7.	7.	0.11
+	2 COMBINED AT C587	401.	4.47	324.	142.	142.	2.11
+	ROUTED TO 587595	401.	4.50	324.	142.	142.	2.11
+	HYDROGRAPH AT 210C	165.	4.17	15.	5.	5.	0.08
+	2 COMBINED AT C595L	468.	4.40	333.	146.	146.	2.19
+	HYDROGRAPH AT 210D	301.	4.18	30.	10.	10.	0.14
+	ROUTED TO 588590	297.	4.22	30.	10.	10.	0.14
+	HYDROGRAPH AT 210E	62.	4.15	6.	2.	2.	0.03
+	2 COMBINED AT C590L	353.	4.20	36.	12.	12.	0.17
+	HYDROGRAPH AT 210F	184.	4.20	21.	7.	7.	0.09
+	ROUTED TO 589590	180.	4.23	21.	7.	7.	0.09
+	HYDROGRAPH AT 210G	293.	4.23	35.	12.	12.	0.16
	2 COMBINED AT						

+	C590R	472.	4.23	56.	19.	19.	0.25
+ 2 COMBINED AT	C590	819.	4.22	91.	31.	31.	0.42
+ HYDROGRAPH AT	210H	163.	4.13	14.	5.	5.	0.07
+ ROUTED TO	592593	158.	4.18	14.	5.	5.	0.07
+ 2 COMBINED AT	C593	972.	4.22	105.	35.	35.	0.49
+ ROUTED TO	593594	963.	4.25	105.	35.	35.	0.49
+ HYDROGRAPH AT	210I	94.	4.17	10.	3.	3.	0.05
+ 2 COMBINED AT	C594	1030.	4.23	115.	38.	38.	0.54
+ ROUTED TO	594595	1007.	4.33	115.	38.	38.	0.54
+ HYDROGRAPH AT	210J	213.	4.18	20.	7.	7.	0.10
+ 2 COMBINED AT	C595R	1119.	4.32	133.	44.	44.	0.64
+ 2 COMBINED AT	C595	1205.	4.35	438.	183.	183.	2.83
+ ROUTED TO	595596	1201.	4.40	438.	183.	183.	2.83
+ HYDROGRAPH AT	210K	207.	4.12	15.	5.	5.	0.08
+ 2 COMBINED AT	C596	1268.	4.38	448.	187.	187.	2.91
+ HYDROGRAPH AT	209A	792.	4.22	82.	27.	27.	0.37
+ ROUTED TO	579580	787.	4.25	82.	27.	27.	0.37
+ HYDROGRAPH AT	209C	105.	4.22	14.	5.	5.	0.06
+ 2 COMBINED AT	C580R	889.	4.25	96.	32.	32.	0.43
+ HYDROGRAPH AT	209B	156.	4.20	19.	6.	6.	0.08
+ 2 COMBINED AT	C580	1031.	4.23	114.	38.	38.	0.51
+ ROUTED TO	580581	1019.	4.28	114.	38.	38.	0.51
+ HYDROGRAPH AT	209D	563.	4.18	54.	18.	18.	0.24
+ 2 COMBINED AT	C581R	1368.	4.23	163.	55.	55.	0.76
+ HYDROGRAPH AT	209E	238.	4.27	33.	11.	11.	0.15
+ 2 COMBINED AT	C581	1511.	4.25	193.	65.	65.	0.91
+ ROUTED TO	581582	1488.	4.30	193.	65.	65.	0.91
+ HYDROGRAPH AT	209F	360.	4.28	49.	16.	16.	0.23
+ 2 COMBINED AT	C582R	1698.	4.30	235.	79.	79.	1.13
+ HYDROGRAPH AT	209G	337.	4.28	45.	15.	15.	0.20
+ 2 COMBINED AT	C582	1886.	4.30	275.	92.	92.	1.34
+ ROUTED TO	582583	1867.	4.33	275.	92.	92.	1.34
+ HYDROGRAPH AT	209H	203.	4.13	17.	6.	6.	0.08
+ 2 COMBINED AT	C583	1928.	4.33	289.	97.	97.	1.42

+	ROUTED TO 583584	1903.	4.40	289.	97.	97.	1.42
	HYDROGRAPH AT 209I	481.	4.13	36.	12.	12.	0.18
+	2 COMBINED AT C584I	1999.	4.40	319.	107.	107.	1.60
+	ROUTED TO C584O	469.	4.95	305.	107.	107.	1.60
+	ROUTED TO 584597	466.	5.08	305.	107.	107.	1.60
+	HYDROGRAPH AT 210L	255.	4.15	24.	8.	8.	0.14
+	2 COMBINED AT C597	460.	5.07	321.	113.	113.	1.74
+	ROUTED TO 597598	458.	5.15	321.	113.	113.	1.74
+	HYDROGRAPH AT 210M	286.	4.22	30.	10.	10.	0.16
+	2 COMBINED AT C598	587.	4.37	344.	121.	121.	1.90
+	HYDROGRAPH AT 210N	130.	4.08	8.	3.	3.	0.05
+	4 COMBINED AT C599I	1917.	4.40	981.	408.	408.	7.13
+	ROUTED TO C599O	954.	6.13	823.	408.	408.	7.13
+	ROUTED TO 599608	954.	6.18	823.	408.	408.	7.13
+	HYDROGRAPH AT 211K	302.	4.05	22.	7.	7.	0.10
+	2 COMBINED AT C608L	954.	6.13	823.	413.	413.	7.24
+	HYDROGRAPH AT 211G	18.	4.05	3.	1.	1.	0.01
	ROUTED TO 604606	17.	4.23	3.	1.	1.	0.01
+	HYDROGRAPH AT 211I	78.	4.17	10.	3.	3.	0.04
+	2 COMBINED AT C606R	94.	4.18	13.	4.	4.	0.05
+	HYDROGRAPH AT 211H	181.	4.13	14.	5.	5.	0.07
+	ROUTED TO C605O	115.	4.27	14.	5.	5.	0.07
+	2 COMBINED AT C606	206.	4.20	26.	9.	9.	0.12
+	ROUTED TO 606607	204.	4.23	26.	9.	9.	0.12
+	HYDROGRAPH AT 211J	37.	4.08	4.	1.	1.	0.01
+	2 COMBINED AT C607	230.	4.22	30.	10.	10.	0.14
+	ROUTED TO 607608	228.	4.25	30.	10.	10.	0.14
+	2 COMBINED AT C608	957.	6.12	839.	420.	420.	7.37
+	ROUTED TO 608613	957.	6.17	839.	420.	420.	7.37
+	HYDROGRAPH AT 211M	203.	4.13	19.	6.	6.	0.08
+	ROUTED TO 610611	200.	4.17	19.	6.	6.	0.08
+	HYDROGRAPH AT 211N	51.	4.07	4.	1.	1.	0.02
+	2 COMBINED AT C611R	241.	4.15	23.	8.	8.	0.10
	HYDROGRAPH AT 211O	107.	4.07	10.	3.	3.	0.04

+	ROUTED TO	C609O	61.	4.25	10.	3.	3.	0.04
+	ROUTED TO	609611	61.	4.28	10.	3.	3.	0.04
+	2 COMBINED AT	C611I	299.	4.17	33.	11.	11.	0.14
+	ROUTED TO	C611O	151.	4.45	33.	11.	11.	0.14
+	DIVERSION TO	D611R	151.	4.45	33.	11.	11.	0.14
+	HYDROGRAPH AT	D611L	0.	0.02	0.	0.	0.	0.14
+	ROUTED TO	611612	0.	0.02	0.	0.	0.	0.14
+	HYDROGRAPH AT	211P	119.	4.00	10.	3.	3.	0.03
+	2 COMBINED AT	C612	119.	4.00	10.	3.	3.	0.17
+	2 COMBINED AT	C613	956.	6.15	840.	422.	422.	7.55
+	ROUTED TO	613621	956.	6.17	840.	422.	422.	7.55
+	HYDROGRAPH AT	211L	301.	4.03	23.	8.	8.	0.10
+	2 COMBINED AT	C621L	957.	6.07	848.	428.	428.	7.64
+	HYDROGRAPH AT	211Q	56.	4.05	4.	1.	1.	0.02
+	ROUTED TO	616617	55.	4.12	4.	1.	1.	0.02
+	HYDROGRAPH AT	211R	200.	4.10	19.	6.	6.	0.08
+	2 COMBINED AT	C617L	255.	4.10	23.	8.	8.	0.10
+	HYDROGRAPH AT	211U	56.	4.07	8.	3.	3.	0.03
+	DIVERSION TO	D614R	39.	4.07	5.	2.	2.	0.03
+	HYDROGRAPH AT	D614L	16.	4.07	3.	1.	1.	0.03
+	2 COMBINED AT	C617	270.	4.10	26.	9.	9.	0.13
+	ROUTED TO	617618	263.	4.18	26.	9.	9.	0.13
+	HYDROGRAPH AT	211S	125.	4.08	12.	4.	4.	0.05
+	2 COMBINED AT	C618I	370.	4.15	37.	12.	12.	0.18
+	ROUTED TO	C618O	367.	4.17	31.	12.	12.	0.18
+	HYDROGRAPH AT	BB614R	39.	4.07	5.	2.	2.	0.03
+	ROUTED TO	614615	39.	4.12	5.	2.	2.	0.03
+	HYDROGRAPH AT	211V	16.	4.02	2.	1.	1.	0.00
+	2 COMBINED AT	C615	51.	4.08	7.	2.	2.	0.03
+	DIVERSION TO	D615R	18.	4.08	2.	1.	1.	0.03
+	HYDROGRAPH AT	D615L	33.	4.08	5.	2.	2.	0.03
+	ROUTED TO	615618	33.	4.08	5.	2.	2.	0.03
+	2 COMBINED AT	C618	398.	4.17	36.	14.	14.	0.19
	ROUTED TO							

+	618619	389.	4.25	36.	14.	14.	0.19
HYDROGRAPH AT	211T	162.	4.08	15.	5.	5.	0.07
2 COMBINED AT	C619L	503.	4.22	50.	19.	19.	0.26
+ HYDROGRAPH AT	BB615R	18.	4.08	2.	1.	1.	0.03
+ ROUTED TO	615619	18.	4.17	2.	1.	1.	0.03
+ 2 COMBINED AT	C619I	520.	4.22	52.	20.	20.	0.25
+ ROUTED TO	C619O	363.	4.40	52.	20.	20.	0.25
+ DIVERSION TO	D619L	171.	4.40	4.	1.	1.	0.25
+ HYDROGRAPH AT	D619R	192.	4.40	48.	18.	18.	0.25
+ ROUTED TO	619620	192.	4.42	48.	18.	18.	0.25
+ HYDROGRAPH AT	BB619L	171.	4.40	4.	1.	1.	0.25
+ ROUTED TO	619620	136.	4.45	4.	1.	1.	0.25
+ HYDROGRAPH AT	211W	105.	4.02	9.	3.	3.	0.03
+ 3 COMBINED AT	C620R	335.	4.43	61.	23.	23.	0.28
+ HYDROGRAPH AT	BB611R	151.	4.45	33.	11.	11.	0.14
+ ROUTED TO	611620	151.	4.47	33.	11.	11.	0.14
+ 2 COMBINED AT	C620	485.	4.43	94.	34.	34.	0.42
ROUTED TO	620621	482.	4.47	94.	33.	33.	0.42
+ 2 COMBINED AT	C621	1184.	4.30	913.	454.	454.	7.93
+ ROUTED TO	621622	1175.	4.40	912.	454.	454.	7.93
+ HYDROGRAPH AT	211X	503.	4.12	55.	18.	18.	0.21
+ 2 COMBINED AT	C622R	1376.	4.37	941.	468.	468.	8.14
+ HYDROGRAPH AT	211A	283.	4.15	30.	10.	10.	0.14
+ ROUTED TO	C600O	266.	4.22	30.	10.	10.	0.14
+ ROUTED TO	600601	263.	4.28	30.	10.	10.	0.14
+ HYDROGRAPH AT	211B	249.	4.12	23.	8.	8.	0.11
+ 2 COMBINED AT	C601	462.	4.18	52.	17.	17.	0.25
+ ROUTED TO	601602	458.	4.23	52.	17.	17.	0.25
+ HYDROGRAPH AT	211C	134.	4.03	12.	4.	4.	0.04
+ 2 COMBINED AT	C602L	515.	4.20	64.	21.	21.	0.30
+ HYDROGRAPH AT	211D	159.	4.07	15.	5.	5.	0.07
+ 2 COMBINED AT	C602	635.	4.15	78.	26.	26.	0.37
+ ROUTED TO	602603	632.	4.22	78.	26.	26.	0.37
HYDROGRAPH AT	211E	507.	4.03	41.	14.	14.	0.16

+	2 COMBINED AT	C603	936.	4.07	118.	40.	40.	0.52
+	ROUTED TO	603622	918.	4.15	118.	40.	40.	0.52
+	HYDROGRAPH AT	211F	332.	4.05	32.	11.	11.	0.11
+	2 COMBINED AT	C622L	1121.	4.13	149.	50.	50.	0.63
+	2 COMBINED AT	C622	1965.	4.33	1039.	506.	506.	8.78
+	ROUTED TO	622549	1954.	4.43	1038.	506.	506.	8.78
+	HYDROGRAPH AT	211Y	216.	4.10	21.	7.	7.	0.09
+	2 COMBINED AT	C549R	2026.	4.42	1050.	511.	511.	8.87
+	2 COMBINED AT	C549	2880.	4.43	1427.	698.	698.	13.06
+	ROUTED TO	549626	2865.	4.52	1426.	698.	698.	13.06
+	HYDROGRAPH AT	211Z	249.	4.03	20.	7.	7.	0.08
+	2 COMBINED AT	C626C	2895.	4.52	1433.	703.	703.	13.14
+	HYDROGRAPH AT	211AA	78.	4.08	9.	3.	3.	0.03
+	ROUTED TO	625626	76.	4.13	9.	3.	3.	0.03
+	HYDROGRAPH AT	211AB	135.	4.02	10.	3.	3.	0.04
+	ROUTED TO	623624	133.	4.03	10.	3.	3.	0.04
+	HYDROGRAPH AT	211AC	90.	4.02	8.	3.	3.	0.03
+	2 COMBINED AT	C624	223.	4.03	18.	6.	6.	0.07
+	ROUTED TO	624626	215.	4.07	18.	6.	6.	0.07
+	HYDROGRAPH AT	211AD	132.	4.03	12.	4.	4.	0.04
+	2 COMBINED AT	C626R	342.	4.05	30.	10.	10.	0.11
+	3 COMBINED AT	C626	2983.	4.50	1452.	713.	713.	13.28
+	ROUTED TO	626627	2981.	4.52	1452.	713.	713.	13.28
+	HYDROGRAPH AT	211AE	114.	4.02	9.	3.	3.	0.03
+	2 COMBINED AT	C627	2996.	4.52	1456.	715.	715.	13.32

*** NORMAL END OF HEC-1 ***

100-Year, Future Condition (6-Hour)

```
1*****************************************
 *                                       *
 *   FLOOD HYDROGRAPH PACKAGE  (HEC-1)   *
 *              MAY   1991               *
 *            VERSION 4.0.1E             *
 *     Lahey F77L-EM/32 version 5.01     *
 *       Dodson & Associates, Inc.       *
 *  RUN DATE  09/13/99  TIME  14:47:09   *
 *****************************************
```

```
*****************************************
*                                       *
*    U.S. ARMY CORPS OF ENGINEERS       *
*    HYDROLOGIC ENGINEERING CENTER      *
*          609 SECOND STREET            *
*       DAVIS, CALIFORNIA 95616         *
*           (916) 551-1748              *
*                                       *
*****************************************
```

```
X     X  XXXXXXX   XXXXX          X
X     X  X        X     X        XX
X     X  X        X              X
XXXXXXX  XXXX     X        XXXXX X
X     X  X        X              X
X     X  X        X     X        X
X     X  XXXXXXX   XXXXX        XXX
```

THIS PROGRAM REPLACES ALL PREVIOUS VERSIONS OF HEC-1 KNOWN AS HEC1 (JAN 73), HEC1GS, HEC1DB, AND HEC1KW.

THE DEFINITIONS OF VARIABLES -RTIMP- AND -RTIOR- HAVE CHANGED FROM THOSE USED WITH THE 1973-STYLE INPUT STRUCTURE.
THE DEFINITION OF -AMSKK- ON RM-CARD WAS CHANGED WITH REVISIONS DATED 28 SEP 81. THIS IS THE FORTRAN77 VERSION
NEW OPTIONS: DAMBREAK OUTFLOW SUBMERGENCE , SINGLE EVENT DAMAGE CALCULATION, DSS:WRITE STAGE FREQUENCY,
DSS:READ TIME SERIES AT DESIRED CALCULATION INTERVAL LOSS RATE:GREEN AND AMPT INFILTRATION
KINEMATIC WAVE: NEW FINITE DIFFERENCE ALGORITHM

```
1                                          HEC-1 INPUT                                                    PAGE  1

  LINE          ID.......1.......2.......3.......4.......5.......6.......7.......8.......9......10

    1           ID   Golden Eagle Park Dam Modifications
    2           ID        by Stantec: Proj. No. 28900095                    File: FU100-6.IH1
    3           ID        for FCDMC:  FCD                                   Date:03-29-99     mcg
    4           ID                                                        Revised:
    5           ID
    6           ID   100-year, 6-hour future condition watershed model for Ashbrook Wash upstream
    7           ID   of the Fort McDowell Indian Reservation boundary.
    8           ID        This model is a portion of the original Fountain Hills North FDS
    9           ID        watershed model conducted by GVSCE, 1994.  The title cards from that
   10           ID        model are included for reference.
   11           ID
   12           ID   Fountain Hills North Floodplain Delineation Study
   13           ID        FCD 92-04       by GVSCE                        File:  FU100-6.IH1
   14           ID    Future Condition Model                              Date:    07-19-94   dtp
   15           ID     100-Year 6-Hour Storm, Clark Unit Hydrograph     Revised:    10-31-94   dtp
                *
   16           IT       1                    1080
   17           IO       5
   18           IN      15
                *DIAGRAM
                *
   19           JD    3.30    0.01
   20           PC   0.000   0.008   0.016   0.025   0.033   0.041   0.050   0.058   0.066   0.074
   21           PC   0.087   0.099   0.118   0.138   0.216   0.377   0.834   0.911   0.931   0.950
   22           PC   0.962   0.972   0.983   0.991   1.000
   23           JD    3.28    0.50
   24           JD    3.23    2.80
   25           PC   0.000   0.009   0.016   0.025   0.034   0.042   0.051   0.059   0.067   0.076
   26           PC   0.087   0.100   0.120   0.163   0.252   0.451   0.694   0.837   0.900   0.938
   27           PC   0.950   0.963   0.975   0.988   1.000
   28           JD    3.04    16.0
   29           PC   0.000   0.015   0.020   0.030   0.048   0.063   0.076   0.090   0.105   0.119
   30           PC   0.135   0.152   0.175   0.222   0.304   0.472   0.670   0.796   0.868   0.912
   31           PC   0.946   0.960   0.973   0.987   1.000
   32           JD    2.67    90.0
   33           PC   0.000   0.021   0.035   0.051   0.071   0.087   0.105   0.125   0.143   0.160
   34           PC   0.179   0.201   0.232   0.281   0.364   0.500   0.658   0.773   0.841   0.888
   35           PC   0.927   0.945   0.964   0.982   1.000
                *

   36           KK    204A
   37           KM   Sub-Basin   204A
   38           KM
   39           KM      The Clark Unit Hydrograph is used for this basin.
   40           KM          The Urban time-area relation is used for this basin.
   41           KM
   42           KM      Time of Concentration for this sub-basin is based on the following:
   43           KM          6-Hour Rainfall, Pattern No.  1.00
   44           KM          An rainfall areal reduction factor of 0.999
   45           KM
   46           KM       EXCESS RAINFALL VALUES EXCEEDED IN 5-MINUTE INTERVALS
   47           KM     5  10  15  20  25  30  35  40  45  50  55  60  65  70  75  80  85  90
   48           KM   .47 .47 .47 .16 .13 .13 .06 .06 .05 .04 .04 .03 .01 .01 .01 .01 .01 .01
   49           KM
   50           KM          L=   0.687 miles, S=  175 feet/mile, Kb= .03
1                                          HEC-1 INPUT                                                    PAGE  2

  LINE          ID.......1.......2.......3.......4.......5.......6.......7.......8.......9......10

   51           KM
   52           BA   0.108
   53           LG    0.09    0.25    5.80    0.18   25.00
   54           UC   0.158   0.126
```

```
 55          UA       0       5      16      30      65      77      84      90      94      97
 56          UA     100
             *

 57          KK  522523
 58          KM      Normal depth channel route from C522 to C523
 59          KM      Source:  200 Scale Mapping
 60          RS       9    FLOW      -1
 61          RC   0.060   0.050   0.060  3275.0  0.0197
 62          RX  1000.0  1020.0  1035.0  1065.0  1080.0  1120.0  1160.0  1185.0
 63          RY  1678.0  1676.0  1674.0  1672.0  1672.0  1674.0  1676.0  1678.0
             *

 64          KK    204B
 65          KM   Sub-Basin   204B
 66          KM
 67          KM      The Clark Unit Hydrograph is used for this basin.
 68          KM          The Urban time-area relation is used for this basin.
 69          KM
 70          KM      Time of Concentration for this sub-basin is based on the following:
 71          KM          6-Hour Rainfall, Pattern No.  1.00
 72          KM          An rainfall areal reduction factor of 0.998
 73          KM
 74          KM       EXCESS RAINFALL VALUES EXCEEDED IN 5-MINUTE INTERVALS
 75          KM     5  10  15  20  25  30  35  40  45  50  55  60  65  70  75  80  85  90
 76          KM   .47 .47 .47 .16 .13 .13 .06 .06 .05 .04 .04 .03 .01 .01 .01 .01 .01 .01
 77          KM
 78          KM          L=   0.775 miles, S=  128 feet/mile, Kb= .03
 79          KM
 80          BA   0.126
 81          LG    0.09    0.25    5.80    0.18   26.66
 82          UC   0.188   0.153
 83          UA       0       5      16      30      65      77      84      90      94      97
 84          UA     100
             *

 85          KK   C523I
 86          KM      Hydrograph combine 522523 + 204B at C523I
 87          HC       2
             *

 88          KK   C523O
 89          KM      Reservoir route at C523.
 90          RS       1    ELEV  1650.3
 91          SV    0.00    0.01    0.12    0.71    2.23    2.50    2.80    3.10    3.20    3.40
 92          SV    3.70    4.00    4.30    4.60    4.90    5.20    5.50
 93          SE  1650.3  1652.0  1654.0  1656.0  1658.0  1658.2  1658.4  1658.6  1658.7  1658.8
 94          SE  1659.0  1659.2  1659.4  1659.6  1659.8  1660.0  1660.2
 95          SQ       0      22      78     144     209     214     220     224     226     232
 96          SQ     239     249     288     384     529     726     960
             *
```



```
LINE         ID.......1.......2.......3.......4.......5.......6.......7.......8.......9......10

 97          KK   D523L
 98          KM      Hydrograph diversion at C523.  Main flow continues in the left branch.
 99          KM      Diverted flow is in the right branch.
100          DT   D523R
101          DI       0      22      78     144     209     214     220     224     226     232
102          DI     239     249     288     384     529     726     960
103          DQ       0       0       0       0       0       0       0       0       0       3
104          DQ       5      10      20      37      61      96     139
             *

105          KK    205A
106          KM   Sub-Basin   205A
107          KM
108          KM      The Clark Unit Hydrograph is used for this basin.
109          KM          The Natural time-area relation is used for this basin.
110          KM
111          KM      Time of Concentration for this sub-basin is based on the following:
112          KM          6-Hour Rainfall, Pattern No.  1.00
113          KM          An rainfall areal reduction factor of 0.998
114          KM
115          KM       EXCESS RAINFALL VALUES EXCEEDED IN 5-MINUTE INTERVALS
116          KM     5  10  15  20  25  30  35  40  45  50  55  60  65  70  75  80  85  90
117          KM   .45 .44 .44 .13 .09 .08 .04 .04 .03 .03 .03 .03 .01 .01 .01 .01 .01 .01
118          KM
119          KM          L=   0.870 miles, S=  378 feet/mile, Kb= .14
120          KM
121          BA   0.118
122          LG    0.25    0.35    4.35    0.40   35.00
123          UC   0.350   0.350
124          UA       0       3       5       8      12      20      43      75      90      96
125          UA     100
             *

126          KK    205B
127          KM   Sub-Basin   205B
128          KM
129          KM      The Clark Unit Hydrograph is used for this basin.
130          KM          The Natural time-area relation is used for this basin.
131          KM
132          KM      Time of Concentration for this sub-basin is based on the following:
133          KM          6-Hour Rainfall, Pattern No.  1.00
134          KM          An rainfall areal reduction factor of 0.997
135          KM
136          KM       EXCESS RAINFALL VALUES EXCEEDED IN 5-MINUTE INTERVALS
137          KM     5  10  15  20  25  30  35  40  45  50  55  60  65  70  75  80  85  90
```

```
 138          KM   .45 .44 .44 .13 .09 .08 .04 .04 .03 .03 .03 .03 .01 .01 .01 .01 .01 .01
 139          KM
 140          KM          L=   0.759 miles, S=  129 feet/mile, Kb= .14
 141          KM
 142          BA   0.211
 143          LG    0.25    0.35    4.35    0.40   35.00
 144          UC   0.508   0.340
 145          UA      0       3       5       8      12      20      43      75      90      96
 146          UA    100
              *
1                                          HEC-1 INPUT                                          PAGE  4

LINE          ID.......1.......2.......3.......4.......5.......6.......7.......8.......9......10


 147          KK    C528
 148          KM      Hydrograph combine 205A + 205B at C528
 149          HC       2
              *

 150          KK  528530
 151          KM      Normal depth channel route from C528 to C530
 152          KM      Source:  Hydrology Field Reconnaissance
 153          RS       3    FLOW      -1
 154          RC   0.060   0.043   0.060  2594.0  0.0709
 155          RX  1000.0  1018.0  1031.0  1042.0  1052.0  1066.0  1093.0  1107.0
 156          RY    96.3    92.2    89.9    85.9    85.7    91.5    91.2    96.3
              *

 157          KK    205C
 158          KM   Sub-Basin   205C
 159          KM
 160          KM      The Clark Unit Hydrograph is used for this basin.
 161          KM          The Natural time-area relation is used for this basin.
 162          KM
 163          KM      Time of Concentration for this sub-basin is based on the following:
 164          KM          6-Hour Rainfall, Pattern No.  1.00
 165          KM          An rainfall areal reduction factor of 0.999
 166          KM
 167          KM       EXCESS RAINFALL VALUES EXCEEDED IN 5-MINUTE INTERVALS
 168          KM     5  10  15  20  25  30  35  40  45  50  55  60  65  70  75  80  85  90
 169          KM   .45 .44 .44 .13 .09 .08 .04 .04 .03 .03 .03 .03 .01 .01 .01 .01 .01 .01
 170          KM
 171          KM          L=   0.618 miles, S=  331 feet/mile, Kb= .15
 172          KM
 173          BA   0.059
 174          LG    0.25    0.35    4.35    0.41   35.00
 175          UC   0.308   0.343
 176          UA      0       3       5       8      12      20      43      75      90      96
 177          UA    100
              *

 178          KK   C530R
 179          KM      Hydrograph combine 528530 + 205C at C530 right branch
 180          HC       2
              *

 181          KK    205D
 182          KM   Sub-Basin   205D
 183          KM
 184          KM      The Clark Unit Hydrograph is used for this basin.
 185          KM          The Natural time-area relation is used for this basin.
 186          KM
 187          KM      Time of Concentration for this sub-basin is based on the following:
 188          KM          6-Hour Rainfall, Pattern No.  1.00
 189          KM          An rainfall areal reduction factor of 0.996
 190          KM
 191          KM       EXCESS RAINFALL VALUES EXCEEDED IN 5-MINUTE INTERVALS
 192          KM     5  10  15  20  25  30  35  40  45  50  55  60  65  70  75  80  85  90
1                                          HEC-1 INPUT                                          PAGE  5

LINE          ID.......1.......2.......3.......4.......5.......6.......7.......8.......9......10

 193          KM   .45 .44 .44 .13 .09 .08 .04 .04 .03 .03 .03 .03 .01 .01 .01 .01 .01 .01
 194          KM
 195          KM          L=   1.020 miles, S=  361 feet/mile, Kb= .13
 196          KM
 197          BA   0.319
 198          LG    0.25    0.35    4.35    0.40   35.00
 199          UC   0.379   0.246
 200          UA      0       3       5       8      12      20      43      75      90      96
 201          UA    100
              *

 202          KK    205E
 203          KM   Sub-Basin   205E
 204          KM
 205          KM      The Clark Unit Hydrograph is used for this basin.
 206          KM          The Natural time-area relation is used for this basin.
 207          KM
 208          KM      Time of Concentration for this sub-basin is based on the following:
 209          KM          6-Hour Rainfall, Pattern No.  1.00
 210          KM          An rainfall areal reduction factor of 0.997
 211          KM
 212          KM       EXCESS RAINFALL VALUES EXCEEDED IN 5-MINUTE INTERVALS
 213          KM     5  10  15  20  25  30  35  40  45  50  55  60  65  70  75  80  85  90
 214          KM   .45 .44 .44 .13 .09 .08 .04 .04 .03 .03 .03 .03 .01 .01 .01 .01 .01 .01
 215          KM
 216          KM          L=   1.357 miles, S=  358 feet/mile, Kb= .14
 217          KM
 218          BA   0.218
```

```
219          LG    0.25    0.35    4.35    0.40   35.00
220          UC   0.488   0.508
221          UA       0       3       5       8      12      20      43      75      90      96
222          UA     100
             *

223          KK    C529
224          KM      Hydrograph combine 205D + 205E at C529
225          HC       2
             *
             * *
             * * NOTE:  529530 too short to route
             * *
             *

226          KK    C530
227          KM      Hydrograph combine C529 + C530R at C530
228          HC       2
             *

229          KK  530531
230          KM      Normal depth channel route from C530 to C531
231          KM      Source:  Hydrology Field Reconnaissance
232          RS       3    FLOW      -1
233          RC   0.060   0.059   0.060  2426.0  0.0404
234          RX  1000.0  1035.0  1050.0  1060.0  1075.0  1081.0  1088.0  1094.0
235          RY    95.9    86.5    86.2    83.1    84.0    90.2    95.6    99.3
             *
1                                          HEC-1 INPUT                                          PAGE  6

LINE         ID.......1.......2.......3.......4.......5.......6.......7.......8.......9......10

236          KK    205F
237          KM   Sub-Basin   205F
238          KM
239          KM      The Clark Unit Hydrograph is used for this basin.
240          KM          The Natural time-area relation is used for this basin.
241          KM
242          KM      Time of Concentration for this sub-basin is based on the following:
243          KM          6-Hour Rainfall, Pattern No.  1.00
244          KM          An rainfall areal reduction factor of 0.998
245          KM
246          KM       EXCESS RAINFALL VALUES EXCEEDED IN 5-MINUTE INTERVALS
247          KM     5  10  15  20  25  30  35  40  45  50  55  60  65  70  75  80  85  90
248          KM   .45 .44 .44 .13 .09 .08 .04 .04 .03 .03 .03 .03 .01 .01 .01 .01 .01 .01
249          KM
250          KM          L=   0.786 miles, S=  326 feet/mile, Kb= .14
251          KM
252          BA   0.161
253          LG    0.25    0.35    4.35    0.41   35.00
254          UC   0.350   0.269
255          UA       0       3       5       8      12      20      43      75      90      96
256          UA     100
             *

257          KK    C531
258          KM      Hydrograph combine 530531 + 205F at C531
259          HC       2
             *

260          KK  531532
261          KM      Normal depth channel route from C531 to C532
262          KM      Source:  Hydrology Field Reconnaissance
263          RS       4    FLOW      -1
264          RC   0.060   0.065   0.060  3391.0  0.0463
265          RX  1000.0  1012.0  1022.0  1032.0  1050.0  1056.0  1068.0  1092.0
266          RY    98.8    93.8    89.1    86.4    86.5    89.1    91.0    97.6
             *

267          KK    205G
268          KM   Sub-Basin   205G
269          KM
270          KM      The Clark Unit Hydrograph is used for this basin.
271          KM          The Natural time-area relation is used for this basin.
272          KM
273          KM      Time of Concentration for this sub-basin is based on the following:
274          KM          6-Hour Rainfall, Pattern No.  1.00
275          KM          An rainfall areal reduction factor of 0.998
276          KM
277          KM       EXCESS RAINFALL VALUES EXCEEDED IN 5-MINUTE INTERVALS
278          KM     5  10  15  20  25  30  35  40  45  50  55  60  65  70  75  80  85  90
279          KM   .45 .44 .44 .13 .09 .07 .03 .03 .03 .03 .03 .03 .01 .01 .01 .01 .01 .01
280          KM
281          KM          L=   0.924 miles, S=  338 feet/mile, Kb= .13
282          KM
283          BA   0.185
1                                          HEC-1 INPUT                                          PAGE  7

LINE         ID.......1.......2.......3.......4.......5.......6.......7.......8.......9......10

284          LG    0.24    0.35    4.50    0.40   31.23
285          UC   0.367   0.298
286          UA       0       3       5       8      12      20      43      75      90      96
287          UA     100
             *

288          KK   C532L
289          KM      Hydrograph combine 531532 + 205G at C532 left branch
290          HC       2
             *
```

```
291          KK    205H
292          KM   Sub-Basin   205H
293          KM
294          KM      The Clark Unit Hydrograph is used for this basin.
295          KM          The Natural time-area relation is used for this basin.
296          KM
297          KM      Time of Concentration for this sub-basin is based on the following:
298          KM          6-Hour Rainfall, Pattern No.  1.00
299          KM          An rainfall areal reduction factor of 0.997
300          KM
301          KM       EXCESS RAINFALL VALUES EXCEEDED IN 5-MINUTE INTERVALS
302          KM     5  10  15  20  25  30  35  40  45  50  55  60  65  70  75  80  85  90
303          KM   .45 .44 .44 .13 .09 .08 .04 .03 .03 .03 .03 .03 .01 .01 .01 .01 .01 .01
304          KM
305          KM          L=   1.464 miles, S=  325 feet/mile, Kb= .13
306          KM
307          BA   0.261
308          LG    0.24    0.35    4.50    0.39   31.55
309          UC   0.513   0.514
310          UA       0       3       5       8      12      20      43      75      90      96
311          UA     100
             *

312          KK    C532
313          KM      Hydrograph combine C532L + 205H at C532
314          HC       2
             *

315          KK  532533
316          KM      Normal depth channel route from C532 to C533
317          KM      Source:  Hydrology Field Reconnaissance
318          RS       2    FLOW      -1
319          RC   0.060   0.045   0.060  1555.0  0.0283
320          RX  1000.0  1020.0  1030.0  1048.0  1065.0  1077.0  1092.0  1119.0
321          RY    98.0    89.4    88.1    85.6    85.9    92.2    93.8    97.0
             *

322          KK    205I
323          KM   Sub-Basin   205I
324          KM
325          KM      The Clark Unit Hydrograph is used for this basin.
326          KM          The Natural time-area relation is used for this basin.
327          KM
328          KM      Time of Concentration for this sub-basin is based on the following:
```



```
LINE         ID.......1.......2.......3.......4.......5.......6.......7.......8.......9......10

329          KM          6-Hour Rainfall, Pattern No.  1.00
330          KM          An rainfall areal reduction factor of 0.995
331          KM
332          KM       EXCESS RAINFALL VALUES EXCEEDED IN 5-MINUTE INTERVALS
333          KM     5  10  15  20  25  30  35  40  45  50  55  60  65  70  75  80  85  90
334          KM   .44 .44 .43 .13 .09 .08 .03 .03 .03 .01 .01 .01 .00 .00 .00 .00 .00 .00
335          KM
336          KM          L=   1.487 miles, S=  326 feet/mile, Kb= .11
337          KM
338          BA   0.354
339          LG    0.20    0.37    5.20    0.28   15.18
340          UC   0.458   0.386
341          UA       0       3       5       8      12      20      43      75      90      96
342          UA     100
             *

343          KK    C533
344          KM      Hydrograph combine 532533 + 205I at C533
345          HC       2
             *

346          KK  533534
347          KM      Normal depth channel route from C533 to C534
348          KM      Source:  Hydrology Field Reconnaissance
349          RS      10    FLOW      -1
350          RC   0.060   0.046   0.060  7145.0  0.0241
351          RX  1000.0  1010.0  1060.0  1073.0  1160.0  1181.0  1223.0  1237.0
352          RY    97.8    93.7    94.7    90.8    89.9    92.4    94.0    96.8
             *

353          KK    205J
354          KM   Sub-Basin   205J
355          KM
356          KM      The Clark Unit Hydrograph is used for this basin.
357          KM          The Natural time-area relation is used for this basin.
358          KM
359          KM      Time of Concentration for this sub-basin is based on the following:
360          KM          6-Hour Rainfall, Pattern No.  1.00
361          KM          An rainfall areal reduction factor of 0.995
362          KM
363          KM       EXCESS RAINFALL VALUES EXCEEDED IN 5-MINUTE INTERVALS
364          KM     5  10  15  20  25  30  35  40  45  50  55  60  65  70  75  80  85  90
365          KM   .44 .43 .42 .12 .08 .06 .03 .02 .02 .00 .00 .00 .00 .00 .00 .00 .00 .00
366          KM
367          KM          L=   1.633 miles, S=  243 feet/mile, Kb= .08
368          KM
369          BA   0.369
370          LG    0.21    0.35    4.90    0.30    3.48
371          UC   0.450   0.398
372          UA       0       3       5       8      12      20      43      75      90      96
373          UA     100
             *
```

```
LINE          ID.......1.......2.......3.......4.......5.......6.......7.......8.......9......10

 374          KK   C534R
 375          KM      Hydrograph combine 533534 + 205J at C534 right branch
 376          HC       2
              *

 377          KK    205K
 378          KM   Sub-Basin   205K
 379          KM
 380          KM      The Clark Unit Hydrograph is used for this basin.
 381          KM          The Natural time-area relation is used for this basin.
 382          KM
 383          KM      Time of Concentration for this sub-basin is based on the following:
 384          KM          6-Hour Rainfall, Pattern No.  1.00
 385          KM          An rainfall areal reduction factor of 0.997
 386          KM
 387          KM       EXCESS RAINFALL VALUES EXCEEDED IN 5-MINUTE INTERVALS
 388          KM     5  10  15  20  25  30  35  40  45  50  55  60  65  70  75  80  85  90
 389          KM   .44 .44 .43 .13 .09 .08 .03 .03 .03 .00 .00 .00 .00 .00 .00 .00 .00 .00
 390          KM
 391          KM          L=   1.772 miles, S=  249 feet/mile, Kb= .10
 392          KM
 393          BA   0.245
 394          LG    0.16    0.38    5.60    0.22    1.54
 395          UC   0.546   0.665
 396          UA       0       3       5       8      12      20      43      75      90      96
 397          UA     100
              *

 398          KK    C534
 399          KM      Hydrograph combine C534R + 205K at C534
 400          HC       2
              *

 401          KK  534535
 402          KM      Normal depth channel route from C534 to C535
 403          KM      Source:  Hydrology Field Reconnaissance
 404          RS       3    FLOW      -1
 405          RC   0.065   0.046   0.065  2037.0  0.0221
 406          RX  1000.0  1010.0  1016.0  1075.0  1150.0  1162.0  1174.0  1182.0
 407          RY    97.1    93.4    91.6    89.6    86.9    90.8    92.2    92.3
              *

 408          KK    205L
 409          KM   Sub-Basin   205L
 410          KM
 411          KM      The Clark Unit Hydrograph is used for this basin.
 412          KM          The Natural time-area relation is used for this basin.
 413          KM
 414          KM      Time of Concentration for this sub-basin is based on the following:
 415          KM          6-Hour Rainfall, Pattern No.  1.00
 416          KM          An rainfall areal reduction factor of 0.998
 417          KM
 418          KM       EXCESS RAINFALL VALUES EXCEEDED IN 5-MINUTE INTERVALS
 419          KM     5  10  15  20  25  30  35  40  45  50  55  60  65  70  75  80  85  90
```



```
LINE          ID.......1.......2.......3.......4.......5.......6.......7.......8.......9......10

 420          KM   .44 .43 .42 .12 .08 .06 .02 .02 .02 .00 .00 .00 .00 .00 .00 .00 .00 .00
 421          KM
 422          KM          L=   0.701 miles, S=  284 feet/mile, Kb= .09
 423          KM
 424          BA   0.118
 425          LG    0.19    0.36    5.00    0.29    0.00
 426          UC   0.254   0.206
 427          UA       0       3       5       8      12      20      43      75      90      96
 428          UA     100
              *

 429          KK    C535
 430          KM      Hydrograph combine 534535 + 205L at C535
 431          HC       2
              *

 432          KK  535536
 433          KM      Normal depth channel route from C535 to C536
 434          KM      Source:  HEC-2 Cross Section: HE 3.275
 435          RS       8    FLOW      -1
 436          RC   0.075   0.050   0.075  2975.0  0.0236
 437          RX  9852.8  9871.5  9957.7 10000.0 10015.6 10052.4 10142.4 10183.6
 438          RY  1911.6  1904.3  1906.9  1900.8  1900.8  1905.4  1905.2  1912.6
              *

 439          KK    205M
 440          KM   Sub-Basin   205M
 441          KM
 442          KM      The Clark Unit Hydrograph is used for this basin.
 443          KM          The Urban time-area relation is used for this basin.
 444          KM
 445          KM      Time of Concentration for this sub-basin is based on the following:
 446          KM          6-Hour Rainfall, Pattern No.  1.00
 447          KM          An rainfall areal reduction factor of 0.998
 448          KM
 449          KM       EXCESS RAINFALL VALUES EXCEEDED IN 5-MINUTE INTERVALS
 450          KM     5  10  15  20  25  30  35  40  45  50  55  60  65  70  75  80  85  90
 451          KM   .46 .46 .46 .15 .12 .11 .05 .05 .04 .02 .02 .02 .01 .01 .01 .01 .01 .01
```

```
452          KM
453          KM          L=   0.839 miles, S=  230 feet/mile, Kb= .05
454          KM
455          BA   0.139
456          LG    0.15    0.31    5.40    0.22   22.35
457          UC   0.213   0.178
458          UA       0       5      16      30      65      77      84      90      94      97
459          UA     100
             *

460          KK   C536R
461          KM      Hydrograph combine 535536 + 205M at C536 right branch
462          HC       2
             *
```



```
LINE         ID.......1.......2.......3.......4.......5.......6.......7.......8.......9......10

463          KK    205N
464          KM   Sub-Basin   205N
465          KM
466          KM      The Clark Unit Hydrograph is used for this basin.
467          KM          The HEC-1 time-area relation is used for this basin.
468          KM
469          KM      Time of Concentration for this sub-basin is based on the following:
470          KM          6-Hour Rainfall, Pattern No.  1.00
471          KM          An rainfall areal reduction factor of 0.998
472          KM
473          KM       EXCESS RAINFALL VALUES EXCEEDED IN 5-MINUTE INTERVALS
474          KM     5  10  15  20  25  30  35  40  45  50  55  60  65  70  75  80  85  90
475          KM   .45 .44 .44 .13 .09 .08 .03 .03 .03 .00 .00 .00 .00 .00 .00 .00 .00 .00
476          KM
477          KM          L=   1.183 miles, S=  245 feet/mile, Kb= .10
478          KM
479          BA   0.156
480          LG    0.15    0.39    5.70    0.21    0.80
481          UC   0.413   0.457
             *

482          KK   C536I
483          KM      Hydrograph combine C536R + 205N at C536I
484          HC       2
             *
             * *
             * * C536I is the total flow in Hesperus Wash upstream of Dam 36
             * *
             *

485          KK   C536O
486          KM      Reservoir route at C536 (Dam 36).
487          RS       1    ELEV  1852.1
488          SV    0.00   14.41   35.94   67.64  108.61  158.07  218.14  276.00  280.00  289.00
489          SV  298.02  308.00  317.00  327.00  337.00  346.95  358.00  374.00
490          SE  1852.1  1866.0  1870.0  1874.0  1878.0  1882.0  1886.0  1889.0  1889.2  1889.6
491          SE  1890.0  1890.4  1890.8  1891.2  1891.6  1892.0  1892.4  1893.0
492          SQ       0     108     168     211     245     276     301     320     338     347
493          SQ     356     459     679     995    1408    1905    2477    3119    3826    5009
494          SE  1852.1  1858.0  1862.0  1866.0  1870.0  1874.0  1878.0  1882.0  1886.0  1889.0
495          SE  1889.2  1889.6  1890.0  1890.4  1890.8  1891.2  1891.6  1892.0  1892.4  1893.0
496          RL                   0.17
             *
             * *
             * * End Basin 205.  Start Basin 206
             * *
             *

497          KK  536537
498          KM      Normal depth channel route from C536 to C537
499          KM      Source:  HEC-2 Cross Section: HE 2.729
500          RS       3    FLOW      -1
501          RC   0.075   0.050   0.075  1480.0  0.0209
502          RX  9900.0  9912.0  9947.3  9979.3 10025.0 10044.5 10051.0 10060.0
```



```
LINE         ID.......1.......2.......3.......4.......5.......6.......7.......8.......9......10

503          RY  1846.5  1845.4  1843.1  1834.3  1833.6  1840.5  1843.3  1843.5
             *

504          KK    206A
505          KM   Sub-Basin   206A
506          KM
507          KM      The Clark Unit Hydrograph is used for this basin.
508          KM          The Urban time-area relation is used for this basin.
509          KM
510          KM      Time of Concentration for this sub-basin is based on the following:
511          KM          6-Hour Rainfall, Pattern No.  1.00
512          KM          An rainfall areal reduction factor of 0.998
513          KM
514          KM       EXCESS RAINFALL VALUES EXCEEDED IN 5-MINUTE INTERVALS
515          KM     5  10  15  20  25  30  35  40  45  50  55  60  65  70  75  80  85  90
516          KM   .47 .47 .46 .16 .13 .12 .05 .05 .05 .04 .03 .03 .01 .01 .01 .01 .01 .01
517          KM
518          KM          L=   0.631 miles, S=  256 feet/mile, Kb= .04
519          KM
520          BA   0.128
521          LG    0.12    0.28    5.30    0.23   33.34
522          UC   0.158   0.107
523          UA       0       5      16      30      65      77      84      90      94      97
524          UA     100
```

```
            *
525         KK    C537
526         KM      Hydrograph combine 536537 + 206A at C537
527         HC       2
            *

528         KK  537538
529         KM      Normal depth channel route from C537 to C538
530         KM      Source:  HEC-2 Cross Section: HE 2.493
531         RS       4    FLOW      -1
532         RC   0.075   0.050   0.075  2155.0  0.0210
533         RX  9946.0  9957.6  9984.8  9994.8 10000.0 10036.5 10070.1 10107.3
534         RY  1817.0  1815.2  1807.4  1803.2  1803.2  1805.5  1814.3  1815.4
            *

535         KK    206B
536         KM   Sub-Basin   206B
537         KM
538         KM      The Clark Unit Hydrograph is used for this basin.
539         KM          The Urban time-area relation is used for this basin.
540         KM
541         KM      Time of Concentration for this sub-basin is based on the following:
542         KM          6-Hour Rainfall, Pattern No.  1.00
543         KM          An rainfall areal reduction factor of 0.999
544         KM
545         KM       EXCESS RAINFALL VALUES EXCEEDED IN 5-MINUTE INTERVALS
546         KM     5  10  15  20  25  30  35  40  45  50  55  60  65  70  75  80  85  90
547         KM   .48 .47 .47 .17 .13 .13 .06 .06 .05 .05 .04 .04 .01 .01 .01 .01 .01 .01
548         KM
549         KM          L=   0.570 miles, S=  139 feet/mile, Kb= .03
```



```
LINE        ID.......1.......2.......3.......4.......5.......6.......7.......8.......9......10

550         KM
551         BA   0.095
552         LG    0.10    0.26    5.20    0.23   41.42
553         UC   0.154   0.113
554         UA       0       5      16      30      65      77      84      90      94      97
555         UA     100
            *

556         KK   C538I
557         KM      Hydrograph combine 537538 + 206B at C538I
558         HC       2
            *

559         KK   C538O
560         KM      Reservoir route at C538.
561         RS       1    ELEV  1778.2
562         SV    0.00    0.10    0.57    1.69    2.60    2.70    2.90    3.00    3.20    3.38
563         SV    3.60    3.90    4.10    4.30    4.60    5.10    5.60    6.10    7.10    8.10
564         SE  1778.2  1782.0  1784.0  1786.0  1787.1  1787.2  1787.4  1787.6  1787.8  1788.0
565         SE  1788.2  1788.4  1788.6  1788.8  1789.0  1789.4  1789.8  1790.2  1790.8  1791.4
566         SQ       0      82     133     185     207     208     212     218     226     235
567         SQ     249     265     286     310     338     400     482     611     942    1439
            *

568         KK  538540
569         KM      Normal depth channel route from C538 to C540
570         KM      Source:  HEC-2 Cross Section: HE 1.990
571         RS       7    FLOW      -1
572         RC   0.075   0.050   0.075  2176.0  0.0210
573         RX  9907.7  9931.8  9978.4 10000.0 10041.1 10056.9 10143.7 10164.9
574         RY  1767.5  1754.9  1755.2  1753.2  1753.1  1755.1  1757.3  1769.4
            *

575         KK    206C
576         KM   Sub-Basin   206C
577         KM
578         KM      The Clark Unit Hydrograph is used for this basin.
579         KM          The Urban time-area relation is used for this basin.
580         KM
581         KM      Time of Concentration for this sub-basin is based on the following:
582         KM          6-Hour Rainfall, Pattern No.  1.00
583         KM          An rainfall areal reduction factor of 1.000
584         KM
585         KM       EXCESS RAINFALL VALUES EXCEEDED IN 5-MINUTE INTERVALS
586         KM     5  10  15  20  25  30  35  40  45  50  55  60  65  70  75  80  85  90
587         KM   .46 .45 .45 .15 .11 .11 .04 .04 .04 .02 .02 .02 .01 .01 .01 .01 .01 .01
588         KM
589         KM          L=   0.427 miles, S=  138 feet/mile, Kb= .04
590         KM
591         BA   0.024
592         LG    0.11    0.26    4.35    0.36   28.55
593         UC   0.158   0.204
594         UA       0       5      16      30      65      77      84      90      94      97
595         UA     100
            *
```



```
LINE        ID.......1.......2.......3.......4.......5.......6.......7.......8.......9......10

596         KK   C540R
597         KM      Hydrograph combine 538540 + 206C at C540 right branch
598         HC       2
            *

599         KK    206D
```

```
600          KM   Sub-Basin   206D
601          KM
602          KM      The Clark Unit Hydrograph is used for this basin.
603          KM          The Urban time-area relation is used for this basin.
604          KM
605          KM      Time of Concentration for this sub-basin is based on the following:
606          KM          6-Hour Rainfall, Pattern No.  1.00
607          KM          An rainfall areal reduction factor of 0.999
608          KM
609          KM       EXCESS RAINFALL VALUES EXCEEDED IN 5-MINUTE INTERVALS
610          KM     5  10  15  20  25  30  35  40  45  50  55  60  65  70  75  80  85  90
611          KM   .48 .48 .48 .17 .14 .14 .06 .06 .06 .05 .05 .05 .01 .01 .01 .01 .01 .01
612          KM
613          KM          L=   0.531 miles, S=  236 feet/mile, Kb= .03
614          KM
615          BA   0.062
616          LG    0.08    0.25    5.70    0.18   43.01
617          UC   0.125   0.109
618          UA       0       5      16      30      65      77      84      90      94      97
619          UA     100
             *

620          KK  539540
621          KM      Normal depth channel route from C539 to C540
622          KM      Source:  200 Scale Mapping
623          RS       5    FLOW      -1
624          RC   0.060   0.050   0.055  1872.0  0.0256
625          RX  1000.0  1007.0  1016.0  1036.0  1046.0  1080.0  1150.0  1210.0
626          RY  1750.0  1748.0  1746.0  1744.0  1744.0  1746.0  1748.0  1750.0
             *

627          KK    206E
628          KM   Sub-Basin   206E
629          KM
630          KM      The Clark Unit Hydrograph is used for this basin.
631          KM          The Urban time-area relation is used for this basin.
632          KM
633          KM      Time of Concentration for this sub-basin is based on the following:
634          KM          6-Hour Rainfall, Pattern No.  1.00
635          KM          An rainfall areal reduction factor of 1.000
636          KM
637          KM       EXCESS RAINFALL VALUES EXCEEDED IN 5-MINUTE INTERVALS
638          KM     5  10  15  20  25  30  35  40  45  50  55  60  65  70  75  80  85  90
639          KM   .46 .45 .45 .15 .11 .11 .04 .04 .04 .02 .02 .02 .01 .01 .01 .01 .01 .01
640          KM
641          KM          L=   0.343 miles, S=  175 feet/mile, Kb= .03
642          KM
643          BA   0.023
```



```
LINE         ID.......1.......2.......3.......4.......5.......6.......7.......8.......9......10

644          LG    0.09    0.25    4.30    0.36   25.75
645          UC   0.113   0.120
646          UA       0       5      16      30      65      77      84      90      94      97
647          UA     100
             *

648          KK   C540L
649          KM      Hydrograph combine 539540 + 206E at C540 left branch
650          HC       2
             *

651          KK    C540
652          KM      Hydrograph combine C540R + C540L at C540
653          HC       2
             *
             * *
             * * C540 is the end of Hesperus Wash and the start of Balboa Wash
             * *
             *

654          KK  540541
655          KM      Normal depth channel route from C540 to C541
656          KM      Source:  HEC-2 Cross Section: BA 1.645
657          RS      12    FLOW      -1
658          RC   0.065   0.035   0.065  4207.0  0.0204
659          RX  9960.8  9968.0  9975.1  9975.7  9993.2 10018.2 10297.5 10343.9
660          RY  1725.2  1721.8  1718.4  1716.2  1716.4  1718.4  1719.8  1730.5
             *

661          KK    206F
662          KM   Sub-Basin   206F
663          KM
664          KM      The Clark Unit Hydrograph is used for this basin.
665          KM          The Urban time-area relation is used for this basin.
666          KM
667          KM      Time of Concentration for this sub-basin is based on the following:
668          KM          6-Hour Rainfall, Pattern No.  1.00
669          KM          An rainfall areal reduction factor of 0.998
670          KM
671          KM       EXCESS RAINFALL VALUES EXCEEDED IN 5-MINUTE INTERVALS
672          KM     5  10  15  20  25  30  35  40  45  50  55  60  65  70  75  80  85  90
673          KM   .46 .46 .46 .15 .12 .11 .05 .05 .04 .03 .02 .02 .01 .01 .01 .01 .01 .01
674          KM
675          KM          L=   0.975 miles, S=  217 feet/mile, Kb= .03
676          KM
677          BA   0.157
678          LG    0.09    0.25    4.60    0.30   24.97
679          UC   0.179   0.154
680          UA       0       5      16      30      65      77      84      90      94      97
```

```
681          UA     100
             *
1                                        HEC-1 INPUT                                                PAGE 16

LINE         ID.......1.......2.......3.......4.......5.......6.......7.......8.......9......10


682          KK    C541
683          KM      Hydrograph combine 540541 + 206F at C541
684          HC       2
             *

685          KK  541548
686          KM      Normal depth channel route from C541 to C548
687          KM      Source:  HEC-2 Cross Section: BA 0.905
688          RS       3    FLOW      -1
689          RC   0.060   0.045   0.060  1138.0  0.0316
690          RX  9761.7  9936.7  9955.2  9986.9  9994.7 10039.2 10065.3 10066.0
691          RY  1647.4  1644.1  1638.1  1637.3  1636.2  1637.5  1652.9  1653.0
             *

692          KK    206G
693          KM   Sub-Basin   206G
694          KM
695          KM      The Clark Unit Hydrograph is used for this basin.
696          KM          The Urban time-area relation is used for this basin.
697          KM
698          KM      Time of Concentration for this sub-basin is based on the following:
699          KM          6-Hour Rainfall, Pattern No.  1.00
700          KM          An rainfall areal reduction factor of 0.999
701          KM
702          KM       EXCESS RAINFALL VALUES EXCEEDED IN 5-MINUTE INTERVALS
703          KM     5  10  15  20  25  30  35  40  45  50  55  60  65  70  75  80  85  90
704          KM   .47 .47 .46 .16 .13 .12 .05 .05 .05 .04 .03 .03 .01 .01 .01 .01 .01 .01
705          KM
706          KM          L=   0.950 miles, S=  132 feet/mile, Kb= .03
707          KM
708          BA   0.089
709          LG    0.11    0.26    5.20    0.23   29.86
710          UC   0.204   0.241
711          UA       0       5      16      30      65      77      84      90      94      97
712          UA     100
             *

713          KK  BB523R
714          KM      Retrieve previously diverted hydrograph at C523 in the right branch.
715          DR   D523R
             *

716          KK  523548
717          KM      Normal depth channel route from C523 to C548
718          KM      Source:  200 Scale Mapping
719          RS      11    FLOW      -1
720          RC   0.040   0.018   0.040  2680.0  0.0189
721          RX  1000.0  1040.0  1090.0  1130.0  1170.0  1171.2  1181.2  1196.2
722          RY  1646.0  1645.0  1643.8  1644.7  1644.0  1644.4  1646.0  1648.0
             *
1                                        HEC-1 INPUT                                                PAGE 17

LINE         ID.......1.......2.......3.......4.......5.......6.......7.......8.......9......10


723          KK   C548L
724          KM      Hydrograph combine 541548 + 206G + BB523R at C548 left branch
725          HC       3    3.72
             *
             * *
             * * C548L is the total flow in Balboa Wash above confluence with Oxford Wash
             * *
             *

726          KK    206H
727          KM   Sub-Basin   206H
728          KM
729          KM      The Clark Unit Hydrograph is used for this basin.
730          KM          The Urban time-area relation is used for this basin.
731          KM
732          KM      Time of Concentration for this sub-basin is based on the following:
733          KM          6-Hour Rainfall, Pattern No.  1.00
734          KM          An rainfall areal reduction factor of 0.999
735          KM
736          KM       EXCESS RAINFALL VALUES EXCEEDED IN 5-MINUTE INTERVALS
737          KM     5  10  15  20  25  30  35  40  45  50  55  60  65  70  75  80  85  90
738          KM   .48 .47 .47 .17 .14 .13 .06 .06 .06 .05 .05 .04 .01 .01 .01 .01 .01 .01
739          KM
740          KM          L=   0.515 miles, S=  183 feet/mile, Kb= .03
741          KM
742          BA   0.059
743          LG    0.08    0.25    5.70    0.18   36.29
744          UC   0.138   0.121
745          UA       0       5      16      30      65      77      84      90      94      97
746          UA     100
             *

747          KK  542543
748          KM      Normal depth channel route from C542 to C543
749          KM      Source:  HEC-2 Cross Section: OX 0.931
750          RS       1    FLOW      -1
751          RC   0.075   0.040   0.050   686.0  0.0066
752          RX  9846.9  9881.6  9967.5  9983.2 10010.0 10025.0 10033.8 10039.6
753          RY  1732.3  1723.5  1724.1  1717.8  1717.0  1724.0  1728.2  1730.7
```

```
                *
 754            KK    206I
 755            KM   Sub-Basin   206I
 756            KM
 757            KM      The Clark Unit Hydrograph is used for this basin.
 758            KM          The Urban time-area relation is used for this basin.
 759            KM
 760            KM      Time of Concentration for this sub-basin is based on the following:
 761            KM          6-Hour Rainfall, Pattern No.  1.00
 762            KM          An rainfall areal reduction factor of 1.000
 763            KM
 764            KM       EXCESS RAINFALL VALUES EXCEEDED IN 5-MINUTE INTERVALS
 765            KM     5  10  15  20  25  30  35  40  45  50  55  60  65  70  75  80  85  90
 766            KM   .48 .47 .47 .17 .14 .13 .06 .06 .06 .05 .05 .04 .01 .01 .01 .01 .01 .01
1                                          HEC-1 INPUT                                          PAGE 18

LINE            ID.......1.......2.......3.......4.......5.......6.......7.......8.......9......10

 767            KM
 768            KM          L=   0.232 miles, S=  286 feet/mile, Kb= .03
 769            KM
 770            BA   0.021
 771            LG    0.08    0.25    5.70    0.18   34.78
 772            UC   0.083   0.066
 773            UA      0       5      16      30      65      77      84      90      94      97
 774            UA    100
                *

 775            KK    C543
 776            KM      Hydrograph combine 542543 + 206I at C543
 777            HC       2
                *

 778            KK   D543L
 779            KM      Hydrograph diversion at C543.  Main flow continues in the left branch.
 780            KM      Diverted flow is in the right branch.
 781            DT   D543R
 782            DI      0      38      45      50      65      85      97     122     141     162
 783            DI    194     350     395     432     475     522     570     612
 784            DQ      0      38      45      50      65      85      97     122     141     162
 785            DQ    194     350     395     425     460     500     540     575
                *

 786            KK  543544
 787            KM      Normal depth channel route from C543 to C544
 788            KM      Source:  200 Scale Mapping & Hydrology Field Reconnaissance
 789            RS       1    FLOW      -1
 790            RC   0.040   0.018   0.040   597.0  0.0277
 791            RX  1000.0  1020.0  1045.0  1075.0  1105.0  1106.2  1146.2  1266.2
 792            RY  1720.0  1718.0  1712.0  1712.3  1712.0  1712.4  1714.0  1720.0
                *

 793            KK    206K
 794            KM   Sub-Basin   206K
 795            KM
 796            KM      The Clark Unit Hydrograph is used for this basin.
 797            KM          The Urban time-area relation is used for this basin.
 798            KM
 799            KM      Time of Concentration for this sub-basin is based on the following:
 800            KM          6-Hour Rainfall, Pattern No.  1.00
 801            KM          An rainfall areal reduction factor of 0.999
 802            KM
 803            KM       EXCESS RAINFALL VALUES EXCEEDED IN 5-MINUTE INTERVALS
 804            KM     5  10  15  20  25  30  35  40  45  50  55  60  65  70  75  80  85  90
 805            KM   .47 .47 .47 .16 .13 .13 .06 .06 .05 .04 .04 .03 .01 .01 .01 .01 .01 .01
 806            KM
 807            KM          L=   0.615 miles, S=  255 feet/mile, Kb= .03
 808            KM
 809            BA   0.056
 810            LG    0.09    0.25    5.70    0.18   25.80
 811            UC   0.133   0.139
 812            UA      0       5      16      30      65      77      84      90      94      97
 813            UA    100
                *
1                                          HEC-1 INPUT                                          PAGE 19

LINE            ID.......1.......2.......3.......4.......5.......6.......7.......8.......9......10

 814            KK    C544
 815            KM      Hydrograph combine 543544 + 206K at C544
 816            HC       2
                *

 817            KK  544545
 818            KM      Normal depth channel route from C544 to C545
 819            KM      Source:  200 Scale Mapping & Hydrology Field Reconnaissance
 820            RS       1    FLOW      -1
 821            RC   0.040   0.018   0.040   985.0  0.0234
 822            RX  1000.0  1008.0  1018.0  1048.0  1078.0  1079.2  1089.2  1109.2
 823            RY  1690.0  1688.0  1686.0  1686.3  1686.0  1686.4  1688.0  1689.0
                *

 824            KK   D545L
 825            KM      Hydrograph diversion at C545.  Main flow continues in the left branch.
 826            KM      Diverted flow is in the right branch.
 827            DT   D545R
 828            DI      0      50     100     200     400     800    1600    3200    5000
 829            DQ      0      25      50     100     200     400     800    1600    2500
                *
```

```
830          KK  545546
831          KM      Normal depth channel route from C545 to C546
832          KM      Source:  200 Scale Mapping & Hydrology Field Reconnaissance
833          RS       1    FLOW      -1
834          RC   0.040   0.018   0.040   428.0  0.0164
835          RX  1000.0  1020.0  1050.0  1080.0  1110.0  1111.2  1121.2  1151.2
836          RY  1680.0  1678.0  1676.0  1676.3  1676.0  1676.4  1678.0  1678.5
             *

837          KK    206L
838          KM   Sub-Basin   206L
839          KM
840          KM      The Clark Unit Hydrograph is used for this basin.
841          KM          The Urban time-area relation is used for this basin.
842          KM
843          KM      Time of Concentration for this sub-basin is based on the following:
844          KM          6-Hour Rainfall, Pattern No.  1.00
845          KM          An rainfall areal reduction factor of 0.999
846          KM
847          KM       EXCESS RAINFALL VALUES EXCEEDED IN 5-MINUTE INTERVALS
848          KM     5  10  15  20  25  30  35  40  45  50  55  60  65  70  75  80  85  90
849          KM   .47 .47 .47 .16 .13 .13 .06 .06 .05 .04 .04 .03 .01 .01 .01 .01 .01 .01
850          KM
851          KM          L=   0.546 miles, S=  231 feet/mile, Kb= .03
852          KM
853          BA   0.060
854          LG    0.09    0.25    5.80    0.18   25.01
855          UC   0.129   0.117
856          UA       0       5      16      30      65      77      84      90      94      97
857          UA     100
             *
```



```
LINE         ID.......1.......2.......3.......4.......5.......6.......7.......8.......9......10

858          KK    C546
859          KM      Hydrograph combine 545546 + 206L at C546
860          HC       2
             *

861          KK  546547
862          KM      Normal depth channel route from C546 to C547
863          KM      Source:  200 Scale Mapping
864          RS       1    FLOW      -1
865          RC   0.040   0.018   0.040   749.0  0.0327
866          RX  1000.0  1005.0  1011.0  1013.0  1029.0  1047.0  1052.0  1057.0
867          RY  1666.0  1664.0  1662.0  1661.9  1662.4  1662.0  1664.0  1666.0
             *

868          KK  BB543R
869          KM      Retrieve previously diverted hydrograph at C543 in the right branch.
870          DR   D543R
             *

871          KK  543547
872          KM      Normal depth channel route from C543 to C547
873          KM      Source:  HEC-2 Cross Section: OX 0.638
874          RS       5    FLOW      -1
875          RC   0.075   0.040   0.050  2395.0  0.0278
876          RX  9720.9  9769.0  9970.7  9985.5 10020.0 10038.1 10097.0 10102.0
877          RY  1690.4  1681.2  1683.1  1676.2  1677.0  1687.1  1687.4  1690.0
             *

878          KK  BB545R
879          KM      Retrieve previously diverted hydrograph at C545 in the right branch.
880          DR   D545R
             *

881          KK  545547
882          KM      Normal depth channel route from C545 to C547
883          KM      Source:  HEC-2 Cross Section: OX 0.542
884          RS       3    FLOW      -1
885          RC   0.075   0.040   0.050  1216.0  0.0259
886          RX  9668.2  9778.4  9957.9  9986.0 10012.7 10043.6 10067.6 10163.4
887          RY  1674.1  1674.1  1673.3  1662.1  1662.2  1680.4  1680.9  1681.1
             *

888          KK    206J
889          KM   Sub-Basin   206J
890          KM
891          KM      The Clark Unit Hydrograph is used for this basin.
892          KM          The Urban time-area relation is used for this basin.
893          KM
894          KM      Time of Concentration for this sub-basin is based on the following:
895          KM          6-Hour Rainfall, Pattern No.  1.00
896          KM          An rainfall areal reduction factor of 0.999
897          KM
898          KM       EXCESS RAINFALL VALUES EXCEEDED IN 5-MINUTE INTERVALS
899          KM     5  10  15  20  25  30  35  40  45  50  55  60  65  70  75  80  85  90
```



```
LINE         ID.......1.......2.......3.......4.......5.......6.......7.......8.......9......10

900          KM   .48 .48 .48 .17 .14 .14 .06 .06 .06 .05 .05 .05 .01 .01 .01 .01 .01 .01
901          KM
902          KM          L=   0.502 miles, S=  214 feet/mile, Kb= .03
903          KM
904          BA   0.060
905          LG    0.08    0.25    5.70    0.18   44.51
```

```
906          UC   0.125   0.105
907          UA       0       5      16      30      65      77      84      90      94      97
908          UA     100
             *

909          KK    C547
910          KM      Hydrograph combine 546547 + 543547 + 545547 + 206J at C547
911          HC       4    0.26
             *

912          KK  547548
913          KM      Normal depth channel route from C547 to C548
914          KM      Source:  HEC-2 Cross Section: OX 0.235
915          RS       3    FLOW      -1
916          RC   0.075   0.040   0.050  2165.0  0.0182
917          RX  9910.0  9911.4  9968.5  9987.6 10017.4 10032.3 10077.4 10080.0
918          RY  1639.0  1638.9  1637.9  1635.7  1635.8  1641.7  1642.9  1643.0
             *

919          KK    206M
920          KM   Sub-Basin   206M
921          KM
922          KM      The Clark Unit Hydrograph is used for this basin.
923          KM          The Urban time-area relation is used for this basin.
924          KM
925          KM      Time of Concentration for this sub-basin is based on the following:
926          KM          6-Hour Rainfall, Pattern No.  1.00
927          KM          An rainfall areal reduction factor of 0.999
928          KM
929          KM       EXCESS RAINFALL VALUES EXCEEDED IN 5-MINUTE INTERVALS
930          KM     5  10  15  20  25  30  35  40  45  50  55  60  65  70  75  80  85  90
931          KM   .48 .47 .47 .17 .14 .13 .06 .06 .06 .05 .05 .04 .01 .01 .01 .01 .01 .01
932          KM
933          KM          L=   0.465 miles, S=  166 feet/mile, Kb= .03
934          KM
935          BA   0.060
936          LG    0.08    0.25    5.20    0.23   46.18
937          UC   0.133   0.107
938          UA       0       5      16      30      65      77      84      90      94      97
939          UA     100
             *

940          KK   C548R
941          KM      Hydrograph combine 547548 + 206M at C548 right branch
942          HC       2
             *
             * *
             * * C548R is the total flow in Oxford Wash above confluence with Balboa Wash
             * *
             *
```



```
LINE         ID.......1.......2.......3.......4.......5.......6.......7.......8.......9......10

943          KK    C548
944          KM      Hydrograph combine C548L + C548R at C548
945          HC       2
             *
             * *
             * * C548 is the total flow in Balboa Wash below the confluence of Balboa Wash
             * * and Oxford Wash
             * *
             *

946          KK  548549
947          KM      Normal depth channel route from C548 to C549
948          KM      Source:  HEC-2 Cross Section: BA0.246
949          RS       9    FLOW      -1
950          RC   0.070   0.080   0.070  3258.0  0.0172
951          RX  9889.1  9912.5  9940.2  9960.0 10026.1 10046.8 10067.8 10079.3
952          RY  1586.2  1585.7  1577.5  1573.6  1573.2  1579.5  1585.7  1586.2
             *

953          KK    206N
954          KM   Sub-Basin   206N
955          KM
956          KM      The Clark Unit Hydrograph is used for this basin.
957          KM          The Urban time-area relation is used for this basin.
958          KM
959          KM      Time of Concentration for this sub-basin is based on the following:
960          KM          6-Hour Rainfall, Pattern No.  1.00
961          KM          An rainfall areal reduction factor of 0.998
962          KM
963          KM       EXCESS RAINFALL VALUES EXCEEDED IN 5-MINUTE INTERVALS
964          KM     5  10  15  20  25  30  35  40  45  50  55  60  65  70  75  80  85  90
965          KM   .48 .47 .47 .17 .14 .13 .06 .06 .06 .05 .05 .05 .01 .01 .01 .01 .01 .01
966          KM
967          KM          L=   0.767 miles, S=  120 feet/mile, Kb= .03
968          KM
969          BA   0.152
970          LG    0.11    0.27    4.65    0.29   52.66
971          UC   0.188   0.137
972          UA       0       5      16      30      65      77      84      90      94      97
973          UA     100
             *

974          KK   C549L
975          KM      Hydrograph combine 548549 + 206N at C549 left branch
976          HC       2
             *
```

```
                 * *
                 * * C549L is the total flow in Balboa Wash above confluence with Ashbrook Wash
                 * *
                 * * End Basin 206.  Start Basin 207
                 * *
                 *
1                                                HEC-1 INPUT                                                    PAGE 23

LINE             ID.......1.......2.......3.......4.......5.......6.......7.......8.......9......10

 977             KK    207A
 978             KM   Sub-Basin   207A
 979             KM
 980             KM      The Clark Unit Hydrograph is used for this basin.
 981             KM          The Natural time-area relation is used for this basin.
 982             KM
 983             KM      Time of Concentration for this sub-basin is based on the following:
 984             KM          6-Hour Rainfall, Pattern No.  1.00
 985             KM          An rainfall areal reduction factor of 0.997
 986             KM
 987             KM       EXCESS RAINFALL VALUES EXCEEDED IN 5-MINUTE INTERVALS
 988             KM     5  10  15  20  25  30  35  40  45  50  55  60  65  70  75  80  85  90
 989             KM   .45 .44 .44 .13 .09 .08 .04 .03 .03 .03 .03 .03 .01 .01 .01 .01 .01 .01
 990             KM
 991             KM          L=   1.356 miles, S=  351 feet/mile, Kb= .13
 992             KM
 993             BA   0.256
 994             LG    0.24    0.35    4.55    0.37   29.81
 995             UC   0.467   0.440
 996             UA       0       3       5       8      12      20      43      75      90      96
 997             UA     100
                 *

 998             KK    207B
 999             KM   Sub-Basin   207B
1000             KM
1001             KM      The Clark Unit Hydrograph is used for this basin.
1002             KM          The Natural time-area relation is used for this basin.
1003             KM
1004             KM      Time of Concentration for this sub-basin is based on the following:
1005             KM          6-Hour Rainfall, Pattern No.  1.00
1006             KM          An rainfall areal reduction factor of 0.997
1007             KM
1008             KM       EXCESS RAINFALL VALUES EXCEEDED IN 5-MINUTE INTERVALS
1009             KM     5  10  15  20  25  30  35  40  45  50  55  60  65  70  75  80  85  90
1010             KM   .45 .44 .44 .13 .09 .08 .04 .04 .03 .03 .03 .03 .01 .01 .01 .01 .01 .01
1011             KM
1012             KM          L=   1.312 miles, S=  359 feet/mile, Kb= .13
1013             KM
1014             BA   0.208
1015             LG    0.24    0.35    4.45    0.38   32.42
1016             UC   0.450   0.463
1017             UA       0       3       5       8      12      20      43      75      90      96
1018             UA     100
                 *

1019             KK    C550
1020             KM      Hydrograph combine 207A + 207B at C550
1021             HC       2
                 *
1                                                HEC-1 INPUT                                                    PAGE 24

LINE             ID.......1.......2.......3.......4.......5.......6.......7.......8.......9......10

1022             KK  550552
1023             KM      Normal depth channel route from C550 to C552
1024             KM      Source:  Hydrology Field Reconnaissance
1025             RS       4    FLOW      -1
1026             RC   0.050   0.045   0.050  4410.0  0.0528
1027             RX  1000.0  1005.0  1018.0  1028.0  1038.0  1043.0  1048.0  1055.0
1028             RY  2188.0  2184.0  2180.0  2176.0  2176.0  2180.0  2184.0  2188.0
                 *

1029             KK    207C
1030             KM   Sub-Basin   207C
1031             KM
1032             KM      The Clark Unit Hydrograph is used for this basin.
1033             KM          The Natural time-area relation is used for this basin.
1034             KM
1035             KM      Time of Concentration for this sub-basin is based on the following:
1036             KM          6-Hour Rainfall, Pattern No.  1.00
1037             KM          An rainfall areal reduction factor of 0.998
1038             KM
1039             KM       EXCESS RAINFALL VALUES EXCEEDED IN 5-MINUTE INTERVALS
1040             KM     5  10  15  20  25  30  35  40  45  50  55  60  65  70  75  80  85  90
1041             KM   .45 .44 .44 .13 .09 .08 .03 .03 .03 .01 .01 .01 .00 .00 .00 .00 .00 .00
1042             KM
1043             KM          L=   0.974 miles, S=  297 feet/mile, Kb= .11
1044             KM
1045             BA   0.173
1046             LG    0.19    0.37    5.30    0.26   13.69
1047             UC   0.354   0.311
1048             UA       0       3       5       8      12      20      43      75      90      96
1049             UA     100
                 *

1050             KK   C552L
1051             KM      Hydrograph combine 550552 + 207C at C552 left branch
1052             HC       2
```

```
                *
1053            KK    207D
1054            KM   Sub-Basin   207D
1055            KM
1056            KM      The Clark Unit Hydrograph is used for this basin.
1057            KM          The HEC-1 time-area relation is used for this basin.
1058            KM
1059            KM      Time of Concentration for this sub-basin is based on the following:
1060            KM          6-Hour Rainfall, Pattern No.  1.00
1061            KM          An rainfall areal reduction factor of 0.997
1062            KM
1063            KM       EXCESS RAINFALL VALUES EXCEEDED IN 5-MINUTE INTERVALS
1064            KM     5  10  15  20  25  30  35  40  45  50  55  60  65  70  75  80  85  90
1065            KM   .46 .45 .45 .15 .11 .10 .05 .05 .04 .04 .04 .04 .01 .01 .01 .01 .01 .01
1066            KM
1067            KM          L=   1.036 miles, S=  373 feet/mile, Kb= .09
1068            KM
1069            BA   0.197
```



```
LINE            ID.......1.......2.......3.......4.......5.......6.......7.......8.......9......10

1070            LG    0.18    0.31    4.35    0.38   41.30
1071            UC   0.288   0.241
                *

1072            KK  551552
1073            KM      Normal depth channel route from C551 to C552
1074            KM      Source:  100 Scale 4' CI Mapping
1075            RS       5    FLOW      -1
1076            RC   0.050   0.045   0.050  4410.0  0.0528
1077            RX  1000.0  1005.0  1018.0  1028.0  1038.0  1043.0  1048.0  1055.0
1078            RY  2188.0  2184.0  2180.0  2176.0  2176.0  2180.0  2184.0  2188.0
                *

1079            KK    207E
1080            KM   Sub-Basin   207E
1081            KM
1082            KM      The Clark Unit Hydrograph is used for this basin.
1083            KM          The Urban time-area relation is used for this basin.
1084            KM
1085            KM      Time of Concentration for this sub-basin is based on the following:
1086            KM          6-Hour Rainfall, Pattern No.  1.00
1087            KM          An rainfall areal reduction factor of 0.998
1088            KM
1089            KM       EXCESS RAINFALL VALUES EXCEEDED IN 5-MINUTE INTERVALS
1090            KM     5  10  15  20  25  30  35  40  45  50  55  60  65  70  75  80  85  90
1091            KM   .46 .46 .46 .15 .12 .11 .05 .05 .04 .04 .04 .04 .01 .01 .01 .01 .01 .01
1092            KM
1093            KM          L=   1.366 miles, S=  315 feet/mile, Kb= .07
1094            KM
1095            BA   0.157
1096            LG    0.15    0.29    4.35    0.38   44.41
1097            UC   0.308   0.370
1098            UA       0       5      16      30      65      77      84      90      94      97
1099            UA     100
                *

1100            KK   C552R
1101            KM      Hydrograph combine 551552 + 207E at C552 right branch
1102            HC       2
                *

1103            KK    C552
1104            KM      Hydrograph combine C552L + C552R at C552
1105            HC       2
                *

1106            KK  552553
1107            KM      Normal depth channel route from C552 to C553
1108            KM      Source:  Hydrology Field Reconnaissance
1109            RS       2    FLOW      -1
1110            RC   0.060   0.050   0.060  1336.0  0.0337
1111            RX   993.0  1010.0  1055.0  1061.0  1082.0  1096.0  1105.0  1127.0
1112            RY    98.0    94.3    94.4    94.0    94.3    94.5    96.2    98.0
                *
```



```
LINE            ID.......1.......2.......3.......4.......5.......6.......7.......8.......9......10

1113            KK    207F
1114            KM   Sub-Basin   207F
1115            KM
1116            KM      The Clark Unit Hydrograph is used for this basin.
1117            KM          The HEC-1 time-area relation is used for this basin.
1118            KM
1119            KM      Time of Concentration for this sub-basin is based on the following:
1120            KM          6-Hour Rainfall, Pattern No.  1.00
1121            KM          An rainfall areal reduction factor of 0.998
1122            KM
1123            KM       EXCESS RAINFALL VALUES EXCEEDED IN 5-MINUTE INTERVALS
1124            KM     5  10  15  20  25  30  35  40  45  50  55  60  65  70  75  80  85  90
1125            KM   .46 .45 .45 .14 .11 .09 .04 .04 .04 .03 .03 .03 .01 .01 .01 .01 .01 .01
1126            KM
1127            KM          L=   0.794 miles, S=  296 feet/mile, Kb= .11
1128            KM
1129            BA   0.126
1130            LG    0.20    0.32    4.40    0.39   38.35
1131            UC   0.304   0.267
```

```
                *
1132            KK    C553
1133            KM      Hydrograph combine 552553 + 207F at C553
1134            HC       2
                *

1135            KK  553556
1136            KM      Normal depth channel route from C553 to C556
1137            KM      Source:  HEC-2 Cross Section: AS 6.118
1138            RS       2    FLOW      -1
1139            RC   0.055   0.045   0.060  2393.0  0.0255
1140            RX  9904.4  9945.9  9974.0  9987.4  9994.9 10008.6 10027.0 10045.3
1141            RY  2004.2  2003.9  1991.7  1990.4  1987.9  1988.2  1997.5  2006.7
                *

1142            KK    207G
1143            KM   Sub-Basin   207G
1144            KM
1145            KM      The Clark Unit Hydrograph is used for this basin.
1146            KM          The HEC-1 time-area relation is used for this basin.
1147            KM
1148            KM      Time of Concentration for this sub-basin is based on the following:
1149            KM          6-Hour Rainfall, Pattern No.  1.00
1150            KM          An rainfall areal reduction factor of 0.997
1151            KM
1152            KM       EXCESS RAINFALL VALUES EXCEEDED IN 5-MINUTE INTERVALS
1153            KM     5  10  15  20  25  30  35  40  45  50  55  60  65  70  75  80  85  90
1154            KM   .45 .44 .44 .13 .10 .08 .04 .03 .03 .01 .01 .01 .00 .00 .00 .00 .00 .00
1155            KM
1156            KM          L=   1.467 miles, S=  198 feet/mile, Kb= .10
1157            KM
1158            BA   0.236
1159            LG    0.17    0.37    5.60    0.23    9.10
1160            UC   0.521   0.555
                *
1                                        HEC-1 INPUT                                          PAGE 27

LINE            ID.......1.......2.......3.......4.......5.......6.......7.......8.......9......10

1161            KK   C556L
1162            KM      Hydrograph combine 553556 + 207G at C556 left branch
1163            HC       2
                *

1164            KK    207H
1165            KM   Sub-Basin   207H
1166            KM
1167            KM      The Clark Unit Hydrograph is used for this basin.
1168            KM          The Urban time-area relation is used for this basin.
1169            KM
1170            KM      Time of Concentration for this sub-basin is based on the following:
1171            KM          6-Hour Rainfall, Pattern No.  1.00
1172            KM          An rainfall areal reduction factor of 0.998
1173            KM
1174            KM       EXCESS RAINFALL VALUES EXCEEDED IN 5-MINUTE INTERVALS
1175            KM     5  10  15  20  25  30  35  40  45  50  55  60  65  70  75  80  85  90
1176            KM   .47 .46 .46 .16 .13 .12 .05 .05 .05 .04 .04 .04 .01 .01 .01 .01 .01 .01
1177            KM
1178            KM          L=   1.044 miles, S=  371 feet/mile, Kb= .05
1179            KM
1180            BA   0.124
1181            LG    0.13    0.27    4.35    0.36   46.78
1182            UC   0.204   0.215
1183            UA       0       5      16      30      65      77      84      90      94      97
1184            UA     100
                *

1185            KK  554555
1186            KM      Normal depth channel route from C554 to C555
1187            KM      Source:  100 Scale 4' CI Mapping
1188            RS       3    FLOW      -1
1189            RC   0.050   0.045   0.050  2497.0  0.0649
1190            RX  1000.0  1025.0  1080.0  1100.0  1120.0  1130.0  1140.0  1155.0
1191            RY  2192.0  2188.0  2186.0  2184.0  2184.0  2188.0  2192.0  2194.0
                *

1192            KK    207I
1193            KM   Sub-Basin   207I
1194            KM
1195            KM      The Clark Unit Hydrograph is used for this basin.
1196            KM          The Urban time-area relation is used for this basin.
1197            KM
1198            KM      Time of Concentration for this sub-basin is based on the following:
1199            KM          6-Hour Rainfall, Pattern No.  1.00
1200            KM          An rainfall areal reduction factor of 0.999
1201            KM
1202            KM       EXCESS RAINFALL VALUES EXCEEDED IN 5-MINUTE INTERVALS
1203            KM     5  10  15  20  25  30  35  40  45  50  55  60  65  70  75  80  85  90
1204            KM   .47 .47 .47 .16 .13 .13 .06 .06 .05 .04 .04 .04 .01 .01 .01 .01 .01 .01
1205            KM
1206            KM          L=   0.810 miles, S=  320 feet/mile, Kb= .03
1207            KM
1208            BA   0.073
1                                        HEC-1 INPUT                                          PAGE 28

LINE            ID.......1.......2.......3.......4.......5.......6.......7.......8.......9......10

1209            LG    0.09    0.25    4.40    0.35   50.00
1210            UC   0.142   0.159
```

```
1211          UA       0       5      16      30      65      77      84      90      94      97
1212          UA     100
              *

1213          KK    C555
1214          KM      Hydrograph combine 554555 + 207I at C555
1215          HC       2
              *

1216          KK  555556
1217          KM      Normal depth channel route from C555 to C556
1218          KM      Source:  200 Scale Mapping
1219          RS       5    FLOW      -1
1220          RC   0.050   0.050   0.055  3353.0  0.0480
1221          RX  1000.0  1050.0  1090.0  1095.0  1130.0  1150.0  1160.0  1185.0
1222          RY  2020.0  2016.5  2006.0  2004.0  2005.0  2006.0  2010.0  2020.0
              *

1223          KK    207J
1224          KM   Sub-Basin   207J
1225          KM
1226          KM      The Clark Unit Hydrograph is used for this basin.
1227          KM          The Urban time-area relation is used for this basin.
1228          KM
1229          KM      Time of Concentration for this sub-basin is based on the following:
1230          KM          6-Hour Rainfall, Pattern No.  1.00
1231          KM          An rainfall areal reduction factor of 0.999
1232          KM
1233          KM       EXCESS RAINFALL VALUES EXCEEDED IN 5-MINUTE INTERVALS
1234          KM     5  10  15  20  25  30  35  40  45  50  55  60  65  70  75  80  85  90
1235          KM   .47 .47 .47 .16 .13 .12 .06 .06 .05 .04 .04 .04 .01 .01 .01 .01 .01 .01
1236          KM
1237          KM          L=   0.714 miles, S=  248 feet/mile, Kb= .04
1238          KM
1239          BA   0.093
1240          LG    0.10    0.26    4.40    0.34   48.61
1241          UC   0.171   0.154
1242          UA       0       5      16      30      65      77      84      90      94      97
1243          UA     100
              *

1244          KK   C556R
1245          KM      Hydrograph combine 555556 + 207J at C556 right branch
1246          HC       2
              *

1247          KK    C556
1248          KM      Hydrograph combine C556L + C556R at C556
1249          HC       2
              *
```



```
LINE          ID.......1.......2.......3.......4.......5.......6.......7.......8.......9......10

1250          KK  556557
1251          KM      Normal depth channel route from C556 to C557
1252          KM      Source:  HEC-2 Cross Section: AS 5.765
1253          RS       3    FLOW      -1
1254          RC   0.055   0.045   0.060  2298.0  0.0260
1255          RX  9957.1  9995.6 10000.0 10010.0 10040.4 10084.4 10104.2 10180.7
1256          RY  1949.3  1935.9  1935.8  1936.7  1936.7  1938.2  1947.1  1949.9
              *

1257          KK    207K
1258          KM   Sub-Basin   207K
1259          KM
1260          KM      The Clark Unit Hydrograph is used for this basin.
1261          KM          The Urban time-area relation is used for this basin.
1262          KM
1263          KM      Time of Concentration for this sub-basin is based on the following:
1264          KM          6-Hour Rainfall, Pattern No.  1.00
1265          KM          An rainfall areal reduction factor of 0.998
1266          KM
1267          KM       EXCESS RAINFALL VALUES EXCEEDED IN 5-MINUTE INTERVALS
1268          KM     5  10  15  20  25  30  35  40  45  50  55  60  65  70  75  80  85  90
1269          KM   .47 .47 .47 .16 .13 .13 .06 .06 .05 .04 .04 .03 .01 .01 .01 .01 .01 .01
1270          KM
1271          KM          L=   0.859 miles, S=  294 feet/mile, Kb= .05
1272          KM
1273          BA   0.130
1274          LG    0.11    0.27    5.40    0.21   37.19
1275          UC   0.196   0.172
1276          UA       0       5      16      30      65      77      84      90      94      97
1277          UA     100
              *

1278          KK   C557R
1279          KM      Hydrograph combine 556557 + 207K at C557
1280          HC       2
              *

1281          KK    207L
1282          KM   Sub-Basin   207L
1283          KM
1284          KM      The Clark Unit Hydrograph is used for this basin.
1285          KM          The Urban time-area relation is used for this basin.
1286          KM
1287          KM      Time of Concentration for this sub-basin is based on the following:
1288          KM          6-Hour Rainfall, Pattern No.  1.00
1289          KM          An rainfall areal reduction factor of 0.999
```

```
1290          KM
1291          KM       EXCESS RAINFALL VALUES EXCEEDED IN 5-MINUTE INTERVALS
1292          KM     5  10  15  20  25  30  35  40  45  50  55  60  65  70  75  80  85  90
1293          KM   .48 .47 .47 .17 .14 .13 .06 .06 .06 .05 .05 .04 .01 .01 .01 .01 .01 .01
1294          KM
1295          KM          L=   0.667 miles, S=  236 feet/mile, Kb= .04
1296          KM
1297          BA   0.080
```



```
LINE          ID.......1.......2.......3.......4.......5.......6.......7.......8.......9......10

1298          LG    0.09    0.26    6.00    0.16   33.25
1299          UC   0.167   0.154
1300          UA       0       5      16      30      65      77      84      90      94      97
1301          UA     100
              *

1302          KK    C557
1303          KM      Hydrograph combine C557R + 207L at C557
1304          HC       2
              *
              * *
              * * C557 is the total flow in Ashbrook Wash downstream of Golden Eagle Blvd.
              * * at fire station
              * *
              *

1305          KK  557558
1306          KM      Normal depth channel route from C557 to C558
1307          KM      Source:  HEC-2 Cross Section: AS 5.254
1308          RS       3    FLOW      -1
1309          RC   0.055   0.045   0.060  2652.0  0.0242
1310          RX  9662.0  9965.0  9967.0 10000.0 10072.0 10095.0 10122.0 10175.0
1311          RY  1890.0  1885.9  1884.0  1878.0  1880.0  1886.0  1888.0  1890.0
              *

1312          KK    207M
1313          KM   Sub-Basin   207M
1314          KM
1315          KM      The Clark Unit Hydrograph is used for this basin.
1316          KM          The Urban time-area relation is used for this basin.
1317          KM
1318          KM      Time of Concentration for this sub-basin is based on the following:
1319          KM          6-Hour Rainfall, Pattern No.  1.00
1320          KM          An rainfall areal reduction factor of 0.998
1321          KM
1322          KM       EXCESS RAINFALL VALUES EXCEEDED IN 5-MINUTE INTERVALS
1323          KM     5  10  15  20  25  30  35  40  45  50  55  60  65  70  75  80  85  90
1324          KM   .47 .47 .46 .16 .13 .12 .06 .05 .05 .04 .03 .03 .01 .01 .01 .01 .01 .01
1325          KM
1326          KM          L=   0.636 miles, S=  295 feet/mile, Kb= .04
1327          KM
1328          BA   0.116
1329          LG    0.11    0.28    6.00    0.17   23.09
1330          UC   0.150   0.107
1331          UA       0       5      16      30      65      77      84      90      94      97
1332          UA     100
              *

1333          KK    C558
1334          KM      Hydrograph combine 557558 + 207M at C558
1335          HC       2
              *
```



```
LINE          ID.......1.......2.......3.......4.......5.......6.......7.......8.......9......10

1336          KK  558560
1337          KM      Normal depth channel route from C558 to C560
1338          KM      Source:  HEC-2 Cross Section: AS 4.839
1339          RS       3    FLOW      -1
1340          RC   0.055   0.045   0.060  1986.0  0.0185
1341          RX  9777.0  9897.0  9933.1  9970.6 10042.2 10063.4 10121.6 10204.9
1342          RY  1840.3  1837.3  1836.3  1824.3  1822.7  1828.5  1827.7  1842.7
              *

1343          KK    207O
1344          KM   Sub-Basin   207O
1345          KM
1346          KM      The Clark Unit Hydrograph is used for this basin.
1347          KM          The Urban time-area relation is used for this basin.
1348          KM
1349          KM      Time of Concentration for this sub-basin is based on the following:
1350          KM          6-Hour Rainfall, Pattern No.  1.00
1351          KM          An rainfall areal reduction factor of 0.998
1352          KM
1353          KM       EXCESS RAINFALL VALUES EXCEEDED IN 5-MINUTE INTERVALS
1354          KM     5  10  15  20  25  30  35  40  45  50  55  60  65  70  75  80  85  90
1355          KM   .47 .46 .46 .15 .12 .11 .05 .05 .05 .03 .02 .02 .01 .01 .01 .01 .01 .01
1356          KM
1357          KM          L=   0.643 miles, S=  275 feet/mile, Kb= .04
1358          KM
1359          BA   0.131
1360          LG    0.13    0.29    5.60    0.21   23.47
1361          UC   0.158   0.107
1362          UA       0       5      16      30      65      77      84      90      94      97
1363          UA     100
              *
```

```
1364          KK   C560R
1365          KM      Hydrograph combine 558560 + 207O at C560 right branch
1366          HC       2
              *

1367          KK    207N
1368          KM   Sub-Basin   207N
1369          KM
1370          KM      The Clark Unit Hydrograph is used for this basin.
1371          KM          The Urban time-area relation is used for this basin.
1372          KM
1373          KM      Time of Concentration for this sub-basin is based on the following:
1374          KM          6-Hour Rainfall, Pattern No.  1.00
1375          KM          An rainfall areal reduction factor of 0.999
1376          KM
1377          KM       EXCESS RAINFALL VALUES EXCEEDED IN 5-MINUTE INTERVALS
1378          KM     5  10  15  20  25  30  35  40  45  50  55  60  65  70  75  80  85  90
1379          KM   .47 .47 .47 .16 .13 .12 .06 .05 .05 .04 .04 .03 .01 .01 .01 .01 .01 .01
1380          KM
1381          KM          L=   0.431 miles, S=  190 feet/mile, Kb= .03
1382          KM
1383          BA   0.049
```



```
LINE          ID.......1.......2.......3.......4.......5.......6.......7.......8.......9......10

1384          LG    0.09    0.25    4.80    0.27   35.87
1385          UC   0.125   0.104
1386          UA       0       5      16      30      65      77      84      90      94      97
1387          UA     100
              *

1388          KK  559560
1389          KM      Normal depth channel route from C559 to C560
1390          KM      Source:  200 Scale Mapping
1391          RS       5    FLOW      -1
1392          RC   0.050   0.045   0.050  2170.0  0.0230
1393          RX  1000.0  1050.0  1080.0  1100.0  1110.0  1140.0  1170.0  1205.0
1394          RY  1854.0  1852.0  1850.0  1848.0  1848.0  1850.0  1852.0  1854.0
              *

1395          KK   C560I
1396          KM      Hydrograph combine C560R + 559560 at C560I
1397          HC       2
              *
              * *
              * * C560I is the total flow in Ashbrook Wash upstream of Dam 6
              * *
              *

1398          KK   C560O
1399          KM      Reservoir route at C560 (Dam 6).
1400          RS       1    ELEV  1808.8
1401          SV    0.00    1.71   14.81   34.65   60.43   93.47  135.64  183.00  186.00  191.44
1402          SV  197.00  205.00  212.00  219.00  226.40  234.00  242.00  246.00  250.00  254.00
1403          SE  1808.8  1812.0  1816.0  1820.0  1824.0  1828.0  1832.0  1835.4  1835.6  1836.0
1404          SE  1836.4  1836.8  1837.2  1837.6  1838.0  1838.4  1838.8  1839.0  1839.2  1839.4
1405          SQ       0      57     136     184     224     257     285     303     319     440
1406          SQ     691    1055    1500    2018    2600    3243    3944    4315    4699    5097
1407          RL                    0.40
              *
              * *
              * * End Basin 207.  Start Basin 210 temporarily
              * *
              *

1408          KK  560585
1409          KM      Normal depth channel route from C560 to C585
1410          KM      Source:  HEC-2 Cross Section: AS4.311
1411          RS       5    FLOW      -1
1412          RC   0.050   0.025   0.050  3127.0  0.0272
1413          RX  9850.4  9950.4  9974.4 10000.0 10035.5 10059.8 10080.4 10104.4
1414          RY  1772.0  1771.7  1765.3  1765.3  1765.9  1768.5  1773.3  1773.7
              *

1415          KK    210A
1416          KM   Sub-Basin   210A
1417          KM
1418          KM      The Clark Unit Hydrograph is used for this basin.
1419          KM          The Urban time-area relation is used for this basin.
1420          KM
```



```
LINE          ID.......1.......2.......3.......4.......5.......6.......7.......8.......9......10

1421          KM      Time of Concentration for this sub-basin is based on the following:
1422          KM          6-Hour Rainfall, Pattern No.  1.00
1423          KM          An rainfall areal reduction factor of 0.998
1424          KM
1425          KM       EXCESS RAINFALL VALUES EXCEEDED IN 5-MINUTE INTERVALS
1426          KM     5  10  15  20  25  30  35  40  45  50  55  60  65  70  75  80  85  90
1427          KM   .46 .46 .46 .15 .12 .11 .05 .05 .04 .03 .03 .02 .00 .00 .00 .00 .00 .00
1428          KM
1429          KM          L=   0.631 miles, S=  233 feet/mile, Kb= .03
1430          KM
1431          BA   0.123
1432          LG    0.09    0.25    5.00    0.24   16.65
1433          UC   0.142   0.097
1434          UA       0       5      16      30      65      77      84      90      94      97
1435          UA     100
              *
```

```
1436          KK    C585
1437          KM      Hydrograph combine 560585 + 210A at C585
1438          HC       2
              *
              * *
              * * C585 is the total flow in Ashbrook Wash at Golden Eagle Blvd. just
              * * upstream of DAM 4
              * *
              * * Temporarily stop Basin 210.  Start Basin 208
              * *
              * * Start Bristol Wash
              * *
              *

1439          KK    208A
1440          KM   Sub-Basin   208A
1441          KM
1442          KM      The Clark Unit Hydrograph is used for this basin.
1443          KM          The Urban time-area relation is used for this basin.
1444          KM
1445          KM      Time of Concentration for this sub-basin is based on the following:
1446          KM          6-Hour Rainfall, Pattern No.  1.00
1447          KM          An rainfall areal reduction factor of 0.998
1448          KM
1449          KM       EXCESS RAINFALL VALUES EXCEEDED IN 5-MINUTE INTERVALS
1450          KM     5  10  15  20  25  30  35  40  45  50  55  60  65  70  75  80  85  90
1451          KM   .47 .47 .47 .16 .13 .13 .06 .06 .05 .04 .04 .04 .01 .01 .01 .01 .01 .01
1452          KM
1453          KM          L=   0.626 miles, S=  366 feet/mile, Kb= .03
1454          KM
1455          BA   0.139
1456          LG    0.09    0.25    4.35    0.35   49.86
1457          UC   0.121   0.075
1458          UA       0       5      16      30      65      77      84      90      94      97
1459          UA     100
              *
1                                          HEC-1 INPUT                                          PAGE 34

LINE          ID.......1.......2.......3.......4.......5.......6.......7.......8.......9......10

1460          KK  561563
1461          KM      Normal depth channel route from C561 to C563
1462          KM      Source:  100 Scale 4' CI Mapping
1463          RS       1    FLOW      -1
1464          RC   0.050   0.045   0.050  2335.0  0.0856
1465          RX  1000.0  1004.0  1009.0  1019.0  1037.0  1045.0  1060.0  1075.0
1466          RY  2280.0  2276.0  2272.0  2268.0  2268.0  2272.0  2274.0  2276.0
              *

1467          KK    208B
1468          KM   Sub-Basin   208B
1469          KM
1470          KM      The Clark Unit Hydrograph is used for this basin.
1471          KM          The Urban time-area relation is used for this basin.
1472          KM
1473          KM      Time of Concentration for this sub-basin is based on the following:
1474          KM          6-Hour Rainfall, Pattern No.  1.00
1475          KM          An rainfall areal reduction factor of 1.000
1476          KM
1477          KM       EXCESS RAINFALL VALUES EXCEEDED IN 5-MINUTE INTERVALS
1478          KM     5  10  15  20  25  30  35  40  45  50  55  60  65  70  75  80  85  90
1479          KM   .47 .47 .47 .16 .13 .13 .06 .06 .05 .04 .04 .04 .01 .01 .01 .01 .01 .01
1480          KM
1481          KM          L=   0.491 miles, S=  325 feet/mile, Kb= .03
1482          KM
1483          BA   0.027
1484          LG    0.09    0.25    4.35    0.35   50.00
1485          UC   0.113   0.146
1486          UA       0       5      16      30      65      77      84      90      94      97
1487          UA     100
              *

1488          KK   C563R
1489          KM      Hydrograph combine 561563 + 206B at C563 right branch
1490          HC       2
              *

1491          KK    208C
1492          KM   Sub-Basin   208C
1493          KM
1494          KM      The Clark Unit Hydrograph is used for this basin.
1495          KM          The HEC-1 time-area relation is used for this basin.
1496          KM
1497          KM      Time of Concentration for this sub-basin is based on the following:
1498          KM          6-Hour Rainfall, Pattern No.  1.00
1499          KM          An rainfall areal reduction factor of 0.999
1500          KM
1501          KM       EXCESS RAINFALL VALUES EXCEEDED IN 5-MINUTE INTERVALS
1502          KM     5  10  15  20  25  30  35  40  45  50  55  60  65  70  75  80  85  90
1503          KM   .46 .45 .45 .14 .11 .10 .05 .04 .04 .03 .03 .03 .01 .01 .01 .01 .01 .01
1504          KM
1505          KM          L=   0.639 miles, S=  387 feet/mile, Kb= .11
1506          KM
1507          BA   0.066
1                                          HEC-1 INPUT                                          PAGE 35

LINE          ID.......1.......2.......3.......4.......5.......6.......7.......8.......9......10

1508          LG    0.20    0.32    4.35    0.38   40.11
```

```
1509          UC   0.238   0.246
              *

1510          KK  562563
1511          KM      Normal depth channel route from C562 to C563
1512          KM      Source:  100 Scale 4' CI Mapping
1513          RS       4    FLOW      -1
1514          RC   0.050   0.045   0.050  3745.0  0.1106
1515          RX  1000.0  1007.0  1012.0  1017.0  1022.0  1027.0  1044.0  1064.0
1516          RY  2420.0  2416.0  2412.0  2411.8  2411.8  2412.0  2416.0  2420.0
              *

1517          KK    208D
1518          KM   Sub-Basin   208D
1519          KM
1520          KM      The Clark Unit Hydrograph is used for this basin.
1521          KM          The Urban time-area relation is used for this basin.
1522          KM
1523          KM      Time of Concentration for this sub-basin is based on the following:
1524          KM          6-Hour Rainfall, Pattern No.  1.00
1525          KM          An rainfall areal reduction factor of 0.999
1526          KM
1527          KM       EXCESS RAINFALL VALUES EXCEEDED IN 5-MINUTE INTERVALS
1528          KM     5  10  15  20  25  30  35  40  45  50  55  60  65  70  75  80  85  90
1529          KM   .47 .47 .47 .16 .13 .13 .06 .06 .05 .04 .04 .04 .01 .01 .01 .01 .01 .01
1530          KM
1531          KM          L=   0.772 miles, S=  327 feet/mile, Kb= .03
1532          KM
1533          BA   0.075
1534          LG    0.09    0.25    4.35    0.35   50.00
1535          UC   0.138   0.146
1536          UA       0       5      16      30      65      77      84      90      94      97
1537          UA     100
              *

1538          KK   C563L
1539          KM      Hydrograph combine 562563 + 208D at C563 left branch
1540          HC       2
              *

1541          KK    C563
1542          KM      Hydrograph combine C563R + C563L at C563
1543          HC       2
              *

1544          KK  563564
1545          KM      Normal depth channel route from C563 to C564
1546          KM      Source:  HEC-2 Cross Section: BR 2.667
1547          RS       3    FLOW      -1
1548          RC   0.080   0.080   0.080  2762.0  0.0540
1549          RX  9947.0  9980.4  9986.4  9995.5 10000.0 10005.8 10021.9 10037.2
1550          RY  2103.4  2089.5  2089.2  2084.5  2084.4  2084.3  2098.5  2100.6
              *
1
                                        HEC-1 INPUT                                          PAGE 36

LINE          ID.......1.......2.......3.......4.......5.......6.......7.......8.......9......10

1551          KK    208E
1552          KM   Sub-Basin   208E
1553          KM
1554          KM      The Clark Unit Hydrograph is used for this basin.
1555          KM          The Urban time-area relation is used for this basin.
1556          KM
1557          KM      Time of Concentration for this sub-basin is based on the following:
1558          KM          6-Hour Rainfall, Pattern No.  1.00
1559          KM          An rainfall areal reduction factor of 0.999
1560          KM
1561          KM       EXCESS RAINFALL VALUES EXCEEDED IN 5-MINUTE INTERVALS
1562          KM     5  10  15  20  25  30  35  40  45  50  55  60  65  70  75  80  85  90
1563          KM   .47 .47 .47 .16 .13 .13 .06 .06 .05 .04 .04 .04 .01 .01 .01 .01 .01 .01
1564          KM
1565          KM          L=   0.644 miles, S=  306 feet/mile, Kb= .03
1566          KM
1567          BA   0.062
1568          LG    0.09    0.25    4.35    0.35   50.00
1569          UC   0.129   0.131
1570          UA       0       5      16      30      65      77      84      90      94      97
1571          UA     100
              *

1572          KK   C564R
1573          KM      Hydrograph combine 563564 + 208E at C564 right branch
1574          HC       2
              *

1575          KK    208F
1576          KM   Sub-Basin   208F
1577          KM
1578          KM      The Clark Unit Hydrograph is used for this basin.
1579          KM          The Urban time-area relation is used for this basin.
1580          KM
1581          KM      Time of Concentration for this sub-basin is based on the following:
1582          KM          6-Hour Rainfall, Pattern No.  1.00
1583          KM          An rainfall areal reduction factor of 0.999
1584          KM
1585          KM       EXCESS RAINFALL VALUES EXCEEDED IN 5-MINUTE INTERVALS
1586          KM     5  10  15  20  25  30  35  40  45  50  55  60  65  70  75  80  85  90
1587          KM   .47 .47 .47 .16 .13 .13 .06 .06 .05 .04 .04 .04 .01 .01 .01 .01 .01 .01
1588          KM
1589          KM          L=   0.582 miles, S=  293 feet/mile, Kb= .03
```

```
1590          KM
1591          BA   0.069
1592          LG    0.09    0.25    4.35    0.35   49.92
1593          UC   0.125   0.109
1594          UA       0       5      16      30      65      77      84      90      94      97
1595          UA     100
              *
1                                        HEC-1 INPUT                                          PAGE 37

LINE          ID.......1.......2.......3.......4.......5.......6.......7.......8.......9......10


1596          KK    C564
1597          KM      Hydrograph combine C564R + 208F at C564
1598          HC       2
              *

1599          KK  564565
1600          KM      Normal depth channel route from C564 to C565
1601          KM      Source:  HEC-2 Cross Section: BR 2.236
1602          RS       5    FLOW      -1
1603          RC   0.080   0.080   0.080  3243.0  0.0398
1604          RX  9937.7  9965.8  9985.5 10000.0 10008.6 10016.4 10037.5 10054.4
1605          RY  1998.7  1998.1  1988.9  1988.8  1989.0  1990.4  1990.6  1999.1
              *

1606          KK    208G
1607          KM   Sub-Basin   208G
1608          KM
1609          KM      The Clark Unit Hydrograph is used for this basin.
1610          KM          The Urban time-area relation is used for this basin.
1611          KM
1612          KM      Time of Concentration for this sub-basin is based on the following:
1613          KM          6-Hour Rainfall, Pattern No.  1.00
1614          KM          An rainfall areal reduction factor of 0.998
1615          KM
1616          KM       EXCESS RAINFALL VALUES EXCEEDED IN 5-MINUTE INTERVALS
1617          KM     5  10  15  20  25  30  35  40  45  50  55  60  65  70  75  80  85  90
1618          KM   .48 .47 .47 .17 .14 .13 .06 .06 .06 .05 .05 .05 .01 .01 .01 .01 .01 .01
1619          KM
1620          KM          L=   0.772 miles, S=  299 feet/mile, Kb= .04
1621          KM
1622          BA   0.129
1623          LG    0.11    0.26    4.60    0.31   54.19
1624          UC   0.167   0.132
1625          UA       0       5      16      30      65      77      84      90      94      97
1626          UA     100
              *

1627          KK    C565
1628          KM      Hydrograph combine 564565 + 208G at C565
1629          HC       2
              *

1630          KK  565568
1631          KM      Normal depth channel route from C565 to C568
1632          KM      Source:  HEC-2 Cross Section: BR 1.853
1633          RS       2    FLOW      -1
1634          RC   0.050   0.060   0.045  2254.0  0.0333
1635          RX  9966.2  9975.6  9985.0 10000.0 10017.9 10027.6 10040.1 10052.5
1636          RY  1929.1  1924.5  1919.8  1918.3  1918.4  1919.6  1925.2  1930.8
              *
1                                        HEC-1 INPUT                                          PAGE 38

LINE          ID.......1.......2.......3.......4.......5.......6.......7.......8.......9......10


1637          KK    208H
1638          KM   Sub-Basin   208H
1639          KM
1640          KM      The Clark Unit Hydrograph is used for this basin.
1641          KM          The Urban time-area relation is used for this basin.
1642          KM
1643          KM      Time of Concentration for this sub-basin is based on the following:
1644          KM          6-Hour Rainfall, Pattern No.  1.00
1645          KM          An rainfall areal reduction factor of 0.999
1646          KM
1647          KM       EXCESS RAINFALL VALUES EXCEEDED IN 5-MINUTE INTERVALS
1648          KM     5  10  15  20  25  30  35  40  45  50  55  60  65  70  75  80  85  90
1649          KM   .47 .47 .47 .16 .13 .12 .06 .06 .05 .04 .03 .03 .01 .01 .01 .01 .01 .01
1650          KM
1651          KM          L=   0.632 miles, S=  283 feet/mile, Kb= .07
1652          KM
1653          BA   0.043
1654          LG    0.12    0.30    5.60    0.21   35.43
1655          UC   0.204   0.265
1656          UA       0       5      16      30      65      77      84      90      94      97
1657          UA     100
              *

1658          KK   C568L
1659          KM      Hydrograph combine 565568 + 208H at C568 left branch
1660          HC       2
              *
              * *
              * * Start Cholula Wash
              * *
              *

1661          KK    208I
1662          KM   Sub-Basin   208I
```

```
1663          KM
1664          KM      The Clark Unit Hydrograph is used for this basin.
1665          KM          The Urban time-area relation is used for this basin.
1666          KM
1667          KM      Time of Concentration for this sub-basin is based on the following:
1668          KM          6-Hour Rainfall, Pattern No.  1.00
1669          KM          An rainfall areal reduction factor of 0.998
1670          KM
1671          KM       EXCESS RAINFALL VALUES EXCEEDED IN 5-MINUTE INTERVALS
1672          KM     5  10  15  20  25  30  35  40  45  50  55  60  65  70  75  80  85  90
1673          KM   .47 .47 .47 .16 .13 .13 .06 .06 .05 .04 .04 .04 .01 .01 .01 .01 .01 .01
1674          KM
1675          KM          L=   0.823 miles, S=  363 feet/mile, Kb= .03
1676          KM
1677          BA   0.117
1678          LG    0.09    0.25    4.35    0.35   50.00
1679          UC   0.138   0.119
1680          UA       0       5      16      30      65      77      84      90      94      97
1681          UA     100
              *
1                                          HEC-1 INPUT                                          PAGE 39

LINE          ID.......1.......2.......3.......4.......5.......6.......7.......8.......9......10

1682          KK    208J
1683          KM   Sub-Basin   208J
1684          KM
1685          KM      The Clark Unit Hydrograph is used for this basin.
1686          KM          The Urban time-area relation is used for this basin.
1687          KM
1688          KM      Time of Concentration for this sub-basin is based on the following:
1689          KM          6-Hour Rainfall, Pattern No.  1.00
1690          KM          An rainfall areal reduction factor of 0.999
1691          KM
1692          KM       EXCESS RAINFALL VALUES EXCEEDED IN 5-MINUTE INTERVALS
1693          KM     5  10  15  20  25  30  35  40  45  50  55  60  65  70  75  80  85  90
1694          KM   .47 .47 .47 .16 .13 .13 .06 .06 .05 .04 .04 .04 .01 .01 .01 .01 .01 .01
1695          KM
1696          KM          L=   0.974 miles, S=  353 feet/mile, Kb= .03
1697          KM
1698          BA   0.081
1699          LG    0.09    0.25    4.35    0.35   50.00
1700          UC   0.154   0.190
1701          UA       0       5      16      30      65      77      84      90      94      97
1702          UA     100
              *

1703          KK    C566
1704          KM      Hydrograph combine 208I + 208J at C566
1705          HC       2
              *

1706          KK  566567
1707          KM      Normal depth channel route from C566 to C567
1708          KM      Source:  HEC-2 Cross Section: CH 0.766
1709          RS       2    FLOW      -1
1710          RC   0.080   0.080   0.080  1463.0  0.0410
1711          RX  9925.3  9949.0  9965.7  9988.3 10000.0 10016.2 10029.5 10042.7
1712          RY  2047.9  2043.7  2035.3  2033.3  2031.4  2033.0  2040.1  2047.2
              *

1713          KK    208K
1714          KM   Sub-Basin   208K
1715          KM
1716          KM      The Clark Unit Hydrograph is used for this basin.
1717          KM          The Urban time-area relation is used for this basin.
1718          KM
1719          KM      Time of Concentration for this sub-basin is based on the following:
1720          KM          6-Hour Rainfall, Pattern No.  1.00
1721          KM          An rainfall areal reduction factor of 0.999
1722          KM
1723          KM       EXCESS RAINFALL VALUES EXCEEDED IN 5-MINUTE INTERVALS
1724          KM     5  10  15  20  25  30  35  40  45  50  55  60  65  70  75  80  85  90
1725          KM   .48 .47 .47 .17 .13 .13 .06 .06 .06 .05 .05 .05 .01 .01 .01 .01 .01 .01
1726          KM
1727          KM          L=   0.431 miles, S=  317 feet/mile, Kb= .03
1728          KM
1729          BA   0.048
1                                          HEC-1 INPUT                                          PAGE 40

LINE          ID.......1.......2.......3.......4.......5.......6.......7.......8.......9......10

1730          LG    0.09    0.25    4.35    0.35   54.38
1731          UC   0.104   0.087
1732          UA       0       5      16      30      65      77      84      90      94      97
1733          UA     100
              *

1734          KK   C567L
1735          KM      Hydrograph combine 566567 + 208K at C567 left branch
1736          HC       2
              *

1737          KK    208L
1738          KM   Sub-Basin   208L
1739          KM
1740          KM      The Clark Unit Hydrograph is used for this basin.
1741          KM          The Urban time-area relation is used for this basin.
1742          KM
1743          KM      Time of Concentration for this sub-basin is based on the following:
```

```
1744        KM          6-Hour Rainfall, Pattern No.  1.00
1745        KM          An rainfall areal reduction factor of 0.999
1746        KM
1747        KM       EXCESS RAINFALL VALUES EXCEEDED IN 5-MINUTE INTERVALS
1748        KM     5  10  15  20  25  30  35  40  45  50  55  60  65  70  75  80  85  90
1749        KM   .47 .47 .47 .16 .13 .13 .06 .06 .05 .04 .04 .04 .01 .01 .01 .01 .01 .01
1750        KM
1751        KM          L=   0.655 miles, S=  334 feet/mile, Kb= .03
1752        KM
1753        BA   0.059
1754        LG    0.09    0.25    4.40    0.35   51.31
1755        UC   0.125   0.132
1756        UA       0       5      16      30      65      77      84      90      94      97
1757        UA     100
            *

1758        KK    C567
1759        KM      Hydrograph combine C567L + 208L at C567
1760        HC       2
            *

1761        KK  567568
1762        KM      Normal depth channel route from C567 to C568
1763        KM      Source:  HEC-2 Cross Section: CH 0.129
1764        RS       5    FLOW      -1
1765        RC   0.050   0.060   0.045  3650.0  0.0389
1766        RX  9945.7  9958.4  9989.8 10000.0 10016.4 10028.3 10045.4 10059.8
1767        RY  1912.1  1905.9  1899.0  1899.3  1898.9  1899.5  1907.1  1911.9
            *

1768        KK    208M
1769        KM   Sub-Basin   208M
1770        KM
1771        KM      The Clark Unit Hydrograph is used for this basin.
1772        KM          The Urban time-area relation is used for this basin.
1773        KM
1774        KM      Time of Concentration for this sub-basin is based on the following:
```



```
LINE        ID.......1.......2.......3.......4.......5.......6.......7.......8.......9......10

1775        KM          6-Hour Rainfall, Pattern No.  1.00
1776        KM          An rainfall areal reduction factor of 0.998
1777        KM
1778        KM       EXCESS RAINFALL VALUES EXCEEDED IN 5-MINUTE INTERVALS
1779        KM     5  10  15  20  25  30  35  40  45  50  55  60  65  70  75  80  85  90
1780        KM   .48 .48 .48 .17 .14 .14 .06 .06 .06 .05 .05 .05 .01 .01 .01 .01 .01 .01
1781        KM
1782        KM          L=   1.031 miles, S=  321 feet/mile, Kb= .03
1783        KM
1784        BA   0.159
1785        LG    0.09    0.25    4.40    0.34   62.04
1786        UC   0.163   0.144
1787        UA       0       5      16      30      65      77      84      90      94      97
1788        UA     100
            *

1789        KK   C568R
1790        KM      Hydrograph combine 567568 + 208M at C568 right branch
1791        HC       2
            *

1792        KK    C568
1793        KM      Hydrograph combine C568L + C568R at C568
1794        HC       2
            *

1795        KK  568573
1796        KM      Normal depth channel route from C568 to C573
1797        KM      Source:  HEC-2 Cross Section: BR 1.340
1798        RS       3    FLOW      -1
1799        RC   0.098   0.075   0.075  2067.0  0.0324
1800        RX  9921.8  9954.1  9968.9  9991.3 10000.0 10006.9 10025.2 10050.4
1801        RY  1843.8  1840.4  1835.1  1834.7  1832.7  1833.3  1838.1  1854.0
            *

1802        KK    208N
1803        KM   Sub-Basin   208N
1804        KM
1805        KM      The Clark Unit Hydrograph is used for this basin.
1806        KM          The Urban time-area relation is used for this basin.
1807        KM
1808        KM      Time of Concentration for this sub-basin is based on the following:
1809        KM          6-Hour Rainfall, Pattern No.  1.00
1810        KM          An rainfall areal reduction factor of 0.999
1811        KM
1812        KM       EXCESS RAINFALL VALUES EXCEEDED IN 5-MINUTE INTERVALS
1813        KM     5  10  15  20  25  30  35  40  45  50  55  60  65  70  75  80  85  90
1814        KM   .49 .49 .49 .18 .15 .15 .07 .07 .07 .07 .06 .06 .01 .01 .01 .01 .01 .01
1815        KM
1816        KM          L=   0.589 miles, S=  160 feet/mile, Kb= .04
1817        KM
1818        BA   0.047
1819        LG    0.09    0.25    6.20    0.15   62.49
1820        UC   0.175   0.200
1821        UA       0       5      16      30      65      77      84      90      94      97
```



```
LINE        ID.......1.......2.......3.......4.......5.......6.......7.......8.......9......10

1822        UA     100
```

```
                *
1823            KK   C573L
1824            KM      Hydrograph combine 568573 + 208N at C573 left branch
1825            HC       2
                *
                * *
                * * C573L is the total flow in Bristol Wash upstream of the confluence with
                * * Zapata Wash
                * *
                * * Start Zapata Wash
                * *
                *

1826            KK    208O
1827            KM   Sub-Basin   208O
1828            KM
1829            KM      The Clark Unit Hydrograph is used for this basin.
1830            KM          The Urban time-area relation is used for this basin.
1831            KM
1832            KM      Time of Concentration for this sub-basin is based on the following:
1833            KM          6-Hour Rainfall, Pattern No.  1.00
1834            KM          An rainfall areal reduction factor of 0.997
1835            KM
1836            KM       EXCESS RAINFALL VALUES EXCEEDED IN 5-MINUTE INTERVALS
1837            KM     5  10  15  20  25  30  35  40  45  50  55  60  65  70  75  80  85  90
1838            KM   .47 .47 .47 .16 .13 .13 .06 .06 .05 .05 .04 .04 .01 .01 .01 .01 .01 .01
1839            KM
1840            KM          L=   1.174 miles, S=  347 feet/mile, Kb= .03
1841            KM
1842            BA   0.230
1843            LG    0.09    0.25    4.60    0.31   48.49
1844            UC   0.167   0.133
1845            UA       0       5      16      30      65      77      84      90      94      97
1846            UA     100
                *

1847            KK  569570
1848            KM      Normal depth channel route from C569 to C570
1849            KM      Source:  HEC-2 Cross Section: ZA 0.493
1850            RS       1    FLOW      -1
1851            RC   0.050   0.035   0.055  1696.0  0.0404
1852            RX  9965.3  9985.5  9998.4 10000.0 10010.6 10019.1 10038.5 10038.5
1853            RY  1919.3  1912.3  1908.1  1907.8  1905.2  1908.1  1920.1  1920.1
                *

1854            KK    208P
1855            KM   Sub-Basin   208P
1856            KM
1857            KM      The Clark Unit Hydrograph is used for this basin.
1858            KM          The Urban time-area relation is used for this basin.
1859            KM
1860            KM      Time of Concentration for this sub-basin is based on the following:
1861            KM          6-Hour Rainfall, Pattern No.  1.00
```



```
LINE            ID.......1.......2.......3.......4.......5.......6.......7.......8.......9......10

1862            KM          An rainfall areal reduction factor of 0.999
1863            KM
1864            KM       EXCESS RAINFALL VALUES EXCEEDED IN 5-MINUTE INTERVALS
1865            KM     5  10  15  20  25  30  35  40  45  50  55  60  65  70  75  80  85  90
1866            KM   .49 .48 .48 .18 .15 .14 .07 .07 .07 .06 .06 .06 .01 .01 .01 .01 .01 .01
1867            KM
1868            KM          L=   0.471 miles, S=  312 feet/mile, Kb= .03
1869            KM
1870            BA   0.058
1871            LG    0.08    0.25    5.70    0.18   59.29
1872            UC   0.108   0.087
1873            UA       0       5      16      30      65      77      84      90      94      97
1874            UA     100
                *

1875            KK   C570R
1876            KM      Hydrograph combine 569570 + 208P at C570 right branch
1877            HC       2
                *

1878            KK    208Q
1879            KM   Sub-Basin   208Q
1880            KM
1881            KM      The Clark Unit Hydrograph is used for this basin.
1882            KM          The Urban time-area relation is used for this basin.
1883            KM
1884            KM      Time of Concentration for this sub-basin is based on the following:
1885            KM          6-Hour Rainfall, Pattern No.  1.00
1886            KM          An rainfall areal reduction factor of 0.999
1887            KM
1888            KM       EXCESS RAINFALL VALUES EXCEEDED IN 5-MINUTE INTERVALS
1889            KM     5  10  15  20  25  30  35  40  45  50  55  60  65  70  75  80  85  90
1890            KM   .48 .48 .48 .17 .14 .14 .06 .06 .06 .05 .05 .05 .01 .01 .01 .01 .01 .01
1891            KM
1892            KM          L=   0.823 miles, S=  324 feet/mile, Kb= .04
1893            KM
1894            BA   0.094
1895            LG    0.10    0.26    5.00    0.25   54.26
1896            UC   0.167   0.166
1897            UA       0       5      16      30      65      77      84      90      94      97
1898            UA     100
                *
```

```
1899          KK    C570
1900          KM      Hydrograph combine C570R + 208Q at C570
1901          HC       2
              *
              * *
              * * NOTE: 570572 is too short to route
              * *
              *
```



```
LINE          ID.......1.......2.......3.......4.......5.......6.......7.......8.......9......10

1902          KK    208R
1903          KM   Sub-Basin   208R
1904          KM
1905          KM      The Clark Unit Hydrograph is used for this basin.
1906          KM          The Urban time-area relation is used for this basin.
1907          KM
1908          KM      Time of Concentration for this sub-basin is based on the following:
1909          KM          6-Hour Rainfall, Pattern No.  1.00
1910          KM          An rainfall areal reduction factor of 1.000
1911          KM
1912          KM        EXCESS RAINFALL VALUES EXCEEDED IN 5-MINUTE INTERVALS
1913          KM     5  10  15  20  25  30  35  40  45  50  55  60  65  70  75  80  85  90
1914          KM   .49 .48 .48 .18 .15 .14 .07 .07 .07 .06 .06 .06 .01 .01 .01 .01 .01 .01
1915          KM
1916          KM          L=   0.238 miles, S=  327 feet/mile, Kb= .03
1917          KM
1918          BA   0.010
1919          LG    0.08    0.23    6.20    0.15   55.16
1920          UC   0.083   0.100
1921          UA       0       5      16      30      65      77      84      90      94      97
1922          UA     100
              *

1923          KK  571572
1924          KM      Normal depth channel route from C571 to C572
1925          KM      Source:  200 Scale Mapping
1926          RS       2    FLOW      -1
1927          RC   0.040   0.020   0.055  1379.0  0.0566
1928          RX  1000.0  1020.0  1040.0  1090.0  1122.0  1125.0  1135.0  1140.0
1929          RY  1894.0  1893.0  1892.0  1891.0  1891.0  1892.0  1894.0  1896.0
              *

1930          KK    C572
1931          KM      Hydrograph combine C570 + 571572 at C572
1932          HC       2
              *

1933          KK  572573
1934          KM      Normal depth channel route from C572 to C573
1935          KM      Source:  HEC-2 Cross Section: ZA 0.142
1936          RS       1    FLOW      -1
1937          RC   0.050   0.035   0.055  1285.0  0.0335
1938          RX  9961.8  9976.8  9982.5  9987.0 10009.5 10014.3 10022.1 10029.3
1939          RY  1840.3  1832.1  1831.2  1829.5  1829.2  1830.6  1831.2  1835.6
              *

1940          KK    208S
1941          KM   Sub-Basin   208S
1942          KM
1943          KM      The Clark Unit Hydrograph is used for this basin.
1944          KM          The Urban time-area relation is used for this basin.
1945          KM
1946          KM      Time of Concentration for this sub-basin is based on the following:
1947          KM          6-Hour Rainfall, Pattern No.  1.00
```



```
LINE          ID.......1.......2.......3.......4.......5.......6.......7.......8.......9......10

1948          KM          An rainfall areal reduction factor of 0.999
1949          KM
1950          KM        EXCESS RAINFALL VALUES EXCEEDED IN 5-MINUTE INTERVALS
1951          KM     5  10  15  20  25  30  35  40  45  50  55  60  65  70  75  80  85  90
1952          KM   .49 .49 .49 .18 .15 .15 .07 .07 .07 .07 .07 .07 .02 .02 .02 .02 .02 .02
1953          KM
1954          KM          L=   0.568 miles, S=  234 feet/mile, Kb= .03
1955          KM
1956          BA   0.068
1957          LG    0.08    0.24    6.20    0.15   67.07
1958          UC   0.129   0.112
1959          UA       0       5      16      30      65      77      84      90      94      97
1960          UA     100
              *

1961          KK   C573R
1962          KM      Hydrograph combine 572573 + 208S at C573 right branch
1963          HC       2
              *

1964          KK    C573
1965          KM      Hydrograph combine C573L + C573R at C573
1966          HC       2
              *
              * *
              * * NOTE: 573577 is too short to route
              * *
              * * C573 is the total flow in Bristol Wash upstream of the confluence
              * * with Montezuna Wash
              * *
```

```
                 * * Start Montezuna Wash
                 * *
                 *

1967             KK    208T
1968             KM   Sub-Basin   208T
1969             KM
1970             KM      The Clark Unit Hydrograph is used for this basin.
1971             KM          The Urban time-area relation is used for this basin.
1972             KM
1973             KM      Time of Concentration for this sub-basin is based on the following:
1974             KM          6-Hour Rainfall, Pattern No.  1.00
1975             KM          An rainfall areal reduction factor of 0.998
1976             KM
1977             KM       EXCESS RAINFALL VALUES EXCEEDED IN 5-MINUTE INTERVALS
1978             KM     5  10  15  20  25  30  35  40  45  50  55  60  65  70  75  80  85  90
1979             KM   .48 .47 .47 .17 .14 .13 .06 .06 .06 .05 .05 .04 .01 .01 .01 .01 .01 .01
1980             KM
1981             KM          L=   0.787 miles, S=  340 feet/mile, Kb= .03
1982             KM
1983             BA   0.132
1984             LG    0.09    0.25    5.20    0.22   44.80
1985             UC   0.138   0.107
1986             UA       0       5      16      30      65      77      84      90      94      97
1987             UA     100
                 *
1                                          HEC-1 INPUT                                          PAGE 46

LINE             ID.......1.......2.......3.......4.......5.......6.......7.......8.......9......10


1988             KK    208U
1989             KM   Sub-Basin   208U
1990             KM
1991             KM      The Clark Unit Hydrograph is used for this basin.
1992             KM          The Urban time-area relation is used for this basin.
1993             KM
1994             KM      Time of Concentration for this sub-basin is based on the following:
1995             KM          6-Hour Rainfall, Pattern No.  1.00
1996             KM          An rainfall areal reduction factor of 0.998
1997             KM
1998             KM       EXCESS RAINFALL VALUES EXCEEDED IN 5-MINUTE INTERVALS
1999             KM     5  10  15  20  25  30  35  40  45  50  55  60  65  70  75  80  85  90
2000             KM   .48 .47 .47 .17 .14 .13 .06 .06 .06 .05 .05 .04 .01 .01 .01 .01 .01 .01
2001             KM
2002             KM          L=   0.507 miles, S=  360 feet/mile, Kb= .03
2003             KM
2004             BA   0.134
2005             LG    0.09    0.25    5.30    0.21   44.19
2006             UC   0.108   0.057
2007             UA       0       5      16      30      65      77      84      90      94      97
2008             UA     100
                 *

2009             KK    C574
2010             KM      Hydrograph combine 208T + 208U at C574
2011             HC       2
                 *

2012             KK  574575
2013             KM      Normal depth channel route from C574 to C575
2014             KM      Source:  HEC-2 Cross Section: MO 0.587
2015             RS       1    FLOW      -1
2016             RC   0.070   0.050   0.055   823.0  0.0365
2017             RX  9945.0  9970.6  9986.7  9995.9 10002.3 10019.0 10036.7 10055.5
2018             RY  1932.6  1928.5  1922.9  1917.8  1917.7  1924.0  1931.1  1934.1
                 *

2019             KK    208V
2020             KM   Sub-Basin   208V
2021             KM
2022             KM      The Clark Unit Hydrograph is used for this basin.
2023             KM          The Urban time-area relation is used for this basin.
2024             KM
2025             KM      Time of Concentration for this sub-basin is based on the following:
2026             KM          6-Hour Rainfall, Pattern No.  1.00
2027             KM          An rainfall areal reduction factor of 1.000
2028             KM
2029             KM       EXCESS RAINFALL VALUES EXCEEDED IN 5-MINUTE INTERVALS
2030             KM     5  10  15  20  25  30  35  40  45  50  55  60  65  70  75  80  85  90
2031             KM   .48 .48 .48 .17 .14 .14 .07 .07 .06 .06 .06 .05 .01 .01 .01 .01 .01 .01
2032             KM
2033             KM          L=   0.354 miles, S=  319 feet/mile, Kb= .03
2034             KM
2035             BA   0.028
1                                          HEC-1 INPUT                                          PAGE 47

LINE             ID.......1.......2.......3.......4.......5.......6.......7.......8.......9......10

2036             LG    0.09    0.21    6.40    0.15   41.15
2037             UC   0.096   0.092
2038             UA       0       5      16      30      65      77      84      90      94      97
2039             UA     100
                 *

2040             KK    C575
2041             KM      Hydrograph combine 574575 + 208V at C575
2042             HC       2
                 *

2043             KK  575576
```

```
2044        KM      Normal depth channel route from C575 to C576
2045        KM      Source:  HEC-2 Cross Section: MO 0.307
2046        RS       2    FLOW      -1
2047        RC   0.070   0.050   0.055  2342.0  0.0423
2048        RX  9973.7  9974.0  9986.7 10000.0 10000.5 10009.7 10026.7 10037.3
2049        RY  1861.6  1861.5  1855.0  1853.0  1853.1  1854.8  1863.0  1867.1
            *

2050        KK    208W
2051        KM   Sub-Basin   208W
2052        KM
2053        KM      The Clark Unit Hydrograph is used for this basin.
2054        KM          The Urban time-area relation is used for this basin.
2055        KM
2056        KM      Time of Concentration for this sub-basin is based on the following:
2057        KM          6-Hour Rainfall, Pattern No.  1.00
2058        KM          An rainfall areal reduction factor of 0.999
2059        KM
2060        KM       EXCESS RAINFALL VALUES EXCEEDED IN 5-MINUTE INTERVALS
2061        KM     5  10  15  20  25  30  35  40  45  50  55  60  65  70  75  80  85  90
2062        KM   .48 .48 .48 .17 .14 .14 .07 .07 .06 .06 .05 .05 .01 .01 .01 .01 .01 .01
2063        KM
2064        KM          L=   0.475 miles, S=  288 feet/mile, Kb= .03
2065        KM
2066        BA   0.050
2067        LG    0.09    0.23    6.20    0.16   42.74
2068        UC   0.113   0.099
2069        UA       0       5      16      30      65      77      84      90      94      97
2070        UA     100
            *

2071        KK    C576
2072        KM      Hydrograph combine 575576 + 208W at C576
2073        HC       2
            *

2074        KK  576577
2075        KM      Normal depth channel route from C576 to C577
2076        KM      Source:  HEC-2 Cross Section: MO 0.116
2077        RS       1    FLOW      -1
2078        RC   0.070   0.050   0.055   740.0  0.0338
2079        RX  9915.1  9960.0  9985.5 10000.0 10000.1 10007.0 10023.3 10023.4
2080        RY  1826.5  1826.4  1814.5  1812.3  1812.3  1814.8  1830.3  1830.4
            *
            * *
            * * 576577 is the total flow in Montezuna Wash just upstream of the confluence
            * * with Bristol Wash
            * *
            *
```



```
LINE        ID.......1.......2.......3.......4.......5.......6.......7.......8.......9......10

2081        KK    C577
2082        KM      Hydrograph combine C577L + 576577 at C570
2083        HC       2
            *
            * *
            * * C577 is the total flow in Bristol Wash downstream of the confluence
            * * with Montezuma Wash
            * *
            *

2084        KK  577578
2085        KM      Normal depth channel route from C577 to C578
2086        KM      Source:  HEC-2 Cross Section: BR 1.099
2087        RS       1    FLOW      -1
2088        RC   0.055   0.045   0.055  1078.0  0.0147
2089        RX  9865.3  9956.6  9991.1 10010.2 10034.3 10063.4 10139.7 10201.7
2090        RY  1821.8  1810.8  1793.2  1792.5  1795.5  1796.1  1813.8  1822.8
            *

2091        KK    208X
2092        KM   Sub-Basin   208X
2093        KM
2094        KM      The Clark Unit Hydrograph is used for this basin.
2095        KM          The Urban time-area relation is used for this basin.
2096        KM
2097        KM      Time of Concentration for this sub-basin is based on the following:
2098        KM          6-Hour Rainfall, Pattern No.  1.00
2099        KM          An rainfall areal reduction factor of 0.999
2100        KM
2101        KM       EXCESS RAINFALL VALUES EXCEEDED IN 5-MINUTE INTERVALS
2102        KM     5  10  15  20  25  30  35  40  45  50  55  60  65  70  75  80  85  90
2103        KM   .47 .47 .47 .16 .13 .12 .06 .06 .05 .04 .04 .03 .01 .01 .01 .01 .01 .01
2104        KM
2105        KM          L=   0.417 miles, S=  223 feet/mile, Kb= .05
2106        KM
2107        BA   0.075
2108        LG    0.13    0.29    5.60    0.21   39.42
2109        UC   0.150   0.098
2110        UA       0       5      16      30      65      77      84      90      94      97
2111        UA     100
            *

2112        KK   C578I
2113        KM      Hydrograph combine 577578 + 208X at C578I
2114        HC       2
            *
            * *
```

```
                 * * C578I is the total flow in Bristol Wash upstream of Dam 11
                 * *
                 *
1                                          HEC-1 INPUT                                                    PAGE 49

LINE             ID.......1.......2.......3.......4.......5.......6.......7.......8.......9......10

2115             KK   C578O
2116             KM      Reservoir route at C578 (Dam 11).
2117             RS       1    ELEV  1779.2
2118             SV    0.00   16.38   31.30   53.65   84.39  126.17  138.00  143.00  147.00  154.47
2119             SV  161.00  167.00  174.00  181.00  187.43  194.00  202.00  205.00
2120             SE  1779.2  1794.0  1798.0  1802.0  1806.0  1810.0  1810.8  1811.2  1811.6  1812.0
2121             SE  1812.4  1812.8  1813.2  1813.6  1814.0  1814.4  1814.8  1815.0
2122             SQ       0     131     181     221     254     283     305     325     328     366
2123             SQ     522     812    1194    1651    2176    2763    3406    4104    4855    5250
2124             SE  1779.2  1786.0  1790.0  1794.0  1798.0  1802.0  1806.0  1810.0  1810.8  1811.2
2125             SE  1811.6  1812.0  1812.4  1812.8  1813.2  1813.6  1814.0  1814.4  1814.8  1815.0
2126             RL                    0.97
                 *
                 * *
                 * * End Basin 208.  Rejoin Basin 210
                 * *
                 *

2127             KK  578587
2128             KM      Normal depth channel route from C578 to C587
2129             KM      Source:  HEC-2 Cross Section: BR 0.697
2130             RS       3    FLOW      -1
2131             RC   0.055   0.045   0.055  1628.0  0.0191
2132             RX  9926.4  9949.5  9960.1  9984.7 10000.0 10014.1 10031.5 10049.4
2133             RY  1763.0  1762.6  1761.8  1757.0  1757.1  1756.9  1761.4  1768.1
                 *

2134             KK    210B
2135             KM   Sub-Basin   210B
2136             KM
2137             KM      The Clark Unit Hydrograph is used for this basin.
2138             KM          The Urban time-area relation is used for this basin.
2139             KM
2140             KM      Time of Concentration for this sub-basin is based on the following:
2141             KM          6-Hour Rainfall, Pattern No.  1.00
2142             KM          An rainfall areal reduction factor of 0.999
2143             KM
2144             KM       EXCESS RAINFALL VALUES EXCEEDED IN 5-MINUTE INTERVALS
2145             KM     5  10  15  20  25  30  35  40  45  50  55  60  65  70  75  80  85  90
2146             KM   .48 .47 .47 .17 .14 .13 .06 .06 .06 .05 .05 .04 .01 .01 .01 .01 .01 .01
2147             KM
2148             KM          L=   0.930 miles, S=  251 feet/mile, Kb= .03
2149             KM
2150             BA   0.107
2151             LG    0.08    0.25    5.80    0.17   37.15
2152             UC   0.167   0.171
2153             UA       0       5      16      30      65      77      84      90      94      97
2154             UA     100
                 *
1                                          HEC-1 INPUT                                                    PAGE 50

LINE             ID.......1.......2.......3.......4.......5.......6.......7.......8.......9......10

2155             KK   C586O
2156             KM      Reservoir route at C586.
2157             RS       1    ELEV  1804.4
2158             SV    0.00    0.05    0.36    1.09    2.45    4.45    7.00    9.50    9.60   10.00
2159             SV   10.34   10.70   11.20   11.60   12.10   12.50
2160             SE  1804.4  1806.0  1808.0  1810.0  1812.0  1814.0  1816.0 1817.55  1817.6  1817.8
2161             SE  1818.0  1818.2  1818.4  1818.6  1818.8  1819.0
2162             SQ       0      37     130     219     284     322     353     375     377     393
2163             SQ     432     492     574     680     808     959
                 *

2164             KK  586587
2165             KM      Normal depth channel route from C586 to C587
2166             KM      Source:  200 Scale Mapping
2167             RS       3    FLOW      -1
2168             RC   0.040   0.035   0.040  1905.0  0.0313
2169             RX  1000.0  1020.0  1050.0  1055.0  1065.0  1070.0  1130.0  1150.0
2170             RY  1782.0  1780.0  1772.0  1771.0  1771.0  1772.0  1778.0  1782.0
                 *

2171             KK    C587
2172             KM      Hydrograph combine 578587 + 586587 at C578
2173             HC       2
                 *

2174             KK  587595
2175             KM      Normal depth channel route from C587 to C595
2176             KM      Source:  HEC-2 Cross Section: BR 0.533
2177             RS       1    FLOW      -1
2178             RC   0.055   0.045   0.055  1039.0  0.0173
2179             RX  9977.2  9980.4  9983.6  9989.9 10009.9 10020.3 10028.8 10037.3
2180             RY  1745.2  1744.0  1742.8  1740.3  1740.3  1742.4  1743.0  1743.6
                 *

2181             KK    210C
2182             KM   Sub-Basin   210C
2183             KM
2184             KM      The Clark Unit Hydrograph is used for this basin.
2185             KM          The Urban time-area relation is used for this basin.
```

```
2186          KM
2187          KM      Time of Concentration for this sub-basin is based on the following:
2188          KM          6-Hour Rainfall, Pattern No.  1.00
2189          KM          An rainfall areal reduction factor of 0.999
2190          KM
2191          KM       EXCESS RAINFALL VALUES EXCEEDED IN 5-MINUTE INTERVALS
2192          KM     5  10  15  20  25  30  35  40  45  50  55  60  65  70  75  80  85  90
2193          KM   .46 .46 .46 .15 .12 .11 .05 .05 .04 .03 .02 .02 .01 .01 .01 .01 .01 .01
2194          KM
2195          KM          L=   0.637 miles, S=  198 feet/mile, Kb= .03
2196          KM
2197          BA   0.082
2198          LG    0.11    0.26    4.80    0.28   22.29
2199          UC   0.150   0.131
2200          UA       0       5      16      30      65      77      84      90      94      97
1                                          HEC-1 INPUT                                          PAGE 51

LINE          ID.......1.......2.......3.......4.......5.......6.......7.......8.......9......10

2201          UA     100
              *

2202          KK   C595L
2203          KM      Hydrograph combine 587595 + 210C at C595 left branch
2204          HC       2
              *
              * *
              * * C595L is the total flow in Bristol Wash upstream of the confluence
              * * with Longmont Wash
              * *
              * * Start Longmont Wash Left Branch
              * *
              *

2205          KK    210D
2206          KM   Sub-Basin   210D
2207          KM
2208          KM      The Clark Unit Hydrograph is used for this basin.
2209          KM          The Urban time-area relation is used for this basin.
2210          KM
2211          KM      Time of Concentration for this sub-basin is based on the following:
2212          KM          6-Hour Rainfall, Pattern No.  1.00
2213          KM          An rainfall areal reduction factor of 0.998
2214          KM
2215          KM       EXCESS RAINFALL VALUES EXCEEDED IN 5-MINUTE INTERVALS
2216          KM     5  10  15  20  25  30  35  40  45  50  55  60  65  70  75  80  85  90
2217          KM   .48 .47 .47 .17 .13 .13 .06 .06 .06 .05 .04 .04 .01 .01 .01 .01 .01 .01
2218          KM
2219          KM          L=   0.832 miles, S=  325 feet/mile, Kb= .03
2220          KM
2221          BA   0.140
2222          LG    0.09    0.25    5.80    0.18   33.66
2223          UC   0.146   0.116
2224          UA       0       5      16      30      65      77      84      90      94      97
2225          UA     100
              *

2226          KK  588590
2227          KM      Normal depth channel route from C588 to C590
2228          KM      Source:  HEC-2 Cross Section: LO-LB1 0.128
2229          RS       1    FLOW      -1
2230          RC   0.065   0.050   0.060  1117.0  0.0340
2231          RX  9931.7  9960.6  9984.9 10005.7 10019.1 10033.8 10151.6 10172.9
2232          RY  1839.3  1833.5  1825.9  1824.7  1825.9  1828.8  1832.9  1838.0
              *

2233          KK    210E
2234          KM   Sub-Basin   210E
2235          KM
2236          KM      The Clark Unit Hydrograph is used for this basin.
2237          KM          The Urban time-area relation is used for this basin.
2238          KM
2239          KM      Time of Concentration for this sub-basin is based on the following:
2240          KM          6-Hour Rainfall, Pattern No.  1.00
1                                          HEC-1 INPUT                                          PAGE 52

LINE          ID.......1.......2.......3.......4.......5.......6.......7.......8.......9......10

2241          KM          An rainfall areal reduction factor of 1.000
2242          KM
2243          KM       EXCESS RAINFALL VALUES EXCEEDED IN 5-MINUTE INTERVALS
2244          KM     5  10  15  20  25  30  35  40  45  50  55  60  65  70  75  80  85  90
2245          KM   .48 .48 .48 .17 .14 .14 .06 .06 .06 .06 .05 .05 .00 .00 .00 .00 .00 .00
2246          KM
2247          KM          L=   0.339 miles, S=  151 feet/mile, Kb= .03
2248          KM
2249          BA   0.028
2250          LG    0.09    0.17    6.80    0.12   15.00
2251          UC   0.117   0.111
2252          UA       0       5      16      30      65      77      84      90      94      97
2253          UA     100
              *

2254          KK   C590L
2255          KM      Hydrograph combine 588590 + 210E at C590 left branch
2256          HC       2
              *
              * *
              * * C590L is the total flow in Longmont Wash Left Branch upstream of the
              * * confluence with Longmont Wash
              * *
```

```
                 * * Start Longmont Wash
                 * *
                 *

2257             KK    210F
2258             KM   Sub-Basin   210F
2259             KM
2260             KM      The Clark Unit Hydrograph is used for this basin.
2261             KM          The Urban time-area relation is used for this basin.
2262             KM
2263             KM      Time of Concentration for this sub-basin is based on the following:
2264             KM          6-Hour Rainfall, Pattern No.  1.00
2265             KM          An rainfall areal reduction factor of 0.999
2266             KM
2267             KM       EXCESS RAINFALL VALUES EXCEEDED IN 5-MINUTE INTERVALS
2268             KM     5  10  15  20  25  30  35  40  45  50  55  60  65  70  75  80  85  90
2269             KM   .47 .47 .47 .16 .13 .13 .06 .06 .05 .04 .04 .04 .01 .01 .01 .01 .01 .01
2270             KM
2271             KM          L=   0.668 miles, S=  349 feet/mile, Kb= .03
2272             KM
2273             BA   0.093
2274             LG    0.09    0.25    4.40    0.34   49.44
2275             UC   0.125   0.103
2276             UA       0       5      16      30      65      77      84      90      94      97
2277             UA     100
                 *
1                                          HEC-1 INPUT                                          PAGE 53

LINE             ID.......1.......2.......3.......4.......5.......6.......7.......8.......9......10

2278             KK  589590
2279             KM      Normal depth channel route from C589 to C590
2280             KM      Source:  HEC-2 Cross Section: LO 0.813
2281             RS       2    FLOW      -1
2282             RC   0.065   0.050   0.060  1751.0  0.0423
2283             RX  9957.0  9963.5  9984.5  9996.1 10008.8 10017.4 10040.1 10060.8
2284             RY  1843.8  1842.9  1837.0  1831.2  1830.6  1836.1  1838.3  1842.1
                 *

2285             KK    210G
2286             KM   Sub-Basin   210G
2287             KM
2288             KM      The Clark Unit Hydrograph is used for this basin.
2289             KM          The Urban time-area relation is used for this basin.
2290             KM
2291             KM      Time of Concentration for this sub-basin is based on the following:
2292             KM          6-Hour Rainfall, Pattern No.  1.00
2293             KM          An rainfall areal reduction factor of 0.998
2294             KM
2295             KM       EXCESS RAINFALL VALUES EXCEEDED IN 5-MINUTE INTERVALS
2296             KM     5  10  15  20  25  30  35  40  45  50  55  60  65  70  75  80  85  90
2297             KM   .48 .47 .47 .17 .13 .13 .06 .06 .05 .05 .04 .04 .01 .01 .01 .01 .01 .01
2298             KM
2299             KM          L=   0.969 miles, S=  333 feet/mile, Kb= .03
2300             KM
2301             BA   0.162
2302             LG    0.09    0.25    5.30    0.22   39.22
2303             UC   0.154   0.128
2304             UA       0       5      16      30      65      77      84      90      94      97
2305             UA     100
                 *

2306             KK   C590R
2307             KM      Hydrograph combine 589590 + 210G at C590 right branch
2308             HC       2
                 *
                 * * NOTE: 590593 is too short to route
                 * *
                 * * C590R is the total flow in Longmont Wash upstream of the confluence
                 * * with Longmont Wash Left Branch
                 * *
                 *

2309             KK    C590
2310             KM      Hydrograph combine C590L + C590R at C590
2311             HC       2
                 *
                 * * C590 is the total flow in Longmont Wash upstream of the confluence
                 * * Longmont Wash Right Branch
                 * *
                 * * Start Longmont Wash Right Branch
                 * *
                 *
1                                          HEC-1 INPUT                                          PAGE 54

LINE             ID.......1.......2.......3.......4.......5.......6.......7.......8.......9......10

2312             KK    210H
2313             KM   Sub-Basin   210H
2314             KM
2315             KM      The Clark Unit Hydrograph is used for this basin.
2316             KM          The Urban time-area relation is used for this basin.
2317             KM
2318             KM      Time of Concentration for this sub-basin is based on the following:
2319             KM          6-Hour Rainfall, Pattern No.  1.00
2320             KM          An rainfall areal reduction factor of 0.999
2321             KM
2322             KM       EXCESS RAINFALL VALUES EXCEEDED IN 5-MINUTE INTERVALS
2323             KM     5  10  15  20  25  30  35  40  45  50  55  60  65  70  75  80  85  90
```

```
2324          KM   .47 .47 .47 .16 .13 .13 .06 .06 .05 .05 .04 .04 .01 .01 .01 .01 .01 .01
2325          KM
2326          KM          L=   0.565 miles, S=  340 feet/mile, Kb= .03
2327          KM
2328          BA   0.070
2329          LG    0.09    0.23    6.20    0.16   21.74
2330          UC   0.117   0.098
2331          UA       0       5      16      30      65      77      84      90      94      97
2332          UA     100
              *

2333          KK  592593
2334          KM      Normal depth channel route from C592 to C593
2335          KM      Source:  HEC-2 Cross Section: LO-RB1 0.027
2336          RS       3    FLOW      -1
2337          RC   0.065   0.050   0.060  2062.0  0.0412
2338          RX  9920.6  9964.0  9984.7  9996.1 10003.9 10025.4 10041.1 10057.9
2339          RY  1820.0  1804.5  1801.2  1797.3  1797.3  1808.5  1818.3  1820.1
              *
              * *
              * * 592593 is the total flow in Longmont Wash Right Branch upstream
              * * of the confluence with Longmont Wash
              * *
              *

2340          KK    C593
2341          KM      Hydrograph combine C590 + C593R at C593
2342          HC       2
              *
              * *
              * * C593 is the total flow in Longmont Wash below the confluence with
              * * Longmont Wash Right Branch
              * *
              *

2343          KK  593594
2344          KM      Normal depth channel route from C593 to C594
2345          KM      Source:  HEC-2 Cross Section: LO0.413
2346          RS       2    FLOW      -1
2347          RC   0.065   0.050   0.060   988.0  0.0202
2348          RX  9937.2  9958.5  9981.7  9992.8 10007.7 10024.4 10041.9 10067.8
2349          RY  1783.6  1773.5  1773.9  1771.3  1771.2  1774.5  1778.7  1788.7
              *
```



```
LINE          ID.......1.......2.......3.......4.......5.......6.......7.......8.......9......10

2350          KK    210I
2351          KM   Sub-Basin   210I
2352          KM
2353          KM      The Clark Unit Hydrograph is used for this basin.
2354          KM          The Urban time-area relation is used for this basin.
2355          KM
2356          KM      Time of Concentration for this sub-basin is based on the following:
2357          KM          6-Hour Rainfall, Pattern No.  1.00
2358          KM          An rainfall areal reduction factor of 0.999
2359          KM
2360          KM       EXCESS RAINFALL VALUES EXCEEDED IN 5-MINUTE INTERVALS
2361          KM     5  10  15  20  25  30  35  40  45  50  55  60  65  70  75  80  85  90
2362          KM   .49 .48 .48 .18 .15 .14 .07 .07 .06 .06 .06 .06 .01 .01 .01 .00 .00 .00
2363          KM
2364          KM          L=   0.634 miles, S=  250 feet/mile, Kb= .03
2365          KM
2366          BA   0.049
2367          LG    0.09    0.15    7.60    0.09   15.00
2368          UC   0.138   0.158
2369          UA       0       5      16      30      65      77      84      90      94      97
2370          UA     100
              *

2371          KK    C594
2372          KM      Hydrograph combine 593594 + 210I at C594
2373          HC       2
              *

2374          KK  594595
2375          KM      Normal depth channel route from C594 to C595
2376          KM      Source:  HEC-2 Cross Section: LO 0.184
2377          RS       3    FLOW      -1
2378          RC   0.065   0.050   0.060  2093.0  0.0201
2379          RX  9814.0  9836.5  9878.5  9988.2  9994.1 10010.9 10030.4 10030.5
2380          RY  1769.3  1766.6  1752.8  1750.6  1747.9  1749.2  1770.5  1770.6
              *

2381          KK    210J
2382          KM   Sub-Basin   210J
2383          KM
2384          KM      The Clark Unit Hydrograph is used for this basin.
2385          KM          The Urban time-area relation is used for this basin.
2386          KM
2387          KM      Time of Concentration for this sub-basin is based on the following:
2388          KM          6-Hour Rainfall, Pattern No.  1.00
2389          KM          An rainfall areal reduction factor of 0.999
2390          KM
2391          KM       EXCESS RAINFALL VALUES EXCEEDED IN 5-MINUTE INTERVALS
2392          KM     5  10  15  20  25  30  35  40  45  50  55  60  65  70  75  80  85  90
2393          KM   .48 .47 .47 .17 .14 .13 .06 .06 .06 .05 .05 .05 .00 .00 .00 .00 .00 .00
2394          KM
2395          KM          L=   0.684 miles, S=  187 feet/mile, Kb= .03
2396          KM
```

```
LINE          ID.......1.......2.......3.......4.......5.......6.......7.......8.......9......10

2397          BA   0.103
2398          LG    0.09    0.19    6.60    0.13   15.00
2399          UC   0.154   0.125
2400          UA       0       5      16      30      65      77      84      90      94      97
2401          UA     100
              *

2402          KK   C595R
2403          KM      Hydrograph combine 594595 + 210J at C595
2404          HC       2
              *
              * *
              * * C595R is the total flow in Longmont Wash upstream of the confluence
              * * with Bristol Wash
              * *
              *

2405          KK    C595
2406          KM      Hydrograph combine C595L + C595R at C595
2407          HC       2
              *
              * *
              * * C595 is the total flow in Bristol Wash just downstream of the
              * * confluence with Longmont Wash
              * *
              *

2408          KK  595596
2409          KM      Normal depth channel route from C595 to C596
2410          KM      Source:  HEC-2 Cross Section: BR0.290
2411          RS       4    FLOW      -1
2412          RC   0.055   0.045   0.055  1095.0  0.0110
2413          RX  9886.8  9904.8  9948.0 10000.0 10032.4 10081.5 10107.3 10130.4
2414          RY  1727.2  1724.1  1725.9  1720.2  1725.6  1725.3  1721.3  1731.4
              *

2415          KK    210K
2416          KM   Sub-Basin   210K
2417          KM
2418          KM      The Clark Unit Hydrograph is used for this basin.
2419          KM          The Urban time-area relation is used for this basin.
2420          KM
2421          KM      Time of Concentration for this sub-basin is based on the following:
2422          KM          6-Hour Rainfall, Pattern No.  1.00
2423          KM          An rainfall areal reduction factor of 0.999
2424          KM
2425          KM       EXCESS RAINFALL VALUES EXCEEDED IN 5-MINUTE INTERVALS
2426          KM     5  10  15  20  25  30  35  40  45  50  55  60  65  70  75  80  85  90
2427          KM   .48 .47 .47 .17 .14 .13 .06 .06 .06 .05 .05 .05 .00 .00 .00 .00 .00 .00
2428          KM
2429          KM          L=   0.425 miles, S=  207 feet/mile, Kb= .03
2430          KM
2431          BA   0.077
2432          LG    0.09    0.19    6.60    0.13   15.00
2433          UC   0.117   0.074
2434          UA       0       5      16      30      65      77      84      90      94      97
```



```
LINE          ID.......1.......2.......3.......4.......5.......6.......7.......8.......9......10

2435          UA     100
              *

2436          KK    C596
2437          KM      Hydrograph combine 595596 + 210K at C596
2438          HC       2
              *
              * *
              * * C596 is the total flow in Bristol Wash at Golden Eagle Blvd.
              * * upstream of DAM 4
              * *
              * * Leave Basin 210 temporarily and move to Basin 209
              * *
              * * Start Cloudburst Wash
              *

2439          KK    209A
2440          KM   Sub-Basin   209A
2441          KM
2442          KM      The Clark Unit Hydrograph is used for this basin.
2443          KM          The HEC-1 time-area relation is used for this basin.
2444          KM
2445          KM      Time of Concentration for this sub-basin is based on the following:
2446          KM          6-Hour Rainfall, Pattern No.  1.00
2447          KM          An rainfall areal reduction factor of 0.995
2448          KM
2449          KM       EXCESS RAINFALL VALUES EXCEEDED IN 5-MINUTE INTERVALS
2450          KM     5  10  15  20  25  30  35  40  45  50  55  60  65  70  75  80  85  90
2451          KM   .46 .45 .45 .15 .11 .10 .05 .05 .04 .04 .04 .04 .01 .01 .01 .01 .01 .01
2452          KM
2453          KM          L=   1.028 miles, S=  367 feet/mile, Kb= .08
2454          KM
2455          BA   0.368
2456          LG    0.18    0.31    4.35    0.38   41.41
2457          UC   0.263   0.152
              *
```

```
2458          KK  579580
2459          KM      Normal depth channel route from C579 to C580
2460          KM      Source:  100 Scale 4' CI Mapping
2461          RS       1     FLOW      -1
2462          RC   0.050   0.045   0.050  1751.0  0.0600
2463          RX  1000.0  1010.0  1025.0  1030.0  1035.0  1040.0  1045.0  1048.0
2464          RY  2336.0  2332.0  2328.0  2327.5  2327.5  2328.0  2332.0  2336.0
              *

2465          KK    209C
2466          KM   Sub-Basin   209C
2467          KM
2468          KM      The Clark Unit Hydrograph is used for this basin.
2469          KM          The Urban time-area relation is used for this basin.
2470          KM
2471          KM      Time of Concentration for this sub-basin is based on the following:
2472          KM          6-Hour Rainfall, Pattern No.  1.00
2473          KM          An rainfall areal reduction factor of 0.999
```



```
LINE          ID.......1.......2.......3.......4.......5.......6.......7.......8.......9......10

2474          KM
2475          KM       EXCESS RAINFALL VALUES EXCEEDED IN 5-MINUTE INTERVALS
2476          KM     5  10  15  20  25  30  35  40  45  50  55  60  65  70  75  80  85  90
2477          KM   .47 .47 .47 .16 .13 .12 .06 .05 .05 .04 .04 .04 .01 .01 .01 .01 .01 .01
2478          KM
2479          KM          L=   0.723 miles, S=  342 feet/mile, Kb= .05
2480          KM
2481          BA   0.064
2482          LG    0.11    0.26    4.35    0.36   48.03
2483          UC   0.175   0.198
2484          UA       0       5      16      30      65      77      84      90      94      97
2485          UA     100
              *

2486          KK   C580R
2487          KM      Hydrograph combine 579580 + 209C at C580 right branch
2488          HC       2
              *

2489          KK    209B
2490          KM   Sub-Basin   209B
2491          KM
2492          KM      The Clark Unit Hydrograph is used for this basin.
2493          KM          The Urban time-area relation is used for this basin.
2494          KM
2495          KM      Time of Concentration for this sub-basin is based on the following:
2496          KM          6-Hour Rainfall, Pattern No.  1.00
2497          KM          An rainfall areal reduction factor of 0.999
2498          KM
2499          KM       EXCESS RAINFALL VALUES EXCEEDED IN 5-MINUTE INTERVALS
2500          KM     5  10  15  20  25  30  35  40  45  50  55  60  65  70  75  80  85  90
2501          KM   .47 .47 .47 .16 .13 .13 .06 .06 .05 .04 .04 .04 .01 .01 .01 .01 .01 .01
2502          KM
2503          KM          L=   0.716 miles, S=  403 feet/mile, Kb= .03
2504          KM
2505          BA   0.083
2506          LG    0.09    0.25    4.35    0.35   50.00
2507          UC   0.125   0.116
2508          UA       0       5      16      30      65      77      84      90      94      97
2509          UA     100
              *

2510          KK    C580
2511          KM      Hydrograph combine 580R + 209B at C580
2512          HC       2
              *

2513          KK  580581
2514          KM      Normal depth channel route from C580 to C581
2515          KM      Source:  100 Scale 4' CI Mapping
2516          RS       2     FLOW      -1
2517          RC   0.050   0.045   0.050  2339.0  0.0440
2518          RX  1000.0  1010.0  1025.0  1030.0  1040.0  1045.0  1070.0  1075.0
2519          RY  2452.0  2448.0  2444.0  2443.5  2443.5  2444.0  2448.0  2452.0
              *
```



```
LINE          ID.......1.......2.......3.......4.......5.......6.......7.......8.......9......10

2520          KK    209D
2521          KM   Sub-Basin   209D
2522          KM
2523          KM      The Clark Unit Hydrograph is used for this basin.
2524          KM          The Urban time-area relation is used for this basin.
2525          KM
2526          KM      Time of Concentration for this sub-basin is based on the following:
2527          KM          6-Hour Rainfall, Pattern No.  1.00
2528          KM          An rainfall areal reduction factor of 0.997
2529          KM
2530          KM       EXCESS RAINFALL VALUES EXCEEDED IN 5-MINUTE INTERVALS
2531          KM     5  10  15  20  25  30  35  40  45  50  55  60  65  70  75  80  85  90
2532          KM   .47 .47 .46 .16 .13 .12 .06 .05 .05 .04 .04 .04 .01 .01 .01 .01 .01 .01
2533          KM
2534          KM          L=   0.800 miles, S=  354 feet/mile, Kb= .04
2535          KM
2536          BA   0.244
2537          LG    0.11    0.26    4.35    0.36   48.63
2538          UC   0.163   0.092
```

```
2539          UA       0       5      16      30      65      77      84      90      94      97
2540          UA     100
              *

2541          KK   C581R
2542          KM      Hydrograph combine 580581 + 209D at C581 right branch
2543          HC       2
              *

2544          KK    209E
2545          KM   Sub-Basin   209E
2546          KM
2547          KM      The Clark Unit Hydrograph is used for this basin.
2548          KM          The Urban time-area relation is used for this basin.
2549          KM
2550          KM      Time of Concentration for this sub-basin is based on the following:
2551          KM          6-Hour Rainfall, Pattern No.  1.00
2552          KM          An rainfall areal reduction factor of 0.998
2553          KM
2554          KM       EXCESS RAINFALL VALUES EXCEEDED IN 5-MINUTE INTERVALS
2555          KM     5  10  15  20  25  30  35  40  45  50  55  60  65  70  75  80  85  90
2556          KM   .47 .47 .47 .16 .13 .13 .06 .06 .05 .04 .04 .04 .01 .01 .01 .01 .01 .01
2557          KM
2558          KM          L=   1.018 miles, S=  341 feet/mile, Kb= .03
2559          KM
2560          BA   0.149
2561          LG    0.09    0.25    4.35    0.35   50.00
2562          UC   0.158   0.144
2563          UA       0       5      16      30      65      77      84      90      94      97
2564          UA     100
              *
```



```
LINE          ID.......1.......2.......3.......4.......5.......6.......7.......8.......9......10

2565          KK    C581
2566          KM      Hydrograph combine 581R + 209E at C581
2567          HC       2
              *

2568          KK  581582
2569          KM      Normal depth channel route from C581 to C582
2570          KM      Source:  100 Scale 4' CI Mapping
2571          RS       3    FLOW      -1
2572          RC   0.050   0.045   0.050  4012.0  0.0459
2573          RX  1000.0  1010.0  1025.0  1030.0  1035.0  1040.0  1050.0  1065.0
2574          RY  2100.0  2096.0  2092.0  2091.5  2091.5  2092.0  2096.0  2100.0
              *

2575          KK    209F
2576          KM   Sub-Basin   209F
2577          KM
2578          KM      The Clark Unit Hydrograph is used for this basin.
2579          KM          The HEC-1 time-area relation is used for this basin.
2580          KM
2581          KM      Time of Concentration for this sub-basin is based on the following:
2582          KM          6-Hour Rainfall, Pattern No.  1.00
2583          KM          An rainfall areal reduction factor of 0.997
2584          KM
2585          KM       EXCESS RAINFALL VALUES EXCEEDED IN 5-MINUTE INTERVALS
2586          KM     5  10  15  20  25  30  35  40  45  50  55  60  65  70  75  80  85  90
2587          KM   .46 .45 .45 .15 .11 .10 .05 .05 .04 .03 .03 .03 .01 .01 .01 .01 .01 .01
2588          KM
2589          KM          L=   1.191 miles, S=  332 feet/mile, Kb= .09
2590          KM
2591          BA   0.226
2592          LG    0.18    0.31    4.50    0.36   40.21
2593          UC   0.329   0.290
              *

2594          KK   C582R
2595          KM      Hydrograph combine 581582 + 209F at C582 right branch
2596          HC       2
              *

2597          KK    209G
2598          KM   Sub-Basin   209G
2599          KM
2600          KM      The Clark Unit Hydrograph is used for this basin.
2601          KM          The Urban time-area relation is used for this basin.
2602          KM
2603          KM      Time of Concentration for this sub-basin is based on the following:
2604          KM          6-Hour Rainfall, Pattern No.  1.00
2605          KM          An rainfall areal reduction factor of 0.997
2606          KM
2607          KM       EXCESS RAINFALL VALUES EXCEEDED IN 5-MINUTE INTERVALS
2608          KM     5  10  15  20  25  30  35  40  45  50  55  60  65  70  75  80  85  90
2609          KM   .47 .47 .47 .16 .13 .13 .06 .06 .05 .04 .04 .04 .01 .01 .01 .01 .01 .01
2610          KM
```



```
LINE          ID.......1.......2.......3.......4.......5.......6.......7.......8.......9......10

2611          KM          L=   1.050 miles, S=  306 feet/mile, Kb= .03
2612          KM
2613          BA   0.204
2614          LG    0.09    0.25    4.35    0.35   49.93
2615          UC   0.167   0.130
2616          UA       0       5      16      30      65      77      84      90      94      97
2617          UA     100
```

```
                *
2618            KK    C582
2619            KM      Hydrograph combine C582R + 209G at C582
2620            HC       2
                *

2621            KK  582583
2622            KM      Normal depth channel route from C582 to C583
2623            KM      Source:  100 Scale 4' CI Mapping.
2624            RS       2    FLOW      -1
2625            RC   0.060   0.050   0.060  1725.0  0.0232
2626            RX   960.0  1020.0  1035.0  1040.0  1050.0  1055.0  1065.0  1073.0
2627            RY  2024.0  2018.0  2016.0  2015.5  2015.5  2016.0  2020.0  2024.0
                *

2628            KK    209H
2629            KM   Sub-Basin   209H
2630            KM
2631            KM      The Clark Unit Hydrograph is used for this basin.
2632            KM          The Urban time-area relation is used for this basin.
2633            KM
2634            KM      Time of Concentration for this sub-basin is based on the following:
2635            KM          6-Hour Rainfall, Pattern No.  1.00
2636            KM          An rainfall areal reduction factor of 0.999
2637            KM
2638            KM       EXCESS RAINFALL VALUES EXCEEDED IN 5-MINUTE INTERVALS
2639            KM     5  10  15  20  25  30  35  40  45  50  55  60  65  70  75  80  85  90
2640            KM   .46 .46 .46 .15 .12 .11 .05 .05 .04 .03 .02 .02 .01 .01 .01 .01 .01 .01
2641            KM
2642            KM          L=   0.542 miles, S=  343 feet/mile, Kb= .07
2643            KM
2644            BA   0.083
2645            LG    0.15    0.31    5.60    0.22   26.57
2646            UC   0.179   0.138
2647            UA       0       5      16      30      65      77      84      90      94      97
2648            UA     100
                *

2649            KK    C583
2650            KM      Hydrograph combine 582583 + 209H at C583
2651            HC       2
                *
```



```
LINE            ID.......1.......2.......3.......4.......5.......6.......7.......8.......9......10

2652            KK  583584
2653            KM      Normal depth channel route from C583 to C584
2654            KM      Source:  HEC-2 Cross Section: CL 1.664
2655            RS       5    FLOW      -1
2656            RC   0.055   0.070   0.055  3107.0  0.0356
2657            RX  9859.8  9910.3  9933.5  9995.6 10021.7 10051.0 10083.0 10127.8
2658            RY  1948.3  1944.2  1943.7  1930.9  1932.4  1941.6  1937.3  1945.2
                *

2659            KK    209I
2660            KM   Sub-Basin   209I
2661            KM
2662            KM      The Clark Unit Hydrograph is used for this basin.
2663            KM          The Urban time-area relation is used for this basin.
2664            KM
2665            KM      Time of Concentration for this sub-basin is based on the following:
2666            KM          6-Hour Rainfall, Pattern No.  1.00
2667            KM          An rainfall areal reduction factor of 0.998
2668            KM
2669            KM       EXCESS RAINFALL VALUES EXCEEDED IN 5-MINUTE INTERVALS
2670            KM     5  10  15  20  25  30  35  40  45  50  55  60  65  70  75  80  85  90
2671            KM   .47 .46 .46 .16 .13 .12 .05 .05 .05 .04 .03 .02 .00 .00 .00 .00 .00 .00
2672            KM
2673            KM          L=   0.691 miles, S=  347 feet/mile, Kb= .04
2674            KM
2675            BA   0.182
2676            LG    0.10    0.27    6.00    0.17   17.98
2677            UC   0.150   0.088
2678            UA       0       5      16      30      65      77      84      90      94      97
2679            UA     100
                *

2680            KK   C584I
2681            KM      Hydrograph combine 583584 + 209I at C584I
2682            HC       2
                *
                * *
                * * C584I is the total flow in Cloudburst Wash upstream of Dam 7
                * *
                *

2683            KK   C584O
2684            KM      Reservoir route at C584 (Dam 7).
2685            RS       1    ELEV  1884.8
2686            SV    0.00   14.55   37.17   57.52   86.65   94.00   97.00  101.00  104.90  109.00
2687            SV  113.00  118.00  122.00  126.25  131.00  133.00  136.00  139.00
2688            SE  1884.8  1908.0  1916.0  1920.0  1924.0  1924.8  1925.2  1925.6  1926.0  1926.4
2689            SE  1926.8  1927.2  1927.6  1928.0  1928.4  1928.6  1928.8  1929.0
2690            SQ       0     135     223     285     326     341     355     358     385     493
2691            SQ     704    1007    1394    1852    2374    2956    3596    3937    4292    4661
2692            SE  1884.8  1892.0  1900.0  1908.0  1916.0  1920.0  1924.0  1924.8  1925.2  1925.6
2693            SE  1926.0  1926.4  1926.8  1927.2  1927.6  1928.0  1928.4  1928.6  1928.8  1929.0
2694            RL                    0.15
```

```
                *
                * *
                * * End Basin 209.  Rejoin Basin 210
                * *
                *
                                          HEC-1 INPUT                                                    PAGE 63
LINE            ID.......1.......2.......3.......4.......5.......6.......7.......8.......9......10

2695            KK  584597
2696            KM      Normal depth channel route from C584 to C597
2697            KM      Source:  HEC-2 Cross Section: CL 1.032
2698            RS       8    FLOW      -1
2699            RC   0.065   0.050   0.065  3704.0  0.0261
2700            RX  9902.1  9923.0  9938.7  9984.6 10049.3 10056.0 10091.7 10120.0
2701            RY  1839.1  1830.1  1826.6  1824.1  1824.9  1826.7  1828.5  1838.8
                *

2702            KK    210L
2703            KM   Sub-Basin   210L
2704            KM
2705            KM      The Clark Unit Hydrograph is used for this basin.
2706            KM          The Urban time-area relation is used for this basin.
2707            KM
2708            KM      Time of Concentration for this sub-basin is based on the following:
2709            KM          6-Hour Rainfall, Pattern No.  1.00
2710            KM          An rainfall areal reduction factor of 0.998
2711            KM
2712            KM       EXCESS RAINFALL VALUES EXCEEDED IN 5-MINUTE INTERVALS
2713            KM     5  10  15  20  25  30  35  40  45  50  55  60  65  70  75  80  85  90
2714            KM   .46 .46 .46 .15 .12 .11 .05 .05 .04 .03 .03 .02 .00 .00 .00 .00 .00 .00
2715            KM
2716            KM          L=   0.820 miles, S=  251 feet/mile, Kb= .03
2717            KM
2718            BA   0.137
2719            LG    0.09    0.25    5.20    0.23   15.90
2720            UC   0.158   0.127
2721            UA       0       5      16      30      65      77      84      90      94      97
2722            UA     100
                *

2723            KK    C597
2724            KM      Hydrograph combine 584597 + 210L at C597
2725            HC       2
                *

2726            KK  597598
2727            KM      Normal depth channel route from C597 to C598
2728            KM      Source:  HEC-2 Cross Section: CL 0.328
2729            RS       5    FLOW      -1
2730            RC   0.065   0.050   0.065  2822.0  0.0252
2731            RX  9961.0  9961.9  9969.1  9986.3 10018.5 10082.6 10155.2 10278.8
2732            RY  1740.2  1740.2  1738.1  1731.6  1732.3  1737.1  1740.0  1740.8
                *

2733            KK    210M
2734            KM   Sub-Basin   210M
2735            KM
2736            KM      The Clark Unit Hydrograph is used for this basin.
2737            KM          The Urban time-area relation is used for this basin.
2738            KM
2739            KM      Time of Concentration for this sub-basin is based on the following:
2740            KM          6-Hour Rainfall, Pattern No.  1.00
1                                         HEC-1 INPUT                                                    PAGE 64
LINE            ID.......1.......2.......3.......4.......5.......6.......7.......8.......9......10

2741            KM          An rainfall areal reduction factor of 0.998
2742            KM
2743            KM       EXCESS RAINFALL VALUES EXCEEDED IN 5-MINUTE INTERVALS
2744            KM     5  10  15  20  25  30  35  40  45  50  55  60  65  70  75  80  85  90
2745            KM   .47 .47 .46 .16 .13 .12 .05 .05 .05 .04 .04 .03 .00 .00 .00 .00 .00 .00
2746            KM
2747            KM          L=   1.022 miles, S=  232 feet/mile, Kb= .03
2748            KM
2749            BA   0.162
2750            LG    0.09    0.25    5.80    0.17   15.02
2751            UC   0.179   0.157
2752            UA       0       5      16      30      65      77      84      90      94      97
2753            UA     100
                *

2754            KK    C598
2755            KM      Hydrograph combine 597598 + 210M at C598
2756            HC       2
                *
                * *
                * * C598 is the total flow in Cloudburst Wash at Golden Eagle Blvd.
                * * upstream of DAM 4
                * *
                *

2757            KK    210N
2758            KM   Sub-Basin   210N
2759            KM
2760            KM      The Clark Unit Hydrograph is used for this basin.
2761            KM          The Urban time-area relation is used for this basin.
2762            KM
2763            KM      Time of Concentration for this sub-basin is based on the following:
2764            KM          6-Hour Rainfall, Pattern No.  1.00
```

```
2765          KM          An rainfall areal reduction factor of 0.999
2766          KM
2767          KM       EXCESS RAINFALL VALUES EXCEEDED IN 5-MINUTE INTERVALS
2768          KM      5  10  15  20  25  30  35  40  45  50  55  60  65  70  75  80  85  90
2769          KM    .45 .44 .44 .13 .10 .09 .03 .03 .03 .01 .01 .01 .00 .00 .00 .00 .00 .00
2770          KM
2771          KM          L=   0.309 miles, S=  178 feet/mile, Kb= .03
2772          KM
2773          BA   0.049
2774          LG    0.09    0.25    4.10    0.40   16.38
2775          UC   0.108   0.069
2776          UA       0       5      16      30      65      77      84      90      94      97
2777          UA     100
              *

2778          KK   C599I
2779          KM      Hydrograph combine C585 + C596 + C598 + 210N at C599I
2780          HC       4
              *
              * *
              * * C599I is the total flow in Ashbrook Wash upstream of DAM 4
              * *
              *
              *
```



```
LINE          ID.......1.......2.......3.......4.......5.......6.......7.......8.......9......10

2781          KK   C599O
2782          KM      Reservoir route at C599 (Dam 4).
2783          RS       1    ELEV  1694.7
2784          SV    0.00   16.85   31.66   52.71   80.85   95.00   98.00  102.00  105.00  109.00
2785          SV  113.00  116.14  120.00  124.00  128.00  136.00  139.00  144.00  148.00  152.00
2786          SE  1694.7  1708.0  1710.0  1712.0  1714.0  1714.8  1715.0  1715.2  1715.4  1715.6
2787          SE  1715.8  1716.0  1716.2  1716.4  1716.6  1717.0  1717.2  1717.4  1717.6  1717.8
2788          SQ       0      38     214     312     384     443     497     543     587     628
2789          SQ     642     754     957    1262    1665    2182    2483    2811    3164    3540
2790          SE  1694.7  1696.0  1700.0  1702.0  1704.0  1706.0  1708.0  1710.0  1712.0  1714.0
2791          SE  1714.8  1715.4  1715.8  1716.2  1716.6  1717.0  1717.2  1717.4  1717.6  1717.8
2792          RL                    0.97
              *
              * * End Basin 210.  Start Basin 211
              * *
              *

2793          KK  599608
2794          KM      Normal depth channel route from C599 to C608
2795          KM      Source:  HEC-2 Cross Section: AS 3.621
2796          RS       2    FLOW     -1
2797          RC   0.055   0.045   0.025  1476.0  0.0148
2798          RX  9675.4  9726.8  9929.0  9990.7 10005.9 10033.3 10061.9 10082.2
2799          RY  1691.3  1687.2  1685.5  1678.6  1678.1  1682.1  1689.8  1691.8
              *

2800          KK    211K
2801          KM   Sub-Basin   211K
2802          KM
2803          KM      The Clark Unit Hydrograph is used for this basin.
2804          KM          The Urban time-area relation is used for this basin.
2805          KM
2806          KM      Time of Concentration for this sub-basin is based on the following:
2807          KM          6-Hour Rainfall, Pattern No.  1.00
2808          KM          An rainfall areal reduction factor of 0.999
2809          KM
2810          KM       EXCESS RAINFALL VALUES EXCEEDED IN 5-MINUTE INTERVALS
2811          KM      5  10  15  20  25  30  35  40  45  50  55  60  65  70  75  80  85  90
2812          KM    .48 .47 .47 .17 .13 .13 .06 .06 .06 .05 .04 .03 .01 .01 .01 .01 .01 .01
2813          KM
2814          KM          L=   0.376 miles, S=  157 feet/mile, Kb= .03
2815          KM
2816          BA   0.102
2817          LG    0.13    0.27    6.00    0.16   31.48
2818          UC   0.121   0.060
2819          UA       0       5      16      30      65      77      84      90      94      97
2820          UA     100
              *
```



```
LINE          ID.......1.......2.......3.......4.......5.......6.......7.......8.......9......10

2821          KK   C608L
2822          KM      Hydrograph combine 599608 + 211K at C608 left branch
2823          HC       2
              *

2824          KK    211G
2825          KM   Sub-Basin   211G
2826          KM
2827          KM      The Clark Unit Hydrograph is used for this basin.
2828          KM          The Urban time-area relation is used for this basin.
2829          KM
2830          KM      Time of Concentration for this sub-basin is based on the following:
2831          KM          6-Hour Rainfall, Pattern No.  1.00
2832          KM          An rainfall areal reduction factor of 1.000
2833          KM
2834          KM       EXCESS RAINFALL VALUES EXCEEDED IN 5-MINUTE INTERVALS
2835          KM      5  10  15  20  25  30  35  40  45  50  55  60  65  70  75  80  85  90
2836          KM    .50 .50 .50 .19 .16 .16 .08 .08 .08 .08 .08 .08 .02 .02 .02 .02 .02 .02
2837          KM
```

```
2838        KM          L=   0.448 miles, S=  190 feet/mile, Kb= .04
2839        KM
2840        BA   0.008
2841        LG    0.06    0.25    5.70    0.18   90.00
2842        UC   0.142   0.359
2843        UA       0       5      16      30      65      77      84      90      94      97
2844        UA     100
            *

2845        KK  604606
2846        KM      Normal depth channel route from C604 to C606
2847        KM      Source:  200 Scale Mapping
2848        RS      11    FLOW      -1
2849        RC   0.040   0.018   0.040  2784.0  0.0647
2850        RX  1000.0  1040.0  1060.0  1076.0  1092.0  1093.2  1098.2  1113.2
2851        RY  1814.0  1811.0  1810.8  1811.1  1810.8  1811.2  1812.0  1816.0
            *

2852        KK    211I
2853        KM   Sub-Basin   211I
2854        KM
2855        KM      The Clark Unit Hydrograph is used for this basin.
2856        KM          The Urban time-area relation is used for this basin.
2857        KM
2858        KM      Time of Concentration for this sub-basin is based on the following:
2859        KM          6-Hour Rainfall, Pattern No.  1.00
2860        KM          An rainfall areal reduction factor of 0.999
2861        KM
2862        KM       EXCESS RAINFALL VALUES EXCEEDED IN 5-MINUTE INTERVALS
2863        KM     5  10  15  20  25  30  35  40  45  50  55  60  65  70  75  80  85  90
2864        KM   .48 .48 .48 .17 .14 .14 .06 .06 .06 .06 .05 .05 .01 .01 .01 .01 .01 .01
2865        KM
2866        KM          L=   0.626 miles, S=  257 feet/mile, Kb= .03
2867        KM
2868        BA   0.041
```



```
LINE        ID.......1.......2.......3.......4.......5.......6.......7.......8.......9......10

2869        LG    0.08    0.25    5.70    0.18   45.00
2870        UC   0.133   0.168
2871        UA       0       5      16      30      65      77      84      90      94      97
2872        UA     100
            *

2873        KK   C606R
2874        KM      Hydrograph combine 604606 + 211I at C606 right branch
2875        HC       2
            *

2876        KK    211H
2877        KM   Sub-Basin   211H
2878        KM
2879        KM      The Clark Unit Hydrograph is used for this basin.
2880        KM          The Urban time-area relation is used for this basin.
2881        KM
2882        KM      Time of Concentration for this sub-basin is based on the following:
2883        KM          6-Hour Rainfall, Pattern No.  1.00
2884        KM          An rainfall areal reduction factor of 0.999
2885        KM
2886        KM       EXCESS RAINFALL VALUES EXCEEDED IN 5-MINUTE INTERVALS
2887        KM     5  10  15  20  25  30  35  40  45  50  55  60  65  70  75  80  85  90
2888        KM   .47 .47 .47 .16 .13 .12 .06 .06 .05 .04 .04 .03 .00 .00 .00 .00 .00 .00
2889        KM
2890        KM          L=   0.501 miles, S=  289 feet/mile, Kb= .03
2891        KM
2892        BA   0.073
2893        LG    0.09    0.25    6.00    0.16   17.93
2894        UC   0.117   0.087
2895        UA       0       5      16      30      65      77      84      90      94      97
2896        UA     100
            *

2897        KK   C605O
2898        KM      Reservoir route at C605.
2899        RS       1    ELEV  1722.5
2900        SV    0.00    0.20    0.20    0.20    0.20    0.30    0.30    0.30    0.40    0.60
2901        SV    0.70    0.90    1.00    1.20    1.40    1.60    1.90    2.80    3.40    4.10
2902        SE  1722.5  1726.8  1727.0  1727.2  1727.4  1727.6  1727.8  1728.0  1728.2  1728.4
2903        SE  1728.6  1728.8  1729.0  1729.2  1729.4  1729.6  1730.0  1730.4  1730.7  1731.0
2904        SQ       0       0       5      10      20      43      63      73      78      85
2905        SQ      91      96     101     105     109     113     122     130     136     200
            *

2906        KK    C606
2907        KM      Hydrograph combine C606R + C605O at C606
2908        HC       2
            *
```



```
LINE        ID.......1.......2.......3.......4.......5.......6.......7.......8.......9......10

2909        KK  606607
2910        KM      Normal depth channel route from C606 to C607
2911        KM      Source:  200 Scale Mapping
2912        RS       2    FLOW      -1
2913        RC   0.020   0.055   0.035  1061.0  0.0286
2914        RX  1000.0  1032.0  1082.0  1095.0  1105.0  1117.0  1123.0  1153.0
2915        RY  1704.3  1704.0  1703.5  1700.0  1700.0  1703.0  1704.0  1706.0
            *
```

```
2916          KK    211J
2917          KM   Sub-Basin   211J
2918          KM
2919          KM      The Clark Unit Hydrograph is used for this basin.
2920          KM          The Urban time-area relation is used for this basin.
2921          KM
2922          KM      Time of Concentration for this sub-basin is based on the following:
2923          KM          6-Hour Rainfall, Pattern No.  1.00
2924          KM          An rainfall areal reduction factor of 1.000
2925          KM
2926          KM       EXCESS RAINFALL VALUES EXCEEDED IN 5-MINUTE INTERVALS
2927          KM     5  10  15  20  25  30  35  40  45  50  55  60  65  70  75  80  85  90
2928          KM   .48 .48 .48 .17 .14 .14 .06 .06 .06 .05 .05 .05 .01 .01 .01 .01 .01 .01
2929          KM
2930          KM          L=   0.249 miles, S=  166 feet/mile, Kb= .03
2931          KM
2932          BA   0.015
2933          LG    0.08    0.23    6.20    0.16   39.19
2934          UC   0.096   0.099
2935          UA       0       5      16      30      65      77      84      90      94      97
2936          UA     100
              *

2937          KK    C607
2938          KM      Hydrograph combine 606607 + 211J at C607
2939          HC       2
              *

2940          KK  607608
2941          KM      Normal depth channel route from C607 to C608
2942          KM      Source:  200 Scale Mapping
2943          RS       2    FLOW      -1
2944          RC   0.040   0.050   0.035  1008.0  0.0145
2945          RX  1000.0  1060.0  1070.0  1082.0  1083.0  1095.0  1115.0  1133.0
2946          RY  1688.0  1686.0  1684.0  1681.0  1681.0  1684.0  1685.0  1685.4
              *

2947          KK    C608
2948          KM      Hydrograph combine C608L + 607608 at C608
2949          HC       2
              *
```



```
LINE          ID.......1.......2.......3.......4.......5.......6.......7.......8.......9......10

2950          KK  608613
2951          KM      Normal depth channel route from C608 to C613
2952          KM      Source:  HEC-2 Cross Section: AS 3.421
2953          RS       2    FLOW      -1
2954          RC   0.100   0.045   0.100  1338.0  0.0202
2955          RX  9885.0  9887.9  9957.3  9986.7 10012.9 10054.7 10086.3 10122.2
2956          RY  1670.2  1670.1  1668.0  1660.0  1659.9  1661.6  1669.9  1670.8
              *
              * *
              * * Move to the top of Sunflower Wash
              * *
              *

2957          KK    211M
2958          KM   Sub-Basin   211M
2959          KM
2960          KM      The Clark Unit Hydrograph is used for this basin.
2961          KM          The Urban time-area relation is used for this basin.
2962          KM
2963          KM      Time of Concentration for this sub-basin is based on the following:
2964          KM          6-Hour Rainfall, Pattern No.  1.00
2965          KM          An rainfall areal reduction factor of 0.999
2966          KM
2967          KM       EXCESS RAINFALL VALUES EXCEEDED IN 5-MINUTE INTERVALS
2968          KM     5  10  15  20  25  30  35  40  45  50  55  60  65  70  75  80  85  90
2969          KM   .48 .48 .48 .17 .14 .14 .07 .07 .06 .06 .06 .05 .01 .01 .01 .01 .01 .01
2970          KM
2971          KM          L=   0.541 miles, S=  266 feet/mile, Kb= .03
2972          KM
2973          BA   0.081
2974          LG    0.07    0.25    5.70    0.18   50.05
2975          UC   0.125   0.094
2976          UA       0       5      16      30      65      77      84      90      94      97
2977          UA     100
              *

2978          KK  610611
2979          KM      Normal depth channel route from C610 to 1611
2980          KM      Source:  HEC-2 Cross Section: SU 0.216
2981          RS       2    FLOW      -1
2982          RC   0.050   0.045   0.050  1090.0  0.0211
2983          RX  9911.9  9948.1  9973.6  9988.6 10007.1 10027.0 10049.8 10143.7
2984          RY  1699.3  1691.7  1686.3  1680.1  1679.7  1686.6  1687.3  1698.6
              *

2985          KK    211N
2986          KM   Sub-Basin   211N
2987          KM
2988          KM      The Clark Unit Hydrograph is used for this basin.
2989          KM          The Urban time-area relation is used for this basin.
2990          KM
2991          KM      Time of Concentration for this sub-basin is based on the following:
2992          KM          6-Hour Rainfall, Pattern No.  1.00
2993          KM          An rainfall areal reduction factor of 1.000
```

```
LINE          ID.......1.......2.......3.......4.......5.......6.......7.......8.......9......10

2994          KM
2995          KM       EXCESS RAINFALL VALUES EXCEEDED IN 5-MINUTE INTERVALS
2996          KM     5  10  15  20  25  30  35  40  45  50  55  60  65  70  75  80  85  90
2997          KM   .49 .48 .48 .18 .15 .14 .07 .07 .07 .06 .06 .06 .01 .01 .01 .01 .01 .01
2998          KM
2999          KM          L=   0.261 miles, S=  235 feet/mile, Kb= .03
3000          KM
3001          BA   0.020
3002          LG    0.07    0.25    5.70    0.18   56.58
3003          UC   0.088   0.078
3004          UA       0       5      16      30      65      77      84      90      94      97
3005          UA     100
              *

3006          KK   C611R
3007          KM      Hydrograph combine 610611 + 211N at C611 right branch
3008          HC       2
              *

3009          KK    211O
3010          KM   Sub-Basin   211O
3011          KM
3012          KM      The Clark Unit Hydrograph is used for this basin.
3013          KM          The Urban time-area relation is used for this basin.
3014          KM
3015          KM      Time of Concentration for this sub-basin is based on the following:
3016          KM          6-Hour Rainfall, Pattern No.  1.00
3017          KM          An rainfall areal reduction factor of 0.999
3018          KM
3019          KM       EXCESS RAINFALL VALUES EXCEEDED IN 5-MINUTE INTERVALS
3020          KM     5  10  15  20  25  30  35  40  45  50  55  60  65  70  75  80  85  90
3021          KM   .48 .48 .48 .17 .14 .14 .06 .06 .06 .06 .05 .05 .01 .01 .01 .01 .01 .01
3022          KM
3023          KM          L=   0.371 miles, S=  257 feet/mile, Kb= .03
3024          KM
3025          BA   0.041
3026          LG    0.08    0.25    5.70    0.18   45.31
3027          UC   0.104   0.084
3028          UA       0       5      16      30      65      77      84      90      94      97
3029          UA     100
              *

3030          KK   C609O
3031          KM      Reservoir route at C609.
3032          RS       1    ELEV  1694.0
3033          SV    0.00    0.10    0.21    0.50    0.86    1.40    1.93    2.60    3.10    3.20
3034          SV    3.39    3.60    3.80    4.00    4.10    4.30    4.50    4.70    4.90    5.10
3035          SE  1694.0  1695.0  1696.0  1697.0  1698.0  1699.0  1700.0  1701.0  1701.6  1701.8
3036          SE  1702.0  1702.2  1702.4  1702.6  1702.8  1703.0  1703.2  1703.4  1703.6  1703.8
3037          SQ       0       6      16      33      48      59      68      75      79      85
3038          SQ     108     149     209     289     390     512     658     829    1025    1247
              *
```



```
LINE          ID.......1.......2.......3.......4.......5.......6.......7.......8.......9......10

3039          KK  609611
3040          KM      Normal depth channel route from C609 to C611
3041          KM      Source:  200 Scale Mapping
3042          RS       2    FLOW      -1
3043          RC   0.035   0.050   0.035   470.0  0.0200
3044          RX  1000.0  1025.0  1050.0  1054.0  1064.0  1068.0  1088.0  1103.0
3045          RY  1690.0  1688.0  1684.0  1682.0  1682.0  1684.0  1688.0  1690.0
              *

3046          KK   C611I
3047          KM      Hydrograph combine 609611 + C611R at C611I
3048          HC       2
              *

3049          KK   C611O
3050          KM      Reservoir route at C611.
3051          RS       1    ELEV  1668.4
3052          SV    0.00    0.41    1.10    2.49    4.34    6.64    6.72    6.81    6.89    6.97
3053          SV    7.06    7.14    7.22    7.31    7.39    7.47    7.56    7.64    7.72    7.81
3054          SE  1674.0  1676.0  1678.0  1680.0  1682.0  1684.0  1684.2  1684.4  1684.6  1684.8
3055          SE  1685.0  1685.2  1685.4  1685.6  1685.8  1686.0  1686.2  1686.4  1686.6  1686.8
3056          SQ       0       0      86     117     141     162     164     170     181     199
3057          SQ     225     262     313     378     460     558     673     807     958    1118
              *

3058          KK   D611L
3059          KM      Hydrograph diversion at C611.  Main flow continues in the left branch.
3060          KM      Diverted flow is in the right branch.
3061          DT   D611R
3062          DI       0       0      86     117     141     162     164     170     181     199
3063          DI     225     262     313     378     460     558     673     807     958    1118
3064          DQ       0       0      86     117     141     162     164     165     167     169
3065          DQ     171     173     175     176     178     180     182     183     185     187
              *

3066          KK  611612
3067          KM      Normal depth channel route from C611 to C612
3068          KM      Source:  200 Scale Mapping
3069          RS       4    FLOW      -1
3070          RC   0.040   0.018   0.040   925.0  0.0270
```

```
3071          RX  1000.0  1020.0  1023.0  1041.0  1059.0  1060.2  1071.2  1136.2
3072          RY  1666.0  1664.0  1663.5  1663.9  1663.5  1663.9  1664.0  1666.0
              *

3073          KK    211P
3074          KM   Sub-Basin   211P
3075          KM
3076          KM      The Clark Unit Hydrograph is used for this basin.
3077          KM          The Urban time-area relation is used for this basin.
3078          KM
3079          KM      Time of Concentration for this sub-basin is based on the following:
3080          KM          6-Hour Rainfall, Pattern No.  1.00
3081          KM          An rainfall areal reduction factor of 1.000
3082          KM
1                                          HEC-1 INPUT                                          PAGE 72

LINE          ID.......1.......2.......3.......4.......5.......6.......7.......8.......9......10

3083          KM       EXCESS RAINFALL VALUES EXCEEDED IN 5-MINUTE INTERVALS
3084          KM     5  10  15  20  25  30  35  40  45  50  55  60  65  70  75  80  85  90
3085          KM   .49 .49 .49 .18 .15 .15 .07 .07 .07 .07 .07 .07 .01 .01 .01 .01 .01 .01
3086          KM
3087          KM          L=   0.307 miles, S=  192 feet/mile, Kb= .03
3088          KM
3089          BA   0.033
3090          LG    0.08    0.15    7.00    0.11   45.00
3091          UC   0.100   0.077
3092          UA       0       5      16      30      65      77      84      90      94      97
3093          UA     100
              *

3094          KK    C612
3095          KM      Hydrograph combine 611612 + 211P at C612
3096          HC       2
              *
              * *
              * * NOTE: 612613 is too short to route
              * *
              *

3097          KK    C613
3098          KM      Hydrograph combine 608613 + C612 at C613
3099          HC       2
              *

3100          KK  613621
3101          KM      Normal depth channel route from C613 to C621
3102          KM      Source:  HEC-2 Cross Section: AS 3.241
3103          RS       1    FLOW      -1
3104          RC   0.100   0.045   0.100   718.0  0.0251
3105          RX  9695.4  9884.0  9985.0  9991.1 10033.8 10062.8 10097.5 10165.1
3106          RY  1655.5  1647.5  1645.8  1641.1  1640.6  1642.1  1648.7  1654.3
              *

3107          KK    211L
3108          KM   Sub-Basin   211L
3109          KM
3110          KM      The Clark Unit Hydrograph is used for this basin.
3111          KM          The Urban time-area relation is used for this basin.
3112          KM
3113          KM      Time of Concentration for this sub-basin is based on the following:
3114          KM          6-Hour Rainfall, Pattern No.  1.00
3115          KM          An rainfall areal reduction factor of 0.999
3116          KM
3117          KM       EXCESS RAINFALL VALUES EXCEEDED IN 5-MINUTE INTERVALS
3118          KM     5  10  15  20  25  30  35  40  45  50  55  60  65  70  75  80  85  90
3119          KM   .47 .46 .46 .16 .12 .12 .05 .05 .05 .04 .04 .04 .01 .01 .01 .01 .01 .01
3120          KM
3121          KM          L=   0.508 miles, S=  181 feet/mile, Kb= .03
3122          KM
3123          BA   0.096
3124          LG    0.11    0.26    4.35    0.36   42.40
3125          UC   0.138   0.091
1                                          HEC-1 INPUT                                          PAGE 73

LINE          ID.......1.......2.......3.......4.......5.......6.......7.......8.......9......10

3126          UA       0       5      16      30      65      77      84      90      94      97
3127          UA     100
              *

3128          KK   C621L
3129          KM     Hydrograph combine 613621 + 211L at C621 left branch
3130          HC       2
              *
              * *
              * * Move to the top of Arrow Wash
              * *
              *

3131          KK    211Q
3132          KM   Sub-Basin   211Q
3133          KM
3134          KM      The Clark Unit Hydrograph is used for this basin.
3135          KM          The Urban time-area relation is used for this basin.
3136          KM
3137          KM      Time of Concentration for this sub-basin is based on the following:
3138          KM          6-Hour Rainfall, Pattern No.  1.00
3139          KM          An rainfall areal reduction factor of 1.000
3140          KM
3141          KM       EXCESS RAINFALL VALUES EXCEEDED IN 5-MINUTE INTERVALS
```

```
3142          KM     5  10  15  20  25  30  35  40  45  50  55  60  65  70  75  80  85  90
3143          KM   .48 .47 .47 .17 .13 .13 .06 .06 .05 .05 .04 .04 .01 .01 .01 .01 .01 .01
3144          KM
3145          KM          L=   0.255 miles, S=  295 feet/mile, Kb= .03
3146          KM
3147          BA   0.021
3148          LG    0.08    0.25    5.70    0.18   30.04
3149          UC   0.083   0.071
3150          UA       0       5      16      30      65      77      84      90      94      97
3151          UA     100
              *

3152          KK  616617
3153          KM      Normal depth channel route from C616 to C617
3154          KM      Source:  200 Scale Mapping
3155          RS       2    FLOW      -1
3156          RC   0.070   0.060   0.070  1131.0  0.0553
3157          RX  1000.0  1008.0  1015.0  1045.0  1050.0  1080.0  1100.0  1110.0
3158          RY  1834.0  1832.0  1830.0  1826.0  1826.0  1830.0  1834.0  1836.0
              *

3159          KK    211R
3160          KM   Sub-Basin   211R
3161          KM
3162          KM      The Clark Unit Hydrograph is used for this basin.
3163          KM          The Urban time-area relation is used for this basin.
3164          KM
3165          KM      Time of Concentration for this sub-basin is based on the following:
3166          KM          6-Hour Rainfall, Pattern No.  1.00
3167          KM          An rainfall areal reduction factor of 0.999
3168          KM
```



```
LINE          ID.......1.......2.......3.......4.......5.......6.......7.......8.......9......10

3169          KM       EXCESS RAINFALL VALUES EXCEEDED IN 5-MINUTE INTERVALS
3170          KM     5  10  15  20  25  30  35  40  45  50  55  60  65  70  75  80  85  90
3171          KM   .48 .47 .47 .17 .14 .13 .06 .06 .06 .05 .05 .04 .01 .01 .01 .01 .01 .01
3172          KM
3173          KM          L=   0.572 miles, S=  271 feet/mile, Kb= .03
3174          KM
3175          BA   0.084
3176          LG    0.08    0.25    5.70    0.18   37.77
3177          UC   0.125   0.096
3178          UA       0       5      16      30      65      77      84      90      94      97
3179          UA     100
              *

3180          KK   C617L
3181          KM      Hydrograph combine 616617 + 211R at C617 left branch
3182          HC       2
              *

3183          KK    211U
3184          KM   Sub-Basin   211U
3185          KM
3186          KM      The Clark Unit Hydrograph is used for this basin.
3187          KM          The Urban time-area relation is used for this basin.
3188          KM
3189          KM      Time of Concentration for this sub-basin is based on the following:
3190          KM          6-Hour Rainfall, Pattern No.  1.00
3191          KM          An rainfall areal reduction factor of 1.000
3192          KM
3193          KM       EXCESS RAINFALL VALUES EXCEEDED IN 5-MINUTE INTERVALS
3194          KM     5  10  15  20  25  30  35  40  45  50  55  60  65  70  75  80  85  90
3195          KM   .49 .49 .49 .18 .15 .15 .07 .07 .07 .07 .07 .06 .02 .02 .02 .02 .02 .02
3196          KM
3197          KM          L=   0.831 miles, S=  214 feet/mile, Kb= .03
3198          KM
3199          BA   0.027
3200          LG    0.07    0.25    5.70    0.18   65.99
3201          UC   0.163   0.330
3202          UA       0       5      16      30      65      77      84      90      94      97
3203          UA     100
              *

3204          KK   D614L
3205          KM      Hydrograph diversion at C614.  Main flow continues in the left branch.
3206          KM      Diverted flow is in the right branch.
3207          DT   D614R
3208          DI       0     4.3     8.5    20.0    49.0    85.5
3209          DQ       0     2.5     5.0    13.5    35.0    60.0
              *

3210          KK    C617
3211          KM      Hydrograph combine C617L + D614L at C617
3212          HC       2
              *
```



```
LINE          ID.......1.......2.......3.......4.......5.......6.......7.......8.......9......10

3213          KK  617618
3214          KM      Normal depth channel route from C617 to C618
3215          KM      Source:  HEC-2 Cross Section: AR 0.836
3216          RS       3    FLOW      -1
3217          RC   0.070   0.060   0.070  1912.0  0.0345
3218          RX  9983.3  9987.2  9989.2  9991.1 10031.5 10053.5 10070.6 10097.7
3219          RY  1766.5  1762.3  1760.2  1758.1  1757.8  1760.8  1764.2  1770.6
              *
```

```
3220          KK    211S
3221          KM   Sub-Basin   211S
3222          KM
3223          KM      The Clark Unit Hydrograph is used for this basin.
3224          KM          The Urban time-area relation is used for this basin.
3225          KM
3226          KM      Time of Concentration for this sub-basin is based on the following:
3227          KM          6-Hour Rainfall, Pattern No.  1.00
3228          KM          An rainfall areal reduction factor of 0.999
3229          KM
3230          KM       EXCESS RAINFALL VALUES EXCEEDED IN 5-MINUTE INTERVALS
3231          KM     5  10  15  20  25  30  35  40  45  50  55  60  65  70  75  80  85  90
3232          KM   .47 .47 .46 .16 .13 .12 .06 .05 .05 .04 .03 .03 .01 .01 .01 .01 .01 .01
3233          KM
3234          KM          L=   0.445 miles, S=  272 feet/mile, Kb= .07
3235          KM
3236          BA   0.050
3237          LG    0.11    0.31    5.70    0.19   30.06
3238          UC   0.175   0.154
3239          UA       0       5      16      30      65      77      84      90      94      97
3240          UA     100
              *

3241          KK   C618I
3242          KM      Hydrograph combine 617618 + 211S at C618I
3243          HC       2
              *

3244          KK   C618O
3245          KM      Reservoir route at C618.
3246          RS       1    ELEV  1730.6
3247          SV    0.00    0.06    0.24    0.50    0.75    1.20    1.66    2.30    2.94    3.20
3248          SV    3.30    3.40    3.60    3.80    3.90    4.10    4.30    4.50    4.65     5.0
3249          SE  1730.6  1736.0  1738.0  1739.0  1740.0  1741.0  1742.0  1743.0  1744.0  1744.3
3250          SE  1744.4  1744.6  1744.8  1745.0  1745.2  1745.4  1745.6  1745.8  1746.0  1746.2
3251          SQ       0     2.6     3.0     3.1     3.2     3.3     3.5     3.6     3.7     3.7
3252          SQ     3.8       8      21      48      88     143     212     295     390     499
              *

3253          KK  BB614R
3254          KM      Retrieve previously diverted hydrograph at C614 in the right branch.
3255          DR   D614R
              *
```



```
LINE          ID.......1.......2.......3.......4.......5.......6.......7.......8.......9......10

3256          KK  614615
3257          KM      Normal depth channel route from C614 to C615
3258          KM      Source:  Hydrology Field Reconnaissance
3259          RS       3    FLOW     -1
3260          RC   0.040   0.018   0.040  1114.0  0.0397
3261          RX  1000.0  1020.0  1025.0  1059.0  1091.0  1093.0  1098.0  1103.0
3262          RY  1828.0  1822.0  1821.5  1822.2  1821.8  1822.0  1824.0  1826.0
              *

3263          KK    211V
3264          KM   Sub-Basin   211V
3265          KM
3266          KM      The Clark Unit Hydrograph is used for this basin.
3267          KM          The Urban time-area relation is used for this basin.
3268          KM
3269          KM      Time of Concentration for this sub-basin is based on the following:
3270          KM          6-Hour Rainfall, Pattern No.  1.00
3271          KM          An rainfall areal reduction factor of 1.000
3272          KM
3273          KM       EXCESS RAINFALL VALUES EXCEEDED IN 5-MINUTE INTERVALS
3274          KM     5  10  15  20  25  30  35  40  45  50  55  60  65  70  75  80  85  90
3275          KM   .50 .50 .50 .19 .16 .16 .08 .08 .08 .08 .08 .08 .02 .02 .02 .02 .02 .02
3276          KM
3277          KM          L=   0.222 miles, S=  212 feet/mile, Kb= .04
3278          KM
3279          BA   0.005
3280          LG    0.06    0.25    5.80    0.18   90.00
3281          UC   0.096   0.170
3282          UA       0       5      16      30      65      77      84      90      94      97
3283          UA     100
              *

3284          KK    C615
3285          KM      Hydrograph combine 614615 + 211V at C615
3286          HC       2    0.03
              *

3287          KK   D615L
3288          KM      Hydrograph diversion at C615.  Main flow continues in the left branch.
3289          KM      Diverted flow is in the right branch.
3290          DT   D615R
3291          DI       0     1.3     2.5     5.3     8.6    14.2    23.0    36.8    55.5    77.5
3292          DQ       0       0       0     1.3     2.6     4.2     7.0    12.8    19.5    29.5
              *

3293          KK  615618
3294          KM      Normal depth channel route from C615 to C618
3295          KM      Source:  Hydrology Field Reconnaissance
3296          RS       1    FLOW     -1
3297          RC   0.040   0.018   0.040   499.0  0.1338
3298          RX  1000.0  1008.0  1009.2  1013.2  1027.2  1028.4  1036.4  1045.4
3299          RY  1800.4  1799.6  1799.2  1798.8  1798.3  1798.7  1798.9  1800.4
```

```
                *
LINE            ID.......1.......2.......3.......4.......5.......6.......7.......8.......9......10

3300            KK    C618
3301            KM      Hydrograph combine C6180 + 615618 at C618
3302            HC       2    0.19
                *

3303            KK  618619
3304            KM      Normal depth channel route from C618 to C619
3305            KM      Source:  HEC-2 Cross Section: AR 0.441
3306            RS       3    FLOW      -1
3307            RC   0.070   0.060   0.070  1837.0  0.0285
3308            RX  9870.6  9928.6  9957.1  9996.9 10004.9 10022.1 10062.0 10116.4
3309            RY  1709.2  1700.9  1698.8  1690.0  1689.8  1699.6  1700.3  1711.3
                *

3310            KK    211T
3311            KM   Sub-Basin   211T
3312            KM
3313            KM      The Clark Unit Hydrograph is used for this basin.
3314            KM          The Urban time-area relation is used for this basin.
3315            KM
3316            KM      Time of Concentration for this sub-basin is based on the following:
3317            KM          6-Hour Rainfall, Pattern No.  1.00
3318            KM          An rainfall areal reduction factor of 0.999
3319            KM
3320            KM       EXCESS RAINFALL VALUES EXCEEDED IN 5-MINUTE INTERVALS
3321            KM     5  10  15  20  25  30  35  40  45  50  55  60  65  70  75  80  85  90
3322            KM   .49 .49 .49 .18 .15 .15 .07 .07 .07 .07 .06 .06 .01 .01 .01 .01 .01 .01
3323            KM
3324            KM          L=   0.488 miles, S=  250 feet/mile, Kb= .03
3325            KM
3326            BA   0.066
3327            LG    0.07    0.25    5.70    0.18   64.25
3328            UC   0.117   0.090
3329            UA       0       5      16      30      65      77      84      90      94      97
3330            UA     100
                *

3331            KK   C619L
3332            KM      Hydrograph combine 618619 + 211T at C619 left branch
3333            HC       2
                *

3334            KK  BB615R
3335            KM      Retrieve previously diverted hydrograph at C615 in the right branch.
3336            DR   D615R
                *

3337            KK  615619
3338            KM      Normal depth channel route from C615 to C619
3339            KM      Source:  Hydrology Field Reconnaissance
3340            RS       6    FLOW      -1
3341            RC   0.045   0.024   0.025  2444.0  0.0493
3342            RX  1000.0  1009.3  1018.5  1037.0  1039.3  1053.0  1065.0  1065.0
3343            RY  1727.2  1726.5  1725.8  1724.4  1724.6  1725.8  1725.9  1725.9
                *
```



```
LINE            ID.......1.......2.......3.......4.......5.......6.......7.......8.......9......10

3344            KK   C619I
3345            KM      Hydrograph combine C619L + 615619 at C619I
3346            HC       2    0.25
                *

3347            KK   C619O
3348            KM      Reservoir route at C619.
3349            RS       1    ELEV  1675.6
3350            SV    0.00    1.72    2.98    4.70    7.00    7.08    7.17    7.26    7.34    7.43
3351            SV    7.51    7.60    7.69    7.77    7.86
3352            SE  1675.6  1686.0  1688.0  1690.0  1692.0  1692.2  1692.4  1692.6  1692.8  1693.0
3353            SE  1693.2  1693.4  1693.6  1693.8  1694.0
3354            SQ       0       4      25      72     128     155     163     172     178     187
3355            SQ     195     213     238     273     318     374     441     518     606     706
3356            SE  1675.6  1676.0  1678.0  1680.0  1682.0  1684.0  1686.0  1688.0  1690.0  1692.0
3357            SE  1692.2  1692.4  1692.6  1692.8  1693.0  1693.2  1693.4  1693.6  1693.8  1694.0
                *

3358            KK   D619R
3359            KM      Hydrograph diversion at C619.  Main flow continues in the right branch.
3360            KM      Diverted flow is in the left branch.
3361            DT   D619L
3362            DI       0       4      25      72     128     155     163     172     178     187
3363            DI     195     213     238     273     318     374     441     518     606     706
3364            DQ       0       0       0       0       0       0       0       0       0       0
3365            DQ       8      24      49      83     128     182     249     326     412     512
                *

3366            KK  619620
3367            KM                 Lag route through Palisades Plaza storm drain
3368            RT       0               1
                *

3369            KK  BB619L
3370            KM      Retrieve previously diverted hydrograph at C619 in the left branch.
```

```
3371          DR   D619L
              *

3372          KK  619620
3373          KM   Normal depth channel route from C619 to C620 in Fountain Hills Blvd.
3374          KM   Source:  200 Scale Mapping. Similiar to 523548
3375          RS       1    FLOW      -1
3376          RC   0.040   0.024   0.040   800.0  0.0288
3377          RX   918.0   940.0   960.0  1000.0  1040.0  1040.1  1044.1  1088.1
3378          RY  1648.0  1645.8  1643.8  1644.7  1644.0  1644.5  1644.5  1648.0
              *

3379          KK    211W
3380          KM   Sub-Basin   211W
3381          KM
3382          KM      The Clark Unit Hydrograph is used for this basin.
3383          KM          The Urban time-area relation is used for this basin.
3384          KM
3385          KM      Time of Concentration for this sub-basin is based on the following:
```



```
LINE          ID.......1.......2.......3.......4.......5.......6.......7.......8.......9......10

3386          KM          6-Hour Rainfall, Pattern No.  1.00
3387          KM          An rainfall areal reduction factor of 1.000
3388          KM
3389          KM       EXCESS RAINFALL VALUES EXCEEDED IN 5-MINUTE INTERVALS
3390          KM     5  10  15  20  25  30  35  40  45  50  55  60  65  70  75  80  85  90
3391          KM   .49 .49 .49 .19 .16 .15 .08 .08 .07 .07 .07 .07 .02 .02 .02 .02 .02 .02
3392          KM
3393          KM          L=   0.289 miles, S=  173 feet/mile, Kb= .03
3394          KM
3395          BA   0.030
3396          LG    0.06    0.25    5.70    0.18   73.65
3397          UC   0.100   0.079
3398          UA       0       5      16      30      65      77      84      90      94      97
3399          UA     100
              *

3400          KK   C620R
3401          KM      Hydrograph combine 619620 + R619L + 211W at C620 right branch
3402          HC       3    0.28
              *

3403          KK  BB611R
3404          KM      Retrieve previously diverted hydrograph at C611 in the right branch.
3405          DR   D611R
              *

3406          KK  611620
3407          KM                  Lag route through Palisades Plaza storm drain
3408          RT       0                1
              *

3409          KK    C620
3410          KM      Hydrograph combine 611620 + C620R at C620
3411          HC       2    0.42
              *

3412          KK  620621
3413          KM      Normal depth channel route from C620 to C621
3414          KM      Source:  HEC-2 Cross Section: AR 0.081
3415          RS       1    FLOW      -1
3416          RC   0.050   0.050   0.050   915.0  0.0394
3417          RX  9790.0  9790.1  9972.2  9994.8 10004.9 10029.7 10048.6 10125.0
3418          RY  1657.9  1657.5  1656.4  1646.8  1646.8  1657.8  1657.0  1657.9
              *

3419          KK    C621
3420          KM      Hydrograph combine C621L + 620621 at C621
3421          HC       2    7.93
              *
```



```
LINE          ID.......1.......2.......3.......4.......5.......6.......7.......8.......9......10

3422          KK  621622
3423          KM      Normal depth channel route from C621 to C622
3424          KM      Source:  HEC-2 Cross Section: AS 2.785
3425          RS       6    FLOW      -1
3426          RC   0.100   0.045   0.100  3830.0  0.0144
3427          RX  9827.3  9922.9  9951.0 10000.0 10002.7 10044.7 10071.6 10076.8
3428          RY  1615.2  1611.0  1604.1  1600.8  1601.5  1601.6  1611.0  1613.9
              *

3429          KK    211X
3430          KM   Sub-Basin   211X
3431          KM
3432          KM      The Clark Unit Hydrograph is used for this basin.
3433          KM          The Urban time-area relation is used for this basin.
3434          KM
3435          KM      Time of Concentration for this sub-basin is based on the following:
3436          KM          6-Hour Rainfall, Pattern No.  1.00
3437          KM          An rainfall areal reduction factor of 0.997
3438          KM
3439          KM       EXCESS RAINFALL VALUES EXCEEDED IN 5-MINUTE INTERVALS
3440          KM     5  10  15  20  25  30  35  40  45  50  55  60  65  70  75  80  85  90
3441          KM   .48 .48 .48 .17 .14 .14 .06 .06 .06 .05 .05 .05 .01 .01 .01 .01 .01 .01
3442          KM
3443          KM          L=   0.929 miles, S=  111 feet/mile, Kb= .03
```

```
3444          KM
3445          BA   0.214
3446          LG    0.10    0.26    4.90    0.26   56.64
3447          UC   0.213   0.151
3448          UA       0       5      16      30      65      77      84      90      94      97
3449          UA     100
              *

3450          KK   C622R
3451          KM      Hydrograph combine 621622 + 211X at C622 right branch
3452          HC       2
              *
              * *
              * * Move to the top of Tulip Wash
              * *
              *

3453          KK    211A
3454          KM   Sub-Basin   211A
3455          KM
3456          KM      The Clark Unit Hydrograph is used for this basin.
3457          KM          The Urban time-area relation is used for this basin.
3458          KM
3459          KM      Time of Concentration for this sub-basin is based on the following:
3460          KM          6-Hour Rainfall, Pattern No.  1.00
3461          KM          An rainfall areal reduction factor of 0.998
3462          KM
3463          KM       EXCESS RAINFALL VALUES EXCEEDED IN 5-MINUTE INTERVALS
3464          KM     5  10  15  20  25  30  35  40  45  50  55  60  65  70  75  80  85  90
3465          KM   .47 .47 .47 .16 .13 .12 .06 .06 .05 .04 .04 .03 .01 .01 .01 .01 .01 .01
```



```
LINE          ID.......1.......2.......3.......4.......5.......6.......7.......8.......9......10

3466          KM
3467          KM          L=   0.820 miles, S=  248 feet/mile, Kb= .03
3468          KM
3469          BA   0.143
3470          LG    0.09    0.25    5.70    0.18   23.09
3471          UC   0.158   0.124
3472          UA       0       5      16      30      65      77      84      90      94      97
3473          UA     100
              *

3474          KK   C600O
3475          KM      Reservoir route at C600.
3476          RS       1    ELEV  1754.0
3477          SV    0.00    0.14    0.62    1.52    2.95    5.06    7.98   11.80   16.61   22.67
3478          SV   30.07   38.71   40.50   40.60   41.60   42.70   43.70   44.60   45.70
3479          SE  1754.0  1756.0  1758.0  1760.0  1762.0  1764.0  1766.0  1768.0  1770.0  1772.0
3480          SE  1774.0  1776.0 1776.36  1776.4  1776.6  1776.8  1777.0  1777.2  1777.4
3481          SQ       0      55     183     320     427     513     570     620     665     709
3482          SQ     750     789     795     795     812     849     906     984    1084
              *

3483          KK  600601
3484          KM      Normal depth channel route from C600 to C601
3485          KM      Source:  HEC-2 Cross Section: TU 1.538
3486          RS       3    FLOW      -1
3487          RC   0.040   0.025   0.040  2406.0  0.0176
3488          RX  9945.6  9959.4  9968.3  9985.9 10000.0 10017.2 10038.7 10058.8
3489          RY  1734.5  1732.3  1727.9  1726.2  1725.0  1727.7  1735.2  1736.0
              *

3490          KK    211B
3491          KM   Sub-Basin   211B
3492          KM
3493          KM      The Clark Unit Hydrograph is used for this basin.
3494          KM          The Urban time-area relation is used for this basin.
3495          KM
3496          KM      Time of Concentration for this sub-basin is based on the following:
3497          KM          6-Hour Rainfall, Pattern No.  1.00
3498          KM          An rainfall areal reduction factor of 0.999
3499          KM
3500          KM       EXCESS RAINFALL VALUES EXCEEDED IN 5-MINUTE INTERVALS
3501          KM     5  10  15  20  25  30  35  40  45  50  55  60  65  70  75  80  85  90
3502          KM   .47 .47 .46 .16 .13 .12 .05 .05 .05 .04 .04 .03 .00 .00 .00 .00 .00 .00
3503          KM
3504          KM          L=   0.618 miles, S=  244 feet/mile, Kb= .03
3505          KM
3506          BA   0.109
3507          LG    0.09    0.25    5.80    0.18   20.22
3508          UC   0.138   0.099
3509          UA       0       5      16      30      65      77      84      90      94      97
3510          UA     100
              *
```



```
LINE          ID.......1.......2.......3.......4.......5.......6.......7.......8.......9......10

3511          KK    C601
3512          KM      Hydrograph combine 600601 + 211B at C601
3513          HC       2
              *

3514          KK  601602
3515          KM      Normal depth channel route from C601 to C602
3516          KM      Source:  HEC-2 Cross Section: TU 1.102
3517          RS       3    FLOW      -1
3518          RC   0.065   0.040   0.055  1765.0  0.0146
```

```
3519          RX  9916.9  9959.1  9965.8  9980.2 10004.0 10019.5 10047.3 10094.1
3520          RY  1699.9  1699.8  1696.4  1689.8  1688.9  1695.7  1698.2  1698.4
              *

3521          KK   211C
3522          KM  Sub-Basin   211C
3523          KM
3524          KM     The Clark Unit Hydrograph is used for this basin.
3525          KM         The Urban time-area relation is used for this basin.
3526          KM
3527          KM     Time of Concentration for this sub-basin is based on the following:
3528          KM         6-Hour Rainfall, Pattern No.  1.00
3529          KM         An rainfall areal reduction factor of 0.999
3530          KM
3531          KM       EXCESS RAINFALL VALUES EXCEEDED IN 5-MINUTE INTERVALS
3532          KM     5  10  15  20  25  30  35  40  45  50  55  60  65  70  75  80  85  90
3533          KM   .48 .48 .48 .17 .14 .14 .06 .06 .06 .05 .05 .05 .01 .01 .01 .01 .01 .01
3534          KM
3535          KM         L=   0.479 miles, S=  154 feet/mile, Kb= .03
3536          KM
3537          BA   0.043
3538          LG    0.08    0.25    5.70    0.18   44.48
3539          UC   0.138   0.137
3540          UA       0       5      16      30      65      77      84      90      94      97
3541          UA     100
              *

3542          KK   C602L
3543          KM     Hydrograph combine 601602 + 211C at C602 left branch
3544          HC       2
              *

3545          KK   211D
3546          KM  Sub-Basin   211D
3547          KM
3548          KM     The Clark Unit Hydrograph is used for this basin.
3549          KM         The Urban time-area relation is used for this basin.
3550          KM
3551          KM     Time of Concentration for this sub-basin is based on the following:
3552          KM         6-Hour Rainfall, Pattern No.  1.00
3553          KM         An rainfall areal reduction factor of 0.999
3554          KM
3555          KM       EXCESS RAINFALL VALUES EXCEEDED IN 5-MINUTE INTERVALS
3556          KM     5  10  15  20  25  30  35  40  45  50  55  60  65  70  75  80  85  90
```



```
LINE          ID.......1.......2.......3.......4.......5.......6.......7.......8.......9......10

3557          KM   .46 .45 .45 .15 .11 .11 .04 .04 .04 .03 .03 .03 .01 .01 .01 .01 .01 .01
3558          KM
3559          KM         L=   0.686 miles, S=  115 feet/mile, Kb= .03
3560          KM
3561          BA   0.071
3562          LG    0.08    0.25    3.85    0.46   37.42
3563          UC   0.183   0.189
3564          UA       0       5      16      30      65      77      84      90      94      97
3565          UA     100
              *

3566          KK   C602
3567          KM     Hydrograph combine C602L + 211D at C602
3568          HC       2
              *

3569          KK  602603
3570          KM     Normal depth channel route from C602 to C603
3571          KM     Source:  HEC-2 Cross Section: LE 0.672
3572          RS       3    FLOW      -1
3573          RC   0.060   0.045   0.060  2610.0  0.0211
3574          RX  9891.9  9963.9  9986.5 10000.0 10012.7 10023.8 10085.0 10176.4
3575          RY  1653.5  1653.5  1644.4  1644.1  1645.0  1649.8  1651.7  1656.7
              *

3576          KK   211E
3577          KM  Sub-Basin   211E
3578          KM
3579          KM     The Clark Unit Hydrograph is used for this basin.
3580          KM         The Urban time-area relation is used for this basin.
3581          KM
3582          KM     Time of Concentration for this sub-basin is based on the following:
3583          KM         6-Hour Rainfall, Pattern No.  1.00
3584          KM         An rainfall areal reduction factor of 0.998
3585          KM
3586          KM       EXCESS RAINFALL VALUES EXCEEDED IN 5-MINUTE INTERVALS
3587          KM     5  10  15  20  25  30  35  40  45  50  55  60  65  70  75  80  85  90
3588          KM   .48 .47 .47 .17 .13 .13 .06 .06 .06 .05 .04 .04 .01 .01 .01 .01 .01 .01
3589          KM
3590          KM         L=   0.609 miles, S=  118 feet/mile, Kb= .03
3591          KM
3592          BA   0.156
3593          LG    0.08    0.25    5.10    0.24   42.21
3594          UC   0.171   0.101
3595          UA       0       5      16      30      65      77      84      90      94      97
3596          UA     100
              *

3597          KK   C603
3598          KM     Hydrograph combine 602603 + 211E at C603
3599          HC       2
              *
```

```
LINE          ID.......1.......2.......3.......4.......5.......6.......7.......8.......9......10

3600          KK  603622
3601          KM      Normal depth channel route from C603 to C622
3602          KM      Source:  HEC-2 Cross Section: LE 0.287
3603          RS       4    FLOW      -1
3604          RC   0.060   0.045   0.060  2745.0  0.0204
3605          RX  9883.0  9929.7  9967.3  9991.6 10042.2 10073.6 10177.6 10194.5
3606          RY  1619.4  1618.7  1611.8  1602.1  1603.3  1609.4  1610.5  1610.6
              *

3607          KK    211F
3608          KM   Sub-Basin   211F
3609          KM
3610          KM      The Clark Unit Hydrograph is used for this basin.
3611          KM          The Urban time-area relation is used for this basin.
3612          KM
3613          KM      Time of Concentration for this sub-basin is based on the following:
3614          KM          6-Hour Rainfall, Pattern No.  1.00
3615          KM          An rainfall areal reduction factor of 0.999
3616          KM
3617          KM       EXCESS RAINFALL VALUES EXCEEDED IN 5-MINUTE INTERVALS
3618          KM     5  10  15  20  25  30  35  40  45  50  55  60  65  70  75  80  85  90
3619          KM   .48 .48 .48 .17 .14 .14 .06 .06 .06 .05 .05 .05 .01 .01 .01 .01 .01 .01
3620          KM
3621          KM          L=   0.770 miles, S=  134 feet/mile, Kb= .03
3622          KM
3623          BA   0.113
3624          LG    0.08    0.25    4.30    0.36   62.81
3625          UC   0.183   0.158
3626          UA       0       5      16      30      65      77      84      90      94      97
3627          UA     100
              *

3628          KK   C622L
3629          KM      Hydrograph combine 603622 + 211F at C622 left branch
3630          HC       2
              *

3631          KK    C622
3632          KM      Hydrograph combine C622R + C622L at C622
3633          HC       2
              *

3634          KK  622549
3635          KM      Normal depth channel route from C622 to C549
3636          KM      Source:  HEC-2 Cross Section: AS 2.279
3637          RS       5    FLOW      -1
3638          RC   0.113   0.125   0.120  1697.0  0.0118
3639          RX  9847.1  9851.0  9857.5  9862.8 10052.6 10062.8 10075.6 10084.6
3640          RY  1573.5  1571.3  1567.2  1564.6  1565.1  1566.7  1573.7  1573.9
              *
```



```
LINE          ID.......1.......2.......3.......4.......5.......6.......7.......8.......9......10

3641          KK    211Y
3642          KM   Sub-Basin   211Y
3643          KM
3644          KM      The Clark Unit Hydrograph is used for this basin.
3645          KM          The Urban time-area relation is used for this basin.
3646          KM
3647          KM      Time of Concentration for this sub-basin is based on the following:
3648          KM          6-Hour Rainfall, Pattern No.  1.00
3649          KM          An rainfall areal reduction factor of 0.999
3650          KM
3651          KM       EXCESS RAINFALL VALUES EXCEEDED IN 5-MINUTE INTERVALS
3652          KM     5  10  15  20  25  30  35  40  45  50  55  60  65  70  75  80  85  90
3653          KM   .49 .48 .48 .18 .15 .14 .07 .07 .07 .06 .06 .06 .01 .01 .01 .01 .01 .01
3654          KM
3655          KM          L=   0.606 miles, S=  147 feet/mile, Kb= .04
3656          KM
3657          BA   0.089
3658          LG    0.09    0.21    6.60    0.13   50.06
3659          UC   0.183   0.149
3660          UA       0       5      16      30      65      77      84      90      94      97
3661          UA     100
              *

3662          KK   C549R
3663          KM      Hydrograph combine 622549 + 211Y at C549 right branch
3664          HC       2
              *

3665          KK    C549
3666          KM      Hydrograph combine C549L + C549R at C549
3667          HC       2
              *

3668          KK  549626
3669          KM      Normal depth channel route from C549 to C626
3670          KM      Source:  HEC-2 Cross Section: AS 1.855
3671          RS       6    FLOW      -1
3672          RC   0.113   0.125   0.120  2044.0  0.0171
3673          RX  9943.2  9963.0  9985.6  9994.1 10007.6 10029.2 10150.5 10171.3
3674          RY  1539.3  1534.5  1531.2  1528.3  1528.2  1531.7  1532.5  1537.4
              *
```

```
3675          KK    211Z
3676          KM   Sub-Basin   211Z
3677          KM
3678          KM      The Clark Unit Hydrograph is used for this basin.
3679          KM          The Urban time-area relation is used for this basin.
3680          KM
3681          KM      Time of Concentration for this sub-basin is based on the following:
3682          KM          6-Hour Rainfall, Pattern No.  1.00
3683          KM          An rainfall areal reduction factor of 0.999
3684          KM
3685          KM        EXCESS RAINFALL VALUES EXCEEDED IN 5-MINUTE INTERVALS
3686          KM     5  10  15  20  25  30  35  40  45  50  55  60  65  70  75  80  85  90
1                                          HEC-1 INPUT                                                    PAGE 86

LINE          ID.......1.......2.......3.......4.......5.......6.......7.......8.......9......10

3687          KM   .46 .46 .46 .15 .12 .11 .05 .05 .04 .03 .03 .03 .01 .01 .01 .01 .01 .01
3688          KM
3689          KM          L=   0.509 miles, S=  147 feet/mile, Kb= .04
3690          KM
3691          BA   0.083
3692          LG    0.14    0.27    4.50    0.34   34.43
3693          UC   0.171   0.126
3694          UA       0       5      16      30      65      77      84      90      94      97
3695          UA     100
              *

3696          KK   C626C
3697          KM      Hydrograph combine 549626 + 211Z at C626 main branch
3698          HC       2
              *

3699          KK   211AA
3700          KM   Sub-Basin  211AA
3701          KM
3702          KM      The Clark Unit Hydrograph is used for this basin.
3703          KM          The Urban time-area relation is used for this basin.
3704          KM
3705          KM      Time of Concentration for this sub-basin is based on the following:
3706          KM          6-Hour Rainfall, Pattern No.  1.00
3707          KM          An rainfall areal reduction factor of 1.000
3708          KM
3709          KM        EXCESS RAINFALL VALUES EXCEEDED IN 5-MINUTE INTERVALS
3710          KM     5  10  15  20  25  30  35  40  45  50  55  60  65  70  75  80  85  90
3711          KM   .49 .48 .48 .18 .15 .14 .07 .07 .06 .06 .06 .06 .01 .01 .01 .01 .01 .01
3712          KM
3713          KM          L=   0.480 miles, S=   85 feet/mile, Kb= .03
3714          KM
3715          BA   0.034
3716          LG    0.08    0.19    6.60    0.13   39.38
3717          UC   0.167   0.193
3718          UA       0       5      16      30      65      77      84      90      94      97
3719          UA     100
              *

3720          KK  625626
3721          KM      Normal depth channel route from C625 to C626
3722          KM      Source:  200 Scale Mapping
3723          RS       2    FLOW      -1
3724          RC   0.040   0.018   0.040  1350.0  0.0252
3725          RX  1000.0  1020.0  1021.2  1055.2  1089.2  1090.4  1100.4  1105.4
3726          RY  1527.0  1526.0  1525.6  1526.3  1525.6  1526.0  1528.0  1530.0
              *

3727          KK   211AB
3728          KM   Sub-Basin  211AB
3729          KM
3730          KM      The Clark Unit Hydrograph is used for this basin.
3731          KM          The Urban time-area relation is used for this basin.
3732          KM
3733          KM      Time of Concentration for this sub-basin is based on the following:
1                                          HEC-1 INPUT                                                    PAGE 87

LINE          ID.......1.......2.......3.......4.......5.......6.......7.......8.......9......10

3734          KM          6-Hour Rainfall, Pattern No.  1.00
3735          KM          An rainfall areal reduction factor of 0.999
3736          KM
3737          KM        EXCESS RAINFALL VALUES EXCEEDED IN 5-MINUTE INTERVALS
3738          KM     5  10  15  20  25  30  35  40  45  50  55  60  65  70  75  80  85  90
3739          KM   .49 .49 .49 .18 .15 .15 .07 .07 .07 .07 .07 .07 .01 .01 .01 .01 .01 .01
3740          KM
3741          KM          L=   0.293 miles, S=  321 feet/mile, Kb= .03
3742          KM
3743          BA   0.040
3744          LG    0.07    0.17    6.80    0.12   54.72
3745          UC   0.083   0.055
3746          UA       0       5      16      30      65      77      84      90      94      97
3747          UA     100
              *

3748          KK  623624
3749          KM      Normal depth channel route from C623 to C624
3750          KM      Source:  200 Scale Mapping
3751          RS       1    FLOW      -1
3752          RC   0.040   0.018   0.040   701.0  0.0114
3753          RX  1000.0  1010.0  1011.2  1027.2  1043.2  1044.4  1059.4  1074.4
3754          RY  1534.0  1532.0  1531.6  1531.9  1531.6  1532.0  1532.5  1533.0
              *

3755          KK   211AC
```

```
3756          KM   Sub-Basin  211AC
3757          KM
3758          KM      The Clark Unit Hydrograph is used for this basin.
3759          KM          The Urban time-area relation is used for this basin.
3760          KM
3761          KM      Time of Concentration for this sub-basin is based on the following:
3762          KM          6-Hour Rainfall, Pattern No.  1.00
3763          KM          An rainfall areal reduction factor of 1.000
3764          KM
3765          KM       EXCESS RAINFALL VALUES EXCEEDED IN 5-MINUTE INTERVALS
3766          KM     5  10  15  20  25  30  35  40  45  50  55  60  65  70  75  80  85  90
3767          KM   .49 .49 .49 .19 .16 .15 .08 .08 .07 .07 .07 .07 .01 .01 .01 .01 .01 .01
3768          KM
3769          KM          L=   0.306 miles, S=   82 feet/mile, Kb= .03
3770          KM
3771          BA   0.027
3772          LG    0.08    0.15    8.40    0.07   44.76
3773          UC   0.133   0.119
3774          UA       0       5      16      30      65      77      84      90      94      97
3775          UA     100
              *

3776          KK    C624
3777          KM      Hydrograph combine 623624 + 211AC at C624
3778          HC       2
              *
```



```
LINE          ID.......1.......2.......3.......4.......5.......6.......7.......8.......9......10

3779          KK  624626
3780          KM      Normal depth channel route from C624 to C626
3781          KM      Source:  HEC-2 Cross Section: AS 1.727
3782          RS       2    FLOW      -1
3783          RC   0.080   0.060   0.080   637.0  0.0235
3784          RX  9872.9  9881.0  9893.9  9902.2  9967.6  9976.4 10076.1 10084.3
3785          RY  1526.3  1524.6  1521.7  1520.0  1520.7  1521.6  1520.7  1526.2
              *

3786          KK   211AD
3787          KM   Sub-Basin  211AD
3788          KM
3789          KM      The Clark Unit Hydrograph is used for this basin.
3790          KM          The Urban time-area relation is used for this basin.
3791          KM
3792          KM      Time of Concentration for this sub-basin is based on the following:
3793          KM          6-Hour Rainfall, Pattern No.  1.00
3794          KM          An rainfall areal reduction factor of 0.999
3795          KM
3796          KM       EXCESS RAINFALL VALUES EXCEEDED IN 5-MINUTE INTERVALS
3797          KM     5  10  15  20  25  30  35  40  45  50  55  60  65  70  75  80  85  90
3798          KM   .49 .49 .49 .19 .16 .15 .08 .08 .07 .07 .07 .07 .01 .01 .01 .01 .01 .01
3799          KM
3800          KM          L=   0.489 miles, S=  280 feet/mile, Kb= .03
3801          KM
3802          BA   0.041
3803          LG    0.08    0.15    8.00    0.08   46.16
3804          UC   0.113   0.114
3805          UA       0       5      16      30      65      77      84      90      94      97
3806          UA     100
              *

3807          KK   C626R
3808          KM      Hydrograph combine 624626 + 211AD at C626 right branch
3809          HC       2
              *

3810          KK    C626
3811          KM      Hydrograph combine C626C + 625626 at C626R
3812          HC       3
              *

3813          KK  626627
3814          KM      Normal depth channel route from C626 to C627
3815          KM      Source:  HEC-2 Cross Section: AS 1.602
3816          RS       1    FLOW      -1
3817          RC   0.080   0.060   0.080   625.0  0.0208
3818          RX  9889.8  9941.2  9963.0 10011.6 10074.8 10083.9 10191.7 10210.4
3819          RY  1517.6  1516.9  1508.1  1506.6  1508.6  1511.7  1513.1  1518.8
              *
```



```
LINE          ID.......1.......2.......3.......4.......5.......6.......7.......8.......9......10

3820          KK   211AE
3821          KM   Sub-Basin  211AE
3822          KM
3823          KM      The Clark Unit Hydrograph is used for this basin.
3824          KM          The Urban time-area relation is used for this basin.
3825          KM
3826          KM      Time of Concentration for this sub-basin is based on the following:
3827          KM          6-Hour Rainfall, Pattern No.  1.00
3828          KM          An rainfall areal reduction factor of 1.000
3829          KM
3830          KM       EXCESS RAINFALL VALUES EXCEEDED IN 5-MINUTE INTERVALS
3831          KM     5  10  15  20  25  30  35  40  45  50  55  60  65  70  75  80  85  90
3832          KM   .48 .48 .48 .17 .14 .13 .06 .06 .06 .05 .05 .05 .01 .01 .01 .01 .01 .01
3833          KM
3834          KM          L=   0.313 miles, S=  153 feet/mile, Kb= .04
```

```
3835          KM
3836          BA   0.034
3837          LG    0.12    0.24    6.40    0.15   38.15
3838          UC   0.129   0.103
3839          UA       0       5      16      30      65      77      84      90      94      97
3840          UA     100
              *

3841          KK    C627
3842          KM      Hydrograph combine 626627 + 211AE at C627
3843          HC       2
              *
              * *
              * * C627 is the total flow in Ashbrook Wash at the Study boundary
              * *
              *
3844          ZZ
```

1

SCHEMATIC DIAGRAM OF STREAM NETWORK

```
INPUT
 LINE      (V) ROUTING          (--->) DIVERSION OR PUMP FLOW

  NO.      (.) CONNECTOR        (<---) RETURN OF DIVERTED OR PUMPED FLOW

   36        204A
                V
                V
   57      522523
                .
                .
   64           .        204B
                .          .
                .          .
   85       C523I............
                V
                V
   88       C523O
                .
                .
  100           .-------->  D523R
   97       D523L
                .
                .
  105           .        205A
                .          .
                .          .
  126           .          .        205B
                .          .          .
                .          .          .
  147           .        C528............
                .          V
                .          V
  150           .      528530
                .          .
                .          .
  157           .          .        205C
                .          .          .
                .          .          .
  178           .       C530R...........
                .          .
                .          .
  181           .          .        205D
                .          .          .
                .          .          .
  202           .          .          .        205E
                .          .          .          .
                .          .          .          .
  223           .          .        C529............
                .          .          .
                .          .          .
  226           .        C530............
                .          V
                .          V
  229           .      530531
                .          .
                .          .
  236           .          .        205F
                .          .          .
                .          .          .
  257           .        C531............
                .          V
                .          V
  260           .      531532
                .          .
                .          .
  267           .          .        205G
                .          .          .
                .          .          .
  288           .       C532L...........
                .          .
                .          .
  291           .          .        205H
                .          .          .
                .          .          .
  312           .        C532............
                .          V
                .          V
  315           .      532533
                .          .
                .          .
  322           .          .        205I
```

```
343          C533............
                V
                V
346         533534
                .
                .
353                 205J
                    .
                    .
374          C534R...........
                .
                .
377                 205K
                    .
                    .
398          C534............
                V
                V
401         534535
                .
                .
408                 205L
                    .
                    .
429          C535............
                V
                V
432         535536
                .
                .
439                 205M
                    .
                    .
460          C536R...........
                .
                .
463                 205N
                    .
                    .
482          C536I...........
                V
                V
485          C536O
                V
                V
497         536537
                .
                .
504                 206A
                    .
                    .
525          C537............
                V
                V
528         537538
                .
                .
535                 206B
                    .
                    .
556          C538I...........
                V
                V
559          C538O
                V
                V
568         538540
                .
                .
575                 206C
                    .
                    .
596          C540R...........
                .
                .
599                 206D
                       V
                       V
620                539540
                       .
                       .
627                       .        206E
                          .           .
                          .           .
648                C540L...........
                       .
                       .
651          C540............
                V
                V
654         540541
                .
                .
661                 206F
                    .
                    .
682          C541............
                V
                V
```

```
685          541548
692                206G
715                                .<-------   D523R
713                          BB523R
                                  V
                                  V
716                          523548
723          C548L......................
726                206H
                     V
                     V
747               542543
754                                206I
                                     .
                                     .
775                C543............
                     .
                     .
781                .------->   D543R
778               D543L
                     V
                     V
786               543544
793                                206K
                                     .
                                     .
814                C544............
                     V
                     V
817               544545
827                .------->   D545R
824               D545L
                     V
                     V
830               545546
837                                206L
                                     .
                                     .
858                C546............
                     V
                     V
861               546547
870                                .<-------   D543R
868                          BB543R
                                  V
                                  V
871                          543547
880                                                .<-------   D545R
878                                          BB545R
                                                  V
                                                  V
881                                          545547
888                                                          206J
                                                               .
                                                               .
909                C547.....................................
                     V
                     V
912               547548
919                          206M
                                     .
                                     .
940               C548R............
943          C548............
                V
                V
946          548549
953                206N
                     .
                     .
974          C549L............
```

977 207A

998 207B

1019 C550

1022 550552

1029 207C

1050 C552L

1053 207D

1072 551552

1079 207E

1100 C552R

1103 C552

1106 552553

1113 207F

1132 C553

1135 553556

1142 207G

1161 C556L

1164 207H

1185 554555

1192 207I

1213 C555

1216 555556

1223 207J

1244 C556R

1247 C556

1250 556557

1257 207K

1278 C557R

1281 207L

1302 C557

1305 557558

1312 207M

1333 C558

1336 558560

```
1343                    207O
                          .
1364            C560R............
                          .
1367                    207N
                          V
                          V
1388                  559560
                          .
                          .
1395            C560I............
                      V
                      V
1398            C560O
                      V
                      V
1408            560585
                          .
                          .
1415                    210A
                          .
                          .
1436             C585............
                          .
                          .
1439                    208A
                          V
                          V
1460                  561563
                          .
                          .
1467                            208B
                                   .
                                   .
1488                  C563R............
                          .
                          .
1491                            208C
                                   V
                                   V
1510                          562563
                                   .
                                   .
1517                                   208D
                                          .
                                          .
1538                          C563L............
                                   .
                                   .
1541                    C563............
                          V
                          V
1544                  563564
                          .
                          .
1551                            208E
                                   .
                                   .
1572                  C564R............
                          .
                          .
1575                            208F
                                   .
                                   .
1596                    C564............
                          V
                          V
1599                  564565
                          .
                          .
1606                            208G
                                   .
                                   .
1627                    C565............
                          V
                          V
1630                  565568
                          .
                          .
1637                            208H
                                   .
                                   .
1658                  C568L............
                          .
                          .
1661                            208I
                                   .
                                   .
1682                                   208J
                                          .
                                          .
1703                            C566............
                                   V
                                   V
1706                          566567
                                   .
                                   .
1713                                   208K
```

```
1734                C567L............
1737                              208L
1758                C567............
                       V
                       V
1761               567568
1768                              208M
1789                C568R...........
1792          C568............
                 V
                 V
1795          568573
1802                208N
1823          C573L...........
1826                208O
                       V
                       V
1847               569570
1854                              208P
1875                C570R...........
1878                              208Q
1899                C570............
1902                              208R
                                     V
                                     V
1923                           571572
1930                C572............
                       V
                       V
1933               572573
1940                              208S
1961                C573R...........
1964          C573............
1967                208T
1988                              208U
2009                C574............
                       V
                       V
2012               574575
2019                              208V
2040                C575............
                       V
                       V
2043               575576
2050                              208W
2071                C576............
                       V
                       V
2074               576577
```

```
2081 . . . C577............
     . . . V
     . . . V
2084 . . . 577578
     . . . .
     . . . .
2091 . . . .       208X
     . . . .         .
     . . . .         .
2112 . . . C578I...........
     . . . V
     . . . V
2115 . . . C578O
     . . . V
     . . . V
2127 . . . 578587
     . . . .
     . . . .
2134 . . . .       210B
     . . . .         V
     . . . .         V
2155 . . . .      C586O
     . . . .         V
     . . . .         V
2164 . . . .     586587
     . . . .         .
     . . . .         .
2171 . . . C587............
     . . . V
     . . . V
2174 . . . 587595
     . . . .
     . . . .
2181 . . . .       210C
     . . . .         .
     . . . .         .
2202 . . . C595L...........
     . . . .
     . . . .
2205 . . . .       210D
     . . . .         V
     . . . .         V
2226 . . . .     588590
     . . . .         .
     . . . .         .
2233 . . . .         .       210E
     . . . .         .         .
     . . . .         .         .
2254 . . . .      C590L...........
     . . . .         .
     . . . .         .
2257 . . . .         .       210F
     . . . .         .         V
     . . . .         .         V
2278 . . . .         .     589590
     . . . .         .         .
     . . . .         .         .
2285 . . . .         .         .       210G
     . . . .         .         .         .
     . . . .         .         .         .
2306 . . . .         .     C590R...........
     . . . .         .         .
     . . . .         .         .
2309 . . . .       C590...........
     . . . .         .
     . . . .         .
2312 . . . .         .       210H
     . . . .         .         V
     . . . .         .         V
2333 . . . .         .     592593
     . . . .         .         .
     . . . .         .         .
2340 . . . .       C593...........
     . . . .         V
     . . . .         V
2343 . . . .     593594
     . . . .         .
     . . . .         .
2350 . . . .         .       210I
     . . . .         .         .
     . . . .         .         .
2371 . . . .       C594...........
     . . . .         V
     . . . .         V
2374 . . . .     594595
     . . . .         .
     . . . .         .
2381 . . . .         .       210J
     . . . .         .         .
     . . . .         .         .
2402 . . . .      C595R...........
     . . . .         .
     . . . .         .
2405 . . . C595............
     . . . V
     . . . V
2408 . . . 595596
     . . . .
     . . . .
2415 . . . .       210K
     . . . .         .
```

```
2436                    C596............
2439                              209A
                                     V
                                     V
2458                           579580
2465                                                 209C
2486                           C580R............
2489                                                 209B
2510                            C580............
                                     V
                                     V
2513                           580581
2520                                                 209D
2541                           C581R............
2544                                                 209E
2565                            C581............
                                     V
                                     V
2568                           581582
2575                                                 209F
2594                           C582R............
2597                                                 209G
2618                            C582............
                                     V
                                     V
2621                           582583
2628                                                 209H
2649                            C583............
                                     V
                                     V
2652                           583584
2659                                                 209I
2680                           C584I............
                                     V
                                     V
2683                           C584O
                                     V
                                     V
2695                           584597
2702                                                 210L
2723                            C597............
                                     V
                                     V
2726                           597598
2733                                                 210M
2754                            C598............
2757                                                 210N
2778                   C599I...................................
                           V
                           V
2781                   C599O
                           V
                           V
2793                   599608
```

```
2800                    211K
                          .
2821            C608L............
                          .
2824                    211G
                          V
                          V
2845                  604606
                          .
2852                          .        211I
                              .          .
2873                  C606R............
                              .
2876                          .        211H
                              .          V
                              .          V
2897                          .      C605O
                              .          .
2906                    C606............
                          V
                          V
2909                  606607
                          .
2916                          .        211J
                              .          .
2937                    C607............
                          V
                          V
2940                  607608
                          .
2947            C608............
                  V
                  V
2950          608613
                          .
2957                    211M
                          V
                          V
2978                  610611
                          .
2985                          .        211N
                              .          .
3006                  C611R............
                              .
3009                          .        211O
                              .          V
                              .          V
3030                          .      C609O
                              .          V
                              .          V
3039                          .      609611
                              .          .
3046                  C611I............
                          V
                          V
3049                  C611O
                              .
                              .-------->   D611R
3058                  D611L
                          V
                          V
3066                  611612
                              .
3073                          .        211P
                              .          .
3094                  C612............
                              .
3097            C613............
                  V
                  V
3100          613621
                          .
3107                  211L
                              .
3128            C621L............
                          .
3131                  211Q
                          V
```

```
                                  V
3152                          616617
                                  .
                                  .
3159                              .        211R
                                  .           .
                                  .           .
3180                           C617L...........
                                  .
                                  .
3183                              .        211U
                                  .           .
                                  .           .
3207                              .           .-------->   D614R
3204                              .       D614L
                                  .           .
                                  .           .
3210                            C617...........
                                  V
                                  V
3213                          617618
                                  .
                                  .
3220                              .        211S
                                  .           .
                                  .           .
3241                           C618I..........
                                  V
                                  V
3244                           C618O
                                  .
                                  .
3255                              .           .<-------   D614R
3253                              .      BB614R
                                  .           V
                                  .           V
3256                              .      614615
                                  .           .
                                  .           .
3263                              .           .        211V
                                  .           .           .
                                  .           .           .
3284                              .        C615...........
                                  .           .
                                  .           .
3290                              .           .-------->   D615R
3287                              .       D615L
                                  .           V
                                  .           V
3293                              .      615618
                                  .           .
                                  .           .
3300                            C618...........
                                  V
                                  V
3303                          618619
                                  .
                                  .
3310                              .        211T
                                  .           .
                                  .           .
3331                           C619L..........
                                  .
                                  .
3336                              .           .<-------   D615R
3334                              .      BB615R
                                  .           V
                                  .           V
3337                              .      615619
                                  .           .
                                  .           .
3344                           C619I..........
                                  V
                                  V
3347                           C619O
                                  .
                                  .
3361                              .-------->   D619L
3358                           D619R
                                  V
                                  V
3366                          619620
                                  .
                                  .
3371                              .           .<-------   D619L
3369                              .      BB619L
                                  .           V
                                  .           V
3372                              .      619620
                                  .           .
                                  .           .
3379                              .           .        211W
                                  .           .           .
                                  .           .           .
3400                           C620R......................
                                  .
                                  .
3405                              .           .<-------   D611R
3403                              .      BB611R
                                  .           V
                                  .           V
```

```
3406 .          .          .          .     611620
     .          .          .          .          .
     .          .          .          .          .
3409 .          .          .       C620...........
     .          .          .          V
     .          .          .          V
3412 .          .          .     620621
     .          .          .          .
     .          .          .          .
3419 .          .       C621...........
     .          .          V
     .          .          V
3422 .          .     621622
     .          .          .
     .          .          .
3429 .          .          .       211X
     .          .          .          .
     .          .          .          .
3450 .          .      C622R...........
     .          .          .
     .          .          .
3453 .          .          .       211A
     .          .          .          V
     .          .          .          V
3474 .          .          .      C600O
     .          .          .          V
     .          .          .          V
3483 .          .          .     600601
     .          .          .          .
     .          .          .          .
3490 .          .          .          .       211B
     .          .          .          .          .
     .          .          .          .          .
3511 .          .          .       C601...........
     .          .          .          V
     .          .          .          V
3514 .          .          .     601602
     .          .          .          .
     .          .          .          .
3521 .          .          .          .       211C
     .          .          .          .          .
     .          .          .          .          .
3542 .          .          .      C602L...........
     .          .          .          .
     .          .          .          .
3545 .          .          .          .       211D
     .          .          .          .          .
     .          .          .          .          .
3566 .          .          .       C602...........
     .          .          .          V
     .          .          .          V
3569 .          .          .     602603
     .          .          .          .
     .          .          .          .
3576 .          .          .          .       211E
     .          .          .          .          .
     .          .          .          .          .
3597 .          .          .       C603...........
     .          .          .          V
     .          .          .          V
3600 .          .          .     603622
     .          .          .          .
     .          .          .          .
3607 .          .          .          .       211F
     .          .          .          .          .
     .          .          .          .          .
3628 .          .          .      C622L...........
     .          .          .          .
     .          .          .          .
3631 .          .       C622...........
     .          .          V
     .          .          V
3634 .          .     622549
     .          .          .
     .          .          .
3641 .          .          .       211Y
     .          .          .          .
     .          .          .          .
3662 .          .      C549R...........
     .          .          .
     .          .          .
3665 .       C549...........
     .          V
     .          V
3668 .     549626
     .          .
     .          .
3675 .          .       211Z
     .          .          .
     .          .          .
3696 .      C626C...........
     .          .
     .          .
3699 .          .      211AA
     .          .          V
     .          .          V
3720 .          .     625626
     .          .          .
     .          .          .
3727 .          .          .      211AB
     .          .          .          V
```

```
                .          .          .          V
3748            .          .          .     623624
                .          .          .          .
                .          .          .          .
3755            .          .          .          .       211AC
                .          .          .          .          .
                .          .          .          .          .
3776            .          .          .       C624............
                .          .          .          V
                .          .          .          V
3779            .          .          .     624626
                .          .          .          .
                .          .          .          .
3786            .          .          .          .       211AD
                .          .          .          .          .
                .          .          .          .          .
3807            .          .          .      C626R...........
                .          .          .          .
                .          .          .          .
3810            .       C626......................
                .          V
                .          V
3813            .     626627
                .          .
                .          .
3820            .          .      211AE
                .          .          .
                .          .          .
3841            .       C627...........
```

(***) RUNOFF ALSO COMPUTED AT THIS LOCATION

```
1****************************************
*                                      *
*   FLOOD HYDROGRAPH PACKAGE  (HEC-1)  *
*            MAY   1991                *
*          VERSION 4.0.1E              *
*     Lahey F77L-EM/32 version 5.01    *
*       Dodson & Associates, Inc.      *
*  RUN DATE  09/13/99  TIME  14:47:09  *
****************************************
```

```
****************************************
*                                      *
*   U.S. ARMY CORPS OF ENGINEERS       *
*   HYDROLOGIC ENGINEERING CENTER      *
*         609 SECOND STREET            *
*       DAVIS, CALIFORNIA 95616        *
*          (916) 551-1748              *
*                                      *
****************************************
```

Golden Eagle Park Dam Modifications
by Stantec: Proj. No. 28900095
for FCDMC: FCD

File: FU100-6.IH1
Date:03-29-99 mcg
Revised:

100-year, 6-hour future condition watershed model for Ashbrook Wash upstream of the Fort McDowell Indian Reservation boundary.
This model is a portion of the original Fountain Hills North FDS watershed model conducted by GVSCE, 1994. The title cards from that model are included for reference.

Fountain Hills North Floodplain Delineation Study
FCD 92-04 by GVSCE
Future Condition Model
100-Year 6-Hour Storm, Clark Unit Hydrograph

File: FU100-6.IH1
Date: 07-19-94 dtp
Revised: 10-31-94 dtp

```
17 IO          OUTPUT CONTROL VARIABLES
                     IPRNT          5  PRINT CONTROL
                     IPLOT          0  PLOT CONTROL
                     QSCAL         0.  HYDROGRAPH PLOT SCALE

   IT          HYDROGRAPH TIME DATA
                      NMIN          1  MINUTES IN COMPUTATION INTERVAL
                     IDATE      1    0  STARTING DATE
                     ITIME       0000  STARTING TIME
                        NQ       1080  NUMBER OF HYDROGRAPH ORDINATES
                    NDDATE      1    0  ENDING DATE
                    NDTIME       1759  ENDING TIME
                     ICENT         19  CENTURY MARK

                COMPUTATION INTERVAL    0.02 HOURS
                     TOTAL TIME BASE   17.98 HOURS

        ENGLISH UNITS
             DRAINAGE AREA          SQUARE MILES
             PRECIPITATION DEPTH    INCHES
             LENGTH, ELEVATION      FEET
             FLOW                   CUBIC FEET PER SECOND
             STORAGE VOLUME         ACRE-FEET
             SURFACE AREA           ACRES
             TEMPERATURE            DEGREES FAHRENHEIT

19 JD          INDEX STORM NO. 1
                    STRM        3.30  PRECIPITATION DEPTH
                    TRDA        0.01  TRANSPOSITION DRAINAGE AREA

20 PI            PRECIPITATION PATTERN
                   0.00      0.00      0.00      0.00      0.00      0.00      0.00      0.00      0.00      0.00
                   0.00      0.00      0.00      0.00      0.00      0.00      0.00      0.00      0.00      0.00
                   0.00      0.00      0.00      0.00      0.00      0.00      0.00      0.00      0.00      0.00
                   0.00      0.00      0.00      0.00      0.00      0.00      0.00      0.00      0.00      0.00
                   0.00      0.00      0.00      0.00      0.00      0.00      0.00      0.00      0.00      0.00
                   0.00      0.00      0.00      0.00      0.00      0.00      0.00      0.00      0.00      0.00
                   0.00      0.00      0.00      0.00      0.00      0.00      0.00      0.00      0.00      0.00
                   0.00      0.00      0.00      0.00      0.00      0.00      0.00      0.00      0.00      0.00
                   0.00      0.00      0.00      0.00      0.00      0.00      0.00      0.00      0.00      0.00
```

```
          0.00      0.00      0.00      0.00      0.00      0.00      0.00      0.00      0.00      0.00
          0.00      0.00      0.00      0.00      0.00      0.00      0.00      0.00      0.00      0.00
          0.00      0.00      0.00      0.00      0.00      0.00      0.00      0.00      0.00      0.00
          0.00      0.00      0.00      0.00      0.00      0.00      0.00      0.00      0.00      0.00
          0.00      0.00      0.00      0.00      0.00      0.00      0.00      0.00      0.00      0.00
          0.00      0.00      0.00      0.00      0.00      0.00      0.00      0.00      0.00      0.00
          0.00      0.00      0.00      0.00      0.00      0.00      0.00      0.00      0.00      0.00
          0.00      0.00      0.00      0.00      0.00      0.00      0.00      0.00      0.00      0.00
          0.00      0.00      0.00      0.00      0.00      0.00      0.00      0.00      0.00      0.00
          0.00      0.00      0.00      0.00      0.00      0.00      0.00      0.00      0.00      0.00
          0.00      0.00      0.00      0.00      0.00      0.01      0.01      0.01      0.01      0.01
          0.01      0.01      0.01      0.01      0.01      0.01      0.01      0.01      0.01      0.01
          0.01      0.01      0.01      0.01      0.01      0.01      0.01      0.01      0.01      0.01
          0.01      0.01      0.01      0.01      0.01      0.03      0.03      0.03      0.03      0.03
          0.03      0.03      0.03      0.03      0.03      0.03      0.03      0.03      0.03      0.03
          0.01      0.01      0.01      0.01      0.01      0.01      0.01      0.01      0.01      0.01
          0.01      0.01      0.01      0.01      0.01      0.00      0.00      0.00      0.00      0.00
          0.00      0.00      0.00      0.00      0.00      0.00      0.00      0.00      0.00      0.00
          0.00      0.00      0.00      0.00      0.00      0.00      0.00      0.00      0.00      0.00
          0.00      0.00      0.00      0.00      0.00      0.00      0.00      0.00      0.00      0.00
          0.00      0.00      0.00      0.00      0.00      0.00      0.00      0.00      0.00      0.00
          0.00      0.00      0.00      0.00      0.00      0.00      0.00      0.00      0.00      0.00
          0.00      0.00      0.00      0.00      0.00      0.00      0.00      0.00      0.00      0.00
          0.00      0.00      0.00      0.00      0.00      0.00      0.00      0.00      0.00      0.00
          0.00      0.00      0.00      0.00      0.00      0.00      0.00      0.00      0.00      0.00
23 JD   INDEX STORM NO. 2
            STRM        3.28  PRECIPITATION DEPTH
            TRDA        0.50  TRANSPOSITION DRAINAGE AREA

 0 PI     PRECIPITATION PATTERN
          0.00      0.00      0.00      0.00      0.00      0.00      0.00      0.00      0.00      0.00
          0.00      0.00      0.00      0.00      0.00      0.00      0.00      0.00      0.00      0.00
          0.00      0.00      0.00      0.00      0.00      0.00      0.00      0.00      0.00      0.00
          0.00      0.00      0.00      0.00      0.00      0.00      0.00      0.00      0.00      0.00
          0.00      0.00      0.00      0.00      0.00      0.00      0.00      0.00      0.00      0.00
          0.00      0.00      0.00      0.00      0.00      0.00      0.00      0.00      0.00      0.00
          0.00      0.00      0.00      0.00      0.00      0.00      0.00      0.00      0.00      0.00
          0.00      0.00      0.00      0.00      0.00      0.00      0.00      0.00      0.00      0.00
          0.00      0.00      0.00      0.00      0.00      0.00      0.00      0.00      0.00      0.00
          0.00      0.00      0.00      0.00      0.00      0.00      0.00      0.00      0.00      0.00
          0.00      0.00      0.00      0.00      0.00      0.00      0.00      0.00      0.00      0.00
          0.00      0.00      0.00      0.00      0.00      0.00      0.00      0.00      0.00      0.00
          0.00      0.00      0.00      0.00      0.00      0.00      0.00      0.00      0.00      0.00
          0.00      0.00      0.00      0.00      0.00      0.00      0.00      0.00      0.00      0.00
          0.00      0.00      0.00      0.00      0.00      0.00      0.00      0.00      0.00      0.00
          0.00      0.00      0.00      0.00      0.00      0.00      0.00      0.00      0.00      0.00
          0.00      0.00      0.00      0.00      0.00      0.00      0.00      0.00      0.00      0.00
          0.00      0.00      0.00      0.00      0.00      0.00      0.00      0.00      0.00      0.00
          0.00      0.00      0.00      0.00      0.00      0.00      0.00      0.00      0.00      0.00
          0.00      0.00      0.00      0.00      0.00      0.01      0.01      0.01      0.01      0.01
          0.01      0.01      0.01      0.01      0.01      0.01      0.01      0.01      0.01      0.01
          0.01      0.01      0.01      0.01      0.01      0.01      0.01      0.01      0.01      0.01
          0.01      0.01      0.01      0.01      0.01      0.03      0.03      0.03      0.03      0.03
          0.03      0.03      0.03      0.03      0.03      0.03      0.03      0.03      0.03      0.03
          0.01      0.01      0.01      0.01      0.01      0.01      0.01      0.01      0.01      0.01
          0.01      0.01      0.01      0.01      0.01      0.00      0.00      0.00      0.00      0.00
          0.00      0.00      0.00      0.00      0.00      0.00      0.00      0.00      0.00      0.00
          0.00      0.00      0.00      0.00      0.00      0.00      0.00      0.00      0.00      0.00
          0.00      0.00      0.00      0.00      0.00      0.00      0.00      0.00      0.00      0.00
          0.00      0.00      0.00      0.00      0.00      0.00      0.00      0.00      0.00      0.00
          0.00      0.00      0.00      0.00      0.00      0.00      0.00      0.00      0.00      0.00
          0.00      0.00      0.00      0.00      0.00      0.00      0.00      0.00      0.00      0.00
          0.00      0.00      0.00      0.00      0.00      0.00      0.00      0.00      0.00      0.00
          0.00      0.00      0.00      0.00      0.00      0.00      0.00      0.00      0.00      0.00
          0.00      0.00      0.00      0.00      0.00      0.00      0.00      0.00      0.00      0.00
24 JD   INDEX STORM NO. 3
            STRM        3.23  PRECIPITATION DEPTH
            TRDA        2.80  TRANSPOSITION DRAINAGE AREA

25 PI     PRECIPITATION PATTERN
          0.00      0.00      0.00      0.00      0.00      0.00      0.00      0.00      0.00      0.00
          0.00      0.00      0.00      0.00      0.00      0.00      0.00      0.00      0.00      0.00
          0.00      0.00      0.00      0.00      0.00      0.00      0.00      0.00      0.00      0.00
          0.00      0.00      0.00      0.00      0.00      0.00      0.00      0.00      0.00      0.00
          0.00      0.00      0.00      0.00      0.00      0.00      0.00      0.00      0.00      0.00
          0.00      0.00      0.00      0.00      0.00      0.00      0.00      0.00      0.00      0.00
          0.00      0.00      0.00      0.00      0.00      0.00      0.00      0.00      0.00      0.00
          0.00      0.00      0.00      0.00      0.00      0.00      0.00      0.00      0.00      0.00
          0.00      0.00      0.00      0.00      0.00      0.00      0.00      0.00      0.00      0.00
          0.00      0.00      0.00      0.00      0.00      0.00      0.00      0.00      0.00      0.00
          0.00      0.00      0.00      0.00      0.00      0.00      0.00      0.00      0.00      0.00
          0.00      0.00      0.00      0.00      0.00      0.00      0.00      0.00      0.00      0.00
          0.00      0.00      0.00      0.00      0.00      0.00      0.00      0.00      0.00      0.00
          0.00      0.00      0.00      0.00      0.00      0.00      0.00      0.00      0.00      0.00
          0.00      0.00      0.00      0.00      0.00      0.00      0.00      0.00      0.00      0.00
          0.00      0.00      0.00      0.00      0.00      0.00      0.00      0.00      0.00      0.00
          0.00      0.00      0.00      0.00      0.00      0.00      0.00      0.00      0.00      0.00
          0.00      0.00      0.00      0.00      0.00      0.00      0.00      0.00      0.00      0.00
          0.00      0.00      0.00      0.00      0.00      0.00      0.00      0.00      0.00      0.00
          0.00      0.00      0.00      0.00      0.00      0.00      0.00      0.00      0.00      0.00
          0.00      0.00      0.00      0.00      0.00      0.01      0.01      0.01      0.01      0.01
          0.01      0.01      0.01      0.01      0.01      0.01      0.01      0.01      0.01      0.01
          0.01      0.01      0.01      0.01      0.01      0.01      0.01      0.01      0.01      0.01
          0.01      0.01      0.01      0.01      0.01      0.02      0.02      0.02      0.02      0.02
          0.02      0.02      0.02      0.02      0.02      0.02      0.02      0.02      0.02      0.02
          0.01      0.01      0.01      0.01      0.01      0.01      0.01      0.01      0.01      0.01
          0.01      0.01      0.01      0.01      0.01      0.00      0.00      0.00      0.00      0.00
```

```
                0.00      0.00      0.00      0.00      0.00      0.00      0.00      0.00      0.00      0.00
                0.00      0.00      0.00      0.00      0.00      0.00      0.00      0.00      0.00      0.00
                0.00      0.00      0.00      0.00      0.00      0.00      0.00      0.00      0.00      0.00
                0.00      0.00      0.00      0.00      0.00      0.00      0.00      0.00      0.00      0.00
                0.00      0.00      0.00      0.00      0.00      0.00      0.00      0.00      0.00      0.00
                0.00      0.00      0.00      0.00      0.00      0.00      0.00      0.00      0.00      0.00
                0.00      0.00      0.00      0.00      0.00      0.00      0.00      0.00      0.00      0.00
                0.00      0.00      0.00      0.00      0.00      0.00      0.00      0.00      0.00      0.00
                0.00      0.00      0.00      0.00      0.00      0.00      0.00      0.00      0.00      0.00

28 JD         INDEX STORM NO. 4
                STRM        3.04  PRECIPITATION DEPTH
                TRDA       16.00  TRANSPOSITION DRAINAGE AREA

29 PI          PRECIPITATION PATTERN
                0.00      0.00      0.00      0.00      0.00      0.00      0.00      0.00      0.00      0.00
                0.00      0.00      0.00      0.00      0.00      0.00      0.00      0.00      0.00      0.00
                0.00      0.00      0.00      0.00      0.00      0.00      0.00      0.00      0.00      0.00
                0.00      0.00      0.00      0.00      0.00      0.00      0.00      0.00      0.00      0.00
                0.00      0.00      0.00      0.00      0.00      0.00      0.00      0.00      0.00      0.00
                0.00      0.00      0.00      0.00      0.00      0.00      0.00      0.00      0.00      0.00
                0.00      0.00      0.00      0.00      0.00      0.00      0.00      0.00      0.00      0.00
                0.00      0.00      0.00      0.00      0.00      0.00      0.00      0.00      0.00      0.00
                0.00      0.00      0.00      0.00      0.00      0.00      0.00      0.00      0.00      0.00
                0.00      0.00      0.00      0.00      0.00      0.00      0.00      0.00      0.00      0.00
                0.00      0.00      0.00      0.00      0.00      0.00      0.00      0.00      0.00      0.00
                0.00      0.00      0.00      0.00      0.00      0.00      0.00      0.00      0.00      0.00
                0.00      0.00      0.00      0.00      0.00      0.00      0.00      0.00      0.00      0.00
                0.00      0.00      0.00      0.00      0.00      0.00      0.00      0.00      0.00      0.00
                0.00      0.00      0.00      0.00      0.00      0.00      0.00      0.00      0.00      0.00
                0.00      0.00      0.00      0.00      0.00      0.00      0.00      0.00      0.00      0.00
                0.00      0.00      0.00      0.00      0.00      0.00      0.00      0.00      0.00      0.00
                0.00      0.00      0.00      0.00      0.00      0.00      0.00      0.00      0.00      0.00
                0.00      0.00      0.00      0.00      0.00      0.00      0.00      0.00      0.00      0.00
                0.00      0.00      0.00      0.00      0.00      0.00      0.00      0.00      0.00      0.00
                0.00      0.00      0.00      0.00      0.00      0.00      0.00      0.00      0.00      0.00
                0.00      0.00      0.00      0.00      0.00      0.00      0.00      0.00      0.00      0.00
                0.00      0.00      0.00      0.00      0.00      0.01      0.01      0.01      0.01      0.01
                0.01      0.01      0.01      0.01      0.01      0.01      0.01      0.01      0.01      0.01
                0.01      0.01      0.01      0.01      0.01      0.01      0.01      0.01      0.01      0.01
                0.01      0.01      0.01      0.01      0.01      0.01      0.01      0.01      0.01      0.01
                0.01      0.01      0.01      0.01      0.01      0.01      0.01      0.01      0.01      0.01
                0.01      0.01      0.01      0.01      0.01      0.01      0.01      0.01      0.01      0.01
                0.01      0.01      0.01      0.01      0.01      0.00      0.00      0.00      0.00      0.00
                0.00      0.00      0.00      0.00      0.00      0.00      0.00      0.00      0.00      0.00
                0.00      0.00      0.00      0.00      0.00      0.00      0.00      0.00      0.00      0.00
                0.00      0.00      0.00      0.00      0.00      0.00      0.00      0.00      0.00      0.00
                0.00      0.00      0.00      0.00      0.00      0.00      0.00      0.00      0.00      0.00
                0.00      0.00      0.00      0.00      0.00      0.00      0.00      0.00      0.00      0.00
                0.00      0.00      0.00      0.00      0.00      0.00      0.00      0.00      0.00      0.00
                0.00      0.00      0.00      0.00      0.00      0.00      0.00      0.00      0.00      0.00
                0.00      0.00      0.00      0.00      0.00      0.00      0.00      0.00      0.00      0.00
                0.00      0.00      0.00      0.00      0.00      0.00      0.00      0.00      0.00      0.00
                0.00      0.00      0.00      0.00      0.00      0.00      0.00      0.00      0.00      0.00

32 JD         INDEX STORM NO. 5
                STRM        2.67  PRECIPITATION DEPTH
                TRDA       90.00  TRANSPOSITION DRAINAGE AREA

33 PI          PRECIPITATION PATTERN
                0.00      0.00      0.00      0.00      0.00      0.00      0.00      0.00      0.00      0.00
                0.00      0.00      0.00      0.00      0.00      0.00      0.00      0.00      0.00      0.00
                0.00      0.00      0.00      0.00      0.00      0.00      0.00      0.00      0.00      0.00
                0.00      0.00      0.00      0.00      0.00      0.00      0.00      0.00      0.00      0.00
                0.00      0.00      0.00      0.00      0.00      0.00      0.00      0.00      0.00      0.00
                0.00      0.00      0.00      0.00      0.00      0.00      0.00      0.00      0.00      0.00
                0.00      0.00      0.00      0.00      0.00      0.00      0.00      0.00      0.00      0.00
                0.00      0.00      0.00      0.00      0.00      0.00      0.00      0.00      0.00      0.00
                0.00      0.00      0.00      0.00      0.00      0.00      0.00      0.00      0.00      0.00
                0.00      0.00      0.00      0.00      0.00      0.00      0.00      0.00      0.00      0.00
                0.00      0.00      0.00      0.00      0.00      0.00      0.00      0.00      0.00      0.00
                0.00      0.00      0.00      0.00      0.00      0.00      0.00      0.00      0.00      0.00
                0.00      0.00      0.00      0.00      0.00      0.00      0.00      0.00      0.00      0.00
                0.00      0.00      0.00      0.00      0.00      0.00      0.00      0.00      0.00      0.00
                0.00      0.00      0.00      0.00      0.00      0.00      0.00      0.00      0.00      0.00
                0.00      0.00      0.00      0.00      0.00      0.00      0.00      0.00      0.00      0.00
                0.00      0.00      0.00      0.00      0.00      0.00      0.00      0.00      0.00      0.00
                0.00      0.00      0.00      0.00      0.00      0.00      0.00      0.00      0.00      0.00
                0.00      0.00      0.00      0.00      0.00      0.00      0.00      0.00      0.00      0.00
                0.00      0.00      0.00      0.00      0.00      0.00      0.00      0.00      0.00      0.00
                0.00      0.00      0.00      0.00      0.00      0.01      0.01      0.01      0.01      0.01
                0.01      0.01      0.01      0.01      0.01      0.01      0.01      0.01      0.01      0.01
                0.01      0.01      0.01      0.01      0.01      0.01      0.01      0.01      0.01      0.01
                0.01      0.01      0.01      0.01      0.01      0.01      0.01      0.01      0.01      0.01
                0.01      0.01      0.01      0.01      0.01      0.01      0.01      0.01      0.01      0.01
                0.01      0.01      0.01      0.01      0.01      0.00      0.00      0.00      0.00      0.00
                0.00      0.00      0.00      0.00      0.00      0.00      0.00      0.00      0.00      0.00
                0.00      0.00      0.00      0.00      0.00      0.00      0.00      0.00      0.00      0.00
                0.00      0.00      0.00      0.00      0.00      0.00      0.00      0.00      0.00      0.00
                0.00      0.00      0.00      0.00      0.00      0.00      0.00      0.00      0.00      0.00
                0.00      0.00      0.00      0.00      0.00      0.00      0.00      0.00      0.00      0.00
                0.00      0.00      0.00      0.00      0.00      0.00      0.00      0.00      0.00      0.00
                0.00      0.00      0.00      0.00      0.00      0.00      0.00      0.00      0.00      0.00
                0.00      0.00      0.00      0.00      0.00      0.00      0.00      0.00      0.00      0.00
                0.00      0.00      0.00      0.00      0.00      0.00      0.00      0.00      0.00      0.00
                0.00      0.00      0.00      0.00      0.00      0.00      0.00      0.00      0.00      0.00
WARNING EXCESS AT PONDING LESS THAN ZERO FOR PERIOD. EXCESS SET TO ZERO
```

1

RUNOFF SUMMARY
FLOW IN CUBIC FEET PER SECOND
TIME IN HOURS, AREA IN SQUARE MILES

PEAK TIME OF AVERAGE FLOW FOR MAXIMUM PERIOD BASIN MAXIMUM TIME OF

	OPERATION	STATION	FLOW	PEAK	6-HOUR	24-HOUR	72-HOUR	AREA	STAGE	MAX STAGE
+	HYDROGRAPH AT	204A	334.	4.03	26.	9.	9.	0.11		
+	ROUTED TO	522523	309.	4.18	26.	9.	9.	0.11		
+	HYDROGRAPH AT	204B	365.	4.05	31.	10.	10.	0.13		
+	2 COMBINED AT	C523I	586.	4.08	57.	19.	19.	0.23		
+	ROUTED TO	C523O	570.	4.15	57.	19.	19.	0.23		
+	DIVERSION TO	D523R	68.	4.15	3.	1.	1.	0.23		
+	HYDROGRAPH AT	D523L	502.	4.15	54.	18.	18.	0.23		
+	HYDROGRAPH AT	205A	210.	4.22	26.	9.	9.	0.12		
+	HYDROGRAPH AT	205B	362.	4.32	47.	16.	16.	0.21		
+	2 COMBINED AT	C528	548.	4.28	73.	25.	25.	0.33		
+	ROUTED TO	528530	545.	4.33	73.	25.	25.	0.33		
+	HYDROGRAPH AT	205C	107.	4.20	13.	4.	4.	0.06		
+	2 COMBINED AT	C530R	629.	4.32	86.	29.	29.	0.39		
+	HYDROGRAPH AT	205D	665.	4.23	71.	24.	24.	0.32		
+	HYDROGRAPH AT	205E	301.	4.33	48.	16.	16.	0.22		
+	2 COMBINED AT	C529	917.	4.25	119.	40.	40.	0.54		
+	2 COMBINED AT	C530	1340.	4.27	197.	66.	66.	0.93		
+	ROUTED TO	530531	1326.	4.32	197.	66.	66.	0.93		
+	HYDROGRAPH AT	205F	325.	4.22	36.	12.	12.	0.16		
+	2 COMBINED AT	C531	1504.	4.30	228.	77.	77.	1.09		
+	ROUTED TO	531532	1490.	4.37	228.	77.	77.	1.09		
+	HYDROGRAPH AT	205G	349.	4.23	40.	13.	13.	0.19		
+	2 COMBINED AT	C532L	1661.	4.35	262.	88.	88.	1.27		
+	HYDROGRAPH AT	205H	350.	4.35	56.	19.	19.	0.26		
+	2 COMBINED AT	C532	1854.	4.35	310.	104.	104.	1.53		
+	ROUTED TO	532533	1850.	4.38	310.	104.	104.	1.53		
+	HYDROGRAPH AT	205I	559.	4.30	70.	23.	23.	0.35		
+	2 COMBINED AT	C533	2132.	4.37	367.	123.	123.	1.89		
+	ROUTED TO	533534	2100.	4.53	367.	123.	123.	1.89		
+	HYDROGRAPH AT	205J	551.	4.28	65.	22.	22.	0.37		
+	2 COMBINED AT	C534R	2306.	4.52	416.	140.	140.	2.25		
+	HYDROGRAPH AT	205K	266.	4.38	45.	15.	15.	0.25		
+	2 COMBINED AT	C534	2427.	4.53	450.	151.	151.	2.50		

+	ROUTED TO	534535	2417.	4.58	450.	151.	151.	2.50
+	HYDROGRAPH AT	205L	263.	4.15	20.	7.	7.	0.12
+	2 COMBINED AT	C535	2441.	4.57	464.	156.	156.	2.62
+	ROUTED TO	535536	2419.	4.70	464.	156.	156.	2.62
+	HYDROGRAPH AT	205M	366.	4.07	31.	11.	11.	0.14
+	2 COMBINED AT	C536R	2427.	4.68	490.	165.	165.	2.76
+	HYDROGRAPH AT	205N	211.	4.25	29.	10.	10.	0.16
+	2 COMBINED AT	C536I	2496.	4.68	511.	172.	172.	2.91
+	ROUTED TO	C536O	326.	6.08	312.	172.	172.	2.91
+	ROUTED TO	536537	326.	6.13	312.	172.	172.	2.91
+	HYDROGRAPH AT	206A	408.	4.03	32.	11.	11.	0.13
+	2 COMBINED AT	C537	346.	4.27	317.	181.	181.	3.04
+	ROUTED TO	537538	343.	4.33	317.	181.	181.	3.04
+	HYDROGRAPH AT	206B	304.	4.03	25.	8.	8.	0.09
+	2 COMBINED AT	C538I	473.	4.08	330.	188.	188.	3.14
+	ROUTED TO	C538O	442.	4.23	327.	188.	188.	3.14
+	ROUTED TO	538540	441.	4.35	327.	188.	188.	3.14
+	HYDROGRAPH AT	206C	61.	4.05	5.	2.	2.	0.02
+	2 COMBINED AT	C540R	464.	4.32	329.	189.	189.	3.16
+	HYDROGRAPH AT	206D	205.	4.02	17.	6.	6.	0.06
+	ROUTED TO	539540	196.	4.10	17.	6.	6.	0.06
+	HYDROGRAPH AT	206E	71.	4.02	5.	2.	2.	0.02
+	2 COMBINED AT	C540L	254.	4.05	22.	7.	7.	0.09
+	2 COMBINED AT	C540	560.	4.27	342.	196.	196.	3.24
+	ROUTED TO	540541	553.	4.47	342.	196.	196.	3.24
+	HYDROGRAPH AT	206F	441.	4.05	36.	12.	12.	0.16
+	2 COMBINED AT	C541	658.	4.28	362.	205.	205.	3.40
+	ROUTED TO	541548	657.	4.33	362.	205.	205.	3.40
+	HYDROGRAPH AT	206G	213.	4.07	22.	7.	7.	0.09
+	HYDROGRAPH AT	BB523R	68.	4.15	3.	1.	1.	0.23
+	ROUTED TO	523548	60.	4.33	3.	1.	1.	0.23
+	3 COMBINED AT	C548L	747.	4.30	377.	210.	210.	3.72
+	HYDROGRAPH AT	206H	188.	4.03	15.	5.	5.	0.06
	ROUTED TO							

+		542543	184.	4.05	15.	5.	5.	0.06
	HYDROGRAPH AT							
+		206I	75.	4.00	5.	2.	2.	0.02
	2 COMBINED AT							
+		C543	252.	4.02	21.	7.	7.	0.08
	DIVERSION TO							
+		D543R	252.	4.02	21.	7.	7.	0.08
	HYDROGRAPH AT							
+		D543L	0.	0.02	0.	0.	0.	0.08
	ROUTED TO							
+		543544	0.	0.02	0.	0.	0.	0.08
	HYDROGRAPH AT							
+		206K	171.	4.03	14.	5.	5.	0.06
	2 COMBINED AT							
+		C544	171.	4.03	14.	5.	5.	0.14
	ROUTED TO							
+		544545	167.	4.05	14.	5.	5.	0.14
	DIVERSION TO							
+		D545R	84.	4.05	7.	2.	2.	0.14
	HYDROGRAPH AT							
+		D545L	84.	4.05	7.	2.	2.	0.14
	ROUTED TO							
+		545546	83.	4.07	7.	2.	2.	0.14
	HYDROGRAPH AT							
+		206L	191.	4.02	15.	5.	5.	0.06
	2 COMBINED AT							
+		C546	271.	4.03	22.	7.	7.	0.20
	ROUTED TO							
+		546547	269.	4.03	22.	7.	7.	0.20
	HYDROGRAPH AT							
+		BB543R	252.	4.02	21.	7.	7.	0.08
	ROUTED TO							
+		543547	241.	4.10	21.	7.	7.	0.08
	HYDROGRAPH AT							
+		BB545R	84.	4.05	7.	2.	2.	0.14
	ROUTED TO							
+		545547	81.	4.10	7.	2.	2.	0.14
	HYDROGRAPH AT							
+		206J	200.	4.02	16.	5.	5.	0.06
	4 COMBINED AT							
+		C547	758.	4.05	66.	22.	22.	0.26
	ROUTED TO							
+		547548	732.	4.10	66.	22.	22.	0.26
	HYDROGRAPH AT							
+		206M	198.	4.02	16.	5.	5.	0.06
	2 COMBINED AT							
+		C548R	883.	4.08	82.	27.	27.	0.32
	2 COMBINED AT							
+		C548	1172.	4.10	440.	233.	233.	4.04
	ROUTED TO							
+		548549	1160.	4.25	440.	233.	233.	4.04
	HYDROGRAPH AT							
+		206N	459.	4.05	42.	14.	14.	0.15
	2 COMBINED AT							
+		C549L	1331.	4.23	466.	245.	245.	4.19
	HYDROGRAPH AT							
+		207A	382.	4.30	55.	18.	18.	0.26
	HYDROGRAPH AT							
+		207B	306.	4.30	46.	15.	15.	0.21
	2 COMBINED AT							
+		C550	687.	4.30	101.	34.	34.	0.46
	ROUTED TO							
+		550552	675.	4.37	100.	34.	34.	0.46
	HYDROGRAPH AT							
+		207C	321.	4.22	34.	11.	11.	0.17
	2 COMBINED AT							
+		C552L	878.	4.35	132.	44.	44.	0.64

+ HYDROGRAPH AT	207D	424.	4.13	48.	16.	16.	0.20
+ ROUTED TO	551552	416.	4.22	48.	16.	16.	0.20
+ HYDROGRAPH AT	207E	286.	4.12	39.	13.	13.	0.16
+ 2 COMBINED AT	C552R	679.	4.18	87.	29.	29.	0.35
+ 2 COMBINED AT	C552	1312.	4.28	211.	71.	71.	0.99
+ ROUTED TO	552553	1308.	4.32	211.	71.	71.	0.99
+ HYDROGRAPH AT	207F	253.	4.15	30.	10.	10.	0.13
+ 2 COMBINED AT	C553	1440.	4.30	237.	80.	80.	1.12
+ ROUTED TO	553556	1432.	4.33	237.	80.	80.	1.12
+ HYDROGRAPH AT	207G	277.	4.33	46.	15.	15.	0.24
+ 2 COMBINED AT	C556L	1601.	4.35	276.	93.	93.	1.35
+ HYDROGRAPH AT	207H	312.	4.07	32.	11.	11.	0.12
+ ROUTED TO	554555	303.	4.12	32.	11.	11.	0.12
+ HYDROGRAPH AT	207I	213.	4.03	19.	7.	7.	0.07
+ 2 COMBINED AT	C555	489.	4.07	51.	17.	17.	0.20
+ ROUTED TO	555556	475.	4.15	51.	17.	17.	0.20
+ HYDROGRAPH AT	207J	270.	4.05	25.	8.	8.	0.09
+ 2 COMBINED AT	C556R	682.	4.10	76.	25.	25.	0.29
+ 2 COMBINED AT	C556	1906.	4.30	343.	115.	115.	1.64
+ ROUTED TO	556557	1899.	4.35	343.	115.	115.	1.64
+ HYDROGRAPH AT	207K	362.	4.05	33.	11.	11.	0.13
+ 2 COMBINED AT	C557R	2002.	4.33	372.	125.	125.	1.77
+ HYDROGRAPH AT	207L	236.	4.03	21.	7.	7.	0.08
+ 2 COMBINED AT	C557	2067.	4.32	390.	132.	132.	1.85
+ ROUTED TO	557558	2055.	4.37	390.	132.	132.	1.85
+ HYDROGRAPH AT	207M	372.	4.03	28.	9.	9.	0.12
+ 2 COMBINED AT	C558	2110.	4.35	414.	140.	140.	1.97
+ ROUTED TO	558560	2104.	4.40	414.	140.	140.	1.97
+ HYDROGRAPH AT	207O	413.	4.03	30.	10.	10.	0.13
+ 2 COMBINED AT	C560R	2157.	4.38	440.	148.	148.	2.10
+ HYDROGRAPH AT	207N	160.	4.02	12.	4.	4.	0.05
+ ROUTED TO	559560	151.	4.10	12.	4.	4.	0.05
+ 2 COMBINED AT	C560I	2201.	4.37	451.	152.	152.	2.15
+ ROUTED TO	C560O	294.	5.77	274.	152.	152.	2.15

+	ROUTED TO 560585	294.	5.85	274.	152.	152.	2.15
+	HYDROGRAPH AT 210A	397.	4.02	28.	9.	9.	0.12
+	2 COMBINED AT C585	360.	4.03	283.	160.	160.	2.27
+	HYDROGRAPH AT 208A	480.	4.02	37.	12.	12.	0.14
+	ROUTED TO 561563	468.	4.03	37.	12.	12.	0.14
+	HYDROGRAPH AT 208B	82.	4.02	7.	2.	2.	0.03
+	2 COMBINED AT C563R	549.	4.03	44.	15.	15.	0.17
+	HYDROGRAPH AT 208C	144.	4.10	16.	5.	5.	0.07
+	ROUTED TO 562563	141.	4.17	16.	5.	5.	0.07
+	HYDROGRAPH AT 208D	225.	4.03	20.	7.	7.	0.08
+	2 COMBINED AT C563L	319.	4.05	36.	12.	12.	0.14
+	2 COMBINED AT C563	864.	4.03	80.	27.	27.	0.31
+	ROUTED TO 563564	833.	4.08	80.	27.	27.	0.31
+	HYDROGRAPH AT 208E	192.	4.03	17.	6.	6.	0.06
+	2 COMBINED AT C564R	994.	4.07	96.	32.	32.	0.37
+	HYDROGRAPH AT 208F	224.	4.02	18.	6.	6.	0.07
+	2 COMBINED AT C564	1195.	4.05	114.	38.	38.	0.44
+	ROUTED TO 564565	1151.	4.13	114.	38.	38.	0.44
+	HYDROGRAPH AT 208G	398.	4.03	35.	12.	12.	0.13
+	2 COMBINED AT C565	1398.	4.12	149.	50.	50.	0.57
+	ROUTED TO 565568	1371.	4.15	148.	50.	50.	0.57
+	HYDROGRAPH AT 208H	99.	4.07	11.	4.	4.	0.04
+	2 COMBINED AT C568L	1429.	4.15	159.	53.	53.	0.61
+	HYDROGRAPH AT 208I	370.	4.03	31.	10.	10.	0.12
+	HYDROGRAPH AT 208J	221.	4.05	22.	7.	7.	0.08
+	2 COMBINED AT C566	590.	4.03	53.	18.	18.	0.20
+	ROUTED TO 566567	572.	4.07	53.	18.	18.	0.20
+	HYDROGRAPH AT 208K	165.	4.02	13.	4.	4.	0.05
+	2 COMBINED AT C567L	713.	4.05	66.	22.	22.	0.25
+	HYDROGRAPH AT 208L	183.	4.02	16.	5.	5.	0.06
+	2 COMBINED AT C567	892.	4.03	82.	27.	27.	0.31
+	ROUTED TO 567568	855.	4.12	81.	27.	27.	0.31
+	HYDROGRAPH AT 208M	484.	4.03	46.	15.	15.	0.16
	2 COMBINED AT						

+	C568R	1263.	4.08	127.	43.	43.	0.46
+ 2 COMBINED AT	C568	2210.	4.12	278.	93.	93.	1.07
+ ROUTED TO	568573	2187.	4.17	277.	93.	93.	1.07
+ HYDROGRAPH AT	208N	131.	4.05	14.	5.	5.	0.05
+ 2 COMBINED AT	C573L	2245.	4.17	291.	98.	98.	1.12
+ HYDROGRAPH AT	208O	703.	4.03	61.	20.	20.	0.23
+ ROUTED TO	569570	693.	4.05	61.	20.	20.	0.23
+ HYDROGRAPH AT	208P	204.	4.02	17.	6.	6.	0.06
+ 2 COMBINED AT	C570R	882.	4.03	78.	26.	26.	0.29
+ HYDROGRAPH AT	208Q	273.	4.05	26.	9.	9.	0.09
+ 2 COMBINED AT	C570	1154.	4.03	104.	35.	35.	0.38
+ HYDROGRAPH AT	208R	35.	4.02	3.	1.	1.	0.01
+ ROUTED TO	571572	33.	4.05	3.	1.	1.	0.01
+ 2 COMBINED AT	C572	1187.	4.03	107.	36.	36.	0.39
+ ROUTED TO	572573	1172.	4.05	107.	36.	36.	0.39
+ HYDROGRAPH AT	208S	229.	4.02	21.	7.	7.	0.07
+ 2 COMBINED AT	C573R	1391.	4.05	128.	43.	43.	0.46
+ 2 COMBINED AT	C573	2843.	4.12	409.	138.	138.	1.58
+ HYDROGRAPH AT	208T	433.	4.02	36.	12.	12.	0.13
+ HYDROGRAPH AT	208U	483.	4.00	36.	12.	12.	0.13
+ 2 COMBINED AT	C574	911.	4.02	72.	24.	24.	0.27
+ ROUTED TO	574575	906.	4.02	72.	24.	24.	0.27
+ HYDROGRAPH AT	208V	97.	4.02	8.	3.	3.	0.03
+ 2 COMBINED AT	C575	1002.	4.02	79.	26.	26.	0.29
+ ROUTED TO	575576	985.	4.05	79.	26.	26.	0.29
+ HYDROGRAPH AT	208W	170.	4.02	14.	5.	5.	0.05
+ 2 COMBINED AT	C576	1146.	4.03	93.	31.	31.	0.34
+ ROUTED TO	576577	1143.	4.05	93.	31.	31.	0.34
+ 2 COMBINED AT	C577	3345.	4.10	494.	166.	166.	1.92
+ ROUTED TO	577578	3329.	4.12	494.	166.	166.	1.92
+ HYDROGRAPH AT	208X	247.	4.02	19.	6.	6.	0.08
+ 2 COMBINED AT	C578I	3404.	4.10	511.	172.	172.	2.00
+ ROUTED TO	C578O	1078.	4.67	390.	172.	172.	2.00
+ ROUTED TO	578587	1073.	4.72	390.	172.	172.	2.00

+	HYDROGRAPH AT	210B	307.	4.05	28.	9.	9.	0.11
+	ROUTED TO	C586O	246.	4.12	28.	9.	9.	0.11
+	ROUTED TO	586587	245.	4.17	28.	9.	9.	0.11
+	2 COMBINED AT	C587	1112.	4.72	411.	181.	181.	2.11
+	ROUTED TO	587595	1105.	4.73	410.	181.	181.	2.11
+	HYDROGRAPH AT	210C	245.	4.03	19.	6.	6.	0.08
+	2 COMBINED AT	C595L	1110.	4.73	423.	186.	186.	2.19
+	HYDROGRAPH AT	210D	448.	4.03	36.	12.	12.	0.14
+	ROUTED TO	588590	437.	4.05	36.	12.	12.	0.14
+	HYDROGRAPH AT	210E	93.	4.02	7.	2.	2.	0.03
+	2 COMBINED AT	C590L	524.	4.03	43.	14.	14.	0.17
+	HYDROGRAPH AT	210F	306.	4.02	25.	8.	8.	0.09
+	ROUTED TO	589590	299.	4.05	25.	8.	8.	0.09
+	HYDROGRAPH AT	210G	504.	4.03	42.	14.	14.	0.16
+	2 COMBINED AT	C590R	800.	4.03	67.	22.	22.	0.25
+	2 COMBINED AT	C590	1323.	4.03	110.	37.	37.	0.42
+	HYDROGRAPH AT	210H	234.	4.02	17.	6.	6.	0.07
+	ROUTED TO	592593	226.	4.07	17.	6.	6.	0.07
+	2 COMBINED AT	C593	1545.	4.03	127.	42.	42.	0.49
+	ROUTED TO	593594	1532.	4.07	127.	42.	42.	0.49
+	HYDROGRAPH AT	210I	149.	4.03	13.	4.	4.	0.05
+	2 COMBINED AT	C594	1636.	4.05	139.	46.	46.	0.54
+	ROUTED TO	594595	1595.	4.10	139.	46.	46.	0.54
+	HYDROGRAPH AT	210J	324.	4.03	25.	8.	8.	0.10
+	2 COMBINED AT	C595R	1764.	4.10	163.	54.	54.	0.64
+	2 COMBINED AT	C595	1603.	4.12	558.	236.	236.	2.83
+	ROUTED TO	595596	1595.	4.18	557.	236.	236.	2.83
+	HYDROGRAPH AT	210K	270.	4.02	19.	6.	6.	0.08
+	2 COMBINED AT	C596	1679.	4.17	572.	241.	241.	2.91
+	HYDROGRAPH AT	209A	951.	4.10	89.	30.	30.	0.37
+	ROUTED TO	579580	942.	4.12	89.	30.	30.	0.37
+	HYDROGRAPH AT	209C	170.	4.05	17.	6.	6.	0.06
+	2 COMBINED AT	C580R	1090.	4.10	106.	35.	35.	0.43
+	HYDROGRAPH AT	209B	266.	4.02	22.	7.	7.	0.08

2 COMBINED AT	C580	1285.	4.08	128.	43.	43.	0.51
ROUTED TO	580581	1267.	4.12	127.	43.	43.	0.51
HYDROGRAPH AT	209D	802.	4.02	64.	21.	21.	0.24
2 COMBINED AT	C581R	1747.	4.07	187.	63.	63.	0.76
HYDROGRAPH AT	209E	445.	4.03	40.	13.	13.	0.15
2 COMBINED AT	C581	2031.	4.05	224.	75.	75.	0.91
ROUTED TO	581582	1981.	4.10	224.	75.	75.	0.91
HYDROGRAPH AT	209F	439.	4.17	55.	18.	18.	0.23
2 COMBINED AT	C582R	2209.	4.12	274.	92.	92.	1.13
HYDROGRAPH AT	209G	625.	4.03	54.	18.	18.	0.20
2 COMBINED AT	C582	2498.	4.10	323.	108.	108.	1.34
ROUTED TO	582583	2472.	4.13	323.	108.	108.	1.34
HYDROGRAPH AT	209H	242.	4.03	19.	6.	6.	0.08
2 COMBINED AT	C583	2567.	4.12	340.	114.	114.	1.42
ROUTED TO	583584	2536.	4.20	340.	114.	114.	1.42
HYDROGRAPH AT	209I	604.	4.02	42.	14.	14.	0.18
2 COMBINED AT	C584I	2656.	4.18	377.	127.	127.	1.60
ROUTED TO	C584O	925.	4.65	357.	127.	127.	1.60
ROUTED TO	584597	903.	4.78	356.	127.	127.	1.60
HYDROGRAPH AT	210L	413.	4.03	31.	10.	10.	0.14
2 COMBINED AT	C597	900.	4.80	381.	136.	136.	1.74
ROUTED TO	597598	883.	4.88	380.	136.	136.	1.74
HYDROGRAPH AT	210M	462.	4.05	38.	13.	13.	0.16
2 COMBINED AT	C598	884.	4.88	411.	147.	147.	1.90
HYDROGRAPH AT	210N	162.	4.00	10.	3.	3.	0.05
4 COMBINED AT	C599I	2474.	4.17	1162.	508.	508.	7.13
ROUTED TO	C599O	1631.	5.00	994.	508.	508.	7.13
ROUTED TO	599608	1630.	5.03	994.	508.	508.	7.13
HYDROGRAPH AT	211K	363.	4.00	26.	9.	9.	0.10
2 COMBINED AT	C608L	1629.	5.03	998.	515.	515.	7.24
HYDROGRAPH AT	211G	18.	4.05	3.	1.	1.	0.01
ROUTED TO	604606	17.	4.23	3.	1.	1.	0.01
HYDROGRAPH AT	211I	121.	4.03	11.	4.	4.	0.04
2 COMBINED AT							

+	C606R	131.	4.03	14.	5.	5.	0.05
HYDROGRAPH AT +	211H	247.	4.02	17.	6.	6.	0.07
ROUTED TO +	C605O	129.	4.12	17.	6.	6.	0.07
2 COMBINED AT +	C606	256.	4.05	31.	10.	10.	0.12
ROUTED TO +	606607	253.	4.08	31.	10.	10.	0.12
HYDROGRAPH AT +	211J	51.	4.02	4.	1.	1.	0.01
2 COMBINED AT +	C607	295.	4.05	35.	12.	12.	0.14
ROUTED TO +	607608	290.	4.08	35.	12.	12.	0.14
2 COMBINED AT +	C608	1642.	5.02	1019.	524.	524.	7.37
ROUTED TO +	608613	1641.	5.05	1019.	524.	524.	7.37
HYDROGRAPH AT +	211M	278.	4.02	23.	8.	8.	0.08
ROUTED TO +	610611	272.	4.05	23.	8.	8.	0.08
HYDROGRAPH AT +	211N	72.	4.00	6.	2.	2.	0.02
2 COMBINED AT +	C611R	338.	4.03	29.	10.	10.	0.10
HYDROGRAPH AT +	211O	143.	4.02	11.	4.	4.	0.04
ROUTED TO +	C609O	69.	4.12	11.	4.	4.	0.04
ROUTED TO +	609611	69.	4.15	11.	4.	4.	0.04
2 COMBINED AT +	C611I	402.	4.03	40.	13.	13.	0.14
ROUTED TO +	C611O	201.	4.20	39.	13.	13.	0.14
DIVERSION TO +	D611R	169.	4.20	38.	13.	13.	0.14
HYDROGRAPH AT +	D611L	32.	4.20	1.	0.	0.	0.14
ROUTED TO +	611612	27.	4.27	1.	0.	0.	0.14
HYDROGRAPH AT +	211P	119.	4.00	10.	3.	3.	0.03
2 COMBINED AT +	C612	119.	4.00	10.	3.	3.	0.17
2 COMBINED AT +	C613	1639.	5.05	1024.	527.	527.	7.55
ROUTED TO +	613621	1632.	5.05	1022.	526.	526.	7.55
HYDROGRAPH AT +	211L	317.	4.02	24.	8.	8.	0.10
2 COMBINED AT +	C621L	1633.	5.05	1035.	532.	532.	7.64
HYDROGRAPH AT +	211Q	74.	4.00	5.	2.	2.	0.02
ROUTED TO +	616617	72.	4.03	5.	2.	2.	0.02
HYDROGRAPH AT +	211R	283.	4.02	22.	7.	7.	0.08
2 COMBINED AT +	C617L	355.	4.02	27.	9.	9.	0.10
HYDROGRAPH AT +	211U	61.	4.05	8.	3.	3.	0.03
DIVERSION TO +	D614R	43.	4.05	5.	2.	2.	0.03

HYDROGRAPH AT	D614L	18.	4.05	3.	1.	1.	0.03
2 COMBINED AT	C617	372.	4.02	30.	10.	10.	0.13
ROUTED TO	617618	359.	4.07	30.	10.	10.	0.13
HYDROGRAPH AT	211S	144.	4.05	12.	4.	4.	0.05
2 COMBINED AT	C618I	499.	4.07	42.	14.	14.	0.18
ROUTED TO	C618O	482.	4.08	36.	14.	14.	0.18
HYDROGRAPH AT	BB614R	43.	4.05	5.	2.	2.	0.03
ROUTED TO	614615	43.	4.10	5.	2.	2.	0.03
HYDROGRAPH AT	211V	16.	4.02	2.	1.	1.	0.00
2 COMBINED AT	C615	55.	4.07	7.	2.	2.	0.03
DIVERSION TO	D615R	19.	4.07	2.	1.	1.	0.03
HYDROGRAPH AT	D615L	36.	4.07	5.	2.	2.	0.03
ROUTED TO	615618	36.	4.08	5.	2.	2.	0.03
2 COMBINED AT	C618	518.	4.08	41.	16.	16.	0.19
ROUTED TO	618619	507.	4.13	41.	16.	16.	0.19
HYDROGRAPH AT	211T	231.	4.02	20.	7.	7.	0.07
2 COMBINED AT	C619L	637.	4.08	60.	22.	22.	0.26
HYDROGRAPH AT	BB615R	19.	4.07	2.	1.	1.	0.03
ROUTED TO	615619	19.	4.17	2.	1.	1.	0.03
2 COMBINED AT	C619I	655.	4.10	62.	23.	23.	0.25
ROUTED TO	C619O	596.	4.18	62.	23.	23.	0.25
DIVERSION TO	D619L	402.	4.18	12.	4.	4.	0.25
HYDROGRAPH AT	D619R	194.	4.18	51.	19.	19.	0.25
ROUTED TO	619620	194.	4.20	51.	19.	19.	0.25
HYDROGRAPH AT	BB619L	402.	4.18	12.	4.	4.	0.25
ROUTED TO	619620	353.	4.22	12.	4.	4.	0.25
HYDROGRAPH AT	211W	108.	4.00	9.	3.	3.	0.03
3 COMBINED AT	C620R	573.	4.22	72.	26.	26.	0.28
HYDROGRAPH AT	BB611R	169.	4.20	38.	13.	13.	0.14
ROUTED TO	611620	169.	4.22	38.	13.	13.	0.14
2 COMBINED AT	C620	741.	4.22	110.	39.	39.	0.42
ROUTED TO	620621	723.	4.23	110.	39.	39.	0.42
2 COMBINED AT	C621	1866.	5.00	1118.	566.	566.	7.93
ROUTED TO	621622	1865.	5.10	1117.	565.	565.	7.93

	HYDROGRAPH AT							
+		211X	629.	4.05	60.	20.	20.	0.21
	2 COMBINED AT							
+		C622R	1877.	5.10	1153.	582.	582.	8.14
	HYDROGRAPH AT							
+		211A	444.	4.03	35.	12.	12.	0.14
	ROUTED TO							
+		C600O	373.	4.10	35.	12.	12.	0.14
	ROUTED TO							
+		600601	366.	4.15	35.	12.	12.	0.14
	HYDROGRAPH AT							
+		211B	357.	4.02	26.	9.	9.	0.11
	2 COMBINED AT							
+		C601	663.	4.03	60.	20.	20.	0.25
	ROUTED TO							
+		601602	651.	4.08	60.	20.	20.	0.25
	HYDROGRAPH AT							
+		211C	134.	4.03	12.	4.	4.	0.04
	2 COMBINED AT							
+		C602L	769.	4.07	72.	24.	24.	0.30
	HYDROGRAPH AT							
+		211D	184.	4.05	17.	6.	6.	0.07
	2 COMBINED AT							
+		C602	950.	4.07	89.	30.	30.	0.37
	ROUTED TO							
+		602603	923.	4.12	89.	30.	30.	0.37
	HYDROGRAPH AT							
+		211E	509.	4.03	41.	14.	14.	0.16
	2 COMBINED AT							
+		C603	1313.	4.07	129.	43.	43.	0.52
	ROUTED TO							
+		603622	1284.	4.13	129.	43.	43.	0.52
	HYDROGRAPH AT							
+		211F	332.	4.05	33.	11.	11.	0.11
	2 COMBINED AT							
+		C622L	1474.	4.12	160.	54.	54.	0.63
	2 COMBINED AT							
+		C622	2429.	4.15	1265.	625.	625.	8.78
	ROUTED TO							
+		622549	2409.	4.23	1264.	624.	624.	8.78
	HYDROGRAPH AT							
+		211Y	271.	4.05	26.	9.	9.	0.09
	2 COMBINED AT							
+		C549R	2508.	4.23	1280.	631.	631.	8.87
	2 COMBINED AT							
+		C549	3524.	4.23	1664.	829.	829.	13.06
	ROUTED TO							
+		549626	3504.	4.33	1662.	829.	829.	13.06
	HYDROGRAPH AT							
+		211Z	249.	4.03	20.	7.	7.	0.08
	2 COMBINED AT							
+		C626C	3561.	4.33	1671.	833.	833.	13.14
	HYDROGRAPH AT							
+		211AA	96.	4.05	9.	3.	3.	0.03
	ROUTED TO							
+		625626	92.	4.08	9.	3.	3.	0.03
	HYDROGRAPH AT							
+		211AB	149.	4.00	12.	4.	4.	0.04
	ROUTED TO							
+		623624	148.	4.02	12.	4.	4.	0.04
	HYDROGRAPH AT							
+		211AC	90.	4.02	8.	3.	3.	0.03
	2 COMBINED AT							
+		C624	238.	4.02	20.	7.	7.	0.07
	ROUTED TO							
+		624626	231.	4.05	20.	7.	7.	0.07
	HYDROGRAPH AT							

+		211AD	139.	4.02	12.	4.	4.	0.04
	2 COMBINED AT							
+		C626R	367.	4.03	32.	11.	11.	0.11
	3 COMBINED AT							
+		C626	3692.	4.32	1694.	845.	845.	13.28
	ROUTED TO							
+		626627	3689.	4.33	1694.	845.	845.	13.28
	HYDROGRAPH AT							
+		211AE	114.	4.02	9.	3.	3.	0.03
	2 COMBINED AT							
+		C627	3714.	4.33	1698.	847.	847.	13.32

*** NORMAL END OF HEC-1 ***

10-Year, Future Condition (6-Hour)

```
1****************************************
*                                      *
*   FLOOD HYDROGRAPH PACKAGE  (HEC-1)  *
*            MAY   1991                *
*          VERSION 4.0.1E              *
*     Lahey F77L-EM/32 version 5.01    *
*       Dodson & Associates, Inc.      *
*  RUN DATE  09/13/99  TIME  13:28:50  *
****************************************
```

```
****************************************
*                                      *
*    U.S. ARMY CORPS OF ENGINEERS      *
*    HYDROLOGIC ENGINEERING CENTER     *
*          609 SECOND STREET           *
*       DAVIS, CALIFORNIA 95616        *
*           (916) 551-1748             *
*                                      *
****************************************
```

```
X     X  XXXXXXX   XXXXX          X
X     X  X        X     X        XX
X     X  X        X               X
XXXXXXX  XXXX     X        XXXXX  X
X     X  X        X               X
X     X  X        X     X         X
X     X  XXXXXXX   XXXXX         XXX
```

THIS PROGRAM REPLACES ALL PREVIOUS VERSIONS OF HEC-1 KNOWN AS HEC1 (JAN 73), HEC1GS, HEC1DB, AND HEC1KW.

THE DEFINITIONS OF VARIABLES -RTIMP- AND -RTIOR- HAVE CHANGED FROM THOSE USED WITH THE 1973-STYLE INPUT STRUCTURE.
THE DEFINITION OF -AMSKK- ON RM-CARD WAS CHANGED WITH REVISIONS DATED 28 SEP 81. THIS IS THE FORTRAN77 VERSION
NEW OPTIONS: DAMBREAK OUTFLOW SUBMERGENCE , SINGLE EVENT DAMAGE CALCULATION, DSS:WRITE STAGE FREQUENCY,
DSS:READ TIME SERIES AT DESIRED CALCULATION INTERVAL LOSS RATE:GREEN AND AMPT INFILTRATION
KINEMATIC WAVE: NEW FINITE DIFFERENCE ALGORITHM

```
1                                          HEC-1 INPUT                                                    PAGE  1

LINE          ID.......1.......2.......3.......4.......5.......6.......7.......8.......9......10

  1           ID   Golden Eagle Park Dam Modifications
  2           ID        by Stantec: Proj. No. 28900095                    File:  FU10-6.IH1
  3           ID        for FCDMC:  FCD                                   Date:03-29-99     mcg
  4           ID                                                       Revised:
  5           ID
  6           ID   10-year, 6-hour future condition watershed model for Ashbrook Wash upstream
  7           ID   of the Fort McDowell Indian Reservation boundary.
  8           ID        This model is a portion of the original Fountain Hills North FDS
  9           ID        watershed model conducted by GVSCE, 1994.  The title cards from that
 10           ID        model are included for reference.
 11           ID
 12           ID   Fountain Hills North Floodplain Delineation Study
 13           ID        FCD 92-04       by GVSCE                          File:   FU10-6.IH1
 14           ID   Future Condition Model                                 Date:    07-21-94   dtp
 15           ID      10-Year 6-Hour Storm, Clark Unit Hydrograph     Revised:    10-31-94   dtp
              *
 16           IT       1                    1080
 17           IO       5
 18           IN      15
              *
 19           JD    2.20    0.01
 20           PC   0.000   0.008   0.016   0.025   0.033   0.041   0.050   0.058   0.066   0.074
 21           PC   0.087   0.099   0.118   0.138   0.216   0.377   0.834   0.911   0.931   0.950
 22           PC   0.962   0.972   0.983   0.991   1.000
 23           JD    2.19    0.50
 24           JD    2.16    2.80
 25           PC   0.000   0.009   0.016   0.025   0.034   0.042   0.051   0.059   0.067   0.076
 26           PC   0.087   0.100   0.120   0.163   0.252   0.451   0.694   0.837   0.900   0.938
 27           PC   0.950   0.963   0.975   0.988   1.000
 28           JD    2.03    16.0
 29           PC   0.000   0.015   0.020   0.030   0.048   0.063   0.076   0.090   0.105   0.119
 30           PC   0.135   0.152   0.175   0.222   0.304   0.472   0.670   0.796   0.868   0.912
 31           PC   0.946   0.960   0.973   0.987   1.000
 32           JD    1.78    90.0
 33           PC   0.000   0.021   0.035   0.051   0.071   0.087   0.105   0.125   0.143   0.160
 34           PC   0.179   0.201   0.232   0.281   0.364   0.500   0.658   0.773   0.841   0.888
 35           PC   0.927   0.945   0.964   0.982   1.000
              *

 36           KK    204A
 37           KM   Sub-Basin   204A
 38           KM
 39           KM      The Clark Unit Hydrograph is used for this basin.
 40           KM          The Urban time-area relation is used for this basin.
 41           KM
 42           KM      Time of Concentration for this sub-basin is based on the following:
 43           KM          6-Hour Rainfall, Pattern No.  1.00
 44           KM          An rainfall areal reduction factor of 0.999
 45           KM
 46           KM       EXCESS RAINFALL VALUES EXCEEDED IN 5-MINUTE INTERVALS
 47           KM     5  10  15  20  25  30  35  40  45  50  55  60  65  70  75  80  85  90
 48           KM   .30 .30 .29 .09 .07 .06 .03 .02 .02 .01 .01 .01 .00 .00 .00 .00 .00 .00
 49           KM
 50           KM          L=   0.687 miles, S=  175 feet/mile, Kb= .03
 51           KM
1                                          HEC-1 INPUT                                                    PAGE  2

LINE          ID.......1.......2.......3.......4.......5.......6.......7.......8.......9......10

 52           BA   0.108
 53           LG    0.09    0.25    5.80    0.18   25.00
 54           UC   0.188   0.152
 55           UA       0       5      16      30      65      77      84      90      94      97
```

```
 56          UA     100
             *

 57          KK  522523
 58          KM      Normal depth channel route from C522 to C523
 59          KM      Source:  200 Scale Mapping
 60          RS      10     FLOW      -1
 61          RC   0.060   0.050   0.060  3275.0  0.0197
 62          RX  1000.0  1020.0  1035.0  1065.0  1080.0  1120.0  1160.0  1185.0
 63          RY  1678.0  1676.0  1674.0  1672.0  1672.0  1674.0  1676.0  1678.0
             *

 64          KK    204B
 65          KM   Sub-Basin   204B
 66          KM
 67          KM      The Clark Unit Hydrograph is used for this basin.
 68          KM          The Urban time-area relation is used for this basin.
 69          KM
 70          KM      Time of Concentration for this sub-basin is based on the following:
 71          KM          6-Hour Rainfall, Pattern No.  1.00
 72          KM          An rainfall areal reduction factor of 0.998
 73          KM
 74          KM       EXCESS RAINFALL VALUES EXCEEDED IN 5-MINUTE INTERVALS
 75          KM     5  10  15  20  25  30  35  40  45  50  55  60  65  70  75  80  85  90
 76          KM   .30 .30 .30 .09 .07 .06 .03 .03 .02 .02 .02 .02 .00 .00 .00 .00 .00 .00
 77          KM
 78          KM          L=   0.775 miles, S=  128 feet/mile, Kb= .03
 79          KM
 80          BA   0.126
 81          LG    0.09    0.25    5.80    0.18   26.66
 82          UC   0.221   0.184
 83          UA       0       5      16      30      65      77      84      90      94      97
 84          UA     100
             *

 85          KK   C523I
 86          KM      Hydrograph combine 522523 + 204B at C523I
 87          HC       2
             *

 88          KK   C523O
 89          KM      Reservoir route at C523.
 90          RS       1    ELEV  1650.3
 91          SV    0.00    0.01    0.12    0.71    2.23    2.50    2.80    3.10    3.20    3.40
 92          SV    3.70    4.00    4.30    4.60    4.90    5.20    5.50
 93          SE  1650.3  1652.0  1654.0  1656.0  1658.0  1658.2  1658.4  1658.6  1658.7  1658.8
 94          SE  1659.0  1659.2  1659.4  1659.6  1659.8  1660.0  1660.2
 95          SQ       0      22      78     144     209     214     220     224     226     232
 96          SQ     239     249     288     384     529     726     960
             *
```



```
LINE         ID.......1.......2.......3.......4.......5.......6.......7.......8.......9......10

 97          KK   D523L
 98          KM      Hydrograph diversion at C523.  Main flow continues in the left branch.
 99          KM      Diverted flow is in the right branch.
100          DT   D523R
101          DI       0      22      78     144     209     214     220     224     226     232
102          DI     239     249     288     384     529     726     960
103          DQ       0       0       0       0       0       0       0       0       0       3
104          DQ       5      10      20      37      61      96     139
             *

105          KK    205A
106          KM   Sub-Basin   205A
107          KM
108          KM      The Clark Unit Hydrograph is used for this basin.
109          KM          The Natural time-area relation is used for this basin.
110          KM
111          KM      Time of Concentration for this sub-basin is based on the following:
112          KM          6-Hour Rainfall, Pattern No.  1.00
113          KM          An rainfall areal reduction factor of 0.998
114          KM
115          KM       EXCESS RAINFALL VALUES EXCEEDED IN 5-MINUTE INTERVALS
116          KM     5  10  15  20  25  30  35  40  45  50  55  60  65  70  75  80  85  90
117          KM   .27 .27 .26 .05 .04 .04 .02 .02 .02 .02 .02 .02 .01 .01 .01 .01 .01 .01
118          KM
119          KM          L=   0.870 miles, S=  378 feet/mile, Kb= .14
120          KM
121          BA   0.118
122          LG    0.25    0.35    4.35    0.40   35.00
123          UC   0.471   0.486
124          UA       0       3       5       8      12      20      43      75      90      96
125          UA     100
             *

126          KK    205B
127          KM   Sub-Basin   205B
128          KM
129          KM      The Clark Unit Hydrograph is used for this basin.
130          KM          The Natural time-area relation is used for this basin.
131          KM
132          KM      Time of Concentration for this sub-basin is based on the following:
133          KM          6-Hour Rainfall, Pattern No.  1.00
134          KM          An rainfall areal reduction factor of 0.997
135          KM
136          KM       EXCESS RAINFALL VALUES EXCEEDED IN 5-MINUTE INTERVALS
137          KM     5  10  15  20  25  30  35  40  45  50  55  60  65  70  75  80  85  90
138          KM   .27 .27 .26 .05 .04 .04 .02 .02 .02 .02 .02 .02 .01 .01 .01 .01 .01 .01
```

```
 139          KM
 140          KM          L=   0.759 miles, S=  129 feet/mile, Kb= .14
 141          KM
 142          BA   0.211
 143          LG    0.25    0.35    4.35    0.40   35.00
 144          UC   0.696   0.481
 145          UA       0       3       5       8      12      20      43      75      90      96
 146          UA     100
              *
```



```
LINE          ID.......1.......2.......3.......4.......5.......6.......7.......8.......9......10

 147          KK    C528
 148          KM      Hydrograph combine 205A + 205B at C528
 149          HC       2
              *

 150          KK  528530
 151          KM      Normal depth channel route from C528 to C530
 152          KM      Source:  Hydrology Field Reconnaissance
 153          RS       3    FLOW      -1
 154          RC   0.060   0.043   0.060  2594.0  0.0709
 155          RX  1000.0  1018.0  1031.0  1042.0  1052.0  1066.0  1093.0  1107.0
 156          RY    96.3    92.2    89.9    85.9    85.7    91.5    91.2    96.3
              *

 157          KK    205C
 158          KM   Sub-Basin   205C
 159          KM
 160          KM      The Clark Unit Hydrograph is used for this basin.
 161          KM          The Natural time-area relation is used for this basin.
 162          KM
 163          KM      Time of Concentration for this sub-basin is based on the following:
 164          KM          6-Hour Rainfall, Pattern No.  1.00
 165          KM          An rainfall areal reduction factor of 0.999
 166          KM
 167          KM       EXCESS RAINFALL VALUES EXCEEDED IN 5-MINUTE INTERVALS
 168          KM     5  10  15  20  25  30  35  40  45  50  55  60  65  70  75  80  85  90
 169          KM   .27 .27 .26 .05 .04 .04 .02 .02 .02 .02 .02 .02 .01 .01 .01 .01 .01 .01
 170          KM
 171          KM          L=   0.618 miles, S=  331 feet/mile, Kb= .15
 172          KM
 173          BA   0.059
 174          LG    0.25    0.35    4.35    0.41   35.00
 175          UC   0.417   0.479
 176          UA       0       3       5       8      12      20      43      75      90      96
 177          UA     100
              *

 178          KK   C530R
 179          KM      Hydrograph combine 528530 + 205C at C530 right branch
 180          HC       2
              *

 181          KK    205D
 182          KM   Sub-Basin   205D
 183          KM
 184          KM      The Clark Unit Hydrograph is used for this basin.
 185          KM          The Natural time-area relation is used for this basin.
 186          KM
 187          KM      Time of Concentration for this sub-basin is based on the following:
 188          KM          6-Hour Rainfall, Pattern No.  1.00
 189          KM          An rainfall areal reduction factor of 0.996
 190          KM
 191          KM       EXCESS RAINFALL VALUES EXCEEDED IN 5-MINUTE INTERVALS
 192          KM     5  10  15  20  25  30  35  40  45  50  55  60  65  70  75  80  85  90
```



```
LINE          ID.......1.......2.......3.......4.......5.......6.......7.......8.......9......10

 193          KM   .27 .27 .26 .05 .04 .04 .02 .02 .02 .02 .02 .02 .01 .01 .01 .01 .01 .01
 194          KM
 195          KM          L=   1.020 miles, S=  361 feet/mile, Kb= .13
 196          KM
 197          BA   0.319
 198          LG    0.25    0.35    4.35    0.40   35.00
 199          UC   0.513   0.343
 200          UA       0       3       5       8      12      20      43      75      90      96
 201          UA     100
              *

 202          KK    205E
 203          KM   Sub-Basin   205E
 204          KM
 205          KM      The Clark Unit Hydrograph is used for this basin.
 206          KM          The Natural time-area relation is used for this basin.
 207          KM
 208          KM      Time of Concentration for this sub-basin is based on the following:
 209          KM          6-Hour Rainfall, Pattern No.  1.00
 210          KM          An rainfall areal reduction factor of 0.997
 211          KM
 212          KM       EXCESS RAINFALL VALUES EXCEEDED IN 5-MINUTE INTERVALS
 213          KM     5  10  15  20  25  30  35  40  45  50  55  60  65  70  75  80  85  90
 214          KM   .27 .27 .26 .05 .04 .04 .02 .02 .02 .02 .02 .02 .01 .01 .01 .01 .01 .01
 215          KM
 216          KM          L=   1.357 miles, S=  358 feet/mile, Kb= .14
 217          KM
 218          BA   0.218
 219          LG    0.25    0.35    4.35    0.40   35.00
```

```
 220          UC   0.671   0.723
 221          UA       0       3       5       8      12      20      43      75      90      96
 222          UA     100
              *

 223          KK    C529
 224          KM      Hydrograph combine 205D + 205E at C529
 225          HC       2
              *
              * *
              * * NOTE:  529530 too short to route
              * *
              *

 226          KK    C530
 227          KM      Hydrograph combine C529 + C530R at C530
 228          HC       2
              *

 229          KK  530531
 230          KM      Normal depth channel route from C530 to C531
 231          KM      Source:  Hydrology Field Reconnaissance
 232          RS       3    FLOW      -1
 233          RC   0.060   0.059   0.060  2426.0  0.0404
 234          RX  1000.0  1035.0  1050.0  1060.0  1075.0  1081.0  1088.0  1094.0
 235          RY    95.9    86.5    86.2    83.1    84.0    90.2    95.6    99.3
              *
1                                          HEC-1 INPUT                                                PAGE  6

LINE          ID.......1.......2.......3.......4.......5.......6.......7.......8.......9......10

 236          KK    205F
 237          KM   Sub-Basin   205F
 238          KM
 239          KM      The Clark Unit Hydrograph is used for this basin.
 240          KM          The Natural time-area relation is used for this basin.
 241          KM
 242          KM      Time of Concentration for this sub-basin is based on the following:
 243          KM          6-Hour Rainfall, Pattern No.  1.00
 244          KM          An rainfall areal reduction factor of 0.998
 245          KM
 246          KM       EXCESS RAINFALL VALUES EXCEEDED IN 5-MINUTE INTERVALS
 247          KM     5  10  15  20  25  30  35  40  45  50  55  60  65  70  75  80  85  90
 248          KM   .27 .27 .26 .05 .04 .04 .02 .02 .02 .02 .02 .02 .01 .01 .01 .01 .01 .01
 249          KM
 250          KM          L=   0.786 miles, S=  326 feet/mile, Kb= .14
 251          KM
 252          BA   0.161
 253          LG    0.25    0.35    4.35    0.41   35.00
 254          UC   0.471   0.374
 255          UA       0       3       5       8      12      20      43      75      90      96
 256          UA     100
              *

 257          KK    C531
 258          KM      Hydrograph combine 530531 + 205F at C531
 259          HC       2
              *

 260          KK  531532
 261          KM      Normal depth channel route from C531 to C532
 262          KM      Source:  Hydrology Field Reconnaissance
 263          RS       5    FLOW      -1
 264          RC   0.060   0.065   0.060  3391.0  0.0463
 265          RX  1000.0  1012.0  1022.0  1032.0  1050.0  1056.0  1068.0  1092.0
 266          RY    98.8    93.8    89.1    86.4    86.5    89.1    91.0    97.6
              *

 267          KK    205G
 268          KM   Sub-Basin   205G
 269          KM
 270          KM      The Clark Unit Hydrograph is used for this basin.
 271          KM          The Natural time-area relation is used for this basin.
 272          KM
 273          KM      Time of Concentration for this sub-basin is based on the following:
 274          KM          6-Hour Rainfall, Pattern No.  1.00
 275          KM          An rainfall areal reduction factor of 0.998
 276          KM
 277          KM       EXCESS RAINFALL VALUES EXCEEDED IN 5-MINUTE INTERVALS
 278          KM     5  10  15  20  25  30  35  40  45  50  55  60  65  70  75  80  85  90
 279          KM   .27 .26 .25 .04 .03 .03 .02 .02 .02 .02 .02 .02 .00 .00 .00 .00 .00 .00
 280          KM
 281          KM          L=   0.924 miles, S=  338 feet/mile, Kb= .13
 282          KM
 283          BA   0.185
1                                          HEC-1 INPUT                                                PAGE  7

LINE          ID.......1.......2.......3.......4.......5.......6.......7.......8.......9......10

 284          LG    0.24    0.35    4.50    0.40   31.23
 285          UC   0.500   0.420
 286          UA       0       3       5       8      12      20      43      75      90      96
 287          UA     100
              *

 288          KK   C532L
 289          KM      Hydrograph combine 531532 + 205G at C532 left branch
 290          HC       2
              *
```

```
291          KK    205H
292          KM   Sub-Basin   205H
293          KM
294          KM      The Clark Unit Hydrograph is used for this basin.
295          KM          The Natural time-area relation is used for this basin.
296          KM
297          KM      Time of Concentration for this sub-basin is based on the following:
298          KM          6-Hour Rainfall, Pattern No.  1.00
299          KM          An rainfall areal reduction factor of 0.997
300          KM
301          KM       EXCESS RAINFALL VALUES EXCEEDED IN 5-MINUTE INTERVALS
302          KM     5  10  15  20  25  30  35  40  45  50  55  60  65  70  75  80  85  90
303          KM   .27 .26 .26 .04 .04 .03 .02 .02 .02 .02 .02 .02 .00 .00 .00 .00 .00 .00
304          KM
305          KM          L=   1.464 miles, S=  325 feet/mile, Kb= .13
306          KM
307          BA   0.261
308          LG    0.24    0.35    4.50    0.39   31.55
309          UC   0.713   0.742
310          UA       0       3       5       8      12      20      43      75      90      96
311          UA     100
             *

312          KK    C532
313          KM      Hydrograph combine C532L + 205H at C532
314          HC       2
             *

315          KK  532533
316          KM      Normal depth channel route from C532 to C533
317          KM      Source:  Hydrology Field Reconnaissance
318          RS       2    FLOW     -1
319          RC   0.060   0.045   0.060  1555.0  0.0283
320          RX  1000.0  1020.0  1030.0  1048.0  1065.0  1077.0  1092.0  1119.0
321          RY    98.0    89.4    88.1    85.6    85.9    92.2    93.8    97.0
             *

322          KK    205I
323          KM   Sub-Basin   205I
324          KM
325          KM      The Clark Unit Hydrograph is used for this basin.
326          KM          The Natural time-area relation is used for this basin.
327          KM
328          KM      Time of Concentration for this sub-basin is based on the following:
```



```
LINE         ID.......1.......2.......3.......4.......5.......6.......7.......8.......9......10

329          KM          6-Hour Rainfall, Pattern No.  1.00
330          KM          An rainfall areal reduction factor of 0.995
331          KM
332          KM       EXCESS RAINFALL VALUES EXCEEDED IN 5-MINUTE INTERVALS
333          KM     5  10  15  20  25  30  35  40  45  50  55  60  65  70  75  80  85  90
334          KM   .27 .26 .25 .04 .02 .02 .01 .01 .01 .01 .01 .01 .00 .00 .00 .00 .00 .00
335          KM
336          KM          L=   1.487 miles, S=  326 feet/mile, Kb= .11
337          KM
338          BA   0.354
339          LG    0.20    0.37    5.20    0.28   15.18
340          UC   0.658   0.578
341          UA       0       3       5       8      12      20      43      75      90      96
342          UA     100
             *

343          KK    C533
344          KM      Hydrograph combine 532533 + 205I at C533
345          HC       2
             *

346          KK  533534
347          KM      Normal depth channel route from C533 to C534
348          KM      Source:  Hydrology Field Reconnaissance
349          RS      13    FLOW     -1
350          RC   0.060   0.046   0.060  7145.0  0.0241
351          RX  1000.0  1010.0  1060.0  1073.0  1160.0  1181.0  1223.0  1237.0
352          RY    97.8    93.7    94.7    90.8    89.9    92.4    94.0    96.8
             *

353          KK    205J
354          KM   Sub-Basin   205J
355          KM
356          KM      The Clark Unit Hydrograph is used for this basin.
357          KM          The Natural time-area relation is used for this basin.
358          KM
359          KM      Time of Concentration for this sub-basin is based on the following:
360          KM          6-Hour Rainfall, Pattern No.  1.00
361          KM          An rainfall areal reduction factor of 0.995
362          KM
363          KM       EXCESS RAINFALL VALUES EXCEEDED IN 5-MINUTE INTERVALS
364          KM     5  10  15  20  25  30  35  40  45  50  55  60  65  70  75  80  85  90
365          KM   .26 .25 .24 .03 .00 .00 .00 .00 .00 .00 .00 .00 .00 .00 .00 .00 .00 .00
366          KM
367          KM          L=   1.633 miles, S=  243 feet/mile, Kb= .08
368          KM
369          BA   0.369
370          LG    0.21    0.35    4.90    0.30    3.48
371          UC   0.667   0.616
372          UA       0       3       5       8      12      20      43      75      90      96
373          UA     100
             *
```

```
LINE          ID.......1.......2.......3.......4.......5.......6.......7.......8.......9......10

 374          KK   C534R
 375          KM      Hydrograph combine 533534 + 205J at C534 right branch
 376          HC       2
              *

 377          KK    205K
 378          KM   Sub-Basin   205K
 379          KM
 380          KM      The Clark Unit Hydrograph is used for this basin.
 381          KM          The Natural time-area relation is used for this basin.
 382          KM
 383          KM      Time of Concentration for this sub-basin is based on the following:
 384          KM          6-Hour Rainfall, Pattern No.  1.00
 385          KM          An rainfall areal reduction factor of 0.997
 386          KM
 387          KM       EXCESS RAINFALL VALUES EXCEEDED IN 5-MINUTE INTERVALS
 388          KM     5  10  15  20  25  30  35  40  45  50  55  60  65  70  75  80  85  90
 389          KM   .27 .26 .26 .05 .01 .00 .00 .00 .00 .00 .00 .00 .00 .00 .00 .00 .00 .00
 390          KM
 391          KM          L=   1.772 miles, S=  249 feet/mile, Kb= .10
 392          KM
 393          BA   0.245
 394          LG    0.16    0.38    5.60    0.22    1.54
 395          UC   0.817   1.040
 396          UA       0       3       5       8      12      20      43      75      90      96
 397          UA     100
              *

 398          KK    C534
 399          KM      Hydrograph combine C534R + 205K at C534
 400          HC       2
              *

 401          KK  534535
 402          KM      Normal depth channel route from C534 to C535
 403          KM      Source:  Hydrology Field Reconnaissance
 404          RS       4    FLOW      -1
 405          RC   0.065   0.046   0.065  2037.0  0.0221
 406          RX  1000.0  1010.0  1016.0  1075.0  1150.0  1162.0  1174.0  1182.0
 407          RY    97.1    93.4    91.6    89.6    86.9    90.8    92.2    92.3
              *

 408          KK    205L
 409          KM   Sub-Basin   205L
 410          KM
 411          KM      The Clark Unit Hydrograph is used for this basin.
 412          KM          The Natural time-area relation is used for this basin.
 413          KM
 414          KM      Time of Concentration for this sub-basin is based on the following:
 415          KM          6-Hour Rainfall, Pattern No.  1.00
 416          KM          An rainfall areal reduction factor of 0.998
 417          KM
 418          KM       EXCESS RAINFALL VALUES EXCEEDED IN 5-MINUTE INTERVALS
 419          KM     5  10  15  20  25  30  35  40  45  50  55  60  65  70  75  80  85  90
```



```
LINE          ID.......1.......2.......3.......4.......5.......6.......7.......8.......9......10

 420          KM   .26 .25 .24 .03 .00 .00 .00 .00 .00 .00 .00 .00 .00 .00 .00 .00 .00 .00
 421          KM
 422          KM          L=   0.701 miles, S=  284 feet/mile, Kb= .09
 423          KM
 424          BA   0.118
 425          LG    0.19    0.36    5.00    0.29    0.00
 426          UC   0.346   0.290
 427          UA       0       3       5       8      12      20      43      75      90      96
 428          UA     100
              *

 429          KK    C535
 430          KM      Hydrograph combine 534535 + 205L at C535
 431          HC       2
              *

 432          KK  535536
 433          KM      Normal depth channel route from C535 to C536
 434          KM      Source:  HEC-2 Cross Section: HE 3.275
 435          RS       5    FLOW      -1
 436          RC   0.075   0.050   0.075  2975.0  0.0236
 437          RX  9852.8  9871.5  9957.7 10000.0 10015.6 10052.4 10142.4 10183.6
 438          RY  1911.6  1904.3  1906.9  1900.8  1900.8  1905.4  1905.2  1912.6
              *

 439          KK    205M
 440          KM   Sub-Basin   205M
 441          KM
 442          KM      The Clark Unit Hydrograph is used for this basin.
 443          KM          The Urban time-area relation is used for this basin.
 444          KM
 445          KM      Time of Concentration for this sub-basin is based on the following:
 446          KM          6-Hour Rainfall, Pattern No.  1.00
 447          KM          An rainfall areal reduction factor of 0.998
 448          KM
 449          KM       EXCESS RAINFALL VALUES EXCEEDED IN 5-MINUTE INTERVALS
 450          KM     5  10  15  20  25  30  35  40  45  50  55  60  65  70  75  80  85  90
 451          KM   .29 .28 .28 .07 .05 .03 .02 .01 .01 .01 .01 .01 .00 .00 .00 .00 .00 .00
 452          KM
```

```
453          KM          L=   0.839 miles, S=  230 feet/mile, Kb= .05
454          KM
455          BA   0.139
456          LG    0.15    0.31    5.40    0.22   22.35
457          UC   0.258   0.221
458          UA       0       5      16      30      65      77      84      90      94      97
459          UA     100
             *

460          KK   C536R
461          KM      Hydrograph combine 535536 + 205M at C536 right branch
462          HC       2
             *
```



```
LINE         ID.......1.......2.......3.......4.......5.......6.......7.......8.......9......10

463          KK    205N
464          KM   Sub-Basin   205N
465          KM
466          KM      The Clark Unit Hydrograph is used for this basin.
467          KM          The HEC-1 time-area relation is used for this basin.
468          KM
469          KM      Time of Concentration for this sub-basin is based on the following:
470          KM          6-Hour Rainfall, Pattern No.  1.00
471          KM          An rainfall areal reduction factor of 0.998
472          KM
473          KM       EXCESS RAINFALL VALUES EXCEEDED IN 5-MINUTE INTERVALS
474          KM     5  10  15  20  25  30  35  40  45  50  55  60  65  70  75  80  85  90
475          KM   .27 .26 .26 .05 .01 .00 .00 .00 .00 .00 .00 .00 .00 .00 .00 .00 .00 .00
476          KM
477          KM          L=   1.183 miles, S=  245 feet/mile, Kb= .10
478          KM
479          BA   0.156
480          LG    0.15    0.39    5.70    0.21    0.80
481          UC   0.592   0.681
             *

482          KK   C536I
483          KM      Hydrograph combine C536R + 205N at C536I
484          HC       2
             *
             * *
             * * C536I is the total flow in Hesperus Wash upstream of Dam 36
             * *
             *

485          KK   C536O
486          KM      Reservoir route at C536 (Dam 36).
487          RS       1    ELEV  1852.1
488          SV    0.00   14.41   35.94   67.64  108.61  158.07  218.14  276.00  280.00  289.00
489          SV  298.02  308.00  317.00  327.00  337.00  346.95  358.00  374.00
490          SE  1852.1  1866.0  1870.0  1874.0  1878.0  1882.0  1886.0  1889.0  1889.2  1889.6
491          SE  1890.0  1890.4  1890.8  1891.2  1891.6  1892.0  1892.4  1893.0
492          SQ       0     108     168     211     245     276     301     320     338     347
493          SQ     356     459     679     995    1408    1905    2477    3119    3826    5009
494          SE  1852.1  1858.0  1862.0  1866.0  1870.0  1874.0  1878.0  1882.0  1886.0  1889.0
495          SE  1889.2  1889.6  1890.0  1890.4  1890.8  1891.2  1891.6  1892.0  1892.4  1893.0
496          RL                    0.17
             *
             * *
             * * End Basin 205.  Start Basin 206
             * *
             *

497          KK  536537
498          KM      Normal depth channel route from C536 to C537
499          KM      Source:  HEC-2 Cross Section: HE 2.729
500          RS       3    FLOW      -1
501          RC   0.075   0.050   0.075  1480.0  0.0209
502          RX  9900.0  9912.0  9947.3  9979.3 10025.0 10044.5 10051.0 10060.0
```



```
LINE         ID.......1.......2.......3.......4.......5.......6.......7.......8.......9......10

503          RY  1846.5  1845.4  1843.1  1834.3  1833.6  1840.5  1843.3  1843.5
             *

504          KK    206A
505          KM   Sub-Basin   206A
506          KM
507          KM      The Clark Unit Hydrograph is used for this basin.
508          KM          The Urban time-area relation is used for this basin.
509          KM
510          KM      Time of Concentration for this sub-basin is based on the following:
511          KM          6-Hour Rainfall, Pattern No.  1.00
512          KM          An rainfall areal reduction factor of 0.998
513          KM
514          KM       EXCESS RAINFALL VALUES EXCEEDED IN 5-MINUTE INTERVALS
515          KM     5  10  15  20  25  30  35  40  45  50  55  60  65  70  75  80  85  90
516          KM   .30 .29 .29 .08 .06 .05 .02 .02 .02 .02 .02 .02 .01 .01 .01 .01 .01 .01
517          KM
518          KM          L=   0.631 miles, S=  256 feet/mile, Kb= .04
519          KM
520          BA   0.128
521          LG    0.12    0.28    5.30    0.23   33.34
522          UC   0.188   0.129
523          UA       0       5      16      30      65      77      84      90      94      97
524          UA     100
             *
```

```
 525          KK    C537
 526          KM      Hydrograph combine 536537 + 206A at C537
 527          HC       2
              *

 528          KK  537538
 529          KM      Normal depth channel route from C537 to C538
 530          KM      Source:  HEC-2 Cross Section: HE 2.493
 531          RS       4    FLOW     -1
 532          RC   0.075   0.050   0.075  2155.0  0.0210
 533          RX  9946.0  9957.6  9984.8  9994.8 10000.0 10036.5 10070.1 10107.3
 534          RY  1817.0  1815.2  1807.4  1803.2  1803.2  1805.5  1814.3  1815.4
              *

 535          KK    206B
 536          KM   Sub-Basin   206B
 537          KM
 538          KM      The Clark Unit Hydrograph is used for this basin.
 539          KM          The Urban time-area relation is used for this basin.
 540          KM
 541          KM      Time of Concentration for this sub-basin is based on the following:
 542          KM          6-Hour Rainfall, Pattern No.  1.00
 543          KM          An rainfall areal reduction factor of 0.999
 544          KM
 545          KM       EXCESS RAINFALL VALUES EXCEEDED IN 5-MINUTE INTERVALS
 546          KM     5  10  15  20  25  30  35  40  45  50  55  60  65  70  75  80  85  90
 547          KM   .30 .30 .30 .09 .07 .06 .03 .03 .02 .02 .02 .02 .01 .01 .01 .01 .01 .01
 548          KM
 549          KM          L=   0.570 miles, S=  139 feet/mile, Kb= .03
```



```
LINE          ID.......1.......2.......3.......4.......5.......6.......7.......8.......9......10

 550          KM
 551          BA   0.095
 552          LG    0.10    0.26    5.20    0.23   41.42
 553          UC   0.183   0.137
 554          UA       0       5      16      30      65      77      84      90      94      97
 555          UA     100
              *

 556          KK   C538I
 557          KM      Hydrograph combine 537538 + 206B at C538I
 558          HC       2
              *

 559          KK   C538O
 560          KM      Reservoir route at C538.
 561          RS       1    ELEV  1778.2
 562          SV    0.00    0.10    0.57    1.69    2.60    2.70    2.90    3.00    3.20    3.38
 563          SV    3.60    3.90    4.10    4.30    4.60    5.10    5.60    6.10    7.10    8.10
 564          SE  1778.2  1782.0  1784.0  1786.0  1787.1  1787.2  1787.4  1787.6  1787.8  1788.0
 565          SE  1788.2  1788.4  1788.6  1788.8  1789.0  1789.4  1789.8  1790.2  1790.8  1791.4
 566          SQ       0      82     133     185     207     208     212     218     226     235
 567          SQ     249     265     286     310     338     400     482     611     942    1439
              *

 568          KK  538540
 569          KM      Normal depth channel route from C538 to C540
 570          KM      Source:  HEC-2 Cross Section: HE 1.990
 571          RS       6    FLOW     -1
 572          RC   0.075   0.050   0.075  2176.0  0.0210
 573          RX  9907.7  9931.8  9978.4 10000.0 10041.1 10056.9 10143.7 10164.9
 574          RY  1767.5  1754.9  1755.2  1753.2  1753.1  1755.1  1757.3  1769.4
              *

 575          KK    206C
 576          KM   Sub-Basin   206C
 577          KM
 578          KM      The Clark Unit Hydrograph is used for this basin.
 579          KM          The Urban time-area relation is used for this basin.
 580          KM
 581          KM      Time of Concentration for this sub-basin is based on the following:
 582          KM          6-Hour Rainfall, Pattern No.  1.00
 583          KM          An rainfall areal reduction factor of 1.000
 584          KM
 585          KM       EXCESS RAINFALL VALUES EXCEEDED IN 5-MINUTE INTERVALS
 586          KM     5  10  15  20  25  30  35  40  45  50  55  60  65  70  75  80  85  90
 587          KM   .29 .28 .28 .07 .04 .03 .02 .02 .02 .02 .02 .02 .00 .00 .00 .00 .00 .00
 588          KM
 589          KM          L=   0.427 miles, S=  138 feet/mile, Kb= .04
 590          KM
 591          BA   0.024
 592          LG    0.11    0.26    4.35    0.36   28.55
 593          UC   0.192   0.252
 594          UA       0       5      16      30      65      77      84      90      94      97
 595          UA     100
              *
```



```
LINE          ID.......1.......2.......3.......4.......5.......6.......7.......8.......9......10

 596          KK   C540R
 597          KM      Hydrograph combine 538540 + 206C at C540 right branch
 598          HC       2
              *

 599          KK    206D
 600          KM   Sub-Basin   206D
```

```
601          KM
602          KM      The Clark Unit Hydrograph is used for this basin.
603          KM          The Urban time-area relation is used for this basin.
604          KM
605          KM      Time of Concentration for this sub-basin is based on the following:
606          KM          6-Hour Rainfall, Pattern No.  1.00
607          KM          An rainfall areal reduction factor of 0.999
608          KM
609          KM        EXCESS RAINFALL VALUES EXCEEDED IN 5-MINUTE INTERVALS
610          KM     5  10  15  20  25  30  35  40  45  50  55  60  65  70  75  80  85  90
611          KM   .31 .31 .31 .10 .08 .07 .03 .03 .03 .02 .02 .02 .01 .01 .01 .01 .01 .01
612          KM
613          KM          L=   0.531 miles, S=  236 feet/mile, Kb= .03
614          KM
615          BA   0.062
616          LG    0.08    0.25    5.70    0.18   43.01
617          UC   0.150   0.133
618          UA       0       5      16      30      65      77      84      90      94      97
619          UA     100
             *

620          KK  539540
621          KM      Normal depth channel route from C539 to C540
622          KM      Source:  200 Scale Mapping
623          RS       5    FLOW      -1
624          RC   0.060   0.050   0.055  1872.0  0.0256
625          RX  1000.0  1007.0  1016.0  1036.0  1046.0  1080.0  1150.0  1210.0
626          RY  1750.0  1748.0  1746.0  1744.0  1744.0  1746.0  1748.0  1750.0
             *

627          KK    206E
628          KM   Sub-Basin   206E
629          KM
630          KM      The Clark Unit Hydrograph is used for this basin.
631          KM          The Urban time-area relation is used for this basin.
632          KM
633          KM      Time of Concentration for this sub-basin is based on the following:
634          KM          6-Hour Rainfall, Pattern No.  1.00
635          KM          An rainfall areal reduction factor of 1.000
636          KM
637          KM        EXCESS RAINFALL VALUES EXCEEDED IN 5-MINUTE INTERVALS
638          KM     5  10  15  20  25  30  35  40  45  50  55  60  65  70  75  80  85  90
639          KM   .29 .28 .28 .07 .04 .03 .01 .01 .01 .01 .01 .01 .00 .00 .00 .00 .00 .00
640          KM
641          KM          L=   0.343 miles, S=  175 feet/mile, Kb= .03
642          KM
643          BA   0.023
```



```
LINE         ID.......1.......2.......3.......4.......5.......6.......7.......8.......9......10

644          LG    0.09    0.25    4.30    0.36   25.75
645          UC   0.138   0.150
646          UA       0       5      16      30      65      77      84      90      94      97
647          UA     100
             *

648          KK   C540L
649          KM      Hydrograph combine 539540 + 206E at C540 left branch
650          HC       2
             *

651          KK    C540
652          KM      Hydrograph combine C540R + C540L at C540
653          HC       2
             *
             * *
             * * C540 is the end of Hesperus Wash and the start of Balboa Wash
             * *
             *

654          KK  540541
655          KM      Normal depth channel route from C540 to C541
656          KM      Source:  HEC-2 Cross Section: BA 1.645
657          RS       7    FLOW      -1
658          RC   0.065   0.035   0.065  4207.0  0.0204
659          RX  9960.8  9968.0  9975.1  9975.7  9993.2 10018.2 10297.5 10343.9
660          RY  1725.2  1721.8  1718.4  1716.2  1716.4  1718.4  1719.8  1730.5
             *

661          KK    206F
662          KM   Sub-Basin   206F
663          KM
664          KM      The Clark Unit Hydrograph is used for this basin.
665          KM          The Urban time-area relation is used for this basin.
666          KM
667          KM      Time of Concentration for this sub-basin is based on the following:
668          KM          6-Hour Rainfall, Pattern No.  1.00
669          KM          An rainfall areal reduction factor of 0.998
670          KM
671          KM        EXCESS RAINFALL VALUES EXCEEDED IN 5-MINUTE INTERVALS
672          KM     5  10  15  20  25  30  35  40  45  50  55  60  65  70  75  80  85  90
673          KM   .29 .29 .28 .08 .05 .04 .02 .01 .01 .01 .01 .01 .00 .00 .00 .00 .00 .00
674          KM
675          KM          L=   0.975 miles, S=  217 feet/mile, Kb= .03
676          KM
677          BA   0.157
678          LG    0.09    0.25    4.60    0.30   24.97
679          UC   0.213   0.187
680          UA       0       5      16      30      65      77      84      90      94      97
681          UA     100
```

```
                *
LINE            ID.......1.......2.......3.......4.......5.......6.......7.......8.......9......10

 682            KK    C541
 683            KM      Hydrograph combine 540541 + 206F at C541
 684            HC       2
                *

 685            KK  541548
 686            KM      Normal depth channel route from C541 to C548
 687            KM      Source:  HEC-2 Cross Section: BA 0.905
 688            RS       2    FLOW      -1
 689            RC   0.060   0.045   0.060  1138.0  0.0316
 690            RX  9761.7  9936.7  9955.2  9986.9  9994.7 10039.2 10065.3 10066.0
 691            RY  1647.4  1644.1  1638.1  1637.3  1636.2  1637.5  1652.9  1653.0
                *

 692            KK    206G
 693            KM   Sub-Basin   206G
 694            KM
 695            KM      The Clark Unit Hydrograph is used for this basin.
 696            KM          The Urban time-area relation is used for this basin.
 697            KM
 698            KM      Time of Concentration for this sub-basin is based on the following:
 699            KM          6-Hour Rainfall, Pattern No.  1.00
 700            KM          An rainfall areal reduction factor of 0.999
 701            KM
 702            KM       EXCESS RAINFALL VALUES EXCEEDED IN 5-MINUTE INTERVALS
 703            KM     5  10  15  20  25  30  35  40  45  50  55  60  65  70  75  80  85  90
 704            KM   .30 .29 .29 .09 .06 .05 .02 .02 .02 .02 .02 .02 .00 .00 .00 .00 .00 .00
 705            KM
 706            KM          L=   0.950 miles, S=  132 feet/mile, Kb= .03
 707            KM
 708            BA   0.089
 709            LG    0.11    0.26    5.20    0.23   29.86
 710            UC   0.246   0.296
 711            UA       0       5      16      30      65      77      84      90      94      97
 712            UA     100
                *

 713            KK  BB523R
 714            KM      Retrieve previously diverted hydrograph at C523 in the right branch.
 715            DR   D523R
                *

 716            KK  523548
 717            KM      Normal depth channel route from C523 to C548
 718            KM      Source:  200 Scale Mapping
 719            RS      23    FLOW      -1
 720            RC   0.040   0.018   0.040  2680.0  0.0189
 721            RX  1000.0  1040.0  1090.0  1130.0  1170.0  1171.2  1181.2  1196.2
 722            RY  1646.0  1645.0  1643.8  1644.7  1644.0  1644.4  1646.0  1648.0
                *
```



```
LINE            ID.......1.......2.......3.......4.......5.......6.......7.......8.......9......10

 723            KK   C548L
 724            KM      Hydrograph combine 541548 + 206G + BB523R at C548 left branch
 725            HC       3    3.72
                *
                * *
                * * C548L is the total flow in Balboa Wash above confluence with Oxford Wash
                * *
                *

 726            KK    206H
 727            KM   Sub-Basin   206H
 728            KM
 729            KM      The Clark Unit Hydrograph is used for this basin.
 730            KM          The Urban time-area relation is used for this basin.
 731            KM
 732            KM      Time of Concentration for this sub-basin is based on the following:
 733            KM          6-Hour Rainfall, Pattern No.  1.00
 734            KM          An rainfall areal reduction factor of 0.999
 735            KM
 736            KM       EXCESS RAINFALL VALUES EXCEEDED IN 5-MINUTE INTERVALS
 737            KM     5  10  15  20  25  30  35  40  45  50  55  60  65  70  75  80  85  90
 738            KM   .31 .30 .30 .10 .07 .07 .03 .03 .03 .02 .02 .02 .01 .01 .01 .01 .01 .01
 739            KM
 740            KM          L=   0.515 miles, S=  183 feet/mile, Kb= .03
 741            KM
 742            BA   0.059
 743            LG    0.08    0.25    5.70    0.18   36.29
 744            UC   0.158   0.141
 745            UA       0       5      16      30      65      77      84      90      94      97
 746            UA     100
                *

 747            KK  542543
 748            KM      Normal depth channel route from C542 to C543
 749            KM      Source:  HEC-2 Cross Section: OX 0.931
 750            RS       2    FLOW      -1
 751            RC   0.075   0.040   0.050   686.0  0.0066
 752            RX  9846.9  9881.6  9967.5  9983.2 10010.0 10025.0 10033.8 10039.6
 753            RY  1732.3  1723.5  1724.1  1717.8  1717.0  1724.0  1728.2  1730.7
                *
```

```
754          KK    206I
755          KM   Sub-Basin   206I
756          KM
757          KM      The Clark Unit Hydrograph is used for this basin.
758          KM          The Urban time-area relation is used for this basin.
759          KM
760          KM      Time of Concentration for this sub-basin is based on the following:
761          KM          6-Hour Rainfall, Pattern No.  1.00
762          KM          An rainfall areal reduction factor of 1.000
763          KM
764          KM       EXCESS RAINFALL VALUES EXCEEDED IN 5-MINUTE INTERVALS
765          KM     5  10  15  20  25  30  35  40  45  50  55  60  65  70  75  80  85  90
766          KM   .31 .30 .30 .10 .07 .07 .03 .03 .03 .02 .02 .02 .01 .01 .01 .01 .01 .01
1                                          HEC-1 INPUT                                          PAGE 18

LINE         ID.......1.......2.......3.......4.......5.......6.......7.......8.......9......10

767          KM
768          KM          L=   0.232 miles, S=  286 feet/mile, Kb= .03
769          KM
770          BA   0.021
771          LG    0.08     0.25     5.70     0.18    34.78
772          UC   0.092    0.074
773          UA       0        5       16       30       65       77       84       90       94       97
774          UA     100
             *

775          KK    C543
776          KM      Hydrograph combine 542543 + 206I at C543
777          HC       2
             *

778          KK   D543L
779          KM      Hydrograph diversion at C543.  Main flow continues in the left branch.
780          KM      Diverted flow is in the right branch.
781          DT   D543R
782          DI       0       38       45       50       65       85       97      122      141      162
783          DI     194      350      395      432      475      522      570      612
784          DQ       0       38       45       50       65       85       97      122      141      162
785          DQ     194      350      395      425      460      500      540      575
             *

786          KK  543544
787          KM      Normal depth channel route from C543 to C544
788          KM      Source:  200 Scale Mapping & Hydrology Field Reconnaissance
789          RS       1    FLOW      -1
790          RC   0.040    0.018    0.040    597.0   0.0277
791          RX  1000.0   1020.0   1045.0   1075.0   1105.0   1106.2   1146.2   1266.2
792          RY  1720.0   1718.0   1712.0   1712.3   1712.0   1712.4   1714.0   1720.0
             *

793          KK    206K
794          KM   Sub-Basin   206K
795          KM
796          KM      The Clark Unit Hydrograph is used for this basin.
797          KM          The Urban time-area relation is used for this basin.
798          KM
799          KM      Time of Concentration for this sub-basin is based on the following:
800          KM          6-Hour Rainfall, Pattern No.  1.00
801          KM          An rainfall areal reduction factor of 0.999
802          KM
803          KM       EXCESS RAINFALL VALUES EXCEEDED IN 5-MINUTE INTERVALS
804          KM     5  10  15  20  25  30  35  40  45  50  55  60  65  70  75  80  85  90
805          KM   .30 .30 .30 .09 .07 .06 .03 .03 .02 .01 .01 .01 .00 .00 .00 .00 .00 .00
806          KM
807          KM          L=   0.615 miles, S=  255 feet/mile, Kb= .03
808          KM
809          BA   0.056
810          LG    0.09     0.25     5.70     0.18    25.80
811          UC   0.158    0.168
812          UA       0        5       16       30       65       77       84       90       94       97
813          UA     100
             *
1                                          HEC-1 INPUT                                          PAGE 19

LINE         ID.......1.......2.......3.......4.......5.......6.......7.......8.......9......10

814          KK    C544
815          KM      Hydrograph combine 543544 + 206K at C544
816          HC       2
             *

817          KK  544545
818          KM      Normal depth channel route from C544 to C545
819          KM      Source:  200 Scale Mapping & Hydrology Field Reconnaissance
820          RS       2    FLOW      -1
821          RC   0.040    0.018    0.040    985.0   0.0234
822          RX  1000.0   1008.0   1018.0   1048.0   1078.0   1079.2   1089.2   1109.2
823          RY  1690.0   1688.0   1686.0   1686.3   1686.0   1686.4   1688.0   1689.0
             *

824          KK   D545L
825          KM      Hydrograph diversion at C545.  Main flow continues in the left branch.
826          KM      Diverted flow is in the right branch.
827          DT   D545R
828          DI       0       50      100      200      400      800     1600     3200     5000
829          DQ       0       25       50      100      200      400      800     1600     2500
             *
```

```
 830          KK  545546
 831          KM      Normal depth channel route from C545 to C546
 832          KM      Source:  200 Scale Mapping & Hydrology Field Reconnaissance
 833          RS       1    FLOW      -1
 834          RC   0.040   0.018   0.040   428.0  0.0164
 835          RX  1000.0  1020.0  1050.0  1080.0  1110.0  1111.2  1121.2  1151.2
 836          RY  1680.0  1678.0  1676.0  1676.3  1676.0  1676.4  1678.0  1678.5
              *

 837          KK    206L
 838          KM   Sub-Basin   206L
 839          KM
 840          KM      The Clark Unit Hydrograph is used for this basin.
 841          KM          The Urban time-area relation is used for this basin.
 842          KM
 843          KM      Time of Concentration for this sub-basin is based on the following:
 844          KM          6-Hour Rainfall, Pattern No.  1.00
 845          KM          An rainfall areal reduction factor of 0.999
 846          KM
 847          KM       EXCESS RAINFALL VALUES EXCEEDED IN 5-MINUTE INTERVALS
 848          KM     5  10  15  20  25  30  35  40  45  50  55  60  65  70  75  80  85  90
 849          KM   .30 .30 .30 .09 .07 .06 .03 .02 .02 .01 .01 .01 .00 .00 .00 .00 .00 .00
 850          KM
 851          KM          L=   0.546 miles, S=  231 feet/mile, Kb= .03
 852          KM
 853          BA   0.060
 854          LG    0.09    0.25    5.80    0.18   25.01
 855          UC   0.154   0.143
 856          UA       0       5      16      30      65      77      84      90      94      97
 857          UA     100
              *
1                                          HEC-1 INPUT                                          PAGE 20

LINE          ID.......1.......2.......3.......4.......5.......6.......7.......8.......9......10

 858          KK    C546
 859          KM      Hydrograph combine 545546 + 206L at C546
 860          HC       2
              *

 861          KK  546547
 862          KM      Normal depth channel route from C546 to C547
 863          KM      Source:  200 Scale Mapping
 864          RS       1    FLOW      -1
 865          RC   0.040   0.018   0.040   749.0  0.0327
 866          RX  1000.0  1005.0  1011.0  1013.0  1029.0  1047.0  1052.0  1057.0
 867          RY  1666.0  1664.0  1662.0  1661.9  1662.4  1662.0  1664.0  1666.0
              *

 868          KK  BB543R
 869          KM      Retrieve previously diverted hydrograph at C543 in the right branch.
 870          DR   D543R
              *

 871          KK  543547
 872          KM      Normal depth channel route from C543 to C547
 873          KM      Source:  HEC-2 Cross Section: OX 0.638
 874          RS       5    FLOW      -1
 875          RC   0.075   0.040   0.050  2395.0  0.0278
 876          RX  9720.9  9769.0  9970.7  9985.5 10020.0 10038.1 10097.0 10102.0
 877          RY  1690.4  1681.2  1683.1  1676.2  1677.0  1687.1  1687.4  1690.0
              *

 878          KK  BB545R
 879          KM      Retrieve previously diverted hydrograph at C545 in the right branch.
 880          DR   D545R
              *

 881          KK  545547
 882          KM      Normal depth channel route from C545 to C547
 883          KM      Source:  HEC-2 Cross Section: OX 0.542
 884          RS       4    FLOW      -1
 885          RC   0.075   0.040   0.050  1216.0  0.0259
 886          RX  9668.2  9778.4  9957.9  9986.0 10012.7 10043.6 10067.6 10163.4
 887          RY  1674.1  1674.1  1673.3  1662.1  1662.2  1680.4  1680.9  1681.1
              *

 888          KK    206J
 889          KM   Sub-Basin   206J
 890          KM
 891          KM      The Clark Unit Hydrograph is used for this basin.
 892          KM          The Urban time-area relation is used for this basin.
 893          KM
 894          KM      Time of Concentration for this sub-basin is based on the following:
 895          KM          6-Hour Rainfall, Pattern No.  1.00
 896          KM          An rainfall areal reduction factor of 0.999
 897          KM
 898          KM       EXCESS RAINFALL VALUES EXCEEDED IN 5-MINUTE INTERVALS
 899          KM     5  10  15  20  25  30  35  40  45  50  55  60  65  70  75  80  85  90
1                                          HEC-1 INPUT                                          PAGE 21

LINE          ID.......1.......2.......3.......4.......5.......6.......7.......8.......9......10

 900          KM   .31 .31 .31 .10 .08 .07 .03 .03 .03 .03 .03 .03 .01 .01 .01 .01 .01 .01
 901          KM
 902          KM          L=   0.502 miles, S=  214 feet/mile, Kb= .03
 903          KM
 904          BA   0.060
 905          LG    0.08    0.25    5.70    0.18   44.51
 906          UC   0.150   0.129
```

```
907          UA       0       5      16      30      65      77      84      90      94      97
908          UA     100
             *

909          KK    C547
910          KM      Hydrograph combine 546547 + 543547 + 545547 + 206J at C547
911          HC       4    0.26
             *

912          KK  547548
913          KM      Normal depth channel route from C547 to C548
914          KM      Source:  HEC-2 Cross Section: OX 0.235
915          RS       4    FLOW      -1
916          RC   0.075   0.040   0.050  2165.0  0.0182
917          RX  9910.0  9911.4  9968.5  9987.6 10017.4 10032.3 10077.4 10080.0
918          RY  1639.0  1638.9  1637.9  1635.7  1635.8  1641.7  1642.9  1643.0
             *

919          KK    206M
920          KM   Sub-Basin   206M
921          KM
922          KM      The Clark Unit Hydrograph is used for this basin.
923          KM          The Urban time-area relation is used for this basin.
924          KM
925          KM      Time of Concentration for this sub-basin is based on the following:
926          KM          6-Hour Rainfall, Pattern No.  1.00
927          KM          An rainfall areal reduction factor of 0.999
928          KM
929          KM       EXCESS RAINFALL VALUES EXCEEDED IN 5-MINUTE INTERVALS
930          KM     5  10  15  20  25  30  35  40  45  50  55  60  65  70  75  80  85  90
931          KM   .31 .30 .30 .10 .07 .07 .03 .03 .03 .03 .03 .03 .01 .01 .01 .01 .01 .01
932          KM
933          KM          L=   0.465 miles, S=  166 feet/mile, Kb= .03
934          KM
935          BA   0.060
936          LG    0.08    0.25    5.20    0.23   46.18
937          UC   0.158   0.129
938          UA       0       5      16      30      65      77      84      90      94      97
939          UA     100
             *

940          KK   C548R
941          KM      Hydrograph combine 547548 + 206M at C548 right branch
942          HC       2
             *
             * *
             * * C548R is the total flow in Oxford Wash above confluence with Balboa Wash
             * *
             *
```



```
LINE         ID.......1.......2.......3.......4.......5.......6.......7.......8.......9......10

943          KK    C548
944          KM      Hydrograph combine C548L + C548R at C548
945          HC       2
             *
             * *
             * * C548 is the total flow in Balboa Wash below the confluence of Balboa Wash
             * * and Oxford Wash
             * *
             *

946          KK  548549
947          KM      Normal depth channel route from C548 to C549
948          KM      Source:  HEC-2 Cross Section: BA0.246
949          RS       9    FLOW      -1
950          RC   0.070   0.080   0.070  3258.0  0.0172
951          RX  9889.1  9912.5  9940.2  9960.0 10026.1 10046.8 10067.8 10079.3
952          RY  1586.2  1585.7  1577.5  1573.6  1573.2  1579.5  1585.7  1586.2
             *

953          KK    206N
954          KM   Sub-Basin   206N
955          KM
956          KM      The Clark Unit Hydrograph is used for this basin.
957          KM          The Urban time-area relation is used for this basin.
958          KM
959          KM      Time of Concentration for this sub-basin is based on the following:
960          KM          6-Hour Rainfall, Pattern No.  1.00
961          KM          An rainfall areal reduction factor of 0.998
962          KM
963          KM       EXCESS RAINFALL VALUES EXCEEDED IN 5-MINUTE INTERVALS
964          KM     5  10  15  20  25  30  35  40  45  50  55  60  65  70  75  80  85  90
965          KM   .31 .30 .30 .10 .07 .06 .03 .03 .03 .03 .03 .03 .01 .01 .01 .01 .01 .01
966          KM
967          KM          L=   0.767 miles, S=  120 feet/mile, Kb= .03
968          KM
969          BA   0.152
970          LG    0.11    0.27    4.65    0.29   52.66
971          UC   0.225   0.167
972          UA       0       5      16      30      65      77      84      90      94      97
973          UA     100
             *

974          KK   C549L
975          KM      Hydrograph combine 548549 + 206N at C549 left branch
976          HC       2
             *
             * *
```

```
                 * * C549L is the total flow in Balboa Wash above confluence with Ashbrook Wash
                 * *
                 * * End Basin 206.  Start Basin 207
                 * *
                 *
1                                                HEC-1 INPUT                                                    PAGE 23

LINE             ID.......1.......2.......3.......4.......5.......6.......7.......8.......9......10

 977             KK    207A
 978             KM   Sub-Basin   207A
 979             KM
 980             KM      The Clark Unit Hydrograph is used for this basin.
 981             KM          The Natural time-area relation is used for this basin.
 982             KM
 983             KM      Time of Concentration for this sub-basin is based on the following:
 984             KM          6-Hour Rainfall, Pattern No.  1.00
 985             KM          An rainfall areal reduction factor of 0.997
 986             KM
 987             KM        EXCESS RAINFALL VALUES EXCEEDED IN 5-MINUTE INTERVALS
 988             KM     5  10  15  20  25  30  35  40  45  50  55  60  65  70  75  80  85  90
 989             KM   .27 .26 .26 .04 .03 .03 .02 .02 .02 .02 .02 .02 .00 .00 .00 .00 .00 .00
 990             KM
 991             KM          L=   1.356 miles, S=  351 feet/mile, Kb= .13
 992             KM
 993             BA   0.256
 994             LG    0.24     0.35     4.55     0.37    29.81
 995             UC   0.650    0.636
 996             UA       0        3        5        8       12       20       43       75       90       96
 997             UA     100
                 *

 998             KK    207B
 999             KM   Sub-Basin   207B
1000             KM
1001             KM      The Clark Unit Hydrograph is used for this basin.
1002             KM          The Natural time-area relation is used for this basin.
1003             KM
1004             KM      Time of Concentration for this sub-basin is based on the following:
1005             KM          6-Hour Rainfall, Pattern No.  1.00
1006             KM          An rainfall areal reduction factor of 0.997
1007             KM
1008             KM        EXCESS RAINFALL VALUES EXCEEDED IN 5-MINUTE INTERVALS
1009             KM     5  10  15  20  25  30  35  40  45  50  55  60  65  70  75  80  85  90
1010             KM   .27 .27 .26 .05 .04 .04 .02 .02 .02 .02 .02 .02 .00 .00 .00 .00 .00 .00
1011             KM
1012             KM          L=   1.312 miles, S=  359 feet/mile, Kb= .13
1013             KM
1014             BA   0.208
1015             LG    0.24     0.35     4.45     0.38    32.42
1016             UC   0.621    0.662
1017             UA       0        3        5        8       12       20       43       75       90       96
1018             UA     100
                 *

1019             KK    C550
1020             KM      Hydrograph combine 207A + 207B at C550
1021             HC       2
                 *
1                                                HEC-1 INPUT                                                    PAGE 24

LINE             ID.......1.......2.......3.......4.......5.......6.......7.......8.......9......10

1022             KK  550552
1023             KM      Normal depth channel route from C550 to C552
1024             KM      Source:  Hydrology Field Reconnaissance
1025             RS       5    FLOW      -1
1026             RC   0.050   0.045   0.050  4410.0  0.0528
1027             RX  1000.0  1005.0  1018.0  1028.0  1038.0  1043.0  1048.0  1055.0
1028             RY  2188.0  2184.0  2180.0  2176.0  2176.0  2180.0  2184.0  2188.0
                 *

1029             KK    207C
1030             KM   Sub-Basin   207C
1031             KM
1032             KM      The Clark Unit Hydrograph is used for this basin.
1033             KM          The Natural time-area relation is used for this basin.
1034             KM
1035             KM      Time of Concentration for this sub-basin is based on the following:
1036             KM          6-Hour Rainfall, Pattern No.  1.00
1037             KM          An rainfall areal reduction factor of 0.998
1038             KM
1039             KM        EXCESS RAINFALL VALUES EXCEEDED IN 5-MINUTE INTERVALS
1040             KM     5  10  15  20  25  30  35  40  45  50  55  60  65  70  75  80  85  90
1041             KM   .27 .26 .26 .05 .02 .02 .01 .01 .01 .01 .01 .01 .00 .00 .00 .00 .00 .00
1042             KM
1043             KM          L=   0.974 miles, S=  297 feet/mile, Kb= .11
1044             KM
1045             BA   0.173
1046             LG    0.19     0.37     5.30     0.26    13.69
1047             UC   0.492    0.448
1048             UA       0        3        5        8       12       20       43       75       90       96
1049             UA     100
                 *

1050             KK   C552L
1051             KM      Hydrograph combine 550552 + 207C at C552 left branch
1052             HC       2
                 *
```

```
1053        KK    207D
1054        KM   Sub-Basin   207D
1055        KM
1056        KM      The Clark Unit Hydrograph is used for this basin.
1057        KM          The HEC-1 time-area relation is used for this basin.
1058        KM
1059        KM      Time of Concentration for this sub-basin is based on the following:
1060        KM          6-Hour Rainfall, Pattern No.  1.00
1061        KM          An rainfall areal reduction factor of 0.997
1062        KM
1063        KM       EXCESS RAINFALL VALUES EXCEEDED IN 5-MINUTE INTERVALS
1064        KM     5  10  15  20  25  30  35  40  45  50  55  60  65  70  75  80  85  90
1065        KM   .29 .28 .28 .07 .05 .05 .02 .02 .02 .02 .02 .02 .01 .01 .01 .01 .01 .01
1066        KM
1067        KM          L=   1.036 miles, S=  373 feet/mile, Kb= .09
1068        KM
1069        BA   0.197
```



```
LINE        ID.......1.......2.......3.......4.......5.......6.......7.......8.......9......10

1070        LG    0.18    0.31    4.35    0.38   41.30
1071        UC   0.371   0.319
            *

1072        KK  551552
1073        KM      Normal depth channel route from C551 to C552
1074        KM      Source:  100 Scale 4' CI Mapping
1075        RS       6    FLOW      -1
1076        RC   0.050   0.045   0.050  4410.0  0.0528
1077        RX  1000.0  1005.0  1018.0  1028.0  1038.0  1043.0  1048.0  1055.0
1078        RY  2188.0  2184.0  2180.0  2176.0  2176.0  2180.0  2184.0  2188.0
            *

1079        KK    207E
1080        KM   Sub-Basin   207E
1081        KM
1082        KM      The Clark Unit Hydrograph is used for this basin.
1083        KM          The Urban time-area relation is used for this basin.
1084        KM
1085        KM      Time of Concentration for this sub-basin is based on the following:
1086        KM          6-Hour Rainfall, Pattern No.  1.00
1087        KM          An rainfall areal reduction factor of 0.998
1088        KM
1089        KM       EXCESS RAINFALL VALUES EXCEEDED IN 5-MINUTE INTERVALS
1090        KM     5  10  15  20  25  30  35  40  45  50  55  60  65  70  75  80  85  90
1091        KM   .29 .29 .28 .08 .05 .05 .03 .03 .03 .03 .03 .02 .01 .01 .01 .01 .01 .01
1092        KM
1093        KM          L=   1.366 miles, S=  315 feet/mile, Kb= .07
1094        KM
1095        BA   0.157
1096        LG    0.15    0.29    4.35    0.38   44.41
1097        UC   0.400   0.494
1098        UA       0       5      16      30      65      77      84      90      94      97
1099        UA     100
            *

1100        KK   C552R
1101        KM      Hydrograph combine 551552 + 207E at C552 right branch
1102        HC       2
            *

1103        KK    C552
1104        KM      Hydrograph combine C552L + C552R at C552
1105        HC       2
            *

1106        KK  552553
1107        KM      Normal depth channel route from C552 to C553
1108        KM      Source:  Hydrology Field Reconnaissance
1109        RS       2    FLOW      -1
1110        RC   0.060   0.050   0.060  1336.0  0.0337
1111        RX   993.0  1010.0  1055.0  1061.0  1082.0  1096.0  1105.0  1127.0
1112        RY    98.0    94.3    94.4    94.0    94.3    94.5    96.2    98.0
            *
```



```
LINE        ID.......1.......2.......3.......4.......5.......6.......7.......8.......9......10

1113        KK    207F
1114        KM   Sub-Basin   207F
1115        KM
1116        KM      The Clark Unit Hydrograph is used for this basin.
1117        KM          The HEC-1 time-area relation is used for this basin.
1118        KM
1119        KM      Time of Concentration for this sub-basin is based on the following:
1120        KM          6-Hour Rainfall, Pattern No.  1.00
1121        KM          An rainfall areal reduction factor of 0.998
1122        KM
1123        KM       EXCESS RAINFALL VALUES EXCEEDED IN 5-MINUTE INTERVALS
1124        KM     5  10  15  20  25  30  35  40  45  50  55  60  65  70  75  80  85  90
1125        KM   .28 .28 .27 .06 .04 .04 .02 .02 .02 .02 .02 .02 .01 .01 .01 .01 .01 .01
1126        KM
1127        KM          L=   0.794 miles, S=  296 feet/mile, Kb= .11
1128        KM
1129        BA   0.126
1130        LG    0.20    0.32    4.40    0.39   38.35
1131        UC   0.400   0.362
            *
```

```
1132          KK    C553
1133          KM      Hydrograph combine 552553 + 207F at C553
1134          HC       2
              *

1135          KK  553556
1136          KM      Normal depth channel route from C553 to C556
1137          KM      Source:  HEC-2 Cross Section: AS 6.118
1138          RS       3    FLOW      -1
1139          RC   0.055   0.045   0.060  2393.0  0.0255
1140          RX  9904.4  9945.9  9974.0  9987.4  9994.9 10008.6 10027.0 10045.3
1141          RY  2004.2  2003.9  1991.7  1990.4  1987.9  1988.2  1997.5  2006.7
              *

1142          KK    207G
1143          KM   Sub-Basin   207G
1144          KM
1145          KM      The Clark Unit Hydrograph is used for this basin.
1146          KM          The HEC-1 time-area relation is used for this basin.
1147          KM
1148          KM      Time of Concentration for this sub-basin is based on the following:
1149          KM          6-Hour Rainfall, Pattern No.  1.00
1150          KM          An rainfall areal reduction factor of 0.997
1151          KM
1152          KM       EXCESS RAINFALL VALUES EXCEEDED IN 5-MINUTE INTERVALS
1153          KM     5  10  15  20  25  30  35  40  45  50  55  60  65  70  75  80  85  90
1154          KM   .27 .27 .26 .05 .02 .01 .01 .01 .01 .01 .01 .00 .00 .00 .00 .00 .00 .00
1155          KM
1156          KM          L=   1.467 miles, S=  198 feet/mile, Kb= .10
1157          KM
1158          BA   0.236
1159          LG    0.17    0.37    5.60    0.23    9.10
1160          UC   0.763   0.847
              *
```



```
LINE          ID.......1.......2.......3.......4.......5.......6.......7.......8.......9......10

1161          KK   C556L
1162          KM      Hydrograph combine 553556 + 207G at C556 left branch
1163          HC       2
              *

1164          KK    207H
1165          KM   Sub-Basin   207H
1166          KM
1167          KM      The Clark Unit Hydrograph is used for this basin.
1168          KM          The Urban time-area relation is used for this basin.
1169          KM
1170          KM      Time of Concentration for this sub-basin is based on the following:
1171          KM          6-Hour Rainfall, Pattern No.  1.00
1172          KM          An rainfall areal reduction factor of 0.998
1173          KM
1174          KM       EXCESS RAINFALL VALUES EXCEEDED IN 5-MINUTE INTERVALS
1175          KM     5  10  15  20  25  30  35  40  45  50  55  60  65  70  75  80  85  90
1176          KM   .30 .29 .29 .08 .06 .05 .03 .03 .03 .03 .03 .03 .01 .01 .01 .01 .01 .01
1177          KM
1178          KM          L=   1.044 miles, S=  371 feet/mile, Kb= .05
1179          KM
1180          BA   0.124
1181          LG    0.13    0.27    4.35    0.36   46.78
1182          UC   0.242   0.260
1183          UA       0       5      16      30      65      77      84      90      94      97
1184          UA     100
              *

1185          KK  554555
1186          KM      Normal depth channel route from C554 to C555
1187          KM      Source:  100 Scale 4' CI Mapping
1188          RS       4    FLOW      -1
1189          RC   0.050   0.045   0.050  2497.0  0.0649
1190          RX  1000.0  1025.0  1080.0  1100.0  1120.0  1130.0  1140.0  1155.0
1191          RY  2192.0  2188.0  2186.0  2184.0  2184.0  2188.0  2192.0  2194.0
              *

1192          KK    207I
1193          KM   Sub-Basin   207I
1194          KM
1195          KM      The Clark Unit Hydrograph is used for this basin.
1196          KM          The Urban time-area relation is used for this basin.
1197          KM
1198          KM      Time of Concentration for this sub-basin is based on the following:
1199          KM          6-Hour Rainfall, Pattern No.  1.00
1200          KM          An rainfall areal reduction factor of 0.999
1201          KM
1202          KM       EXCESS RAINFALL VALUES EXCEEDED IN 5-MINUTE INTERVALS
1203          KM     5  10  15  20  25  30  35  40  45  50  55  60  65  70  75  80  85  90
1204          KM   .30 .30 .30 .09 .07 .06 .03 .03 .03 .03 .03 .03 .01 .01 .01 .01 .01 .01
1205          KM
1206          KM          L=   0.810 miles, S=  320 feet/mile, Kb= .03
1207          KM
1208          BA   0.073
```



```
LINE          ID.......1.......2.......3.......4.......5.......6.......7.......8.......9......10

1209          LG    0.09    0.25    4.40    0.35   50.00
1210          UC   0.171   0.196
1211          UA       0       5      16      30      65      77      84      90      94      97
```

```
1212        UA     100
            *

1213        KK    C555
1214        KM      Hydrograph combine 554555 + 207I at C555
1215        HC       2
            *

1216        KK  555556
1217        KM      Normal depth channel route from C555 to C556
1218        KM      Source:  200 Scale Mapping
1219        RS       8    FLOW      -1
1220        RC   0.050   0.050   0.055  3353.0  0.0480
1221        RX  1000.0  1050.0  1090.0  1095.0  1130.0  1150.0  1160.0  1185.0
1222        RY  2020.0  2016.5  2006.0  2004.0  2005.0  2006.0  2010.0  2020.0
            *

1223        KK    207J
1224        KM   Sub-Basin   207J
1225        KM
1226        KM      The Clark Unit Hydrograph is used for this basin.
1227        KM          The Urban time-area relation is used for this basin.
1228        KM
1229        KM      Time of Concentration for this sub-basin is based on the following:
1230        KM          6-Hour Rainfall, Pattern No.  1.00
1231        KM          An rainfall areal reduction factor of 0.999
1232        KM
1233        KM       EXCESS RAINFALL VALUES EXCEEDED IN 5-MINUTE INTERVALS
1234        KM     5  10  15  20  25  30  35  40  45  50  55  60  65  70  75  80  85  90
1235        KM   .30 .30 .30 .09 .07 .06 .03 .03 .03 .03 .03 .03 .01 .01 .01 .01 .01 .01
1236        KM
1237        KM          L=   0.714 miles, S=  248 feet/mile, Kb= .04
1238        KM
1239        BA   0.093
1240        LG    0.10    0.26    4.40    0.34   48.61
1241        UC   0.200   0.184
1242        UA       0       5      16      30      65      77      84      90      94      97
1243        UA     100
            *

1244        KK   C556R
1245        KM      Hydrograph combine 555556 + 207J at C556 right branch
1246        HC       2
            *

1247        KK    C556
1248        KM      Hydrograph combine C556L + C556R at C556
1249        HC       2
            *
```



```
LINE        ID.......1.......2.......3.......4.......5.......6.......7.......8.......9......10

1250        KK  556557
1251        KM      Normal depth channel route from C556 to C557
1252        KM      Source:  HEC-2 Cross Section: AS 5.765
1253        RS       3    FLOW      -1
1254        RC   0.055   0.045   0.060  2298.0  0.0260
1255        RX  9957.1  9995.6 10000.0 10010.0 10040.4 10084.4 10104.2 10180.7
1256        RY  1949.3  1935.9  1935.8  1936.7  1936.7  1938.2  1947.1  1949.9
            *

1257        KK    207K
1258        KM   Sub-Basin   207K
1259        KM
1260        KM      The Clark Unit Hydrograph is used for this basin.
1261        KM          The Urban time-area relation is used for this basin.
1262        KM
1263        KM      Time of Concentration for this sub-basin is based on the following:
1264        KM          6-Hour Rainfall, Pattern No.  1.00
1265        KM          An rainfall areal reduction factor of 0.998
1266        KM
1267        KM       EXCESS RAINFALL VALUES EXCEEDED IN 5-MINUTE INTERVALS
1268        KM     5  10  15  20  25  30  35  40  45  50  55  60  65  70  75  80  85  90
1269        KM   .30 .30 .30 .09 .07 .06 .03 .03 .02 .02 .02 .02 .01 .01 .01 .01 .01 .01
1270        KM
1271        KM          L=   0.859 miles, S=  294 feet/mile, Kb= .05
1272        KM
1273        BA   0.130
1274        LG    0.11    0.27    5.40    0.21   37.19
1275        UC   0.233   0.209
1276        UA       0       5      16      30      65      77      84      90      94      97
1277        UA     100
            *

1278        KK   C557R
1279        KM      Hydrograph combine 556557 + 207K at C557
1280        HC       2
            *

1281        KK    207L
1282        KM   Sub-Basin   207L
1283        KM
1284        KM      The Clark Unit Hydrograph is used for this basin.
1285        KM          The Urban time-area relation is used for this basin.
1286        KM
1287        KM      Time of Concentration for this sub-basin is based on the following:
1288        KM          6-Hour Rainfall, Pattern No.  1.00
1289        KM          An rainfall areal reduction factor of 0.999
1290        KM
```

```
1291          KM        EXCESS RAINFALL VALUES EXCEEDED IN 5-MINUTE INTERVALS
1292          KM      5  10  15  20  25  30  35  40  45  50  55  60  65  70  75  80  85  90
1293          KM    .31 .30 .30 .10 .07 .07 .03 .03 .03 .02 .02 .02 .01 .01 .01 .01 .01 .01
1294          KM
1295          KM           L=   0.667 miles, S=  236 feet/mile, Kb= .04
1296          KM
1297          BA   0.080
```



```
LINE          ID.......1.......2.......3.......4.......5.......6.......7.......8.......9......10

1298          LG    0.09    0.26    6.00    0.16   33.25
1299          UC   0.196   0.184
1300          UA       0       5      16      30      65      77      84      90      94      97
1301          UA     100
              *

1302          KK    C557
1303          KM      Hydrograph combine C557R + 207L at C557
1304          HC       2
              *
              * *
              * * C557 is the total flow in Ashbrook Wash downstream of Golden Eagle Blvd.
              * * at fire station
              * *
              *

1305          KK  557558
1306          KM      Normal depth channel route from C557 to C558
1307          KM      Source:  HEC-2 Cross Section: AS 5.254
1308          RS       4    FLOW      -1
1309          RC   0.055   0.045   0.060  2652.0  0.0242
1310          RX  9662.0  9965.0  9967.0 10000.0 10072.0 10095.0 10122.0 10175.0
1311          RY  1890.0  1885.9  1884.0  1878.0  1880.0  1886.0  1888.0  1890.0
              *

1312          KK    207M
1313          KM   Sub-Basin   207M
1314          KM
1315          KM      The Clark Unit Hydrograph is used for this basin.
1316          KM          The Urban time-area relation is used for this basin.
1317          KM
1318          KM      Time of Concentration for this sub-basin is based on the following:
1319          KM          6-Hour Rainfall, Pattern No.  1.00
1320          KM          An rainfall areal reduction factor of 0.998
1321          KM
1322          KM        EXCESS RAINFALL VALUES EXCEEDED IN 5-MINUTE INTERVALS
1323          KM      5  10  15  20  25  30  35  40  45  50  55  60  65  70  75  80  85  90
1324          KM    .30 .29 .29 .09 .06 .05 .02 .02 .02 .01 .01 .01 .00 .00 .00 .00 .00 .00
1325          KM
1326          KM           L=   0.636 miles, S=  295 feet/mile, Kb= .04
1327          KM
1328          BA   0.116
1329          LG    0.11    0.28    6.00    0.17   23.09
1330          UC   0.179   0.130
1331          UA       0       5      16      30      65      77      84      90      94      97
1332          UA     100
              *

1333          KK    C558
1334          KM      Hydrograph combine 557558 + 207M at C558
1335          HC       2
              *
```



```
LINE          ID.......1.......2.......3.......4.......5.......6.......7.......8.......9......10

1336          KK  558560
1337          KM      Normal depth channel route from C558 to C560
1338          KM      Source:  HEC-2 Cross Section: AS 4.839
1339          RS       3    FLOW      -1
1340          RC   0.055   0.045   0.060  1986.0  0.0185
1341          RX  9777.0  9897.0  9933.1  9970.6 10042.2 10063.4 10121.6 10204.9
1342          RY  1840.3  1837.3  1836.3  1824.3  1822.7  1828.5  1827.7  1842.7
              *

1343          KK    207O
1344          KM   Sub-Basin   207O
1345          KM
1346          KM      The Clark Unit Hydrograph is used for this basin.
1347          KM          The Urban time-area relation is used for this basin.
1348          KM
1349          KM      Time of Concentration for this sub-basin is based on the following:
1350          KM          6-Hour Rainfall, Pattern No.  1.00
1351          KM          An rainfall areal reduction factor of 0.998
1352          KM
1353          KM        EXCESS RAINFALL VALUES EXCEEDED IN 5-MINUTE INTERVALS
1354          KM      5  10  15  20  25  30  35  40  45  50  55  60  65  70  75  80  85  90
1355          KM    .29 .29 .28 .08 .05 .04 .02 .02 .01 .01 .01 .01 .00 .00 .00 .00 .00 .00
1356          KM
1357          KM           L=   0.643 miles, S=  275 feet/mile, Kb= .04
1358          KM
1359          BA   0.131
1360          LG    0.13    0.29    5.60    0.21   23.47
1361          UC   0.188   0.129
1362          UA       0       5      16      30      65      77      84      90      94      97
1363          UA     100
              *

1364          KK   C560R
```

```
1365        KM      Hydrograph combine 558560 + 207O at C560 right branch
1366        HC       2
            *

1367        KK    207N
1368        KM   Sub-Basin   207N
1369        KM
1370        KM      The Clark Unit Hydrograph is used for this basin.
1371        KM          The Urban time-area relation is used for this basin.
1372        KM
1373        KM      Time of Concentration for this sub-basin is based on the following:
1374        KM          6-Hour Rainfall, Pattern No.  1.00
1375        KM          An rainfall areal reduction factor of 0.999
1376        KM
1377        KM       EXCESS RAINFALL VALUES EXCEEDED IN 5-MINUTE INTERVALS
1378        KM     5  10  15  20  25  30  35  40  45  50  55  60  65  70  75  80  85  90
1379        KM   .30 .30 .29 .09 .06 .05 .02 .02 .02 .02 .02 .02 .01 .01 .01 .01 .01 .01
1380        KM
1381        KM          L=   0.431 miles, S=  190 feet/mile, Kb= .03
1382        KM
1383        BA   0.049
```



```
LINE        ID.......1.......2.......3.......4.......5.......6.......7.......8.......9......10

1384        LG    0.09    0.25    4.80    0.27   35.87
1385        UC   0.146   0.124
1386        UA       0       5      16      30      65      77      84      90      94      97
1387        UA     100
            *

1388        KK  559560
1389        KM      Normal depth channel route from C559 to C560
1390        KM      Source:  200 Scale Mapping
1391        RS       6    FLOW      -1
1392        RC   0.050   0.045   0.050  2170.0  0.0230
1393        RX  1000.0  1050.0  1080.0  1100.0  1110.0  1140.0  1170.0  1205.0
1394        RY  1854.0  1852.0  1850.0  1848.0  1848.0  1850.0  1852.0  1854.0
            *

1395        KK   C560I
1396        KM      Hydrograph combine C560R + 559560 at C560I
1397        HC       2
            *
            * *
            * * C560I is the total flow in Ashbrook Wash upstream of Dam 6
            * *
            *

1398        KK   C560O
1399        KM      Reservoir route at C560 (Dam 6).
1400        RS       1    ELEV  1808.8
1401        SV    0.00    1.71   14.81   34.65   60.43   93.47  135.64  183.00  186.00  191.44
1402        SV  197.00  205.00  212.00  219.00  226.40  234.00  242.00  246.00  250.00  254.00
1403        SE  1808.8  1812.0  1816.0  1820.0  1824.0  1828.0  1832.0  1835.4  1835.6  1836.0
1404        SE  1836.4  1836.8  1837.2  1837.6  1838.0  1838.4  1838.8  1839.0  1839.2  1839.4
1405        SQ       0      57     136     184     224     257     285     303     319     440
1406        SQ     691    1055    1500    2018    2600    3243    3944    4315    4699    5097
1407        RL                    0.40
            *
            * *
            * * End Basin 207.  Start Basin 210 temporarily
            * *
            *

1408        KK  560585
1409        KM      Normal depth channel route from C560 to C585
1410        KM      Source:  HEC-2 Cross Section: AS4.311
1411        RS       6    FLOW      -1
1412        RC   0.050   0.025   0.050  3127.0  0.0272
1413        RX  9850.4  9950.4  9974.4 10000.0 10035.5 10059.8 10080.4 10104.4
1414        RY  1772.0  1771.7  1765.3  1765.3  1765.9  1768.5  1773.3  1773.7
            *

1415        KK    210A
1416        KM   Sub-Basin   210A
1417        KM
1418        KM      The Clark Unit Hydrograph is used for this basin.
1419        KM          The Urban time-area relation is used for this basin.
1420        KM
```



```
LINE        ID.......1.......2.......3.......4.......5.......6.......7.......8.......9......10

1421        KM      Time of Concentration for this sub-basin is based on the following:
1422        KM          6-Hour Rainfall, Pattern No.  1.00
1423        KM          An rainfall areal reduction factor of 0.998
1424        KM
1425        KM       EXCESS RAINFALL VALUES EXCEEDED IN 5-MINUTE INTERVALS
1426        KM     5  10  15  20  25  30  35  40  45  50  55  60  65  70  75  80  85  90
1427        KM   .29 .29 .28 .08 .05 .04 .02 .02 .01 .01 .01 .01 .00 .00 .00 .00 .00 .00
1428        KM
1429        KM          L=   0.631 miles, S=  233 feet/mile, Kb= .03
1430        KM
1431        BA   0.123
1432        LG    0.09    0.25    5.00    0.24   16.65
1433        UC   0.167   0.116
1434        UA       0       5      16      30      65      77      84      90      94      97
1435        UA     100
            *
```

```
1436          KK    C585
1437          KM      Hydrograph combine 560585 + 210A at C585
1438          HC       2
              *
              * *
              * * C585 is the total flow in Ashbrook Wash at Golden Eagle Blvd. just
              * * upstream of DAM 4
              * *
              * * Temporarily stop Basin 210.  Start Basin 208
              * *
              * * Start Bristol Wash
              * *
              *

1439          KK    208A
1440          KM   Sub-Basin   208A
1441          KM
1442          KM      The Clark Unit Hydrograph is used for this basin.
1443          KM          The Urban time-area relation is used for this basin.
1444          KM
1445          KM      Time of Concentration for this sub-basin is based on the following:
1446          KM          6-Hour Rainfall, Pattern No.  1.00
1447          KM          An rainfall areal reduction factor of 0.998
1448          KM
1449          KM       EXCESS RAINFALL VALUES EXCEEDED IN 5-MINUTE INTERVALS
1450          KM     5  10  15  20  25  30  35  40  45  50  55  60  65  70  75  80  85  90
1451          KM   .30 .30 .30 .09 .07 .06 .03 .03 .03 .03 .03 .03 .01 .01 .01 .01 .01 .01
1452          KM
1453          KM          L=   0.626 miles, S=  366 feet/mile, Kb= .03
1454          KM
1455          BA   0.139
1456          LG    0.09     0.25     4.35     0.35    49.86
1457          UC   0.142    0.090
1458          UA       0        5       16       30       65       77       84       90       94       97
1459          UA     100
              *
```



```
LINE          ID.......1.......2.......3.......4.......5.......6.......7.......8.......9......10

1460          KK  561563
1461          KM      Normal depth channel route from C561 to C563
1462          KM      Source:  100 Scale 4' CI Mapping
1463          RS       2    FLOW      -1
1464          RC   0.050   0.045   0.050  2335.0  0.0856
1465          RX  1000.0  1004.0  1009.0  1019.0  1037.0  1045.0  1060.0  1075.0
1466          RY  2280.0  2276.0  2272.0  2268.0  2268.0  2272.0  2274.0  2276.0
              *

1467          KK    208B
1468          KM   Sub-Basin   208B
1469          KM
1470          KM      The Clark Unit Hydrograph is used for this basin.
1471          KM          The Urban time-area relation is used for this basin.
1472          KM
1473          KM      Time of Concentration for this sub-basin is based on the following:
1474          KM          6-Hour Rainfall, Pattern No.  1.00
1475          KM          An rainfall areal reduction factor of 1.000
1476          KM
1477          KM       EXCESS RAINFALL VALUES EXCEEDED IN 5-MINUTE INTERVALS
1478          KM     5  10  15  20  25  30  35  40  45  50  55  60  65  70  75  80  85  90
1479          KM   .30 .30 .30 .09 .07 .06 .03 .03 .03 .03 .03 .03 .01 .01 .01 .01 .01 .01
1480          KM
1481          KM          L=   0.491 miles, S=  325 feet/mile, Kb= .03
1482          KM
1483          BA   0.027
1484          LG    0.09     0.25     4.35     0.35    50.00
1485          UC   0.133    0.176
1486          UA       0        5       16       30       65       77       84       90       94       97
1487          UA     100
              *

1488          KK   C563R
1489          KM      Hydrograph combine 561563 + 206B at C563 right branch
1490          HC       2
              *

1491          KK    208C
1492          KM   Sub-Basin   208C
1493          KM
1494          KM      The Clark Unit Hydrograph is used for this basin.
1495          KM          The HEC-1 time-area relation is used for this basin.
1496          KM
1497          KM      Time of Concentration for this sub-basin is based on the following:
1498          KM          6-Hour Rainfall, Pattern No.  1.00
1499          KM          An rainfall areal reduction factor of 0.999
1500          KM
1501          KM       EXCESS RAINFALL VALUES EXCEEDED IN 5-MINUTE INTERVALS
1502          KM     5  10  15  20  25  30  35  40  45  50  55  60  65  70  75  80  85  90
1503          KM   .29 .28 .27 .06 .04 .04 .02 .02 .02 .02 .02 .02 .01 .01 .01 .01 .01 .01
1504          KM
1505          KM          L=   0.639 miles, S=  387 feet/mile, Kb= .11
1506          KM
1507          BA   0.066
```



```
LINE          ID.......1.......2.......3.......4.......5.......6.......7.......8.......9......10

1508          LG    0.20     0.32     4.35     0.38    40.11
1509          UC   0.300    0.319
```

```
                *
1510            KK  562563
1511            KM      Normal depth channel route from C562 to C563
1512            KM      Source:  100 Scale 4' CI Mapping
1513            RS       6    FLOW      -1
1514            RC   0.050   0.045   0.050  3745.0  0.1106
1515            RX  1000.0  1007.0  1012.0  1017.0  1022.0  1027.0  1044.0  1064.0
1516            RY  2420.0  2416.0  2412.0  2411.8  2411.8  2412.0  2416.0  2420.0
                *

1517            KK    208D
1518            KM   Sub-Basin   208D
1519            KM
1520            KM      The Clark Unit Hydrograph is used for this basin.
1521            KM          The Urban time-area relation is used for this basin.
1522            KM
1523            KM      Time of Concentration for this sub-basin is based on the following:
1524            KM          6-Hour Rainfall, Pattern No.  1.00
1525            KM          An rainfall areal reduction factor of 0.999
1526            KM
1527            KM       EXCESS RAINFALL VALUES EXCEEDED IN 5-MINUTE INTERVALS
1528            KM     5  10  15  20  25  30  35  40  45  50  55  60  65  70  75  80  85  90
1529            KM   .30 .30 .30 .09 .07 .06 .03 .03 .03 .03 .03 .03 .01 .01 .01 .01 .01 .01
1530            KM
1531            KM          L=   0.772 miles, S=  327 feet/mile, Kb= .03
1532            KM
1533            BA   0.075
1534            LG    0.09    0.25    4.35    0.35   50.00
1535            UC   0.167   0.181
1536            UA       0       5      16      30      65      77      84      90      94      97
1537            UA     100
                *

1538            KK   C563L
1539            KM      Hydrograph combine 562563 + 208D at C563 left branch
1540            HC       2
                *

1541            KK    C563
1542            KM      Hydrograph combine C563R + C563L at C563
1543            HC       2
                *

1544            KK  563564
1545            KM      Normal depth channel route from C563 to C564
1546            KM      Source:  HEC-2 Cross Section: BR 2.667
1547            RS       4    FLOW      -1
1548            RC   0.080   0.080   0.080  2762.0  0.0540
1549            RX  9947.0  9980.4  9986.4  9995.5 10000.0 10005.8 10021.9 10037.2
1550            RY  2103.4  2089.5  2089.2  2084.5  2084.4  2084.3  2098.5  2100.6
                *
```



```
LINE            ID.......1.......2.......3.......4.......5.......6.......7.......8.......9......10

1551            KK    208E
1552            KM   Sub-Basin   208E
1553            KM
1554            KM      The Clark Unit Hydrograph is used for this basin.
1555            KM          The Urban time-area relation is used for this basin.
1556            KM
1557            KM      Time of Concentration for this sub-basin is based on the following:
1558            KM          6-Hour Rainfall, Pattern No.  1.00
1559            KM          An rainfall areal reduction factor of 0.999
1560            KM
1561            KM       EXCESS RAINFALL VALUES EXCEEDED IN 5-MINUTE INTERVALS
1562            KM     5  10  15  20  25  30  35  40  45  50  55  60  65  70  75  80  85  90
1563            KM   .30 .30 .30 .09 .07 .06 .03 .03 .03 .03 .03 .03 .01 .01 .01 .01 .01 .01
1564            KM
1565            KM          L=   0.644 miles, S=  306 feet/mile, Kb= .03
1566            KM
1567            BA   0.062
1568            LG    0.09    0.25    4.35    0.35   50.00
1569            UC   0.154   0.159
1570            UA       0       5      16      30      65      77      84      90      94      97
1571            UA     100
                *

1572            KK   C564R
1573            KM      Hydrograph combine 563564 + 208E at C564 right branch
1574            HC       2
                *

1575            KK    208F
1576            KM   Sub-Basin   208F
1577            KM
1578            KM      The Clark Unit Hydrograph is used for this basin.
1579            KM          The Urban time-area relation is used for this basin.
1580            KM
1581            KM      Time of Concentration for this sub-basin is based on the following:
1582            KM          6-Hour Rainfall, Pattern No.  1.00
1583            KM          An rainfall areal reduction factor of 0.999
1584            KM
1585            KM       EXCESS RAINFALL VALUES EXCEEDED IN 5-MINUTE INTERVALS
1586            KM     5  10  15  20  25  30  35  40  45  50  55  60  65  70  75  80  85  90
1587            KM   .30 .30 .30 .09 .07 .06 .03 .03 .03 .03 .03 .03 .01 .01 .01 .01 .01 .01
1588            KM
1589            KM          L=   0.582 miles, S=  293 feet/mile, Kb= .03
1590            KM
```

```
1591          BA   0.069
1592          LG    0.09    0.25    4.35    0.35   49.92
1593          UC   0.150   0.134
1594          UA       0       5      16      30      65      77      84      90      94      97
1595          UA     100
              *
```



```
LINE          ID.......1.......2.......3.......4.......5.......6.......7.......8.......9......10

1596          KK    C564
1597          KM      Hydrograph combine C564R + 208F at C564
1598          HC       2
              *

1599          KK  564565
1600          KM      Normal depth channel route from C564 to C565
1601          KM      Source:  HEC-2 Cross Section: BR 2.236
1602          RS       6    FLOW      -1
1603          RC   0.080   0.080   0.080  3243.0  0.0398
1604          RX  9937.7  9965.8  9985.5 10000.0 10008.6 10016.4 10037.5 10054.4
1605          RY  1998.7  1998.1  1988.9  1988.8  1989.0  1990.4  1990.6  1999.1
              *

1606          KK    208G
1607          KM   Sub-Basin   208G
1608          KM
1609          KM      The Clark Unit Hydrograph is used for this basin.
1610          KM          The Urban time-area relation is used for this basin.
1611          KM
1612          KM      Time of Concentration for this sub-basin is based on the following:
1613          KM          6-Hour Rainfall, Pattern No.  1.00
1614          KM          An rainfall areal reduction factor of 0.998
1615          KM
1616          KM       EXCESS RAINFALL VALUES EXCEEDED IN 5-MINUTE INTERVALS
1617          KM     5  10  15  20  25  30  35  40  45  50  55  60  65  70  75  80  85  90
1618          KM   .31 .30 .30 .10 .07 .06 .03 .03 .03 .03 .03 .03 .01 .01 .01 .01 .01 .01
1619          KM
1620          KM          L=   0.772 miles, S=  299 feet/mile, Kb= .04
1621          KM
1622          BA   0.129
1623          LG    0.11    0.26    4.60    0.31   54.19
1624          UC   0.196   0.158
1625          UA       0       5      16      30      65      77      84      90      94      97
1626          UA     100
              *

1627          KK    C565
1628          KM      Hydrograph combine 564565 + 208G at C565
1629          HC       2
              *

1630          KK  565568
1631          KM      Normal depth channel route from C565 to C568
1632          KM      Source:  HEC-2 Cross Section: BR 1.853
1633          RS       3    FLOW      -1
1634          RC   0.050   0.060   0.045  2254.0  0.0333
1635          RX  9966.2  9975.6  9985.0 10000.0 10017.9 10027.6 10040.1 10052.5
1636          RY  1929.1  1924.5  1919.8  1918.3  1918.4  1919.6  1925.2  1930.8
              *
```



```
LINE          ID.......1.......2.......3.......4.......5.......6.......7.......8.......9......10

1637          KK    208H
1638          KM   Sub-Basin   208H
1639          KM
1640          KM      The Clark Unit Hydrograph is used for this basin.
1641          KM          The Urban time-area relation is used for this basin.
1642          KM
1643          KM      Time of Concentration for this sub-basin is based on the following:
1644          KM          6-Hour Rainfall, Pattern No.  1.00
1645          KM          An rainfall areal reduction factor of 0.999
1646          KM
1647          KM       EXCESS RAINFALL VALUES EXCEEDED IN 5-MINUTE INTERVALS
1648          KM     5  10  15  20  25  30  35  40  45  50  55  60  65  70  75  80  85  90
1649          KM   .30 .30 .29 .09 .06 .05 .02 .02 .02 .02 .02 .02 .01 .01 .01 .01 .01 .01
1650          KM
1651          KM          L=   0.632 miles, S=  283 feet/mile, Kb= .07
1652          KM
1653          BA   0.043
1654          LG    0.12    0.30    5.60    0.21   35.43
1655          UC   0.246   0.326
1656          UA       0       5      16      30      65      77      84      90      94      97
1657          UA     100
              *

1658          KK   C568L
1659          KM      Hydrograph combine 565568 + 208H at C568 left branch
1660          HC       2
              *
              * *
              * * Start Cholula Wash
              * *
              *

1661          KK    208I
1662          KM   Sub-Basin   208I
1663          KM
```

```
1664        KM      The Clark Unit Hydrograph is used for this basin.
1665        KM          The Urban time-area relation is used for this basin.
1666        KM
1667        KM      Time of Concentration for this sub-basin is based on the following:
1668        KM          6-Hour Rainfall, Pattern No.  1.00
1669        KM          An rainfall areal reduction factor of 0.998
1670        KM
1671        KM        EXCESS RAINFALL VALUES EXCEEDED IN 5-MINUTE INTERVALS
1672        KM     5  10  15  20  25  30  35  40  45  50  55  60  65  70  75  80  85  90
1673        KM   .30 .30 .30 .09 .07 .06 .03 .03 .03 .03 .03 .03 .01 .01 .01 .01 .01 .01
1674        KM
1675        KM          L=   0.823 miles, S=  363 feet/mile, Kb= .03
1676        KM
1677        BA   0.117
1678        LG    0.09    0.25    4.35    0.35   50.00
1679        UC   0.167   0.147
1680        UA       0       5      16      30      65      77      84      90      94      97
1681        UA     100
            *
```



```
LINE        ID.......1.......2.......3.......4.......5.......6.......7.......8.......9......10

1682        KK    208J
1683        KM   Sub-Basin   208J
1684        KM
1685        KM      The Clark Unit Hydrograph is used for this basin.
1686        KM          The Urban time-area relation is used for this basin.
1687        KM
1688        KM      Time of Concentration for this sub-basin is based on the following:
1689        KM          6-Hour Rainfall, Pattern No.  1.00
1690        KM          An rainfall areal reduction factor of 0.999
1691        KM
1692        KM        EXCESS RAINFALL VALUES EXCEEDED IN 5-MINUTE INTERVALS
1693        KM     5  10  15  20  25  30  35  40  45  50  55  60  65  70  75  80  85  90
1694        KM   .30 .30 .30 .09 .07 .06 .03 .03 .03 .03 .03 .03 .01 .01 .01 .01 .01 .01
1695        KM
1696        KM          L=   0.974 miles, S=  353 feet/mile, Kb= .03
1697        KM
1698        BA   0.081
1699        LG    0.09    0.25    4.35    0.35   50.00
1700        UC   0.179   0.225
1701        UA       0       5      16      30      65      77      84      90      94      97
1702        UA     100
            *

1703        KK    C566
1704        KM      Hydrograph combine 208I + 208J at C566
1705        HC       2
            *

1706        KK  566567
1707        KM      Normal depth channel route from C566 to C567
1708        KM      Source:  HEC-2 Cross Section: CH 0.766
1709        RS       3    FLOW      -1
1710        RC   0.080   0.080   0.080  1463.0  0.0410
1711        RX  9925.3  9949.0  9965.7  9988.3 10000.0 10016.2 10029.5 10042.7
1712        RY  2047.9  2043.7  2035.3  2033.3  2031.4  2033.0  2040.1  2047.2
            *

1713        KK    208K
1714        KM   Sub-Basin   208K
1715        KM
1716        KM      The Clark Unit Hydrograph is used for this basin.
1717        KM          The Urban time-area relation is used for this basin.
1718        KM
1719        KM      Time of Concentration for this sub-basin is based on the following:
1720        KM          6-Hour Rainfall, Pattern No.  1.00
1721        KM          An rainfall areal reduction factor of 0.999
1722        KM
1723        KM        EXCESS RAINFALL VALUES EXCEEDED IN 5-MINUTE INTERVALS
1724        KM     5  10  15  20  25  30  35  40  45  50  55  60  65  70  75  80  85  90
1725        KM   .31 .30 .30 .09 .07 .06 .03 .03 .03 .03 .03 .03 .01 .01 .01 .01 .01 .01
1726        KM
1727        KM          L=   0.431 miles, S=  317 feet/mile, Kb= .03
1728        KM
1729        BA   0.048
```



```
LINE        ID.......1.......2.......3.......4.......5.......6.......7.......8.......9......10

1730        LG    0.09    0.25    4.35    0.35   54.38
1731        UC   0.125   0.106
1732        UA       0       5      16      30      65      77      84      90      94      97
1733        UA     100
            *

1734        KK   C567L
1735        KM      Hydrograph combine 566567 + 208K at C567 left branch
1736        HC       2
            *

1737        KK    208L
1738        KM   Sub-Basin   208L
1739        KM
1740        KM      The Clark Unit Hydrograph is used for this basin.
1741        KM          The Urban time-area relation is used for this basin.
1742        KM
1743        KM      Time of Concentration for this sub-basin is based on the following:
1744        KM          6-Hour Rainfall, Pattern No.  1.00
```

```
1745          KM          An rainfall areal reduction factor of 0.999
1746          KM
1747          KM       EXCESS RAINFALL VALUES EXCEEDED IN 5-MINUTE INTERVALS
1748          KM     5  10  15  20  25  30  35  40  45  50  55  60  65  70  75  80  85  90
1749          KM   .30 .30 .30 .09 .07 .06 .03 .03 .03 .03 .03 .03 .01 .01 .01 .01 .01 .01
1750          KM
1751          KM          L=   0.655 miles, S=  334 feet/mile, Kb= .03
1752          KM
1753          BA   0.059
1754          LG    0.09    0.25    4.40    0.35   51.31
1755          UC   0.150   0.161
1756          UA       0       5      16      30      65      77      84      90      94      97
1757          UA     100
              *

1758          KK    C567
1759          KM      Hydrograph combine C567L + 208L at C567
1760          HC       2
              *

1761          KK  567568
1762          KM      Normal depth channel route from C567 to C568
1763          KM      Source:  HEC-2 Cross Section: CH 0.129
1764          RS       7    FLOW      -1
1765          RC   0.050   0.060   0.045  3650.0  0.0389
1766          RX  9945.7  9958.4  9989.8 10000.0 10016.4 10028.3 10045.4 10059.8
1767          RY  1912.1  1905.9  1899.0  1899.3  1898.9  1899.5  1907.1  1911.9
              *

1768          KK    208M
1769          KM   Sub-Basin   208M
1770          KM
1771          KM      The Clark Unit Hydrograph is used for this basin.
1772          KM          The Urban time-area relation is used for this basin.
1773          KM
1774          KM      Time of Concentration for this sub-basin is based on the following:
1                                      HEC-1 INPUT                                          PAGE 41

LINE          ID.......1.......2.......3.......4.......5.......6.......7.......8.......9......10

1775          KM          6-Hour Rainfall, Pattern No.  1.00
1776          KM          An rainfall areal reduction factor of 0.998
1777          KM
1778          KM       EXCESS RAINFALL VALUES EXCEEDED IN 5-MINUTE INTERVALS
1779          KM     5  10  15  20  25  30  35  40  45  50  55  60  65  70  75  80  85  90
1780          KM   .31 .31 .31 .10 .08 .07 .04 .04 .04 .04 .04 .03 .01 .01 .01 .01 .01 .01
1781          KM
1782          KM          L=   1.031 miles, S=  321 feet/mile, Kb= .03
1783          KM
1784          BA   0.159
1785          LG    0.09    0.25    4.40    0.34   62.04
1786          UC   0.192   0.173
1787          UA       0       5      16      30      65      77      84      90      94      97
1788          UA     100
              *

1789          KK   C568R
1790          KM      Hydrograph combine 567568 + 208M at C568 right branch
1791          HC       2
              *

1792          KK    C568
1793          KM      Hydrograph combine C568L + C568R at C568
1794          HC       2
              *

1795          KK  568573
1796          KM      Normal depth channel route from C568 to C573
1797          KM      Source:  HEC-2 Cross Section: BR 1.340
1798          RS       3    FLOW      -1
1799          RC   0.098   0.075   0.075  2067.0  0.0324
1800          RX  9921.8  9954.1  9968.9  9991.3 10000.0 10006.9 10025.2 10050.4
1801          RY  1843.8  1840.4  1835.1  1834.7  1832.7  1833.3  1838.1  1854.0
              *

1802          KK    208N
1803          KM   Sub-Basin   208N
1804          KM
1805          KM      The Clark Unit Hydrograph is used for this basin.
1806          KM          The Urban time-area relation is used for this basin.
1807          KM
1808          KM      Time of Concentration for this sub-basin is based on the following:
1809          KM          6-Hour Rainfall, Pattern No.  1.00
1810          KM          An rainfall areal reduction factor of 0.999
1811          KM
1812          KM       EXCESS RAINFALL VALUES EXCEEDED IN 5-MINUTE INTERVALS
1813          KM     5  10  15  20  25  30  35  40  45  50  55  60  65  70  75  80  85  90
1814          KM   .32 .32 .32 .11 .09 .09 .04 .04 .04 .04 .04 .04 .01 .01 .01 .01 .01 .01
1815          KM
1816          KM          L=   0.589 miles, S=  160 feet/mile, Kb= .04
1817          KM
1818          BA   0.047
1819          LG    0.09    0.25    6.20    0.15   62.49
1820          UC   0.204   0.237
1821          UA       0       5      16      30      65      77      84      90      94      97
1                                      HEC-1 INPUT                                          PAGE 42

LINE          ID.......1.......2.......3.......4.......5.......6.......7.......8.......9......10

1822          UA     100
              *
```

```
1823        KK   C573L
1824        KM      Hydrograph combine 568573 + 208N at C573 left branch
1825        HC       2
            *
            * *
            * * C573L is the total flow in Bristol Wash upstream of the confluence with
            * * Zapata Wash
            * *
            * * Start Zapata Wash
            * *
            *

1826        KK    208O
1827        KM   Sub-Basin   208O
1828        KM
1829        KM      The Clark Unit Hydrograph is used for this basin.
1830        KM          The Urban time-area relation is used for this basin.
1831        KM
1832        KM      Time of Concentration for this sub-basin is based on the following:
1833        KM          6-Hour Rainfall, Pattern No.  1.00
1834        KM          An rainfall areal reduction factor of 0.997
1835        KM
1836        KM       EXCESS RAINFALL VALUES EXCEEDED IN 5-MINUTE INTERVALS
1837        KM     5  10  15  20  25  30  35  40  45  50  55  60  65  70  75  80  85  90
1838        KM   .30 .30 .30 .09 .07 .06 .03 .03 .03 .03 .03 .03 .01 .01 .01 .01 .01 .01
1839        KM
1840        KM          L=   1.174 miles, S=  347 feet/mile, Kb= .03
1841        KM
1842        BA   0.230
1843        LG    0.09     0.25     4.60     0.31    48.49
1844        UC   0.200    0.163
1845        UA       0        5       16       30       65       77       84       90       94       97
1846        UA     100
            *

1847        KK  569570
1848        KM      Normal depth channel route from C569 to C570
1849        KM      Source:  HEC-2 Cross Section: ZA 0.493
1850        RS       2    FLOW      -1
1851        RC   0.050   0.035   0.055  1696.0  0.0404
1852        RX  9965.3  9985.5  9998.4 10000.0 10010.6 10019.1 10038.5 10038.5
1853        RY  1919.3  1912.3  1908.1  1907.8  1905.2  1908.1  1920.1  1920.1
            *

1854        KK    208P
1855        KM   Sub-Basin   208P
1856        KM
1857        KM      The Clark Unit Hydrograph is used for this basin.
1858        KM          The Urban time-area relation is used for this basin.
1859        KM
1860        KM      Time of Concentration for this sub-basin is based on the following:
1861        KM          6-Hour Rainfall, Pattern No.  1.00
```



```
LINE        ID.......1.......2.......3.......4.......5.......6.......7.......8.......9......10

1862        KM          An rainfall areal reduction factor of 0.999
1863        KM
1864        KM       EXCESS RAINFALL VALUES EXCEEDED IN 5-MINUTE INTERVALS
1865        KM     5  10  15  20  25  30  35  40  45  50  55  60  65  70  75  80  85  90
1866        KM   .32 .31 .31 .11 .09 .08 .04 .04 .04 .03 .03 .03 .01 .01 .01 .01 .01 .01
1867        KM
1868        KM          L=   0.471 miles, S=  312 feet/mile, Kb= .03
1869        KM
1870        BA   0.058
1871        LG    0.08     0.25     5.70     0.18    59.29
1872        UC   0.129    0.106
1873        UA       0        5       16       30       65       77       84       90       94       97
1874        UA     100
            *

1875        KK   C570R
1876        KM      Hydrograph combine 569570 + 208P at C570 right branch
1877        HC       2
            *

1878        KK    208Q
1879        KM   Sub-Basin   208Q
1880        KM
1881        KM      The Clark Unit Hydrograph is used for this basin.
1882        KM          The Urban time-area relation is used for this basin.
1883        KM
1884        KM      Time of Concentration for this sub-basin is based on the following:
1885        KM          6-Hour Rainfall, Pattern No.  1.00
1886        KM          An rainfall areal reduction factor of 0.999
1887        KM
1888        KM       EXCESS RAINFALL VALUES EXCEEDED IN 5-MINUTE INTERVALS
1889        KM     5  10  15  20  25  30  35  40  45  50  55  60  65  70  75  80  85  90
1890        KM   .31 .31 .30 .10 .08 .07 .03 .03 .03 .03 .03 .03 .01 .01 .01 .01 .01 .01
1891        KM
1892        KM          L=   0.823 miles, S=  324 feet/mile, Kb= .04
1893        KM
1894        BA   0.094
1895        LG    0.10     0.26     5.00     0.25    54.26
1896        UC   0.196    0.199
1897        UA       0        5       16       30       65       77       84       90       94       97
1898        UA     100
            *

1899        KK    C570
```

```
1900          KM      Hydrograph combine C570R + 208Q at C570
1901          HC       2
              *
              * *
              * * NOTE: 570572 is too short to route
              * *
              *
```



```
LINE          ID.......1.......2.......3.......4.......5.......6.......7.......8.......9......10

1902          KK    208R
1903          KM   Sub-Basin   208R
1904          KM
1905          KM      The Clark Unit Hydrograph is used for this basin.
1906          KM          The Urban time-area relation is used for this basin.
1907          KM
1908          KM      Time of Concentration for this sub-basin is based on the following:
1909          KM          6-Hour Rainfall, Pattern No.  1.00
1910          KM          An rainfall areal reduction factor of 1.000
1911          KM
1912          KM       EXCESS RAINFALL VALUES EXCEEDED IN 5-MINUTE INTERVALS
1913          KM     5  10  15  20  25  30  35  40  45  50  55  60  65  70  75  80  85  90
1914          KM   .32 .32 .31 .11 .09 .09 .04 .04 .04 .03 .03 .03 .01 .01 .01 .01 .01 .01
1915          KM
1916          KM          L=   0.238 miles, S=  327 feet/mile, Kb= .03
1917          KM
1918          BA   0.010
1919          LG    0.08    0.23    6.20    0.15   55.16
1920          UC   0.092   0.111
1921          UA       0       5      16      30      65      77      84      90      94      97
1922          UA     100
              *

1923          KK  571572
1924          KM      Normal depth channel route from C571 to C572
1925          KM      Source:  200 Scale Mapping
1926          RS       2    FLOW      -1
1927          RC   0.040   0.020   0.055  1379.0  0.0566
1928          RX  1000.0  1020.0  1040.0  1090.0  1122.0  1125.0  1135.0  1140.0
1929          RY  1894.0  1893.0  1892.0  1891.0  1891.0  1892.0  1894.0  1896.0
              *

1930          KK    C572
1931          KM      Hydrograph combine C570 + 571572 at C572
1932          HC       2
              *

1933          KK  572573
1934          KM      Normal depth channel route from C572 to C573
1935          KM      Source:  HEC-2 Cross Section: ZA 0.142
1936          RS       2    FLOW      -1
1937          RC   0.050   0.035   0.055  1285.0  0.0335
1938          RX  9961.8  9976.8  9982.5  9987.0 10009.5 10014.3 10022.1 10029.3
1939          RY  1840.3  1832.1  1831.2  1829.5  1829.2  1830.6  1831.2  1835.6
              *

1940          KK    208S
1941          KM   Sub-Basin   208S
1942          KM
1943          KM      The Clark Unit Hydrograph is used for this basin.
1944          KM          The Urban time-area relation is used for this basin.
1945          KM
1946          KM      Time of Concentration for this sub-basin is based on the following:
1947          KM          6-Hour Rainfall, Pattern No.  1.00
```



```
LINE          ID.......1.......2.......3.......4.......5.......6.......7.......8.......9......10

1948          KM          An rainfall areal reduction factor of 0.999
1949          KM
1950          KM       EXCESS RAINFALL VALUES EXCEEDED IN 5-MINUTE INTERVALS
1951          KM     5  10  15  20  25  30  35  40  45  50  55  60  65  70  75  80  85  90
1952          KM   .32 .32 .32 .12 .09 .09 .05 .04 .04 .04 .04 .04 .01 .01 .01 .01 .01 .01
1953          KM
1954          KM          L=   0.568 miles, S=  234 feet/mile, Kb= .03
1955          KM
1956          BA   0.068
1957          LG    0.08    0.24    6.20    0.15   67.07
1958          UC   0.154   0.136
1959          UA       0       5      16      30      65      77      84      90      94      97
1960          UA     100
              *

1961          KK   C573R
1962          KM      Hydrograph combine 572573 + 208S at C573 right branch
1963          HC       2
              *

1964          KK    C573
1965          KM      Hydrograph combine C573L + C573R at C573
1966          HC       2
              *
              * *
              * * NOTE: 573577 is too short to route
              * *
              * * C573 is the total flow in Bristol Wash upstream of the confluence
              * * with Montezuna Wash
              * *
              * * Start Montezuna Wash
```

```
                 * *
                 *
1967             KK    208T
1968             KM   Sub-Basin   208T
1969             KM
1970             KM      The Clark Unit Hydrograph is used for this basin.
1971             KM          The Urban time-area relation is used for this basin.
1972             KM
1973             KM      Time of Concentration for this sub-basin is based on the following:
1974             KM          6-Hour Rainfall, Pattern No.  1.00
1975             KM          An rainfall areal reduction factor of 0.998
1976             KM
1977             KM       EXCESS RAINFALL VALUES EXCEEDED IN 5-MINUTE INTERVALS
1978             KM     5  10  15  20  25  30  35  40  45  50  55  60  65  70  75  80  85  90
1979             KM   .31 .30 .30 .10 .07 .07 .03 .03 .03 .03 .03 .03 .01 .01 .01 .01 .01 .01
1980             KM
1981             KM          L=   0.787 miles, S=  340 feet/mile, Kb= .03
1982             KM
1983             BA   0.132
1984             LG    0.09    0.25    5.20    0.22   44.80
1985             UC   0.163   0.129
1986             UA       0       5      16      30      65      77      84      90      94      97
1987             UA     100
                 *
1                                          HEC-1 INPUT                                          PAGE 46

LINE             ID.......1.......2.......3.......4.......5.......6.......7.......8.......9......10


1988             KK    208U
1989             KM   Sub-Basin   208U
1990             KM
1991             KM      The Clark Unit Hydrograph is used for this basin.
1992             KM          The Urban time-area relation is used for this basin.
1993             KM
1994             KM      Time of Concentration for this sub-basin is based on the following:
1995             KM          6-Hour Rainfall, Pattern No.  1.00
1996             KM          An rainfall areal reduction factor of 0.998
1997             KM
1998             KM       EXCESS RAINFALL VALUES EXCEEDED IN 5-MINUTE INTERVALS
1999             KM     5  10  15  20  25  30  35  40  45  50  55  60  65  70  75  80  85  90
2000             KM   .31 .30 .30 .10 .08 .07 .03 .03 .03 .03 .03 .03 .01 .01 .01 .01 .01 .01
2001             KM
2002             KM          L=   0.507 miles, S=  360 feet/mile, Kb= .03
2003             KM
2004             BA   0.134
2005             LG    0.09    0.25    5.30    0.21   44.19
2006             UC   0.129   0.070
2007             UA       0       5      16      30      65      77      84      90      94      97
2008             UA     100
                 *

2009             KK    C574
2010             KM      Hydrograph combine 208T + 208U at C574
2011             HC       2
                 *

2012             KK  574575
2013             KM      Normal depth channel route from C574 to C575
2014             KM      Source:  HEC-2 Cross Section: MO 0.587
2015             RS       1    FLOW      -1
2016             RC   0.070   0.050   0.055   823.0  0.0365
2017             RX  9945.0  9970.6  9986.7  9995.9 10002.3 10019.0 10036.7 10055.5
2018             RY  1932.6  1928.5  1922.9  1917.8  1917.7  1924.0  1931.1  1934.1
                 *

2019             KK    208V
2020             KM   Sub-Basin   208V
2021             KM
2022             KM      The Clark Unit Hydrograph is used for this basin.
2023             KM          The Urban time-area relation is used for this basin.
2024             KM
2025             KM      Time of Concentration for this sub-basin is based on the following:
2026             KM          6-Hour Rainfall, Pattern No.  1.00
2027             KM          An rainfall areal reduction factor of 1.000
2028             KM
2029             KM       EXCESS RAINFALL VALUES EXCEEDED IN 5-MINUTE INTERVALS
2030             KM     5  10  15  20  25  30  35  40  45  50  55  60  65  70  75  80  85  90
2031             KM   .31 .31 .31 .10 .08 .08 .04 .04 .03 .02 .02 .02 .01 .01 .01 .01 .01 .01
2032             KM
2033             KM          L=   0.354 miles, S=  319 feet/mile, Kb= .03
2034             KM
2035             BA   0.028
1                                          HEC-1 INPUT                                          PAGE 47

LINE             ID.......1.......2.......3.......4.......5.......6.......7.......8.......9......10

2036             LG    0.09    0.21    6.40    0.15   41.15
2037             UC   0.113   0.110
2038             UA       0       5      16      30      65      77      84      90      94      97
2039             UA     100
                 *

2040             KK    C575
2041             KM      Hydrograph combine 574575 + 208V at C575
2042             HC       2
                 *

2043             KK  575576
2044             KM      Normal depth channel route from C575 to C576
```

```
2045        KM      Source:  HEC-2 Cross Section: MO 0.307
2046        RS        2    FLOW      -1
2047        RC   0.070   0.050   0.055  2342.0  0.0423
2048        RX  9973.7  9974.0  9986.7 10000.0 10000.5 10009.7 10026.7 10037.3
2049        RY  1861.6  1861.5  1855.0  1853.0  1853.1  1854.8  1863.0  1867.1
            *

2050        KK    208W
2051        KM   Sub-Basin   208W
2052        KM
2053        KM      The Clark Unit Hydrograph is used for this basin.
2054        KM          The Urban time-area relation is used for this basin.
2055        KM
2056        KM      Time of Concentration for this sub-basin is based on the following:
2057        KM          6-Hour Rainfall, Pattern No.  1.00
2058        KM          An rainfall areal reduction factor of 0.999
2059        KM
2060        KM        EXCESS RAINFALL VALUES EXCEEDED IN 5-MINUTE INTERVALS
2061        KM     5  10  15  20  25  30  35  40  45  50  55  60  65  70  75  80  85  90
2062        KM   .31 .31 .31 .10 .08 .08 .04 .03 .03 .02 .02 .02 .01 .01 .01 .01 .01 .01
2063        KM
2064        KM          L=   0.475 miles, S=  288 feet/mile, Kb= .03
2065        KM
2066        BA   0.050
2067        LG    0.09    0.23    6.20    0.16   42.74
2068        UC   0.133   0.120
2069        UA       0       5      16      30      65      77      84      90      94      97
2070        UA     100
            *

2071        KK    C576
2072        KM      Hydrograph combine 575576 + 208W at C576
2073        HC       2
            *

2074        KK  576577
2075        KM      Normal depth channel route from C576 to C577
2076        KM      Source:  HEC-2 Cross Section: MO 0.116
2077        RS       1    FLOW      -1
2078        RC   0.070   0.050   0.055   740.0  0.0338
2079        RX  9915.1  9960.0  9985.5 10000.0 10000.1 10007.0 10023.3 10023.4
2080        RY  1826.5  1826.4  1814.5  1812.3  1812.3  1814.8  1830.3  1830.4
            *
            * *
            * * 576577 is the total flow in Montezuna Wash just upstream of the confluence
            * * with Bristol Wash
            * *
            *
```



```
LINE        ID.......1.......2.......3.......4.......5.......6.......7.......8.......9......10

2081        KK    C577
2082        KM      Hydrograph combine C577L + 576577 at C570
2083        HC       2
            *
            * *
            * * C577 is the total flow in Bristol Wash downstream of the confluence
            * * with Montezuma Wash
            * *
            *

2084        KK  577578
2085        KM      Normal depth channel route from C577 to C578
2086        KM      Source:  HEC-2 Cross Section: BR 1.099
2087        RS       2    FLOW      -1
2088        RC   0.055   0.045   0.055  1078.0  0.0147
2089        RX  9865.3  9956.6  9991.1 10010.2 10034.3 10063.4 10139.7 10201.7
2090        RY  1821.8  1810.8  1793.2  1792.5  1795.5  1796.1  1813.8  1822.8
            *

2091        KK    208X
2092        KM   Sub-Basin   208X
2093        KM
2094        KM      The Clark Unit Hydrograph is used for this basin.
2095        KM          The Urban time-area relation is used for this basin.
2096        KM
2097        KM      Time of Concentration for this sub-basin is based on the following:
2098        KM          6-Hour Rainfall, Pattern No.  1.00
2099        KM          An rainfall areal reduction factor of 0.999
2100        KM
2101        KM        EXCESS RAINFALL VALUES EXCEEDED IN 5-MINUTE INTERVALS
2102        KM     5  10  15  20  25  30  35  40  45  50  55  60  65  70  75  80  85  90
2103        KM   .30 .30 .30 .09 .06 .05 .03 .03 .02 .02 .02 .02 .01 .01 .01 .01 .01 .01
2104        KM
2105        KM          L=   0.417 miles, S=  223 feet/mile, Kb= .05
2106        KM
2107        BA   0.075
2108        LG    0.13    0.29    5.60    0.21   39.42
2109        UC   0.179   0.119
2110        UA       0       5      16      30      65      77      84      90      94      97
2111        UA     100
            *

2112        KK   C578I
2113        KM      Hydrograph combine 577578 + 208X at C578I
2114        HC       2
            *
            * *
            * * C578I is the total flow in Bristol Wash upstream of Dam 11
```

```
                * *
                *
LINE            ID.......1.......2.......3.......4.......5.......6.......7.......8.......9......10

2115            KK   C578O
2116            KM      Reservoir route at C578 (Dam 11).
2117            RS       1    ELEV  1779.2
2118            SV    0.00   16.38   31.30   53.65   84.39  126.17  138.00  143.00  147.00  154.47
2119            SV  161.00  167.00  174.00  181.00  187.43  194.00  202.00  205.00
2120            SE  1779.2  1794.0  1798.0  1802.0  1806.0  1810.0  1810.8  1811.2  1811.6  1812.0
2121            SE  1812.4  1812.8  1813.2  1813.6  1814.0  1814.4  1814.8  1815.0
2122            SQ       0     131     181     221     254     283     305     325     328     366
2123            SQ     522     812    1194    1651    2176    2763    3406    4104    4855    5250
2124            SE  1779.2  1786.0  1790.0  1794.0  1798.0  1802.0  1806.0  1810.0  1810.8  1811.2
2125            SE  1811.6  1812.0  1812.4  1812.8  1813.2  1813.6  1814.0  1814.4  1814.8  1815.0
2126            RL                    0.97
                *
                * *
                * * End Basin 208.  Rejoin Basin 210
                * *
                *

2127            KK  578587
2128            KM      Normal depth channel route from C578 to C587
2129            KM      Source:  HEC-2 Cross Section: BR 0.697
2130            RS       3    FLOW      -1
2131            RC   0.055   0.045   0.055  1628.0  0.0191
2132            RX  9926.4  9949.5  9960.1  9984.7 10000.0 10014.1 10031.5 10049.4
2133            RY  1763.0  1762.6  1761.8  1757.0  1757.1  1756.9  1761.4  1768.1
                *

2134            KK    210B
2135            KM   Sub-Basin   210B
2136            KM
2137            KM      The Clark Unit Hydrograph is used for this basin.
2138            KM          The Urban time-area relation is used for this basin.
2139            KM
2140            KM      Time of Concentration for this sub-basin is based on the following:
2141            KM          6-Hour Rainfall, Pattern No.  1.00
2142            KM          An rainfall areal reduction factor of 0.999
2143            KM
2144            KM       EXCESS RAINFALL VALUES EXCEEDED IN 5-MINUTE INTERVALS
2145            KM     5  10  15  20  25  30  35  40  45  50  55  60  65  70  75  80  85  90
2146            KM   .31 .30 .30 .10 .08 .07 .03 .03 .03 .02 .02 .02 .01 .01 .01 .01 .01 .01
2147            KM
2148            KM          L=   0.930 miles, S=  251 feet/mile, Kb= .03
2149            KM
2150            BA   0.107
2151            LG    0.08    0.25    5.80    0.17   37.15
2152            UC   0.196   0.205
2153            UA       0       5      16      30      65      77      84      90      94      97
2154            UA     100
                *
```



```
LINE            ID.......1.......2.......3.......4.......5.......6.......7.......8.......9......10

2155            KK   C586O
2156            KM      Reservoir route at C586.
2157            RS       1    ELEV  1804.4
2158            SV    0.00    0.05    0.36    1.09    2.45    4.45    7.00    9.50    9.60   10.00
2159            SV   10.34   10.70   11.20   11.60   12.10   12.50
2160            SE  1804.4  1806.0  1808.0  1810.0  1812.0  1814.0  1816.0 1817.55  1817.6  1817.8
2161            SE  1818.0  1818.2  1818.4  1818.6  1818.8  1819.0
2162            SQ       0      37     130     219     284     322     353     375     377     393
2163            SQ     432     492     574     680     808     959
                *

2164            KK  586587
2165            KM      Normal depth channel route from C586 to C587
2166            KM      Source:  200 Scale Mapping
2167            RS       3    FLOW      -1
2168            RC   0.040   0.035   0.040  1905.0  0.0313
2169            RX  1000.0  1020.0  1050.0  1055.0  1065.0  1070.0  1130.0  1150.0
2170            RY  1782.0  1780.0  1772.0  1771.0  1771.0  1772.0  1778.0  1782.0
                *

2171            KK    C587
2172            KM      Hydrograph combine 578587 + 586587 at C578
2173            HC       2
                *

2174            KK  587595
2175            KM      Normal depth channel route from C587 to C595
2176            KM      Source:  HEC-2 Cross Section: BR 0.533
2177            RS       2    FLOW      -1
2178            RC   0.055   0.045   0.055  1039.0  0.0173
2179            RX  9977.2  9980.4  9983.6  9989.9 10009.9 10020.3 10028.8 10037.3
2180            RY  1745.2  1744.0  1742.8  1740.3  1740.3  1742.4  1743.0  1743.6
                *

2181            KK    210C
2182            KM   Sub-Basin   210C
2183            KM
2184            KM      The Clark Unit Hydrograph is used for this basin.
2185            KM          The Urban time-area relation is used for this basin.
2186            KM
```

```
2187          KM      Time of Concentration for this sub-basin is based on the following:
2188          KM          6-Hour Rainfall, Pattern No.  1.00
2189          KM          An rainfall areal reduction factor of 0.999
2190          KM
2191          KM       EXCESS RAINFALL VALUES EXCEEDED IN 5-MINUTE INTERVALS
2192          KM     5  10  15  20  25  30  35  40  45  50  55  60  65  70  75  80  85  90
2193          KM    .29 .28 .28 .07 .05 .04 .01 .01 .01 .01 .01 .01 .00 .00 .00 .00 .00 .00
2194          KM
2195          KM          L=   0.637 miles, S=  198 feet/mile, Kb= .03
2196          KM
2197          BA   0.082
2198          LG    0.11    0.26    4.80    0.28   22.29
2199          UC   0.179   0.159
2200          UA       0       5      16      30      65      77      84      90      94      97
```



```
LINE          ID.......1.......2.......3.......4.......5.......6.......7.......8.......9......10

2201          UA     100
              *

2202          KK   C595L
2203          KM     Hydrograph combine 587595 + 210C at C595 left branch
2204          HC       2
              *
              * *
              * * C595L is the total flow in Bristol Wash upstream of the confluence
              * * with Longmont Wash
              * *
              * * Start Longmont Wash Left Branch
              * *
              *

2205          KK    210D
2206          KM   Sub-Basin   210D
2207          KM
2208          KM      The Clark Unit Hydrograph is used for this basin.
2209          KM          The Urban time-area relation is used for this basin.
2210          KM
2211          KM      Time of Concentration for this sub-basin is based on the following:
2212          KM          6-Hour Rainfall, Pattern No.  1.00
2213          KM          An rainfall areal reduction factor of 0.998
2214          KM
2215          KM       EXCESS RAINFALL VALUES EXCEEDED IN 5-MINUTE INTERVALS
2216          KM     5  10  15  20  25  30  35  40  45  50  55  60  65  70  75  80  85  90
2217          KM    .30 .30 .30 .09 .07 .06 .03 .03 .03 .02 .02 .02 .01 .01 .01 .01 .01 .01
2218          KM
2219          KM          L=   0.832 miles, S=  325 feet/mile, Kb= .03
2220          KM
2221          BA   0.140
2222          LG    0.09    0.25    5.80    0.18   33.66
2223          UC   0.171   0.138
2224          UA       0       5      16      30      65      77      84      90      94      97
2225          UA     100
              *

2226          KK  588590
2227          KM     Normal depth channel route from C588 to C590
2228          KM     Source:  HEC-2 Cross Section: LO-LB1 0.128
2229          RS       2    FLOW      -1
2230          RC   0.065   0.050   0.060  1117.0  0.0340
2231          RX  9931.7  9960.6  9984.9 10005.7 10019.1 10033.8 10151.6 10172.9
2232          RY  1839.3  1833.5  1825.9  1824.7  1825.9  1828.8  1832.9  1838.0
              *

2233          KK    210E
2234          KM   Sub-Basin   210E
2235          KM
2236          KM      The Clark Unit Hydrograph is used for this basin.
2237          KM          The Urban time-area relation is used for this basin.
2238          KM
2239          KM      Time of Concentration for this sub-basin is based on the following:
2240          KM          6-Hour Rainfall, Pattern No.  1.00
```



```
LINE          ID.......1.......2.......3.......4.......5.......6.......7.......8.......9......10

2241          KM          An rainfall areal reduction factor of 1.000
2242          KM
2243          KM       EXCESS RAINFALL VALUES EXCEEDED IN 5-MINUTE INTERVALS
2244          KM     5  10  15  20  25  30  35  40  45  50  55  60  65  70  75  80  85  90
2245          KM    .31 .31 .31 .10 .08 .08 .03 .03 .03 .02 .01 .01 .00 .00 .00 .00 .00 .00
2246          KM
2247          KM          L=   0.339 miles, S=  151 feet/mile, Kb= .03
2248          KM
2249          BA   0.028
2250          LG    0.09    0.17    6.80    0.12   15.00
2251          UC   0.138   0.133
2252          UA       0       5      16      30      65      77      84      90      94      97
2253          UA     100
              *

2254          KK   C590L
2255          KM     Hydrograph combine 588590 + 210E at C590 left branch
2256          HC       2
              *
              * *
              * * C590L is the total flow in Longmont Wash Left Branch upstream of the
              * * confluence with Longmont Wash
              * *
              * * Start Longmont Wash
```

```
                 * *
                 *
2257             KK    210F
2258             KM   Sub-Basin   210F
2259             KM
2260             KM      The Clark Unit Hydrograph is used for this basin.
2261             KM          The Urban time-area relation is used for this basin.
2262             KM
2263             KM      Time of Concentration for this sub-basin is based on the following:
2264             KM          6-Hour Rainfall, Pattern No.  1.00
2265             KM          An rainfall areal reduction factor of 0.999
2266             KM
2267             KM       EXCESS RAINFALL VALUES EXCEEDED IN 5-MINUTE INTERVALS
2268             KM     5  10  15  20  25  30  35  40  45  50  55  60  65  70  75  80  85  90
2269             KM   .30 .30 .30 .09 .07 .06 .03 .03 .03 .03 .03 .03 .01 .01 .01 .01 .01 .01
2270             KM
2271             KM          L=   0.668 miles, S=  349 feet/mile, Kb= .03
2272             KM
2273             BA   0.093
2274             LG    0.09    0.25    4.40    0.34   49.44
2275             UC   0.150   0.127
2276             UA       0       5      16      30      65      77      84      90      94      97
2277             UA     100
                 *
1                                          HEC-1 INPUT                                          PAGE 53

LINE             ID.......1.......2.......3.......4.......5.......6.......7.......8.......9......10

2278             KK  589590
2279             KM      Normal depth channel route from C589 to C590
2280             KM      Source:  HEC-2 Cross Section: LO 0.813
2281             RS       2    FLOW      -1
2282             RC   0.065   0.050   0.060  1751.0  0.0423
2283             RX  9957.0  9963.5  9984.5  9996.1 10008.8 10017.4 10040.1 10060.8
2284             RY  1843.8  1842.9  1837.0  1831.2  1830.6  1836.1  1838.3  1842.1
                 *

2285             KK    210G
2286             KM   Sub-Basin   210G
2287             KM
2288             KM      The Clark Unit Hydrograph is used for this basin.
2289             KM          The Urban time-area relation is used for this basin.
2290             KM
2291             KM      Time of Concentration for this sub-basin is based on the following:
2292             KM          6-Hour Rainfall, Pattern No.  1.00
2293             KM          An rainfall areal reduction factor of 0.998
2294             KM
2295             KM       EXCESS RAINFALL VALUES EXCEEDED IN 5-MINUTE INTERVALS
2296             KM     5  10  15  20  25  30  35  40  45  50  55  60  65  70  75  80  85  90
2297             KM   .30 .30 .30 .09 .07 .06 .03 .03 .02 .02 .02 .02 .01 .01 .01 .01 .01 .01
2298             KM
2299             KM          L=   0.969 miles, S=  333 feet/mile, Kb= .03
2300             KM
2301             BA   0.162
2302             LG    0.09    0.25    5.30    0.22   39.22
2303             UC   0.183   0.155
2304             UA       0       5      16      30      65      77      84      90      94      97
2305             UA     100
                 *

2306             KK   C590R
2307             KM      Hydrograph combine 589590 + 210G at C590 right branch
2308             HC       2
                 *
                 * * NOTE: 590593 is too short to route
                 * *
                 * * C590R is the total flow in Longmont Wash upstream of the confluence
                 * * with Longmont Wash Left Branch
                 * *
                 *

2309             KK    C590
2310             KM      Hydrograph combine C590L + C590R at C590
2311             HC       2
                 *
                 * * C590 is the total flow in Longmont Wash upstream of the confluence
                 * * Longmont Wash Right Branch
                 * *
                 * * Start Longmont Wash Right Branch
                 * *
                 *
1                                          HEC-1 INPUT                                          PAGE 54

LINE             ID.......1.......2.......3.......4.......5.......6.......7.......8.......9......10

2312             KK    210H
2313             KM   Sub-Basin   210H
2314             KM
2315             KM      The Clark Unit Hydrograph is used for this basin.
2316             KM          The Urban time-area relation is used for this basin.
2317             KM
2318             KM      Time of Concentration for this sub-basin is based on the following:
2319             KM          6-Hour Rainfall, Pattern No.  1.00
2320             KM          An rainfall areal reduction factor of 0.999
2321             KM
2322             KM       EXCESS RAINFALL VALUES EXCEEDED IN 5-MINUTE INTERVALS
2323             KM     5  10  15  20  25  30  35  40  45  50  55  60  65  70  75  80  85  90
2324             KM   .30 .30 .30 .09 .07 .06 .03 .03 .02 .01 .01 .01 .00 .00 .00 .00 .00 .00
```

```
2325          KM
2326          KM          L=   0.565 miles, S=  340 feet/mile, Kb= .03
2327          KM
2328          BA   0.070
2329          LG    0.09    0.23    6.20    0.16   21.74
2330          UC   0.138   0.118
2331          UA       0       5      16      30      65      77      84      90      94      97
2332          UA     100
              *

2333          KK  592593
2334          KM      Normal depth channel route from C592 to C593
2335          KM      Source:  HEC-2 Cross Section: LO-RB1 0.027
2336          RS       2    FLOW      -1
2337          RC   0.065   0.050   0.060  2062.0  0.0412
2338          RX  9920.6  9964.0  9984.7  9996.1 10003.9 10025.4 10041.1 10057.9
2339          RY  1820.0  1804.5  1801.2  1797.3  1797.3  1808.5  1818.3  1820.1
              *
              * *
              * * 592593 is the total flow in Longmont Wash Right Branch upstream
              * * of the confluence with Longmont Wash
              * *
              *

2340          KK    C593
2341          KM      Hydrograph combine C590 + C593R at C593
2342          HC       2
              *
              * *
              * * C593 is the total flow in Longmont Wash below the confluence with
              * * Longmont Wash Right Branch
              * *
              *

2343          KK  593594
2344          KM      Normal depth channel route from C593 to C594
2345          KM      Source:  HEC-2 Cross Section: LO0.413
2346          RS       2    FLOW      -1
2347          RC   0.065   0.050   0.060   988.0  0.0202
2348          RX  9937.2  9958.5  9981.7  9992.8 10007.7 10024.4 10041.9 10067.8
2349          RY  1783.6  1773.5  1773.9  1771.3  1771.2  1774.5  1778.7  1788.7
              *
```



```
LINE          ID.......1.......2.......3.......4.......5.......6.......7.......8.......9......10

2350          KK    210I
2351          KM   Sub-Basin   210I
2352          KM
2353          KM      The Clark Unit Hydrograph is used for this basin.
2354          KM          The Urban time-area relation is used for this basin.
2355          KM
2356          KM      Time of Concentration for this sub-basin is based on the following:
2357          KM          6-Hour Rainfall, Pattern No.  1.00
2358          KM          An rainfall areal reduction factor of 0.999
2359          KM
2360          KM       EXCESS RAINFALL VALUES EXCEEDED IN 5-MINUTE INTERVALS
2361          KM     5  10  15  20  25  30  35  40  45  50  55  60  65  70  75  80  85  90
2362          KM   .31 .31 .31 .11 .09 .08 .04 .04 .03 .03 .02 .02 .00 .00 .00 .00 .00 .00
2363          KM
2364          KM          L=   0.634 miles, S=  250 feet/mile, Kb= .03
2365          KM
2366          BA   0.049
2367          LG    0.09    0.15    7.60    0.09   15.00
2368          UC   0.158   0.185
2369          UA       0       5      16      30      65      77      84      90      94      97
2370          UA     100
              *

2371          KK    C594
2372          KM      Hydrograph combine 593594 + 210I at C594
2373          HC       2
              *

2374          KK  594595
2375          KM      Normal depth channel route from C594 to C595
2376          KM      Source:  HEC-2 Cross Section: LO 0.184
2377          RS       5    FLOW      -1
2378          RC   0.065   0.050   0.060  2093.0  0.0201
2379          RX  9814.0  9836.5  9878.5  9988.2  9994.1 10010.9 10030.4 10030.5
2380          RY  1769.3  1766.6  1752.8  1750.6  1747.9  1749.2  1770.5  1770.6
              *

2381          KK    210J
2382          KM   Sub-Basin   210J
2383          KM
2384          KM      The Clark Unit Hydrograph is used for this basin.
2385          KM          The Urban time-area relation is used for this basin.
2386          KM
2387          KM      Time of Concentration for this sub-basin is based on the following:
2388          KM          6-Hour Rainfall, Pattern No.  1.00
2389          KM          An rainfall areal reduction factor of 0.999
2390          KM
2391          KM       EXCESS RAINFALL VALUES EXCEEDED IN 5-MINUTE INTERVALS
2392          KM     5  10  15  20  25  30  35  40  45  50  55  60  65  70  75  80  85  90
2393          KM   .31 .30 .30 .10 .08 .07 .03 .03 .03 .01 .01 .01 .00 .00 .00 .00 .00 .00
2394          KM
2395          KM          L=   0.684 miles, S=  187 feet/mile, Kb= .03
2396          KM
2397          BA   0.103
```

```
LINE          ID.......1.......2.......3.......4.......5.......6.......7.......8.......9......10

2398          LG    0.09    0.19    6.60    0.13   15.00
2399          UC   0.183   0.152
2400          UA       0       5      16      30      65      77      84      90      94      97
2401          UA     100
              *

2402          KK   C595R
2403          KM      Hydrograph combine 594595 + 210J at C595
2404          HC       2
              *
              * *
              * * C595R is the total flow in Longmont Wash upstream of the confluence
              * * with Bristol Wash
              * *
              *

2405          KK    C595
2406          KM      Hydrograph combine C595L + C595R at C595
2407          HC       2
              *
              * *
              * * C595 is the total flow in Bristol Wash just downstream of the
              * * confluence with Longmont Wash
              * *
              *

2408          KK  595596
2409          KM      Normal depth channel route from C595 to C596
2410          KM      Source:  HEC-2 Cross Section: BR0.290
2411          RS       3    FLOW     -1
2412          RC   0.055   0.045   0.055  1095.0  0.0110
2413          RX  9886.8  9904.8  9948.0 10000.0 10032.4 10081.5 10107.3 10130.4
2414          RY  1727.2  1724.1  1725.9  1720.2  1725.6  1725.3  1721.3  1731.4
              *

2415          KK    210K
2416          KM   Sub-Basin   210K
2417          KM
2418          KM      The Clark Unit Hydrograph is used for this basin.
2419          KM          The Urban time-area relation is used for this basin.
2420          KM
2421          KM      Time of Concentration for this sub-basin is based on the following:
2422          KM          6-Hour Rainfall, Pattern No.  1.00
2423          KM          An rainfall areal reduction factor of 0.999
2424          KM
2425          KM       EXCESS RAINFALL VALUES EXCEEDED IN 5-MINUTE INTERVALS
2426          KM     5  10  15  20  25  30  35  40  45  50  55  60  65  70  75  80  85  90
2427          KM   .31 .30 .30 .10 .08 .07 .03 .03 .03 .01 .01 .01 .00 .00 .00 .00 .00 .00
2428          KM
2429          KM          L=   0.425 miles, S=  207 feet/mile, Kb= .03
2430          KM
2431          BA   0.077
2432          LG    0.09    0.19    6.60    0.13   15.00
2433          UC   0.142   0.092
2434          UA       0       5      16      30      65      77      84      90      94      97
```



```
LINE          ID.......1.......2.......3.......4.......5.......6.......7.......8.......9......10

2435          UA     100
              *

2436          KK    C596
2437          KM      Hydrograph combine 595596 + 210K at C596
2438          HC       2
              *
              * *
              * * C596 is the total flow in Bristol Wash at Golden Eagle Blvd.
              * * upstream of DAM 4
              * *
              * * Leave Basin 210 temporarily and move to Basin 209
              * *
              * * Start Cloudburst Wash
              *

2439          KK    209A
2440          KM   Sub-Basin   209A
2441          KM
2442          KM      The Clark Unit Hydrograph is used for this basin.
2443          KM          The HEC-1 time-area relation is used for this basin.
2444          KM
2445          KM      Time of Concentration for this sub-basin is based on the following:
2446          KM          6-Hour Rainfall, Pattern No.  1.00
2447          KM          An rainfall areal reduction factor of 0.995
2448          KM
2449          KM       EXCESS RAINFALL VALUES EXCEEDED IN 5-MINUTE INTERVALS
2450          KM     5  10  15  20  25  30  35  40  45  50  55  60  65  70  75  80  85  90
2451          KM   .29 .28 .28 .07 .05 .05 .02 .02 .02 .02 .02 .02 .01 .01 .01 .01 .01 .01
2452          KM
2453          KM          L=   1.028 miles, S=  367 feet/mile, Kb= .08
2454          KM
2455          BA   0.368
2456          LG    0.18    0.31    4.35    0.38   41.41
2457          UC   0.342   0.203
              *

2458          KK  579580
```

```
2459          KM      Normal depth channel route from C579 to C580
2460          KM      Source:  100 Scale 4' CI Mapping
2461          RS       2    FLOW      -1
2462          RC   0.050    0.045    0.050  1751.0  0.0600
2463          RX  1000.0  1010.0  1025.0  1030.0  1035.0  1040.0  1045.0  1048.0
2464          RY  2336.0  2332.0  2328.0  2327.5  2327.5  2328.0  2332.0  2336.0
              *

2465          KK    209C
2466          KM   Sub-Basin   209C
2467          KM
2468          KM      The Clark Unit Hydrograph is used for this basin.
2469          KM          The Urban time-area relation is used for this basin.
2470          KM
2471          KM      Time of Concentration for this sub-basin is based on the following:
2472          KM          6-Hour Rainfall, Pattern No.  1.00
2473          KM          An rainfall areal reduction factor of 0.999
```



```
LINE          ID.......1.......2.......3.......4.......5.......6.......7.......8.......9......10

2474          KM
2475          KM       EXCESS RAINFALL VALUES EXCEEDED IN 5-MINUTE INTERVALS
2476          KM     5  10  15  20  25  30  35  40  45  50  55  60  65  70  75  80  85  90
2477          KM   .30 .30 .29 .09 .06 .05 .03 .03 .03 .03 .03 .03 .01 .01 .01 .01 .01 .01
2478          KM
2479          KM          L=   0.723 miles, S=  342 feet/mile, Kb= .05
2480          KM
2481          BA   0.064
2482          LG    0.11    0.26    4.35    0.36   48.03
2483          UC   0.208   0.240
2484          UA       0       5      16      30      65      77      84      90      94      97
2485          UA     100
              *

2486          KK   C580R
2487          KM      Hydrograph combine 579580 + 209C at C580 right branch
2488          HC       2
              *

2489          KK    209B
2490          KM   Sub-Basin   209B
2491          KM
2492          KM      The Clark Unit Hydrograph is used for this basin.
2493          KM          The Urban time-area relation is used for this basin.
2494          KM
2495          KM      Time of Concentration for this sub-basin is based on the following:
2496          KM          6-Hour Rainfall, Pattern No.  1.00
2497          KM          An rainfall areal reduction factor of 0.999
2498          KM
2499          KM       EXCESS RAINFALL VALUES EXCEEDED IN 5-MINUTE INTERVALS
2500          KM     5  10  15  20  25  30  35  40  45  50  55  60  65  70  75  80  85  90
2501          KM   .30 .30 .30 .09 .07 .06 .03 .03 .03 .03 .03 .03 .01 .01 .01 .01 .01 .01
2502          KM
2503          KM          L=   0.716 miles, S=  403 feet/mile, Kb= .03
2504          KM
2505          BA   0.083
2506          LG    0.09    0.25    4.35    0.35   50.00
2507          UC   0.150   0.142
2508          UA       0       5      16      30      65      77      84      90      94      97
2509          UA     100
              *

2510          KK    C580
2511          KM      Hydrograph combine 580R + 209B at C580
2512          HC       2
              *

2513          KK  580581
2514          KM      Normal depth channel route from C580 to C581
2515          KM      Source:  100 Scale 4' CI Mapping
2516          RS       3    FLOW      -1
2517          RC   0.050    0.045    0.050  2339.0  0.0440
2518          RX  1000.0  1010.0  1025.0  1030.0  1040.0  1045.0  1070.0  1075.0
2519          RY  2452.0  2448.0  2444.0  2443.5  2443.5  2444.0  2448.0  2452.0
              *
```



```
LINE          ID.......1.......2.......3.......4.......5.......6.......7.......8.......9......10

2520          KK    209D
2521          KM   Sub-Basin   209D
2522          KM
2523          KM      The Clark Unit Hydrograph is used for this basin.
2524          KM          The Urban time-area relation is used for this basin.
2525          KM
2526          KM      Time of Concentration for this sub-basin is based on the following:
2527          KM          6-Hour Rainfall, Pattern No.  1.00
2528          KM          An rainfall areal reduction factor of 0.997
2529          KM
2530          KM       EXCESS RAINFALL VALUES EXCEEDED IN 5-MINUTE INTERVALS
2531          KM     5  10  15  20  25  30  35  40  45  50  55  60  65  70  75  80  85  90
2532          KM   .30 .30 .29 .09 .06 .05 .03 .03 .03 .03 .03 .03 .01 .01 .01 .01 .01 .01
2533          KM
2534          KM          L=   0.800 miles, S=  354 feet/mile, Kb= .04
2535          KM
2536          BA   0.244
2537          LG    0.11    0.26    4.35    0.36   48.63
2538          UC   0.192   0.110
2539          UA       0       5      16      30      65      77      84      90      94      97
```

```
2540          UA     100
              *

2541          KK   C581R
2542          KM      Hydrograph combine 580581 + 209D at C581 right branch
2543          HC       2
              *

2544          KK    209E
2545          KM   Sub-Basin   209E
2546          KM
2547          KM      The Clark Unit Hydrograph is used for this basin.
2548          KM          The Urban time-area relation is used for this basin.
2549          KM
2550          KM      Time of Concentration for this sub-basin is based on the following:
2551          KM          6-Hour Rainfall, Pattern No.  1.00
2552          KM          An rainfall areal reduction factor of 0.998
2553          KM
2554          KM       EXCESS RAINFALL VALUES EXCEEDED IN 5-MINUTE INTERVALS
2555          KM     5  10  15  20  25  30  35  40  45  50  55  60  65  70  75  80  85  90
2556          KM   .30 .30 .30 .09 .07 .06 .03 .03 .03 .03 .03 .03 .01 .01 .01 .01 .01 .01
2557          KM
2558          KM          L=   1.018 miles, S=  341 feet/mile, Kb= .03
2559          KM
2560          BA   0.149
2561          LG    0.09    0.25    4.35    0.35   50.00
2562          UC   0.188   0.173
2563          UA       0       5      16      30      65      77      84      90      94      97
2564          UA     100
              *
```



```
LINE          ID.......1.......2.......3.......4.......5.......6.......7.......8.......9......10

2565          KK    C581
2566          KM      Hydrograph combine 581R + 209E at C581
2567          HC       2
              *

2568          KK  581582
2569          KM      Normal depth channel route from C581 to C582
2570          KM      Source:  100 Scale 4' CI Mapping
2571          RS       4    FLOW      -1
2572          RC   0.050   0.045   0.050  4012.0  0.0459
2573          RX  1000.0  1010.0  1025.0  1030.0  1035.0  1040.0  1050.0  1065.0
2574          RY  2100.0  2096.0  2092.0  2091.5  2091.5  2092.0  2096.0  2100.0
              *

2575          KK    209F
2576          KM   Sub-Basin   209F
2577          KM
2578          KM      The Clark Unit Hydrograph is used for this basin.
2579          KM          The HEC-1 time-area relation is used for this basin.
2580          KM
2581          KM      Time of Concentration for this sub-basin is based on the following:
2582          KM          6-Hour Rainfall, Pattern No.  1.00
2583          KM          An rainfall areal reduction factor of 0.997
2584          KM
2585          KM       EXCESS RAINFALL VALUES EXCEEDED IN 5-MINUTE INTERVALS
2586          KM     5  10  15  20  25  30  35  40  45  50  55  60  65  70  75  80  85  90
2587          KM   .29 .28 .28 .07 .04 .04 .02 .02 .02 .02 .02 .02 .01 .01 .01 .01 .01 .01
2588          KM
2589          KM          L=   1.191 miles, S=  332 feet/mile, Kb= .09
2590          KM
2591          BA   0.226
2592          LG    0.18    0.31    4.50    0.36   40.21
2593          UC   0.433   0.393
              *

2594          KK   C582R
2595          KM      Hydrograph combine 581582 + 209F at C582 right branch
2596          HC       2
              *

2597          KK    209G
2598          KM   Sub-Basin   209G
2599          KM
2600          KM      The Clark Unit Hydrograph is used for this basin.
2601          KM          The Urban time-area relation is used for this basin.
2602          KM
2603          KM      Time of Concentration for this sub-basin is based on the following:
2604          KM          6-Hour Rainfall, Pattern No.  1.00
2605          KM          An rainfall areal reduction factor of 0.997
2606          KM
2607          KM       EXCESS RAINFALL VALUES EXCEEDED IN 5-MINUTE INTERVALS
2608          KM     5  10  15  20  25  30  35  40  45  50  55  60  65  70  75  80  85  90
2609          KM   .30 .30 .30 .09 .07 .06 .03 .03 .03 .03 .03 .03 .01 .01 .01 .01 .01 .01
2610          KM
```



```
LINE          ID.......1.......2.......3.......4.......5.......6.......7.......8.......9......10

2611          KM          L=   1.050 miles, S=  306 feet/mile, Kb= .03
2612          KM
2613          BA   0.204
2614          LG    0.09    0.25    4.35    0.35   49.93
2615          UC   0.196   0.156
2616          UA       0       5      16      30      65      77      84      90      94      97
2617          UA     100
              *
```

```
2618          KK    C582
2619          KM      Hydrograph combine C582R + 209G at C582
2620          HC       2
              *

2621          KK  582583
2622          KM      Normal depth channel route from C582 to C583
2623          KM      Source:  100 Scale 4' CI Mapping.
2624          RS       2    FLOW     -1
2625          RC   0.060   0.050   0.060  1725.0  0.0232
2626          RX   960.0  1020.0  1035.0  1040.0  1050.0  1055.0  1065.0  1073.0
2627          RY  2024.0  2018.0  2016.0  2015.5  2015.5  2016.0  2020.0  2024.0
              *

2628          KK    209H
2629          KM   Sub-Basin   209H
2630          KM
2631          KM      The Clark Unit Hydrograph is used for this basin.
2632          KM          The Urban time-area relation is used for this basin.
2633          KM
2634          KM      Time of Concentration for this sub-basin is based on the following:
2635          KM          6-Hour Rainfall, Pattern No.  1.00
2636          KM          An rainfall areal reduction factor of 0.999
2637          KM
2638          KM       EXCESS RAINFALL VALUES EXCEEDED IN 5-MINUTE INTERVALS
2639          KM     5  10  15  20  25  30  35  40  45  50  55  60  65  70  75  80  85  90
2640          KM   .29 .29 .28 .08 .05 .03 .02 .02 .02 .02 .02 .01 .00 .00 .00 .00 .00 .00
2641          KM
2642          KM          L=   0.542 miles, S=  343 feet/mile, Kb= .07
2643          KM
2644          BA   0.083
2645          LG    0.15    0.31    5.60    0.22   26.57
2646          UC   0.217   0.171
2647          UA       0       5      16      30      65      77      84      90      94      97
2648          UA     100
              *

2649          KK    C583
2650          KM      Hydrograph combine 582583 + 209H at C583
2651          HC       2
              *
```



```
LINE          ID.......1.......2.......3.......4.......5.......6.......7.......8.......9......10

2652          KK  583584
2653          KM      Normal depth channel route from C583 to C584
2654          KM      Source:  HEC-2 Cross Section: CL 1.664
2655          RS       4    FLOW     -1
2656          RC   0.055   0.070   0.055  3107.0  0.0356
2657          RX  9859.8  9910.3  9933.5  9995.6 10021.7 10051.0 10083.0 10127.8
2658          RY  1948.3  1944.2  1943.7  1930.9  1932.4  1941.6  1937.3  1945.2
              *

2659          KK    209I
2660          KM   Sub-Basin   209I
2661          KM
2662          KM      The Clark Unit Hydrograph is used for this basin.
2663          KM          The Urban time-area relation is used for this basin.
2664          KM
2665          KM      Time of Concentration for this sub-basin is based on the following:
2666          KM          6-Hour Rainfall, Pattern No.  1.00
2667          KM          An rainfall areal reduction factor of 0.998
2668          KM
2669          KM       EXCESS RAINFALL VALUES EXCEEDED IN 5-MINUTE INTERVALS
2670          KM     5  10  15  20  25  30  35  40  45  50  55  60  65  70  75  80  85  90
2671          KM   .30 .29 .29 .08 .06 .05 .02 .02 .02 .01 .01 .01 .00 .00 .00 .00 .00 .00
2672          KM
2673          KM          L=   0.691 miles, S=  347 feet/mile, Kb= .04
2674          KM
2675          BA   0.182
2676          LG    0.10    0.27    6.00    0.17   17.98
2677          UC   0.179   0.108
2678          UA       0       5      16      30      65      77      84      90      94      97
2679          UA     100
              *

2680          KK   C584I
2681          KM      Hydrograph combine 583584 + 209I at C584I
2682          HC       2
              *
              * *
              * * C584I is the total flow in Cloudburst Wash upstream of Dam 7
              * *
              *

2683          KK   C584O
2684          KM      Reservoir route at C584 (Dam 7).
2685          RS       1    ELEV  1884.8
2686          SV    0.00   14.55   37.17   57.52   86.65   94.00   97.00  101.00  104.90  109.00
2687          SV  113.00  118.00  122.00  126.25  131.00  133.00  136.00  139.00
2688          SE  1884.8  1908.0  1916.0  1920.0  1924.0  1924.8  1925.2  1925.6  1926.0  1926.4
2689          SE  1926.8  1927.2  1927.6  1928.0  1928.4  1928.6  1928.8  1929.0
2690          SQ       0     135     223     285     326     341     355     358     385     493
2691          SQ     704    1007    1394    1852    2374    2956    3596    3937    4292    4661
2692          SE  1884.8  1892.0  1900.0  1908.0  1916.0  1920.0  1924.0  1924.8  1925.2  1925.6
2693          SE  1926.0  1926.4  1926.8  1927.2  1927.6  1928.0  1928.4  1928.6  1928.8  1929.0
2694          RL                    0.15
              *
```

```
                 * *
                 * * End Basin 209.  Rejoin Basin 210
                 * *
                 *
                                          HEC-1 INPUT                                                    PAGE 63
LINE             ID.......1.......2.......3.......4.......5.......6.......7.......8.......9......10

2695             KK  584597
2696             KM      Normal depth channel route from C584 to C597
2697             KM      Source:  HEC-2 Cross Section: CL 1.032
2698             RS      10    FLOW      -1
2699             RC   0.065   0.050   0.065  3704.0  0.0261
2700             RX  9902.1  9923.0  9938.7  9984.6 10049.3 10056.0 10091.7 10120.0
2701             RY  1839.1  1830.1  1826.6  1824.1  1824.9  1826.7  1828.5  1838.8
                 *

2702             KK    210L
2703             KM   Sub-Basin   210L
2704             KM
2705             KM      The Clark Unit Hydrograph is used for this basin.
2706             KM          The Urban time-area relation is used for this basin.
2707             KM
2708             KM      Time of Concentration for this sub-basin is based on the following:
2709             KM          6-Hour Rainfall, Pattern No.  1.00
2710             KM          An rainfall areal reduction factor of 0.998
2711             KM
2712             KM       EXCESS RAINFALL VALUES EXCEEDED IN 5-MINUTE INTERVALS
2713             KM     5  10  15  20  25  30  35  40  45  50  55  60  65  70  75  80  85  90
2714             KM   .29 .29 .28 .08 .05 .04 .02 .02 .01 .01 .01 .01 .00 .00 .00 .00 .00 .00
2715             KM
2716             KM          L=   0.820 miles, S=  251 feet/mile, Kb= .03
2717             KM
2718             BA   0.137
2719             LG    0.09    0.25    5.20    0.23   15.90
2720             UC   0.188   0.153
2721             UA      0       5      16      30      65      77      84      90      94      97
2722             UA    100
                 *

2723             KK    C597
2724             KM      Hydrograph combine 584597 + 210L at C597
2725             HC       2
                 *

2726             KK  597598
2727             KM      Normal depth channel route from C597 to C598
2728             KM      Source:  HEC-2 Cross Section: CL 0.328
2729             RS       6    FLOW      -1
2730             RC   0.065   0.050   0.065  2822.0  0.0252
2731             RX  9961.0  9961.9  9969.1  9986.3 10018.5 10082.6 10155.2 10278.8
2732             RY  1740.2  1740.2  1738.1  1731.6  1732.3  1737.1  1740.0  1740.8
                 *

2733             KK    210M
2734             KM   Sub-Basin   210M
2735             KM
2736             KM      The Clark Unit Hydrograph is used for this basin.
2737             KM          The Urban time-area relation is used for this basin.
2738             KM
2739             KM      Time of Concentration for this sub-basin is based on the following:
2740             KM          6-Hour Rainfall, Pattern No.  1.00
1                                         HEC-1 INPUT                                                    PAGE 64

LINE             ID.......1.......2.......3.......4.......5.......6.......7.......8.......9......10

2741             KM          An rainfall areal reduction factor of 0.998
2742             KM
2743             KM       EXCESS RAINFALL VALUES EXCEEDED IN 5-MINUTE INTERVALS
2744             KM     5  10  15  20  25  30  35  40  45  50  55  60  65  70  75  80  85  90
2745             KM   .30 .29 .29 .09 .06 .06 .02 .02 .02 .01 .01 .01 .00 .00 .00 .00 .00 .00
2746             KM
2747             KM          L=   1.022 miles, S=  232 feet/mile, Kb= .03
2748             KM
2749             BA   0.162
2750             LG    0.09    0.25    5.80    0.17   15.02
2751             UC   0.213   0.190
2752             UA      0       5      16      30      65      77      84      90      94      97
2753             UA    100
                 *

2754             KK    C598
2755             KM      Hydrograph combine 597598 + 210M at C598
2756             HC       2
                 *
                 * *
                 * * C598 is the total flow in Cloudburst Wash at Golden Eagle Blvd.
                 * * upstream of DAM 4
                 * *
                 *

2757             KK    210N
2758             KM   Sub-Basin   210N
2759             KM
2760             KM      The Clark Unit Hydrograph is used for this basin.
2761             KM          The Urban time-area relation is used for this basin.
2762             KM
2763             KM      Time of Concentration for this sub-basin is based on the following:
2764             KM          6-Hour Rainfall, Pattern No.  1.00
2765             KM          An rainfall areal reduction factor of 0.999
```

```
2766          KM
2767          KM       EXCESS RAINFALL VALUES EXCEEDED IN 5-MINUTE INTERVALS
2768          KM     5  10  15  20  25  30  35  40  45  50  55  60  65  70  75  80  85  90
2769          KM   .28 .27 .27 .06 .03 .02 .01 .01 .01 .01 .01 .01 .00 .00 .00 .00 .00 .00
2770          KM
2771          KM          L=   0.309 miles, S=  178 feet/mile, Kb= .03
2772          KM
2773          BA   0.049
2774          LG    0.09     0.25     4.10     0.40    16.38
2775          UC   0.129    0.084
2776          UA       0        5       16       30       65       77       84       90       94       97
2777          UA     100
              *

2778          KK   C599I
2779          KM      Hydrograph combine C585 + C596 + C598 + 210N at C599I
2780          HC       4
              *
              * *
              * * C599I is the total flow in Ashbrook Wash upstream of DAM 4
              * *
              *
```



```
LINE          ID.......1.......2.......3.......4.......5.......6.......7.......8.......9......10

2781          KK   C599O
2782          KM      Reservoir route at C599 (Dam 4).
2783          RS       1    ELEV  1694.7
2784          SV    0.00   16.85   31.66   52.71   80.85   95.00   98.00  102.00  105.00  109.00
2785          SV  113.00  116.14  120.00  124.00  128.00  136.00  139.00  144.00  148.00  152.00
2786          SE  1694.7  1708.0  1710.0  1712.0  1714.0  1714.8  1715.0  1715.2  1715.4  1715.6
2787          SE  1715.8  1716.0  1716.2  1716.4  1716.6  1717.0  1717.2  1717.4  1717.6  1717.8
2788          SQ       0      38     214     312     384     443     497     543     587     628
2789          SQ     642     754     957    1262    1665    2182    2483    2811    3164    3540
2790          SE  1694.7  1696.0  1700.0  1702.0  1704.0  1706.0  1708.0  1710.0  1712.0  1714.0
2791          SE  1714.8  1715.4  1715.8  1716.2  1716.6  1717.0  1717.2  1717.4  1717.6  1717.8
2792          RL                    0.97
              *
              * * End Basin 210.  Start Basin 211
              * *
              *

2793          KK  599608
2794          KM      Normal depth channel route from C599 to C608
2795          KM      Source:  HEC-2 Cross Section: AS 3.621
2796          RS       4    FLOW      -1
2797          RC   0.055   0.045   0.025  1476.0  0.0148
2798          RX  9675.4  9726.8  9929.0  9990.7 10005.9 10033.3 10061.9 10082.2
2799          RY  1691.3  1687.2  1685.5  1678.6  1678.1  1682.1  1689.8  1691.8
              *

2800          KK    211K
2801          KM   Sub-Basin   211K
2802          KM
2803          KM      The Clark Unit Hydrograph is used for this basin.
2804          KM          The Urban time-area relation is used for this basin.
2805          KM
2806          KM      Time of Concentration for this sub-basin is based on the following:
2807          KM          6-Hour Rainfall, Pattern No.  1.00
2808          KM          An rainfall areal reduction factor of 0.999
2809          KM
2810          KM       EXCESS RAINFALL VALUES EXCEEDED IN 5-MINUTE INTERVALS
2811          KM     5  10  15  20  25  30  35  40  45  50  55  60  65  70  75  80  85  90
2812          KM   .30 .30 .30 .09 .07 .06 .03 .03 .02 .02 .02 .02 .00 .00 .00 .00 .00 .00
2813          KM
2814          KM          L=   0.376 miles, S=  157 feet/mile, Kb= .03
2815          KM
2816          BA   0.102
2817          LG    0.13     0.27     6.00     0.16    31.48
2818          UC   0.146    0.073
2819          UA       0        5       16       30       65       77       84       90       94       97
2820          UA     100
              *
```



```
LINE          ID.......1.......2.......3.......4.......5.......6.......7.......8.......9......10

2821          KK   C608L
2822          KM      Hydrograph combine 599608 + 211K at C608 left branch
2823          HC       2
              *

2824          KK    211G
2825          KM   Sub-Basin   211G
2826          KM
2827          KM      The Clark Unit Hydrograph is used for this basin.
2828          KM          The Urban time-area relation is used for this basin.
2829          KM
2830          KM      Time of Concentration for this sub-basin is based on the following:
2831          KM          6-Hour Rainfall, Pattern No.  1.00
2832          KM          An rainfall areal reduction factor of 1.000
2833          KM
2834          KM       EXCESS RAINFALL VALUES EXCEEDED IN 5-MINUTE INTERVALS
2835          KM     5  10  15  20  25  30  35  40  45  50  55  60  65  70  75  80  85  90
2836          KM   .33 .33 .33 .13 .11 .10 .05 .05 .05 .05 .05 .05 .01 .01 .01 .01 .01 .01
2837          KM
2838          KM          L=   0.448 miles, S=  190 feet/mile, Kb= .04
2839          KM
```

```
2840          BA   0.008
2841          LG    0.06    0.25    5.70    0.18   90.00
2842          UC   0.167   0.430
2843          UA       0       5      16      30      65      77      84      90      94      97
2844          UA     100
              *

2845          KK  604606
2846          KM      Normal depth channel route from C604 to C606
2847          KM      Source:  200 Scale Mapping
2848          RS      11    FLOW      -1
2849          RC   0.040   0.018   0.040  2784.0  0.0647
2850          RX  1000.0  1040.0  1060.0  1076.0  1092.0  1093.2  1098.2  1113.2
2851          RY  1814.0  1811.0  1810.8  1811.1  1810.8  1811.2  1812.0  1816.0
              *

2852          KK    211I
2853          KM   Sub-Basin   211I
2854          KM
2855          KM      The Clark Unit Hydrograph is used for this basin.
2856          KM          The Urban time-area relation is used for this basin.
2857          KM
2858          KM      Time of Concentration for this sub-basin is based on the following:
2859          KM          6-Hour Rainfall, Pattern No.  1.00
2860          KM          An rainfall areal reduction factor of 0.999
2861          KM
2862          KM       EXCESS RAINFALL VALUES EXCEEDED IN 5-MINUTE INTERVALS
2863          KM     5  10  15  20  25  30  35  40  45  50  55  60  65  70  75  80  85  90
2864          KM   .31 .31 .31 .10 .08 .07 .03 .03 .03 .03 .03 .03 .01 .01 .01 .01 .01 .01
2865          KM
2866          KM          L=   0.626 miles, S=  257 feet/mile, Kb= .03
2867          KM
2868          BA   0.041
```



```
LINE          ID.......1.......2.......3.......4.......5.......6.......7.......8.......9......10

2869          LG    0.08    0.25    5.70    0.18   45.00
2870          UC   0.158   0.204
2871          UA       0       5      16      30      65      77      84      90      94      97
2872          UA     100
              *

2873          KK   C606R
2874          KM      Hydrograph combine 604606 + 211I at C606 right branch
2875          HC       2
              *

2876          KK    211H
2877          KM   Sub-Basin   211H
2878          KM
2879          KM      The Clark Unit Hydrograph is used for this basin.
2880          KM          The Urban time-area relation is used for this basin.
2881          KM
2882          KM      Time of Concentration for this sub-basin is based on the following:
2883          KM          6-Hour Rainfall, Pattern No.  1.00
2884          KM          An rainfall areal reduction factor of 0.999
2885          KM
2886          KM       EXCESS RAINFALL VALUES EXCEEDED IN 5-MINUTE INTERVALS
2887          KM     5  10  15  20  25  30  35  40  45  50  55  60  65  70  75  80  85  90
2888          KM   .30 .30 .29 .09 .07 .06 .03 .02 .02 .01 .01 .01 .00 .00 .00 .00 .00 .00
2889          KM
2890          KM          L=   0.501 miles, S=  289 feet/mile, Kb= .03
2891          KM
2892          BA   0.073
2893          LG    0.09    0.25    6.00    0.16   17.93
2894          UC   0.138   0.104
2895          UA       0       5      16      30      65      77      84      90      94      97
2896          UA     100
              *

2897          KK   C605O
2898          KM      Reservoir route at C605.
2899          RS       1    ELEV  1722.5
2900          SV    0.00    0.20    0.20    0.20    0.20    0.30    0.30    0.30    0.40    0.60
2901          SV    0.70    0.90    1.00    1.20    1.40    1.60    1.90    2.80    3.40    4.10
2902          SE  1722.5  1726.8  1727.0  1727.2  1727.4  1727.6  1727.8  1728.0  1728.2  1728.4
2903          SE  1728.6  1728.8  1729.0  1729.2  1729.4  1729.6  1730.0  1730.4  1730.7  1731.0
2904          SQ       0       0       5      10      20      43      63      73      78      85
2905          SQ      91      96     101     105     109     113     122     130     136     200
              *

2906          KK    C606
2907          KM      Hydrograph combine C606R + C605O at C606
2908          HC       2
              *
```



```
LINE          ID.......1.......2.......3.......4.......5.......6.......7.......8.......9......10

2909          KK  606607
2910          KM      Normal depth channel route from C606 to C607
2911          KM      Source:  200 Scale Mapping
2912          RS       2    FLOW      -1
2913          RC   0.020   0.055   0.035  1061.0  0.0286
2914          RX  1000.0  1032.0  1082.0  1095.0  1105.0  1117.0  1123.0  1153.0
2915          RY  1704.3  1704.0  1703.5  1700.0  1700.0  1703.0  1704.0  1706.0
              *

2916          KK    211J
```

```
2917          KM   Sub-Basin   211J
2918          KM
2919          KM      The Clark Unit Hydrograph is used for this basin.
2920          KM          The Urban time-area relation is used for this basin.
2921          KM
2922          KM      Time of Concentration for this sub-basin is based on the following:
2923          KM          6-Hour Rainfall, Pattern No.  1.00
2924          KM          An rainfall areal reduction factor of 1.000
2925          KM
2926          KM        EXCESS RAINFALL VALUES EXCEEDED IN 5-MINUTE INTERVALS
2927          KM      5  10  15  20  25  30  35  40  45  50  55  60  65  70  75  80  85  90
2928          KM    .31 .31 .31 .10 .08 .07 .03 .03 .03 .02 .02 .02 .01 .01 .01 .01 .01 .01
2929          KM
2930          KM          L=   0.249 miles, S=  166 feet/mile, Kb= .03
2931          KM
2932          BA   0.015
2933          LG    0.08    0.23    6.20    0.16   39.19
2934          UC   0.113   0.119
2935          UA       0       5      16      30      65      77      84      90      94      97
2936          UA     100
              *

2937          KK    C607
2938          KM      Hydrograph combine 606607 + 211J at C607
2939          HC       2
              *

2940          KK  607608
2941          KM      Normal depth channel route from C607 to C608
2942          KM      Source:  200 Scale Mapping
2943          RS       2    FLOW      -1
2944          RC   0.040   0.050   0.035  1008.0  0.0145
2945          RX  1000.0  1060.0  1070.0  1082.0  1083.0  1095.0  1115.0  1133.0
2946          RY  1688.0  1686.0  1684.0  1681.0  1681.0  1684.0  1685.0  1685.4
              *

2947          KK    C608
2948          KM      Hydrograph combine C608L + 607608 at C608
2949          HC       2
              *
```



```
LINE          ID.......1.......2.......3.......4.......5.......6.......7.......8.......9......10

2950          KK  608613
2951          KM      Normal depth channel route from C608 to C613
2952          KM      Source:  HEC-2 Cross Section: AS 3.421
2953          RS       3    FLOW      -1
2954          RC   0.100   0.045   0.100  1338.0  0.0202
2955          RX  9885.0  9887.9  9957.3  9986.7 10012.9 10054.7 10086.3 10122.2
2956          RY  1670.2  1670.1  1668.0  1660.0  1659.9  1661.6  1669.9  1670.8
              *
              * *
              * * Move to the top of Sunflower Wash
              * *
              *

2957          KK    211M
2958          KM   Sub-Basin   211M
2959          KM
2960          KM      The Clark Unit Hydrograph is used for this basin.
2961          KM          The Urban time-area relation is used for this basin.
2962          KM
2963          KM      Time of Concentration for this sub-basin is based on the following:
2964          KM          6-Hour Rainfall, Pattern No.  1.00
2965          KM          An rainfall areal reduction factor of 0.999
2966          KM
2967          KM        EXCESS RAINFALL VALUES EXCEEDED IN 5-MINUTE INTERVALS
2968          KM      5  10  15  20  25  30  35  40  45  50  55  60  65  70  75  80  85  90
2969          KM    .31 .31 .31 .10 .08 .08 .04 .04 .03 .03 .03 .03 .01 .01 .01 .01 .01 .01
2970          KM
2971          KM          L=   0.541 miles, S=  266 feet/mile, Kb= .03
2972          KM
2973          BA   0.081
2974          LG    0.07    0.25    5.70    0.18   50.05
2975          UC   0.146   0.112
2976          UA       0       5      16      30      65      77      84      90      94      97
2977          UA     100
              *

2978          KK  610611
2979          KM      Normal depth channel route from C610 to 1611
2980          KM      Source:  HEC-2 Cross Section: SU 0.216
2981          RS       1    FLOW      -1
2982          RC   0.050   0.045   0.050  1090.0  0.0211
2983          RX  9911.9  9948.1  9973.6  9988.6 10007.1 10027.0 10049.8 10143.7
2984          RY  1699.3  1691.7  1686.3  1680.1  1679.7  1686.6  1687.3  1698.6
              *

2985          KK    211N
2986          KM   Sub-Basin   211N
2987          KM
2988          KM      The Clark Unit Hydrograph is used for this basin.
2989          KM          The Urban time-area relation is used for this basin.
2990          KM
2991          KM      Time of Concentration for this sub-basin is based on the following:
2992          KM          6-Hour Rainfall, Pattern No.  1.00
2993          KM          An rainfall areal reduction factor of 1.000
```

```
LINE          ID.......1.......2.......3.......4.......5.......6.......7.......8.......9......10

2994          KM
2995          KM       EXCESS RAINFALL VALUES EXCEEDED IN 5-MINUTE INTERVALS
2996          KM     5  10  15  20  25  30  35  40  45  50  55  60  65  70  75  80  85  90
2997          KM   .32 .31 .31 .11 .09 .08 .04 .04 .04 .03 .03 .03 .01 .01 .01 .01 .01 .01
2998          KM
2999          KM          L=   0.261 miles, S=  235 feet/mile, Kb= .03
3000          KM
3001          BA   0.020
3002          LG    0.07    0.25    5.70    0.18   56.58
3003          UC   0.104   0.094
3004          UA       0       5      16      30      65      77      84      90      94      97
3005          UA     100
              *

3006          KK   C611R
3007          KM      Hydrograph combine 610611 + 211N at C611 right branch
3008          HC       2
              *

3009          KK    211O
3010          KM   Sub-Basin   211O
3011          KM
3012          KM      The Clark Unit Hydrograph is used for this basin.
3013          KM          The Urban time-area relation is used for this basin.
3014          KM
3015          KM      Time of Concentration for this sub-basin is based on the following:
3016          KM          6-Hour Rainfall, Pattern No.  1.00
3017          KM          An rainfall areal reduction factor of 0.999
3018          KM
3019          KM       EXCESS RAINFALL VALUES EXCEEDED IN 5-MINUTE INTERVALS
3020          KM     5  10  15  20  25  30  35  40  45  50  55  60  65  70  75  80  85  90
3021          KM   .31 .31 .31 .10 .08 .07 .03 .03 .03 .03 .03 .03 .01 .01 .01 .01 .01 .01
3022          KM
3023          KM          L=   0.371 miles, S=  257 feet/mile, Kb= .03
3024          KM
3025          BA   0.041
3026          LG    0.08    0.25    5.70    0.18   45.31
3027          UC   0.121   0.099
3028          UA       0       5      16      30      65      77      84      90      94      97
3029          UA     100
              *

3030          KK   C609O
3031          KM      Reservoir route at C609.
3032          RS       1    ELEV  1694.0
3033          SV    0.00    0.10    0.21    0.50    0.86    1.40    1.93    2.60    3.10    3.20
3034          SV    3.39    3.60    3.80    4.00    4.10    4.30    4.50    4.70    4.90    5.10
3035          SE  1694.0  1695.0  1696.0  1697.0  1698.0  1699.0  1700.0  1701.0  1701.6  1701.8
3036          SE  1702.0  1702.2  1702.4  1702.6  1702.8  1703.0  1703.2  1703.4  1703.6  1703.8
3037          SQ       0       6      16      33      48      59      68      75      79      85
3038          SQ     108     149     209     289     390     512     658     829    1025    1247
              *
```



```
LINE          ID.......1.......2.......3.......4.......5.......6.......7.......8.......9......10

3039          KK  609611
3040          KM      Normal depth channel route from C609 to C611
3041          KM      Source:  200 Scale Mapping
3042          RS       1    FLOW      -1
3043          RC   0.035   0.050   0.035   470.0  0.0200
3044          RX  1000.0  1025.0  1050.0  1054.0  1064.0  1068.0  1088.0  1103.0
3045          RY  1690.0  1688.0  1684.0  1682.0  1682.0  1684.0  1688.0  1690.0
              *

3046          KK   C611I
3047          KM      Hydrograph combine 609611 + C611R at C611I
3048          HC       2
              *

3049          KK   C611O
3050          KM      Reservoir route at C611.
3051          RS       1    ELEV  1668.4
3052          SV    0.00    0.41    1.10    2.49    4.34    6.64    6.72    6.81    6.89    6.97
3053          SV    7.06    7.14    7.22    7.31    7.39    7.47    7.56    7.64    7.72    7.81
3054          SE  1674.0  1676.0  1678.0  1680.0  1682.0  1684.0  1684.2  1684.4  1684.6  1684.8
3055          SE  1685.0  1685.2  1685.4  1685.6  1685.8  1686.0  1686.2  1686.4  1686.6  1686.8
3056          SQ       0       0      86     117     141     162     164     170     181     199
3057          SQ     225     262     313     378     460     558     673     807     958    1118
              *

3058          KK   D611L
3059          KM      Hydrograph diversion at C611.  Main flow continues in the left branch.
3060          KM      Diverted flow is in the right branch.
3061          DT   D611R
3062          DI       0       0      86     117     141     162     164     170     181     199
3063          DI     225     262     313     378     460     558     673     807     958    1118
3064          DQ       0       0      86     117     141     162     164     165     167     169
3065          DQ     171     173     175     176     178     180     182     183     185     187
              *

3066          KK  611612
3067          KM      Normal depth channel route from C611 to C612
3068          KM      Source:  200 Scale Mapping
3069          RS       1    FLOW      -1
3070          RC   0.040   0.018   0.040   925.0  0.0270
3071          RX  1000.0  1020.0  1023.0  1041.0  1059.0  1060.2  1071.2  1136.2
3072          RY  1666.0  1664.0  1663.5  1663.9  1663.5  1663.9  1664.0  1666.0
```

```
                *
3073            KK    211P
3074            KM   Sub-Basin   211P
3075            KM
3076            KM      The Clark Unit Hydrograph is used for this basin.
3077            KM          The Urban time-area relation is used for this basin.
3078            KM
3079            KM      Time of Concentration for this sub-basin is based on the following:
3080            KM          6-Hour Rainfall, Pattern No.  1.00
3081            KM          An rainfall areal reduction factor of 1.000
3082            KM
```



```
LINE            ID.......1.......2.......3.......4.......5.......6.......7.......8.......9......10

3083            KM       EXCESS RAINFALL VALUES EXCEEDED IN 5-MINUTE INTERVALS
3084            KM     5  10  15  20  25  30  35  40  45  50  55  60  65  70  75  80  85  90
3085            KM   .32 .32 .32 .11 .09 .09 .04 .04 .04 .04 .03 .03 .01 .01 .01 .01 .01 .01
3086            KM
3087            KM          L=   0.307 miles, S=  192 feet/mile, Kb= .03
3088            KM
3089            BA   0.033
3090            LG    0.08     0.15     7.00     0.11    45.00
3091            UC   0.121    0.096
3092            UA       0        5       16       30       65       77       84       90       94       97
3093            UA     100
                *

3094            KK    C612
3095            KM      Hydrograph combine 611612 + 211P at C612
3096            HC       2
                *
                * *
                * * NOTE: 612613 is too short to route
                * *
                *

3097            KK    C613
3098            KM      Hydrograph combine 608613 + C612 at C613
3099            HC       2
                *

3100            KK  613621
3101            KM      Normal depth channel route from C613 to C621
3102            KM      Source:  HEC-2 Cross Section: AS 3.241
3103            RS       1     FLOW      -1
3104            RC   0.100    0.045    0.100    718.0   0.0251
3105            RX  9695.4  9884.0  9985.0  9991.1 10033.8 10062.8 10097.5 10165.1
3106            RY  1655.5  1647.5  1645.8  1641.1  1640.6  1642.1  1648.7  1654.3
                *

3107            KK    211L
3108            KM   Sub-Basin   211L
3109            KM
3110            KM      The Clark Unit Hydrograph is used for this basin.
3111            KM          The Urban time-area relation is used for this basin.
3112            KM
3113            KM      Time of Concentration for this sub-basin is based on the following:
3114            KM          6-Hour Rainfall, Pattern No.  1.00
3115            KM          An rainfall areal reduction factor of 0.999
3116            KM
3117            KM       EXCESS RAINFALL VALUES EXCEEDED IN 5-MINUTE INTERVALS
3118            KM     5  10  15  20  25  30  35  40  45  50  55  60  65  70  75  80  85  90
3119            KM   .30 .29 .29 .08 .06 .05 .02 .02 .02 .02 .02 .02 .01 .01 .01 .01 .01 .01
3120            KM
3121            KM          L=   0.508 miles, S=  181 feet/mile, Kb= .03
3122            KM
3123            BA   0.096
3124            LG    0.11     0.26     4.35     0.36    42.40
3125            UC   0.163    0.109
```



```
LINE            ID.......1.......2.......3.......4.......5.......6.......7.......8.......9......10

3126            UA       0        5       16       30       65       77       84       90       94       97
3127            UA     100
                *

3128            KK   C621L
3129            KM      Hydrograph combine 613621 + 211L at C621 left branch
3130            HC       2
                *
                * *
                * * Move to the top of Arrow Wash
                * *
                *

3131            KK    211Q
3132            KM   Sub-Basin   211Q
3133            KM
3134            KM      The Clark Unit Hydrograph is used for this basin.
3135            KM          The Urban time-area relation is used for this basin.
3136            KM
3137            KM      Time of Concentration for this sub-basin is based on the following:
3138            KM          6-Hour Rainfall, Pattern No.  1.00
3139            KM          An rainfall areal reduction factor of 1.000
3140            KM
3141            KM       EXCESS RAINFALL VALUES EXCEEDED IN 5-MINUTE INTERVALS
3142            KM     5  10  15  20  25  30  35  40  45  50  55  60  65  70  75  80  85  90
3143            KM   .30 .30 .30 .09 .07 .06 .03 .03 .02 .02 .02 .02 .00 .00 .00 .00 .00 .00
```

```
3144          KM
3145          KM          L=   0.255 miles, S=  295 feet/mile, Kb= .03
3146          KM
3147          BA   0.021
3148          LG    0.08     0.25     5.70     0.18    30.04
3149          UC   0.096    0.083
3150          UA       0        5       16       30       65       77       84       90       94       97
3151          UA     100
              *

3152          KK  616617
3153          KM      Normal depth channel route from C616 to C617
3154          KM      Source:  200 Scale Mapping
3155          RS       2     FLOW      -1
3156          RC   0.070    0.060    0.070   1131.0   0.0553
3157          RX  1000.0   1008.0   1015.0   1045.0   1050.0   1080.0   1100.0   1110.0
3158          RY  1834.0   1832.0   1830.0   1826.0   1826.0   1830.0   1834.0   1836.0
              *

3159          KK    211R
3160          KM   Sub-Basin   211R
3161          KM
3162          KM      The Clark Unit Hydrograph is used for this basin.
3163          KM          The Urban time-area relation is used for this basin.
3164          KM
3165          KM      Time of Concentration for this sub-basin is based on the following:
3166          KM          6-Hour Rainfall, Pattern No.  1.00
3167          KM          An rainfall areal reduction factor of 0.999
3168          KM
```



```
LINE          ID.......1.......2.......3.......4.......5.......6.......7.......8.......9......10

3169          KM       EXCESS RAINFALL VALUES EXCEEDED IN 5-MINUTE INTERVALS
3170          KM     5  10  15  20  25  30  35  40  45  50  55  60  65  70  75  80  85  90
3171          KM   .31 .30 .30 .10 .08 .07 .03 .03 .03 .02 .02 .02 .01 .01 .01 .01 .01 .01
3172          KM
3173          KM          L=   0.572 miles, S=  271 feet/mile, Kb= .03
3174          KM
3175          BA   0.084
3176          LG    0.08     0.25     5.70     0.18    37.77
3177          UC   0.150    0.118
3178          UA       0        5       16       30       65       77       84       90       94       97
3179          UA     100
              *

3180          KK   C617L
3181          KM      Hydrograph combine 616617 + 211R at C617 left branch
3182          HC       2
              *

3183          KK    211U
3184          KM   Sub-Basin   211U
3185          KM
3186          KM      The Clark Unit Hydrograph is used for this basin.
3187          KM          The Urban time-area relation is used for this basin.
3188          KM
3189          KM      Time of Concentration for this sub-basin is based on the following:
3190          KM          6-Hour Rainfall, Pattern No.  1.00
3191          KM          An rainfall areal reduction factor of 1.000
3192          KM
3193          KM       EXCESS RAINFALL VALUES EXCEEDED IN 5-MINUTE INTERVALS
3194          KM     5  10  15  20  25  30  35  40  45  50  55  60  65  70  75  80  85  90
3195          KM   .32 .32 .32 .11 .09 .09 .04 .04 .04 .04 .04 .04 .01 .01 .01 .01 .01 .01
3196          KM
3197          KM          L=   0.831 miles, S=  214 feet/mile, Kb= .03
3198          KM
3199          BA   0.027
3200          LG    0.07     0.25     5.70     0.18    65.99
3201          UC   0.192    0.396
3202          UA       0        5       16       30       65       77       84       90       94       97
3203          UA     100
              *

3204          KK   D614L
3205          KM      Hydrograph diversion at C614.  Main flow continues in the left branch.
3206          KM      Diverted flow is in the right branch.
3207          DT   D614R
3208          DI       0      4.3      8.5     20.0     49.0     85.5
3209          DQ       0      2.5      5.0     13.5     35.0     60.0
              *

3210          KK    C617
3211          KM      Hydrograph combine C617L + D614L at C617
3212          HC       2
              *
```



```
LINE          ID.......1.......2.......3.......4.......5.......6.......7.......8.......9......10

3213          KK  617618
3214          KM      Normal depth channel route from C617 to C618
3215          KM      Source:  HEC-2 Cross Section: AR 0.836
3216          RS       4     FLOW      -1
3217          RC   0.070    0.060    0.070   1912.0   0.0345
3218          RX  9983.3   9987.2   9989.2   9991.1  10031.5  10053.5  10070.6  10097.7
3219          RY  1766.5   1762.3   1760.2   1758.1   1757.8   1760.8   1764.2   1770.6
              *

3220          KK    211S
```

```
3221        KM   Sub-Basin   211S
3222        KM
3223        KM      The Clark Unit Hydrograph is used for this basin.
3224        KM          The Urban time-area relation is used for this basin.
3225        KM
3226        KM      Time of Concentration for this sub-basin is based on the following:
3227        KM          6-Hour Rainfall, Pattern No.  1.00
3228        KM          An rainfall areal reduction factor of 0.999
3229        KM
3230        KM        EXCESS RAINFALL VALUES EXCEEDED IN 5-MINUTE INTERVALS
3231        KM     5  10  15  20  25  30  35  40  45  50  55  60  65  70  75  80  85  90
3232        KM   .30 .29 .29 .09 .06 .05 .02 .02 .02 .02 .02 .02 .00 .00 .00 .00 .00 .00
3233        KM
3234        KM          L=   0.445 miles, S=  272 feet/mile, Kb= .07
3235        KM
3236        BA   0.050
3237        LG    0.11    0.31    5.70    0.19   30.06
3238        UC   0.208   0.186
3239        UA       0       5      16      30      65      77      84      90      94      97
3240        UA     100
            *

3241        KK   C618I
3242        KM      Hydrograph combine 617618 + 211S at C618I
3243        HC       2
            *

3244        KK   C618O
3245        KM      Reservoir route at C618.
3246        RS       1    ELEV  1730.6
3247        SV    0.00    0.01    0.06    0.24    0.50    0.75    1.20    1.66    2.30    2.94
3248        SV    3.20    3.30    3.40    3.60    3.80    3.90    4.10    4.30    4.50    4.65
3249        SE  1730.6  1734.0  1736.0  1738.0  1739.0  1740.0  1741.0  1742.0  1743.0  1744.0
3250        SE  1744.3  1744.4  1744.6  1744.8  1745.0  1745.2  1745.4  1745.6  1745.8  1746.0
3251        SQ       0     2.2     2.6     3.0     3.1     3.2     3.3     3.5     3.6     3.7
3252        SQ     3.7     3.8       8      21      48      88     143     212     295     390
            *

3253        KK  BB614R
3254        KM      Retrieve previously diverted hydrograph at C614 in the right branch.
3255        DR   D614R
            *
```



```
LINE        ID.......1.......2.......3.......4.......5.......6.......7.......8.......9......10

3256        KK  614615
3257        KM      Normal depth channel route from C614 to C615
3258        KM      Source:  Hydrology Field Reconnaissance
3259        RS       3    FLOW      -1
3260        RC   0.040   0.018   0.040  1114.0  0.0397
3261        RX  1000.0  1020.0  1025.0  1059.0  1091.0  1093.0  1098.0  1103.0
3262        RY  1828.0  1822.0  1821.5  1822.2  1821.8  1822.0  1824.0  1826.0
            *

3263        KK    211V
3264        KM   Sub-Basin   211V
3265        KM
3266        KM      The Clark Unit Hydrograph is used for this basin.
3267        KM          The Urban time-area relation is used for this basin.
3268        KM
3269        KM      Time of Concentration for this sub-basin is based on the following:
3270        KM          6-Hour Rainfall, Pattern No.  1.00
3271        KM          An rainfall areal reduction factor of 1.000
3272        KM
3273        KM        EXCESS RAINFALL VALUES EXCEEDED IN 5-MINUTE INTERVALS
3274        KM     5  10  15  20  25  30  35  40  45  50  55  60  65  70  75  80  85  90
3275        KM   .33 .33 .33 .13 .11 .10 .05 .05 .05 .05 .05 .05 .01 .01 .01 .01 .01 .01
3276        KM
3277        KM          L=   0.222 miles, S=  212 feet/mile, Kb= .04
3278        KM
3279        BA   0.005
3280        LG    0.06    0.25    5.80    0.18   90.00
3281        UC   0.113   0.204
3282        UA       0       5      16      30      65      77      84      90      94      97
3283        UA     100
            *

3284        KK    C615
3285        KM      Hydrograph combine 614615 + 211V at C615
3286        HC       2    0.03
            *

3287        KK   D615L
3288        KM      Hydrograph diversion at C615.  Main flow continues in the left branch.
3289        KM      Diverted flow is in the right branch.
3290        DT   D615R
3291        DI       0     1.3     2.5     5.3     8.6    14.2    23.0    36.8    55.5    77.5
3292        DQ       0       0       0     1.3     2.6     4.2     7.0    12.8    19.5    29.5
            *

3293        KK  615618
3294        KM      Normal depth channel route from C615 to C618
3295        KM      Source:  Hydrology Field Reconnaissance
3296        RS       1    FLOW      -1
3297        RC   0.040   0.018   0.040   499.0  0.1338
3298        RX  1000.0  1008.0  1009.2  1013.2  1027.2  1028.4  1036.4  1045.4
3299        RY  1800.4  1799.6  1799.2  1798.8  1798.3  1798.7  1798.9  1800.4
            *
```

```
3446          LG    0.10    0.26    4.90    0.26   56.64
3447          UC   0.250   0.180
3448          UA       0       5      16      30      65      77      84      90      94      97
3449          UA     100
              *

3450          KK   C622R
3451          KM      Hydrograph combine 621622 + 211X at C622 right branch
3452          HC       2
              *
              * *
              * * Move to the top of Tulip Wash
              * *
              *

3453          KK    211A
3454          KM   Sub-Basin   211A
3455          KM
3456          KM      The Clark Unit Hydrograph is used for this basin.
3457          KM          The Urban time-area relation is used for this basin.
3458          KM
3459          KM      Time of Concentration for this sub-basin is based on the following:
3460          KM          6-Hour Rainfall, Pattern No.  1.00
3461          KM          An rainfall areal reduction factor of 0.998
3462          KM
3463          KM       EXCESS RAINFALL VALUES EXCEEDED IN 5-MINUTE INTERVALS
3464          KM     5  10  15  20  25  30  35  40  45  50  55  60  65  70  75  80  85  90
3465          KM   .30 .30 .29 .09 .07 .06 .03 .02 .02 .01 .01 .01 .00 .00 .00 .00 .00 .00
```



```
LINE          ID.......1.......2.......3.......4.......5.......6.......7.......8.......9......10

3466          KM
3467          KM          L=   0.820 miles, S=  248 feet/mile, Kb= .03
3468          KM
3469          BA   0.143
3470          LG    0.09    0.25    5.70    0.18   23.09
3471          UC   0.188   0.149
3472          UA       0       5      16      30      65      77      84      90      94      97
3473          UA     100
              *

3474          KK   C6000
3475          KM      Reservoir route at C600.
3476          RS       1    ELEV  1754.0
3477          SV    0.00    0.14    0.62    1.52    2.95    5.06    7.98   11.80   16.61   22.67
3478          SV   30.07   38.71   40.50   40.60   41.60   42.70   43.70   44.60   45.70
3479          SE  1754.0  1756.0  1758.0  1760.0  1762.0  1764.0  1766.0  1768.0  1770.0  1772.0
3480          SE  1774.0  1776.0 1776.36  1776.4  1776.6  1776.8  1777.0  1777.2  1777.4
3481          SQ       0      55     183     320     427     513     570     620     665     709
3482          SQ     750     789     795     795     812     849     906     984    1084
              *

3483          KK  600601
3484          KM      Normal depth channel route from C600 to C601
3485          KM      Source:  HEC-2 Cross Section: TU 1.538
3486          RS       3    FLOW      -1
3487          RC   0.040   0.025   0.040  2406.0  0.0176
3488          RX  9945.6  9959.4  9968.3  9985.9 10000.0 10017.2 10038.7 10058.8
3489          RY  1734.5  1732.3  1727.9  1726.2  1725.0  1727.7  1735.2  1736.0
              *

3490          KK    211B
3491          KM   Sub-Basin   211B
3492          KM
3493          KM      The Clark Unit Hydrograph is used for this basin.
3494          KM          The Urban time-area relation is used for this basin.
3495          KM
3496          KM      Time of Concentration for this sub-basin is based on the following:
3497          KM          6-Hour Rainfall, Pattern No.  1.00
3498          KM          An rainfall areal reduction factor of 0.999
3499          KM
3500          KM       EXCESS RAINFALL VALUES EXCEEDED IN 5-MINUTE INTERVALS
3501          KM     5  10  15  20  25  30  35  40  45  50  55  60  65  70  75  80  85  90
3502          KM   .30 .29 .29 .09 .06 .06 .02 .02 .02 .01 .01 .01 .00 .00 .00 .00 .00 .00
3503          KM
3504          KM          L=   0.618 miles, S=  244 feet/mile, Kb= .03
3505          KM
3506          BA   0.109
3507          LG    0.09    0.25    5.80    0.18   20.22
3508          UC   0.163   0.119
3509          UA       0       5      16      30      65      77      84      90      94      97
3510          UA     100
              *
```



```
LINE          ID.......1.......2.......3.......4.......5.......6.......7.......8.......9......10

3511          KK    C601
3512          KM      Hydrograph combine 600601 + 211B at C601
3513          HC       2
              *

3514          KK  601602
3515          KM      Normal depth channel route from C601 to C602
3516          KM      Source:  HEC-2 Cross Section: TU 1.102
3517          RS       3    FLOW      -1
3518          RC   0.065   0.040   0.055  1765.0  0.0146
3519          RX  9916.9  9959.1  9965.8  9980.2 10004.0 10019.5 10047.3 10094.1
3520          RY  1699.9  1699.8  1696.4  1689.8  1688.9  1695.7  1698.2  1698.4
```

```
                 *
3521             KK    211C
3522             KM   Sub-Basin   211C
3523             KM
3524             KM      The Clark Unit Hydrograph is used for this basin.
3525             KM          The Urban time-area relation is used for this basin.
3526             KM
3527             KM      Time of Concentration for this sub-basin is based on the following:
3528             KM          6-Hour Rainfall, Pattern No.  1.00
3529             KM          An rainfall areal reduction factor of 0.999
3530             KM
3531             KM        EXCESS RAINFALL VALUES EXCEEDED IN 5-MINUTE INTERVALS
3532             KM     5  10  15  20  25  30  35  40  45  50  55  60  65  70  75  80  85  90
3533             KM   .31 .31 .31 .10 .08 .07 .03 .03 .03 .03 .03 .03 .01 .01 .01 .01 .01 .01
3534             KM
3535             KM          L=   0.479 miles, S=  154 feet/mile, Kb= .03
3536             KM
3537             BA   0.043
3538             LG    0.08    0.25    5.70    0.18   44.48
3539             UC   0.163   0.165
3540             UA       0       5      16      30      65      77      84      90      94      97
3541             UA     100
                 *

3542             KK   C602L
3543             KM      Hydrograph combine 601602 + 211C at C602 left branch
3544             HC       2
                 *

3545             KK    211D
3546             KM   Sub-Basin   211D
3547             KM
3548             KM      The Clark Unit Hydrograph is used for this basin.
3549             KM          The Urban time-area relation is used for this basin.
3550             KM
3551             KM      Time of Concentration for this sub-basin is based on the following:
3552             KM          6-Hour Rainfall, Pattern No.  1.00
3553             KM          An rainfall areal reduction factor of 0.999
3554             KM
3555             KM        EXCESS RAINFALL VALUES EXCEEDED IN 5-MINUTE INTERVALS
3556             KM     5  10  15  20  25  30  35  40  45  50  55  60  65  70  75  80  85  90
```



```
LINE             ID.......1.......2.......3.......4.......5.......6.......7.......8.......9......10

3557             KM   .29 .28 .28 .07 .05 .04 .02 .02 .02 .02 .02 .02 .01 .01 .01 .01 .01 .01
3558             KM
3559             KM          L=   0.686 miles, S=  115 feet/mile, Kb= .03
3560             KM
3561             BA   0.071
3562             LG    0.08    0.25    3.85    0.46   37.42
3563             UC   0.221   0.232
3564             UA       0       5      16      30      65      77      84      90      94      97
3565             UA     100
                 *

3566             KK    C602
3567             KM      Hydrograph combine C602L + 211D at C602
3568             HC       2
                 *

3569             KK  602603
3570             KM      Normal depth channel route from C602 to C603
3571             KM      Source:  HEC-2 Cross Section: LE 0.672
3572             RS       4    FLOW      -1
3573             RC   0.060   0.045   0.060  2610.0  0.0211
3574             RX  9891.9  9963.9  9986.5 10000.0 10012.7 10023.8 10085.0 10176.4
3575             RY  1653.5  1653.5  1644.4  1644.1  1645.0  1649.8  1651.7  1656.7
                 *

3576             KK    211E
3577             KM   Sub-Basin   211E
3578             KM
3579             KM      The Clark Unit Hydrograph is used for this basin.
3580             KM          The Urban time-area relation is used for this basin.
3581             KM
3582             KM      Time of Concentration for this sub-basin is based on the following:
3583             KM          6-Hour Rainfall, Pattern No.  1.00
3584             KM          An rainfall areal reduction factor of 0.998
3585             KM
3586             KM        EXCESS RAINFALL VALUES EXCEEDED IN 5-MINUTE INTERVALS
3587             KM     5  10  15  20  25  30  35  40  45  50  55  60  65  70  75  80  85  90
3588             KM   .30 .30 .30 .09 .07 .06 .03 .03 .02 .02 .02 .02 .01 .01 .01 .01 .01 .01
3589             KM
3590             KM          L=   0.609 miles, S=  118 feet/mile, Kb= .03
3591             KM
3592             BA   0.156
3593             LG    0.08    0.25    5.10    0.24   42.21
3594             UC   0.200   0.120
3595             UA       0       5      16      30      65      77      84      90      94      97
3596             UA     100
                 *

3597             KK    C603
3598             KM      Hydrograph combine 602603 + 211E at C603
3599             HC       2
                 *
```



```
LINE             ID.......1.......2.......3.......4.......5.......6.......7.......8.......9......10
```

```
LINE          ID.......1.......2.......3.......4.......5.......6.......7.......8.......9......10

3300          KK    C618
3301          KM      Hydrograph combine C618O + 615618 at C618
3302          HC       2    0.19
              *

3303          KK  618619
3304          KM      Normal depth channel route from C618 to C619
3305          KM      Source:  HEC-2 Cross Section: AR 0.441
3306          RS       5    FLOW      -1
3307          RC   0.070   0.060   0.070  1837.0  0.0285
3308          RX  9870.6  9928.6  9957.1  9996.9 10004.9 10022.1 10062.0 10116.4
3309          RY  1709.2  1700.9  1698.8  1690.0  1689.8  1699.6  1700.3  1711.3
              *

3310          KK    211T
3311          KM   Sub-Basin   211T
3312          KM
3313          KM      The Clark Unit Hydrograph is used for this basin.
3314          KM          The Urban time-area relation is used for this basin.
3315          KM
3316          KM      Time of Concentration for this sub-basin is based on the following:
3317          KM          6-Hour Rainfall, Pattern No.  1.00
3318          KM          An rainfall areal reduction factor of 0.999
3319          KM
3320          KM       EXCESS RAINFALL VALUES EXCEEDED IN 5-MINUTE INTERVALS
3321          KM     5  10  15  20  25  30  35  40  45  50  55  60  65  70  75  80  85  90
3322          KM   .32 .32 .32 .11 .09 .09 .04 .04 .04 .04 .04 .04 .01 .01 .01 .01 .01 .01
3323          KM
3324          KM          L=   0.488 miles, S=  250 feet/mile, Kb= .03
3325          KM
3326          BA   0.066
3327          LG    0.07    0.25    5.70    0.18   64.25
3328          UC   0.138   0.108
3329          UA       0       5      16      30      65      77      84      90      94      97
3330          UA     100
              *

3331          KK   C619L
3332          KM      Hydrograph combine 618619 + 211T at C619 left branch
3333          HC       2
              *

3334          KK  BB615R
3335          KM      Retrieve previously diverted hydrograph at C615 in the right branch.
3336          DR   D615R
              *

3337          KK  615619
3338          KM      Normal depth channel route from C615 to C619
3339          KM      Source:  Hydrology Field Reconnaissance
3340          RS       8    FLOW      -1
3341          RC   0.045   0.024   0.025  2444.0  0.0493
3342          RX  1000.0  1009.3  1018.5  1037.0  1039.3  1053.0  1065.0  1065.0
3343          RY  1727.2  1726.5  1725.8  1724.4  1724.6  1725.8  1725.9  1725.9
              *
```



```
LINE          ID.......1.......2.......3.......4.......5.......6.......7.......8.......9......10

3344          KK   C619I
3345          KM      Hydrograph combine C619L + 615619 at C619I
3346          HC       2    0.25
              *

3347          KK   C619O
3348          KM      Reservoir route at C619.
3349          RS       1    ELEV  1675.6
3350          SV    0.00    1.72    2.98    4.70    7.00    7.08    7.17    7.26    7.34    7.43
3351          SV    7.51    7.60    7.69    7.77    7.86
3352          SE  1675.6  1686.0  1688.0  1690.0  1692.0  1692.2  1692.4  1692.6  1692.8  1693.0
3353          SE  1693.2  1693.4  1693.6  1693.8  1694.0
3354          SQ       0       4      25      72     128     155     163     172     178     187
3355          SQ     195     213     238     273     318     374     441     518     606     706
3356          SE  1675.6  1676.0  1678.0  1680.0  1682.0  1684.0  1686.0  1688.0  1690.0  1692.0
3357          SE  1692.2  1692.4  1692.6  1692.8  1693.0  1693.2  1693.4  1693.6  1693.8  1694.0
              *

3358          KK   D619R
3359          KM      Hydrograph diversion at C619.  Main flow continues in the right branch.
3360          KM      Diverted flow is in the left branch.
3361          DT   D619L
3362          DI       0       4      25      72     128     155     163     172     178     187
3363          DI     195     213     238     273     318     374     441     518     606     706
3364          DQ       0       0       0       0       0       0       0       0       0       0
3365          DQ       8      24      49      83     128     182     249     326     412     512
              *

3366          KK  619620
3367          KM                Lag route through Palisades Plaza storm drain
3368          RT       0               1
              *

3369          KK  BB619L
3370          KM      Retrieve previously diverted hydrograph at C619 in the left branch.
3371          DR   D619L
              *
```

```
3372          KK  619620
3373          KM   Normal depth channel route from C619 to C620 in Fountain Hills Blvd.
3374          KM   Source:  200 Scale Mapping. Similiar to 523548
3375          RS       1    FLOW      -1
3376          RC   0.040   0.024   0.040   800.0  0.0288
3377          RX   918.0   940.0   960.0  1000.0  1040.0  1040.1  1044.1  1088.1
3378          RY  1648.0  1645.8  1643.8  1644.7  1644.0  1644.5  1644.5  1648.0
              *

3379          KK    211W
3380          KM   Sub-Basin   211W
3381          KM
3382          KM      The Clark Unit Hydrograph is used for this basin.
3383          KM          The Urban time-area relation is used for this basin.
3384          KM
3385          KM      Time of Concentration for this sub-basin is based on the following:
1                                          HEC-1 INPUT                                          PAGE 79

LINE          ID.......1.......2.......3.......4.......5.......6.......7.......8.......9......10

3386          KM          6-Hour Rainfall, Pattern No.  1.00
3387          KM          An rainfall areal reduction factor of 1.000
3388          KM
3389          KM       EXCESS RAINFALL VALUES EXCEEDED IN 5-MINUTE INTERVALS
3390          KM     5  10  15  20  25  30  35  40  45  50  55  60  65  70  75  80  85  90
3391          KM   .32 .32 .32 .12 .10 .09 .05 .05 .04 .04 .04 .04 .01 .01 .01 .01 .01 .01
3392          KM
3393          KM          L=   0.289 miles, S=  173 feet/mile, Kb= .03
3394          KM
3395          BA   0.030
3396          LG    0.06    0.25    5.70    0.18   73.65
3397          UC   0.121   0.097
3398          UA       0       5      16      30      65      77      84      90      94      97
3399          UA     100
              *

3400          KK   C620R
3401          KM      Hydrograph combine 619620 + R619L + 211W at C620 right branch
3402          HC       3    0.28
              *

3403          KK  BB611R
3404          KM      Retrieve previously diverted hydrograph at C611 in the right branch.
3405          DR   D611R
              *

3406          KK  611620
3407          KM                 Lag route through Palisades Plaza storm drain
3408          RT       0               1
              *

3409          KK    C620
3410          KM      Hydrograph combine 611620 + C620R at C620
3411          HC       2    0.42
              *

3412          KK  620621
3413          KM      Normal depth channel route from C620 to C621
3414          KM      Source:  HEC-2 Cross Section: AR 0.081
3415          RS       1    FLOW      -1
3416          RC   0.050   0.050   0.050   915.0  0.0394
3417          RX  9790.0  9790.1  9972.2  9994.8 10004.9 10029.7 10048.6 10125.0
3418          RY  1657.9  1657.5  1656.4  1646.8  1646.8  1657.8  1657.0  1657.9
              *

3419          KK    C621
3420          KM      Hydrograph combine C621L + 620621 at C621
3421          HC       2    7.93
              *
1                                          HEC-1 INPUT                                          PAGE 80

LINE          ID.......1.......2.......3.......4.......5.......6.......7.......8.......9......10

3422          KK  621622
3423          KM      Normal depth channel route from C621 to C622
3424          KM      Source:  HEC-2 Cross Section: AS 2.785
3425          RS       6    FLOW      -1
3426          RC   0.100   0.045   0.100  3830.0  0.0144
3427          RX  9827.3  9922.9  9951.0 10000.0 10002.7 10044.7 10071.6 10076.8
3428          RY  1615.2  1611.0  1604.1  1600.8  1601.5  1601.6  1611.0  1613.9
              *

3429          KK    211X
3430          KM   Sub-Basin   211X
3431          KM
3432          KM      The Clark Unit Hydrograph is used for this basin.
3433          KM          The Urban time-area relation is used for this basin.
3434          KM
3435          KM      Time of Concentration for this sub-basin is based on the following:
3436          KM          6-Hour Rainfall, Pattern No.  1.00
3437          KM          An rainfall areal reduction factor of 0.997
3438          KM
3439          KM       EXCESS RAINFALL VALUES EXCEEDED IN 5-MINUTE INTERVALS
3440          KM     5  10  15  20  25  30  35  40  45  50  55  60  65  70  75  80  85  90
3441          KM   .31 .31 .31 .10 .08 .07 .03 .03 .03 .03 .03 .03 .01 .01 .01 .01 .01 .01
3442          KM
3443          KM          L=   0.929 miles, S=  111 feet/mile, Kb= .03
3444          KM
3445          BA   0.214
```

```
3600        KK  603622
3601        KM      Normal depth channel route from C603 to C622
3602        KM      Source:  HEC-2 Cross Section: LE 0.287
3603        RS       5    FLOW      -1
3604        RC   0.060   0.045   0.060  2745.0  0.0204
3605        RX  9883.0  9929.7  9967.3  9991.6 10042.2 10073.6 10177.6 10194.5
3606        RY  1619.4  1618.7  1611.8  1602.1  1603.3  1609.4  1610.5  1610.6
            *

3607        KK    211F
3608        KM   Sub-Basin   211F
3609        KM
3610        KM      The Clark Unit Hydrograph is used for this basin.
3611        KM          The Urban time-area relation is used for this basin.
3612        KM
3613        KM      Time of Concentration for this sub-basin is based on the following:
3614        KM          6-Hour Rainfall, Pattern No.  1.00
3615        KM          An rainfall areal reduction factor of 0.999
3616        KM
3617        KM       EXCESS RAINFALL VALUES EXCEEDED IN 5-MINUTE INTERVALS
3618        KM     5  10  15  20  25  30  35  40  45  50  55  60  65  70  75  80  85  90
3619        KM   .31 .31 .31 .10 .08 .07 .04 .04 .04 .04 .04 .03 .01 .01 .01 .01 .01 .01
3620        KM
3621        KM          L=   0.770 miles, S=  134 feet/mile, Kb= .03
3622        KM
3623        BA   0.113
3624        LG    0.08    0.25    4.30    0.36   62.81
3625        UC   0.217   0.191
3626        UA       0       5      16      30      65      77      84      90      94      97
3627        UA     100
            *

3628        KK   C622L
3629        KM      Hydrograph combine 603622 + 211F at C622 left branch
3630        HC       2
            *

3631        KK    C622
3632        KM      Hydrograph combine C622R + C622L at C622
3633        HC       2
            *

3634        KK  622549
3635        KM      Normal depth channel route from C622 to C549
3636        KM      Source:  HEC-2 Cross Section: AS 2.279
3637        RS       7    FLOW      -1
3638        RC   0.113   0.125   0.120  1697.0  0.0118
3639        RX  9847.1  9851.0  9857.5  9862.8 10052.6 10062.8 10075.6 10084.6
3640        RY  1573.5  1571.3  1567.2  1564.6  1565.1  1566.7  1573.7  1573.9
            *
```



```
LINE        ID.......1.......2.......3.......4.......5.......6.......7.......8.......9......10

3641        KK    211Y
3642        KM   Sub-Basin   211Y
3643        KM
3644        KM      The Clark Unit Hydrograph is used for this basin.
3645        KM          The Urban time-area relation is used for this basin.
3646        KM
3647        KM      Time of Concentration for this sub-basin is based on the following:
3648        KM          6-Hour Rainfall, Pattern No.  1.00
3649        KM          An rainfall areal reduction factor of 0.999
3650        KM
3651        KM       EXCESS RAINFALL VALUES EXCEEDED IN 5-MINUTE INTERVALS
3652        KM     5  10  15  20  25  30  35  40  45  50  55  60  65  70  75  80  85  90
3653        KM   .32 .32 .31 .11 .09 .09 .04 .04 .04 .03 .03 .03 .01 .01 .01 .01 .01 .01
3654        KM
3655        KM          L=   0.606 miles, S=  147 feet/mile, Kb= .04
3656        KM
3657        BA   0.089
3658        LG    0.09    0.21    6.60    0.13   50.06
3659        UC   0.213   0.176
3660        UA       0       5      16      30      65      77      84      90      94      97
3661        UA     100
            *

3662        KK   C549R
3663        KM      Hydrograph combine 622549 + 211Y at C549 right branch
3664        HC       2
            *

3665        KK    C549
3666        KM      Hydrograph combine C549L + C549R at C549
3667        HC       2
            *

3668        KK  549626
3669        KM      Normal depth channel route from C549 to C626
3670        KM      Source:  HEC-2 Cross Section: AS 1.855
3671        RS       7    FLOW      -1
3672        RC   0.113   0.125   0.120  2044.0  0.0171
3673        RX  9943.2  9963.0  9985.6  9994.1 10007.6 10029.2 10150.5 10171.3
3674        RY  1539.3  1534.5  1531.2  1528.3  1528.2  1531.7  1532.5  1537.4
            *

3675        KK    211Z
3676        KM   Sub-Basin   211Z
```

```
3677          KM
3678          KM      The Clark Unit Hydrograph is used for this basin.
3679          KM          The Urban time-area relation is used for this basin.
3680          KM
3681          KM      Time of Concentration for this sub-basin is based on the following:
3682          KM          6-Hour Rainfall, Pattern No.  1.00
3683          KM          An rainfall areal reduction factor of 0.999
3684          KM
3685          KM       EXCESS RAINFALL VALUES EXCEEDED IN 5-MINUTE INTERVALS
3686          KM     5  10  15  20  25  30  35  40  45  50  55  60  65  70  75  80  85  90
```



```
LINE          ID.......1.......2.......3.......4.......5.......6.......7.......8.......9......10

3687          KM   .29 .29 .28 .07 .05 .04 .02 .02 .02 .02 .02 .02 .01 .01 .01 .01 .01 .01
3688          KM
3689          KM          L=   0.509 miles, S=  147 feet/mile, Kb= .04
3690          KM
3691          BA   0.083
3692          LG    0.14    0.27    4.50    0.34   34.43
3693          UC   0.204   0.153
3694          UA       0       5      16      30      65      77      84      90      94      97
3695          UA     100
              *

3696          KK   C626C
3697          KM      Hydrograph combine 549626 + 211Z at C626 main branch
3698          HC       2
              *

3699          KK   211AA
3700          KM   Sub-Basin  211AA
3701          KM
3702          KM      The Clark Unit Hydrograph is used for this basin.
3703          KM          The Urban time-area relation is used for this basin.
3704          KM
3705          KM      Time of Concentration for this sub-basin is based on the following:
3706          KM          6-Hour Rainfall, Pattern No.  1.00
3707          KM          An rainfall areal reduction factor of 1.000
3708          KM
3709          KM       EXCESS RAINFALL VALUES EXCEEDED IN 5-MINUTE INTERVALS
3710          KM     5  10  15  20  25  30  35  40  45  50  55  60  65  70  75  80  85  90
3711          KM   .32 .31 .31 .11 .09 .08 .04 .04 .04 .03 .02 .02 .01 .01 .01 .01 .01 .01
3712          KM
3713          KM          L=   0.480 miles, S=   85 feet/mile, Kb= .03
3714          KM
3715          BA   0.034
3716          LG    0.08    0.19    6.60    0.13   39.38
3717          UC   0.196   0.231
3718          UA       0       5      16      30      65      77      84      90      94      97
3719          UA     100
              *

3720          KK  625626
3721          KM      Normal depth channel route from C625 to C626
3722          KM      Source:  200 Scale Mapping
3723          RS       3    FLOW      -1
3724          RC   0.040   0.018   0.040  1350.0  0.0252
3725          RX  1000.0  1020.0  1021.2  1055.2  1089.2  1090.4  1100.4  1105.4
3726          RY  1527.0  1526.0  1525.6  1526.3  1525.6  1526.0  1528.0  1530.0
              *

3727          KK   211AB
3728          KM   Sub-Basin  211AB
3729          KM
3730          KM      The Clark Unit Hydrograph is used for this basin.
3731          KM          The Urban time-area relation is used for this basin.
3732          KM
3733          KM      Time of Concentration for this sub-basin is based on the following:
```



```
LINE          ID.......1.......2.......3.......4.......5.......6.......7.......8.......9......10

3734          KM          6-Hour Rainfall, Pattern No.  1.00
3735          KM          An rainfall areal reduction factor of 0.999
3736          KM
3737          KM       EXCESS RAINFALL VALUES EXCEEDED IN 5-MINUTE INTERVALS
3738          KM     5  10  15  20  25  30  35  40  45  50  55  60  65  70  75  80  85  90
3739          KM   .32 .32 .32 .12 .10 .09 .04 .04 .04 .04 .04 .03 .01 .01 .01 .01 .01 .01
3740          KM
3741          KM          L=   0.293 miles, S=  321 feet/mile, Kb= .03
3742          KM
3743          BA   0.040
3744          LG    0.07    0.17    6.80    0.12   54.72
3745          UC   0.100   0.068
3746          UA       0       5      16      30      65      77      84      90      94      97
3747          UA     100
              *

3748          KK  623624
3749          KM      Normal depth channel route from C623 to C624
3750          KM      Source:  200 Scale Mapping
3751          RS       1    FLOW      -1
3752          RC   0.040   0.018   0.040   701.0  0.0114
3753          RX  1000.0  1010.0  1011.2  1027.2  1043.2  1044.4  1059.4  1074.4
3754          RY  1534.0  1532.0  1531.6  1531.9  1531.6  1532.0  1532.5  1533.0
              *

3755          KK   211AC
3756          KM   Sub-Basin  211AC
3757          KM
```

```
3758        KM      The Clark Unit Hydrograph is used for this basin.
3759        KM          The Urban time-area relation is used for this basin.
3760        KM
3761        KM      Time of Concentration for this sub-basin is based on the following:
3762        KM          6-Hour Rainfall, Pattern No.  1.00
3763        KM          An rainfall areal reduction factor of 1.000
3764        KM
3765        KM       EXCESS RAINFALL VALUES EXCEEDED IN 5-MINUTE INTERVALS
3766        KM     5  10  15  20  25  30  35  40  45  50  55  60  65  70  75  80  85  90
3767        KM   .32 .32 .32 .12 .10 .09 .05 .05 .04 .04 .04 .04 .01 .01 .01 .01 .01 .01
3768        KM
3769        KM          L=   0.306 miles, S=   82 feet/mile, Kb= .03
3770        KM
3771        BA   0.027
3772        LG    0.08     0.15     8.40     0.07    44.76
3773        UC   0.154    0.140
3774        UA       0        5       16       30       65       77       84       90       94       97
3775        UA     100
            *

3776        KK    C624
3777        KM      Hydrograph combine 623624 + 211AC at C624
3778        HC       2
            *
```



```
LINE        ID.......1.......2.......3.......4.......5.......6.......7.......8.......9......10

3779        KK  624626
3780        KM      Normal depth channel route from C624 to C626
3781        KM      Source:  HEC-2 Cross Section: AS 1.727
3782        RS       3    FLOW      -1
3783        RC   0.080   0.060   0.080   637.0  0.0235
3784        RX  9872.9  9881.0  9893.9  9902.2  9967.6  9976.4 10076.1 10084.3
3785        RY  1526.3  1524.6  1521.7  1520.0  1520.7  1521.6  1520.7  1526.2
            *

3786        KK   211AD
3787        KM   Sub-Basin  211AD
3788        KM
3789        KM      The Clark Unit Hydrograph is used for this basin.
3790        KM          The Urban time-area relation is used for this basin.
3791        KM
3792        KM      Time of Concentration for this sub-basin is based on the following:
3793        KM          6-Hour Rainfall, Pattern No.  1.00
3794        KM          An rainfall areal reduction factor of 0.999
3795        KM
3796        KM       EXCESS RAINFALL VALUES EXCEEDED IN 5-MINUTE INTERVALS
3797        KM     5  10  15  20  25  30  35  40  45  50  55  60  65  70  75  80  85  90
3798        KM   .32 .32 .32 .12 .10 .09 .05 .05 .04 .04 .04 .04 .01 .01 .01 .01 .01 .01
3799        KM
3800        KM          L=   0.489 miles, S=  280 feet/mile, Kb= .03
3801        KM
3802        BA   0.041
3803        LG    0.08     0.15     8.00     0.08    46.16
3804        UC   0.133    0.137
3805        UA       0        5       16       30       65       77       84       90       94       97
3806        UA     100
            *

3807        KK   C626R
3808        KM      Hydrograph combine 624626 + 211AD at C626 right branch
3809        HC       2
            *

3810        KK    C626
3811        KM      Hydrograph combine C626C + 625626 at C626R
3812        HC       3
            *

3813        KK  626627
3814        KM      Normal depth channel route from C626 to C627
3815        KM      Source:  HEC-2 Cross Section: AS 1.602
3816        RS       2    FLOW      -1
3817        RC   0.080   0.060   0.080   625.0  0.0208
3818        RX  9889.8  9941.2  9963.0 10011.6 10074.8 10083.9 10191.7 10210.4
3819        RY  1517.6  1516.9  1508.1  1506.6  1508.6  1511.7  1513.1  1518.8
            *
```



```
LINE        ID.......1.......2.......3.......4.......5.......6.......7.......8.......9......10

3820        KK   211AE
3821        KM   Sub-Basin  211AE
3822        KM
3823        KM      The Clark Unit Hydrograph is used for this basin.
3824        KM          The Urban time-area relation is used for this basin.
3825        KM
3826        KM      Time of Concentration for this sub-basin is based on the following:
3827        KM          6-Hour Rainfall, Pattern No.  1.00
3828        KM          An rainfall areal reduction factor of 1.000
3829        KM
3830        KM       EXCESS RAINFALL VALUES EXCEEDED IN 5-MINUTE INTERVALS
3831        KM     5  10  15  20  25  30  35  40  45  50  55  60  65  70  75  80  85  90
3832        KM   .31 .31 .30 .10 .08 .07 .03 .03 .03 .02 .02 .02 .01 .01 .01 .01 .01 .01
3833        KM
3834        KM          L=   0.313 miles, S=  153 feet/mile, Kb= .04
3835        KM
3836        BA   0.034
```

```
3837          LG    0.12    0.24    6.40    0.15   38.15
3838          UC   0.154   0.125
3839          UA       0       5      16      30      65      77      84      90      94      97
3840          UA     100
              *

3841          KK    C627
3842          KM      Hydrograph combine 626627 + 211AE at C627
3843          HC       2
              *
              * *
              * * C627 is the total flow in Ashbrook Wash at the Study boundary
              * *
              *
3844          ZZ
```

```
1*************************************                    *************************************
*                                   *                    *                                   *
*   FLOOD HYDROGRAPH PACKAGE  (HEC-1)   *                *   U.S. ARMY CORPS OF ENGINEERS    *
*              MAY  1991            *                    *   HYDROLOGIC ENGINEERING CENTER   *
*           VERSION 4.0.1E          *                    *          609 SECOND STREET        *
*     Lahey F77L-EM/32 version 5.01 *                    *       DAVIS, CALIFORNIA 95616     *
*       Dodson & Associates, Inc.   *                    *           (916) 551-1748          *
*  RUN DATE  09/13/99  TIME  13:28:50   *                *                                   *
*************************************                    *************************************
```

```
Golden Eagle Park Dam Modifications
     by Stantec: Proj. No. 28900095                    File:  FU10-6.IH1
     for FCDMC:  FCD                                   Date:03-29-99     mcg
                                                     Revised:

10-year, 6-hour future condition watershed model for Ashbrook Wash upstream
of the Fort McDowell Indian Reservation boundary.
     This model is a portion of the original Fountain Hills North FDS
     watershed model conducted by GVSCE, 1994.  The title cards from that
     model are included for reference.

Fountain Hills North Floodplain Delineation Study
     FCD 92-04       by GVSCE                          File:   FU10-6.IH1
Future Condition Model                                 Date:    07-21-94   dtp
   10-Year 6-Hour Storm, Clark Unit Hydrograph       Revised:   10-31-94   dtp

 17 IO        OUTPUT CONTROL VARIABLES
                IPRNT          5  PRINT CONTROL
                IPLOT          0  PLOT CONTROL
                QSCAL         0.  HYDROGRAPH PLOT SCALE

   IT         HYDROGRAPH TIME DATA
                 NMIN          1  MINUTES IN COMPUTATION INTERVAL
                IDATE      1   0  STARTING DATE
                ITIME       0000  STARTING TIME
                   NQ       1080  NUMBER OF HYDROGRAPH ORDINATES
               NDDATE      1   0  ENDING DATE
               NDTIME       1759  ENDING TIME
                ICENT         19  CENTURY MARK

            COMPUTATION INTERVAL    0.02 HOURS
                 TOTAL TIME BASE   17.98 HOURS

       ENGLISH UNITS
            DRAINAGE AREA          SQUARE MILES
            PRECIPITATION DEPTH    INCHES
            LENGTH, ELEVATION      FEET
            FLOW                   CUBIC FEET PER SECOND
            STORAGE VOLUME         ACRE-FEET
            SURFACE AREA           ACRES
            TEMPERATURE            DEGREES FAHRENHEIT

 19 JD        INDEX STORM NO. 1
                STRM        2.20  PRECIPITATION DEPTH
                TRDA        0.01  TRANSPOSITION DRAINAGE AREA

 20 PI          PRECIPITATION PATTERN
                0.00      0.00      0.00      0.00      0.00      0.00      0.00      0.00      0.00      0.00
                0.00      0.00      0.00      0.00      0.00      0.00      0.00      0.00      0.00      0.00
                0.00      0.00      0.00      0.00      0.00      0.00      0.00      0.00      0.00      0.00
                0.00      0.00      0.00      0.00      0.00      0.00      0.00      0.00      0.00      0.00
                0.00      0.00      0.00      0.00      0.00      0.00      0.00      0.00      0.00      0.00
                0.00      0.00      0.00      0.00      0.00      0.00      0.00      0.00      0.00      0.00
                0.00      0.00      0.00      0.00      0.00      0.00      0.00      0.00      0.00      0.00
                0.00      0.00      0.00      0.00      0.00      0.00      0.00      0.00      0.00      0.00
                0.00      0.00      0.00      0.00      0.00      0.00      0.00      0.00      0.00      0.00
                0.00      0.00      0.00      0.00      0.00      0.00      0.00      0.00      0.00      0.00
                0.00      0.00      0.00      0.00      0.00      0.00      0.00      0.00      0.00      0.00
                0.00      0.00      0.00      0.00      0.00      0.00      0.00      0.00      0.00      0.00
                0.00      0.00      0.00      0.00      0.00      0.00      0.00      0.00      0.00      0.00
                0.00      0.00      0.00      0.00      0.00      0.00      0.00      0.00      0.00      0.00
                0.00      0.00      0.00      0.00      0.00      0.00      0.00      0.00      0.00      0.00
                0.00      0.00      0.00      0.00      0.00      0.00      0.00      0.00      0.00      0.00
                0.00      0.00      0.00      0.00      0.00      0.00      0.00      0.00      0.00      0.00
                0.00      0.00      0.00      0.00      0.00      0.00      0.00      0.00      0.00      0.00
                0.00      0.00      0.00      0.00      0.00      0.00      0.00      0.00      0.00      0.00
                0.00      0.00      0.00      0.00      0.00      0.01      0.01      0.01      0.01      0.01
                0.01      0.01      0.01      0.01      0.01      0.01      0.01      0.01      0.01      0.01
                0.01      0.01      0.01      0.01      0.01      0.01      0.01      0.01      0.01      0.01
                0.01      0.01      0.01      0.01      0.01      0.03      0.03      0.03      0.03      0.03
                0.03      0.03      0.03      0.03      0.03      0.03      0.03      0.03      0.03      0.03
                0.01      0.01      0.01      0.01      0.01      0.01      0.01      0.01      0.01      0.01
```

```
                0.01      0.01      0.01      0.01      0.01      0.00      0.00      0.00      0.00      0.00
                0.00      0.00      0.00      0.00      0.00      0.00      0.00      0.00      0.00      0.00
                0.00      0.00      0.00      0.00      0.00      0.00      0.00      0.00      0.00      0.00
                0.00      0.00      0.00      0.00      0.00      0.00      0.00      0.00      0.00      0.00
                0.00      0.00      0.00      0.00      0.00      0.00      0.00      0.00      0.00      0.00
                0.00      0.00      0.00      0.00      0.00      0.00      0.00      0.00      0.00      0.00
                0.00      0.00      0.00      0.00      0.00      0.00      0.00      0.00      0.00      0.00
                0.00      0.00      0.00      0.00      0.00      0.00      0.00      0.00      0.00      0.00
                0.00      0.00      0.00      0.00      0.00      0.00      0.00      0.00      0.00      0.00
                0.00      0.00      0.00      0.00      0.00      0.00      0.00      0.00      0.00      0.00
                0.00      0.00      0.00      0.00      0.00      0.00      0.00      0.00      0.00      0.00

23 JD         INDEX STORM NO. 2
                STRM          2.19  PRECIPITATION DEPTH
                TRDA          0.50  TRANSPOSITION DRAINAGE AREA

 0 PI          PRECIPITATION PATTERN
                0.00      0.00      0.00      0.00      0.00      0.00      0.00      0.00      0.00      0.00
                0.00      0.00      0.00      0.00      0.00      0.00      0.00      0.00      0.00      0.00
                0.00      0.00      0.00      0.00      0.00      0.00      0.00      0.00      0.00      0.00
                0.00      0.00      0.00      0.00      0.00      0.00      0.00      0.00      0.00      0.00
                0.00      0.00      0.00      0.00      0.00      0.00      0.00      0.00      0.00      0.00
                0.00      0.00      0.00      0.00      0.00      0.00      0.00      0.00      0.00      0.00
                0.00      0.00      0.00      0.00      0.00      0.00      0.00      0.00      0.00      0.00
                0.00      0.00      0.00      0.00      0.00      0.00      0.00      0.00      0.00      0.00
                0.00      0.00      0.00      0.00      0.00      0.00      0.00      0.00      0.00      0.00
                0.00      0.00      0.00      0.00      0.00      0.00      0.00      0.00      0.00      0.00
                0.00      0.00      0.00      0.00      0.00      0.00      0.00      0.00      0.00      0.00
                0.00      0.00      0.00      0.00      0.00      0.00      0.00      0.00      0.00      0.00
                0.00      0.00      0.00      0.00      0.00      0.00      0.00      0.00      0.00      0.00
                0.00      0.00      0.00      0.00      0.00      0.00      0.00      0.00      0.00      0.00
                0.00      0.00      0.00      0.00      0.00      0.00      0.00      0.00      0.00      0.00
                0.00      0.00      0.00      0.00      0.00      0.00      0.00      0.00      0.00      0.00
                0.00      0.00      0.00      0.00      0.00      0.00      0.00      0.00      0.00      0.00
                0.00      0.00      0.00      0.00      0.00      0.00      0.00      0.00      0.00      0.00
                0.00      0.00      0.00      0.00      0.00      0.00      0.00      0.00      0.00      0.00
                0.00      0.00      0.00      0.00      0.00      0.01      0.01      0.01      0.01      0.01
                0.01      0.01      0.01      0.01      0.01      0.01      0.01      0.01      0.01      0.01
                0.01      0.01      0.01      0.01      0.01      0.01      0.01      0.01      0.01      0.01
                0.01      0.01      0.01      0.01      0.01      0.03      0.03      0.03      0.03      0.03
                0.03      0.03      0.03      0.03      0.03      0.03      0.03      0.03      0.03      0.03
                0.01      0.01      0.01      0.01      0.01      0.01      0.01      0.01      0.01      0.01
                0.01      0.01      0.01      0.01      0.01      0.00      0.00      0.00      0.00      0.00
                0.00      0.00      0.00      0.00      0.00      0.00      0.00      0.00      0.00      0.00
                0.00      0.00      0.00      0.00      0.00      0.00      0.00      0.00      0.00      0.00
                0.00      0.00      0.00      0.00      0.00      0.00      0.00      0.00      0.00      0.00
                0.00      0.00      0.00      0.00      0.00      0.00      0.00      0.00      0.00      0.00
                0.00      0.00      0.00      0.00      0.00      0.00      0.00      0.00      0.00      0.00
                0.00      0.00      0.00      0.00      0.00      0.00      0.00      0.00      0.00      0.00
                0.00      0.00      0.00      0.00      0.00      0.00      0.00      0.00      0.00      0.00
                0.00      0.00      0.00      0.00      0.00      0.00      0.00      0.00      0.00      0.00
                0.00      0.00      0.00      0.00      0.00      0.00      0.00      0.00      0.00      0.00

24 JD         INDEX STORM NO. 3
                STRM          2.16  PRECIPITATION DEPTH
                TRDA          2.80  TRANSPOSITION DRAINAGE AREA

25 PI          PRECIPITATION PATTERN
                0.00      0.00      0.00      0.00      0.00      0.00      0.00      0.00      0.00      0.00
                0.00      0.00      0.00      0.00      0.00      0.00      0.00      0.00      0.00      0.00
                0.00      0.00      0.00      0.00      0.00      0.00      0.00      0.00      0.00      0.00
                0.00      0.00      0.00      0.00      0.00      0.00      0.00      0.00      0.00      0.00
                0.00      0.00      0.00      0.00      0.00      0.00      0.00      0.00      0.00      0.00
                0.00      0.00      0.00      0.00      0.00      0.00      0.00      0.00      0.00      0.00
                0.00      0.00      0.00      0.00      0.00      0.00      0.00      0.00      0.00      0.00
                0.00      0.00      0.00      0.00      0.00      0.00      0.00      0.00      0.00      0.00
                0.00      0.00      0.00      0.00      0.00      0.00      0.00      0.00      0.00      0.00
                0.00      0.00      0.00      0.00      0.00      0.00      0.00      0.00      0.00      0.00
                0.00      0.00      0.00      0.00      0.00      0.00      0.00      0.00      0.00      0.00
                0.00      0.00      0.00      0.00      0.00      0.00      0.00      0.00      0.00      0.00
                0.00      0.00      0.00      0.00      0.00      0.00      0.00      0.00      0.00      0.00
                0.00      0.00      0.00      0.00      0.00      0.00      0.00      0.00      0.00      0.00
                0.00      0.00      0.00      0.00      0.00      0.00      0.00      0.00      0.00      0.00
                0.00      0.00      0.00      0.00      0.00      0.00      0.00      0.00      0.00      0.00
                0.00      0.00      0.00      0.00      0.00      0.00      0.00      0.00      0.00      0.00
                0.00      0.00      0.00      0.00      0.00      0.01      0.01      0.01      0.01      0.01
                0.01      0.01      0.01      0.01      0.01      0.01      0.01      0.01      0.01      0.01
                0.01      0.01      0.01      0.01      0.01      0.01      0.01      0.01      0.01      0.01
                0.01      0.01      0.01      0.01      0.01      0.02      0.02      0.02      0.02      0.02
                0.02      0.02      0.02      0.02      0.02      0.02      0.02      0.02      0.02      0.02
                0.01      0.01      0.01      0.01      0.01      0.01      0.01      0.01      0.01      0.01
                0.01      0.01      0.01      0.01      0.01      0.00      0.00      0.00      0.00      0.00
                0.00      0.00      0.00      0.00      0.00      0.00      0.00      0.00      0.00      0.00
                0.00      0.00      0.00      0.00      0.00      0.00      0.00      0.00      0.00      0.00
                0.00      0.00      0.00      0.00      0.00      0.00      0.00      0.00      0.00      0.00
                0.00      0.00      0.00      0.00      0.00      0.00      0.00      0.00      0.00      0.00
                0.00      0.00      0.00      0.00      0.00      0.00      0.00      0.00      0.00      0.00
                0.00      0.00      0.00      0.00      0.00      0.00      0.00      0.00      0.00      0.00
                0.00      0.00      0.00      0.00      0.00      0.00      0.00      0.00      0.00      0.00
                0.00      0.00      0.00      0.00      0.00      0.00      0.00      0.00      0.00      0.00
                0.00      0.00      0.00      0.00      0.00      0.00      0.00      0.00      0.00      0.00

28 JD         INDEX STORM NO. 4
                STRM          2.03  PRECIPITATION DEPTH
                TRDA         16.00  TRANSPOSITION DRAINAGE AREA

29 PI          PRECIPITATION PATTERN
```

0.00	0.00	0.00	0.00	0.00	0.00	0.00	0.00	0.00	0.00
0.00	0.00	0.00	0.00	0.00	0.00	0.00	0.00	0.00	0.00
0.00	0.00	0.00	0.00	0.00	0.00	0.00	0.00	0.00	0.00
0.00	0.00	0.00	0.00	0.00	0.00	0.00	0.00	0.00	0.00
0.00	0.00	0.00	0.00	0.00	0.00	0.00	0.00	0.00	0.00
0.00	0.00	0.00	0.00	0.00	0.00	0.00	0.00	0.00	0.00
0.00	0.00	0.00	0.00	0.00	0.00	0.00	0.00	0.00	0.00
0.00	0.00	0.00	0.00	0.00	0.00	0.00	0.00	0.00	0.00
0.00	0.00	0.00	0.00	0.00	0.00	0.00	0.00	0.00	0.00
0.00	0.00	0.00	0.00	0.00	0.00	0.00	0.00	0.00	0.00
0.00	0.00	0.00	0.00	0.00	0.00	0.00	0.00	0.00	0.00
0.00	0.00	0.00	0.00	0.00	0.00	0.00	0.00	0.00	0.00
0.00	0.00	0.00	0.00	0.00	0.00	0.00	0.00	0.00	0.00
0.00	0.00	0.00	0.00	0.00	0.00	0.00	0.00	0.00	0.00
0.00	0.00	0.00	0.00	0.00	0.00	0.00	0.00	0.00	0.00
0.00	0.00	0.00	0.00	0.00	0.00	0.00	0.00	0.00	0.00
0.00	0.00	0.00	0.00	0.00	0.00	0.00	0.00	0.00	0.00
0.00	0.00	0.00	0.00	0.00	0.00	0.00	0.00	0.00	0.00
0.00	0.00	0.00	0.00	0.00	0.01	0.01	0.01	0.01	0.01
0.01	0.01	0.01	0.01	0.01	0.01	0.01	0.01	0.01	0.01
0.01	0.01	0.01	0.01	0.01	0.01	0.01	0.01	0.01	0.01
0.01	0.01	0.01	0.01	0.01	0.01	0.01	0.01	0.01	0.01
0.01	0.01	0.01	0.01	0.01	0.01	0.01	0.01	0.01	0.01
0.01	0.01	0.01	0.01	0.01	0.01	0.01	0.01	0.01	0.01
0.01	0.01	0.01	0.01	0.01	0.00	0.00	0.00	0.00	0.00
0.00	0.00	0.00	0.00	0.00	0.00	0.00	0.00	0.00	0.00
0.00	0.00	0.00	0.00	0.00	0.00	0.00	0.00	0.00	0.00
0.00	0.00	0.00	0.00	0.00	0.00	0.00	0.00	0.00	0.00
0.00	0.00	0.00	0.00	0.00	0.00	0.00	0.00	0.00	0.00
0.00	0.00	0.00	0.00	0.00	0.00	0.00	0.00	0.00	0.00
0.00	0.00	0.00	0.00	0.00	0.00	0.00	0.00	0.00	0.00
0.00	0.00	0.00	0.00	0.00	0.00	0.00	0.00	0.00	0.00
0.00	0.00	0.00	0.00	0.00	0.00	0.00	0.00	0.00	0.00
0.00	0.00	0.00	0.00	0.00	0.00	0.00	0.00	0.00	0.00

32 JD INDEX STORM NO. 5

STRM 1.78 PRECIPITATION DEPTH
TRDA 90.00 TRANSPOSITION DRAINAGE AREA

33 PI PRECIPITATION PATTERN

0.00	0.00	0.00	0.00	0.00	0.00	0.00	0.00	0.00	0.00
0.00	0.00	0.00	0.00	0.00	0.00	0.00	0.00	0.00	0.00
0.00	0.00	0.00	0.00	0.00	0.00	0.00	0.00	0.00	0.00
0.00	0.00	0.00	0.00	0.00	0.00	0.00	0.00	0.00	0.00
0.00	0.00	0.00	0.00	0.00	0.00	0.00	0.00	0.00	0.00
0.00	0.00	0.00	0.00	0.00	0.00	0.00	0.00	0.00	0.00
0.00	0.00	0.00	0.00	0.00	0.00	0.00	0.00	0.00	0.00
0.00	0.00	0.00	0.00	0.00	0.00	0.00	0.00	0.00	0.00
0.00	0.00	0.00	0.00	0.00	0.00	0.00	0.00	0.00	0.00
0.00	0.00	0.00	0.00	0.00	0.00	0.00	0.00	0.00	0.00
0.00	0.00	0.00	0.00	0.00	0.00	0.00	0.00	0.00	0.00
0.00	0.00	0.00	0.00	0.00	0.00	0.00	0.00	0.00	0.00
0.00	0.00	0.00	0.00	0.00	0.00	0.00	0.00	0.00	0.00
0.00	0.00	0.00	0.00	0.00	0.00	0.00	0.00	0.00	0.00
0.00	0.00	0.00	0.00	0.00	0.00	0.00	0.00	0.00	0.00
0.00	0.00	0.00	0.00	0.00	0.00	0.00	0.00	0.00	0.00
0.00	0.00	0.00	0.00	0.00	0.00	0.00	0.00	0.00	0.00
0.00	0.00	0.00	0.00	0.00	0.00	0.00	0.00	0.00	0.00
0.00	0.00	0.00	0.00	0.00	0.00	0.00	0.00	0.00	0.00
0.00	0.00	0.00	0.00	0.00	0.01	0.01	0.01	0.01	0.01
0.01	0.01	0.01	0.01	0.01	0.01	0.01	0.01	0.01	0.01
0.01	0.01	0.01	0.01	0.01	0.01	0.01	0.01	0.01	0.01
0.01	0.01	0.01	0.01	0.01	0.01	0.01	0.01	0.01	0.01
0.01	0.01	0.01	0.01	0.01	0.01	0.01	0.01	0.01	0.01
0.01	0.01	0.01	0.01	0.01	0.00	0.00	0.00	0.00	0.00
0.00	0.00	0.00	0.00	0.00	0.00	0.00	0.00	0.00	0.00
0.00	0.00	0.00	0.00	0.00	0.00	0.00	0.00	0.00	0.00
0.00	0.00	0.00	0.00	0.00	0.00	0.00	0.00	0.00	0.00
0.00	0.00	0.00	0.00	0.00	0.00	0.00	0.00	0.00	0.00
0.00	0.00	0.00	0.00	0.00	0.00	0.00	0.00	0.00	0.00
0.00	0.00	0.00	0.00	0.00	0.00	0.00	0.00	0.00	0.00
0.00	0.00	0.00	0.00	0.00	0.00	0.00	0.00	0.00	0.00
0.00	0.00	0.00	0.00	0.00	0.00	0.00	0.00	0.00	0.00
0.00	0.00	0.00	0.00	0.00	0.00	0.00	0.00	0.00	0.00

WARNING EXCESS AT PONDING LESS THAN ZERO FOR PERIOD. EXCESS SET TO ZERO
WARNING EXCESS AT PONDING LESS THAN ZERO FOR PERIOD. EXCESS SET TO ZERO

1

RUNOFF SUMMARY
FLOW IN CUBIC FEET PER SECOND
TIME IN HOURS, AREA IN SQUARE MILES

	OPERATION	STATION	PEAK FLOW	TIME OF PEAK	AVERAGE FLOW FOR MAXIMUM PERIOD 6-HOUR	24-HOUR	72-HOUR	BASIN AREA	MAXIMUM STAGE	TIME OF MAX STAGE
+	HYDROGRAPH AT	204A	196.	4.05	16.	5.	5.	0.11		
+	ROUTED TO	522523	178.	4.22	16.	5.	5.	0.11		
+	HYDROGRAPH AT	204B	211.	4.07	18.	6.	6.	0.13		
+	2 COMBINED AT	C523I	322.	4.15	34.	11.	11.	0.23		

+	ROUTED TO	C523O	227.	4.33	34.	11.	11.	0.23
+	DIVERSION TO	D523R	0.	4.33	0.	0.	0.	0.23
+	HYDROGRAPH AT	D523L	226.	4.33	34.	11.	11.	0.23
+	HYDROGRAPH AT	205A	97.	4.32	15.	5.	5.	0.12
+	HYDROGRAPH AT	205B	164.	4.47	27.	9.	9.	0.21
+	2 COMBINED AT	C528	247.	4.43	42.	14.	14.	0.33
+	ROUTED TO	528530	246.	4.48	42.	14.	14.	0.33
+	HYDROGRAPH AT	205C	50.	4.28	8.	3.	3.	0.06
+	2 COMBINED AT	C530R	284.	4.47	50.	17.	17.	0.39
+	HYDROGRAPH AT	205D	315.	4.33	41.	14.	14.	0.32
+	HYDROGRAPH AT	205E	133.	4.48	28.	9.	9.	0.22
+	2 COMBINED AT	C529	418.	4.37	68.	23.	23.	0.54
+	2 COMBINED AT	C530	596.	4.42	110.	37.	37.	0.93
+	ROUTED TO	530531	592.	4.47	110.	37.	37.	0.93
+	HYDROGRAPH AT	205F	153.	4.30	21.	7.	7.	0.16
+	2 COMBINED AT	C531	669.	4.45	127.	43.	43.	1.09
+	ROUTED TO	531532	663.	4.53	127.	43.	43.	1.09
+	HYDROGRAPH AT	205G	160.	4.33	23.	8.	8.	0.19
+	2 COMBINED AT	C532L	735.	4.52	144.	49.	49.	1.27
+	HYDROGRAPH AT	205H	151.	4.50	32.	11.	11.	0.26
+	2 COMBINED AT	C532	808.	4.52	168.	57.	57.	1.53
+	ROUTED TO	532533	806.	4.55	168.	57.	57.	1.53
+	HYDROGRAPH AT	205I	226.	4.45	37.	12.	12.	0.35
+	2 COMBINED AT	C533	907.	4.55	193.	66.	66.	1.89
+	ROUTED TO	533534	892.	4.77	193.	66.	66.	1.89
+	HYDROGRAPH AT	205J	204.	4.47	32.	11.	11.	0.37
+	2 COMBINED AT	C534R	946.	4.75	211.	72.	72.	2.25
+	HYDROGRAPH AT	205K	95.	4.60	22.	7.	7.	0.25
+	2 COMBINED AT	C534	978.	4.77	224.	76.	76.	2.50
+	ROUTED TO	534535	974.	4.83	224.	76.	76.	2.50
+	HYDROGRAPH AT	205L	117.	4.22	10.	3.	3.	0.12
+	2 COMBINED AT	C535	972.	4.83	229.	78.	78.	2.62
+	ROUTED TO	535536	968.	4.92	229.	78.	78.	2.62
+	HYDROGRAPH AT	205M	197.	4.08	18.	6.	6.	0.14

+	2 COMBINED AT	C536R	967.	4.92	241.	82.	82.	2.76
+	HYDROGRAPH AT	205N	80.	4.40	14.	5.	5.	0.16
+	2 COMBINED AT	C536I	983.	4.92	249.	85.	85.	2.91
+	ROUTED TO	C536O	271.	6.20	233.	85.	85.	2.91
+	ROUTED TO	536537	271.	6.25	232.	85.	85.	2.91
+	HYDROGRAPH AT	206A	240.	4.05	19.	6.	6.	0.13
+	2 COMBINED AT	C537	273.	6.05	237.	90.	90.	3.04
+	ROUTED TO	537538	273.	6.12	236.	90.	90.	3.04
+	HYDROGRAPH AT	206B	181.	4.05	15.	5.	5.	0.09
+	2 COMBINED AT	C538I	275.	6.05	243.	94.	94.	3.14
+	ROUTED TO	C538O	273.	6.15	240.	94.	94.	3.14
+	ROUTED TO	538540	273.	6.25	240.	94.	94.	3.14
+	HYDROGRAPH AT	206C	33.	4.07	3.	1.	1.	0.02
+	2 COMBINED AT	C540R	274.	6.25	241.	95.	95.	3.16
+	HYDROGRAPH AT	206D	124.	4.03	10.	3.	3.	0.06
+	ROUTED TO	539540	117.	4.12	10.	3.	3.	0.06
+	HYDROGRAPH AT	206E	40.	4.03	3.	1.	1.	0.02
+	2 COMBINED AT	C540L	147.	4.10	13.	4.	4.	0.09
+	2 COMBINED AT	C540	275.	6.23	247.	98.	98.	3.24
+	ROUTED TO	540541	275.	6.35	247.	98.	98.	3.24
+	HYDROGRAPH AT	206F	247.	4.07	21.	7.	7.	0.16
+	2 COMBINED AT	C541	357.	4.30	256.	103.	103.	3.40
+	ROUTED TO	541548	355.	4.33	256.	103.	103.	3.40
+	HYDROGRAPH AT	206G	116.	4.08	13.	4.	4.	0.09
+	HYDROGRAPH AT	BB523R	0.	4.33	0.	0.	0.	0.23
+	ROUTED TO	523548	0.	4.72	0.	0.	0.	0.23
+	3 COMBINED AT	C548L	406.	4.32	262.	106.	106.	3.72
+	HYDROGRAPH AT	206H	114.	4.03	9.	3.	3.	0.06
+	ROUTED TO	542543	110.	4.07	9.	3.	3.	0.06
+	HYDROGRAPH AT	206I	47.	4.00	3.	1.	1.	0.02
+	2 COMBINED AT	C543	150.	4.03	13.	4.	4.	0.08
+	DIVERSION TO	D543R	150.	4.03	13.	4.	4.	0.08
+	HYDROGRAPH AT	D543L	0.	0.02	0.	0.	0.	0.08
	ROUTED TO							

	543544	0.	0.02	0.	0.	0.	0.08
HYDROGRAPH AT	206K	100.	4.03	8.	3.	3.	0.06
2 COMBINED AT	C544	100.	4.03	8.	3.	3.	0.14
ROUTED TO	544545	98.	4.07	8.	3.	3.	0.14
DIVERSION TO	D545R	49.	4.07	4.	1.	1.	0.14
HYDROGRAPH AT	D545L	49.	4.07	4.	1.	1.	0.14
ROUTED TO	545546	48.	4.08	4.	1.	1.	0.14
HYDROGRAPH AT	206L	113.	4.03	9.	3.	3.	0.06
2 COMBINED AT	C546	157.	4.05	13.	4.	4.	0.20
ROUTED TO	546547	156.	4.07	13.	4.	4.	0.20
HYDROGRAPH AT	BB543R	150.	4.03	13.	4.	4.	0.08
ROUTED TO	543547	143.	4.12	13.	4.	4.	0.08
HYDROGRAPH AT	BB545R	49.	4.07	4.	1.	1.	0.14
ROUTED TO	545547	47.	4.13	4.	1.	1.	0.14
HYDROGRAPH AT	206J	121.	4.03	10.	3.	3.	0.06
4 COMBINED AT	C547	446.	4.07	39.	13.	13.	0.26
ROUTED TO	547548	433.	4.13	39.	13.	13.	0.26
HYDROGRAPH AT	206M	119.	4.03	10.	3.	3.	0.06
2 COMBINED AT	C548R	518.	4.12	49.	16.	16.	0.32
2 COMBINED AT	C548	646.	4.23	296.	119.	119.	4.04
ROUTED TO	548549	641.	4.38	295.	119.	119.	4.04
HYDROGRAPH AT	206N	269.	4.07	26.	9.	9.	0.15
2 COMBINED AT	C549L	730.	4.32	308.	126.	126.	4.19
HYDROGRAPH AT	207A	165.	4.45	31.	11.	11.	0.26
HYDROGRAPH AT	207B	134.	4.43	26.	9.	9.	0.21
2 COMBINED AT	C550	298.	4.45	57.	19.	19.	0.46
ROUTED TO	550552	295.	4.53	57.	19.	19.	0.46
HYDROGRAPH AT	207C	138.	4.33	18.	6.	6.	0.17
2 COMBINED AT	C552L	378.	4.50	73.	25.	25.	0.64
HYDROGRAPH AT	207D	213.	4.20	28.	9.	9.	0.20
ROUTED TO	551552	209.	4.30	28.	9.	9.	0.20
HYDROGRAPH AT	207E	140.	4.17	23.	8.	8.	0.16
2 COMBINED AT	C552R	338.	4.27	52.	17.	17.	0.35
2 COMBINED AT	C552	577.	4.43	117.	40.	40.	0.99

+	ROUTED TO	552553	574.	4.47	117.	40.	40.	0.99
+	HYDROGRAPH AT	207F	122.	4.23	17.	6.	6.	0.13
+	2 COMBINED AT	C553	634.	4.45	131.	45.	45.	1.12
+	ROUTED TO	553556	630.	4.50	131.	45.	45.	1.12
+	HYDROGRAPH AT	207G	104.	4.55	24.	8.	8.	0.24
+	2 COMBINED AT	C556L	687.	4.52	149.	51.	51.	1.35
+	HYDROGRAPH AT	207H	174.	4.08	19.	6.	6.	0.12
+	ROUTED TO	554555	168.	4.15	19.	6.	6.	0.12
+	HYDROGRAPH AT	207I	123.	4.05	12.	4.	4.	0.07
+	2 COMBINED AT	C555	269.	4.10	31.	10.	10.	0.20
+	ROUTED TO	555556	260.	4.23	31.	10.	10.	0.20
+	HYDROGRAPH AT	207J	157.	4.05	15.	5.	5.	0.09
+	2 COMBINED AT	C556R	356.	4.18	46.	15.	15.	0.29
+	2 COMBINED AT	C556	824.	4.45	187.	64.	64.	1.64
+	ROUTED TO	556557	821.	4.50	187.	64.	64.	1.64
+	HYDROGRAPH AT	207K	206.	4.07	20.	7.	7.	0.13
+	2 COMBINED AT	C557R	860.	4.47	204.	69.	69.	1.77
+	HYDROGRAPH AT	207L	139.	4.05	12.	4.	4.	0.08
+	2 COMBINED AT	C557	886.	4.43	214.	73.	73.	1.85
+	ROUTED TO	557558	883.	4.50	214.	73.	73.	1.85
+	HYDROGRAPH AT	207M	219.	4.03	16.	5.	5.	0.12
+	2 COMBINED AT	C558	898.	4.48	227.	77.	77.	1.97
+	ROUTED TO	558560	896.	4.53	227.	77.	77.	1.97
+	HYDROGRAPH AT	207O	240.	4.05	17.	6.	6.	0.13
+	2 COMBINED AT	C560R	908.	4.50	240.	82.	82.	2.10
+	HYDROGRAPH AT	207N	95.	4.03	7.	2.	2.	0.05
+	ROUTED TO	559560	89.	4.13	7.	2.	2.	0.05
+	2 COMBINED AT	C560I	928.	4.48	246.	84.	84.	2.15
+	ROUTED TO	C560O	234.	5.80	200.	84.	84.	2.15
+	ROUTED TO	560585	234.	5.90	200.	84.	84.	2.15
+	HYDROGRAPH AT	210A	234.	4.03	16.	5.	5.	0.12
+	2 COMBINED AT	C585	235.	5.88	205.	88.	88.	2.27
+	HYDROGRAPH AT	208A	295.	4.02	23.	8.	8.	0.14
+	ROUTED TO	561563	289.	4.05	23.	8.	8.	0.14

HYDROGRAPH AT	208B	48.	4.03	4.	1.	1.	0.03
2 COMBINED AT	C563R	336.	4.05	27.	9.	9.	0.17
HYDROGRAPH AT	208C	73.	4.15	9.	3.	3.	0.07
ROUTED TO	562563	72.	4.25	9.	3.	3.	0.07
HYDROGRAPH AT	208D	130.	4.05	12.	4.	4.	0.08
2 COMBINED AT	C563L	165.	4.10	22.	7.	7.	0.14
2 COMBINED AT	C563	492.	4.05	49.	16.	16.	0.31
ROUTED TO	563564	476.	4.12	49.	16.	16.	0.31
HYDROGRAPH AT	208E	113.	4.03	10.	3.	3.	0.06
2 COMBINED AT	C564R	565.	4.10	59.	20.	20.	0.37
HYDROGRAPH AT	208F	133.	4.03	11.	4.	4.	0.07
2 COMBINED AT	C564	676.	4.08	70.	23.	23.	0.44
ROUTED TO	564565	651.	4.18	70.	23.	23.	0.44
HYDROGRAPH AT	208G	236.	4.05	22.	7.	7.	0.13
2 COMBINED AT	C565	779.	4.17	91.	31.	31.	0.57
ROUTED TO	565568	765.	4.22	91.	31.	31.	0.57
HYDROGRAPH AT	208H	54.	4.08	6.	2.	2.	0.04
2 COMBINED AT	C568L	793.	4.22	97.	33.	33.	0.61
HYDROGRAPH AT	208I	218.	4.03	19.	6.	6.	0.12
HYDROGRAPH AT	208J	128.	4.05	13.	4.	4.	0.08
2 COMBINED AT	C566	346.	4.05	32.	11.	11.	0.20
ROUTED TO	566567	334.	4.10	32.	11.	11.	0.20
HYDROGRAPH AT	208K	101.	4.02	8.	3.	3.	0.05
2 COMBINED AT	C567L	413.	4.07	40.	14.	14.	0.25
HYDROGRAPH AT	208L	108.	4.03	10.	3.	3.	0.06
2 COMBINED AT	C567	517.	4.05	50.	17.	17.	0.31
ROUTED TO	567568	497.	4.17	50.	17.	17.	0.31
HYDROGRAPH AT	208M	289.	4.05	29.	10.	10.	0.16
2 COMBINED AT	C568R	720.	4.12	79.	26.	26.	0.46
2 COMBINED AT	C568	1231.	4.18	169.	57.	57.	1.07
ROUTED TO	568573	1214.	4.23	169.	57.	57.	1.07
HYDROGRAPH AT	208N	79.	4.07	9.	3.	3.	0.05
2 COMBINED AT	C573L	1246.	4.23	177.	60.	60.	1.12
HYDROGRAPH AT							

+	208O	410.	4.05	38.	13.	13.	0.23
+	ROUTED TO 569570	404.	4.08	37.	13.	13.	0.23
+	HYDROGRAPH AT 208P	127.	4.02	11.	4.	4.	0.06
+	2 COMBINED AT C570R	514.	4.05	48.	16.	16.	0.29
+	HYDROGRAPH AT 208Q	161.	4.05	16.	5.	5.	0.09
+	2 COMBINED AT C570	674.	4.05	64.	22.	22.	0.38
+	HYDROGRAPH AT 208R	22.	4.02	2.	1.	1.	0.01
+	ROUTED TO 571572	21.	4.05	2.	1.	1.	0.01
+	2 COMBINED AT C572	695.	4.05	66.	22.	22.	0.39
+	ROUTED TO 572573	690.	4.08	66.	22.	22.	0.39
+	HYDROGRAPH AT 208S	142.	4.03	13.	4.	4.	0.07
+	2 COMBINED AT C573R	821.	4.07	80.	27.	27.	0.46
+	2 COMBINED AT C573	1573.	4.18	249.	84.	84.	1.58
+	HYDROGRAPH AT 208T	262.	4.03	22.	7.	7.	0.13
+	HYDROGRAPH AT 208U	303.	4.02	22.	7.	7.	0.13
+	2 COMBINED AT C574	561.	4.02	44.	15.	15.	0.27
+	ROUTED TO 574575	557.	4.03	44.	15.	15.	0.27
+	HYDROGRAPH AT 208V	60.	4.02	5.	2.	2.	0.03
+	2 COMBINED AT C575	616.	4.03	49.	16.	16.	0.29
+	ROUTED TO 575576	601.	4.07	48.	16.	16.	0.29
+	HYDROGRAPH AT 208W	104.	4.02	8.	3.	3.	0.05
+	2 COMBINED AT C576	697.	4.05	57.	19.	19.	0.34
+	ROUTED TO 576577	694.	4.07	57.	19.	19.	0.34
+	2 COMBINED AT C577	1864.	4.13	299.	101.	101.	1.92
+	ROUTED TO 577578	1855.	4.17	299.	101.	101.	1.92
+	HYDROGRAPH AT 208X	147.	4.03	12.	4.	4.	0.08
+	2 COMBINED AT C578I	1899.	4.15	309.	104.	104.	2.00
+	ROUTED TO C578O	311.	5.05	272.	104.	104.	2.00
+	ROUTED TO 578587	311.	5.10	272.	104.	104.	2.00
+	HYDROGRAPH AT 210B	179.	4.05	17.	6.	6.	0.11
+	ROUTED TO C586O	161.	4.12	17.	6.	6.	0.11
+	ROUTED TO 586587	160.	4.17	17.	6.	6.	0.11
+	2 COMBINED AT C587	378.	4.27	285.	109.	109.	2.11
+	ROUTED TO 587595	378.	4.30	285.	109.	109.	2.11

+	HYDROGRAPH AT	210C	139.	4.05	11.	4.	4.	0.08
+	2 COMBINED AT	C595L	427.	4.20	292.	112.	112.	2.19
+	HYDROGRAPH AT	210D	268.	4.03	22.	7.	7.	0.14
+	ROUTED TO	588590	264.	4.07	22.	7.	7.	0.14
+	HYDROGRAPH AT	210E	56.	4.03	4.	1.	1.	0.03
+	2 COMBINED AT	C590L	316.	4.05	26.	9.	9.	0.17
+	HYDROGRAPH AT	210F	183.	4.03	15.	5.	5.	0.09
+	ROUTED TO	589590	177.	4.07	15.	5.	5.	0.09
+	HYDROGRAPH AT	210G	297.	4.05	26.	9.	9.	0.16
+	2 COMBINED AT	C590R	471.	4.05	41.	14.	14.	0.25
+	2 COMBINED AT	C590	787.	4.05	66.	22.	22.	0.42
+	HYDROGRAPH AT	210H	141.	4.03	10.	3.	3.	0.07
+	ROUTED TO	592593	134.	4.07	10.	3.	3.	0.07
+	2 COMBINED AT	C593	919.	4.05	76.	26.	26.	0.49
+	ROUTED TO	593594	906.	4.08	76.	26.	26.	0.49
+	HYDROGRAPH AT	210I	89.	4.05	8.	3.	3.	0.05
+	2 COMBINED AT	C594	968.	4.08	84.	28.	28.	0.54
+	ROUTED TO	594595	926.	4.17	84.	28.	28.	0.54
+	HYDROGRAPH AT	210J	193.	4.05	15.	5.	5.	0.10
+	2 COMBINED AT	C595R	1003.	4.15	97.	33.	33.	0.64
+	2 COMBINED AT	C595	1023.	4.17	371.	140.	140.	2.83
+	ROUTED TO	595596	1019.	4.22	371.	140.	140.	2.83
+	HYDROGRAPH AT	210K	166.	4.02	11.	4.	4.	0.08
+	2 COMBINED AT	C596	1068.	4.22	379.	143.	143.	2.91
+	HYDROGRAPH AT	209A	491.	4.15	53.	18.	18.	0.37
+	ROUTED TO	579580	488.	4.18	53.	18.	18.	0.37
+	HYDROGRAPH AT	209C	96.	4.07	10.	3.	3.	0.06
+	2 COMBINED AT	C580R	563.	4.17	63.	21.	21.	0.43
+	HYDROGRAPH AT	209B	158.	4.03	14.	5.	5.	0.08
+	2 COMBINED AT	C580	657.	4.13	76.	26.	26.	0.51
+	ROUTED TO	580581	651.	4.18	76.	26.	26.	0.51
+	HYDROGRAPH AT	209D	481.	4.03	39.	13.	13.	0.24
+	2 COMBINED AT	C581R	911.	4.08	112.	38.	38.	0.76
+	HYDROGRAPH AT	209E	260.	4.05	24.	8.	8.	0.15

+	2 COMBINED AT	C581	1080.	4.07	134.	45.	45.	0.91
+	ROUTED TO	581582	1059.	4.13	134.	45.	45.	0.91
+	HYDROGRAPH AT	209F	213.	4.25	32.	11.	11.	0.23
+	2 COMBINED AT	C582R	1151.	4.15	162.	54.	54.	1.13
+	HYDROGRAPH AT	209G	368.	4.05	33.	11.	11.	0.20
+	2 COMBINED AT	C582	1317.	4.13	191.	64.	64.	1.34
+	ROUTED TO	582583	1303.	4.17	191.	64.	64.	1.34
+	HYDROGRAPH AT	209H	135.	4.07	11.	4.	4.	0.08
+	2 COMBINED AT	C583	1355.	4.17	200.	67.	67.	1.42
+	ROUTED TO	583584	1332.	4.25	200.	67.	67.	1.42
+	HYDROGRAPH AT	209I	359.	4.03	24.	8.	8.	0.18
+	2 COMBINED AT	C584I	1399.	4.23	221.	74.	74.	1.60
+	ROUTED TO	C584O	341.	4.95	215.	74.	74.	1.60
+	ROUTED TO	584597	341.	5.12	215.	74.	74.	1.60
+	HYDROGRAPH AT	210L	237.	4.05	17.	6.	6.	0.14
+	2 COMBINED AT	C597	371.	4.28	229.	79.	79.	1.74
+	ROUTED TO	597598	369.	4.38	229.	79.	79.	1.74
+	HYDROGRAPH AT	210M	263.	4.07	22.	7.	7.	0.16
+	2 COMBINED AT	C598	468.	4.28	246.	85.	85.	1.90
+	HYDROGRAPH AT	210N	95.	4.02	6.	2.	2.	0.05
+	4 COMBINED AT	C599I	1549.	4.27	756.	288.	288.	7.13
+	ROUTED TO	C599O	751.	6.87	657.	288.	288.	7.13
+	ROUTED TO	599608	751.	6.92	657.	288.	288.	7.13
+	HYDROGRAPH AT	211K	225.	4.02	15.	5.	5.	0.10
+	2 COMBINED AT	C608L	749.	6.93	659.	291.	291.	7.24
+	HYDROGRAPH AT	211G	11.	4.07	2.	1.	1.	0.01
+	ROUTED TO	604606	10.	4.25	2.	1.	1.	0.01
+	HYDROGRAPH AT	211I	71.	4.05	7.	2.	2.	0.04
+	2 COMBINED AT	C606R	77.	4.05	9.	3.	3.	0.05
+	HYDROGRAPH AT	211H	150.	4.02	10.	3.	3.	0.07
+	ROUTED TO	C605O	103.	4.10	10.	3.	3.	0.07
+	2 COMBINED AT	C606	178.	4.07	18.	6.	6.	0.12
+	ROUTED TO	606607	175.	4.10	18.	6.	6.	0.12
	HYDROGRAPH AT							

	211J	31.	4.02	2.	1.	1.	0.01
2 COMBINED AT	C607	199.	4.08	21.	7.	7.	0.14
ROUTED TO	607608	197.	4.12	21.	7.	7.	0.14
2 COMBINED AT	C608	748.	6.92	671.	297.	297.	7.37
ROUTED TO	608613	748.	6.97	671.	297.	297.	7.37
HYDROGRAPH AT	211M	171.	4.03	14.	5.	5.	0.08
ROUTED TO	610611	166.	4.05	14.	5.	5.	0.08
HYDROGRAPH AT	211N	45.	4.02	4.	1.	1.	0.02
2 COMBINED AT	C611R	208.	4.03	18.	6.	6.	0.10
HYDROGRAPH AT	211O	89.	4.02	7.	2.	2.	0.04
ROUTED TO	C609O	53.	4.12	7.	2.	2.	0.04
ROUTED TO	609611	52.	4.13	7.	2.	2.	0.04
2 COMBINED AT	C611I	255.	4.05	25.	8.	8.	0.14
ROUTED TO	C611O	133.	4.23	24.	8.	8.	0.14
DIVERSION TO	D611R	133.	4.23	24.	8.	8.	0.14
HYDROGRAPH AT	D611L	0.	0.02	0.	0.	0.	0.14
ROUTED TO	611612	0.	0.02	0.	0.	0.	0.14
HYDROGRAPH AT	211P	75.	4.02	6.	2.	2.	0.03
2 COMBINED AT	C612	75.	4.02	6.	2.	2.	0.17
2 COMBINED AT	C613	746.	6.97	673.	298.	298.	7.55
ROUTED TO	613621	746.	6.98	673.	298.	298.	7.55
HYDROGRAPH AT	211L	189.	4.03	15.	5.	5.	0.10
2 COMBINED AT	C621L	793.	4.10	679.	301.	301.	7.64
HYDROGRAPH AT	211Q	46.	4.02	3.	1.	1.	0.02
ROUTED TO	616617	44.	4.05	3.	1.	1.	0.02
HYDROGRAPH AT	211R	171.	4.03	13.	4.	4.	0.08
2 COMBINED AT	C617L	215.	4.03	17.	6.	6.	0.10
HYDROGRAPH AT	211U	35.	4.07	5.	2.	2.	0.03
DIVERSION TO	D614R	25.	4.07	3.	1.	1.	0.03
HYDROGRAPH AT	D614L	10.	4.07	2.	1.	1.	0.03
2 COMBINED AT	C617	225.	4.03	18.	6.	6.	0.13
ROUTED TO	617618	214.	4.10	18.	6.	6.	0.13
HYDROGRAPH AT	211S	82.	4.07	7.	2.	2.	0.05
2 COMBINED AT	C618I	291.	4.08	26.	9.	9.	0.18

+	ROUTED TO C618O	273.	4.13	20.	9.	9.	0.18
+	HYDROGRAPH AT BB614R	25.	4.07	3.	1.	1.	0.03
+	ROUTED TO 614615	24.	4.12	3.	1.	1.	0.03
+	HYDROGRAPH AT 211V	10.	4.03	1.	0.	0.	0.00
+	2 COMBINED AT C615	32.	4.08	4.	2.	2.	0.03
+	DIVERSION TO D615R	11.	4.08	1.	0.	0.	0.03
+	HYDROGRAPH AT D615L	21.	4.08	3.	1.	1.	0.03
+	ROUTED TO 615618	21.	4.10	3.	1.	1.	0.03
+	2 COMBINED AT C618	294.	4.13	23.	10.	10.	0.19
+	ROUTED TO 618619	283.	4.22	23.	10.	10.	0.19
+	HYDROGRAPH AT 211T	145.	4.02	13.	4.	4.	0.07
+	2 COMBINED AT C619L	338.	4.20	35.	14.	14.	0.26
+	HYDROGRAPH AT BB615R	11.	4.08	1.	0.	0.	0.03
+	ROUTED TO 615619	11.	4.20	1.	0.	0.	0.03
+	2 COMBINED AT C619I	349.	4.20	36.	14.	14.	0.25
+	ROUTED TO C619O	175.	4.40	36.	14.	14.	0.25
+	DIVERSION TO D619L	0.	0.02	0.	0.	0.	0.25
+	HYDROGRAPH AT D619R	175.	4.40	36.	14.	14.	0.25
+	ROUTED TO 619620	175.	4.42	36.	14.	14.	0.25
+	HYDROGRAPH AT BB619L	0.	0.02	0.	0.	0.	0.25
+	ROUTED TO 619620	0.	0.02	0.	0.	0.	0.25
+	HYDROGRAPH AT 211W	69.	4.02	6.	2.	2.	0.03
+	3 COMBINED AT C620R	201.	4.03	42.	16.	16.	0.28
+	HYDROGRAPH AT BB611R	133.	4.23	24.	8.	8.	0.14
+	ROUTED TO 611620	133.	4.25	24.	8.	8.	0.14
+	2 COMBINED AT C620	321.	4.27	66.	24.	24.	0.42
+	ROUTED TO 620621	321.	4.28	66.	24.	24.	0.42
+	2 COMBINED AT C621	998.	4.33	723.	321.	321.	7.93
+	ROUTED TO 621622	990.	4.43	722.	321.	321.	7.93
+	HYDROGRAPH AT 211X	372.	4.07	38.	13.	13.	0.21
+	2 COMBINED AT C622R	1125.	4.25	741.	331.	331.	8.14
+	HYDROGRAPH AT 211A	260.	4.05	20.	7.	7.	0.14
+	ROUTED TO C600O	236.	4.10	20.	7.	7.	0.14
+	ROUTED TO 600601	231.	4.15	20.	7.	7.	0.14

+	HYDROGRAPH AT	211B	213.	4.03	15.	5.	5.	0.11
+	2 COMBINED AT	C601	396.	4.07	35.	12.	12.	0.25
+	ROUTED TO	601602	388.	4.12	35.	12.	12.	0.25
+	HYDROGRAPH AT	211C	80.	4.05	7.	2.	2.	0.04
+	2 COMBINED AT	C602L	455.	4.10	42.	14.	14.	0.30
+	HYDROGRAPH AT	211D	100.	4.07	10.	3.	3.	0.07
+	2 COMBINED AT	C602	552.	4.10	52.	18.	18.	0.37
+	ROUTED TO	602603	538.	4.17	52.	18.	18.	0.37
+	HYDROGRAPH AT	211E	306.	4.05	25.	8.	8.	0.16
+	2 COMBINED AT	C603	742.	4.12	77.	26.	26.	0.52
+	ROUTED TO	603622	728.	4.20	77.	26.	26.	0.52
+	HYDROGRAPH AT	211F	196.	4.07	20.	7.	7.	0.11
+	2 COMBINED AT	C622L	829.	4.17	96.	32.	32.	0.63
+	2 COMBINED AT	C622	1551.	4.23	803.	355.	355.	8.78
+	ROUTED TO	622549	1541.	4.35	802.	355.	355.	8.78
+	HYDROGRAPH AT	211Y	164.	4.07	16.	5.	5.	0.09
+	2 COMBINED AT	C549R	1594.	4.35	810.	359.	359.	8.87
+	2 COMBINED AT	C549	2118.	4.35	1064.	454.	454.	13.06
+	ROUTED TO	549626	2102.	4.47	1063.	454.	454.	13.06
+	HYDROGRAPH AT	211Z	141.	4.05	12.	4.	4.	0.08
+	2 COMBINED AT	C626C	2121.	4.47	1066.	456.	456.	13.14
+	HYDROGRAPH AT	211AA	56.	4.07	6.	2.	2.	0.03
+	ROUTED TO	625626	54.	4.12	6.	2.	2.	0.03
+	HYDROGRAPH AT	211AB	96.	4.00	8.	3.	3.	0.04
+	ROUTED TO	623624	95.	4.02	8.	3.	3.	0.04
+	HYDROGRAPH AT	211AC	56.	4.03	5.	2.	2.	0.03
+	2 COMBINED AT	C624	151.	4.02	13.	4.	4.	0.07
+	ROUTED TO	624626	147.	4.07	13.	4.	4.	0.07
+	HYDROGRAPH AT	211AD	86.	4.03	8.	3.	3.	0.04
+	2 COMBINED AT	C626R	231.	4.05	20.	7.	7.	0.11
+	3 COMBINED AT	C626	2184.	4.45	1078.	463.	463.	13.28
+	ROUTED TO	626627	2183.	4.47	1078.	463.	463.	13.28
+	HYDROGRAPH AT	211AE	69.	4.03	6.	2.	2.	0.03
+	2 COMBINED AT							

+	C627	2193.	4.47	1080.	464.	464.	13.32

*** NORMAL END OF HEC-1 ***

APPENDIX C

FLOOD ROUTING MODELS (HEC-1)

IDF2

IDF1

100-YEAR, FUTURE CONDITION (6-HOUR)

10-YEAR, FUTURE CONDITION (6-HOUR)

```
****************************************
*                                      *
*   FLOOD HYDROGRAPH PACKAGE  (HEC-1)  *
*              MAY   1991              *
*           VERSION 4.0.1E             *
*     Lahey F77L-EM/32 version 5.01    *
*        Dodson & Associates, Inc.     *
*        DATE  09/11/99  TIME  12:30:27 *
****************************************
```

```
****************************************
*                                      *
*    U.S. ARMY CORPS OF ENGINEERS      *
*    HYDROLOGIC ENGINEERING CENTER     *
*          609 SECOND STREET           *
*       DAVIS, CALIFORNIA 95616        *
*           (916) 551-1748             *
*                                      *
****************************************
```

```
X     X  XXXXXXX   XXXXX          X
X     X  X        X     X        XX
X     X  X        X              X
XXXXXXX  XXXX     X        XXXXX X
X     X  X        X              X
X     X  X        X     X        X
X     X  XXXXXXX   XXXXX        XXX
```

THIS PROGRAM REPLACES ALL PREVIOUS VERSIONS OF HEC-1 KNOWN AS HEC1 (JAN 73), HEC1GS, HEC1DB, AND HEC1KW.

THE DEFINITIONS OF VARIABLES -RTIMP- AND -RTIOR- HAVE CHANGED FROM THOSE USED WITH THE 1973-STYLE INPUT STRUCTURE.
THE DEFINITION OF -AMSKK- ON RM-CARD WAS CHANGED WITH REVISIONS DATED 28 SEP 81. THIS IS THE FORTRAN77 VERSION
NEW OPTIONS: DAMBREAK OUTFLOW SUBMERGENCE , SINGLE EVENT DAMAGE CALCULATION, DSS:WRITE STAGE FREQUENCY,
DSS:READ TIME SERIES AT DESIRED CALCULATION INTERVAL LOSS RATE:GREEN AND AMPT INFILTRATION
KINEMATIC WAVE: NEW FINITE DIFFERENCE ALGORITHM

```
LINE          ID.......1.......2.......3.......4.......5.......6.......7.......8.......9......10

  1           ID   ACCOUNTS FOR TRASH RACK LOSSES AT THE PRINCIPAL INLET - 50% CLOGG
  2           ID
  3           ID        FILENAME:IDF2-B.IH2  RJS 8-10-99
  4           ID        ALTERNATIVE "F" FOR IDF2 - NO BREACH OF NORTH HEIGHTS DAM
  5           ID        PROPOSED AUXILIARY SPILLWAY 8'X4', ENLARGED EMERGENCY OUTLET Lee=120'
  6           ID        NO ADDITION TO EXISTING PRINCIPAL OUTLET
  7           ID
  8           ID        GOLDEN EAGLE PARK DAM (FCD 97-44)
  9           ID        IDF2 Model for the Computation of IDF for Golden Eagle Park Dam
 10           ID        ***************************************************************
 11           ID        Analytical Considerations:
 12           ID            Without Upstream Dam Breach
 13           ID        ***************************************************************
 14           ID
 15           ID
 16           ID    THIS MODEL WAS DERIVED FROM THE ORIGINAL MODEL- IDF2.DAT (10-98)FCDMC WHICH
 17           ID    WAS BASED ON THE MODEL GEPD-PMF.DAT FOR THE GOLDEN EAGLE PARK DAM
 18           ID    FEASIBILITY STUDY DONE BY GEORGE V.
 19           ID    SABOL CONSULTING ENGINEERS, INC. (GVSCE), JULY 1997
 20           ID
 21           ID       THIS MODEL HAS UNDERGONE THE FOLLOWING ADJUSTMENTS (BY FCDMC):
 22           ID          1.)  NORTH HEIGHTS DAM IN THIS MODEL DOES NOT BREACH
 23           ID          2.)  BEFORE THE FLOW FROM EACH WATERSHED IS ROUTED THROUGH THEIR
 24           ID               RESPECTIVE DAMS,  HALF THE FLOW IS DIVERTED OUT TO REFLECT
 25           ID               THE HALF PMF EVENT.
 26           ID               THE FLOWS FROM BETWEEN THE UPPER DAMS AND GEPD HAS ALSO BEEN
 27           ID               HALVED
 28           ID          3.)  THE RATING CURVES FOR THE DAMS WERE ALTERED USING THE
 29           ID               EQUATION Q=CLH3/2 TO INCREASE THE LENGTH OF THE SPILLWAY
 30           ID               SO THAT THE HALF PMF WILL PASS THROUGH THE SPILLWAY WITH
 31           ID               THE REQUIRED THREE FEET OF FREEBOARD
 32           ID               C = 2.6
 33           ID          4.)  THE PRINCIPLE SPILLWAYS WERE MODELED AS UNCLOGGED
 34           ID          5.)  THE INITIAL WATER SURFACE ELEVATION WAS SET TO THE
 35           ID               HEIGHT OF THE 100 YEAR EVENT WSEL
 36           ID          NOTE:MODIFICATIONS BY STANTEC ARE EDITORIAL ONLY. THE ORIGINAL GVSCE
 37           ID               MODEL AND REVISIONS BY FCDMC ARE ACCEPTED. THE ROUTING (BY FCDMC)
 38           ID               OF THE IDF2 HYDROGRAPH THROUGH THE EXISTING GEP DAM IS DELETED.
              *DIAGRAM
 39           IT       5 02JUN98             200
 40           IO       4
 41           IN      15
              *
              * IDF2 INFLOW HYDROGRAPH - NO BREACH AT GOLDEN HEIGHTS DAM
              *

 42           KK    IDF2
 43           KO       1                              22
 44           KM    INFLOW FROM NORTH HEIGHTS DAM AND WATERSHED
 45           KM    THIS HYDROGRAPH WAS TABULATED BY THE HEC1 MODEL
 46           KM    FOR GOLDEN EAGLE PARK DAM - IDF2.DAT (FCDMC REVISED FROM GEPD-PMF.DAT BY
 47           KM    GVSCE, 7-97).
 48           IN       5
 49           BA    7.13
 50           QI    6249    5380    3895    2851    2194    1815    1578    1428    1322    1242
```

```
LINE          ID.......1.......2.......3.......4.......5.......6.......7.......8.......9......10

  51          QI    1181    1131    1091    1061    1047    1038    1030    1027    1028    1032
  52          QI    1041    1050    1059    1067    1074    1849    4636    9374   16212   23350
  53          QI   25850   26516   24925   21640   18324   15492   13277   11364    9872    8548
  54          QI    7506    6569    5744    5066    4538    4163    3877    3630    3416    3218
  55          QI    2987    2721    2477    2242    2051    1908    1797    1714    1649    1597
  56          QI    1551    1504    1443    1376    1324    1280    1241    1206    1174    1144
  57          QI    1116    1089    1064    1039    1013     986     963     948     939     933
  58          QI     927     922     918     913     908     903     899     894     889     883
  59          QI     876     868     860     852     844     834     823     811     797     782
  60          QI     764     743     710     672     641     616     595     578     563     551
  61          QI     543     535     527     519     511     504     497     489     483     476
  62          QI     469     463     457     451     445     439     432     425     417     409
  63          QI     401     393     386     378     370     355     331     304     280     258
  64          QI     240     224     210     198     188     180     173     167     163     158
  65          QI     154     150     146     142     139     136     133     130     127     124
  66          QI     121     119     116     114     111     109     106     104      98      91
  67          QI      83      78      73      67      62      57      52      47      43      39
  68          QI      35      32      29      26      24      21      19      18      16      14
  69          QI      13      12      11      10       9       8       7       7       6       0
  70          QI    5380    2851    1815    1428 1242.45 1131.41 1060.59 1038.05 1027.34 1032.14
  71          QI  1049.9  1066.9 1849.29 9374.0523349.6226516.0521639.9515491.9311364.07 8547.55
  72          QI  6568.7  5065.6  4162.7  3629.6  3217.9  2720.9  2242.4  1908.2  1714.3  1597.2
  73          QI  1504.1  1375.7  1279.9  1206.0  1143.7  1089.3  1039.3     986   948.1   932.9
  74          QI   922.5   912.9   903.4     894   882.6   868.2   852.4   834.3   810.6   781.9
  75          QI   743.3   672.1   615.7   577.7   551.3   535.1   519.2   503.9   489.4   475.8
  76          QI   463.0   450.9   438.6   424.5   409.1   393.4     378   354.8   304.5   257.6
  77          QI   223.6   198.2   179.9   167.3   158.1   149.9   142.5   135.8   129.6   123.9
  78          QI   118.5   113.5   108.8   103.7    90.8    77.7    67.3    56.6      47    38.8
  79          QI    31.9    26.2    21.5    17.6    14.5    11.9     9.7       8     6.5     5.4
              *

  80          KK   C5990
  81          KO       1                                  21
  82          KM      Reservoir route at C599 (Dam 4 - GEPD). New Stage-Storage Curve 3/4/99
  83          RS       1    ELEV  1694.7
  84          SV    0.00    0.02    0.08    0.24    0.93    2.29    7.17   18.89   36.08   58.41
  85          SV   86.41   99.21  105.97  112.96  120.18   127.6  146.86  154.86  158.92  378.27
  86          SE  1694.6    1698    1699    1700    1702    1704    1706    1708    1710    1712
  87          SE    1714  1714.8  1715.2  1715.6    1716  1716.4  1717.4  1717.8    1718    1728
  88          SQ       0      78     216     443     633     785     907    1017    1113    1199
  89          SQ    1279    1300    1314    2514    9464   17797   21634   27860   36994   49907
  90          SE  1694.6  1696.0  1698.0  1700.0  1702.0  1704.0  1706.0  1708.0  1710.0  1712.0
  91          SE  1714.0  1714.5 1714.86    1716    1719  1721.5  1722.5    1724    1726    1728
  92          RL                   0.97
              *
              * * End Basin 210.  Start Basin 211
  93          ZZ
```

SCHEMATIC DIAGRAM OF STREAM NETWORK

```
INPUT
 LINE        (V) ROUTING          (--->) DIVERSION OR PUMP FLOW

  NO         (.) CONNECTOR        (<---) RETURN OF DIVERTED OR PUMPED FLOW

              IDF2
                 V
                 V
   80         C5990
```

(***) RUNOFF ALSO COMPUTED AT THIS LOCATION

```
****************************************
*                                      *
*   FLOOD HYDROGRAPH PACKAGE  (HEC-1)  *
*              MAY   1991              *
*            VERSION 4.0.1E            *
*     Lahey F77L-EM/32 version 5.01    *
*        Dodson & Associates, Inc.     *
*        DATE  09/11/99  TIME  12:30:27 *
****************************************
```

```
****************************************
*                                      *
*    U.S. ARMY CORPS OF ENGINEERS      *
*    HYDROLOGIC ENGINEERING CENTER     *
*          609 SECOND STREET           *
*       DAVIS, CALIFORNIA 95616        *
*           (916) 551-1748             *
*                                      *
****************************************
```

ACCOUNTS FOR TRASH RACK LOSSES AT THE PRINCIPAL INLET - 50% CLOGG

FILENAME:IDF2-B.IH2 RJS 8-10-99
ALTERNATIVE "F" FOR IDF2 - NO BREACH OF NORTH HEIGHTS DAM
PROPOSED AUXILIARY SPILLWAY 8'X4', ENLARGED EMERGENCY OUTLET Lee=120'
NO ADDITION TO EXISTING PRINCIPAL OUTLET

GOLDEN EAGLE PARK DAM (FCD 97-44)
IDF2 Model for the Computation of IDF for Golden Eagle Park Dam
****
Analytical Considerations:
Without Upstream Dam Breach
****

THIS MODEL WAS DERIVED FROM THE ORIGINAL MODEL- IDF2.DAT (10-98)FCDMC WHICH
WAS BASED ON THE MODEL GEPD-PMF.DAT FOR THE GOLDEN EAGLE PARK DAM.
FEASIBILITY STUDY DONE BY GEORGE V.
SABOL CONSULTING ENGINEERS, INC. (GVSCE), JULY 1997

THIS MODEL HAS UNDERGONE THE FOLLOWING ADJUSTMENTS (BY FCDMC):

1.) NORTH HEIGHTS DAM IN THIS MODEL DOES NOT BREACH
2.) BEFORE THE FLOW FROM EACH WATERSHED IS ROUTED THROUGH THEIR RESPECTIVE DAMS, HALF THE FLOW IS DIVERTED OUT TO REFLECT THE HALF PMF EVENT.
THE FLOWS FROM BETWEEN THE UPPER DAMS AND GEPD HAS ALSO BEEN HALVED
3.) THE RATING CURVES FOR THE DAMS WERE ALTERED USING THE EQUATION Q=CLH3/2 TO INCREASE THE LENGTH OF THE SPILLWAY SO THAT THE HALF PMF WILL PASS THROUGH THE SPILLWAY WITH THE REQUIRED THREE FEET OF FREEBOARD
C = 2.6
4.) THE PRINCIPLE SPILLWAYS WERE MODELED AS UNCLOGGED
5.) THE INITIAL WATER SURFACE ELEVATION WAS SET TO THE HEIGHT OF THE 100 YEAR EVENT WSEL

NOTE:MODIFICATIONS BY STANTEC ARE EDITORIAL ONLY. THE ORIGINAL GVSCE MODEL AND REVISIONS BY FCDMC ARE ACCEPTED. THE ROUTING (BY FCDMC) OF THE IDF2 HYDROGRAPH THROUGH THE EXISTING GEP DAM IS DELETED.

```
40 IO        OUTPUT CONTROL VARIABLES
                  IPRNT          4  PRINT CONTROL
                  IPLOT          0  PLOT CONTROL
                  QSCAL         0.  HYDROGRAPH PLOT SCALE

   IT        HYDROGRAPH TIME DATA
                   NMIN          5  MINUTES IN COMPUTATION INTERVAL
                  IDATE     2JUN98  STARTING DATE
                  ITIME       0000  STARTING TIME
                     NQ        200  NUMBER OF HYDROGRAPH ORDINATES
                 NDDATE     2JUN98  ENDING DATE
                 NDTIME       1635  ENDING TIME
                  ICENT         19  CENTURY MARK

          COMPUTATION INTERVAL    0.08 HOURS
               TOTAL TIME BASE   16.58 HOURS

     ENGLISH UNITS
          DRAINAGE AREA          SQUARE MILES
          PRECIPITATION DEPTH    INCHES
          LENGTH, ELEVATION      FEET
          FLOW                   CUBIC FEET PER SECOND
          STORAGE VOLUME         ACRE-FEET
          SURFACE AREA           ACRES
          TEMPERATURE            DEGREES FAHRENHEIT
```

```
*** *** *** *** *** *** *** *** *** *** *** *** *** *** *** *** *** *** *** *** *** *** *** *** *** *** *** *** *** *** *** *** *** *** ***

              **************
              *            *
42 KK         *     IDF2   *
              *            *
              **************

43 KO          OUTPUT CONTROL VARIABLES
                     IPRNT          1  PRINT CONTROL
                     IPLOT          0  PLOT CONTROL
                     QSCAL         0.  HYDROGRAPH PLOT SCALE
                     IPNCH          0  PUNCH COMPUTED HYDROGRAPH
                      IOUT         22  SAVE HYDROGRAPH ON THIS UNIT
                     ISAV1          1  FIRST ORDINATE PUNCHED OR SAVED
                     ISAV2        200  LAST ORDINATE PUNCHED OR SAVED
                    TIMINT      0.083  TIME INTERVAL IN HOURS

                         INFLOW FROM NORTH HEIGHTS DAM AND WATERSHED
                         THIS HYDROGRAPH WAS TABULATED BY THE HEC1 MODEL
                         FOR GOLDEN EAGLE PARK DAM - IDF2.DAT (FCDMC REVISED FROM GEPD-PMF.DAT BY
                         GVSCE, 7-97).

48 IN          TIME DATA FOR INPUT TIME SERIES
                     JXMIN          5  TIME INTERVAL IN MINUTES
                    JXDATE     2JUN98  STARTING DATE
                    JXTIME          0  STARTING TIME

            SUBBASIN RUNOFF DATA

49 BA          SUBBASIN CHARACTERISTICS
                     TAREA       7.13  SUBBASIN AREA

                                                                  ***

*****************************************************************************************************************************
```

HYDROGRAPH AT STATION IDF2

DA	MON	HRMN	ORD	FLOW	DA	MON	HRMN	ORD	FLOW	DA	MON	HRMN	ORD	FLOW	DA	MON	HRMN	ORD	FLOW
2	JUN	0000	1	6249.	2	JUN	0410	51	2987.	2	JUN	0820	101	764.	2	JUN	1230	151	154.
2	JUN	0005	2	5380.	2	JUN	0415	52	2721.	2	JUN	0825	102	743.	2	JUN	1235	152	150.
2	JUN	0010	3	3895.	2	JUN	0420	53	2477.	2	JUN	0830	103	710.	2	JUN	1240	153	146.
2	JUN	0015	4	2851.	2	JUN	0425	54	2242.	2	JUN	0835	104	672.	2	JUN	1245	154	142.
2	JUN	0020	5	2194.	2	JUN	0430	55	2051.	2	JUN	0840	105	641.	2	JUN	1250	155	139.
2	JUN	0025	6	1815.	2	JUN	0435	56	1908.	2	JUN	0845	106	616.	2	JUN	1255	156	136.
2	JUN	0030	7	1578.	2	JUN	0440	57	1797.	2	JUN	0850	107	595.	2	JUN	1300	157	133.
2	JUN	0035	8	1428.	2	JUN	0445	58	1714.	2	JUN	0855	108	578.	2	JUN	1305	158	130.
2	JUN	0040	9	1322.	2	JUN	0450	59	1649.	2	JUN	0900	109	563.	2	JUN	1310	159	127.
2	JUN	0045	10	1242.	2	JUN	0455	60	1597.	2	JUN	0905	110	551.	2	JUN	1315	160	124.
2	JUN	0050	11	1181.	2	JUN	0500	61	1551.	2	JUN	0910	111	543.	2	JUN	1320	161	121.
2	JUN	0055	12	1131.	2	JUN	0505	62	1504.	2	JUN	0915	112	535.	2	JUN	1325	162	119.
2	JUN	0100	13	1091.	2	JUN	0510	63	1443.	2	JUN	0920	113	527.	2	JUN	1330	163	116.
2	JUN	0105	14	1061.	2	JUN	0515	64	1376.	2	JUN	0925	114	519.	2	JUN	1335	164	114.
2	JUN	0110	15	1047.	2	JUN	0520	65	1324.	2	JUN	0930	115	511.	2	JUN	1340	165	111.
2	JUN	0115	16	1038.	2	JUN	0525	66	1280.	2	JUN	0935	116	504.	2	JUN	1345	166	109.
2	JUN	0120	17	1030.	2	JUN	0530	67	1241.	2	JUN	0940	117	497.	2	JUN	1350	167	106.
2	JUN	0125	18	1027.	2	JUN	0535	68	1206.	2	JUN	0945	118	489.	2	JUN	1355	168	104.
2	JUN	0130	19	1028.	2	JUN	0540	69	1174.	2	JUN	0950	119	483.	2	JUN	1400	169	98.
2	JUN	0135	20	1032.	2	JUN	0545	70	1144.	2	JUN	0955	120	476.	2	JUN	1405	170	91.
2	JUN	0140	21	1041.	2	JUN	0550	71	1116.	2	JUN	1000	121	469.	2	JUN	1410	171	83.
2	JUN	0145	22	1050.	2	JUN	0555	72	1089.	2	JUN	1005	122	463.	2	JUN	1415	172	78.
2	JUN	0150	23	1059.	2	JUN	0600	73	1064.	2	JUN	1010	123	457.	2	JUN	1420	173	73.
2	JUN	0155	24	1067.	2	JUN	0605	74	1039.	2	JUN	1015	124	451.	2	JUN	1425	174	67.
2	JUN	0200	25	1074.	2	JUN	0610	75	1013.	2	JUN	1020	125	445.	2	JUN	1430	175	62.
2	JUN	0205	26	1849.	2	JUN	0615	76	986.	2	JUN	1025	126	439.	2	JUN	1435	176	57.
2	JUN	0210	27	4636.	2	JUN	0620	77	963.	2	JUN	1030	127	432.	2	JUN	1440	177	52.
2	JUN	0215	28	9374.	2	JUN	0625	78	948.	2	JUN	1035	128	425.	2	JUN	1445	178	47.
2	JUN	0220	29	16212.	2	JUN	0630	79	939.	2	JUN	1040	129	417.	2	JUN	1450	179	43.
2	JUN	0225	30	23350.	2	JUN	0635	80	933.	2	JUN	1045	130	409.	2	JUN	1455	180	39.
2	JUN	0230	31	25850.	2	JUN	0640	81	927.	2	JUN	1050	131	401.	2	JUN	1500	181	35.

2 JUN 0235	32	26516.	*	2 JUN 0645	82	922.	*	2 JUN 1055	132	393.	*	2 JUN 1505	182	32.
2 JUN 0240	33	24925.	*	2 JUN 0650	83	918.	*	2 JUN 1100	133	386.	*	2 JUN 1510	183	29.
2 JUN 0245	34	21640.	*	2 JUN 0655	84	913.	*	2 JUN 1105	134	378.	*	2 JUN 1515	184	26.
2 JUN 0250	35	18324.	*	2 JUN 0700	85	908.	*	2 JUN 1110	135	370.	*	2 JUN 1520	185	24.
2 JUN 0255	36	15492.	*	2 JUN 0705	86	903.	*	2 JUN 1115	136	355.	*	2 JUN 1525	186	21.
2 JUN 0300	37	13277.	*	2 JUN 0710	87	899.	*	2 JUN 1120	137	331.	*	2 JUN 1530	187	19.
[illegible] 0305	38	11364.	*	2 JUN 0715	88	894.	*	2 JUN 1125	138	304.	*	2 JUN 1535	188	18.
[illegible] 0310	39	9872.	*	2 JUN 0720	89	889.	*	2 JUN 1130	139	280.	*	2 JUN 1540	189	16.
2 JUN 0315	40	8548.	*	2 JUN 0725	90	883.	*	2 JUN 1135	140	258.	*	2 JUN 1545	190	14.
2 JUN 0320	41	7506.	*	2 JUN 0730	91	876.	*	2 JUN 1140	141	240.	*	2 JUN 1550	191	13.
2 JUN 0325	42	6569.	*	2 JUN 0735	92	868.	*	2 JUN 1145	142	224.	*	2 JUN 1555	192	12.
2 JUN 0330	43	5744.	*	2 JUN 0740	93	860.	*	2 JUN 1150	143	210.	*	2 JUN 1600	193	11.
2 JUN 0335	44	5066.	*	2 JUN 0745	94	852.	*	2 JUN 1155	144	198.	*	2 JUN 1605	194	10.
2 JUN 0340	45	4538.	*	2 JUN 0750	95	844.	*	2 JUN 1200	145	188.	*	2 JUN 1610	195	9.
2 JUN 0345	46	4163.	*	2 JUN 0755	96	834.	*	2 JUN 1205	146	180.	*	2 JUN 1615	196	8.
2 JUN 0350	47	3877.	*	2 JUN 0800	97	823.	*	2 JUN 1210	147	173.	*	2 JUN 1620	197	7.
2 JUN 0355	48	3630.	*	2 JUN 0805	98	811.	*	2 JUN 1215	148	167.	*	2 JUN 1625	198	7.
2 JUN 0400	49	3416.	*	2 JUN 0810	99	797.	*	2 JUN 1220	149	163.	*	2 JUN 1630	199	6.
2 JUN 0405	50	3218.	*	2 JUN 0815	100	782.	*	2 JUN 1225	150	158.	*	2 JUN 1635	200	0.
			*				*				*			

****

PEAK FLOW (CFS)	TIME (HR)		MAXIMUM AVERAGE FLOW 6-HR	24-HR	72-HR	16.58-HR
26516.	2.58	(CFS)	4956.	2042.	2042.	2042.
		(INCHES)	6.463	7.358	7.358	7.358
		(AC-FT)	2458.	2798.	2798.	2798.

CUMULATIVE AREA = 7.13 SQ MI

*** ***

```
              **************
              *            *
80 KK         *    C5990   *
              *            *
              **************
```

81 KO OUTPUT CONTROL VARIABLES

IPRNT	1	PRINT CONTROL
IPLOT	0	PLOT CONTROL
QSCAL	0.	HYDROGRAPH PLOT SCALE
IPNCH	0	PUNCH COMPUTED HYDROGRAPH
IOUT	21	SAVE HYDROGRAPH ON THIS UNIT
ISAV1	1	FIRST ORDINATE PUNCHED OR SAVED
ISAV2	200	LAST ORDINATE PUNCHED OR SAVED
TIMINT	0.083	TIME INTERVAL IN HOURS

Reservoir route at C599 (Dam 4 - GEPD). New Stage-Storage Curve 3/4/99

HYDROGRAPH ROUTING DATA

92 RL ROUTING LOSSES

QLOSS	0.00	INITIAL LOSS
CLOSS	0.00	ADDITIONAL FRACTION LOST
PERCRT	0.97	CHANNEL PERCOLATION RATE
ELVINV	0.00	INVERT ELEVATION

83 RS STORAGE ROUTING

NSTPS	1	NUMBER OF SUBREACHES
ITYP	ELEV	TYPE OF INITIAL CONDITION
RSVRIC	1694.70	INITIAL CONDITION
X	0.00	WORKING R AND D COEFFICIENT

84 SV STORAGE	0.0	0.0	0.1	0.2	0.9	2.3	7.2	18.9	36.1	58.4
	86.4	99.2	106.0	113.0	120.2	127.6	146.9	154.9	158.9	378.3
86 SE ELEVATION	1694.60	1698.00	1699.00	1700.00	1702.00	1704.00	1706.00	1708.00	1710.00	1712.00
	1714.00	1714.80	1715.20	1715.60	1716.00	1716.40	1717.40	1717.80	1718.00	1728.00
8[illegible] DISCHARGE	0.	78.	216.	443.	633.	785.	907.	1017.	1113.	1199.
	1279.	1300.	1314.	2514.	9464.	17797.	21634.	27860.	36994.	49907.
90 SE ELEVATION	1694.60	1696.00	1698.00	1700.00	1702.00	1704.00	1706.00	1708.00	1710.00	1712.00

1714.00 1714.50 1714.86 1716.00 1719.00 1721.50 1722.50 1724.00 1726.00 1728.00

***

COMPUTED STORAGE-OUTFLOW-ELEVATION DATA

STORAGE	0.00	0.01	0.02	0.08	0.24	0.93	2.29	7.17	18.89	36.08
OUTFLOW	0.00	78.00	216.00	329.50	443.00	633.00	785.00	907.00	1017.00	1113.00
ELEVATION	1694.60	1696.00	1698.00	1699.00	1700.00	1702.00	1704.00	1706.00	1708.00	1710.00
STORAGE	58.41	86.41	94.41	99.21	100.22	105.97	112.96	120.18	127.60	146.86
OUTFLOW	1199.00	1279.00	1300.00	1311.67	1314.00	1671.85	2092.93	2514.00	3440.72	5757.39
ELEVATION	1712.00	1714.00	1714.50	1714.80	1714.86	1715.20	1715.60	1716.00	1716.40	1717.40
STORAGE	154.86	158.92	180.85	235.69	257.63	290.53	334.40	378.27		
OUTFLOW	6684.11	7147.33	9464.00	17797.00	21634.00	27860.00	36994.00	49907.00		
ELEVATION	1717.80	1718.00	1719.00	1721.50	1722.50	1724.00	1726.00	1728.00		

*** WARNING *** MODIFIED PULS ROUTING MAY BE NUMERICALLY UNSTABLE FOR OUTFLOWS BETWEEN 0. TO 49907.
THE ROUTED HYDROGRAPH SHOULD BE EXAMINED FOR OSCILLATIONS OR OUTFLOWS GREATER THAN PEAK INFLOWS.
THIS CAN BE CORRECTED BY DECREASING THE TIME INTERVAL OR INCREASING STORAGE (USE A LONGER REACH.)

****

HYDROGRAPH AT STATION C5990

****

DA	MON	HRMN	ORD	OUTFLOW	STORAGE	STAGE	DA	MON	HRMN	ORD	OUTFLOW	STORAGE	STAGE	DA	MON	HRMN	ORD	OUTFLOW	STORAGE	STAGE
2	JUN	0000	1	6.	0.0	1694.7	2	JUN	0535	68	1314.	100.1	1714.9	2	JUN	1110	135	372.	0.1	1699.4
2	JUN	0005	2	1113.	36.2	1710.0	2	JUN	0540	69	1312.	99.3	1714.8	2	JUN	1115	136	359.	0.1	1699.3
2	JUN	0010	3	1204.	60.2	1712.1	2	JUN	0545	70	1309.	98.2	1714.7	2	JUN	1120	137	336.	0.1	1699.1
2	JUN	0015	4	1246.	74.9	1713.2	2	JUN	0550	71	1306.	97.0	1714.7	2	JUN	1125	138	305.	0.1	1698.8
2	JUN	0020	5	1271.	83.6	1713.8	2	JUN	0555	72	1303.	95.6	1714.6	2	JUN	1130	139	282.	0.1	1698.6
2	JUN	0025	6	1285.	88.7	1714.1	2	JUN	0600	73	1299.	94.1	1714.5	2	JUN	1135	140	259.	0.0	1698.4
2	JUN	0030	7	1292.	91.5	1714.3	2	JUN	0605	74	1295.	92.4	1714.4	2	JUN	1140	141	242.	0.0	1698.2
2	JUN	0035	8	1296.	92.9	1714.4	2	JUN	0610	75	1290.	90.5	1714.3	2	JUN	1145	142	225.	0.0	1698.1
2	JUN	0040	9	1297.	93.4	1714.4	2	JUN	0615	76	1285.	88.6	1714.1	2	JUN	1150	143	211.	0.0	1697.9
2	JUN	0045	10	1297.	93.3	1714.4	2	JUN	0620	77	1279.	86.4	1714.0	2	JUN	1155	144	198.	0.0	1697.7
[illegible]	[illegible]	0050	11	1296.	92.7	1714.4	2	JUN	0625	78	1273.	84.2	1713.8	2	JUN	1200	145	188.	0.0	1697.6
[illegible]	[illegible]	0055	12	1293.	91.8	1714.3	2	JUN	0630	79	1266.	82.0	1713.7	2	JUN	1205	146	180.	0.0	1697.5
2	JUN	0100	13	1290.	90.6	1714.3	2	JUN	0635	80	1260.	79.7	1713.5	2	JUN	1210	147	173.	0.0	1697.4
2	JUN	0105	14	1286.	89.1	1714.2	2	JUN	0640	81	1253.	77.5	1713.4	2	JUN	1215	148	167.	0.0	1697.3
2	JUN	0110	15	1282.	87.5	1714.1	2	JUN	0645	82	1247.	75.2	1713.2	2	JUN	1220	149	163.	0.0	1697.2
2	JUN	0115	16	1277.	85.9	1714.0	2	JUN	0650	83	1241.	73.0	1713.0	2	JUN	1225	150	158.	0.0	1697.2
2	JUN	0120	17	1273.	84.2	1713.8	2	JUN	0655	84	1234.	70.8	1712.9	2	JUN	1230	151	154.	0.0	1697.1
2	JUN	0125	18	1268.	82.5	1713.7	2	JUN	0700	85	1228.	68.6	1712.7	2	JUN	1235	152	150.	0.0	1697.0
2	JUN	0130	19	1263.	80.9	1713.6	2	JUN	0705	86	1222.	66.4	1712.6	2	JUN	1240	153	146.	0.0	1697.0
2	JUN	0135	20	1259.	79.3	1713.5	2	JUN	0710	87	1216.	64.2	1712.4	2	JUN	1245	154	142.	0.0	1696.9
2	JUN	0140	21	1254.	77.8	1713.4	2	JUN	0715	88	1209.	62.0	1712.3	2	JUN	1250	155	139.	0.0	1696.9
2	JUN	0145	22	1250.	76.4	1713.3	2	JUN	0720	89	1203.	59.9	1712.1	2	JUN	1255	156	136.	0.0	1696.8
2	JUN	0150	23	1246.	75.0	1713.2	2	JUN	0725	90	1196.	57.7	1711.9	2	JUN	1300	157	133.	0.0	1696.8
2	JUN	0155	24	1243.	73.8	1713.1	2	JUN	0730	91	1188.	55.5	1711.7	2	JUN	1305	158	130.	0.0	1696.8
2	JUN	0200	25	1240.	72.6	1713.0	2	JUN	0735	92	1180.	53.4	1711.6	2	JUN	1310	159	127.	0.0	1696.7
2	JUN	0205	26	1244.	74.1	1713.1	2	JUN	0740	93	1171.	51.2	1711.4	2	JUN	1315	160	124.	0.0	1696.7
2	JUN	0210	27	1282.	87.8	1714.1	2	JUN	0745	94	1163.	49.1	1711.2	2	JUN	1320	161	121.	0.0	1696.6
2	JUN	0215	28	2754.	122.1	1716.1	2	JUN	0750	95	1155.	47.0	1711.0	2	JUN	1325	162	119.	0.0	1696.6
2	JUN	0220	29	8479.	171.5	1718.6	2	JUN	0755	96	1147.	44.8	1710.8	2	JUN	1330	163	116.	0.0	1696.6
2	JUN	0225	30	15960.	223.6	1720.9	2	JUN	0800	97	1138.	42.7	1710.6	2	JUN	1335	164	114.	0.0	1696.5
2	JUN	0230	31	22315.	261.2	1722.7	2	JUN	0805	98	1130.	40.5	1710.4	2	JUN	1340	165	111.	0.0	1696.5
2	JUN	0235	32	25367.	277.4	1723.4	2	JUN	0810	99	1121.	38.3	1710.2	2	JUN	1345	166	109.	0.0	1696.4
2	JUN	0240	33	25646.	278.8	1723.5	2	JUN	0815	100	1113.	36.0	1710.0	2	JUN	1350	167	106.	0.0	1696.4
2	JUN	0245	34	23781.	269.0	1723.0	2	JUN	0820	101	1100.	33.7	1709.7	2	JUN	1355	168	104.	0.0	1696.4
2	JUN	0250	35	20823.	253.0	1722.3	2	JUN	0825	102	1087.	31.4	1709.5	2	JUN	1400	169	98.	0.0	1696.3
2	JUN	0255	36	17880.	236.2	1721.5	2	JUN	0830	103	1073.	28.9	1709.2	2	JUN	1405	170	91.	0.0	1696.2
2	JUN	0300	37	15471.	220.4	1720.8	2	JUN	0835	104	1059.	26.4	1708.9	2	JUN	1410	171	83.	0.0	1696.1
2	JUN	0305	38	13306.	206.1	1720.2	2	JUN	0840	105	1043.	23.6	1708.6	2	JUN	1415	172	78.	0.0	1696.0
2	JUN	0310	39	11459.	194.0	1719.6	2	JUN	0845	106	1028.	20.8	1708.2	2	JUN	1420	173	73.	0.0	1695.9
2	JUN	0315	40	9914.	183.8	1719.1	2	JUN	0850	107	1009.	18.0	1707.8	2	JUN	1425	174	67.	0.0	1695.8
2	JUN	0320	41	8807.	174.6	1718.7	2	JUN	0855	108	982.	15.2	1707.4	2	JUN	1430	175	62.	0.0	1695.7
2	JUN	0325	42	7863.	165.7	1718.3	2	JUN	0900	109	956.	12.4	1706.9	2	JUN	1435	176	57.	0.0	1695.6
2	JUN	0330	43	6942.	157.1	1717.9	2	JUN	0905	110	931.	9.8	1706.4	2	JUN	1440	177	52.	0.0	1695.5
2	JUN	0335	44	6068.	149.5	1717.5	2	JUN	0910	111	907.	7.2	1706.0	2	JUN	1445	178	47.	0.0	1695.4
[illegible]	[illegible]	0340	45	5335.	143.3	1717.2	2	JUN	0915	112	849.	4.9	1705.1	2	JUN	1450	179	43.	0.0	1695.4
[illegible]	[illegible]	0345	46	4758.	138.6	1717.0	2	JUN	0920	113	799.	2.8	1704.2	2	JUN	1455	180	39.	0.0	1695.3
2	JUN	0350	47	4326.	135.0	1716.8	2	JUN	0925	114	680.	1.4	1702.6	2	JUN	1500	181	35.	0.0	1695.2
2	JUN	0355	48	3990.	132.2	1716.6	2	JUN	0930	115	555.	0.6	1701.2	2	JUN	1505	182	32.	0.0	1695.2

2 JUN 0400	49	3717.	129.9	1716.5	*	2 JUN 0935	116	509.	0.5	1700.7	*	2 JUN 1510	183	29.	0.0	1695.1
2 JUN 0405	50	3482.	127.9	1716.4	*	2 JUN 0940	117	501.	0.4	1700.6	*	2 JUN 1515	184	26.	0.0	1695.1
2 JUN 0410	51	3255.	126.1	1716.3	*	2 JUN 0945	118	493.	0.4	1700.5	*	2 JUN 1520	185	24.	0.0	1695.0
2 JUN 0415	52	3014.	124.2	1716.2	*	2 JUN 0950	119	486.	0.4	1700.5	*	2 JUN 1525	186	21.	0.0	1695.0
2 JUN 0420	53	2764.	122.2	1716.1	*	2 JUN 0955	120	480.	0.4	1700.4	*	2 JUN 1530	187	19.	0.0	1694.9
2 JUN 0425	54	2521.	120.2	1716.0	*	2 JUN 1000	121	473.	0.3	1700.3	*	2 JUN 1535	188	18.	0.0	1694.9
2 JUN 0430	55	2393.	118.1	1715.9	*	2 JUN 1005	122	466.	0.3	1700.2	*	2 JUN 1540	189	16.	0.0	1694.9
2 JUN 0435	56	2254.	115.7	1715.8	*	2 JUN 1010	123	460.	0.3	1700.2	*	2 JUN 1545	190	14.	0.0	1694.9
2 JUN 0440	57	2120.	113.4	1715.6	*	2 JUN 1015	124	454.	0.3	1700.1	*	2 JUN 1550	191	13.	0.0	1694.8
2 JUN 0445	58	1995.	111.3	1715.5	*	2 JUN 1020	125	448.	0.3	1700.1	*	2 JUN 1555	192	12.	0.0	1694.8
2 JUN 0450	59	1888.	109.6	1715.4	*	2 JUN 1025	126	442.	0.2	1700.0	*	2 JUN 1600	193	11.	0.0	1694.8
2 JUN 0455	60	1797.	108.0	1715.3	*	2 JUN 1030	127	433.	0.2	1699.9	*	2 JUN 1605	194	10.	0.0	1694.8
2 JUN 0500	61	1720.	106.8	1715.2	*	2 JUN 1035	128	427.	0.2	1699.9	*	2 JUN 1610	195	9.	0.0	1694.8
2 JUN 0505	62	1653.	105.7	1715.2	*	2 JUN 1040	129	419.	0.2	1699.8	*	2 JUN 1615	196	8.	0.0	1694.7
2 JUN 0510	63	1590.	104.7	1715.1	*	2 JUN 1045	130	411.	0.2	1699.7	*	2 JUN 1620	197	7.	0.0	1694.7
2 JUN 0515	64	1526.	103.6	1715.1	*	2 JUN 1050	131	403.	0.2	1699.6	*	2 JUN 1625	198	7.	0.0	1694.7
2 JUN 0520	65	1464.	102.6	1715.0	*	2 JUN 1055	132	395.	0.2	1699.6	*	2 JUN 1630	199	6.	0.0	1694.7
2 JUN 0525	66	1407.	101.7	1714.9	*	2 JUN 1100	133	387.	0.2	1699.5	*	2 JUN 1635	200	0.	0.0	1694.6
2 JUN 0530	67	1355.	100.9	1714.9	*	2 JUN 1105	134	380.	0.2	1699.4	*					
					*						*					

****

PEAK FLOW (CFS)	TIME (HR)		6-HR	MAXIMUM AVERAGE FLOW 24-HR	72-HR	16.58-HR
25646.	2.67	(CFS)	4780.	2042.	2042.	2042.
		(INCHES)	6.233	7.358	7.358	7.358
		(AC-FT)	2370.	2798.	2798.	2798.

PEAK STORAGE (AC-FT)	TIME (HR)	6-HR	MAXIMUM AVERAGE STORAGE 24-HR	72-HR	16.58-HR
279.	2.67	126.	55.	55.	55.

PEAK STAGE (FEET)	TIME (HR)	6-HR	MAXIMUM AVERAGE STAGE 24-HR	72-HR	16.58-HR
1723.47	2.67	1716.08	1706.75	1706.75	1706.75

CUMULATIVE AREA = 7.13 SQ MI

RUNOFF SUMMARY
FLOW IN CUBIC FEET PER SECOND
TIME IN HOURS, AREA IN SQUARE MILES

OPERATION	STATION	PEAK FLOW	TIME OF PEAK	AVERAGE FLOW FOR MAXIMUM PERIOD 6-HOUR	24-HOUR	72-HOUR	BASIN AREA	MAXIMUM STAGE	TIME OF MAX STAGE
HYDROGRAPH AT	IDF2	26516.	2.58	4956.	2042.	2042.	7.13		
ROUTED TO	C5990	25646.	2.67	4780.	2042.	2042.	7.13	1723.47	2.67

*** NORMAL END OF HEC-1 ***

```
*****************************************
*                                       *
*   FLOOD HYDROGRAPH PACKAGE  (HEC-1)   *
*              MAY   1991               *
*            VERSION 4.0.1E             *
*     Lahey F77L-EM/32 version 5.01     *
*       Dodson & Associates, Inc.       *
*       DATE  09/11/99  TIME  12:55:38  *
*****************************************
```

```
****************************************
*                                      *
*    U.S. ARMY CORPS OF ENGINEERS      *
*    HYDROLOGIC ENGINEERING CENTER     *
*          609 SECOND STREET           *
*       DAVIS, CALIFORNIA 95616        *
*           (916) 551-1748             *
*                                      *
****************************************
```

```
X     X  XXXXXXX   XXXXX           X
X     X  X        X     X         XX
X     X  X        X                X
XXXXXXX  XXXX     X        XXXXX   X
X     X  X        X                X
X     X  X        X     X          X
X     X  XXXXXXX   XXXXX          XXX
```

THIS PROGRAM REPLACES ALL PREVIOUS VERSIONS OF HEC-1 KNOWN AS HEC1 (JAN 73), HEC1GS, HEC1DB, AND HEC1KW.

THE DEFINITIONS OF VARIABLES -RTIMP- AND -RTIOR- HAVE CHANGED FROM THOSE USED WITH THE 1973-STYLE INPUT STRUCTURE.
THE DEFINITION OF -AMSKK- ON RM-CARD WAS CHANGED WITH REVISIONS DATED 28 SEP 81. THIS IS THE FORTRAN77 VERSION
NEW OPTIONS: DAMBREAK OUTFLOW SUBMERGENCE , SINGLE EVENT DAMAGE CALCULATION, DSS:WRITE STAGE FREQUENCY,
DSS:READ TIME SERIES AT DESIRED CALCULATION INTERVAL LOSS RATE:GREEN AND AMPT INFILTRATION
KINEMATIC WAVE: NEW FINITE DIFFERENCE ALGORITHM

```
LINE          ID.......1.......2.......3.......4.......5.......6.......7.......8.......9......10

  1           ID   ACCOUNTS FOR TRASH RACK LOSSES AT THE PRINCIPAL INLET - 50% CLOGG
  2           ID
  3           ID        FILENAME:IDF1-B.IH2, RJS 8-10-99
  4           ID        ALTERNATIVE "F" FOR IDF1 - WITH A BREACH OF NORTH HEIGHTS DAM
  5           ID        ENLARGED EMERGENCY SPILLWAY, Lee=120 FEET
  6           ID        PROPOSED AUXILIARY RCC SPILLWAY, La = 8'
  7           ID        DAM OVERTOPPING IS REFLECTED IN STAGE-DISCHARGE @ C5590 FOR STAGES IN
  8           ID        EXCESS OF PROPOSED TOP OF DAM ELEVATION
  9           ID
 10           ID        DATE:4-12-99
 11           ID        Golden Eagle Park Dam (FCD 97-44)
 12           ID        IDF1 Model for the Computation of IDF for Golden Eagle Park Dam
 13           ID        ****************************************************************
 14           ID        Analytical Considerations:
 15           ID            Includes Breach of North Heights Dam
 16           ID            Single Basin Model
 17           ID            This model considers areal reduction method.
 18           ID        ****************************************************************
 19           ID
 20           ID      FILE:  IDF1.DAT
 21           ID      DATE: OCTOBER 1998 (by FCDMC)
 22           ID      Modified by Stantec - February 1999
 23           ID
 24           ID     THIS MODEL WAS ALTERED BY FCDMC FROM THE ORIGINAL MODEL- GEPD-PMF.DAT
 25           ID     FROM THE GOLDEN EAGLE PARK DAM FEASIBILITY STUDY DONE BY GEORGE V.
 26           ID     SABOL CONSULTING ENGINEERS, INC. (GVSCE), JULY 1997
 27           ID
 28           ID    THE MODEL HAS THE FOLLOWING ADJUSTMENTS (BY FCDMC):FROM THE ORIGINAL
 29           ID     1.)  THE SINGLE BASIN FOR THE NORTH HEIGHTS DAM WATERSHED HAS BEEN
 30           ID          REMOVED.  IN ITS PLACE ARE QI CARDS TAKEN FROM THE DAM BREACH
 31           ID          HEC-1 FOR NORTH HEIGHTS DAM (GVSCE, JANUARY 1996).
 32           ID     2.)  BEFORE EACH WATERSHED IS ROUTED THROUGH ITS RESPECTIVE DAM,
 33           ID          HALF OF THE FLOW IS DIVERTED OUT TO REFLECT THE HALF PMF EVENT.
 34           ID          THE SAME WAS ALSO DONE ON THE WATERSHED (BASIN S210) BETWEEN THE THREE
 35           ID          UPPER DAMS AND GEPD.THE BREACH HYDROGRAPH ALREADY IS HALF PMF.
 36           ID     3.)  THE RATING CURVES FOR ASPEN AND SUNRIDGE CANYON DAMS WERE ALTERED
 37           ID          THE NEW RATING CURVES WERE DEVELOPED USING THE EQUATION Q=CLH3/2.
 38           ID          THE RATING CURVES WERE ALTERED TO MAKE THE SPILLWAY LENGTH LONG
 39           ID          ENOUGH TO PASS THE HALF PMF THROUGH THE DAM WITH THE REQUIRED
 40           ID          THREE FEET OF FREEBOARD.
 41           ID          C = 2.6
 42           ID     4.)  IN THIS MODEL THE PRINCIPLE SPILLWAYS OF ASPEN AND SUNRIDGE CANYON DAM
 43           ID          ARE UNCLOGGED.
 44           ID     5.)  THE INITIAL WATER SURFACE ELEVATION FOR EACH OF THE DAMS WAS
 45           ID          SET TO THE WSEL OF THE 100 YEAR EVENT
 46           ID     NOTE:MODIFICATIONS BY STANTEC ARE EDITORIAL ONLY.  THE ORIGINAL GVSCE MODEL
 47           ID          AND REVISIONS BY FCDMC ARE ACCEPTED.  THE ROUTING (BY FCDMC) OF THE
 48           ID          IDF1 HYDROGRAPH THROUGH THE EXISTING GEP DAM IS DELETED.
              *DIAGRAM
 49           IT       5 02JUN98             210
 50           IO       4
 51           IN      15
              *
              *
              * IDF1 INFLOW HYDROGRAPH - DAM BREAK AT GOLDEN HEIGHTS DAM
              *
```

```
LINE          ID.......1.......2.......3.......4.......5.......6.......7.......8.......9......10

  52          KK    IDF1
  53          KM    INFLOW FROM DAM BREACH OF NORTHERN HEIGHTS DAM AND WATERSHED
  54          KM    THIS HYDROGRAPH WAS TABULATED BY THE HEC1 MODEL
  55          KM    FOR GOLDEN EAGLE PARK DAM - IDF1.DAT (FCDMC REVISED FROM GEPD-PMF.DAT BY
  56          KM    GVSCE, 7-97).
  57          IN       5
  58          KO       1
  59          BA    7.13
  60          QI    4065    3647    2908    2362    1960    1676    1467    1321    1208    1118
  61          QI    1050     991     941     901     879     865     855     853     859     873
  62          QI     894     919     946     972    1005    1826    4826    9464   14562   25783
  63          QI   40111   37985   27674   22673   19451   16481   13950   11905   10317    8927
  64          QI    7849    6892    6081    5400    4842    4440    4128    3862    3626    3408
  65          QI    3165    2905    2683    2469    2280    2132    2000    1896    1806    1734
  66          QI    1670    1607    1530    1447    1380    1320    1264    1211    1161    1113
  67          QI    1067    1025     984     945     909     873     841     815     796     778
  68          QI     762     747     732     717     703     689     677     664     653     642
  69          QI     631     619     608     597     586     573     560     546     532     515
  70          QI     496     475     442     404     373     349     329     312     299     288
  71          QI     281     275     270     265     260     255     250     246     242     238
  72          QI     235     231     228     225     222     219     216     214     211     208
  73          QI     206     204     201     199     197     195     193     191     189     186
  74          QI     183     179     175     172     168     165     161     158     155     152
  75          QI     149     146     143     140     137     134     131     129     126     124
  76          QI     121     119     116     114     112     109     107     104      99      92
  77          QI      84      79      74      68      63      58      53      48      44      40
  78          QI      36      33      30      27      25      22      20      19      17      15
  79          QI      14      13      12      11      10       9       8       8       7       6
  80          QI       6       5       5       5       4       4       4       3       3       0

  81          KK   C599O
  82          KO       1
  83          KM      Reservoir route at C599 (Dam 4 - GEPD). New Stage-Storage Curve 3/4/99
  84          RS       1    ELEV  1694.7
  85          SV    0.00    0.02    0.08    0.24    0.93    2.29    7.17   18.89   36.08   58.41
  86          SV   86.41   99.21  105.97  112.96  120.18   127.6  146.86  154.86  158.92  378.27
  87          SE  1694.6    1698    1699    1700    1702    1704    1706    1708    1710    1712
  88          SE    1714  1714.8  1715.2  1715.6    1716  1716.4  1717.4  1717.8    1718    1728
  89          SQ       0      80     220     445     635     787     910    1019    1116    1201
  90          SQ    1282    1302    1317    2517    9467   17800   21637   27864   36998   49906
  91          SE  1694.6  1696.0  1698.0  1700.0  1702.0  1704.0  1706.0  1708.0  1710.0  1712.0
  92          SE  1714.0  1714.5 1714.86    1716    1719  1721.5  1722.5    1724    1726    1728
  93          RL                   0.97
              *
              * * End Basin 210.  Start Basin 211
  94          ZZ
```

SCHEMATIC DIAGRAM OF STREAM NETWORK

```
INPUT
 LINE      (V) ROUTING          (--->) DIVERSION OR PUMP FLOW

 NO.       (.) CONNECTOR        (<---) RETURN OF DIVERTED OR PUMPED FLOW

            IDF1
               V
               V
  81        C5990
```

(***) RUNOFF ALSO COMPUTED AT THIS LOCATION

```
****************************************
*                                      *
*   FLOOD HYDROGRAPH PACKAGE  (HEC-1)  *
*              MAY   1991              *
*            VERSION 4.0.1E            *
*     Lahey F77L-EM/32 version 5.01    *
*        Dodson & Associates, Inc.     *
*        DATE  09/11/99  TIME  12:55:38 *
****************************************
```

```
****************************************
*                                      *
*    U.S. ARMY CORPS OF ENGINEERS      *
*    HYDROLOGIC ENGINEERING CENTER     *
*          609 SECOND STREET           *
*       DAVIS, CALIFORNIA 95616        *
*           (916) 551-1748             *
*                                      *
****************************************
```

ACCOUNTS FOR TRASH RACK LOSSES AT THE PRINCIPAL INLET - 50% CLOGG

FILENAME:IDF1-B.IH2, RJS 8-10-99
ALTERNATIVE "F" FOR IDF1 - WITH A BREACH OF NORTH HEIGHTS DAM
ENLARGED EMERGENCY SPILLWAY, Lee=120 FEET
PROPOSED AUXILIARY RCC SPILLWAY, La = 8'
DAM OVERTOPPING IS REFLECTED IN STAGE-DISCHARGE @ C5590 FOR STAGES IN
EXCESS OF PROPOSED TOP OF DAM ELEVATION

DATE:4-12-99
Golden Eagle Park Dam (FCD 97-44)
IDF1 Model for the Computation of IDF for Golden Eagle Park Dam
****
Analytical Considerations:
Includes Breach of North Heights Dam
Single Basin Model
This model considers areal reduction method.
****

FILE: IDF1.DAT
DATE: OCTOBER 1998 (by FCDMC)
Modified by Stantec - February 1999

THIS MODEL WAS ALTERED BY FCDMC FROM THE ORIGINAL MODEL- GEPD-PMF.DAT
FROM THE GOLDEN EAGLE PARK DAM FEASIBILITY STUDY DONE BY GEORGE V.
SABOL CONSULTING ENGINEERS, INC. (GVSCE), JULY 1997

THE MODEL HAS THE FOLLOWING ADJUSTMENTS (BY FCDMC):FROM THE ORIGINAL

1.) THE SINGLE BASIN FOR THE NORTH HEIGHTS DAM WATERSHED HAS BEEN REMOVED. IN ITS PLACE ARE QI CARDS TAKEN FROM THE DAM BREACH HEC-1 FOR NORTH HEIGHTS DAM (GVSCE, JANUARY 1996).
2.) BEFORE EACH WATERSHED IS ROUTED THROUGH ITS RESPECTIVE DAM, HALF OF THE FLOW IS DIVERTED OUT TO REFLECT THE HALF PMF EVENT. THE SAME WAS ALSO DONE ON THE WATERSHED (BASIN S210) BETWEEN THE THREE UPPER DAMS AND GEPD.THE BREACH HYDROGRAPH ALREADY IS HALF PMF.
3.) THE RATING CURVES FOR ASPEN AND SUNRIDGE CANYON DAMS WERE ALTERED THE NEW RATING CURVES WERE DEVELOPED USING THE EQUATION Q=CLH3/2. THE RATING CURVES WERE ALTERED TO MAKE THE SPILLWAY LENGTH LONG ENOUGH TO PASS THE HALF PMF THROUGH THE DAM WITH THE REQUIRED THREE FEET OF FREEBOARD.
C = 2.6
4.) IN THIS MODEL THE PRINCIPLE SPILLWAYS OF ASPEN AND SUNRIDGE CANYON DAM ARE UNCLOGGED.
5.) THE INITIAL WATER SURFACE ELEVATION FOR EACH OF THE DAMS WAS SET TO THE WSEL OF THE 100 YEAR EVENT

NOTE:MODIFICATIONS BY STANTEC ARE EDITORIAL ONLY. THE ORIGINAL GVSCE MODEL AND REVISIONS BY FCDMC ARE ACCEPTED. THE ROUTING (BY FCDMC) OF THE IDF1 HYDROGRAPH THROUGH THE EXISTING GEP DAM IS DELETED.

```
50 IO        OUTPUT CONTROL VARIABLES
                   IPRNT          4  PRINT CONTROL
                   IPLOT          0  PLOT CONTROL
                   QSCAL         0.  HYDROGRAPH PLOT SCALE

   IT        HYDROGRAPH TIME DATA
                    NMIN          5  MINUTES IN COMPUTATION INTERVAL
                   IDATE     2JUN98  STARTING DATE
                   ITIME       0000  STARTING TIME
                      NQ        210  NUMBER OF HYDROGRAPH ORDINATES
                  NDDATE     2JUN98  ENDING DATE
                  NDTIME       1725  ENDING TIME
                   ICENT         19  CENTURY MARK

             COMPUTATION INTERVAL    0.08 HOURS
```

TOTAL TIME BASE 17.42 HOURS

ENGLISH UNITS

DRAINAGE AREA	SQUARE MILES
PRECIPITATION DEPTH	INCHES
LENGTH, ELEVATION	FEET
FLOW	CUBIC FEET PER SECOND
STORAGE VOLUME	ACRE-FEET
SURFACE AREA	ACRES
TEMPERATURE	DEGREES FAHRENHEIT

*** ***

```
              **************
              *            *
52 KK         *      IDF1  *
              *            *
              **************
```

INFLOW FROM DAM BREACH OF NORTHERN HEIGHTS DAM AND WATERSHED
THIS HYDROGRAPH WAS TABULATED BY THE HEC1 MODEL
FOR GOLDEN EAGLE PARK DAM - IDF1.DAT (FCDMC REVISED FROM GEPD-PMF.DAT BY
GVSCE, 7-97).

58 KO OUTPUT CONTROL VARIABLES

IPRNT	1	PRINT CONTROL
IPLOT	0	PLOT CONTROL
QSCAL	0.	HYDROGRAPH PLOT SCALE

57 IN TIME DATA FOR INPUT TIME SERIES

JXMIN	5	TIME INTERVAL IN MINUTES
JXDATE	2JUN98	STARTING DATE
JXTIME	0	STARTING TIME

SUBBASIN RUNOFF DATA

59 BA SUBBASIN CHARACTERISTICS

TAREA	7.13	SUBBASIN AREA

***

****

HYDROGRAPH AT STATION IDF1

****

DA	MON	HRMN	ORD	FLOW	DA	MON	HRMN	ORD	FLOW	DA	MON	HRMN	ORD	FLOW	DA	MON	HRMN	ORD	FLOW
2	JUN	0000	1	4065.	2	JUN	0425	54	2469.	2	JUN	0850	107	329.	2	JUN	1315	160	124.
2	JUN	0005	2	3647.	2	JUN	0430	55	2280.	2	JUN	0855	108	312.	2	JUN	1320	161	121.
2	JUN	0010	3	2908.	2	JUN	0435	56	2132.	2	JUN	0900	109	299.	2	JUN	1325	162	119.
2	JUN	0015	4	2362.	2	JUN	0440	57	2000.	2	JUN	0905	110	288.	2	JUN	1330	163	116.
2	JUN	0020	5	1960.	2	JUN	0445	58	1896.	2	JUN	0910	111	281.	2	JUN	1335	164	114.
2	JUN	0025	6	1676.	2	JUN	0450	59	1806.	2	JUN	0915	112	275.	2	JUN	1340	165	112.
2	JUN	0030	7	1467.	2	JUN	0455	60	1734.	2	JUN	0920	113	270.	2	JUN	1345	166	109.
2	JUN	0035	8	1321.	2	JUN	0500	61	1670.	2	JUN	0925	114	265.	2	JUN	1350	167	107.
2	JUN	0040	9	1208.	2	JUN	0505	62	1607.	2	JUN	0930	115	260.	2	JUN	1355	168	104.
2	JUN	0045	10	1118.	2	JUN	0510	63	1530.	2	JUN	0935	116	255.	2	JUN	1400	169	99.
2	JUN	0050	11	1050.	2	JUN	0515	64	1447.	2	JUN	0940	117	250.	2	JUN	1405	170	92.
2	JUN	0055	12	991.	2	JUN	0520	65	1380.	2	JUN	0945	118	246.	2	JUN	1410	171	84.
2	JUN	0100	13	941.	2	JUN	0525	66	1320.	2	JUN	0950	119	242.	2	JUN	1415	172	79.
2	JUN	0105	14	901.	2	JUN	0530	67	1264.	2	JUN	0955	120	238.	2	JUN	1420	173	74.
2	JUN	0110	15	879.	2	JUN	0535	68	1211.	2	JUN	1000	121	235.	2	JUN	1425	174	68.
2	JUN	0115	16	865.	2	JUN	0540	69	1161.	2	JUN	1005	122	231.	2	JUN	1430	175	63.
2	JUN	0120	17	855.	2	JUN	0545	70	1113.	2	JUN	1010	123	228.	2	JUN	1435	176	58.
2	JUN	0125	18	853.	2	JUN	0550	71	1067.	2	JUN	1015	124	225.	2	JUN	1440	177	53.
2	JUN	0130	19	859.	2	JUN	0555	72	1025.	2	JUN	1020	125	222.	2	JUN	1445	178	48.
2	JUN	0135	20	873.	2	JUN	0600	73	984.	2	JUN	1025	126	219.	2	JUN	1450	179	44.
2	JUN	0140	21	894.	2	JUN	0605	74	945.	2	JUN	1030	127	216.	2	JUN	1455	180	40.
2	JUN	0145	22	919.	2	JUN	0610	75	909.	2	JUN	1035	128	214.	2	JUN	1500	181	36.
2	JUN	0150	23	946.	2	JUN	0615	76	873.	2	JUN	1040	129	211.	2	JUN	1505	182	33.
2	JUN	0155	24	972.	2	JUN	0620	77	841.	2	JUN	1045	130	208.	2	JUN	1510	183	30.
2	JUN	0200	25	1005.	2	JUN	0625	78	815.	2	JUN	1050	131	206.	2	JUN	1515	184	27.
2	JUN	0205	26	1826.	2	JUN	0630	79	796.	2	JUN	1055	132	204.	2	JUN	1520	185	25.
2	JUN	0210	27	4826.	2	JUN	0635	80	778.	2	JUN	1100	133	201.	2	JUN	1525	186	22.

2 JUN 0215	28	9464.	*	2 JUN 0640	81	762.	*	2 JUN 1105	134	199.	*	2 JUN 1530	187	20.
2 JUN 0220	29	14562.	*	2 JUN 0645	82	747.	*	2 JUN 1110	135	197.	*	2 JUN 1535	188	19.
2 JUN 0225	30	25783.	*	2 JUN 0650	83	732.	*	2 JUN 1115	136	195.	*	2 JUN 1540	189	17.
2 JUN 0230	31	40111.	*	2 JUN 0655	84	717.	*	2 JUN 1120	137	193.	*	2 JUN 1545	190	15.
2 JUN 0235	32	37985.	*	2 JUN 0700	85	703.	*	2 JUN 1125	138	191.	*	2 JUN 1550	191	14.
2 JUN 0240	33	27674.	*	2 JUN 0705	86	689.	*	2 JUN 1130	139	189.	*	2 JUN 1555	192	13.
2 JUN 0245	34	22673.	*	2 JUN 0710	87	677.	*	2 JUN 1135	140	186.	*	2 JUN 1600	193	12.
2 JUN 0250	35	19451.	*	2 JUN 0715	88	664.	*	2 JUN 1140	141	183.	*	2 JUN 1605	194	11.
2 JUN 0255	36	16481.	*	2 JUN 0720	89	653.	*	2 JUN 1145	142	179.	*	2 JUN 1610	195	10.
2 JUN 0300	37	13950.	*	2 JUN 0725	90	642.	*	2 JUN 1150	143	175.	*	2 JUN 1615	196	9.
2 JUN 0305	38	11905.	*	2 JUN 0730	91	631.	*	2 JUN 1155	144	172.	*	2 JUN 1620	197	8.
2 JUN 0310	39	10317.	*	2 JUN 0735	92	619.	*	2 JUN 1200	145	168.	*	2 JUN 1625	198	8.
2 JUN 0315	40	8927.	*	2 JUN 0740	93	608.	*	2 JUN 1205	146	165.	*	2 JUN 1630	199	7.
2 JUN 0320	41	7849.	*	2 JUN 0745	94	597.	*	2 JUN 1210	147	161.	*	2 JUN 1635	200	6.
2 JUN 0325	42	6892.	*	2 JUN 0750	95	586.	*	2 JUN 1215	148	158.	*	2 JUN 1640	201	6.
2 JUN 0330	43	6081.	*	2 JUN 0755	96	573.	*	2 JUN 1220	149	155.	*	2 JUN 1645	202	5.
2 JUN 0335	44	5400.	*	2 JUN 0800	97	560.	*	2 JUN 1225	150	152.	*	2 JUN 1650	203	5.
2 JUN 0340	45	4842.	*	2 JUN 0805	98	546.	*	2 JUN 1230	151	149.	*	2 JUN 1655	204	5.
2 JUN 0345	46	4440.	*	2 JUN 0810	99	532.	*	2 JUN 1235	152	146.	*	2 JUN 1700	205	4.
2 JUN 0350	47	4128.	*	2 JUN 0815	100	515.	*	2 JUN 1240	153	143.	*	2 JUN 1705	206	4.
2 JUN 0355	48	3862.	*	2 JUN 0820	101	496.	*	2 JUN 1245	154	140.	*	2 JUN 1710	207	4.
2 JUN 0400	49	3626.	*	2 JUN 0825	102	475.	*	2 JUN 1250	155	137.	*	2 JUN 1715	208	3.
2 JUN 0405	50	3408.	*	2 JUN 0830	103	442.	*	2 JUN 1255	156	134.	*	2 JUN 1720	209	3.
2 JUN 0410	51	3165.	*	2 JUN 0835	104	404.	*	2 JUN 1300	157	131.	*	2 JUN 1725	210	3.
2 JUN 0415	52	2905.	*	2 JUN 0840	105	373.	*	2 JUN 1305	158	129.	*			
2 JUN 0420	53	2683.	*	2 JUN 0845	106	349.	*	2 JUN 1310	159	126.	*			
			*				*				*			

****

PEAK FLOW (CFS)	TIME (HR)		MAXIMUM AVERAGE FLOW 6-HR	24-HR	72-HR	17.42-HR
40111.	2.50	(CFS)	5407.	2029.	2029.	2029.
		(INCHES)	7.051	7.682	7.682	7.682
		(AC-FT)	2681.	2921.	2921.	2921.

CUMULATIVE AREA = 7.13 SQ MI

*** ***

```
          **************
          *            *
81 KK     *     C5990  *
          *            *
          **************

82 KO          OUTPUT CONTROL VARIABLES
                     IPRNT          1  PRINT CONTROL
                     IPLOT          0  PLOT CONTROL
                     QSCAL         0.  HYDROGRAPH PLOT SCALE
                           Reservoir route at C599 (Dam 4 - GEPD). New Stage-Storage Curve 3/4/99

             HYDROGRAPH ROUTING DATA

93 RL          ROUTING LOSSES
                     QLOSS       0.00  INITIAL LOSS
                     CLOSS       0.00  ADDITIONAL FRACTION LOST
                    PERCRT       0.97  CHANNEL PERCOLATION RATE
                    ELVINV       0.00  INVERT ELEVATION

84 RS          STORAGE ROUTING
                     NSTPS          1  NUMBER OF SUBREACHES
                      ITYP       ELEV  TYPE OF INITIAL CONDITION
                    RSVRIC    1694.70  INITIAL CONDITION
                         X       0.00 WORKING R AND D COEFFICIENT

85 SV            STORAGE        0.0      0.0      0.1      0.2      0.9      2.3      7.2     18.9     36.1     58.4
                               86.4     99.2    106.0    113.0    120.2    127.6    146.9    154.9    158.9    378.3

87 SE          ELEVATION    1694.60  1698.00  1699.00  1700.00  1702.00  1704.00  1706.00  1708.00  1710.00  1712.00
                            1714.00  1714.80  1715.20  1715.60  1716.00  1716.40  1717.40  1717.80  1718.00  1728.00

[illegible]Q           DISCHARGE        0.       80.     220.     445.     635.     787.     910.    1019.    1116.    1201.
                             1282.    1302.    1317.    2517.    9467.   17800.   21637.   27864.   36998.   49906.
```

91 SE	ELEVATION	1694.60	1696.00	1698.00	1700.00	1702.00	1704.00	1706.00	1708.00	1710.00	1712.00
		1714.00	1714.50	1714.86	1716.00	1719.00	1721.50	1722.50	1724.00	1726.00	1728.00

***

COMPUTED STORAGE-OUTFLOW-ELEVATION DATA

STORAGE	0.00	0.01	0.02	0.08	0.24	0.93	2.29	7.17	18.89	36.08
OUTFLOW	0.00	80.00	220.00	332.50	445.00	635.00	787.00	910.00	1019.00	1116.00
ELEVATION	1694.60	1696.00	1698.00	1699.00	1700.00	1702.00	1704.00	1706.00	1708.00	1710.00
STORAGE	58.41	86.41	94.41	99.21	100.22	105.97	112.96	120.18	127.60	146.86
OUTFLOW	1201.00	1282.00	1302.00	1314.50	1317.00	1674.85	2095.93	2517.00	3443.72	5760.39
ELEVATION	1712.00	1714.00	1714.50	1714.80	1714.86	1715.20	1715.60	1716.00	1716.40	1717.40
STORAGE	154.86	158.92	180.85	235.69	257.63	290.53	334.40	378.27		
OUTFLOW	6687.11	7150.33	9467.00	17800.00	21637.00	27864.00	36998.00	49906.00		
ELEVATION	1717.80	1718.00	1719.00	1721.50	1722.50	1724.00	1726.00	1728.00		

*** WARNING *** MODIFIED PULS ROUTING MAY BE NUMERICALLY UNSTABLE FOR OUTFLOWS BETWEEN 0. TO 49906.
THE ROUTED HYDROGRAPH SHOULD BE EXAMINED FOR OSCILLATIONS OR OUTFLOWS GREATER THAN PEAK INFLOWS.
THIS CAN BE CORRECTED BY DECREASING THE TIME INTERVAL OR INCREASING STORAGE (USE A LONGER REACH.)

****

HYDROGRAPH AT STATION C5990

****

DA	MON	HRMN	ORD	OUTFLOW	STORAGE	STAGE	*	DA	MON	HRMN	ORD	OUTFLOW	STORAGE	STAGE	*	DA	MON	HRMN	ORD	OUTFLOW	STORAGE	STAGE
2	JUN	0000	1	6.	0.0	1694.7	*	2	JUN	0550	71	1309.	97.0	1714.7	*	2	JUN	1140	141	183.	0.0	1697.5
2	JUN	0005	2	1042.	22.9	1708.5	*	2	JUN	0555	72	1304.	95.2	1714.6	*	2	JUN	1145	142	179.	0.0	1697.4
2	JUN	0010	3	1124.	38.1	1710.2	*	2	JUN	0600	73	1299.	93.2	1714.4	*	2	JUN	1150	143	175.	0.0	1697.4
2	JUN	0015	4	1163.	48.3	1711.1	*	2	JUN	0605	74	1293.	90.9	1714.3	*	2	JUN	1155	144	172.	0.0	1697.3
2	JUN	0020	5	1188.	55.1	1711.7	*	2	JUN	0610	75	1287.	88.4	1714.1	*	2	JUN	1200	145	168.	0.0	1697.3
2	JUN	0025	6	1204.	59.4	1712.1	*	2	JUN	0615	76	1280.	85.7	1714.0	*	2	JUN	1205	146	165.	0.0	1697.2
2	JUN	0030	7	1211.	61.9	1712.3	*	2	JUN	0620	77	1272.	82.8	1713.7	*	2	JUN	1210	147	161.	0.0	1697.2
2	JUN	0035	8	1215.	63.2	1712.3	*	2	JUN	0625	78	1263.	79.8	1713.5	*	2	JUN	1215	148	158.	0.0	1697.1
2	JUN	0040	9	1216.	63.5	1712.4	*	2	JUN	0630	79	1254.	76.7	1713.3	*	2	JUN	1220	149	155.	0.0	1697.1
2	JUN	0045	10	1215.	63.1	1712.3	*	2	JUN	0635	80	1245.	73.5	1713.1	*	2	JUN	1225	150	152.	0.0	1697.0
2	JUN	0050	11	1212.	62.3	1712.3	*	2	JUN	0640	81	1235.	70.3	1712.8	*	2	JUN	1230	151	149.	0.0	1697.0
2	JUN	0055	12	1208.	60.9	1712.2	*	2	JUN	0645	82	1226.	67.0	1712.6	*	2	JUN	1235	152	146.	0.0	1696.9
2	JUN	0100	13	1204.	59.3	1712.1	*	2	JUN	0650	83	1216.	63.7	1712.4	*	2	JUN	1240	153	143.	0.0	1696.9
2	JUN	0105	14	1197.	57.4	1711.9	*	2	JUN	0655	84	1206.	60.3	1712.1	*	2	JUN	1245	154	140.	0.0	1696.9
2	JUN	0110	15	1189.	55.3	1711.7	*	2	JUN	0700	85	1195.	56.9	1711.9	*	2	JUN	1250	155	137.	0.0	1696.8
2	JUN	0115	16	1181.	53.1	1711.5	*	2	JUN	0705	86	1182.	53.5	1711.6	*	2	JUN	1255	156	134.	0.0	1696.8
2	JUN	0120	17	1173.	50.9	1711.3	*	2	JUN	0710	87	1170.	50.1	1711.3	*	2	JUN	1300	157	131.	0.0	1696.7
2	JUN	0125	18	1164.	48.8	1711.1	*	2	JUN	0715	88	1157.	46.8	1711.0	*	2	JUN	1305	158	129.	0.0	1696.7
2	JUN	0130	19	1156.	46.7	1710.9	*	2	JUN	0720	89	1144.	43.4	1710.7	*	2	JUN	1310	159	126.	0.0	1696.7
2	JUN	0135	20	1149.	44.7	1710.8	*	2	JUN	0725	90	1131.	40.0	1710.4	*	2	JUN	1315	160	124.	0.0	1696.6
2	JUN	0140	21	1142.	42.9	1710.6	*	2	JUN	0730	91	1118.	36.6	1710.0	*	2	JUN	1320	161	121.	0.0	1696.6
2	JUN	0145	22	1136.	41.3	1710.5	*	2	JUN	0735	92	1100.	33.3	1709.7	*	2	JUN	1325	162	119.	0.0	1696.6
2	JUN	0150	23	1131.	39.9	1710.3	*	2	JUN	0740	93	1082.	30.0	1709.3	*	2	JUN	1330	163	116.	0.0	1696.5
2	JUN	0155	24	1126.	38.8	1710.2	*	2	JUN	0745	94	1063.	26.8	1708.9	*	2	JUN	1335	164	114.	0.0	1696.5
2	JUN	0200	25	1123.	37.8	1710.2	*	2	JUN	0750	95	1045.	23.6	1708.5	*	2	JUN	1340	165	112.	0.0	1696.5
2	JUN	0205	26	1130.	39.8	1710.3	*	2	JUN	0755	96	1028.	20.4	1708.2	*	2	JUN	1345	166	109.	0.0	1696.4
2	JUN	0210	27	1187.	54.7	1711.7	*	2	JUN	0800	97	1005.	17.3	1707.7	*	2	JUN	1350	167	107.	0.0	1696.4
2	JUN	0215	28	1304.	95.4	1714.6	*	2	JUN	0805	98	977.	14.3	1707.2	*	2	JUN	1355	168	104.	0.0	1696.3
2	JUN	0220	29	6333.	151.8	1717.6	*	2	JUN	0810	99	949.	11.4	1706.7	*	2	JUN	1400	169	99.	0.0	1696.3
2	JUN	0225	30	15000.	217.3	1720.7	*	2	JUN	0815	100	923.	8.6	1706.2	*	2	JUN	1405	170	92.	0.0	1696.2
2	JUN	0230	31	28596.	294.0	1724.2	*	2	JUN	0820	101	877.	5.8	1705.5	*	2	JUN	1410	171	84.	0.0	1696.1
2	JUN	0235	32	37392.	335.7	1726.1	*	2	JUN	0825	102	814.	3.4	1704.4	*	2	JUN	1415	172	79.	0.0	1696.0
2	JUN	0240	33	33514.	317.7	1725.2	*	2	JUN	0830	103	684.	1.4	1702.6	*	2	JUN	1420	173	74.	0.0	1695.9
2	JUN	0245	34	26621.	284.0	1723.7	*	2	JUN	0835	104	467.	0.3	1700.2	*	2	JUN	1425	174	68.	0.0	1695.8
2	JUN	0250	35	22234.	260.8	1722.6	*	2	JUN	0840	105	366.	0.1	1699.3	*	2	JUN	1430	175	63.	0.0	1695.7
2	JUN	0255	36	18997.	242.5	1721.8	*	2	JUN	0845	106	359.	0.1	1699.2	*	2	JUN	1435	176	58.	0.0	1695.6
2	JUN	0300	37	16296.	225.8	1721.0	*	2	JUN	0850	107	330.	0.1	1699.0	*	2	JUN	1440	177	53.	0.0	1695.5
2	JUN	0305	38	13982.	210.6	1720.4	*	2	JUN	0855	108	313.	0.1	1698.8	*	2	JUN	1445	178	48.	0.0	1695.4
2	JUN	0310	39	12009.	197.6	1719.8	*	2	JUN	0900	109	300.	0.1	1698.7	*	2	JUN	1450	179	44.	0.0	1695.4
2	JUN	0315	40	10369.	186.8	1719.3	*	2	JUN	0905	110	289.	0.1	1698.6	*	2	JUN	1455	180	40.	0.0	1695.3
2	JUN	0320	41	9111.	177.5	1718.8	*	2	JUN	0910	111	281.	0.1	1698.5	*	2	JUN	1500	181	36.	0.0	1695.2
2	JUN	0325	42	8182.	168.7	1718.4	*	2	JUN	0915	112	276.	0.0	1698.5	*	2	JUN	1505	182	33.	0.0	1695.2
2	JUN	0330	43	7278.	160.1	1718.1	*	2	JUN	0920	113	270.	0.0	1698.4	*	2	JUN	1510	183	30.	0.0	1695.1
2	JUN	0335	44	6415.	152.5	1717.7	*	2	JUN	0925	114	266.	0.0	1698.4	*	2	JUN	1515	184	27.	0.0	1695.1
2	JUN	0340	45	5675.	146.1	1717.4	*	2	JUN	0930	115	260.	0.0	1698.4	*	2	JUN	1520	185	25.	0.0	1695.0
2	JUN	0345	46	5069.	141.1	1717.1	*	2	JUN	0935	116	255.	0.0	1698.3	*	2	JUN	1525	186	22.	0.0	1695.0
2	JUN	0350	47	4609.	137.3	1716.9	*	2	JUN	0940	117	250.	0.0	1698.3	*	2	JUN	1530	187	20.	0.0	1695.0

2 JUN	0355	48	4249.	134.3	1716.7	*	2 JUN	0945	118	246.	0.0	1698.2	*	2 JUN	1535	188	19.	0.0	1694.9
2 JUN	0400	49	3953.	131.8	1716.6	*	2 JUN	0950	119	242.	0.0	1698.2	*	2 JUN	1540	189	17.	0.0	1694.9
2 JUN	0405	50	3698.	129.7	1716.5	*	2 JUN	0955	120	238.	0.0	1698.2	*	2 JUN	1545	190	15.	0.0	1694.9
2 JUN	0410	51	3457.	127.7	1716.4	*	2 JUN	1000	121	235.	0.0	1698.1	*	2 JUN	1550	191	14.	0.0	1694.8
2 JUN	0415	52	3203.	125.7	1716.3	*	2 JUN	1005	122	231.	0.0	1698.1	*	2 JUN	1555	192	13.	0.0	1694.8
2 JUN	0420	53	2957.	123.7	1716.2	*	2 JUN	1010	123	228.	0.0	1698.1	*	2 JUN	1600	193	12.	0.0	1694.8
2 JUN	0425	54	2728.	121.9	1716.1	*	2 JUN	1015	124	225.	0.0	1698.0	*	2 JUN	1605	194	11.	0.0	1694.8
2 JUN	0430	55	2516.	120.2	1716.0	*	2 JUN	1020	125	222.	0.0	1698.0	*	2 JUN	1610	195	10.	0.0	1694.8
2 JUN	0435	56	2412.	118.4	1715.9	*	2 JUN	1025	126	219.	0.0	1698.0	*	2 JUN	1615	196	9.	0.0	1694.8
2 JUN	0440	57	2296.	116.4	1715.8	*	2 JUN	1030	127	216.	0.0	1697.9	*	2 JUN	1620	197	8.	0.0	1694.7
2 JUN	0445	58	2180.	114.4	1715.7	*	2 JUN	1035	128	214.	0.0	1697.9	*	2 JUN	1625	198	8.	0.0	1694.7
2 JUN	0450	59	2069.	112.5	1715.6	*	2 JUN	1040	129	211.	0.0	1697.9	*	2 JUN	1630	199	7.	0.0	1694.7
2 JUN	0455	60	1966.	110.8	1715.5	*	2 JUN	1045	130	208.	0.0	1697.8	*	2 JUN	1635	200	6.	0.0	1694.7
2 JUN	0500	61	1875.	109.3	1715.4	*	2 JUN	1050	131	206.	0.0	1697.8	*	2 JUN	1640	201	6.	0.0	1694.7
2 JUN	0505	62	1794.	107.9	1715.3	*	2 JUN	1055	132	204.	0.0	1697.8	*	2 JUN	1645	202	5.	0.0	1694.7
2 JUN	0510	63	1717.	106.7	1715.2	*	2 JUN	1100	133	201.	0.0	1697.7	*	2 JUN	1650	203	5.	0.0	1694.7
2 JUN	0515	64	1637.	105.4	1715.2	*	2 JUN	1105	134	199.	0.0	1697.7	*	2 JUN	1655	204	5.	0.0	1694.7
2 JUN	0520	65	1558.	104.1	1715.1	*	2 JUN	1110	135	197.	0.0	1697.7	*	2 JUN	1700	205	4.	0.0	1694.7
2 JUN	0525	66	1485.	102.9	1715.0	*	2 JUN	1115	136	195.	0.0	1697.6	*	2 JUN	1705	206	4.	0.0	1694.7
2 JUN	0530	67	1417.	101.8	1715.0	*	2 JUN	1120	137	193.	0.0	1697.6	*	2 JUN	1710	207	4.	0.0	1694.7
2 JUN	0535	68	1353.	100.8	1714.9	*	2 JUN	1125	138	191.	0.0	1697.6	*	2 JUN	1715	208	3.	0.0	1694.7
2 JUN	0540	69	1316.	99.8	1714.8	*	2 JUN	1130	139	189.	0.0	1697.6	*	2 JUN	1720	209	3.	0.0	1694.7
2 JUN	0545	70	1313.	98.6	1714.8	*	2 JUN	1135	140	186.	0.0	1697.5	*	2 JUN	1725	210	3.	0.0	1694.7
						*							*						

****

PEAK FLOW (CFS)	TIME (HR)		MAXIMUM AVERAGE FLOW 6-HR	24-HR	72-HR	17.42-HR
37392.	2.58	(CFS)	5239.	2029.	2029.	2029.
		(INCHES)	6.832	7.682	7.682	7.682
		(AC-FT)	2598.	2921.	2921.	2921.

PEAK STORAGE (AC-FT)	TIME (HR)	MAXIMUM AVERAGE STORAGE 6-HR	24-HR	72-HR	17.42-HR
336.	2.58	119.	46.	46.	46.

PEAK STAGE (FEET)	TIME (HR)	MAXIMUM AVERAGE STAGE 6-HR	24-HR	72-HR	17.42-HR
1726.06	2.58	1715.50	1705.00	1705.00	1705.00

CUMULATIVE AREA = 7.13 SQ MI

RUNOFF SUMMARY
FLOW IN CUBIC FEET PER SECOND
TIME IN HOURS, AREA IN SQUARE MILES

OPERATION	STATION	PEAK FLOW	TIME OF PEAK	AVERAGE FLOW FOR MAXIMUM PERIOD 6-HOUR	24-HOUR	72-HOUR	BASIN AREA	MAXIMUM STAGE	TIME OF MAX STAGE
HYDROGRAPH AT	IDF1	40111.	2.50	5407.	2029.	2029.	7.13		
ROUTED TO	C5990	37392.	2.58	5239.	2029.	2029.	7.13	1726.06	2.58

*** NORMAL END OF HEC-1 ***

100-Year, Future Condition (6-Hour)

```
****************************************
*                                      *
*   FLOOD HYDROGRAPH PACKAGE  (HEC-1)  *
*              MAY   1991              *
*           VERSION 4.0.1E             *
*     Lahey F77L-EM/32 version 5.01    *
*        Dodson & Associates, Inc.     *
*        DATE  08/11/99  TIME  15:25:26 *
****************************************
```

```
****************************************
*                                      *
*    U.S. ARMY CORPS OF ENGINEERS      *
*    HYDROLOGIC ENGINEERING CENTER     *
*          609 SECOND STREET           *
*       DAVIS, CALIFORNIA 95616        *
*           (916) 551-1748             *
*                                      *
****************************************
```

```
X     X  XXXXXXX   XXXXX           X
X     X  X        X     X         XX
X     X  X        X                X
XXXXXXX  XXXX     X        XXXXX   X
X     X  X        X                X
X     X  X        X     X          X
X     X  XXXXXXX   XXXXX          XXX
```

THIS PROGRAM REPLACES ALL PREVIOUS VERSIONS OF HEC-1 KNOWN AS HEC1 (JAN 73), HEC1GS, HEC1DB, AND HEC1KW.

THE DEFINITIONS OF VARIABLES -RTIMP- AND -RTIOR- HAVE CHANGED FROM THOSE USED WITH THE 1973-STYLE INPUT STRUCTURE.
THE DEFINITION OF -AMSKK- ON RM-CARD WAS CHANGED WITH REVISIONS DATED 28 SEP 81. THIS IS THE FORTRAN77 VERSION
NEW OPTIONS: DAMBREAK OUTFLOW SUBMERGENCE , SINGLE EVENT DAMAGE CALCULATION, DSS:WRITE STAGE FREQUENCY,
DSS:READ TIME SERIES AT DESIRED CALCULATION INTERVAL LOSS RATE:GREEN AND AMPT INFILTRATION
KINEMATIC WAVE: NEW FINITE DIFFERENCE ALGORITHM

```
LINE          ID.......1.......2.......3.......4.......5.......6.......7.......8.......9......10

  1           ID   ACCOUNTS FOR TRASH RACK LOSSES AT THE PRINCIPAL INLET - 50%  CLOGG
  2           ID
  3           ID   STANTEC FILENAME:100_6-B.IH1 - 100-YEAR, 6-HOUR STORM
  4           ID   ALTERNATIVE "F" - 8-10-99 BY RJS
  5           ID   Enlarg emergency spillway 120'
  6           ID   Auxiliary Spillway Length, LA = 8'
  7           ID   Auxiliary Spillway Elevation, EA = 1695'
  8           ID
  9           ID   GOLDEN EAGLE PARK DAM - MODEL WITH REVISED STAGE-STORAGE CURVE 3/99
              * ******************************************************************************
              *   100-Year, 6-Hour Storm
              * ******************************************************************************
              *
              *
              *
              *  Modifications include a new stage-storage based on Stantec survey 1999
              *  Stage-storage reflects changes to grading behind the existing GEPD.
              *  This grading ocurred since the time of the original ADMP 6/30/97.  The
              *  The stage discharge curve represents the operation of the existing
              *  principal spillway and the proposed auxiliary spillway.
              *
 10           IT       1                    1080
 11           IO       5
 12           IN      15
              *
              *

 13           KK   C559I
 14           KM    INFLOW FROM UPPER WATERSHED AS DEFINED BY GVSCE HEC MODEL FU100-24.IH1 1994
 15           IN       1
 16           KO       1                              21
 17           BA    7.13
 18           QI       0       0       0       1       1       2       2       3       3       4
 19           QI       4       4       5       5       6       6       6       7       7       7
 20           QI       7       7       8       8       9      10      11      11      12      13
 21           QI      14      15      16      17      18      19      20      22      23      24
 22           QI      24      25      26      27      28      29      30      31      31      33
 23           QI      34      35      36      38      39      40      41      43      44      46
 24           QI      47      48      50      51      52      54      55      56      58      59
 25           QI      60      62      63      65      66      68      70      71      73      75
 26           QI      76      78      80      82      84      86      88      91      93      96
 27           QI      98     101     104     106     109     111     114     117     120     122
 28           QI     125     127     130     132     135     137     139     141     144     146
 29           QI     148     150     152     154     156     159     161     163     165     167
 30           QI     169     171     172     174     176     178     180     182     183     185
 31           QI     187     189     190     192     193     195     197     198     200     201
 32           QI     202     204     205     207     208     209     210     211     212     213
 33           QI     214     215     216     217     218     219     220     221     222     223
 34           QI     224     225     226     227     228     229     230     231     232     233
 35           QI     234     235     237     238     239     240     241     242     244     245
 36           QI     246     247     249     251     253     256     259     262     265     268
 37           QI     271     274     277     281     284     287     292     298     307     320
 38           QI     335     351     367     383     400     417     435     453     472     490
 39           QI     510     532     560     598     648     704     764     824     883     940
 40           QI     997    1053    1109    1165    1221    1279    1338    1401    1471    1544
```

LINE	ID.....1	2	3	4	5	6	7	8	9	10
41	QI	1620	1697	1775	1852	1927	1998	2066	2128	2182	2232
42	QI	2282	2331	2374	2407	2429	2445	2456	2464	2470	2473
43	QI	2474	2466	2453	2438	2423	2409	2392	2369	2339	2302
44	QI	2261	2219	2177	2135	2094	2053	2008	1953	1908	1871
45	QI	1839	1811	1788	1770	1756	1746	1741	1738	1737	1736
46	QI	1735	1732	1728	1729	1735	1746	1759	1775	1789	1797
47	QI	1799	1795	1784	1764	1738	1718	1700	1681	1662	1642
48	QI	1622	1601	1580	1559	1537	1516	1496	1475	1456	1436
49	QI	1417	1398	1380	1362	1345	1329	1313	1297	1282	1267
50	QI	1253	1239	1226	1213	1200	1189	1177	1165	1154	1142
51	QI	1131	1120	1109	1099	1090	1081	1073	1066	1059	1054
52	QI	1049	1044	1040	1036	1033	1029	1026	1023	1021	1018
53	QI	1016	1013	1011	1009	1008	1006	1005	1004	1003	1002
54	QI	1002	1001	1001	1000	999	998	997	996	995	993
55	QI	992	991	990	989	988	987	986	984	983	982
56	QI	981	980	978	977	976	975	973	972	971	969
57	QI	968	967	966	964	963	962	961	960	959	958
58	QI	957	956	955	954	953	952	951	950	949	949
59	QI	948	947	946	946	945	944	944	943	942	942
60	QI	941	940	940	939	938	938	937	936	936	935
61	QI	934	934	933	932	932	931	931	930	929	929
62	QI	928	927	926	926	925	924	923	923	922	921
63	QI	921	920	919	918	918	917	916	915	915	914
64	QI	913	912	912	911	910	909	908	907	906	906
65	QI	905	904	903	902	901	900	899	898	897	896
66	QI	894	893	892	891	890	889	888	886	885	884
67	QI	883	882	880	879	878	876	875	874	873	871
68	QI	870	869	867	866	865	863	862	861	859	858
69	QI	857	855	854	853	851	850	848	847	845	843
70	QI	841	839	837	834	831	829	826	823	820	817
71	QI	814	810	807	804	800	797	793	789	785	781
72	QI	776	772	767	763	759	755	751	746	742	737
73	QI	733	728	723	719	714	709	704	699	694	689
74	QI	685	680	676	671	667	663	658	654	650	646
75	QI	642	639	635	632	628	625	622	619	615	612
76	QI	608	605	602	599	595	592	590	587	585	583
77	QI	580	578	576	574	572	570	568	566	563	561
78	QI	559	556	554	552	550	548	546	544	541	539
79	QI	537	535	533	530	528	526	524	521	519	517
80	QI	515	513	511	508	506	504	503	501	499	497
81	QI	495	493	491	490	488	486	484	483	481	479
82	QI	477	476	474	473	471	469	468	466	465	464
83	QI	462	461	459	458	456	455	454	452	451	449
84	QI	448	447	445	444	443	441	440	439	437	436
85	QI	435	433	432	430	429	427	426	424	423	421
86	QI	419	416	414	411	408	405	402	399	396	393
87	QI	390	387	384	381	378	375	371	368	365	362
88	QI	360	357	354	351	348	346	343	340	338	335
89	QI	332	330	327	324	322	319	316	313	311	308
90	QI	305	301	298	295	292	289	286	283	280	277
91	QI	274	271	268	265	263	260	257	255	252	250
92	QI	248	245	243	241	239	237	235	233	231	229
93	QI	227	225	223	221	219	217	215	213	211	209
94	QI	207	205	203	201	199	197	195	193	192	190
95	QI	188	187	185	184	182	181	179	178	177	175

```
LINE          ID.......1.......2.......3.......4.......5.......6.......7.......8.......9......10

  96          QI     174     173     171     170     168     167     166     164     163     162
  97          QI     160     159     158     156     155     154     153     151     150     149
  98          QI     148     147     146     145     144     143     141     140     139     138
  99          QI     137     136     135     134     133     132     131     130     129     128
 100          QI     127     126     125     125     124     123     122     122     121     120
 101          QI     119     119     118     117     116     115     115     114     113     112
 102          QI     111     110     109     108     107     107     106     105     104     103
 103          QI     102     101     100      99      98      97      96      96      95      94
 104          QI      93      92      91      90      89      88      87      86      85      83
 105          QI      82      81      79      78      76      75      73      72      71      69
 106          QI      68      67      66      64      63      62      61      60      59      58
 107          QI      57      56      55      54      54      53      52      51      50      50
 108          QI      49      48      47      47      46      46      46      45      45      44
 109          QI      44      43      43      42      42      41      41      40      40      39
 110          QI      39      38      38      37      37      37      36      36      35      35
 111          QI      35      34      34      34      33      33      32      32      32      31
 112          QI      31      31      30      30      30      29      29      28      28      27
 113          QI      27      26      25      24      23      23      22      21      20      19
 114          QI      18      18      17      16      15      15      14      14      13      12
 115          QI      12      11      11      10      10       9       9       9       8       8
 116          QI       8       7       7       7       6       6       6       6       5       5
 117          QI       5       5       4       4       4       4       4       4       3       3
 118          QI       3       3       3       3       3       3       2       2       2       2
 119          QI       2       2       2       2       2       2       2       1       1       1
 120          QI       1       1       1       1       1       1       1       1       1       1
 121          QI       1       1       1       1       1       1       1       1       1       1
 122          QI       1       1       1       0       0       0       0       0       0       0
 123          QI       0       0       0       0       0       0       0       0       0       0
 124          QI       0       0       0       0       0       0       0       0       0       0
 125          QI       0       0       0       0       0       0       0       0       0       0
              *
              * *
              * * C599I is the total flow in Ashbrook Wash upstream of DAM 4
              * *
              *

 126          KK   C599O
 127          KO       1                                  21
 128          KM      Reservoir route at C599 (Dam 4 - GEPD). New Stage-Storage Curve 3/4/99
 129          RS       1    ELEV  1694.7
 130          SV    0.00    0.00    0.02    0.08    0.24    0.93    2.29    7.17   18.89   36.08
 131          SV   58.41   86.41   99.21  105.97  112.96  120.18   127.6  146.86  154.86  158.92
 132          SE  1694.6    1697    1698    1699    1700    1702    1704    1706    1708    1710
 133          SE    1712    1714  1714.8  1715.2  1715.6    1716  1716.4  1717.4  1717.8    1718
 134          SQ       0      78     216     443     633     785     907    1017    1113    1199
 135          SQ    1279    1300    1314    1370    2514    5488    9464   14236   17797   19683
 136          SE  1694.5  1696.0  1698.0  1700.0  1702.0  1704.0  1706.0  1708.0  1710.0  1712.0
 137          SE  1714.0  1714.5 1714.86  1715.0  1716.0  1717.5  1719.0  1720.5  1721.5  1722.0
 138          RL                   0.97
              *
              * * End Basin 210.  Start Basin 211
              * *
              *
 139          ZZ
```

```
*****************************************
*                                       *
*   FLOOD HYDROGRAPH PACKAGE  (HEC-1)   *
*              MAY   1991               *
*            VERSION 4.0.1E             *
*     Lahey F77L-EM/32 version 5.01     *
*        Dodson & Associates, Inc.      *
*        DATE  08/11/99  TIME  15:25:26 *
*****************************************
```

```
*****************************************
*                                       *
*    U.S. ARMY CORPS OF ENGINEERS       *
*    HYDROLOGIC ENGINEERING CENTER      *
*          609 SECOND STREET            *
*       DAVIS, CALIFORNIA 95616         *
*           (916) 551-1748              *
*                                       *
*****************************************
```

ACCOUNTS FOR TRASH RACK LOSSES AT THE PRINCIPAL INLET - 50% CLOGG

STANTEC FILENAME:100_6-B.IH1 - 100-YEAR, 6-HOUR STORM
ALTERNATIVE "F" - 8-10-99 BY RJS
Enlarg emergency spillway 120'
Auxiliary Spillway Length, LA = 8'
Auxiliary Spillway Elevation, EA = 1695'

GOLDEN EAGLE PARK DAM - MODEL WITH REVISED STAGE-STORAGE CURVE 3/99

```
11 IO        OUTPUT CONTROL VARIABLES
                  IPRNT          5  PRINT CONTROL
                  IPLOT          0  PLOT CONTROL
                  QSCAL         0.  HYDROGRAPH PLOT SCALE

   IT        HYDROGRAPH TIME DATA
                   NMIN          1  MINUTES IN COMPUTATION INTERVAL
                  IDATE      1   0  STARTING DATE
                  ITIME       0000  STARTING TIME
                     NQ       1080  NUMBER OF HYDROGRAPH ORDINATES
                 NDDATE      1   0  ENDING DATE
                 NDTIME       1759  ENDING TIME
                  ICENT         19  CENTURY MARK

            COMPUTATION INTERVAL    0.02 HOURS
                 TOTAL TIME BASE   17.98 HOURS

      ENGLISH UNITS
           DRAINAGE AREA          SQUARE MILES
           PRECIPITATION DEPTH    INCHES
           LENGTH, ELEVATION      FEET
           FLOW                   CUBIC FEET PER SECOND
           STORAGE VOLUME         ACRE-FEET
           SURFACE AREA           ACRES
           TEMPERATURE            DEGREES FAHRENHEIT
```

*** ***

```
          **************
          *            *
13 KK     *     C559I  *
          *            *
          **************

16 KO        OUTPUT CONTROL VARIABLES
                  IPRNT          1  PRINT CONTROL
                  IPLOT          0  PLOT CONTROL
                  QSCAL         0.  HYDROGRAPH PLOT SCALE
                  IPNCH          0  PUNCH COMPUTED HYDROGRAPH
                   IOUT         21  SAVE HYDROGRAPH ON THIS UNIT
                  ISAV1          1  FIRST ORDINATE PUNCHED OR SAVED
                  ISAV2       1080  LAST ORDINATE PUNCHED OR SAVED
                 TIMINT      0.017  TIME INTERVAL IN HOURS


15 IN        TIME DATA FOR INPUT TIME SERIES
                   JXMIN          1  TIME INTERVAL IN MINUTES
                  JXDATE      1   0  STARTING DATE
                  JXTIME          0  STARTING TIME

           SUBBASIN RUNOFF DATA
```

17 BA SUBBASIN CHARACTERISTICS
TAREA 7.13 SUBBASIN AREA

***

HYDROGRAPH AT STATION C559I

DA	MON	HRMN	ORD	FLOW	DA	MON	HRMN	ORD	FLOW	DA	MON	HRMN	ORD	FLOW	DA	MON	HRMN	ORD	FLOW
1		0000	1	0.	1		0430	271	1839.	1		0900	541	776.	1		1330	811	137.
1		0001	2	0.	1		0431	272	1811.	1		0901	542	772.	1		1331	812	136.
1		0002	3	0.	1		0432	273	1788.	1		0902	543	767.	1		1332	813	135.
1		0003	4	1.	1		0433	274	1770.	1		0903	544	763.	1		1333	814	134.
1		0004	5	1.	1		0434	275	1756.	1		0904	545	759.	1		1334	815	133.
1		0005	6	2.	1		0435	276	1746.	1		0905	546	755.	1		1335	816	132.
1		0006	7	2.	1		0436	277	1741.	1		0906	547	751.	1		1336	817	131.
1		0007	8	3.	1		0437	278	1738.	1		0907	548	746.	1		1337	818	130.
1		0008	9	3.	1		0438	279	1737.	1		0908	549	742.	1		1338	819	129.
1		0009	10	4.	1		0439	280	1736.	1		0909	550	737.	1		1339	820	128.
1		0010	11	4.	1		0440	281	1735.	1		0910	551	733.	1		1340	821	127.
1		0011	12	4.	1		0441	282	1732.	1		0911	552	728.	1		1341	822	126.
1		0012	13	5.	1		0442	283	1728.	1		0912	553	723.	1		1342	823	125.
1		0013	14	5.	1		0443	284	1729.	1		0913	554	719.	1		1343	824	125.
1		0014	15	6.	1		0444	285	1735.	1		0914	555	714.	1		1344	825	124.
1		0015	16	6.	1		0445	286	1746.	1		0915	556	709.	1		1345	826	123.
1		0016	17	6.	1		0446	287	1759.	1		0916	557	704.	1		1346	827	122.
1		0017	18	7.	1		0447	288	1775.	1		0917	558	699.	1		1347	828	122.
1		0018	19	7.	1		0448	289	1789.	1		0918	559	694.	1		1348	829	121.
1		0019	20	7.	1		0449	290	1797.	1		0919	560	689.	1		1349	830	120.
1		0020	21	7.	1		0450	291	1799.	1		0920	561	685.	1		1350	831	119.
1		0021	22	7.	1		0451	292	1795.	1		0921	562	680.	1		1351	832	119.
1		0022	23	8.	1		0452	293	1784.	1		0922	563	676.	1		1352	833	118.
1		0023	24	8.	1		0453	294	1764.	1		0923	564	671.	1		1353	834	117.
1		0024	25	9.	1		0454	295	1738.	1		0924	565	667.	1		1354	835	116.
1		0025	26	10.	1		0455	296	1718.	1		0925	566	663.	1		1355	836	115.
		0026	27	11.	1		0456	297	1700.	1		0926	567	658.	1		1356	837	115.
		0027	28	11.	1		0457	298	1681.	1		0927	568	654.	1		1357	838	114.
1		0028	29	12.	1		0458	299	1662.	1		0928	569	650.	1		1358	839	113.
1		0029	30	13.	1		0459	300	1642.	1		0929	570	646.	1		1359	840	112.
1		0030	31	14.	1		0500	301	1622.	1		0930	571	642.	1		1400	841	111.
1		0031	32	15.	1		0501	302	1601.	1		0931	572	639.	1		1401	842	110.
1		0032	33	16.	1		0502	303	1580.	1		0932	573	635.	1		1402	843	109.
1		0033	34	17.	1		0503	304	1559.	1		0933	574	632.	1		1403	844	108.
1		0034	35	18.	1		0504	305	1537.	1		0934	575	628.	1		1404	845	107.
1		0035	36	19.	1		0505	306	1516.	1		0935	576	625.	1		1405	846	107.
1		0036	37	20.	1		0506	307	1496.	1		0936	577	622.	1		1406	847	106.
1		0037	38	22.	1		0507	308	1475.	1		0937	578	619.	1		1407	848	105.
1		0038	39	23.	1		0508	309	1456.	1		0938	579	615.	1		1408	849	104.
1		0039	40	24.	1		0509	310	1436.	1		0939	580	612.	1		1409	850	103.
1		0040	41	24.	1		0510	311	1417.	1		0940	581	608.	1		1410	851	102.
1		0041	42	25.	1		0511	312	1398.	1		0941	582	605.	1		1411	852	101.
1		0042	43	26.	1		0512	313	1380.	1		0942	583	602.	1		1412	853	100.
1		0043	44	27.	1		0513	314	1362.	1		0943	584	599.	1		1413	854	99.
1		0044	45	28.	1		0514	315	1345.	1		0944	585	595.	1		1414	855	98.
1		0045	46	29.	1		0515	316	1329.	1		0945	586	592.	1		1415	856	97.
1		0046	47	30.	1		0516	317	1313.	1		0946	587	590.	1		1416	857	96.
1		0047	48	31.	1		0517	318	1297.	1		0947	588	587.	1		1417	858	96.
1		0048	49	31.	1		0518	319	1282.	1		0948	589	585.	1		1418	859	95.
1		0049	50	33.	1		0519	320	1267.	1		0949	590	583.	1		1419	860	94.
1		0050	51	34.	1		0520	321	1253.	1		0950	591	580.	1		1420	861	93.
1		0051	52	35.	1		0521	322	1239.	1		0951	592	578.	1		1421	862	92.
1		0052	53	36.	1		0522	323	1226.	1		0952	593	576.	1		1422	863	91.
1		0053	54	38.	1		0523	324	1213.	1		0953	594	574.	1		1423	864	90.
1		0054	55	39.	1		0524	325	1200.	1		0954	595	572.	1		1424	865	89.
1		0055	56	40.	1		0525	326	1189.	1		0955	596	570.	1		1425	866	88.
1		0056	57	41.	1		0526	327	1177.	1		0956	597	568.	1		1426	867	87.
1		0057	58	43.	1		0527	328	1165.	1		0957	598	566.	1		1427	868	86.
1		0058	59	44.	1		0528	329	1154.	1		0958	599	563.	1		1428	869	85.
		0059	60	46.	1		0529	330	1142.	1		0959	600	561.	1		1429	870	83.
		0100	61	47.	1		0530	331	1131.	1		1000	601	559.	1		1430	871	82.
		0101	62	48.	1		0531	332	1120.	1		1001	602	556.	1		1431	872	81.
1		0102	63	50.	1		0532	333	1109.	1		1002	603	554.	1		1432	873	79.
1		0103	64	51.	1		0533	334	1099.	1		1003	604	552.	1		1433	874	78.

1	0104	65	52.	*	1	0534	335	1090.	*	1	1004	605	550.	*	1	1434	875	76.
1	0105	66	54.	*	1	0535	336	1081.	*	1	1005	606	548.	*	1	1435	876	75.
1	0106	67	55.	*	1	0536	337	1073.	*	1	1006	607	546.	*	1	1436	877	73.
1	0107	68	56.	*	1	0537	338	1066.	*	1	1007	608	544.	*	1	1437	878	72.
1	0108	69	58.	*	1	0538	339	1059.	*	1	1008	609	541.	*	1	1438	879	71.
1	0109	70	59.	*	1	0539	340	1054.	*	1	1009	610	539.	*	1	1439	880	69.
1	0110	71	60.	*	1	0540	341	1049.	*	1	1010	611	537.	*	1	1440	881	68.
1	0111	72	62.	*	1	0541	342	1044.	*	1	1011	612	535.	*	1	1441	882	67.
1	0112	73	63.	*	1	0542	343	1040.	*	1	1012	613	533.	*	1	1442	883	66.
1	0113	74	65.	*	1	0543	344	1036.	*	1	1013	614	530.	*	1	1443	884	64.
1	0114	75	66.	*	1	0544	345	1033.	*	1	1014	615	528.	*	1	1444	885	63.
1	0115	76	68.	*	1	0545	346	1029.	*	1	1015	616	526.	*	1	1445	886	62.
1	0116	77	70.	*	1	0546	347	1026.	*	1	1016	617	524.	*	1	1446	887	61.
1	0117	78	71.	*	1	0547	348	1023.	*	1	1017	618	521.	*	1	1447	888	60.
1	0118	79	73.	*	1	0548	349	1021.	*	1	1018	619	519.	*	1	1448	889	59.
1	0119	80	75.	*	1	0549	350	1018.	*	1	1019	620	517.	*	1	1449	890	58.
1	0120	81	76.	*	1	0550	351	1016.	*	1	1020	621	515.	*	1	1450	891	57.
1	0121	82	78.	*	1	0551	352	1013.	*	1	1021	622	513.	*	1	1451	892	56.
1	0122	83	80.	*	1	0552	353	1011.	*	1	1022	623	511.	*	1	1452	893	55.
1	0123	84	82.	*	1	0553	354	1009.	*	1	1023	624	508.	*	1	1453	894	54.
1	0124	85	84.	*	1	0554	355	1008.	*	1	1024	625	506.	*	1	1454	895	54.
1	0125	86	86.	*	1	0555	356	1006.	*	1	1025	626	504.	*	1	1455	896	53.
1	0126	87	88.	*	1	0556	357	1005.	*	1	1026	627	503.	*	1	1456	897	52.
1	0127	88	91.	*	1	0557	358	1004.	*	1	1027	628	501.	*	1	1457	898	51.
1	0128	89	93.	*	1	0558	359	1003.	*	1	1028	629	499.	*	1	1458	899	50.
1	0129	90	96.	*	1	0559	360	1002.	*	1	1029	630	497.	*	1	1459	900	50.
1	0130	91	98.	*	1	0600	361	1002.	*	1	1030	631	495.	*	1	1500	901	49.
1	0131	92	101.	*	1	0601	362	1001.	*	1	1031	632	493.	*	1	1501	902	48.
1	0132	93	104.	*	1	0602	363	1001.	*	1	1032	633	491.	*	1	1502	903	47.
1	0133	94	106.	*	1	0603	364	1000.	*	1	1033	634	490.	*	1	1503	904	47.
1	0134	95	109.	*	1	0604	365	999.	*	1	1034	635	488.	*	1	1504	905	46.
1	0135	96	111.	*	1	0605	366	998.	*	1	1035	636	486.	*	1	1505	906	46.
1	0136	97	114.	*	1	0606	367	997.	*	1	1036	637	484.	*	1	1506	907	46.
1	0137	98	117.	*	1	0607	368	996.	*	1	1037	638	483.	*	1	1507	908	45.
1	0138	99	120.	*	1	0608	369	995.	*	1	1038	639	481.	*	1	1508	909	45.
1	0139	100	122.	*	1	0609	370	993.	*	1	1039	640	479.	*	1	1509	910	44.
1	0140	101	125.	*	1	0610	371	992.	*	1	1040	641	477.	*	1	1510	911	44.
1	0141	102	127.	*	1	0611	372	991.	*	1	1041	642	476.	*	1	1511	912	43.
1	0142	103	130.	*	1	0612	373	990.	*	1	1042	643	474.	*	1	1512	913	43.
1	0143	104	132.	*	1	0613	374	989.	*	1	1043	644	473.	*	1	1513	914	42.
1	0144	105	135.	*	1	0614	375	988.	*	1	1044	645	471.	*	1	1514	915	42.
1	0145	106	137.	*	1	0615	376	987.	*	1	1045	646	469.	*	1	1515	916	41.
1	0146	107	139.	*	1	0616	377	986.	*	1	1046	647	468.	*	1	1516	917	41.
1	0147	108	141.	*	1	0617	378	984.	*	1	1047	648	466.	*	1	1517	918	40.
1	0148	109	144.	*	1	0618	379	983.	*	1	1048	649	465.	*	1	1518	919	40.
1	0149	110	146.	*	1	0619	380	982.	*	1	1049	650	464.	*	1	1519	920	39.
1	0150	111	148.	*	1	0620	381	981.	*	1	1050	651	462.	*	1	1520	921	39.
1	0151	112	150.	*	1	0621	382	980.	*	1	1051	652	461.	*	1	1521	922	38.
1	0152	113	152.	*	1	0622	383	978.	*	1	1052	653	459.	*	1	1522	923	38.
1	0153	114	154.	*	1	0623	384	977.	*	1	1053	654	458.	*	1	1523	924	37.
1	0154	115	156.	*	1	0624	385	976.	*	1	1054	655	456.	*	1	1524	925	37.
1	0155	116	159.	*	1	0625	386	975.	*	1	1055	656	455.	*	1	1525	926	37.
1	0156	117	161.	*	1	0626	387	973.	*	1	1056	657	454.	*	1	1526	927	36.
1	0157	118	163.	*	1	0627	388	972.	*	1	1057	658	452.	*	1	1527	928	36.
1	0158	119	165.	*	1	0628	389	971.	*	1	1058	659	451.	*	1	1528	929	35.
1	0159	120	167.	*	1	0629	390	969.	*	1	1059	660	449.	*	1	1529	930	35.
1	0200	121	169.	*	1	0630	391	968.	*	1	1100	661	448.	*	1	1530	931	35.
1	0201	122	171.	*	1	0631	392	967.	*	1	1101	662	447.	*	1	1531	932	34.
1	0202	123	172.	*	1	0632	393	966.	*	1	1102	663	445.	*	1	1532	933	34.
1	0203	124	174.	*	1	0633	394	964.	*	1	1103	664	444.	*	1	1533	934	34.
1	0204	125	176.	*	1	0634	395	963.	*	1	1104	665	443.	*	1	1534	935	33.
1	0205	126	178.	*	1	0635	396	962.	*	1	1105	666	441.	*	1	1535	936	33.
1	0206	127	180.	*	1	0636	397	961.	*	1	1106	667	440.	*	1	1536	937	32.
1	0207	128	182.	*	1	0637	398	960.	*	1	1107	668	439.	*	1	1537	938	32.
1	0208	129	183.	*	1	0638	399	959.	*	1	1108	669	437.	*	1	1538	939	32.
1	0209	130	185.	*	1	0639	400	958.	*	1	1109	670	436.	*	1	1539	940	31.
1	0210	131	187.	*	1	0640	401	957.	*	1	1110	671	435.	*	1	1540	941	31.
1	0211	132	189.	*	1	0641	402	956.	*	1	1111	672	433.	*	1	1541	942	31.
1	0212	133	190.	*	1	0642	403	955.	*	1	1112	673	432.	*	1	1542	943	30.
1	0213	134	192.	*	1	0643	404	954.	*	1	1113	674	430.	*	1	1543	944	30.
1	0214	135	193.	*	1	0644	405	953.	*	1	1114	675	429.	*	1	1544	945	30.
1	0215	136	195.	*	1	0645	406	952.	*	1	1115	676	427.	*	1	1545	946	29.
1	0216	137	197.	*	1	0646	407	951.	*	1	1116	677	426.	*	1	1546	947	29.
1	0217	138	198.	*	1	0647	408	950.	*	1	1117	678	424.	*	1	1547	948	28.
1	0218	139	200.	*	1	0648	409	949.	*	1	1118	679	423.	*	1	1548	949	28.
1	0219	140	201.	*	1	0649	410	949.	*	1	1119	680	421.	*	1	1549	950	27.
1	0220	141	202.	*	1	0650	411	948.	*	1	1120	681	419.	*	1	1550	951	27.
1	0221	142	204.	*	1	0651	412	947.	*	1	1121	682	416.	*	1	1551	952	26.

1	0222	143	205.	*	1	0652	413	946.	*	1	1122	683	414.	*	1	1552	953	25.
1	0223	144	207.	*	1	0653	414	946.	*	1	1123	684	411.	*	1	1553	954	24.
1	0224	145	208.	*	1	0654	415	945.	*	1	1124	685	408.	*	1	1554	955	23.
1	0225	146	209.	*	1	0655	416	944.	*	1	1125	686	405.	*	1	1555	956	23.
1	0226	147	210.	*	1	0656	417	944.	*	1	1126	687	402.	*	1	1556	957	22.
1	0227	148	211.	*	1	0657	418	943.	*	1	1127	688	399.	*	1	1557	958	21.
1	0228	149	212.	*	1	0658	419	942.	*	1	1128	689	396.	*	1	1558	959	20.
1	0229	150	213.	*	1	0659	420	942.	*	1	1129	690	393.	*	1	1559	960	19.
1	0230	151	214.	*	1	0700	421	941.	*	1	1130	691	390.	*	1	1600	961	18.
1	0231	152	215.	*	1	0701	422	940.	*	1	1131	692	387.	*	1	1601	962	18.
1	0232	153	216.	*	1	0702	423	940.	*	1	1132	693	384.	*	1	1602	963	17.
1	0233	154	217.	*	1	0703	424	939.	*	1	1133	694	381.	*	1	1603	964	16.
1	0234	155	218.	*	1	0704	425	938.	*	1	1134	695	378.	*	1	1604	965	15.
1	0235	156	219.	*	1	0705	426	938.	*	1	1135	696	375.	*	1	1605	966	15.
1	0236	157	220.	*	1	0706	427	937.	*	1	1136	697	371.	*	1	1606	967	14.
1	0237	158	221.	*	1	0707	428	936.	*	1	1137	698	368.	*	1	1607	968	14.
1	0238	159	222.	*	1	0708	429	936.	*	1	1138	699	365.	*	1	1608	969	13.
1	0239	160	223.	*	1	0709	430	935.	*	1	1139	700	362.	*	1	1609	970	12.
1	0240	161	224.	*	1	0710	431	934.	*	1	1140	701	360.	*	1	1610	971	12.
1	0241	162	225.	*	1	0711	432	934.	*	1	1141	702	357.	*	1	1611	972	11.
1	0242	163	226.	*	1	0712	433	933.	*	1	1142	703	354.	*	1	1612	973	11.
1	0243	164	227.	*	1	0713	434	932.	*	1	1143	704	351.	*	1	1613	974	10.
1	0244	165	228.	*	1	0714	435	932.	*	1	1144	705	348.	*	1	1614	975	10.
1	0245	166	229.	*	1	0715	436	931.	*	1	1145	706	346.	*	1	1615	976	9.
1	0246	167	230.	*	1	0716	437	931.	*	1	1146	707	343.	*	1	1616	977	9.
1	0247	168	231.	*	1	0717	438	930.	*	1	1147	708	340.	*	1	1617	978	9.
1	0248	169	232.	*	1	0718	439	929.	*	1	1148	709	338.	*	1	1618	979	8.
1	0249	170	233.	*	1	0719	440	929.	*	1	1149	710	335.	*	1	1619	980	8.
1	0250	171	234.	*	1	0720	441	928.	*	1	1150	711	332.	*	1	1620	981	8.
1	0251	172	235.	*	1	0721	442	927.	*	1	1151	712	330.	*	1	1621	982	7.
1	0252	173	237.	*	1	0722	443	926.	*	1	1152	713	327.	*	1	1622	983	7.
1	0253	174	238.	*	1	0723	444	926.	*	1	1153	714	324.	*	1	1623	984	7.
1	0254	175	239.	*	1	0724	445	925.	*	1	1154	715	322.	*	1	1624	985	6.
1	0255	176	240.	*	1	0725	446	924.	*	1	1155	716	319.	*	1	1625	986	6.
1	0256	177	241.	*	1	0726	447	923.	*	1	1156	717	316.	*	1	1626	987	6.
1	0257	178	242.	*	1	0727	448	923.	*	1	1157	718	313.	*	1	1627	988	6.
1	0258	179	244.	*	1	0728	449	922.	*	1	1158	719	311.	*	1	1628	989	5.
1	0259	180	245.	*	1	0729	450	921.	*	1	1159	720	308.	*	1	1629	990	5.
1	0300	181	246.	*	1	0730	451	921.	*	1	1200	721	305.	*	1	1630	991	5.
1	0301	182	247.	*	1	0731	452	920.	*	1	1201	722	301.	*	1	1631	992	5.
1	0302	183	249.	*	1	0732	453	919.	*	1	1202	723	298.	*	1	1632	993	4.
1	0303	184	251.	*	1	0733	454	918.	*	1	1203	724	295.	*	1	1633	994	4.
1	0304	185	253.	*	1	0734	455	918.	*	1	1204	725	292.	*	1	1634	995	4.
1	0305	186	256.	*	1	0735	456	917.	*	1	1205	726	289.	*	1	1635	996	4.
1	0306	187	259.	*	1	0736	457	916.	*	1	1206	727	286.	*	1	1636	997	4.
1	0307	188	262.	*	1	0737	458	915.	*	1	1207	728	283.	*	1	1637	998	4.
1	0308	189	265.	*	1	0738	459	915.	*	1	1208	729	280.	*	1	1638	999	3.
1	0309	190	268.	*	1	0739	460	914.	*	1	1209	730	277.	*	1	1639	1000	3.
1	0310	191	271.	*	1	0740	461	913.	*	1	1210	731	274.	*	1	1640	1001	3.
1	0311	192	274.	*	1	0741	462	912.	*	1	1211	732	271.	*	1	1641	1002	3.
1	0312	193	277.	*	1	0742	463	912.	*	1	1212	733	268.	*	1	1642	1003	3.
1	0313	194	281.	*	1	0743	464	911.	*	1	1213	734	265.	*	1	1643	1004	3.
1	0314	195	284.	*	1	0744	465	910.	*	1	1214	735	263.	*	1	1644	1005	3.
1	0315	196	287.	*	1	0745	466	909.	*	1	1215	736	260.	*	1	1645	1006	3.
1	0316	197	292.	*	1	0746	467	908.	*	1	1216	737	257.	*	1	1646	1007	2.
1	0317	198	298.	*	1	0747	468	907.	*	1	1217	738	255.	*	1	1647	1008	2.
1	0318	199	307.	*	1	0748	469	906.	*	1	1218	739	252.	*	1	1648	1009	2.
1	0319	200	320.	*	1	0749	470	906.	*	1	1219	740	250.	*	1	1649	1010	2.
1	0320	201	335.	*	1	0750	471	905.	*	1	1220	741	248.	*	1	1650	1011	2.
1	0321	202	351.	*	1	0751	472	904.	*	1	1221	742	245.	*	1	1651	1012	2.
1	0322	203	367.	*	1	0752	473	903.	*	1	1222	743	243.	*	1	1652	1013	2.
1	0323	204	383.	*	1	0753	474	902.	*	1	1223	744	241.	*	1	1653	1014	2.
1	0324	205	400.	*	1	0754	475	901.	*	1	1224	745	239.	*	1	1654	1015	2.
1	0325	206	417.	*	1	0755	476	900.	*	1	1225	746	237.	*	1	1655	1016	2.
1	0326	207	435.	*	1	0756	477	899.	*	1	1226	747	235.	*	1	1656	1017	2.
1	0327	208	453.	*	1	0757	478	898.	*	1	1227	748	233.	*	1	1657	1018	1.
1	0328	209	472.	*	1	0758	479	897.	*	1	1228	749	231.	*	1	1658	1019	1.
1	0329	210	490.	*	1	0759	480	896.	*	1	1229	750	229.	*	1	1659	1020	1.
1	0330	211	510.	*	1	0800	481	894.	*	1	1230	751	227.	*	1	1700	1021	1.
1	0331	212	532.	*	1	0801	482	893.	*	1	1231	752	225.	*	1	1701	1022	1.
1	0332	213	560.	*	1	0802	483	892.	*	1	1232	753	223.	*	1	1702	1023	1.
1	0333	214	598.	*	1	0803	484	891.	*	1	1233	754	221.	*	1	1703	1024	1.
1	0334	215	648.	*	1	0804	485	890.	*	1	1234	755	219.	*	1	1704	1025	1.
1	0335	216	704.	*	1	0805	486	889.	*	1	1235	756	217.	*	1	1705	1026	1.
1	0336	217	764.	*	1	0806	487	888.	*	1	1236	757	215.	*	1	1706	1027	1.
1	0337	218	824.	*	1	0807	488	886.	*	1	1237	758	213.	*	1	1707	1028	1.
1	0338	219	883.	*	1	0808	489	885.	*	1	1238	759	211.	*	1	1708	1029	1.
1	0339	220	940.	*	1	0809	490	884.	*	1	1239	760	209.	*	1	1709	1030	1.

1	0340	221	997.	*	1	0810	491	883.	*	1	1240	761	207.	*	1	1710	1031	1.
1	0341	222	1053.	*	1	0811	492	882.	*	1	1241	762	205.	*	1	1711	1032	1.
1	0342	223	1109.	*	1	0812	493	880.	*	1	1242	763	203.	*	1	1712	1033	1.
1	0343	224	1165.	*	1	0813	494	879.	*	1	1243	764	201.	*	1	1713	1034	1.
1	0344	225	1221.	*	1	0814	495	878.	*	1	1244	765	199.	*	1	1714	1035	1.
1	0345	226	1279.	*	1	0815	496	876.	*	1	1245	766	197.	*	1	1715	1036	1.
1	0346	227	1338.	*	1	0816	497	875.	*	1	1246	767	195.	*	1	1716	1037	1.
1	0347	228	1401.	*	1	0817	498	874.	*	1	1247	768	193.	*	1	1717	1038	1.
1	0348	229	1471.	*	1	0818	499	873.	*	1	1248	769	192.	*	1	1718	1039	1.
1	0349	230	1544.	*	1	0819	500	871.	*	1	1249	770	190.	*	1	1719	1040	1.
1	0350	231	1620.	*	1	0820	501	870.	*	1	1250	771	188.	*	1	1720	1041	1.
1	0351	232	1697.	*	1	0821	502	869.	*	1	1251	772	187.	*	1	1721	1042	1.
1	0352	233	1775.	*	1	0822	503	867.	*	1	1252	773	185.	*	1	1722	1043	1.
1	0353	234	1852.	*	1	0823	504	866.	*	1	1253	774	184.	*	1	1723	1044	0.
1	0354	235	1927.	*	1	0824	505	865.	*	1	1254	775	182.	*	1	1724	1045	0.
1	0355	236	1998.	*	1	0825	506	863.	*	1	1255	776	181.	*	1	1725	1046	0.
1	0356	237	2066.	*	1	0826	507	862.	*	1	1256	777	179.	*	1	1726	1047	0.
1	0357	238	2128.	*	1	0827	508	861.	*	1	1257	778	178.	*	1	1727	1048	0.
1	0358	239	2182.	*	1	0828	509	859.	*	1	1258	779	177.	*	1	1728	1049	0.
1	0359	240	2232.	*	1	0829	510	858.	*	1	1259	780	175.	*	1	1729	1050	0.
1	0400	241	2282.	*	1	0830	511	857.	*	1	1300	781	174.	*	1	1730	1051	0.
1	0401	242	2331.	*	1	0831	512	855.	*	1	1301	782	173.	*	1	1731	1052	0.
1	0402	243	2374.	*	1	0832	513	854.	*	1	1302	783	171.	*	1	1732	1053	0.
1	0403	244	2407.	*	1	0833	514	853.	*	1	1303	784	170.	*	1	1733	1054	0.
1	0404	245	2429.	*	1	0834	515	851.	*	1	1304	785	168.	*	1	1734	1055	0.
1	0405	246	2445.	*	1	0835	516	850.	*	1	1305	786	167.	*	1	1735	1056	0.
1	0406	247	2456.	*	1	0836	517	848.	*	1	1306	787	166.	*	1	1736	1057	0.
1	0407	248	2464.	*	1	0837	518	847.	*	1	1307	788	164.	*	1	1737	1058	0.
1	0408	249	2470.	*	1	0838	519	845.	*	1	1308	789	163.	*	1	1738	1059	0.
1	0409	250	2473.	*	1	0839	520	843.	*	1	1309	790	162.	*	1	1739	1060	0.
1	0410	251	2474.	*	1	0840	521	841.	*	1	1310	791	160.	*	1	1740	1061	0.
1	0411	252	2466.	*	1	0841	522	839.	*	1	1311	792	159.	*	1	1741	1062	0.
1	0412	253	2453.	*	1	0842	523	837.	*	1	1312	793	158.	*	1	1742	1063	0.
1	0413	254	2438.	*	1	0843	524	834.	*	1	1313	794	156.	*	1	1743	1064	0.
1	0414	255	2423.	*	1	0844	525	831.	*	1	1314	795	155.	*	1	1744	1065	0.
1	0415	256	2409.	*	1	0845	526	829.	*	1	1315	796	154.	*	1	1745	1066	0.
1	0416	257	2392.	*	1	0846	527	826.	*	1	1316	797	153.	*	1	1746	1067	0.
1	0417	258	2369.	*	1	0847	528	823.	*	1	1317	798	151.	*	1	1747	1068	0.
1	0418	259	2339.	*	1	0848	529	820.	*	1	1318	799	150.	*	1	1748	1069	0.
1	0419	260	2302.	*	1	0849	530	817.	*	1	1319	800	149.	*	1	1749	1070	0.
1	0420	261	2261.	*	1	0850	531	814.	*	1	1320	801	148.	*	1	1750	1071	0.
1	0421	262	2219.	*	1	0851	532	810.	*	1	1321	802	147.	*	1	1751	1072	0.
1	0422	263	2177.	*	1	0852	533	807.	*	1	1322	803	146.	*	1	1752	1073	0.
1	0423	264	2135.	*	1	0853	534	804.	*	1	1323	804	145.	*	1	1753	1074	0.
1	0424	265	2094.	*	1	0854	535	800.	*	1	1324	805	144.	*	1	1754	1075	0.
1	0425	266	2053.	*	1	0855	536	797.	*	1	1325	806	143.	*	1	1755	1076	0.
1	0426	267	2008.	*	1	0856	537	793.	*	1	1326	807	141.	*	1	1756	1077	0.
1	0427	268	1953.	*	1	0857	538	789.	*	1	1327	808	140.	*	1	1757	1078	0.
1	0428	269	1908.	*	1	0858	539	785.	*	1	1328	809	139.	*	1	1758	1079	0.
1	0429	270	1871.	*	1	0859	540	781.	*	1	1329	810	138.	*	1	1759	1080	0.
				*					*					*				

****

PEAK FLOW (CFS)	TIME (HR)		MAXIMUM AVERAGE FLOW 6-HR	24-HR	72-HR	17.98-HR
2474.	4.17	(CFS)	1162.	508.	508.	508.
		(INCHES)	1.516	1.985	1.985	1.985
		(AC-FT)	576.	755.	755.	755.

CUMULATIVE AREA = 7.13 SQ MI

*** ***

```
              **************
              *            *
126 KK        *     C5990  *
              *            *
              **************
```

12[illegible]0 OUTPUT CONTROL VARIABLES

IPRNT	1	PRINT CONTROL
IPLOT	0	PLOT CONTROL
QSCAL	0.	HYDROGRAPH PLOT SCALE
IPNCH	0	PUNCH COMPUTED HYDROGRAPH

IOUT	21	SAVE HYDROGRAPH ON THIS UNIT
ISAV1	1	FIRST ORDINATE PUNCHED OR SAVED
ISAV2	1080	LAST ORDINATE PUNCHED OR SAVED
TIMINT	0.017	TIME INTERVAL IN HOURS

Reservoir route at C599 (Dam 4 - GEPD). New Stage-Storage Curve 3/4/99

HYDROGRAPH ROUTING DATA

138 RL ROUTING LOSSES

QLOSS	0.00	INITIAL LOSS
CLOSS	0.00	ADDITIONAL FRACTION LOST
PERCRT	0.97	CHANNEL PERCOLATION RATE
ELVINV	0.00	INVERT ELEVATION

129 RS STORAGE ROUTING

NSTPS	1	NUMBER OF SUBREACHES
ITYP	ELEV	TYPE OF INITIAL CONDITION
RSVRIC	1694.70	INITIAL CONDITION
X	0.00	WORKING R AND D COEFFICIENT

130 SV	STORAGE	0.0	0.0	0.0	0.1	0.2	0.9	2.3	7.2	18.9	36.1
		58.4	86.4	99.2	106.0	113.0	120.2	127.6	146.9	154.9	158.9
132 SE	ELEVATION	1694.60	1697.00	1698.00	1699.00	1700.00	1702.00	1704.00	1706.00	1708.00	1710.00
		1712.00	1714.00	1714.80	1715.20	1715.60	1716.00	1716.40	1717.40	1717.80	1718.00
134 SQ	DISCHARGE	0.	78.	216.	443.	633.	785.	907.	1017.	1113.	1199.
		1279.	1300.	1314.	1370.	2514.	5488.	9464.	14236.	17797.	19683.
136 SE	ELEVATION	1694.50	1696.00	1698.00	1700.00	1702.00	1704.00	1706.00	1708.00	1710.00	1712.00
		1714.00	1714.50	1714.86	1715.00	1716.00	1717.50	1719.00	1720.50	1721.50	1722.00

***

COMPUTED STORAGE-OUTFLOW-ELEVATION DATA

STORAGE	0.00	0.00	0.00	0.00	0.02	0.08	0.24	0.93	2.29	7.17
OUTFLOW	0.00	5.20	78.00	147.00	216.00	329.50	443.00	633.00	785.00	907.00
ELEVATION	1694.50	1694.60	1696.00	1697.00	1698.00	1699.00	1700.00	1702.00	1704.00	1706.00
STORAGE	18.89	36.08	58.41	86.41	94.41	99.21	100.22	102.59	105.97	112.96
OUTFLOW	1017.00	1113.00	1199.00	1279.00	1300.00	1311.67	1314.00	1370.00	1598.74	2056.37
ELEVATION	1708.00	1710.00	1712.00	1714.00	1714.50	1714.80	1714.86	1715.00	1715.20	1715.60
STORAGE	120.18	127.60	146.86	148.86	154.86	158.92	179.22	209.68	229.99	240.14
OUTFLOW	2514.00	3307.11	5289.78	5488.00	6283.33	6813.33	9464.00	14236.00	17797.00	19683.00
ELEVATION	1716.00	1716.40	1717.40	1717.50	1717.80	1718.00	1719.00	1720.50	1721.50	1722.00

*** WARNING *** MODIFIED PULS ROUTING MAY BE NUMERICALLY UNSTABLE FOR OUTFLOWS BETWEEN 147. TO 330.
THE ROUTED HYDROGRAPH SHOULD BE EXAMINED FOR OSCILLATIONS OR OUTFLOWS GREATER THAN PEAK INFLOWS.
THIS CAN BE CORRECTED BY DECREASING THE TIME INTERVAL OR INCREASING STORAGE (USE A LONGER REACH.)

****

HYDROGRAPH AT STATION C5990

****

DA	MON	HRMN	ORD	OUTFLOW	STORAGE	STAGE	DA	MON	HRMN	ORD	OUTFLOW	STORAGE	STAGE	DA	MON	HRMN	ORD	OUTFLOW	STORAGE	STAGE
1		0000	1	10.	0.0	1694.6	1		0600	361	1264.	81.3	1713.6	1		1200	721	306.	0.1	1698.8
1		0001	2	0.	0.0	1694.5	1		0601	362	1263.	81.0	1713.6	1		1201	722	303.	0.1	1698.8
1		0002	3	0.	0.0	1694.5	1		0602	363	1262.	80.6	1713.6	1		1202	723	299.	0.1	1698.7
1		0003	4	1.	0.0	1694.5	1		0603	364	1261.	80.3	1713.6	1		1203	724	296.	0.1	1698.7
1		0004	5	1.	0.0	1694.5	1		0604	365	1260.	79.9	1713.5	1		1204	725	293.	0.1	1698.7
1		0005	6	2.	0.0	1694.5	1		0605	366	1259.	79.5	1713.5	1		1205	726	290.	0.1	1698.7
1		0006	7	2.	0.0	1694.5	1		0606	367	1258.	79.2	1713.5	1		1206	727	287.	0.1	1698.6
1		0007	8	3.	0.0	1694.6	1		0607	368	1257.	78.8	1713.5	1		1207	728	284.	0.1	1698.6
1		0008	9	3.	0.0	1694.6	1		0608	369	1256.	78.5	1713.4	1		1208	729	281.	0.1	1698.6
1		0009	10	4.	0.0	1694.6	1		0609	370	1255.	78.1	1713.4	1		1209	730	278.	0.1	1698.5
1		0010	11	4.	0.0	1694.6	1		0610	371	1254.	77.7	1713.4	1		1210	731	275.	0.1	1698.5
1		0011	12	4.	0.0	1694.6	1		0611	372	1253.	77.4	1713.4	1		1211	732	272.	0.0	1698.5
1		0012	13	5.	0.0	1694.6	1		0612	373	1252.	77.0	1713.3	1		1212	733	269.	0.0	1698.5
1		0013	14	5.	0.0	1694.6	1		0613	374	1251.	76.7	1713.3	1		1213	734	266.	0.0	1698.4
1		0014	15	6.	0.0	1694.6	1		0614	375	1250.	76.3	1713.3	1		1214	735	264.	0.0	1698.4
1		0015	16	6.	0.0	1694.6	1		0615	376	1249.	75.9	1713.3	1		1215	736	261.	0.0	1698.4

1	0016	17	6.	0.0	1694.6	*	1	0616	377	1248.	75.6	1713.2	*	1	1216	737	258.	0.0	1698.4
1	0017	18	7.	0.0	1694.6	*	1	0617	378	1247.	75.2	1713.2	*	1	1217	738	256.	0.0	1698.3
1	0018	19	7.	0.0	1694.6	*	1	0618	379	1246.	74.8	1713.2	*	1	1218	739	253.	0.0	1698.3
1	0019	20	7.	0.0	1694.6	*	1	0619	380	1245.	74.5	1713.1	*	1	1219	740	251.	0.0	1698.3
1	0020	21	7.	0.0	1694.6	*	1	0620	381	1244.	74.1	1713.1	*	1	1220	741	249.	0.0	1698.3
1	0021	22	7.	0.0	1694.6	*	1	0621	382	1243.	73.8	1713.1	*	1	1221	742	246.	0.0	1698.3
1	0022	23	8.	0.0	1694.7	*	1	0622	383	1242.	73.4	1713.1	*	1	1222	743	244.	0.0	1698.2
1	0023	24	8.	0.0	1694.7	*	1	0623	384	1241.	73.0	1713.0	*	1	1223	744	242.	0.0	1698.2
1	0024	25	9.	0.0	1694.7	*	1	0624	385	1240.	72.7	1713.0	*	1	1224	745	240.	0.0	1698.2
1	0025	26	10.	0.0	1694.7	*	1	0625	386	1239.	72.3	1713.0	*	1	1225	746	238.	0.0	1698.2
1	0026	27	11.	0.0	1694.7	*	1	0626	387	1238.	71.9	1713.0	*	1	1226	747	236.	0.0	1698.2
1	0027	28	11.	0.0	1694.7	*	1	0627	388	1237.	71.6	1712.9	*	1	1227	748	234.	0.0	1698.2
1	0028	29	12.	0.0	1694.7	*	1	0628	389	1236.	71.2	1712.9	*	1	1228	749	232.	0.0	1698.1
1	0029	30	13.	0.0	1694.8	*	1	0629	390	1234.	70.8	1712.9	*	1	1229	750	230.	0.0	1698.1
1	0030	31	14.	0.0	1694.8	*	1	0630	391	1233.	70.5	1712.9	*	1	1230	751	228.	0.0	1698.1
1	0031	32	15.	0.0	1694.8	*	1	0631	392	1232.	70.1	1712.8	*	1	1231	752	226.	0.0	1698.1
1	0032	33	16.	0.0	1694.8	*	1	0632	393	1231.	69.8	1712.8	*	1	1232	753	224.	0.0	1698.1
1	0033	34	17.	0.0	1694.8	*	1	0633	394	1230.	69.4	1712.8	*	1	1233	754	222.	0.0	1698.1
1	0034	35	18.	0.0	1694.8	*	1	0634	395	1229.	69.0	1712.8	*	1	1234	755	220.	0.0	1698.0
1	0035	36	19.	0.0	1694.9	*	1	0635	396	1228.	68.7	1712.7	*	1	1235	756	218.	0.0	1698.0
1	0036	37	20.	0.0	1694.9	*	1	0636	397	1227.	68.3	1712.7	*	1	1236	757	216.	0.0	1698.0
1	0037	38	22.	0.0	1694.9	*	1	0637	398	1226.	67.9	1712.7	*	1	1237	758	213.	0.0	1698.0
1	0038	39	23.	0.0	1694.9	*	1	0638	399	1225.	67.6	1712.7	*	1	1238	759	211.	0.0	1697.9
1	0039	40	24.	0.0	1695.0	*	1	0639	400	1224.	67.2	1712.6	*	1	1239	760	209.	0.0	1697.9
1	0040	41	24.	0.0	1695.0	*	1	0640	401	1223.	66.8	1712.6	*	1	1240	761	207.	0.0	1697.9
1	0041	42	25.	0.0	1695.0	*	1	0641	402	1222.	66.5	1712.6	*	1	1241	762	205.	0.0	1697.8
1	0042	43	26.	0.0	1695.0	*	1	0642	403	1221.	66.1	1712.5	*	1	1242	763	203.	0.0	1697.8
1	0043	44	27.	0.0	1695.0	*	1	0643	404	1220.	65.7	1712.5	*	1	1243	764	201.	0.0	1697.8
1	0044	45	28.	0.0	1695.0	*	1	0644	405	1219.	65.4	1712.5	*	1	1244	765	199.	0.0	1697.8
1	0045	46	29.	0.0	1695.1	*	1	0645	406	1218.	65.0	1712.5	*	1	1245	766	197.	0.0	1697.7
1	0046	47	30.	0.0	1695.1	*	1	0646	407	1217.	64.6	1712.4	*	1	1246	767	195.	0.0	1697.7
1	0047	48	31.	0.0	1695.1	*	1	0647	408	1216.	64.3	1712.4	*	1	1247	768	193.	0.0	1697.7
1	0048	49	31.	0.0	1695.1	*	1	0648	409	1215.	63.9	1712.4	*	1	1248	769	192.	0.0	1697.7
1	0049	50	33.	0.0	1695.1	*	1	0649	410	1214.	63.5	1712.4	*	1	1249	770	191.	0.0	1697.6
1	0050	51	34.	0.0	1695.2	*	1	0650	411	1213.	63.2	1712.3	*	1	1250	771	188.	0.0	1697.6
1	0051	52	35.	0.0	1695.2	*	1	0651	412	1211.	62.8	1712.3	*	1	1251	772	187.	0.0	1697.6
1	0052	53	36.	0.0	1695.2	*	1	0652	413	1210.	62.4	1712.3	*	1	1252	773	186.	0.0	1697.6
1	0053	54	38.	0.0	1695.2	*	1	0653	414	1209.	62.1	1712.3	*	1	1253	774	184.	0.0	1697.5
1	0054	55	39.	0.0	1695.3	*	1	0654	415	1208.	61.7	1712.2	*	1	1254	775	183.	0.0	1697.5
1	0055	56	40.	0.0	1695.3	*	1	0655	416	1207.	61.3	1712.2	*	1	1255	776	181.	0.0	1697.5
1	0056	57	41.	0.0	1695.3	*	1	0656	417	1206.	61.0	1712.2	*	1	1256	777	180.	0.0	1697.5
1	0057	58	43.	0.0	1695.3	*	1	0657	418	1205.	60.6	1712.2	*	1	1257	778	178.	0.0	1697.5
1	0058	59	44.	0.0	1695.3	*	1	0658	419	1204.	60.3	1712.1	*	1	1258	779	177.	0.0	1697.4
1	0059	60	46.	0.0	1695.4	*	1	0659	420	1203.	59.9	1712.1	*	1	1259	780	175.	0.0	1697.4
1	0100	61	47.	0.0	1695.4	*	1	0700	421	1202.	59.5	1712.1	*	1	1300	781	174.	0.0	1697.4
1	0101	62	48.	0.0	1695.4	*	1	0701	422	1201.	59.2	1712.1	*	1	1301	782	173.	0.0	1697.4
1	0102	63	50.	0.0	1695.5	*	1	0702	423	1200.	58.8	1712.0	*	1	1302	783	171.	0.0	1697.4
1	0103	64	51.	0.0	1695.5	*	1	0703	424	1199.	58.5	1712.0	*	1	1303	784	170.	0.0	1697.3
1	0104	65	52.	0.0	1695.5	*	1	0704	425	1198.	58.1	1712.0	*	1	1304	785	169.	0.0	1697.3
1	0105	66	54.	0.0	1695.5	*	1	0705	426	1196.	57.7	1711.9	*	1	1305	786	167.	0.0	1697.3
1	0106	67	55.	0.0	1695.6	*	1	0706	427	1195.	57.4	1711.9	*	1	1306	787	166.	0.0	1697.3
1	0107	68	56.	0.0	1695.6	*	1	0707	428	1194.	57.0	1711.9	*	1	1307	788	164.	0.0	1697.3
1	0108	69	58.	0.0	1695.6	*	1	0708	429	1192.	56.7	1711.8	*	1	1308	789	163.	0.0	1697.2
1	0109	70	59.	0.0	1695.6	*	1	0709	430	1191.	56.3	1711.8	*	1	1309	790	162.	0.0	1697.2
1	0110	71	60.	0.0	1695.7	*	1	0710	431	1190.	56.0	1711.8	*	1	1310	791	160.	0.0	1697.2
1	0111	72	62.	0.0	1695.7	*	1	0711	432	1188.	55.6	1711.8	*	1	1311	792	159.	0.0	1697.2
1	0112	73	63.	0.0	1695.7	*	1	0712	433	1187.	55.3	1711.7	*	1	1312	793	158.	0.0	1697.2
1	0113	74	65.	0.0	1695.8	*	1	0713	434	1186.	54.9	1711.7	*	1	1313	794	156.	0.0	1697.1
1	0114	75	66.	0.0	1695.8	*	1	0714	435	1184.	54.6	1711.7	*	1	1314	795	155.	0.0	1697.1
1	0115	76	68.	0.0	1695.8	*	1	0715	436	1183.	54.2	1711.6	*	1	1315	796	154.	0.0	1697.1
1	0116	77	70.	0.0	1695.8	*	1	0716	437	1182.	53.9	1711.6	*	1	1316	797	153.	0.0	1697.1
1	0117	78	71.	0.0	1695.9	*	1	0717	438	1180.	53.5	1711.6	*	1	1317	798	152.	0.0	1697.1
1	0118	79	73.	0.0	1695.9	*	1	0718	439	1179.	53.2	1711.5	*	1	1318	799	150.	0.0	1697.0
1	0119	80	75.	0.0	1695.9	*	1	0719	440	1178.	52.8	1711.5	*	1	1319	800	149.	0.0	1697.0
1	0120	81	76.	0.0	1696.0	*	1	0720	441	1176.	52.5	1711.5	*	1	1320	801	148.	0.0	1697.0
1	0121	82	78.	0.0	1696.0	*	1	0721	442	1175.	52.2	1711.4	*	1	1321	802	147.	0.0	1697.0
1	0122	83	80.	0.0	1696.0	*	1	0722	443	1174.	51.8	1711.4	*	1	1322	803	146.	0.0	1697.0
1	0123	84	82.	0.0	1696.1	*	1	0723	444	1172.	51.5	1711.4	*	1	1323	804	145.	0.0	1697.0
1	0124	85	84.	0.0	1696.1	*	1	0724	445	1171.	51.1	1711.3	*	1	1324	805	144.	0.0	1697.0
1	0125	86	86.	0.0	1696.1	*	1	0725	446	1170.	50.8	1711.3	*	1	1325	806	143.	0.0	1696.9
1	0126	87	88.	0.0	1696.1	*	1	0726	447	1168.	50.5	1711.3	*	1	1326	807	141.	0.0	1696.9
1	0127	88	91.	0.0	1696.2	*	1	0727	448	1167.	50.1	1711.3	*	1	1327	808	140.	0.0	1696.9
1	0128	89	93.	0.0	1696.2	*	1	0728	449	1166.	49.8	1711.2	*	1	1328	809	139.	0.0	1696.9
1	0129	90	96.	0.0	1696.3	*	1	0729	450	1164.	49.5	1711.2	*	1	1329	810	138.	0.0	1696.9
1	0130	91	98.	0.0	1696.3	*	1	0730	451	1163.	49.1	1711.2	*	1	1330	811	137.	0.0	1696.9
1	0131	92	101.	0.0	1696.3	*	1	0731	452	1162.	48.8	1711.1	*	1	1331	812	136.	0.0	1696.8
1	0132	93	104.	0.0	1696.4	*	1	0732	453	1161.	48.5	1711.1	*	1	1332	813	135.	0.0	1696.8
1	0133	94	106.	0.0	1696.4	*	1	0733	454	1159.	48.1	1711.1	*	1	1333	814	134.	0.0	1696.8

1	0134	95	109.	0.0	1696.4	*	1	0734	455	1158.	47.8	1711.0	*	1	1334	815	133.	0.0	1696.8
1	0135	96	111.	0.0	1696.5	*	1	0735	456	1157.	47.5	1711.0	*	1	1335	816	132.	0.0	1696.8
1	0136	97	114.	0.0	1696.5	*	1	0736	457	1156.	47.1	1711.0	*	1	1336	817	131.	0.0	1696.8
1	0137	98	117.	0.0	1696.6	*	1	0737	458	1154.	46.8	1711.0	*	1	1337	818	130.	0.0	1696.8
1	0138	99	120.	0.0	1696.6	*	1	0738	459	1153.	46.5	1710.9	*	1	1338	819	129.	0.0	1696.7
1	0139	100	122.	0.0	1696.6	*	1	0739	460	1152.	46.1	1710.9	*	1	1339	820	128.	0.0	1696.7
1	0140	101	125.	0.0	1696.7	*	1	0740	461	1150.	45.8	1710.9	*	1	1340	821	127.	0.0	1696.7
1	0141	102	127.	0.0	1696.7	*	1	0741	462	1149.	45.5	1710.8	*	1	1341	822	126.	0.0	1696.7
1	0142	103	130.	0.0	1696.8	*	1	0742	463	1148.	45.2	1710.8	*	1	1342	823	125.	0.0	1696.7
1	0143	104	132.	0.0	1696.8	*	1	0743	464	1147.	44.8	1710.8	*	1	1343	824	125.	0.0	1696.7
1	0144	105	135.	0.0	1696.8	*	1	0744	465	1145.	44.5	1710.8	*	1	1344	825	124.	0.0	1696.7
1	0145	106	137.	0.0	1696.9	*	1	0745	466	1144.	44.2	1710.7	*	1	1345	826	123.	0.0	1696.7
1	0146	107	139.	0.0	1696.9	*	1	0746	467	1143.	43.9	1710.7	*	1	1346	827	122.	0.0	1696.6
1	0147	108	141.	0.0	1696.9	*	1	0747	468	1142.	43.5	1710.7	*	1	1347	828	122.	0.0	1696.6
1	0148	109	144.	0.0	1697.0	*	1	0748	469	1140.	43.2	1710.6	*	1	1348	829	121.	0.0	1696.6
1	0149	110	146.	0.0	1697.0	*	1	0749	470	1139.	42.9	1710.6	*	1	1349	830	120.	0.0	1696.6
1	0150	111	148.	0.0	1697.0	*	1	0750	471	1138.	42.6	1710.6	*	1	1350	831	119.	0.0	1696.6
1	0151	112	150.	0.0	1697.0	*	1	0751	472	1137.	42.3	1710.6	*	1	1351	832	119.	0.0	1696.6
1	0152	113	152.	0.0	1697.1	*	1	0752	473	1136.	41.9	1710.5	*	1	1352	833	118.	0.0	1696.6
1	0153	114	154.	0.0	1697.1	*	1	0753	474	1134.	41.6	1710.5	*	1	1353	834	117.	0.0	1696.6
1	0154	115	156.	0.0	1697.1	*	1	0754	475	1133.	41.3	1710.5	*	1	1354	835	116.	0.0	1696.5
1	0155	116	158.	0.0	1697.2	*	1	0755	476	1132.	41.0	1710.4	*	1	1355	836	115.	0.0	1696.5
1	0156	117	161.	0.0	1697.2	*	1	0756	477	1131.	40.7	1710.4	*	1	1356	837	115.	0.0	1696.5
1	0157	118	163.	0.0	1697.2	*	1	0757	478	1129.	40.3	1710.4	*	1	1357	838	114.	0.0	1696.5
1	0158	119	165.	0.0	1697.3	*	1	0758	479	1128.	40.0	1710.4	*	1	1358	839	113.	0.0	1696.5
1	0159	120	167.	0.0	1697.3	*	1	0759	480	1127.	39.7	1710.3	*	1	1359	840	112.	0.0	1696.5
1	0200	121	169.	0.0	1697.3	*	1	0800	481	1126.	39.4	1710.3	*	1	1400	841	111.	0.0	1696.5
1	0201	122	171.	0.0	1697.3	*	1	0801	482	1124.	39.1	1710.3	*	1	1401	842	110.	0.0	1696.5
1	0202	123	172.	0.0	1697.4	*	1	0802	483	1123.	38.7	1710.2	*	1	1402	843	109.	0.0	1696.4
1	0203	124	173.	0.0	1697.4	*	1	0803	484	1122.	38.4	1710.2	*	1	1403	844	108.	0.0	1696.4
1	0204	125	176.	0.0	1697.4	*	1	0804	485	1121.	38.1	1710.2	*	1	1404	845	107.	0.0	1696.4
1	0205	126	178.	0.0	1697.4	*	1	0805	486	1120.	37.8	1710.2	*	1	1405	846	107.	0.0	1696.4
1	0206	127	180.	0.0	1697.5	*	1	0806	487	1118.	37.5	1710.1	*	1	1406	847	106.	0.0	1696.4
1	0207	128	182.	0.0	1697.5	*	1	0807	488	1117.	37.2	1710.1	*	1	1407	848	105.	0.0	1696.4
1	0208	129	183.	0.0	1697.5	*	1	0808	489	1116.	36.8	1710.1	*	1	1408	849	104.	0.0	1696.4
1	0209	130	184.	0.0	1697.5	*	1	0809	490	1115.	36.5	1710.0	*	1	1409	850	103.	0.0	1696.4
1	0210	131	187.	0.0	1697.6	*	1	0810	491	1113.	36.2	1710.0	*	1	1410	851	102.	0.0	1696.3
1	0211	132	189.	0.0	1697.6	*	1	0811	492	1112.	35.9	1710.0	*	1	1411	852	101.	0.0	1696.3
1	0212	133	190.	0.0	1697.6	*	1	0812	493	1110.	35.6	1709.9	*	1	1412	853	100.	0.0	1696.3
1	0213	134	191.	0.0	1697.6	*	1	0813	494	1108.	35.3	1709.9	*	1	1413	854	99.	0.0	1696.3
1	0214	135	193.	0.0	1697.7	*	1	0814	495	1107.	34.9	1709.9	*	1	1414	855	98.	0.0	1696.3
1	0215	136	194.	0.0	1697.7	*	1	0815	496	1105.	34.6	1709.8	*	1	1415	856	97.	0.0	1696.3
1	0216	137	197.	0.0	1697.7	*	1	0816	497	1103.	34.3	1709.8	*	1	1416	857	96.	0.0	1696.3
1	0217	138	198.	0.0	1697.7	*	1	0817	498	1101.	34.0	1709.8	*	1	1417	858	96.	0.0	1696.3
1	0218	139	199.	0.0	1697.8	*	1	0818	499	1100.	33.7	1709.7	*	1	1418	859	95.	0.0	1696.2
1	0219	140	201.	0.0	1697.8	*	1	0819	500	1098.	33.4	1709.7	*	1	1419	860	94.	0.0	1696.2
1	0220	141	202.	0.0	1697.8	*	1	0820	501	1096.	33.1	1709.6	*	1	1420	861	93.	0.0	1696.2
1	0221	142	204.	0.0	1697.8	*	1	0821	502	1094.	32.7	1709.6	*	1	1421	862	92.	0.0	1696.2
1	0222	143	205.	0.0	1697.8	*	1	0822	503	1093.	32.4	1709.6	*	1	1422	863	91.	0.0	1696.2
1	0223	144	206.	0.0	1697.9	*	1	0823	504	1091.	32.1	1709.5	*	1	1423	864	90.	0.0	1696.2
1	0224	145	208.	0.0	1697.9	*	1	0824	505	1089.	31.8	1709.5	*	1	1424	865	89.	0.0	1696.2
1	0225	146	209.	0.0	1697.9	*	1	0825	506	1087.	31.5	1709.5	*	1	1425	866	88.	0.0	1696.1
1	0226	147	210.	0.0	1697.9	*	1	0826	507	1086.	31.2	1709.4	*	1	1426	867	87.	0.0	1696.1
1	0227	148	211.	0.0	1697.9	*	1	0827	508	1084.	30.9	1709.4	*	1	1427	868	86.	0.0	1696.1
1	0228	149	212.	0.0	1697.9	*	1	0828	509	1082.	30.6	1709.4	*	1	1428	869	85.	0.0	1696.1
1	0229	150	213.	0.0	1698.0	*	1	0829	510	1081.	30.3	1709.3	*	1	1429	870	83.	0.0	1696.1
1	0230	151	214.	0.0	1698.0	*	1	0830	511	1079.	30.0	1709.3	*	1	1430	871	82.	0.0	1696.1
1	0231	152	215.	0.0	1698.0	*	1	0831	512	1077.	29.7	1709.3	*	1	1431	872	81.	0.0	1696.0
1	0232	153	216.	0.0	1698.0	*	1	0832	513	1075.	29.4	1709.2	*	1	1432	873	79.	0.0	1696.0
1	0233	154	217.	0.0	1698.0	*	1	0833	514	1074.	29.1	1709.2	*	1	1433	874	78.	0.0	1696.0
1	0234	155	218.	0.0	1698.0	*	1	0834	515	1072.	28.7	1709.1	*	1	1434	875	76.	0.0	1696.0
1	0235	156	219.	0.0	1698.0	*	1	0835	516	1070.	28.4	1709.1	*	1	1435	876	75.	0.0	1695.9
1	0236	157	220.	0.0	1698.0	*	1	0836	517	1069.	28.1	1709.1	*	1	1436	877	73.	0.0	1695.9
1	0237	158	221.	0.0	1698.0	*	1	0837	518	1067.	27.8	1709.0	*	1	1437	878	72.	0.0	1695.9
1	0238	159	222.	0.0	1698.0	*	1	0838	519	1065.	27.5	1709.0	*	1	1438	879	71.	0.0	1695.9
1	0239	160	223.	0.0	1698.1	*	1	0839	520	1064.	27.2	1709.0	*	1	1439	880	69.	0.0	1695.8
1	0240	161	224.	0.0	1698.1	*	1	0840	521	1062.	26.9	1708.9	*	1	1440	881	68.	0.0	1695.8
1	0241	162	225.	0.0	1698.1	*	1	0841	522	1060.	26.6	1708.9	*	1	1441	882	67.	0.0	1695.8
1	0242	163	226.	0.0	1698.1	*	1	0842	523	1058.	26.3	1708.9	*	1	1442	883	66.	0.0	1695.8
1	0243	164	227.	0.0	1698.1	*	1	0843	524	1057.	26.0	1708.8	*	1	1443	884	64.	0.0	1695.7
1	0244	165	228.	0.0	1698.1	*	1	0844	525	1055.	25.7	1708.8	*	1	1444	885	63.	0.0	1695.7
1	0245	166	229.	0.0	1698.1	*	1	0845	526	1053.	25.4	1708.8	*	1	1445	886	62.	0.0	1695.7
1	0246	167	230.	0.0	1698.1	*	1	0846	527	1052.	25.1	1708.7	*	1	1446	887	61.	0.0	1695.7
1	0247	168	231.	0.0	1698.1	*	1	0847	528	1050.	24.8	1708.7	*	1	1447	888	60.	0.0	1695.7
1	0248	169	232.	0.0	1698.1	*	1	0848	529	1048.	24.5	1708.6	*	1	1448	889	59.	0.0	1695.6
1	0249	170	233.	0.0	1698.1	*	1	0849	530	1046.	24.1	1708.6	*	1	1449	890	58.	0.0	1695.6
1	0250	171	234.	0.0	1698.2	*	1	0850	531	1045.	23.8	1708.6	*	1	1450	891	57.	0.0	1695.6
1	0251	172	235.	0.0	1698.2	*	1	0851	532	1043.	23.5	1708.5	*	1	1451	892	56.	0.0	1695.6

1	0252	173	236.	0.0	1698.2	*	1	0852	533	1041.	23.2	1708.5	*	1	1452	893	55.	0.0	1695.6
1	0253	174	238.	0.0	1698.2	*	1	0853	534	1039.	22.9	1708.5	*	1	1453	894	54.	0.0	1695.5
1	0254	175	239.	0.0	1698.2	*	1	0854	535	1037.	22.5	1708.4	*	1	1454	895	54.	0.0	1695.5
1	0255	176	240.	0.0	1698.2	*	1	0855	536	1036.	22.2	1708.4	*	1	1455	896	53.	0.0	1695.5
1	0256	177	241.	0.0	1698.2	*	1	0856	537	1034.	21.9	1708.3	*	1	1456	897	52.	0.0	1695.5
1	0257	178	242.	0.0	1698.2	*	1	0857	538	1032.	21.5	1708.3	*	1	1457	898	51.	0.0	1695.5
1	0258	179	243.	0.0	1698.2	*	1	0858	539	1030.	21.2	1708.3	*	1	1458	899	50.	0.0	1695.5
1	0259	180	245.	0.0	1698.3	*	1	0859	540	1028.	20.9	1708.2	*	1	1459	900	50.	0.0	1695.5
1	0300	181	246.	0.0	1698.3	*	1	0900	541	1026.	20.5	1708.2	*	1	1500	901	49.	0.0	1695.4
1	0301	182	247.	0.0	1698.3	*	1	0901	542	1024.	20.2	1708.2	*	1	1501	902	48.	0.0	1695.4
1	0302	183	248.	0.0	1698.3	*	1	0902	543	1022.	19.8	1708.1	*	1	1502	903	47.	0.0	1695.4
1	0303	184	250.	0.0	1698.3	*	1	0903	544	1020.	19.5	1708.1	*	1	1503	904	47.	0.0	1695.4
1	0304	185	252.	0.0	1698.3	*	1	0904	545	1018.	19.1	1708.0	*	1	1504	905	46.	0.0	1695.4
1	0305	186	255.	0.0	1698.3	*	1	0905	546	1016.	18.8	1708.0	*	1	1505	906	46.	0.0	1695.4
1	0306	187	258.	0.0	1698.4	*	1	0906	547	1012.	18.4	1707.9	*	1	1506	907	46.	0.0	1695.4
1	0307	188	261.	0.0	1698.4	*	1	0907	548	1009.	18.0	1707.9	*	1	1507	908	45.	0.0	1695.4
1	0308	189	264.	0.0	1698.4	*	1	0908	549	1006.	17.7	1707.8	*	1	1508	909	45.	0.0	1695.4
1	0309	190	267.	0.0	1698.4	*	1	0909	550	1002.	17.3	1707.7	*	1	1509	910	44.	0.0	1695.3
1	0310	191	270.	0.0	1698.5	*	1	0910	551	999.	17.0	1707.7	*	1	1510	911	44.	0.0	1695.3
1	0311	192	273.	0.1	1698.5	*	1	0911	552	995.	16.6	1707.6	*	1	1511	912	43.	0.0	1695.3
1	0312	193	276.	0.1	1698.5	*	1	0912	553	992.	16.2	1707.5	*	1	1512	913	43.	0.0	1695.3
1	0313	194	279.	0.1	1698.6	*	1	0913	554	988.	15.8	1707.5	*	1	1513	914	42.	0.0	1695.3
1	0314	195	283.	0.1	1698.6	*	1	0914	555	985.	15.5	1707.4	*	1	1514	915	42.	0.0	1695.3
1	0315	196	286.	0.1	1698.6	*	1	0915	556	981.	15.1	1707.4	*	1	1515	916	41.	0.0	1695.3
1	0316	197	290.	0.1	1698.7	*	1	0916	557	978.	14.7	1707.3	*	1	1516	917	41.	0.0	1695.3
1	0317	198	296.	0.1	1698.7	*	1	0917	558	974.	14.3	1707.2	*	1	1517	918	40.	0.0	1695.3
1	0318	199	303.	0.1	1698.8	*	1	0918	559	971.	14.0	1707.2	*	1	1518	919	40.	0.0	1695.3
1	0319	200	315.	0.1	1698.9	*	1	0919	560	967.	13.6	1707.1	*	1	1519	920	39.	0.0	1695.2
1	0320	201	329.	0.1	1699.0	*	1	0920	561	964.	13.2	1707.0	*	1	1520	921	39.	0.0	1695.2
1	0321	202	338.	0.1	1699.1	*	1	0921	562	960.	12.8	1707.0	*	1	1521	922	38.	0.0	1695.2
1	0322	203	352.	0.1	1699.2	*	1	0922	563	956.	12.4	1706.9	*	1	1522	923	38.	0.0	1695.2
1	0323	204	367.	0.1	1699.3	*	1	0923	564	953.	12.0	1706.8	*	1	1523	924	37.	0.0	1695.2
1	0324	205	383.	0.2	1699.5	*	1	0924	565	949.	11.7	1706.8	*	1	1524	925	37.	0.0	1695.2
1	0325	206	400.	0.2	1699.6	*	1	0925	566	945.	11.3	1706.7	*	1	1525	926	37.	0.0	1695.2
1	0326	207	417.	0.2	1699.8	*	1	0926	567	942.	10.9	1706.6	*	1	1526	927	36.	0.0	1695.2
1	0327	208	435.	0.2	1699.9	*	1	0927	568	938.	10.5	1706.6	*	1	1527	928	36.	0.0	1695.2
1	0328	209	448.	0.3	1700.1	*	1	0928	569	934.	10.1	1706.5	*	1	1528	929	35.	0.0	1695.2
1	0329	210	458.	0.3	1700.2	*	1	0929	570	931.	9.7	1706.4	*	1	1529	930	35.	0.0	1695.2
1	0330	211	472.	0.3	1700.3	*	1	0930	571	927.	9.3	1706.4	*	1	1530	931	35.	0.0	1695.2
1	0331	212	487.	0.4	1700.5	*	1	0931	572	923.	8.9	1706.3	*	1	1531	932	34.	0.0	1695.2
1	0332	213	506.	0.5	1700.7	*	1	0932	573	920.	8.5	1706.2	*	1	1532	933	34.	0.0	1695.2
1	0333	214	529.	0.6	1700.9	*	1	0933	574	916.	8.1	1706.2	*	1	1533	934	34.	0.0	1695.2
1	0334	215	559.	0.7	1701.2	*	1	0934	575	912.	7.7	1706.1	*	1	1534	935	33.	0.0	1695.1
1	0335	216	596.	0.8	1701.6	*	1	0935	576	909.	7.4	1706.0	*	1	1535	936	33.	0.0	1695.1
1	0336	217	636.	1.0	1702.0	*	1	0936	577	902.	7.0	1705.9	*	1	1536	937	32.	0.0	1695.1
1	0337	218	659.	1.2	1702.3	*	1	0937	578	892.	6.6	1705.8	*	1	1537	938	32.	0.0	1695.1
1	0338	219	687.	1.4	1702.7	*	1	0938	579	883.	6.2	1705.6	*	1	1538	939	32.	0.0	1695.1
1	0339	220	719.	1.7	1703.1	*	1	0939	580	874.	5.8	1705.5	*	1	1539	940	31.	0.0	1695.1
1	0340	221	754.	2.0	1703.6	*	1	0940	581	865.	5.5	1705.3	*	1	1540	941	31.	0.0	1695.1
1	0341	222	787.	2.4	1704.0	*	1	0941	582	856.	5.1	1705.2	*	1	1541	942	31.	0.0	1695.1
1	0342	223	797.	2.8	1704.2	*	1	0942	583	848.	4.8	1705.0	*	1	1542	943	30.	0.0	1695.1
1	0343	224	808.	3.2	1704.4	*	1	0943	584	839.	4.5	1704.9	*	1	1543	944	30.	0.0	1695.1
1	0344	225	821.	3.7	1704.6	*	1	0944	585	831.	4.1	1704.8	*	1	1544	945	30.	0.0	1695.1
1	0345	226	836.	4.3	1704.8	*	1	0945	586	823.	3.8	1704.6	*	1	1545	946	29.	0.0	1695.1
1	0346	227	852.	5.0	1705.1	*	1	0946	587	815.	3.5	1704.5	*	1	1546	947	29.	0.0	1695.1
1	0347	228	869.	5.7	1705.4	*	1	0947	588	807.	3.2	1704.4	*	1	1547	948	28.	0.0	1695.0
1	0348	229	889.	6.4	1705.7	*	1	0948	589	800.	2.9	1704.2	*	1	1548	949	28.	0.0	1695.0
1	0349	230	908.	7.3	1706.0	*	1	0949	590	793.	2.6	1704.1	*	1	1549	950	27.	0.0	1695.0
1	0350	231	917.	8.2	1706.2	*	1	0950	591	786.	2.3	1704.0	*	1	1550	951	27.	0.0	1695.0
1	0351	232	926.	9.2	1706.3	*	1	0951	592	758.	2.0	1703.6	*	1	1551	952	26.	0.0	1695.0
1	0352	233	937.	10.3	1706.5	*	1	0952	593	732.	1.8	1703.3	*	1	1552	953	25.	0.0	1695.0
1	0353	234	948.	11.5	1706.7	*	1	0953	594	709.	1.6	1703.0	*	1	1553	954	24.	0.0	1695.0
1	0354	235	960.	12.8	1707.0	*	1	0954	595	690.	1.4	1702.7	*	1	1554	955	23.	0.0	1694.9
1	0355	236	973.	14.2	1707.2	*	1	0955	596	673.	1.3	1702.5	*	1	1555	956	23.	0.0	1694.9
1	0356	237	986.	15.6	1707.4	*	1	0956	597	658.	1.2	1702.3	*	1	1556	957	22.	0.0	1694.9
1	0357	238	1001.	17.2	1707.7	*	1	0957	598	645.	1.0	1702.2	*	1	1557	958	21.	0.0	1694.9
1	0358	239	1015.	18.7	1708.0	*	1	0958	599	634.	0.9	1702.0	*	1	1558	959	20.	0.0	1694.9
1	0359	240	1025.	20.4	1708.2	*	1	0959	600	611.	0.9	1701.8	*	1	1559	960	19.	0.0	1694.9
1	0400	241	1035.	22.1	1708.4	*	1	1000	601	595.	0.8	1701.6	*	1	1600	961	18.	0.0	1694.8
1	0401	242	1044.	23.8	1708.6	*	1	1001	602	583.	0.7	1701.5	*	1	1601	962	18.	0.0	1694.8
1	0402	243	1054.	25.6	1708.8	*	1	1002	603	574.	0.7	1701.4	*	1	1602	963	17.	0.0	1694.8
1	0403	244	1065.	27.4	1709.0	*	1	1003	604	567.	0.7	1701.3	*	1	1603	964	16.	0.0	1694.8
1	0404	245	1075.	29.3	1709.2	*	1	1004	605	562.	0.7	1701.3	*	1	1604	965	15.	0.0	1694.8
1	0405	246	1085.	31.2	1709.4	*	1	1005	606	558.	0.7	1701.2	*	1	1605	966	15.	0.0	1694.8
1	0406	247	1096.	33.0	1709.6	*	1	1006	607	554.	0.6	1701.2	*	1	1606	967	14.	0.0	1694.8
1	0407	248	1106.	34.9	1709.9	*	1	1007	608	551.	0.6	1701.1	*	1	1607	968	14.	0.0	1694.8
1	0408	249	1116.	36.8	1710.1	*	1	1008	609	549.	0.6	1701.1	*	1	1608	969	13.	0.0	1694.7
1	0409	250	1123.	38.6	1710.2	*	1	1009	610	546.	0.6	1701.1	*	1	1609	970	12.	0.0	1694.7

1	0410	251	1130.	40.5	1710.4	*	1	1010	611	543.	0.6	1701.1	*	1	1610	971	12.	0.0	1694.7
1	0411	252	1137.	42.3	1710.6	*	1	1011	612	541.	0.6	1701.0	*	1	1611	972	11.	0.0	1694.7
1	0412	253	1144.	44.1	1710.7	*	1	1012	613	539.	0.6	1701.0	*	1	1612	973	11.	0.0	1694.7
1	0413	254	1151.	45.9	1710.9	*	1	1013	614	536.	0.6	1701.0	*	1	1613	974	10.	0.0	1694.7
1	0414	255	1158.	47.7	1711.0	*	1	1014	615	534.	0.6	1701.0	*	1	1614	975	10.	0.0	1694.7
1	0415	256	1164.	49.4	1711.2	*	1	1015	616	532.	0.6	1700.9	*	1	1615	976	9.	0.0	1694.7
1	0416	257	1171.	51.1	1711.3	*	1	1016	617	530.	0.6	1700.9	*	1	1616	977	9.	0.0	1694.7
1	0417	258	1177.	52.8	1711.5	*	1	1017	618	527.	0.5	1700.9	*	1	1617	978	9.	0.0	1694.7
1	0418	259	1183.	54.4	1711.6	*	1	1018	619	525.	0.5	1700.9	*	1	1618	979	8.	0.0	1694.7
1	0419	260	1190.	56.0	1711.8	*	1	1019	620	523.	0.5	1700.8	*	1	1619	980	8.	0.0	1694.7
1	0420	261	1195.	57.5	1711.9	*	1	1020	621	521.	0.5	1700.8	*	1	1620	981	8.	0.0	1694.7
1	0421	262	1200.	58.9	1712.0	*	1	1021	622	519.	0.5	1700.8	*	1	1621	982	7.	0.0	1694.6
1	0422	263	1204.	60.3	1712.1	*	1	1022	623	516.	0.5	1700.8	*	1	1622	983	7.	0.0	1694.6
1	0423	264	1208.	61.6	1712.2	*	1	1023	624	514.	0.5	1700.7	*	1	1623	984	7.	0.0	1694.6
1	0424	265	1212.	62.8	1712.3	*	1	1024	625	512.	0.5	1700.7	*	1	1624	985	6.	0.0	1694.6
1	0425	266	1215.	64.0	1712.4	*	1	1025	626	510.	0.5	1700.7	*	1	1625	986	6.	0.0	1694.6
1	0426	267	1218.	65.1	1712.5	*	1	1026	627	508.	0.5	1700.7	*	1	1626	987	6.	0.0	1694.6
1	0427	268	1221.	66.2	1712.6	*	1	1027	628	506.	0.5	1700.7	*	1	1627	988	6.	0.0	1694.6
1	0428	269	1224.	67.1	1712.6	*	1	1028	629	504.	0.5	1700.6	*	1	1628	989	5.	0.0	1694.6
1	0429	270	1227.	68.1	1712.7	*	1	1029	630	502.	0.5	1700.6	*	1	1629	990	5.	0.0	1694.6
1	0430	271	1229.	68.9	1712.8	*	1	1030	631	500.	0.4	1700.6	*	1	1630	991	5.	0.0	1694.6
1	0431	272	1231.	69.7	1712.8	*	1	1031	632	498.	0.4	1700.6	*	1	1631	992	5.	0.0	1694.6
1	0432	273	1234.	70.5	1712.9	*	1	1032	633	496.	0.4	1700.6	*	1	1632	993	4.	0.0	1694.6
1	0433	274	1236.	71.3	1712.9	*	1	1033	634	494.	0.4	1700.5	*	1	1633	994	4.	0.0	1694.6
1	0434	275	1238.	72.0	1713.0	*	1	1034	635	493.	0.4	1700.5	*	1	1634	995	4.	0.0	1694.6
1	0435	276	1240.	72.7	1713.0	*	1	1035	636	491.	0.4	1700.5	*	1	1635	996	4.	0.0	1694.6
1	0436	277	1242.	73.4	1713.1	*	1	1036	637	489.	0.4	1700.5	*	1	1636	997	4.	0.0	1694.6
1	0437	278	1244.	74.1	1713.1	*	1	1037	638	487.	0.4	1700.5	*	1	1637	998	4.	0.0	1694.6
1	0438	279	1246.	74.8	1713.2	*	1	1038	639	486.	0.4	1700.4	*	1	1638	999	3.	0.0	1694.6
1	0439	280	1248.	75.4	1713.2	*	1	1039	640	484.	0.4	1700.4	*	1	16391000		3.	0.0	1694.6
1	0440	281	1250.	76.1	1713.3	*	1	1040	641	482.	0.4	1700.4	*	1	16401001		3.	0.0	1694.6
1	0441	282	1251.	76.8	1713.3	*	1	1041	642	480.	0.4	1700.4	*	1	16411002		3.	0.0	1694.6
1	0442	283	1253.	77.4	1713.4	*	1	1042	643	479.	0.4	1700.4	*	1	16421003		3.	0.0	1694.6
1	0443	284	1255.	78.1	1713.4	*	1	1043	644	477.	0.4	1700.4	*	1	16431004		3.	0.0	1694.6
1	0444	285	1257.	78.7	1713.5	*	1	1044	645	475.	0.4	1700.3	*	1	16441005		3.	0.0	1694.6
1	0445	286	1259.	79.4	1713.5	*	1	1045	646	474.	0.4	1700.3	*	1	16451006		3.	0.0	1694.6
1	0446	287	1261.	80.1	1713.5	*	1	1046	647	472.	0.3	1700.3	*	1	16461007		2.	0.0	1694.5
1	0447	288	1263.	80.8	1713.6	*	1	1047	648	470.	0.3	1700.3	*	1	16471008		2.	0.0	1694.5
1	0448	289	1265.	81.5	1713.6	*	1	1048	649	469.	0.3	1700.3	*	1	16481009		2.	0.0	1694.5
1	0449	290	1267.	82.2	1713.7	*	1	1049	650	467.	0.3	1700.3	*	1	16491010		2.	0.0	1694.5
1	0450	291	1269.	82.9	1713.8	*	1	1050	651	466.	0.3	1700.2	*	1	16501011		2.	0.0	1694.5
1	0451	292	1271.	83.7	1713.8	*	1	1051	652	465.	0.3	1700.2	*	1	16511012		2.	0.0	1694.5
1	0452	293	1273.	84.4	1713.9	*	1	1052	653	463.	0.3	1700.2	*	1	16521013		2.	0.0	1694.5
1	0453	294	1275.	85.1	1713.9	*	1	1053	654	462.	0.3	1700.2	*	1	16531014		2.	0.0	1694.5
1	0454	295	1277.	85.7	1714.0	*	1	1054	655	460.	0.3	1700.2	*	1	16541015		2.	0.0	1694.5
1	0455	296	1279.	86.3	1714.0	*	1	1055	656	459.	0.3	1700.2	*	1	16551016		2.	0.0	1694.5
1	0456	297	1280.	86.9	1714.0	*	1	1056	657	457.	0.3	1700.2	*	1	16561017		2.	0.0	1694.5
1	0457	298	1282.	87.5	1714.1	*	1	1057	658	456.	0.3	1700.1	*	1	16571018		1.	0.0	1694.5
1	0458	299	1283.	88.0	1714.1	*	1	1058	659	455.	0.3	1700.1	*	1	16581019		1.	0.0	1694.5
1	0459	300	1285.	88.5	1714.1	*	1	1059	660	453.	0.3	1700.1	*	1	16591020		1.	0.0	1694.5
1	0500	301	1286.	89.0	1714.2	*	1	1100	661	452.	0.3	1700.1	*	1	17001021		1.	0.0	1694.5
1	0501	302	1287.	89.5	1714.2	*	1	1101	662	450.	0.3	1700.1	*	1	17011022		1.	0.0	1694.5
1	0502	303	1288.	89.9	1714.2	*	1	1102	663	449.	0.3	1700.1	*	1	17021023		1.	0.0	1694.5
1	0503	304	1289.	90.3	1714.2	*	1	1103	664	448.	0.3	1700.0	*	1	17031024		1.	0.0	1694.5
1	0504	305	1290.	90.6	1714.3	*	1	1104	665	446.	0.3	1700.0	*	1	17041025		1.	0.0	1694.5
1	0505	306	1291.	91.0	1714.3	*	1	1105	666	445.	0.2	1700.0	*	1	17051026		1.	0.0	1694.5
1	0506	307	1292.	91.2	1714.3	*	1	1106	667	443.	0.2	1700.0	*	1	17061027		1.	0.0	1694.5
1	0507	308	1292.	91.5	1714.3	*	1	1107	668	441.	0.2	1700.0	*	1	17071028		1.	0.0	1694.5
1	0508	309	1293.	91.8	1714.3	*	1	1108	669	439.	0.2	1700.0	*	1	17081029		1.	0.0	1694.5
1	0509	310	1294.	92.0	1714.3	*	1	1109	670	437.	0.2	1700.0	*	1	17091030		1.	0.0	1694.5
1	0510	311	1294.	92.1	1714.4	*	1	1110	671	436.	0.2	1699.9	*	1	17101031		1.	0.0	1694.5
1	0511	312	1294.	92.3	1714.4	*	1	1111	672	435.	0.2	1699.9	*	1	17111032		1.	0.0	1694.5
1	0512	313	1295.	92.4	1714.4	*	1	1112	673	433.	0.2	1699.9	*	1	17121033		1.	0.0	1694.5
1	0513	314	1295.	92.5	1714.4	*	1	1113	674	432.	0.2	1699.9	*	1	17131034		1.	0.0	1694.5
1	0514	315	1295.	92.6	1714.4	*	1	1114	675	430.	0.2	1699.9	*	1	17141035		1.	0.0	1694.5
1	0515	316	1295.	92.7	1714.4	*	1	1115	676	429.	0.2	1699.9	*	1	17151036		1.	0.0	1694.5
1	0516	317	1295.	92.7	1714.4	*	1	1116	677	427.	0.2	1699.9	*	1	17161037		1.	0.0	1694.5
1	0517	318	1296.	92.7	1714.4	*	1	1117	678	426.	0.2	1699.8	*	1	17171038		1.	0.0	1694.5
1	0518	319	1296.	92.7	1714.4	*	1	1118	679	424.	0.2	1699.8	*	1	17181039		1.	0.0	1694.5
1	0519	320	1295.	92.7	1714.4	*	1	1119	680	423.	0.2	1699.8	*	1	17191040		1.	0.0	1694.5
1	0520	321	1295.	92.6	1714.4	*	1	1120	681	421.	0.2	1699.8	*	1	17201041		1.	0.0	1694.5
1	0521	322	1295.	92.6	1714.4	*	1	1121	682	419.	0.2	1699.8	*	1	17211042		1.	0.0	1694.5
1	0522	323	1295.	92.5	1714.4	*	1	1122	683	416.	0.2	1699.8	*	1	17221043		1.	0.0	1694.5
1	0523	324	1295.	92.4	1714.4	*	1	1123	684	414.	0.2	1699.7	*	1	17231044		0.	0.0	1694.5
1	0524	325	1294.	92.3	1714.4	*	1	1124	685	411.	0.2	1699.7	*	1	17241045		0.	0.0	1694.5
1	0525	326	1294.	92.1	1714.4	*	1	1125	686	408.	0.2	1699.7	*	1	17251046		0.	0.0	1694.5
1	0526	327	1294.	92.0	1714.3	*	1	1126	687	405.	0.2	1699.7	*	1	17261047		0.	0.0	1694.5
1	0527	328	1293.	91.8	1714.3	*	1	1127	688	402.	0.2	1699.6	*	1	17271048		0.	0.0	1694.5

1	0528	329	1293.	91.6	1714.3	*	1	1128	689	399.	0.2	1699.6	*	1	17281049	0.	0.0	1694.5
1	0529	330	1292.	91.4	1714.3	*	1	1129	690	396.	0.2	1699.6	*	1	17291050	0.	0.0	1694.5
1	0530	331	1292.	91.2	1714.3	*	1	1130	691	393.	0.2	1699.6	*	1	17301051	0.	0.0	1694.5
1	0531	332	1291.	91.0	1714.3	*	1	1131	692	390.	0.2	1699.5	*	1	17311052	0.	0.0	1694.5
1	0532	333	1290.	90.7	1714.3	*	1	1132	693	387.	0.2	1699.5	*	1	17321053	0.	0.0	1694.5
1	0533	334	1290.	90.5	1714.3	*	1	1133	694	384.	0.2	1699.5	*	1	17331054	0.	0.0	1694.5
1	0534	335	1289.	90.2	1714.2	*	1	1134	695	381.	0.2	1699.5	*	1	17341055	0.	0.0	1694.5
1	0535	336	1288.	89.9	1714.2	*	1	1135	696	378.	0.1	1699.4	*	1	17351056	0.	0.0	1694.5
1	0536	337	1287.	89.6	1714.2	*	1	1136	697	375.	0.1	1699.4	*	1	17361057	0.	0.0	1694.5
1	0537	338	1287.	89.3	1714.2	*	1	1137	698	371.	0.1	1699.4	*	1	17371058	0.	0.0	1694.5
1	0538	339	1286.	89.0	1714.2	*	1	1138	699	368.	0.1	1699.3	*	1	17381059	0.	0.0	1694.5
1	0539	340	1285.	88.7	1714.1	*	1	1139	700	365.	0.1	1699.3	*	1	17391060	0.	0.0	1694.5
1	0540	341	1284.	88.4	1714.1	*	1	1140	701	362.	0.1	1699.3	*	1	17401061	0.	0.0	1694.5
1	0541	342	1283.	88.1	1714.1	*	1	1141	702	360.	0.1	1699.3	*	1	17411062	0.	0.0	1694.5
1	0542	343	1282.	87.7	1714.1	*	1	1142	703	357.	0.1	1699.2	*	1	17421063	0.	0.0	1694.5
1	0543	344	1282.	87.4	1714.1	*	1	1143	704	354.	0.1	1699.2	*	1	17431064	0.	0.0	1694.5
1	0544	345	1281.	87.1	1714.0	*	1	1144	705	351.	0.1	1699.2	*	1	17441065	0.	0.0	1694.5
1	0545	346	1280.	86.7	1714.0	*	1	1145	706	348.	0.1	1699.2	*	1	17451066	0.	0.0	1694.5
1	0546	347	1279.	86.4	1714.0	*	1	1146	707	346.	0.1	1699.1	*	1	17461067	0.	0.0	1694.5
1	0547	348	1278.	86.0	1714.0	*	1	1147	708	343.	0.1	1699.1	*	1	17471068	0.	0.0	1694.5
1	0548	349	1277.	85.7	1713.9	*	1	1148	709	340.	0.1	1699.1	*	1	17481069	0.	0.0	1694.5
1	0549	350	1276.	85.3	1713.9	*	1	1149	710	338.	0.1	1699.1	*	1	17491070	0.	0.0	1694.5
1	0550	351	1275.	85.0	1713.9	*	1	1150	711	335.	0.1	1699.0	*	1	17501071	0.	0.0	1694.5
1	0551	352	1274.	84.6	1713.9	*	1	1151	712	332.	0.1	1699.0	*	1	17511072	0.	0.0	1694.5
1	0552	353	1273.	84.2	1713.8	*	1	1152	713	330.	0.1	1699.0	*	1	17521073	0.	0.0	1694.5
1	0553	354	1272.	83.9	1713.8	*	1	1153	714	325.	0.1	1699.0	*	1	17531074	0.	0.0	1694.5
1	0554	355	1271.	83.5	1713.8	*	1	1154	715	323.	0.1	1698.9	*	1	17541075	0.	0.0	1694.5
1	0555	356	1270.	83.2	1713.8	*	1	1155	716	320.	0.1	1698.9	*	1	17551076	0.	0.0	1694.5
1	0556	357	1269.	82.8	1713.7	*	1	1156	717	317.	0.1	1698.9	*	1	17561077	0.	0.0	1694.5
1	0557	358	1268.	82.4	1713.7	*	1	1157	718	314.	0.1	1698.9	*	1	17571078	0.	0.0	1694.5
1	0558	359	1267.	82.1	1713.7	*	1	1158	719	312.	0.1	1698.8	*	1	17581079	0.	0.0	1694.5
1	0559	360	1266.	81.7	1713.7	*	1	1159	720	309.	0.1	1698.8	*	1	17591080	0.	0.0	1694.5
						*							*					

****

PEAK FLOW (CFS)	TIME (HR)		MAXIMUM AVERAGE FLOW 6-HR	24-HR	72-HR	17.98-HR
1296.	5.28	(CFS)	1152.	508.	508.	508.
		(INCHES)	1.503	1.985	1.985	1.985
		(AC-FT)	571.	755.	755.	755.

PEAK STORAGE (AC-FT)	TIME (HR)	MAXIMUM AVERAGE STORAGE 6-HR	24-HR	72-HR	17.98-HR
93.	5.28	52.	18.	18.	18.

PEAK STAGE (FEET)	TIME (HR)	MAXIMUM AVERAGE STAGE 6-HR	24-HR	72-HR	17.98-HR
1714.39	5.28	1711.08	1701.77	1701.77	1701.77

CUMULATIVE AREA = 7.13 SQ MI

RUNOFF SUMMARY
FLOW IN CUBIC FEET PER SECOND
TIME IN HOURS, AREA IN SQUARE MILES

OPERATION	STATION	PEAK FLOW	TIME OF PEAK	AVERAGE FLOW FOR MAXIMUM PERIOD 6-HOUR	24-HOUR	72-HOUR	BASIN AREA	MAXIMUM STAGE	TIME OF MAX STAGE
HYDROGRAPH AT	C559I	2474.	4.17	1162.	508.	508.	7.13		
ROUTED TO	C599O	1296.	5.28	1152.	508.	508.	7.13	1714.39	5.28

*** NORMAL END OF HEC-1 ***

10-Year, Future Condition (6-Hour)

```
****************************************
*                                      *
*   FLOOD HYDROGRAPH PACKAGE  (HEC-1)  *
*              MAY   1991              *
*            VERSION 4.0.1E            *
*     Lahey F77L-EM/32 version 5.01    *
*        Dodson & Associates, Inc.     *
*        DATE  09/11/99  TIME  12:56:36 *
****************************************
```

```
****************************************
*                                      *
*    U.S. ARMY CORPS OF ENGINEERS      *
*    HYDROLOGIC ENGINEERING CENTER     *
*          609 SECOND STREET           *
*       DAVIS, CALIFORNIA 95616        *
*           (916) 551-1748             *
*                                      *
****************************************
```

```
X     X  XXXXXXX   XXXXX           X
X     X  X        X     X         XX
X     X  X        X                X
XXXXXXX  XXXX     X        XXXXX   X
X     X  X        X                X
X     X  X        X     X          X
X     X  XXXXXXX   XXXXX          XXX
```

THIS PROGRAM REPLACES ALL PREVIOUS VERSIONS OF HEC-1 KNOWN AS HEC1 (JAN 73), HEC1GS, HEC1DB, AND HEC1KW.

THE DEFINITIONS OF VARIABLES -RTIMP- AND -RTIOR- HAVE CHANGED FROM THOSE USED WITH THE 1973-STYLE INPUT STRUCTURE.
THE DEFINITION OF -AMSKK- ON RM-CARD WAS CHANGED WITH REVISIONS DATED 28 SEP 81. THIS IS THE FORTRAN77 VERSION
NEW OPTIONS: DAMBREAK OUTFLOW SUBMERGENCE , SINGLE EVENT DAMAGE CALCULATION, DSS:WRITE STAGE FREQUENCY,
DSS:READ TIME SERIES AT DESIRED CALCULATION INTERVAL LOSS RATE:GREEN AND AMPT INFILTRATION
KINEMATIC WAVE: NEW FINITE DIFFERENCE ALGORITHM

```
LINE          ID.......1.......2.......3.......4.......5.......6.......7.......8.......9......10

  1           ID   ACCOUNTS FOR TRASH RACK LOSSES AT THE PRINCIPAL INLET - 50%  CLOGG
  2           ID
  3           ID   Golden Eagle Park Dam Modifications
  4           ID        by Stantec: Proj. No. 28900095                    File:10_6-B.IH1
  5           ID        for FCDMC:  FCD                                   Date:08-10-99     RJS
  6           ID                                                        Revised:
  7           ID
  8           ID   Alternative F:
  9           ID        The stage-storage relation is adjusted to
 10           ID        reflect revised grading in the park.
 11           ID        Enlarge emergency spillway
 12           ID        Add auxilary
 13           ID
 14           ID   10-year, 6-hour future condition watershed model for Ashbrook Wash upstream
 15           ID   of the Fort McDowell Indian Reservation boundary.
 16           ID        This model is a portion of the original Fountain Hills North FDS
 17           ID        watershed model conducted by GVSCE, 1994.  The title cards from that
 18           ID        model are included for reference.
 19           ID
 20           ID   Fountain Hills North Floodplain Delineation Study
 21           ID        FCD 92-04       by GVSCE                        File:   FU10-6.IH1
 22           ID   Future Condition Model                               Date:    07-21-94   dtp
 23           ID      10-Year 6-Hour Storm, Clark Unit Hydrograph     Revised:   10-31-94   dtp
              *
 24           IT       1                    1080
 25           IO       5
 26           IN      15

 27           KK   C599I
 28           KM   INFLOW HYDROGRAPH FROM ENTIRE WATERSHED TO GEPD
 29           IN       1
 30           KO       1                              21
 31           BA    7.13
              *
              * *
              * * C599I is the total flow in Ashbrook Wash upstream of DAM 4
              * *
 32           QI       0       0       0       0       0       1       1       1       2       2
 33           QI       2       3       3       3       3       4       4       4       4       4
 34           QI       4       5       5       5       5       5       5       6       6       7
 35           QI       7       8       9       9      10      11      12      13      13      14
 36           QI      15      15      16      17      17      18      18      19      20      20
 37           QI      21      21      22      23      23      24      25      25      26      27
 38           QI      28      29      30      30      31      32      33      34      35      36
 39           QI      37      38      39      40      41      42      43      44      45      47
 40           QI      48      49      50      51      52      53      54      55      56      57
 41           QI      58      59      60      61      62      63      64      65      66      67
 42           QI      68      70      71      72      74      75      77      79      81      82
 43           QI      84      86      87      89      91      92      94      96      97      99
 44           QI     100     102     103     105     106     107     109     110     111     113
 45           QI     114     115     117     118     119     120     121     123     124     125
 46           QI     126     127     128     130     131     132     133     134     135     136
 47           QI     137     138     139     139     140     141     142     143     144     145
 48           QI     145     146     147     148     149     149     150     151     152     153
 49           QI     154     154     155     156     157     158     159     160     161     161
```

LINE	ID.....1	2	3	4	5	6	7	8	9	10
50	QI	162	163	164	165	167	168	170	171	173	175
51	QI	176	178	180	182	183	185	187	189	192	195
52	QI	199	203	207	211	216	221	225	230	236	242
53	QI	248	256	266	280	299	321	345	371	399	427
54	QI	455	484	513	542	573	605	641	680	722	766
55	QI	809	851	891	931	971	1012	1052	1093	1134	1177
56	QI	1221	1264	1307	1349	1386	1418	1444	1466	1484	1498
57	QI	1510	1520	1529	1537	1543	1547	1549	1549	1544	1535
58	QI	1521	1505	1487	1467	1447	1427	1408	1389	1371	1353
59	QI	1336	1318	1301	1283	1264	1245	1225	1205	1184	1163
60	QI	1143	1123	1103	1085	1069	1055	1042	1031	1021	1011
61	QI	1002	994	987	980	973	967	962	956	952	947
62	QI	943	939	936	932	929	926	923	920	917	915
63	QI	912	910	907	905	903	902	900	899	897	895
64	QI	894	892	891	890	889	888	886	885	884	883
65	QI	882	881	880	879	878	877	876	875	874	873
66	QI	872	871	870	870	869	868	867	866	866	865
67	QI	864	863	863	862	861	860	860	859	858	858
68	QI	857	856	855	854	854	852	851	850	849	848
69	QI	847	845	844	843	842	840	839	838	836	835
70	QI	833	832	831	829	827	826	824	823	821	819
71	QI	818	816	814	813	811	809	807	804	802	799
72	QI	797	794	791	788	785	782	779	776	773	770
73	QI	766	763	760	757	754	751	748	745	741	738
74	QI	735	732	729	726	723	721	718	716	713	710
75	QI	707	704	701	698	695	692	689	685	681	677
76	QI	673	669	665	660	656	651	647	642	638	634
77	QI	629	625	621	617	613	609	605	601	598	595
78	QI	591	589	586	583	580	577	574	571	568	564
79	QI	561	558	554	551	548	545	541	538	534	531
80	QI	527	523	520	516	512	509	505	502	499	496
81	QI	493	491	488	486	484	482	480	478	476	474
82	QI	471	469	467	465	463	461	459	457	455	452
83	QI	450	447	444	441	438	435	432	428	425	422
84	QI	419	416	413	409	406	403	400	397	394	391
85	QI	388	385	382	380	377	374	372	369	367	364
86	QI	362	359	357	354	352	350	347	344	342	339
87	QI	337	334	331	328	326	323	320	317	314	310
88	QI	307	304	301	298	295	291	288	285	282	279
89	QI	276	273	270	267	264	262	259	256	253	250
90	QI	248	245	242	240	237	234	232	230	227	225
91	QI	222	220	217	215	213	210	208	205	203	201
92	QI	198	196	194	192	189	187	185	183	181	178
93	QI	176	174	172	170	168	166	164	163	161	159
94	QI	157	155	154	152	150	148	147	145	143	141
95	QI	139	138	136	134	133	131	129	128	126	125
96	QI	123	121	120	118	117	116	114	113	112	110
97	QI	109	108	107	106	104	103	102	101	100	99
98	QI	98	96	95	93	92	90	89	87	85	84
99	QI	82	80	79	77	76	74	73	71	70	69
100	QI	68	67	66	65	64	63	61	60	59	58
101	QI	57	56	55	54	54	53	52	51	50	49
102	QI	49	48	47	46	46	45	44	44	43	42
103	QI	42	41	41	40	39	39	38	38	37	37
104	QI	36	36	35	35	34	33	32	32	31	30

```
LINE          ID.......1.......2.......3.......4.......5.......6.......7.......8.......9......10

 105          QI      29      28      27      26      25      24      23      22      21      20
 106          QI      19      19      18      17      17      16      15      15      14      13
 107          QI      13      12      12      11      11      11      10      10       9       9
 108          QI       9       8       8       8       8       7       7       7       7       6
 109          QI       6       6       6       5       5       5       5       5       5       4
 110          QI       4       4       4       4       4       4       3       3       3       3
 111          QI       3       3       3       3       3       2       2       2       2       2
 112          QI       2       2       2       2       2       2       2       2       2       2
 113          QI       1       1       1       1       1       1       1       1       1       1
 114          QI       1       1       1       1       1       1       1       1       1       1
 115          QI       1       1       1       1       1       1       1       1       1       1
 116          QI       1       1       1       1       1       0       0       0       0       0
 117          QI       0       0       0       0       0       0       0       0       0       0
 118          QI       0       0       0       0       0       0       0       0       0       0
 119          QI       0       0       0       0       0       0       0       0       0       0
 120          QI       0       0       0       0       0       0       0       0       0       0
 121          QI       0       0       0       0       0       0       0       0       0       0
 122          QI       0       0       0       0       0       0       0       0       0       0
 123          QI       0       0       0       0       0       0       0       0       0       0
 124          QI       0       0       0       0       0       0       0       0       0       0
 125          QI       0       0       0       0       0       0       0       0       0       0
 126          QI       0       0       0       0       0       0       0       0       0       0
 127          QI       0       0       0       0       0       0       0       0       0       0
 128          QI       0       0       0       0       0       0       0       0       0       0
 129          QI       0       0       0       0       0       0       0       0       0       0
 130          QI       0       0       0       0       0       0       0       0       0       0
 131          QI       0       0       0       0       0       0       0       0       0       0
 132          QI       0       0       0       0       0       0       0       0       0       0
 133          QI       0       0       0       0       0       0       0       0       0       0
 134          QI       0       0       0       0       0       0       0       0       0       0
 135          QI       0       0       0       0       0       0       0       0       0       0
 136          QI       0       0       0       0       0       0       0       0       0       0
 137          QI       0       0       0       0       0       0       0       0       0       0
 138          QI       0       0       0       0       0       0       0       0       0       0
 139          QI       0       0       0       0       0       0       0       0       0       0
              *
              *
              *

 140          KK   C599O
 141          KO       1
 142          KM      Reservoir route at C599 (Dam 4).
 143          RS       1    ELEV  1694.7
 144          SV    0.00    0.00    0.02    0.08    0.24    0.93    2.29    7.17   18.89   36.08
 145          SV   58.41   86.41   99.21  105.97  112.96  120.18  127.60  146.86  154.86  158.92
 146          SE  1694.6  1697.0  1698.0  1699.0  1700.0  1702.0  1704.0  1706.0  1708.0  1710.0
 147          SE  1712.0  1714.0  1714.8  1715.2  1715.6  1716.0  1716.4  1717.4  1717.8  1718.0
 148          SQ       0      78     216     443     633     785     907    1017    1113    1199
 149          SQ    1279    1300    1314    1370    2514    5488    9464   14236   17797   19683
 150          SE  1694.5  1696.0  1698.0  1700.0  1702.0  1704.0  1706.0  1708.0  1710.0  1712.0
 151          SE  1714.0  1714.5 1714.86  1715.0  1716.0  1717.5  1719.0  1720.5  1721.5  1722.0
 152          RL                   0.97
              *
              * * End Basin 210.  Start Basin 211
              * *
```

```
LINE          ID.......1.......2.......3.......4.......5.......6.......7.......8.......9......10

 153          ZZ
```

```
*****************************************
*                                       *
*   FLOOD HYDROGRAPH PACKAGE  (HEC-1)   *
*              MAY   1991               *
*            VERSION 4.0.1E             *
*     Lahey F77L-EM/32 version 5.01     *
*        Dodson & Associates, Inc.      *
*        DATE  09/11/99  TIME  12:56:36 *
*****************************************
```

```
*****************************************
*                                       *
*    U.S. ARMY CORPS OF ENGINEERS       *
*    HYDROLOGIC ENGINEERING CENTER      *
*          609 SECOND STREET            *
*       DAVIS, CALIFORNIA 95616         *
*           (916) 551-1748              *
*                                       *
*****************************************
```

ACCOUNTS FOR TRASH RACK LOSSES AT THE PRINCIPAL INLET - 50% CLOGG

Golden Eagle Park Dam Modifications
by Stantec: Proj. No. 28900095 File:10_6-B.IH1
for FCDMC: FCD Date:08-10-99 RJS
Revised:

Alternative F:
The stage-storage relation is adjusted to
reflect revised grading in the park.
Enlarge emergency spillway
Add auxilary

10-year, 6-hour future condition watershed model for Ashbrook Wash upstream
of the Fort McDowell Indian Reservation boundary.
This model is a portion of the original Fountain Hills North FDS
watershed model conducted by GVSCE, 1994. The title cards from that
model are included for reference.

Fountain Hills North Floodplain Delineation Study
FCD 92-04 by GVSCE File: FU10-6.IH1
Future Condition Model Date: 07-21-94 dtp
10-Year 6-Hour Storm, Clark Unit Hydrograph Revised: 10-31-94 dtp

```
25 IO        OUTPUT CONTROL VARIABLES
                  IPRNT          5  PRINT CONTROL
                  IPLOT          0  PLOT CONTROL
                  QSCAL         0.  HYDROGRAPH PLOT SCALE

   IT        HYDROGRAPH TIME DATA
                   NMIN          1  MINUTES IN COMPUTATION INTERVAL
                  IDATE      1    0  STARTING DATE
                  ITIME       0000  STARTING TIME
                     NQ       1080  NUMBER OF HYDROGRAPH ORDINATES
                 NDDATE      1    0  ENDING DATE
                 NDTIME       1759  ENDING TIME
                  ICENT         19  CENTURY MARK

             COMPUTATION INTERVAL    0.02 HOURS
                  TOTAL TIME BASE   17.98 HOURS

      ENGLISH UNITS
           DRAINAGE AREA          SQUARE MILES
           PRECIPITATION DEPTH    INCHES
           LENGTH, ELEVATION      FEET
           FLOW                   CUBIC FEET PER SECOND
           STORAGE VOLUME         ACRE-FEET
           SURFACE AREA           ACRES
           TEMPERATURE            DEGREES FAHRENHEIT


*** *** *** *** *** *** *** *** *** *** *** *** *** *** *** *** *** *** *** *** *** *** *** *** *** *** *** *** *** *** *** *** *** *** ***


          **************
          *            *
27 KK     *     C599I  *
          *            *
          **************

30        OUTPUT CONTROL VARIABLES
                  IPRNT          1  PRINT CONTROL
                  IPLOT          0  PLOT CONTROL
```

QSCAL	0.	HYDROGRAPH PLOT SCALE
IPNCH	0	PUNCH COMPUTED HYDROGRAPH
IOUT	21	SAVE HYDROGRAPH ON THIS UNIT
ISAV1	1	FIRST ORDINATE PUNCHED OR SAVED
ISAV2	1080	LAST ORDINATE PUNCHED OR SAVED
TIMINT	0.017	TIME INTERVAL IN HOURS

29 IN TIME DATA FOR INPUT TIME SERIES

JXMIN	1	TIME INTERVAL IN MINUTES
JXDATE	1 0	STARTING DATE
JXTIME	0	STARTING TIME

SUBBASIN RUNOFF DATA

31 BA SUBBASIN CHARACTERISTICS

TAREA	7.13	SUBBASIN AREA

***

HYDROGRAPH AT STATION C599I

DA	MON	HRMN	ORD	FLOW	DA	MON	HRMN	ORD	FLOW	DA	MON	HRMN	ORD	FLOW	DA	MON	HRMN	ORD	FLOW
1		0000	1	0.	1		0430	271	1336.	1		0900	541	362.	1		1330	811	1.
1		0001	2	0.	1		0431	272	1318.	1		0901	542	359.	1		1331	812	1.
1		0002	3	0.	1		0432	273	1301.	1		0902	543	357.	1		1332	813	1.
1		0003	4	0.	1		0433	274	1283.	1		0903	544	354.	1		1333	814	1.
1		0004	5	0.	1		0434	275	1264.	1		0904	545	352.	1		1334	815	1.
1		0005	6	1.	1		0435	276	1245.	1		0905	546	350.	1		1335	816	1.
1		0006	7	1.	1		0436	277	1225.	1		0906	547	347.	1		1336	817	1.
1		0007	8	1.	1		0437	278	1205.	1		0907	548	344.	1		1337	818	1.
1		0008	9	2.	1		0438	279	1184.	1		0908	549	342.	1		1338	819	1.
1		0009	10	2.	1		0439	280	1163.	1		0909	550	339.	1		1339	820	1.
1		0010	11	2.	1		0440	281	1143.	1		0910	551	337.	1		1340	821	1.
		0011	12	3.	1		0441	282	1123.	1		0911	552	334.	1		1341	822	1.
		0012	13	3.	1		0442	283	1103.	1		0912	553	331.	1		1342	823	1.
		0013	14	3.	1		0443	284	1085.	1		0913	554	328.	1		1343	824	1.
1		0014	15	3.	1		0444	285	1069.	1		0914	555	326.	1		1344	825	1.
1		0015	16	4.	1		0445	286	1055.	1		0915	556	323.	1		1345	826	1.
1		0016	17	4.	1		0446	287	1042.	1		0916	557	320.	1		1346	827	1.
1		0017	18	4.	1		0447	288	1031.	1		0917	558	317.	1		1347	828	1.
1		0018	19	4.	1		0448	289	1021.	1		0918	559	314.	1		1348	829	1.
1		0019	20	4.	1		0449	290	1011.	1		0919	560	310.	1		1349	830	1.
1		0020	21	4.	1		0450	291	1002.	1		0920	561	307.	1		1350	831	1.
1		0021	22	5.	1		0451	292	994.	1		0921	562	304.	1		1351	832	1.
1		0022	23	5.	1		0452	293	987.	1		0922	563	301.	1		1352	833	1.
1		0023	24	5.	1		0453	294	980.	1		0923	564	298.	1		1353	834	1.
1		0024	25	5.	1		0454	295	973.	1		0924	565	295.	1		1354	835	1.
1		0025	26	5.	1		0455	296	967.	1		0925	566	291.	1		1355	836	1.
1		0026	27	5.	1		0456	297	962.	1		0926	567	288.	1		1356	837	1.
1		0027	28	6.	1		0457	298	956.	1		0927	568	285.	1		1357	838	1.
1		0028	29	6.	1		0458	299	952.	1		0928	569	282.	1		1358	839	1.
1		0029	30	7.	1		0459	300	947.	1		0929	570	279.	1		1359	840	1.
1		0030	31	7.	1		0500	301	943.	1		0930	571	276.	1		1400	841	1.
1		0031	32	8.	1		0501	302	939.	1		0931	572	273.	1		1401	842	1.
1		0032	33	9.	1		0502	303	936.	1		0932	573	270.	1		1402	843	1.
1		0033	34	9.	1		0503	304	932.	1		0933	574	267.	1		1403	844	1.
1		0034	35	10.	1		0504	305	929.	1		0934	575	264.	1		1404	845	1.
1		0035	36	11.	1		0505	306	926.	1		0935	576	262.	1		1405	846	0.
1		0036	37	12.	1		0506	307	923.	1		0936	577	259.	1		1406	847	0.
1		0037	38	13.	1		0507	308	920.	1		0937	578	256.	1		1407	848	0.
1		0038	39	13.	1		0508	309	917.	1		0938	579	253.	1		1408	849	0.
1		0039	40	14.	1		0509	310	915.	1		0939	580	250.	1		1409	850	0.
1		0040	41	15.	1		0510	311	912.	1		0940	581	248.	1		1410	851	0.
1		0041	42	15.	1		0511	312	910.	1		0941	582	245.	1		1411	852	0.
1		0042	43	16.	1		0512	313	907.	1		0942	583	242.	1		1412	853	0.
1		0043	44	17.	1		0513	314	905.	1		0943	584	240.	1		1413	854	0.
1		0044	45	17.	1		0514	315	903.	1		0944	585	237.	1		1414	855	0.
		0045	46	18.	1		0515	316	902.	1		0945	586	234.	1		1415	856	0.
		0046	47	18.	1		0516	317	900.	1		0946	587	232.	1		1416	857	0.
		0047	48	19.	1		0517	318	899.	1		0947	588	230.	1		1417	858	0.
1		0048	49	20.	1		0518	319	897.	1		0948	589	227.	1		1418	859	0.
1		0049	50	20.	1		0519	320	895.	1		0949	590	225.	1		1419	860	0.

1	0050	51	21.	*	1	0520	321	894.	*	1	0950	591	222.	*	1	1420	861	0.
1	0051	52	21.	*	1	0521	322	892.	*	1	0951	592	220.	*	1	1421	862	0.
1	0052	53	22.	*	1	0522	323	891.	*	1	0952	593	217.	*	1	1422	863	0.
1	0053	54	23.	*	1	0523	324	890.	*	1	0953	594	215.	*	1	1423	864	0.
1	0054	55	23.	*	1	0524	325	889.	*	1	0954	595	213.	*	1	1424	865	0.
1	0055	56	24.	*	1	0525	326	888.	*	1	0955	596	210.	*	1	1425	866	0.
	0056	57	25.	*	1	0526	327	886.	*	1	0956	597	208.	*	1	1426	867	0.
	0057	58	25.	*	1	0527	328	885.	*	1	0957	598	205.	*	1	1427	868	0.
1	0058	59	26.	*	1	0528	329	884.	*	1	0958	599	203.	*	1	1428	869	0.
1	0059	60	27.	*	1	0529	330	883.	*	1	0959	600	201.	*	1	1429	870	0.
1	0100	61	28.	*	1	0530	331	882.	*	1	1000	601	198.	*	1	1430	871	0.
1	0101	62	29.	*	1	0531	332	881.	*	1	1001	602	196.	*	1	1431	872	0.
1	0102	63	30.	*	1	0532	333	880.	*	1	1002	603	194.	*	1	1432	873	0.
1	0103	64	30.	*	1	0533	334	879.	*	1	1003	604	192.	*	1	1433	874	0.
1	0104	65	31.	*	1	0534	335	878.	*	1	1004	605	189.	*	1	1434	875	0.
1	0105	66	32.	*	1	0535	336	877.	*	1	1005	606	187.	*	1	1435	876	0.
1	0106	67	33.	*	1	0536	337	876.	*	1	1006	607	185.	*	1	1436	877	0.
1	0107	68	34.	*	1	0537	338	875.	*	1	1007	608	183.	*	1	1437	878	0.
1	0108	69	35.	*	1	0538	339	874.	*	1	1008	609	181.	*	1	1438	879	0.
1	0109	70	36.	*	1	0539	340	873.	*	1	1009	610	178.	*	1	1439	880	0.
1	0110	71	37.	*	1	0540	341	872.	*	1	1010	611	176.	*	1	1440	881	0.
1	0111	72	38.	*	1	0541	342	871.	*	1	1011	612	174.	*	1	1441	882	0.
1	0112	73	39.	*	1	0542	343	870.	*	1	1012	613	172.	*	1	1442	883	0.
1	0113	74	40.	*	1	0543	344	870.	*	1	1013	614	170.	*	1	1443	884	0.
1	0114	75	41.	*	1	0544	345	869.	*	1	1014	615	168.	*	1	1444	885	0.
1	0115	76	42.	*	1	0545	346	868.	*	1	1015	616	166.	*	1	1445	886	0.
1	0116	77	43.	*	1	0546	347	867.	*	1	1016	617	164.	*	1	1446	887	0.
1	0117	78	44.	*	1	0547	348	866.	*	1	1017	618	163.	*	1	1447	888	0.
1	0118	79	45.	*	1	0548	349	866.	*	1	1018	619	161.	*	1	1448	889	0.
1	0119	80	47.	*	1	0549	350	865.	*	1	1019	620	159.	*	1	1449	890	0.
1	0120	81	48.	*	1	0550	351	864.	*	1	1020	621	157.	*	1	1450	891	0.
1	0121	82	49.	*	1	0551	352	863.	*	1	1021	622	155.	*	1	1451	892	0.
1	0122	83	50.	*	1	0552	353	863.	*	1	1022	623	154.	*	1	1452	893	0.
1	0123	84	51.	*	1	0553	354	862.	*	1	1023	624	152.	*	1	1453	894	0.
1	0124	85	52.	*	1	0554	355	861.	*	1	1024	625	150.	*	1	1454	895	0.
1	0125	86	53.	*	1	0555	356	860.	*	1	1025	626	148.	*	1	1455	896	0.
1	0126	87	54.	*	1	0556	357	860.	*	1	1026	627	147.	*	1	1456	897	0.
1	0127	88	55.	*	1	0557	358	859.	*	1	1027	628	145.	*	1	1457	898	0.
1	0128	89	56.	*	1	0558	359	858.	*	1	1028	629	143.	*	1	1458	899	0.
	0129	90	57.	*	1	0559	360	858.	*	1	1029	630	141.	*	1	1459	900	0.
	0130	91	58.	*	1	0600	361	857.	*	1	1030	631	139.	*	1	1500	901	0.
	0131	92	59.	*	1	0601	362	856.	*	1	1031	632	138.	*	1	1501	902	0.
1	0132	93	60.	*	1	0602	363	855.	*	1	1032	633	136.	*	1	1502	903	0.
1	0133	94	61.	*	1	0603	364	854.	*	1	1033	634	134.	*	1	1503	904	0.
1	0134	95	62.	*	1	0604	365	854.	*	1	1034	635	133.	*	1	1504	905	0.
1	0135	96	63.	*	1	0605	366	852.	*	1	1035	636	131.	*	1	1505	906	0.
1	0136	97	64.	*	1	0606	367	851.	*	1	1036	637	129.	*	1	1506	907	0.
1	0137	98	65.	*	1	0607	368	850.	*	1	1037	638	128.	*	1	1507	908	0.
1	0138	99	66.	*	1	0608	369	849.	*	1	1038	639	126.	*	1	1508	909	0.
1	0139	100	67.	*	1	0609	370	848.	*	1	1039	640	125.	*	1	1509	910	0.
1	0140	101	68.	*	1	0610	371	847.	*	1	1040	641	123.	*	1	1510	911	0.
1	0141	102	70.	*	1	0611	372	845.	*	1	1041	642	121.	*	1	1511	912	0.
1	0142	103	71.	*	1	0612	373	844.	*	1	1042	643	120.	*	1	1512	913	0.
1	0143	104	72.	*	1	0613	374	843.	*	1	1043	644	118.	*	1	1513	914	0.
1	0144	105	74.	*	1	0614	375	842.	*	1	1044	645	117.	*	1	1514	915	0.
1	0145	106	75.	*	1	0615	376	840.	*	1	1045	646	116.	*	1	1515	916	0.
1	0146	107	77.	*	1	0616	377	839.	*	1	1046	647	114.	*	1	1516	917	0.
1	0147	108	79.	*	1	0617	378	838.	*	1	1047	648	113.	*	1	1517	918	0.
1	0148	109	81.	*	1	0618	379	836.	*	1	1048	649	112.	*	1	1518	919	0.
1	0149	110	82.	*	1	0619	380	835.	*	1	1049	650	110.	*	1	1519	920	0.
1	0150	111	84.	*	1	0620	381	833.	*	1	1050	651	109.	*	1	1520	921	0.
1	0151	112	86.	*	1	0621	382	832.	*	1	1051	652	108.	*	1	1521	922	0.
1	0152	113	87.	*	1	0622	383	831.	*	1	1052	653	107.	*	1	1522	923	0.
1	0153	114	89.	*	1	0623	384	829.	*	1	1053	654	106.	*	1	1523	924	0.
1	0154	115	91.	*	1	0624	385	827.	*	1	1054	655	104.	*	1	1524	925	0.
1	0155	116	92.	*	1	0625	386	826.	*	1	1055	656	103.	*	1	1525	926	0.
1	0156	117	94.	*	1	0626	387	824.	*	1	1056	657	102.	*	1	1526	927	0.
1	0157	118	96.	*	1	0627	388	823.	*	1	1057	658	101.	*	1	1527	928	0.
1	0158	119	97.	*	1	0628	389	821.	*	1	1058	659	100.	*	1	1528	929	0.
1	0159	120	99.	*	1	0629	390	819.	*	1	1059	660	99.	*	1	1529	930	0.
1	0200	121	100.	*	1	0630	391	818.	*	1	1100	661	98.	*	1	1530	931	0.
1	0201	122	102.	*	1	0631	392	816.	*	1	1101	662	96.	*	1	1531	932	0.
1	0202	123	103.	*	1	0632	393	814.	*	1	1102	663	95.	*	1	1532	933	0.
	0203	124	105.	*	1	0633	394	813.	*	1	1103	664	93.	*	1	1533	934	0.
	0204	125	106.	*	1	0634	395	811.	*	1	1104	665	92.	*	1	1534	935	0.
	0205	126	107.	*	1	0635	396	809.	*	1	1105	666	90.	*	1	1535	936	0.
1	0206	127	109.	*	1	0636	397	807.	*	1	1106	667	89.	*	1	1536	937	0.
1	0207	128	110.	*	1	0637	398	804.	*	1	1107	668	87.	*	1	1537	938	0.

1	0208	129	111.	*	1	0638	399	802.	*	1	1108	669	85.	*	1	1538	939	0.
1	0209	130	113.	*	1	0639	400	799.	*	1	1109	670	84.	*	1	1539	940	0.
1	0210	131	114.	*	1	0640	401	797.	*	1	1110	671	82.	*	1	1540	941	0.
1	0211	132	115.	*	1	0641	402	794.	*	1	1111	672	80.	*	1	1541	942	0.
1	0212	133	117.	*	1	0642	403	791.	*	1	1112	673	79.	*	1	1542	943	0.
1	0213	134	118.	*	1	0643	404	788.	*	1	1113	674	77.	*	1	1543	944	0.
	0214	135	119.	*	1	0644	405	785.	*	1	1114	675	76.	*	1	1544	945	0.
	0215	136	120.	*	1	0645	406	782.	*	1	1115	676	74.	*	1	1545	946	0.
1	0216	137	121.	*	1	0646	407	779.	*	1	1116	677	73.	*	1	1546	947	0.
1	0217	138	123.	*	1	0647	408	776.	*	1	1117	678	71.	*	1	1547	948	0.
1	0218	139	124.	*	1	0648	409	773.	*	1	1118	679	70.	*	1	1548	949	0.
1	0219	140	125.	*	1	0649	410	770.	*	1	1119	680	69.	*	1	1549	950	0.
1	0220	141	126.	*	1	0650	411	766.	*	1	1120	681	68.	*	1	1550	951	0.
1	0221	142	127.	*	1	0651	412	763.	*	1	1121	682	67.	*	1	1551	952	0.
1	0222	143	128.	*	1	0652	413	760.	*	1	1122	683	66.	*	1	1552	953	0.
1	0223	144	130.	*	1	0653	414	757.	*	1	1123	684	65.	*	1	1553	954	0.
1	0224	145	131.	*	1	0654	415	754.	*	1	1124	685	64.	*	1	1554	955	0.
1	0225	146	132.	*	1	0655	416	751.	*	1	1125	686	63.	*	1	1555	956	0.
1	0226	147	133.	*	1	0656	417	748.	*	1	1126	687	61.	*	1	1556	957	0.
1	0227	148	134.	*	1	0657	418	745.	*	1	1127	688	60.	*	1	1557	958	0.
1	0228	149	135.	*	1	0658	419	741.	*	1	1128	689	59.	*	1	1558	959	0.
1	0229	150	136.	*	1	0659	420	738.	*	1	1129	690	58.	*	1	1559	960	0.
1	0230	151	137.	*	1	0700	421	735.	*	1	1130	691	57.	*	1	1600	961	0.
1	0231	152	138.	*	1	0701	422	732.	*	1	1131	692	56.	*	1	1601	962	0.
1	0232	153	139.	*	1	0702	423	729.	*	1	1132	693	55.	*	1	1602	963	0.
1	0233	154	139.	*	1	0703	424	726.	*	1	1133	694	54.	*	1	1603	964	0.
1	0234	155	140.	*	1	0704	425	723.	*	1	1134	695	54.	*	1	1604	965	0.
1	0235	156	141.	*	1	0705	426	721.	*	1	1135	696	53.	*	1	1605	966	0.
1	0236	157	142.	*	1	0706	427	718.	*	1	1136	697	52.	*	1	1606	967	0.
1	0237	158	143.	*	1	0707	428	716.	*	1	1137	698	51.	*	1	1607	968	0.
1	0238	159	144.	*	1	0708	429	713.	*	1	1138	699	50.	*	1	1608	969	0.
1	0239	160	145.	*	1	0709	430	710.	*	1	1139	700	49.	*	1	1609	970	0.
1	0240	161	145.	*	1	0710	431	707.	*	1	1140	701	49.	*	1	1610	971	0.
1	0241	162	146.	*	1	0711	432	704.	*	1	1141	702	48.	*	1	1611	972	0.
1	0242	163	147.	*	1	0712	433	701.	*	1	1142	703	47.	*	1	1612	973	0.
1	0243	164	148.	*	1	0713	434	698.	*	1	1143	704	46.	*	1	1613	974	0.
1	0244	165	149.	*	1	0714	435	695.	*	1	1144	705	46.	*	1	1614	975	0.
1	0245	166	149.	*	1	0715	436	692.	*	1	1145	706	45.	*	1	1615	976	0.
1	0246	167	150.	*	1	0716	437	689.	*	1	1146	707	44.	*	1	1616	977	0.
1	0247	168	151.	*	1	0717	438	685.	*	1	1147	708	44.	*	1	1617	978	0.
	0248	169	152.	*	1	0718	439	681.	*	1	1148	709	43.	*	1	1618	979	0.
	0249	170	153.	*	1	0719	440	677.	*	1	1149	710	42.	*	1	1619	980	0.
1	0250	171	154.	*	1	0720	441	673.	*	1	1150	711	42.	*	1	1620	981	0.
1	0251	172	154.	*	1	0721	442	669.	*	1	1151	712	41.	*	1	1621	982	0.
1	0252	173	155.	*	1	0722	443	665.	*	1	1152	713	41.	*	1	1622	983	0.
1	0253	174	156.	*	1	0723	444	660.	*	1	1153	714	40.	*	1	1623	984	0.
1	0254	175	157.	*	1	0724	445	656.	*	1	1154	715	39.	*	1	1624	985	0.
1	0255	176	158.	*	1	0725	446	651.	*	1	1155	716	39.	*	1	1625	986	0.
1	0256	177	159.	*	1	0726	447	647.	*	1	1156	717	38.	*	1	1626	987	0.
1	0257	178	160.	*	1	0727	448	642.	*	1	1157	718	38.	*	1	1627	988	0.
1	0258	179	161.	*	1	0728	449	638.	*	1	1158	719	37.	*	1	1628	989	0.
1	0259	180	161.	*	1	0729	450	634.	*	1	1159	720	37.	*	1	1629	990	0.
1	0300	181	162.	*	1	0730	451	629.	*	1	1200	721	36.	*	1	1630	991	0.
1	0301	182	163.	*	1	0731	452	625.	*	1	1201	722	36.	*	1	1631	992	0.
1	0302	183	164.	*	1	0732	453	621.	*	1	1202	723	35.	*	1	1632	993	0.
1	0303	184	165.	*	1	0733	454	617.	*	1	1203	724	35.	*	1	1633	994	0.
1	0304	185	167.	*	1	0734	455	613.	*	1	1204	725	34.	*	1	1634	995	0.
1	0305	186	168.	*	1	0735	456	609.	*	1	1205	726	33.	*	1	1635	996	0.
1	0306	187	170.	*	1	0736	457	605.	*	1	1206	727	32.	*	1	1636	997	0.
1	0307	188	171.	*	1	0737	458	601.	*	1	1207	728	32.	*	1	1637	998	0.
1	0308	189	173.	*	1	0738	459	598.	*	1	1208	729	31.	*	1	1638	999	0.
1	0309	190	175.	*	1	0739	460	595.	*	1	1209	730	30.	*	1	1639	1000	0.
1	0310	191	176.	*	1	0740	461	591.	*	1	1210	731	29.	*	1	1640	1001	0.
1	0311	192	178.	*	1	0741	462	589.	*	1	1211	732	28.	*	1	1641	1002	0.
1	0312	193	180.	*	1	0742	463	586.	*	1	1212	733	27.	*	1	1642	1003	0.
1	0313	194	182.	*	1	0743	464	583.	*	1	1213	734	26.	*	1	1643	1004	0.
1	0314	195	183.	*	1	0744	465	580.	*	1	1214	735	25.	*	1	1644	1005	0.
1	0315	196	185.	*	1	0745	466	577.	*	1	1215	736	24.	*	1	1645	1006	0.
1	0316	197	187.	*	1	0746	467	574.	*	1	1216	737	23.	*	1	1646	1007	0.
1	0317	198	189.	*	1	0747	468	571.	*	1	1217	738	22.	*	1	1647	1008	0.
1	0318	199	192.	*	1	0748	469	568.	*	1	1218	739	21.	*	1	1648	1009	0.
1	0319	200	195.	*	1	0749	470	564.	*	1	1219	740	20.	*	1	1649	1010	0.
1	0320	201	199.	*	1	0750	471	561.	*	1	1220	741	19.	*	1	1650	1011	0.
1	0321	202	203.	*	1	0751	472	558.	*	1	1221	742	19.	*	1	1651	1012	0.
	0322	203	207.	*	1	0752	473	554.	*	1	1222	743	18.	*	1	1652	1013	0.
	0323	204	211.	*	1	0753	474	551.	*	1	1223	744	17.	*	1	1653	1014	0.
1	0324	205	216.	*	1	0754	475	548.	*	1	1224	745	17.	*	1	1654	1015	0.
1	0325	206	221.	*	1	0755	476	545.	*	1	1225	746	16.	*	1	1655	1016	0.

1	0326	207	225.	*	1	0756	477	541.	*	1	1226	747	15.	*	1	1656	1017	0.
1	0327	208	230.	*	1	0757	478	538.	*	1	1227	748	15.	*	1	1657	1018	0.
1	0328	209	236.	*	1	0758	479	534.	*	1	1228	749	14.	*	1	1658	1019	0.
1	0329	210	242.	*	1	0759	480	531.	*	1	1229	750	13.	*	1	1659	1020	0.
1	0330	211	248.	*	1	0800	481	527.	*	1	1230	751	13.	*	1	1700	1021	0.
1	0331	212	256.	*	1	0801	482	523.	*	1	1231	752	12.	*	1	1701	1022	0.
1	0332	213	266.	*	1	0802	483	520.	*	1	1232	753	12.	*	1	1702	1023	0.
1	0333	214	280.	*	1	0803	484	516.	*	1	1233	754	11.	*	1	1703	1024	0.
1	0334	215	299.	*	1	0804	485	512.	*	1	1234	755	11.	*	1	1704	1025	0.
1	0335	216	321.	*	1	0805	486	509.	*	1	1235	756	11.	*	1	1705	1026	0.
1	0336	217	345.	*	1	0806	487	505.	*	1	1236	757	10.	*	1	1706	1027	0.
1	0337	218	371.	*	1	0807	488	502.	*	1	1237	758	10.	*	1	1707	1028	0.
1	0338	219	399.	*	1	0808	489	499.	*	1	1238	759	9.	*	1	1708	1029	0.
1	0339	220	427.	*	1	0809	490	496.	*	1	1239	760	9.	*	1	1709	1030	0.
1	0340	221	455.	*	1	0810	491	493.	*	1	1240	761	9.	*	1	1710	1031	0.
1	0341	222	484.	*	1	0811	492	491.	*	1	1241	762	8.	*	1	1711	1032	0.
1	0342	223	513.	*	1	0812	493	488.	*	1	1242	763	8.	*	1	1712	1033	0.
1	0343	224	542.	*	1	0813	494	486.	*	1	1243	764	8.	*	1	1713	1034	0.
1	0344	225	573.	*	1	0814	495	484.	*	1	1244	765	8.	*	1	1714	1035	0.
1	0345	226	605.	*	1	0815	496	482.	*	1	1245	766	7.	*	1	1715	1036	0.
1	0346	227	641.	*	1	0816	497	480.	*	1	1246	767	7.	*	1	1716	1037	0.
1	0347	228	680.	*	1	0817	498	478.	*	1	1247	768	7.	*	1	1717	1038	0.
1	0348	229	722.	*	1	0818	499	476.	*	1	1248	769	7.	*	1	1718	1039	0.
1	0349	230	766.	*	1	0819	500	474.	*	1	1249	770	6.	*	1	1719	1040	0.
1	0350	231	809.	*	1	0820	501	471.	*	1	1250	771	6.	*	1	1720	1041	0.
1	0351	232	851.	*	1	0821	502	469.	*	1	1251	772	6.	*	1	1721	1042	0.
1	0352	233	891.	*	1	0822	503	467.	*	1	1252	773	6.	*	1	1722	1043	0.
1	0353	234	931.	*	1	0823	504	465.	*	1	1253	774	5.	*	1	1723	1044	0.
1	0354	235	971.	*	1	0824	505	463.	*	1	1254	775	5.	*	1	1724	1045	0.
1	0355	236	1012.	*	1	0825	506	461.	*	1	1255	776	5.	*	1	1725	1046	0.
1	0356	237	1052.	*	1	0826	507	459.	*	1	1256	777	5.	*	1	1726	1047	0.
1	0357	238	1093.	*	1	0827	508	457.	*	1	1257	778	5.	*	1	1727	1048	0.
1	0358	239	1134.	*	1	0828	509	455.	*	1	1258	779	5.	*	1	1728	1049	0.
1	0359	240	1177.	*	1	0829	510	452.	*	1	1259	780	4.	*	1	1729	1050	0.
1	0400	241	1221.	*	1	0830	511	450.	*	1	1300	781	4.	*	1	1730	1051	0.
1	0401	242	1264.	*	1	0831	512	447.	*	1	1301	782	4.	*	1	1731	1052	0.
1	0402	243	1307.	*	1	0832	513	444.	*	1	1302	783	4.	*	1	1732	1053	0.
1	0403	244	1349.	*	1	0833	514	441.	*	1	1303	784	4.	*	1	1733	1054	0.
1	0404	245	1386.	*	1	0834	515	438.	*	1	1304	785	4.	*	1	1734	1055	0.
1	0405	246	1418.	*	1	0835	516	435.	*	1	1305	786	4.	*	1	1735	1056	0.
1	0406	247	1444.	*	1	0836	517	432.	*	1	1306	787	3.	*	1	1736	1057	0.
1	0407	248	1466.	*	1	0837	518	428.	*	1	1307	788	3.	*	1	1737	1058	0.
1	0408	249	1484.	*	1	0838	519	425.	*	1	1308	789	3.	*	1	1738	1059	0.
1	0409	250	1498.	*	1	0839	520	422.	*	1	1309	790	3.	*	1	1739	1060	0.
1	0410	251	1510.	*	1	0840	521	419.	*	1	1310	791	3.	*	1	1740	1061	0.
1	0411	252	1520.	*	1	0841	522	416.	*	1	1311	792	3.	*	1	1741	1062	0.
1	0412	253	1529.	*	1	0842	523	413.	*	1	1312	793	3.	*	1	1742	1063	0.
1	0413	254	1537.	*	1	0843	524	409.	*	1	1313	794	3.	*	1	1743	1064	0.
1	0414	255	1543.	*	1	0844	525	406.	*	1	1314	795	3.	*	1	1744	1065	0.
1	0415	256	1547.	*	1	0845	526	403.	*	1	1315	796	2.	*	1	1745	1066	0.
1	0416	257	1549.	*	1	0846	527	400.	*	1	1316	797	2.	*	1	1746	1067	0.
1	0417	258	1549.	*	1	0847	528	397.	*	1	1317	798	2.	*	1	1747	1068	0.
1	0418	259	1544.	*	1	0848	529	394.	*	1	1318	799	2.	*	1	1748	1069	0.
1	0419	260	1535.	*	1	0849	530	391.	*	1	1319	800	2.	*	1	1749	1070	0.
1	0420	261	1521.	*	1	0850	531	388.	*	1	1320	801	2.	*	1	1750	1071	0.
1	0421	262	1505.	*	1	0851	532	385.	*	1	1321	802	2.	*	1	1751	1072	0.
1	0422	263	1487.	*	1	0852	533	382.	*	1	1322	803	2.	*	1	1752	1073	0.
1	0423	264	1467.	*	1	0853	534	380.	*	1	1323	804	2.	*	1	1753	1074	0.
1	0424	265	1447.	*	1	0854	535	377.	*	1	1324	805	2.	*	1	1754	1075	0.
1	0425	266	1427.	*	1	0855	536	374.	*	1	1325	806	2.	*	1	1755	1076	0.
1	0426	267	1408.	*	1	0856	537	372.	*	1	1326	807	2.	*	1	1756	1077	0.
1	0427	268	1389.	*	1	0857	538	369.	*	1	1327	808	2.	*	1	1757	1078	0.
1	0428	269	1371.	*	1	0858	539	367.	*	1	1328	809	2.	*	1	1758	1079	0.
1	0429	270	1353.	*	1	0859	540	364.	*	1	1329	810	2.	*	1	1759	1080	0.
				*					*					*				

****

PEAK FLOW (CFS)	TIME (HR)		MAXIMUM AVERAGE FLOW 6-HR	24-HR	72-HR	17.98-HR
1549.	4.27	(CFS)	756.	288.	288.	288.
		(INCHES)	0.985	1.124	1.124	1.124
		(AC-FT)	375.	427.	427.	427.

CUMULATIVE AREA = 7.13 SQ MI

*** ***

```
              **************
              *            *
140 KK        *     C599O  *
              *            *
              **************

141 KO          OUTPUT CONTROL VARIABLES
                     IPRNT          1  PRINT CONTROL
                     IPLOT          0  PLOT CONTROL
                     QSCAL         0.  HYDROGRAPH PLOT SCALE
                           Reservoir route at C599 (Dam 4).

                HYDROGRAPH ROUTING DATA

152 RL          ROUTING LOSSES
                     QLOSS       0.00  INITIAL LOSS
                     CLOSS       0.00  ADDITIONAL FRACTION LOST
                    PERCRT       0.97  CHANNEL PERCOLATION RATE
                    ELVINV       0.00  INVERT ELEVATION

143 RS          STORAGE ROUTING
                     NSTPS          1  NUMBER OF SUBREACHES
                      ITYP       ELEV  TYPE OF INITIAL CONDITION
                    RSVRIC    1694.70  INITIAL CONDITION
                         X       0.00 WORKING R AND D COEFFICIENT

144 SV            STORAGE        0.0      0.0      0.0      0.1      0.2      0.9      2.3      7.2     18.9     36.1
                                58.4     86.4     99.2    106.0    113.0    120.2    127.6    146.9    154.9    158.9

146 SE          ELEVATION    1694.60  1697.00  1698.00  1699.00  1700.00  1702.00  1704.00  1706.00  1708.00  1710.00
                             1712.00  1714.00  1714.80  1715.20  1715.60  1716.00  1716.40  1717.40  1717.80  1718.00

148 SQ          DISCHARGE        0.      78.     216.     443.     633.     785.     907.    1017.    1113.    1199.
                                1279.    1300.    1314.    1370.    2514.    5488.    9464.   14236.   17797.   19683.

150 SE          ELEVATION    1694.50  1696.00  1698.00  1700.00  1702.00  1704.00  1706.00  1708.00  1710.00  1712.00
                             1714.00  1714.50  1714.86  1715.00  1716.00  1717.50  1719.00  1720.50  1721.50  1722.00
```

***

COMPUTED STORAGE-OUTFLOW-ELEVATION DATA

STORAGE	0.00	0.00	0.00	0.00	0.02	0.08	0.24	0.93	2.29	7.17
OUTFLOW	0.00	5.20	78.00	147.00	216.00	329.50	443.00	633.00	785.00	907.00
ELEVATION	1694.50	1694.60	1696.00	1697.00	1698.00	1699.00	1700.00	1702.00	1704.00	1706.00
STORAGE	18.89	36.08	58.41	86.41	94.41	99.21	100.22	102.59	105.97	112.96
OUTFLOW	1017.00	1113.00	1199.00	1279.00	1300.00	1311.67	1314.00	1370.00	1598.74	2056.37
ELEVATION	1708.00	1710.00	1712.00	1714.00	1714.50	1714.80	1714.86	1715.00	1715.20	1715.60
STORAGE	120.18	127.60	146.86	148.86	154.86	158.92	179.22	209.68	229.99	240.14
OUTFLOW	2514.00	3307.11	5289.78	5488.00	6283.33	6813.33	9464.00	14236.00	17797.00	19683.00
ELEVATION	1716.00	1716.40	1717.40	1717.50	1717.80	1718.00	1719.00	1720.50	1721.50	1722.00

*** WARNING *** MODIFIED PULS ROUTING MAY BE NUMERICALLY UNSTABLE FOR OUTFLOWS BETWEEN 147. TO 330.
THE ROUTED HYDROGRAPH SHOULD BE EXAMINED FOR OSCILLATIONS OR OUTFLOWS GREATER THAN PEAK INFLOWS.
THIS CAN BE CORRECTED BY DECREASING THE TIME INTERVAL OR INCREASING STORAGE (USE A LONGER REACH.)

****

HYDROGRAPH AT STATION C599O

****

DA	MON	HRMN	ORD	OUTFLOW	STORAGE	STAGE	*	DA	MON	HRMN	ORD	OUTFLOW	STORAGE	STAGE	*	DA	MON	HRMN	ORD	OUTFLOW	STORAGE	STAGE
1		0000	1	10.	0.0	1694.6	*	1		0600	361	977.	14.7	1707.3	*	1		1200	721	36.	0.0	1695.2
1		0001	2	0.	0.0	1694.5	*	1		0601	362	976.	14.5	1707.2	*	1		1201	722	36.	0.0	1695.2
1		0002	3	0.	0.0	1694.5	*	1		0602	363	974.	14.3	1707.2	*	1		1202	723	35.	0.0	1695.2
1		0003	4	0.	0.0	1694.5	*	1		0603	364	973.	14.2	1707.2	*	1		1203	724	35.	0.0	1695.2
1		0004	5	0.	0.0	1694.5	*	1		0604	365	971.	14.0	1707.2	*	1		1204	725	34.	0.0	1695.2
1		0005	6	1.	0.0	1694.5	*	1		0605	366	970.	13.8	1707.1	*	1		1205	726	33.	0.0	1695.1
1		0006	7	1.	0.0	1694.5	*	1		0606	367	968.	13.7	1707.1	*	1		1206	727	32.	0.0	1695.1
1		0007	8	1.	0.0	1694.5	*	1		0607	368	967.	13.5	1707.1	*	1		1207	728	32.	0.0	1695.1

1	0008	9	2.	0.0	1694.5	*	1	0608	369	965.	13.4	1707.1	*	1	1208	729	31.	0.0	1695.1
1	0009	10	2.	0.0	1694.5	*	1	0609	370	964.	13.2	1707.0	*	1	1209	730	30.	0.0	1695.1
1	0010	11	2.	0.0	1694.5	*	1	0610	371	962.	13.0	1707.0	*	1	1210	731	29.	0.0	1695.1
1	0011	12	3.	0.0	1694.6	*	1	0611	372	961.	12.9	1707.0	*	1	1211	732	28.	0.0	1695.0
1	0012	13	3.	0.0	1694.6	*	1	0612	373	959.	12.7	1706.9	*	1	1212	733	27.	0.0	1695.0
1	0013	14	3.	0.0	1694.6	*	1	0613	374	958.	12.6	1706.9	*	1	1213	734	26.	0.0	1695.0
1	0014	15	3.	0.0	1694.6	*	1	0614	375	956.	12.4	1706.9	*	1	1214	735	25.	0.0	1695.0
1	0015	16	4.	0.0	1694.6	*	1	0615	376	955.	12.2	1706.9	*	1	1215	736	24.	0.0	1695.0
1	0016	17	4.	0.0	1694.6	*	1	0616	377	953.	12.1	1706.8	*	1	1216	737	23.	0.0	1694.9
1	0017	18	4.	0.0	1694.6	*	1	0617	378	952.	11.9	1706.8	*	1	1217	738	22.	0.0	1694.9
1	0018	19	4.	0.0	1694.6	*	1	0618	379	950.	11.8	1706.8	*	1	1218	739	21.	0.0	1694.9
1	0019	20	4.	0.0	1694.6	*	1	0619	380	949.	11.6	1706.8	*	1	1219	740	20.	0.0	1694.9
1	0020	21	4.	0.0	1694.6	*	1	0620	381	947.	11.5	1706.7	*	1	1220	741	19.	0.0	1694.9
1	0021	22	5.	0.0	1694.6	*	1	0621	382	946.	11.3	1706.7	*	1	1221	742	19.	0.0	1694.9
1	0022	23	5.	0.0	1694.6	*	1	0622	383	944.	11.1	1706.7	*	1	1222	743	18.	0.0	1694.8
1	0023	24	5.	0.0	1694.6	*	1	0623	384	943.	11.0	1706.7	*	1	1223	744	17.	0.0	1694.8
1	0024	25	5.	0.0	1694.6	*	1	0624	385	941.	10.8	1706.6	*	1	1224	745	17.	0.0	1694.8
1	0025	26	5.	0.0	1694.6	*	1	0625	386	940.	10.7	1706.6	*	1	1225	746	16.	0.0	1694.8
1	0026	27	5.	0.0	1694.6	*	1	0626	387	938.	10.5	1706.6	*	1	1226	747	15.	0.0	1694.8
1	0027	28	6.	0.0	1694.6	*	1	0627	388	937.	10.4	1706.5	*	1	1227	748	15.	0.0	1694.8
1	0028	29	6.	0.0	1694.6	*	1	0628	389	935.	10.2	1706.5	*	1	1228	749	14.	0.0	1694.8
1	0029	30	7.	0.0	1694.6	*	1	0629	390	934.	10.0	1706.5	*	1	1229	750	13.	0.0	1694.7
1	0030	31	7.	0.0	1694.6	*	1	0630	391	932.	9.9	1706.5	*	1	1230	751	13.	0.0	1694.7
1	0031	32	8.	0.0	1694.7	*	1	0631	392	931.	9.7	1706.4	*	1	1231	752	12.	0.0	1694.7
1	0032	33	9.	0.0	1694.7	*	1	0632	393	930.	9.6	1706.4	*	1	1232	753	12.	0.0	1694.7
1	0033	34	9.	0.0	1694.7	*	1	0633	394	928.	9.4	1706.4	*	1	1233	754	11.	0.0	1694.7
1	0034	35	10.	0.0	1694.7	*	1	0634	395	927.	9.3	1706.4	*	1	1234	755	11.	0.0	1694.7
1	0035	36	11.	0.0	1694.7	*	1	0635	396	925.	9.1	1706.3	*	1	1235	756	11.	0.0	1694.7
1	0036	37	12.	0.0	1694.7	*	1	0636	397	924.	8.9	1706.3	*	1	1236	757	10.	0.0	1694.7
1	0037	38	13.	0.0	1694.8	*	1	0637	398	922.	8.8	1706.3	*	1	1237	758	10.	0.0	1694.7
1	0038	39	13.	0.0	1694.8	*	1	0638	399	920.	8.6	1706.2	*	1	1238	759	9.	0.0	1694.7
1	0039	40	14.	0.0	1694.8	*	1	0639	400	919.	8.4	1706.2	*	1	1239	760	9.	0.0	1694.7
1	0040	41	15.	0.0	1694.8	*	1	0640	401	917.	8.3	1706.2	*	1	1240	761	9.	0.0	1694.7
1	0041	42	15.	0.0	1694.8	*	1	0641	402	916.	8.1	1706.2	*	1	1241	762	8.	0.0	1694.7
1	0042	43	16.	0.0	1694.8	*	1	0642	403	914.	7.9	1706.1	*	1	1242	763	8.	0.0	1694.7
1	0043	44	17.	0.0	1694.8	*	1	0643	404	913.	7.8	1706.1	*	1	1243	764	8.	0.0	1694.7
1	0044	45	17.	0.0	1694.8	*	1	0644	405	911.	7.6	1706.1	*	1	1244	765	8.	0.0	1694.7
1	0045	46	18.	0.0	1694.8	*	1	0645	406	909.	7.4	1706.0	*	1	1245	766	7.	0.0	1694.6
1	0046	47	18.	0.0	1694.8	*	1	0646	407	908.	7.2	1706.0	*	1	1246	767	7.	0.0	1694.6
1	0047	48	19.	0.0	1694.9	*	1	0647	408	905.	7.1	1706.0	*	1	1247	768	7.	0.0	1694.6
1	0048	49	20.	0.0	1694.9	*	1	0648	409	900.	6.9	1705.9	*	1	1248	769	7.	0.0	1694.6
1	0049	50	20.	0.0	1694.9	*	1	0649	410	896.	6.7	1705.8	*	1	1249	770	6.	0.0	1694.6
1	0050	51	21.	0.0	1694.9	*	1	0650	411	891.	6.5	1705.7	*	1	1250	771	6.	0.0	1694.6
1	0051	52	21.	0.0	1694.9	*	1	0651	412	887.	6.4	1705.7	*	1	1251	772	6.	0.0	1694.6
1	0052	53	22.	0.0	1694.9	*	1	0652	413	883.	6.2	1705.6	*	1	1252	773	6.	0.0	1694.6
1	0053	54	23.	0.0	1694.9	*	1	0653	414	879.	6.0	1705.5	*	1	1253	774	5.	0.0	1694.6
1	0054	55	23.	0.0	1694.9	*	1	0654	415	875.	5.9	1705.5	*	1	1254	775	5.	0.0	1694.6
1	0055	56	24.	0.0	1695.0	*	1	0655	416	870.	5.7	1705.4	*	1	1255	776	5.	0.0	1694.6
1	0056	57	25.	0.0	1695.0	*	1	0656	417	866.	5.5	1705.3	*	1	1256	777	5.	0.0	1694.6
1	0057	58	25.	0.0	1695.0	*	1	0657	418	862.	5.4	1705.3	*	1	1257	778	5.	0.0	1694.6
1	0058	59	26.	0.0	1695.0	*	1	0658	419	858.	5.2	1705.2	*	1	1258	779	5.	0.0	1694.6
1	0059	60	27.	0.0	1695.0	*	1	0659	420	854.	5.1	1705.1	*	1	1259	780	4.	0.0	1694.6
1	0100	61	28.	0.0	1695.0	*	1	0700	421	850.	4.9	1705.1	*	1	1300	781	4.	0.0	1694.6
1	0101	62	29.	0.0	1695.1	*	1	0701	422	846.	4.7	1705.0	*	1	1301	782	4.	0.0	1694.6
1	0102	63	30.	0.0	1695.1	*	1	0702	423	842.	4.6	1704.9	*	1	1302	783	4.	0.0	1694.6
1	0103	64	30.	0.0	1695.1	*	1	0703	424	838.	4.4	1704.9	*	1	1303	784	4.	0.0	1694.6
1	0104	65	31.	0.0	1695.1	*	1	0704	425	835.	4.3	1704.8	*	1	1304	785	4.	0.0	1694.6
1	0105	66	32.	0.0	1695.1	*	1	0705	426	831.	4.1	1704.8	*	1	1305	786	4.	0.0	1694.6
1	0106	67	33.	0.0	1695.1	*	1	0706	427	827.	4.0	1704.7	*	1	1306	787	3.	0.0	1694.6
1	0107	68	34.	0.0	1695.2	*	1	0707	428	823.	3.8	1704.6	*	1	1307	788	3.	0.0	1694.6
1	0108	69	35.	0.0	1695.2	*	1	0708	429	820.	3.7	1704.6	*	1	1308	789	3.	0.0	1694.6
1	0109	70	36.	0.0	1695.2	*	1	0709	430	816.	3.5	1704.5	*	1	1309	790	3.	0.0	1694.6
1	0110	71	37.	0.0	1695.2	*	1	0710	431	812.	3.4	1704.4	*	1	1310	791	3.	0.0	1694.6
1	0111	72	38.	0.0	1695.2	*	1	0711	432	809.	3.2	1704.4	*	1	1311	792	3.	0.0	1694.6
1	0112	73	39.	0.0	1695.3	*	1	0712	433	805.	3.1	1704.3	*	1	1312	793	3.	0.0	1694.6
1	0113	74	40.	0.0	1695.3	*	1	0713	434	802.	3.0	1704.3	*	1	1313	794	3.	0.0	1694.6
1	0114	75	41.	0.0	1695.3	*	1	0714	435	798.	2.8	1704.2	*	1	1314	795	3.	0.0	1694.6
1	0115	76	42.	0.0	1695.3	*	1	0715	436	794.	2.7	1704.2	*	1	1315	796	2.	0.0	1694.5
1	0116	77	43.	0.0	1695.3	*	1	0716	437	791.	2.5	1704.1	*	1	1316	797	2.	0.0	1694.5
1	0117	78	44.	0.0	1695.3	*	1	0717	438	787.	2.4	1704.0	*	1	1317	798	2.	0.0	1694.5
1	0118	79	45.	0.0	1695.4	*	1	0718	439	780.	2.2	1703.9	*	1	1318	799	2.	0.0	1694.5
1	0119	80	47.	0.0	1695.4	*	1	0719	440	766.	2.1	1703.7	*	1	1319	800	2.	0.0	1694.5
1	0120	81	48.	0.0	1695.4	*	1	0720	441	753.	2.0	1703.6	*	1	1320	801	2.	0.0	1694.5
1	0121	82	49.	0.0	1695.4	*	1	0721	442	741.	1.9	1703.4	*	1	1321	802	2.	0.0	1694.5
1	0122	83	50.	0.0	1695.5	*	1	0722	443	730.	1.8	1703.3	*	1	1322	803	2.	0.0	1694.5
1	0123	84	51.	0.0	1695.5	*	1	0723	444	721.	1.7	1703.2	*	1	1323	804	2.	0.0	1694.5
1	0124	85	52.	0.0	1695.5	*	1	0724	445	712.	1.6	1703.0	*	1	1324	805	2.	0.0	1694.5
1	0125	86	53.	0.0	1695.5	*	1	0725	446	703.	1.6	1702.9	*	1	1325	806	2.	0.0	1694.5

1	0126	87	54.	0.0	1695.5	*	1	0726	447	696.	1.5	1702.8	*	1	1326	807	2.	0.0	1694.5
1	0127	88	55.	0.0	1695.6	*	1	0727	448	688.	1.4	1702.7	*	1	1327	808	2.	0.0	1694.5
1	0128	89	56.	0.0	1695.6	*	1	0728	449	681.	1.4	1702.6	*	1	1328	809	2.	0.0	1694.5
1	0129	90	57.	0.0	1695.6	*	1	0729	450	675.	1.3	1702.6	*	1	1329	810	2.	0.0	1694.5
1	0130	91	58.	0.0	1695.6	*	1	0730	451	669.	1.2	1702.5	*	1	1330	811	1.	0.0	1694.5
1	0131	92	59.	0.0	1695.6	*	1	0731	452	663.	1.2	1702.4	*	1	1331	812	1.	0.0	1694.5
1	0132	93	60.	0.0	1695.7	*	1	0732	453	657.	1.1	1702.3	*	1	1332	813	1.	0.0	1694.5
1	0133	94	61.	0.0	1695.7	*	1	0733	454	652.	1.1	1702.2	*	1	1333	814	1.	0.0	1694.5
1	0134	95	62.	0.0	1695.7	*	1	0734	455	646.	1.0	1702.2	*	1	1334	815	1.	0.0	1694.5
1	0135	96	63.	0.0	1695.7	*	1	0735	456	641.	1.0	1702.1	*	1	1335	816	1.	0.0	1694.5
1	0136	97	64.	0.0	1695.7	*	1	0736	457	636.	1.0	1702.0	*	1	1336	817	1.	0.0	1694.5
1	0137	98	65.	0.0	1695.8	*	1	0737	458	630.	0.9	1702.0	*	1	1337	818	1.	0.0	1694.5
1	0138	99	66.	0.0	1695.8	*	1	0738	459	620.	0.9	1701.9	*	1	1338	819	1.	0.0	1694.5
1	0139	100	67.	0.0	1695.8	*	1	0739	460	613.	0.9	1701.8	*	1	1339	820	1.	0.0	1694.5
1	0140	101	68.	0.0	1695.8	*	1	0740	461	606.	0.8	1701.7	*	1	1340	821	1.	0.0	1694.5
1	0141	102	70.	0.0	1695.8	*	1	0741	462	601.	0.8	1701.7	*	1	1341	822	1.	0.0	1694.5
1	0142	103	71.	0.0	1695.9	*	1	0742	463	597.	0.8	1701.6	*	1	1342	823	1.	0.0	1694.5
1	0143	104	72.	0.0	1695.9	*	1	0743	464	593.	0.8	1701.6	*	1	1343	824	1.	0.0	1694.5
1	0144	105	74.	0.0	1695.9	*	1	0744	465	589.	0.8	1701.5	*	1	1344	825	1.	0.0	1694.5
1	0145	106	75.	0.0	1695.9	*	1	0745	466	586.	0.8	1701.5	*	1	1345	826	1.	0.0	1694.5
1	0146	107	77.	0.0	1696.0	*	1	0746	467	583.	0.7	1701.5	*	1	1346	827	1.	0.0	1694.5
1	0147	108	79.	0.0	1696.0	*	1	0747	468	579.	0.7	1701.4	*	1	1347	828	1.	0.0	1694.5
1	0148	109	81.	0.0	1696.0	*	1	0748	469	576.	0.7	1701.4	*	1	1348	829	1.	0.0	1694.5
1	0149	110	82.	0.0	1696.1	*	1	0749	470	573.	0.7	1701.4	*	1	1349	830	1.	0.0	1694.5
1	0150	111	84.	0.0	1696.1	*	1	0750	471	570.	0.7	1701.3	*	1	1350	831	1.	0.0	1694.5
1	0151	112	86.	0.0	1696.1	*	1	0751	472	566.	0.7	1701.3	*	1	1351	832	1.	0.0	1694.5
1	0152	113	87.	0.0	1696.1	*	1	0752	473	563.	0.7	1701.3	*	1	1352	833	1.	0.0	1694.5
1	0153	114	89.	0.0	1696.2	*	1	0753	474	560.	0.7	1701.2	*	1	1353	834	1.	0.0	1694.5
1	0154	115	91.	0.0	1696.2	*	1	0754	475	556.	0.7	1701.2	*	1	1354	835	1.	0.0	1694.5
1	0155	116	92.	0.0	1696.2	*	1	0755	476	553.	0.6	1701.2	*	1	1355	836	1.	0.0	1694.5
1	0156	117	94.	0.0	1696.2	*	1	0756	477	550.	0.6	1701.1	*	1	1356	837	1.	0.0	1694.5
1	0157	118	96.	0.0	1696.3	*	1	0757	478	547.	0.6	1701.1	*	1	1357	838	1.	0.0	1694.5
1	0158	119	97.	0.0	1696.3	*	1	0758	479	543.	0.6	1701.1	*	1	1358	839	1.	0.0	1694.5
1	0159	120	99.	0.0	1696.3	*	1	0759	480	540.	0.6	1701.0	*	1	1359	840	1.	0.0	1694.5
1	0200	121	100.	0.0	1696.3	*	1	0800	481	536.	0.6	1701.0	*	1	1400	841	1.	0.0	1694.5
1	0201	122	102.	0.0	1696.3	*	1	0801	482	533.	0.6	1700.9	*	1	1401	842	1.	0.0	1694.5
1	0202	123	103.	0.0	1696.4	*	1	0802	483	529.	0.6	1700.9	*	1	1402	843	1.	0.0	1694.5
1	0203	124	105.	0.0	1696.4	*	1	0803	484	526.	0.5	1700.9	*	1	1403	844	1.	0.0	1694.5
1	0204	125	106.	0.0	1696.4	*	1	0804	485	522.	0.5	1700.8	*	1	1404	845	1.	0.0	1694.5
1	0205	126	107.	0.0	1696.4	*	1	0805	486	518.	0.5	1700.8	*	1	1405	846	0.	0.0	1694.5
1	0206	127	109.	0.0	1696.4	*	1	0806	487	515.	0.5	1700.8	*	1	1406	847	0.	0.0	1694.5
1	0207	128	110.	0.0	1696.5	*	1	0807	488	511.	0.5	1700.7	*	1	1407	848	0.	0.0	1694.5
1	0208	129	111.	0.0	1696.5	*	1	0808	489	508.	0.5	1700.7	*	1	1408	849	0.	0.0	1694.5
1	0209	130	113.	0.0	1696.5	*	1	0809	490	504.	0.5	1700.6	*	1	1409	850	0.	0.0	1694.5
1	0210	131	114.	0.0	1696.5	*	1	0810	491	501.	0.5	1700.6	*	1	1410	851	0.	0.0	1694.5
1	0211	132	115.	0.0	1696.5	*	1	0811	492	498.	0.4	1700.6	*	1	1411	852	0.	0.0	1694.5
1	0212	133	117.	0.0	1696.6	*	1	0812	493	496.	0.4	1700.6	*	1	1412	853	0.	0.0	1694.5
1	0213	134	118.	0.0	1696.6	*	1	0813	494	493.	0.4	1700.5	*	1	1413	854	0.	0.0	1694.5
1	0214	135	119.	0.0	1696.6	*	1	0814	495	490.	0.4	1700.5	*	1	1414	855	0.	0.0	1694.5
1	0215	136	120.	0.0	1696.6	*	1	0815	496	488.	0.4	1700.5	*	1	1415	856	0.	0.0	1694.5
1	0216	137	121.	0.0	1696.6	*	1	0816	497	486.	0.4	1700.5	*	1	1416	857	0.	0.0	1694.5
1	0217	138	123.	0.0	1696.7	*	1	0817	498	484.	0.4	1700.4	*	1	1417	858	0.	0.0	1694.5
1	0218	139	124.	0.0	1696.7	*	1	0818	499	481.	0.4	1700.4	*	1	1418	859	0.	0.0	1694.5
1	0219	140	125.	0.0	1696.7	*	1	0819	500	479.	0.4	1700.4	*	1	1419	860	0.	0.0	1694.5
1	0220	141	126.	0.0	1696.7	*	1	0820	501	477.	0.4	1700.4	*	1	1420	861	0.	0.0	1694.5
1	0221	142	127.	0.0	1696.7	*	1	0821	502	475.	0.4	1700.3	*	1	1421	862	0.	0.0	1694.5
1	0222	143	128.	0.0	1696.7	*	1	0822	503	473.	0.3	1700.3	*	1	1422	863	0.	0.0	1694.5
1	0223	144	130.	0.0	1696.8	*	1	0823	504	471.	0.3	1700.3	*	1	1423	864	0.	0.0	1694.5
1	0224	145	131.	0.0	1696.8	*	1	0824	505	468.	0.3	1700.3	*	1	1424	865	0.	0.0	1694.5
1	0225	146	132.	0.0	1696.8	*	1	0825	506	466.	0.3	1700.2	*	1	1425	866	0.	0.0	1694.5
1	0226	147	133.	0.0	1696.8	*	1	0826	507	464.	0.3	1700.2	*	1	1426	867	0.	0.0	1694.5
1	0227	148	134.	0.0	1696.8	*	1	0827	508	462.	0.3	1700.2	*	1	1427	868	0.	0.0	1694.5
1	0228	149	135.	0.0	1696.8	*	1	0828	509	460.	0.3	1700.2	*	1	1428	869	0.	0.0	1694.5
1	0229	150	136.	0.0	1696.8	*	1	0829	510	458.	0.3	1700.2	*	1	1429	870	0.	0.0	1694.5
1	0230	151	137.	0.0	1696.9	*	1	0830	511	456.	0.3	1700.1	*	1	1430	871	0.	0.0	1694.5
1	0231	152	138.	0.0	1696.9	*	1	0831	512	454.	0.3	1700.1	*	1	1431	872	0.	0.0	1694.5
1	0232	153	139.	0.0	1696.9	*	1	0832	513	451.	0.3	1700.1	*	1	1432	873	0.	0.0	1694.5
1	0233	154	139.	0.0	1696.9	*	1	0833	514	448.	0.3	1700.1	*	1	1433	874	0.	0.0	1694.5
1	0234	155	140.	0.0	1696.9	*	1	0834	515	445.	0.2	1700.0	*	1	1434	875	0.	0.0	1694.5
1	0235	156	141.	0.0	1696.9	*	1	0835	516	442.	0.2	1700.0	*	1	1435	876	0.	0.0	1694.5
1	0236	157	142.	0.0	1696.9	*	1	0836	517	436.	0.2	1699.9	*	1	1436	877	0.	0.0	1694.5
1	0237	158	143.	0.0	1696.9	*	1	0837	518	432.	0.2	1699.9	*	1	1437	878	0.	0.0	1694.5
1	0238	159	144.	0.0	1697.0	*	1	0838	519	428.	0.2	1699.9	*	1	1438	879	0.	0.0	1694.5
1	0239	160	145.	0.0	1697.0	*	1	0839	520	425.	0.2	1699.8	*	1	1439	880	0.	0.0	1694.5
1	0240	161	145.	0.0	1697.0	*	1	0840	521	422.	0.2	1699.8	*	1	1440	881	0.	0.0	1694.5
1	0241	162	146.	0.0	1697.0	*	1	0841	522	419.	0.2	1699.8	*	1	1441	882	0.	0.0	1694.5
1	0242	163	147.	0.0	1697.0	*	1	0842	523	416.	0.2	1699.8	*	1	1442	883	0.	0.0	1694.5
1	0243	164	148.	0.0	1697.0	*	1	0843	524	413.	0.2	1699.7	*	1	1443	884	0.	0.0	1694.5

1	0244	165	149.	0.0	1697.0	*	1	0844	525	409.	0.2	1699.7	*	1	1444	885	0.	0.0	1694.5
1	0245	166	149.	0.0	1697.0	*	1	0845	526	406.	0.2	1699.7	*	1	1445	886	0.	0.0	1694.5
1	0246	167	150.	0.0	1697.0	*	1	0846	527	403.	0.2	1699.6	*	1	1446	887	0.	0.0	1694.5
1	0247	168	151.	0.0	1697.1	*	1	0847	528	400.	0.2	1699.6	*	1	1447	888	0.	0.0	1694.5
1	0248	169	152.	0.0	1697.1	*	1	0848	529	397.	0.2	1699.6	*	1	1448	889	0.	0.0	1694.5
1	0249	170	153.	0.0	1697.1	*	1	0849	530	394.	0.2	1699.6	*	1	1449	890	0.	0.0	1694.5
1	0250	171	154.	0.0	1697.1	*	1	0850	531	391.	0.2	1699.5	*	1	1450	891	0.	0.0	1694.5
1	0251	172	154.	0.0	1697.1	*	1	0851	532	388.	0.2	1699.5	*	1	1451	892	0.	0.0	1694.5
1	0252	173	155.	0.0	1697.1	*	1	0852	533	385.	0.2	1699.5	*	1	1452	893	0.	0.0	1694.5
1	0253	174	156.	0.0	1697.1	*	1	0853	534	382.	0.2	1699.5	*	1	1453	894	0.	0.0	1694.5
1	0254	175	157.	0.0	1697.1	*	1	0854	535	380.	0.2	1699.4	*	1	1454	895	0.	0.0	1694.5
1	0255	176	158.	0.0	1697.2	*	1	0855	536	377.	0.1	1699.4	*	1	1455	896	0.	0.0	1694.5
1	0256	177	159.	0.0	1697.2	*	1	0856	537	374.	0.1	1699.4	*	1	1456	897	0.	0.0	1694.5
1	0257	178	160.	0.0	1697.2	*	1	0857	538	372.	0.1	1699.4	*	1	1457	898	0.	0.0	1694.5
1	0258	179	161.	0.0	1697.2	*	1	0858	539	369.	0.1	1699.4	*	1	1458	899	0.	0.0	1694.5
1	0259	180	161.	0.0	1697.2	*	1	0859	540	367.	0.1	1699.3	*	1	1459	900	0.	0.0	1694.5
1	0300	181	162.	0.0	1697.2	*	1	0900	541	364.	0.1	1699.3	*	1	1500	901	0.	0.0	1694.5
1	0301	182	163.	0.0	1697.2	*	1	0901	542	362.	0.1	1699.3	*	1	1501	902	0.	0.0	1694.5
1	0302	183	164.	0.0	1697.2	*	1	0902	543	359.	0.1	1699.3	*	1	1502	903	0.	0.0	1694.5
1	0303	184	165.	0.0	1697.3	*	1	0903	544	357.	0.1	1699.2	*	1	1503	904	0.	0.0	1694.5
1	0304	185	166.	0.0	1697.3	*	1	0904	545	354.	0.1	1699.2	*	1	1504	905	0.	0.0	1694.5
1	0305	186	168.	0.0	1697.3	*	1	0905	546	352.	0.1	1699.2	*	1	1505	906	0.	0.0	1694.5
1	0306	187	169.	0.0	1697.3	*	1	0906	547	350.	0.1	1699.2	*	1	1506	907	0.	0.0	1694.5
1	0307	188	171.	0.0	1697.3	*	1	0907	548	347.	0.1	1699.2	*	1	1507	908	0.	0.0	1694.5
1	0308	189	172.	0.0	1697.4	*	1	0908	549	344.	0.1	1699.1	*	1	1508	909	0.	0.0	1694.5
1	0309	190	175.	0.0	1697.4	*	1	0909	550	342.	0.1	1699.1	*	1	1509	910	0.	0.0	1694.5
1	0310	191	176.	0.0	1697.4	*	1	0910	551	339.	0.1	1699.1	*	1	1510	911	0.	0.0	1694.5
1	0311	192	177.	0.0	1697.4	*	1	0911	552	337.	0.1	1699.1	*	1	1511	912	0.	0.0	1694.5
1	0312	193	180.	0.0	1697.5	*	1	0912	553	334.	0.1	1699.0	*	1	1512	913	0.	0.0	1694.5
1	0313	194	182.	0.0	1697.5	*	1	0913	554	331.	0.1	1699.0	*	1	1513	914	0.	0.0	1694.5
1	0314	195	183.	0.0	1697.5	*	1	0914	555	328.	0.1	1699.0	*	1	1514	915	0.	0.0	1694.5
1	0315	196	184.	0.0	1697.5	*	1	0915	556	324.	0.1	1699.0	*	1	1515	916	0.	0.0	1694.5
1	0316	197	187.	0.0	1697.6	*	1	0916	557	321.	0.1	1698.9	*	1	1516	917	0.	0.0	1694.5
1	0317	198	189.	0.0	1697.6	*	1	0917	558	318.	0.1	1698.9	*	1	1517	918	0.	0.0	1694.5
1	0318	199	191.	0.0	1697.6	*	1	0918	559	315.	0.1	1698.9	*	1	1518	919	0.	0.0	1694.5
1	0319	200	194.	0.0	1697.7	*	1	0919	560	312.	0.1	1698.8	*	1	1519	920	0.	0.0	1694.5
1	0320	201	198.	0.0	1697.7	*	1	0920	561	308.	0.1	1698.8	*	1	1520	921	0.	0.0	1694.5
1	0321	202	202.	0.0	1697.8	*	1	0921	562	305.	0.1	1698.8	*	1	1521	922	0.	0.0	1694.5
1	0322	203	206.	0.0	1697.9	*	1	0922	563	302.	0.1	1698.8	*	1	1522	923	0.	0.0	1694.5
1	0323	204	210.	0.0	1697.9	*	1	0923	564	299.	0.1	1698.7	*	1	1523	924	0.	0.0	1694.5
1	0324	205	215.	0.0	1698.0	*	1	0924	565	296.	0.1	1698.7	*	1	1524	925	0.	0.0	1694.5
1	0325	206	219.	0.0	1698.0	*	1	0925	566	293.	0.1	1698.7	*	1	1525	926	0.	0.0	1694.5
1	0326	207	223.	0.0	1698.1	*	1	0926	567	289.	0.1	1698.6	*	1	1526	927	0.	0.0	1694.5
1	0327	208	228.	0.0	1698.1	*	1	0927	568	286.	0.1	1698.6	*	1	1527	928	0.	0.0	1694.5
1	0328	209	234.	0.0	1698.2	*	1	0928	569	283.	0.1	1698.6	*	1	1528	929	0.	0.0	1694.5
1	0329	210	240.	0.0	1698.2	*	1	0929	570	280.	0.1	1698.6	*	1	1529	930	0.	0.0	1694.5
1	0330	211	246.	0.0	1698.3	*	1	0930	571	277.	0.1	1698.5	*	1	1530	931	0.	0.0	1694.5
1	0331	212	253.	0.0	1698.3	*	1	0931	572	274.	0.1	1698.5	*	1	1531	932	0.	0.0	1694.5
1	0332	213	262.	0.0	1698.4	*	1	0932	573	271.	0.0	1698.5	*	1	1532	933	0.	0.0	1694.5
1	0333	214	274.	0.1	1698.5	*	1	0933	574	268.	0.0	1698.5	*	1	1533	934	0.	0.0	1694.5
1	0334	215	291.	0.1	1698.7	*	1	0934	575	265.	0.0	1698.4	*	1	1534	935	0.	0.0	1694.5
1	0335	216	312.	0.1	1698.8	*	1	0935	576	263.	0.0	1698.4	*	1	1535	936	0.	0.0	1694.5
1	0336	217	333.	0.1	1699.0	*	1	0936	577	260.	0.0	1698.4	*	1	1536	937	0.	0.0	1694.5
1	0337	218	349.	0.1	1699.2	*	1	0937	578	257.	0.0	1698.4	*	1	1537	938	0.	0.0	1694.5
1	0338	219	373.	0.1	1699.4	*	1	0938	579	254.	0.0	1698.3	*	1	1538	939	0.	0.0	1694.5
1	0339	220	399.	0.2	1699.6	*	1	0939	580	251.	0.0	1698.3	*	1	1539	940	0.	0.0	1694.5
1	0340	221	427.	0.2	1699.9	*	1	0940	581	249.	0.0	1698.3	*	1	1540	941	0.	0.0	1694.5
1	0341	222	449.	0.3	1700.1	*	1	0941	582	246.	0.0	1698.3	*	1	1541	942	0.	0.0	1694.5
1	0342	223	465.	0.3	1700.2	*	1	0942	583	243.	0.0	1698.2	*	1	1542	943	0.	0.0	1694.5
1	0343	224	485.	0.4	1700.4	*	1	0943	584	241.	0.0	1698.2	*	1	1543	944	0.	0.0	1694.5
1	0344	225	508.	0.5	1700.7	*	1	0944	585	238.	0.0	1698.2	*	1	1544	945	0.	0.0	1694.5
1	0345	226	534.	0.6	1701.0	*	1	0945	586	235.	0.0	1698.2	*	1	1545	946	0.	0.0	1694.5
1	0346	227	562.	0.7	1701.3	*	1	0946	587	233.	0.0	1698.1	*	1	1546	947	0.	0.0	1694.5
1	0347	228	594.	0.8	1701.6	*	1	0947	588	231.	0.0	1698.1	*	1	1547	948	0.	0.0	1694.5
1	0348	229	628.	0.9	1701.9	*	1	0948	589	228.	0.0	1698.1	*	1	1548	949	0.	0.0	1694.5
1	0349	230	647.	1.1	1702.2	*	1	0949	590	226.	0.0	1698.1	*	1	1549	950	0.	0.0	1694.5
1	0350	231	667.	1.2	1702.5	*	1	0950	591	223.	0.0	1698.1	*	1	1550	951	0.	0.0	1694.5
1	0351	232	691.	1.4	1702.8	*	1	0951	592	221.	0.0	1698.0	*	1	1551	952	0.	0.0	1694.5
1	0352	233	716.	1.7	1703.1	*	1	0952	593	218.	0.0	1698.0	*	1	1552	953	0.	0.0	1694.5
1	0353	234	744.	1.9	1703.5	*	1	0953	594	216.	0.0	1698.0	*	1	1553	954	0.	0.0	1694.5
1	0354	235	774.	2.2	1703.9	*	1	0954	595	213.	0.0	1698.0	*	1	1554	955	0.	0.0	1694.5
1	0355	236	790.	2.5	1704.1	*	1	0955	596	211.	0.0	1697.9	*	1	1555	956	0.	0.0	1694.5
1	0356	237	798.	2.8	1704.2	*	1	0956	597	208.	0.0	1697.9	*	1	1556	957	0.	0.0	1694.5
1	0357	238	807.	3.2	1704.4	*	1	0957	598	206.	0.0	1697.9	*	1	1557	958	0.	0.0	1694.5
1	0358	239	818.	3.6	1704.5	*	1	0958	599	203.	0.0	1697.8	*	1	1558	959	0.	0.0	1694.5
1	0359	240	829.	4.1	1704.7	*	1	0959	600	201.	0.0	1697.8	*	1	1559	960	0.	0.0	1694.5
1	0400	241	842.	4.6	1704.9	*	1	1000	601	199.	0.0	1697.7	*	1	1600	961	0.	0.0	1694.5
1	0401	242	855.	5.1	1705.1	*	1	1001	602	196.	0.0	1697.7	*	1	1601	962	0.	0.0	1694.5

1	0402	243	870.	5.7	1705.4	*	1	1002	603	194.	0.0	1697.7	*	1	1602 963	0.	0.0	1694.5
1	0403	244	885.	6.3	1705.6	*	1	1003	604	192.	0.0	1697.7	*	1	1603 964	0.	0.0	1694.5
1	0404	245	902.	7.0	1705.9	*	1	1004	605	190.	0.0	1697.6	*	1	1604 965	0.	0.0	1694.5
1	0405	246	911.	7.6	1706.1	*	1	1005	606	187.	0.0	1697.6	*	1	1605 966	0.	0.0	1694.5
1	0406	247	918.	8.3	1706.2	*	1	1006	607	185.	0.0	1697.6	*	1	1606 967	0.	0.0	1694.5
1	0407	248	925.	9.1	1706.3	*	1	1007	608	183.	0.0	1697.5	*	1	1607 968	0.	0.0	1694.5
1	0408	249	932.	9.8	1706.5	*	1	1008	609	181.	0.0	1697.5	*	1	1608 969	0.	0.0	1694.5
1	0409	250	939.	10.6	1706.6	*	1	1009	610	179.	0.0	1697.5	*	1	1609 970	0.	0.0	1694.5
1	0410	251	946.	11.4	1706.7	*	1	1010	611	176.	0.0	1697.4	*	1	1610 971	0.	0.0	1694.5
1	0411	252	954.	12.1	1706.8	*	1	1011	612	174.	0.0	1697.4	*	1	1611 972	0.	0.0	1694.5
1	0412	253	961.	12.9	1707.0	*	1	1012	613	172.	0.0	1697.4	*	1	1612 973	0.	0.0	1694.5
1	0413	254	968.	13.7	1707.1	*	1	1013	614	170.	0.0	1697.3	*	1	1613 974	0.	0.0	1694.5
1	0414	255	976.	14.5	1707.3	*	1	1014	615	168.	0.0	1697.3	*	1	1614 975	0.	0.0	1694.5
1	0415	256	983.	15.3	1707.4	*	1	1015	616	166.	0.0	1697.3	*	1	1615 976	0.	0.0	1694.5
1	0416	257	990.	16.0	1707.5	*	1	1016	617	164.	0.0	1697.3	*	1	1616 977	0.	0.0	1694.5
1	0417	258	997.	16.8	1707.6	*	1	1017	618	163.	0.0	1697.2	*	1	1617 978	0.	0.0	1694.5
1	0418	259	1005.	17.6	1707.8	*	1	1018	619	162.	0.0	1697.2	*	1	1618 979	0.	0.0	1694.5
1	0419	260	1011.	18.3	1707.9	*	1	1019	620	159.	0.0	1697.2	*	1	1619 980	0.	0.0	1694.5
1	0420	261	1018.	19.0	1708.0	*	1	1020	621	157.	0.0	1697.2	*	1	1620 981	0.	0.0	1694.5
1	0421	262	1021.	19.7	1708.1	*	1	1021	622	155.	0.0	1697.1	*	1	1621 982	0.	0.0	1694.5
1	0422	263	1025.	20.3	1708.2	*	1	1022	623	154.	0.0	1697.1	*	1	1622 983	0.	0.0	1694.5
1	0423	264	1029.	21.0	1708.2	*	1	1023	624	153.	0.0	1697.1	*	1	1623 984	0.	0.0	1694.5
1	0424	265	1032.	21.5	1708.3	*	1	1024	625	150.	0.0	1697.0	*	1	1624 985	0.	0.0	1694.5
1	0425	266	1035.	22.1	1708.4	*	1	1025	626	148.	0.0	1697.0	*	1	1625 986	0.	0.0	1694.5
1	0426	267	1038.	22.6	1708.4	*	1	1026	627	147.	0.0	1697.0	*	1	1626 987	0.	0.0	1694.5
1	0427	268	1041.	23.1	1708.5	*	1	1027	628	145.	0.0	1697.0	*	1	1627 988	0.	0.0	1694.5
1	0428	269	1043.	23.6	1708.5	*	1	1028	629	143.	0.0	1696.9	*	1	1628 989	0.	0.0	1694.5
1	0429	270	1046.	24.0	1708.6	*	1	1029	630	141.	0.0	1696.9	*	1	1629 990	0.	0.0	1694.5
1	0430	271	1048.	24.4	1708.6	*	1	1030	631	139.	0.0	1696.9	*	1	1630 991	0.	0.0	1694.5
1	0431	272	1050.	24.8	1708.7	*	1	1031	632	138.	0.0	1696.9	*	1	1631 992	0.	0.0	1694.5
1	0432	273	1052.	25.2	1708.7	*	1	1032	633	136.	0.0	1696.8	*	1	1632 993	0.	0.0	1694.5
1	0433	274	1054.	25.5	1708.8	*	1	1033	634	134.	0.0	1696.8	*	1	1633 994	0.	0.0	1694.5
1	0434	275	1056.	25.8	1708.8	*	1	1034	635	133.	0.0	1696.8	*	1	1634 995	0.	0.0	1694.5
1	0435	276	1057.	26.1	1708.8	*	1	1035	636	131.	0.0	1696.8	*	1	1635 996	0.	0.0	1694.5
1	0436	277	1058.	26.3	1708.9	*	1	1036	637	129.	0.0	1696.7	*	1	1636 997	0.	0.0	1694.5
1	0437	278	1060.	26.5	1708.9	*	1	1037	638	128.	0.0	1696.7	*	1	1637 998	0.	0.0	1694.5
1	0438	279	1061.	26.7	1708.9	*	1	1038	639	126.	0.0	1696.7	*	1	1638 999	0.	0.0	1694.5
1	0439	280	1062.	26.9	1708.9	*	1	1039	640	125.	0.0	1696.7	*	1	16391000	0.	0.0	1694.5
1	0440	281	1062.	27.0	1708.9	*	1	1040	641	123.	0.0	1696.7	*	1	16401001	0.	0.0	1694.5
1	0441	282	1063.	27.1	1709.0	*	1	1041	642	121.	0.0	1696.6	*	1	16411002	0.	0.0	1694.5
1	0442	283	1063.	27.2	1709.0	*	1	1042	643	120.	0.0	1696.6	*	1	16421003	0.	0.0	1694.5
1	0443	284	1063.	27.2	1709.0	*	1	1043	644	118.	0.0	1696.6	*	1	16431004	0.	0.0	1694.5
1	0444	285	1064.	27.2	1709.0	*	1	1044	645	117.	0.0	1696.6	*	1	16441005	0.	0.0	1694.5
1	0445	286	1064.	27.2	1709.0	*	1	1045	646	116.	0.0	1696.5	*	1	16451006	0.	0.0	1694.5
1	0446	287	1063.	27.2	1709.0	*	1	1046	647	114.	0.0	1696.5	*	1	16461007	0.	0.0	1694.5
1	0447	288	1063.	27.2	1709.0	*	1	1047	648	113.	0.0	1696.5	*	1	16471008	0.	0.0	1694.5
1	0448	289	1063.	27.1	1709.0	*	1	1048	649	112.	0.0	1696.5	*	1	16481009	0.	0.0	1694.5
1	0449	290	1063.	27.0	1708.9	*	1	1049	650	110.	0.0	1696.5	*	1	16491010	0.	0.0	1694.5
1	0450	291	1062.	27.0	1708.9	*	1	1050	651	109.	0.0	1696.4	*	1	16501011	0.	0.0	1694.5
1	0451	292	1062.	26.9	1708.9	*	1	1051	652	108.	0.0	1696.4	*	1	16511012	0.	0.0	1694.5
1	0452	293	1061.	26.8	1708.9	*	1	1052	653	107.	0.0	1696.4	*	1	16521013	0.	0.0	1694.5
1	0453	294	1060.	26.7	1708.9	*	1	1053	654	106.	0.0	1696.4	*	1	16531014	0.	0.0	1694.5
1	0454	295	1060.	26.6	1708.9	*	1	1054	655	104.	0.0	1696.4	*	1	16541015	0.	0.0	1694.5
1	0455	296	1059.	26.4	1708.9	*	1	1055	656	103.	0.0	1696.4	*	1	16551016	0.	0.0	1694.5
1	0456	297	1058.	26.3	1708.9	*	1	1056	657	102.	0.0	1696.3	*	1	16561017	0.	0.0	1694.5
1	0457	298	1058.	26.2	1708.8	*	1	1057	658	101.	0.0	1696.3	*	1	16571018	0.	0.0	1694.5
1	0458	299	1057.	26.0	1708.8	*	1	1058	659	100.	0.0	1696.3	*	1	16581019	0.	0.0	1694.5
1	0459	300	1056.	25.9	1708.8	*	1	1059	660	99.	0.0	1696.3	*	1	16591020	0.	0.0	1694.5
1	0500	301	1055.	25.7	1708.8	*	1	1100	661	98.	0.0	1696.3	*	1	17001021	0.	0.0	1694.5
1	0501	302	1054.	25.6	1708.8	*	1	1101	662	96.	0.0	1696.3	*	1	17011022	0.	0.0	1694.5
1	0502	303	1053.	25.4	1708.8	*	1	1102	663	95.	0.0	1696.2	*	1	17021023	0.	0.0	1694.5
1	0503	304	1053.	25.3	1708.7	*	1	1103	664	93.	0.0	1696.2	*	1	17031024	0.	0.0	1694.5
1	0504	305	1052.	25.1	1708.7	*	1	1104	665	92.	0.0	1696.2	*	1	17041025	0.	0.0	1694.5
1	0505	306	1051.	24.9	1708.7	*	1	1105	666	90.	0.0	1696.2	*	1	17051026	0.	0.0	1694.5
1	0506	307	1050.	24.7	1708.7	*	1	1106	667	89.	0.0	1696.2	*	1	17061027	0.	0.0	1694.5
1	0507	308	1049.	24.6	1708.7	*	1	1107	668	87.	0.0	1696.1	*	1	17071028	0.	0.0	1694.5
1	0508	309	1048.	24.4	1708.6	*	1	1108	669	85.	0.0	1696.1	*	1	17081029	0.	0.0	1694.5
1	0509	310	1047.	24.2	1708.6	*	1	1109	670	84.	0.0	1696.1	*	1	17091030	0.	0.0	1694.5
1	0510	311	1046.	24.0	1708.6	*	1	1110	671	82.	0.0	1696.1	*	1	17101031	0.	0.0	1694.5
1	0511	312	1045.	23.8	1708.6	*	1	1111	672	80.	0.0	1696.0	*	1	17111032	0.	0.0	1694.5
1	0512	313	1044.	23.7	1708.6	*	1	1112	673	79.	0.0	1696.0	*	1	17121033	0.	0.0	1694.5
1	0513	314	1043.	23.5	1708.5	*	1	1113	674	77.	0.0	1696.0	*	1	17131034	0.	0.0	1694.5
1	0514	315	1041.	23.3	1708.5	*	1	1114	675	76.	0.0	1696.0	*	1	17141035	0.	0.0	1694.5
1	0515	316	1040.	23.1	1708.5	*	1	1115	676	74.	0.0	1695.9	*	1	17151036	0.	0.0	1694.5
1	0516	317	1039.	22.9	1708.5	*	1	1116	677	73.	0.0	1695.9	*	1	17161037	0.	0.0	1694.5
1	0517	318	1038.	22.7	1708.4	*	1	1117	678	71.	0.0	1695.9	*	1	17171038	0.	0.0	1694.5
1	0518	319	1037.	22.5	1708.4	*	1	1118	679	70.	0.0	1695.8	*	1	17181039	0.	0.0	1694.5
1	0519	320	1036.	22.3	1708.4	*	1	1119	680	69.	0.0	1695.8	*	1	17191040	0.	0.0	1694.5

1	0520	321	1035.	22.1	1708.4	*	1	1120	681	68.	0.0	1695.8	*	1	17201041	0.	0.0	1694.5
1	0521	322	1034.	21.9	1708.4	*	1	1121	682	67.	0.0	1695.8	*	1	17211042	0.	0.0	1694.5
1	0522	323	1033.	21.7	1708.3	*	1	1122	683	66.	0.0	1695.8	*	1	17221043	0.	0.0	1694.5
1	0523	324	1032.	21.5	1708.3	*	1	1123	684	65.	0.0	1695.7	*	1	17231044	0.	0.0	1694.5
1	0524	325	1031.	21.3	1708.3	*	1	1124	685	64.	0.0	1695.7	*	1	17241045	0.	0.0	1694.5
1	0525	326	1030.	21.1	1708.3	*	1	1125	686	63.	0.0	1695.7	*	1	17251046	0.	0.0	1694.5
1	0526	327	1028.	20.9	1708.2	*	1	1126	687	61.	0.0	1695.7	*	1	17261047	0.	0.0	1694.5
1	0527	328	1027.	20.8	1708.2	*	1	1127	688	60.	0.0	1695.7	*	1	17271048	0.	0.0	1694.5
1	0528	329	1026.	20.6	1708.2	*	1	1128	689	59.	0.0	1695.6	*	1	17281049	0.	0.0	1694.5
1	0529	330	1025.	20.4	1708.2	*	1	1129	690	58.	0.0	1695.6	*	1	17291050	0.	0.0	1694.5
1	0530	331	1024.	20.2	1708.1	*	1	1130	691	57.	0.0	1695.6	*	1	17301051	0.	0.0	1694.5
1	0531	332	1023.	20.0	1708.1	*	1	1131	692	56.	0.0	1695.6	*	1	17311052	0.	0.0	1694.5
1	0532	333	1022.	19.8	1708.1	*	1	1132	693	55.	0.0	1695.6	*	1	17321053	0.	0.0	1694.5
1	0533	334	1021.	19.6	1708.1	*	1	1133	694	54.	0.0	1695.5	*	1	17331054	0.	0.0	1694.5
1	0534	335	1020.	19.4	1708.1	*	1	1134	695	54.	0.0	1695.5	*	1	17341055	0.	0.0	1694.5
1	0535	336	1019.	19.2	1708.0	*	1	1135	696	53.	0.0	1695.5	*	1	17351056	0.	0.0	1694.5
1	0536	337	1018.	19.0	1708.0	*	1	1136	697	52.	0.0	1695.5	*	1	17361057	0.	0.0	1694.5
1	0537	338	1016.	18.8	1708.0	*	1	1137	698	51.	0.0	1695.5	*	1	17371058	0.	0.0	1694.5
1	0538	339	1014.	18.6	1708.0	*	1	1138	699	50.	0.0	1695.5	*	1	17381059	0.	0.0	1694.5
1	0539	340	1012.	18.4	1707.9	*	1	1139	700	49.	0.0	1695.4	*	1	17391060	0.	0.0	1694.5
1	0540	341	1011.	18.2	1707.9	*	1	1140	701	49.	0.0	1695.4	*	1	17401061	0.	0.0	1694.5
1	0541	342	1009.	18.0	1707.9	*	1	1141	702	48.	0.0	1695.4	*	1	17411062	0.	0.0	1694.5
1	0542	343	1007.	17.8	1707.8	*	1	1142	703	47.	0.0	1695.4	*	1	17421063	0.	0.0	1694.5
1	0543	344	1005.	17.6	1707.8	*	1	1143	704	46.	0.0	1695.4	*	1	17431064	0.	0.0	1694.5
1	0544	345	1004.	17.5	1707.8	*	1	1144	705	46.	0.0	1695.4	*	1	17441065	0.	0.0	1694.5
1	0545	346	1002.	17.3	1707.7	*	1	1145	706	45.	0.0	1695.4	*	1	17451066	0.	0.0	1694.5
1	0546	347	1000.	17.1	1707.7	*	1	1146	707	44.	0.0	1695.3	*	1	17461067	0.	0.0	1694.5
1	0547	348	998.	16.9	1707.7	*	1	1147	708	44.	0.0	1695.3	*	1	17471068	0.	0.0	1694.5
1	0548	349	997.	16.7	1707.6	*	1	1148	709	43.	0.0	1695.3	*	1	17481069	0.	0.0	1694.5
1	0549	350	995.	16.6	1707.6	*	1	1149	710	42.	0.0	1695.3	*	1	17491070	0.	0.0	1694.5
1	0550	351	993.	16.4	1707.6	*	1	1150	711	42.	0.0	1695.3	*	1	17501071	0.	0.0	1694.5
1	0551	352	992.	16.2	1707.5	*	1	1151	712	41.	0.0	1695.3	*	1	17511072	0.	0.0	1694.5
1	0552	353	990.	16.0	1707.5	*	1	1152	713	41.	0.0	1695.3	*	1	17521073	0.	0.0	1694.5
1	0553	354	988.	15.8	1707.5	*	1	1153	714	40.	0.0	1695.3	*	1	17531074	0.	0.0	1694.5
1	0554	355	987.	15.7	1707.5	*	1	1154	715	39.	0.0	1695.2	*	1	17541075	0.	0.0	1694.5
1	0555	356	985.	15.5	1707.4	*	1	1155	716	39.	0.0	1695.2	*	1	17551076	0.	0.0	1694.5
1	0556	357	984.	15.3	1707.4	*	1	1156	717	38.	0.0	1695.2	*	1	17561077	0.	0.0	1694.5
1	0557	358	982.	15.2	1707.4	*	1	1157	718	38.	0.0	1695.2	*	1	17571078	0.	0.0	1694.5
1	0558	359	980.	15.0	1707.3	*	1	1158	719	37.	0.0	1695.2	*	1	17581079	0.	0.0	1694.5
1	0559	360	979.	14.8	1707.3	*	1	1159	720	37.	0.0	1695.2	*	1	17591080	0.	0.0	1694.5
						*							*					

****

PEAK FLOW (CFS)	TIME (HR)		MAXIMUM AVERAGE FLOW 6-HR	24-HR	72-HR	17.98-HR
1064.	4.73	(CFS)	756.	288.	288.	288.
		(INCHES)	0.985	1.124	1.124	1.124
		(AC-FT)	375.	427.	427.	427.

PEAK STORAGE (AC-FT)	TIME (HR)	MAXIMUM AVERAGE STORAGE 6-HR	24-HR	72-HR	17.98-HR
27.	4.73	9.	3.	3.	3.

PEAK STAGE (FEET)	TIME (HR)	MAXIMUM AVERAGE STAGE 6-HR	24-HR	72-HR	17.98-HR
1708.97	4.73	1704.26	1698.36	1698.36	1698.36

CUMULATIVE AREA = 7.13 SQ MI

RUNOFF SUMMARY
FLOW IN CUBIC FEET PER SECOND
TIME IN HOURS, AREA IN SQUARE MILES

OPERATION	STATION	PEAK FLOW	TIME OF PEAK	AVERAGE FLOW FOR MAXIMUM PERIOD 6-HOUR	24-HOUR	72-HOUR	BASIN AREA	MAXIMUM STAGE	TIME OF MAX STAGE
HYDROGRAPH AT	C599I	1549.	4.27	756.	288.	288.	7.13		
ROUTED TO	C599O	1064.	4.73	756.	288.	288.	7.13	1708.97	4.73

*** NORMAL END OF HEC-1 ***

APPENDIX D

HYDRAULIC ANALYSIS OF EMERGENCY, PRINCIPAL & AUXILIARY SPILLWAYS

Alternative F
Existing Emergency Spillway

Elev. (ft)	Q (cfs)
1714.86	0
1715.00	33
1716.00	777
1717.50	2738
1719.00	5378
1720.50	8551
1721.50	10923
1722.00	12180
1722.50	13481
1723.00	14826
1723.50	16213
1724.00	17641
1724.50	19108
1725.00	20613
1725.50	22157
1726.00	23737
1726.50	25353
1727.00	27004
1727.50	28689
1728.00	30408
1728.50	32160
1729.00	33944
1729.50	35761
1730.00	37608

Alternative F
Enlarged Emergency Spillway

Elev. (ft)	Q (cfs)
1714.86	0
1715.00	16
1716.00	380
1717.50	1338
1719.00	2628
1720.50	4179
1721.50	5338
1722.00	5953
1722.50	6589
1723.00	7246
1723.50	7924
1724.00	8621
1724.50	9338
1725.00	10074
1725.50	10828
1726.00	11601
1726.50	12390
1727.00	13197
1727.50	14021
1728.00	14861
1728.50	15717
1729.00	16589
1729.50	17477
1730.00	18380

Alternative F
Emergency Spillway
(Enlarged (+) Existing)

Elev. (ft)	50% Clogg 2-60" RCP with trash rack headloss at the inlet Q (cfs)
1714.86	0
1715.00	50
1716.00	1157
1717.50	4077
1719.00	8006
1720.50	12730
1721.50	16261
1722.00	18132
1722.50	20070
1723.00	22072
1723.50	24137
1724.00	26262
1724.50	28446
1725.00	30688
1725.50	32985
1726.00	35337
1726.50	37743
1727.00	40201
1727.50	42710
1728.00	45269
1728.50	47877
1729.00	50534
1729.50	53238
1730.00	55988

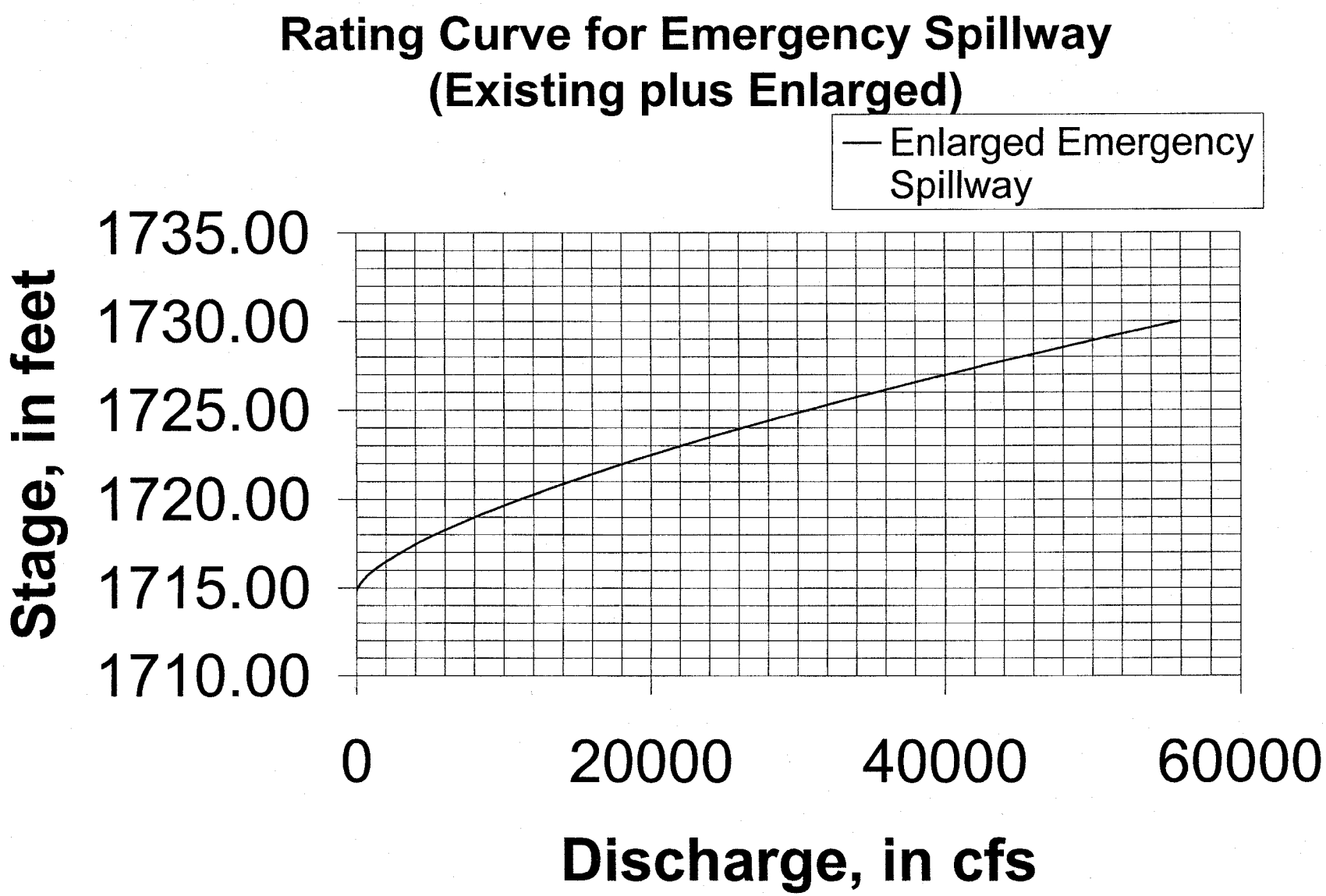
Rating Curve for Emergency Spillway
(Existing plus Enlarged)
Enlarged Emergency Spillway
Stage, in feet
1735.00
1730.00
1725.00
1720.00
1715.00
1710.00
0
20000
40000
60000
Discharge, in cfs

Alternative F
Auxiliary 8'x4' RCB

Elev. (ft)	50% Clogg 8'x4' RCB with trash rack headloss at the inlet Q (cfs)
1694.60	0
1696.00	46
1698.00	120
1700.00	228
1702.00	320
1704.00	397
1706.00	462
1708.00	517
1710.00	566
1712.00	609
1714.00	648
1714.50	658
1714.86	664
1715.00	667
1716.00	686
1717.50	713
1719.00	737
1720.50	762
1721.50	779
1722.00	787
1722.50	795
1723.00	802
1723.50	810
1724.00	818
1724.50	825
1725.00	833
1725.50	840
1726.00	847
1726.50	854
1727.00	861
1727.50	868
1728.00	875
1728.50	882
1729.00	889
1729.50	896
1730.00	903

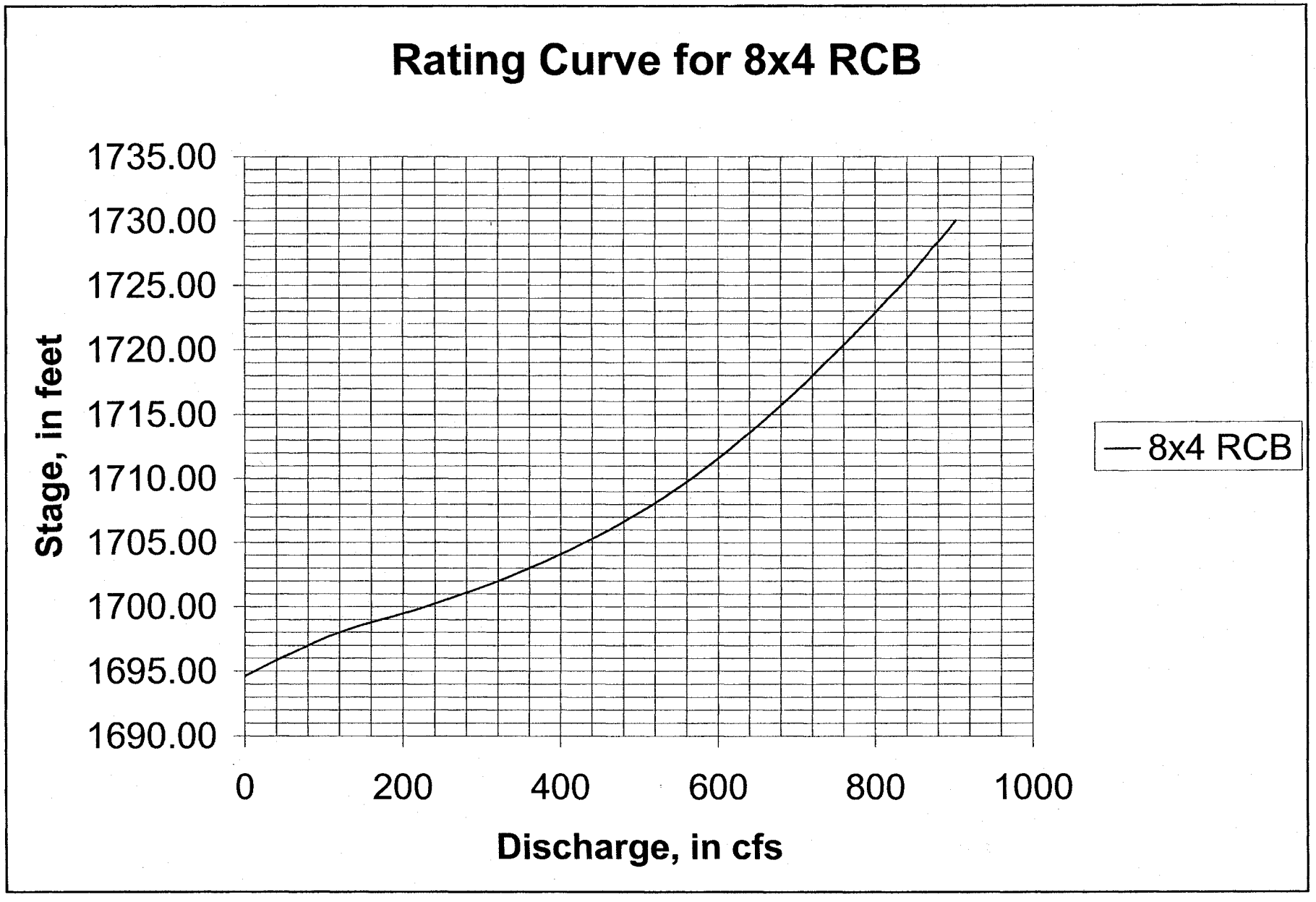
Rating Curve for 8x4 RCB
1735.00
1730.00
1725.00
1720.00
1715.00
1710.00
1705.00
1700.00
1695.00
1690.00
Stage, in feet
0
200
400
600
800
1000
Discharge, in cfs
8x4 RCB

Alternative F
Principal 2-60" RCP

Elev. (ft)	50% Clogg 2-60" RCP with trash rack headloss at the inlet Q (cfs)
1694.60	0
1696.00	32
1698.00	96
1700.00	215
1702.00	313
1704.00	388
1706.00	446
1708.00	500
1710.00	548
1712.00	590
1714.00	631
1714.50	642
1714.86	650
1715.00	653
1716.00	671
1717.50	698
1719.00	721
1720.50	743
1721.50	756
1722.00	763
1722.50	770
1723.00	776
1723.50	782
1724.00	788
1724.50	794
1725.00	799
1725.50	804
1726.00	810
1726.50	815
1727.00	821
1727.50	830
1728.00	841
1728.50	846
1729.00	848
1729.50	851
1730.00	853

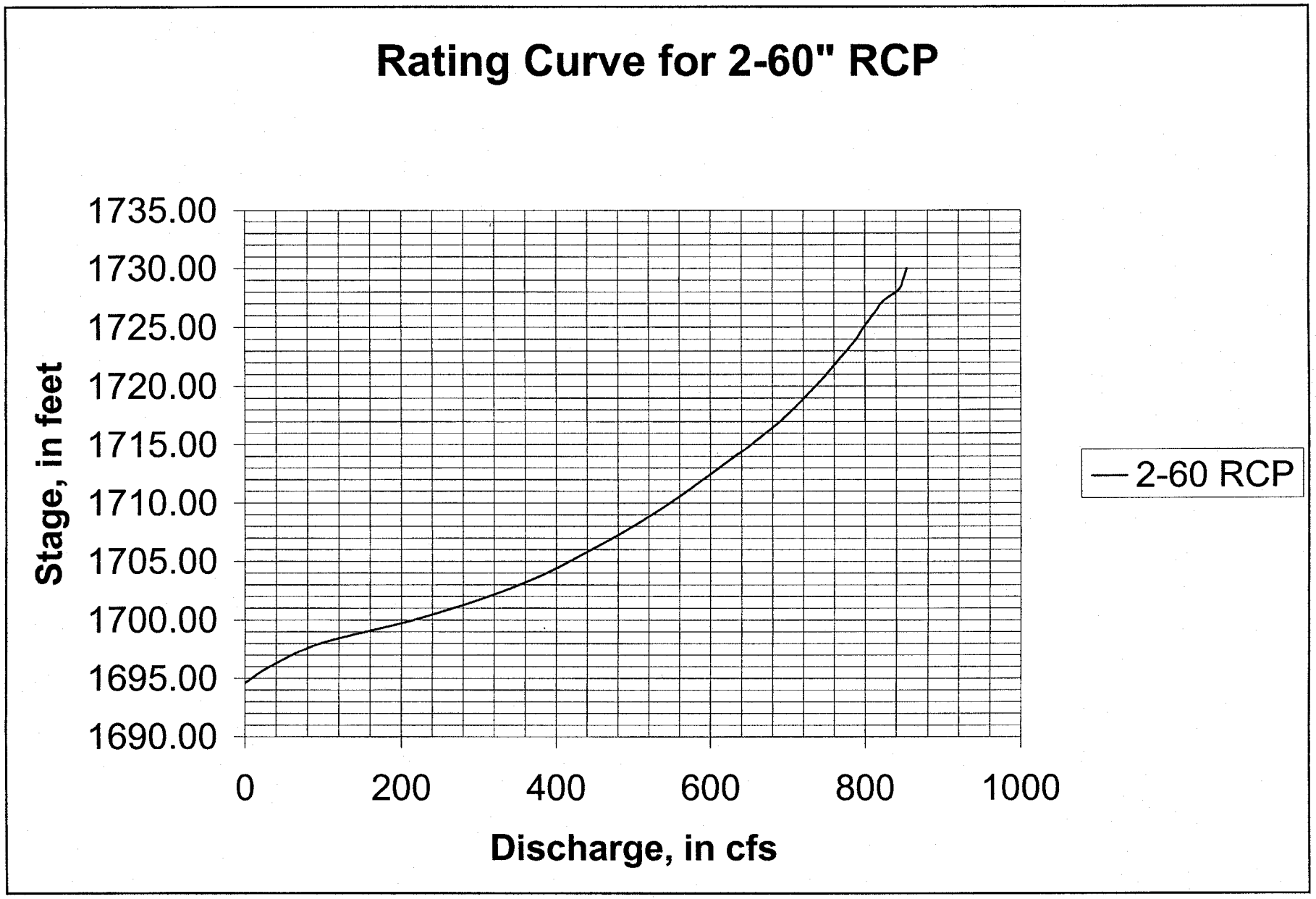
Rating Curve for 2-60" RCP
Stage, in feet
1735.00
1730.00
1725.00
1720.00
1715.00
1710.00
1705.00
1700.00
1695.00
1690.00
0
200
400
600
800
1000
Discharge, in cfs
2-60 RCP

Alternative F
Total Discharge Through all Spillways

Elev. (ft)	50% clogg 1727 Total Discharge Through Spillways and Over Top of Prop. Dam Q (cfs)
1694.60	0
1696.00	78
1698.00	216
1700.00	443
1702.00	633
1704.00	785
1706.00	907
1708.00	1017
1710.00	1113
1712.00	1199
1714.00	1279
1714.50	1300
1714.86	1314
1715.00	1370
1716.00	2514
1717.50	5488
1719.00	9464
1720.50	14236
1721.50	17797
1722.00	19683
1722.50	21634
1723.00	23650
1723.50	25729
1724.00	27868
1724.50	30065
1725.00	32319
1725.50	34630
1726.00	36994
1726.50	39413
1727.00	42444
1727.50	45996
1728.00	49902
1728.50	54097
1729.00	58548
1729.50	63235
1730.00	68141

PRINCIPAL & AUXILIARY OUTLET TW CURVE CALCULATIONS

Existing Pipe diameter:	60	inches
Proposed box height:	4	feet
Channel Invert at Outlet:	1693.24	feet
Top of **PIPE** at outlet:	1698.24	feet
Channel Invert at Outlet:	1693.95	feet
Top of **BOX** at outlet:	1697.95	feet

Stage Elev	FlowMaster Tw Stage at outlet Elev	[3]total discharge through principal outlet cfs	discharge through 8'x4' RCB cfs	comment	discharge through 2-60" RCP cfs	comment
1694.60	1690.00	0	0	free outfall	0	free outfall
1696.00	1691.91	80	48	free outfall	32	free outfall
1698.00	1692.60	223	127	free outfall	96	free outfall
1700.00	1693.34	460	244	free outfall	216	free outfall
1702.00	1693.84	660	346	free outfall	314	free outfall
1704.00	1694.17	818	429	free outfall	389	free outfall
1706.00	1694.42	944	497	free outfall	447	free outfall
1708.00	1694.63	1056	555	free outfall	501	free outfall
1710.00	1694.80	1153	604	free outfall	549	free outfall
1712.00	1694.95	1241	649	free outfall	592	free outfall
1714.00	1695.08	1325	692	free outfall	633	free outfall
1714.50	1695.11	1346	702	free outfall	644	free outfall
1714.86	1695.13	1361	709	free outfall	652	free outfall
1715.00	1695.22	1366	712	free outfall	654	free outfall
1716.00	1696.70	1403	730	free outfall	673	free outfall
1717.50	1699.47	1459	759	submerged outlet	700	submerged outlet
1719	1702.61	1510	787	submerged outlet	723	submerged outlet
1720.5	1703.36	1558	813	submerged outlet	745	submerged outlet
1721.5	1703.85	1589	831	submerged outlet	758	submerged outlet
1722.5	1704.33	1618	847	submerged outlet	771	submerged outlet
1723.5	1704.81	1647	863	submerged outlet	784	submerged outlet
1724.5	1705.29	1674	879	submerged outlet	795	submerged outlet
1725	1705.53	1687	887	submerged outlet	800	submerged outlet
1726	1706.00	1713	902	submerged outlet	811	submerged outlet
1727	1706.46	1739	917	submerged outlet	822	submerged outlet
1728	1706.93	1764	920	submerged outlet	844	submerged outlet
1730	1707.84	1813	959	submerged outlet	854	submerged outlet

1. The "orange" numbers are in the "inlet" control stage
2. The TW curve was generated by a cross section just downstream of the principal outlet. The invert at this cross section is below the outfall of the principal spillway.
3. Before the application of trash rack headlosses at the inlet.

Stage Elev	$Q_{e\text{-}existing}$ (cfs)	Existing Rating Curves $Q_{enlarged}$ (cfs)	[1]$Q_{e\text{-}total}$ (cfs)	[2]Q_{prnc} (cfs)	Q_e+Q_{prnc} Qt (cfs)	FlowMaster Tw (cfs)	Input the Tailwater from col. "G" which was obtained using the **TOTAL** outflow from GEPD at the stage in Col. "A" HY-8 (ft)	Looking at HY-8 output, interpolate the Q that corresponds with the stage shown in colum "A" $Q_{HY\text{-}8\text{-}interpolated}$ (cfs)	This is the difference between the assumed inlet control discharge, col. "E" and the outlet control discharge, col "I" Δ Q_{prnc} (cfs)	Enter into FlowMaster New Q_{total} (cfs)	FlowMaster Tw (cfs)	HY-8 (ft)	$Q_{HY\text{-}8\text{-}interpolated}$ (cfs)
1719	5378	2628	8006	1515	9521	1702.61	1702.61	1510	-5	9516	0	1510	
1720.5	8551	4179	12730	1564	14294	1703.36	1703.36	1558	-6	14288	0	1558	
1721.5	10923	5338	16261	1597	17858	1703.85	1703.85	1589	-8	17850	0	1589	
1722.5	13481	6589	20070	1630	21700	1704.33	1704.33	1618	-12	21688	0	1618	
1723.5	16213	7924	24137	1662	25799	1704.81	1704.81	1647	-15	25784	0	1647	
1724.5	19108	9338	28446	1694	30140	1705.29	1705.29	1674	-20	30120	0	1674	
1725	20613	10074	30687	1709	32396	1705.53	1705.53	1687	-22	32374		1687	
1726	23737	11601	35338	1737	37075	1706	1706	1713	-24	37051		1713	
1727	27004	13197	40201	1766	41967	1706.46	1706.46	1739	-27	41940		1739	
1728	30408	14861	45269	1794	47063	1706.93	1706.93	1764	-30	47033		1764	
1730	37608	18380	55988	1850	57838	1707.84	1707.84	1813	-37	57801		1813	

1) This is the outflow from the emergency spillway at the desired stage in colum "A" - see rating curve on the workbook tab "Prop. Em. Splway - Total".
2) Assumed inlet control - add the flows from "Exist. Prnc. Splwy." and "Auxiliary PROP 8'x4' RCB" at the desired stage to calc. this value

TAILWATER CALCULATIONS

Existing Pipe diameter:	60	inches
Proposed box height:	4	feet
Channel Invert at Outlet:	1693.24	feet
Top of **PIPE** at outlet:	1698.24	feet
Channel Invert at Outlet:	1693.95	feet
Top of **BOX** at outlet:	1697.95	feet

Stage Elev	FlowMaster Tw Stage at outlet Elev	[3]total discharge through principal outlet cfs	discharge through 8'x4' RCB cfs	comment	discharge through 2-60" RCP cfs	comment
1694.60	1690.00	0	0	free outfall	0	free outfall
1696.00	1691.91	80	48	free outfall	32	free outfall
1698.00	1692.60	223	127	free outfall	96	free outfall
1700.00	1693.34	460	244	free outfall	216	free outfall
1702.00	1693.84	660	346	free outfall	314	free outfall
1704.00	1694.17	818	429	free outfall	389	free outfall
1706.00	1694.42	944	497	free outfall	447	free outfall
1708.00	1694.63	1056	555	free outfall	501	free outfall
1710.00	1694.80	1153	604	free outfall	549	free outfall
1712.00	1694.95	1241	649	free outfall	592	free outfall
1714.00	1695.08	1325	692	free outfall	633	free outfall
1714.50	1695.11	1346	702	free outfall	644	free outfall
1714.86	1695.13	1361	709	free outfall	652	free outfall
1715.00	1695.22	1366	712	free outfall	654	free outfall
1716.00	1696.70	1403	730	free outfall	673	free outfall
1717.50	1699.47	1459	759	submerged outlet	700	submerged outlet
1719	1702.61	1510	787	submerged outlet	723	submerged outlet
1720.5	1703.36	1558	813	submerged outlet	745	submerged outlet
1721.5	1703.85	1589	831	submerged outlet	758	submerged outlet
1722.5	1704.33	1618	847	submerged outlet	771	submerged outlet
1723.5	1704.81	1647	863	submerged outlet	784	submerged outlet
1724.5	1705.29	1674	879	submerged outlet	795	submerged outlet
1725	1705.53	1687	887	submerged outlet	800	submerged outlet

1726	1706.00	1713	902	submerged outlet	811	submerged outlet
1727	1706.46	1739	917	submerged outlet	822	submerged outlet
1728	1706.93	1764	920	submerged outlet	844	submerged outlet
1730	1707.84	1813	959	submerged outlet	854	submerged outlet

1. The "orange" numbers are in the "inlet" control stage
2. The TW curve was generated by a cross section just downstream of the principal outlet. The invert at this cross section is below the outfall of the principal spillway.
3. Before the application of trash rack headlosses at the inlet.

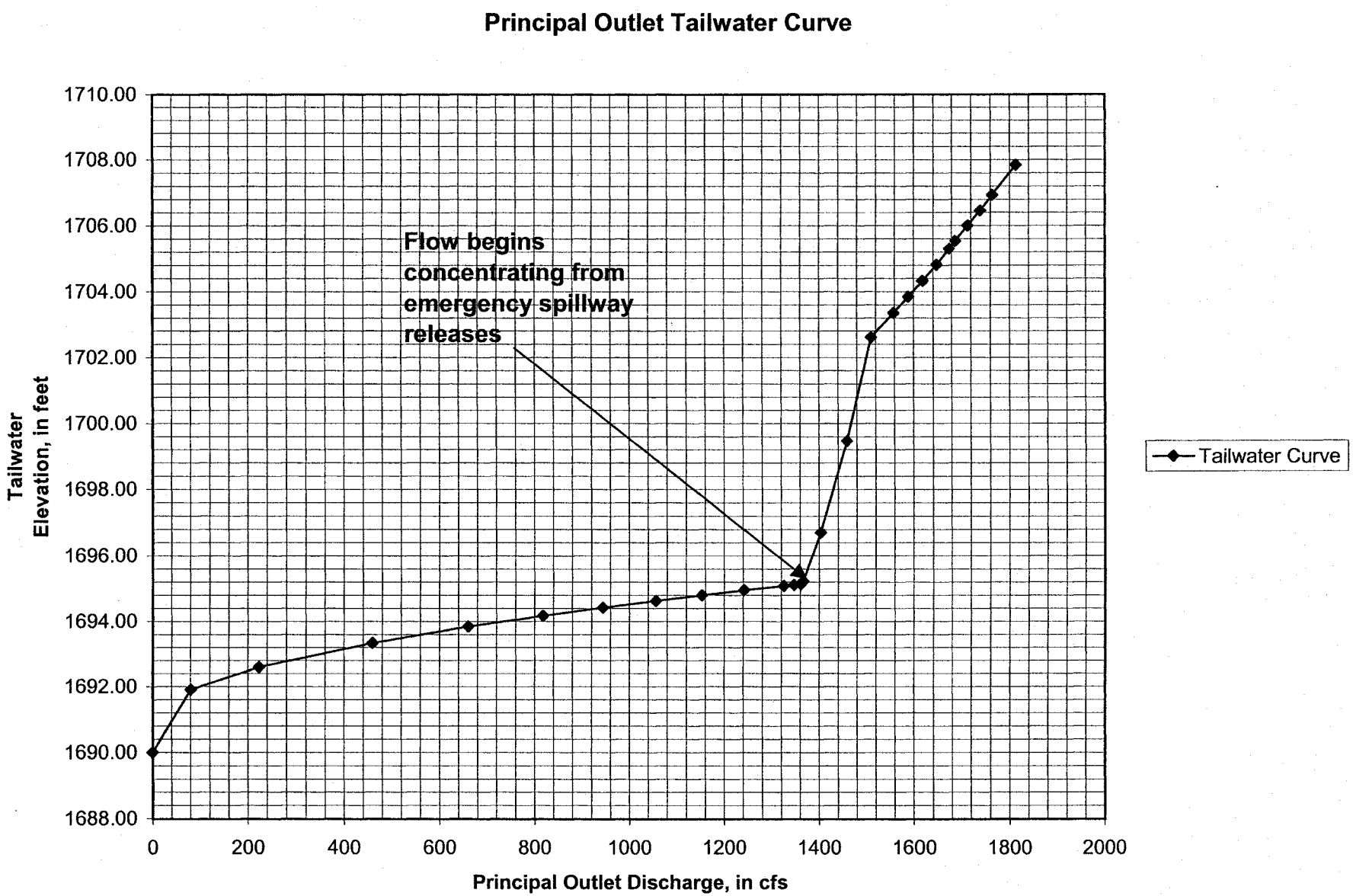
Principal Outlet Tailwater Curve
Flow begins concentrating from emergency spillway releases
Tailwater Elevation, in feet
1710.00
1708.00
1706.00
1704.00
1702.00
1700.00
1698.00
1696.00
1694.00
1692.00
1690.00
1688.00
0
200
400
600
800
1000
1200
1400
1600
1800
2000
Principal Outlet Discharge, in cfs
Tailwater Curve

Alternative F
Principal and Auxiliary Outlets

	HY-8 Output ***PROPOSED*** PRINCIPAL OUTLET RATING CURVE WITH INLET CONTROL FOR 8'X4' RCB AND EXISTING 60" RCP'S	
Elev.	Q	
(ft)	(cfs)	**Comments**
1694.6	0	*Inlet Control
1697.55	169.4	*Inlet Control
1698.98	338.8	*Inlet Control
1700.41	508.2	*Inlet Control
1702.18	677.6	*Inlet Control
1704.17	831	*Inlet Control
1707.17	1016.4	*Inlet Control
1710.68	1185.8	*Inlet Control
1714.71	1355.2	*Inlet Control
1718	1478	* This is outlet control and was obtained through an iterative Procedure using HY-8 and constant tailwater at given stages
1719	1510	* This is outlet control and was obtained through an iterative Procedure using HY-8 and constant tailwater at given stages
1720.5	1558	* This is outlet control and was obtained through an iterative Procedure using HY-8 and constant tailwater at given stages
1721.5	1589	* This is outlet control and was obtained through an iterative Procedure using HY-8 and constant tailwater at given stages
1722.5	1618	* This is outlet control and was obtained through an iterative Procedure using HY-8 and constant tailwater at given stages
1723.5	1647	* This is outlet control and was obtained through an iterative Procedure using HY-8 and constant tailwater at given stages
1724.5	1674	* This is outlet control and was obtained through an iterative Procedure using HY-8 and constant tailwater at given stages
1725	1687	* This is outlet control and was obtained through an iterative Procedure using HY-8 and constant tailwater at given stages
1726	1713	* This is outlet control and was obtained through an iterative Procedure using HY-8 and constant tailwater at given stages
1727	1739	* This is outlet control and was obtained through an iterative Procedure using HY-8 and constant tailwater at given stages
1728	1764	* This is outlet control and was obtained through an iterative Procedure using HY-8 and constant tailwater at given stages
1730	1813	* This is outlet control and was obtained through an iterative Procedure using HY-8 and constant tailwater at given stages

CURRENT DATE: 09-11-1999
CURRENT TIME: 14:26:53

FILE DATE: 08-26-1999
FILE NAME: PRC_IN

FHWA CULVERT ANALYSIS
HY-8, VERSION 6.1

INLET CONTROL ASSUMED

CULV NO.	SITE DATA			CULVERT SHAPE, MATERIAL, INLET				
	INLET ELEV. (ft)	OUTLET ELEV. (ft)	CULVERT LENGTH (ft)	BARRELS SHAPE MATERIAL	SPAN (ft)	RISE (ft)	MANNING n	INLET TYPE
1	1694.60	1693.24	105.01	1 RCP	5.00	5.00	.013	CONVENTIONAL
2	1696.56	1695.10	105.01	1 IRCP	4.91	3.00	.013	CONVENTIONAL
3	1695.00	1693.95	105.01	1 RCB	8.00	4.00	.013	CONVENTIONAL
4								
5								
6								

SUMMARY OF CULVERT FLOWS (cfs) FILE: PRC_IN DATE: 08-26-1999

ELEV (ft)	TOTAL	1	2	3	4	5	6	ROADWAY	ITR
1694.60	0.0	0.0	0.0	0.0	0.0	0.0	0.0	0.00	0
1697.55	169.4	55.2	13.3	100.2	0.0	0.0	0.0	0.00	4
1698.98	338.8	104.6	49.6	184.6	0.0	0.0	0.0	0.00	3
1700.41	508.2	155.0	85.7	267.6	0.0	0.0	0.0	0.00	4
1702.18	677.6	203.8	119.0	355.5	0.0	0.0	0.0	0.00	3
1704.17	831.0	247.2	147.7	436.2	0.0	0.0	0.0	0.00	3
1707.17	1016.4	299.9	181.5	535.1	0.0	0.0	0.0	0.00	4
1710.68	1185.8	351.7	213.6	620.7	0.0	0.0	0.0	0.00	5
1714.71	1355.2	403.7	245.4	706.1	0.0	0.0	0.0	0.00	6
1719.29	1524.6	455.3	277.1	792.3	0.0	0.0	0.0	0.00	6
1724.49	1694.0	504.9	309.2	880.0	0.0	0.0	0.0	0.00	7
1735.00	1979.4	579.3	365.5	1034.5	0.0	0.0	0.0	OVERTOPPING	

SUMMARY OF ITERATIVE SOLUTION ERRORS FILE: PRC_IN DATE: 08-26-1999

HEAD ELEV (ft)	HEAD ERROR (ft)	TOTAL FLOW (cfs)	FLOW ERROR (cfs)	% FLOW ERROR
1694.60	0.000	0.00	0.00	0.00
1697.55	-0.007	169.40	0.69	0.41
1698.98	-0.001	338.80	0.08	0.02
1700.41	0.001	508.20	-0.09	-0.02
1702.18	0.008	677.60	-0.73	-0.11
1704.17	0.000	831.00	-0.04	-0.00
1707.17	0.000	1016.40	-0.02	-0.00
1710.68	0.005	1185.80	-0.24	-0.02
1714.71	0.000	1355.20	-0.01	-0.00
1719.29	0.003	1524.60	-0.11	-0.01
1724.49	0.002	1694.00	-0.07	-0.00

<1> TOLERANCE (ft) = 0.010 <2> TOLERANCE (%) = 1.000

CURRENT DATE: 09-11-1999
CURRENT TIME: 14:26:53

FILE DATE: 08-26-1999
FILE NAME: PRC_IN

PERFORMANCE CURVE FOR CULVERT 1 - 1(5.00 (ft) BY 5.00 (ft)) RCP

DIS-CHARGE FLOW (cfs)	HEAD-WATER ELEV. (ft)	INLET CONTROL DEPTH (ft)	OUTLET CONTROL DEPTH (ft)	FLOW TYPE <F4>	NORMAL DEPTH (ft)	CRIT. DEPTH (ft)	OUTLET DEPTH (ft)	TW DEPTH (ft)	OUTLET VEL. (fps)	TW VEL. (fps)
0.00	1694.60	0.00	0.00	0-NF	0.00	0.00	0.00	-3.24	0.00	0.00
55.20	1697.55	2.95	2.95	1-S2n	1.45	2.08	1.54	-1.11	10.78	2.27
104.57	1698.99	4.39	4.39	1-S2n	2.04	2.91	2.21	-0.61	12.50	2.87
154.99	1700.42	5.82	5.82	5-S2n	2.56	3.56	2.79	-0.21	13.75	3.28
203.79	1702.17	7.57	7.57	5-S2n	3.04	4.06	3.32	0.12	14.75	3.61
247.18	1704.17	9.57	9.57	5-S2n	3.48	4.38	3.76	0.39	15.64	3.87
299.87	1707.16	12.56	12.56	5-S2n	4.17	4.77	4.29	0.69	16.77	4.12
351.68	1710.67	16.07	13.02	6-S2n	5.00	5.00	4.90	0.93	18.10	4.32
403.71	1714.71	20.11	16.00	6-S2n	5.00	5.00	4.90	1.16	20.78	4.51
455.27	1719.28	24.68	19.35	6-S2n	5.00	5.00	4.90	1.38	23.43	4.68
504.94	1724.49	29.89	22.97	6-S2n	5.00	5.00	4.90	1.58	25.99	4.83

El. inlet face invert 1694.60 ft El. outlet invert 1693.24 ft
El. inlet throat invert 0.00 ft El. inlet crest 0.00 ft

*** SITE DATA ***** CULVERT INVERT **********

INLET STATION	949.00 ft
INLET ELEVATION	1694.60 ft
OUTLET STATION	1054.00 ft
OUTLET ELEVATION	1693.24 ft
NUMBER OF BARRELS	1
SLOPE (V/H)	0.0130
CULVERT LENGTH ALONG SLOPE	105.01 ft

***** CULVERT DATA SUMMARY **********

BARREL SHAPE	CIRCULAR
BARREL DIAMETER	5.00 ft
BARREL MATERIAL	CONCRETE
BARREL MANNING'S n	0.013
INLET TYPE	CONVENTIONAL
INLET EDGE AND WALL	SQUARE EDGE WITH HEADWALL
INLET DEPRESSION	NONE

CURRENT DATE: 09-11-1999
CURRENT TIME: 14:26:53

FILE DATE: 08-26-1999
FILE NAME: PRC_IN

PERFORMANCE CURVE FOR CULVERT 2 - 1(4.91 (ft) BY 3.00 (ft)) IRCP

DIS-CHARGE FLOW (cfs)	HEAD-WATER ELEV. (ft)	INLET CONTROL DEPTH (ft)	OUTLET CONTROL DEPTH (ft)	FLOW TYPE <F4>	NORMAL DEPTH (ft)	CRIT. DEPTH (ft)	OUTLET DEPTH (ft)	TW DEPTH (ft)	OUTLET VEL. (fps)	TW VEL. (fps)
0.00	1696.56	0.00	0.00	0-NF	0.00	0.00	0.00	-5.10	0.00	0.00
13.29	1697.55	0.99	0.99	1-S2n	0.39	0.61	0.31	-2.97	9.17	2.27
49.56	1698.98	2.42	2.42	1-S2n	0.95	1.45	0.99	-2.47	10.21	2.87
85.67	1700.41	3.85	3.85	5-S2n	1.41	2.05	1.48	-2.07	11.94	3.28
119.02	1702.17	5.61	5.61	5-S2n	1.85	2.45	1.95	-1.74	13.00	3.61
147.67	1704.17	7.61	7.61	5-S2n	2.32	2.70	2.38	-1.47	13.75	3.87
181.47	1707.16	10.60	8.93	2-M2c	3.00	2.98	2.98	-1.17	15.07	4.12
213.63	1710.68	14.12	11.78	6-S2n	3.00	3.00	2.90	-0.93	17.91	4.32
245.37	1714.70	18.14	15.04	6-S2n	3.00	3.00	2.90	-0.70	20.57	4.51
277.11	1719.29	22.73	18.76	6-S2n	3.00	3.00	2.90	-0.48	23.24	4.68
309.19	1724.49	27.93	22.98	6-S2n	3.00	3.00	2.90	-0.28	25.93	4.83

El. inlet face invert 1696.56 ft El. outlet invert 1695.10 ft
El. inlet throat invert 0.00 ft El. inlet crest 0.00 ft

*** SITE DATA ***** CULVERT INVERT **********

INLET STATION	949.00 ft
INLET ELEVATION	1696.56 ft
OUTLET STATION	1054.00 ft
OUTLET ELEVATION	1695.10 ft
NUMBER OF BARRELS	1
SLOPE (V/H)	0.0139
CULVERT LENGTH ALONG SLOPE	105.01 ft

***** CULVERT DATA SUMMARY **********

BARREL SHAPE	USER DEFINED
BARREL SPAN	4.91 ft
BARREL RISE	3.00 ft
BARREL MATERIAL	CONCRETE
BARREL MANNING'S n	0.013 FOR SIDES AND TOP
	0.015 FOR BOTTOM
INLET TYPE	CONVENTIONAL
INLET EDGE AND WALL	HEADWALL
INLET DEPRESSION	NONE

RRENT DATE: 09-11-1999
RRENT TIME: 14:26:53

FILE DATE: 08-26-1999
FILE NAME: PRC_IN

***** USER DEFINED CULVERT CROSS-SECTION - CULVERT # 2

COORDINATE NUMBER	X (ft)	Y-TOP (ft)	Y-BOTTOM (ft)
1	0.00	0.96	0.04
2	0.10	1.33	0.00
3	0.60	2.17	0.00
4	1.10	2.60	0.00
5	1.60	2.85	0.00
6	2.46	3.00	0.00
7	3.31	2.85	0.00
8	3.81	2.60	0.00
9	4.31	2.17	0.00
10	4.81	1.33	0.00
11	4.91	0.96	0.40

CURRENT DATE: 09-11-1999 FILE DATE: 08-26-1999
CURRENT TIME: 14:26:53 FILE NAME: PRC_IN

PERFORMANCE CURVE FOR CULVERT 3 - 1(8.00 (ft) BY 4.00 (ft)) RCB

DIS-CHARGE FLOW (cfs)	HEAD-WATER ELEV. (ft)	INLET CONTROL DEPTH (ft)	OUTLET CONTROL DEPTH (ft)	FLOW TYPE <F4>	NORMAL DEPTH (ft)	CRIT. DEPTH (ft)	OUTLET DEPTH (ft)	TW DEPTH (ft)	OUTLET VEL. (fps)	TW VEL. (fps)
0.00	1695.00	0.00	0.00	0-NF	0.00	0.00	0.00	-3.95	0.00	0.00
100.22	1697.55	2.55	2.55	1-S2n	1.17	1.70	1.23	-1.82	10.21	2.27
184.58	1698.98	3.98	3.98	1-S2n	1.76	2.55	1.90	-1.32	12.12	2.87
267.63	1700.40	5.40	5.40	5-S2n	2.28	3.27	2.51	-0.92	13.33	3.28
355.52	1702.18	7.18	7.18	5-S2n	2.79	3.95	3.10	-0.59	14.33	3.61
436.19	1704.17	9.17	7.42	6-S2n	3.23	4.00	3.57	-0.32	15.27	3.87
535.08	1707.16	12.16	9.68	6-S2n	4.00	4.00	3.90	-0.02	17.15	4.12
620.73	1710.68	15.68	12.01	6-S2n	4.00	4.00	3.90	0.22	19.90	4.32
706.13	1714.70	19.70	14.67	6-S2n	4.00	4.00	3.90	0.45	22.63	4.51
792.33	1719.29	24.29	17.71	6-S2n	4.00	4.00	3.90	0.67	25.40	4.68
879.95	1724.49	29.49	21.16	6-S2n	4.00	4.00	3.90	0.87	28.20	4.83

El. inlet face invert 1695.00 ft El. outlet invert 1693.95 ft
El. inlet throat invert 0.00 ft El. inlet crest 0.00 ft

** SITE DATA ***** CULVERT INVERT **********

INLET STATION	0.00 ft
INLET ELEVATION	1695.00 ft
OUTLET STATION	105.00 ft
OUTLET ELEVATION	1693.95 ft
NUMBER OF BARRELS	1
SLOPE (V/H)	0.0100
CULVERT LENGTH ALONG SLOPE	105.01 ft

***** CULVERT DATA SUMMARY **********

BARREL SHAPE	BOX
BARREL SPAN	8.00 ft
BARREL RISE	4.00 ft
BARREL MATERIAL	CONCRETE
BARREL MANNING'S n	0.013
INLET TYPE	CONVENTIONAL
INLET EDGE AND WALL	1:1 BEVEL (45 DEG. FLARE)
INLET DEPRESSION	NONE

CURRENT DATE: 09-11-1999
CURRENT TIME: 14:26:53

FILE DATE: 08-26-1999
FILE NAME: PRC_IN

TAILWATER

***** USER DEFINED CHANNEL CROSS-SECTION

FILE NAME: TAIL2
FILE DATE: 07-08-1999

MAIN CHANNEL ONLY	
LEFT CHANNEL BOUNDARY	0
RIGHT CHANNEL BOUNDARY	0
MANNING n LEFT OVER BANK	0.000
MANNING n MAIN CHANNEL	0.031
MANNING n RIGHT OVER BANK	0.000
SLOPE OF CHANNEL	0.0025 ft/ft

CROSS-SECTION COORD. NO.	X (ft)	Y (ft)
1	0.00	1715.00
2	33.00	1700.00
3	49.00	1695.00
4	89.00	1690.00
5	92.00	1690.00
6	96.00	1691.00
7	114.00	1691.00
8	152.00	1692.00
9	161.00	1693.00
10	180.00	1696.00
11	202.00	1700.00
12	326.00	1702.00
13	795.00	1702.00
14	914.00	1716.00

******* UNIFORM FLOW RATING CURVE FOR DOWNSTREAM CHANNEL

FLOW (cfs)	W.S.E. (ft)	FROUDE NUMBER	DEPTH (ft)	VEL. (f/s)	SHEAR (psf)
0.00	1690.00	0.000	-3.24	0.00	0.00
169.40	1692.13	0.416	-1.11	2.27	0.14
338.80	1692.63	0.441	-0.61	2.87	0.20
508.20	1693.03	0.456	-0.21	3.28	0.25
677.60	1693.36	0.467	0.12	3.61	0.29
831.00	1693.63	0.475	0.39	3.87	0.32
1016.40	1693.93	0.483	0.69	4.12	0.35
1185.80	1694.17	0.488	0.93	4.32	0.38
1355.20	1694.40	0.493	1.16	4.51	0.40
1524.60	1694.62	0.498	1.38	4.68	0.43
1694.00	1694.82	0.502	1.58	4.83	0.45

Note: Shear stress was calculated using R.

ROADWAY OVERTOPPING DATA

ROADWAY SURFACE	GRAVEL
EMBANKMENT TOP WIDTH	16.00 ft
CREST LENGTH	700.00 ft

OVERTOPPING CREST ELEVATION 1735.00 ft

APPENDIX E

HYDRAULIC ANALYSES OF TRASHRACKS FOR PRINCIPAL & AUXILIARY SPILLWAYS

Stantec

Project: TRASHRACK AREA CALC'S Project Number:

Notes: *THESE CALC'S SHOW "CONCEPT" & METHOD ONLY, THESE ARE NOT THE ACTUAL #'S, SEE SPREADSHEET FOR #'S Scale:

Page 1 of ___ Page(s)

Computed By: ___ Date: ___ Checked By: ___ Date: 8 6 99

I.) 8'x4' RCB

A.) INLET SIDE

B.) USE APWA DETAIL NO. 360-0

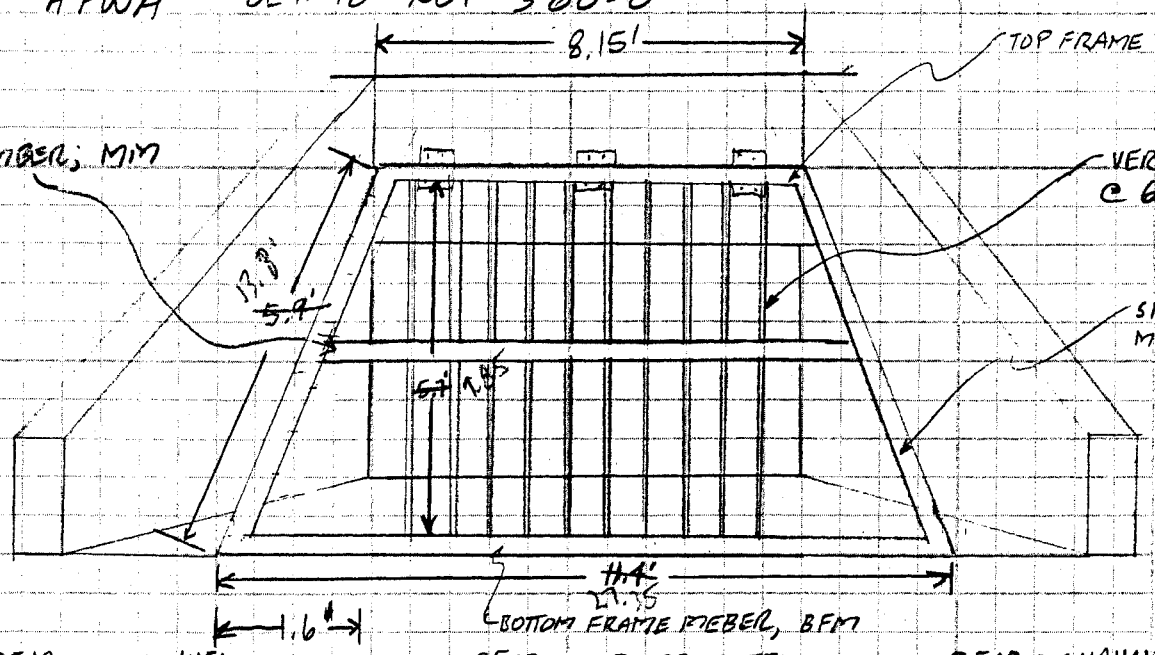

1.) TFM = CHANNEL BFM = TUBULAR STEEL SFM = CHANNEL

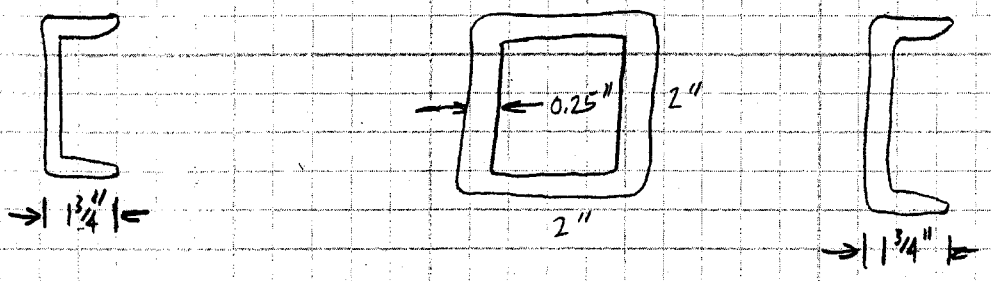

MM = ANGLE VB = VERTICAL BARS

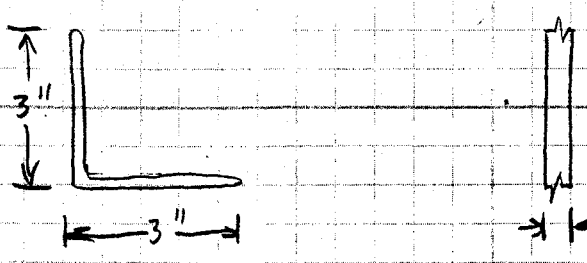

Stantec

Project: TRASH RACK CALC'S 2-60" Project Number:

Notes: Scale:

Page of Page(s)

Computed By: RJS Date: Checked By: Date: 8 9 99

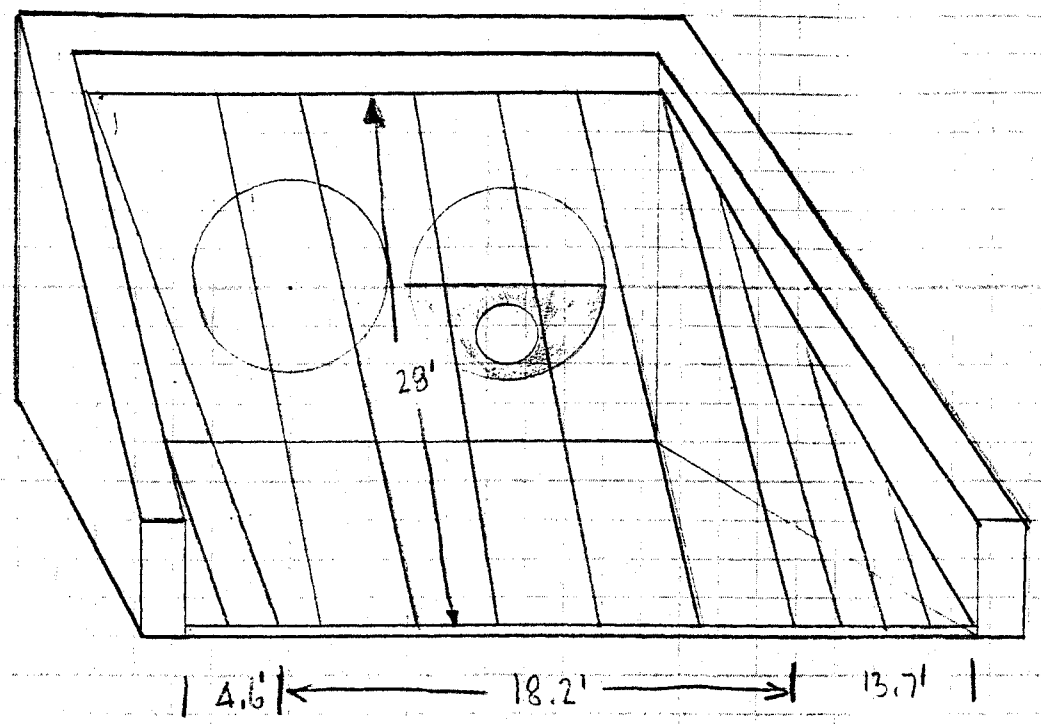

Golden Eagle Park Dam trashrack headloss for unclogged and 50% clogged

Calculated Bar Area, A_b = 30.00 sf

Top of Box = 1697.95'
1- 8' x 4' BOX

without trash rack Discharge cfs	a_g Gross[b] sq. feet	Trashrack Area[a] Unclogged a_n Net[c] sq. feet	clogged $a_{n50\%}$ Net[c] sq. feet	$k_t = 1.45-[0.45(a_n/a_g)]-(a_n/a_g)^2$ K [1]Headloss Coefficient Unclogged	K [1]Headloss Coefficient clogged	Q/a_n Unclogged Velocity Through Bars[d] fps	Unclogged Headloss[e] feet	$Q/a_{g50\%}$ Clogged Velocity Through Bars[d] fps	50% Clogged Headloss[e] feet	old Stage feet	New Stage (Unclog)	Q	New Q (unclogged)	old Stage feet	New Stage (Clog)	Q	New Q (Clogged)
0	149.23	119.22	59.61	0.452	1.111	0	0	0	0	1694.60	1694.60	0	0	1694.60	1694.60	0	0
48	149.23	119.22	59.61	0.452	1.111	0.40	0.01	0.81	0.07	1696.00	1696.01	48	48	1696.00	1696.07	48	46
127	149.23	119.22	59.61	0.452	1.111	1.07	0.02	2.13	0.18	1698.00	1698.02	127	126	1698.00	1698.18	127	120
244	149.23	119.22	59.61	0.452	1.111	2.05	0.03	4.09	0.29	1700.00	1700.03	244	242	1700.00	1700.29	244	228
346	149.23	119.22	59.61	0.452	1.111	2.90	0.06	5.80	0.58	1702.00	1702.06	346	343	1702.00	1702.58	346	320
429	149.23	119.22	59.61	0.452	1.111	3.60	0.09	7.20	0.89	1704.00	1704.09	429	425	1704.00	1704.89	429	397
497	149.23	119.22	59.61	0.452	1.111	4.17	0.12	8.34	1.20	1706.00	1706.12	497	493	1706.00	1707.20	497	462
555	149.23	119.22	59.61	0.452	1.111	4.66	0.15	9.31	1.50	1708.00	1708.15	555	551	1708.00	1709.50	555	517
604	149.23	119.22	59.61	0.452	1.111	5.07	0.18	10.13	1.77	1710.00	1710.18	604	600	1710.00	1711.77	604	566
649	149.23	119.22	59.61	0.452	1.111	5.44	0.21	10.89	2.05	1712.00	1712.21	649	644	1712.00	1714.05	649	609
692	149.23	119.22	59.61	0.452	1.111	5.80	0.24	11.61	2.33	1714.00	1714.24	692	687	1714.00	1716.33	692	648
702	149.23	119.22	59.61	0.452	1.111	5.89	0.24	11.78	2.39	1714.50	1714.74	702	697	1714.50	1716.89	702	658
709	149.23	119.22	59.61	0.452	1.111	5.95	0.25	11.89	2.44	1714.86	1715.11	709	704	1714.86	1717.30	709	664
712	149.23	119.22	59.61	0.452	1.111	5.97	0.25	11.94	2.46	1715.00	1715.25	712	707	1715.00	1717.46	712	667
730	149.23	119.22	59.61	0.452	1.111	6.12	0.26	12.25	2.59	1716.00	1716.26	730	725	1716.00	1718.59	730	686
759	149.23	119.22	59.61	0.452	1.111	6.37	0.28	12.73	2.80	1717.50	1717.78	759	754	1717.50	1720.30	759	713
787	149.23	119.22	59.61	0.452	1.111	6.60	0.31	13.20	3.01	1719.00	1719.31	787	781	1719.00	1722.01	787	737
813	149.23	119.22	59.61	0.452	1.111	6.82	0.33	13.64	3.21	1720.50	1720.83	813	807	1720.50	1723.71	813	762
831	149.23	119.22	59.61	0.452	1.111	6.97	0.34	13.94	3.35	1721.50	1721.84	831	825	1721.50	1724.85	831	779
839	149.23	119.22	59.61	0.452	1.111	7.04	0.35	14.07	3.42	1722.00	1722.35	839	834	1722.00	1725.42	839	787
847	149.23	119.22	59.61	0.452	1.111	7.10	0.35	14.21	3.48	1722.50	1722.85	847	841	1722.50	1725.98	847	795
855	149.23	119.22	59.61	0.452	1.111	7.17	0.36	14.34	3.55	1723.00	1723.36	855	849	1723.00	1726.55	855	802
863	149.23	119.22	59.61	0.452	1.111	7.24	0.37	14.48	3.62	1723.50	1723.87	863	857	1723.50	1727.12	863	810
871	149.23	119.22	59.61	0.452	1.111	7.31	0.38	14.61	3.68	1724.00	1724.38	871	865	1724.00	1727.68	871	818
879	149.23	119.22	59.61	0.452	1.111	7.37	0.38	14.75	3.75	1724.50	1724.88	879	873	1724.50	1728.25	879	825
887	149.23	119.22	59.61	0.452	1.111	7.44	0.39	14.88	3.82	1725.00	1725.39	887	881	1725.00	1728.82	887	833
895	149.23	119.22	59.61	0.452	1.111	7.50	0.40	15.01	3.89	1725.50	1725.90	895	889	1725.50	1729.39	895	840
902	149.23	119.22	59.61	0.452	1.111	7.57	0.40	15.13	3.95	1726.00	1726.40	902	896	1726.00	1729.95	902	847
910	149.23	119.22	59.61	0.452	1.111	7.63	0.41	15.26	4.02	1726.50	1726.91	910	903	1726.50	1730.52	910	854
917	149.23	119.22	59.61	0.452	1.111	7.69	0.42	15.38	4.08	1727.00	1727.42	917	911	1727.00	1731.08	917	861
919	149.23	119.22	59.61	0.452	1.111	7.70	0.42	15.41	4.10	1727.50	1727.92	919	917	1727.50	1731.60	919	868
920	149.23	119.22	59.61	0.452	1.111	7.72	0.42	15.43	4.11	1728.00	1728.42	920	919	1728.00	1732.11	920	875
930	149.23	119.22	59.61	0.452	1.111	7.80	0.43	15.60	4.20	1728.50	1728.93	930	922	1728.50	1732.70	930	882
940	149.23	119.22	59.61	0.452	1.111	7.88	0.44	15.76	4.29	1729.00	1729.44	940	931	1729.00	1733.29	940	889
949	149.23	119.22	59.61	0.452	1.111	7.96	0.45	15.92	4.38	1729.50	1729.95	949	941	1729.50	1733.88	949	896
959	149.23	119.22	59.61	0.452	1.111	8.04	0.45	16.09	4.47	1730.00	1730.45	959	950	1730.00	1734.47	959	903

Notes
a: Only fully submereged conditions are considered.
b: Assumes the trashrack is mounted on a "u-shaped" headwall as shown on figure.
c: Assumes 50% of gross area is clogging after the bar area is subtracted.
d: Velocity through the net area.
e: Headloss below fully submerged trashrack is linearly interpolated.

1. Computation based on USBR method

Discharge cfs	Stage feet	New Q (unclogged)	New Q (Clogged)
0	1694.60	0.00	0.0
48	1696.00	47.74	45.6
127	1698.00	126.27	120.2
244	1700.00	242.29	227.9
346	1702.00	343.03	320.1
429	1704.00	425.28	396.9
497	1706.00	492.91	461.6
555	1708.00	550.65	517.2
604	1710.00	599.64	565.8
649	1712.00	644.38	608.5
692	1714.00	686.98	648.1
702	1714.50	697.19	657.6
709	1714.86	704.23	664.4
712	1715.00	706.92	667.0
730	1716.00	725.32	685.9
759	1717.50	753.57	712.6
787	1719.00	781.36	737.0
813	1720.50	807.41	762.3
831	1721.50	824.94	778.7
839	1722.00	833.50	786.9
847	1722.50	841.40	794.5
855	1723.00	849.29	802.1
863	1723.50	857.19	809.8
871	1724.00	865.08	817.6
879	1724.50	872.97	825.4
887	1725.00	880.86	833.1
895	1725.50	888.64	840.1
902	1726.00	896.05	847.2
910	1726.50	903.45	854.3
917	1727.00	910.85	861.3
919	1727.50	917.25	868.4
920	1728.00	918.75	875.4
930	1728.50	921.56	882.5
940	1729.00	931.14	889.4
949	1729.50	940.72	896.0
959	1730.00	950.29	902.6

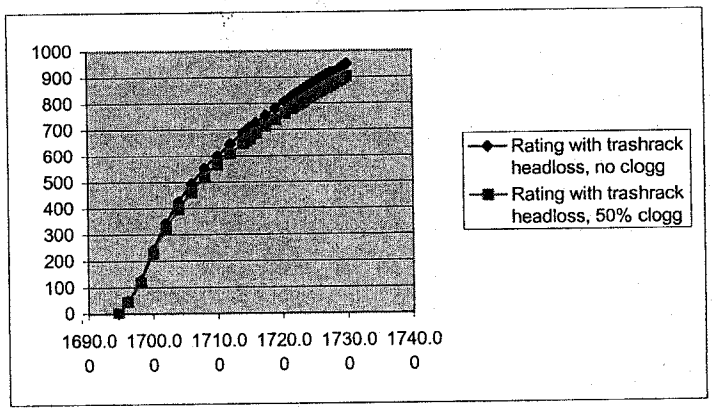

Golden Eagle Park Dam trashrack headloss for unclogged and 50% clogged

Calculated Bar Area, A_b = 93.98 sf

Top of Pipe = 1698.37'
2-60" RCP

without trash rack Discharge cfs	a_g Gross[b] sq. feet	Trashrack Area[a] Unclogged a_n Net[c] sq. feet	clogged $a_{n50\%}$ Net[c] sq. feet	$k_t = 1.45-[0.45(a_n/a_g)]-(a_n/a_g)^2$ K [1]Headloss Coefficient Unclogged	K [1]Headloss Coefficient clogged	Q/a_n Unclogged Velocity Through Bars[d] fps	Unclogged Headloss[e] feet	$Q/a_{g50\%}$ Clogged Velocity Through Bars[d] fps	50% Clogged Headloss[e] feet	old Stage feet	New Stage (Unclog)	Q	New Q (unclogged)	old Stage feet	New Stage (Clog)	Q	New Q (Clogged)
0	664.52	570.54	285.27	0.326	1.073	0	0	0	0	1694.60	1694.60	0	0	1694.60	1694.60	0	0
32	664.52	570.54	285.27	0.326	1.073	0.06	0.00	0.11	0.00	1696.00	1696.00	32	32	1696.00	1696.00	32	32
96	664.52	570.54	285.27	0.326	1.073	0.17	0.00	0.34	0.00	1698.00	1698.00	96	96	1698.00	1698.00	96	96
216	664.52	570.54	285.27	0.326	1.073	0.38	0.00	0.76	0.01	1700.00	1700.00	216	216	1700.00	1700.01	216	215
314	664.52	570.54	285.27	0.326	1.073	0.55	0.00	1.10	0.02	1702.00	1702.00	314	314	1702.00	1702.02	314	313
389	664.52	570.54	285.27	0.326	1.073	0.68	0.00	1.36	0.03	1704.00	1704.00	389	389	1704.00	1704.03	389	388
447	664.52	570.54	285.27	0.326	1.073	0.78	0.00	1.57	0.04	1706.00	1706.00	447	447	1706.00	1706.04	447	446
501	664.52	570.54	285.27	0.326	1.073	0.88	0.00	1.76	0.05	1708.00	1708.00	501	501	1708.00	1708.05	501	500
549	664.52	570.54	285.27	0.326	1.073	0.96	0.00	1.92	0.06	1710.00	1710.00	549	549	1710.00	1710.06	549	548
592	664.52	570.54	285.27	0.326	1.073	1.04	0.01	2.08	0.07	1712.00	1712.01	592	592	1712.00	1712.07	592	590
633	664.52	570.54	285.27	0.326	1.073	1.11	0.01	2.22	0.08	1714.00	1714.01	633	633	1714.00	1714.08	633	631
644	664.52	570.54	285.27	0.326	1.073	1.13	0.01	2.26	0.08	1714.50	1714.51	644	644	1714.50	1714.58	644	642
652	664.52	570.54	285.27	0.326	1.073	1.14	0.01	2.29	0.09	1714.86	1714.87	652	652	1714.86	1714.95	652	650
654	664.52	570.54	285.27	0.326	1.073	1.15	0.01	2.29	0.09	1715.00	1715.01	654	654	1715.00	1715.09	654	653
673	664.52	570.54	285.27	0.326	1.073	1.18	0.01	2.36	0.09	1716.00	1716.01	673	673	1716.00	1716.09	673	671
700	664.52	570.54	285.27	0.326	1.073	1.23	0.01	2.45	0.10	1717.50	1717.51	700	700	1717.50	1717.60	700	698
723	664.52	570.54	285.27	0.326	1.073	1.27	0.01	2.53	0.11	1719.00	1719.01	723	723	1719.00	1719.11	723	721
745	664.52	570.54	285.27	0.326	1.073	1.31	0.01	2.61	0.11	1720.50	1720.51	745	745	1720.50	1720.61	745	743
758	664.52	570.54	285.27	0.326	1.073	1.33	0.01	2.66	0.12	1721.50	1721.51	758	758	1721.50	1721.62	758	756
765	664.52	570.54	285.27	0.326	1.073	1.34	0.01	2.68	0.12	1722.00	1722.01	765	765	1722.00	1722.12	765	763
771	664.52	570.54	285.27	0.326	1.073	1.35	0.01	2.70	0.12	1722.50	1722.51	771	771	1722.50	1722.62	771	770
778	664.52	570.54	285.27	0.326	1.073	1.36	0.01	2.73	0.12	1723.00	1723.01	778	778	1723.00	1723.12	778	776
784	664.52	570.54	285.27	0.326	1.073	1.37	0.01	2.75	0.13	1723.50	1723.51	784	784	1723.50	1723.63	784	782
790	664.52	570.54	285.27	0.326	1.073	1.38	0.01	2.77	0.13	1724.00	1724.01	790	790	1724.00	1724.13	790	788
795	664.52	570.54	285.27	0.326	1.073	1.39	0.01	2.79	0.13	1724.50	1724.51	795	795	1724.50	1724.63	795	794
800	664.52	570.54	285.27	0.326	1.073	1.40	0.01	2.80	0.13	1725.00	1725.01	800	800	1725.00	1725.13	800	799
806	664.52	570.54	285.27	0.326	1.073	1.41	0.01	2.83	0.13	1725.50	1725.51	806	806	1725.50	1725.63	806	804
811	664.52	570.54	285.27	0.326	1.073	1.42	0.01	2.84	0.13	1726.00	1726.01	811	811	1726.00	1726.13	811	810
817	664.52	570.54	285.27	0.326	1.073	1.43	0.01	2.86	0.14	1726.50	1726.51	817	817	1726.50	1726.64	817	815
822	664.52	570.54	285.27	0.326	1.073	1.44	0.01	2.88	0.14	1727.00	1727.01	822	822	1727.00	1727.14	822	821
833	664.52	570.54	285.27	0.326	1.073	1.46	0.01	2.92	0.14	1727.50	1727.51	833	833	1727.50	1727.64	833	830
844	664.52	570.54	285.27	0.326	1.073	1.48	0.01	2.96	0.15	1728.00	1728.01	844	844	1728.00	1728.15	844	841
847	664.52	570.54	285.27	0.326	1.073	1.48	0.01	2.97	0.15	1728.50	1728.51	847	847	1728.50	1728.65	847	846
849	664.52	570.54	285.27	0.326	1.073	1.49	0.01	2.98	0.15	1729.00	1729.01	849	849	1729.00	1729.15	849	848
852	664.52	570.54	285.27	0.326	1.073	1.49	0.01	2.99	0.15	1729.50	1729.51	852	852	1729.50	1729.65	852	851
854	664.52	570.54	285.27	0.326	1.073	1.50	0.01	2.99	0.15	1730.00	1730.01	854	854	1730.00	1730.15	854	853

Notes
a: Only fully submereged conditions are considered.
b: Assumes the trashrack is mounted on a "u-shaped" headwall as shown on figure.
c: Assumes 50% of gross area is clogging after the bar area is subtracted.
d: Velocity through the net area.
e: Headloss below fully submerged trashrack is linearly interpolated.

1. Computation based on USBR method

trash-r[illegible]ls
Inlet 2-60" RCP

Stage feet	New Q (unclogged)	New Q (Clogged)
1694.60	0.00	0.0
1696.00	32.00	32.0
1698.00	95.99	95.9
1700.00	215.96	215.4
1702.00	313.92	313.0
1704.00	388.91	387.8
1706.00	446.91	445.8
1708.00	500.89	499.6
1710.00	548.89	547.5
1712.00	591.88	590.5
1714.00	632.87	631.3
1714.50	643.86	642.1
1714.86	651.85	650.1
1715.00	653.90	652.8
1716.00	672.87	671.2
1717.50	699.86	698.2
1719.00	722.88	721.4
1720.50	744.87	743.3
1721.50	757.88	756.5
1722.00	764.87	763.3
1722.50	770.89	769.5
1723.00	777.87	776.3
1723.50	783.89	782.5
1724.00	789.88	788.5
1724.50	794.90	793.7
1725.00	799.90	798.7
1725.50	805.88	804.4
1726.00	810.90	809.7
1726.50	816.88	815.4
1727.00	821.89	820.6
1727.50	832.76	829.9
1728.00	843.76	840.8
1728.50	846.93	846.1
1729.00	848.96	848.4
1729.50	851.93	851.1
1730.00	853.95	853.4

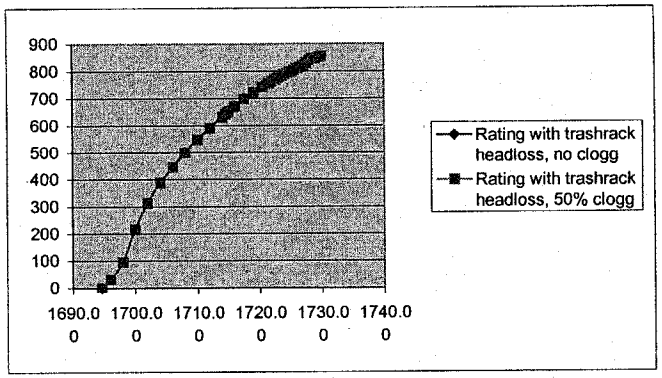

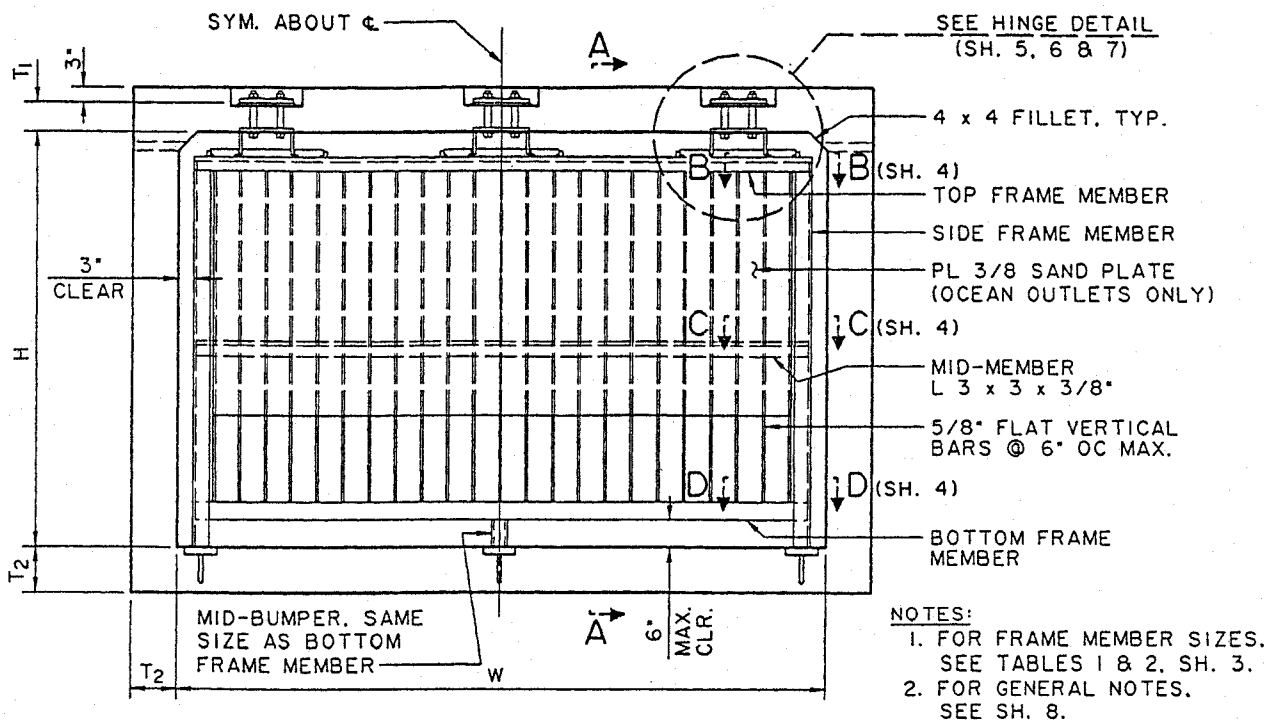

NOTES:
1. FOR FRAME MEMBER SIZES, SEE TABLES 1 & 2, SH. 3.
2. FOR GENERAL NOTES, SEE SH. 8.

THREE HINGED INLET/OUTLET BARRIER

FOR RCB

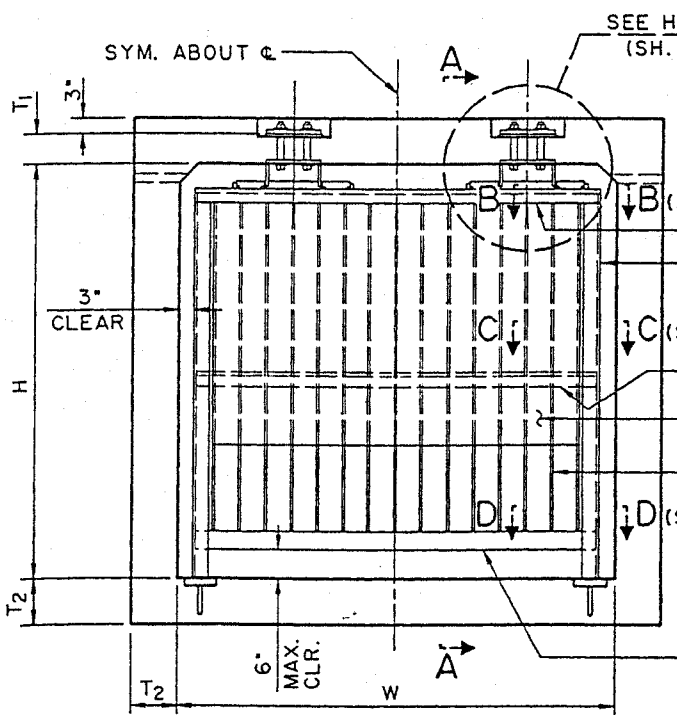

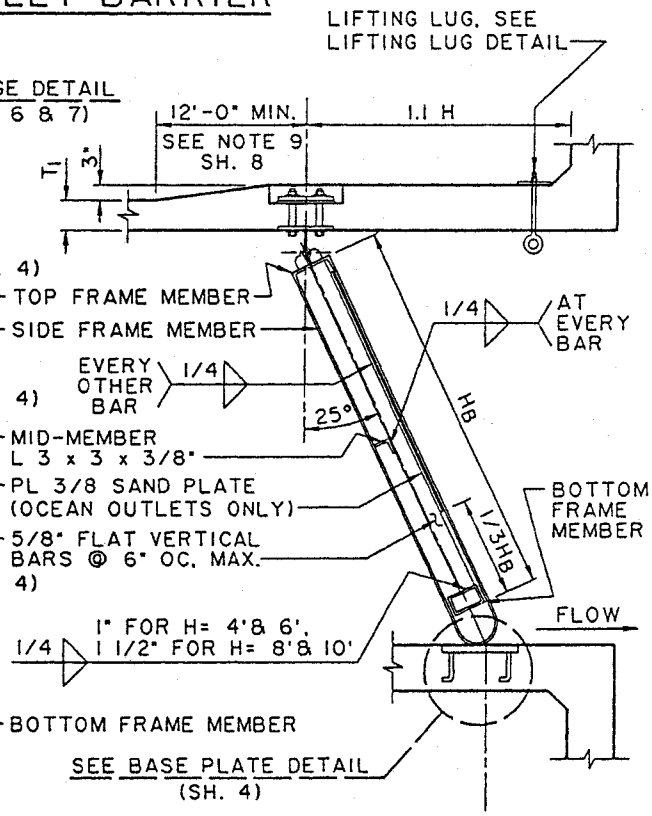

TWO HINGED INLET/OUTLET BARRIER

FOR RCB

SECTION A-A

NOTE:
FOR FRAME MEMBER SIZES, SEE TABLES 1 & 2, SH. 3.
FOR CONNECTION DETAILS, SEE SH. 4.

AMERICAN PUBLIC WORKS ASSOCIATION – SOUTHERN CALIFORNIA CHAPTER		
PROMULGATED BY THE APWA-AGC JOINT COOPERATIVE COMMITTEE 1993	**SLOPED PROTECTION BARRIER**	STANDARD PLAN **360-0**
	USE WITH STANDARD SPECIFICATIONS FOR PUBLIC WORKS CONSTRUCTION	SHEET 1 OF 8

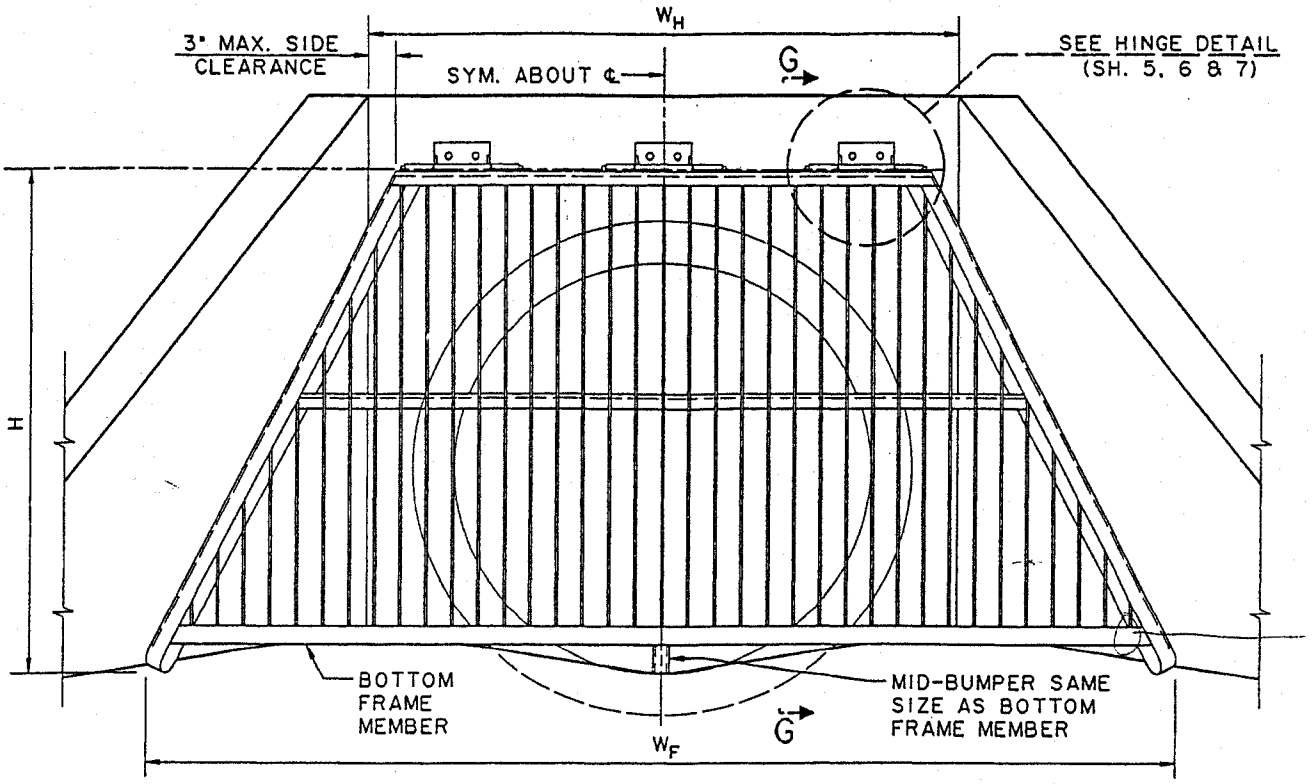

FRONT ELEVATION

NOTES:
1. FOR FRAME MEMBER SIZE, SEE TABLE 1, SH. 3.
2. FOR CONNECTION DETAILS SEE SH. 4.

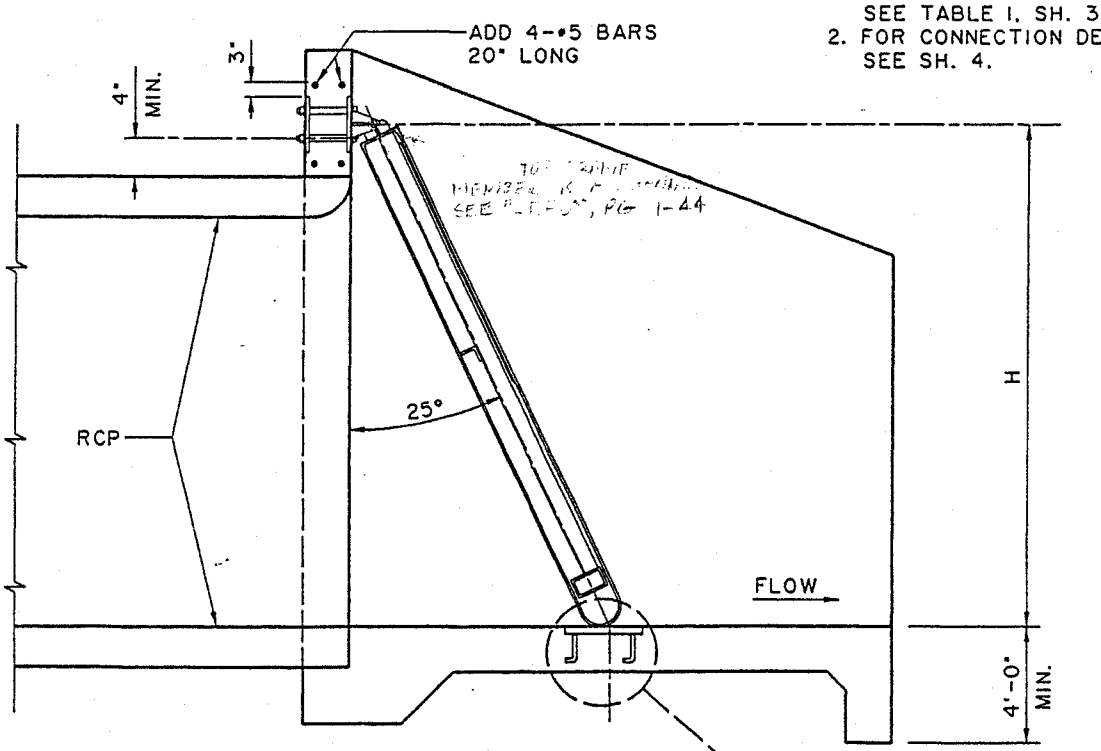

SECTION G-G
RCP OUTLET PROTECTION BARRIER

AMERICAN PUBLIC WORKS ASSOCIATION – SOUTHERN CALIFORNIA CHAPTER	STANDARD PLAN
SLOPED PROTECTION BARRIER	**360-0**
	SHEET 2 OF 8

TABLE 1:

STANDARD INLET/OUTLET, BOX OR PIPE, RECTANGULAR OR TRAPEZOIDAL SHAPED PROTECTION BARRIERS.

NOTE 1: FOR TRAPEZOIDAL SHAPED PROTECTION BARRIERS, USE W_H TO DETERMINE NUMBER AND SIZE OF HINGES, AND USE W_F TO DETERMINE REQUIRED FRAME MEMBER SIZES. (FOR W_H AND W_F, SEE SH. 2)

TABLE 1: INLET/OUTLET SLOPED PROTECTION BARRIER

BOX SIZE W x H (FT.)	NO. OF HINGES	HINGE SIZE	VERTICAL BAR SIZE (INCHES)	TOP FRAME MEMBER SIZE	SIDE FRAME MEMBER SIZE	BOTTOM FRAME MEMBER SIZE
4x4	2	12"	1x1/2	C 4x7.25	C 4x7.25	TS 2x2x.250
4x6	2	12"	2x1/2	C 4x7.25	C 4x7.25	TS 2x2x.250
4x8	2	12"	3x1/2	C 5x9	C 5x9	TS 3x3x.250
6x4	2	18"	1x1/2	C 4x7.25	C 4x7.25	TS 2x2x.250
6x6	2	18"	2x1/2	C 4x7.25	C 4x7.25	TS 2.5x2.5x.250
6x8	2	18"	3x1/2	C 5x9	C 5x9	TS 3.5x3.5x.250
6x10	2	18"	4 1/2x1/2	C 6x10.5	C 6x10.5	TS 4.5x4.5x.250
8x4	3	12"	1x1/2	C 4x7.25	C 4x7.25	TS 2x2x.250
8x6	3	12"	2x1/2	C 4x7.25	C 4x7.25	TS 2.5x2.5x.250
8x8	3	12"	3x1/2	C 5x9	C 5x9	TS 3x3x.250
8x10	3	12"	4 1/2x1/2	C 6x10.5	C 6x10.5	TS 4.5x4.5x.250
10x6	3	18"	2x1/2	C 4x7.25	C 4x7.25	TS 2.5x2.5x.250
10x8	3	18"	3x1/2	C 5x9	C 5x9	TS 3.5x3.5x.250
10x10	3	18"	4 1/2x1/2	C 6x10.5	C 6x10.5	TS 4.5x4.5x.250
12x6	3	24"	2x1/2	C 5x9	C 5x9	TS 3x3x.250
12x8	3	24"	3x1/2	C 5x9	C 5x9	TS 3.5x3.5x.250
12x10	3	24"	4 1/2x1/2	C 6x10.5	C 6x10.5	TS 4.5x4.5x.250
14x6	3	24"	2x1/2	C 5x9	C 5x9	TS 3x3x.250
14x8	3	24"	3x1/2	C 6x10.5	C 6x10.5	TS 4x4x.250
14x10	3	24"	4 1/2x1/2	C 7x12.25	C 7x12.25	TS 5x5x.250

TABLE 2:

BOX OCEAN OUTLET PROTECTION BARRIERS WITH OR WITHOUT SAND BARRIER PLATE.

TABLE 2: OCEAN OUTLET SLOPED PROTECTION BARRIER

BOX SIZE W x H (FT.)	NO. OF HINGES	HINGE SIZE	VERTICAL BAR SIZE (INCHES)	TOP FRAME MEMBER SIZE	SIDE FRAME MEMBER SIZE	BOTTOM FRAME MEMBER SIZE
4x4	2	12"	2 1/2x5/8	C 5x9	C 5x9	TS 3x3x.250
4x6	2	12"	3 3/4x5/8	C 6x13	C 6x8.2	TS 4x2x.313
4x8	2	12"	5 1/4x5/8	C 8x18.75	C 8x11.5	TS 6x2x.250
6x4	2	18"	2 1/2x5/8	C 6x13	C 6x8.2	TS 4x3x.313
6x6	2	18"	3 3/4x5/8	C 6x13	C 6x8.2	TS 4x4x.500
6x8	2	18"	5 1/4x5/8	C 8x18.75	C 8x11.5	TS 6x4x.375
6x10	2	18"	6 1/2x5/8	C 9x20	C 9x13.4	TS 7x4x.375
8x4	3	12"	2 1/2x5/8	C 5x9	C 5x9	TS 3x3x.250
8x6	3	12"	3 3/4x5/8	C 6x13	C 6x8.2	TS 4x3x.250
8x8	3	12"	5 1/4x5/8	C 8x18.75	C 8x11.5	TS 6x2x.250
8x10	3	12"	6 1/2x5/8	C 9x20	C 9x13.4	TS 7x3x.250
10x6	3	18"	3 3/4x5/8	C 6x13	C 6x8.2	TS 4x4x.313
10x8	3	18"	5 1/4x5/8	C 8x18.75	C 8x11.5	TS 6x4x.313
10x10	3	18"	6 1/2x5/8	C 9x20	C 9x13.4	TS 7x3x.313
12x6	3	24"	3 3/4x5/8	C 7x14.75	C 7x9.8	TS 5x4x.313
12x8	3	24"	5 1/4x5/8	C 8x18.75	C 8x11.5	TS 6x4x.375
12x10	3	24"	6 1/2x5/8	C 9x20	C 9x13.4	TS 7x4x.375
14x6	3	24"	3 3/4x5/8	C 8x18.75	C 8x11.5	TS 6x4x.375
14x8	3	24"	5 1/4x5/8	C 8x18.75	C 8x11.5	TS 6x6x.375
14x10	3	24"	6 1/2x5/8	C 9x20	C 9x13.4	TS 7x5x.500

AMERICAN PUBLIC WORKS ASSOCIATION – SOUTHERN CALIFORNIA CHAPTER

SLOPED PROTECTION BARRIER

STANDARD PLAN

360-0

SHEET 3 OF 8

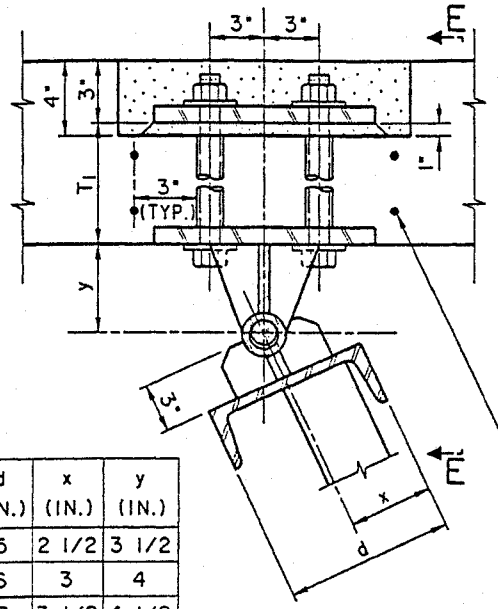

d (IN.)	x (IN.)	y (IN.)
5	2 1/2	3 1/2
6	3	4
7	3 1/2	4 1/2
8	4	5
9	4	5

HINGE CLEARANCE DETAIL

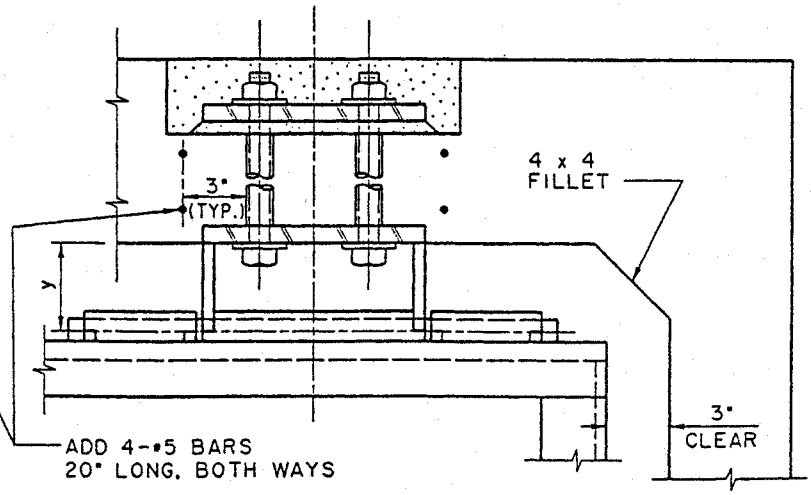

SECTION E-E

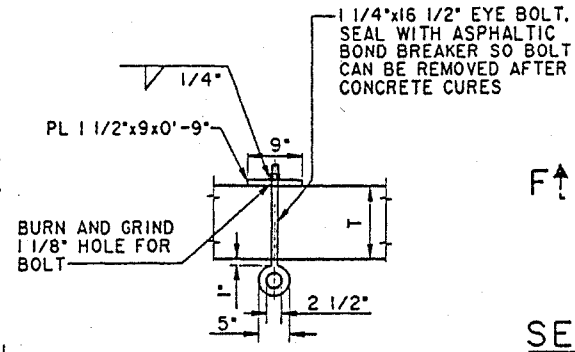

LIFTING LUG DETAIL

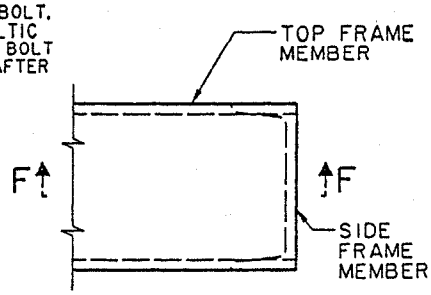

SECTION B-B (SH. 1)

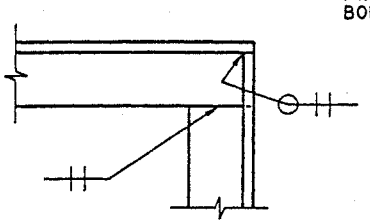

SECTION F-F

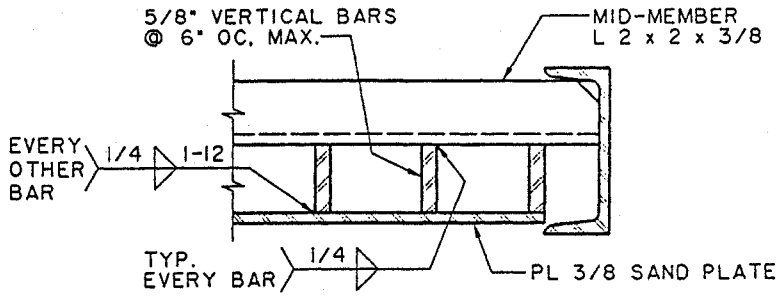

SECTION C-C (SH. 1)

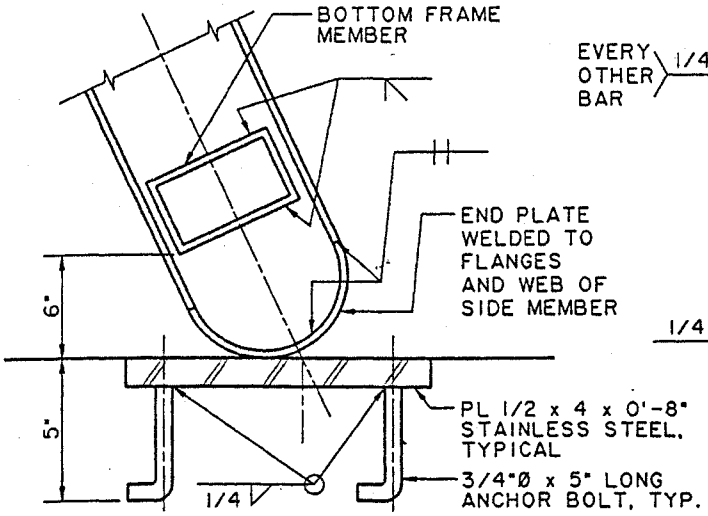

BASE PLATE DETAIL (SH. 1 & 2)

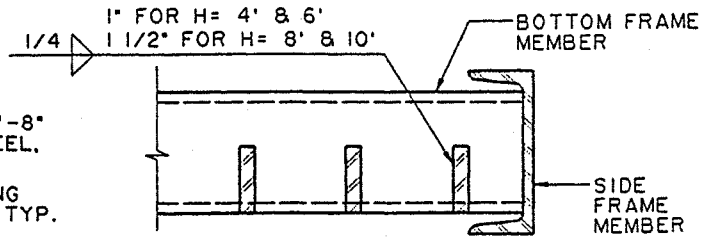

SECTION D-D (SH. 1)

AMERICAN PUBLIC WORKS ASSOCIATION – SOUTHERN CALIFORNIA CHAPTER	STANDARD PLAN
SLOPED PROTECTION BARRIER	**360-0**
	SHEET 4 OF 8

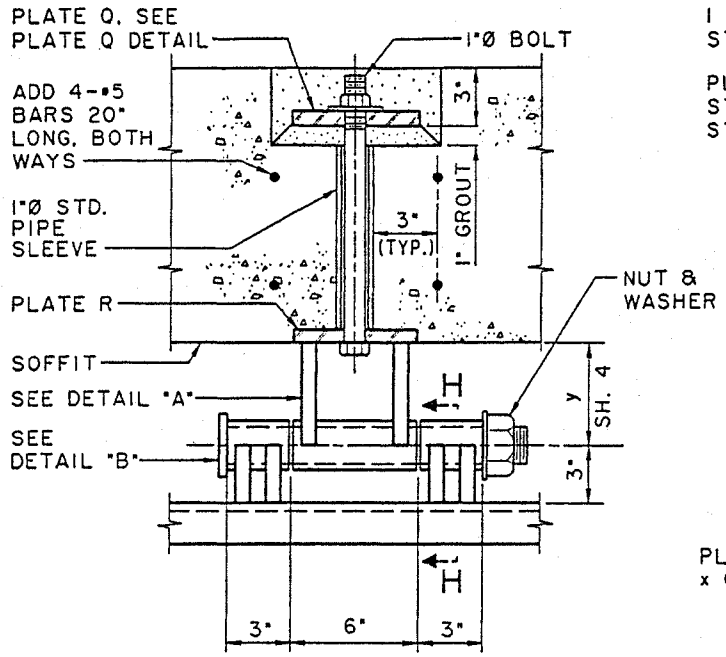

12" HINGE DETAIL (SH. 1 & 2)

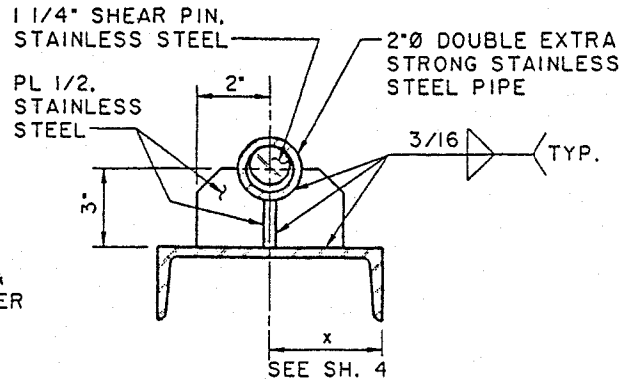

SECTION H-H

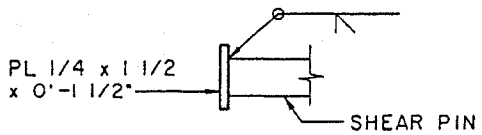

DETAIL "B"

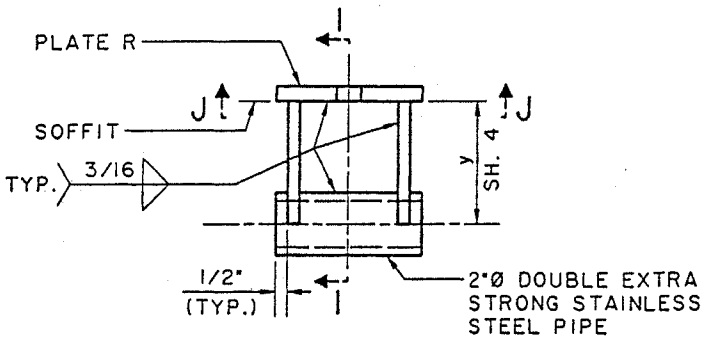

DETAIL "A"

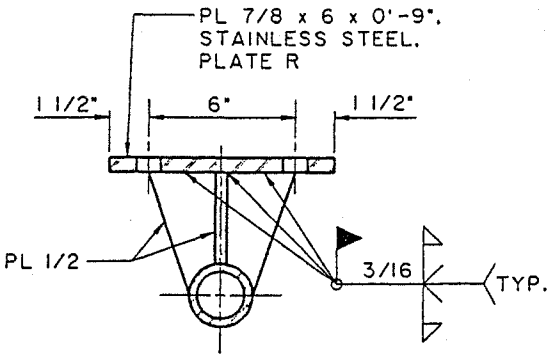

SECTION I-I

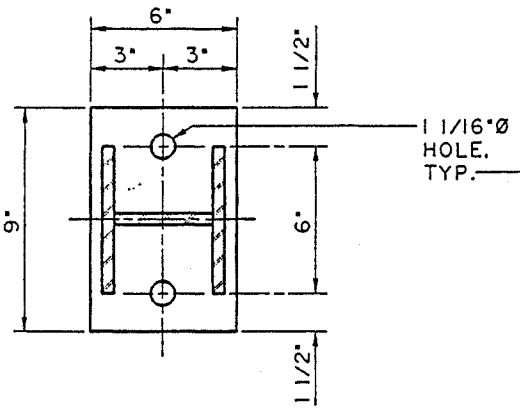

SECTION J-J

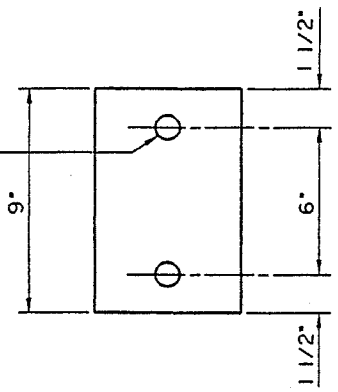

PLATE Q DETAIL

AMERICAN PUBLIC WORKS ASSOCIATION – SOUTHERN CALIFORNIA CHAPTER	STANDARD PLAN
SLOPED PROTECTION BARRIER	**360-0**
	SHEET 5 OF 8

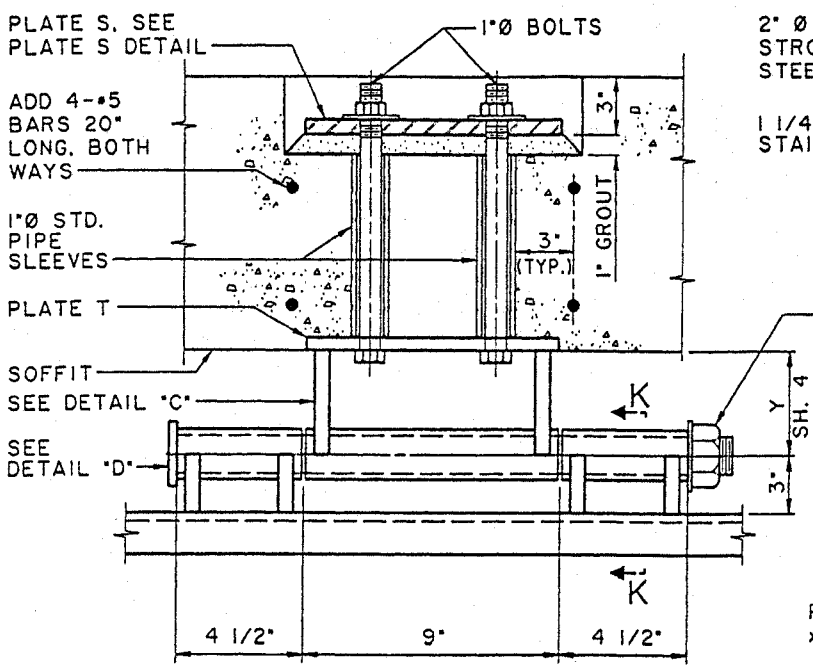

18" HINGE DETAIL (SH. 1 & 2)

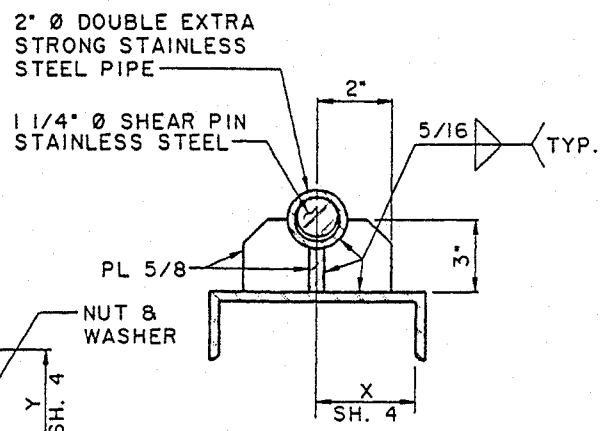

SECTION K-K

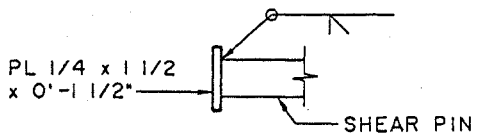

DETAIL "D"

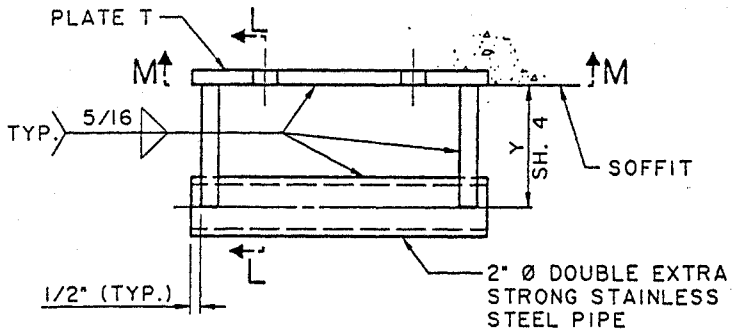

DETAIL "C"

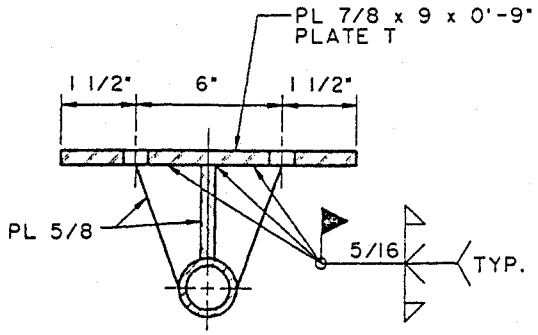

SECTION L-L

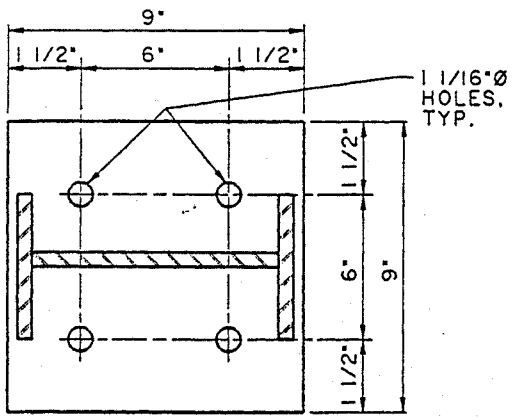

SECTION M-M

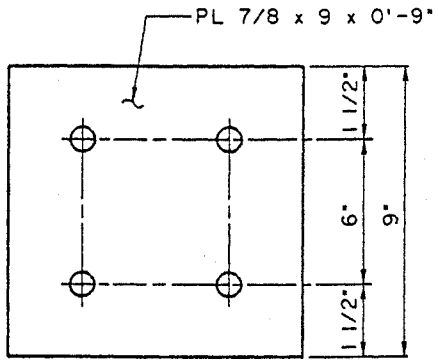

PLATE S DETAIL

AMERICAN PUBLIC WORKS ASSOCIATION – SOUTHERN CALIFORNIA CHAPTER	STANDARD PLAN
SLOPED PROTECTION BARRIER	**360-0**
	SHEET 6 OF 8

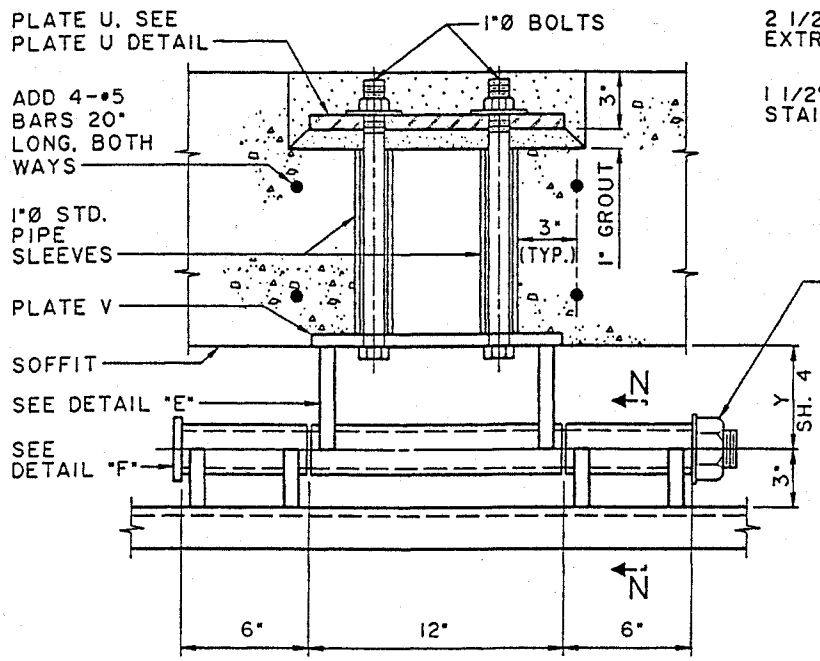

24" HINGE DETAIL (SH. 1 & 2)

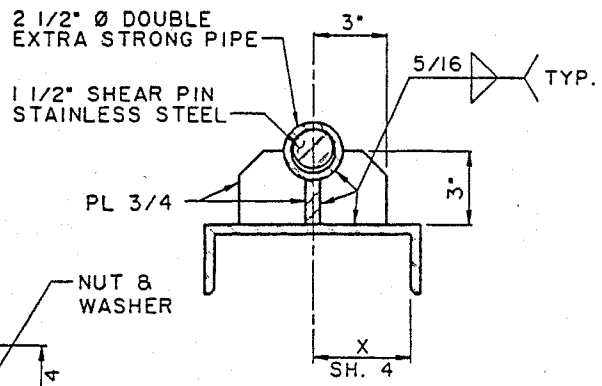

SECTION N-N

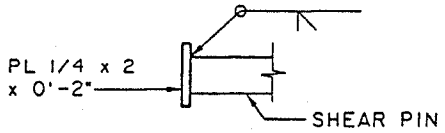

DETAIL "F"

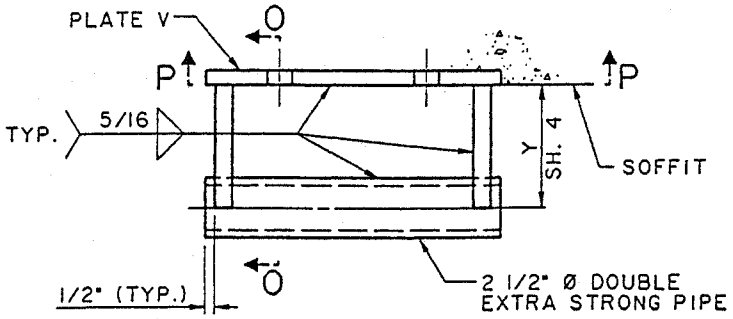

DETAIL "E"

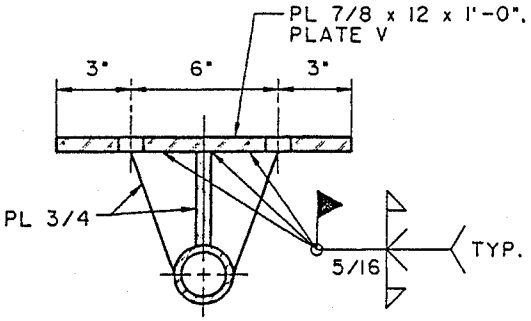

SECTION O-O

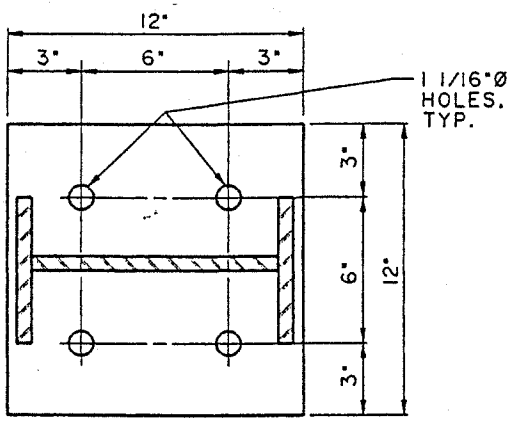

SECTION P-P

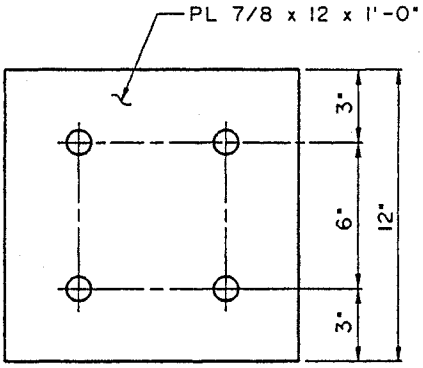

PLATE V DETAIL

AMERICAN PUBLIC WORKS ASSOCIATION – SOUTHERN CALIFORNIA CHAPTER	STANDARD PLAN
SLOPED PROTECTION BARRIER	**360-0**
	SHEET 7 OF 8

NOTES

1. WHENEVER RCB SIZE FALLS BETWEEN SIZES SHOWN ON THE TABLE, THE NEXT LARGER SIZE SHALL BE USED.

2. ALL FRAME MEMBERS SHALL BE ASTM A 36 STEEL OR BETTER.

3. ALL HINGE ASSEMBLIES AND BASE PLATES SHALL BE STAINLESS STEEL.

4. THE CONTRACTOR SHALL MAKE ANY NECESSARY MODIFICATIONS TO ALLOW FOR THE SIMPLE REMOVAL OR INSERTION OF HINGE PINS IN ORDER TO INSTALL OR REMOVE THE PROTECTION BARRIER. ENDS OF HINGE PINS SHALL BE THREADED IN ORDER THAT NUTS AND LOCK WASHERS WILL BE FLUSH WITH THE HINGE PIPE. THREADS BEYOND THE NUT FACE SHALL BE DAMAGED TO PREVENT REMOVAL.

5. ALL FRAME MEMBERS SHALL BE GALVANIZED AFTER FABRICATION.

6. IF FIELD WELDS ARE NECESSARY, GALVICON, GALVALLOY OR AGENCY APPROVED EQUAL SHALL BE USED FOR COATING.

7. MID-BUMPER SHALL BE USED FOR 3 HINGED BARRIERS.

8. ANY DEVIATIONS OR MODIFICATIONS TO THIS STANDARD SHALL BE APPROVED BY THE AGENCY.

9. AT OCEAN OUTLETS OR WHEREVER THE TOP SLAB SERVES AS A PUBLIC WALKWAY, THE TOP SLAB THICKNESS SHALL BE INCREASED BY 3" IN ORDER TO PROVIDE A RECESS FOR THE HINGE TOP PLATE. THE RECESS SHALL BE BACKFILLED WITH GROUT AND SMOOTHED AS SHOWN.

10. PROTECTION BARRIERS FOR RCB CONDUITS SHALL BE SLOPED TO SWING OPEN IN THE DIRECTION OF FLOW.

11. MEMBERS SHALL BE SELECTED FROM TABLE I UNLESS OTHERWISE NOTED.

12. DESIGN LOADS:
    A. INLET/OUTLET: BULKED EFD = 85 PCF
    B. OCEAN OUTLETS:
        1. 1800 PSF @ SAND PLATE AREA
        2. 600 PSF @ LOWER OPEN AREA

Chart 2-5 for K's
Given $G = \frac{\Sigma I_c/L_c}{\Sigma I_G/L_G}$
P 2-5

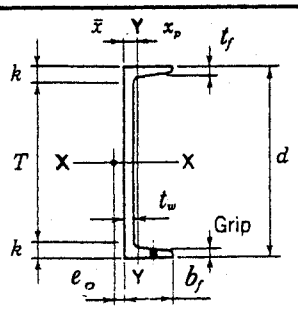

CHANNELS
AMERICAN STANDARD
Dimensions

Designation	Area A	Depth d	Web Thickness t_w		$\frac{t_w}{2}$	Flange Width b_f		Flange Average thickness t_f		Distance T	Distance k	Grip	Max. Flge. Fastener
	In.^{2}	In.	In.		In.	In.		In.		In.	In.	In.	In.
C 15x50	14.7	15.00	0.716	11/16	3/8	3.716	3 3/4	0.650	5/8	12 1/8	1 7/16	5/8	1
x40	11.8	15.00	0.520	1/2	1/4	3.520	3 1/2	0.650	5/8	12 1/8	1 7/16	5/8	1
x33.9	9.96	15.00	0.400	3/8	3/16	3.400	3 3/8	0.650	5/8	12 1/8	1 7/16	5/8	1
C 12x30	8.82	12.00	0.510	1/2	1/4	3.170	3 1/8	0.501	1/2	9 3/4	1 1/8	1/2	7/8
x25	7.35	12.00	0.387	3/8	3/16	3.047	3	0.501	1/2	9 3/4	1 1/8	1/2	7/8
x20.7	6.09	12.00	0.282	5/16	1/8	2.942	3	0.501	1/2	9 3/4	1 1/8	1/2	7/8
C 10x30	8.82	10.00	0.673	11/16	5/16	3.033	3	0.436	7/16	8	1	7/16	3/4
x25	7.35	10.00	0.526	1/2	1/4	2.886	2 7/8	0.436	7/16	8	1	7/16	3/4
x20	5.88	10.00	0.379	3/8	3/16	2.739	2 3/4	0.436	7/16	8	1	7/16	3/4
x15.3	4.49	10.00	0.240	1/4	1/8	2.600	2 5/8	0.436	7/16	8	1	7/16	3/4
C 9x20	5.88	9.00	0.448	7/16	1/4	2.648	2 5/8	0.413	7/16	7 1/8	15/16	7/16	3/4
x15	4.41	9.00	0.285	5/16	1/8	2.485	2 1/2	0.413	7/16	7 1/8	15/16	7/16	3/4
x13.4	3.94	9.00	0.233	1/4	1/8	2.433	2 3/8	0.413	7/16	7 1/8	15/16	7/16	3/4
C 8x18.75	5.51	8.00	0.487	1/2	1/4	2.527	2 1/2	0.390	3/8	6 1/8	15/16	3/8	3/4
x13.75	4.04	8.00	0.303	5/16	1/8	2.343	2 3/8	0.390	3/8	6 1/8	15/16	3/8	3/4
x11.5	3.38	8.00	0.220	1/4	1/8	2.260	2 1/4	0.390	3/8	6 1/8	15/16	3/8	3/4
C 7x14.75	4.33	7.00	0.419	7/16	3/16	2.299	2 1/4	0.366	3/8	5 1/4	7/8	3/8	5/8
x12.25	3.60	7.00	0.314	5/16	3/16	2.194	2 1/4	0.366	3/8	5 1/4	7/8	3/8	5/8
x 9.8	2.87	7.00	0.210	3/16	1/8	2.090	2 1/8	0.366	3/8	5 1/4	7/8	3/8	5/8
C 6x13	3.83	6.00	0.437	7/16	3/16	2.157	2 1/8	0.343	5/16	4 3/8	13/16	5/16	5/8
x10.5	3.09	6.00	0.314	5/16	3/16	2.034	2	0.343	5/16	4 3/8	13/16	3/8	5/8
x 8.2	2.40	6.00	0.200	3/16	1/8	1.920	1 7/8	0.343	5/16	4 3/8	13/16	5/16	5/8
C 5x 9	2.64	5.00	0.325	5/16	3/16	1.885	1 7/8	0.320	5/16	3 1/2	3/4	5/16	5/8
x 6.7	1.97	5.00	0.190	3/16	1/8	1.750	1 3/4	0.320	5/16	3 1/2	3/4	—	—
C 4x 7.25	2.13	4.00	0.321	5/16	3/16	1.721	1 3/4	0.296	5/16	2 5/8	11/16	5/16	5/8
x 5.4	1.59	4.00	0.184	3/16	1/16	1.584	1 5/8	0.296	5/16	2 5/8	11/16	—	—
C 3x 6	1.76	3.00	0.356	3/8	3/16	1.596	1 5/8	0.273	1/4	1 5/8	11/16	—	—
x 5	1.47	3.00	0.258	1/4	1/8	1.498	1 1/2	0.273	1/4	1 5/8	11/16	—	—
x 4.1	1.21	3.00	0.170	3/16	1/16	1.410	1 3/8	0.273	1/4	1 5/8	11/16	—	—

CHANI
AMERICAN S
Prope

Nominal Wt. per Ft	$\bar{x}$	Shear Center Location e_o	PNA Location x_p	I
Lb.	In.	In.	In.	In.^{4}
50	0.798	0.583	0.488	404
40	0.777	0.767	0.390	349
33.9	0.787	0.896	0.330	315
30	0.674	0.618	0.366	162
25	0.674	0.746	0.305	144
20.7	0.698	0.870	0.252	129
30	0.649	0.369	0.439	103
25	0.617	0.494	0.366	91.2
20	0.606	0.637	0.292	78.9
15.3	0.634	0.796	0.223	67.4
20	0.583	0.515	0.325	60.9
15	0.586	0.682	0.243	51.0
13.4	0.601	0.743	0.217	47.9
18.75	0.565	0.431	0.343	44.0
13.75	0.553	0.604	0.251	36.1
11.5	0.571	0.697	0.209	32.6
14.75	0.532	0.441	0.308	27.2
12.25	0.525	0.538	0.255	24.2
9.8	0.540	0.647	0.203	21.3
13	0.514	0.380	0.317	17.4
10.5	0.499	0.486	0.255	15.2
8.2	0.511	0.599	0.198	13.1
9	0.478	0.427	0.262	8.96
6.7	0.484	0.552	0.217	7.49
7.25	0.459	0.386	0.264	4.59
5.4	0.457	0.502	0.241	3.85
6	0.455	0.322	0.291	2.07
5	0.438	0.392	0.242	1.85
4.1	0.436	0.461	0.284	1.66

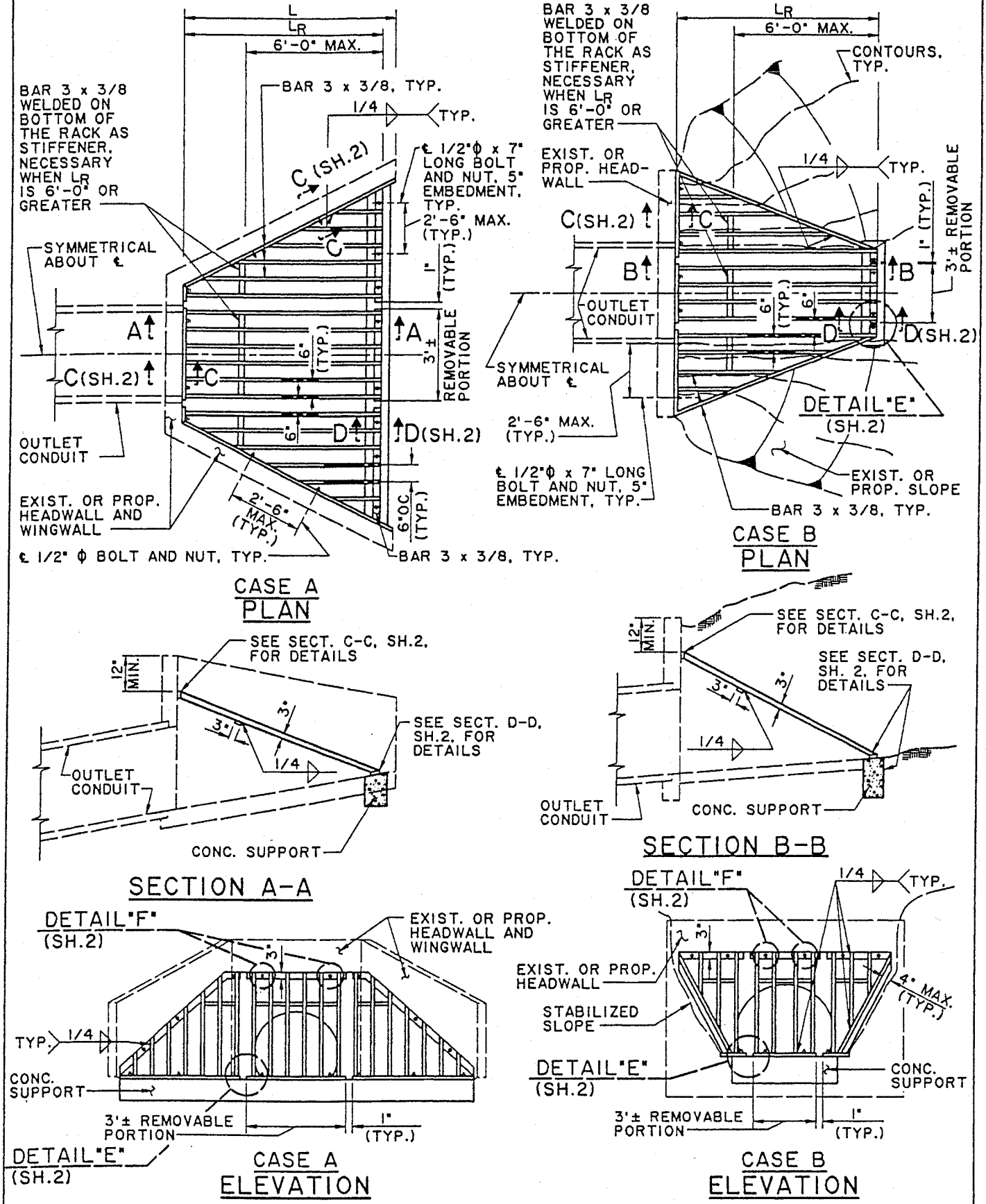

AMERICAN PUBLIC WORKS ASSOCIATION – SOUTHERN CALIFORNIA CHAPTER		
PROMULGATED BY THE APWA-AGC JOINT COOPERATIVE COMMITTEE 1993	**TRASH RACK (INCLINED)**	STANDARD PLAN **361-0**
	USE WITH STANDARD SPECIFICATIONS FOR PUBLIC WORKS CONSTRUCTION	SHEET 1 OF 3

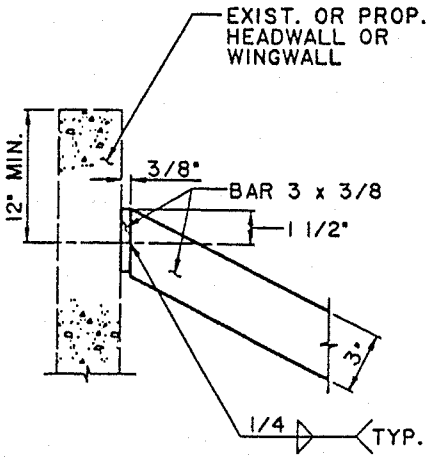

SECTION C-C (SH. 1)

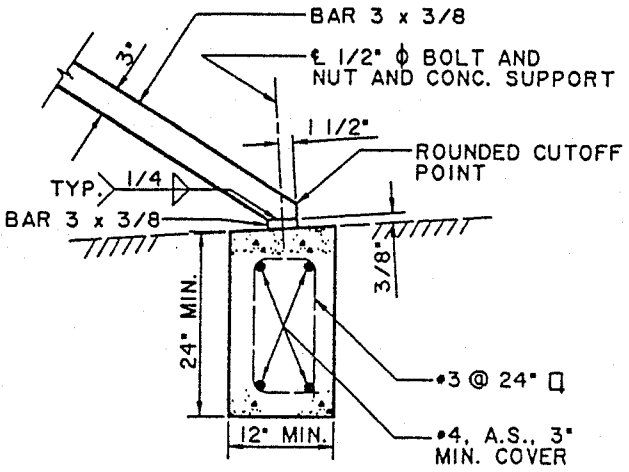

SECTION D-D (SH. 1)

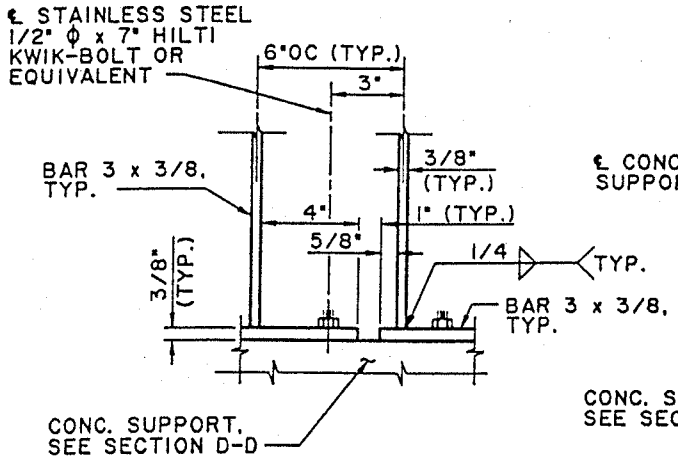

ELEVATION

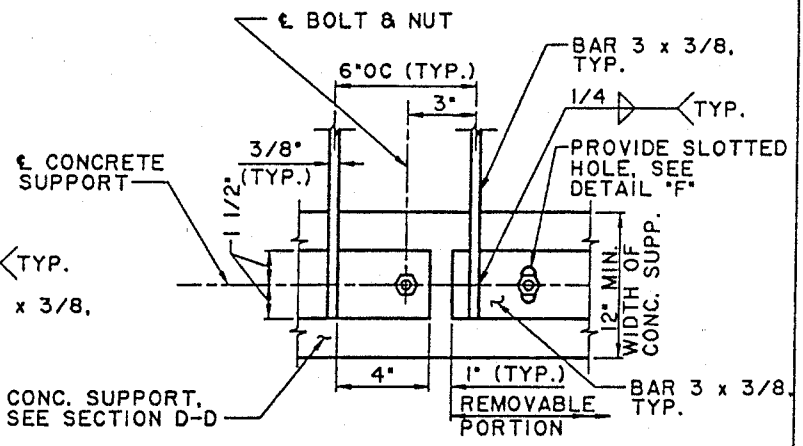

PLAN

DETAIL "E" (SH. 1)

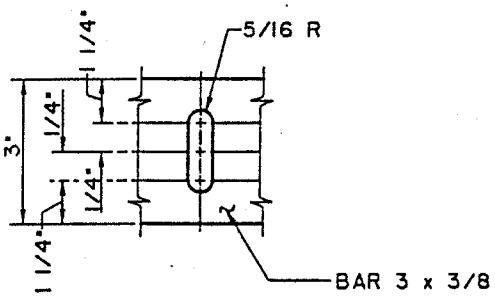

DETAIL "F" (SH. 1)
APPLIES TO THE TOP AND BOTTOM
BARS OF THE REMOVABLE PORTION ONLY

AMERICAN PUBLIC WORKS ASSOCIATION – SOUTHERN CALIFORNIA CHAPTER	STANDARD PLAN
TRASH RACK (INCLINED)	**361-0**
	SHEET 2 OF 3

NOTES

1. MAXIMUM SIZE OF OUTLET TO BE USED WITH THIS RACK IS 48" PIPE OR 48" WIDE RCB. MAXIMUM LENGTH OF RACK L_R IS 10'-0".

2. L_R CAN BE ADJUSTED SO THAT THE SLOPE OF THE RACK IS APPROXIMATELY 2 HORIZONTAL TO 1 VERTICAL.

3. THE CONCRETE SUPPORT IS NOT NECESSARY IF EXISTING OR PROPOSED INLET STRUCTURE HAS ADEQUATE SUPPORT CUTOFF WALL. IT DOES NOT ELIMINATE THE NEED FOR A CUTOFF WALL BUT CAN BE INTEGRATED WITH ONE WHEN REQUIRED AT A PARTICULAR INSTALLATION.

4. GALVANIZE ALL EXPOSED FERROUS PARTS AFTER FABRICATION.

5. IF FIELD WELDS ARE NECESSARY, USE GALVICON, GALVALLOY OR AGENCY APPROVED EQUAL FOR COATING.

6. ALL BOLTS SHALL BE 1/2" IN DIAMETER AND 7" IN LENGTH. ON REMOVABLE PORTION OF THE RACK, USE 300 SERIES STAINLESS STEEL BOLTS AND NUTS. FOR WINGWALL BOLTS FOR CASE A, AND WHERE HEADWALL AND WINGWALL ARE EXISTING, HILTI KWIK-BOLT OR EQUIVALENT CAN BE USED.

APPENDIX F

HYDRAULIC ANALYSIS OF AUXILIARY SPILLWAY ENERGY DISSIPATOR

Hydraulic Performance of the Proposed Energy Dissipator at GEPD (8'x4' RCB)

$Q_{100\text{-Box}}$ =	694 cfs	*Interpolated from values shown on "Q vs. TW at Principal Outlet"
$TW_{100\text{-Confluence}}$ =	1695.10'	*This is the TW at the confluence of the proposed 8'x4' RCB outlet channel with the existing Ashbrook Wash - it is bas was obtained using Flow Master normal depth calculation.

Trial	Culvert shape (Circ or Box) box	Discharge through culvert Q 694 cfs	Diameter OR width of culvert D_{pipe} or $W_{culvert}$ 8	Width of Flow Jet at Culvert Brink ft 8	Flow depth in culvert at outlet 4	Θ N/A	Area of flow A 32.00 sf	Hydraulic radius R N/A	Wetted perimeter P_w N/A

Summary	**8' X 4' RCB**	
D_1 =	**4.9'**	
V_1 =	**16.9 ft/s**	
Fn_1 =	**1.35**	
L_{jet} =	**Ld = 20.3' from Chow**	
D_2 =	**7.21'**	
L_{jump} =	**25.2'**	
L_{total} =	**45.5'**	
D_{jump} =	**7.21' vs.**	**D2=7.82' from Chow**
TW =	**5.75**	
$\Delta = D_{jump}$ -TW =	**1.5**	

1. See "Chow", pg 423 - Chow is used to reflect the "Free Fall" condition at the outlet, USBR does not directly address this geometric condition
2. Assumes a rectangular cross section
3. See "Hydraulic Design of Stilling Basins and Energy Dissipators", from USBR, page 25
4. Assumes max rate of flow expansion = 10°.

Hydraulic Performance of the Proposed Energy Dissipator at GEPD (8'x4' RCB)

sed on 1999 topo and

Unit discharge q	h	Dissipator floor elevation $Elev_{floor}$	Adj. NG Elev. LT ft	Adj. NG Elev. RT ft	[1]Drop No.	[1]Flow depth at section #1 of hydraulic jump D_1	Max. Rate of Flow Expansion (degrees)	[4]Width of flow in dissipator at jet impact $W_{dissipator}$	Flow area in dissipator at section #1 of the jump A_1
87 cfs/ft	1.5'	1692.5'	1700.6' (8.1' Above Floor)	1702.1' (9.7' Above Floor)	69.25	4.9'	10.0 deg	8.4 Actual Width	40.97 sf

Assume length through D_1 is 1'

Hydraulic Performance of the Proposed Energy Dissipator at GEPD (8'x4' RCB)

Velocity V_1	[4]Froude No. $F_{\#1}$	Pipe invert at outlet Elev	**Jump Elev** measured from (from $Elev_{floor}$) at outlet ft	**TW Elev** Obtained Using HECRAS or D_{normal} ft	USBR Fig 11 [3]**Depth of Jump** section #2 of hydraulic jump D_2	compare to Chow? Y/N	Depth of Jump (EQ. 15-13) From Chow
16.9 ft/s	1.35	1693.95'	1699.66' **Jmp ><TW !**	1698.20'	7.21'	y	D2=7.82' from Chow

Hydraulic Performance of the Proposed Energy Dissipator at GEPD (8'x4' RCB)

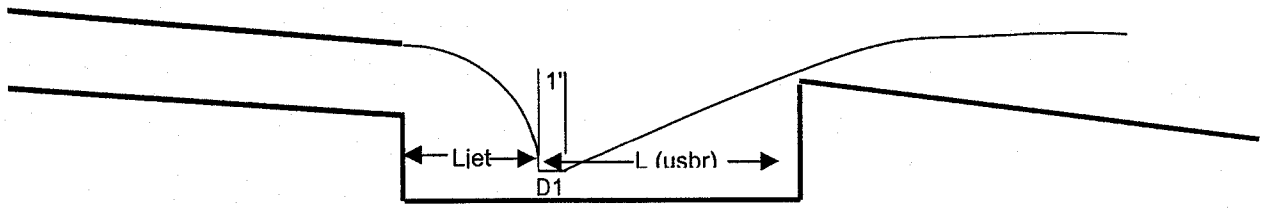

L/D_2 Fig 12, pg27 USBR	USBR Fig 12 Length **OF** hydraulic jump USBR L_{jump}	compare to Chow? Y/N	Length **TO** hydraulic jump L_{jet} (EQ. 15-13) From Chow	Total Length of Jump L_{total}
3.5	25.2'	y	Ld = 20.3' from Chow	**45.5'**

Hydraulic Performance [illegible]e Existing Energy Dissipator
at GEPD
(1-60" RCP)

$Q_{100\text{-}60\text{"-toal}}$ =	637 cfs	*Interpolated from values shown on "Q vs. TW at Principal Outlet" - Flow through pipe
$TW_{100\text{-Confluence}}$ =	1695.10'	*This is the TW at the confluence of the proposed 8'x4' RCB outlet channel with the existing Ashbrook Wash - it is based on 1999 topo and was obtained using Flow Master normal depth calculation.
$Q_{100\text{-}60\text{"-circ}}$ =	396 cfs	*Interpolated from values shown on "Principal Outlet HY-8 Run"
$V_{100\text{-}60\text{"-circ}}$ =	12.1 ft/s	

Trial	Culvert shape (Circ or Box)	Discharge through 1-60" culvert Q	[5]Diameter OR width of culvert D_{pipe} or $W_{culvert}$	[5]Width of Flow Jet at Culvert Brink ft	[7]Flow depth in culvert at outlet	Θ	Area of flow A	Hydraulic radius R	Wetted perimeter P_w	Unit discharge q	h	Dissipator floor elevation $Elev_{floor}$
	circ	396 cfs	5	5	4.9	5.72 rad	N/A	N/A	7.85'	50 cfs/ft	0.0'	1691.5'

Summary	**2-60" RCP**	
D_1 =	**3.5'**	
V_1 =	**12.1 ft/s**	
Fn_1 =	**1.14**	
L_{jet} =	**Ld = 0.0' from Chow**	
D_2 =	**4.16'**	
L_{jump} =	**13.1'**	
L_{total} =	**13.1'**	
D_{jump} =	**4.16' vs.**	**D2=0.00' from Chow**
TW =	**3.60**	
$\Delta = D_{jump}$ -TW =	**0.6**	

1. Based upon TOTAL flow (396+241=637cfs) since this depth is in the energy dissipator and flow from the two pipes has combined at this point. Use open channel flow calculation. The effective width of conveyance has been determined by assuming a max rate of expansion of 10 degrees. Assumes ponded water in the ineffective flow area within stilling basin.
2. Assumes a rectangular cross section
3. See "Hydraulic Design of Stilling Basins and Energy Dissipators", from USBR, page 25
4. See "As-Builts"
5. Reflects 2-60" diameter pipes side by side
6. Not used with this geometric configuration - see Chow, page 423.
7. From partial flow in circular culverts, dodson

Hydraulic Performance [illegible]e Existing Energy Dissipator at GEPD (1-60" RCP)

[Average] Adj. NG Elev. LT ft	[Average] Adj. NG Elev. RT ft	[5]Drop No.	(critical assumed) [1]Flow depth at section #1 of hydraulic jump D_1	Max. Rate of Flow Expansion (degrees)	28.65' to location D1 in stilling basin [4]Width of flow in dissipator at jet impact $W_{dissipator}$	Flow area in dissipator at section #1 of the jump A_1	[1]Jet Velocity at Location "D_1" V_1	[2]Froude No. $F_{\#1}$	Pipe invert at outlet Elev
1698.5' (7.0' Above Floor)	1698.6' (7.1' Above Floor)	N/A	3.5'	10.0 deg	15.1 Actual Width	52.64 sf	12.1 ft/s	1.14	1693.24'

Assume length through D_1 is 1'

Hydraulic Performance [illegible]e Existing Energy Dissipator at GEPD (1-60" RCP)

Jump Elev measured from (from $Elev_{floor}$) at outlet ft	**TW Elev** Obtained Using HECRAS or D_{normal} ft	USBR Fig 11 [3]**Depth of Jump** section #2 of hydraulic jump D_2	compare to Chow? Y/N	Depth of Jump (EQ. 15-13) From Chow	L/D_2 Fig 12, pg27 USBR	USBR Fig 12 Length **OF** hydraulic jump USBR L_{jump}	compare to Chow? Y/N	Length **TO** hydraulic jump L_{jet} (EQ. 15-13) From Chow	Total Length of Jump L_{total}
1695.66' **Jmp ><TW !**	1695.10'	4.16'	y	D2=0.00' from Chow	3.15	13.1'	y	Ld = 0.0' from Chow	**13.1'**

APPENDIX G

HYDRAULIC ANALYSIS OF ACCESS BARRIER FOR AUXILIARY SPILLWAY

ANALYSIS EXPLANATION

Stantec

Project: TRASH RACK OUTLET Project Number:

Notes: Scale:

Page of Page(s)

Computed By: Date: Checked By: Date:

TRASH RACK HEADLOSS INFORMATION

ASSUMPTION: OUTLET NOT SUBMERGED BY TW

a.) INLET CONTROL

(A)

b.) EVEN THOUGH PIPE MAY BE FULL @ OUTLET IF TW < T/PIPE, THERE IS NO NEGATIVE BACKPRESURE IMPEDING OUTFLOW, O.K.

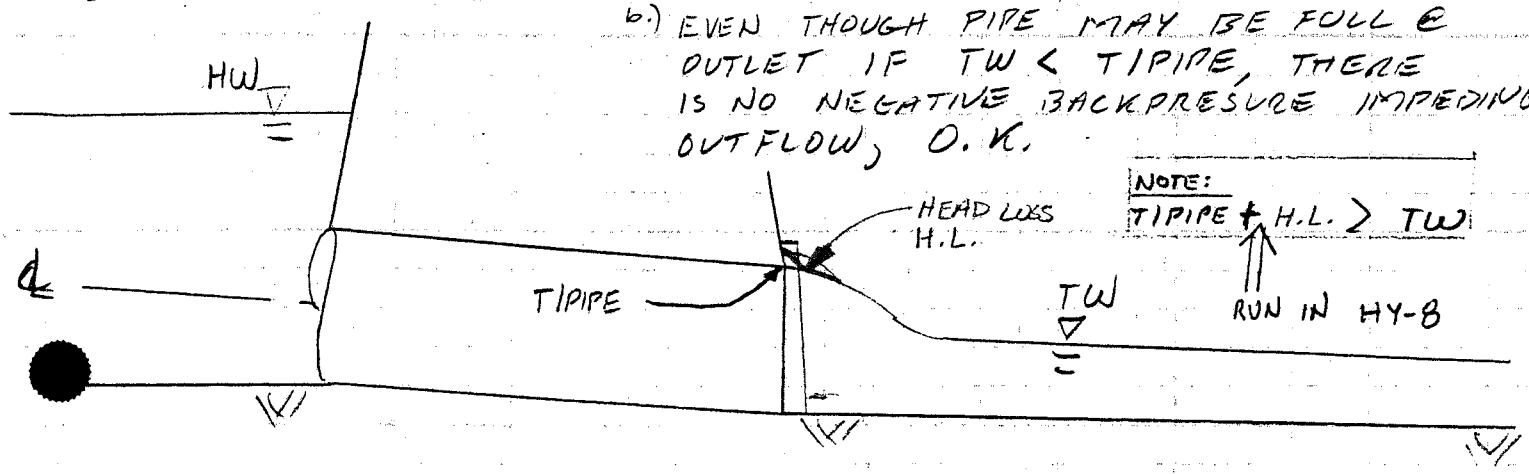

NOTE:
T/PIPE + H.L. > TW
RUN IN HY-8

1.) TRASH RACK H.L. ARE ADDED TO DOWNSTREAM T/PIPE & TW

a.) CHOOSE THE LARGER (T/PIPE + H.L IN THIS CASE ABOVE)

b.) RUN HY-8; COMPARE ORIGINAL DISCHARGE TO NEW DISCHARGE Q_2

(B)

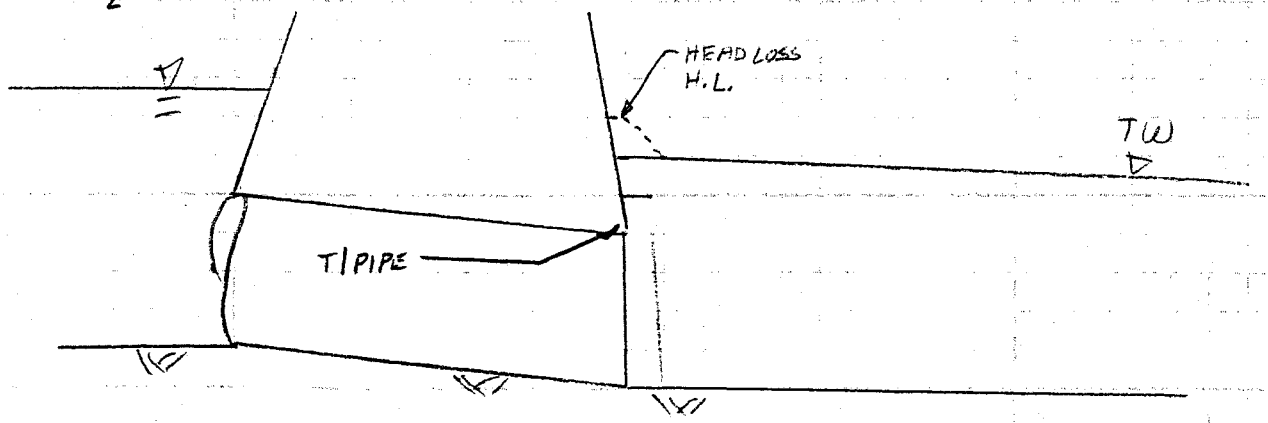

NOTE:
T/PIPE + H.L. < TW

Stantec

Project: GEPD - OUTLET HEAD LOSS Project Number:

Notes: @ 8'x4' RCB Scale:

NO CLOGGING Page 1 of Page(s)

Computed By: RJS Date: 8 10 99 Checked By: Date:

8'x4' OUTLET TRASH RACK

APWA 360-0

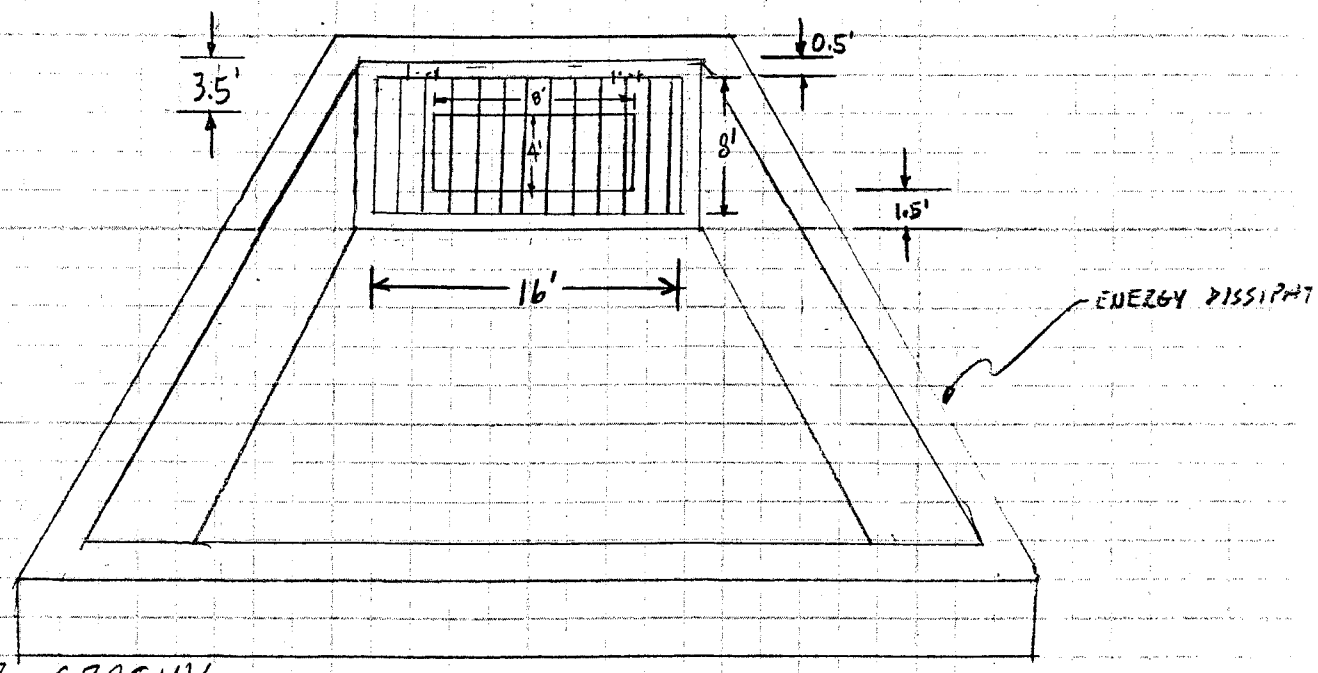

I-) 8" BAR SPACING

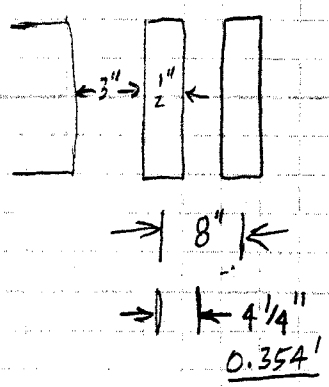

A-) WIDTH OF RACK => 16'

B-) LENGTH OF RACK => 8'

Stantec

Project: GEPD - OUTLET HEAD LOSS Project Number:

Notes: Scale:

Page 1 of Page(s)

Computed By: Date: Checked By: Date:

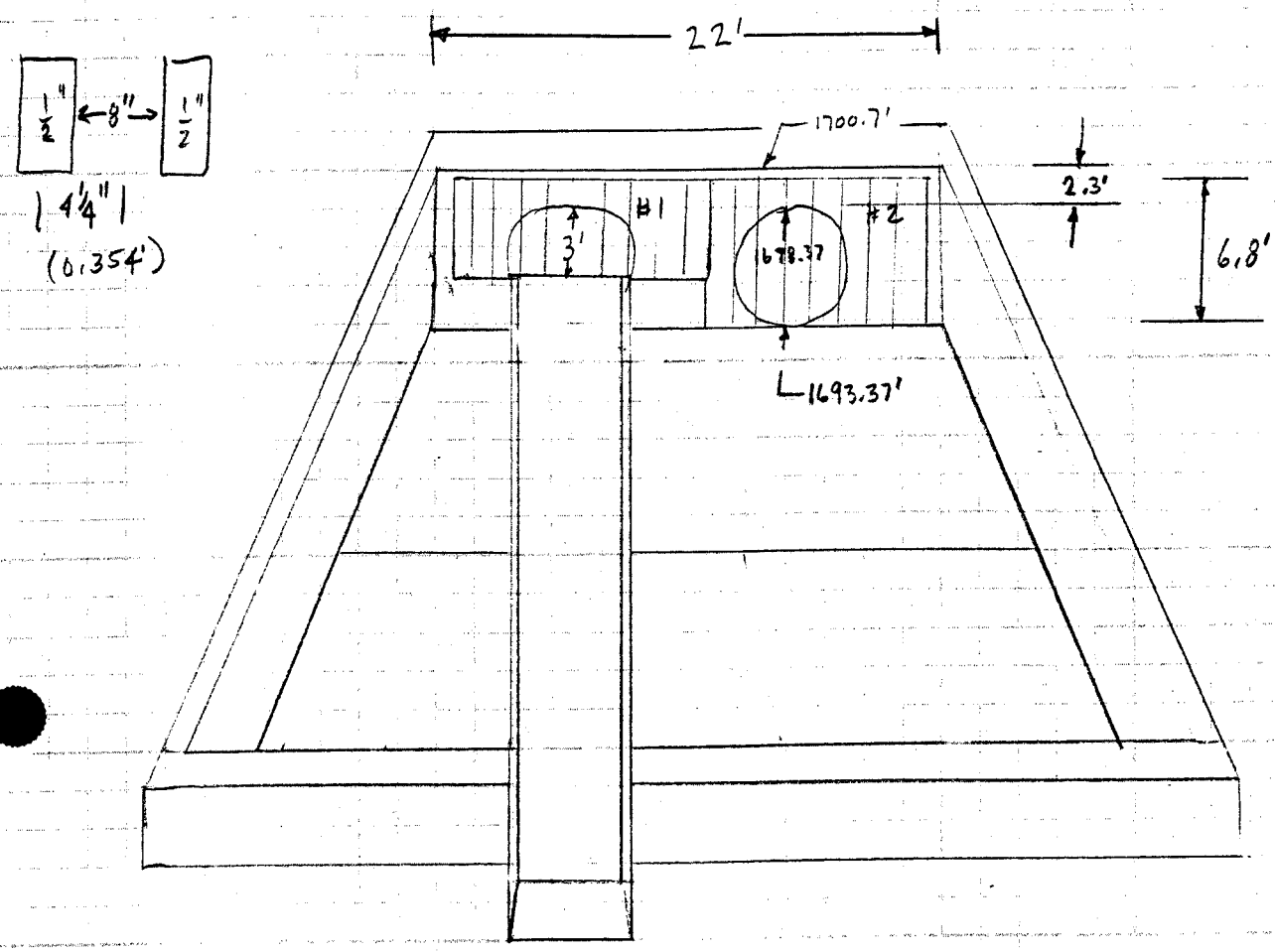

I.) TRASH RACK #1

10' WIDE
3.0' LONGITUDINAL LENGTH

BARS = 28 BARS

A_b : 28 x 3' x 1/2" = 3.5sf

A_g : 10' x 3' = 30sf

TRASH RACK #2

10' WIDE
6.8' LONGITUDINAL LENGTH

BARS = 10 ÷ .354 = 28 BARS

A_b = 28 x 6.8' x 1/2" = 7.9sf

A_g = 10 x 6.8 = 68sf

TOTAL A_b = 11.4sf

TOTAL A_g = 98sf

A_n = 86.6sf

RESULTS:

STAGE 1696 HEADLOSS Ø ⟹ @ 1716 HL = 0.3' ∴ TW = 1697 < 1678.37 (T/PIPE)

Stantec

Project: GEPD Project Number:

Notes: TRASH RACK HEADLOSS @ OUTLETS Scale:

Page 1 of 2 Page(s)

Computed By: Date: Checked By: Date:

I) CHECK EFFECT OF TRASH RACK HEAD LOSS AT OUTLET ON HW @ INLET

A-) PROCEDURE

1.) CALC. HL THROUGH OUTLET T.R.
2.) ADD HL TO TW @ OUTLET
3.) IF TW > TIPIPE THEN RUN HY8 TO GET NEW Q AT GIVEN STAGE (OUTLET CONTROL, GOTO 4.).

IF TW < TIPIPE, INLET CONTROL → DONE

4.) ADD H.L. THROUGH INLET TO STAGE IN QUESTION
5.) RE-CALC. Q USING THE Q FROM STEP 3.) AS A BASE LINE

①

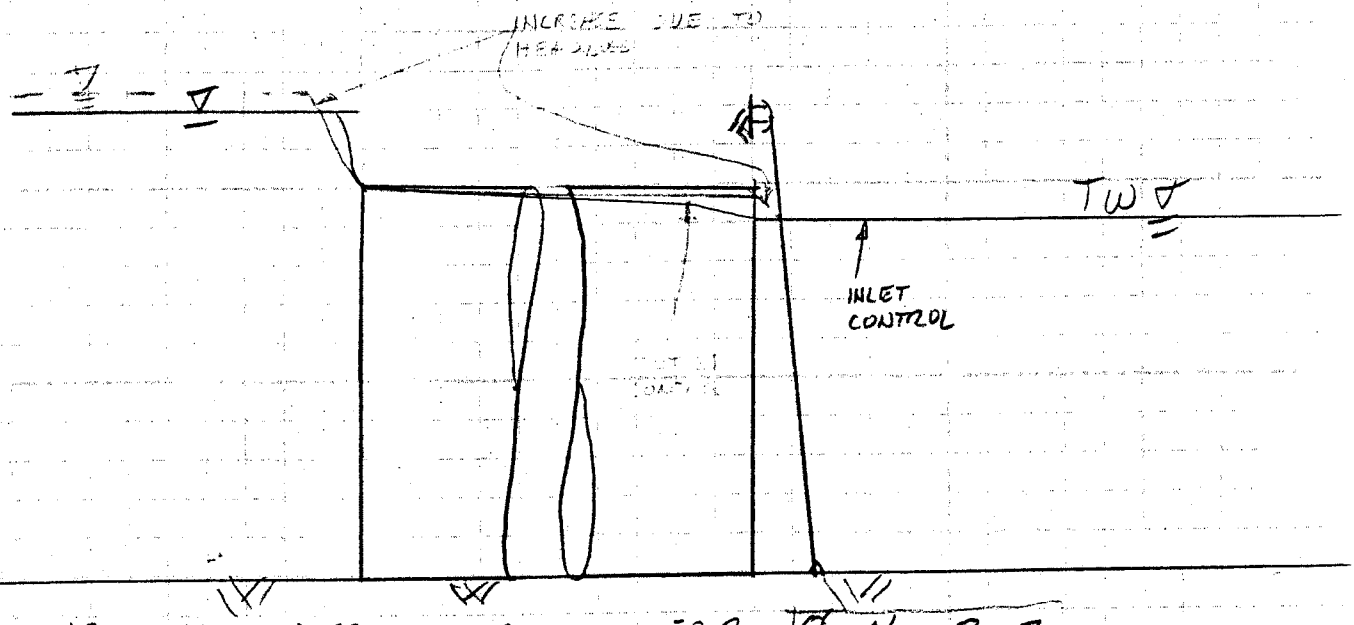

II) CHECK 100YR AND 1DF2 IMPACTS FOR 8x4' RCB

ADD SINCE TW1 < TIPIPE

1.)

* STAGE	Q	TIPIPE @ OUTLET	TW1	HL	TW2	CONTROL	
1714.5	702	1697.95	1695.11	0.16	1698.11	INLET	OK
1714.86	709	1697.95	1695.13	0.17	1698.12	INLET	OK
1715.00	712	1697.95	1695.22	0.17	1698.12	INLET	OK

* NO CHANGE/IMPACT ON CULVERT CAPACITY

* FROM HY8 RUN W/TW2, Q1 DID NOT CHANGE?

Stantec

Project: GEPD Project Number:

Notes: TRASH RACK HEADLOSS @ OUTLET Scale:

Page 2 of 2 Page(s)

Computed By: Date: Checked By: Date:

CHECK 8'x 4' CONT....

ADD SINCE TW1 > TIPIPE

2.) STAGE	Q1	TIPIPE OUTLET	TW1	HL	TW2	CONTROL	
1723	855	1697.95	1704.51	0.24	1704.75	OUTLET	#1
1723.5	863	1697.95	1704.81	0.25	1705.06	OUTLET	#1
1724	871	1697.95	1705.05	0.25	1705.30	OUTLE	#1

#1 RUN HY-8 w/ TW2 !

STAGE	HY-8 Q2		ORIG. Q1	
1723	855	vs.	855	NO CHANGE - O.K.
1723.5	862	vs.	863	Δ = -1cfs ie, NO CHANGE - O.K.
1724	870	vs.	871	Δ = -1cfs ie, NO CHANGE - O.K.

CONCLUSION:

ADDING A TRASHRACK/ ACCESS BARRIER AT THE DOWN STREAM SIDE OF THE 8'x4' HAS NO ADVERSE EFFECTS ON SYSTEM.

III.) CHECK 100YR AND 1DF2 IMPACTS FOR 2-60" RCP

ADD SINCE TW1 < TIPIPE

STAGE	Q1	TIPIPE OUTLET	TW1	HL	TW2	CONTROL	
1714.5	644	1698.24	1695.11	0.23	1698.47	INLET	FROM HY8
1714.86	652	1698.24	1695.43	0.24	1698.48	INLET	FROM HY8
1715	654	1698.24	1695.22	0.24	1698.48	INLET	FROM HY8

ADDED SINCE TW1 > TIPIPE

1723	778	1698.24	1704.51	0.34	1704.85	OUTLET	#2
1723.5	784	1698.24	1704.81	0.35	1705.16	OUTLET	#2
1724	790	1698.24	1705.05	0.35	1705.40	OUTLET	#2

HY8 Q2: 644 ... NO CHANGE

#2 RUN HY8 w/TW2 !

STAGE	HY8 Q2		ORIG. Q1	
1723	485+284 = 769	vs.	778	Δ = -9cfs (NOT SIGNIFICANT) - O.K.
1723.5	490+286 = 776	vs.	784	Δ = -8cfs (NOT SIG.) - O.K.
1724	495+288 = 783	vs.	790	Δ = -7cfs (NOT SIG.) - O.K.

Golden Eagle Park Dam trashrack headloss for unclogged @ OUTLET - NO CLOGGING

Calculated Bar Area, A_b = 15.00 sf

1- 8' x 4' BOX

$k_t = 1.45-[0.45(a_n/a_g)]-(a_n/a_g)^2$

outlet inv=1693.95

Q/a_n

1693.95

1697.95

without trash rack Discharge cfs	a_g Trashrack Area[a] Gross[b] sq. feet	a_n Unclogged Net[c] sq. feet	K [1]Headloss Coefficient Unclogged	Unclogged Velocity Through Bars[d] fps	Unclogged Headloss[e] feet	inlet stage feet	Tailwater at outlet feet	Effective Tailwater at outlet feet	T/pipe at outlet feet	Control
0	128.00	113.00	0.273	0	0	1694.60	1690.00	1690.00	1697.95	
48	128.00	113.00	0.273	0.42	0.00	1696.00	1691.91	1691.91	1697.95	
127	128.00	113.00	0.273	1.12	0.01	1698.00	1692.60	1692.61	1697.95	
244	128.00	113.00	0.273	2.16	0.02	1700.00	1693.34	1693.36	1697.95	
346	128.00	113.00	0.273	3.06	0.04	1702.00	1693.84	1693.88	1697.95	
429	128.00	113.00	0.273	3.80	0.06	1704.00	1694.17	1694.23	1697.95	
497	128.00	113.00	0.273	4.40	0.08	1706.00	1694.42	1694.50	1697.95	
555	128.00	113.00	0.273	4.91	0.10	1708.00	1694.63	1694.73	1697.95	
604	128.00	113.00	0.273	5.35	0.12	1710.00	1694.80	1694.92	1697.95	
649	128.00	113.00	0.273	5.74	0.14	1712.00	1694.95	1695.09	1697.95	
692	128.00	113.00	0.273	6.12	0.16	1714.00	1695.08	1695.24	1697.95	
702	128.00	113.00	0.273	6.21	**0.16**	**1714.50**	**1695.11**	**1695.27**	1697.95	inlet
709	128.00	113.00	0.273	6.27	**0.17**	**1714.86**	**1695.13**	**1695.30**	1697.95	inlet
712	128.00	113.00	0.273	6.30	**0.17**	**1715.00**	**1695.22**	**1695.39**	1697.95	inlet
730	128.00	113.00	0.273	6.46	0.18	1716.00	1696.70	1696.88	1697.95	
759	128.00	113.00	0.273	6.72	0.19	1717.50	1699.47	1699.66	1697.95	
787	128.00	113.00	0.273	6.96	0.21	1719.00	1702.61	1702.82	1697.95	
813	128.00	113.00	0.273	7.19	0.22	1720.50	1703.36	1703.58	1697.95	
831	128.00	113.00	0.273	7.35	0.23	1721.50	1703.85	1704.08	1697.95	
839	128.00	113.00	0.273	7.42	0.23	1722.00	1704.10	1704.33	1697.95	
847	128.00	113.00	0.273	7.50	0.24	1722.50	1704.33	1704.57	1697.95	
855	128.00	113.00	0.273	7.57	**0.24**	**1723.00**	**1704.51**	**1704.75**	1697.95	outlet
863	128.00	113.00	0.273	7.64	**0.25**	**1723.50**	**1704.81**	**1705.06**	1697.95	outlet
871	128.00	113.00	0.273	7.71	**0.25**	**1724.00**	**1705.05**	**1705.30**	1697.95	outlet
879	128.00	113.00	0.273	7.78	0.26	1724.50	1705.29	1705.55	1697.95	
887	128.00	113.00	0.273	7.85	0.26	1725.00	1705.53	1705.79	1697.95	
895	128.00	113.00	0.273	7.92	0.27	1725.50	1705.75	1706.02	1697.95	
902	128.00	113.00	0.273	7.98	0.27	1726.00	1706.00	1706.27	1697.95	
910	128.00	113.00	0.273	8.05	0.28	1726.50	1706.24	1706.52	1697.95	
917	128.00	113.00	0.273	8.12	0.28	1727.00	1706.46	1706.74	1697.95	
919	128.00	113.00	0.273	8.13	0.28	1727.50	1706.70	1706.98	1697.95	
920	128.00	113.00	0.273	8.14	0.28	1728.00	1706.93	1707.21	1697.95	
930	128.00	113.00	0.273	8.23	0.29	1728.50	1707.16	1707.45	1697.95	
940	128.00	113.00	0.273	8.31	0.29	1729.00	1707.39	1707.68	1697.95	
949	128.00	113.00	0.273	8.40	0.30	1729.50	1707.61	1707.91	1697.95	
959	128.00	113.00	0.273	8.49	0.31	1730.00	1707.84	1708.15	1697.95	

Notes
a: Only fully submereged conditions are considered.
b: Assumes the trashrack is mounted on a "u-shaped" headwall as shown on figure.
c: Assumes 50% of gross area is clogging after the bar area is subtracted.
d: Velocity through the net area.
e: Headloss below fully submerged trashrack is linearly interpolated.

1. Computation based on USBR method

Golden Eagle Park Dam trashrack headloss for unclogged @ OUTLET - NO CLOGGING

Calculated Bar Area, A_b = 11.40 sf

2 - 60 inch RCP
$k_t = 1.45-[0.45(a_n/a_g)]-(a_n/a_g)^2$

without trash rack Discharge cfs	a_g Trashrack Area[a] Gross[b] sq. feet	a_n Unclogged Net[c] sq. feet	K [1]Headloss Coefficient Unclogged	Q/a_n Unclogged Velocity Through Bars[d] fps	Unclogged Headloss[e] feet	inlet Stage feet	Tailwater at outlet feet	Effective Tailwater at outlet feet	1693.24 1698.24 T/pipe at outlet feet	control
0	98.00	86.60	0.271	0	0	1694.60	1690.00	1690.00	1698.24	
32	98.00	86.60	0.271	0.37	0.00	1696.00	1691.91	1691.91	1698.24	
96	98.00	86.60	0.271	1.11	0.01	1698.00	1692.60	1692.61	1698.24	
216	98.00	86.60	0.271	2.49	0.03	1700.00	1693.34	1693.37	1698.24	
314	98.00	86.60	0.271	3.62	0.06	1702.00	1693.84	1693.90	1698.24	
389	98.00	86.60	0.271	4.49	0.09	1704.00	1694.17	1694.26	1698.24	
447	98.00	86.60	0.271	5.16	0.11	1706.00	1694.42	1694.53	1698.24	
501	98.00	86.60	0.271	5.78	0.14	1708.00	1694.63	1694.77	1698.24	
549	98.00	86.60	0.271	6.34	0.17	1710.00	1694.80	1694.97	1698.24	
592	98.00	86.60	0.271	6.83	0.20	1712.00	1694.95	1695.15	1698.24	
633	98.00	86.60	0.271	7.31	0.23	1714.00	1695.08	1695.31	1698.24	
644	98.00	86.60	0.271	7.43	**0.23**	**1714.50**	**1695.11**	**1695.34**	**1698.24**	inlet
652	98.00	86.60	0.271	7.53	**0.24**	**1714.86**	**1695.13**	**1695.37**	**1698.24**	inlet
654	98.00	86.60	0.271	7.55	**0.24**	**1715.00**	**1695.22**	**1695.46**	**1698.24**	inlet
673	98.00	86.60	0.271	7.77	0.25	1716.00	1696.70	1696.95	1698.24	
700	98.00	86.60	0.271	8.08	0.28	1717.50	1699.47	1699.75	1698.24	
723	98.00	86.60	0.271	8.35	0.29	1719.00	1702.61	1702.90	1698.24	
745	98.00	86.60	0.271	8.60	0.31	1720.50	1703.36	1703.67	1698.24	
758	98.00	86.60	0.271	8.75	0.32	1721.50	1703.85	1704.17	1698.24	
765	98.00	86.60	0.271	8.83	0.33	1722.00	1704.10	1704.43	1698.24	
771	98.00	86.60	0.271	8.90	0.33	1722.50	1704.33	1704.66	1698.24	
778	98.00	86.60	0.271	8.98	**0.34**	**1723.00**	**1704.51**	**1704.85**	**1698.24**	
784	98.00	86.60	0.271	9.05	**0.35**	**1723.50**	**1704.81**	**1705.16**	**1698.24**	
790	98.00	86.60	0.271	9.12	**0.35**	**1724.00**	**1705.05**	**1705.40**	**1698.24**	
795	98.00	86.60	0.271	9.18	0.36	1724.50	1705.29	1705.65	1698.24	
800	98.00	86.60	0.271	9.24	0.36	1725.00	1705.53	1705.89	1698.24	
806	98.00	86.60	0.271	9.31	0.37	1725.50	1705.75	1706.12	1698.24	
811	98.00	86.60	0.271	9.36	0.37	1726.00	1706.00	1706.37	1698.24	
817	98.00	86.60	0.271	9.43	0.38	1726.50	1706.24	1706.62	1698.24	
822	98.00	86.60	0.271	9.49	0.38	1727.00	1706.46	1706.84	1698.24	
833	98.00	86.60	0.271	9.62	0.39	1727.50	1706.70	1707.09	1698.24	
844	98.00	86.60	0.271	9.74	0.40	1728.00	1706.93	1707.33	1698.24	
847	98.00	86.60	0.271	9.78	0.40	1728.50	1707.16	1707.56	1698.24	
849	98.00	86.60	0.271	9.80	0.41	1729.00	1707.39	1707.80	1698.24	
852	98.00	86.60	0.271	9.84	0.41	1729.50	1707.61	1708.02	1698.24	
854	98.00	86.60	0.271	9.86	0.41	1730.00	1707.84	1708.25	1698.24	

Notes
a: Only fully submereged conditions are considered.
b: Assumes the trashrack is mounted on a "u-shaped" headwall as shown on figure.
c: Assumes 50% of gross area is clogging after the bar area is subtracted.
d: Velocity through the net area.
e: Headloss below fully submerged trashrack is linearly interpolated.

1. Computation based on USBR method

9/13/1999 @ 6:39 AM

ANALYSIS EXPLANATION

Stantec

Project: TRASH RACK OUTLET Project Number:

Notes: Scale:

Page of Page(s)

Computed By: Date: Checked By: Date:

TRASH RACK HEADLOSS INFORMATION

ASSUMPTION: OUTLET NOT SUBMERGED BY TW

a.) INLET CONTROL

(A)

b.) EVEN THOUGH PIPE MAY BE FULL @ OUTLET IF TW < T/PIPE, THERE IS NO NEGATIVE BACKPRESURE IMPEDING OUTFLOW, O.K.

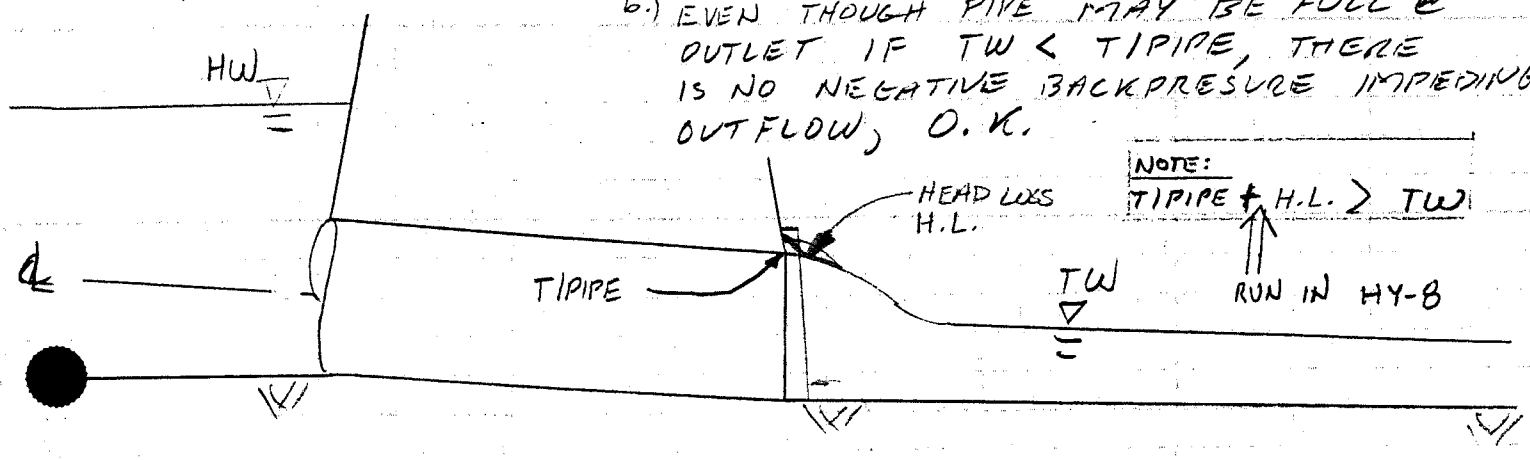

NOTE:
T/PIPE + H.L. > TW

RUN IN HY-8

1.) TRASH RACK H.L. ARE ADDED TO DOWNSTREAM T/PIPE & TW

a.) CHOOSE THE LARGER (T/PIPE + H.L. IN THIS CASE ABOVE)

b.) RUN HY-8; COMPARE ORIGINAL DISCHARGE TO NEW DISCHARGE Q_2

(B)

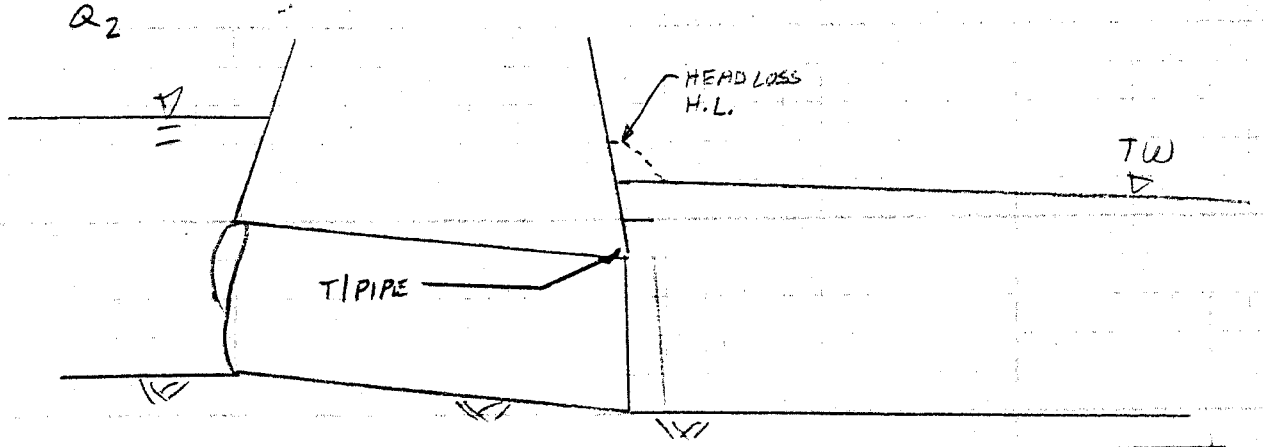

NOTE:
T/PIPE + H.L. < TW

Stantec

Project: GEPD - OUTLET HEAD LOSS Project Number:

Notes: @ 8'x4' RCB Scale:

NO CLOGGING Page 1 of Page(s)

Computed By: RJS Date: 8 10 99 Checked By: Date:

8'x4' OUTLET TRASH RACK

APWA 360-0

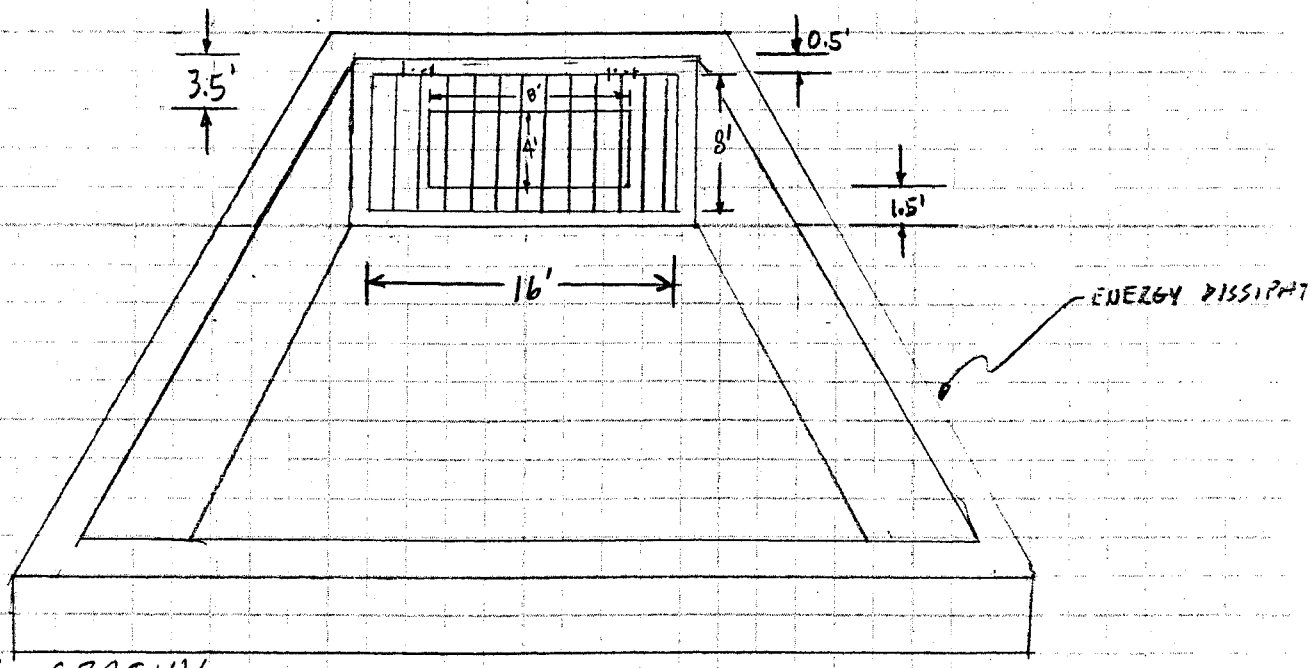

I.) 8" BAR SPACING

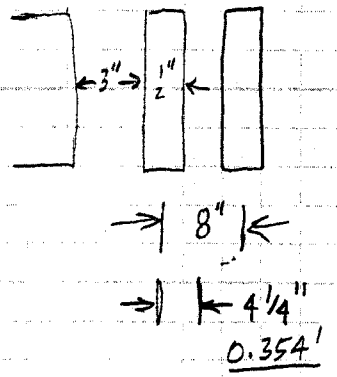

A.) WIDTH OF RACK => 16'

B.) LENGTH OF RACK => 8'

Stantec

Project: GERD - OUTLET HEAD LOSS Project Number:

Notes: Scale:

Page 1 of Page(s)

Computed By: Date: Checked By: Date:

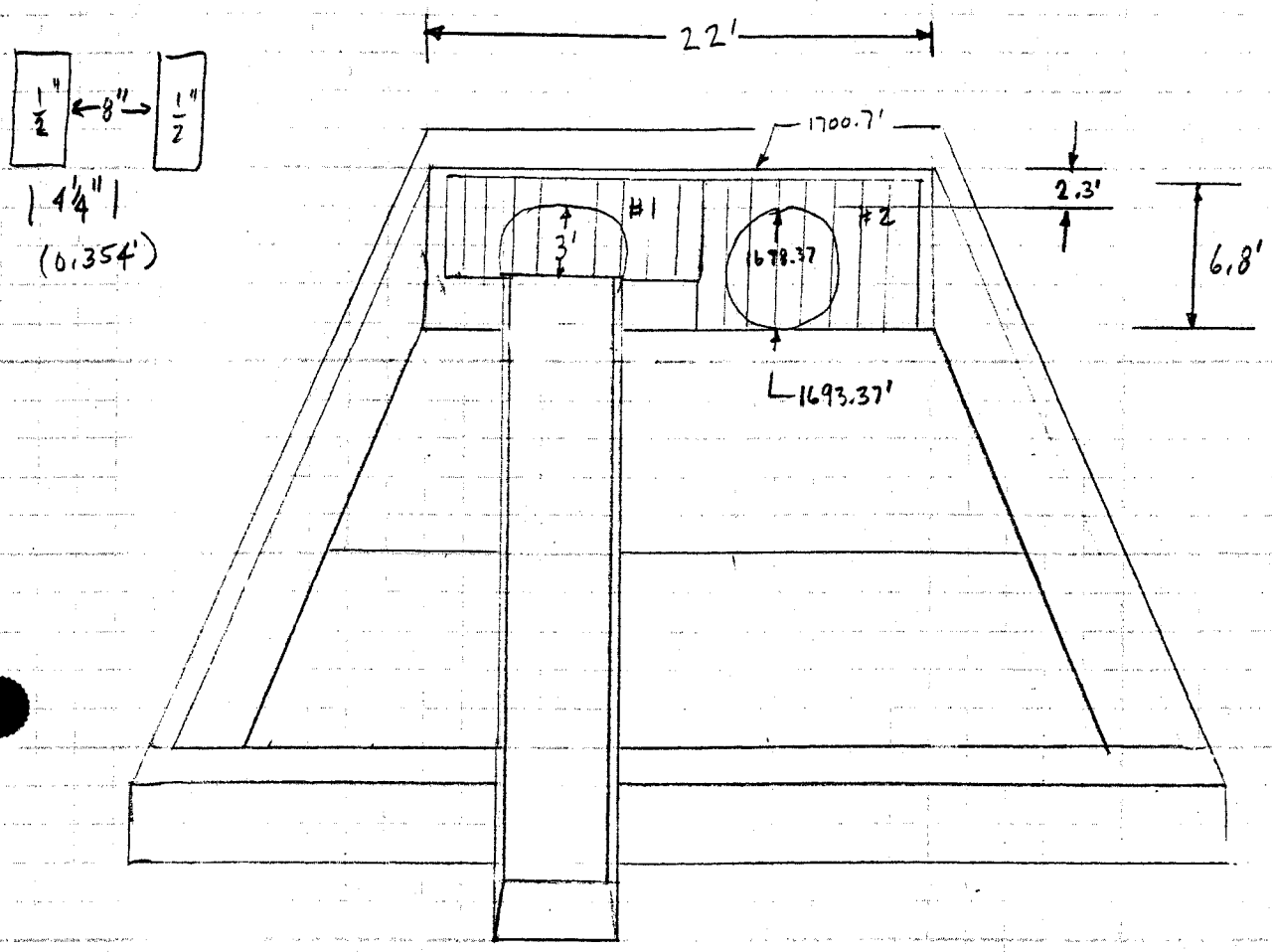

I.) TRASH RACK #1

10' WIDE
3.0' LONGITUDINAL LENGTH

BARS = 28 BARS

A_b : 28 x 3' x 1/2" = 3.5sf

A_g : 10' x 3' = 30sf

TRASH RACK #2

10' WIDE
6.8' LONGITUDINAL LENGTH

BARS = 10 ÷ .354 = 28 BARS

A_b = 28 x 6.8' x 1/2" = 7.9sf

A_g = 10 x 6.8 = 68sf

TOTAL A_b = 11.4sf

TOTAL A_g = 98sf

A_n = 86.6sf

RESULTS:

STAGE	HEADLOSS
1696	Ø ⟹ @ 1714 HL = 0.3' ∴ TW = 1697 < 1698.37

T/PIPE

Stantec

Project: GEPD Project Number:

Notes: TRASH RACK HEADLOSS @ OUTLETS Scale:

Page 1 of 2 Page(s)

Computed By: Date: Checked By: Date:

I) CHECK EFFECT OF TRASH RACK HEAD LOSS AT OUTLET ON HW @ INLET

A-) PROCEDURE

1.) CALC. HL THROUGH OUTLET T.R.

2.) ADD HL TO TW @ OUTLET

3.) IF TW > TIPIPE THEN RUN HY8 TO GET NEW Q AT GIVEN STAGE (OUTLET CONTROL, GOTO 4.).

IF TW < TIPIPE, INLET CONTROL → DONE

4.) ADD H.L. THROUGH INLET TO STAGE IN QUESTION

5.) RE-CALC. Q USING THE Q FROM STEP 3.) AS A BASE LINE

(1)

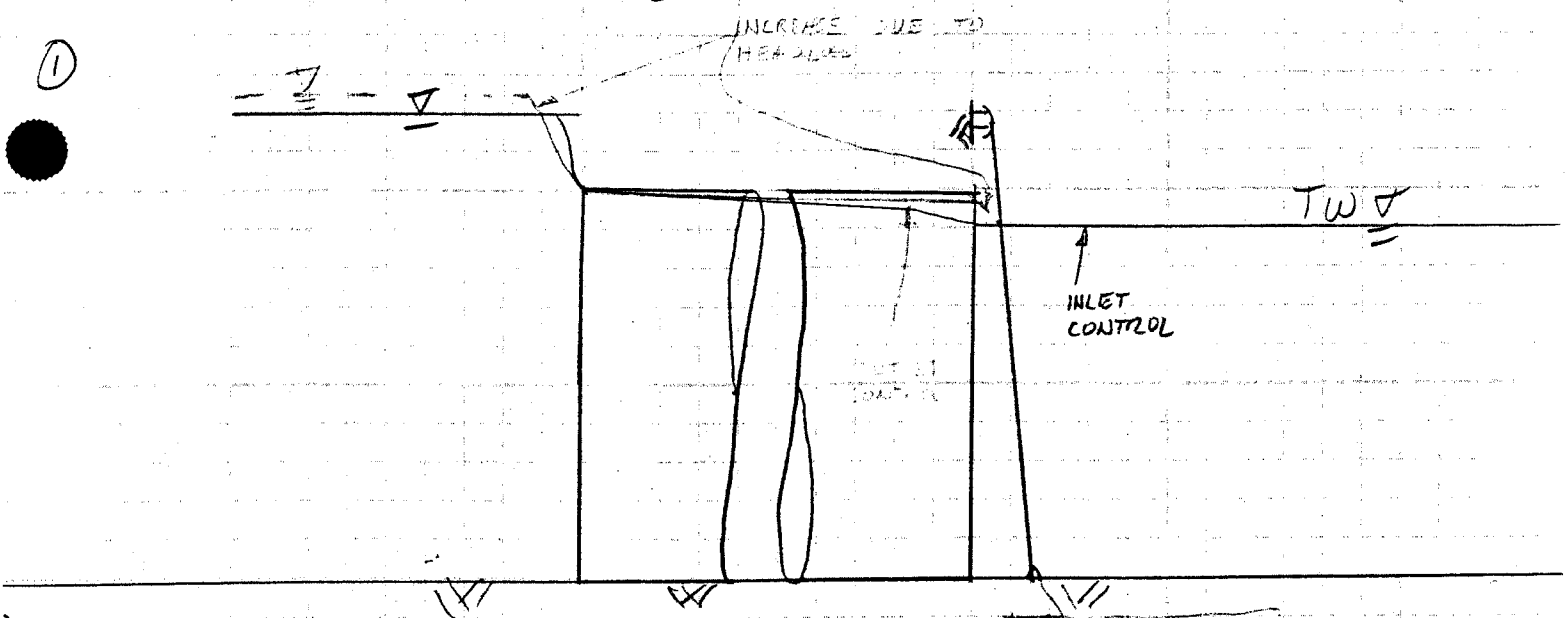

II) CHECK 100YR AND 1DF2 IMPACTS FOR 8x4' RCB

ADD SINCE TW1 < TIPIPE

1.)

* STAGE	Q1	TIPIPE @ OUTLET	TW1	HL	TW2	CONTROL	
1714.5	702	1697.95	1695.11	vs 0.16	1698.11	INLET	OK
1714.86	709	1697.95	1695.13	vs 0.17	1698.12	INLET	OK
1715.00	712	1697.95	1695.22	0.17	1698.12	INLET	OK

* NO CHANGE/IMPACT ON CULVERT CAPACITY

* FROM HY8 RUN W/TW2, Q1 DID NOT CHANGE?

Stantec

Project: GEPD Project Number:

Notes: TRASH RACK HEADLOSS @ OUTLET Scale:

Page 2 of 2 Page(s)

Computed By: Date: Checked By: Date:

CHECK 8' x 4' CONT....

ADD SINCE $TW_1 > TIPIPE$

2.) STAGE	Q_1	TIPIPE OUTLET	TW_1	HL	TW_2	CONTROL	
1723	855	1697.95	1704.51	0.24	1704.75	OUTLET	#1
1723.5	863	1697.95	1704.81	0.25	1705.06	OUTLET	#1
1724	871	1697.95	1705.05	0.25	1705.30	OUTLE	#1

#1 RUN HY-8 w/ TW_2:

STAGE	HY-8 Q_2		ORIG. Q_1	
1723	855	vs.	855	NO CHANGE - O.K.
IDF1 1723.5	862	vs.	863	Δ = -1 cfs ie, NO CHANGE - O.K.
1724	870	vs.	871	Δ = -1 cfs ie, NO CHANGE - O.K.

CONCLUSION:

ADDING A TRASHRACK/ ACCESS BARRIER AT THE DOWN STREAM SIDE OF THE 8'x4' HAS NO ADVERSE EFFECTS ON SYSTEM.

III.) CHECK 100YR AND IDF2 IMPACTS FOR 2-60" RCP

ADD SINCE $TW_1 < TIPIPE$

STAGE	Q_1	TIPIPE OUTLET	TW_1	HL	TW_2	CONTROL	
1714.5	644	1698.24	1695.11	0.23	1698.47	INLET	FROM HY8
1714.86	652	1698.24	1695.43	0.24	1698.48	INLET	FROM HY8
1715	654	1698.24	1695.22	0.24	1698.48	INLET	FROM HY8
			ADDED SINCE $TW_1 > TIPIPE$				
1723	778	1698.24	1704.51	0.34	1704.85	OUTLET	#2
1723.5	784	1698.24	1704.81	0.35	1705.16	OUTLET	#2
1724	790	1698.24	1705.05	0.35	1705.40	OUTLET	#2

HY8 Q_2: 644

NO CHANGE

#2 RUN HY8 w/ TW_2:

STAGE	HY8 Q_2		ORIG. Q_1	
1723	485 + 284 = 769	vs.	778	Δ = -9 cfs (NOT SIGNIFICANT) - O.K.
1723.5	490 + 286 = 776	vs.	784	Δ = -8 cfs (NOT SIG.) - O.K.
1724	495 + 288 = 783	vs.	790	Δ = -7 cfs (NOT SIG.) - O.K.

Golden Eagle Park Dam trashrack headloss for unclogged @ OUTLET - NO CLOGGING

Calculated Bar Area, A_b = 15.00 sf

1- 8' x 4' BOX

$k_t = 1.45-[0.45(a_n/a_g)]-(a_n/a_g)^2$

outlet inv=1693.95

Q/a_n

1693.95

1697.95

without trash rack Discharge cfs	Trashrack Area[a] a_g Gross[b] sq. feet	Unclogged a_n Net[c] sq. feet	K [1]Headloss Coefficient Unclogged	Unclogged Velocity Through Bars[d] fps	Unclogged Headloss[e] feet	inlet stage feet	Tailwater at outlet feet	Effective Tailwater at outlet feet	T/pipe at outlet feet	Control
0	128.00	113.00	0.273	0	0	1694.60	1690.00	1690.00	1697.95	
48	128.00	113.00	0.273	0.42	0.00	1696.00	1691.91	1691.91	1697.95	
127	128.00	113.00	0.273	1.12	0.01	1698.00	1692.60	1692.61	1697.95	
244	128.00	113.00	0.273	2.16	0.02	1700.00	1693.34	1693.36	1697.95	
346	128.00	113.00	0.273	3.06	0.04	1702.00	1693.84	1693.88	1697.95	
429	128.00	113.00	0.273	3.80	0.06	1704.00	1694.17	1694.23	1697.95	
497	128.00	113.00	0.273	4.40	0.08	1706.00	1694.42	1694.50	1697.95	
555	128.00	113.00	0.273	4.91	0.10	1708.00	1694.63	1694.73	1697.95	
604	128.00	113.00	0.273	5.35	0.12	1710.00	1694.80	1694.92	1697.95	
649	128.00	113.00	0.273	5.74	0.14	1712.00	1694.95	1695.09	1697.95	
692	128.00	113.00	0.273	6.12	0.16	1714.00	1695.08	1695.24	1697.95	
702	128.00	113.00	0.273	6.21	**0.16**	**1714.50**	**1695.11**	**1695.27**	1697.95	inlet
709	128.00	113.00	0.273	6.27	**0.17**	**1714.86**	**1695.13**	**1695.30**	1697.95	inlet
712	128.00	113.00	0.273	6.30	**0.17**	**1715.00**	**1695.22**	**1695.39**	1697.95	inlet
730	128.00	113.00	0.273	6.46	0.18	1716.00	1696.70	1696.88	1697.95	
759	128.00	113.00	0.273	6.72	0.19	1717.50	1699.47	1699.66	1697.95	
787	128.00	113.00	0.273	6.96	0.21	1719.00	1702.61	1702.82	1697.95	
813	128.00	113.00	0.273	7.19	0.22	1720.50	1703.36	1703.58	1697.95	
831	128.00	113.00	0.273	7.35	0.23	1721.50	1703.85	1704.08	1697.95	
839	128.00	113.00	0.273	7.42	0.23	1722.00	1704.10	1704.33	1697.95	
847	128.00	113.00	0.273	7.50	0.24	1722.50	1704.33	1704.57	1697.95	
855	128.00	113.00	0.273	7.57	**0.24**	**1723.00**	**1704.51**	**1704.75**	1697.95	outlet
863	128.00	113.00	0.273	7.64	**0.25**	**1723.50**	**1704.81**	**1705.06**	1697.95	outlet
871	128.00	113.00	0.273	7.71	**0.25**	**1724.00**	**1705.05**	**1705.30**	1697.95	outlet
879	128.00	113.00	0.273	7.78	0.26	1724.50	1705.29	1705.55	1697.95	
887	128.00	113.00	0.273	7.85	0.26	1725.00	1705.53	1705.79	1697.95	
895	128.00	113.00	0.273	7.92	0.27	1725.50	1705.75	1706.02	1697.95	
902	128.00	113.00	0.273	7.98	0.27	1726.00	1706.00	1706.27	1697.95	
910	128.00	113.00	0.273	8.05	0.28	1726.50	1706.24	1706.52	1697.95	
917	128.00	113.00	0.273	8.12	0.28	1727.00	1706.46	1706.74	1697.95	
919	128.00	113.00	0.273	8.13	0.28	1727.50	1706.70	1706.98	1697.95	
920	128.00	113.00	0.273	8.14	0.28	1728.00	1706.93	1707.21	1697.95	
930	128.00	113.00	0.273	8.23	0.29	1728.50	1707.16	1707.45	1697.95	
940	128.00	113.00	0.273	8.31	0.29	1729.00	1707.39	1707.68	1697.95	
949	128.00	113.00	0.273	8.40	0.30	1729.50	1707.61	1707.91	1697.95	
959	128.00	113.00	0.273	8.49	0.31	1730.00	1707.84	1708.15	1697.95	

Notes
a: Only fully submereged conditions are considered.
b: Assumes the trashrack is mounted on a "u-shaped" headwall as shown on figure.
c: Assumes 50% of gross area is clogging after the bar area is subtracted.
d: Velocity through the net area.
e: Headloss below fully submerged trashrack is linearly interpolated.

1. Computation based on USBR method

Golden Eagle Park Dam trashrack headloss for unclogged @ OUTLET - NO CLOGGING

Calculated Bar Area, A_b = 11.40 sf

2 - 60 inch RCP
$k_t = 1.45-[0.45(a_n/a_g)]-(a_n/a_g)^2$

without trash rack Discharge cfs	Trashrack Area[a] Unclogged a_g Gross[b] sq. feet	a_n Net[c] sq. feet	K [1]Headloss Coefficient Unclogged	Q/a_n Unclogged Velocity Through Bars[d] fps	Unclogged Headloss[e] feet	inlet Stage feet	Tailwater at outlet feet	Effective Tailwater at outlet feet	1693.24 1698.24 T/pipe at outlet feet	control
0	98.00	86.60	0.271	0	0	1694.60	1690.00	1690.00	1698.24	
32	98.00	86.60	0.271	0.37	0.00	1696.00	1691.91	1691.91	1698.24	
96	98.00	86.60	0.271	1.11	0.01	1698.00	1692.60	1692.61	1698.24	
216	98.00	86.60	0.271	2.49	0.03	1700.00	1693.34	1693.37	1698.24	
314	98.00	86.60	0.271	3.62	0.06	1702.00	1693.84	1693.90	1698.24	
389	98.00	86.60	0.271	4.49	0.09	1704.00	1694.17	1694.26	1698.24	
447	98.00	86.60	0.271	5.16	0.11	1706.00	1694.42	1694.53	1698.24	
501	98.00	86.60	0.271	5.78	0.14	1708.00	1694.63	1694.77	1698.24	
549	98.00	86.60	0.271	6.34	0.17	1710.00	1694.80	1694.97	1698.24	
592	98.00	86.60	0.271	6.83	0.20	1712.00	1694.95	1695.15	1698.24	
633	98.00	86.60	0.271	7.31	0.23	1714.00	1695.08	1695.31	1698.24	
644	98.00	86.60	0.271	7.43	**0.23**	**1714.50**	**1695.11**	**1695.34**	**1698.24**	inlet
652	98.00	86.60	0.271	7.53	**0.24**	**1714.86**	**1695.13**	**1695.37**	**1698.24**	inlet
654	98.00	86.60	0.271	7.55	**0.24**	**1715.00**	**1695.22**	**1695.46**	**1698.24**	inlet
673	98.00	86.60	0.271	7.77	0.25	1716.00	1696.70	1696.95	1698.24	
700	98.00	86.60	0.271	8.08	0.28	1717.50	1699.47	1699.75	1698.24	
723	98.00	86.60	0.271	8.35	0.29	1719.00	1702.61	1702.90	1698.24	
745	98.00	86.60	0.271	8.60	0.31	1720.50	1703.36	1703.67	1698.24	
758	98.00	86.60	0.271	8.75	0.32	1721.50	1703.85	1704.17	1698.24	
765	98.00	86.60	0.271	8.83	0.33	1722.00	1704.10	1704.43	1698.24	
771	98.00	86.60	0.271	8.90	0.33	1722.50	1704.33	1704.66	1698.24	
778	98.00	86.60	0.271	8.98	**0.34**	**1723.00**	**1704.51**	**1704.85**	**1698.24**	
784	98.00	86.60	0.271	9.05	**0.35**	**1723.50**	**1704.81**	**1705.16**	**1698.24**	
790	98.00	86.60	0.271	9.12	**0.35**	**1724.00**	**1705.05**	**1705.40**	**1698.24**	
795	98.00	86.60	0.271	9.18	0.36	1724.50	1705.29	1705.65	1698.24	
800	98.00	86.60	0.271	9.24	0.36	1725.00	1705.53	1705.89	1698.24	
806	98.00	86.60	0.271	9.31	0.37	1725.50	1705.75	1706.12	1698.24	
811	98.00	86.60	0.271	9.36	0.37	1726.00	1706.00	1706.37	1698.24	
817	98.00	86.60	0.271	9.43	0.38	1726.50	1706.24	1706.62	1698.24	
822	98.00	86.60	0.271	9.49	0.38	1727.00	1706.46	1706.84	1698.24	
833	98.00	86.60	0.271	9.62	0.39	1727.50	1706.70	1707.09	1698.24	
844	98.00	86.60	0.271	9.74	0.40	1728.00	1706.93	1707.33	1698.24	
847	98.00	86.60	0.271	9.78	0.40	1728.50	1707.16	1707.56	1698.24	
849	98.00	86.60	0.271	9.80	0.41	1729.00	1707.39	1707.80	1698.24	
852	98.00	86.60	0.271	9.84	0.41	1729.50	1707.61	1708.02	1698.24	
854	98.00	86.60	0.271	9.86	0.41	1730.00	1707.84	1708.25	1698.24	

Notes
a: Only fully submereged conditions are considered.
b: Assumes the trashrack is mounted on a "u-shaped" headwall as shown on figure.
c: Assumes 50% of gross area is clogging after the bar area is subtracted.
d: Velocity through the net area.
e: Headloss below fully submerged trashrack is linearly interpolated.

1. Computation based on USBR method

APPENDIX H

REPORT OF STRUCTURAL ANALYSIS OF PRINCIPAL SPILLWAY CONDUITS BY T.Y. LIN INTERNATIONAL, INC.

T·Y·LIN INTERNATIONAL

To : Mr. George Sabol, PE
Stantech Consulting Inc.
7776 Pointe Parkway West, Suite 290
Phoenix, AZ 85044

From : Claudia G. Perchinelli, P.E. CGP

Date : May 13, 1999

Copy : Dan Heller

Reference : Golden Eagle Park Dam – Principal Outlet Works

Memorandum

The existing outlet works at Golden Eagle Park Dam has been analyzed for a loading that reflects raising the dam 7 ft. Our analysis shows that the existing principal outlet works is adequate for this loading. Our analysis is based on the assumption that the double 60" diameter RCP is per ASTM C-76, Class III and the concrete cradle was only poured up to the springline of the pipe. These assumptions are conservative with respect to what was shown on the design documents. These assumptions were based on the construction inspection reports. Attached for your information are these construction inspection reports obtained from the Department of Water Resource's file.

If you have any questions or need additional information please call.

1270 E. Broadway Rd, Suite 122 Tempe, AZ 85282 Fax (602) 921-0002 Tel (602) 968 -8814

T·Y·LIN INTERNATIONAL

Project: Golden Eagle Park Dam | Job No. 1285 | Sheet: 1 of 2
Item: Pipe - 60" OD, C76 Principle Outlet Works | Designer: CGP | Date: 5/7/99
Checker: [illegible] | Date: 9/99
Grid: 1/10"

ASSUME ASTM C76, CLASS III

Inspection Report 3/29/72 and letter from State Water Engineer dated 3/28/72 (attached)

DLOAD

$$D\ LOAD = \frac{W_L + W_E}{E_f \times D} \times FS$$

FS = 1.0 for reinf concrete

Concrete Pipe Design Manual, pp 42

ASSUME WALL A

$t_w = 5''$

ASTM C76 (attached)

for $A_s = 0.4\%$ (assume) $E_f = 3.4$

Figure 227 of Concrete Pipe Design Manual; CLASS A (attached)

TRENCH WALL CONSTRUCTION WITH Concrete cradle ($f'c = 2500$ ps)

INSPECTION RECORDS (attached)
4/21/72
4/26, 4/27 1972
5/3/72
5/5, 5/8 1972

DETERMINE W_L & W_E:

W_L = LIVE LOAD = 0

W_E = EARTH LOAD

∴ for Trench Wall Construction

Trench width c top of double 60"φ pipe = 6.92×2 ≅ 14'

INSPECTION RECORDS (attached) 4/21/72 & CONSTRUCTION PLANS

for existing conditions:

H = 23', USE K = 0.110 ⇒ W_E = 20440# * 125/100 = 25550 #

TABLE 28 D CONCRETE PIPE DESIGN MANUAL (attached)

To raise Dam 7'

H = 30', USE K = 0.110 ⇒ W_E = 26760# * 125/100 = 33450#

T·Y·LIN INTERNATIONAL

Projects: Golden Eagle Park Dam | Job No. 1285.00 | Sheet: 2 of 2
Item: Pipe - 60" O.D ASTM C76 | Designer: LGP | Date: 5/7/99
Checker: [illegible] | Date: 9/99
Grid: 1/10"

D LOAD / per pipe

$\therefore$ D LOAD (exist) = $\frac{25550/2}{3.4 \times (5.0)} \times 1.0$

D LOAD REQ'D = 752 < 1360 $\therefore$ OK

ASTM C76 CLASS III has D LOAD = 1360 and D LOAD ULT = 2000 (attached)

$\therefore$ D LOAD (new) = $\frac{33450/2}{3.4 \times (5.0)} \times 1.0$

D LOAD REQ'D = 984 < 1360 $\therefore$ OK

STATE OF ARIZONA
OFFICE OF STATE WATER ENGINEER
SUPERVISION OF DAM SAFETY

INSPECTION OF DAM CONSTRUCTION

NAME OF DAM Fountain Hills #4 DAM NO. 7-33

TYPE OF DAM Earthfill

CONTACTS Messrs. R. Tulk and G. Beckwith

STAGE OF CONSTRUCTION:

Foundation excavation is progressing. Reservoir site clearing is nearly complete.

IMPORTANT ACTIONS TAKEN:

Informally approved Zone I borrow site. Disapproved owner's request that he be permitted to construct dam as a homogeneous section, entirely of Zone I material. Approved widening the bottom of the core trench from 10' to 12' to accommodate the 12-foot width of the D-9 tractor blad

CONDITIONS NOTED AND REMARKS:

The purpose of this inspection was to inspect the foundation which the owner had expected to be ready for embankment placement on this date. However, the work had been delayed and this inspection revealed that foundation excavation was only partially completed. They had only begun excavating the core trench.

Discussion with Messrs. Tulk and Beckwith centered around the nature of the left abutment contact and the Zone I material. The cemented material exposed on the upper left abutment contact, at the core trench, is quite hard and massive. Loose material will be removed from the lower contact of the core trench to expose the harder cemented material.

The Zone I borrow area, upstream of the dam, had been cleared and the native soil had been sufficiently worked to reveal a generally well-graded clayey sandy silt. The material had been sampled and tested by Sergent, Hauskins and Beckwith. Results of the Atterberg tests revealed good gradation, adequate fines and some plasticity. This should make good Zone I material and there should be ample quantity available in the borrow area.

(see attached sheet)

Inspection by JDW/BGS
Date of Inspection 3-29-72
Date of Report 3-31-72
Photos: Yes

Mr. Tulk favored the construction of a homogeneous dam composed entirely of Zone I material. However, we expressed our desire to retain the original zoned embankment design.

Mr. Tulk was also informed that we preferred the use of ASTM C76 culvert pipe for the outlet pipes through this and Fountain Hills #7 Dams. High head AWWA pipe was called for on the plans for No. 7 Dam, and was intended to be used on this dam as well.

JDW:mf

R3

March 28, 1972

Mr. Milton Cox, President
Trico International, Inc.
8718 East McDowell Road
Scottsdale, Arizona 85257

Attention: Mr. Hal Marron, Project Engineer

Re: Flood Retarding Dams Nos. 7 & 4
(7-32, 7-33)

Gentlemen:

In a recent telephone conversation, Mr. Roger Tulk requested permission to substitute AWWA Standard C-300 for AWWA Standard C-301 for the outlet pipe on Retarding Dam #4. This standard is not shown on the plans or in the specifications for Structure #4, but is noted on Sheet 5 of the plans for Structure #7.

In lieu of either of the above AWWA specifications, we suggest the use of ASTM C76 Class III, or equivalent AASHO specification, for the 60 inch outlet pipes at Retarding Structure #4; and ASTM C76 Class IV, or equivalent AASHO specification, for the 48 inch outlet pipe at Retarding Structure #7.

As shown on the approved drawings, specially compacted backfill is required about the outlet pipes to the lines indicated. It is especially important that heavy construction equipment or embankment compactors not be permitted to cross the outlet works until the specially compacted material is in place to at least 3 feet above the top of the pipe.

Sincerely,

WESLEY E. STEINER
State Water Engineer

B. G. SCOTT
Chief, Supervision of Dam Safety

WES:BGS:JDW:mf

1994 – Annual Book of ASTM Standards

R4

TABLE 3 Design Requirements for Class III Reinforced Concrete Pipe[A]

NOTE—See Section 5 for basis of acceptance specified by the purchaser.

The strength test requirements in pounds-force per linear foot of pipe under the three-edge-bearing method shall be either the D-load (test load expressed in pounds-force per linear foot per foot of diameter) to produce a 0.01-in. crack, or the D-loads to produce the 0.01-in. crack and the ultimate load as specified below, multiplied by the internal diameter of the pipe in feet.

D-load to produce a 0.01-in. crack	1350
D-load to produce the ultimate load[F]	2000

Internal Designated Diameter, in.	Reinforcement, in.²/linear ft of pipe wall											
	Wall A				Wall B				Wall C			
	Concrete Strength, 4000 psi				Concrete Strength, 4000 psi				Concrete Strength, 4000 psi			
	Wall Thicknesses, in.	Circular Reinforcement[C] Inner Cage	Circular Reinforcement[C] Outer Cage	Elliptical Reinforcement[D]	Wall Thicknesses, in.	Circular Reinforcement[C] Inner Cage	Circular Reinforcement[C] Outer Cage	Elliptical Reinforcement[D]	Wall Thicknesses, in.	Circular Reinforcement[C] Inner Cage	Circular Reinforcement[C] Outer Cage	Elliptical Reinforcement[D]
12	1¾	0.07[B]	...	...	2	0.07[B]	...	...	2¾	0.07[B]	...	...
15	1⅞	0.07[B]	...	...	2¼	0.07[B]	...	...	3	0.07[B]	...	...
18	2	0.07[B]	...	0.07[B]	2½	0.07[B]	...	0.07[B]	3¼	0.07[B]	...	0.07[B]
21	2¼	0.14	...	0.11	2¾	0.07[B]	...	0.07[B]	3½	0.07[B]	...	0.07[B]
24	2½	0.17	...	0.14	3	0.07[B]	...	0.07[B]	3¾	0.07	...	0.07[B]
27	2⅝	0.18	...	0.16	3¼	0.16	...	0.14	4	0.08	...	0.07[B]
30	2¾	0.19	...	0.18	3½	0.18	...	0.15	4¼	0.10	...	0.08
33	2⅞	0.21	...	0.20	3¾	0.20	...	0.17	4½	0.12	...	0.10
36	3	0.21	0.13	0.23	4[E]	0.17	0.10	0.19	4¾[E]	0.08	0.07	0.09
42	3½	0.25	0.15	0.28	4½	0.21	0.13	0.23	5¼	0.12	0.07	0.13
48	4	0.32	0.19	0.35	5	0.24	0.14	0.27	5¾	0.16	0.10	0.18
54	4½	0.38	0.23	0.42	5½	0.29	0.17	0.32	6¼	0.21	0.13	0.23
60	5	0.44	0.26	0.49	6	0.34	0.20	0.38	6¾	0.25	0.15	0.28
66	5½	0.50	0.30	0.55	6½	0.41	0.25	0.46	7¼	0.31	0.19	0.34
72	6	0.57	0.34	0.63	7	0.49	0.29	0.54	7¾	0.36	0.22	0.40
	Concrete Strength, 5000 psi											
78	6½	0.64	0.38	0.71	7½	0.57	0.34	0.63	8¼	0.42	0.25	0.47
84	7	0.72	0.43	0.80	8	0.64	0.38	0.71	8¾	0.50	0.30	0.56
					Concrete Strength, 5000 psi				Concrete Strength, 5000 psi			
90	7½	0.81	0.49	0.90	8½	0.69	0.41	0.77	9¼	0.59	0.35	0.66
96	8	0.93	0.56	1.03	9	0.76	0.46	0.84	9¾	0.70	0.42	Inner Circular 0.28; Plus Elliptical 0.42
102	8½	1.03	0.62	Inner Circular 0.41; Plus Elliptical 0.62	9½	0.90	0.54	Inner Circular 0.36; Plus Elliptical 0.54	10¼	0.83	0.50	Inner Circular 0.33; Plus Elliptical 0.50
108	9	1.22	0.73	Inner Circular 0.49; Plus Elliptical 0.73	10	1.08	0.65	Inner Circular 0.43; Plus Elliptical 0.65	10¾	0.99	0.59	Inner Circular 0.40; Plus Elliptical 0.59
114	[A]	...	...	... ...	[A]	...	...	... ...	[A]	...	...	... ...
120	[A]	...	...	... ...	[A]	...	...	... ...	[A]	...	...	... ...
126	[A]	...	...	... ...	[A]	...	...	... ...	[A]	...	...	... ...
132	[A]	...	...	... ...	[A]	...	...	... ...	[A]	...	...	... ...
138	[A]	...	...	... ...	[A]	...	...	... ...	[A]	...	...	... ...
144	[A]	...	...	... ...	[A]	...	...	... ...	[A]	...	...	... ...

[A] For modified or special designs see 7.2 or with the permission of the purchaser utilize the provisions of Specification C 655. Steel areas may be interpolated between those shown for variations in diameter, loading, or wall thickness. Pipe over 96 in. in diameter shall have two circular cages or an inner circular plus one elliptical cage.

[B] For these classes and sizes, the minimum practical steel reinforcement is specified. The actual ultimate strength is greater than the minimum strength specified for unreinforced pipe of equivalent diameters in Specification C 14.

[C] As an alternative to designs requiring both inner and outer circular cages the reinforcement may be positioned and proportioned in either of the following manners:
An inner circular cage plus an elliptical cage such that the area of the elliptical cage shall not be less than that specified for the outer cage in the table and the total area of the inner circular cage plus the elliptical cage shall not be less than that specified for the inner cage in the table,
An inner and outer cage plus quadrant mats in accordance with Fig. 1, or
An inner and outer cage plus an elliptical cage in accordance with Fig. 2.

[D] Elliptical and quadrant steel must be held in place by means of holding rods, chairs, or other positive means throughout the entire casting operation.

[E] As an alternative, single cage reinforcement may be used. The reinforcement area in square in. per linear foot shall be 0.30 for wall B and 0.20 for wall C.

[F] Three-edge-bearing test to ultimate load is not required for any class of pipe 60-in. or less in diameter provided all other requirements of this specification are met.

25

FIGURE 227

TRENCH BEDDINGS CIRCULAR PIPE

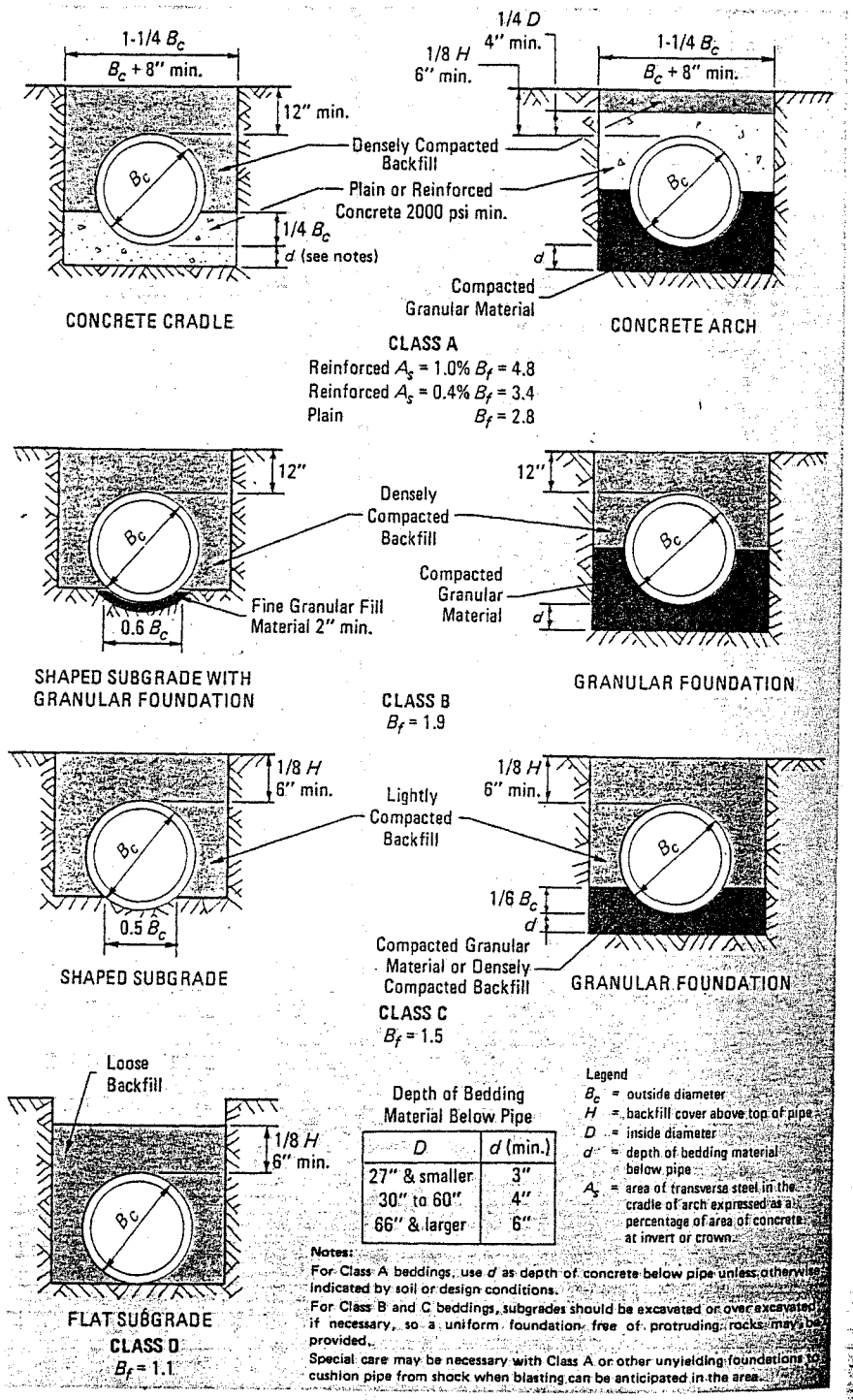

Depth of Bedding Material Below Pipe

D	d (min.)
27" & smaller	3"
30" to 60"	4"
66" & larger	6"

Legend
B_c = outside diameter
H = backfill cover above top of pipe
D = inside diameter
d = depth of bedding material below pipe
A_s = area of transverse steel in the cradle of arch expressed as a percentage of area of concrete at invert or crown.

Notes:
For Class A beddings, use d as depth of concrete below pipe unless otherwise indicated by soil or design conditions.
For Class B and C beddings, subgrades should be excavated or over excavated if necessary, so a uniform foundation free of protruding rocks may be provided.
Special care may be necessary with Class A or other unyielding foundations to cushion pipe from shock when blasting can be anticipated in the area.

R6

STATE OF ARIZONA
OFFICE OF STATE WATER ENGINEER
SUPERVISION OF DAM SAFETY

INSPECTION OF DAM CONSTRUCTION

NAME OF DAM Fountain Hills #4 DAM NO. 7-33

TYPE OF DAM Earthfill

CONTACTS Roger Tulk and J. Swindel

STAGE OF CONSTRUCTION:

Embankment to elevation 1708±.

IMPORTANT ACTIONS TAKEN:

Requested outlet trench excavation to vertical sides in the embankment and with clearance from pipe equal to the neat lines of the designed concrete encasement.

CONDITIONS NOTED AND REMARKS:

Embankment placement thus far is satisfactory with densities averaging nearly 100% of maximum specified densities. Zone II borrow is being obtained from downstream streambed.

Spillway excavation will await embankment placement to the level of the spillway crest.

R. Tulk's request to excavate the outlet trench to side slopes sloping upward from the bottom of the trench was denied. He agreed to my suggestion to excavate side slopes nearly vertical, up to a level equal to at least 6 inches above the top of the pipes, and then sloping to grade. Trench walls would clear the outside of the pipes by an amount equal to the concrete cradle thickness at the pipe sides. Concrete cradle placement would then be against the trench wall.

Inspection by J. D. Walters
Date of Inspection 4-21-72
Date of Report 4-24-72
Photos: Yes

STATE OF ARIZONA
OFFICE OF STATE WATER ENGINEER
SUPERVISION OF DAM SAFETY

R7

INSPECTION OF DAM CONSTRUCTION

NAME OF DAM Fountain Hills #4 DAM NO. 7-33

TYPE OF DAM Earthfill

CONTACTS Roger Tulk and J. Swindel

STAGE OF CONSTRUCTION:

Embankment to elevation 1710±. Trench for outlet works excavated.

IMPORTANT ACTIONS TAKEN:

Approved foundation for outlet, subject to acceptable results of density tests on foundation material.

CONDITIONS NOTED AND REMARKS:

April 26, 1972:

Work had been temporarily stopped on embankment construction, pending completion of installation of the outlet. Trenching for the outlet was in progress, using a pusher cat-scraper operation. The cross section of the excavation will be finished to vertical sides, 8 inches clear of the pipe, O.D. on either side, and equivalent to at least 6 inches above the tops of pipes. The excavation would slope, on either side, from the top of the trench on a 2:1. The concrete encasement will be placed against the sides of the earth excavation, and backfilling will be by hand, or light equipment, to at least 4 feet above the tops of the pipes before resuming normal compacted embankment placement. I informed R. Tulk that, upon completion o excavation and after compaction of the trench bottom, I would inspect same for approval.

April 27, 1972:

The outlet trench had been completed; final compaction ot the trench bottom forming the base for the concrete encasement was accomplished with a 5 foot drum "Rayco" vibratory compactor. In response to my request, R. Tulk promised to complete density tests on samples extracted from the foundation are

Inspected by J. D. Welt
Date of Inspection 4-26-72
Date of Report 4-28-72
Photos: Yes.

(See attached sheet)

FOUNTAIN HILLS #4 (7-33)

5-5-72

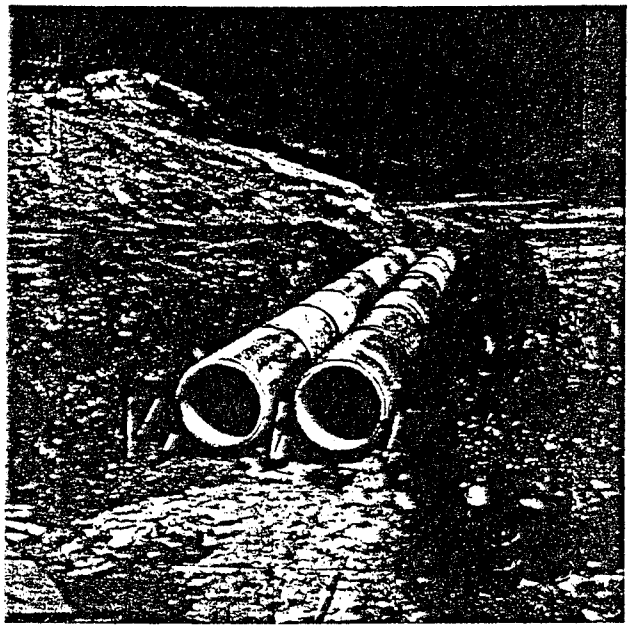

Outlet pipes in place before concrete encasement.

I approved the foundation, subject to satisfactory results of the density tests.

Laying of the double 60 inch RCP pipes for the outlet will be completed by 5-2-72 according to R. Tulk, and another approval inspection will be made at this stage, prior to concrete encasement.

JDW:mf

R11

STATE OF ARIZONA
OFFICE OF STATE WATER ENGINEER
SUPERVISION OF DAM SAFETY

INSPECTION OF DAM CONSTRUCTION

NAME OF DAM Fountain Hills #4 DAM NO. 7-33

TYPE OF DAM Earthfill

CONTACTS R. Tulk of Trico International, Inc.

STAGE OF CONSTRUCTION:

Embankment to El. 1708; Dbl. 60" RCP outlet is in place.

IMPORTANT ACTIONS TAKEN:

Approved placement of the outlet.

CONDITIONS NOTED AND REMARKS:

May 5, 1972

In response to a telephone call from Mr. R. Tulk, I inspected the placement of the double 60" outlet pipes before concrete encasement. The pipes were supported by concrete pedestals, set at least 8 inches above the trench foundation. The joints had been mortared by the usual procedure, using a "diapered" joint for grout placement. Pointing of the joints on the pipe interiors was poorly done; I requested that the excess mortar projection be ground flush with the pipe surface. The "T" marks were not opposite the bottom or top of several of the pipe joints; however, this was so only near the inlet ends of the pipes where the fill will be of shallow depth; and, of course, there is no dynamic loading. I approved this stage of the work subject to the minor modifications hereinabove described.

May 8, 1972

Upon arrival at the site, Dan Lawrence and I observed that the con-

(see attached sheet)

Inspection by J. D. W./D. R.
Date of Inspection 5-5,6-72
Date of Report 5-9-72
Photos: Yes

crete encasement of the outlet pipes had been completed. Approximately 200 cubic yards of concrete were required. Class "A" concrete, or 6 sack, 2500 p.s.i. concrete had been used. Cylinder sampling was accomplished to confirm the 7 day and 28 day strengths. The encasement extended to within about 2 feet of the pipe ends and #4 bars were embedded @ about 18" centers for later extension into the second stage emplacement for the headwalls. I had previously approved this method of construction which would result in a second-stage monolithic placement of the remaining encasement and the head walls. The designed circular concrete collars, adjacent to the headwalls, would then not be required about the peripheries of the pipe O.D.'s.

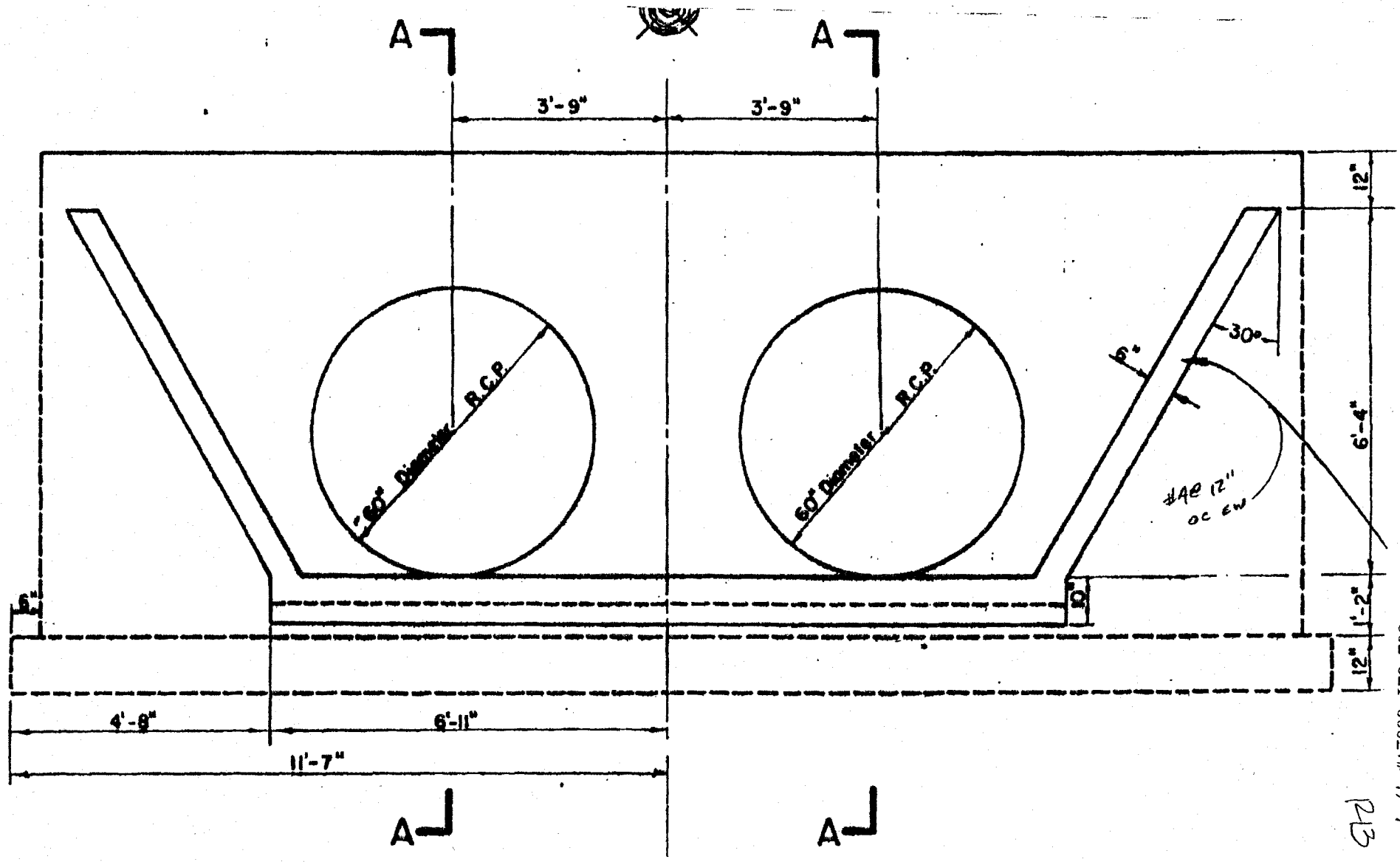
A
A
3'-9"
3'-9"
60" Diameter R.C.P.
60" Diameter R.C.P.
30°
6"
#4@ 12" OC EW
12"
6'-4"
1'-2"
12"
6"
6"
4'-8"
6'-11"
11'-7"
A
A

PB

TABLE 28

BACKFILL LOADS ON CIRCULAR PIPE IN TRENCH INSTALLATION

60″ 60″

* 100 POUNDS PER CUBIC FOOT BACKFILL MATERIAL — LOADS IN POUNDS PER LINEAR FOOT

A — SAND AND GRAVEL Kμ′—0.165

HEIGHT OF BACKFILL H ABOVE TOP OF PIPE, FEET	TRENCH WIDTH AT TOP OF PIPE 8′-0″	8′-6″	9′-0″	9′-6″	10′-0″	10′-6″	11′-0″	12′-0″	13′-0″	14′-0″	▲TRANSITION WIDTH
5	3522										7′-10″
6	4252	4368									8′- 2″
7	4864	5210	5268								8′- 7″
8	5451	5845	6226								9′- 0″
9	6014	6456	6899	7246							9′- 5″
10	6555	7044	7534	8025	8331						9′-10″
11	7074	7609	8146	8685	9224	9486					10′- 3″
12	7571	8153	8737	9322	9908	10480					10′- 6″
13	8049	8676	9306	9937	10570	11200	11390				10′- 8″
14	8508	9180	9855	10530	11210	11890	12300				10′-10″
15	8948	9664	10380	11110	11830	12560	13210				11′- 0″
16	9370	10130	10890	11660	12430	13200	13980	14120			11′- 1″
17	9775	10580	11380	12200	13010	13830	14650	15020			11′- 3″
18	10160	11010	11860	12710	13570	14430	15300	15930			11′- 4″
19	10540	11420	12320	13210	14120	15020	15930	16830			11′- 6″
20	10890	11820	12760	13700	14640	15590	16540	17740			11′- 7″
21	11240	12200	13180	14160	15150	16140	17140	18640			11′- 9″
22	11570	12570	13590	14610	15640	16680	17720	19540			11′-11″
23	11880	12930	13980	15050	16120	17190	18280	20440			12′- 0″
24	12190	13270	14360	15470	16580	17700	18820	21080	21340		12′- 1″
25	12480	13600	14730	15870	17020	18180	19350	21690	22240		12′- 3″
26	12760	13920	15080	16260	17450	18650	19860	22290	23150		12′- 1″
27	13030	14220	15420	16640	17870	19110	20360	22870	24060		12′- 6″
28	13280	14510	15750	17010	18270	19550	20840	23430	24960		12′- 7″
29	13530	14790	16070	17360	18660	19980	21300	23980	25860		12′- 8″
30	13770	15060	16370	17700	19040	20400	21760	24510	26760		12′-10″
31	13990	15320	16670	18030	19410	20800	22200	25030	27680		12′-11″
32	14210	15570	16950	18350	19760	21190	22630	25540	28560		13′- 0″
33	14420	15810	17230	18660	20100	21570	23040	26030	29050	29460	13′- 2″
34	14620	16040	17490	18950	20440	21930	23440	26500	29610	30380	13′- 3″
35	14820	16270	17740	19240	20760	22290	23840	26970	30150	31270	13′- 4″
36	15000	16480	17990	19520	21060	22630	24210	27420	30680	32140	13′- 5″
37	15180	16690	18220	19780	21360	22960	24580	27860	31190	33090	13′- 7″
38	15350	16890	18450	20040	21660	23290	24940	28290	31690	33970	13′- 8″
39	15510	17080	18670	20290	21940	23600	25290	28710	32190	34880	13′- 9″
40	15670	17260	18880	20530	22210	23900	25620	29110	32660	35770	13′-10″

B — SATURATED TOP SOIL Kμ′—0.150

HEIGHT OF BACKFILL H ABOVE TOP OF PIPE, FEET	TRENCH WIDTH AT TOP OF PIPE 8′-0″	8′-6″	9′-0″	9′-6″	10′-0″	10′-6″	1′-0″	12′-0″	13′-0″	14′-0″	▲TRANSITION WIDTH
5	3522										7′- 9″
6	4298	4368									8′- 1″
7	4925	5268									8′- 6″
8	5529	5924	6226								8′-11″
9	6110	6554	6997	7246							9′- 3″
10	6671	7161	7653	8146	8331						9′- 8″
11	7210	7748	8287	8828	9369	9486					10′- 1″
12	7730	8315	8901	9488	10080	10480					10′- 4″
13	8231	8862	9494	10130	10760	11390					10′- 6″
14	8713	9389	10070	10750	11430	12120	12300				10′- 7″
15	9177	9899	10620	11350	12080	12810	13210				10′-10″
16	9625	10390	11160	11930	12710	13480	14120				10′-11″
17	10060	10870	11680	12500	13320	14140	14960	15020			11′- 1″
18	10470	11320	12180	13040	13910	14780	15650	15930			11′- 2″
19	10870	11770	12670	13570	14480	15400	16310	16830			11′- 3″
20	11260	12190	13140	14090	15040	16000	16960	17740			11′- 5″
21	11630	12610	13590	14580	15580	16580	17580	18640			11′- 6″
22	11980	13000	14030	15060	16100	17150	18200	19540			11′- 8″
23	12330	13390	14460	15530	16610	17700	18790	20440			11′- 9″
24	12660	13760	14870	15980	17110	18240	19370	21340			11′-11″
25	12980	14120	15260	16420	17590	18760	19940	22240			12′- 0″
26	13290	14460	15650	16850	18050	19270	20480	22940	23150		12′- 1″
27	13580	14800	16020	17260	18500	19760	21020	23560	24060		12′- 2″
28	13870	15120	16380	17660	18940	20240	21540	24160	24960		12′- 4″
29	14140	15430	16730	18040	19370	20700	22040	24750	25860		12′- 5″
30	14410	15730	17070	18420	19780	21150	22540	25330	26760		12′- 6″
31	14660	16020	17390	18780	20180	21590	23020	25890	27680		12′- 7″
32	14910	16300	17710	19130	20570	22020	23480	26430	28560		12′- 8″
33	15140	16570	18010	19470	20950	22440	23940	26960	29460		12′-10″
34	15370	16830	18310	19800	21310	22840	24380	27480	30380		12′-11″
35	15590	17080	18590	20120	21670	23230	24800	27990	31270		13′- 0″
36	15800	17320	18870	20430	22010	23610	25220	28480	31790	32140	13′- 2″
37	16010	17560	19130	20730	22350	23980	25630	28970	32350	33090	13′- 3″
38	16200	17780	19390	21020	22670	24340	26020	29440	32900	33970	13′- 4″
39	16390	18000	19640	21300	22990	24690	26410	29890	33430	34880	13′- 5″
40	16570	18210	19880	21580	23290	25030	26760	30340	33950	35770	13′- 6″

P-14

C ORDINARY CLAY Kp = 0.130

D SATURATED CLAY Kp = 0.110

HEIGHT OF BACKFILL ABOVE TOP OF PIPE, FEET	TRENCH WIDTH AT TOP OF PIPE											▲TRAINSHEAD WIDTH	TRENCH WIDTH AT TOP OF PIPE											▲TRAINSHEAD WIDTH
	6.0	7.0	8.0	9.0	10.0	11.0	12.0	13.0	14.0	15.0			6.0	7.0	8.0	9.0	10.0	11.0	12.0	13.0	14.0	15.0		
5	3522											7' 8"	3522											7' 7"
6	4168											8' 0"	4168											7' 11"
7		5268										8' 5"		5268										8' 3"
8			6226									8' 9"			6226									8' 7"
9				7246								9' 1"				7246								9' 0"
10					8311							9' 6"					8311							9' 4"
11						9486						9' 11"						9486						9' 5"
12							10480					10' 2"						10480						9' 11"
13								11560				10' 3"							11560					10' 1"
14									12660			10' 5"								12660				10' 2"
15										13210		10' 6"									13210			10' 3"
16											14120	10' 8"										14120		10' 5"
17												10' 10"											15020	10' 6"
18												10' 11"												10' 7"
19												11' 0"												10' 8"
20												11' 1"												10' 10"
21												11' 4"												10' 11"
22												11' 4"												11' 0"
23												11' 5"												11' 1"
24												11' 6"												11' 2"
25												11' 7"												11' 3"
26												11' 8"												11' 4"
27												11' 10"												11' 5"
28												11' 11"												11' 6"
29												12' 0"												11' 7"
30												12' 1"												11' 8"
31												12' 2"												11' 9"
32												12' 4"												11' 10"
33												12' 5"												11' 11"
34												12' 6"												12' 0"
35												12' 7"												12' 1"
36												12' 8"												12' 2"
37												12' 9"												12' 3"
38												12' 10"												12' 4"
39												12' 11"												12' 5"
40												13' 0"												12' 6"

* Trench widths are based on the pressure and critical of the same kinds for a lb 120 pounds per cubic foot indicated on ...
▲ Trainshead widths (type) and are based on Kp = 0.130 (ordinary) and 0.110 (saturated) in the determination of expansion.
* Interpolate for intermediate heights of backfill above trench widths.

March 28, 1972

Mr. Milton Cox, President
Trico International, Inc.
8718 East McDowell Road
Scottsdale, Arizona 85257

Attention: Mr. Hal Marron, Project Engineer

Re: Flood Retarding Dams Nos. 7 & 4
(7-32, 7-33)

Gentlemen:

In a recent telephone conversation, Mr. Roger Tulk requested permission to substitute AWWA Standard C-300 for AWWA Standard C-301 for the outlet pipe on Retarding Dam #4. This standard is not shown on the plans or in the specifications for Structure #4, but is noted on Sheet 5 of the plans for Structure #7.

In lieu of either of the above AWWA specifications, we suggest the use of ASTM C76 Class III, or equivalent AASHO specification, for the 60 inch outlet pipes at Retarding Structure #4; and ASTM C76 Class IV, or equivalent AASHO specification, for the 48 inch outlet pipe at Retarding Structure #7.

As shown on the approved drawings, specially compacted backfill is required about the outlet pipes to the lines indicated. It is especially important that heavy construction equipment or embankment compactors not be permitted to cross the outlet works until the specially compacted material is in place to at least 3 feet above the top of the pipe.

Sincerely,

WESLEY E. STEINER
State Water Engineer

B. G. SCOTT
Chief, Supervision of Dam Safety

WES:BGS:JDW:mf

STATE OF ARIZONA
OFFICE OF STATE WATER ENGINEER
SUPERVISION OF DAM SAFETY

INSPECTION OF DAM CONSTRUCTION

NAME OF DAM Fountain Hills #4 DAM NO. 7-33

TYPE OF DAM Earthfill

CONTACTS Messrs. R. Tulk and G. Beckwith

STAGE OF CONSTRUCTION:

Foundation excavation is progressing. Reservoir site clearing is nearly complete.

IMPORTANT ACTIONS TAKEN:

Informally approved Zone I borrow site. Disapproved owner's request that he be permitted to construct dam as a homogeneous section, entirely of Zone I material. Approved widening the bottom of the core trench from 10' to 12' to accommodate the 12-foot width of the D-9 tractor blade.

CONDITIONS NOTED AND REMARKS:

The purpose of this inspection was to inspect the foundation which the owner had expected to be ready for embankment placement on this date. However, the work had been delayed and this inspection revealed that foundation excavation was only partially completed. They had only begun excavating the core trench.

Discussion with Messrs. Tulk and Beckwith centered around the nature of the left abutment contact and the Zone I material. The cemented material exposed on the upper left abutment contact, at the core trench, is quite hard and massive. Loose material will be removed from the lower contact of the core trench to expose the harder cemented material.

The Zone I borrow area, upstream of the dam, had been cleared and the native soil had been sufficiently worked to reveal a generally well-graded clayey sandy silt. The material had been sampled and tested by Sergent, Hauskins and Beckwith. Results of the Atterberg tests revealed good gradation, adequate fines and some plasticity. This should make good Zone I material and there should be ample quantity available in the borrow area.

(see attached sheet)

Inspection by JDW/BGS
Date of Inspection 3-29-72
Date of Report 3-31-72
Photos: Yes

Mr. Tulk favored the construction of a homogeneous dam composed entirely of Zone I material. However, we expressed our desire to retain the original zoned embankment design.

Mr. Tulk was also informed that we preferred the use of ASTM C76 culvert pipe for the outlet pipes through this and Fountain Hills #7 Dams. High head AWWA pipe was called for on the plans for No. 7 Dam, and was intended to be used on this dam as well.

JDW:mf

STATE OF ARIZONA
OFFICE OF STATE WATER ENGINEER
SUPERVISION OF DAM SAFETY

INSPECTION OF DAM CONSTRUCTION

NAME OF DAM Fountain Hills #4 DAM NO. 7-33

TYPE OF DAM Earthfill

CONTACTS Roger Tulk and J. Swindel

STAGE OF CONSTRUCTION:

Embankment to elevation 1708±.

IMPORTANT ACTIONS TAKEN:

Requested outlet trench excavation to vertical sides in the embankment and with clearance from pipe equal to the neat lines of the designed concrete encasement.

CONDITIONS NOTED AND REMARKS:

Embankment placement thus far is satisfactory with densities averaging nearly 100% of maximum specified densities. Zone II borrow is being obtained from downstream streambed.

Spillway excavation will await embankment placement to the level of the spillway crest.

R. Tulk's request to excavate the outlet trench to side slopes sloping upward from the bottom of the trench was denied. He agreed to my suggestion to excavate side slopes nearly vertical, up to a level equal to at least 6 inches above the top of the pipes, and then sloping to grade. Trench walls would clear the outside of the pipes by an amount equal to the concrete cradle thickness at the pipe sides. Concrete cradle placement would then be against the trench wall.

Inspection by J. D. Walters
Date of Inspection 4-21-72
Date of Report 4-24-72
Photos: Yes

STATE OF ARIZONA
OFFICE OF STATE WATER ENGINEER
SUPERVISION OF DAM SAFETY

INSPECTION OF DAM CONSTRUCTION

NAME OF DAM Fountain Hills #4 DAM NO. 7-33

TYPE OF DAM Earthfill

CONTACTS Roger Tulk and J. Swindel

STAGE OF CONSTRUCTION:

Embankment to elevation 1710±. Trench for outlet works excavated.

IMPORTANT ACTIONS TAKEN:

Approved foundation for outlet, subject to acceptable results of density tests on foundation material.

CONDITIONS NOTED AND REMARKS:

April 26, 1972:

Work had been temporarily stopped on embankment construction, pending completion of installation of the outlet. Trenching for the outlet was in progress, using a pusher cat-scraper operation. The cross section of the excavation will be finished to vertical sides, 8 inches clear of the pipe, O.D. on either side, and equivalent to at least 6 inches above the tops of pipes. The excavation would slope, on either side, from the top of the trench on a 2:1. The concrete encasement will be placed against the sides of the earth excavation, and backfilling will be by hand, or light equipment, to at least 4 feet above the tops of the pipes before resuming normal compacted embankment placement. I informed R. Tulk that, upon completion o. excavation and after compaction of the trench bottom, I would inspect same for approval.

April 27, 1972:

The outlet trench had been completed; final compaction ot the trench bottom forming the base for the concrete encasement was accomplished with a 5 foot drum "Rayco" vibratory compactor. In response to my request, R. Tulk promised to complete density tests on samples extracted from the foundation are.

Inspected by J. D. Walt
Date of Inspection 4-2[redacted]7
Date of Report 4-2[redacted]2
Photos: Yes.

(See attached sheet)

FOUNTAIN HILLS #4 (7-33)

5-5-72

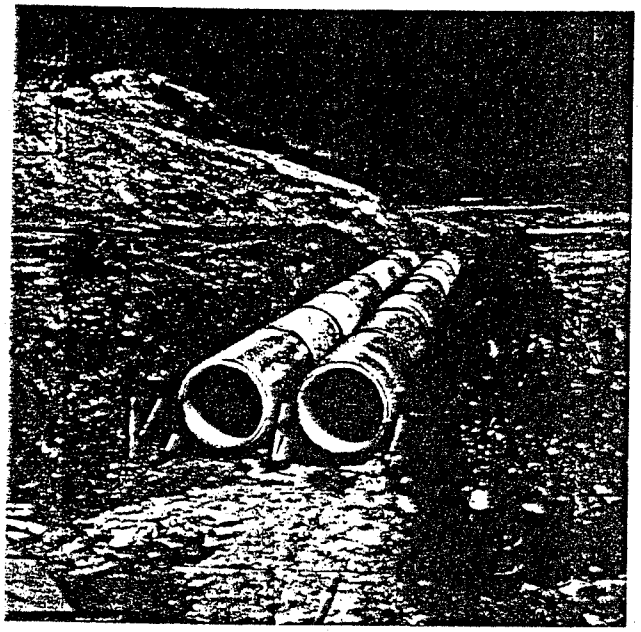

Outlet pipes in place before concrete encasement.

I approved the foundation, subject to satisfactory results of the density tests.

Laying of the double 60 inch RCP pipes for the outlet will be completed by 5-2-72 according to R. Tulk, and another approval inspection will be made at this stage, prior to concrete encasement.

JDW:mf

STATE OF ARIZONA
OFFICE OF STATE WATER ENGINEER
SUPERVISION OF DAM SAFETY

INSPECTION OF DAM CONSTRUCTION

NAME OF DAM Fountain Hills #4 DAM NO. 7-33

TYPE OF DAM Earthfill

CONTACTS R. Tulk and J. Swindel

STAGE OF CONSTRUCTION:

Embankment to 1708.

IMPORTANT ACTIONS TAKEN:

None

CONDITIONS NOTED AND REMARKS:

Work is still suspended on the embankment and spillway pending completion of the outlet works. The contractor was laying the double 60" outlets. The trench for the outlet works had been widened to approximately 18 feet bottom width and the side slopes had been trimmed to about 1/4:1 to a height of approximately 7 feet beyond which the slopes continued at 2:1.

Concrete encasement will be placed against the side slopes and to the spring line as previously planned. Mortaring of the joints is expected to be completed by Friday and concrete encasement will be place during May 8th.

Inspection by J. D. Walte
Date of Inspection 5-3-72
Date of Report 5-5-72
Photos: No photo

TOTAL P.03

STATE OF ARIZONA
OFFICE OF STATE WATER ENGINEER
SUPERVISION OF DAM SAFETY

INSPECTION OF DAM CONSTRUCTION

NAME OF DAM Fountain Hills #4 DAM NO. 7-33

TYPE OF DAM Earthfill

CONTACTS R. Tulk of Trico International, Inc.

STAGE OF CONSTRUCTION:

Embankment to El. 1708; Dbl. 60" RCP outlet is in place.

IMPORTANT ACTIONS TAKEN:

Approved placement of the outlet.

CONDITIONS NOTED AND REMARKS:

May 5, 1972

In response to a telephone call from Mr. R. Tulk, I inspected the placement of the double 60" outlet pipes before concrete encasement. The pipes were supported by concrete pedestals, set at least 8 inches above the trench foundation. The joints had been mortared by the usual procedure, using a "diapered" joint for grout placement. Pointing of the joints on the pipe interiors was poorly done; I requested that the excess mortar projection be ground flush with the pipe surface. The "T" marks were not opposite the bottom or top of several of the pipe joints; however, this was so only near the inlet ends of the pipes where the fill will be of shallow depth; and, of course, there is no dynamic loading. I approved this stage of the work subject to the minor modifications hereinabove described.

May 8, 1972

Upon arrival at the site, Dan Lawrence and I observed that the con-

(see attached sheet)

Inspection by J. D. W./D. F
Date of Inspection 5-5,8-72
Date of Report 5-9-7[illegible]
Photos: Yes

crete encasement of the outlet pipes had been completed. Approximately 200 cubic yards of concrete were required. Class "A" concrete, or 6 sack, 2500 p.s.i. concrete had been used. Cylinder sampling was accomplished to confirm the 7 day and 28 day strengths. The encasement extended to within about 2 feet of the pipe ends and #4 bars were embedded @ about 18" centers for later extension into the second stage emplacement for the headwalls. I had previously approved this method of construction which would result in a second-stage monolithic placement of the remaining encasement and the head walls. The designed circular concrete collars, adjacent to the headwalls, would then not be required about the peripheries of the pipe O.D.'s.

APPENDIX I

SAMPLE CONSTRUCTION QUALITY ASSURANCE PLAN

Lynx Lake Dam & Spillway Alterations
Construction Quality Assurance Plan

Lynx Lake Dam
Prescott National Forest
Arizona

for
Arizona Game & Fish Department
Phoenix, Arizona

May 1999

Stantec

Table of Contents

Introduction 3
Project Background 3
Dam & Spillway Modifications 3
Owner 4
Design Engineer 4
Construction Administrator 4
Geotechnical Engineer 5
Surveyor 5
Jurisdictional Agency 5
Permitting Agencies 5
Land Owner 6
Communication Chart 7
Policies and Procedures 8
Definitions 8
General Considerations 8
Importance of construction control 9
Relation of construction and design 10
Contractor Responsibility 10
General 10
Staffing 11
Government Responsibilities. 11
General 11
Planning 11
Implementation and Enforcement 13
QA for Procedural Specifications 16
Performing Acceptance Inspections 16
Progress Meetings 17
Deficiencies 17
Earthwork 18
Field Organization and Responsibility 19
Resident Inspection Force 19
Technical responsibilities 19
Quality control. 20
Relationship with contractor 22
Laboratory 22
Types of tests and facilities required 22
Design engineers 23
Surveying 23
Records and Reports 24
General 24
Construction records 24
Construction reports 24

Daily Reports 25
Compaction Control Reports 26
Final Construction Report 26
References 28
Appendix A - Sample Forms 29
Project Punch List 30
Nonconformance Report 31
Concrete Placement Card 32
Concrete Field Test Summary 33
Quality Assurance Report (QAR) 34
Summary of Field Compaction Control 36
Summary of Field Compaction Control (both pervious fill and rock-fill) 37
Summary Form, Field Compaction Control Data, Impervious Material 38
Summary Form, Field Compaction Control Data, Pervious Material 39

Introduction

This manual provides the general policy and guidance for establishing quality management procedures in the construction of the improvements to Lynx Lake Dam, Prescott Arizona.

The objective of this manual is to provide a plan to verify that proper materials, construction techniques, and procedures are followed by the contractor and the contract administrator and that the completed structure meets the requirements and intent of the plans and specifications.

Project Background

Lynx Lake Dam is owned by the Arizona Game and Fish Department (AGFD), and is operated and maintained for wildlife enhancement and related recreational purposes. The dam and lake are located within the Prescott National Forest in Yavapai County near Prescott, Arizona. The Prescott National Forest, and activities within the boundary of the Forest, are managed by the U.S. Forest Service (USFS). Due to the size of the dam, it is jurisdictional under the statutes of the State of Arizona as regulated by the Arizona Department of Water Resources (ADWR). Construction of the dam began in 1960 and was completed in 1963. The dam has been in continual operation since that time. There are no dam safety incidents reported or known for the dam. Impounded runoff from the watershed creates the lake behind the dam, and there was not a natural lake at this location prior to construction of the dam.

Dam & Spillway Modifications

Alteration to the dam includes widening the spillway and raising the embankment as well as repair of the erosion protection on the upstream face of the dam. The spillway modification consists of widening the spillway crest. To the right of the spillway, a training dike will be constructed in the lake to orient the flow so that it approaches the

spillway perpendicular to the crest. The spillway chute is widened and the chute invert slope is lowered. The crest of the dam is raised using gabions.

Owner

The owner of the project is the Arizona Game and Fish Department (AGFD). The owner is directly responsible for all activities related to the dam and spillway construction.

Design Engineer

Stantec Consulting Inc. (SCI) was selected by AGFD to design and prepare construction documents for dam and spillway modifications. Agra Earth and Environmental, Inc. (AEE) prepared the dam embankment stability analysis, gabion wall stability analysis, geologic mapping and the geotechnical investigation. TY Lin International is the structural design engineer.

Construction Administrator

Stantec Consulting, Inc. (SCI) will be the Construction Administrator for the Lynx Lake Dam project and is the official representative of the Owner and is responsible for all construction activities including observation and direction during construction. The Construction Administrator is also responsible for coordination and quality assurance activities for the project. A full time inspector will be on the site everyday during construction. The Construction Administrator shall serve as communications coordinator for the project initiating preconstruction and weekly project meetings. As communications coordinator, the Construction Administrator will serve as a liaison between all parties involved in the project to ensure that ongoing communications are maintained. The Construction Administrator shall also be responsible for the resolution of all quality assurance issues that arise during construction.

Geotechnical Engineer

Agra Earth and Environmental, Inc. (AEE) will provide the Geotechnical testing and observations during the earthwork phase of the project. Specifically, they will verify the following:

- The materials used meet the specifications and the intent of the design
- Methods of placement and compaction are acceptable and proper compaction is achieved
- Structural foundations are sound

Surveyor

The surveyor is an independent land surveyor licensed in the State of Arizona, to be hired by the Contractor.

Jurisdictional Agency

Due to the size of the dam, it is jurisdictional under the statutes of the State of Arizona as regulated by the Arizona Department of Water Resources (ADWR). As such, all design and construction must be approved by ADWR.

Permitting Agencies

The project requires a Section 404 permit by the US Army Corps of Engineers (USACOE). All construction activities within or affecting the Waters of the US as defined by the permit must follow the requirements of the permit. The 404 permit also requires that a 401 Water Quality Certification be issued. This permit is administered by the Arizona Department of Environmental Quality (ADEQ) and also regulates all construction activities within or affecting the Waters of the US. All construction work must follow the letter and intent of both permits.

Land Owner

The dam and lake are located entirely within the Prescott National Forest. The Prescott National Forest, and activities within the boundary of the Forest, are managed by the U.S. Forest Service (USFS). The USFS has issued a special use permit to the AGFD for construction, operation and maintenance of the dam and lake facilities. Additional mitigation requirements are outlined in the project specifications. All activities within the forest are approved by the USFS.

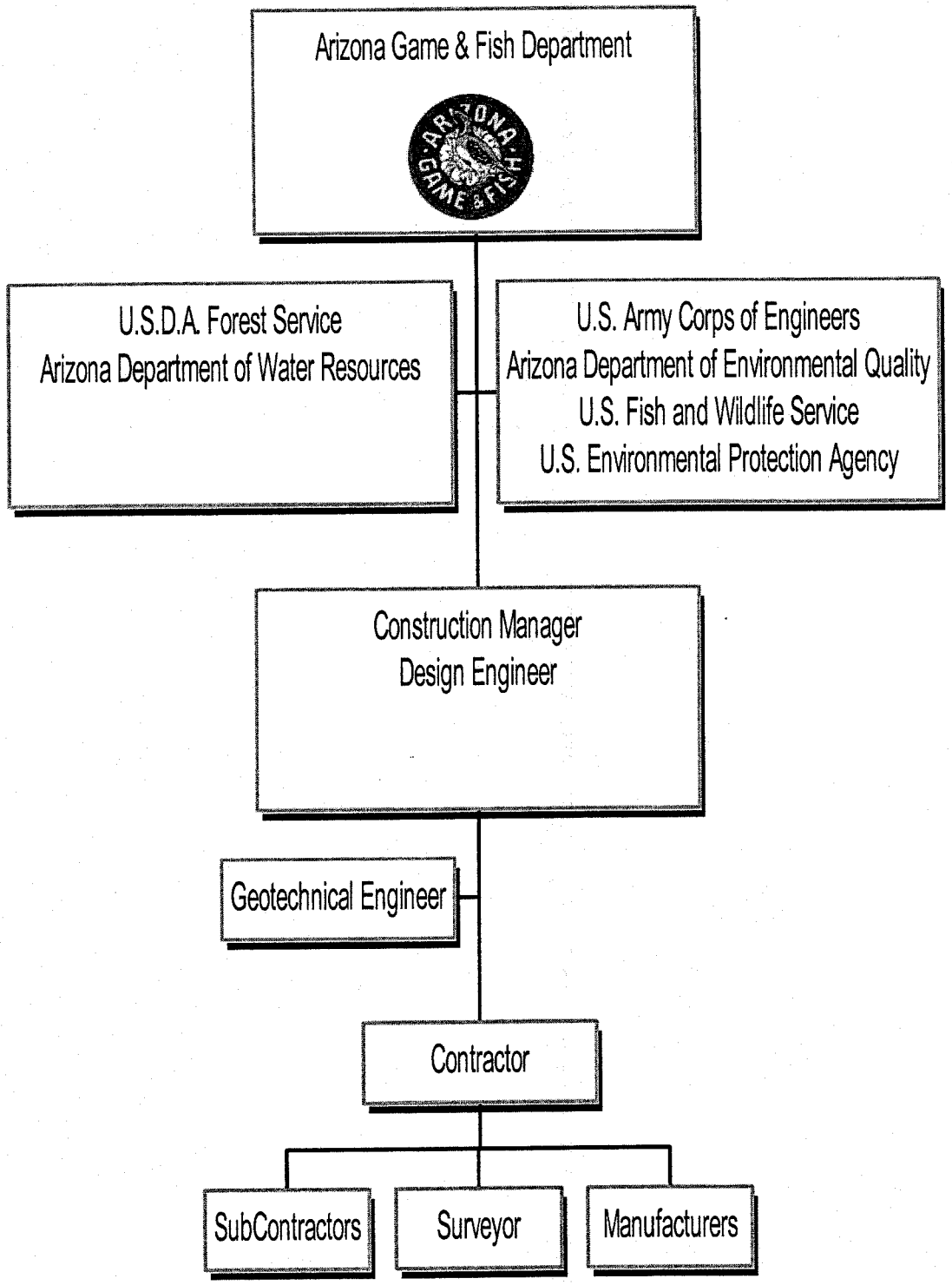

Communication Chart

Policies and Procedures

Definitions

a. Quality - conformance to properly developed requirements. In the case of construction contracts, these requirements are established by the contract specifications and drawings.

b. Quality Management (QM) - is all control and assurance activities instituted to achieve the quality established by the contract requirements.

c. Contractor Quality Control (CQC) - is the construction contractor's system to manage, control and document his/her own, his/her supplier's, and his/her subcontractor's activities to comply with contract requirements.

d. Quality Assurance (QA) - is the system by which the government fulfills its responsibility to be certain the CQC is functioning and the specified end product is realized.

General Considerations

The safety and satisfactory performance of earth and rock-fill dams require competent and adequate supervision, careful inspection, and control testing. It is the responsibility of the Resident Engineer to bring to the attention of the Construction Administrator any design or construction detail not adequately covered by the plans and specifications. The Resident Engineer must provide the field supervision and control required to accomplish the intent of the plans and specifications. The resident engineer must also coordinate the work with design engineers and provide guidance to the contractor if unexpected conditions are discovered during construction.

Importance of construction control

Many earth and rock-fill dams have shown signs of distress or experienced partial failure (necessitating expensive remedial measures) from causes traceable to poor construction practices or to unexpected adverse conditions. Close observations by soils engineers and geologists of foundation and abutment preparation, excavation, fill operations, movements and deformations of fill and foundation, and seepage can often enable early detection and correction of undesirable conditions. Construction control should ensure that:

(1) Necessary actions are taken to remedy or allow for unexpected conditions. Frequent and careful observations by inspectors, geologists, and field engineers, who are familiar with conditions assumed for design, are essential during stripping of the foundation, opening of borrow areas, and excavating operations. Immediate reporting of unexpected conditions will enable the Resident Engineer to coordinate and plan, with design engineers, any additional investigations needed to establish design modifications.

(2) Equipment and procedures are adequate to satisfactorily accomplish the work. Review of the contractor's plans for quality control, dewatering and draining work areas, and haul roads, together with inspections of the actual operations, is an important aspect of construction control.

(3) The completed structure meets the requirements and intent of the plans and specifications. This involves continuous inspection of foundation and abutment preparation, material processing, and embankment construction, and a comprehensive control testing program to ensure proper material placement and compaction.

(4) Adequate construction records are maintained. Preparation of completion reports of construction operations and maintenance of records of test results are essential aspects of field control. Such reports and records are often required to evaluate claims by the contractor and to determine possible causes of distress that might later occur in portions of the completed work. These documents should

include as many detailed photographs as necessary. Video photography may also be included in the methods to document and record construction procedure and methods.

Relation of construction and design

The design of an earth or rock-fill dam is not finished until construction is complete, the reservoir has been filled, and the dam is functioning satisfactorily. During construction, design engineers should frequently reassess design concepts and assumed conditions in light of actual conditions observed in the field. This involves frequent visits to the project to observe actual conditions and construction procedures. Consultation with specialists may be required to evaluate unusual problems or foundation conditions. Design evaluation must include analyses of compaction control results. It may also require reanalysis of stability conditions based on results of laboratory tests on record samples and additional foundation samples and field observations of pore water pressures, settlements, and lateral displacements. A high degree of coordination between design and construction engineers is mandatory.

Contractor Responsibility

General

Contractors shall be made responsible for all activities necessary to manage, control, and document work so as to ensure compliance with the contract plans and specifications. The contractor's responsibility includes ensuring adequate quality control services are provided for work accomplished on-and off-site by his/her organization, suppliers, subcontractors, technical laboratories and consultants. The work activities include safety, submittal management, and all other functions relating to the requirement for quality construction.

Staffing

It is the contractor's responsibility to carefully examine the contract requirements for CQC and provide personnel capable of complying with the CQC requirements of the contract clauses and technical provisions. The CQC staff must be of sufficient size and have the qualifications necessary to ensure contract compliance, whether work is performed by the prime contractor or by subcontractors or vendors. The CQC system manager will be an employee of the prime contractor and must report directly to the project superintendent or someone higher in the contractor's organization. The size and composition of the CQC organization may vary as the job progresses. At all times it should be compatible with the level of effort and capability required by the contract and construction schedule.

Government Responsibilities.

General

Quality assurance is the process by which the government verifies end product quality. The process starts well before construction and includes reviews of the plans and specifications for biddability, constructibility, operability and environmental responsibility, plan-in-hand site reviews, coordination with using agencies or local interests, establishment of performance periods and quality control requirements, field office planning, preparation of QA plans, reviews of quality control plans, enforcement of contract clauses, maintenance of quality assurance and quality control inspection and work records, and acceptance of completed construction.

Planning

Prior to construction, the following activities should be performed:

(1) Participate in the design review conference. This may be conducted at the Pre-Construction meeting. However, it is recommended that sufficient time be allowed to review the design and discuss quality control and assurance issues. It is recommended

that a representative of the field office responsible for the administration of the contract participate. Conduct constructibility, operability and environmental reviews.

(2) Conduct site plan-in-hand reviews. This is a field office responsibility.

(3) Establish the contract CQC requirements. Input from field office required.

(4) Review field office workloads and staffing needs.

(5) Assure office and field personnel have a clear understanding of QA/CQC responsibilities.

(6) Review the contractor's CQC plan and verify affirmative answers to the following questions as a minimum:

(a) Does the plan adequately cover control of all features of the contract?

(b) Is the CQC staff adequately sized to maintain quality and accomplish tests required?

(c) Have the person or persons responsible for each definable feature of work, all tests, and submittal control and review been identified?

(d) Do the qualifications of the staff appear adequate for the control and test requirements?

(e) Is the delegation of responsibility and authority to the CQC staff manager clear? Does this person report directly to the highest ranking contractor personnel on-site with responsibility for the overall management of the project including quality and production?

(f) Are the CQC organization lines of authority and responsibility clear?

(g) Are individual control and test duties clearly assigned?

(h) Do the proposed control and test report forms include all the required features and reporting items?

(i) Does it comply with the specific requirements established by the contract?

(j) Are definable features of work identified. A definable feature of work is a task which is separate and distinct from other tasks and has separate control requirements. For example, definable features for concrete would be formwork; reinforcing and imbedded items; placement including mix design, finish, etc.; and curing.

(7) Accept the CQC plan subject to satisfactory performance and reserve the right to require revisions to correct unsatisfactory performance. Revisions made by the contractor are subject to government acceptance.

Implementation and Enforcement

During construction the following activities will be performed by quality assurance personnel (QAP):

(1) After the preconstruction conference, the resident engineer or other responsible designee shall conduct a coordination meeting with the contractor on the CQC/QA program. Minutes of the meeting will be prepared for signature by both the contractor and the government representative.

(2) Delay construction start until after the coordination meeting and submittal and acceptance of at least the interim CQC plan, if required.

(3) Require revision of the CQC plan and its execution as necessary to obtain quality.

(4) Verify adequacy and calibration of test equipment, application of specified test standards and computation of test results.

(5) Spot check CQC approved submittals.

(6) Review contractor's daily quality control reports (QCR) to verify that they adequately document his/her quality control operations. If reports are not adequate, require the contractor to submit a supplementary report containing the necessary information..

(7) Hold periodic job-site assurance conferences on CQC/QA interrelationship of activity and effectiveness.

(8) Participate in the three-phase control process as necessary to verify that the contractor is adequately conducting the required control processes. Attendance at a majority of the preparatory and initial-phase meetings is required. Government participant will be totally familiar with contract requirements. Ensure that the contractor prepares minutes of each preparatory and initial meeting and includes highlights of each control phase on the daily CQC report. These reports shall be made readily accessible for quick reference throughout the life of the project.

(9) Conduct government QA tests at the job-site to verify acceptability of the completed work. A sufficient number of tests, but not less than 5 percent of the frequency of the CQC tests, should be scheduled to verify CQC test procedures and results. For test procedures for which duplicate sampling is appropriate the contractor shall be required to furnish for possible QA testing duplicate samples of test specimens of a minimum of 20 percent of the CQC tests. A minimum of one-fourth of these duplicate samples should be tested and the results compared to the CQC test results to verify test procedures and results. The duplicate samples on which QA test are performed should not be known in advance by the contractor, so that the CQC staff will not know which of the CQC test results are subject to verification. The results of QA test performed on duplicate samples should be made available to and discussed with the contractor in order to reconcile any discrepancies. Testing duplicate samples is part of, not in addition to, the requirement to perform QA test at a minimum frequency of 5 percent of the CQC tests. QA testing and inspection should be conducted at unannounced intervals. The contracting officer's representative should verify the accuracy and calibration of equipment, verify correct application of specified test standards, and verify the coverage and accuracy of required CQC tests by observing approximately 10 percent of the CQC tests. The exact number of tests observed will be commensurate with the confidence level in the contractor's CQC system and consistency in government and contractor test results. Test reports, which should be submitted as attachments to the contractor's CQC reports, should be reviewed by government

engineering, laboratory, and/or QA personnel assigned to the work depending upon the type of test.

(10) Monitor contractor's procedures for tracking construction deficiencies to verify acceptable corrective action and that an audit trail is maintained.

(11) Ensure that new work is not placed on unacceptable work or that progress payments do not include the value of non-conforming construction.

(12) Prepare QA reports (QAR) and all other necessary QA documentation as detailed below:

(a) Quality assurance personnel will prepare a report for each visit day of construction or fabrication. If for some reason QAP did not visit the site on a particular day of construction, the reason for non-visit and pertinent observations as to events occurring during period of absence will be included in the QAR for the next subsequent visit day. The purpose of the QAR is to document government activities in the day-to-day administration of the contract. Memoranda for the record (MFR), letters, and the QAR will be used to provide a formal record of contract information. Particular care will be taken to record and preserve all possible data and exhibits with respect to any matter which may become the basis for a claim.

(b) As a minimum the QAR will cover the following areas: Contractor name, date, contract number, daily report number, project title and location, weather, precipitation, temperature (max. and min.), portion of the day suitable for work, contractors/subcontractors on job and area of responsibility, operating plant or equipment, work performed today, results of control activities, tests performed, equipment and materials received, job safety, verbal instructions received, remarks. The QAP will document the results of their QA inspections and tests, deficiencies observed, actions taken and corrective actions of the contractor. They should also include comments pertaining to the CQC activities.

(c) All pertinent items of information will be included on the QAR. Data incorporated on the contractor quality control report will not be repeated on the QAR unless it is necessary to augment or correct erroneous entries on the QCR.

(d) The resident engineer/project engineer or their designees are responsible for assuring that the QAR contains all pertinent items of information. In order to verify the accuracy and completeness of the QAR, this individual will review initial reports of any QAP and perform follow-up reviews as deemed necessary to confirm/maintain continued acceptability. Those reports reviewed will be initialed.

(13) The QAP will review the entries on the contractor's QCR. The QCR should contain information on the contractor's quality control operations as described above and not be burdened with other peripheral information. The QCR will be attached to or filed with the QAR, if separate report forms are used, to form a complete quality control/quality assurance report to be kept in the contract file.

(14) Document contractor performance throughout the contract and initiate interim and final unsatisfactory ratings where necessary.

QA for Procedural Specifications

Some QA testing in the case of certain critical earthwork and concrete dam structures must be conducted continuously. A comprehensive quality assurance testing program is necessary on the part of the government when specifications limit the contractor to prescriptive procedures leaving the responsibility for end product quality to the government. Contracting officers must limit contractor responsibilities for tests to those which control the prescriptive procedures and strictly avoid any duplication of government testing.

Performing Acceptance Inspections

Subsequent to CQC completion inspections, acceptance inspections of completed construction are a government responsibility.

Progress Meetings

Progress meetings will be held weekly either at the beginning or end of the work week. At a minimum this meeting will be attended by the Construction Inspector and the Contractor (Foreman or Superintendent). The Contractor's CQC system manager must attend the meetings. It is recommended that the design engineer attend meetings where discussion of changed conditions or proposed design changes are anticipated. Problems that occur should be immediately brought to the attention of the inspector and not be held until the next progress meeting. The progress meetings will be documented by the inspector and minutes will be distributed to the contractor, design engineer and owner. The following items relating to quality management will be a part of the agenda:

- Review scheduled work activities
- Review the previous week's activities and discuss any problems
- Review test data
- Discuss any environmental compliance issues
- Discuss safety issues
- Discuss non-conformance reports
- Discuss any changed conditions or proposed design changes

Deficiencies

When deficiencies (items that do not meet project requirements or do not meet the intent of the design) are discovered, the Inspector shall immediately determine the nature and extent of the problem and notify the contractor. If unsatisfactory test results identify a deficiency, additional tests will be performed to define the extent of the deficient area. The Contractor shall correct the deficiency to the satisfaction of the inspector. If unable to correct the problem, the inspector will notify the design Engineer

who will assist in the resolution of the problem. Corrected deficiencies shall be retested and approved before any additional related work is performed by the Contractor. All retests and related documentation shall be recorded by the Inspector and included in the final report documentation.

The Owner or the Engineer will immediately report to ADWR the nature of any design revision. Written approval from ADWR is required prior to implementation of the design change.

Earthwork

Quality assurance testing and sampling will be performed by the Geotechnical Consultant under the direction of the Construction Administrator or the inspector. Documentation shall meet the requirement of the plans, specifications and this plan.

The Inspector shall observe and document that the following activities are conducted in accordance with the specifications and design drawings and with the requirements of the Engineer:

- Stripping and excavation activities to ensure that the excavation is conducted carefully to protect the existing embankment and excavated to the proper depths; and that excavated material is properly stockpiled for later reuse if necessary.
- Establishment of proper drainage on the embankment
- Placement of all fill materials, confirming that all fill meets the requirements of the specifications and the intent of the design.
- Preparation of foundation subgrade.
- Placement of clay layers, filter layers, bedding layers, riprap and gabions.

Field Organization and Responsibility

Resident Inspection Force

The dam, spillway and training dike must be adequately inspected to The size and composition of the resident inspection force for foundation and earthwork control operations should be adequate to provide for continuous inspection of construction activities, field testing and sampling, observation of field instrumentation, laboratory testing, data compilation, maintenance of records, and preparation of reports. The inspection force must be so staffed and organized that inspectors and technicians are available for continuous inspection of the contractor's operations. The Government is responsible for all phases of the construction project, including the activities necessary to verify that the contractor has complied with the requirements of the contract plans and specifications and In contrast to the Contractor's quality control the government is responsible for quality assurance. This includes checks, inspections, and tests of the products which comprise the construction, the processes used in the work and the finished work for the purpose of determining whether the Contractor's quality control is effective and he is meeting the requirements of the contract. These activities are to verify that defective work or materials are not incorporated in the construction."

Technical responsibilities

The Resident Engineer is responsible for constructing the embankment and related appurtenances in compliance with plans and specifications. Resident geologists and soils engineers provide technical assistance. Assisting the Resident Engineer are office and field engineering staffs. The office engineering staff is responsible for preparing field modifications to the plans and specifications in accordance with ADWR regulations, reviewing plans submitted by the contractor such as those for quality control and dewatering, evaluating results of construction control tests, and compiling instrumentation data for evaluation. The field engineer in charge of field supervision

and inspection is responsible for planning, executing, and coordinating all field inspection and testing to ensure compliance with established standards and detail drawings and specifications. The field engineer may be assisted by one or more construction inspectors on each shift and by a materials testing or soils engineer who supervises a number of technicians in obtaining samples and performing required field and laboratory tests. The project is to be staffed with the number of experienced laboratory technicians needed to perform acceptance testing on compacted fill, including filter and drainage fills. Acceptance testing should be performed immediately after placement and compaction of the lift material to be sampled and tested. Attention should be given to selection of samples for acceptance testing so that all materials of generally different descriptions being placed in the same compacted zone of the embankment will be tested.

Good communication between design and construction personnel is essential. The construction staff should be familiar with the design memoranda pertinent to the work. Preconstruction instructions and training should be given to field inspection personnel to acquaint them with the design concepts and to provide them with a clear understanding of expected conditions, methods of construction, and the scope of plans and specifications. This may be done by training sessions, preferably with design personnel present, to discuss engineering considerations involved and to explain control procedures and required results. Inspection personnel should be familiar with the plans and specifications; excavation boundaries; types of materials to be excavated; temporary and permanent drainage and seepage control measures; approved sources of borrow materials; procedures and equipment most suitable for excavating, processing, and hauling borrow materials; characteristics of fill materials and compaction requirements; capabilities of various types of compaction equipment; and procedures required to obtain desired or specified compaction.

Quality control.

(1) The contractor is responsible for quality control, and the contract specifications give requirements for the contractor quality-control organization, personnel qualifications,

facilities and types of tests, and reporting of test data and inspections. The field inspection force has the responsibility of accepting completed work and must have a staff large enough to accomplish the following:

(a) Check the effectiveness and adequacy of the contractor's quality-control system and take action to have deficiencies corrected.

(b) Inspect construction operations to prevent defective work and placement of unsatisfactory materials.

(c) Monitor progress.

(d) Perform check tests and acceptance tests.

(e) Resolve or report field problems and conflicts with contract documents to higher authority.

(f) Make acceptance inspections.

(2) Contractor quality-control operations will, if properly implemented, assist in achieving adequate construction, particularly on those operations where specifications contain product requirements such as water content limits and gradation of filter material. However, field inspectors must be present to witness operations for which construction procedures are specified and to conduct tests to ensure that results obtained are those required by design. Several important considerations are listed below:

(a) The contractor is not required to conduct tests on the quality or durability of materials used for pervious fill, filter zones, bedding, spalls, or rip-rap. The Government is responsible for determining such properties in approving sources of natural or processed (blasted, ripped, or crushed) pervious materials for use in embankments.

(b) The contractor is not required to provide tests on compaction characteristics when fill placement procedure is specified. Government inspection forces are responsible for inspecting the contractor's specified construction activities and for testing

embankment or slope materials to establish that excavation and fill placement procedures result in an excavated slope or fill that conforms to properties assumed in the design.

Relationship with contractor

Mutual understanding between the Resident Engineer and his staff and the contractor of the requirements of the contract specifications is necessary to obtain desired construction quality. The quality of the work must never be compromised. Unnecessary requirements and restrictions should not be imposed over and above the specification requirements. Firmness by Resident Engineers and inspectors who are efficient and know their job will gain the respect and cooperation of the contractor.

Laboratory

Foundation and earth-fill materials are tested in the laboratory to determine gradation, water content, in situ density, compaction, relative density, and Atterberg limits. The data obtained serve as a basis for ensuring compliance with specifications and design requirements, for guidance toward maximum utilization of available materials, and for providing a record of the properties of materials placed in all parts of the project.

Types of tests and facilities required

The major portion of testing in the field laboratory is for acceptance testing of compacted fill. These tests must be conducted in a manner that will yield results of a quality comparable to the initial laboratory tests upon which the design was based. Discrepancies resulting from variations in testing equipment and techniques should be carefully avoided. Water content, compaction, relative density gradation, and Atterberg limits tests are the most common tests conducted. Water content and compaction tests are used for control of cohesive soils in impervious and random fills. Atterberg limits tests may be used for control of fills of fine-grained cohesive soils where good correlations of optimum water content and maximum dry density with the Atterberg limits have been established. Gradation and relative density tests are used for control

of pervious fills. Gradation tests are also used for control of rock fill. Field density tests are performed on the fill, but compaction tests on the material and water content determinations may be made either in the central laboratory or in the field. The central laboratory must have equipment for these tests, but supplemental portable units may be advisable for gradation, compaction, and water content testing at remote locations. Panel pickup trucks are often used to transport equipment for field density testing, undisturbed (record) sampling in the fill, and sampling in borrow areas. Specially equipped pickup trucks with a small hoist may be required where large-scale field density tests are to be performed on material such as rock fill or soils with a high percentage of large gravel sizes.

Design engineers

The engineer who designs the earth or rock-fill dam should visit the project during construction and assist field personnel in interpreting plans and specifications and observe problems that may not have been fully evaluated in the design. Visits should also be made whenever unexpected conditions are encountered that may require changes in the plans or specifications. A cooperative attitude must be maintained between design engineers and construction personnel so that mutual understanding is reached on existing problems and feasible solutions are developed. In some cases, conferences at the construction site may be necessary between construction personnel, designers, and specialists to review conditions and determine if design modifications are required. A regular schedule of visits should be set up so that design personnel can inspect field conditions at critical construction stages.

Surveying

Survey layout and as-built survey and documentation is to be provided by an independent licensed surveyor hired by the Contractor per the requirements in the specifications. Monitoring of settlement during blasting will also be performed. The contract administrator reserves the right to perform independent survey spot checks to verify the quality of the constructed structures.

Records and Reports

General

Construction records and reports are needed to document results of tests made to verify specification requirements and action taken to correct deficiencies and to provide a record describing the field conditions, modifications to plans and specifications, construction procedures, sequence of operations, and the location and as-built dimensions of important features. These are necessary to evaluate claims made by the contractor based on changed conditions, or claims by the Contracting Officer that work performed does not meet contract requirements. Progress reports are also needed for to provide a basis for payments to the contractor for work accomplished. Inspectors must maintain a daily inspection report (or log), and a master diary must be kept by the Resident Engineer. Details of specific construction control records and reports follow.

Construction records

These records provide useful data for designing future alterations and additions to the structure, determining causes of later undesirable movement or seepage, or interpreting piezometric data. As-built drawings, construction photographs, descriptions of foundation conditions encountered and various treatments, compaction data, and test data on record samples should be included in the records.

Construction reports

The construction foundation report should include details such as dip and strike of rock, faults, artesian and other groundwater conditions, and other characteristics or conditions of foundation materials. A complete history of the project in narrative form should be written, giving the schedule of starting and completing various phases of the work, describing construction methods and equipment used, summarizing quantities of materials involved, and including other pertinent data. Foundation reports should be supplemented by photographs that clearly depict foundation conditions. Routine photographs should be taken at regular intervals, and additional pictures should be

taken of items of specific interest, such as the preparation of foundations and dam abutments. For these items, colored photographs should be taken to provide a better depiction of construction conditions. The captions of all photographs should contain the name of the project, the date on which the photograph was taken, the identity of the feature being reported, and the location of the camera. In reports containing a number of photographs, an alternative would be an index map with a circle indicating the location of the camera with an arrow pointing in the direction the camera was pointing, with each location keyed to the numbers on the accompanying photographs.

Daily Reports

Daily reports or logs are prepared by inspection personnel covering their assigned areas of work. The importance of daily reports should be stressed at all levels of the Resident Engineer's force, since daily reports form a part of official records and may by used as evidence in court or in other legal action. The reports are also valuable in determining possible causes of distress, unusual seepage, or other potentially critical conditions during and after construction is completed. Inspectors' reports are not personal records and should be carefully controlled and accounted for as official records. The daily reports must be thorough, accurate, neat, and legible. Detailed information on the following items should be included:

a. Contract number and contractor's name.

b. Description and location of the work.

c. Date.

d. Weather.

e. Items of equipment and procedures used.

f. Type and amount of work performed.

g. Type and number of field control tests performed by the contractor and by Government forces, and brief comments on results obtained.

h. Progress of work, delays, causes of delays, and extent of delays.

i. Instructions given to contractor, including name of contractor representative talked to, and resulting actions taken by contractor.

j. Details of any controversial matters.

k. Visitors to the inspector's area of responsibility.

l. Safety infractions/violations observed and corrective actions taken.

Compaction Control Reports

Records of compaction control are required to document the procedure used and the adequacy of results obtained. The records also provide information for evaluation of compaction control and for use in determining causes of distress or unusual conditions that may develop during or after construction. Forms for use in tabulating daily field control data are contained in the Appendix. Evaluation of compaction control is necessary to ensure that the method and procedures are producing the quality of in-place fill required by the specifications. Summaries of compaction control data provide a convenient means of evaluating the adequacy of compaction.

Final Construction Report

A final construction report should include the foundation report as described above and the following:

a. A narrative history of the project, including schedules of starting and completing various phases, treatment of unusual conditions, construction methods and equipment used, quantities of materials involved, and other pertinent information.

b. As-built drawings.

c. Construction photographs.

d. Summary of field compaction control data and laboratory test results.

e. Summary of other tests for acceptance control.

f. Test results on record samples.

g. Results of stability and other analyses during construction.

h. Summary of instrumentation data.

i. Summaries or references to conferences and inspection visits and resulting actions implemented.

j. Summaries of all design changes and the justification for these changes.

The report will certify that the work has been performed in compliance with the design drawings, project specifications, and related documents, and will include a final report from the Geotechnical Engineer who supervised the construction.

References

1. Michael Baker Jr., Inc., 1999, *Fool Hollow Spillway Rehabilitation, Quality Assurance Plan* for the Arizona Game & Fish Department, 11 p. plus attachments.

2. Department of the Army, ER 1180-1-6 *Construction Quality Management* .

3. Department of the Army, EM 1110-2-1911 Construction Control for Earth and Rock-Fill Dams.

4. Stantec Consulting, Inc., Construction Administration Procedures Manual.

Appendix A - Sample Forms

Project Punch List

PROJECT	PROJECT NO.	INSPECTION BY	DATE

OWNER:	ARCHITECT/ENGINEER

ITEM	DESCRIPTION	CONTRACTOR	COMMENTS	INITIAL	DATE

EACH CONTRACTOR LISTED SHALL PROVIDE COMMENT OR INITIAL AND DATE COMPLETED.

Nonconformance Report

Client	Date
Project	Project No.
Drawing, Specification or Code	Report No.
Description:	
Prepared By	Date
Contractor Response ☐ Repair or Replace in accordance with approved plans and specifications	☐ Engineering Evaluation
Comments:	
Prepared By	Date
Engineering Evaluation	
Prepared By	
Company/Title	Date
Repair Completed and Acceptable	
Contractor	Date
Inspector	Date

Concrete Placement Card

Pour Date:	Time:
Concrete Mix No.:	Required Strength:
Pour Description:	
CY Quantity Ordered:	
CY Quantity N.L.:	CY Quantity Final:

Prior to pour, contractor acknowledges their work will be completed per the contract documents.

INSPECTION ITEM	CONTRACTOR SIGNATURE	DATE	INSPECTOR	DATE
Formwork				
Re-shoring				
Keys, Blockouts, Exp. Jts.				
Clean Up				
Electrical				
Mechanical/Sleeves Duct				
Plumbing - Pipe Sleeves				
Re-Steel/Mesh				
Fire Protection				
P/T				
Anchor Bolt and Imbed Placement				

Pour is authorized to proceed:

Contractor's Superintendent

_____

Concrete Field Test Summary

LOCATION			DATE	JOB NO.	
OWNER					
PROJECT					
CONTRACTOR					
Mix Number:	Spec Strength	Concrete	Grout	Mortar	Other
Truck No.	Location	Cyls Taken	Slump (inches)	Air Content %	Conc Temp F

Quality Assurance Report (QAR)
Daily Log of Construction

	Report Number
Project	Date
Contractor	Weather

Portion of scheduled day suitable for operations (%)					Temperature	
Structural Excavation	Borrow Excavation	Embankment	Concrete	Structure	Minimum	Maximum

Number of Government Employees					24 hour precipitation	
Supervisory	Office	Layout	Inspection	Total	inches	ending

Number of Contractor Employees								Lake Level	
Supervisory	Skilled	Laborers	Total	From	To	From	To	Feet	Time

Attach list of the following: (a) Major items of equipment either idle or working, and (b) Number and classification of contractor personnel

Contractors/Subcontractors and area of responsibility for work performed today:

a.

b.

c.

d.

e.

f.

Work performed today:: (Indicate location and description of work performed. Refer to work performed by prime and/or subcontractors by letter in table above. If no work performed, indicate reason.)

Information on progress of work, causes for delays and extend of delays, plant, material, etc.

CQC Control phases attended and instruction given:

Results of QA activities and tests, deficiencies observed, actions taken and corrective action of contractor. Include comment pertaining to contractors CQC activities.

Verbal instruction given to contractor (include names, reactions and remarks)
Has anything developed on the work which might lead to a change order or finding of fact?
Information on progress of work, causes for delays and extend of delays, weather, plant, material, etc.
Information, instructions or actions taken not covered on QCR report or disagreements:
Safety: (Include any infractions of approved safety plan, safety manual or instructions given. Specify corrective action taken)
Remarks: (Include visitors to project and miscellaneous remarks pertinent to work)

QA representatives signature	Date	Engineers Initials	Date

Summary of Field Compaction Control

(1) Daily SUMMARY OF FIELD COMPACTION CONTROL OF IMPERVIOUS OR SEMIPERVIOUS SOILS FOR CIVIL WORKS PROJECTS

ENGINEER FORM

ECE: ENGCW-E-11(R1)

PROJECT	RIVER / STATE / TOWN	CONTRACT NO	CONTRACTOR	DATE OF REPORT	REPORT NO
Main Embankment Closure Section Dam	(nearest)	(Fill in if desired for district or division use)		(date transmitted from field)	73

SHEET 1 OF 1

SPACE RESERVED FOR PUNCH CARD OPERATOR

1-2 ___ 3-4 ___ 5 ___ 6-7 ___ 8-9 ___ 10-13 ___

EMBANKMENT ZONE	(S) SPECIFIED OR (D) Desired % COMP	W % LIMITS	COMPACTION EQUIPMENT (3)	LOOSE LIFT THICKNESS (IN.)	NUMBER OF PASSES	CONTACT PRESSURE (PSI)
Upstream	95 D	+2 to -3 S	SFR	8	8	517
Central	95 D	+2 to -2 S	SFR	8	8	517
Downstream	95 D	+2 to -3 S	SFR	8	8	517

TEST IDENTIFICATION: TEST NO	DATE MADE	TYPE TEST	STATION	OFFSET (FT)	ELEVATION (FT)	DEPTH (IN.)	EMBANKMENT ZONE	BORROW SOURCE	CLASSIFICATION: CLASS WORD OR LETTER SYMBOL	GRADATION: MAX PART SIZE (IN.)	% PASSING #4 SIEVE	% PASSING #200 SIEVE	ATTERBERG LIMITS: LL	PI (NOT PL)	IN PLACE DATA: TOTAL SAMPLE: DRY DENSITY (PCF)	WATER CONTENT (%)	-#4 FRACTION: DRY DENSITY (PCF)	WATER CONTENT (%)	LABORATORY TEST DATA: STANDARD METHOD: TEST	MAX DRY DENSITY (PCF)	OPT WATER CONTENT (%)	Liquid Limit Correlation: MAX DRY DENSITY (PCF)	OPT WATER CONTENT (%)	FIELD AND LABORATORY CORRELATION: % +OR-	PERCENT COMPACTION	COMMENTS ON TESTS
COL 1	COL 2	COL 3	COL 4	COL 5	COL 6	COL 7	COL 8	COL 9	COL 10	COL 11	COL 12	COL 13	COL 14	COL 15	COL 16	COL 17	COL 18	COL 19	COL 20	COL 21	COL 22	COL 23	COL 24	COL 25	COL 26	COL 27
488	1965 4 Mar	SV	147+50	480 DS	93		DS	"	SP	"	"	7	NP	NP	-	-	114.8	9.8	-	-	-	112.7	12.9	-3.1	102	
489	4 Mar	CYL	149+30	20 DS	104	"	Central	"	CH	"	"	62	52	32	-	-	110.0	16.5	-	-	-	107.2	17.1	-0.6	103	
490	4 Mar	CYL	149+00	175 US	105	"	US	"	CL	"	"	44	37	25	-	-	111.9	14.1	-	-	-	116.0	12.9	+1.2	96.5	
								Following data from					Dam,				District					Visual	Class			
545	1963 9 Jul	NM	10+05	110 US	1375	"	A	Spillway Excav	CL(E)	"	"	"	"	"	113.0	"	-	-	-	-	-	113.5	"	"	98.8	Check les on NM
1	9 Jul	WV	10+05	110 US	1375	"	A	Spillway Excav	CL(E)	"	"	"	"	"	110.7	"	-	-	-	-	-	113.5	"	"	97.7	
								Following data from					Dam				District					1 Pt.	Std.			
CRF-7 DM D-30	1963 6 Sep	SV	7+25	85 DS	797	"	Random	Excav	SM	"	"	"		"	136.7	7.2	121.5	11.5	-	-	-	124.8	10.2	-3.0	97.3E	
CRF-8 DM D-48	9 Sep	SV	8+00	90 US	826	"	Impervious	Borrow	SM	"	"	"	"	"	126.2	9.6	118.9	11.9	-	-	-	126.3	10.2	-0.6	94.1E	
								Following data from					Dam				District									
404	1964 19 Aug	CYL	10+00	8 DS	705		Impervious Core	"	MH	"	68	27	75	34	82.3	34.6	68.4	44.4	(A)	84.0	37.0			+7.4	81	
707	21 Sep	CYL	20+00	℄	801		Impervious Core	"	MH	"	76	37	74	32	91.1	27.4	81.0	34.9	(A)	81.0	"			"	100	

Information not given in field report but should have been.

ATTN: Compaction procedure using 12-in. mold was added to EM 1110-2-1906 after note on COL 20 (see below) was prepared.

NOTE (1) FILL IN APPROPRIATE WORD DAILY, WEEKLY, MONTHLY OR PERIODIC
(2) ENTER TYPE OF EQUIPMENT USED, E.G. SHEEPSFOOT ROLLER (SFR), PNEUMATIC ROLLER (PR), VIBRATORY ROLLER (VR), PNEUMATIC HAND TAMPER (PHT), OR VIBRATORY TAMPER (VT)
COL 1 CYLINDER (CYL), CHUNK (CH), SAND VOLUME (SV), WATER VOLUME (WV), NUCLEAR METHOD (NM), OTHER ___
COL 5 RECORD OFFSET BY DISTANCE UPSTREAM OR DOWNSTREAM OF CENTERLINE OF DAM OR RIGHT OR LEFT OF AXIS
COL 6 DEPTH FROM FILL SURFACE TO TOP OF DENSITY TEST
COL 8 E.G. AREA C SPILLWAY EXCAVATION, ETC
COL 10 ENTER SOIL COLOR BEFORE CL-ML WHEN CLASS ESTIMATED NOTE BY LETTER (E)
COL 11-12 WHEN BOTH GRADATION AND WATER CONTENT CONTROL OF THE FILL MATERIAL IS A SPECIFICATION REQUIREMENT USE THE SUPPLEMENTAL FORM ALONG WITH THIS FORM, USING THE SAME SHEET NUMBER FOR THE SUPPLEMENTAL SHEET FOLLOWED BY A, B
COL 20 STANDARD METHOD (A) 6-IN. DIAM MOLD, (B) 6-IN. DIAM MOLD AS OUTLINED IN MANUAL EM 1110-2-1906 IF MATERIAL WITH MAX PARTICLE SIZE GREATER THAN 2.0 IN. OR OTHER EFFORT IS USED IN THE LAB COMPACTION TEST, NOTE IT AS UNDER COL 20 AND REPORT DETAILS OF PROCEDURE
COL 21-22 1- OR 2-POINT COMPACTION DATA ON FIELD SAMPLES CAN BE RECORDED IN COL 21 AND 22, MAKING APPROPRIATE CHANGES IN COLUMN HEADINGS
COL 23-24 FOR USE WHEN MAX DENSITY AND OPTIMUM WATER CONTENT ESTIMATED. STATE HOW ESTIMATED BY FILLING IN BLANK, E.G. 1-POINT STANDARD METHOD, RAPID COMPACTION CONTROL, LIQUID LIMIT CORRELATION, VISUAL COMPARISON, ETC
COL 25 COL 11 OR COL 12 MINUS COL 23 OR COL 24
COL 26 INDICATE DERIVATION, E.G. FOR COL 18 = COL 21 OR COL 23, INDICATE BY A OR B, RESPECTIVELY FOR COL 19 = COL 21 OR COL 23, INDICATE BY C OR D, RESPECTIVELY
COL 27 IF TEST RESULTS DO NOT MEET SPECIFICATIONS, DENOTE BY LETTER (V) AND NOTE REMEDIAL TREATMENT IN FOOTNOTE. WHEN UNSATISFACTORY AREA IS REMOVED AND RETESTED, DENOTE BY (R)

U. S. ARMY ENGINEER District, ___
CORPS OF ENGINEERS

PREPARED BY
(Inspector)

SUBMITTED BY
RESIDENT ENGINEER

Summary of Field Compaction Control (both pervious fill and rock-fill)

(8): Daily — SUMMARY OF FIELD COMPACTION CONTROL OF PERVIOUS SOILS AND ROCKFILL FOR CIVIL WORKS PROJECTS — RCS: ENGCW-E-11(R1)

PROJECT	RIVER / STATE / TOWN	CONTRACT NO	CONTRACTOR	DATE OF REPORT	REPORT NO
Main Embankment Dam	(nearest)	(Optional entry if desired for district or division use)		(date transmitted from field)	96 — SHEET 1 OF 1

SPACE RESERVED FOR PUNCH CARD OPERATOR — 1 – CARD NO 1 AND CARD NO 2

EMBANKMENT ZONE	SPECIFIED (S) COMP REL DEN	COMPACTION EQUIP (B)	LOOSE LIFT THICKNESS (IN)	NO OF PASSES	WEIGHT (LB) OR CONT PRESS (PSI)
(Data on Dam)					
Pervious		PR	8	3	50 T

EMBANKMENT ZONE	TYPE	COLOR	HARDNESS	% WEATHERED
(Data on Dam)				
Class II 18"	Slabby Basalt	Gray		
Class I 18"	Basalt	Black		

TEST IDENTIFICATION: TEST NO	DATE MADE	TYPE TEST	STATION	OFFSET (FT)	ELEVATION (FT)	DEPTH (IN) OR VOLUME (CF)	EMBANKMENT ZONE	SOURCE	CLASSIFICATION SYMB	MAX PART SIZE (IN)	GRADATION PERCENT PASSING: TOTAL SAMPLE 3"	1-1/2	3/4	4	10	40	100	200	3/4" FRACTION: 3/4"	4	FINE FRACTION: 40	#200	UNIF COEF C_u	APPARENT SPECIFIC GRAVITY		DRY DENSITY: FIELD (PCF)	LABORATORY: TEST METHOD	MAXIMUM (PCF)	MINIMUM (PCF)	% COMP OR REL DEN	COMMENTS ON TESTS
COL 1	COL 2	COL 3	COL 4	COL 5	COL 6	COL 7	COL 8	COL 9	COL 10	COL 11	COL 12	COL 13	COL 14	COL 15	COL 16	COL 17	COL 18	COL 19	COL 20	COL 21	COL 22	COL 23	COL 24	COL 25	COL 26	COL 27	COL 28	COL 29	COL 30	COL 31	COL M
CF-10 D-D361	1 Oct	WV	10+70	10 US	338		Pervious	Borrow C	GP	3	100	92.9	77.4	44.2	33.6	25.1	-	0.7	77.5	44.2	56.9	1.6	42.5	*	*	135.8	PVD	138.8	-	D_M 97.8	
CF-15 D-D364	1 Oct	WV	15+00	25 DS	343		Pervious	Borrow C	GP	3	100	96.6	67.1	40.8	31.5	14.0	-	0.6	67.1	40.8	34.4	1.4	46.7	*	*	134.3	PVD	139.8	-	D_M 96.1	
Rock-fill data from Dam, District											Total Sample: 12"	6	3	1	4	10	40	200	3" Fraction: 1"	4										
2026	1962 18 Apr	DT	21+00	240 US	1400		Class II 18"	Spillway	-	18	100	89	64	34	16	10	6.4	3.7	44	23.4	-	-	3.4	*	-	112.1	V	102.7	94.4	D_M 109	
2176	25 Jun	DT	21+20	100 DS	1461		Class I 18"	Helga Bungale	-	18	100	89	68	22	2.9	1.7	0.7	0.2	25	3.3	-	-	4.7	*	-	118.6	V	114.1	100.8	D_M 104	

* Information not given in field report but should have been.

Remarks: Col 3 - Density Test (DT) performed using plastic membrane or tarpaulin and water.

Col 28 - V - laboratory test using 3/4 cu yd vibrating apparatus (job-built).

NOTE 1: ENTER APPROPRIATE WORD: DAILY, WEEKLY, MONTHLY, OR PERIODIC

2: ENTER TYPE OF EQUIPMENT USED: E.G. PNEUMATIC ROLLER (PR), VIBRATORY ROLLER (VR), CRAWLER TRACTOR (CT), RUBBER-TIRED TRACTOR (RT), STEEL TAMPING PLATE (STP), OTHER _____

COL. 4: FOR GRAVEL OR SAND FILL: WATER VOLUME (WV), SAND VOLUME (SV), NUCLEAR METHOD (NM), GRADATION SAMPLE (GS), OTHER _____; FOR ROCKFILL: GRADATION SAMPLE (GS), DENSITY TEST (DT)

COL. 5: RECORD OFFSET BY DISTANCE UPSTREAM OR DOWNSTREAM OF CENTERLINE OF DAM OR RIGHT OR LEFT OF AXIS

COL. 7: GRAVEL OR SAND FILL: SHOW DEPTH BELOW COMPACTED SURFACE TO TOP OF DENSITY TEST; E.G. "18"; ROCKFILL: SHOW VOLUME OF DENSITY TEST HOLE, E.G. "315 CF"

COL. 9: E.G. AREA C, SPILLWAY EXCAVATION, ETC

COL. 10: WHEN CLASSIFICATION ESTIMATED, NOTE BY LETTER (E)

COL. 27: IF ESTIMATED, SO NOTE AS (E) AND STATE HOW ESTIMATED IN FOOTNOTE

COL. 28: VIBRATORY TABLE (VT), PROVIDENCE VIBRATED DENSITY (PVD), OTHER _____

REPORT SEPARATELY DETAILS OF SPECIAL LABORATORY PROCEDURES USED

COL. 31: INDICATE HOW DERIVED, E.G. PERCENT COMPACTION (D_M) OR RELATIVE DENSITY (D_R) BY PLACING APPROPRIATE SYMBOL (D_M OR D_R) OVER VALUE OBTAINED

COL. M: IF TEST RESULTS DO NOT MEET SPECIFICATIONS, DENOTE BY LETTER (N) AND NOTE REMEDIAL TREATMENT IN FOOTNOTE. WHEN UNSATISFACTORY AREA REMOVED AND RETESTED, DENOTE BY LETTER (R)

U.S. ARMY ENGINEER District, _____

CORPS OF ENGINEERS

PREPARED BY

(Inspector)

SUBMITTED BY

RESIDENT ENGINEER

PERIODIC SUMMARY OF FIELD COMPACTION CONTROL DATA

Project _____ Dam _____ Resident Engr S. J. Smith
District _____ Insp. or Tech J. S. Jones
Location of Project _____ (River) _____ (Nearest town, state)
Report No. 12 Period 5 Nov 68 to 5 Dec 68

TYPE OF FILL	IMPERVIOUS (CORE)
Soil Classification (USCS Symbols)	CH, CL
Stationing of Areas Tested	14+75 to 46+50
Elevation of Areas Tested	832 to 840
Compaction Equipment	Sheepsfoot roller, Ferguson self-propelled model SP-120B (615 psi)
Number of Passes	8
Uncomp. Lift Thick.	8 in.
Roller Speed, MPH	3 to 5
In-Place Density Method (Give % of tests made with each method)	Sand Volume (90%) Nuclear (10%)*
Method of Determining Field w	Oven Drying
Method of Relating Field w to Std Opt w, and Field Density to Max. Dry Density, or Relative Density	Field results compared to laboratory compaction curve for similar soil. Appropriate laboratory curve selected by 1- or 2-point Std compaction test at field w or drier, supplemented with liquid limit test correlation
Specified Range of w (Percentage Points Above & Below Std Opt w)	Opt -1 % to Opt +2 %
(Desired) (Specified) Min. (% Comp. or Rel. Density)**	95%
No. Areas Tested	21
No. with w Outside Acceptable Limits	3
No. with Density Below Min.	2
No. with w and Density Outside Acceptable Limits	1
No. Areas Reworked	5
No. Areas Retested	4

Remarks

* Only the two "initial" tests shown on the summary plot were by nuclear method check tests and remainder of tests were by sand volume method.

**Strike out inapplicable words.

Summary Prepared by ARG Date 6 Dec 68
Summary Checked by JSJ Date 7 Dec 68

ENG Form 4287
JUN 69 (ER 1110-2-1925)

Summary Form, Field Compaction Control Data, Impervious Material

Project Dam Resident Engr J. S. Smith
District Insp. or Tech J. S. Jones
Location of Project (River) (nearest town, state
Report No. 12 Period 5 Nov 68 to 5 Dec 68

TYPE OF FILL	PERVIOUS (SAND DRAIN)
Soil Classification (USCS Symbols)	SW
Stationing of Areas Tested	15+50 to 37+50
Elevation of Areas Tested	830 to 839
Compaction Equipment *	Vibratory Roller, Tampo Model VC80 (static wt. = 3.5 tons, centrifugal force of 7.5 tons at 1600 rpm)
Number of Passes *	4
Uncomp. Lift Thick.	6 in.
Roller Speed, MPH	2
In-Place Density Method (Give % of tests made with each method)	Sand Volume (90%) Nuclear (10%)**
Method of Determining Field w	Visual Observation
Method of Relating Field w to Std Opt w, and Field Density to Max. Dry Density, or Relative Density	Field results compared to results of laboratory maximum (modified Providence vibrated) and minimum density tests on similar material. Appropriate laboratory results selected by gradation correlation.
Specified Range of w (Percentage Points Above & Below Std Opt w)	Saturated during compaction
(Desired) (Specified) Min. (% Comp. or Rel. Density)+	80%
No. Areas Tested	25
No. with w Outside Acceptable Limits	Not Applicable
No. with Density Below Min.	6
No. with w and Density Outside Acceptable Limits	Not applicable
No. Areas Reworked	5
No. Areas Retested	3

Remarks
* If compacted by crawler tractor, change "passes" to "coverages"
** Only the two "initial" tests shown on summary plot were by nuclear meth
Check tests and all other tests were by the Sand Volume method.

+Strike out inapplicable words. Summary Prepared by ARG Date 6 Dec
ENG Form 4287 Summary Checked by JSJ Date 7 Dec
JUN 69 (ER 1110-2-1925)

Summary Form, Field Compaction Control Data, Pervious Material

APPENDIX J

ELECTRONIC FILES OF HEC-1 MODELS FOR FLOOD HYDROLOGY & FLOOD ROUTING THROUGH THE MODIFIED DAM

Contents of the Hydrology diskette

The files included on this diskette are the final hydrologic models used for design of the modifications to Golden Eagle Park Dam. This diskette contains three sets of hydrologic models. The first is the original FDS models for each hydrologic condition. The original models are modified to only include the portions of the watershed that contribute runoff to Ashbrook Wash. The following describes these different models which generates inflow hydrographs to the impoundment (without routing through the dam).

ex100-6.*	Existing watershed conditions for the 100-year, 6-hour event.
ex100-24.*	Existing watershed conditions for the 100-year, 24-hour event.
fu100-6.*	Future full build out watershed conditions for the 100-year, 6-hour event.
fu100-6.*	Future full build out watershed conditions for the 100-year, 24-hour event.
fu10-6.*	Future full build out watershed conditions for the 10-year, 6-hour event.
fu10-24.*	Future full build out watershed conditions for the 10-year, 24-hour event.

The second set of models is for routing using the designed modifications to the Golden Eagle Park Dam. The following describes these flood routing models.

E_10024.*	100-year, 24-hour 1994 Condition
E_100-6.*	100-year, 6-hour 1994 Condition
10024-B.*	100-year, 24-hour Future Condition
10_6-B.*	100-year, 6-hour Future Condition
10_24-B.*	10-year, 24-hour Future Condition
10_6-B.*	10-year, 6-hour Future Condition

The third set is for the inflow design flood. The following describes these models.

Dam11-RT.*	Dam break analysis (piping breach) as developed by GVSCE for North Heights Dam. This breach analysis is used to develop the inflow record for IDF1.
Dam11P.out	HEC-1 file as developed by GVSCE of the emergency spillway release from North Heights Dam prior to and concurrent with the piping breach. This hydrograph is added to the piping breach hydrograph to develop North Heights Dam QI record in IDF1.
IDF1.out	HEC-1 file for GEP Dam IDF1 (with North Heights Dam breach). Basic HEC-1 file was originally developed by GVSCE and subsequently modified by the District. Stantec added editorial comments.
IDF2.out	HEC-1 file for GEP Dam IDF2 (without upstream dam break). File was developed by GVSCE and used by the District in its January 1999 analysis. Stantec added editorial comments.

Routing of the inflow design flood (IDF1 & IDF2) through the modified dam and spillway are contained in IDF1.OUT & IDF2.OUT, respectively.

Transmittal

Stantec Consulting Inc.
7776 Pointe Parkway West, Suite 290
Phoenix, AZ 85044
Tel: 602-438-2200 Fax: 602-431-9562
www.stantec.com

Stantec

To:	Distribution	Sender:	Robin Wade
Date:	28 September 1999	☒	For Your Use
File:	82000095	☐	For Your Approval
		☐	For Your Review
		☐	As Requested

Reference: Golden Eagle Park Dam Pre-Design Modification Design Report

Attached are the revised Appendix B and Appendix J of the *Design Report*, for Golden Eagle Park Dam, dated September 1999.

Please replace the attached appendices with the ones currently in your report.

If you have any questions or concerns regarding these revisions, please do not hesitate to contact me. My direct line is 602.707.4684.

Thank you.

STANTEC CONSULTING INC.

Robin D. Wade
Administrative Assistant

Attachments

c.

rdw documento

100-Year, Existing Condition (6-Hour)

```
****************************************
*                                      *
*   FLOOD HYDROGRAPH PACKAGE  (HEC-1)  *
*              MAY   1991              *
*           VERSION 4.0.1E             *
*     Lahey F77L-EM/32 version 5.01    *
*      Dodson & Associates, Inc.       *
*      DATE  09/28/99  TIME  13:50:47  *
****************************************
```

```
****************************************
*                                      *
*    U.S. ARMY CORPS OF ENGINEERS      *
*    HYDROLOGIC ENGINEERING CENTER     *
*          609 SECOND STREET           *
*       DAVIS, CALIFORNIA 95616        *
*           (916) 551-1748             *
*                                      *
****************************************
```

```
X     X  XXXXXXX   XXXXX           X
X     X  X        X     X         XX
X     X  X        X                X
XXXXXXX  XXXX     X        XXXXX   X
X     X  X        X                X
X     X  X        X     X          X
X     X  XXXXXXX   XXXXX          XXX
```

THIS PROGRAM REPLACES ALL PREVIOUS VERSIONS OF HEC-1 KNOWN AS HEC1 (JAN 73), HEC1GS, HEC1DB, AND HEC1KW.

THE DEFINITIONS OF VARIABLES -RTIMP- AND -RTIOR- HAVE CHANGED FROM THOSE USED WITH THE 1973-STYLE INPUT STRUCTURE.
THE DEFINITION OF -AMSKK- ON RM-CARD WAS CHANGED WITH REVISIONS DATED 28 SEP 81. THIS IS THE FORTRAN77 VERSION
NEW OPTIONS: DAMBREAK OUTFLOW SUBMERGENCE , SINGLE EVENT DAMAGE CALCULATION, DSS:WRITE STAGE FREQUENCY,
DSS:READ TIME SERIES AT DESIRED CALCULATION INTERVAL LOSS RATE:GREEN AND AMPT INFILTRATION
KINEMATIC WAVE: NEW FINITE DIFFERENCE ALGORITHM

```
LINE          ID.......1.......2.......3.......4.......5.......6.......7.......8.......9......10

  1           ID   Golden Eagle Park Dam Modifications
  2           ID        by Stantec: Proj. No. 28900095                    File: ALTFf-2.IH1
  3           ID        for FCDMC:  FCD                                   Date:07-08-99     mcg
  4           ID                                                        Revised:
  5           ID
  6           ID   Alternative F:
  7           ID        Addition of an auxillary spillway.  This spillway will function such
  8           ID        that the existing emergency spillway does not operate for the 100-year
  9           ID        storm.  The stage-storage relation is adjusted to reflect revised
 10           ID        grading in the park.
 11           ID
 12           ID        The purpose of this model is to estimate peak discharges in Ashbrook
 13           ID        Wash for evaluation of the Dam modifications impact on the floodplain.
 14           ID
 15           ID   100-year, 6-hour existing condition watershed model for Ashbrook Wash
 16           ID   upstream of the Fort McDowell Indian Reservation boundary.
 17           ID        This model is a portion of the original Fountain Hills North FDS
 18           ID        watershed model conducted by GVSCE, 1994.  The title cards from that
 19           ID        model are included for reference.
 20           ID
 21           ID   Fountain Hills North Floodplain Delineation Study
 22           ID        FCD 92-04        by GVSCE                         File:  EX100-6.IH1
 23           ID     Existing Condition                                   Date:    02-25-94   trl
 24           ID     100-Year 6-Hour Storm, Clark Unit Hydrograph      Revised:    09-14-94   trl
              *
 25           IT       1                    1080
 26           IO       5
 27           IN      15
              *
 28           JD    3.30     0.01
 29           PC   0.000    0.008    0.016    0.025    0.033    0.041    0.050    0.058    0.066    0.074
 30           PC   0.087    0.099    0.118    0.138    0.216    0.377    0.834    0.911    0.931    0.950
 31           PC   0.962    0.972    0.983    0.991    1.000
 32           JD    3.28     0.50
 33           JD    3.23     2.80
 34           PC   0.000    0.009    0.016    0.025    0.034    0.042    0.051    0.059    0.067    0.076
 35           PC   0.087    0.100    0.120    0.163    0.252    0.451    0.694    0.837    0.900    0.938
 36           PC   0.950    0.963    0.975    0.988    1.000
 37           JD    3.04     16.0
 38           PC   0.000    0.015    0.020    0.030    0.048    0.063    0.076    0.090    0.105    0.119
 39           PC   0.135    0.152    0.175    0.222    0.304    0.472    0.670    0.796    0.868    0.912
 40           PC   0.946    0.960    0.973    0.987    1.000
 41           JD    2.67     90.0
 42           PC   0.000    0.021    0.035    0.051    0.071    0.087    0.105    0.125    0.143    0.160
 43           PC   0.179    0.201    0.232    0.281    0.364    0.500    0.658    0.773    0.841    0.888
 44           PC   0.927    0.945    0.964    0.982    1.000
              *

 45           KK    204A
 46           KM   Sub-Basin   204A
 47           KM
 48           KM      The Clark Unit Hydrograph is used for this basin.
 49           KM          The Natural time-area relation is used for this basin.
 50           KM
 51           KM      Time of Concentration for this sub-basin is based on the following:
```

```
LINE          ID.......1.......2.......3.......4.......5.......6.......7.......8.......9......10

 52           KM          6-Hour Rainfall, Pattern No.  1.00
 53           KM          An rainfall areal reduction factor of 0.999
 54           KM
 55           KM       EXCESS RAINFALL VALUES EXCEEDED IN 5-MINUTE INTERVALS
 56           KM     5  10  15  20  25  30  35  40  45  50  55  60  65  70  75  80  85  90
 57           KM   .45 .44 .44 .13 .10 .09 .04 .03 .03 .00 .00 .00 .00 .00 .00 .00 .00 .00
 58           KM
 59           KM          L=   0.687 miles, S=  175 feet/mile, Kb= .10
 60           KM
 61           BA   0.108
 62           LG    0.15    0.39    5.80    0.19    0.00
 63           UC   0.325   0.280
 64           UA       0       3       5       8      12      20      43      75      90      96
 65           UA     100
              *

 66           KK  522523
 67           KM      Normal depth channel route from C522 to C523
 68           KM      Source:  200 Scale Mapping
 69           RS      10    FLOW      -1
 70           RC   0.060   0.050   0.060  3275.0  0.0197
 71           RX  1000.0  1020.0  1035.0  1065.0  1080.0  1120.0  1160.0  1185.0
 72           RY  1678.0  1676.0  1674.0  1672.0  1672.0  1674.0  1676.0  1678.0
              *

 73           KK    204B
 74           KM   Sub-Basin   204B
 75           KM
 76           KM      The Clark Unit Hydrograph is used for this basin.
 77           KM          The Natural time-area relation is used for this basin.
 78           KM
 79           KM      Time of Concentration for this sub-basin is based on the following:
 80           KM          6-Hour Rainfall, Pattern No.  1.00
 81           KM          An rainfall areal reduction factor of 0.998
 82           KM
 83           KM       EXCESS RAINFALL VALUES EXCEEDED IN 5-MINUTE INTERVALS
 84           KM     5  10  15  20  25  30  35  40  45  50  55  60  65  70  75  80  85  90
 85           KM   .44 .44 .43 .13 .09 .08 .03 .03 .03 .00 .00 .00 .00 .00 .00 .00 .00 .00
 86           KM
 87           KM          L=   0.775 miles, S=  128 feet/mile, Kb= .10
 88           KM
 89           BA   0.126
 90           LG    0.15    0.39    5.80    0.21    0.20
 91           UC   0.408   0.364
 92           UA       0       3       5       8      12      20      43      75      90      96
 93           UA     100
              *

 94           KK   C523I
 95           KM      Hydrograph combine 522523 + 204B at C523I
 96           HC       2
              *
```

```
LINE          ID.......1.......2.......3.......4.......5.......6.......7.......8.......9......10

 97           KK   C523O
 98           KM      Reservoir route at C523.
 99           RS       1    ELEV  1650.3
100           SV    0.00    0.01    0.12    0.71    2.23    2.50    2.80    3.10    3.20    3.40
101           SV    3.70    4.00    4.30    4.60    4.90    5.20    5.50
102           SE  1650.3  1652.0  1654.0  1656.0  1658.0  1658.2  1658.4  1658.6  1658.7  1658.8
103           SE  1659.0  1659.2  1659.4  1659.6  1659.8  1660.0  1660.2
104           SQ       0      22      78     144     209     214     220     224     226     232
105           SQ     239     249     288     384     529     726     960
              *

106           KK   D523L
107           KM      Hydrograph diversion at C523.  Main flow continues in the left branch.
108           KM      Diverted flow is in the right branch.
109           DT   D523R
110           DI       0      22      78     144     209     214     220     224     226     232
111           DI     239     249     288     384     529     726     960
112           DQ       0       0       0       0       0       0       0       0       0       3
113           DQ       5      10      20      37      61      96     139
              *

114           KK    205A
115           KM   Sub-Basin   205A
116           KM
117           KM      The Clark Unit Hydrograph is used for this basin.
118           KM          The Natural time-area relation is used for this basin.
119           KM
120           KM      Time of Concentration for this sub-basin is based on the following:
121           KM          6-Hour Rainfall, Pattern No.  1.00
122           KM          An rainfall areal reduction factor of 0.998
123           KM
124           KM       EXCESS RAINFALL VALUES EXCEEDED IN 5-MINUTE INTERVALS
125           KM     5  10  15  20  25  30  35  40  45  50  55  60  65  70  75  80  85  90
126           KM   .45 .44 .44 .13 .09 .08 .04 .04 .03 .03 .03 .03 .01 .01 .01 .01 .01 .01
127           KM
128           KM          L=   0.870 miles, S=  378 feet/mile, Kb= .14
129           KM
130           BA   0.118
131           LG    0.25    0.35    4.35    0.40   35.00
132           UC   0.350   0.350
133           UA       0       3       5       8      12      20      43      75      90      96
134           UA     100
              *

135           KK    205B
136           KM   Sub-Basin   205B
137           KM
138           KM      The Clark Unit Hydrograph is used for this basin.
139           KM          The Natural time-area relation is used for this basin.
140           KM
141           KM      Time of Concentration for this sub-basin is based on the following:
142           KM          6-Hour Rainfall, Pattern No.  1.00
143           KM          An rainfall areal reduction factor of 0.997
144           KM
```

```
LINE          ID.......1.......2.......3.......4.......5.......6.......7.......8.......9......10

 145          KM       EXCESS RAINFALL VALUES EXCEEDED IN 5-MINUTE INTERVALS
 146          KM     5  10  15  20  25  30  35  40  45  50  55  60  65  70  75  80  85  90
 147          KM   .45 .44 .44 .13 .09 .08 .04 .04 .03 .03 .03 .03 .01 .01 .01 .01 .01 .01
 148          KM
 149          KM          L=   0.759 miles, S=  373 feet/mile, Kb= .14
 150          KM
 151          BA   0.211
 152          LG    0.25    0.35    4.35    0.40   35.00
 153          UC   0.321   0.204
 154          UA       0       3       5       8      12      20      43      75      90      96
 155          UA     100
              *

 156          KK    C528
 157          KM      Hydrograph combine 205A + 205B at C528
 158          HC       2
              *

 159          KK  528530
 160          KM      Normal depth channel route from C528 to C530
 161          KM      Source:  Hydrology Field Reconnaissance
 162          RS       2    FLOW      -1
 163          RC   0.060   0.043   0.060  2594.0  0.0709
 164          RX  1000.0  1018.0  1031.0  1042.0  1052.0  1066.0  1093.0  1107.0
 165          RY    96.3    92.2    89.9    85.9    85.7    91.5    91.2    96.3
              *

 166          KK    205C
 167          KM   Sub-Basin   205C
 168          KM
 169          KM      The Clark Unit Hydrograph is used for this basin.
 170          KM          The Natural time-area relation is used for this basin.
 171          KM
 172          KM      Time of Concentration for this sub-basin is based on the following:
 173          KM          6-Hour Rainfall, Pattern No.  1.00
 174          KM          An rainfall areal reduction factor of 0.999
 175          KM
 176          KM       EXCESS RAINFALL VALUES EXCEEDED IN 5-MINUTE INTERVALS
 177          KM     5  10  15  20  25  30  35  40  45  50  55  60  65  70  75  80  85  90
 178          KM   .45 .44 .44 .13 .09 .08 .04 .04 .03 .03 .03 .03 .01 .01 .01 .01 .01 .01
 179          KM
 180          KM          L=   0.618 miles, S=  331 feet/mile, Kb= .15
 181          KM
 182          BA   0.059
 183          LG    0.25    0.35    4.35    0.41   35.00
 184          UC   0.308   0.343
 185          UA       0       3       5       8      12      20      43      75      90      96
 186          UA     100
              *
```

```
LINE          ID.......1.......2.......3.......4.......5.......6.......7.......8.......9......10

 187          KK   C530R
 188          KM      Hydrograph combine 528530 + 205C at C530 right branch
 189          HC       2
              *

 190          KK    205D
 191          KM   Sub-Basin   205D
 192          KM
 193          KM      The Clark Unit Hydrograph is used for this basin.
 194          KM          The Natural time-area relation is used for this basin.
 195          KM
 196          KM      Time of Concentration for this sub-basin is based on the following:
 197          KM          6-Hour Rainfall, Pattern No.  1.00
 198          KM          An rainfall areal reduction factor of 0.996
 199          KM
 200          KM       EXCESS RAINFALL VALUES EXCEEDED IN 5-MINUTE INTERVALS
 201          KM     5  10  15  20  25  30  35  40  45  50  55  60  65  70  75  80  85  90
 202          KM   .45 .44 .44 .13 .09 .08 .04 .04 .03 .03 .03 .03 .01 .01 .01 .01 .01 .01
 203          KM
 204          KM          L=   1.020 miles, S=  361 feet/mile, Kb= .13
 205          KM
 206          BA   0.319
 207          LG    0.25     0.35     4.35     0.40    35.00
 208          UC   0.379    0.246
 209          UA      0        3        5        8       12       20       43       75       90       96
 210          UA    100
              *

 211          KK    205E
 212          KM   Sub-Basin   205E
 213          KM
 214          KM      The Clark Unit Hydrograph is used for this basin.
 215          KM          The Natural time-area relation is used for this basin.
 216          KM
 217          KM      Time of Concentration for this sub-basin is based on the following:
 218          KM          6-Hour Rainfall, Pattern No.  1.00
 219          KM          An rainfall areal reduction factor of 0.997
 220          KM
 221          KM       EXCESS RAINFALL VALUES EXCEEDED IN 5-MINUTE INTERVALS
 222          KM     5  10  15  20  25  30  35  40  45  50  55  60  65  70  75  80  85  90
 223          KM   .45 .44 .44 .13 .09 .08 .04 .04 .03 .03 .03 .03 .01 .01 .01 .01 .01 .01
 224          KM
 225          KM          L=   1.357 miles, S=  358 feet/mile, Kb= .14
 226          KM
 227          BA   0.218
 228          LG    0.25     0.35     4.35     0.40    35.00
 229          UC   0.488    0.508
 230          UA      0        3        5        8       12       20       43       75       90       96
 231          UA    100
              *
```

```
LINE          ID.......1.......2.......3.......4.......5.......6.......7.......8.......9......10

 232          KK    C529
 233          KM      Hydrograph combine 205D + 205E at C529
 234          HC       2
              *
              * *
              * * NOTE:  529530 too short to route
              * *
              *

 235          KK    C530
 236          KM      Hydrograph combine C529 + C530R at C530
 237          HC       2
              *

 238          KK  530531
 239          KM      Normal depth channel route from C530 to C531
 240          KM      Source:  Hydrology Field Reconnaissance
 241          RS       3    FLOW      -1
 242          RC   0.060   0.059   0.060  2426.0  0.0404
 243          RX  1000.0  1035.0  1050.0  1060.0  1075.0  1081.0  1088.0  1094.0
 244          RY    95.9    86.5    86.2    83.1    84.0    90.2    95.6    99.3
              *

 245          KK    205F
 246          KM   Sub-Basin   205F
 247          KM
 248          KM      The Clark Unit Hydrograph is used for this basin.
 249          KM          The Natural time-area relation is used for this basin.
 250          KM
 251          KM      Time of Concentration for this sub-basin is based on the following:
 252          KM          6-Hour Rainfall, Pattern No.  1.00
 253          KM          An rainfall areal reduction factor of 0.998
 254          KM
 255          KM       EXCESS RAINFALL VALUES EXCEEDED IN 5-MINUTE INTERVALS
 256          KM     5  10  15  20  25  30  35  40  45  50  55  60  65  70  75  80  85  90
 257          KM   .45 .44 .44 .13 .09 .08 .04 .04 .03 .03 .03 .03 .01 .01 .01 .01 .01 .01
 258          KM
 259          KM          L=   0.786 miles, S=  326 feet/mile, Kb= .14
 260          KM
 261          BA   0.161
 262          LG    0.25    0.35    4.35    0.41   35.00
 263          UC   0.350   0.269
 264          UA       0       3       5       8      12      20      43      75      90      96
 265          UA     100
              *

 266          KK    C531
 267          KM      Hydrograph combine 530531 + 205F at C531
 268          HC       2
              *
```

```
LINE          ID.......1.......2.......3.......4.......5.......6.......7.......8.......9......10

 269          KK  531532
 270          KM      Normal depth channel route from C531 to C532
 271          KM      Source:  Hydrology Field Reconnaissance
 272          RS       4    FLOW      -1
 273          RC   0.060   0.065   0.060  3391.0  0.0463
 274          RX  1000.0  1012.0  1022.0  1032.0  1050.0  1056.0  1068.0  1092.0
 275          RY    98.8    93.8    89.1    86.4    86.5    89.1    91.0    97.6
              *

 276          KK   205G
 277          KM   Sub-Basin   205G
 278          KM
 279          KM      The Clark Unit Hydrograph is used for this basin.
 280          KM          The Natural time-area relation is used for this basin.
 281          KM
 282          KM      Time of Concentration for this sub-basin is based on the following:
 283          KM          6-Hour Rainfall, Pattern No.  1.00
 284          KM          An rainfall areal reduction factor of 0.998
 285          KM
 286          KM       EXCESS RAINFALL VALUES EXCEEDED IN 5-MINUTE INTERVALS
 287          KM     5  10  15  20  25  30  35  40  45  50  55  60  65  70  75  80  85  90
 288          KM   .45 .44 .44 .13 .09 .07 .03 .03 .03 .03 .03 .03 .01 .01 .01 .01 .01 .01
 289          KM
 290          KM          L=   0.924 miles, S=  338 feet/mile, Kb= .13
 291          KM
 292          BA   0.185
 293          LG    0.24    0.35    4.50    0.40   31.20
 294          UC   0.367   0.298
 295          UA       0       3       5       8      12      20      43      75      90      96
 296          UA     100
              *

 297          KK   C532L
 298          KM      Hydrograph combine 531532 + 205G at C532 left branch
 299          HC       2
              *

 300          KK   205H
 301          KM   Sub-Basin   205H
 302          KM
 303          KM      The Clark Unit Hydrograph is used for this basin.
 304          KM          The Natural time-area relation is used for this basin.
 305          KM
 306          KM      Time of Concentration for this sub-basin is based on the following:
 307          KM          6-Hour Rainfall, Pattern No.  1.00
 308          KM          An rainfall areal reduction factor of 0.997
 309          KM
 310          KM       EXCESS RAINFALL VALUES EXCEEDED IN 5-MINUTE INTERVALS
 311          KM     5  10  15  20  25  30  35  40  45  50  55  60  65  70  75  80  85  90
 312          KM   .45 .44 .44 .13 .09 .08 .04 .03 .03 .03 .03 .03 .01 .01 .01 .01 .01 .01
 313          KM
 314          KM          L=   1.464 miles, S=  325 feet/mile, Kb= .13
 315          KM
 316          BA   0.261
```

```
LINE          ID.......1.......2.......3.......4.......5.......6.......7.......8.......9......10

 317          LG    0.24     0.35     4.50     0.39    31.60
 318          UC   0.513    0.514
 319          UA       0        3        5        8       12       20       43       75       90       96
 320          UA     100
              *

 321          KK    C532
 322          KM      Hydrograph combine C532L + 205H at C532
 323          HC       2
              *

 324          KK  532533
 325          KM      Normal depth channel route from C532 to C533
 326          KM      Source:  Hydrology Field Reconnaissance
 327          RS       1    FLOW      -1
 328          RC   0.060    0.045    0.060  1555.0  0.0283
 329          RX  1000.0   1020.0   1030.0  1048.0  1065.0  1077.0  1092.0  1119.0
 330          RY    98.0     89.4     88.1    85.6    85.9    92.2    93.8    97.0
              *

 331          KK    205I
 332          KM   Sub-Basin   205I
 333          KM
 334          KM      The Clark Unit Hydrograph is used for this basin.
 335          KM          The Natural time-area relation is used for this basin.
 336          KM
 337          KM      Time of Concentration for this sub-basin is based on the following:
 338          KM          6-Hour Rainfall, Pattern No.  1.00
 339          KM          An rainfall areal reduction factor of 0.995
 340          KM
 341          KM       EXCESS RAINFALL VALUES EXCEEDED IN 5-MINUTE INTERVALS
 342          KM     5  10  15  20  25  30  35  40  45  50  55  60  65  70  75  80  85  90
 343          KM   .44 .44 .43 .13 .09 .08 .03 .03 .03 .01 .01 .01 .00 .00 .00 .00 .00 .00
 344          KM
 345          KM          L=   1.487 miles, S=  326 feet/mile, Kb= .11
 346          KM
 347          BA   0.354
 348          LG    0.20     0.37     5.20     0.28    15.20
 349          UC   0.458    0.386
 350          UA       0        3        5        8       12       20       43       75       90       96
 351          UA     100
              *

 352          KK    C533
 353          KM      Hydrograph combine 532533 + 205I at C533
 354          HC       2
              *

 355          KK  533534
 356          KM      Normal depth channel route from C533 to C534
 357          KM      Source:  Hydrology Field Reconnaissance
 358          RS      10    FLOW      -1
 359          RC   0.060    0.046    0.060  7145.0  0.0241
 360          RX  1000.0   1010.0   1060.0  1073.0  1160.0  1181.0  1223.0  1237.0
 361          RY    97.8     93.7     94.7    90.8    89.9    92.4    94.0    96.8
              *
```

```
LINE          ID.......1.......2.......3.......4.......5.......6.......7.......8.......9......10

 362          KK    205J
 363          KM   Sub-Basin   205J
 364          KM
 365          KM      The Clark Unit Hydrograph is used for this basin.
 366          KM          The Natural time-area relation is used for this basin.
 367          KM
 368          KM      Time of Concentration for this sub-basin is based on the following:
 369          KM          6-Hour Rainfall, Pattern No.  1.00
 370          KM          An rainfall areal reduction factor of 0.995
 371          KM
 372          KM       EXCESS RAINFALL VALUES EXCEEDED IN 5-MINUTE INTERVALS
 373          KM     5  10  15  20  25  30  35  40  45  50  55  60  65  70  75  80  85  90
 374          KM   .44 .43 .42 .12 .08 .06 .03 .02 .02 .00 .00 .00 .00 .00 .00 .00 .00 .00
 375          KM
 376          KM          L=   1.633 miles, S=  243 feet/mile, Kb= .08
 377          KM
 378          BA   0.369
 379          LG    0.21    0.35    4.90    0.30    3.50
 380          UC   0.450   0.398
 381          UA       0       3       5       8      12      20      43      75      90      96
 382          UA     100
              *

 383          KK   C534R
 384          KM      Hydrograph combine 533534 + 205J at C534 right branch
 385          HC       2
              *

 386          KK    205K
 387          KM   Sub-Basin   205K
 388          KM
 389          KM      The Clark Unit Hydrograph is used for this basin.
 390          KM          The Natural time-area relation is used for this basin.
 391          KM
 392          KM      Time of Concentration for this sub-basin is based on the following:
 393          KM          6-Hour Rainfall, Pattern No.  1.00
 394          KM          An rainfall areal reduction factor of 0.997
 395          KM
 396          KM       EXCESS RAINFALL VALUES EXCEEDED IN 5-MINUTE INTERVALS
 397          KM     5  10  15  20  25  30  35  40  45  50  55  60  65  70  75  80  85  90
 398          KM   .44 .44 .43 .13 .09 .08 .03 .03 .03 .00 .00 .00 .00 .00 .00 .00 .00 .00
 399          KM
 400          KM          L=   1.772 miles, S=  249 feet/mile, Kb= .10
 401          KM
 402          BA   0.245
 403          LG    0.16    0.38    5.60    0.22    1.50
 404          UC   0.546   0.665
 405          UA       0       3       5       8      12      20      43      75      90      96
 406          UA     100
              *
```

```
LINE          ID.......1.......2.......3.......4.......5.......6.......7.......8.......9......10

 407          KK    C534
 408          KM      Hydrograph combine C534R + 205K at C534
 409          HC       2
              *

 410          KK  534535
 411          KM      Normal depth channel route from C534 to C535
 412          KM      Source:  Hydrology Field Reconnaissance
 413          RS       3    FLOW      -1
 414          RC   0.065   0.046   0.065  2037.0  0.0221
 415          RX  1000.0  1010.0  1016.0  1075.0  1150.0  1162.0  1174.0  1182.0
 416          RY    97.1    93.4    91.6    89.6    86.9    90.8    92.2    92.3
              *

 417          KK    205L
 418          KM   Sub-Basin   205L
 419          KM
 420          KM      The Clark Unit Hydrograph is used for this basin.
 421          KM          The Natural time-area relation is used for this basin.
 422          KM
 423          KM      Time of Concentration for this sub-basin is based on the following:
 424          KM          6-Hour Rainfall, Pattern No.  1.00
 425          KM          An rainfall areal reduction factor of 0.998
 426          KM
 427          KM       EXCESS RAINFALL VALUES EXCEEDED IN 5-MINUTE INTERVALS
 428          KM     5  10  15  20  25  30  35  40  45  50  55  60  65  70  75  80  85  90
 429          KM   .44 .43 .42 .12 .08 .06 .02 .02 .02 .00 .00 .00 .00 .00 .00 .00 .00 .00
 430          KM
 431          KM          L=   0.701 miles, S=  284 feet/mile, Kb= .09
 432          KM
 433          BA   0.118
 434          LG    0.19    0.36    5.00    0.29    0.00
 435          UC   0.254   0.206
 436          UA       0       3       5       8      12      20      43      75      90      96
 437          UA     100
              *

 438          KK    C535
 439          KM      Hydrograph combine 534535 + 205L at C535
 440          HC       2
              *

 441          KK  535536
 442          KM      Normal depth channel route from C535 to C536
 443          KM      Source:  HEC-2 Cross Section: HE 3.275
 444          RS       8    FLOW      -1
 445          RC   0.075   0.050   0.075  2975.0  0.0236
 446          RX  9852.8  9871.5  9957.7 10000.0 10015.6 10052.4 10142.4 10183.6
 447          RY  1911.6  1904.3  1906.9  1900.8  1900.8  1905.4  1905.2  1912.6
              *
```

```
LINE          ID.......1.......2.......3.......4.......5.......6.......7.......8.......9......10

 448          KK    205M
 449          KM   Sub-Basin   205M
 450          KM
 451          KM      The Clark Unit Hydrograph is used for this basin.
 452          KM          The HEC-1 time-area relation is used for this basin.
 453          KM
 454          KM      Time of Concentration for this sub-basin is based on the following:
 455          KM          6-Hour Rainfall, Pattern No.  1.00
 456          KM          An rainfall areal reduction factor of 0.998
 457          KM
 458          KM       EXCESS RAINFALL VALUES EXCEEDED IN 5-MINUTE INTERVALS
 459          KM     5  10  15  20  25  30  35  40  45  50  55  60  65  70  75  80  85  90
 460          KM   .46 .46 .45 .15 .11 .11 .05 .05 .04 .02 .02 .02 .00 .00 .00 .00 .00 .00
 461          KM
 462          KM          L=   0.839 miles, S=  230 feet/mile, Kb= .06
 463          KM
 464          BA   0.139
 465          LG    0.15    0.33    5.40    0.22   21.00
 466          UC   0.233   0.197
              *

 467          KK   C536R
 468          KM      Hydrograph combine 535536 + 205M at C536 right branch
 469          HC       2
              *

 470          KK    205N
 471          KM   Sub-Basin   205N
 472          KM
 473          KM      The Clark Unit Hydrograph is used for this basin.
 474          KM          The HEC-1 time-area relation is used for this basin.
 475          KM
 476          KM      Time of Concentration for this sub-basin is based on the following:
 477          KM          6-Hour Rainfall, Pattern No.  1.00
 478          KM          An rainfall areal reduction factor of 0.998
 479          KM
 480          KM       EXCESS RAINFALL VALUES EXCEEDED IN 5-MINUTE INTERVALS
 481          KM     5  10  15  20  25  30  35  40  45  50  55  60  65  70  75  80  85  90
 482          KM   .45 .44 .44 .13 .09 .08 .03 .03 .03 .00 .00 .00 .00 .00 .00 .00 .00 .00
 483          KM
 484          KM          L=   1.183 miles, S=  245 feet/mile, Kb= .10
 485          KM
 486          BA   0.156
 487          LG    0.15    0.39    5.70    0.21    0.80
 488          UC   0.413   0.457
              *

 489          KK   C536I
 490          KM      Hydrograph combine C536R + 205N at C536I
 491          HC       2
              *
              * *
              * * C536I is the total flow in Hesperus Wash upstream of Dam 36
              * *
              *
```

```
LINE          ID.......1.......2.......3.......4.......5.......6.......7.......8.......9......10

492           KK   C5360
493           KM      Reservoir route at C536 (Dam 36).
494           RS       1    ELEV  1852.1
495           SV    0.00   14.41   35.94   67.64  108.61  158.07  218.14  276.00  280.00  289.00
496           SV  298.02  308.00  317.00  327.00  337.00  346.95  358.00  374.00
497           SE  1852.1  1866.0  1870.0  1874.0  1878.0  1882.0  1886.0  1889.0  1889.2  1889.6
498           SE  1890.0  1890.4  1890.8  1891.2  1891.6  1892.0  1892.4  1893.0
499           SQ       0     108     168     211     245     276     301     320     338     347
500           SQ     356     459     679     995    1408    1905    2477    3119    3826    5009
501           SE  1852.1  1858.0  1862.0  1866.0  1870.0  1874.0  1878.0  1882.0  1886.0  1889.0
502           SE  1889.2  1889.6  1890.0  1890.4  1890.8  1891.2  1891.6  1892.0  1892.4  1893.0
503           RL                    0.17
              *
              * *
              * * End Basin 205.  Start Basin 206
              * *
              *

504           KK  536537
505           KM      Normal depth channel route from C536 to C537
506           KM      Source:  HEC-2 Cross Section: HE 2.729
507           RS       3    FLOW      -1
508           RC   0.075   0.050   0.075  1480.0  0.0209
509           RX  9900.0  9912.0  9947.3  9979.3 10025.0 10044.5 10051.0 10060.0
510           RY  1846.5  1845.4  1843.1  1834.3  1833.6  1840.5  1843.3  1843.5
              *

511           KK    206A
512           KM   Sub-Basin   206A
513           KM
514           KM      The Clark Unit Hydrograph is used for this basin.
515           KM          The Urban time-area relation is used for this basin.
516           KM
517           KM      Time of Concentration for this sub-basin is based on the following:
518           KM          6-Hour Rainfall, Pattern No.  1.00
519           KM          An rainfall areal reduction factor of 0.998
520           KM
521           KM       EXCESS RAINFALL VALUES EXCEEDED IN 5-MINUTE INTERVALS
522           KM     5  10  15  20  25  30  35  40  45  50  55  60  65  70  75  80  85  90
523           KM   .47 .46 .46 .16 .13 .12 .05 .05 .05 .04 .03 .03 .01 .01 .01 .01 .01 .01
524           KM
525           KM          L=   0.631 miles, S=  256 feet/mile, Kb= .04
526           KM
527           BA   0.128
528           LG    0.13    0.28    5.30    0.23   32.80
529           UC   0.158   0.107
530           UA       0       5      16      30      65      77      84      90      94      97
531           UA     100
              *
```

```
LINE          ID.......1.......2.......3.......4.......5.......6.......7.......8.......9......10

 532          KK    C537
 533          KM      Hydrograph combine 536537 + 206A at C537
 534          HC       2
              *

 535          KK  537538
 536          KM      Normal depth channel route from C537 to C538
 537          KM      Source:  HEC-2 Cross Section: HE 2.493
 538          RS       3    FLOW      -1
 539          RC   0.075   0.050   0.075  2155.0  0.0210
 540          RX  9946.0  9957.6  9984.8  9994.8 10000.0 10036.5 10070.1 10107.3
 541          RY  1817.0  1815.2  1807.4  1803.2  1803.2  1805.5  1814.3  1815.4
              *

 542          KK    206B
 543          KM   Sub-Basin   206B
 544          KM
 545          KM      The Clark Unit Hydrograph is used for this basin.
 546          KM          The Urban time-area relation is used for this basin.
 547          KM
 548          KM      Time of Concentration for this sub-basin is based on the following:
 549          KM          6-Hour Rainfall, Pattern No.  1.00
 550          KM          An rainfall areal reduction factor of 0.999
 551          KM
 552          KM       EXCESS RAINFALL VALUES EXCEEDED IN 5-MINUTE INTERVALS
 553          KM     5  10  15  20  25  30  35  40  45  50  55  60  65  70  75  80  85  90
 554          KM   .48 .47 .47 .17 .13 .13 .06 .06 .05 .05 .04 .04 .01 .01 .01 .01 .01 .01
 555          KM
 556          KM          L=   0.570 miles, S=  139 feet/mile, Kb= .03
 557          KM
 558          BA   0.095
 559          LG    0.10     0.26     5.20     0.23    41.30
 560          UC   0.154    0.113
 561          UA       0        5       16       30       65       77       84       90       94       97
 562          UA     100
              *

 563          KK   C538I
 564          KM      Hydrograph combine 537538 + 206B at C538I
 565          HC       2
              *

 566          KK   C538O
 567          KM      Reservoir route at C538.
 568          RS       1    ELEV  1778.2
 569          SV    0.00     0.10     0.57     1.69     2.60     2.70     2.90     3.00     3.20     3.38
 570          SV    3.60     3.90     4.10     4.30     4.60     5.10     5.60     6.10     7.10     8.10
 571          SE  1778.2  1782.0  1784.0  1786.0  1787.1  1787.2  1787.4  1787.6  1787.8  1788.0
 572          SE  1788.2  1788.4  1788.6  1788.8  1789.0  1789.4  1789.8  1790.2  1790.8  1791.4
 573          SQ       0       82      133      185      207      208      212      218      226      235
 574          SQ     249      265      286      310      338      400      482      611      942     1439
              *
```

```
LINE          ID.......1.......2.......3.......4.......5.......6.......7.......8.......9......10

 575          KK  538540
 576          KM      Normal depth channel route from C538 to C540
 577          KM      Source:  HEC-2 Cross Section: HE 1.990
 578          RS       5    FLOW      -1
 579          RC   0.075   0.050   0.075  2176.0  0.0210
 580          RX  9907.7  9931.8  9978.4 10000.0 10041.1 10056.9 10143.7 10164.9
 581          RY  1767.5  1754.9  1755.2  1753.2  1753.1  1755.1  1757.3  1769.4
              *

 582          KK    206C
 583          KM   Sub-Basin   206C
 584          KM
 585          KM      The Clark Unit Hydrograph is used for this basin.
 586          KM          The HEC-1 time-area relation is used for this basin.
 587          KM
 588          KM      Time of Concentration for this sub-basin is based on the following:
 589          KM          6-Hour Rainfall, Pattern No.  1.00
 590          KM          An rainfall areal reduction factor of 1.000
 591          KM
 592          KM       EXCESS RAINFALL VALUES EXCEEDED IN 5-MINUTE INTERVALS
 593          KM     5  10  15  20  25  30  35  40  45  50  55  60  65  70  75  80  85  90
 594          KM   .44 .43 .42 .12 .08 .06 .02 .02 .02 .01 .01 .01 .00 .00 .00 .00 .00 .00
 595          KM
 596          KM          L=   0.427 miles, S=  138 feet/mile, Kb= .07
 597          KM
 598          BA   0.024
 599          LG    0.21    0.32    4.35    0.40   12.40
 600          UC   0.217   0.289
              *

 601          KK   C540R
 602          KM      Hydrograph combine 538540 + 206C at C540 right branch
 603          HC       2
              *

 604          KK    206D
 605          KM   Sub-Basin   206D
 606          KM
 607          KM      The Clark Unit Hydrograph is used for this basin.
 608          KM          The Urban time-area relation is used for this basin.
 609          KM
 610          KM      Time of Concentration for this sub-basin is based on the following:
 611          KM          6-Hour Rainfall, Pattern No.  1.00
 612          KM          An rainfall areal reduction factor of 0.999
 613          KM
 614          KM       EXCESS RAINFALL VALUES EXCEEDED IN 5-MINUTE INTERVALS
 615          KM     5  10  15  20  25  30  35  40  45  50  55  60  65  70  75  80  85  90
 616          KM   .48 .48 .47 .17 .14 .13 .06 .06 .06 .05 .05 .04 .01 .01 .01 .01 .01 .01
 617          KM
 618          KM          L=   0.531 miles, S=  236 feet/mile, Kb= .04
 619          KM
 620          BA   0.062
 621          LG    0.08    0.26    5.70    0.18   41.20
 622          UC   0.146   0.129
```

```
LINE          ID.......1.......2.......3.......4.......5.......6.......7.......8.......9......10

 623          UA       0       5      16      30      65      77      84      90      94      97
 624          UA     100
              *

 625          KK  539540
 626          KM      Normal depth channel route from C539 to C540
 627          KM      Source:  200 Scale Mapping
 628          RS       4    FLOW      -1
 629          RC   0.060   0.050   0.055  1872.0  0.0256
 630          RX  1000.0  1007.0  1016.0  1036.0  1046.0  1080.0  1150.0  1210.0
 631          RY  1750.0  1748.0  1746.0  1744.0  1744.0  1746.0  1748.0  1750.0
              *

 632          KK    206E
 633          KM   Sub-Basin   206E
 634          KM
 635          KM      The Clark Unit Hydrograph is used for this basin.
 636          KM          The HEC-1 time-area relation is used for this basin.
 637          KM
 638          KM      Time of Concentration for this sub-basin is based on the following:
 639          KM          6-Hour Rainfall, Pattern No.  1.00
 640          KM          An rainfall areal reduction factor of 1.000
 641          KM
 642          KM       EXCESS RAINFALL VALUES EXCEEDED IN 5-MINUTE INTERVALS
 643          KM     5  10  15  20  25  30  35  40  45  50  55  60  65  70  75  80  85  90
 644          KM   .42 .42 .41 .10 .06 .04 .01 .01 .01 .00 .00 .00 .00 .00 .00 .00 .00 .00
 645          KM
 646          KM          L=   0.343 miles, S=  175 feet/mile, Kb= .09
 647          KM
 648          BA   0.023
 649          LG    0.23    0.35    4.30    0.40    1.70
 650          UC   0.208   0.238
              *

 651          KK   C540L
 652          KM      Hydrograph combine 539540 + 206E at C540 left branch
 653          HC       2
              *

 654          KK    C540
 655          KM      Hydrograph combine C540R + C540L at C540
 656          HC       2
              *
              * *
              * * C540 is the end of Hesperus Wash and the start of Balboa Wash
              * *
              *

 657          KK  540541
 658          KM      Normal depth channel route from C540 to C541
 659          KM      Source:  HEC-2 Cross Section: BA 1.645
 660          RS      12    FLOW      -1
 661          RC   0.065   0.035   0.065  4207.0  0.0204
 662          RX  9960.8  9968.0  9975.1  9975.7  9993.2 10018.2 10297.5 10343.9
 663          RY  1725.2  1721.8  1718.4  1716.2  1716.4  1718.4  1719.8  1730.5
              *
```

```
LINE          ID.......1.......2.......3.......4.......5.......6.......7.......8.......9......10

 664          KK    206F
 665          KM   Sub-Basin   206F
 666          KM
 667          KM      The Clark Unit Hydrograph is used for this basin.
 668          KM          The HEC-1 time-area relation is used for this basin.
 669          KM
 670          KM      Time of Concentration for this sub-basin is based on the following:
 671          KM          6-Hour Rainfall, Pattern No.  1.00
 672          KM          An rainfall areal reduction factor of 0.998
 673          KM
 674          KM       EXCESS RAINFALL VALUES EXCEEDED IN 5-MINUTE INTERVALS
 675          KM     5  10  15  20  25  30  35  40  45  50  55  60  65  70  75  80  85  90
 676          KM   .43 .42 .42 .11 .07 .06 .02 .02 .01 .00 .00 .00 .00 .00 .00 .00 .00 .00
 677          KM
 678          KM          L=   0.975 miles, S=  217 feet/mile, Kb= .08
 679          KM
 680          BA   0.157
 681          LG    0.21    0.35    4.60    0.35    5.10
 682          UC   0.333   0.308
              *

 683          KK    C541
 684          KM      Hydrograph combine 540541 + 206F at C541
 685          HC       2
              *

 686          KK  541548
 687          KM      Normal depth channel route from C541 to C548
 688          KM      Source:  HEC-2 Cross Section: BA 0.905
 689          RS       1    FLOW      -1
 690          RC   0.060   0.045   0.060  1138.0  0.0316
 691          RX  9761.7  9936.7  9955.2  9986.9  9994.7 10039.2 10065.3 10066.0
 692          RY  1647.4  1644.1  1638.1  1637.3  1636.2  1637.5  1652.9  1653.0
              *

 693          KK    206G
 694          KM   Sub-Basin   206G
 695          KM
 696          KM      The Clark Unit Hydrograph is used for this basin.
 697          KM          The HEC-1 time-area relation is used for this basin.
 698          KM
 699          KM      Time of Concentration for this sub-basin is based on the following:
 700          KM          6-Hour Rainfall, Pattern No.  1.00
 701          KM          An rainfall areal reduction factor of 0.999
 702          KM
 703          KM       EXCESS RAINFALL VALUES EXCEEDED IN 5-MINUTE INTERVALS
 704          KM     5  10  15  20  25  30  35  40  45  50  55  60  65  70  75  80  85  90
 705          KM   .45 .44 .44 .13 .10 .09 .04 .04 .03 .01 .01 .01 .00 .00 .00 .00 .00 .00
 706          KM
 707          KM          L=   0.950 miles, S=  132 feet/mile, Kb= .09
 708          KM
 709          BA   0.089
 710          LG    0.16    0.35    5.20    0.25   12.50
 711          UC   0.425   0.544
              *
```

```
LINE          ID.......1.......2.......3.......4.......5.......6.......7.......8.......9......10

 712          KK  BB523R
 713          KM      Retrieve previously diverted hydrograph at C523 in the right branch.
 714          DR   D523R
              *

 715          KK  523548
 716          KM      Normal depth channel route from C523 to C548
 717          KM      Source:  200 Scale Mapping
 718          RS      15    FLOW      -1
 719          RC   0.040   0.018   0.040  2680.0  0.0189
 720          RX  1000.0  1040.0  1090.0  1130.0  1170.0  1171.2  1181.2  1196.2
 721          RY  1646.0  1645.0  1643.8  1644.7  1644.0  1644.4  1646.0  1648.0
              *

 722          KK   C548L
 723          KM      Hydrograph combine 541548 + 206G + BB523R at C548 left branch
 724          HC       3    3.72
              *
              * *
              * * C548L is the total flow in Balboa Wash above confluence with Oxford Wash
              * *
              *

 725          KK    206H
 726          KM   Sub-Basin   206H
 727          KM
 728          KM      The Clark Unit Hydrograph is used for this basin.
 729          KM          The Urban time-area relation is used for this basin.
 730          KM
 731          KM      Time of Concentration for this sub-basin is based on the following:
 732          KM          6-Hour Rainfall, Pattern No.  1.00
 733          KM          An rainfall areal reduction factor of 0.999
 734          KM
 735          KM       EXCESS RAINFALL VALUES EXCEEDED IN 5-MINUTE INTERVALS
 736          KM     5  10  15  20  25  30  35  40  45  50  55  60  65  70  75  80  85  90
 737          KM   .47 .46 .46 .16 .13 .12 .05 .05 .05 .04 .03 .02 .01 .01 .01 .01 .01 .01
 738          KM
 739          KM          L=   0.515 miles, S=  183 feet/mile, Kb= .07
 740          KM
 741          BA   0.059
 742          LG    0.11    0.31    5.70    0.19   26.10
 743          UC   0.213   0.196
 744          UA       0       5      16      30      65      77      84      90      94      97
 745          UA     100
              *

 746          KK  542543
 747          KM      Normal depth channel route from C542 to C543
 748          KM      Source:  HEC-2 Cross Section: OX 0.931
 749          RS       1    FLOW      -1
 750          RC   0.075   0.040   0.050   686.0  0.0066
 751          RX  9846.9  9881.6  9967.5  9983.2 10010.0 10025.0 10033.8 10039.6
 752          RY  1732.3  1723.5  1724.1  1717.8  1717.0  1724.0  1728.2  1730.7
              *
```

```
LINE          ID.......1.......2.......3.......4.......5.......6.......7.......8.......9......10

 753          KK    206I
 754          KM   Sub-Basin   206I
 755          KM
 756          KM      The Clark Unit Hydrograph is used for this basin.
 757          KM          The HEC-1 time-area relation is used for this basin.
 758          KM
 759          KM      Time of Concentration for this sub-basin is based on the following:
 760          KM          6-Hour Rainfall, Pattern No.  1.00
 761          KM          An rainfall areal reduction factor of 1.000
 762          KM
 763          KM       EXCESS RAINFALL VALUES EXCEEDED IN 5-MINUTE INTERVALS
 764          KM     5  10  15  20  25  30  35  40  45  50  55  60  65  70  75  80  85  90
 765          KM   .47 .47 .47 .16 .13 .12 .06 .06 .05 .04 .04 .03 .01 .01 .01 .01 .01 .01
 766          KM
 767          KM          L=   0.232 miles, S=  286 feet/mile, Kb= .08
 768          KM
 769          BA   0.021
 770          LG    0.11     0.32     5.70     0.19    35.70
 771          UC   0.133    0.112
              *

 772          KK    C543
 773          KM      Hydrograph combine 542543 + 206I at C543
 774          HC       2
              *

 775          KK   D543L
 776          KM      Hydrograph diversion at C543.  Main flow continues in the left branch.
 777          KM      Diverted flow is in the right branch.
 778          DT   D543R
 779          DI       0       38       45       50       65       85       97      122      141      162
 780          DI     194      350      395      432      475      522      570      612
 781          DQ       0       38       45       50       65       85       97      122      141      162
 782          DQ     194      350      395      425      460      500      540      575
              *

 783          KK  543544
 784          KM      Normal depth channel route from C543 to C544
 785          KM      Source:  200 Scale Mapping & Hydrology Field Reconnaissance
 786          RS       1    FLOW      -1
 787          RC   0.040    0.018    0.040    597.0   0.0277
 788          RX  1000.0   1020.0   1045.0   1075.0   1105.0   1106.2   1146.2   1266.2
 789          RY  1720.0   1718.0   1712.0   1712.3   1712.0   1712.4   1714.0   1720.0
              *

 790          KK    206K
 791          KM   Sub-Basin   206K
 792          KM
 793          KM      The Clark Unit Hydrograph is used for this basin.
 794          KM          The HEC-1 time-area relation is used for this basin.
 795          KM
 796          KM      Time of Concentration for this sub-basin is based on the following:
 797          KM          6-Hour Rainfall, Pattern No.  1.00
 798          KM          An rainfall areal reduction factor of 0.999
```

```
LINE          ID.......1.......2.......3.......4.......5.......6.......7.......8.......9......10

 799          KM
 800          KM       EXCESS RAINFALL VALUES EXCEEDED IN 5-MINUTE INTERVALS
 801          KM     5  10  15  20  25  30  35  40  45  50  55  60  65  70  75  80  85  90
 802          KM   .45 .44 .44 .13 .10 .09 .04 .03 .03 .00 .00 .00 .00 .00 .00 .00 .00 .00
 803          KM
 804          KM          L=   0.615 miles, S=  255 feet/mile, Kb= .11
 805          KM
 806          BA   0.056
 807          LG    0.15    0.38    5.70    0.21    5.60
 808          UC   0.275   0.310
              *

 809          KK    C544
 810          KM      Hydrograph combine 543544 + 206K at C544
 811          HC       2
              *

 812          KK  544545
 813          KM      Normal depth channel route from C544 to C545
 814          KM      Source:  200 Scale Mapping & Hydrology Field Reconnaissance
 815          RS       2    FLOW      -1
 816          RC   0.040   0.018   0.040   985.0  0.0234
 817          RX  1000.0  1008.0  1018.0  1048.0  1078.0  1079.2  1089.2  1109.2
 818          RY  1690.0  1688.0  1686.0  1686.3  1686.0  1686.4  1688.0  1689.0
              *

 819          KK   D545L
 820          KM      Hydrograph diversion at C545.  Main flow continues in the left branch.
 821          KM      Diverted flow is in the right branch.
 822          DT   D545R
 823          DI       0      50     100     200     400     800    1600    3200    5000
 824          DQ       0      25      50     100     200     400     800    1600    2500
              *

 825          KK  545546
 826          KM      Normal depth channel route from C545 to C546
 827          KM      Source:  200 Scale Mapping & Hydrology Field Reconnaissance
 828          RS       2    FLOW      -1
 829          RC   0.040   0.018   0.040   428.0  0.0164
 830          RX  1000.0  1020.0  1050.0  1080.0  1110.0  1111.2  1121.2  1151.2
 831          RY  1680.0  1678.0  1676.0  1676.3  1676.0  1676.4  1678.0  1678.5
              *

 832          KK    206L
 833          KM   Sub-Basin   206L
 834          KM
 835          KM      The Clark Unit Hydrograph is used for this basin.
 836          KM          The HEC-1 time-area relation is used for this basin.
 837          KM
 838          KM      Time of Concentration for this sub-basin is based on the following:
 839          KM          6-Hour Rainfall, Pattern No.  1.00
 840          KM          An rainfall areal reduction factor of 0.999
 841          KM
 842          KM       EXCESS RAINFALL VALUES EXCEEDED IN 5-MINUTE INTERVALS
 843          KM     5  10  15  20  25  30  35  40  45  50  55  60  65  70  75  80  85  90
```

```
LINE          ID.......1.......2.......3.......4.......5.......6.......7.......8.......9......10

 844          KM   .45 .45 .45 .14 .10 .09 .04 .04 .03 .01 .01 .01 .00 .00 .00 .00 .00 .00
 845          KM
 846          KM          L=   0.546 miles, S=  231 feet/mile, Kb= .11
 847          KM
 848          BA   0.060
 849          LG    0.14    0.39    5.80    0.21   14.70
 850          UC   0.263   0.258
              *

 851          KK    C546
 852          KM      Hydrograph combine 545546 + 206L at C546
 853          HC       2
              *

 854          KK  546547
 855          KM      Normal depth channel route from C546 to C547
 856          KM      Source:  200 Scale Mapping
 857          RS       1    FLOW      -1
 858          RC   0.040   0.018   0.040   749.0  0.0327
 859          RX  1000.0  1005.0  1011.0  1013.0  1029.0  1047.0  1052.0  1057.0
 860          RY  1666.0  1664.0  1662.0  1661.9  1662.4  1662.0  1664.0  1666.0
              *

 861          KK  BB543R
 862          KM      Retrieve previously diverted hydrograph at C543 in the right branch.
 863          DR   D543R
              *

 864          KK  543547
 865          KM      Normal depth channel route from C543 to C547
 866          KM      Source:  HEC-2 Cross Section: OX 0.638
 867          RS       5    FLOW      -1
 868          RC   0.075   0.040   0.050  2395.0  0.0278
 869          RX  9720.9  9769.0  9970.7  9985.5 10020.0 10038.1 10097.0 10102.0
 870          RY  1690.4  1681.2  1683.1  1676.2  1677.0  1687.1  1687.4  1690.0
              *

 871          KK  BB545R
 872          KM      Retrieve previously diverted hydrograph at C545 in the right branch.
 873          DR   D545R
              *

 874          KK  545547
 875          KM      Normal depth channel route from C545 to C547
 876          KM      Source:  HEC-2 Cross Section: OX 0.542
 877          RS       4    FLOW      -1
 878          RC   0.075   0.040   0.050  1216.0  0.0259
 879          RX  9668.2  9778.4  9957.9  9986.0 10012.7 10043.6 10067.6 10163.4
 880          RY  1674.1  1674.1  1673.3  1662.1  1662.2  1680.4  1680.9  1681.1
              *
```

```
LINE          ID.......1.......2.......3.......4.......5.......6.......7.......8.......9......10

 881          KK    206J
 882          KM   Sub-Basin   206J
 883          KM
 884          KM      The Clark Unit Hydrograph is used for this basin.
 885          KM          The Urban time-area relation is used for this basin.
 886          KM
 887          KM      Time of Concentration for this sub-basin is based on the following:
 888          KM          6-Hour Rainfall, Pattern No.  1.00
 889          KM          An rainfall areal reduction factor of 0.999
 890          KM
 891          KM        EXCESS RAINFALL VALUES EXCEEDED IN 5-MINUTE INTERVALS
 892          KM     5  10  15  20  25  30  35  40  45  50  55  60  65  70  75  80  85  90
 893          KM   .48 .48 .48 .17 .14 .14 .06 .06 .06 .05 .05 .05 .01 .01 .01 .01 .01 .01
 894          KM
 895          KM          L=   0.502 miles, S=  214 feet/mile, Kb= .03
 896          KM
 897          BA   0.060
 898          LG    0.08     0.25     5.70     0.18    44.60
 899          UC   0.125    0.105
 900          UA       0        5       16       30       65       77       84       90       94       97
 901          UA     100
              *

 902          KK    C547
 903          KM      Hydrograph combine 546547 + 543547 + 545547 + 206J at C547
 904          HC       4     0.26
              *

 905          KK  547548
 906          KM      Normal depth channel route from C547 to C548
 907          KM      Source:  HEC-2 Cross Section: OX 0.235
 908          RS       4     FLOW       -1
 909          RC   0.075    0.040    0.050   2165.0   0.0182
 910          RX  9910.0   9911.4   9968.5   9987.6 10017.4 10032.3 10077.4 10080.0
 911          RY  1639.0   1638.9   1637.9   1635.7  1635.8  1641.7  1642.9  1643.0
              *

 912          KK    206M
 913          KM   Sub-Basin   206M
 914          KM
 915          KM      The Clark Unit Hydrograph is used for this basin.
 916          KM          The Urban time-area relation is used for this basin.
 917          KM
 918          KM      Time of Concentration for this sub-basin is based on the following:
 919          KM          6-Hour Rainfall, Pattern No.  1.00
 920          KM          An rainfall areal reduction factor of 0.999
 921          KM
 922          KM        EXCESS RAINFALL VALUES EXCEEDED IN 5-MINUTE INTERVALS
 923          KM     5  10  15  20  25  30  35  40  45  50  55  60  65  70  75  80  85  90
 924          KM   .48 .47 .47 .17 .14 .13 .06 .06 .06 .05 .05 .04 .01 .01 .01 .01 .01 .01
 925          KM
 926          KM          L=   0.465 miles, S=  166 feet/mile, Kb= .03
 927          KM
 928          BA   0.060
```

```
LINE          ID.......1.......2.......3.......4.......5.......6.......7.......8.......9......10

 929          LG    0.08    0.25    5.20    0.23   46.20
 930          UC   0.133   0.107
 931          UA       0       5      16      30      65      77      84      90      94      97
 932          UA     100
              *

 933          KK   C548R
 934          KM      Hydrograph combine 547548 + 206M at C548 right branch
 935          HC       2
              *
              * *
              * * C548R is the total flow in Oxford Wash above confluence with Balboa Wash
              * *
              *

 936          KK    C548
 937          KM      Hydrograph combine C548L + C548R at C548
 938          HC       2
              *
              * *
              * * C548 is the total flow in Balboa Wash below the confluence of Balboa Wash
              * * and Oxford Wash
              * *
              *

 939          KK  548549
 940          KM      Normal depth channel route from C548 to C549
 941          KM      Source:  HEC-2 Cross Section: BA0.246
 942          RS       9    FLOW      -1
 943          RC   0.070   0.080   0.070  3258.0  0.0172
 944          RX  9889.1  9912.5  9940.2  9960.0 10026.1 10046.8 10067.8 10079.3
 945          RY  1586.2  1585.7  1577.5  1573.6  1573.2  1579.5  1585.7  1586.2
              *

 946          KK    206N
 947          KM  Sub-Basin   206N
 948          KM
 949          KM      The Clark Unit Hydrograph is used for this basin.
 950          KM          The Urban time-area relation is used for this basin.
 951          KM
 952          KM      Time of Concentration for this sub-basin is based on the following:
 953          KM          6-Hour Rainfall, Pattern No.  1.00
 954          KM          An rainfall areal reduction factor of 0.998
 955          KM
 956          KM       EXCESS RAINFALL VALUES EXCEEDED IN 5-MINUTE INTERVALS
 957          KM     5  10  15  20  25  30  35  40  45  50  55  60  65  70  75  80  85  90
 958          KM   .48 .47 .47 .17 .13 .13 .06 .06 .06 .05 .04 .04 .01 .01 .01 .01 .01 .01
 959          KM
 960          KM          L=   0.767 miles, S=  120 feet/mile, Kb= .03
 961          KM
 962          BA   0.152
 963          LG    0.12    0.27    4.65    0.29   51.60
 964          UC   0.188   0.137
 965          UA       0       5      16      30      65      77      84      90      94      97
 966          UA     100
              *
```

```
LINE          ID.......1.......2.......3.......4.......5.......6.......7.......8.......9......10

 967          KK   C549L
 968          KM      Hydrograph combine 548549 + 206N at C549 left branch
 969          HC       2
              *
              * *
              * * C549L is the total flow in Balboa Wash above confluence with Ashbrook Wash
              * *
              * * End Basin 206.  Start Basin 207
              * *
              *

 970          KK   C599O
 971          KM      The following is the design outflow hydrograph from Golden Eagle Park Dam
 972          IN       1
 973          BA    7.13
 974          QI       0       0       0       0       0       0       0       0       0       0
 975          QI       0       0       0       0       1       1       1       1       1       1
 976          QI       1       1       1       1       1       1       1       1       1       1
 977          QI       1       1       2       2       2       2       2       2       2       3
 978          QI       3       3       3       4       4       4       5       5       6       6
 979          QI       7       8       8       9       9      10      10      11      11      12
 980          QI      12      13      13      14      14      15      15      16      16      17
 981          QI      17      18      18      19      19      20      21      21      22      23
 982          QI      24      25      26      26      27      28      29      30      31      32
 983          QI      33      34      35      36      37      38      39      40      41      42
 984          QI      44      45      46      47      48      49      50      52      53      54
 985          QI      55      57      58      59      61      62      64      65      67      68
 986          QI      70     153      74      76      78      80      82      84      86      88
 987          QI      90      92      94      96      98      99     101     103     104     106
 988          QI     107     109     110     112     113     114     116     117     118     120
 989          QI     121     122     123     124     126     127     128     129     130     131
 990          QI     132     133     134     135     136     137     138     139     140     140
 991          QI     141     142     143     144     145     146     146     147     148     149
 992          QI     150     150     151     152     153     153     154     155     156     157
 993          QI     158     158     159     160     161     162     163     163     164     165
 994          QI     166     167     168     170     171     173     174     176     179     181
 995          QI     183     186     190     194     199     204     211     219     155     263
 996          QI     251     273     294     317     341     358     382     410     441     468
 997          QI     487     513     543     577     614     655     678     702     730     761
 998          QI     795     822     832     843     855     869     885     903     921     942
 999          QI     952     961     970     979     988     998    1009    1019    1030    1040
1000          QI    1051    1061    1067    1073    1080    1086    1093    1099    1105    1111
1001          QI    1117    1122    1128    1133    1138    1143    1148    1152    1156    1159
1002          QI    1162    1164    1167    1169    1172    1174    1176    1178    1180    1182
1003          QI    1183    1185    1186    1187    1189    1190    1191    1192    1192    1193
1004          QI    1194    1194    1194    1195    1195    1195    1195    1195    1195    1195
1005          QI    1195    1194    1194    1194    1193    1193    1192    1192    1191    1191
1006          QI    1190    1189    1189    1188    1187    1187    1186    1185    1184    1183
1007          QI    1183    1182    1181    1180    1179    1178    1177    1176    1175    1175
1008          QI    1174    1173    1172    1171    1170    1169    1168    1167    1166    1165
1009          QI    1164    1163    1162    1161    1160    1159    1158    1157    1156    1155
1010          QI    1154    1153    1151    1150    1148    1147    1146    1144    1143    1141
1011          QI    1140    1139    1137    1136    1135    1133    1132    1130    1129    1128
1012          QI    1126    1125    1124    1122    1121    1120    1118    1117    1116    1114
```

LINE	ID.....1	2	3	4	5	6	7	8	9	10
1013	QI	1113	1112	1110	1109	1108	1107	1105	1104	1103	1101
1014	QI	1100	1099	1098	1096	1095	1094	1092	1091	1090	1089
1015	QI	1087	1086	1085	1084	1082	1081	1080	1079	1078	1076
1016	QI	1075	1074	1073	1071	1070	1069	1068	1067	1065	1064
1017	QI	1063	1062	1061	1059	1058	1056	1054	1052	1050	1048
1018	QI	1046	1044	1042	1040	1039	1037	1035	1033	1031	1029
1019	QI	1027	1025	1023	1022	1020	1018	1016	1014	1013	1011
1020	QI	1009	1007	1006	1004	1002	1000	999	997	995	994
1021	QI	992	990	989	987	985	984	982	981	979	977
1022	QI	976	974	972	971	969	968	966	964	963	961
1023	QI	959	958	956	954	952	951	949	947	944	939
1024	QI	934	929	924	919	915	910	905	901	896	892
1025	QI	888	883	879	875	871	866	862	858	854	850
1026	QI	846	842	838	835	831	827	823	819	804	790
1027	QI	777	766	757	748	740	733	726	720	715	710
1028	QI	705	701	697	693	689	685	681	677	674	670
1029	QI	667	663	656	650	644	639	634	630	626	622
1030	QI	618	615	611	608	604	601	597	594	590	586
1031	QI	583	579	575	572	568	564	561	557	553	550
1032	QI	546	543	539	536	533	530	527	524	521	519
1033	QI	517	514	512	510	509	507	505	503	501	499
1034	QI	497	494	492	490	487	485	483	480	478	475
1035	QI	473	470	468	465	462	457	453	450	448	445
1036	QI	442	440	437	434	432	429	426	424	421	419
1037	QI	416	413	411	408	406	403	400	397	395	392
1038	QI	389	386	384	381	378	376	373	370	368	365
1039	QI	363	360	358	356	353	351	349	347	345	343
1040	QI	340	338	336	335	333	331	329	327	325	323
1041	QI	321	319	317	314	312	310	307	305	302	300
1042	QI	298	295	293	291	289	286	284	282	280	278
1043	QI	276	274	272	270	268	266	264	262	261	259
1044	QI	257	255	253	252	250	248	246	244	242	240
1045	QI	238	236	234	232	230	228	226	223	221	219
1046	QI	217	215	213	211	209	207	205	203	201	199
1047	QI	197	195	193	191	190	189	186	184	183	182
1048	QI	179	178	177	174	173	172	170	169	167	166
1049	QI	164	163	161	160	158	157	155	154	153	152
1050	QI	151	150	148	147	146	145	144	143	142	141
1051	QI	140	139	138	137	136	135	134	133	132	131
1052	QI	130	129	129	128	127	126	126	125	124	124
1053	QI	123	122	121	121	120	119	118	117	117	116
1054	QI	115	114	114	113	112	111	110	109	108	107
1055	QI	106	105	104	103	102	101	100	99	98	97
1056	QI	97	96	95	94	93	92	91	90	89	88
1057	QI	87	86	84	83	82	80	79	77	76	75
1058	QI	73	72	70	69	68	67	65	64	63	62
1059	QI	61	60	59	58	57	56	55	54	53	52
1060	QI	52	51	50	49	49	48	47	47	46	46
1061	QI	45	45	44	44	44	43	43	42	42	41
1062	QI	41	40	40	40	39	39	38	38	37	37
1063	QI	36	36	36	35	35	35	34	34	33	33
1064	QI	33	32	32	32	31	31	31	30	30	30
1065	QI	29	29	29	28	28	27	26	25	25	24
1066	QI	23	22	21	20	19	19	18	17	16	16
1067	QI	15	14	14	13	12	12	11	11	10	10

```
LINE          ID.......1.......2.......3.......4.......5.......6.......7.......8.......9......10

1068          QI      10       9       9       8       8       8       7       7       7       6
1069          QI       6       6       6       5       5       5       5       4       4       4
1070          QI       4       4       4       3       3       3       3       3       3       3
1071          QI       3       2       2       2       2       2       2       2       2       2
1072          QI       2       2       1       1       1       1       1       1       1       1
1073          QI       1       1       1       1       1       1       1       1       1       1
1074          QI       1       1       1       1       1       1       1       1       0       0
1075          QI       0       0       0       0       0       0       0       0       0       0
1076          QI       0       0       0       0       0       0       0       0       0       0
1077          QI       0       0       0       0       0       0       0       0       0       0
1078          QI       0       0       0       0       0       0       0       0       0       0
1079          QI       0       0       0       0       0       0       0       0       0       0
1080          QI       0       0       0       0       0       0       0       0       0       0
1081          QI       0       0       0       0       0       0       0       0       0       0
1082          IN      15
              *
              * * End Basin 210.  Start Basin 211
              * *
              *

1083          KK  599608
1084          KM      Normal depth channel route from C599 to C608
1085          KM      Source:  HEC-2 Cross Section: AS 3.621
1086          RS       3    FLOW      -1
1087          RC   0.055   0.045   0.025  1476.0  0.0148
1088          RX  9675.4  9726.8  9929.0  9990.7 10005.9 10033.3 10061.9 10082.2
1089          RY  1691.3  1687.2  1685.5  1678.6  1678.1  1682.1  1689.8  1691.8
              *

1090          KK    211K
1091          KM   Sub-Basin   211K
1092          KM
1093          KM      The Clark Unit Hydrograph is used for this basin.
1094          KM          The HEC-1 time-area relation is used for this basin.
1095          KM
1096          KM      Time of Concentration for this sub-basin is based on the following:
1097          KM          6-Hour Rainfall, Pattern No.  1.00
1098          KM          An rainfall areal reduction factor of 0.999
1099          KM
1100          KM       EXCESS RAINFALL VALUES EXCEEDED IN 5-MINUTE INTERVALS
1101          KM     5  10  15  20  25  30  35  40  45  50  55  60  65  70  75  80  85  90
1102          KM   .46 .45 .45 .15 .11 .10 .05 .04 .04 .02 .02 .02 .00 .00 .00 .00 .00 .00
1103          KM
1104          KM          L=   0.376 miles, S=  157 feet/mile, Kb= .08
1105          KM
1106          BA   0.102
1107          LG    0.18    0.38    6.00    0.18   17.80
1108          UC   0.204   0.107
              *
```

```
LINE          ID.......1.......2.......3.......4.......5.......6.......7.......8.......9......10

1109          KK   C608L
1110          KM      Hydrograph combine 599608 + 211K at C608 left branch
1111          HC       2
              *

1112          KK    211G
1113          KM   Sub-Basin   211G
1114          KM
1115          KM      The Clark Unit Hydrograph is used for this basin.
1116          KM          The Urban time-area relation is used for this basin.
1117          KM
1118          KM      Time of Concentration for this sub-basin is based on the following:
1119          KM          6-Hour Rainfall, Pattern No.  1.00
1120          KM          An rainfall areal reduction factor of 1.000
1121          KM
1122          KM       EXCESS RAINFALL VALUES EXCEEDED IN 5-MINUTE INTERVALS
1123          KM     5  10  15  20  25  30  35  40  45  50  55  60  65  70  75  80  85  90
1124          KM   .50 .50 .50 .19 .16 .16 .08 .08 .08 .08 .08 .08 .02 .02 .02 .02 .02 .02
1125          KM
1126          KM          L=   0.448 miles, S=  190 feet/mile, Kb= .04
1127          KM
1128          BA   0.008
1129          LG    0.06    0.25    5.70    0.18   90.00
1130          UC   0.142   0.359
1131          UA       0       5      16      30      65      77      84      90      94      97
1132          UA     100
              *

1133          KK  604606
1134          KM      Normal depth channel route from C604 to C606
1135          KM      Source:  200 Scale Mapping
1136          RS      11    FLOW      -1
1137          RC   0.040   0.018   0.040  2784.0  0.0647
1138          RX  1000.0  1040.0  1060.0  1076.0  1092.0  1093.2  1098.2  1113.2
1139          RY  1814.0  1811.0  1810.8  1811.1  1810.8  1811.2  1812.0  1816.0
              *

1140          KK    211I
1141          KM   Sub-Basin   211I
1142          KM
1143          KM      The Clark Unit Hydrograph is used for this basin.
1144          KM          The Natural time-area relation is used for this basin.
1145          KM
1146          KM      Time of Concentration for this sub-basin is based on the following:
1147          KM          6-Hour Rainfall, Pattern No.  1.00
1148          KM          An rainfall areal reduction factor of 0.999
1149          KM
1150          KM       EXCESS RAINFALL VALUES EXCEEDED IN 5-MINUTE INTERVALS
1151          KM     5  10  15  20  25  30  35  40  45  50  55  60  65  70  75  80  85  90
1152          KM   .47 .46 .46 .16 .12 .11 .05 .05 .05 .03 .03 .03 .01 .01 .01 .01 .01 .01
1153          KM
1154          KM          L=   0.626 miles, S=  257 feet/mile, Kb= .11
1155          KM
1156          BA   0.041
```

```
LINE          ID.......1.......2.......3.......4.......5.......6.......7.......8.......9......10

1157          LG   0.13    0.39    5.70    0.20   35.00
1158          UC  0.271   0.370
1159          UA      0       3       5       8      12      20      43      75      90      96
1160          UA    100
              *

1161          KK  C606R
1162          KM     Hydrograph combine 604606 + 211I at C606 right branch
1163          HC      2
              *

1164          KK   211H
1165          KM  Sub-Basin   211H
1166          KM
1167          KM     The Clark Unit Hydrograph is used for this basin.
1168          KM         The Natural time-area relation is used for this basin.
1169          KM
1170          KM     Time of Concentration for this sub-basin is based on the following:
1171          KM         6-Hour Rainfall, Pattern No.  1.00
1172          KM         An rainfall areal reduction factor of 0.999
1173          KM
1174          KM      EXCESS RAINFALL VALUES EXCEEDED IN 5-MINUTE INTERVALS
1175          KM    5  10  15  20  25  30  35  40  45  50  55  60  65  70  75  80  85  90
1176          KM  .45 .45 .44 .14 .10 .09 .04 .04 .03 .00 .00 .00 .00 .00 .00 .00 .00 .00
1177          KM
1178          KM         L=   0.501 miles, S=  289 feet/mile, Kb= .11
1179          KM
1180          BA  0.073
1181          LG   0.15    0.40    6.00    0.18    3.40
1182          UC  0.233   0.187
1183          UA      0       3       5       8      12      20      43      75      90      96
1184          UA    100
              *

1185          KK  C605O
1186          KM     Reservoir route at C605.
1187          RS      1    ELEV  1722.5
1188          SV   0.00    0.20    0.20    0.20    0.20    0.30    0.30    0.30    0.40    0.60
1189          SV   0.70    0.90    1.00    1.20    1.40    1.60    1.90    2.80    3.40    4.10
1190          SE 1722.5  1726.8  1727.0  1727.2  1727.4  1727.6  1727.8  1728.0  1728.2  1728.4
1191          SE 1728.6  1728.8  1729.0  1729.2  1729.4  1729.6  1730.0  1730.4  1730.7  1731.0
1192          SQ      0       0       5      10      20      43      63      73      78      85
1193          SQ     91      96     101     105     109     113     122     130     136     200
              *

1194          KK   C606
1195          KM     Hydrograph combine C606R + C605O at C606
1196          HC      2
              *
```

```
LINE          ID.......1.......2.......3.......4.......5.......6.......7.......8.......9......10

1197          KK  606607
1198          KM      Normal depth channel route from C606 to C607
1199          KM      Source:  200 Scale Mapping
1200          RS       2    FLOW      -1
1201          RC   0.020   0.055   0.035  1061.0  0.0286
1202          RX  1000.0  1032.0  1082.0  1095.0  1105.0  1117.0  1123.0  1153.0
1203          RY  1704.3  1704.0  1703.5  1700.0  1700.0  1703.0  1704.0  1706.0
              *

1204          KK    211J
1205          KM   Sub-Basin   211J
1206          KM
1207          KM      The Clark Unit Hydrograph is used for this basin.
1208          KM          The HEC-1 time-area relation is used for this basin.
1209          KM
1210          KM      Time of Concentration for this sub-basin is based on the following:
1211          KM          6-Hour Rainfall, Pattern No.  1.00
1212          KM          An rainfall areal reduction factor of 1.000
1213          KM
1214          KM       EXCESS RAINFALL VALUES EXCEEDED IN 5-MINUTE INTERVALS
1215          KM     5  10  15  20  25  30  35  40  45  50  55  60  65  70  75  80  85  90
1216          KM   .47 .46 .46 .16 .12 .12 .05 .05 .05 .03 .03 .03 .01 .01 .01 .01 .01 .01
1217          KM
1218          KM          L=   0.249 miles, S=  166 feet/mile, Kb= .11
1219          KM
1220          BA   0.015
1221          LG    0.13    0.37    6.20    0.18   32.40
1222          UC   0.192   0.215
              *

1223          KK    C607
1224          KM      Hydrograph combine 606607 + 211J at C607
1225          HC       2
              *

1226          KK  607608
1227          KM      Normal depth channel route from C607 to C608
1228          KM      Source:  200 Scale Mapping
1229          RS       2    FLOW      -1
1230          RC   0.040   0.050   0.035  1008.0  0.0145
1231          RX  1000.0  1060.0  1070.0  1082.0  1083.0  1095.0  1115.0  1133.0
1232          RY  1688.0  1686.0  1684.0  1681.0  1681.0  1684.0  1685.0  1685.4
              *

1233          KK    C608
1234          KM      Hydrograph combine C608L + 607608 at C608
1235          HC       2
              *
```

```
LINE          ID.......1.......2.......3.......4.......5.......6.......7.......8.......9......10

1236          KK  608613
1237          KM      Normal depth channel route from C608 to C613
1238          KM      Source:  HEC-2 Cross Section: AS 3.421
1239          RS       2    FLOW      -1
1240          RC   0.100   0.045   0.100  1338.0  0.0202
1241          RX  9885.0  9887.9  9957.3  9986.7 10012.9 10054.7 10086.3 10122.2
1242          RY  1670.2  1670.1  1668.0  1660.0  1659.9  1661.6  1669.9  1670.8
              *
              * *
              * * Move to the top of Sunflower Wash
              * *
              *

1243          KK    211M
1244          KM   Sub-Basin   211M
1245          KM
1246          KM      The Clark Unit Hydrograph is used for this basin.
1247          KM          The Natural time-area relation is used for this basin.
1248          KM
1249          KM      Time of Concentration for this sub-basin is based on the following:
1250          KM          6-Hour Rainfall, Pattern No.  1.00
1251          KM          An rainfall areal reduction factor of 0.999
1252          KM
1253          KM       EXCESS RAINFALL VALUES EXCEEDED IN 5-MINUTE INTERVALS
1254          KM     5  10  15  20  25  30  35  40  45  50  55  60  65  70  75  80  85  90
1255          KM   .46 .46 .46 .15 .12 .11 .05 .05 .04 .03 .03 .03 .01 .01 .01 .01 .01 .01
1256          KM
1257          KM          L=   0.541 miles, S=  266 feet/mile, Kb= .11
1258          KM
1259          BA   0.081
1260          LG    0.13    0.39    5.70    0.21   30.30
1261          UC   0.246   0.199
1262          UA       0       3       5       8      12      20      43      75      90      96
1263          UA     100
              *

1264          KK  610611
1265          KM      Normal depth channel route from C610 to 1611
1266          KM      Source:  HEC-2 Cross Section: SU 0.216
1267          RS       2    FLOW      -1
1268          RC   0.050   0.045   0.050  1090.0  0.0211
1269          RX  9911.9  9948.1  9973.6  9988.6 10007.1 10027.0 10049.8 10143.7
1270          RY  1699.3  1691.7  1686.3  1680.1  1679.7  1686.6  1687.3  1698.6
              *

1271          KK    211N
1272          KM   Sub-Basin   211N
1273          KM
1274          KM      The Clark Unit Hydrograph is used for this basin.
1275          KM          The HEC-1 time-area relation is used for this basin.
1276          KM
1277          KM      Time of Concentration for this sub-basin is based on the following:
1278          KM          6-Hour Rainfall, Pattern No.  1.00
1279          KM          An rainfall areal reduction factor of 1.000
```

```
LINE          ID.......1.......2.......3.......4.......5.......6.......7.......8.......9......10

1280          KM
1281          KM       EXCESS RAINFALL VALUES EXCEEDED IN 5-MINUTE INTERVALS
1282          KM     5  10  15  20  25  30  35  40  45  50  55  60  65  70  75  80  85  90
1283          KM   .46 .45 .45 .15 .11 .10 .05 .04 .04 .02 .02 .02 .00 .00 .00 .00 .00 .00
1284          KM
1285          KM          L=   0.261 miles, S=  235 feet/mile, Kb= .12
1286          KM
1287          BA   0.020
1288          LG    0.14     0.39     5.70     0.20    20.20
1289          UC   0.188    0.181
              *

1290          KK   C611R
1291          KM      Hydrograph combine 610611 + 211N at C611 right branch
1292          HC       2
              *

1293          KK    211O
1294          KM   Sub-Basin   211O
1295          KM
1296          KM      The Clark Unit Hydrograph is used for this basin.
1297          KM          The HEC-1 time-area relation is used for this basin.
1298          KM
1299          KM      Time of Concentration for this sub-basin is based on the following:
1300          KM          6-Hour Rainfall, Pattern No.  1.00
1301          KM          An rainfall areal reduction factor of 0.999
1302          KM
1303          KM       EXCESS RAINFALL VALUES EXCEEDED IN 5-MINUTE INTERVALS
1304          KM     5  10  15  20  25  30  35  40  45  50  55  60  65  70  75  80  85  90
1305          KM   .47 .46 .46 .15 .12 .11 .05 .05 .05 .03 .03 .03 .01 .01 .01 .01 .01 .01
1306          KM
1307          KM          L=   0.371 miles, S=  257 feet/mile, Kb= .11
1308          KM
1309          BA   0.041
1310          LG    0.13     0.39     5.70     0.20    34.60
1311          UC   0.204    0.177
              *

1312          KK   C609O
1313          KM      Reservoir route at C609.
1314          RS       1     ELEV  1694.0
1315          SV    0.00     0.10     0.21     0.50     0.86     1.40     1.93     2.60     3.10     3.20
1316          SV    3.39     3.60     3.80     4.00     4.10     4.30     4.50     4.70     4.90     5.10
1317          SE  1694.0   1695.0   1696.0   1697.0   1698.0   1699.0   1700.0   1701.0   1701.6   1701.8
1318          SE  1702.0   1702.2   1702.4   1702.6   1702.8   1703.0   1703.2   1703.4   1703.6   1703.8
1319          SQ       0        6       16       33       48       59       68       75       79       85
1320          SQ     108      149      209      289      390      512      658      829     1025     1247
              *

1321          KK  609611
1322          KM      Normal depth channel route from C609 to C611
1323          KM      Source:  200 Scale Mapping
1324          RS       2     FLOW      -1
1325          RC   0.035    0.050    0.035    470.0   0.0200
1326          RX  1000.0   1025.0   1050.0   1054.0   1064.0   1068.0   1088.0   1103.0
```

```
LINE          ID.......1.......2.......3.......4.......5.......6.......7.......8.......9......10

1327          RY  1690.0  1688.0  1684.0  1682.0  1682.0  1684.0  1688.0  1690.0
              *

1328          KK   C611I
1329          KM      Hydrograph combine 609611 + C611R at C611I
1330          HC       2
              *

1331          KK   C611O
1332          KM      Reservoir route at C611.
1333          RS       1    ELEV  1668.4
1334          SV    0.00    0.41    1.10    2.49    4.34    6.64    6.72    6.81    6.89    6.97
1335          SV    7.06    7.14    7.22    7.31    7.39    7.47    7.56    7.64    7.72    7.81
1336          SE  1674.0  1676.0  1678.0  1680.0  1682.0  1684.0  1684.2  1684.4  1684.6  1684.8
1337          SE  1685.0  1685.2  1685.4  1685.6  1685.8  1686.0  1686.2  1686.4  1686.6  1686.8
1338          SQ       0       0      86     117     141     162     164     170     181     199
1339          SQ     225     262     313     378     460     558     673     807     958    1118
              *

1340          KK   D611L
1341          KM      Hydrograph diversion at C611.  Main flow continues in the left branch.
1342          KM      Diverted flow is in the right branch.
1343          DT   D611R
1344          DI       0       0      86     117     141     162     164     170     181     199
1345          DI     225     262     313     378     460     558     673     807     958    1118
1346          DQ       0       0      86     117     141     162     164     165     167     169
1347          DQ     171     173     175     176     178     180     182     183     185     187
              *

1348          KK  611612
1349          KM      Normal depth channel route from C611 to C612
1350          KM      Source:  200 Scale Mapping
1351          RS       1    FLOW      -1
1352          RC   0.040   0.018   0.040   925.0  0.0270
1353          RX  1000.0  1020.0  1023.0  1041.0  1059.0  1060.2  1071.2  1136.2
1354          RY  1666.0  1664.0  1663.5  1663.9  1663.5  1663.9  1664.0  1666.0
              *

1355          KK    211P
1356          KM   Sub-Basin   211P
1357          KM
1358          KM      The Clark Unit Hydrograph is used for this basin.
1359          KM          The Urban time-area relation is used for this basin.
1360          KM
1361          KM      Time of Concentration for this sub-basin is based on the following:
1362          KM          6-Hour Rainfall, Pattern No.  1.00
1363          KM          An rainfall areal reduction factor of 1.000
1364          KM
1365          KM       EXCESS RAINFALL VALUES EXCEEDED IN 5-MINUTE INTERVALS
1366          KM     5  10  15  20  25  30  35  40  45  50  55  60  65  70  75  80  85  90
1367          KM   .49 .49 .49 .18 .15 .15 .07 .07 .07 .07 .07 .07 .01 .01 .01 .01 .01 .01
1368          KM
1369          KM          L=   0.307 miles, S=  192 feet/mile, Kb= .03
1370          KM
1371          BA   0.033
```

```
LINE          ID.......1.......2.......3.......4.......5.......6.......7.......8.......9......10

1372          LG    0.08    0.15    7.00    0.11   44.90
1373          UC   0.100   0.077
1374          UA       0       5      16      30      65      77      84      90      94      97
1375          UA     100
              *

1376          KK    C612
1377          KM      Hydrograph combine 611612 + 211P at C612
1378          HC       2
              *
              * *
              * * NOTE: 612613 is too short to route
              * *
              *

1379          KK    C613
1380          KM      Hydrograph combine 608613 + C612 at C613
1381          HC       2
              *

1382          KK  613621
1383          KM      Normal depth channel route from C613 to C621
1384          KM      Source:  HEC-2 Cross Section: AS 3.241
1385          RS       2    FLOW      -1
1386          RC   0.100   0.045   0.100   718.0  0.0251
1387          RX  9695.4  9884.0  9985.0  9991.1 10033.8 10062.8 10097.5 10165.1
1388          RY  1655.5  1647.5  1645.8  1641.1  1640.6  1642.1  1648.7  1654.3
              *

1389          KK    211L
1390          KM   Sub-Basin   211L
1391          KM
1392          KM      The Clark Unit Hydrograph is used for this basin.
1393          KM          The Urban time-area relation is used for this basin.
1394          KM
1395          KM      Time of Concentration for this sub-basin is based on the following:
1396          KM          6-Hour Rainfall, Pattern No.  1.00
1397          KM          An rainfall areal reduction factor of 0.999
1398          KM
1399          KM       EXCESS RAINFALL VALUES EXCEEDED IN 5-MINUTE INTERVALS
1400          KM     5  10  15  20  25  30  35  40  45  50  55  60  65  70  75  80  85  90
1401          KM   .46 .46 .46 .15 .12 .11 .05 .05 .04 .03 .03 .03 .01 .01 .01 .01 .01 .01
1402          KM
1403          KM          L=   0.508 miles, S=  181 feet/mile, Kb= .04
1404          KM
1405          BA   0.096
1406          LG    0.16    0.28    4.35    0.36   37.80
1407          UC   0.158   0.106
1408          UA       0       5      16      30      65      77      84      90      94      97
1409          UA     100
              *
```

```
LINE          ID.......1.......2.......3.......4.......5.......6.......7.......8.......9......10

1410          KK   C621L
1411          KM      Hydrograph combine 613621 + 211L at C621 left branch
1412          HC       2
              *
              * *
              * * Move to the top of Arrow Wash
              * *
              *

1413          KK    211Q
1414          KM   Sub-Basin   211Q
1415          KM
1416          KM      The Clark Unit Hydrograph is used for this basin.
1417          KM          The HEC-1 time-area relation is used for this basin.
1418          KM
1419          KM      Time of Concentration for this sub-basin is based on the following:
1420          KM          6-Hour Rainfall, Pattern No.  1.00
1421          KM          An rainfall areal reduction factor of 1.000
1422          KM
1423          KM       EXCESS RAINFALL VALUES EXCEEDED IN 5-MINUTE INTERVALS
1424          KM     5  10  15  20  25  30  35  40  45  50  55  60  65  70  75  80  85  90
1425          KM   .45 .45 .45 .14 .10 .09 .04 .04 .03 .01 .01 .01 .00 .00 .00 .00 .00 .00
1426          KM
1427          KM          L=   0.255 miles, S=  295 feet/mile, Kb= .12
1428          KM
1429          BA   0.021
1430          LG    0.14     0.38     5.70     0.20     8.50
1431          UC   0.171    0.157
              *

1432          KK  616617
1433          KM      Normal depth channel route from C616 to C617
1434          KM      Source:  200 Scale Mapping
1435          RS       4    FLOW      -1
1436          RC   0.070   0.060   0.070  1131.0  0.0553
1437          RX  1000.0  1008.0  1015.0  1045.0  1050.0  1080.0  1100.0  1110.0
1438          RY  1834.0  1832.0  1830.0  1826.0  1826.0  1830.0  1834.0  1836.0
              *

1439          KK    211R
1440          KM   Sub-Basin   211R
1441          KM
1442          KM      The Clark Unit Hydrograph is used for this basin.
1443          KM          The HEC-1 time-area relation is used for this basin.
1444          KM
1445          KM      Time of Concentration for this sub-basin is based on the following:
1446          KM          6-Hour Rainfall, Pattern No.  1.00
1447          KM          An rainfall areal reduction factor of 0.999
1448          KM
1449          KM       EXCESS RAINFALL VALUES EXCEEDED IN 5-MINUTE INTERVALS
1450          KM     5  10  15  20  25  30  35  40  45  50  55  60  65  70  75  80  85  90
1451          KM   .46 .46 .45 .15 .11 .11 .05 .05 .04 .02 .02 .02 .01 .01 .01 .01 .01 .01
1452          KM
1453          KM          L=   0.572 miles, S=  271 feet/mile, Kb= .10
```

```
LINE          ID.......1.......2.......3.......4.......5.......6.......7.......8.......9......10

1454          KM
1455          BA   0.084
1456          LG    0.13    0.38    5.70    0.20   22.00
1457          UC   0.242   0.200
              *

1458          KK   C617L
1459          KM      Hydrograph combine 616617 + 211R at C617 left branch
1460          HC       2
              *

1461          KK    211U
1462          KM   Sub-Basin   211U
1463          KM
1464          KM      The Clark Unit Hydrograph is used for this basin.
1465          KM          The Urban time-area relation is used for this basin.
1466          KM
1467          KM      Time of Concentration for this sub-basin is based on the following:
1468          KM          6-Hour Rainfall, Pattern No.  1.00
1469          KM          An rainfall areal reduction factor of 1.000
1470          KM
1471          KM       EXCESS RAINFALL VALUES EXCEEDED IN 5-MINUTE INTERVALS
1472          KM     5  10  15  20  25  30  35  40  45  50  55  60  65  70  75  80  85  90
1473          KM   .49 .49 .49 .18 .15 .15 .07 .07 .07 .07 .06 .06 .02 .02 .02 .02 .02 .02
1474          KM
1475          KM          L=   0.831 miles, S=  214 feet/mile, Kb= .04
1476          KM
1477          BA   0.027
1478          LG    0.07    0.26    5.70    0.18   65.50
1479          UC   0.188   0.386
1480          UA       0       5      16      30      65      77      84      90      94      97
1481          UA     100
              *

1482          KK   D614L
1483          KM     Hydrograph diversion at C614.  Main flow continues in the left branch.
1484          KM      Diverted flow is in the right branch.
1485          DT   D614R
1486          DI       0     4.3     8.5    20.0    49.0    85.5
1487          DQ       0     2.5     5.0    13.5    35.0   60.0
              *

1488          KK    C617
1489          KM      Hydrograph combine C617L + D614L at C617
1490          HC       2
              *

1491          KK  617618
1492          KM      Normal depth channel route from C617 to C618
1493          KM      Source:  HEC-2 Cross Section: AR 0.836
1494          RS       5    FLOW      -1
1495          RC   0.070   0.060   0.070  1912.0  0.0345
1496          RX  9983.3  9987.2  9989.2  9991.1 10031.5 10053.5 10070.6 10097.7
1497          RY  1766.5  1762.3  1760.2  1758.1  1757.8  1760.8  1764.2  1770.6
              *
```

```
LINE          ID.......1.......2.......3.......4.......5.......6.......7.......8.......9......10

1498          KK    211S
1499          KM   Sub-Basin   211S
1500          KM
1501          KM      The Clark Unit Hydrograph is used for this basin.
1502          KM          The HEC-1 time-area relation is used for this basin.
1503          KM
1504          KM      Time of Concentration for this sub-basin is based on the following:
1505          KM          6-Hour Rainfall, Pattern No.  1.00
1506          KM          An rainfall areal reduction factor of 0.999
1507          KM
1508          KM       EXCESS RAINFALL VALUES EXCEEDED IN 5-MINUTE INTERVALS
1509          KM     5  10  15  20  25  30  35  40  45  50  55  60  65  70  75  80  85  90
1510          KM   .46 .46 .46 .15 .12 .11 .05 .05 .04 .03 .02 .02 .01 .01 .01 .01 .01 .01
1511          KM
1512          KM          L=   0.445 miles, S=  272 feet/mile, Kb= .10
1513          KM
1514          BA   0.050
1515          LG    0.13     0.36     5.70     0.20    26.10
1516          UC   0.213    0.190
              *

1517          KK   C618I
1518          KM      Hydrograph combine 617618 + 211S at C618I
1519          HC       2
              *

1520          KK   C618O
1521          KM      Reservoir route at C618.
1522          RS       1    ELEV  1730.6
1523          SV    0.00     0.01     0.06     0.24     0.50     0.75     1.20     1.66     2.30     2.94
1524          SV    3.20     3.30     3.40     3.60     3.80     3.90     4.10     4.30     4.50     4.65
1525          SE  1730.6   1734.0   1736.0   1738.0   1739.0   1740.0   1741.0   1742.0   1743.0   1744.0
1526          SE  1744.3   1744.4   1744.6   1744.8   1745.0   1745.2   1745.4   1745.6   1745.8   1746.0
1527          SQ       0      2.2      2.6      3.0      3.1      3.2      3.3      3.5      3.6      3.7
1528          SQ     3.7      3.8        8       21       48       88      143      212      295      390
              *

1529          KK  BB614R
1530          KM      Retrieve previously diverted hydrograph at C614 in the right branch.
1531          DR   D614R
              *

1532          KK  614615
1533          KM      Normal depth channel route from C614 to C615
1534          KM      Source:  Hydrology Field Reconnaissance
1535          RS       3    FLOW      -1
1536          RC   0.040    0.018    0.040   1114.0   0.0397
1537          RX  1000.0   1020.0   1025.0   1059.0   1091.0   1093.0   1098.0   1103.0
1538          RY  1828.0   1822.0   1821.5   1822.2   1821.8   1822.0   1824.0   1826.0
              *
```

```
LINE          ID.......1.......2.......3.......4.......5.......6.......7.......8.......9......10

1539          KK    211V
1540          KM   Sub-Basin   211V
1541          KM
1542          KM      The Clark Unit Hydrograph is used for this basin.
1543          KM          The Urban time-area relation is used for this basin.
1544          KM
1545          KM      Time of Concentration for this sub-basin is based on the following:
1546          KM          6-Hour Rainfall, Pattern No.  1.00
1547          KM          An rainfall areal reduction factor of 1.000
1548          KM
1549          KM       EXCESS RAINFALL VALUES EXCEEDED IN 5-MINUTE INTERVALS
1550          KM     5  10  15  20  25  30  35  40  45  50  55  60  65  70  75  80  85  90
1551          KM   .50 .50 .50 .19 .16 .16 .08 .08 .08 .08 .08 .08 .02 .02 .02 .02 .02 .02
1552          KM
1553          KM          L=   0.222 miles, S=  212 feet/mile, Kb= .04
1554          KM
1555          BA   0.005
1556          LG    0.06    0.25    5.80    0.18   90.00
1557          UC   0.096   0.170
1558          UA       0       5      16      30      65      77      84      90      94      97
1559          UA     100
              *

1560          KK    C615
1561          KM      Hydrograph combine 614615 + 211V at C615
1562          HC       2    0.03
              *

1563          KK   D615L
1564          KM      Hydrograph diversion at C615.  Main flow continues in the left branch.
1565          KM      Diverted flow is in the right branch.
1566          DT   D615R
1567          DI       0     1.3     2.5     5.3     8.6    14.2    23.0    36.8    55.5    77.5
1568          DQ       0       0       0     1.3     2.6     4.2     7.0    12.8    19.5    29.5
              *

1569          KK  615618
1570          KM      Normal depth channel route from C615 to C618
1571          KM      Source:  Hydrology Field Reconnaissance
1572          RS       1    FLOW      -1
1573          RC   0.040   0.018   0.040   499.0  0.1338
1574          RX  1000.0  1008.0  1009.2  1013.2  1027.2  1028.4  1036.4  1045.4
1575          RY  1800.4  1799.6  1799.2  1798.8  1798.3  1798.7  1798.9  1800.4
              *

1576          KK    C618
1577          KM      Hydrograph combine C618O + 615618 at C618
1578          HC       2    0.19
              *
```

```
LINE          ID.......1.......2.......3.......4.......5.......6.......7.......8.......9......10

1579          KK  618619
1580          KM      Normal depth channel route from C618 to C619
1581          KM      Source:  HEC-2 Cross Section: AR 0.441
1582          RS       4    FLOW      -1
1583          RC   0.070   0.060   0.070  1837.0  0.0285
1584          RX  9870.6  9928.6  9957.1  9996.9 10004.9 10022.1 10062.0 10116.4
1585          RY  1709.2  1700.9  1698.8  1690.0  1689.8  1699.6  1700.3  1711.3
              *

1586          KK    211T
1587          KM   Sub-Basin   211T
1588          KM
1589          KM      The Clark Unit Hydrograph is used for this basin.
1590          KM          The HEC-1 time-area relation is used for this basin.
1591          KM
1592          KM      Time of Concentration for this sub-basin is based on the following:
1593          KM          6-Hour Rainfall, Pattern No.  1.00
1594          KM          An rainfall areal reduction factor of 0.999
1595          KM
1596          KM       EXCESS RAINFALL VALUES EXCEEDED IN 5-MINUTE INTERVALS
1597          KM     5  10  15  20  25  30  35  40  45  50  55  60  65  70  75  80  85  90
1598          KM   .46 .46 .45 .15 .11 .11 .05 .05 .04 .02 .02 .02 .00 .00 .00 .00 .00 .00
1599          KM
1600          KM          L=   0.488 miles, S=  250 feet/mile, Kb= .10
1601          KM
1602          BA   0.066
1603          LG    0.13    0.37    5.70    0.20   21.00
1604          UC   0.229   0.191
              *

1605          KK   C619L
1606          KM      Hydrograph combine 618619 + 211T at C619 left branch
1607          HC       2
              *

1608          KK  BB615R
1609          KM      Retrieve previously diverted hydrograph at C615 in the right branch.
1610          DR   D615R
              *

1611          KK  615619
1612          KM      Normal depth channel route from C615 to C619
1613          KM      Source:  Hydrology Field Reconnaissance
1614          RS       5    FLOW      -1
1615          RC   0.045   0.024   0.025  2444.0  0.0493
1616          RX  1000.0  1009.3  1018.5  1037.0  1039.3  1053.0  1065.0  1065.0
1617          RY  1727.2  1726.5  1725.8  1724.4  1724.6  1725.8  1725.9  1725.9
              *
```

```
LINE          ID.......1.......2.......3.......4.......5.......6.......7.......8.......9......10

1618          KK   C619I
1619          KM      Hydrograph combine C619L + 615619 at C619I
1620          HC       2    0.25
              *

1621          KK   C619O
1622          KM      Reservoir route at C619.
1623          RS       1    ELEV  1675.6
1624          SV    0.00    1.72    2.98    4.70    7.00    7.08    7.17    7.26    7.34    7.43
1625          SV    7.51    7.60    7.69    7.77    7.86
1626          SE  1675.6  1686.0  1688.0  1690.0  1692.0  1692.2  1692.4  1692.6  1692.8  1693.0
1627          SE  1693.2  1693.4  1693.6  1693.8  1694.0
1628          SQ       0       4      25      72     128     155     163     172     178     187
1629          SQ     195     213     238     273     318     374     441     518     606     706
1630          SE  1675.6  1676.0  1678.0  1680.0  1682.0  1684.0  1686.0  1688.0  1690.0  1692.0
1631          SE  1692.2  1692.4  1692.6  1692.8  1693.0  1693.2  1693.4  1693.6  1693.8  1694.0
              *

1632          KK   D619R
1633          KM      Hydrograph diversion at C619.  Main flow continues in the right branch.
1634          KM      Diverted flow is in the left branch.
1635          DT   D619L
1636          DI       0       4      25      72     128     155     163     172     178     187
1637          DI     195     213     238     273     318     374     441     518     606     706
1638          DQ       0       0       0       0       0       0       0       0       0       0
1639          DQ       8      24      49      83     128     182     249     326     412     512
              *

1640          KK  619620
1641          KM                  Lag route through Palisades Plaza storm drain
1642          RT       0                1
              *

1643          KK  BB619L
1644          KM      Retrieve previously diverted hydrograph at C619 in the left branch.
1645          DR   D619L
              *

1646          KK  619620
1647          KM   Normal depth channel route from C619 to C620 in Fountain Hills Blvd.
1648          KM   Source:  200 Scale Mapping. Similiar to 523548
1649          RS       1    FLOW      -1
1650          RC   0.040   0.024   0.040   800.0  0.0288
1651          RX   918.0   940.0   960.0  1000.0  1040.0  1040.1  1044.1  1088.1
1652          RY  1648.0  1645.8  1643.8  1644.7  1644.0  1644.5  1644.5  1648.0
              *

1653          KK    211W
1654          KM   Sub-Basin   211W
1655          KM
1656          KM      The Clark Unit Hydrograph is used for this basin.
1657          KM          The Urban time-area relation is used for this basin.
1658          KM
1659          KM      Time of Concentration for this sub-basin is based on the following:
```

```
LINE          ID.......1.......2.......3.......4.......5.......6.......7.......8.......9......10

1660          KM          6-Hour Rainfall, Pattern No.  1.00
1661          KM          An rainfall areal reduction factor of 1.000
1662          KM
1663          KM       EXCESS RAINFALL VALUES EXCEEDED IN 5-MINUTE INTERVALS
1664          KM     5  10  15  20  25  30  35  40  45  50  55  60  65  70  75  80  85  90
1665          KM   .49 .49 .49 .18 .15 .15 .07 .07 .07 .07 .07 .06 .02 .02 .02 .02 .02 .02
1666          KM
1667          KM          L=   0.289 miles, S=  173 feet/mile, Kb= .04
1668          KM
1669          BA   0.030
1670          LG    0.07    0.27    5.70    0.18   69.90
1671          UC   0.117   0.094
1672          UA       0       5      16      30      65      77      84      90      94      97
1673          UA     100
              *

1674          KK   C620R
1675          KM      Hydrograph combine 619620 + R619L + 211W at C620 right branch
1676          HC       3    0.28
              *

1677          KK  BB611R
1678          KM      Retrieve previously diverted hydrograph at C611 in the right branch.
1679          DR   D611R
              *

1680          KK  611620
1681          KM                Lag route through Palisades Plaza storm drain
1682          RT       0               1
              *

1683          KK    C620
1684          KM      Hydrograph combine 611620 + C620R at C620
1685          HC       2    0.42
              *

1686          KK  620621
1687          KM      Normal depth channel route from C620 to C621
1688          KM      Source:  HEC-2 Cross Section: AR 0.081
1689          RS       2    FLOW      -1
1690          RC   0.050   0.050   0.050   915.0  0.0394
1691          RX  9790.0  9790.1  9972.2  9994.8 10004.9 10029.7 10048.6 10125.0
1692          RY  1657.9  1657.5  1656.4  1646.8  1646.8  1657.8  1657.0  1657.9
              *

1693          KK    C621
1694          KM      Hydrograph combine C621L + 620621 at C621
1695          HC       2    7.93
              *
```

```
LINE          ID.......1.......2.......3.......4.......5.......6.......7.......8.......9......10

1696          KK  621622
1697          KM      Normal depth channel route from C621 to C622
1698          KM      Source:  HEC-2 Cross Section: AS 2.785
1699          RS       6    FLOW      -1
1700          RC   0.100   0.045   0.100  3830.0  0.0144
1701          RX  9827.3  9922.9  9951.0 10000.0 10002.7 10044.7 10071.6 10076.8
1702          RY  1615.2  1611.0  1604.1  1600.8  1601.5  1601.6  1611.0  1613.9
              *

1703          KK    211X
1704          KM   Sub-Basin   211X
1705          KM
1706          KM      The Clark Unit Hydrograph is used for this basin.
1707          KM          The HEC-1 time-area relation is used for this basin.
1708          KM
1709          KM      Time of Concentration for this sub-basin is based on the following:
1710          KM          6-Hour Rainfall, Pattern No.  1.00
1711          KM          An rainfall areal reduction factor of 0.997
1712          KM
1713          KM       EXCESS RAINFALL VALUES EXCEEDED IN 5-MINUTE INTERVALS
1714          KM     5  10  15  20  25  30  35  40  45  50  55  60  65  70  75  80  85  90
1715          KM   .47 .47 .46 .16 .13 .12 .06 .05 .05 .04 .04 .04 .01 .01 .01 .01 .01 .01
1716          KM
1717          KM          L=   0.929 miles, S=  111 feet/mile, Kb= .05
1718          KM
1719          BA   0.214
1720          LG    0.16    0.30    4.90    0.27   43.20
1721          UC   0.288   0.211
              *

1722          KK   C622R
1723          KM      Hydrograph combine 621622 + 211X at C622 right branch
1724          HC       2
              *
              * *
              * * Move to the top of Tulip Wash
              * *
              *

1725          KK    211A
1726          KM   Sub-Basin   211A
1727          KM
1728          KM      The Clark Unit Hydrograph is used for this basin.
1729          KM          The HEC-1 time-area relation is used for this basin.
1730          KM
1731          KM      Time of Concentration for this sub-basin is based on the following:
1732          KM          6-Hour Rainfall, Pattern No.  1.00
1733          KM          An rainfall areal reduction factor of 0.998
1734          KM
1735          KM       EXCESS RAINFALL VALUES EXCEEDED IN 5-MINUTE INTERVALS
1736          KM     5  10  15  20  25  30  35  40  45  50  55  60  65  70  75  80  85  90
1737          KM   .45 .45 .45 .14 .10 .10 .04 .04 .03 .01 .01 .01 .00 .00 .00 .00 .00 .00
1738          KM
1739          KM          L=   0.820 miles, S=  248 feet/mile, Kb= .10
```

```
LINE          ID.......1.......2.......3.......4.......5.......6.......7.......8.......9......10

1740          KM
1741          BA   0.143
1742          LG    0.14    0.38    5.70    0.21   13.80
1743          UC   0.313   0.263
              *

1744          KK   C6000
1745          KM      Reservoir route at C600.
1746          RS       1    ELEV  1754.0
1747          SV    0.00    0.14    0.62    1.52    2.95    5.06    7.98   11.80   16.61   22.67
1748          SV   30.07   38.71   40.50   40.60   41.60   42.70   43.70   44.60   45.70
1749          SE  1754.0  1756.0  1758.0  1760.0  1762.0  1764.0  1766.0  1768.0  1770.0  1772.0
1750          SE  1774.0  1776.0 1776.36  1776.4  1776.6  1776.8  1777.0  1777.2  1777.4
1751          SQ       0      55     183     320     427     513     570     620     665     709
1752          SQ     750     789     795     795     812     849     906     984    1084
              *

1753          KK  600601
1754          KM      Normal depth channel route from C600 to C601
1755          KM      Source:  HEC-2 Cross Section: TU 1.538
1756          RS       4    FLOW      -1
1757          RC   0.040   0.025   0.040  2406.0  0.0176
1758          RX  9945.6  9959.4  9968.3  9985.9 10000.0 10017.2 10038.7 10058.8
1759          RY  1734.5  1732.3  1727.9  1726.2  1725.0  1727.7  1735.2  1736.0
              *

1760          KK    211B
1761          KM   Sub-Basin   211B
1762          KM
1763          KM      The Clark Unit Hydrograph is used for this basin.
1764          KM          The HEC-1 time-area relation is used for this basin.
1765          KM
1766          KM      Time of Concentration for this sub-basin is based on the following:
1767          KM          6-Hour Rainfall, Pattern No.  1.00
1768          KM          An rainfall areal reduction factor of 0.999
1769          KM
1770          KM       EXCESS RAINFALL VALUES EXCEEDED IN 5-MINUTE INTERVALS
1771          KM     5  10  15  20  25  30  35  40  45  50  55  60  65  70  75  80  85  90
1772          KM   .45 .45 .45 .14 .11 .10 .04 .04 .03 .01 .01 .01 .00 .00 .00 .00 .00 .00
1773          KM
1774          KM          L=   0.618 miles, S=  244 feet/mile, Kb= .10
1775          KM
1776          BA   0.109
1777          LG    0.14    0.37    5.80    0.21   13.40
1778          UC   0.263   0.202
              *

1779          KK    C601
1780          KM      Hydrograph combine 600601 + 211B at C601
1781          HC       2
              *
```

```
LINE          ID.......1.......2.......3.......4.......5.......6.......7.......8.......9......10

1782          KK  601602
1783          KM      Normal depth channel route from C601 to C602
1784          KM      Source:  HEC-2 Cross Section: TU 1.102
1785          RS       3    FLOW      -1
1786          RC   0.065   0.040   0.055  1765.0  0.0146
1787          RX  9916.9  9959.1  9965.8  9980.2 10004.0 10019.5 10047.3 10094.1
1788          RY  1699.9  1699.8  1696.4  1689.8  1688.9  1695.7  1698.2  1698.4
              *

1789          KK   211C
1790          KM   Sub-Basin   211C
1791          KM
1792          KM      The Clark Unit Hydrograph is used for this basin.
1793          KM          The Urban time-area relation is used for this basin.
1794          KM
1795          KM      Time of Concentration for this sub-basin is based on the following:
1796          KM          6-Hour Rainfall, Pattern No.  1.00
1797          KM          An rainfall areal reduction factor of 0.999
1798          KM
1799          KM       EXCESS RAINFALL VALUES EXCEEDED IN 5-MINUTE INTERVALS
1800          KM     5  10  15  20  25  30  35  40  45  50  55  60  65  70  75  80  85  90
1801          KM   .48 .48 .48 .17 .14 .14 .06 .06 .06 .05 .05 .05 .01 .01 .01 .01 .01 .01
1802          KM
1803          KM          L=   0.479 miles, S=  154 feet/mile, Kb= .03
1804          KM
1805          BA   0.043
1806          LG    0.08    0.25    5.70    0.18   44.50
1807          UC   0.138   0.137
1808          UA       0       5      16      30      65      77      84      90      94      97
1809          UA     100
              *

1810          KK   C602L
1811          KM      Hydrograph combine 601602 + 211C at C602 left branch
1812          HC       2
              *

1813          KK   211D
1814          KM   Sub-Basin   211D
1815          KM
1816          KM      The Clark Unit Hydrograph is used for this basin.
1817          KM          The Urban time-area relation is used for this basin.
1818          KM
1819          KM      Time of Concentration for this sub-basin is based on the following:
1820          KM          6-Hour Rainfall, Pattern No.  1.00
1821          KM          An rainfall areal reduction factor of 0.999
1822          KM
1823          KM       EXCESS RAINFALL VALUES EXCEEDED IN 5-MINUTE INTERVALS
1824          KM     5  10  15  20  25  30  35  40  45  50  55  60  65  70  75  80  85  90
1825          KM   .44 .44 .43 .13 .09 .07 .03 .03 .02 .02 .02 .02 .01 .01 .01 .01 .01 .01
1826          KM
1827          KM          L=   0.686 miles, S=  115 feet/mile, Kb= .04
1828          KM
1829          BA   0.071
```

```
LINE          ID.......1.......2.......3.......4.......5.......6.......7.......8.......9......10

1830          LG    0.21    0.30    3.85    0.49   28.30
1831          UC   0.217   0.227
1832          UA       0       5      16      30      65      77      84      90      94      97
1833          UA     100
              *

1834          KK    C602
1835          KM      Hydrograph combine C602L + 211D at C602
1836          HC       2
              *

1837          KK  602603
1838          KM      Normal depth channel route from C602 to C603
1839          KM      Source:  HEC-2 Cross Section: LE 0.672
1840          RS       4    FLOW      -1
1841          RC   0.060   0.045   0.060  2610.0  0.0211
1842          RX  9891.9  9963.9  9986.5 10000.0 10012.7 10023.8 10085.0 10176.4
1843          RY  1653.5  1653.5  1644.4  1644.1  1645.0  1649.8  1651.7  1656.7
              *

1844          KK    211E
1845          KM   Sub-Basin   211E
1846          KM
1847          KM      The Clark Unit Hydrograph is used for this basin.
1848          KM          The Urban time-area relation is used for this basin.
1849          KM
1850          KM      Time of Concentration for this sub-basin is based on the following:
1851          KM          6-Hour Rainfall, Pattern No.  1.00
1852          KM          An rainfall areal reduction factor of 0.998
1853          KM
1854          KM       EXCESS RAINFALL VALUES EXCEEDED IN 5-MINUTE INTERVALS
1855          KM     5  10  15  20  25  30  35  40  45  50  55  60  65  70  75  80  85  90
1856          KM   .47 .47 .47 .16 .13 .13 .06 .06 .05 .04 .04 .04 .01 .01 .01 .01 .01 .01
1857          KM
1858          KM          L=   0.609 miles, S=  118 feet/mile, Kb= .03
1859          KM
1860          BA   0.156
1861          LG    0.11    0.27    5.10    0.24   42.20
1862          UC   0.171   0.101
1863          UA       0       5      16      30      65      77      84      90      94      97
1864          UA     100
              *

1865          KK    C603
1866          KM      Hydrograph combine 602603 + 211E at C603
1867          HC       2
              *

1868          KK  603622
1869          KM      Normal depth channel route from C603 to C622
1870          KM      Source:  HEC-2 Cross Section: LE 0.287
1871          RS       5    FLOW      -1
1872          RC   0.060   0.045   0.060  2745.0  0.0204
1873          RX  9883.0  9929.7  9967.3  9991.6 10042.2 10073.6 10177.6 10194.5
1874          RY  1619.4  1618.7  1611.8  1602.1  1603.3  1609.4  1610.5  1610.6
              *
```

```
LINE          ID.......1.......2.......3.......4.......5.......6.......7.......8.......9......10

1875          KK    211F
1876          KM   Sub-Basin   211F
1877          KM
1878          KM      The Clark Unit Hydrograph is used for this basin.
1879          KM          The Urban time-area relation is used for this basin.
1880          KM
1881          KM      Time of Concentration for this sub-basin is based on the following:
1882          KM          6-Hour Rainfall, Pattern No.  1.00
1883          KM          An rainfall areal reduction factor of 0.999
1884          KM
1885          KM       EXCESS RAINFALL VALUES EXCEEDED IN 5-MINUTE INTERVALS
1886          KM     5  10  15  20  25  30  35  40  45  50  55  60  65  70  75  80  85  90
1887          KM   .48 .48 .48 .17 .14 .14 .06 .06 .06 .05 .05 .05 .01 .01 .01 .01 .01 .01
1888          KM
1889          KM          L=   0.770 miles, S=  134 feet/mile, Kb= .03
1890          KM
1891          BA   0.113
1892          LG    0.08    0.25    4.30    0.36   62.70
1893          UC   0.183   0.158
1894          UA       0       5      16      30      65      77      84      90      94      97
1895          UA     100
              *

1896          KK   C622L
1897          KM      Hydrograph combine 603622 + 211F at C622 left branch
1898          HC       2
              *

1899          KK    C622
1900          KM      Hydrograph combine C622R + C622L at C622
1901          HC       2
              *

1902          KK  622549
1903          KM      Normal depth channel route from C622 to C549
1904          KM      Source:  HEC-2 Cross Section: AS 2.279
1905          RS       6    FLOW      -1
1906          RC   0.113   0.125   0.120  1697.0  0.0118
1907          RX  9847.1  9851.0  9857.5  9862.8 10052.6 10062.8 10075.6 10084.6
1908          RY  1573.5  1571.3  1567.2  1564.6  1565.1  1566.7  1573.7  1573.9
              *

1909          KK    211Y
1910          KM   Sub-Basin   211Y
1911          KM
1912          KM      The Clark Unit Hydrograph is used for this basin.
1913          KM          The HEC-1 time-area relation is used for this basin.
1914          KM
1915          KM      Time of Concentration for this sub-basin is based on the following:
1916          KM          6-Hour Rainfall, Pattern No.  1.00
1917          KM          An rainfall areal reduction factor of 0.999
1918          KM
1919          KM       EXCESS RAINFALL VALUES EXCEEDED IN 5-MINUTE INTERVALS
1920          KM     5  10  15  20  25  30  35  40  45  50  55  60  65  70  75  80  85  90
```

```
LINE          ID.......1.......2.......3.......4.......5.......6.......7.......8.......9......10

1921          KM   .47 .47 .46 .16 .13 .12 .05 .05 .05 .04 .03 .02 .00 .00 .00 .00 .00 .00
1922          KM
1923          KM         L=   0.606 miles, S=  147 feet/mile, Kb= .07
1924          KM
1925          BA   0.089
1926          LG    0.13    0.30    6.60    0.14   16.80
1927          UC   0.246   0.207
              *

1928          KK   C549R
1929          KM      Hydrograph combine 622549 + 211Y at C549 right branch
1930          HC       2
              *

1931          KK    C549
1932          KM      Hydrograph combine C549L + C549R at C549
1933          HC       2
              *

1934          KK  549626
1935          KM      Normal depth channel route from C549 to C626
1936          KM      Source:  HEC-2 Cross Section: AS 1.855
1937          RS       5    FLOW      -1
1938          RC   0.113   0.125   0.120  2044.0  0.0171
1939          RX  9943.2  9963.0  9985.6  9994.1 10007.6 10029.2 10150.5 10171.3
1940          RY  1539.3  1534.5  1531.2  1528.3  1528.2  1531.7  1532.5  1537.4
              *

1941          KK    211Z
1942          KM   Sub-Basin   211Z
1943          KM
1944          KM      The Clark Unit Hydrograph is used for this basin.
1945          KM          The Urban time-area relation is used for this basin.
1946          KM
1947          KM      Time of Concentration for this sub-basin is based on the following:
1948          KM          6-Hour Rainfall, Pattern No.  1.00
1949          KM          An rainfall areal reduction factor of 0.999
1950          KM
1951          KM       EXCESS RAINFALL VALUES EXCEEDED IN 5-MINUTE INTERVALS
1952          KM     5  10  15  20  25  30  35  40  45  50  55  60  65  70  75  80  85  90
1953          KM   .46 .46 .46 .15 .12 .11 .05 .05 .04 .03 .03 .03 .01 .01 .01 .01 .01 .01
1954          KM
1955          KM         L=   0.509 miles, S=  147 feet/mile, Kb= .04
1956          KM
1957          BA   0.083
1958          LG    0.14    0.27    4.50    0.34   34.40
1959          UC   0.171   0.126
1960          UA       0       5      16      30      65      77      84      90      94      97
1961          UA     100
              *
```

HEC-1 INPUT

```
LINE          ID.......1.......2.......3.......4.......5.......6.......7.......8.......9......10

1962          KK   C626C
1963          KM      Hydrograph combine 549626 + 211Z at C626 main branch
1964          HC       2
              *

1965          KK   211AA
1966          KM   Sub-Basin  211AA
1967          KM
1968          KM      The Clark Unit Hydrograph is used for this basin.
1969          KM          The Urban time-area relation is used for this basin.
1970          KM
1971          KM      Time of Concentration for this sub-basin is based on the following:
1972          KM          6-Hour Rainfall, Pattern No.  1.00
1973          KM          An rainfall areal reduction factor of 1.000
1974          KM
1975          KM        EXCESS RAINFALL VALUES EXCEEDED IN 5-MINUTE INTERVALS
1976          KM     5  10  15  20  25  30  35  40  45  50  55  60  65  70  75  80  85  90
1977          KM   .48 .48 .48 .17 .14 .14 .07 .06 .06 .06 .05 .05 .01 .01 .01 .01 .01 .01
1978          KM
1979          KM          L=   0.480 miles, S=   85 feet/mile, Kb= .06
1980          KM
1981          BA   0.034
1982          LG    0.09    0.24    6.60    0.14   38.80
1983          UC   0.238   0.287
1984          UA       0       5      16      30      65      77      84      90      94      97
1985          UA     100
              *

1986          KK   625626
1987          KM      Normal depth channel route from C625 to C626
1988          KM      Source:  200 Scale Mapping
1989          RS       3    FLOW      -1
1990          RC   0.040   0.018   0.040  1350.0  0.0252
1991          RX  1000.0  1020.0  1021.2  1055.2  1089.2  1090.4  1100.4  1105.4
1992          RY  1527.0  1526.0  1525.6  1526.3  1525.6  1526.0  1528.0  1530.0
              *

1993          KK   211AB
1994          KM   Sub-Basin  211AB
1995          KM
1996          KM      The Clark Unit Hydrograph is used for this basin.
1997          KM          The Urban time-area relation is used for this basin.
1998          KM
1999          KM      Time of Concentration for this sub-basin is based on the following:
2000          KM          6-Hour Rainfall, Pattern No.  1.00
2001          KM          An rainfall areal reduction factor of 0.999
2002          KM
2003          KM        EXCESS RAINFALL VALUES EXCEEDED IN 5-MINUTE INTERVALS
2004          KM     5  10  15  20  25  30  35  40  45  50  55  60  65  70  75  80  85  90
2005          KM   .48 .47 .47 .17 .13 .13 .06 .06 .06 .05 .04 .04 .01 .01 .01 .01 .01 .01
2006          KM
2007          KM          L=   0.293 miles, S=  321 feet/mile, Kb= .07
2008          KM
2009          BA   0.040
```

```
LINE          ID.......1.......2.......3.......4.......5.......6.......7.......8.......9......10

2010          LG    0.11    0.26    6.80    0.13   23.10
2011          UC   0.133   0.093
2012          UA       0       5      16      30      65      77      84      90      94      97
2013          UA     100
              *

2014          KK  623624
2015          KM      Normal depth channel route from C623 to C624
2016          KM      Source:  200 Scale Mapping
2017          RS       1    FLOW      -1
2018          RC   0.040   0.018   0.040   701.0  0.0114
2019          RX  1000.0  1010.0  1011.2  1027.2  1043.2  1044.4  1059.4  1074.4
2020          RY  1534.0  1532.0  1531.6  1531.9  1531.6  1532.0  1532.5  1533.0
              *

2021          KK   211AC
2022          KM   Sub-Basin  211AC
2023          KM
2024          KM      The Clark Unit Hydrograph is used for this basin.
2025          KM          The Urban time-area relation is used for this basin.
2026          KM
2027          KM      Time of Concentration for this sub-basin is based on the following:
2028          KM          6-Hour Rainfall, Pattern No.  1.00
2029          KM          An rainfall areal reduction factor of 1.000
2030          KM
2031          KM       EXCESS RAINFALL VALUES EXCEEDED IN 5-MINUTE INTERVALS
2032          KM     5  10  15  20  25  30  35  40  45  50  55  60  65  70  75  80  85  90
2033          KM   .49 .49 .49 .19 .16 .15 .08 .08 .07 .07 .07 .07 .01 .01 .01 .01 .01 .01
2034          KM
2035          KM          L=   0.306 miles, S=   82 feet/mile, Kb= .03
2036          KM
2037          BA   0.027
2038          LG    0.08    0.15    8.40    0.07   44.80
2039          UC   0.133   0.119
2040          UA       0       5      16      30      65      77      84      90      94      97
2041          UA     100
              *

2042          KK    C624
2043          KM      Hydrograph combine 623624 + 211AC at C624
2044          HC       2
              *

2045          KK  624626
2046          KM      Normal depth channel route from C624 to C626
2047          KM      Source:  HEC-2 Cross Section: AS 1.727
2048          RS       2    FLOW      -1
2049          RC   0.080   0.060   0.080   637.0  0.0235
2050          RX  9872.9  9881.0  9893.9  9902.2  9967.6  9976.4 10076.1 10084.3
2051          RY  1526.3  1524.6  1521.7  1520.0  1520.7  1521.6  1520.7  1526.2
              *
```

```
LINE          ID.......1.......2.......3.......4.......5.......6.......7.......8.......9......10

2052          KK   211AD
2053          KM   Sub-Basin  211AD
2054          KM
2055          KM      The Clark Unit Hydrograph is used for this basin.
2056          KM          The Urban time-area relation is used for this basin.
2057          KM
2058          KM      Time of Concentration for this sub-basin is based on the following:
2059          KM          6-Hour Rainfall, Pattern No.  1.00
2060          KM          An rainfall areal reduction factor of 0.999
2061          KM
2062          KM       EXCESS RAINFALL VALUES EXCEEDED IN 5-MINUTE INTERVALS
2063          KM     5  10  15  20  25  30  35  40  45  50  55  60  65  70  75  80  85  90
2064          KM   .49 .49 .49 .18 .15 .15 .07 .07 .07 .07 .07 .07 .01 .01 .01 .01 .01 .01
2065          KM
2066          KM          L=   0.489 miles, S=  280 feet/mile, Kb= .04
2067          KM
2068          BA   0.041
2069          LG    0.08     0.16     8.00     0.08    42.40
2070          UC   0.133    0.137
2071          UA      0        5       16       30       65       77       84       90       94       97
2072          UA    100
              *

2073          KK   C626R
2074          KM      Hydrograph combine 624626 + 211AD at C626 right branch
2075          HC       2
              *

2076          KK    C626
2077          KM      Hydrograph combine C626C + 625626 at C626R
2078          HC       3
              *

2079          KK  626627
2080          KM      Normal depth channel route from C626 to C627
2081          KM      Source:  HEC-2 Cross Section: AS 1.602
2082          RS       1     FLOW      -1
2083          RC   0.080    0.060    0.080    625.0   0.0208
2084          RX  9889.8   9941.2   9963.0 10011.6 10074.8 10083.9 10191.7 10210.4
2085          RY  1517.6   1516.9   1508.1  1506.6  1508.6  1511.7  1513.1  1518.8
              *

2086          KK   211AE
2087          KM   Sub-Basin  211AE
2088          KM
2089          KM      The Clark Unit Hydrograph is used for this basin.
2090          KM          The Urban time-area relation is used for this basin.
2091          KM
2092          KM      Time of Concentration for this sub-basin is based on the following:
2093          KM          6-Hour Rainfall, Pattern No.  1.00
2094          KM          An rainfall areal reduction factor of 1.000
2095          KM
2096          KM       EXCESS RAINFALL VALUES EXCEEDED IN 5-MINUTE INTERVALS
2097          KM     5  10  15  20  25  30  35  40  45  50  55  60  65  70  75  80  85  90
```

```
LINE          ID.......1.......2.......3.......4.......5.......6.......7.......8.......9......10

2098          KM   .48 .48 .48 .17 .14 .13 .06 .06 .06 .05 .05 .05 .01 .01 .01 .01 .01 .01
2099          KM
2100          KM          L=   0.313 miles, S=  153 feet/mile, Kb= .04
2101          KM
2102          BA   0.034
2103          LG    0.12    0.24    6.40    0.15   38.20
2104          UC   0.129   0.103
2105          UA       0       5      16      30      65      77      84      90      94      97
2106          UA     100
              *

2107          KK    C627
2108          KM      Hydrograph combine 626627 + 211AE at C627
2109          HC       2
              *
              * *
              * * C627 is the total flow in Ashbrook Wash at the Study boundary
              * *
              *
2110          ZZ
```

```
*****************************************
                                        *
  FLOOD HYDROGRAPH PACKAGE  (HEC-1)     *
            MAY   1991                  *
         VERSION 4.0.1E                 *
      ney F77L-EM/32 version 5.01       *
     Dodson & Associates, Inc.          *
 RUN DATE  09/28/99  TIME  13:50:47     *
*****************************************
```

```
*****************************************
*                                       *
*    U.S. ARMY CORPS OF ENGINEERS       *
*    HYDROLOGIC ENGINEERING CENTER      *
*          609 SECOND STREET            *
*       DAVIS, CALIFORNIA 95616         *
*           (916) 551-1748              *
*                                       *
*****************************************
```

Golden Eagle Park Dam Modifications
by Stantec: Proj. No. 28900095
for FCDMC: FCD

File: ALTFf-2.IH1
Date:07-08-99 mcg
Revised:

Alternative F:
Addition of an auxillary spillway. This spillway will function such that the existing emergency spillway does not operate for the 100-year storm. The stage-storage relation is adjusted to reflect revised grading in the park.

The purpose of this model is to estimate peak discharges in Ashbrook Wash for evaluation of the Dam modifications impact on the floodplain.

100-year, 6-hour existing condition watershed model for Ashbrook Wash upstream of the Fort McDowell Indian Reservation boundary.
This model is a portion of the original Fountain Hills North FDS watershed model conducted by GVSCE, 1994. The title cards from that model are included for reference.

Fountain Hills North Floodplain Delineation Study
FCD 92-04 by GVSCE
Existing Condition
100-Year 6-Hour Storm, Clark Unit Hydrograph

File: EX100-6.IH1
Date: 02-25-94 trl
Revised: 09-14-94 trl

```
2        OUTPUT CONTROL VARIABLES
               IPRNT          5  PRINT CONTROL
               IPLOT          0  PLOT CONTROL
               QSCAL         0.  HYDROGRAPH PLOT SCALE

IT       HYDROGRAPH TIME DATA
                NMIN          1  MINUTES IN COMPUTATION INTERVAL
               IDATE     1    0  STARTING DATE
               ITIME       0000  STARTING TIME
                  NQ       1080  NUMBER OF HYDROGRAPH ORDINATES
              NDDATE     1    0  ENDING DATE
              NDTIME       1759  ENDING TIME
               ICENT         19  CENTURY MARK

          COMPUTATION INTERVAL    0.02 HOURS
               TOTAL TIME BASE   17.98 HOURS

     ENGLISH UNITS
          DRAINAGE AREA          SQUARE MILES
          PRECIPITATION DEPTH    INCHES
          LENGTH, ELEVATION      FEET
          FLOW                   CUBIC FEET PER SECOND
          STORAGE VOLUME         ACRE-FEET
          SURFACE AREA           ACRES
          TEMPERATURE            DEGREES FAHRENHEIT

28 JD      INDEX STORM NO. 1
               STRM        3.30  PRECIPITATION DEPTH
               TRDA        0.01  TRANSPOSITION DRAINAGE AREA

29 PI        PRECIPITATION PATTERN
               0.00      0.00      0.00      0.00      0.00      0.00      0.00      0.00      0.00      0.00
               0.00      0.00      0.00      0.00      0.00      0.00      0.00      0.00      0.00      0.00
               0.00      0.00      0.00      0.00      0.00      0.00      0.00      0.00      0.00      0.00
               0.00      0.00      0.00      0.00      0.00      0.00      0.00      0.00      0.00      0.00
               0.00      0.00      0.00      0.00      0.00      0.00      0.00      0.00      0.00      0.00
               0.00      0.00      0.00      0.00      0.00      0.00      0.00      0.00      0.00      0.00
               0.00      0.00      0.00      0.00      0.00      0.00      0.00      0.00      0.00      0.00
               0.00      0.00      0.00      0.00      0.00      0.00      0.00      0.00      0.00      0.00
```

0.00	0.00	0.00	0.00	0.00	0.00	0.00	0.00	0.00	0.00
0.00	0.00	0.00	0.00	0.00	0.00	0.00	0.00	0.00	0.00
0.00	0.00	0.00	0.00	0.00	0.00	0.00	0.00	0.00	0.00
0.00	0.00	0.00	0.00	0.00	0.00	0.00	0.00	0.00	0.00
0.00	0.00	0.00	0.00	0.00	0.00	0.00	0.00	0.00	0.00
0.00	0.00	0.00	0.00	0.00	0.00	0.00	0.00	0.00	0.00
0.00	0.00	0.00	0.00	0.00	0.00	0.00	0.00	0.00	0.00
0.00	0.00	0.00	0.00	0.00	0.00	0.00	0.00	0.00	0.00
0.00	0.00	0.00	0.00	0.00	0.00	0.00	0.00	0.00	0.00
0.00	0.00	0.00	0.00	0.00	0.00	0.00	0.00	0.00	0.00
0.00	0.00	0.00	0.00	0.00	0.00	0.00	0.00	0.00	0.00
0.00	0.00	0.00	0.00	0.00	0.01	0.01	0.01	0.01	0.01
0.01	0.01	0.01	0.01	0.01	0.01	0.01	0.01	0.01	0.01
0.01	0.01	0.01	0.01	0.01	0.01	0.01	0.01	0.01	0.01
0.01	0.01	0.01	0.01	0.01	0.03	0.03	0.03	0.03	0.03
0.03	0.03	0.03	0.03	0.03	0.03	0.03	0.03	0.03	0.03
0.01	0.01	0.01	0.01	0.01	0.01	0.01	0.01	0.01	0.01
0.01	0.01	0.01	0.01	0.01	0.00	0.00	0.00	0.00	0.00
0.00	0.00	0.00	0.00	0.00	0.00	0.00	0.00	0.00	0.00
0.00	0.00	0.00	0.00	0.00	0.00	0.00	0.00	0.00	0.00
0.00	0.00	0.00	0.00	0.00	0.00	0.00	0.00	0.00	0.00
0.00	0.00	0.00	0.00	0.00	0.00	0.00	0.00	0.00	0.00
0.00	0.00	0.00	0.00	0.00	0.00	0.00	0.00	0.00	0.00
0.00	0.00	0.00	0.00	0.00	0.00	0.00	0.00	0.00	0.00
0.00	0.00	0.00	0.00	0.00	0.00	0.00	0.00	0.00	0.00
0.00	0.00	0.00	0.00	0.00	0.00	0.00	0.00	0.00	0.00
0.00	0.00	0.00	0.00	0.00	0.00	0.00	0.00	0.00	0.00

32 JD INDEX STORM NO. 2

STRM 3.28 PRECIPITATION DEPTH

TRDA 0.50 TRANSPOSITION DRAINAGE AREA

0 PI PRECIPITATION PATTERN

0.00	0.00	0.00	0.00	0.00	0.00	0.00	0.00	0.00	0.00
0.00	0.00	0.00	0.00	0.00	0.00	0.00	0.00	0.00	0.00
0.00	0.00	0.00	0.00	0.00	0.00	0.00	0.00	0.00	0.00
0.00	0.00	0.00	0.00	0.00	0.00	0.00	0.00	0.00	0.00
0.00	0.00	0.00	0.00	0.00	0.00	0.00	0.00	0.00	0.00
0.00	0.00	0.00	0.00	0.00	0.00	0.00	0.00	0.00	0.00
0.00	0.00	0.00	0.00	0.00	0.00	0.00	0.00	0.00	0.00
0.00	0.00	0.00	0.00	0.00	0.00	0.00	0.00	0.00	0.00
0.00	0.00	0.00	0.00	0.00	0.00	0.00	0.00	0.00	0.00
0.00	0.00	0.00	0.00	0.00	0.00	0.00	0.00	0.00	0.00
0.00	0.00	0.00	0.00	0.00	0.00	0.00	0.00	0.00	0.00
0.00	0.00	0.00	0.00	0.00	0.00	0.00	0.00	0.00	0.00
0.00	0.00	0.00	0.00	0.00	0.00	0.00	0.00	0.00	0.00
0.00	0.00	0.00	0.00	0.00	0.00	0.00	0.00	0.00	0.00
0.00	0.00	0.00	0.00	0.00	0.00	0.00	0.00	0.00	0.00
0.00	0.00	0.00	0.00	0.00	0.00	0.00	0.00	0.00	0.00
0.00	0.00	0.00	0.00	0.00	0.00	0.00	0.00	0.00	0.00
0.00	0.00	0.00	0.00	0.00	0.00	0.00	0.00	0.00	0.00
0.00	0.00	0.00	0.00	0.00	0.00	0.00	0.00	0.00	0.00
0.00	0.00	0.00	0.00	0.00	0.01	0.01	0.01	0.01	0.01
0.01	0.01	0.01	0.01	0.01	0.01	0.01	0.01	0.01	0.01
0.01	0.01	0.01	0.01	0.01	0.01	0.01	0.01	0.01	0.01
0.01	0.01	0.01	0.01	0.01	0.03	0.03	0.03	0.03	0.03
0.03	0.03	0.03	0.03	0.03	0.03	0.03	0.03	0.03	0.03
0.01	0.01	0.01	0.01	0.01	0.01	0.01	0.01	0.01	0.01
0.01	0.01	0.01	0.01	0.01	0.00	0.00	0.00	0.00	0.00
0.00	0.00	0.00	0.00	0.00	0.00	0.00	0.00	0.00	0.00
0.00	0.00	0.00	0.00	0.00	0.00	0.00	0.00	0.00	0.00
0.00	0.00	0.00	0.00	0.00	0.00	0.00	0.00	0.00	0.00
0.00	0.00	0.00	0.00	0.00	0.00	0.00	0.00	0.00	0.00
0.00	0.00	0.00	0.00	0.00	0.00	0.00	0.00	0.00	0.00
0.00	0.00	0.00	0.00	0.00	0.00	0.00	0.00	0.00	0.00
0.00	0.00	0.00	0.00	0.00	0.00	0.00	0.00	0.00	0.00
0.00	0.00	0.00	0.00	0.00	0.00	0.00	0.00	0.00	0.00
0.00	0.00	0.00	0.00	0.00	0.00	0.00	0.00	0.00	0.00
0.00	0.00	0.00	0.00	0.00	0.00	0.00	0.00	0.00	0.00

33 JD INDEX STORM NO. 3

STRM 3.23 PRECIPITATION DEPTH

TRDA 2.80 TRANSPOSITION DRAINAGE AREA

34 PI PRECIPITATION PATTERN

0.00	0.00	0.00	0.00	0.00	0.00	0.00	0.00	0.00	0.00
0.00	0.00	0.00	0.00	0.00	0.00	0.00	0.00	0.00	0.00

0.00	0.00	0.00	0.00	0.00	0.00	0.00	0.00	0.00	0.00
0.00	0.00	0.00	0.00	0.00	0.00	0.00	0.00	0.00	0.00
0.00	0.00	0.00	0.00	0.00	0.00	0.00	0.00	0.00	0.00
0.00	0.00	0.00	0.00	0.00	0.00	0.00	0.00	0.00	0.00
0.00	0.00	0.00	0.00	0.00	0.00	0.00	0.00	0.00	0.00
0.00	0.00	0.00	0.00	0.00	0.00	0.00	0.00	0.00	0.00
0.00	0.00	0.00	0.00	0.00	0.00	0.00	0.00	0.00	0.00
0.00	0.00	0.00	0.00	0.00	0.00	0.00	0.00	0.00	0.00
0.00	0.00	0.00	0.00	0.00	0.00	0.00	0.00	0.00	0.00
0.00	0.00	0.00	0.00	0.00	0.00	0.00	0.00	0.00	0.00
0.00	0.00	0.00	0.00	0.00	0.00	0.00	0.00	0.00	0.00
0.00	0.00	0.00	0.00	0.00	0.00	0.00	0.00	0.00	0.00
0.00	0.00	0.00	0.00	0.00	0.00	0.00	0.00	0.00	0.00
0.00	0.00	0.00	0.00	0.00	0.00	0.00	0.00	0.00	0.00
0.00	0.00	0.00	0.00	0.00	0.00	0.00	0.00	0.00	0.00
0.00	0.00	0.00	0.00	0.00	0.00	0.00	0.00	0.00	0.00
0.00	0.00	0.00	0.00	0.00	0.01	0.01	0.01	0.01	0.01
0.01	0.01	0.01	0.01	0.01	0.01	0.01	0.01	0.01	0.01
0.01	0.01	0.01	0.01	0.01	0.01	0.01	0.01	0.01	0.01
0.01	0.01	0.01	0.01	0.01	0.02	0.02	0.02	0.02	0.02
0.02	0.02	0.02	0.02	0.02	0.02	0.02	0.02	0.02	0.02
0.01	0.01	0.01	0.01	0.01	0.01	0.01	0.01	0.01	0.01
0.01	0.01	0.01	0.01	0.01	0.00	0.00	0.00	0.00	0.00
0.00	0.00	0.00	0.00	0.00	0.00	0.00	0.00	0.00	0.00
0.00	0.00	0.00	0.00	0.00	0.00	0.00	0.00	0.00	0.00
0.00	0.00	0.00	0.00	0.00	0.00	0.00	0.00	0.00	0.00
0.00	0.00	0.00	0.00	0.00	0.00	0.00	0.00	0.00	0.00
0.00	0.00	0.00	0.00	0.00	0.00	0.00	0.00	0.00	0.00
0.00	0.00	0.00	0.00	0.00	0.00	0.00	0.00	0.00	0.00
0.00	0.00	0.00	0.00	0.00	0.00	0.00	0.00	0.00	0.00
0.00	0.00	0.00	0.00	0.00	0.00	0.00	0.00	0.00	0.00
0.00	0.00	0.00	0.00	0.00	0.00	0.00	0.00	0.00	0.00

37 JD INDEX STORM NO. 4

STRM 3.04 PRECIPITATION DEPTH

TRDA 16.00 TRANSPOSITION DRAINAGE AREA

PRECIPITATION PATTERN

0.00	0.00	0.00	0.00	0.00	0.00	0.00	0.00	0.00	0.00
0.00	0.00	0.00	0.00	0.00	0.00	0.00	0.00	0.00	0.00
0.00	0.00	0.00	0.00	0.00	0.00	0.00	0.00	0.00	0.00
0.00	0.00	0.00	0.00	0.00	0.00	0.00	0.00	0.00	0.00
0.00	0.00	0.00	0.00	0.00	0.00	0.00	0.00	0.00	0.00
0.00	0.00	0.00	0.00	0.00	0.00	0.00	0.00	0.00	0.00
0.00	0.00	0.00	0.00	0.00	0.00	0.00	0.00	0.00	0.00
0.00	0.00	0.00	0.00	0.00	0.00	0.00	0.00	0.00	0.00
0.00	0.00	0.00	0.00	0.00	0.00	0.00	0.00	0.00	0.00
0.00	0.00	0.00	0.00	0.00	0.00	0.00	0.00	0.00	0.00
0.00	0.00	0.00	0.00	0.00	0.00	0.00	0.00	0.00	0.00
0.00	0.00	0.00	0.00	0.00	0.00	0.00	0.00	0.00	0.00
0.00	0.00	0.00	0.00	0.00	0.00	0.00	0.00	0.00	0.00
0.00	0.00	0.00	0.00	0.00	0.00	0.00	0.00	0.00	0.00
0.00	0.00	0.00	0.00	0.00	0.00	0.00	0.00	0.00	0.00
0.00	0.00	0.00	0.00	0.00	0.00	0.00	0.00	0.00	0.00
0.00	0.00	0.00	0.00	0.00	0.00	0.00	0.00	0.00	0.00
0.00	0.00	0.00	0.00	0.00	0.00	0.00	0.00	0.00	0.00
0.00	0.00	0.00	0.00	0.00	0.00	0.00	0.00	0.00	0.00
0.00	0.00	0.00	0.00	0.00	0.00	0.00	0.00	0.00	0.00
0.00	0.00	0.00	0.00	0.00	0.00	0.00	0.00	0.00	0.00
0.00	0.00	0.00	0.00	0.00	0.00	0.00	0.00	0.00	0.00
0.00	0.00	0.00	0.00	0.00	0.00	0.00	0.00	0.00	0.00
0.00	0.00	0.00	0.00	0.00	0.00	0.00	0.00	0.00	0.00
0.00	0.00	0.00	0.00	0.00	0.01	0.01	0.01	0.01	0.01
0.01	0.01	0.01	0.01	0.01	0.01	0.01	0.01	0.01	0.01
0.01	0.01	0.01	0.01	0.01	0.01	0.01	0.01	0.01	0.01
0.01	0.01	0.01	0.01	0.01	0.01	0.01	0.01	0.01	0.01
0.01	0.01	0.01	0.01	0.01	0.01	0.01	0.01	0.01	0.01
0.01	0.01	0.01	0.01	0.01	0.01	0.01	0.01	0.01	0.01
0.01	0.01	0.01	0.01	0.01	0.00	0.00	0.00	0.00	0.00
0.00	0.00	0.00	0.00	0.00	0.00	0.00	0.00	0.00	0.00
0.00	0.00	0.00	0.00	0.00	0.00	0.00	0.00	0.00	0.00
0.00	0.00	0.00	0.00	0.00	0.00	0.00	0.00	0.00	0.00
0.00	0.00	0.00	0.00	0.00	0.00	0.00	0.00	0.00	0.00
0.00	0.00	0.00	0.00	0.00	0.00	0.00	0.00	0.00	0.00
0.00	0.00	0.00	0.00	0.00	0.00	0.00	0.00	0.00	0.00
0.00	0.00	0.00	0.00	0.00	0.00	0.00	0.00	0.00	0.00
0.00	0.00	0.00	0.00	0.00	0.00	0.00	0.00	0.00	0.00
0.00	0.00	0.00	0.00	0.00	0.00	0.00	0.00	0.00	0.00

41 JD INDEX STORM NO. 5

STRM 2.67 PRECIPITATION DEPTH
TRDA 90.00 TRANSPOSITION DRAINAGE AREA

42 PI

PRECIPITATION PATTERN

0.00	0.00	0.00	0.00	0.00	0.00	0.00	0.00	0.00	0.00
0.00	0.00	0.00	0.00	0.00	0.00	0.00	0.00	0.00	0.00
0.00	0.00	0.00	0.00	0.00	0.00	0.00	0.00	0.00	0.00
0.00	0.00	0.00	0.00	0.00	0.00	0.00	0.00	0.00	0.00
0.00	0.00	0.00	0.00	0.00	0.00	0.00	0.00	0.00	0.00
0.00	0.00	0.00	0.00	0.00	0.00	0.00	0.00	0.00	0.00
0.00	0.00	0.00	0.00	0.00	0.00	0.00	0.00	0.00	0.00
0.00	0.00	0.00	0.00	0.00	0.00	0.00	0.00	0.00	0.00
0.00	0.00	0.00	0.00	0.00	0.00	0.00	0.00	0.00	0.00
0.00	0.00	0.00	0.00	0.00	0.00	0.00	0.00	0.00	0.00
0.00	0.00	0.00	0.00	0.00	0.00	0.00	0.00	0.00	0.00
0.00	0.00	0.00	0.00	0.00	0.00	0.00	0.00	0.00	0.00
0.00	0.00	0.00	0.00	0.00	0.00	0.00	0.00	0.00	0.00
0.00	0.00	0.00	0.00	0.00	0.00	0.00	0.00	0.00	0.00
0.00	0.00	0.00	0.00	0.00	0.00	0.00	0.00	0.00	0.00
0.00	0.00	0.00	0.00	0.00	0.00	0.00	0.00	0.00	0.00
0.00	0.00	0.00	0.00	0.00	0.00	0.00	0.00	0.00	0.00
0.00	0.00	0.00	0.00	0.00	0.00	0.00	0.00	0.00	0.00
0.00	0.00	0.00	0.00	0.00	0.00	0.00	0.00	0.00	0.00
0.00	0.00	0.00	0.00	0.00	0.01	0.01	0.01	0.01	0.01
0.01	0.01	0.01	0.01	0.01	0.01	0.01	0.01	0.01	0.01
0.01	0.01	0.01	0.01	0.01	0.01	0.01	0.01	0.01	0.01
0.01	0.01	0.01	0.01	0.01	0.01	0.01	0.01	0.01	0.01
0.01	0.01	0.01	0.01	0.01	0.01	0.01	0.01	0.01	0.01
0.01	0.01	0.01	0.01	0.01	0.01	0.01	0.01	0.01	0.01
0.01	0.01	0.01	0.01	0.01	0.00	0.00	0.00	0.00	0.00
0.00	0.00	0.00	0.00	0.00	0.00	0.00	0.00	0.00	0.00
0.00	0.00	0.00	0.00	0.00	0.00	0.00	0.00	0.00	0.00
0.00	0.00	0.00	0.00	0.00	0.00	0.00	0.00	0.00	0.00
0.00	0.00	0.00	0.00	0.00	0.00	0.00	0.00	0.00	0.00
0.00	0.00	0.00	0.00	0.00	0.00	0.00	0.00	0.00	0.00
0.00	0.00	0.00	0.00	0.00	0.00	0.00	0.00	0.00	0.00
0.00	0.00	0.00	0.00	0.00	0.00	0.00	0.00	0.00	0.00
0.00	0.00	0.00	0.00	0.00	0.00	0.00	0.00	0.00	0.00
0.00	0.00	0.00	0.00	0.00	0.00	0.00	0.00	0.00	0.00
0.00	0.00	0.00	0.00	0.00	0.00	0.00	0.00	0.00	0.00

WARNING EXCESS AT PONDING LESS THAN ZERO FOR PERIOD. EXCESS SET TO ZERO
WARNING EXCESS AT PONDING LESS THAN ZERO FOR PERIOD. EXCESS SET TO ZERO
WARNING EXCESS AT PONDING LESS THAN ZERO FOR PERIOD. EXCESS SET TO ZERO

RUNOFF SUMMARY
FLOW IN CUBIC FEET PER SECOND
TIME IN HOURS, AREA IN SQUARE MILES

OPERATION	STATION	PEAK FLOW	TIME OF PEAK	AVERAGE FLOW FOR MAXIMUM PERIOD 6-HOUR	24-HOUR	72-HOUR	BASIN AREA	MAXIMUM STAGE	TIME OF MAX STAGE
HYDROGRAPH AT	204A	214.	4.20	20.	7.	7.	0.11		
ROUTED TO	522523	201.	4.37	20.	7.	7.	0.11		
HYDROGRAPH AT	204B	208.	4.27	23.	8.	8.	0.13		
2 COMBINED AT	C523I	386.	4.33	43.	14.	14.	0.23		
ROUTED TO	C523O	286.	4.52	43.	14.	14.	0.23		
DIVERSION TO	D523R	19.	4.52	1.	0.	0.	0.23		
HYDROGRAPH AT	D523L	266.	4.52	42.	14.	14.	0.23		
HYDROGRAPH AT	205A	210.	4.22	26.	9.	9.	0.12		
HYDROGRAPH AT	205B	486.	4.18	47.	16.	16.	0.21		
2 COMBINED AT	C528	690.	4.20	73.	25.	25.	0.33		
ROUTED TO	528530	680.	4.23	73.	25.	25.	0.33		
HYDROGRAPH AT	205C	107.	4.20	13.	4.	4.	0.06		
2 COMBINED AT	C530R	785.	4.22	86.	29.	29.	0.39		
HYDROGRAPH AT	205D	665.	4.23	71.	24.	24.	0.32		
HYDROGRAPH AT	205E	301.	4.33	48.	16.	16.	0.22		
2 COMBINED AT	C529	917.	4.25	119.	40.	40.	0.54		
2 COMBINED AT	C530	1472.	4.23	197.	66.	66.	0.93		
ROUTED TO	530531	1455.	4.28	197.	66.	66.	0.93		
HYDROGRAPH AT	205F	325.	4.22	36.	12.	12.	0.16		
2 COMBINED AT	C531	1639.	4.27	228.	77.	77.	1.09		
ROUTED TO	531532	1619.	4.33	228.	77.	77.	1.09		
HYDROGRAPH AT	205G	349.	4.23	40.	13.	13.	0.19		
2 COMBINED AT	C532L	1791.	4.32	262.	88.	88.	1.27		
HYDROGRAPH AT	205H	350.	4.35	56.	19.	19.	0.26		
2 COMBINED AT	C532	1970.	4.33	310.	104.	104.	1.53		
ROUTED TO	532533	1956.	4.35	310.	104.	104.	1.53		
HYDROGRAPH AT	205I	559.	4.30	70.	23.	23.	0.35		
2 COMBINED AT	C533	2232.	4.35	367.	123.	123.	1.89		
ROUTED TO	533534	2189.	4.52	367.	123.	123.	1.89		
HYDROGRAPH AT	205J	551.	4.28	65.	22.	22.	0.37		
2 COMBINED AT	C534R	2392.	4.50	416.	140.	140.	2.25		
HYDROGRAPH AT	205K	266.	4.38	45.	15.	15.	0.25		
2 COMBINED AT	C534	2507.	4.52	450.	151.	151.	2.50		
ROUTED TO	534535	2495.	4.55	450.	151.	151.	2.50		
HYDROGRAPH AT	205L	263.	4.15	20.	7.	7.	0.12		

2 COMBINED AT	C535	2520.	4.55	465.	156.	156.	2.62
ROUTED TO	535536	2496.	4.68	464.	156.	156.	2.62
HYDROGRAPH AT	205M	335.	4.10	31.	10.	10.	0.14
2 COMBINED AT	C536R	2516.	4.67	489.	165.	165.	2.76
HYDROGRAPH AT	205N	211.	4.25	29.	10.	10.	0.16
2 COMBINED AT	C536I	2586.	4.67	510.	172.	172.	2.91
ROUTED TO	C536O	326.	6.03	312.	172.	172.	2.91
ROUTED TO	536537	326.	6.08	312.	172.	172.	2.91
HYDROGRAPH AT	206A	408.	4.03	31.	10.	10.	0.13
2 COMBINED AT	C537	344.	4.28	317.	181.	181.	3.04
ROUTED TO	537538	339.	4.33	316.	181.	181.	3.04
HYDROGRAPH AT	206B	304.	4.03	25.	8.	8.	0.09
2 COMBINED AT	C538I	463.	4.08	329.	188.	188.	3.14
ROUTED TO	C538O	434.	4.28	327.	188.	188.	3.14
ROUTED TO	538540	433.	4.37	327.	188.	188.	3.14
HYDROGRAPH AT	206C	45.	4.10	4.	1.	1.	0.02
2 COMBINED AT	C540R	452.	4.35	329.	189.	189.	3.16
HYDROGRAPH AT	206D	195.	4.03	17.	6.	6.	0.06
ROUTED TO	539540	185.	4.10	17.	6.	6.	0.06
HYDROGRAPH AT	206E	45.	4.08	4.	1.	1.	0.02
2 COMBINED AT	C540L	230.	4.10	20.	7.	7.	0.09
2 COMBINED AT	C540	545.	4.30	341.	194.	194.	3.24
ROUTED TO	540541	541.	4.50	340.	194.	194.	3.24
HYDROGRAPH AT	206F	259.	4.17	27.	9.	9.	0.16
2 COMBINED AT	C541	651.	4.43	357.	200.	200.	3.40
ROUTED TO	541548	649.	4.45	357.	200.	200.	3.40
HYDROGRAPH AT	206G	112.	4.27	18.	6.	6.	0.09
HYDROGRAPH AT	BB523R	19.	4.52	1.	0.	0.	0.23
ROUTED TO	523548	16.	4.77	1.	0.	0.	0.23
3 COMBINED AT	C548L	713.	4.45	369.	203.	203.	3.72
HYDROGRAPH AT	206H	153.	4.07	14.	5.	5.	0.06
ROUTED TO	542543	149.	4.08	14.	5.	5.	0.06
HYDROGRAPH AT	206I	67.	4.03	5.	2.	2.	0.02
2 COMBINED AT	C543	210.	4.07	19.	6.	6.	0.08
DIVERSION TO	D543R	210.	4.07	19.	6.	6.	0.08
HYDROGRAPH AT	D543L	0.	0.02	0.	0.	0.	0.08
ROUTED TO	543544	0.	0.02	0.	0.	0.	0.08
HYDROGRAPH AT	206K	103.	4.13	11.	4.	4.	0.06
2 COMBINED AT	C544	102.	4.13	11.	4.	4.	0.14

ROUTED TO	544545	102.	4.17	11.	4.	4.	0.14
DIVERSION TO	D545R	51.	4.17	5.	2.	2.	0.14
HYDROGRAPH AT	D545L	51.	4.17	5.	2.	2.	0.14
ROUTED TO	545546	51.	4.18	5.	2.	2.	0.14
HYDROGRAPH AT	206L	123.	4.12	12.	4.	4.	0.06
2 COMBINED AT	C546	171.	4.15	18.	6.	6.	0.20
ROUTED TO	546547	170.	4.17	18.	6.	6.	0.20
HYDROGRAPH AT	BB543R	210.	4.07	19.	6.	6.	0.08
ROUTED TO	543547	202.	4.15	19.	6.	6.	0.08
HYDROGRAPH AT	BB545R	51.	4.17	5.	2.	2.	0.14
ROUTED TO	545547	50.	4.23	5.	2.	2.	0.14
HYDROGRAPH AT	206J	200.	4.02	16.	5.	5.	0.06
4 COMBINED AT	C547	525.	4.10	59.	20.	20.	0.26
ROUTED TO	547548	521.	4.17	59.	20.	20.	0.26
HYDROGRAPH AT	206M	198.	4.02	16.	5.	5.	0.06
2 COMBINED AT	C548R	635.	4.12	75.	25.	25.	0.32
2 COMBINED AT	C548	1038.	4.30	421.	224.	224.	4.04
ROUTED TO	548549	1028.	4.45	421.	224.	224.	4.04
HYDROGRAPH AT	206N	458.	4.05	41.	14.	14.	0.15
2 COMBINED AT	C549L	1128.	4.40	443.	235.	235.	4.19
HYDROGRAPH AT	C599O	1195.	5.05	981.	408.	408.	7.13
ROUTED TO	599608	1195.	5.17	981.	408.	408.	7.13
HYDROGRAPH AT	211K	302.	4.05	22.	7.	7.	0.10
2 COMBINED AT	C608L	1199.	5.10	993.	414.	414.	7.23
HYDROGRAPH AT	211G	18.	4.05	3.	1.	1.	0.01
ROUTED TO	604606	17.	4.23	3.	1.	1.	0.01
HYDROGRAPH AT	211I	78.	4.17	10.	3.	3.	0.04
2 COMBINED AT	C606R	94.	4.18	13.	4.	4.	0.05
HYDROGRAPH AT	211H	181.	4.13	14.	5.	5.	0.07
ROUTED TO	C605O	115.	4.27	14.	5.	5.	0.07
2 COMBINED AT	C606	206.	4.20	26.	9.	9.	0.12
ROUTED TO	606607	204.	4.23	26.	9.	9.	0.12
HYDROGRAPH AT	211J	37.	4.08	4.	1.	1.	0.01
2 COMBINED AT	C607	230.	4.22	30.	10.	10.	0.14
ROUTED TO	607608	228.	4.25	30.	10.	10.	0.14
2 COMBINED AT	C608	1269.	4.55	1015.	422.	422.	7.37
ROUTED TO	608613	1268.	4.57	1015.	422.	422.	7.37
HYDROGRAPH AT	211M	203.	4.13	19.	6.	6.	0.08
ROUTED TO	610611	200.	4.17	19.	6.	6.	0.08

HYDROGRAPH AT	211N	51.	4.07	4.	1.	1.	0.02
2 COMBINED AT	C611R	241.	4.15	23.	8.	8.	0.10
HYDROGRAPH AT	211O	107.	4.07	10.	3.	3.	0.04
ROUTED TO	C609O	61.	4.25	10.	3.	3.	0.04
ROUTED TO	609611	61.	4.28	10.	3.	3.	0.04
2 COMBINED AT	C611I	299.	4.17	33.	11.	11.	0.14
ROUTED TO	C611O	151.	4.45	33.	11.	11.	0.14
DIVERSION TO	D611R	151.	4.45	33.	11.	11.	0.14
HYDROGRAPH AT	D611L	0.	0.02	0.	0.	0.	0.14
ROUTED TO	611612	0.	0.02	0.	0.	0.	0.14
HYDROGRAPH AT	211P	119.	4.00	10.	3.	3.	0.03
2 COMBINED AT	C612	119.	4.00	10.	3.	3.	0.17
2 COMBINED AT	C613	1282.	4.53	1020.	425.	425.	7.54
ROUTED TO	613621	1282.	4.55	1020.	425.	425.	7.54
HYDROGRAPH AT	211L	301.	4.03	23.	8.	8.	0.10
2 COMBINED AT	C621L	1326.	4.32	1033.	431.	431.	7.64
HYDROGRAPH AT	211Q	56.	4.05	4.	1.	1.	0.02
ROUTED TO	616617	55.	4.12	4.	1.	1.	0.02
HYDROGRAPH AT	211R	200.	4.10	19.	6.	6.	0.08
2 COMBINED AT	C617L	255.	4.10	23.	8.	8.	0.10
HYDROGRAPH AT	211U	56.	4.07	8.	3.	3.	0.03
DIVERSION TO	D614R	39.	4.07	5.	2.	2.	0.03
HYDROGRAPH AT	D614L	16.	4.07	3.	1.	1.	0.03
2 COMBINED AT	C617	270.	4.10	26.	9.	9.	0.13
ROUTED TO	617618	263.	4.18	26.	9.	9.	0.13
HYDROGRAPH AT	211S	125.	4.08	12.	4.	4.	0.05
2 COMBINED AT	C618I	370.	4.15	37.	12.	12.	0.18
ROUTED TO	C618O	367.	4.17	31.	12.	12.	0.18
HYDROGRAPH AT	BB614R	39.	4.07	5.	2.	2.	0.03
ROUTED TO	614615	39.	4.12	5.	2.	2.	0.03
HYDROGRAPH AT	211V	16.	4.02	2.	1.	1.	0.00
2 COMBINED AT	C615	51.	4.08	7.	2.	2.	0.03
DIVERSION TO	D615R	18.	4.08	2.	1.	1.	0.03
HYDROGRAPH AT	D615L	33.	4.08	5.	2.	2.	0.03
ROUTED TO	615618	33.	4.08	5.	2.	2.	0.03
2 COMBINED AT	C618	398.	4.17	36.	14.	14.	0.19
ROUTED TO	618619	389.	4.25	36.	14.	14.	0.19
HYDROGRAPH AT	211T	162.	4.08	15.	5.	5.	0.07
2 COMBINED AT	C619L	503.	4.22	50.	19.	19.	0.26

HYDROGRAPH AT	BB615R	18.	4.08	2.	1.	1.	0.03
ROUTED TO	615619	18.	4.17	2.	1.	1.	0.03
2 COMBINED AT	C619I	520.	4.22	52.	20.	20.	0.25
ROUTED TO	C619O	363.	4.40	52.	20.	20.	0.25
DIVERSION TO	D619L	171.	4.40	4.	1.	1.	0.25
HYDROGRAPH AT	D619R	192.	4.40	48.	18.	18.	0.25
ROUTED TO	619620	192.	4.42	48.	18.	18.	0.25
HYDROGRAPH AT	BB619L	171.	4.40	4.	1.	1.	0.25
ROUTED TO	619620	136.	4.45	4.	1.	1.	0.25
HYDROGRAPH AT	211W	105.	4.02	9.	3.	3.	0.03
3 COMBINED AT	C620R	335.	4.43	61.	23.	23.	0.28
HYDROGRAPH AT	BB611R	151.	4.45	33.	11.	11.	0.14
ROUTED TO	611620	151.	4.47	33.	11.	11.	0.14
2 COMBINED AT	C620	485.	4.43	94.	34.	34.	0.42
ROUTED TO	620621	482.	4.47	94.	33.	33.	0.42
2 COMBINED AT	C621	1633.	4.33	1103.	459.	459.	7.93
ROUTED TO	621622	1630.	4.48	1102.	459.	459.	7.93
HYDROGRAPH AT	211X	503.	4.12	55.	18.	18.	0.21
2 COMBINED AT	C622R	1814.	4.40	1136.	474.	474.	8.14
HYDROGRAPH AT	211A	283.	4.15	30.	10.	10.	0.14
ROUTED TO	C600O	266.	4.22	30.	10.	10.	0.14
ROUTED TO	600601	263.	4.28	30.	10.	10.	0.14
HYDROGRAPH AT	211B	249.	4.12	23.	8.	8.	0.11
2 COMBINED AT	C601	462.	4.18	52.	17.	17.	0.25
ROUTED TO	601602	458.	4.23	52.	17.	17.	0.25
HYDROGRAPH AT	211C	134.	4.03	12.	4.	4.	0.04
2 COMBINED AT	C602L	515.	4.20	64.	21.	21.	0.30
HYDROGRAPH AT	211D	159.	4.07	15.	5.	5.	0.07
2 COMBINED AT	C602	635.	4.15	78.	26.	26.	0.37
ROUTED TO	602603	632.	4.22	78.	26.	26.	0.37
HYDROGRAPH AT	211E	507.	4.03	41.	14.	14.	0.16
2 COMBINED AT	C603	936.	4.07	118.	40.	40.	0.52
ROUTED TO	603622	918.	4.15	118.	40.	40.	0.52
HYDROGRAPH AT	211F	332.	4.05	32.	11.	11.	0.11
2 COMBINED AT	C622L	1121.	4.13	149.	50.	50.	0.63
2 COMBINED AT	C622	2389.	4.35	1241.	516.	516.	8.78
ROUTED TO	622549	2379.	4.45	1240.	515.	515.	8.78
HYDROGRAPH AT	211Y	216.	4.10	21.	7.	7.	0.09
2 COMBINED AT	C549R	2449.	4.43	1253.	521.	521.	8.87

2 COMBINED AT	C549	3311.	4.43	1652.	725.	725.	13.06
ROUTED TO	549626	3296.	4.53	1651.	724.	724.	13.06
HYDROGRAPH AT	211Z	249.	4.03	20.	7.	7.	0.08
2 COMBINED AT	C626C	3326.	4.53	1659.	729.	729.	13.14
HYDROGRAPH AT	211AA	78.	4.08	9.	3.	3.	0.03
ROUTED TO	625626	76.	4.13	9.	3.	3.	0.03
HYDROGRAPH AT	211AB	135.	4.02	10.	3.	3.	0.04
ROUTED TO	623624	133.	4.03	10.	3.	3.	0.04
HYDROGRAPH AT	211AC	90.	4.02	8.	3.	3.	0.03
2 COMBINED AT	C624	223.	4.03	18.	6.	6.	0.07
ROUTED TO	624626	215.	4.07	18.	6.	6.	0.07
HYDROGRAPH AT	211AD	132.	4.03	12.	4.	4.	0.04
2 COMBINED AT	C626R	342.	4.05	30.	10.	10.	0.11
3 COMBINED AT	C626	3412.	4.52	1679.	740.	740.	13.28
ROUTED TO	626627	3410.	4.53	1679.	740.	740.	13.28
HYDROGRAPH AT	211AE	114.	4.02	9.	3.	3.	0.03
2 COMBINED AT	C627	3425.	4.53	1683.	743.	743.	13.32

*** NORMAL END OF HEC-1 ***

100-Year, Future Condition (6-Hour)

```
****************************************
*                                      *
*   FLOOD HYDROGRAPH PACKAGE  (HEC-1)  *
*              MAY   1991              *
*            VERSION 4.0.1E            *
*     Lahey F77L-EM/32 version 5.01    *
*        Dodson & Associates, Inc.     *
*        DATE  09/28/99  TIME  13:52:18 *
****************************************
```

```
****************************************
*                                      *
*    U.S. ARMY CORPS OF ENGINEERS      *
*    HYDROLOGIC ENGINEERING CENTER     *
*          609 SECOND STREET           *
*       DAVIS, CALIFORNIA 95616        *
*           (916) 551-1748             *
*                                      *
****************************************
```

```
X     X  XXXXXXX   XXXXX          X
X     X  X        X     X        XX
X     X  X        X               X
XXXXXXX  XXXX     X        XXXXX  X
X     X  X        X               X
X     X  X        X     X         X
X     X  XXXXXXX   XXXXX         XXX
```

THIS PROGRAM REPLACES ALL PREVIOUS VERSIONS OF HEC-1 KNOWN AS HEC1 (JAN 73), HEC1GS, HEC1DB, AND HEC1KW.

THE DEFINITIONS OF VARIABLES -RTIMP- AND -RTIOR- HAVE CHANGED FROM THOSE USED WITH THE 1973-STYLE INPUT STRUCTURE.
THE DEFINITION OF -AMSKK- ON RM-CARD WAS CHANGED WITH REVISIONS DATED 28 SEP 81. THIS IS THE FORTRAN77 VERSION
NEW OPTIONS: DAMBREAK OUTFLOW SUBMERGENCE , SINGLE EVENT DAMAGE CALCULATION, DSS:WRITE STAGE FREQUENCY,
DSS:READ TIME SERIES AT DESIRED CALCULATION INTERVAL LOSS RATE:GREEN AND AMPT INFILTRATION
KINEMATIC WAVE: NEW FINITE DIFFERENCE ALGORITHM

```
LINE          ID.......1.......2.......3.......4.......5.......6.......7.......8.......9......10

  1           ID   Golden Eagle Park Dam Modifications
  2           ID        by Stantec: Proj. No. 28900095                    File: ALTFf-4.IH1
  3           ID        for FCDMC:  FCD                                   Date:07-08-99     mcg
  4           ID                                                        Revised:
  5           ID
  6           ID   Alternative F:
  7           ID        Addition of an auxillary spillway.  This spillway will function such
  8           ID        that the existing emergency spillway does not operate for the 100-year
  9           ID        storm.  The stage-storage relation is adjusted to reflect revised
 10           ID        grading in the park.
 11           ID
 12           ID        The purpose of this model is to estimate peak discharges in Ashbrook
 13           ID        Wash for evaluation of the Dam modifications impact on the floodplain.
 14           ID
 15           ID   100-year, 6-hour future condition watershed model for Ashbrook Wash upstream
 16           ID   of the Fort McDowell Indian Reservation boundary.
 17           ID        This model is a portion of the original Fountain Hills North FDS
 18           ID        watershed model conducted by GVSCE, 1994.  The title cards from that
 19           ID        model are included for reference.
 20           ID
 21           ID   Fountain Hills North Floodplain Delineation Study
 22           ID        FCD 92-04       by GVSCE                          File:  FU100-6.IH1
 23           ID    Future Condition Model                                Date:    07-19-94   dtp
 24           ID     100-Year 6-Hour Storm, Clark Unit Hydrograph      Revised:    10-31-94   dtp
              *
 25           IT       1                    1080
 26           IO       5
 27           IN      15
              *
 28           JD    3.30    0.01
 29           PC   0.000   0.008   0.016   0.025   0.033   0.041   0.050   0.058   0.066   0.074
 30           PC   0.087   0.099   0.118   0.138   0.216   0.377   0.834   0.911   0.931   0.950
 31           PC   0.962   0.972   0.983   0.991   1.000
 32           JD    3.28    0.50
 33           JD    3.23    2.80
 34           PC   0.000   0.009   0.016   0.025   0.034   0.042   0.051   0.059   0.067   0.076
 35           PC   0.087   0.100   0.120   0.163   0.252   0.451   0.694   0.837   0.900   0.938
 36           PC   0.950   0.963   0.975   0.988   1.000
 37           JD    3.04    16.0
 38           PC   0.000   0.015   0.020   0.030   0.048   0.063   0.076   0.090   0.105   0.119
 39           PC   0.135   0.152   0.175   0.222   0.304   0.472   0.670   0.796   0.868   0.912
 40           PC   0.946   0.960   0.973   0.987   1.000
 41           JD    2.67    90.0
 42           PC   0.000   0.021   0.035   0.051   0.071   0.087   0.105   0.125   0.143   0.160
 43           PC   0.179   0.201   0.232   0.281   0.364   0.500   0.658   0.773   0.841   0.888
 44           PC   0.927   0.945   0.964   0.982   1.000
              *

 45           KK    204A
 46           KM   Sub-Basin   204A
 47           KM
 48           KM      The Clark Unit Hydrograph is used for this basin.
 49           KM          The Urban time-area relation is used for this basin.
 50           KM
 51           KM      Time of Concentration for this sub-basin is based on the following:
```

```
LINE          ID.......1.......2.......3.......4.......5.......6.......7.......8.......9......10

  52          KM          6-Hour Rainfall, Pattern No.  1.00
  53          KM          An rainfall areal reduction factor of 0.999
  54          KM
  55          KM       EXCESS RAINFALL VALUES EXCEEDED IN 5-MINUTE INTERVALS
  56          KM     5  10  15  20  25  30  35  40  45  50  55  60  65  70  75  80  85  90
  57          KM   .47 .47 .47 .16 .13 .13 .06 .06 .05 .04 .04 .03 .01 .01 .01 .01 .01 .01
  58          KM
  59          KM          L=   0.687 miles, S=  175 feet/mile, Kb= .03
  60          KM
  61          BA   0.108
  62          LG    0.09    0.25    5.80    0.18   25.00
  63          UC   0.158   0.126
  64          UA       0       5      16      30      65      77      84      90      94      97
  65          UA     100
              *

  66          KK  522523
  67          KM      Normal depth channel route from C522 to C523
  68          KM      Source:  200 Scale Mapping
  69          RS       9    FLOW      -1
  70          RC   0.060   0.050   0.060  3275.0  0.0197
  71          RX  1000.0  1020.0  1035.0  1065.0  1080.0  1120.0  1160.0  1185.0
  72          RY  1678.0  1676.0  1674.0  1672.0  1672.0  1674.0  1676.0  1678.0
              *

  73          KK    204B
  74          KM   Sub-Basin   204B
  75          KM
  76          KM      The Clark Unit Hydrograph is used for this basin.
  77          KM          The Urban time-area relation is used for this basin.
  78          KM
  79          KM      Time of Concentration for this sub-basin is based on the following:
  80          KM          6-Hour Rainfall, Pattern No.  1.00
  81          KM          An rainfall areal reduction factor of 0.998
  82          KM
  83          KM       EXCESS RAINFALL VALUES EXCEEDED IN 5-MINUTE INTERVALS
  84          KM     5  10  15  20  25  30  35  40  45  50  55  60  65  70  75  80  85  90
  85          KM   .47 .47 .47 .16 .13 .13 .06 .06 .05 .04 .04 .03 .01 .01 .01 .01 .01 .01
  86          KM
  87          KM          L=   0.775 miles, S=  128 feet/mile, Kb= .03
  88          KM
  89          BA   0.126
  90          LG    0.09    0.25    5.80    0.18   26.66
  91          UC   0.188   0.153
  92          UA       0       5      16      30      65      77      84      90      94      97
  93          UA     100
              *

  94          KK   C523I
  95          KM      Hydrograph combine 522523 + 204B at C523I
  96          HC       2
              *
```

```
LINE          ID.......1.......2.......3.......4.......5.......6.......7.......8.......9......10

 97           KK   C523O
 98           KM      Reservoir route at C523.
 99           RS       1    ELEV  1650.3
100           SV    0.00    0.01    0.12    0.71    2.23    2.50    2.80    3.10    3.20    3.40
101           SV    3.70    4.00    4.30    4.60    4.90    5.20    5.50
102           SE  1650.3  1652.0  1654.0  1656.0  1658.0  1658.2  1658.4  1658.6  1658.7  1658.8
103           SE  1659.0  1659.2  1659.4  1659.6  1659.8  1660.0  1660.2
104           SQ       0      22      78     144     209     214     220     224     226     232
105           SQ     239     249     288     384     529     726     960
              *

106           KK   D523L
107           KM      Hydrograph diversion at C523.  Main flow continues in the left branch.
108           KM      Diverted flow is in the right branch.
109           DT   D523R
110           DI       0      22      78     144     209     214     220     224     226     232
111           DI     239     249     288     384     529     726     960
112           DQ       0       0       0       0       0       0       0       0       0       3
113           DQ       5      10      20      37      61      96     139
              *

114           KK    205A
115           KM   Sub-Basin   205A
116           KM
117           KM      The Clark Unit Hydrograph is used for this basin.
118           KM          The Natural time-area relation is used for this basin.
119           KM
120           KM      Time of Concentration for this sub-basin is based on the following:
121           KM          6-Hour Rainfall, Pattern No.  1.00
122           KM          An rainfall areal reduction factor of 0.998
123           KM
124           KM       EXCESS RAINFALL VALUES EXCEEDED IN 5-MINUTE INTERVALS
125           KM     5  10  15  20  25  30  35  40  45  50  55  60  65  70  75  80  85  90
126           KM   .45 .44 .44 .13 .09 .08 .04 .04 .03 .03 .03 .03 .01 .01 .01 .01 .01 .01
127           KM
128           KM          L=   0.870 miles, S=  378 feet/mile, Kb=  .14
129           KM
130           BA   0.118
131           LG    0.25    0.35    4.35    0.40   35.00
132           UC   0.350   0.350
133           UA       0       3       5       8      12      20      43      75      90      96
134           UA     100
              *

135           KK    205B
136           KM   Sub-Basin   205B
137           KM
138           KM      The Clark Unit Hydrograph is used for this basin.
139           KM          The Natural time-area relation is used for this basin.
140           KM
141           KM      Time of Concentration for this sub-basin is based on the following:
142           KM          6-Hour Rainfall, Pattern No.  1.00
143           KM          An rainfall areal reduction factor of 0.997
144           KM
```

```
LINE          ID.......1.......2.......3.......4.......5.......6.......7.......8.......9......10

 145          KM       EXCESS RAINFALL VALUES EXCEEDED IN 5-MINUTE INTERVALS
 146          KM     5  10  15  20  25  30  35  40  45  50  55  60  65  70  75  80  85  90
 147          KM   .45 .44 .44 .13 .09 .08 .04 .04 .03 .03 .03 .03 .01 .01 .01 .01 .01 .01
 148          KM
 149          KM          L=   0.759 miles, S=  129 feet/mile, Kb= .14
 150          KM
 151          BA   0.211
 152          LG    0.25    0.35    4.35    0.40   35.00
 153          UC   0.508   0.340
 154          UA       0       3       5       8      12      20      43      75      90      96
 155          UA     100
              *

 156          KK    C528
 157          KM      Hydrograph combine 205A + 205B at C528
 158          HC       2
              *

 159          KK  528530
 160          KM      Normal depth channel route from C528 to C530
 161          KM      Source:  Hydrology Field Reconnaissance
 162          RS       3    FLOW      -1
 163          RC   0.060   0.043   0.060  2594.0  0.0709
 164          RX  1000.0  1018.0  1031.0  1042.0  1052.0  1066.0  1093.0  1107.0
 165          RY    96.3    92.2    89.9    85.9    85.7    91.5    91.2    96.3
              *

 166          KK    205C
 167          KM   Sub-Basin   205C
 168          KM
 169          KM      The Clark Unit Hydrograph is used for this basin.
 170          KM          The Natural time-area relation is used for this basin.
 171          KM
 172          KM      Time of Concentration for this sub-basin is based on the following:
 173          KM          6-Hour Rainfall, Pattern No.  1.00
 174          KM          An rainfall areal reduction factor of 0.999
 175          KM
 176          KM       EXCESS RAINFALL VALUES EXCEEDED IN 5-MINUTE INTERVALS
 177          KM     5  10  15  20  25  30  35  40  45  50  55  60  65  70  75  80  85  90
 178          KM   .45 .44 .44 .13 .09 .08 .04 .04 .03 .03 .03 .03 .01 .01 .01 .01 .01 .01
 179          KM
 180          KM          L=   0.618 miles, S=  331 feet/mile, Kb= .15
 181          KM
 182          BA   0.059
 183          LG    0.25    0.35    4.35    0.41   35.00
 184          UC   0.308   0.343
 185          UA       0       3       5       8      12      20      43      75      90      96
 186          UA     100
              *
```

```
LINE          ID.......1.......2.......3.......4.......5.......6.......7.......8.......9......10

 187          KK   C530R
 188          KM      Hydrograph combine 528530 + 205C at C530 right branch
 189          HC       2
              *

 190          KK    205D
 191          KM   Sub-Basin   205D
 192          KM
 193          KM      The Clark Unit Hydrograph is used for this basin.
 194          KM          The Natural time-area relation is used for this basin.
 195          KM
 196          KM      Time of Concentration for this sub-basin is based on the following:
 197          KM          6-Hour Rainfall, Pattern No.  1.00
 198          KM          An rainfall areal reduction factor of 0.996
 199          KM
 200          KM       EXCESS RAINFALL VALUES EXCEEDED IN 5-MINUTE INTERVALS
 201          KM     5  10  15  20  25  30  35  40  45  50  55  60  65  70  75  80  85  90
 202          KM   .45 .44 .44 .13 .09 .08 .04 .04 .03 .03 .03 .03 .01 .01 .01 .01 .01 .01
 203          KM
 204          KM          L=   1.020 miles, S=  361 feet/mile, Kb= .13
 205          KM
 206          BA   0.319
 207          LG    0.25    0.35    4.35    0.40   35.00
 208          UC   0.379   0.246
 209          UA       0       3       5       8      12      20      43      75      90      96
 210          UA     100
              *

 211          KK    205E
 212          KM   Sub-Basin   205E
 213          KM
 214          KM      The Clark Unit Hydrograph is used for this basin.
 215          KM          The Natural time-area relation is used for this basin.
 216          KM
 217          KM      Time of Concentration for this sub-basin is based on the following:
 218          KM          6-Hour Rainfall, Pattern No.  1.00
 219          KM          An rainfall areal reduction factor of 0.997
 220          KM
 221          KM       EXCESS RAINFALL VALUES EXCEEDED IN 5-MINUTE INTERVALS
 222          KM     5  10  15  20  25  30  35  40  45  50  55  60  65  70  75  80  85  90
 223          KM   .45 .44 .44 .13 .09 .08 .04 .04 .03 .03 .03 .03 .01 .01 .01 .01 .01 .01
 224          KM
 225          KM          L=   1.357 miles, S=  358 feet/mile, Kb= .14
 226          KM
 227          BA   0.218
 228          LG    0.25    0.35    4.35    0.40   35.00
 229          UC   0.488   0.508
 230          UA       0       3       5       8      12      20      43      75      90      96
 231          UA     100
              *
```

```
LINE          ID.......1.......2.......3.......4.......5.......6.......7.......8.......9......10

 232          KK    C529
 233          KM      Hydrograph combine 205D + 205E at C529
 234          HC       2
              *
              * *
              * * NOTE:  529530 too short to route
              * *
              *

 235          KK    C530
 236          KM      Hydrograph combine C529 + C530R at C530
 237          HC       2
              *

 238          KK  530531
 239          KM      Normal depth channel route from C530 to C531
 240          KM      Source:  Hydrology Field Reconnaissance
 241          RS       3    FLOW      -1
 242          RC   0.060   0.059   0.060  2426.0  0.0404
 243          RX  1000.0  1035.0  1050.0  1060.0  1075.0  1081.0  1088.0  1094.0
 244          RY    95.9    86.5    86.2    83.1    84.0    90.2    95.6    99.3
              *

 245          KK    205F
 246          KM   Sub-Basin   205F
 247          KM
 248          KM      The Clark Unit Hydrograph is used for this basin.
 249          KM          The Natural time-area relation is used for this basin.
 250          KM
 251          KM      Time of Concentration for this sub-basin is based on the following:
 252          KM          6-Hour Rainfall, Pattern No.  1.00
 253          KM          An rainfall areal reduction factor of 0.998
 254          KM
 255          KM       EXCESS RAINFALL VALUES EXCEEDED IN 5-MINUTE INTERVALS
 256          KM     5  10  15  20  25  30  35  40  45  50  55  60  65  70  75  80  85  90
 257          KM   .45 .44 .44 .13 .09 .08 .04 .04 .03 .03 .03 .03 .01 .01 .01 .01 .01 .01
 258          KM
 259          KM          L=   0.786 miles, S=  326 feet/mile, Kb= .14
 260          KM
 261          BA   0.161
 262          LG    0.25    0.35    4.35    0.41   35.00
 263          UC   0.350   0.269
 264          UA       0       3       5       8      12      20      43      75      90      96
 265          UA     100
              *

 266          KK    C531
 267          KM      Hydrograph combine 530531 + 205F at C531
 268          HC       2
              *
```

```
LINE          ID.......1.......2.......3.......4.......5.......6.......7.......8.......9......10

 269          KK  531532
 270          KM      Normal depth channel route from C531 to C532
 271          KM      Source:  Hydrology Field Reconnaissance
 272          RS       4    FLOW      -1
 273          RC   0.060   0.065   0.060  3391.0  0.0463
 274          RX  1000.0  1012.0  1022.0  1032.0  1050.0  1056.0  1068.0  1092.0
 275          RY    98.8    93.8    89.1    86.4    86.5    89.1    91.0    97.6
              *

 276          KK    205G
 277          KM   Sub-Basin   205G
 278          KM
 279          KM      The Clark Unit Hydrograph is used for this basin.
 280          KM          The Natural time-area relation is used for this basin.
 281          KM
 282          KM      Time of Concentration for this sub-basin is based on the following:
 283          KM          6-Hour Rainfall, Pattern No.  1.00
 284          KM          An rainfall areal reduction factor of 0.998
 285          KM
 286          KM       EXCESS RAINFALL VALUES EXCEEDED IN 5-MINUTE INTERVALS
 287          KM     5  10  15  20  25  30  35  40  45  50  55  60  65  70  75  80  85  90
 288          KM   .45 .44 .44 .13 .09 .07 .03 .03 .03 .03 .03 .03 .01 .01 .01 .01 .01 .01
 289          KM
 290          KM          L=   0.924 miles, S=  338 feet/mile, Kb= .13
 291          KM
 292          BA   0.185
 293          LG    0.24    0.35    4.50    0.40   31.23
 294          UC   0.367   0.298
 295          UA       0       3       5       8      12      20      43      75      90      96
 296          UA     100
              *

 297          KK   C532L
 298          KM      Hydrograph combine 531532 + 205G at C532 left branch
 299          HC       2
              *

 300          KK    205H
 301          KM   Sub-Basin   205H
 302          KM
 303          KM      The Clark Unit Hydrograph is used for this basin.
 304          KM          The Natural time-area relation is used for this basin.
 305          KM
 306          KM      Time of Concentration for this sub-basin is based on the following:
 307          KM          6-Hour Rainfall, Pattern No.  1.00
 308          KM          An rainfall areal reduction factor of 0.997
 309          KM
 310          KM       EXCESS RAINFALL VALUES EXCEEDED IN 5-MINUTE INTERVALS
 311          KM     5  10  15  20  25  30  35  40  45  50  55  60  65  70  75  80  85  90
 312          KM   .45 .44 .44 .13 .09 .08 .04 .03 .03 .03 .03 .03 .01 .01 .01 .01 .01 .01
 313          KM
 314          KM          L=   1.464 miles, S=  325 feet/mile, Kb= .13
 315          KM
 316          BA   0.261
```

```
LINE          ID.......1.......2.......3.......4.......5.......6.......7.......8.......9......10

 317          LG    0.24    0.35    4.50    0.39   31.55
 318          UC   0.513   0.514
 319          UA       0       3       5       8      12      20      43      75      90      96
 320          UA     100
              *

 321          KK    C532
 322          KM      Hydrograph combine C532L + 205H at C532
 323          HC       2
              *

 324          KK  532533
 325          KM      Normal depth channel route from C532 to C533
 326          KM      Source:  Hydrology Field Reconnaissance
 327          RS       2    FLOW      -1
 328          RC   0.060   0.045   0.060  1555.0  0.0283
 329          RX  1000.0  1020.0  1030.0  1048.0  1065.0  1077.0  1092.0  1119.0
 330          RY    98.0    89.4    88.1    85.6    85.9    92.2    93.8    97.0
              *

 331          KK    205I
 332          KM   Sub-Basin   205I
 333          KM
 334          KM      The Clark Unit Hydrograph is used for this basin.
 335          KM          The Natural time-area relation is used for this basin.
 336          KM
 337          KM      Time of Concentration for this sub-basin is based on the following:
 338          KM          6-Hour Rainfall, Pattern No.  1.00
 339          KM          An rainfall areal reduction factor of 0.995
 340          KM
 341          KM       EXCESS RAINFALL VALUES EXCEEDED IN 5-MINUTE INTERVALS
 342          KM     5  10  15  20  25  30  35  40  45  50  55  60  65  70  75  80  85  90
 343          KM   .44 .44 .43 .13 .09 .08 .03 .03 .03 .01 .01 .01 .00 .00 .00 .00 .00 .00
 344          KM
 345          KM          L=   1.487 miles, S=  326 feet/mile, Kb= .11
 346          KM
 347          BA   0.354
 348          LG    0.20    0.37    5.20    0.28   15.18
 349          UC   0.458   0.386
 350          UA       0       3       5       8      12      20      43      75      90      96
 351          UA     100
              *

 352          KK    C533
 353          KM      Hydrograph combine 532533 + 205I at C533
 354          HC       2
              *

 355          KK  533534
 356          KM      Normal depth channel route from C533 to C534
 357          KM      Source:  Hydrology Field Reconnaissance
 358          RS      10    FLOW      -1
 359          RC   0.060   0.046   0.060  7145.0  0.0241
 360          RX  1000.0  1010.0  1060.0  1073.0  1160.0  1181.0  1223.0  1237.0
 361          RY    97.8    93.7    94.7    90.8    89.9    92.4    94.0    96.8
              *
```

```
LINE          ID.......1.......2.......3.......4.......5.......6.......7.......8.......9......10

 362          KK    205J
 363          KM   Sub-Basin   205J
 364          KM
 365          KM      The Clark Unit Hydrograph is used for this basin.
 366          KM          The Natural time-area relation is used for this basin.
 367          KM
 368          KM      Time of Concentration for this sub-basin is based on the following:
 369          KM          6-Hour Rainfall, Pattern No.  1.00
 370          KM          An rainfall areal reduction factor of 0.995
 371          KM
 372          KM       EXCESS RAINFALL VALUES EXCEEDED IN 5-MINUTE INTERVALS
 373          KM     5  10  15  20  25  30  35  40  45  50  55  60  65  70  75  80  85  90
 374          KM   .44 .43 .42 .12 .08 .06 .03 .02 .02 .00 .00 .00 .00 .00 .00 .00 .00 .00
 375          KM
 376          KM          L=   1.633 miles, S=  243 feet/mile, Kb= .08
 377          KM
 378          BA   0.369
 379          LG    0.21    0.35    4.90    0.30    3.48
 380          UC   0.450   0.398
 381          UA       0       3       5       8      12      20      43      75      90      96
 382          UA     100
              *

 383          KK   C534R
 384          KM      Hydrograph combine 533534 + 205J at C534 right branch
 385          HC       2
              *

 386          KK    205K
 387          KM   Sub-Basin   205K
 388          KM
 389          KM      The Clark Unit Hydrograph is used for this basin.
 390          KM          The Natural time-area relation is used for this basin.
 391          KM
 392          KM      Time of Concentration for this sub-basin is based on the following:
 393          KM          6-Hour Rainfall, Pattern No.  1.00
 394          KM          An rainfall areal reduction factor of 0.997
 395          KM
 396          KM       EXCESS RAINFALL VALUES EXCEEDED IN 5-MINUTE INTERVALS
 397          KM     5  10  15  20  25  30  35  40  45  50  55  60  65  70  75  80  85  90
 398          KM   .44 .44 .43 .13 .09 .08 .03 .03 .03 .00 .00 .00 .00 .00 .00 .00 .00 .00
 399          KM
 400          KM          L=   1.772 miles, S=  249 feet/mile, Kb= .10
 401          KM
 402          BA   0.245
 403          LG    0.16    0.38    5.60    0.22    1.54
 404          UC   0.546   0.665
 405          UA       0       3       5       8      12      20      43      75      90      96
 406          UA     100
              *
```

```
LINE          ID.......1.......2.......3.......4.......5.......6.......7.......8.......9......10

 407          KK    C534
 408          KM      Hydrograph combine C534R + 205K at C534
 409          HC       2
              *

 410          KK  534535
 411          KM      Normal depth channel route from C534 to C535
 412          KM      Source:  Hydrology Field Reconnaissance
 413          RS       3    FLOW      -1
 414          RC   0.065   0.046   0.065  2037.0  0.0221
 415          RX  1000.0  1010.0  1016.0  1075.0  1150.0  1162.0  1174.0  1182.0
 416          RY    97.1    93.4    91.6    89.6    86.9    90.8    92.2    92.3
              *

 417          KK    205L
 418          KM   Sub-Basin   205L
 419          KM
 420          KM      The Clark Unit Hydrograph is used for this basin.
 421          KM          The Natural time-area relation is used for this basin.
 422          KM
 423          KM      Time of Concentration for this sub-basin is based on the following:
 424          KM          6-Hour Rainfall, Pattern No.  1.00
 425          KM          An rainfall areal reduction factor of 0.998
 426          KM
 427          KM       EXCESS RAINFALL VALUES EXCEEDED IN 5-MINUTE INTERVALS
 428          KM     5  10  15  20  25  30  35  40  45  50  55  60  65  70  75  80  85  90
 429          KM   .44 .43 .42 .12 .08 .06 .02 .02 .02 .00 .00 .00 .00 .00 .00 .00 .00 .00
 430          KM
 431          KM          L=   0.701 miles, S=  284 feet/mile, Kb= .09
 432          KM
 433          BA   0.118
 434          LG    0.19    0.36    5.00    0.29    0.00
 435          UC   0.254   0.206
 436          UA       0       3       5       8      12      20      43      75      90      96
 437          UA     100
              *

 438          KK    C535
 439          KM      Hydrograph combine 534535 + 205L at C535
 440          HC       2
              *

 441          KK  535536
 442          KM      Normal depth channel route from C535 to C536
 443          KM      Source:  HEC-2 Cross Section: HE 3.275
 444          RS       8    FLOW      -1
 445          RC   0.075   0.050   0.075  2975.0  0.0236
 446          RX  9852.8  9871.5  9957.7 10000.0 10015.6 10052.4 10142.4 10183.6
 447          RY  1911.6  1904.3  1906.9  1900.8  1900.8  1905.4  1905.2  1912.6
              *
```

```
LINE          ID.......1.......2.......3.......4.......5.......6.......7.......8.......9......10

 448          KK   205M
 449          KM  Sub-Basin   205M
 450          KM
 451          KM     The Clark Unit Hydrograph is used for this basin.
 452          KM         The Urban time-area relation is used for this basin.
 453          KM
 454          KM     Time of Concentration for this sub-basin is based on the following:
 455          KM         6-Hour Rainfall, Pattern No.  1.00
 456          KM         An rainfall areal reduction factor of 0.998
 457          KM
 458          KM      EXCESS RAINFALL VALUES EXCEEDED IN 5-MINUTE INTERVALS
 459          KM    5  10  15  20  25  30  35  40  45  50  55  60  65  70  75  80  85  90
 460          KM  .46 .46 .46 .15 .12 .11 .05 .05 .04 .02 .02 .02 .01 .01 .01 .01 .01 .01
 461          KM
 462          KM         L=   0.839 miles, S=  230 feet/mile, Kb= .05
 463          KM
 464          BA  0.139
 465          LG   0.15    0.31    5.40    0.22   22.35
 466          UC  0.213   0.178
 467          UA      0       5      16      30      65      77      84      90      94      97
 468          UA    100
              *

 469          KK  C536R
 470          KM     Hydrograph combine 535536 + 205M at C536 right branch
 471          HC      2
              *

 472          KK   205N
 473          KM  Sub-Basin   205N
 474          KM
 475          KM     The Clark Unit Hydrograph is used for this basin.
 476          KM         The HEC-1 time-area relation is used for this basin.
 477          KM
 478          KM     Time of Concentration for this sub-basin is based on the following:
 479          KM         6-Hour Rainfall, Pattern No.  1.00
 480          KM         An rainfall areal reduction factor of 0.998
 481          KM
 482          KM      EXCESS RAINFALL VALUES EXCEEDED IN 5-MINUTE INTERVALS
 483          KM    5  10  15  20  25  30  35  40  45  50  55  60  65  70  75  80  85  90
 484          KM  .45 .44 .44 .13 .09 .08 .03 .03 .03 .00 .00 .00 .00 .00 .00 .00 .00 .00
 485          KM
 486          KM         L=   1.183 miles, S=  245 feet/mile, Kb= .10
 487          KM
 488          BA  0.156
 489          LG   0.15    0.39    5.70    0.21    0.80
 490          UC  0.413   0.457
              *
```

```
LINE          ID.......1.......2.......3.......4.......5.......6.......7.......8.......9......10

491           KK   C536I
492           KM      Hydrograph combine C536R + 205N at C536I
493           HC       2
              *
              * *
              * * C536I is the total flow in Hesperus Wash upstream of Dam 36
              * *
              *

494           KK   C536O
495           KM      Reservoir route at C536 (Dam 36).
496           RS       1    ELEV  1852.1
497           SV    0.00   14.41   35.94   67.64  108.61  158.07  218.14  276.00  280.00  289.00
498           SV  298.02  308.00  317.00  327.00  337.00  346.95  358.00  374.00
499           SE  1852.1  1866.0  1870.0  1874.0  1878.0  1882.0  1886.0  1889.0  1889.2  1889.6
500           SE  1890.0  1890.4  1890.8  1891.2  1891.6  1892.0  1892.4  1893.0
501           SQ       0     108     168     211     245     276     301     320     338     347
502           SQ     356     459     679     995    1408    1905    2477    3119    3826    5009
503           SE  1852.1  1858.0  1862.0  1866.0  1870.0  1874.0  1878.0  1882.0  1886.0  1889.0
504           SE  1889.2  1889.6  1890.0  1890.4  1890.8  1891.2  1891.6  1892.0  1892.4  1893.0
505           RL                   0.17
              *
              * *
              * * End Basin 205.  Start Basin 206
              * *
              *

506           KK  536537
507           KM      Normal depth channel route from C536 to C537
508           KM      Source:  HEC-2 Cross Section: HE 2.729
509           RS       3    FLOW      -1
510           RC   0.075   0.050   0.075  1480.0  0.0209
511           RX  9900.0  9912.0  9947.3  9979.3 10025.0 10044.5 10051.0 10060.0
512           RY  1846.5  1845.4  1843.1  1834.3  1833.6  1840.5  1843.3  1843.5
              *

513           KK    206A
514           KM   Sub-Basin   206A
515           KM
516           KM      The Clark Unit Hydrograph is used for this basin.
517           KM          The Urban time-area relation is used for this basin.
518           KM
519           KM      Time of Concentration for this sub-basin is based on the following:
520           KM          6-Hour Rainfall, Pattern No.  1.00
521           KM          An rainfall areal reduction factor of 0.998
522           KM
523           KM       EXCESS RAINFALL VALUES EXCEEDED IN 5-MINUTE INTERVALS
524           KM     5  10  15  20  25  30  35  40  45  50  55  60  65  70  75  80  85  90
525           KM   .47 .47 .46 .16 .13 .12 .05 .05 .05 .04 .03 .03 .01 .01 .01 .01 .01 .01
526           KM
527           KM          L=   0.631 miles, S=  256 feet/mile, Kb= .04
528           KM
529           BA   0.128
530           LG    0.12    0.28    5.30    0.23   33.34
```

```
LINE          ID.......1.......2.......3.......4.......5.......6.......7.......8.......9......10

 531          UC   0.158   0.107
 532          UA       0       5      16      30      65      77      84      90      94      97
 533          UA     100
              *

 534          KK    C537
 535          KM      Hydrograph combine 536537 + 206A at C537
 536          HC       2
              *

 537          KK  537538
 538          KM      Normal depth channel route from C537 to C538
 539          KM      Source:  HEC-2 Cross Section: HE 2.493
 540          RS       4    FLOW      -1
 541          RC   0.075   0.050   0.075  2155.0  0.0210
 542          RX  9946.0  9957.6  9984.8  9994.8 10000.0 10036.5 10070.1 10107.3
 543          RY  1817.0  1815.2  1807.4  1803.2  1803.2  1805.5  1814.3  1815.4
              *

 544          KK    206B
 545          KM   Sub-Basin   206B
 546          KM
 547          KM      The Clark Unit Hydrograph is used for this basin.
 548          KM          The Urban time-area relation is used for this basin.
 549          KM
 550          KM      Time of Concentration for this sub-basin is based on the following:
 551          KM          6-Hour Rainfall, Pattern No.  1.00
 552          KM          An rainfall areal reduction factor of 0.999
 553          KM
 554          KM       EXCESS RAINFALL VALUES EXCEEDED IN 5-MINUTE INTERVALS
 555          KM     5  10  15  20  25  30  35  40  45  50  55  60  65  70  75  80  85  90
 556          KM   .48 .47 .47 .17 .13 .13 .06 .06 .05 .05 .04 .04 .01 .01 .01 .01 .01 .01
 557          KM
 558          KM          L=   0.570 miles, S=  139 feet/mile, Kb= .03
 559          KM
 560          BA   0.095
 561          LG    0.10    0.26    5.20    0.23   41.42
 562          UC   0.154   0.113
 563          UA       0       5      16      30      65      77      84      90      94      97
 564          UA     100
              *

 565          KK   C538I
 566          KM      Hydrograph combine 537538 + 206B at C538I
 567          HC       2
              *

 568          KK   C538O
 569          KM      Reservoir route at C538.
 570          RS       1    ELEV  1778.2
 571          SV    0.00    0.10    0.57    1.69    2.60    2.70    2.90    3.00    3.20    3.38
 572          SV    3.60    3.90    4.10    4.30    4.60    5.10    5.60    6.10    7.10    8.10
 573          SE  1778.2  1782.0  1784.0  1786.0  1787.1  1787.2  1787.4  1787.6  1787.8  1788.0
 574          SE  1788.2  1788.4  1788.6  1788.8  1789.0  1789.4  1789.8  1790.2  1790.8  1791.4
 575          SQ       0      82     133     185     207     208     212     218     226     235
```

```
LINE          ID.......1.......2.......3.......4.......5.......6.......7.......8.......9......10

 576          SQ     249     265     286     310     338     400     482     611     942    1439
              *

 577          KK  538540
 578          KM      Normal depth channel route from C538 to C540
 579          KM      Source:  HEC-2 Cross Section: HE 1.990
 580          RS       7    FLOW      -1
 581          RC   0.075   0.050   0.075  2176.0  0.0210
 582          RX  9907.7  9931.8  9978.4 10000.0 10041.1 10056.9 10143.7 10164.9
 583          RY  1767.5  1754.9  1755.2  1753.2  1753.1  1755.1  1757.3  1769.4
              *

 584          KK    206C
 585          KM   Sub-Basin   206C
 586          KM
 587          KM      The Clark Unit Hydrograph is used for this basin.
 588          KM          The Urban time-area relation is used for this basin.
 589          KM
 590          KM      Time of Concentration for this sub-basin is based on the following:
 591          KM          6-Hour Rainfall, Pattern No.  1.00
 592          KM          An rainfall areal reduction factor of 1.000
 593          KM
 594          KM       EXCESS RAINFALL VALUES EXCEEDED IN 5-MINUTE INTERVALS
 595          KM     5  10  15  20  25  30  35  40  45  50  55  60  65  70  75  80  85  90
 596          KM   .46 .45 .45 .15 .11 .11 .04 .04 .04 .02 .02 .02 .01 .01 .01 .01 .01 .01
 597          KM
 598          KM          L=   0.427 miles, S=  138 feet/mile, Kb= .04
 599          KM
 600          BA   0.024
 601          LG    0.11    0.26    4.35    0.36   28.55
 602          UC   0.158   0.204
 603          UA       0       5      16      30      65      77      84      90      94      97
 604          UA     100
              *

 605          KK   C540R
 606          KM      Hydrograph combine 538540 + 206C at C540 right branch
 607          HC       2
              *

 608          KK    206D
 609          KM   Sub-Basin   206D
 610          KM
 611          KM      The Clark Unit Hydrograph is used for this basin.
 612          KM          The Urban time-area relation is used for this basin.
 613          KM
 614          KM      Time of Concentration for this sub-basin is based on the following:
 615          KM          6-Hour Rainfall, Pattern No.  1.00
 616          KM          An rainfall areal reduction factor of 0.999
 617          KM
 618          KM       EXCESS RAINFALL VALUES EXCEEDED IN 5-MINUTE INTERVALS
 619          KM     5  10  15  20  25  30  35  40  45  50  55  60  65  70  75  80  85  90
 620          KM   .48 .48 .48 .17 .14 .14 .06 .06 .06 .05 .05 .05 .01 .01 .01 .01 .01 .01
 621          KM
 622          KM          L=   0.531 miles, S=  236 feet/mile, Kb= .03
```

```
LINE          ID.......1.......2.......3.......4.......5.......6.......7.......8.......9......10

 623          KM
 624          BA   0.062
 625          LG    0.08    0.25    5.70    0.18   43.01
 626          UC   0.125   0.109
 627          UA       0       5      16      30      65      77      84      90      94      97
 628          UA     100
              *

 629          KK  539540
 630          KM      Normal depth channel route from C539 to C540
 631          KM      Source:  200 Scale Mapping
 632          RS       5    FLOW      -1
 633          RC   0.060   0.050   0.055  1872.0  0.0256
 634          RX  1000.0  1007.0  1016.0  1036.0  1046.0  1080.0  1150.0  1210.0
 635          RY  1750.0  1748.0  1746.0  1744.0  1744.0  1746.0  1748.0  1750.0
              *

 636          KK    206E
 637          KM   Sub-Basin   206E
 638          KM
 639          KM      The Clark Unit Hydrograph is used for this basin.
 640          KM          The Urban time-area relation is used for this basin.
 641          KM
 642          KM      Time of Concentration for this sub-basin is based on the following:
 643          KM          6-Hour Rainfall, Pattern No.  1.00
 644          KM          An rainfall areal reduction factor of 1.000
 645          KM
 646          KM       EXCESS RAINFALL VALUES EXCEEDED IN 5-MINUTE INTERVALS
 647          KM     5  10  15  20  25  30  35  40  45  50  55  60  65  70  75  80  85  90
 648          KM   .46 .45 .45 .15 .11 .11 .04 .04 .04 .02 .02 .02 .01 .01 .01 .01 .01 .01
 649          KM
 650          KM          L=   0.343 miles, S=  175 feet/mile, Kb= .03
 651          KM
 652          BA   0.023
 653          LG    0.09    0.25    4.30    0.36   25.75
 654          UC   0.113   0.120
 655          UA       0       5      16      30      65      77      84      90      94      97
 656          UA     100
              *

 657          KK   C540L
 658          KM      Hydrograph combine 539540 + 206E at C540 left branch
 659          HC       2
              *

 660          KK    C540
 661          KM      Hydrograph combine C540R + C540L at C540
 662          HC       2
              *
              * *
              * * C540 is the end of Hesperus Wash and the start of Balboa Wash
              * *
              *
```

```
LINE          ID.......1.......2.......3.......4.......5.......6.......7.......8.......9......10

663           KK  540541
664           KM      Normal depth channel route from C540 to C541
665           KM      Source:  HEC-2 Cross Section: BA 1.645
666           RS      12    FLOW      -1
667           RC   0.065   0.035   0.065  4207.0  0.0204
668           RX  9960.8  9968.0  9975.1  9975.7  9993.2 10018.2 10297.5 10343.9
669           RY  1725.2  1721.8  1718.4  1716.2  1716.4  1718.4  1719.8  1730.5
              *

670           KK    206F
671           KM   Sub-Basin   206F
672           KM
673           KM      The Clark Unit Hydrograph is used for this basin.
674           KM          The Urban time-area relation is used for this basin.
675           KM
676           KM      Time of Concentration for this sub-basin is based on the following:
677           KM          6-Hour Rainfall, Pattern No.  1.00
678           KM          An rainfall areal reduction factor of 0.998
679           KM
680           KM       EXCESS RAINFALL VALUES EXCEEDED IN 5-MINUTE INTERVALS
681           KM     5  10  15  20  25  30  35  40  45  50  55  60  65  70  75  80  85  90
682           KM   .46 .46 .46 .15 .12 .11 .05 .05 .04 .03 .02 .02 .01 .01 .01 .01 .01 .01
683           KM
684           KM          L=   0.975 miles, S=  217 feet/mile, Kb= .03
685           KM
686           BA   0.157
687           LG    0.09    0.25    4.60    0.30   24.97
688           UC   0.179   0.154
689           UA       0       5      16      30      65      77      84      90      94      97
690           UA     100
              *

691           KK    C541
692           KM      Hydrograph combine 540541 + 206F at C541
693           HC       2
              *

694           KK  541548
695           KM      Normal depth channel route from C541 to C548
696           KM      Source:  HEC-2 Cross Section: BA 0.905
697           RS       3    FLOW      -1
698           RC   0.060   0.045   0.060  1138.0  0.0316
699           RX  9761.7  9936.7  9955.2  9986.9  9994.7 10039.2 10065.3 10066.0
700           RY  1647.4  1644.1  1638.1  1637.3  1636.2  1637.5  1652.9  1653.0
              *

701           KK    206G
702           KM   Sub-Basin   206G
703           KM
704           KM      The Clark Unit Hydrograph is used for this basin.
705           KM          The Urban time-area relation is used for this basin.
706           KM
707           KM      Time of Concentration for this sub-basin is based on the following:
708           KM          6-Hour Rainfall, Pattern No.  1.00
```

```
LINE          ID.......1.......2.......3.......4.......5.......6.......7.......8.......9......10

 709          KM          An rainfall areal reduction factor of 0.999
 710          KM
 711          KM       EXCESS RAINFALL VALUES EXCEEDED IN 5-MINUTE INTERVALS
 712          KM     5  10  15  20  25  30  35  40  45  50  55  60  65  70  75  80  85  90
 713          KM   .47 .47 .46 .16 .13 .12 .05 .05 .05 .04 .03 .03 .01 .01 .01 .01 .01 .01
 714          KM
 715          KM          L=   0.950 miles, S=  132 feet/mile, Kb= .03
 716          KM
 717          BA   0.089
 718          LG    0.11    0.26    5.20    0.23   29.86
 719          UC   0.204   0.241
 720          UA       0       5      16      30      65      77      84      90      94      97
 721          UA     100
              *

 722          KK  BB523R
 723          KM      Retrieve previously diverted hydrograph at C523 in the right branch.
 724          DR   D523R
              *

 725          KK  523548
 726          KM      Normal depth channel route from C523 to C548
 727          KM      Source:  200 Scale Mapping
 728          RS      11    FLOW      -1
 729          RC   0.040   0.018   0.040  2680.0  0.0189
 730          RX  1000.0  1040.0  1090.0  1130.0  1170.0  1171.2  1181.2  1196.2
 731          RY  1646.0  1645.0  1643.8  1644.7  1644.0  1644.4  1646.0  1648.0
              *

 732          KK   C548L
 733          KM      Hydrograph combine 541548 + 206G + BB523R at C548 left branch
 734          HC       3    3.72
              *
              * *
              * * C548L is the total flow in Balboa Wash above confluence with Oxford Wash
              * *
              *

 735          KK    206H
 736          KM   Sub-Basin   206H
 737          KM
 738          KM      The Clark Unit Hydrograph is used for this basin.
 739          KM          The Urban time-area relation is used for this basin.
 740          KM
 741          KM      Time of Concentration for this sub-basin is based on the following:
 742          KM          6-Hour Rainfall, Pattern No.  1.00
 743          KM          An rainfall areal reduction factor of 0.999
 744          KM
 745          KM       EXCESS RAINFALL VALUES EXCEEDED IN 5-MINUTE INTERVALS
 746          KM     5  10  15  20  25  30  35  40  45  50  55  60  65  70  75  80  85  90
 747          KM   .48 .47 .47 .17 .14 .13 .06 .06 .06 .05 .05 .04 .01 .01 .01 .01 .01 .01
 748          KM
 749          KM          L=   0.515 miles, S=  183 feet/mile, Kb= .03
 750          KM
 751          BA   0.059
```

```
LINE          ID.......1.......2.......3.......4.......5.......6.......7.......8.......9......10

 752          LG    0.08    0.25    5.70    0.18   36.29
 753          UC   0.138   0.121
 754          UA       0       5      16      30      65      77      84      90      94      97
 755          UA     100
              *

 756          KK  542543
 757          KM      Normal depth channel route from C542 to C543
 758          KM      Source:  HEC-2 Cross Section: OX 0.931
 759          RS       1    FLOW      -1
 760          RC   0.075   0.040   0.050   686.0  0.0066
 761          RX  9846.9  9881.6  9967.5  9983.2 10010.0 10025.0 10033.8 10039.6
 762          RY  1732.3  1723.5  1724.1  1717.8  1717.0  1724.0  1728.2  1730.7
              *

 763          KK    206I
 764          KM   Sub-Basin   206I
 765          KM
 766          KM      The Clark Unit Hydrograph is used for this basin.
 767          KM          The Urban time-area relation is used for this basin.
 768          KM
 769          KM      Time of Concentration for this sub-basin is based on the following:
 770          KM          6-Hour Rainfall, Pattern No.  1.00
 771          KM          An rainfall areal reduction factor of 1.000
 772          KM
 773          KM       EXCESS RAINFALL VALUES EXCEEDED IN 5-MINUTE INTERVALS
 774          KM     5  10  15  20  25  30  35  40  45  50  55  60  65  70  75  80  85  90
 775          KM   .48 .47 .47 .17 .14 .13 .06 .06 .06 .05 .05 .04 .01 .01 .01 .01 .01 .01
 776          KM
 777          KM          L=   0.232 miles, S=  286 feet/mile, Kb= .03
 778          KM
 779          BA   0.021
 780          LG    0.08    0.25    5.70    0.18   34.78
 781          UC   0.083   0.066
 782          UA       0       5      16      30      65      77      84      90      94      97
 783          UA     100
              *

 784          KK    C543
 785          KM      Hydrograph combine 542543 + 206I at C543
 786          HC       2
              *

 787          KK   D543L
 788          KM      Hydrograph diversion at C543.  Main flow continues in the left branch.
 789          KM      Diverted flow is in the right branch.
 790          DT   D543R
 791          DI       0      38      45      50      65      85      97     122     141     162
 792          DI     194     350     395     432     475     522     570     612
 793          DQ       0      38      45      50      65      85      97     122     141     162
 794          DQ     194     350     395     425     460     500     540     575
              *
```

```
LINE          ID.......1.......2.......3.......4.......5.......6.......7.......8.......9......10

 795          KK  543544
 796          KM      Normal depth channel route from C543 to C544
 797          KM      Source:  200 Scale Mapping & Hydrology Field Reconnaissance
 798          RS       1    FLOW      -1
 799          RC   0.040   0.018   0.040   597.0  0.0277
 800          RX  1000.0  1020.0  1045.0  1075.0  1105.0  1106.2  1146.2  1266.2
 801          RY  1720.0  1718.0  1712.0  1712.3  1712.0  1712.4  1714.0  1720.0
              *

 802          KK    206K
 803          KM   Sub-Basin   206K
 804          KM
 805          KM      The Clark Unit Hydrograph is used for this basin.
 806          KM          The Urban time-area relation is used for this basin.
 807          KM
 808          KM      Time of Concentration for this sub-basin is based on the following:
 809          KM          6-Hour Rainfall, Pattern No.  1.00
 810          KM          An rainfall areal reduction factor of 0.999
 811          KM
 812          KM       EXCESS RAINFALL VALUES EXCEEDED IN 5-MINUTE INTERVALS
 813          KM     5  10  15  20  25  30  35  40  45  50  55  60  65  70  75  80  85  90
 814          KM   .47 .47 .47 .16 .13 .13 .06 .06 .05 .04 .04 .03 .01 .01 .01 .01 .01 .01
 815          KM
 816          KM          L=   0.615 miles, S=  255 feet/mile, Kb= .03
 817          KM
 818          BA   0.056
 819          LG    0.09    0.25    5.70    0.18   25.80
 820          UC   0.133   0.139
 821          UA       0       5      16      30      65      77      84      90      94      97
 822          UA     100
              *

 823          KK    C544
 824          KM      Hydrograph combine 543544 + 206K at C544
 825          HC       2
              *

 826          KK  544545
 827          KM      Normal depth channel route from C544 to C545
 828          KM      Source:  200 Scale Mapping & Hydrology Field Reconnaissance
 829          RS       1    FLOW      -1
 830          RC   0.040   0.018   0.040   985.0  0.0234
 831          RX  1000.0  1008.0  1018.0  1048.0  1078.0  1079.2  1089.2  1109.2
 832          RY  1690.0  1688.0  1686.0  1686.3  1686.0  1686.4  1688.0  1689.0
              *

 833          KK   D545L
 834          KM      Hydrograph diversion at C545.  Main flow continues in the left branch.
 835          KM      Diverted flow is in the right branch.
 836          DT   D545R
 837          DI       0      50     100     200     400     800    1600    3200    5000
 838          DQ       0      25      50     100     200     400     800    1600    2500
              *
```

```
LINE          ID.......1.......2.......3.......4.......5.......6.......7.......8.......9......10

839           KK  545546
840           KM      Normal depth channel route from C545 to C546
841           KM      Source:  200 Scale Mapping & Hydrology Field Reconnaissance
842           RS       1    FLOW      -1
843           RC   0.040   0.018   0.040   428.0  0.0164
844           RX  1000.0  1020.0  1050.0  1080.0  1110.0  1111.2  1121.2  1151.2
845           RY  1680.0  1678.0  1676.0  1676.3  1676.0  1676.4  1678.0  1678.5
              *

846           KK    206L
847           KM   Sub-Basin   206L
848           KM
849           KM      The Clark Unit Hydrograph is used for this basin.
850           KM          The Urban time-area relation is used for this basin.
851           KM
852           KM      Time of Concentration for this sub-basin is based on the following:
853           KM          6-Hour Rainfall, Pattern No.  1.00
854           KM          An rainfall areal reduction factor of 0.999
855           KM
856           KM       EXCESS RAINFALL VALUES EXCEEDED IN 5-MINUTE INTERVALS
857           KM     5  10  15  20  25  30  35  40  45  50  55  60  65  70  75  80  85  90
858           KM   .47 .47 .47 .16 .13 .13 .06 .06 .05 .04 .04 .03 .01 .01 .01 .01 .01 .01
859           KM
860           KM          L=   0.546 miles, S=  231 feet/mile, Kb= .03
861           KM
862           BA   0.060
863           LG    0.09    0.25    5.80    0.18   25.01
864           UC   0.129   0.117
865           UA       0       5      16      30      65      77      84      90      94      97
866           UA     100
              *

867           KK    C546
868           KM      Hydrograph combine 545546 + 206L at C546
869           HC       2
              *

870           KK  546547
871           KM      Normal depth channel route from C546 to C547
872           KM      Source:  200 Scale Mapping
873           RS       1    FLOW      -1
874           RC   0.040   0.018   0.040   749.0  0.0327
875           RX  1000.0  1005.0  1011.0  1013.0  1029.0  1047.0  1052.0  1057.0
876           RY  1666.0  1664.0  1662.0  1661.9  1662.4  1662.0  1664.0  1666.0
              *

877           KK  BB543R
878           KM      Retrieve previously diverted hydrograph at C543 in the right branch.
879           DR   D543R
              *
```

```
LINE          ID.......1.......2.......3.......4.......5.......6.......7.......8.......9......10

 880          KK  543547
 881          KM      Normal depth channel route from C543 to C547
 882          KM      Source:  HEC-2 Cross Section: OX 0.638
 883          RS       5    FLOW      -1
 884          RC   0.075   0.040   0.050  2395.0  0.0278
 885          RX  9720.9  9769.0  9970.7  9985.5 10020.0 10038.1 10097.0 10102.0
 886          RY  1690.4  1681.2  1683.1  1676.2  1677.0  1687.1  1687.4  1690.0
              *

 887          KK  BB545R
 888          KM      Retrieve previously diverted hydrograph at C545 in the right branch.
 889          DR   D545R
              *

 890          KK  545547
 891          KM      Normal depth channel route from C545 to C547
 892          KM      Source:  HEC-2 Cross Section: OX 0.542
 893          RS       3    FLOW      -1
 894          RC   0.075   0.040   0.050  1216.0  0.0259
 895          RX  9668.2  9778.4  9957.9  9986.0 10012.7 10043.6 10067.6 10163.4
 896          RY  1674.1  1674.1  1673.3  1662.1  1662.2  1680.4  1680.9  1681.1
              *

 897          KK    206J
 898          KM   Sub-Basin   206J
 899          KM
 900          KM      The Clark Unit Hydrograph is used for this basin.
 901          KM          The Urban time-area relation is used for this basin.
 902          KM
 903          KM      Time of Concentration for this sub-basin is based on the following:
 904          KM          6-Hour Rainfall, Pattern No.  1.00
 905          KM          An rainfall areal reduction factor of 0.999
 906          KM
 907          KM       EXCESS RAINFALL VALUES EXCEEDED IN 5-MINUTE INTERVALS
 908          KM     5  10  15  20  25  30  35  40  45  50  55  60  65  70  75  80  85  90
 909          KM   .48 .48 .48 .17 .14 .14 .06 .06 .06 .05 .05 .05 .01 .01 .01 .01 .01 .01
 910          KM
 911          KM          L=   0.502 miles, S=  214 feet/mile, Kb= .03
 912          KM
 913          BA   0.060
 914          LG    0.08    0.25    5.70    0.18   44.51
 915          UC   0.125   0.105
 916          UA       0       5      16      30      65      77      84      90      94      97
 917          UA     100
              *

 918          KK    C547
 919          KM      Hydrograph combine 546547 + 543547 + 545547 + 206J at C547
 920          HC       4    0.26
              *
```

```
LINE          ID.......1.......2.......3.......4.......5.......6.......7.......8.......9......10

921           KK  547548
922           KM      Normal depth channel route from C547 to C548
923           KM      Source:  HEC-2 Cross Section: OX 0.235
924           RS       3    FLOW      -1
925           RC   0.075   0.040   0.050  2165.0  0.0182
926           RX  9910.0  9911.4  9968.5  9987.6 10017.4 10032.3 10077.4 10080.0
927           RY  1639.0  1638.9  1637.9  1635.7  1635.8  1641.7  1642.9  1643.0
              *

928           KK    206M
929           KM   Sub-Basin   206M
930           KM
931           KM      The Clark Unit Hydrograph is used for this basin.
932           KM          The Urban time-area relation is used for this basin.
933           KM
934           KM      Time of Concentration for this sub-basin is based on the following:
935           KM          6-Hour Rainfall, Pattern No.  1.00
936           KM          An rainfall areal reduction factor of 0.999
937           KM
938           KM       EXCESS RAINFALL VALUES EXCEEDED IN 5-MINUTE INTERVALS
939           KM     5  10  15  20  25  30  35  40  45  50  55  60  65  70  75  80  85  90
940           KM   .48 .47 .47 .17 .14 .13 .06 .06 .06 .05 .05 .04 .01 .01 .01 .01 .01 .01
941           KM
942           KM          L=   0.465 miles, S=  166 feet/mile, Kb= .03
943           KM
944           BA   0.060
945           LG    0.08    0.25    5.20    0.23   46.18
946           UC   0.133   0.107
947           UA       0       5      16      30      65      77      84      90      94      97
948           UA     100
              *

949           KK   C548R
950           KM      Hydrograph combine 547548 + 206M at C548 right branch
951           HC       2
              *
              * *
              * * C548R is the total flow in Oxford Wash above confluence with Balboa Wash
              * *
              *

952           KK    C548
953           KM      Hydrograph combine C548L + C548R at C548
954           HC       2
              *
              * *
              * * C548 is the total flow in Balboa Wash below the confluence of Balboa Wash
              * * and Oxford Wash
              * *
              *
```

```
LINE          ID.......1.......2.......3.......4.......5.......6.......7.......8.......9......10

 955          KK  548549
 956          KM      Normal depth channel route from C548 to C549
 957          KM      Source:  HEC-2 Cross Section: BA0.246
 958          RS       9    FLOW      -1
 959          RC   0.070   0.080   0.070  3258.0  0.0172
 960          RX  9889.1  9912.5  9940.2  9960.0 10026.1 10046.8 10067.8 10079.3
 961          RY  1586.2  1585.7  1577.5  1573.6  1573.2  1579.5  1585.7  1586.2
              *

 962          KK    206N
 963          KM   Sub-Basin   206N
 964          KM
 965          KM      The Clark Unit Hydrograph is used for this basin.
 966          KM          The Urban time-area relation is used for this basin.
 967          KM
 968          KM      Time of Concentration for this sub-basin is based on the following:
 969          KM          6-Hour Rainfall, Pattern No.  1.00
 970          KM          An rainfall areal reduction factor of 0.998
 971          KM
 972          KM       EXCESS RAINFALL VALUES EXCEEDED IN 5-MINUTE INTERVALS
 973          KM     5  10  15  20  25  30  35  40  45  50  55  60  65  70  75  80  85  90
 974          KM   .48 .47 .47 .17 .14 .13 .06 .06 .06 .05 .05 .05 .01 .01 .01 .01 .01 .01
 975          KM
 976          KM          L=   0.767 miles, S=  120 feet/mile, Kb= .03
 977          KM
 978          BA   0.152
 979          LG    0.11    0.27    4.65    0.29   52.66
 980          UC   0.188   0.137
 981          UA       0       5      16      30      65      77      84      90      94      97
 982          UA     100
              *

 983          KK   C549L
 984          KM      Hydrograph combine 548549 + 206N at C549 left branch
 985          HC       2
              *
              * *
              * * C549L is the total flow in Balboa Wash above confluence with Ashbrook Wash
              * *
              * * End Basin 206.  Start Basin 207
              * *
              *

 986          KK   C5990
 987          KM      The following is the design outflow hydrograph from Golden Eagle Park Dam
 988          IN       1
 989          BA    7.13
 990          QI       0       0       0       1       1       2       2       3       3       4
 991          QI       4       4       5       5       6       6       6       7       7       7
 992          QI       7       7       8       8       9      10      11      11      12      13
 993          QI      14      15      16      17      18      19      20      22      23      24
 994          QI      24      25      26      27      28      29      30      31      31      33
 995          QI      34      35      36      38      39      40      41      43      44      46
 996          QI      47      48      50      51      52      54      55      56      58      59
```

LINE	ID.....1	2	3	4	5	6	7	8	9	10
997	QI 60	62	63	65	66	68	70	71	73	75
998	QI 76	78	80	82	84	86	88	91	93	96
999	QI 98	101	104	106	109	111	114	117	120	122
1000	QI 125	127	130	132	135	137	139	141	144	146
1001	QI 148	150	152	153	156	158	161	163	165	167
1002	QI 169	171	172	173	176	178	180	182	183	184
1003	QI 187	189	190	191	193	194	197	198	199	201
1004	QI 202	204	205	206	208	209	210	211	212	213
1005	QI 214	215	216	217	218	219	220	221	222	223
1006	QI 224	225	226	227	228	229	230	231	232	233
1007	QI 234	235	236	238	239	240	241	242	243	245
1008	QI 246	247	248	250	252	255	258	261	264	267
1009	QI 270	273	276	279	283	286	290	296	304	315
1010	QI 329	344	354	368	384	401	418	435	454	466
1011	QI 477	492	510	533	563	601	645	675	702	733
1012	QI 768	806	825	836	848	862	878	895	914	935
1013	QI 949	958	968	979	991	1004	1017	1032	1046	1059
1014	QI 1069	1078	1088	1098	1108	1119	1129	1139	1149	1158
1015	QI 1165	1172	1179	1186	1192	1199	1206	1212	1218	1224
1016	QI 1230	1235	1240	1244	1248	1251	1255	1258	1260	1263
1017	QI 1265	1268	1270	1272	1274	1276	1278	1280	1282	1284
1018	QI 1285	1287	1289	1291	1293	1295	1296	1298	1300	1302
1019	QI 1304	1306	1308	1310	1312	1314	1316	1317	1319	1320
1020	QI 1321	1322	1324	1325	1325	1326	1327	1327	1328	1328
1021	QI 1329	1329	1329	1329	1329	1329	1329	1329	1329	1329
1022	QI 1329	1328	1328	1328	1327	1327	1326	1326	1325	1324
1023	QI 1324	1323	1322	1321	1320	1319	1318	1317	1316	1315
1024	QI 1314	1313	1312	1310	1309	1308	1307	1306	1305	1304
1025	QI 1302	1301	1300	1299	1298	1296	1295	1294	1293	1292
1026	QI 1290	1289	1288	1287	1286	1284	1283	1282	1281	1280
1027	QI 1279	1277	1276	1275	1274	1273	1271	1270	1269	1268
1028	QI 1267	1266	1264	1263	1262	1261	1260	1258	1257	1256
1029	QI 1255	1254	1253	1251	1250	1249	1248	1247	1245	1244
1030	QI 1243	1242	1241	1239	1238	1236	1234	1233	1231	1230
1031	QI 1228	1227	1225	1224	1222	1221	1219	1218	1216	1215
1032	QI 1213	1212	1210	1209	1207	1206	1205	1203	1202	1200
1033	QI 1199	1197	1196	1194	1193	1192	1190	1189	1187	1186
1034	QI 1185	1183	1182	1180	1179	1178	1176	1175	1174	1172
1035	QI 1171	1169	1168	1167	1165	1164	1163	1161	1160	1159
1036	QI 1157	1156	1155	1153	1152	1150	1148	1146	1144	1142
1037	QI 1141	1139	1137	1135	1133	1132	1130	1128	1126	1124
1038	QI 1123	1121	1119	1117	1116	1114	1112	1110	1109	1107
1039	QI 1105	1103	1102	1100	1098	1097	1095	1093	1091	1090
1040	QI 1088	1086	1085	1083	1081	1080	1078	1076	1075	1073
1041	QI 1071	1070	1068	1066	1065	1063	1061	1060	1058	1056
1042	QI 1054	1051	1048	1045	1043	1040	1037	1034	1031	1029
1043	QI 1026	1023	1020	1017	1015	1012	1009	1006	1003	1000
1044	QI 997	995	992	989	986	983	980	977	974	971
1045	QI 967	964	961	958	955	952	949	945	939	930
1046	QI 922	913	905	897	889	881	874	866	858	851
1047	QI 844	837	830	823	810	783	759	739	721	705
1048	QI 691	678	667	654	635	621	611	604	598	593
1049	QI 589	586	583	580	578	576	573	571	569	567
1050	QI 564	562	560	558	555	553	551	549	547	545
1051	QI 542	540	538	536	534	531	529	527	525	522

```
LINE          ID.......1.......2.......3.......4.......5.......6.......7.......8.......9......10

1052          QI     520     518     516     514     512     509     507     506     504     502
1053          QI     500     498     496     494     492     491     489     487     485     484
1054          QI     482     480     478     477     475     473     472     470     469     467
1055          QI     466     464     463     461     460     457     455     454     452     451
1056          QI     449     448     447     445     444     443     441     440     439     437
1057          QI     436     435     433     432     430     429     427     426     424     423
1058          QI     421     419     416     414     411     408     405     402     399     396
1059          QI     393     390     387     384     381     378     375     371     368     365
1060          QI     362     360     357     354     351     348     346     343     339     336
1061          QI     333     331     328     325     323     320     317     314     312     309
1062          QI     306     303     299     296     293     290     287     284     281     278
1063          QI     275     272     269     266     264     261     258     256     253     251
1064          QI     249     246     244     242     240     238     236     234     232     230
1065          QI     228     226     224     221     219     217     215     213     211     209
1066          QI     207     205     203     201     199     197     195     193     192     191
1067          QI     188     187     186     184     183     181     180     178     177     175
1068          QI     174     173     171     170     169     167     166     164     163     162
1069          QI     160     159     158     156     155     154     153     152     150     149
1070          QI     148     147     146     145     144     143     141     140     139     138
1071          QI     137     136     135     134     133     132     131     130     129     128
1072          QI     127     126     125     125     124     123     122     122     121     120
1073          QI     119     119     118     117     116     115     115     114     113     112
1074          QI     111     110     109     108     107     107     106     105     104     103
1075          QI     102     101     100      99      98      97      96      96      95      94
1076          QI      93      92      91      90      89      88      87      86      85      83
1077          QI      82      81      79      78      76      75      73      72      71      69
1078          QI      68      67      66      64      63      62      61      60      59      58
1079          QI      57      56      55      54      54      53      52      51      50      50
1080          QI      49      48      47      47      46      46      46      45      45      44
1081          QI      44      43      43      42      42      41      41      40      40      39
1082          QI      39      38      38      37      37      37      36      36      35      35
1083          QI      35      34      34      34      33      33      32      32      32      31
1084          QI      31      31      30      30      30      29      29      28      28      27
1085          QI      27      26      25      24      23      23      22      21      20      19
1086          QI      18      18      17      16      15      15      14      14      13      12
1087          QI      12      11      11      10      10       9       9       9       8       8
1088          QI       8       7       7       7       6       6       6       6       5       5
1089          QI       5       5       4       4       4       4       4       4       3       3
1090          QI       3       3       3       3       3       3       2       2       2       2
1091          QI       2       2       2       2       2       2       2       1       1       1
1092          QI       1       1       1       1       1       1       1       1       1       1
1093          QI       1       1       1       1       1       1       1       1       1       1
1094          QI       1       1       1       0       0       0       0       0       0       0
1095          QI       0       0       0       0       0       0       0       0       0       0
1096          QI       0       0       0       0       0       0       0       0       0       0
1097          QI       0       0       0       0       0       0       0       0       0       0
1098          IN      15
              *
              * * End Basin 210.  Start Basin 211
              * *
              *
```

```
LINE          ID.......1.......2.......3.......4.......5.......6.......7.......8.......9......10

1099          KK  599608
1100          KM      Normal depth channel route from C599 to C608
1101          KM      Source:  HEC-2 Cross Section: AS 3.621
1102          RS       2    FLOW      -1
1103          RC   0.055   0.045   0.025  1476.0  0.0148
1104          RX  9675.4  9726.8  9929.0  9990.7 10005.9 10033.3 10061.9 10082.2
1105          RY  1691.3  1687.2  1685.5  1678.6  1678.1  1682.1  1689.8  1691.8
              *

1106          KK    211K
1107          KM   Sub-Basin   211K
1108          KM
1109          KM      The Clark Unit Hydrograph is used for this basin.
1110          KM          The Urban time-area relation is used for this basin.
1111          KM
1112          KM      Time of Concentration for this sub-basin is based on the following:
1113          KM          6-Hour Rainfall, Pattern No.  1.00
1114          KM          An rainfall areal reduction factor of 0.999
1115          KM
1116          KM       EXCESS RAINFALL VALUES EXCEEDED IN 5-MINUTE INTERVALS
1117          KM     5  10  15  20  25  30  35  40  45  50  55  60  65  70  75  80  85  90
1118          KM   .48 .47 .47 .17 .13 .13 .06 .06 .06 .05 .04 .03 .01 .01 .01 .01 .01 .01
1119          KM
1120          KM          L=   0.376 miles, S=  157 feet/mile, Kb= .03
1121          KM
1122          BA   0.102
1123          LG    0.13    0.27    6.00    0.16   31.48
1124          UC   0.121   0.060
1125          UA       0       5      16      30      65      77      84      90      94      97
1126          UA     100
              *

1127          KK   C608L
1128          KM      Hydrograph combine 599608 + 211K at C608 left branch
1129          HC       2
              *

1130          KK    211G
1131          KM   Sub-Basin   211G
1132          KM
1133          KM      The Clark Unit Hydrograph is used for this basin.
1134          KM          The Urban time-area relation is used for this basin.
1135          KM
1136          KM      Time of Concentration for this sub-basin is based on the following:
1137          KM          6-Hour Rainfall, Pattern No.  1.00
1138          KM          An rainfall areal reduction factor of 1.000
1139          KM
1140          KM       EXCESS RAINFALL VALUES EXCEEDED IN 5-MINUTE INTERVALS
1141          KM     5  10  15  20  25  30  35  40  45  50  55  60  65  70  75  80  85  90
1142          KM   .50 .50 .50 .19 .16 .16 .08 .08 .08 .08 .08 .08 .02 .02 .02 .02 .02 .02
1143          KM
1144          KM          L=   0.448 miles, S=  190 feet/mile, Kb= .04
1145          KM
1146          BA   0.008
```

```
LINE          ID.......1.......2.......3.......4.......5.......6.......7.......8.......9......10

1147          LG    0.06    0.25    5.70    0.18   90.00
1148          UC   0.142   0.359
1149          UA       0       5      16      30      65      77      84      90      94      97
1150          UA     100
              *

1151          KK  604606
1152          KM      Normal depth channel route from C604 to C606
1153          KM      Source:  200 Scale Mapping
1154          RS      11    FLOW      -1
1155          RC   0.040   0.018   0.040  2784.0  0.0647
1156          RX  1000.0  1040.0  1060.0  1076.0  1092.0  1093.2  1098.2  1113.2
1157          RY  1814.0  1811.0  1810.8  1811.1  1810.8  1811.2  1812.0  1816.0
              *

1158          KK    211I
1159          KM   Sub-Basin   211I
1160          KM
1161          KM      The Clark Unit Hydrograph is used for this basin.
1162          KM          The Urban time-area relation is used for this basin.
1163          KM
1164          KM      Time of Concentration for this sub-basin is based on the following:
1165          KM          6-Hour Rainfall, Pattern No.  1.00
1166          KM          An rainfall areal reduction factor of 0.999
1167          KM
1168          KM       EXCESS RAINFALL VALUES EXCEEDED IN 5-MINUTE INTERVALS
1169          KM     5  10  15  20  25  30  35  40  45  50  55  60  65  70  75  80  85  90
1170          KM   .48 .48 .48 .17 .14 .14 .06 .06 .06 .06 .05 .05 .01 .01 .01 .01 .01 .01
1171          KM
1172          KM          L=   0.626 miles, S=  257 feet/mile, Kb= .03
1173          KM
1174          BA   0.041
1175          LG    0.08    0.25    5.70    0.18   45.00
1176          UC   0.133   0.168
1177          UA       0       5      16      30      65      77      84      90      94      97
1178          UA     100
              *

1179          KK   C606R
1180          KM      Hydrograph combine 604606 + 211I at C606 right branch
1181          HC       2
              *

1182          KK    211H
1183          KM   Sub-Basin   211H
1184          KM
1185          KM      The Clark Unit Hydrograph is used for this basin.
1186          KM          The Urban time-area relation is used for this basin.
1187          KM
1188          KM      Time of Concentration for this sub-basin is based on the following:
1189          KM          6-Hour Rainfall, Pattern No.  1.00
1190          KM          An rainfall areal reduction factor of 0.999
1191          KM
1192          KM       EXCESS RAINFALL VALUES EXCEEDED IN 5-MINUTE INTERVALS
1193          KM     5  10  15  20  25  30  35  40  45  50  55  60  65  70  75  80  85  90
```

```
LINE          ID.......1.......2.......3.......4.......5.......6.......7.......8.......9......10

1194          KM   .47 .47 .47 .16 .13 .12 .06 .06 .05 .04 .04 .03 .00 .00 .00 .00 .00 .00
1195          KM
1196          KM          L=   0.501 miles, S=  289 feet/mile, Kb= .03
1197          KM
1198          BA   0.073
1199          LG    0.09    0.25    6.00    0.16   17.93
1200          UC   0.117   0.087
1201          UA       0       5      16      30      65      77      84      90      94      97
1202          UA     100
              *

1203          KK   C605O
1204          KM      Reservoir route at C605.
1205          RS       1    ELEV  1722.5
1206          SV    0.00    0.20    0.20    0.20    0.20    0.30    0.30    0.30    0.40    0.60
1207          SV    0.70    0.90    1.00    1.20    1.40    1.60    1.90    2.80    3.40    4.10
1208          SE  1722.5  1726.8  1727.0  1727.2  1727.4  1727.6  1727.8  1728.0  1728.2  1728.4
1209          SE  1728.6  1728.8  1729.0  1729.2  1729.4  1729.6  1730.0  1730.4  1730.7  1731.0
1210          SQ       0       0       5      10      20      43      63      73      78      85
1211          SQ      91      96     101     105     109     113     122     130     136     200
              *

1212          KK    C606
1213          KM      Hydrograph combine C606R + C605O at C606
1214          HC       2
              *

1215          KK  606607
1216          KM      Normal depth channel route from C606 to C607
1217          KM      Source:  200 Scale Mapping
1218          RS       2    FLOW      -1
1219          RC   0.020   0.055   0.035  1061.0  0.0286
1220          RX  1000.0  1032.0  1082.0  1095.0  1105.0  1117.0  1123.0  1153.0
1221          RY  1704.3  1704.0  1703.5  1700.0  1700.0  1703.0  1704.0  1706.0
              *

1222          KK    211J
1223          KM   Sub-Basin   211J
1224          KM
1225          KM      The Clark Unit Hydrograph is used for this basin.
1226          KM          The Urban time-area relation is used for this basin.
1227          KM
1228          KM      Time of Concentration for this sub-basin is based on the following:
1229          KM          6-Hour Rainfall, Pattern No.  1.00
1230          KM          An rainfall areal reduction factor of 1.000
1231          KM
1232          KM       EXCESS RAINFALL VALUES EXCEEDED IN 5-MINUTE INTERVALS
1233          KM     5  10  15  20  25  30  35  40  45  50  55  60  65  70  75  80  85  90
1234          KM   .48 .48 .48 .17 .14 .14 .06 .06 .06 .05 .05 .05 .01 .01 .01 .01 .01 .01
1235          KM
1236          KM          L=   0.249 miles, S=  166 feet/mile, Kb= .03
1237          KM
1238          BA   0.015
1239          LG    0.08    0.23    6.20    0.16   39.19
1240          UC   0.096   0.099
```

```
LINE          ID.......1.......2.......3.......4.......5.......6.......7.......8.......9......10

1241          UA       0       5      16      30      65      77      84      90      94      97
1242          UA     100
              *

1243          KK    C607
1244          KM      Hydrograph combine 606607 + 211J at C607
1245          HC       2
              *

1246          KK  607608
1247          KM      Normal depth channel route from C607 to C608
1248          KM      Source:  200 Scale Mapping
1249          RS       2    FLOW      -1
1250          RC   0.040   0.050   0.035  1008.0  0.0145
1251          RX  1000.0  1060.0  1070.0  1082.0  1083.0  1095.0  1115.0  1133.0
1252          RY  1688.0  1686.0  1684.0  1681.0  1681.0  1684.0  1685.0  1685.4
              *

1253          KK    C608
1254          KM      Hydrograph combine C608L + 607608 at C608
1255          HC       2
              *

1256          KK  608613
1257          KM      Normal depth channel route from C608 to C613
1258          KM      Source:  HEC-2 Cross Section: AS 3.421
1259          RS       2    FLOW      -1
1260          RC   0.100   0.045   0.100  1338.0  0.0202
1261          RX  9885.0  9887.9  9957.3  9986.7 10012.9 10054.7 10086.3 10122.2
1262          RY  1670.2  1670.1  1668.0  1660.0  1659.9  1661.6  1669.9  1670.8
              *
              * *
              * * Move to the top of Sunflower Wash
              * *
              *

1263          KK    211M
1264          KM   Sub-Basin   211M
1265          KM
1266          KM      The Clark Unit Hydrograph is used for this basin.
1267          KM          The Urban time-area relation is used for this basin.
1268          KM
1269          KM      Time of Concentration for this sub-basin is based on the following:
1270          KM          6-Hour Rainfall, Pattern No.  1.00
1271          KM          An rainfall areal reduction factor of 0.999
1272          KM
1273          KM       EXCESS RAINFALL VALUES EXCEEDED IN 5-MINUTE INTERVALS
1274          KM     5  10  15  20  25  30  35  40  45  50  55  60  65  70  75  80  85  90
1275          KM   .48 .48 .48 .17 .14 .14 .07 .07 .06 .06 .06 .05 .01 .01 .01 .01 .01 .01
1276          KM
1277          KM          L=   0.541 miles, S=  266 feet/mile, Kb= .03
1278          KM
1279          BA   0.081
1280          LG    0.07    0.25    5.70    0.18   50.05
1281          UC   0.125   0.094
```

```
LINE          ID.......1.......2.......3.......4.......5.......6.......7.......8.......9......10

1282          UA       0       5      16      30      65      77      84      90      94      97
1283          UA     100
              *

1284          KK  610611
1285          KM      Normal depth channel route from C610 to 1611
1286          KM      Source:  HEC-2 Cross Section: SU 0.216
1287          RS       2    FLOW      -1
1288          RC   0.050   0.045   0.050  1090.0  0.0211
1289          RX  9911.9  9948.1  9973.6  9988.6 10007.1 10027.0 10049.8 10143.7
1290          RY  1699.3  1691.7  1686.3  1680.1  1679.7  1686.6  1687.3  1698.6
              *

1291          KK    211N
1292          KM   Sub-Basin   211N
1293          KM
1294          KM      The Clark Unit Hydrograph is used for this basin.
1295          KM          The Urban time-area relation is used for this basin.
1296          KM
1297          KM      Time of Concentration for this sub-basin is based on the following:
1298          KM          6-Hour Rainfall, Pattern No.  1.00
1299          KM          An rainfall areal reduction factor of 1.000
1300          KM
1301          KM       EXCESS RAINFALL VALUES EXCEEDED IN 5-MINUTE INTERVALS
1302          KM     5  10  15  20  25  30  35  40  45  50  55  60  65  70  75  80  85  90
1303          KM   .49 .48 .48 .18 .15 .14 .07 .07 .07 .06 .06 .06 .01 .01 .01 .01 .01 .01
1304          KM
1305          KM          L=   0.261 miles, S=  235 feet/mile, Kb= .03
1306          KM
1307          BA   0.020
1308          LG    0.07    0.25    5.70    0.18   56.58
1309          UC   0.088   0.078
1310          UA       0       5      16      30      65      77      84      90      94      97
1311          UA     100
              *

1312          KK   C611R
1313          KM      Hydrograph combine 610611 + 211N at C611 right branch
1314          HC       2
              *

1315          KK    211O
1316          KM   Sub-Basin   211O
1317          KM
1318          KM      The Clark Unit Hydrograph is used for this basin.
1319          KM          The Urban time-area relation is used for this basin.
1320          KM
1321          KM      Time of Concentration for this sub-basin is based on the following:
1322          KM          6-Hour Rainfall, Pattern No.  1.00
1323          KM          An rainfall areal reduction factor of 0.999
1324          KM
1325          KM       EXCESS RAINFALL VALUES EXCEEDED IN 5-MINUTE INTERVALS
1326          KM     5  10  15  20  25  30  35  40  45  50  55  60  65  70  75  80  85  90
1327          KM   .48 .48 .48 .17 .14 .14 .06 .06 .06 .06 .05 .05 .01 .01 .01 .01 .01 .01
1328          KM
```

```
LINE          ID.......1.......2.......3.......4.......5.......6.......7.......8.......9......10

1329          KM          L=   0.371 miles, S=  257 feet/mile, Kb= .03
1330          KM
1331          BA   0.041
1332          LG    0.08    0.25    5.70    0.18   45.31
1333          UC   0.104   0.084
1334          UA       0       5      16      30      65      77      84      90      94      97
1335          UA     100
              *

1336          KK   C609O
1337          KM      Reservoir route at C609.
1338          RS       1    ELEV  1694.0
1339          SV    0.00    0.10    0.21    0.50    0.86    1.40    1.93    2.60    3.10    3.20
1340          SV    3.39    3.60    3.80    4.00    4.10    4.30    4.50    4.70    4.90    5.10
1341          SE  1694.0  1695.0  1696.0  1697.0  1698.0  1699.0  1700.0  1701.0  1701.6  1701.8
1342          SE  1702.0  1702.2  1702.4  1702.6  1702.8  1703.0  1703.2  1703.4  1703.6  1703.8
1343          SQ       0       6      16      33      48      59      68      75      79      85
1344          SQ     108     149     209     289     390     512     658     829    1025    1247
              *

1345          KK  609611
1346          KM      Normal depth channel route from C609 to C611
1347          KM      Source:  200 Scale Mapping
1348          RS       2    FLOW      -1
1349          RC   0.035   0.050   0.035   470.0  0.0200
1350          RX  1000.0  1025.0  1050.0  1054.0  1064.0  1068.0  1088.0  1103.0
1351          RY  1690.0  1688.0  1684.0  1682.0  1682.0  1684.0  1688.0  1690.0
              *

1352          KK   C611I
1353          KM      Hydrograph combine 609611 + C611R at C611I
1354          HC       2
              *

1355          KK   C611O
1356          KM      Reservoir route at C611.
1357          RS       1    ELEV  1668.4
1358          SV    0.00    0.41    1.10    2.49    4.34    6.64    6.72    6.81    6.89    6.97
1359          SV    7.06    7.14    7.22    7.31    7.39    7.47    7.56    7.64    7.72    7.81
1360          SE  1674.0  1676.0  1678.0  1680.0  1682.0  1684.0  1684.2  1684.4  1684.6  1684.8
1361          SE  1685.0  1685.2  1685.4  1685.6  1685.8  1686.0  1686.2  1686.4  1686.6  1686.8
1362          SQ       0       0      86     117     141     162     164     170     181     199
1363          SQ     225     262     313     378     460     558     673     807     958    1118
              *

1364          KK   D611L
1365          KM      Hydrograph diversion at C611.  Main flow continues in the left branch.
1366          KM      Diverted flow is in the right branch.
1367          DT   D611R
1368          DI       0       0      86     117     141     162     164     170     181     199
1369          DI     225     262     313     378     460     558     673     807     958    1118
1370          DQ       0       0      86     117     141     162     164     165     167     169
1371          DQ     171     173     175     176     178     180     182     183     185     187
              *
```

```
LINE          ID.......1.......2.......3.......4.......5.......6.......7.......8.......9......10

1372          KK  611612
1373          KM      Normal depth channel route from C611 to C612
1374          KM      Source:  200 Scale Mapping
1375          RS       4    FLOW      -1
1376          RC   0.040   0.018   0.040   925.0  0.0270
1377          RX  1000.0  1020.0  1023.0  1041.0  1059.0  1060.2  1071.2  1136.2
1378          RY  1666.0  1664.0  1663.5  1663.9  1663.5  1663.9  1664.0  1666.0
              *

1379          KK    211P
1380          KM   Sub-Basin   211P
1381          KM
1382          KM      The Clark Unit Hydrograph is used for this basin.
1383          KM          The Urban time-area relation is used for this basin.
1384          KM
1385          KM      Time of Concentration for this sub-basin is based on the following:
1386          KM          6-Hour Rainfall, Pattern No.  1.00
1387          KM          An rainfall areal reduction factor of 1.000
1388          KM
1389          KM       EXCESS RAINFALL VALUES EXCEEDED IN 5-MINUTE INTERVALS
1390          KM     5  10  15  20  25  30  35  40  45  50  55  60  65  70  75  80  85  90
1391          KM   .49 .49 .49 .18 .15 .15 .07 .07 .07 .07 .07 .07 .01 .01 .01 .01 .01 .01
1392          KM
1393          KM          L=   0.307 miles, S=  192 feet/mile, Kb= .03
1394          KM
1395          BA   0.033
1396          LG    0.08    0.15    7.00    0.11   45.00
1397          UC   0.100   0.077
1398          UA       0       5      16      30      65      77      84      90      94      97
1399          UA     100
              *

1400          KK    C612
1401          KM      Hydrograph combine 611612 + 211P at C612
1402          HC       2
              *
              * *
              * * NOTE: 612613 is too short to route
              * *
              *

1403          KK    C613
1404          KM      Hydrograph combine 608613 + C612 at C613
1405          HC       2
              *

1406          KK  613621
1407          KM      Normal depth channel route from C613 to C621
1408          KM      Source:  HEC-2 Cross Section: AS 3.241
1409          RS       1    FLOW      -1
1410          RC   0.100   0.045   0.100   718.0  0.0251
1411          RX  9695.4  9884.0  9985.0  9991.1 10033.8 10062.8 10097.5 10165.1
1412          RY  1655.5  1647.5  1645.8  1641.1  1640.6  1642.1  1648.7  1654.3
              *
```

```
LINE          ID.......1.......2.......3.......4.......5.......6.......7.......8.......9......10

1413          KK    211L
1414          KM   Sub-Basin   211L
1415          KM
1416          KM      The Clark Unit Hydrograph is used for this basin.
1417          KM          The Urban time-area relation is used for this basin.
1418          KM
1419          KM      Time of Concentration for this sub-basin is based on the following:
1420          KM          6-Hour Rainfall, Pattern No.  1.00
1421          KM          An rainfall areal reduction factor of 0.999
1422          KM
1423          KM       EXCESS RAINFALL VALUES EXCEEDED IN 5-MINUTE INTERVALS
1424          KM     5  10  15  20  25  30  35  40  45  50  55  60  65  70  75  80  85  90
1425          KM   .47 .46 .46 .16 .12 .12 .05 .05 .05 .04 .04 .04 .01 .01 .01 .01 .01 .01
1426          KM
1427          KM          L=   0.508 miles, S=  181 feet/mile, Kb= .03
1428          KM
1429          BA   0.096
1430          LG    0.11    0.26    4.35    0.36   42.40
1431          UC   0.138   0.091
1432          UA       0       5      16      30      65      77      84      90      94      97
1433          UA     100
              *

1434          KK   C621L
1435          KM      Hydrograph combine 613621 + 211L at C621 left branch
1436          HC       2
              *
              * *
              * * Move to the top of Arrow Wash
              * *
              *

1437          KK    211Q
1438          KM   Sub-Basin   211Q
1439          KM
1440          KM      The Clark Unit Hydrograph is used for this basin.
1441          KM          The Urban time-area relation is used for this basin.
1442          KM
1443          KM      Time of Concentration for this sub-basin is based on the following:
1444          KM          6-Hour Rainfall, Pattern No.  1.00
1445          KM          An rainfall areal reduction factor of 1.000
1446          KM
1447          KM       EXCESS RAINFALL VALUES EXCEEDED IN 5-MINUTE INTERVALS
1448          KM     5  10  15  20  25  30  35  40  45  50  55  60  65  70  75  80  85  90
1449          KM   .48 .47 .47 .17 .13 .13 .06 .06 .05 .05 .04 .04 .01 .01 .01 .01 .01 .01
1450          KM
1451          KM          L=   0.255 miles, S=  295 feet/mile, Kb= .03
1452          KM
1453          BA   0.021
1454          LG    0.08    0.25    5.70    0.18   30.04
1455          UC   0.083   0.071
1456          UA       0       5      16      30      65      77      84      90      94      97
1457          UA     100
              *
```

```
LINE          ID.......1.......2.......3.......4.......5.......6.......7.......8.......9......10

1458          KK  616617
1459          KM     Normal depth channel route from C616 to C617
1460          KM     Source:  200 Scale Mapping
1461          RS       2    FLOW      -1
1462          RC   0.070   0.060   0.070  1131.0  0.0553
1463          RX  1000.0  1008.0  1015.0  1045.0  1050.0  1080.0  1100.0  1110.0
1464          RY  1834.0  1832.0  1830.0  1826.0  1826.0  1830.0  1834.0  1836.0
              *

1465          KK   211R
1466          KM   Sub-Basin   211R
1467          KM
1468          KM     The Clark Unit Hydrograph is used for this basin.
1469          KM         The Urban time-area relation is used for this basin.
1470          KM
1471          KM     Time of Concentration for this sub-basin is based on the following:
1472          KM         6-Hour Rainfall, Pattern No.  1.00
1473          KM         An rainfall areal reduction factor of 0.999
1474          KM
1475          KM      EXCESS RAINFALL VALUES EXCEEDED IN 5-MINUTE INTERVALS
1476          KM    5  10  15  20  25  30  35  40  45  50  55  60  65  70  75  80  85  90
1477          KM   .48 .47 .47 .17 .14 .13 .06 .06 .06 .05 .05 .04 .01 .01 .01 .01 .01 .01
1478          KM
1479          KM         L=   0.572 miles, S=  271 feet/mile, Kb= .03
1480          KM
1481          BA   0.084
1482          LG    0.08    0.25    5.70    0.18   37.77
1483          UC   0.125   0.096
1484          UA       0       5      16      30      65      77      84      90      94      97
1485          UA     100
              *

1486          KK   C617L
1487          KM     Hydrograph combine 616617 + 211R at C617 left branch
1488          HC       2
              *

1489          KK   211U
1490          KM   Sub-Basin   211U
1491          KM
1492          KM     The Clark Unit Hydrograph is used for this basin.
1493          KM         The Urban time-area relation is used for this basin.
1494          KM
1495          KM     Time of Concentration for this sub-basin is based on the following:
1496          KM         6-Hour Rainfall, Pattern No.  1.00
1497          KM         An rainfall areal reduction factor of 1.000
1498          KM
1499          KM      EXCESS RAINFALL VALUES EXCEEDED IN 5-MINUTE INTERVALS
1500          KM    5  10  15  20  25  30  35  40  45  50  55  60  65  70  75  80  85  90
1501          KM   .49 .49 .49 .18 .15 .15 .07 .07 .07 .07 .07 .06 .02 .02 .02 .02 .02 .02
1502          KM
1503          KM         L=   0.831 miles, S=  214 feet/mile, Kb= .03
1504          KM
1505          BA   0.027
```

```
LINE          ID.......1.......2.......3.......4.......5.......6.......7.......8.......9......10

1506          LG    0.07    0.25    5.70    0.18   65.99
1507          UC   0.163   0.330
1508          UA       0       5      16      30      65      77      84      90      94      97
1509          UA     100
              *

1510          KK   D614L
1511          KM      Hydrograph diversion at C614.  Main flow continues in the left branch.
1512          KM      Diverted flow is in the right branch.
1513          DT   D614R
1514          DI       0     4.3     8.5    20.0    49.0    85.5
1515          DQ       0     2.5     5.0    13.5    35.0    60.0
              *

1516          KK    C617
1517          KM      Hydrograph combine C617L + D614L at C617
1518          HC       2
              *

1519          KK  617618
1520          KM      Normal depth channel route from C617 to C618
1521          KM      Source:  HEC-2 Cross Section: AR 0.836
1522          RS       3    FLOW      -1
1523          RC   0.070   0.060   0.070  1912.0  0.0345
1524          RX  9983.3  9987.2  9989.2  9991.1 10031.5 10053.5 10070.6 10097.7
1525          RY  1766.5  1762.3  1760.2  1758.1  1757.8  1760.8  1764.2  1770.6
              *

1526          KK    211S
1527          KM   Sub-Basin   211S
1528          KM
1529          KM      The Clark Unit Hydrograph is used for this basin.
1530          KM          The Urban time-area relation is used for this basin.
1531          KM
1532          KM      Time of Concentration for this sub-basin is based on the following:
1533          KM          6-Hour Rainfall, Pattern No.  1.00
1534          KM          An rainfall areal reduction factor of 0.999
1535          KM
1536          KM       EXCESS RAINFALL VALUES EXCEEDED IN 5-MINUTE INTERVALS
1537          KM     5  10  15  20  25  30  35  40  45  50  55  60  65  70  75  80  85  90
1538          KM   .47 .47 .46 .16 .13 .12 .06 .05 .05 .04 .03 .03 .01 .01 .01 .01 .01 .01
1539          KM
1540          KM          L=   0.445 miles, S=  272 feet/mile, Kb= .07
1541          KM
1542          BA   0.050
1543          LG    0.11    0.31    5.70    0.19   30.06
1544          UC   0.175   0.154
1545          UA       0       5      16      30      65      77      84      90      94      97
1546          UA     100
              *
```

```
LINE          ID.......1.......2.......3.......4.......5.......6.......7.......8.......9......10

1547          KK   C618I
1548          KM      Hydrograph combine 617618 + 211S at C618I
1549          HC       2
              *

1550          KK   C618O
1551          KM      Reservoir route at C618.
1552          RS       1    ELEV  1730.6
1553          SV    0.00    0.06    0.24    0.50    0.75    1.20    1.66    2.30    2.94    3.20
1554          SV    3.30    3.40    3.60    3.80    3.90    4.10    4.30    4.50    4.65     5.0
1555          SE  1730.6  1736.0  1738.0  1739.0  1740.0  1741.0  1742.0  1743.0  1744.0  1744.3
1556          SE  1744.4  1744.6  1744.8  1745.0  1745.2  1745.4  1745.6  1745.8  1746.0  1746.2
1557          SQ       0     2.6     3.0     3.1     3.2     3.3     3.5     3.6     3.7     3.7
1558          SQ     3.8       8      21      48      88     143     212     295     390     499
              *

1559          KK  BB614R
1560          KM      Retrieve previously diverted hydrograph at C614 in the right branch.
1561          DR   D614R
              *

1562          KK  614615
1563          KM      Normal depth channel route from C614 to C615
1564          KM      Source:  Hydrology Field Reconnaissance
1565          RS       3    FLOW      -1
1566          RC   0.040   0.018   0.040  1114.0  0.0397
1567          RX  1000.0  1020.0  1025.0  1059.0  1091.0  1093.0  1098.0  1103.0
1568          RY  1828.0  1822.0  1821.5  1822.2  1821.8  1822.0  1824.0  1826.0
              *

1569          KK    211V
1570          KM   Sub-Basin   211V
1571          KM
1572          KM      The Clark Unit Hydrograph is used for this basin.
1573          KM          The Urban time-area relation is used for this basin.
1574          KM
1575          KM      Time of Concentration for this sub-basin is based on the following:
1576          KM          6-Hour Rainfall, Pattern No.  1.00
1577          KM          An rainfall areal reduction factor of 1.000
1578          KM
1579          KM       EXCESS RAINFALL VALUES EXCEEDED IN 5-MINUTE INTERVALS
1580          KM     5  10  15  20  25  30  35  40  45  50  55  60  65  70  75  80  85  90
1581          KM   .50 .50 .50 .19 .16 .16 .08 .08 .08 .08 .08 .08 .02 .02 .02 .02 .02 .02
1582          KM
1583          KM          L=   0.222 miles, S=  212 feet/mile, Kb= .04
1584          KM
1585          BA   0.005
1586          LG    0.06    0.25    5.80    0.18   90.00
1587          UC   0.096   0.170
1588          UA       0       5      16      30      65      77      84      90      94      97
1589          UA     100
              *
```

```
LINE          ID.......1.......2.......3.......4.......5.......6.......7.......8.......9......10

1590          KK    C615
1591          KM      Hydrograph combine 614615 + 211V at C615
1592          HC       2    0.03
              *

1593          KK   D615L
1594          KM      Hydrograph diversion at C615.  Main flow continues in the left branch.
1595          KM      Diverted flow is in the right branch.
1596          DT   D615R
1597          DI       0     1.3     2.5     5.3     8.6    14.2    23.0    36.8    55.5    77.5
1598          DQ       0       0       0     1.3     2.6     4.2     7.0    12.8    19.5    29.5
              *

1599          KK  615618
1600          KM      Normal depth channel route from C615 to C618
1601          KM      Source:  Hydrology Field Reconnaissance
1602          RS       1    FLOW      -1
1603          RC   0.040   0.018   0.040   499.0  0.1338
1604          RX  1000.0  1008.0  1009.2  1013.2  1027.2  1028.4  1036.4  1045.4
1605          RY  1800.4  1799.6  1799.2  1798.8  1798.3  1798.7  1798.9  1800.4
              *

1606          KK    C618
1607          KM      Hydrograph combine C618O + 615618 at C618
1608          HC       2    0.19
              *

1609          KK  618619
1610          KM      Normal depth channel route from C618 to C619
1611          KM      Source:  HEC-2 Cross Section: AR 0.441
1612          RS       3    FLOW      -1
1613          RC   0.070   0.060   0.070  1837.0  0.0285
1614          RX  9870.6  9928.6  9957.1  9996.9 10004.9 10022.1 10062.0 10116.4
1615          RY  1709.2  1700.9  1698.8  1690.0  1689.8  1699.6  1700.3  1711.3
              *

1616          KK    211T
1617          KM   Sub-Basin   211T
1618          KM
1619          KM      The Clark Unit Hydrograph is used for this basin.
1620          KM          The Urban time-area relation is used for this basin.
1621          KM
1622          KM      Time of Concentration for this sub-basin is based on the following:
1623          KM          6-Hour Rainfall, Pattern No.  1.00
1624          KM          An rainfall areal reduction factor of 0.999
1625          KM
1626          KM       EXCESS RAINFALL VALUES EXCEEDED IN 5-MINUTE INTERVALS
1627          KM     5  10  15  20  25  30  35  40  45  50  55  60  65  70  75  80  85  90
1628          KM   .49 .49 .49 .18 .15 .15 .07 .07 .07 .07 .06 .06 .01 .01 .01 .01 .01 .01
1629          KM
1630          KM          L=   0.488 miles, S=  250 feet/mile, Kb= .03
1631          KM
1632          BA   0.066
1633          LG    0.07    0.25    5.70    0.18   64.25
```

```
LINE          ID.......1.......2.......3.......4.......5.......6.......7.......8.......9......10

1634          UC   0.117   0.090
1635          UA       0       5      16      30      65      77      84      90      94      97
1636          UA     100
              *

1637          KK   C619L
1638          KM      Hydrograph combine 618619 + 211T at C619 left branch
1639          HC       2
              *

1640          KK  BB615R
1641          KM      Retrieve previously diverted hydrograph at C615 in the right branch.
1642          DR   D615R
              *

1643          KK  615619
1644          KM      Normal depth channel route from C615 to C619
1645          KM      Source:  Hydrology Field Reconnaissance
1646          RS       6    FLOW      -1
1647          RC   0.045   0.024   0.025  2444.0  0.0493
1648          RX  1000.0  1009.3  1018.5  1037.0  1039.3  1053.0  1065.0  1065.0
1649          RY  1727.2  1726.5  1725.8  1724.4  1724.6  1725.8  1725.9  1725.9
              *

1650          KK   C619I
1651          KM      Hydrograph combine C619L + 615619 at C619I
1652          HC       2    0.25
              *

1653          KK   C619O
1654          KM      Reservoir route at C619.
1655          RS       1    ELEV  1675.6
1656          SV    0.00    1.72    2.98    4.70    7.00    7.08    7.17    7.26    7.34    7.43
1657          SV    7.51    7.60    7.69    7.77    7.86
1658          SE  1675.6  1686.0  1688.0  1690.0  1692.0  1692.2  1692.4  1692.6  1692.8  1693.0
1659          SE  1693.2  1693.4  1693.6  1693.8  1694.0
1660          SQ       0       4      25      72     128     155     163     172     178     187
1661          SQ     195     213     238     273     318     374     441     518     606     706
1662          SE  1675.6  1676.0  1678.0  1680.0  1682.0  1684.0  1686.0  1688.0  1690.0  1692.0
1663          SE  1692.2  1692.4  1692.6  1692.8  1693.0  1693.2  1693.4  1693.6  1693.8  1694.0
              *

1664          KK   D619R
1665          KM      Hydrograph diversion at C619.  Main flow continues in the right branch.
1666          KM      Diverted flow is in the left branch.
1667          DT   D619L
1668          DI       0       4      25      72     128     155     163     172     178     187
1669          DI     195     213     238     273     318     374     441     518     606     706
1670          DQ       0       0       0       0       0       0       0       0       0       0
1671          DQ       8      24      49      83     128     182     249     326     412     512
              *
```

```
LINE          ID.......1.......2.......3.......4.......5.......6.......7.......8.......9......10

1672          KK  619620
1673          KM                 Lag route through Palisades Plaza storm drain
1674          RT       0                1
              *

1675          KK  BB619L
1676          KM      Retrieve previously diverted hydrograph at C619 in the left branch.
1677          DR   D619L
              *

1678          KK  619620
1679          KM   Normal depth channel route from C619 to C620 in Fountain Hills Blvd.
1680          KM   Source:  200 Scale Mapping. Similiar to 523548
1681          RS       1    FLOW      -1
1682          RC   0.040   0.024   0.040   800.0  0.0288
1683          RX   918.0   940.0   960.0  1000.0  1040.0  1040.1  1044.1  1088.1
1684          RY  1648.0  1645.8  1643.8  1644.7  1644.0  1644.5  1644.5  1648.0
              *

1685          KK    211W
1686          KM   Sub-Basin   211W
1687          KM
1688          KM      The Clark Unit Hydrograph is used for this basin.
1689          KM          The Urban time-area relation is used for this basin.
1690          KM
1691          KM      Time of Concentration for this sub-basin is based on the following:
1692          KM          6-Hour Rainfall, Pattern No.  1.00
1693          KM          An rainfall areal reduction factor of 1.000
1694          KM
1695          KM       EXCESS RAINFALL VALUES EXCEEDED IN 5-MINUTE INTERVALS
1696          KM     5  10  15  20  25  30  35  40  45  50  55  60  65  70  75  80  85  90
1697          KM   .49 .49 .49 .19 .16 .15 .08 .08 .07 .07 .07 .07 .02 .02 .02 .02 .02 .02
1698          KM
1699          KM          L=   0.289 miles, S=  173 feet/mile, Kb= .03
1700          KM
1701          BA   0.030
1702          LG    0.06    0.25    5.70    0.18   73.65
1703          UC   0.100   0.079
1704          UA       0       5      16      30      65      77      84      90      94      97
1705          UA     100
              *

1706          KK   C620R
1707          KM      Hydrograph combine 619620 + R619L + 211W at C620 right branch
1708          HC       3    0.28
              *

1709          KK  BB611R
1710          KM      Retrieve previously diverted hydrograph at C611 in the right branch.
1711          DR   D611R
              *
```

```
LINE          ID.......1.......2.......3.......4.......5.......6.......7.......8.......9......10

1712          KK  611620
1713          KM                 Lag route through Palisades Plaza storm drain
1714          RT       0               1
              *

1715          KK    C620
1716          KM      Hydrograph combine 611620 + C620R at C620
1717          HC       2    0.42
              *

1718          KK  620621
1719          KM      Normal depth channel route from C620 to C621
1720          KM      Source:  HEC-2 Cross Section: AR 0.081
1721          RS       1    FLOW      -1
1722          RC   0.050   0.050   0.050   915.0  0.0394
1723          RX  9790.0  9790.1  9972.2  9994.8 10004.9 10029.7 10048.6 10125.0
1724          RY  1657.9  1657.5  1656.4  1646.8  1646.8  1657.8  1657.0  1657.9
              *

1725          KK    C621
1726          KM      Hydrograph combine C621L + 620621 at C621
1727          HC       2    7.93
              *

1728          KK  621622
1729          KM      Normal depth channel route from C621 to C622
1730          KM      Source:  HEC-2 Cross Section: AS 2.785
1731          RS       6    FLOW      -1
1732          RC   0.100   0.045   0.100  3830.0  0.0144
1733          RX  9827.3  9922.9  9951.0 10000.0 10002.7 10044.7 10071.6 10076.8
1734          RY  1615.2  1611.0  1604.1  1600.8  1601.5  1601.6  1611.0  1613.9
              *

1735          KK    211X
1736          KM   Sub-Basin   211X
1737          KM
1738          KM      The Clark Unit Hydrograph is used for this basin.
1739          KM          The Urban time-area relation is used for this basin.
1740          KM
1741          KM      Time of Concentration for this sub-basin is based on the following:
1742          KM          6-Hour Rainfall, Pattern No.  1.00
1743          KM          An rainfall areal reduction factor of 0.997
1744          KM
1745          KM       EXCESS RAINFALL VALUES EXCEEDED IN 5-MINUTE INTERVALS
1746          KM     5  10  15  20  25  30  35  40  45  50  55  60  65  70  75  80  85  90
1747          KM   .48 .48 .48 .17 .14 .14 .06 .06 .06 .05 .05 .05 .01 .01 .01 .01 .01 .01
1748          KM
1749          KM          L=   0.929 miles, S=  111 feet/mile, Kb= .03
1750          KM
1751          BA   0.214
1752          LG    0.10    0.26    4.90    0.26   56.64
1753          UC   0.213   0.151
1754          UA       0       5      16      30      65      77      84      90      94      97
1755          UA     100
              *
```

```
LINE          ID.......1.......2.......3.......4.......5.......6.......7.......8.......9......10

1756          KK   C622R
1757          KM      Hydrograph combine 621622 + 211X at C622 right branch
1758          HC       2
              *
              * *
              * * Move to the top of Tulip Wash
              * *
              *

1759          KK    211A
1760          KM   Sub-Basin   211A
1761          KM
1762          KM      The Clark Unit Hydrograph is used for this basin.
1763          KM          The Urban time-area relation is used for this basin.
1764          KM
1765          KM      Time of Concentration for this sub-basin is based on the following:
1766          KM          6-Hour Rainfall, Pattern No.  1.00
1767          KM          An rainfall areal reduction factor of 0.998
1768          KM
1769          KM       EXCESS RAINFALL VALUES EXCEEDED IN 5-MINUTE INTERVALS
1770          KM     5  10  15  20  25  30  35  40  45  50  55  60  65  70  75  80  85  90
1771          KM   .47 .47 .47 .16 .13 .12 .06 .06 .05 .04 .04 .03 .01 .01 .01 .01 .01 .01
1772          KM
1773          KM          L=   0.820 miles, S=  248 feet/mile, Kb= .03
1774          KM
1775          BA   0.143
1776          LG    0.09     0.25     5.70     0.18    23.09
1777          UC   0.158    0.124
1778          UA       0        5       16       30       65       77       84       90       94       97
1779          UA     100
              *

1780          KK   C600O
1781          KM      Reservoir route at C600.
1782          RS       1     ELEV  1754.0
1783          SV    0.00     0.14     0.62     1.52     2.95     5.06     7.98    11.80    16.61    22.67
1784          SV   30.07    38.71    40.50    40.60    41.60    42.70    43.70    44.60    45.70
1785          SE  1754.0   1756.0   1758.0   1760.0   1762.0   1764.0   1766.0   1768.0   1770.0   1772.0
1786          SE  1774.0   1776.0  1776.36   1776.4   1776.6   1776.8   1777.0   1777.2   1777.4
1787          SQ       0       55      183      320      427      513      570      620      665      709
1788          SQ     750      789      795      795      812      849      906      984     1084
              *

1789          KK  600601
1790          KM      Normal depth channel route from C600 to C601
1791          KM      Source:  HEC-2 Cross Section: TU 1.538
1792          RS       3     FLOW      -1
1793          RC   0.040    0.025    0.040   2406.0   0.0176
1794          RX  9945.6   9959.4   9968.3   9985.9  10000.0  10017.2  10038.7  10058.8
1795          RY  1734.5   1732.3   1727.9   1726.2   1725.0   1727.7   1735.2   1736.0
              *
```

```
LINE          ID.......1.......2.......3.......4.......5.......6.......7.......8.......9......10

1796          KK    211B
1797          KM   Sub-Basin   211B
1798          KM
1799          KM      The Clark Unit Hydrograph is used for this basin.
1800          KM          The Urban time-area relation is used for this basin.
1801          KM
1802          KM      Time of Concentration for this sub-basin is based on the following:
1803          KM          6-Hour Rainfall, Pattern No.  1.00
1804          KM          An rainfall areal reduction factor of 0.999
1805          KM
1806          KM       EXCESS RAINFALL VALUES EXCEEDED IN 5-MINUTE INTERVALS
1807          KM     5  10  15  20  25  30  35  40  45  50  55  60  65  70  75  80  85  90
1808          KM   .47 .47 .46 .16 .13 .12 .05 .05 .05 .04 .04 .03 .00 .00 .00 .00 .00 .00
1809          KM
1810          KM          L=   0.618 miles, S=  244 feet/mile, Kb= .03
1811          KM
1812          BA   0.109
1813          LG    0.09    0.25    5.80    0.18   20.22
1814          UC   0.138   0.099
1815          UA       0       5      16      30      65      77      84      90      94      97
1816          UA     100
              *

1817          KK    C601
1818          KM      Hydrograph combine 600601 + 211B at C601
1819          HC       2
              *

1820          KK  601602
1821          KM      Normal depth channel route from C601 to C602
1822          KM      Source:  HEC-2 Cross Section: TU 1.102
1823          RS       3    FLOW      -1
1824          RC   0.065   0.040   0.055  1765.0  0.0146
1825          RX  9916.9  9959.1  9965.8  9980.2 10004.0 10019.5 10047.3 10094.1
1826          RY  1699.9  1699.8  1696.4  1689.8  1688.9  1695.7  1698.2  1698.4
              *

1827          KK    211C
1828          KM   Sub-Basin   211C
1829          KM
1830          KM      The Clark Unit Hydrograph is used for this basin.
1831          KM          The Urban time-area relation is used for this basin.
1832          KM
1833          KM      Time of Concentration for this sub-basin is based on the following:
1834          KM          6-Hour Rainfall, Pattern No.  1.00
1835          KM          An rainfall areal reduction factor of 0.999
1836          KM
1837          KM       EXCESS RAINFALL VALUES EXCEEDED IN 5-MINUTE INTERVALS
1838          KM     5  10  15  20  25  30  35  40  45  50  55  60  65  70  75  80  85  90
1839          KM   .48 .48 .48 .17 .14 .14 .06 .06 .06 .05 .05 .05 .01 .01 .01 .01 .01 .01
1840          KM
1841          KM          L=   0.479 miles, S=  154 feet/mile, Kb= .03
1842          KM
1843          BA   0.043
```

```
LINE          ID.......1.......2.......3.......4.......5.......6.......7.......8.......9......10

1844          LG    0.08    0.25    5.70    0.18   44.48
1845          UC   0.138   0.137
1846          UA       0       5      16      30      65      77      84      90      94      97
1847          UA     100
              *

1848          KK   C602L
1849          KM      Hydrograph combine 601602 + 211C at C602 left branch
1850          HC       2
              *

1851          KK    211D
1852          KM   Sub-Basin   211D
1853          KM
1854          KM      The Clark Unit Hydrograph is used for this basin.
1855          KM          The Urban time-area relation is used for this basin.
1856          KM
1857          KM      Time of Concentration for this sub-basin is based on the following:
1858          KM          6-Hour Rainfall, Pattern No.  1.00
1859          KM          An rainfall areal reduction factor of 0.999
1860          KM
1861          KM       EXCESS RAINFALL VALUES EXCEEDED IN 5-MINUTE INTERVALS
1862          KM     5  10  15  20  25  30  35  40  45  50  55  60  65  70  75  80  85  90
1863          KM   .46 .45 .45 .15 .11 .11 .04 .04 .04 .03 .03 .03 .01 .01 .01 .01 .01 .01
1864          KM
1865          KM          L=   0.686 miles, S=  115 feet/mile, Kb= .03
1866          KM
1867          BA   0.071
1868          LG    0.08    0.25    3.85    0.46   37.42
1869          UC   0.183   0.189
1870          UA       0       5      16      30      65      77      84      90      94      97
1871          UA     100
              *

1872          KK    C602
1873          KM      Hydrograph combine C602L + 211D at C602
1874          HC       2
              *

1875          KK  602603
1876          KM      Normal depth channel route from C602 to C603
1877          KM      Source:  HEC-2 Cross Section: LE 0.672
1878          RS       3    FLOW      -1
1879          RC   0.060   0.045   0.060  2610.0  0.0211
1880          RX  9891.9  9963.9  9986.5 10000.0 10012.7 10023.8 10085.0 10176.4
1881          RY  1653.5  1653.5  1644.4  1644.1  1645.0  1649.8  1651.7  1656.7
              *

1882          KK    211E
1883          KM   Sub-Basin   211E
1884          KM
1885          KM      The Clark Unit Hydrograph is used for this basin.
1886          KM          The Urban time-area relation is used for this basin.
1887          KM
1888          KM      Time of Concentration for this sub-basin is based on the following:
```

```
LINE          ID.......1.......2.......3.......4.......5.......6.......7.......8.......9......10

1889          KM          6-Hour Rainfall, Pattern No.  1.00
1890          KM          An rainfall areal reduction factor of 0.998
1891          KM
1892          KM       EXCESS RAINFALL VALUES EXCEEDED IN 5-MINUTE INTERVALS
1893          KM     5  10  15  20  25  30  35  40  45  50  55  60  65  70  75  80  85  90
1894          KM   .48 .47 .47 .17 .13 .13 .06 .06 .06 .05 .04 .04 .01 .01 .01 .01 .01 .01
1895          KM
1896          KM          L=   0.609 miles, S=  118 feet/mile, Kb= .03
1897          KM
1898          BA   0.156
1899          LG    0.08    0.25    5.10    0.24   42.21
1900          UC   0.171   0.101
1901          UA       0       5      16      30      65      77      84      90      94      97
1902          UA     100
              *

1903          KK    C603
1904          KM      Hydrograph combine 602603 + 211E at C603
1905          HC       2
              *

1906          KK  603622
1907          KM      Normal depth channel route from C603 to C622
1908          KM      Source:  HEC-2 Cross Section: LE 0.287
1909          RS       4    FLOW      -1
1910          RC   0.060   0.045   0.060  2745.0  0.0204
1911          RX  9883.0  9929.7  9967.3  9991.6 10042.2 10073.6 10177.6 10194.5
1912          RY  1619.4  1618.7  1611.8  1602.1  1603.3  1609.4  1610.5  1610.6
              *

1913          KK    211F
1914          KM   Sub-Basin   211F
1915          KM
1916          KM      The Clark Unit Hydrograph is used for this basin.
1917          KM          The Urban time-area relation is used for this basin.
1918          KM
1919          KM      Time of Concentration for this sub-basin is based on the following:
1920          KM          6-Hour Rainfall, Pattern No.  1.00
1921          KM          An rainfall areal reduction factor of 0.999
1922          KM
1923          KM       EXCESS RAINFALL VALUES EXCEEDED IN 5-MINUTE INTERVALS
1924          KM     5  10  15  20  25  30  35  40  45  50  55  60  65  70  75  80  85  90
1925          KM   .48 .48 .48 .17 .14 .14 .06 .06 .06 .05 .05 .05 .01 .01 .01 .01 .01 .01
1926          KM
1927          KM          L=   0.770 miles, S=  134 feet/mile, Kb= .03
1928          KM
1929          BA   0.113
1930          LG    0.08    0.25    4.30    0.36   62.81
1931          UC   0.183   0.158
1932          UA       0       5      16      30      65      77      84      90      94      97
1933          UA     100
              *
```

```
LINE          ID.......1.......2.......3.......4.......5.......6.......7.......8.......9......10

1934          KK   C622L
1935          KM      Hydrograph combine 603622 + 211F at C622 left branch
1936          HC       2
              *

1937          KK    C622
1938          KM      Hydrograph combine C622R + C622L at C622
1939          HC       2
              *

1940          KK  622549
1941          KM      Normal depth channel route from C622 to C549
1942          KM      Source:  HEC-2 Cross Section: AS 2.279
1943          RS       5    FLOW      -1
1944          RC   0.113   0.125   0.120  1697.0  0.0118
1945          RX  9847.1  9851.0  9857.5  9862.8 10052.6 10062.8 10075.6 10084.6
1946          RY  1573.5  1571.3  1567.2  1564.6  1565.1  1566.7  1573.7  1573.9
              *

1947          KK    211Y
1948          KM   Sub-Basin   211Y
1949          KM
1950          KM      The Clark Unit Hydrograph is used for this basin.
1951          KM          The Urban time-area relation is used for this basin.
1952          KM
1953          KM      Time of Concentration for this sub-basin is based on the following:
1954          KM          6-Hour Rainfall, Pattern No.  1.00
1955          KM          An rainfall areal reduction factor of 0.999
1956          KM
1957          KM       EXCESS RAINFALL VALUES EXCEEDED IN 5-MINUTE INTERVALS
1958          KM     5  10  15  20  25  30  35  40  45  50  55  60  65  70  75  80  85  90
1959          KM   .49 .48 .48 .18 .15 .14 .07 .07 .07 .06 .06 .06 .01 .01 .01 .01 .01 .01
1960          KM
1961          KM          L=   0.606 miles, S=  147 feet/mile, Kb= .04
1962          KM
1963          BA   0.089
1964          LG    0.09    0.21    6.60    0.13   50.06
1965          UC   0.183   0.149
1966          UA       0       5      16      30      65      77      84      90      94      97
1967          UA     100
              *

1968          KK   C549R
1969          KM      Hydrograph combine 622549 + 211Y at C549 right branch
1970          HC       2
              *

1971          KK    C549
1972          KM      Hydrograph combine C549L + C549R at C549
1973          HC       2
              *
```

```
LINE          ID.......1.......2.......3.......4.......5.......6.......7.......8.......9......10

1974          KK  549626
1975          KM      Normal depth channel route from C549 to C626
1976          KM      Source:  HEC-2 Cross Section: AS 1.855
1977          RS       6    FLOW      -1
1978          RC   0.113   0.125   0.120  2044.0  0.0171
1979          RX  9943.2  9963.0  9985.6  9994.1 10007.6 10029.2 10150.5 10171.3
1980          RY  1539.3  1534.5  1531.2  1528.3  1528.2  1531.7  1532.5  1537.4
              *

1981          KK    211Z
1982          KM   Sub-Basin   211Z
1983          KM
1984          KM      The Clark Unit Hydrograph is used for this basin.
1985          KM          The Urban time-area relation is used for this basin.
1986          KM
1987          KM      Time of Concentration for this sub-basin is based on the following:
1988          KM          6-Hour Rainfall, Pattern No.  1.00
1989          KM          An rainfall areal reduction factor of 0.999
1990          KM
1991          KM       EXCESS RAINFALL VALUES EXCEEDED IN 5-MINUTE INTERVALS
1992          KM     5  10  15  20  25  30  35  40  45  50  55  60  65  70  75  80  85  90
1993          KM   .46 .46 .46 .15 .12 .11 .05 .05 .04 .03 .03 .03 .01 .01 .01 .01 .01 .01
1994          KM
1995          KM          L=   0.509 miles, S=  147 feet/mile, Kb= .04
1996          KM
1997          BA   0.083
1998          LG    0.14    0.27    4.50    0.34   34.43
1999          UC   0.171   0.126
2000          UA       0       5      16      30      65      77      84      90      94      97
2001          UA     100
              *

2002          KK   C626C
2003          KM      Hydrograph combine 549626 + 211Z at C626 main branch
2004          HC       2
              *

2005          KK   211AA
2006          KM   Sub-Basin  211AA
2007          KM
2008          KM      The Clark Unit Hydrograph is used for this basin.
2009          KM          The Urban time-area relation is used for this basin.
2010          KM
2011          KM      Time of Concentration for this sub-basin is based on the following:
2012          KM          6-Hour Rainfall, Pattern No.  1.00
2013          KM          An rainfall areal reduction factor of 1.000
2014          KM
2015          KM       EXCESS RAINFALL VALUES EXCEEDED IN 5-MINUTE INTERVALS
2016          KM     5  10  15  20  25  30  35  40  45  50  55  60  65  70  75  80  85  90
2017          KM   .49 .48 .48 .18 .15 .14 .07 .07 .06 .06 .06 .06 .01 .01 .01 .01 .01 .01
2018          KM
2019          KM          L=   0.480 miles, S=   85 feet/mile, Kb= .03
2020          KM
2021          BA   0.034
```

```
LINE          ID.......1.......2.......3.......4.......5.......6.......7.......8.......9......10

2022          LG    0.08    0.19    6.60    0.13   39.38
2023          UC   0.167   0.193
2024          UA       0       5      16      30      65      77      84      90      94      97
2025          UA     100
              *

2026          KK  625626
2027          KM      Normal depth channel route from C625 to C626
2028          KM      Source:  200 Scale Mapping
2029          RS       2    FLOW      -1
2030          RC   0.040   0.018   0.040  1350.0  0.0252
2031          RX  1000.0  1020.0  1021.2  1055.2  1089.2  1090.4  1100.4  1105.4
2032          RY  1527.0  1526.0  1525.6  1526.3  1525.6  1526.0  1528.0  1530.0
              *

2033          KK   211AB
2034          KM   Sub-Basin  211AB
2035          KM
2036          KM      The Clark Unit Hydrograph is used for this basin.
2037          KM          The Urban time-area relation is used for this basin.
2038          KM
2039          KM      Time of Concentration for this sub-basin is based on the following:
2040          KM          6-Hour Rainfall, Pattern No.  1.00
2041          KM          An rainfall areal reduction factor of 0.999
2042          KM
2043          KM       EXCESS RAINFALL VALUES EXCEEDED IN 5-MINUTE INTERVALS
2044          KM     5  10  15  20  25  30  35  40  45  50  55  60  65  70  75  80  85  90
2045          KM   .49 .49 .49 .18 .15 .15 .07 .07 .07 .07 .07 .07 .01 .01 .01 .01 .01 .01
2046          KM
2047          KM          L=   0.293 miles, S=  321 feet/mile, Kb= .03
2048          KM
2049          BA   0.040
2050          LG    0.07    0.17    6.80    0.12   54.72
2051          UC   0.083   0.055
2052          UA       0       5      16      30      65      77      84      90      94      97
2053          UA     100
              *

2054          KK  623624
2055          KM      Normal depth channel route from C623 to C624
2056          KM      Source:  200 Scale Mapping
2057          RS       1    FLOW      -1
2058          RC   0.040   0.018   0.040   701.0  0.0114
2059          RX  1000.0  1010.0  1011.2  1027.2  1043.2  1044.4  1059.4  1074.4
2060          RY  1534.0  1532.0  1531.6  1531.9  1531.6  1532.0  1532.5  1533.0
              *

2061          KK   211AC
2062          KM   Sub-Basin  211AC
2063          KM
2064          KM      The Clark Unit Hydrograph is used for this basin.
2065          KM          The Urban time-area relation is used for this basin.
2066          KM
2067          KM      Time of Concentration for this sub-basin is based on the following:
2068          KM          6-Hour Rainfall, Pattern No.  1.00
```

```
LINE          ID.......1.......2.......3.......4.......5.......6.......7.......8.......9......10

2069          KM          An rainfall areal reduction factor of 1.000
2070          KM
2071          KM       EXCESS RAINFALL VALUES EXCEEDED IN 5-MINUTE INTERVALS
2072          KM     5  10  15  20  25  30  35  40  45  50  55  60  65  70  75  80  85  90
2073          KM   .49 .49 .49 .19 .16 .15 .08 .08 .07 .07 .07 .07 .01 .01 .01 .01 .01 .01
2074          KM
2075          KM          L=   0.306 miles, S=   82 feet/mile, Kb= .03
2076          KM
2077          BA   0.027
2078          LG    0.08    0.15    8.40    0.07   44.76
2079          UC   0.133   0.119
2080          UA       0       5      16      30      65      77      84      90      94      97
2081          UA     100
              *

2082          KK    C624
2083          KM      Hydrograph combine 623624 + 211AC at C624
2084          HC       2
              *

2085          KK  624626
2086          KM      Normal depth channel route from C624 to C626
2087          KM      Source:  HEC-2 Cross Section: AS 1.727
2088          RS       2    FLOW      -1
2089          RC   0.080   0.060   0.080   637.0  0.0235
2090          RX  9872.9  9881.0  9893.9  9902.2  9967.6  9976.4 10076.1 10084.3
2091          RY  1526.3  1524.6  1521.7  1520.0  1520.7  1521.6  1520.7  1526.2
              *

2092          KK   211AD
2093          KM   Sub-Basin  211AD
2094          KM
2095          KM      The Clark Unit Hydrograph is used for this basin.
2096          KM          The Urban time-area relation is used for this basin.
2097          KM
2098          KM      Time of Concentration for this sub-basin is based on the following:
2099          KM          6-Hour Rainfall, Pattern No.  1.00
2100          KM          An rainfall areal reduction factor of 0.999
2101          KM
2102          KM       EXCESS RAINFALL VALUES EXCEEDED IN 5-MINUTE INTERVALS
2103          KM     5  10  15  20  25  30  35  40  45  50  55  60  65  70  75  80  85  90
2104          KM   .49 .49 .49 .19 .16 .15 .08 .08 .07 .07 .07 .07 .01 .01 .01 .01 .01 .01
2105          KM
2106          KM          L=   0.489 miles, S=  280 feet/mile, Kb= .03
2107          KM
2108          BA   0.041
2109          LG    0.08    0.15    8.00    0.08   46.16
2110          UC   0.113   0.114
2111          UA       0       5      16      30      65      77      84      90      94      97
2112          UA     100
              *
```

```
LINE          ID.......1.......2.......3.......4.......5.......6.......7.......8.......9......10

2113          KK   C626R
2114          KM      Hydrograph combine 624626 + 211AD at C626 right branch
2115          HC       2
              *

2116          KK    C626
2117          KM      Hydrograph combine C626C + 625626 at C626R
2118          HC       3
              *

2119          KK  626627
2120          KM      Normal depth channel route from C626 to C627
2121          KM      Source:  HEC-2 Cross Section: AS 1.602
2122          RS       1    FLOW      -1
2123          RC   0.080   0.060   0.080   625.0  0.0208
2124          RX  9889.8  9941.2  9963.0 10011.6 10074.8 10083.9 10191.7 10210.4
2125          RY  1517.6  1516.9  1508.1  1506.6  1508.6  1511.7  1513.1  1518.8
              *

2126          KK   211AE
2127          KM   Sub-Basin  211AE
2128          KM
2129          KM      The Clark Unit Hydrograph is used for this basin.
2130          KM          The Urban time-area relation is used for this basin.
2131          KM
2132          KM      Time of Concentration for this sub-basin is based on the following:
2133          KM          6-Hour Rainfall, Pattern No.  1.00
2134          KM          An rainfall areal reduction factor of 1.000
2135          KM
2136          KM       EXCESS RAINFALL VALUES EXCEEDED IN 5-MINUTE INTERVALS
2137          KM     5  10  15  20  25  30  35  40  45  50  55  60  65  70  75  80  85  90
2138          KM   .48 .48 .48 .17 .14 .13 .06 .06 .06 .05 .05 .05 .01 .01 .01 .01 .01 .01
2139          KM
2140          KM          L=   0.313 miles, S=  153 feet/mile, Kb= .04
2141          KM
2142          BA   0.034
2143          LG    0.12    0.24    6.40    0.15   38.15
2144          UC   0.129   0.103
2145          UA       0       5      16      30      65      77      84      90      94      97
2146          UA     100
              *

2147          KK    C627
2148          KM      Hydrograph combine 626627 + 211AE at C627
2149          HC       2
              *
              * *
              * * C627 is the total flow in Ashbrook Wash at the Study boundary
              * *
              *
2150          ZZ
```

```
*****************************************
*                                       *
*   FLOOD HYDROGRAPH PACKAGE  (HEC-1)   *
*             MAY   1991                *
*          VERSION 4.0.1E               *
*    Lahey F77L-EM/32 version 5.01      *
*    Dodson & Associates, Inc.          *
*    DATE  09/28/99  TIME  13:52:18     *
*****************************************
```

```
*****************************************
*                                       *
*   U.S. ARMY CORPS OF ENGINEERS        *
*   HYDROLOGIC ENGINEERING CENTER       *
*          609 SECOND STREET            *
*       DAVIS, CALIFORNIA 95616         *
*          (916) 551-1748               *
*                                       *
*****************************************
```

Golden Eagle Park Dam Modifications
by Stantec: Proj. No. 28900095
for FCDMC: FCD

File: ALTFf-4.IH1
Date:07-08-99 mcg
Revised:

Alternative F:
Addition of an auxillary spillway. This spillway will function such that the existing emergency spillway does not operate for the 100-year storm. The stage-storage relation is adjusted to reflect revised grading in the park.

The purpose of this model is to estimate peak discharges in Ashbrook Wash for evaluation of the Dam modifications impact on the floodplain.

100-year, 6-hour future condition watershed model for Ashbrook Wash upstream of the Fort McDowell Indian Reservation boundary.
This model is a portion of the original Fountain Hills North FDS watershed model conducted by GVSCE, 1994. The title cards from that model are included for reference.

Fountain Hills North Floodplain Delineation Study
FCD 92-04 by GVSCE
Future Condition Model
100-Year 6-Hour Storm, Clark Unit Hydrograph

File: FU100-6.IH1
Date: 07-19-94 dtp
Revised: 10-31-94 dtp

```
26 IO        OUTPUT CONTROL VARIABLES
                 IPRNT          5  PRINT CONTROL
                 IPLOT          0  PLOT CONTROL
                 QSCAL         0.  HYDROGRAPH PLOT SCALE

  IT         HYDROGRAPH TIME DATA
                  NMIN          1  MINUTES IN COMPUTATION INTERVAL
                 IDATE      1    0  STARTING DATE
                 ITIME       0000  STARTING TIME
                    NQ       1080  NUMBER OF HYDROGRAPH ORDINATES
               NDDATE      1    0  ENDING DATE
               NDTIME       1759  ENDING TIME
               ICENT          19  CENTURY MARK

          COMPUTATION INTERVAL    0.02 HOURS
               TOTAL TIME BASE   17.98 HOURS

     ENGLISH UNITS
          DRAINAGE AREA          SQUARE MILES
          PRECIPITATION DEPTH    INCHES
          LENGTH, ELEVATION      FEET
          FLOW                   CUBIC FEET PER SECOND
          STORAGE VOLUME         ACRE-FEET
          SURFACE AREA           ACRES
          TEMPERATURE            DEGREES FAHRENHEIT

28 JD        INDEX STORM NO. 1
                 STRM        3.30  PRECIPITATION DEPTH
                 TRDA        0.01  TRANSPOSITION DRAINAGE AREA

29 PI          PRECIPITATION PATTERN
                 0.00      0.00      0.00      0.00      0.00      0.00      0.00      0.00      0.00      0.00
                 0.00      0.00      0.00      0.00      0.00      0.00      0.00      0.00      0.00      0.00
                 0.00      0.00      0.00      0.00      0.00      0.00      0.00      0.00      0.00      0.00
                 0.00      0.00      0.00      0.00      0.00      0.00      0.00      0.00      0.00      0.00
                 0.00      0.00      0.00      0.00      0.00      0.00      0.00      0.00      0.00      0.00
                 0.00      0.00      0.00      0.00      0.00      0.00      0.00      0.00      0.00      0.00
                 0.00      0.00      0.00      0.00      0.00      0.00      0.00      0.00      0.00      0.00
                 0.00      0.00      0.00      0.00      0.00      0.00      0.00      0.00      0.00      0.00
```

0.00	0.00	0.00	0.00	0.00	0.00	0.00	0.00	0.00	0.00
0.00	0.00	0.00	0.00	0.00	0.00	0.00	0.00	0.00	0.00
0.00	0.00	0.00	0.00	0.00	0.00	0.00	0.00	0.00	0.00
0.00	0.00	0.00	0.00	0.00	0.00	0.00	0.00	0.00	0.00
0.00	0.00	0.00	0.00	0.00	0.00	0.00	0.00	0.00	0.00
0.00	0.00	0.00	0.00	0.00	0.00	0.00	0.00	0.00	0.00
0.00	0.00	0.00	0.00	0.00	0.00	0.00	0.00	0.00	0.00
0.00	0.00	0.00	0.00	0.00	0.00	0.00	0.00	0.00	0.00
0.00	0.00	0.00	0.00	0.00	0.00	0.00	0.00	0.00	0.00
0.00	0.00	0.00	0.00	0.00	0.00	0.00	0.00	0.00	0.00
0.00	0.00	0.00	0.00	0.00	0.00	0.00	0.00	0.00	0.00
0.00	0.00	0.00	0.00	0.00	0.01	0.01	0.01	0.01	0.01
0.01	0.01	0.01	0.01	0.01	0.01	0.01	0.01	0.01	0.01
0.01	0.01	0.01	0.01	0.01	0.01	0.01	0.01	0.01	0.01
0.01	0.01	0.01	0.01	0.01	0.03	0.03	0.03	0.03	0.03
0.03	0.03	0.03	0.03	0.03	0.03	0.03	0.03	0.03	0.03
0.01	0.01	0.01	0.01	0.01	0.01	0.01	0.01	0.01	0.01
0.01	0.01	0.01	0.01	0.01	0.00	0.00	0.00	0.00	0.00
0.00	0.00	0.00	0.00	0.00	0.00	0.00	0.00	0.00	0.00
0.00	0.00	0.00	0.00	0.00	0.00	0.00	0.00	0.00	0.00
0.00	0.00	0.00	0.00	0.00	0.00	0.00	0.00	0.00	0.00
0.00	0.00	0.00	0.00	0.00	0.00	0.00	0.00	0.00	0.00
0.00	0.00	0.00	0.00	0.00	0.00	0.00	0.00	0.00	0.00
0.00	0.00	0.00	0.00	0.00	0.00	0.00	0.00	0.00	0.00
0.00	0.00	0.00	0.00	0.00	0.00	0.00	0.00	0.00	0.00
0.00	0.00	0.00	0.00	0.00	0.00	0.00	0.00	0.00	0.00
0.00	0.00	0.00	0.00	0.00	0.00	0.00	0.00	0.00	0.00

32 JD INDEX STORM NO. 2

STRM 3.28 PRECIPITATION DEPTH

TRDA 0.50 TRANSPOSITION DRAINAGE AREA

0 PI PRECIPITATION PATTERN

0.00	0.00	0.00	0.00	0.00	0.00	0.00	0.00	0.00	0.00
0.00	0.00	0.00	0.00	0.00	0.00	0.00	0.00	0.00	0.00
0.00	0.00	0.00	0.00	0.00	0.00	0.00	0.00	0.00	0.00
0.00	0.00	0.00	0.00	0.00	0.00	0.00	0.00	0.00	0.00
0.00	0.00	0.00	0.00	0.00	0.00	0.00	0.00	0.00	0.00
0.00	0.00	0.00	0.00	0.00	0.00	0.00	0.00	0.00	0.00
0.00	0.00	0.00	0.00	0.00	0.00	0.00	0.00	0.00	0.00
0.00	0.00	0.00	0.00	0.00	0.00	0.00	0.00	0.00	0.00
0.00	0.00	0.00	0.00	0.00	0.00	0.00	0.00	0.00	0.00
0.00	0.00	0.00	0.00	0.00	0.00	0.00	0.00	0.00	0.00
0.00	0.00	0.00	0.00	0.00	0.00	0.00	0.00	0.00	0.00
0.00	0.00	0.00	0.00	0.00	0.00	0.00	0.00	0.00	0.00
0.00	0.00	0.00	0.00	0.00	0.00	0.00	0.00	0.00	0.00
0.00	0.00	0.00	0.00	0.00	0.00	0.00	0.00	0.00	0.00
0.00	0.00	0.00	0.00	0.00	0.00	0.00	0.00	0.00	0.00
0.00	0.00	0.00	0.00	0.00	0.00	0.00	0.00	0.00	0.00
0.00	0.00	0.00	0.00	0.00	0.00	0.00	0.00	0.00	0.00
0.00	0.00	0.00	0.00	0.00	0.00	0.00	0.00	0.00	0.00
0.00	0.00	0.00	0.00	0.00	0.00	0.00	0.00	0.00	0.00
0.00	0.00	0.00	0.00	0.00	0.00	0.00	0.00	0.00	0.00
0.00	0.00	0.00	0.00	0.00	0.00	0.00	0.00	0.00	0.00
0.00	0.00	0.00	0.00	0.00	0.00	0.00	0.00	0.00	0.00
0.00	0.00	0.00	0.00	0.00	0.01	0.01	0.01	0.01	0.01
0.01	0.01	0.01	0.01	0.01	0.01	0.01	0.01	0.01	0.01
0.01	0.01	0.01	0.01	0.01	0.01	0.01	0.01	0.01	0.01
0.01	0.01	0.01	0.01	0.01	0.03	0.03	0.03	0.03	0.03
0.03	0.03	0.03	0.03	0.03	0.03	0.03	0.03	0.03	0.03
0.01	0.01	0.01	0.01	0.01	0.01	0.01	0.01	0.01	0.01
0.01	0.01	0.01	0.01	0.01	0.00	0.00	0.00	0.00	0.00
0.00	0.00	0.00	0.00	0.00	0.00	0.00	0.00	0.00	0.00
0.00	0.00	0.00	0.00	0.00	0.00	0.00	0.00	0.00	0.00
0.00	0.00	0.00	0.00	0.00	0.00	0.00	0.00	0.00	0.00
0.00	0.00	0.00	0.00	0.00	0.00	0.00	0.00	0.00	0.00
0.00	0.00	0.00	0.00	0.00	0.00	0.00	0.00	0.00	0.00
0.00	0.00	0.00	0.00	0.00	0.00	0.00	0.00	0.00	0.00
0.00	0.00	0.00	0.00	0.00	0.00	0.00	0.00	0.00	0.00
0.00	0.00	0.00	0.00	0.00	0.00	0.00	0.00	0.00	0.00
0.00	0.00	0.00	0.00	0.00	0.00	0.00	0.00	0.00	0.00

33 JD INDEX STORM NO. 3

STRM 3.23 PRECIPITATION DEPTH

TRDA 2.80 TRANSPOSITION DRAINAGE AREA

34 PI PRECIPITATION PATTERN

0.00	0.00	0.00	0.00	0.00	0.00	0.00	0.00	0.00	0.00
0.00	0.00	0.00	0.00	0.00	0.00	0.00	0.00	0.00	0.00

0.00	0.00	0.00	0.00	0.00	0.00	0.00	0.00	0.00	0.00
0.00	0.00	0.00	0.00	0.00	0.00	0.00	0.00	0.00	0.00
0.00	0.00	0.00	0.00	0.00	0.00	0.00	0.00	0.00	0.00
0.00	0.00	0.00	0.00	0.00	0.00	0.00	0.00	0.00	0.00
0.00	0.00	0.00	0.00	0.00	0.00	0.00	0.00	0.00	0.00
0.00	0.00	0.00	0.00	0.00	0.00	0.00	0.00	0.00	0.00
0.00	0.00	0.00	0.00	0.00	0.00	0.00	0.00	0.00	0.00
0.00	0.00	0.00	0.00	0.00	0.00	0.00	0.00	0.00	0.00
0.00	0.00	0.00	0.00	0.00	0.00	0.00	0.00	0.00	0.00
0.00	0.00	0.00	0.00	0.00	0.00	0.00	0.00	0.00	0.00
0.00	0.00	0.00	0.00	0.00	0.00	0.00	0.00	0.00	0.00
0.00	0.00	0.00	0.00	0.00	0.00	0.00	0.00	0.00	0.00
0.00	0.00	0.00	0.00	0.00	0.00	0.00	0.00	0.00	0.00
0.00	0.00	0.00	0.00	0.00	0.00	0.00	0.00	0.00	0.00
0.00	0.00	0.00	0.00	0.00	0.00	0.00	0.00	0.00	0.00
0.00	0.00	0.00	0.00	0.00	0.00	0.00	0.00	0.00	0.00
0.00	0.00	0.00	0.00	0.00	0.00	0.00	0.00	0.00	0.00
0.00	0.00	0.00	0.00	0.00	0.01	0.01	0.01	0.01	0.01
0.01	0.01	0.01	0.01	0.01	0.01	0.01	0.01	0.01	0.01
0.01	0.01	0.01	0.01	0.01	0.01	0.01	0.01	0.01	0.01
0.01	0.01	0.01	0.01	0.01	0.02	0.02	0.02	0.02	0.02
0.02	0.02	0.02	0.02	0.02	0.02	0.02	0.02	0.02	0.02
0.01	0.01	0.01	0.01	0.01	0.01	0.01	0.01	0.01	0.01
0.01	0.01	0.01	0.01	0.01	0.00	0.00	0.00	0.00	0.00
0.00	0.00	0.00	0.00	0.00	0.00	0.00	0.00	0.00	0.00
0.00	0.00	0.00	0.00	0.00	0.00	0.00	0.00	0.00	0.00
0.00	0.00	0.00	0.00	0.00	0.00	0.00	0.00	0.00	0.00
0.00	0.00	0.00	0.00	0.00	0.00	0.00	0.00	0.00	0.00
0.00	0.00	0.00	0.00	0.00	0.00	0.00	0.00	0.00	0.00
0.00	0.00	0.00	0.00	0.00	0.00	0.00	0.00	0.00	0.00
0.00	0.00	0.00	0.00	0.00	0.00	0.00	0.00	0.00	0.00
0.00	0.00	0.00	0.00	0.00	0.00	0.00	0.00	0.00	0.00
0.00	0.00	0.00	0.00	0.00	0.00	0.00	0.00	0.00	0.00

37 JD INDEX STORM NO. 4

STRM 3.04 PRECIPITATION DEPTH
TRDA 16.00 TRANSPOSITION DRAINAGE AREA

38 JD PRECIPITATION PATTERN

0.00	0.00	0.00	0.00	0.00	0.00	0.00	0.00	0.00	0.00
0.00	0.00	0.00	0.00	0.00	0.00	0.00	0.00	0.00	0.00
0.00	0.00	0.00	0.00	0.00	0.00	0.00	0.00	0.00	0.00
0.00	0.00	0.00	0.00	0.00	0.00	0.00	0.00	0.00	0.00
0.00	0.00	0.00	0.00	0.00	0.00	0.00	0.00	0.00	0.00
0.00	0.00	0.00	0.00	0.00	0.00	0.00	0.00	0.00	0.00
0.00	0.00	0.00	0.00	0.00	0.00	0.00	0.00	0.00	0.00
0.00	0.00	0.00	0.00	0.00	0.00	0.00	0.00	0.00	0.00
0.00	0.00	0.00	0.00	0.00	0.00	0.00	0.00	0.00	0.00
0.00	0.00	0.00	0.00	0.00	0.00	0.00	0.00	0.00	0.00
0.00	0.00	0.00	0.00	0.00	0.00	0.00	0.00	0.00	0.00
0.00	0.00	0.00	0.00	0.00	0.00	0.00	0.00	0.00	0.00
0.00	0.00	0.00	0.00	0.00	0.00	0.00	0.00	0.00	0.00
0.00	0.00	0.00	0.00	0.00	0.00	0.00	0.00	0.00	0.00
0.00	0.00	0.00	0.00	0.00	0.00	0.00	0.00	0.00	0.00
0.00	0.00	0.00	0.00	0.00	0.00	0.00	0.00	0.00	0.00
0.00	0.00	0.00	0.00	0.00	0.00	0.00	0.00	0.00	0.00
0.00	0.00	0.00	0.00	0.00	0.00	0.00	0.00	0.00	0.00
0.00	0.00	0.00	0.00	0.00	0.00	0.00	0.00	0.00	0.00
0.00	0.00	0.00	0.00	0.00	0.01	0.01	0.01	0.01	0.01
0.01	0.01	0.01	0.01	0.01	0.01	0.01	0.01	0.01	0.01
0.01	0.01	0.01	0.01	0.01	0.01	0.01	0.01	0.01	0.01
0.01	0.01	0.01	0.01	0.01	0.01	0.01	0.01	0.01	0.01
0.01	0.01	0.01	0.01	0.01	0.01	0.01	0.01	0.01	0.01
0.01	0.01	0.01	0.01	0.01	0.01	0.01	0.01	0.01	0.01
0.01	0.01	0.01	0.01	0.01	0.00	0.00	0.00	0.00	0.00
0.00	0.00	0.00	0.00	0.00	0.00	0.00	0.00	0.00	0.00
0.00	0.00	0.00	0.00	0.00	0.00	0.00	0.00	0.00	0.00
0.00	0.00	0.00	0.00	0.00	0.00	0.00	0.00	0.00	0.00
0.00	0.00	0.00	0.00	0.00	0.00	0.00	0.00	0.00	0.00
0.00	0.00	0.00	0.00	0.00	0.00	0.00	0.00	0.00	0.00
0.00	0.00	0.00	0.00	0.00	0.00	0.00	0.00	0.00	0.00
0.00	0.00	0.00	0.00	0.00	0.00	0.00	0.00	0.00	0.00
0.00	0.00	0.00	0.00	0.00	0.00	0.00	0.00	0.00	0.00
0.00	0.00	0.00	0.00	0.00	0.00	0.00	0.00	0.00	0.00
0.00	0.00	0.00	0.00	0.00	0.00	0.00	0.00	0.00	0.00

41 JD INDEX STORM NO. 5

STRM 2.67 PRECIPITATION DEPTH
TRDA 90.00 TRANSPOSITION DRAINAGE AREA

42 PI PRECIPITATION PATTERN

0.00	0.00	0.00	0.00	0.00	0.00	0.00	0.00	0.00	0.00
0.00	0.00	0.00	0.00	0.00	0.00	0.00	0.00	0.00	0.00
0.00	0.00	0.00	0.00	0.00	0.00	0.00	0.00	0.00	0.00
0.00	0.00	0.00	0.00	0.00	0.00	0.00	0.00	0.00	0.00
0.00	0.00	0.00	0.00	0.00	0.00	0.00	0.00	0.00	0.00
0.00	0.00	0.00	0.00	0.00	0.00	0.00	0.00	0.00	0.00
0.00	0.00	0.00	0.00	0.00	0.00	0.00	0.00	0.00	0.00
0.00	0.00	0.00	0.00	0.00	0.00	0.00	0.00	0.00	0.00
0.00	0.00	0.00	0.00	0.00	0.00	0.00	0.00	0.00	0.00
0.00	0.00	0.00	0.00	0.00	0.00	0.00	0.00	0.00	0.00
0.00	0.00	0.00	0.00	0.00	0.00	0.00	0.00	0.00	0.00
0.00	0.00	0.00	0.00	0.00	0.00	0.00	0.00	0.00	0.00
0.00	0.00	0.00	0.00	0.00	0.00	0.00	0.00	0.00	0.00
0.00	0.00	0.00	0.00	0.00	0.00	0.00	0.00	0.00	0.00
0.00	0.00	0.00	0.00	0.00	0.00	0.00	0.00	0.00	0.00
0.00	0.00	0.00	0.00	0.00	0.00	0.00	0.00	0.00	0.00
0.00	0.00	0.00	0.00	0.00	0.00	0.00	0.00	0.00	0.00
0.00	0.00	0.00	0.00	0.00	0.00	0.00	0.00	0.00	0.00
0.00	0.00	0.00	0.00	0.00	0.00	0.00	0.00	0.00	0.00
0.00	0.00	0.00	0.00	0.00	0.01	0.01	0.01	0.01	0.01
0.01	0.01	0.01	0.01	0.01	0.01	0.01	0.01	0.01	0.01
0.01	0.01	0.01	0.01	0.01	0.01	0.01	0.01	0.01	0.01
0.01	0.01	0.01	0.01	0.01	0.01	0.01	0.01	0.01	0.01
0.01	0.01	0.01	0.01	0.01	0.01	0.01	0.01	0.01	0.01
0.01	0.01	0.01	0.01	0.01	0.01	0.01	0.01	0.01	0.01
0.01	0.01	0.01	0.01	0.01	0.00	0.00	0.00	0.00	0.00
0.00	0.00	0.00	0.00	0.00	0.00	0.00	0.00	0.00	0.00
0.00	0.00	0.00	0.00	0.00	0.00	0.00	0.00	0.00	0.00
0.00	0.00	0.00	0.00	0.00	0.00	0.00	0.00	0.00	0.00
0.00	0.00	0.00	0.00	0.00	0.00	0.00	0.00	0.00	0.00
0.00	0.00	0.00	0.00	0.00	0.00	0.00	0.00	0.00	0.00
0.00	0.00	0.00	0.00	0.00	0.00	0.00	0.00	0.00	0.00
0.00	0.00	0.00	0.00	0.00	0.00	0.00	0.00	0.00	0.00
0.00	0.00	0.00	0.00	0.00	0.00	0.00	0.00	0.00	0.00
0.00	0.00	0.00	0.00	0.00	0.00	0.00	0.00	0.00	0.00
0.00	0.00	0.00	0.00	0.00	0.00	0.00	0.00	0.00	0.00

WARNING EXCESS AT PONDING LESS THAN ZERO FOR PERIOD. EXCESS SET TO ZERO

RUNOFF SUMMARY
FLOW IN CUBIC FEET PER SECOND
TIME IN HOURS, AREA IN SQUARE MILES

OPERATION	STATION	PEAK FLOW	TIME OF PEAK	AVERAGE FLOW FOR MAXIMUM PERIOD 6-HOUR	24-HOUR	72-HOUR	BASIN AREA	MAXIMUM STAGE	TIME OF MAX STAGE
HYDROGRAPH AT	204A	334.	4.03	26.	9.	9.	0.11		
ROUTED TO	522523	309.	4.18	26.	9.	9.	0.11		
HYDROGRAPH AT	204B	365.	4.05	31.	10.	10.	0.13		
2 COMBINED AT	C523I	586.	4.08	57.	19.	19.	0.23		
ROUTED TO	C523O	570.	4.15	57.	19.	19.	0.23		
DIVERSION TO	D523R	68.	4.15	3.	1.	1.	0.23		
HYDROGRAPH AT	D523L	502.	4.15	54.	18.	18.	0.23		
HYDROGRAPH AT	205A	210.	4.22	26.	9.	9.	0.12		
HYDROGRAPH AT	205B	362.	4.32	47.	16.	16.	0.21		
2 COMBINED AT	C528	548.	4.28	73.	25.	25.	0.33		
ROUTED TO	528530	545.	4.33	73.	25.	25.	0.33		
HYDROGRAPH AT	205C	107.	4.20	13.	4.	4.	0.06		
2 COMBINED AT	C530R	629.	4.32	86.	29.	29.	0.39		
HYDROGRAPH AT	205D	665.	4.23	71.	24.	24.	0.32		
HYDROGRAPH AT	205E	301.	4.33	48.	16.	16.	0.22		
2 COMBINED AT	C529	917.	4.25	119.	40.	40.	0.54		
2 COMBINED AT	C530	1340.	4.27	197.	66.	66.	0.93		
ROUTED TO	530531	1326.	4.32	197.	66.	66.	0.93		
HYDROGRAPH AT	205F	325.	4.22	36.	12.	12.	0.16		
2 COMBINED AT	C531	1504.	4.30	228.	77.	77.	1.09		
ROUTED TO	531532	1490.	4.37	228.	77.	77.	1.09		
HYDROGRAPH AT	205G	349.	4.23	40.	13.	13.	0.19		
2 COMBINED AT	C532L	1661.	4.35	262.	88.	88.	1.27		
HYDROGRAPH AT	205H	350.	4.35	56.	19.	19.	0.26		
2 COMBINED AT	C532	1854.	4.35	310.	104.	104.	1.53		
ROUTED TO	532533	1850.	4.38	310.	104.	104.	1.53		
HYDROGRAPH AT	205I	559.	4.30	70.	23.	23.	0.35		
2 COMBINED AT	C533	2132.	4.37	367.	123.	123.	1.89		
ROUTED TO	533534	2100.	4.53	367.	123.	123.	1.89		
HYDROGRAPH AT	205J	551.	4.28	65.	22.	22.	0.37		
2 COMBINED AT	C534R	2306.	4.52	416.	140.	140.	2.25		
HYDROGRAPH AT	205K	266.	4.38	45.	15.	15.	0.25		
2 COMBINED AT	C534	2427.	4.53	450.	151.	151.	2.50		
ROUTED TO	534535	2417.	4.58	450.	151.	151.	2.50		
HYDROGRAPH AT	205L	263.	4.15	20.	7.	7.	0.12		

2 COMBINED AT	C535	2441.	4.57	464.	156.	156.	2.62
ROUTED TO	535536	2419.	4.70	464.	156.	156.	2.62
HYDROGRAPH AT	205M	366.	4.07	31.	11.	11.	0.14
2 COMBINED AT	C536R	2427.	4.68	490.	165.	165.	2.76
HYDROGRAPH AT	205N	211.	4.25	29.	10.	10.	0.16
2 COMBINED AT	C536I	2496.	4.68	511.	172.	172.	2.91
ROUTED TO	C536O	326.	6.08	312.	172.	172.	2.91
ROUTED TO	536537	326.	6.13	312.	172.	172.	2.91
HYDROGRAPH AT	206A	408.	4.03	32.	11.	11.	0.13
2 COMBINED AT	C537	346.	4.27	317.	181.	181.	3.04
ROUTED TO	537538	343.	4.33	317.	181.	181.	3.04
HYDROGRAPH AT	206B	304.	4.03	25.	8.	8.	0.09
2 COMBINED AT	C538I	473.	4.08	330.	188.	188.	3.14
ROUTED TO	C538O	442.	4.23	327.	188.	188.	3.14
ROUTED TO	538540	441.	4.35	327.	188.	188.	3.14
HYDROGRAPH AT	206C	61.	4.05	5.	2.	2.	0.02
2 COMBINED AT	C540R	464.	4.32	329.	189.	189.	3.16
HYDROGRAPH AT	206D	205.	4.02	17.	6.	6.	0.06
ROUTED TO	539540	196.	4.10	17.	6.	6.	0.06
HYDROGRAPH AT	206E	71.	4.02	5.	2.	2.	0.02
2 COMBINED AT	C540L	254.	4.05	22.	7.	7.	0.09
2 COMBINED AT	C540	560.	4.27	342.	196.	196.	3.24
ROUTED TO	540541	553.	4.47	342.	196.	196.	3.24
HYDROGRAPH AT	206F	441.	4.05	36.	12.	12.	0.16
2 COMBINED AT	C541	658.	4.28	362.	205.	205.	3.40
ROUTED TO	541548	657.	4.33	362.	205.	205.	3.40
HYDROGRAPH AT	206G	213.	4.07	22.	7.	7.	0.09
HYDROGRAPH AT	BB523R	68.	4.15	3.	1.	1.	0.23
ROUTED TO	523548	60.	4.33	3.	1.	1.	0.23
3 COMBINED AT	C548L	747.	4.30	377.	210.	210.	3.72
HYDROGRAPH AT	206H	188.	4.03	15.	5.	5.	0.06
ROUTED TO	542543	184.	4.05	15.	5.	5.	0.06
HYDROGRAPH AT	206I	75.	4.00	5.	2.	2.	0.02
2 COMBINED AT	C543	252.	4.02	21.	7.	7.	0.08
DIVERSION TO	D543R	252.	4.02	21.	7.	7.	0.08
HYDROGRAPH AT	D543L	0.	0.02	0.	0.	0.	0.08
ROUTED TO	543544	0.	0.02	0.	0.	0.	0.08
HYDROGRAPH AT	206K	171.	4.03	14.	5.	5.	0.06
2 COMBINED AT	C544	171.	4.03	14.	5.	5.	0.14

ROUTED TO	544545	167.	4.05	14.	5.	5.	0.14
DIVERSION TO	D545R	84.	4.05	7.	2.	2.	0.14
HYDROGRAPH AT	D545L	84.	4.05	7.	2.	2.	0.14
ROUTED TO	545546	83.	4.07	7.	2.	2.	0.14
HYDROGRAPH AT	206L	191.	4.02	15.	5.	5.	0.06
2 COMBINED AT	C546	271.	4.03	22.	7.	7.	0.20
ROUTED TO	546547	269.	4.03	22.	7.	7.	0.20
HYDROGRAPH AT	BB543R	252.	4.02	21.	7.	7.	0.08
ROUTED TO	543547	241.	4.10	21.	7.	7.	0.08
HYDROGRAPH AT	BB545R	84.	4.05	7.	2.	2.	0.14
ROUTED TO	545547	81.	4.10	7.	2.	2.	0.14
HYDROGRAPH AT	206J	200.	4.02	16.	5.	5.	0.06
4 COMBINED AT	C547	758.	4.05	66.	22.	22.	0.26
ROUTED TO	547548	732.	4.10	66.	22.	22.	0.26
HYDROGRAPH AT	206M	198.	4.02	16.	5.	5.	0.06
2 COMBINED AT	C548R	883.	4.08	82.	27.	27.	0.32
2 COMBINED AT	C548	1172.	4.10	440.	233.	233.	4.04
ROUTED TO	548549	1160.	4.25	440.	233.	233.	4.04
HYDROGRAPH AT	206N	459.	4.05	42.	14.	14.	0.15
2 COMBINED AT	C549L	1331.	4.23	466.	245.	245.	4.19
HYDROGRAPH AT	C599O	1329.	5.17	1160.	508.	508.	7.13
ROUTED TO	599608	1329.	5.33	1160.	508.	508.	7.13
HYDROGRAPH AT	211K	363.	4.00	26.	9.	9.	0.10
2 COMBINED AT	C608L	1333.	5.27	1177.	515.	515.	7.23
HYDROGRAPH AT	211G	18.	4.05	3.	1.	1.	0.01
ROUTED TO	604606	17.	4.23	3.	1.	1.	0.01
HYDROGRAPH AT	211I	121.	4.03	11.	4.	4.	0.04
2 COMBINED AT	C606R	131.	4.03	14.	5.	5.	0.05
HYDROGRAPH AT	211H	247.	4.02	17.	6.	6.	0.07
ROUTED TO	C605O	129.	4.12	17.	6.	6.	0.07
2 COMBINED AT	C606	256.	4.05	31.	10.	10.	0.12
ROUTED TO	606607	253.	4.08	31.	10.	10.	0.12
HYDROGRAPH AT	211J	51.	4.02	4.	1.	1.	0.01
2 COMBINED AT	C607	295.	4.05	35.	12.	12.	0.14
ROUTED TO	607608	290.	4.08	35.	12.	12.	0.14
2 COMBINED AT	C608	1445.	4.28	1204.	526.	526.	7.37
ROUTED TO	608613	1443.	4.32	1204.	526.	526.	7.37
HYDROGRAPH AT	211M	278.	4.02	23.	8.	8.	0.08
ROUTED TO	610611	272.	4.05	23.	8.	8.	0.08

HYDROGRAPH AT	211N	72.	4.00	6.	2.	2.	0.02
2 COMBINED AT	C611R	338.	4.03	29.	10.	10.	0.10
HYDROGRAPH AT	211O	143.	4.02	11.	4.	4.	0.04
ROUTED TO	C609O	69.	4.12	11.	4.	4.	0.04
ROUTED TO	609611	69.	4.15	11.	4.	4.	0.04
2 COMBINED AT	C611I	402.	4.03	40.	13.	13.	0.14
ROUTED TO	C611O	201.	4.20	39.	13.	13.	0.14
DIVERSION TO	D611R	169.	4.20	38.	13.	13.	0.14
HYDROGRAPH AT	D611L	32.	4.20	1.	0.	0.	0.14
ROUTED TO	611612	27.	4.27	1.	0.	0.	0.14
HYDROGRAPH AT	211P	119.	4.00	10.	3.	3.	0.03
2 COMBINED AT	C612	119.	4.00	10.	3.	3.	0.17
2 COMBINED AT	C613	1472.	4.30	1210.	529.	529.	7.54
ROUTED TO	613621	1471.	4.32	1210.	529.	529.	7.54
HYDROGRAPH AT	211L	317.	4.02	24.	8.	8.	0.10
2 COMBINED AT	C621L	1552.	4.08	1226.	535.	535.	7.64
HYDROGRAPH AT	211Q	74.	4.00	5.	2.	2.	0.02
ROUTED TO	616617	72.	4.03	5.	2.	2.	0.02
HYDROGRAPH AT	211R	283.	4.02	22.	7.	7.	0.08
2 COMBINED AT	C617L	355.	4.02	27.	9.	9.	0.10
HYDROGRAPH AT	211U	61.	4.05	8.	3.	3.	0.03
DIVERSION TO	D614R	43.	4.05	5.	2.	2.	0.03
HYDROGRAPH AT	D614L	18.	4.05	3.	1.	1.	0.03
2 COMBINED AT	C617	372.	4.02	30.	10.	10.	0.13
ROUTED TO	617618	359.	4.07	30.	10.	10.	0.13
HYDROGRAPH AT	211S	144.	4.05	12.	4.	4.	0.05
2 COMBINED AT	C618I	499.	4.07	42.	14.	14.	0.18
ROUTED TO	C618O	482.	4.08	36.	14.	14.	0.18
HYDROGRAPH AT	BB614R	43.	4.05	5.	2.	2.	0.03
ROUTED TO	614615	43.	4.10	5.	2.	2.	0.03
HYDROGRAPH AT	211V	16.	4.02	2.	1.	1.	0.00
2 COMBINED AT	C615	55.	4.07	7.	2.	2.	0.03
DIVERSION TO	D615R	19.	4.07	2.	1.	1.	0.03
HYDROGRAPH AT	D615L	36.	4.07	5.	2.	2.	0.03
ROUTED TO	615618	36.	4.08	5.	2.	2.	0.03
2 COMBINED AT	C618	518.	4.08	41.	16.	16.	0.19
ROUTED TO	618619	507.	4.13	41.	16.	16.	0.19
HYDROGRAPH AT	211T	231.	4.02	20.	7.	7.	0.07
2 COMBINED AT	C619L	637.	4.08	60.	22.	22.	0.26

HYDROGRAPH AT	BB615R	19.	4.07	2.	1.	1.	0.03
ROUTED TO	615619	19.	4.17	2.	1.	1.	0.03
2 COMBINED AT	C619I	655.	4.10	62.	23.	23.	0.25
ROUTED TO	C619O	596.	4.18	62.	23.	23.	0.25
DIVERSION TO	D619L	402.	4.18	12.	4.	4.	0.25
HYDROGRAPH AT	D619R	194.	4.18	51.	19.	19.	0.25
ROUTED TO	619620	194.	4.20	51.	19.	19.	0.25
HYDROGRAPH AT	BB619L	402.	4.18	12.	4.	4.	0.25
ROUTED TO	619620	353.	4.22	12.	4.	4.	0.25
HYDROGRAPH AT	211W	108.	4.00	9.	3.	3.	0.03
3 COMBINED AT	C620R	573.	4.22	72.	26.	26.	0.28
HYDROGRAPH AT	BB611R	169.	4.20	38.	13.	13.	0.14
ROUTED TO	611620	169.	4.22	38.	13.	13.	0.14
2 COMBINED AT	C620	741.	4.22	110.	39.	39.	0.42
ROUTED TO	620621	723.	4.23	110.	39.	39.	0.42
2 COMBINED AT	C621	1891.	4.28	1313.	570.	570.	7.93
ROUTED TO	621622	1886.	4.37	1312.	570.	570.	7.93
HYDROGRAPH AT	211X	629.	4.05	60.	20.	20.	0.21
2 COMBINED AT	C622R	2131.	4.17	1352.	588.	588.	8.14
HYDROGRAPH AT	211A	444.	4.03	35.	12.	12.	0.14
ROUTED TO	C600O	373.	4.10	35.	12.	12.	0.14
ROUTED TO	600601	366.	4.15	35.	12.	12.	0.14
HYDROGRAPH AT	211B	357.	4.02	26.	9.	9.	0.11
2 COMBINED AT	C601	663.	4.03	60.	20.	20.	0.25
ROUTED TO	601602	651.	4.08	60.	20.	20.	0.25
HYDROGRAPH AT	211C	134.	4.03	12.	4.	4.	0.04
2 COMBINED AT	C602L	769.	4.07	72.	24.	24.	0.30
HYDROGRAPH AT	211D	184.	4.05	17.	6.	6.	0.07
2 COMBINED AT	C602	950.	4.07	89.	30.	30.	0.37
ROUTED TO	602603	923.	4.12	89.	30.	30.	0.37
HYDROGRAPH AT	211E	509.	4.03	41.	14.	14.	0.16
2 COMBINED AT	C603	1313.	4.07	129.	43.	43.	0.52
ROUTED TO	603622	1284.	4.13	129.	43.	43.	0.52
HYDROGRAPH AT	211F	332.	4.05	33.	11.	11.	0.11
2 COMBINED AT	C622L	1474.	4.12	160.	54.	54.	0.63
2 COMBINED AT	C622	2916.	4.15	1472.	633.	633.	8.78
ROUTED TO	622549	2898.	4.25	1471.	633.	633.	8.78
HYDROGRAPH AT	211Y	271.	4.05	26.	9.	9.	0.09
2 COMBINED AT	C549R	2995.	4.25	1487.	641.	641.	8.87

2 COMBINED AT	C549	4013.	4.25	1908.	854.	854.	13.06
ROUTED TO	549626	3996.	4.33	1906.	854.	854.	13.06
HYDROGRAPH AT	211Z	249.	4.03	20.	7.	7.	0.08
2 COMBINED AT	C626C	4053.	4.33	1916.	859.	859.	13.14
HYDROGRAPH AT	211AA	96.	4.05	9.	3.	3.	0.03
ROUTED TO	625626	92.	4.08	9.	3.	3.	0.03
HYDROGRAPH AT	211AB	149.	4.00	12.	4.	4.	0.04
ROUTED TO	623624	148.	4.02	12.	4.	4.	0.04
HYDROGRAPH AT	211AC	90.	4.02	8.	3.	3.	0.03
2 COMBINED AT	C624	238.	4.02	20.	7.	7.	0.07
ROUTED TO	624626	231.	4.05	20.	7.	7.	0.07
HYDROGRAPH AT	211AD	139.	4.02	12.	4.	4.	0.04
2 COMBINED AT	C626R	367.	4.03	32.	11.	11.	0.11
3 COMBINED AT	C626	4183.	4.32	1939.	870.	870.	13.28
ROUTED TO	626627	4181.	4.33	1938.	870.	870.	13.28
HYDROGRAPH AT	211AE	114.	4.02	9.	3.	3.	0.03
2 COMBINED AT	C627	4205.	4.33	1943.	873.	873.	13.32

*** NORMAL END OF HEC-1 ***

10-Year, Future Condition (6-Hour)

```
****************************************
*                                      *
*   FLOOD HYDROGRAPH PACKAGE  (HEC-1)  *
*              MAY   1991              *
*           VERSION 4.0.1E             *
*     Lahey F77L-EM/32 version 5.01    *
*        Dodson & Associates, Inc.     *
*        DATE  09/28/99  TIME  13:51:35 *
****************************************
```

```
****************************************
*                                      *
*    U.S. ARMY CORPS OF ENGINEERS      *
*    HYDROLOGIC ENGINEERING CENTER     *
*          609 SECOND STREET           *
*       DAVIS, CALIFORNIA 95616        *
*           (916) 551-1748             *
*                                      *
****************************************
```

```
X     X  XXXXXXX   XXXXX           X
X     X  X        X     X         XX
X     X  X        X                X
XXXXXXX  XXXX     X        XXXXX   X
X     X  X        X                X
X     X  X        X     X          X
X     X  XXXXXXX   XXXXX          XXX
```

THIS PROGRAM REPLACES ALL PREVIOUS VERSIONS OF HEC-1 KNOWN AS HEC1 (JAN 73), HEC1GS, HEC1DB, AND HEC1KW.

THE DEFINITIONS OF VARIABLES -RTIMP- AND -RTIOR- HAVE CHANGED FROM THOSE USED WITH THE 1973-STYLE INPUT STRUCTURE.
THE DEFINITION OF -AMSKK- ON RM-CARD WAS CHANGED WITH REVISIONS DATED 28 SEP 81. THIS IS THE FORTRAN77 VERSION
NEW OPTIONS: DAMBREAK OUTFLOW SUBMERGENCE , SINGLE EVENT DAMAGE CALCULATION, DSS:WRITE STAGE FREQUENCY,
DSS:READ TIME SERIES AT DESIRED CALCULATION INTERVAL LOSS RATE:GREEN AND AMPT INFILTRATION
KINEMATIC WAVE: NEW FINITE DIFFERENCE ALGORITHM

```
LINE          ID.......1.......2.......3.......4.......5.......6.......7.......8.......9......10

  1           ID   Golden Eagle Park Dam Modifications
  2           ID        by Stantec: Proj. No. 28900095                    File: ALTFf-6.IH1
  3           ID        for FCDMC:  FCD                                   Date:07-08-99     mcg
  4           ID                                                        Revised:
  5           ID
  6           ID   Alternative F:
  7           ID        Addition of an auxillary spillway.  This spillway will function such
  8           ID        that the existing emergency spillway does not operate for the 100-year
  9           ID        storm.  The stage-storage relation is adjusted to reflect revised
 10           ID        grading in the park.
 11           ID
 12           ID        The purpose of this model is to estimate peak discharges in Ashbrook
 13           ID        Wash for evaluation of the Dam modifications impact on the floodplain.
 14           ID
 15           ID   10-year, 6-hour future condition watershed model for Ashbrook Wash upstream
 16           ID   of the Fort McDowell Indian Reservation boundary.
 17           ID        This model is a portion of the original Fountain Hills North FDS
 18           ID        watershed model conducted by GVSCE, 1994.  The title cards from that
 19           ID        model are included for reference.
 20           ID
 21           ID   Fountain Hills North Floodplain Delineation Study
 22           ID        FCD 92-04       by GVSCE                          File:   FU10-6.IH1
 23           ID   Future Condition Model                                 Date:    07-21-94   dtp
 24           ID      10-Year 6-Hour Storm, Clark Unit Hydrograph      Revised:    10-31-94   dtp
              *
 25           IT       1                    1080
 26           IO       5
 27           IN      15
              *
 28           JD    2.20     0.01
 29           PC   0.000    0.008    0.016    0.025    0.033    0.041    0.050    0.058    0.066    0.074
 30           PC   0.087    0.099    0.118    0.138    0.216    0.377    0.834    0.911    0.931    0.950
 31           PC   0.962    0.972    0.983    0.991    1.000
 32           JD    2.19     0.50
 33           JD    2.16     2.80
 34           PC   0.000    0.009    0.016    0.025    0.034    0.042    0.051    0.059    0.067    0.076
 35           PC   0.087    0.100    0.120    0.163    0.252    0.451    0.694    0.837    0.900    0.938
 36           PC   0.950    0.963    0.975    0.988    1.000
 37           JD    2.03     16.0
 38           PC   0.000    0.015    0.020    0.030    0.048    0.063    0.076    0.090    0.105    0.119
 39           PC   0.135    0.152    0.175    0.222    0.304    0.472    0.670    0.796    0.868    0.912
 40           PC   0.946    0.960    0.973    0.987    1.000
 41           JD    1.78     90.0
 42           PC   0.000    0.021    0.035    0.051    0.071    0.087    0.105    0.125    0.143    0.160
 43           PC   0.179    0.201    0.232    0.281    0.364    0.500    0.658    0.773    0.841    0.888
 44           PC   0.927    0.945    0.964    0.982    1.000
              *

 45           KK    204A
 46           KM   Sub-Basin   204A
 47           KM
 48           KM      The Clark Unit Hydrograph is used for this basin.
 49           KM          The Urban time-area relation is used for this basin.
 50           KM
 51           KM      Time of Concentration for this sub-basin is based on the following:
```

```
LINE          ID.......1.......2.......3.......4.......5.......6.......7.......8.......9......10

  52          KM          6-Hour Rainfall, Pattern No.  1.00
  53          KM          An rainfall areal reduction factor of 0.999
  54          KM
  55          KM       EXCESS RAINFALL VALUES EXCEEDED IN 5-MINUTE INTERVALS
  56          KM     5  10  15  20  25  30  35  40  45  50  55  60  65  70  75  80  85  90
  57          KM   .30 .30 .29 .09 .07 .06 .03 .02 .02 .01 .01 .01 .00 .00 .00 .00 .00 .00
  58          KM
  59          KM          L=   0.687 miles, S=  175 feet/mile, Kb= .03
  60          KM
  61          BA   0.108
  62          LG    0.09    0.25    5.80    0.18   25.00
  63          UC   0.188   0.152
  64          UA       0       5      16      30      65      77      84      90      94      97
  65          UA     100
              *

  66          KK  522523
  67          KM      Normal depth channel route from C522 to C523
  68          KM      Source:  200 Scale Mapping
  69          RS      10    FLOW      -1
  70          RC   0.060   0.050   0.060  3275.0  0.0197
  71          RX  1000.0  1020.0  1035.0  1065.0  1080.0  1120.0  1160.0  1185.0
  72          RY  1678.0  1676.0  1674.0  1672.0  1672.0  1674.0  1676.0  1678.0
              *

  73          KK    204B
  74          KM   Sub-Basin   204B
  75          KM
  76          KM      The Clark Unit Hydrograph is used for this basin.
  77          KM          The Urban time-area relation is used for this basin.
  78          KM
  79          KM      Time of Concentration for this sub-basin is based on the following:
  80          KM          6-Hour Rainfall, Pattern No.  1.00
  81          KM          An rainfall areal reduction factor of 0.998
  82          KM
  83          KM       EXCESS RAINFALL VALUES EXCEEDED IN 5-MINUTE INTERVALS
  84          KM     5  10  15  20  25  30  35  40  45  50  55  60  65  70  75  80  85  90
  85          KM   .30 .30 .30 .09 .07 .06 .03 .03 .02 .02 .02 .02 .00 .00 .00 .00 .00 .00
  86          KM
  87          KM          L=   0.775 miles, S=  128 feet/mile, Kb= .03
  88          KM
  89          BA   0.126
  90          LG    0.09    0.25    5.80    0.18   26.66
  91          UC   0.221   0.184
  92          UA       0       5      16      30      65      77      84      90      94      97
  93          UA     100
              *

  94          KK   C523I
  95          KM      Hydrograph combine 522523 + 204B at C523I
  96          HC       2
              *
```

```
LINE          ID.......1.......2.......3.......4.......5.......6.......7.......8.......9......10

 97           KK   C523O
 98           KM      Reservoir route at C523.
 99           RS       1    ELEV  1650.3
100           SV    0.00    0.01    0.12    0.71    2.23    2.50    2.80    3.10    3.20    3.40
101           SV    3.70    4.00    4.30    4.60    4.90    5.20    5.50
102           SE  1650.3  1652.0  1654.0  1656.0  1658.0  1658.2  1658.4  1658.6  1658.7  1658.8
103           SE  1659.0  1659.2  1659.4  1659.6  1659.8  1660.0  1660.2
104           SQ       0      22      78     144     209     214     220     224     226     232
105           SQ     239     249     288     384     529     726     960
              *

106           KK   D523L
107           KM      Hydrograph diversion at C523.  Main flow continues in the left branch.
108           KM      Diverted flow is in the right branch.
109           DT   D523R
110           DI       0      22      78     144     209     214     220     224     226     232
111           DI     239     249     288     384     529     726     960
112           DQ       0       0       0       0       0       0       0       0       0       3
113           DQ       5      10      20      37      61      96     139
              *

114           KK    205A
115           KM   Sub-Basin   205A
116           KM
117           KM      The Clark Unit Hydrograph is used for this basin.
118           KM          The Natural time-area relation is used for this basin.
119           KM
120           KM      Time of Concentration for this sub-basin is based on the following:
121           KM          6-Hour Rainfall, Pattern No.  1.00
122           KM          An rainfall areal reduction factor of 0.998
123           KM
124           KM       EXCESS RAINFALL VALUES EXCEEDED IN 5-MINUTE INTERVALS
125           KM     5  10  15  20  25  30  35  40  45  50  55  60  65  70  75  80  85  90
126           KM   .27 .27 .26 .05 .04 .04 .02 .02 .02 .02 .02 .02 .01 .01 .01 .01 .01 .01
127           KM
128           KM          L=   0.870 miles, S=  378 feet/mile, Kb= .14
129           KM
130           BA   0.118
131           LG    0.25    0.35    4.35    0.40   35.00
132           UC   0.471   0.486
133           UA       0       3       5       8      12      20      43      75      90      96
134           UA     100
              *

135           KK    205B
136           KM   Sub-Basin   205B
137           KM
138           KM      The Clark Unit Hydrograph is used for this basin.
139           KM          The Natural time-area relation is used for this basin.
140           KM
141           KM      Time of Concentration for this sub-basin is based on the following:
142           KM          6-Hour Rainfall, Pattern No.  1.00
143           KM          An rainfall areal reduction factor of 0.997
144           KM
```

```
LINE          ID.......1.......2.......3.......4.......5.......6.......7.......8.......9......10

 145          KM       EXCESS RAINFALL VALUES EXCEEDED IN 5-MINUTE INTERVALS
 146          KM    5  10  15  20  25  30  35  40  45  50  55  60  65  70  75  80  85  90
 147          KM   .27 .27 .26 .05 .04 .04 .02 .02 .02 .02 .02 .02 .01 .01 .01 .01 .01 .01
 148          KM
 149          KM          L=   0.759 miles, S=  129 feet/mile, Kb= .14
 150          KM
 151          BA   0.211
 152          LG    0.25    0.35    4.35    0.40   35.00
 153          UC   0.696   0.481
 154          UA       0       3       5       8      12      20      43      75      90      96
 155          UA     100
              *

 156          KK    C528
 157          KM      Hydrograph combine 205A + 205B at C528
 158          HC       2
              *

 159          KK  528530
 160          KM      Normal depth channel route from C528 to C530
 161          KM      Source:  Hydrology Field Reconnaissance
 162          RS       3    FLOW      -1
 163          RC   0.060   0.043   0.060  2594.0  0.0709
 164          RX  1000.0  1018.0  1031.0  1042.0  1052.0  1066.0  1093.0  1107.0
 165          RY    96.3    92.2    89.9    85.9    85.7    91.5    91.2    96.3
              *

 166          KK    205C
 167          KM   Sub-Basin   205C
 168          KM
 169          KM      The Clark Unit Hydrograph is used for this basin.
 170          KM          The Natural time-area relation is used for this basin.
 171          KM
 172          KM      Time of Concentration for this sub-basin is based on the following:
 173          KM          6-Hour Rainfall, Pattern No.  1.00
 174          KM          An rainfall areal reduction factor of 0.999
 175          KM
 176          KM       EXCESS RAINFALL VALUES EXCEEDED IN 5-MINUTE INTERVALS
 177          KM     5  10  15  20  25  30  35  40  45  50  55  60  65  70  75  80  85  90
 178          KM   .27 .27 .26 .05 .04 .04 .02 .02 .02 .02 .02 .02 .01 .01 .01 .01 .01 .01
 179          KM
 180          KM          L=   0.618 miles, S=  331 feet/mile, Kb= .15
 181          KM
 182          BA   0.059
 183          LG    0.25    0.35    4.35    0.41   35.00
 184          UC   0.417   0.479
 185          UA       0       3       5       8      12      20      43      75      90      96
 186          UA     100
              *
```

```
LINE          ID.......1.......2.......3.......4.......5.......6.......7.......8.......9......10

 187          KK   C530R
 188          KM      Hydrograph combine 528530 + 205C at C530 right branch
 189          HC       2
              *

 190          KK    205D
 191          KM   Sub-Basin   205D
 192          KM
 193          KM      The Clark Unit Hydrograph is used for this basin.
 194          KM          The Natural time-area relation is used for this basin.
 195          KM
 196          KM      Time of Concentration for this sub-basin is based on the following:
 197          KM          6-Hour Rainfall, Pattern No.  1.00
 198          KM          An rainfall areal reduction factor of 0.996
 199          KM
 200          KM       EXCESS RAINFALL VALUES EXCEEDED IN 5-MINUTE INTERVALS
 201          KM     5  10  15  20  25  30  35  40  45  50  55  60  65  70  75  80  85  90
 202          KM   .27 .27 .26 .05 .04 .04 .02 .02 .02 .02 .02 .02 .01 .01 .01 .01 .01 .01
 203          KM
 204          KM          L=   1.020 miles, S=  361 feet/mile, Kb= .13
 205          KM
 206          BA   0.319
 207          LG    0.25     0.35     4.35     0.40    35.00
 208          UC   0.513    0.343
 209          UA       0        3        5        8       12       20       43       75       90       96
 210          UA     100
              *

 211          KK    205E
 212          KM   Sub-Basin   205E
 213          KM
 214          KM      The Clark Unit Hydrograph is used for this basin.
 215          KM          The Natural time-area relation is used for this basin.
 216          KM
 217          KM      Time of Concentration for this sub-basin is based on the following:
 218          KM          6-Hour Rainfall, Pattern No.  1.00
 219          KM          An rainfall areal reduction factor of 0.997
 220          KM
 221          KM       EXCESS RAINFALL VALUES EXCEEDED IN 5-MINUTE INTERVALS
 222          KM     5  10  15  20  25  30  35  40  45  50  55  60  65  70  75  80  85  90
 223          KM   .27 .27 .26 .05 .04 .04 .02 .02 .02 .02 .02 .02 .01 .01 .01 .01 .01 .01
 224          KM
 225          KM          L=   1.357 miles, S=  358 feet/mile, Kb= .14
 226          KM
 227          BA   0.218
 228          LG    0.25     0.35     4.35     0.40    35.00
 229          UC   0.671    0.723
 230          UA       0        3        5        8       12       20       43       75       90       96
 231          UA     100
              *
```

```
LINE          ID.......1.......2.......3.......4.......5.......6.......7.......8.......9......10

 232          KK    C529
 233          KM      Hydrograph combine 205D + 205E at C529
 234          HC       2
              *
              * *
              * * NOTE:  529530 too short to route
              * *
              *

 235          KK    C530
 236          KM      Hydrograph combine C529 + C530R at C530
 237          HC       2
              *

 238          KK  530531
 239          KM      Normal depth channel route from C530 to C531
 240          KM      Source:  Hydrology Field Reconnaissance
 241          RS       3    FLOW      -1
 242          RC   0.060   0.059   0.060  2426.0  0.0404
 243          RX  1000.0  1035.0  1050.0  1060.0  1075.0  1081.0  1088.0  1094.0
 244          RY    95.9    86.5    86.2    83.1    84.0    90.2    95.6    99.3
              *

 245          KK    205F
 246          KM   Sub-Basin   205F
 247          KM
 248          KM      The Clark Unit Hydrograph is used for this basin.
 249          KM          The Natural time-area relation is used for this basin.
 250          KM
 251          KM      Time of Concentration for this sub-basin is based on the following:
 252          KM          6-Hour Rainfall, Pattern No.  1.00
 253          KM          An rainfall areal reduction factor of 0.998
 254          KM
 255          KM       EXCESS RAINFALL VALUES EXCEEDED IN 5-MINUTE INTERVALS
 256          KM     5  10  15  20  25  30  35  40  45  50  55  60  65  70  75  80  85  90
 257          KM   .27 .27 .26 .05 .04 .04 .02 .02 .02 .02 .02 .02 .01 .01 .01 .01 .01 .01
 258          KM
 259          KM          L=   0.786 miles, S=  326 feet/mile, Kb= .14
 260          KM
 261          BA   0.161
 262          LG    0.25    0.35    4.35    0.41   35.00
 263          UC   0.471   0.374
 264          UA       0       3       5       8      12      20      43      75      90      96
 265          UA     100
              *

 266          KK    C531
 267          KM      Hydrograph combine 530531 + 205F at C531
 268          HC       2
              *
```

```
LINE          ID.......1.......2.......3.......4.......5.......6.......7.......8.......9......10

 269          KK  531532
 270          KM      Normal depth channel route from C531 to C532
 271          KM      Source:  Hydrology Field Reconnaissance
 272          RS       5    FLOW      -1
 273          RC   0.060   0.065   0.060  3391.0  0.0463
 274          RX  1000.0  1012.0  1022.0  1032.0  1050.0  1056.0  1068.0  1092.0
 275          RY    98.8    93.8    89.1    86.4    86.5    89.1    91.0    97.6
              *

 276          KK    205G
 277          KM   Sub-Basin   205G
 278          KM
 279          KM      The Clark Unit Hydrograph is used for this basin.
 280          KM          The Natural time-area relation is used for this basin.
 281          KM
 282          KM      Time of Concentration for this sub-basin is based on the following:
 283          KM          6-Hour Rainfall, Pattern No.  1.00
 284          KM          An rainfall areal reduction factor of 0.998
 285          KM
 286          KM       EXCESS RAINFALL VALUES EXCEEDED IN 5-MINUTE INTERVALS
 287          KM     5  10  15  20  25  30  35  40  45  50  55  60  65  70  75  80  85  90
 288          KM   .27 .26 .25 .04 .03 .03 .02 .02 .02 .02 .02 .02 .00 .00 .00 .00 .00 .00
 289          KM
 290          KM          L=   0.924 miles, S=  338 feet/mile, Kb= .13
 291          KM
 292          BA   0.185
 293          LG    0.24    0.35    4.50    0.40   31.23
 294          UC   0.500   0.420
 295          UA       0       3       5       8      12      20      43      75      90      96
 296          UA     100
              *

 297          KK   C532L
 298          KM      Hydrograph combine 531532 + 205G at C532 left branch
 299          HC       2
              *

 300          KK    205H
 301          KM   Sub-Basin   205H
 302          KM
 303          KM      The Clark Unit Hydrograph is used for this basin.
 304          KM          The Natural time-area relation is used for this basin.
 305          KM
 306          KM      Time of Concentration for this sub-basin is based on the following:
 307          KM          6-Hour Rainfall, Pattern No.  1.00
 308          KM          An rainfall areal reduction factor of 0.997
 309          KM
 310          KM       EXCESS RAINFALL VALUES EXCEEDED IN 5-MINUTE INTERVALS
 311          KM     5  10  15  20  25  30  35  40  45  50  55  60  65  70  75  80  85  90
 312          KM   .27 .26 .26 .04 .04 .03 .02 .02 .02 .02 .02 .02 .00 .00 .00 .00 .00 .00
 313          KM
 314          KM          L=   1.464 miles, S=  325 feet/mile, Kb= .13
 315          KM
 316          BA   0.261
```

```
LINE          ID.......1.......2.......3.......4.......5.......6.......7.......8.......9......10

 317          LG    0.24     0.35     4.50     0.39    31.55
 318          UC   0.713    0.742
 319          UA       0        3        5        8       12       20       43       75       90       96
 320          UA     100
              *

 321          KK    C532
 322          KM      Hydrograph combine C532L + 205H at C532
 323          HC       2
              *

 324          KK  532533
 325          KM      Normal depth channel route from C532 to C533
 326          KM      Source:  Hydrology Field Reconnaissance
 327          RS       2    FLOW      -1
 328          RC   0.060    0.045    0.060   1555.0   0.0283
 329          RX  1000.0   1020.0   1030.0   1048.0   1065.0   1077.0   1092.0   1119.0
 330          RY    98.0     89.4     88.1     85.6     85.9     92.2     93.8     97.0
              *

 331          KK    205I
 332          KM   Sub-Basin   205I
 333          KM
 334          KM      The Clark Unit Hydrograph is used for this basin.
 335          KM          The Natural time-area relation is used for this basin.
 336          KM
 337          KM      Time of Concentration for this sub-basin is based on the following:
 338          KM          6-Hour Rainfall, Pattern No.  1.00
 339          KM          An rainfall areal reduction factor of 0.995
 340          KM
 341          KM       EXCESS RAINFALL VALUES EXCEEDED IN 5-MINUTE INTERVALS
 342          KM     5  10  15  20  25  30  35  40  45  50  55  60  65  70  75  80  85  90
 343          KM   .27 .26 .25 .04 .02 .02 .01 .01 .01 .01 .01 .01 .00 .00 .00 .00 .00 .00
 344          KM
 345          KM          L=   1.487 miles, S=  326 feet/mile, Kb= .11
 346          KM
 347          BA   0.354
 348          LG    0.20     0.37     5.20     0.28    15.18
 349          UC   0.658    0.578
 350          UA       0        3        5        8       12       20       43       75       90       96
 351          UA     100
              *

 352          KK    C533
 353          KM      Hydrograph combine 532533 + 205I at C533
 354          HC       2
              *

 355          KK  533534
 356          KM      Normal depth channel route from C533 to C534
 357          KM      Source:  Hydrology Field Reconnaissance
 358          RS      13    FLOW      -1
 359          RC   0.060    0.046    0.060   7145.0   0.0241
 360          RX  1000.0   1010.0   1060.0   1073.0   1160.0   1181.0   1223.0   1237.0
 361          RY    97.8     93.7     94.7     90.8     89.9     92.4     94.0     96.8
              *
```

```
LINE          ID.......1.......2.......3.......4.......5.......6.......7.......8.......9......10

 362          KK    205J
 363          KM   Sub-Basin   205J
 364          KM
 365          KM      The Clark Unit Hydrograph is used for this basin.
 366          KM          The Natural time-area relation is used for this basin.
 367          KM
 368          KM      Time of Concentration for this sub-basin is based on the following:
 369          KM          6-Hour Rainfall, Pattern No.  1.00
 370          KM          An rainfall areal reduction factor of 0.995
 371          KM
 372          KM       EXCESS RAINFALL VALUES EXCEEDED IN 5-MINUTE INTERVALS
 373          KM     5  10  15  20  25  30  35  40  45  50  55  60  65  70  75  80  85  90
 374          KM   .26 .25 .24 .03 .00 .00 .00 .00 .00 .00 .00 .00 .00 .00 .00 .00 .00 .00
 375          KM
 376          KM          L=   1.633 miles, S=  243 feet/mile, Kb= .08
 377          KM
 378          BA   0.369
 379          LG    0.21    0.35    4.90    0.30    3.48
 380          UC   0.667   0.616
 381          UA       0       3       5       8      12      20      43      75      90      96
 382          UA     100
              *

 383          KK   C534R
 384          KM      Hydrograph combine 533534 + 205J at C534 right branch
 385          HC       2
              *

 386          KK    205K
 387          KM   Sub-Basin   205K
 388          KM
 389          KM      The Clark Unit Hydrograph is used for this basin.
 390          KM          The Natural time-area relation is used for this basin.
 391          KM
 392          KM      Time of Concentration for this sub-basin is based on the following:
 393          KM          6-Hour Rainfall, Pattern No.  1.00
 394          KM          An rainfall areal reduction factor of 0.997
 395          KM
 396          KM       EXCESS RAINFALL VALUES EXCEEDED IN 5-MINUTE INTERVALS
 397          KM     5  10  15  20  25  30  35  40  45  50  55  60  65  70  75  80  85  90
 398          KM   .27 .26 .26 .05 .01 .00 .00 .00 .00 .00 .00 .00 .00 .00 .00 .00 .00 .00
 399          KM
 400          KM          L=   1.772 miles, S=  249 feet/mile, Kb= .10
 401          KM
 402          BA   0.245
 403          LG    0.16    0.38    5.60    0.22    1.54
 404          UC   0.817   1.040
 405          UA       0       3       5       8      12      20      43      75      90      96
 406          UA     100
              *
```

```
LINE          ID.......1.......2.......3.......4.......5.......6.......7.......8.......9......10

 407          KK    C534
 408          KM      Hydrograph combine C534R + 205K at C534
 409          HC       2
              *

 410          KK  534535
 411          KM      Normal depth channel route from C534 to C535
 412          KM      Source:  Hydrology Field Reconnaissance
 413          RS       4    FLOW      -1
 414          RC   0.065   0.046   0.065  2037.0  0.0221
 415          RX  1000.0  1010.0  1016.0  1075.0  1150.0  1162.0  1174.0  1182.0
 416          RY    97.1    93.4    91.6    89.6    86.9    90.8    92.2    92.3
              *

 417          KK    205L
 418          KM   Sub-Basin   205L
 419          KM
 420          KM      The Clark Unit Hydrograph is used for this basin.
 421          KM          The Natural time-area relation is used for this basin.
 422          KM
 423          KM      Time of Concentration for this sub-basin is based on the following:
 424          KM          6-Hour Rainfall, Pattern No.  1.00
 425          KM          An rainfall areal reduction factor of 0.998
 426          KM
 427          KM       EXCESS RAINFALL VALUES EXCEEDED IN 5-MINUTE INTERVALS
 428          KM     5  10  15  20  25  30  35  40  45  50  55  60  65  70  75  80  85  90
 429          KM   .26 .25 .24 .03 .00 .00 .00 .00 .00 .00 .00 .00 .00 .00 .00 .00 .00 .00
 430          KM
 431          KM          L=   0.701 miles, S=  284 feet/mile, Kb= .09
 432          KM
 433          BA   0.118
 434          LG    0.19    0.36    5.00    0.29    0.00
 435          UC   0.346   0.290
 436          UA       0       3       5       8      12      20      43      75      90      96
 437          UA     100
              *

 438          KK    C535
 439          KM      Hydrograph combine 534535 + 205L at C535
 440          HC       2
              *

 441          KK  535536
 442          KM      Normal depth channel route from C535 to C536
 443          KM      Source:  HEC-2 Cross Section: HE 3.275
 444          RS       5    FLOW      -1
 445          RC   0.075   0.050   0.075  2975.0  0.0236
 446          RX  9852.8  9871.5  9957.7 10000.0 10015.6 10052.4 10142.4 10183.6
 447          RY  1911.6  1904.3  1906.9  1900.8  1900.8  1905.4  1905.2  1912.6
              *
```

```
LINE          ID.......1.......2.......3.......4.......5.......6.......7.......8.......9......10

 448          KK    205M
 449          KM   Sub-Basin   205M
 450          KM
 451          KM      The Clark Unit Hydrograph is used for this basin.
 452          KM          The Urban time-area relation is used for this basin.
 453          KM
 454          KM      Time of Concentration for this sub-basin is based on the following:
 455          KM          6-Hour Rainfall, Pattern No.  1.00
 456          KM          An rainfall areal reduction factor of 0.998
 457          KM
 458          KM       EXCESS RAINFALL VALUES EXCEEDED IN 5-MINUTE INTERVALS
 459          KM     5  10  15  20  25  30  35  40  45  50  55  60  65  70  75  80  85  90
 460          KM   .29 .28 .28 .07 .05 .03 .02 .01 .01 .01 .01 .01 .00 .00 .00 .00 .00 .00
 461          KM
 462          KM          L=   0.839 miles, S=  230 feet/mile, Kb= .05
 463          KM
 464          BA   0.139
 465          LG    0.15    0.31    5.40    0.22   22.35
 466          UC   0.258   0.221
 467          UA      0       5      16      30      65      77      84      90      94      97
 468          UA    100
              *

 469          KK   C536R
 470          KM      Hydrograph combine 535536 + 205M at C536 right branch
 471          HC       2
              *

 472          KK    205N
 473          KM   Sub-Basin   205N
 474          KM
 475          KM      The Clark Unit Hydrograph is used for this basin.
 476          KM          The HEC-1 time-area relation is used for this basin.
 477          KM
 478          KM      Time of Concentration for this sub-basin is based on the following:
 479          KM          6-Hour Rainfall, Pattern No.  1.00
 480          KM          An rainfall areal reduction factor of 0.998
 481          KM
 482          KM       EXCESS RAINFALL VALUES EXCEEDED IN 5-MINUTE INTERVALS
 483          KM     5  10  15  20  25  30  35  40  45  50  55  60  65  70  75  80  85  90
 484          KM   .27 .26 .26 .05 .01 .00 .00 .00 .00 .00 .00 .00 .00 .00 .00 .00 .00 .00
 485          KM
 486          KM          L=   1.183 miles, S=  245 feet/mile, Kb= .10
 487          KM
 488          BA   0.156
 489          LG    0.15    0.39    5.70    0.21    0.80
 490          UC   0.592   0.681
              *
```

```
LINE          ID.......1.......2.......3.......4.......5.......6.......7.......8.......9......10

491           KK   C536I
492           KM      Hydrograph combine C536R + 205N at C536I
493           HC       2
              *
              * *
              * * C536I is the total flow in Hesperus Wash upstream of Dam 36
              * *
              *

494           KK   C536O
495           KM      Reservoir route at C536 (Dam 36).
496           RS       1    ELEV  1852.1
497           SV    0.00   14.41   35.94   67.64  108.61  158.07  218.14  276.00  280.00  289.00
498           SV  298.02  308.00  317.00  327.00  337.00  346.95  358.00  374.00
499           SE  1852.1  1866.0  1870.0  1874.0  1878.0  1882.0  1886.0  1889.0  1889.2  1889.6
500           SE  1890.0  1890.4  1890.8  1891.2  1891.6  1892.0  1892.4  1893.0
501           SQ       0     108     168     211     245     276     301     320     338     347
502           SQ     356     459     679     995    1408    1905    2477    3119    3826    5009
503           SE  1852.1  1858.0  1862.0  1866.0  1870.0  1874.0  1878.0  1882.0  1886.0  1889.0
504           SE  1889.2  1889.6  1890.0  1890.4  1890.8  1891.2  1891.6  1892.0  1892.4  1893.0
505           RL                   0.17
              *
              * *
              * * End Basin 205.  Start Basin 206
              * *
              *

506           KK  536537
507           KM     Normal depth channel route from C536 to C537
508           KM     Source:  HEC-2 Cross Section: HE 2.729
509           RS       3    FLOW      -1
510           RC   0.075   0.050   0.075  1480.0  0.0209
511           RX  9900.0  9912.0  9947.3  9979.3 10025.0 10044.5 10051.0 10060.0
512           RY  1846.5  1845.4  1843.1  1834.3  1833.6  1840.5  1843.3  1843.5
              *

513           KK    206A
514           KM   Sub-Basin   206A
515           KM
516           KM      The Clark Unit Hydrograph is used for this basin.
517           KM          The Urban time-area relation is used for this basin.
518           KM
519           KM      Time of Concentration for this sub-basin is based on the following:
520           KM          6-Hour Rainfall, Pattern No.  1.00
521           KM          An rainfall areal reduction factor of 0.998
522           KM
523           KM       EXCESS RAINFALL VALUES EXCEEDED IN 5-MINUTE INTERVALS
524           KM     5  10  15  20  25  30  35  40  45  50  55  60  65  70  75  80  85  90
525           KM   .30 .29 .29 .08 .06 .05 .02 .02 .02 .02 .02 .02 .01 .01 .01 .01 .01 .01
526           KM
527           KM          L=   0.631 miles, S=  256 feet/mile, Kb= .04
528           KM
529           BA   0.128
530           LG    0.12    0.28    5.30    0.23   33.34
```

```
LINE          ID.......1.......2.......3.......4.......5.......6.......7.......8.......9......10

 531          UC   0.188   0.129
 532          UA       0       5      16      30      65      77      84      90      94      97
 533          UA     100
              *

 534          KK    C537
 535          KM      Hydrograph combine 536537 + 206A at C537
 536          HC       2
              *

 537          KK  537538
 538          KM      Normal depth channel route from C537 to C538
 539          KM      Source:  HEC-2 Cross Section: HE 2.493
 540          RS       4    FLOW      -1
 541          RC   0.075   0.050   0.075  2155.0  0.0210
 542          RX  9946.0  9957.6  9984.8  9994.8 10000.0 10036.5 10070.1 10107.3
 543          RY  1817.0  1815.2  1807.4  1803.2  1803.2  1805.5  1814.3  1815.4
              *

 544          KK    206B
 545          KM   Sub-Basin   206B
 546          KM
 547          KM      The Clark Unit Hydrograph is used for this basin.
 548          KM          The Urban time-area relation is used for this basin.
 549          KM
 550          KM      Time of Concentration for this sub-basin is based on the following:
 551          KM          6-Hour Rainfall, Pattern No.  1.00
 552          KM          An rainfall areal reduction factor of 0.999
 553          KM
 554          KM       EXCESS RAINFALL VALUES EXCEEDED IN 5-MINUTE INTERVALS
 555          KM     5  10  15  20  25  30  35  40  45  50  55  60  65  70  75  80  85  90
 556          KM   .30 .30 .30 .09 .07 .06 .03 .03 .02 .02 .02 .02 .01 .01 .01 .01 .01 .01
 557          KM
 558          KM          L=   0.570 miles, S=  139 feet/mile, Kb= .03
 559          KM
 560          BA   0.095
 561          LG    0.10    0.26    5.20    0.23   41.42
 562          UC   0.183   0.137
 563          UA       0       5      16      30      65      77      84      90      94      97
 564          UA     100
              *

 565          KK   C538I
 566          KM      Hydrograph combine 537538 + 206B at C538I
 567          HC       2
              *

 568          KK   C538O
 569          KM      Reservoir route at C538.
 570          RS       1    ELEV  1778.2
 571          SV    0.00    0.10    0.57    1.69    2.60    2.70    2.90    3.00    3.20    3.38
 572          SV    3.60    3.90    4.10    4.30    4.60    5.10    5.60    6.10    7.10    8.10
 573          SE  1778.2  1782.0  1784.0  1786.0  1787.1  1787.2  1787.4  1787.6  1787.8  1788.0
 574          SE  1788.2  1788.4  1788.6  1788.8  1789.0  1789.4  1789.8  1790.2  1790.8  1791.4
 575          SQ       0      82     133     185     207     208     212     218     226     235
```

```
LINE          ID.......1.......2.......3.......4.......5.......6.......7.......8.......9......10

576           SQ     249     265     286     310     338     400     482     611     942    1439
              *

577           KK  538540
578           KM      Normal depth channel route from C538 to C540
579           KM      Source:  HEC-2 Cross Section: HE 1.990
580           RS       6    FLOW      -1
581           RC   0.075   0.050   0.075  2176.0  0.0210
582           RX  9907.7  9931.8  9978.4 10000.0 10041.1 10056.9 10143.7 10164.9
583           RY  1767.5  1754.9  1755.2  1753.2  1753.1  1755.1  1757.3  1769.4
              *

584           KK    206C
585           KM   Sub-Basin   206C
586           KM
587           KM      The Clark Unit Hydrograph is used for this basin.
588           KM          The Urban time-area relation is used for this basin.
589           KM
590           KM      Time of Concentration for this sub-basin is based on the following:
591           KM          6-Hour Rainfall, Pattern No.  1.00
592           KM          An rainfall areal reduction factor of 1.000
593           KM
594           KM       EXCESS RAINFALL VALUES EXCEEDED IN 5-MINUTE INTERVALS
595           KM     5  10  15  20  25  30  35  40  45  50  55  60  65  70  75  80  85  90
596           KM   .29 .28 .28 .07 .04 .03 .02 .02 .02 .02 .02 .02 .00 .00 .00 .00 .00 .00
597           KM
598           KM          L=   0.427 miles, S=  138 feet/mile, Kb= .04
599           KM
600           BA   0.024
601           LG    0.11    0.26    4.35    0.36   28.55
602           UC   0.192   0.252
603           UA       0       5      16      30      65      77      84      90      94      97
604           UA     100
              *

605           KK   C540R
606           KM      Hydrograph combine 538540 + 206C at C540 right branch
607           HC       2
              *

608           KK    206D
609           KM   Sub-Basin   206D
610           KM
611           KM      The Clark Unit Hydrograph is used for this basin.
612           KM          The Urban time-area relation is used for this basin.
613           KM
614           KM      Time of Concentration for this sub-basin is based on the following:
615           KM          6-Hour Rainfall, Pattern No.  1.00
616           KM          An rainfall areal reduction factor of 0.999
617           KM
618           KM       EXCESS RAINFALL VALUES EXCEEDED IN 5-MINUTE INTERVALS
619           KM     5  10  15  20  25  30  35  40  45  50  55  60  65  70  75  80  85  90
620           KM   .31 .31 .31 .10 .08 .07 .03 .03 .03 .02 .02 .02 .01 .01 .01 .01 .01 .01
621           KM
622           KM          L=   0.531 miles, S=  236 feet/mile, Kb= .03
```

```
LINE          ID.......1.......2.......3.......4.......5.......6.......7.......8.......9......10

 623          KM
 624          BA   0.062
 625          LG    0.08     0.25     5.70     0.18    43.01
 626          UC   0.150    0.133
 627          UA       0        5       16       30       65       77       84       90       94       97
 628          UA     100
              *

 629          KK  539540
 630          KM      Normal depth channel route from C539 to C540
 631          KM      Source:  200 Scale Mapping
 632          RS       5    FLOW      -1
 633          RC   0.060    0.050    0.055   1872.0   0.0256
 634          RX  1000.0   1007.0   1016.0   1036.0   1046.0   1080.0   1150.0   1210.0
 635          RY  1750.0   1748.0   1746.0   1744.0   1744.0   1746.0   1748.0   1750.0
              *

 636          KK    206E
 637          KM   Sub-Basin   206E
 638          KM
 639          KM      The Clark Unit Hydrograph is used for this basin.
 640          KM          The Urban time-area relation is used for this basin.
 641          KM
 642          KM      Time of Concentration for this sub-basin is based on the following:
 643          KM          6-Hour Rainfall, Pattern No.  1.00
 644          KM          An rainfall areal reduction factor of 1.000
 645          KM
 646          KM       EXCESS RAINFALL VALUES EXCEEDED IN 5-MINUTE INTERVALS
 647          KM     5  10  15  20  25  30  35  40  45  50  55  60  65  70  75  80  85  90
 648          KM   .29 .28 .28 .07 .04 .03 .01 .01 .01 .01 .01 .01 .00 .00 .00 .00 .00 .00
 649          KM
 650          KM          L=   0.343 miles, S=  175 feet/mile, Kb= .03
 651          KM
 652          BA   0.023
 653          LG    0.09     0.25     4.30     0.36    25.75
 654          UC   0.138    0.150
 655          UA       0        5       16       30       65       77       84       90       94       97
 656          UA     100
              *

 657          KK   C540L
 658          KM      Hydrograph combine 539540 + 206E at C540 left branch
 659          HC       2
              *

 660          KK    C540
 661          KM      Hydrograph combine C540R + C540L at C540
 662          HC       2
              *
              * *
              * * C540 is the end of Hesperus Wash and the start of Balboa Wash
              * *
              *
```

```
LINE          ID.......1.......2.......3.......4.......5.......6.......7.......8.......9......10

663           KK  540541
664           KM      Normal depth channel route from C540 to C541
665           KM      Source:  HEC-2 Cross Section: BA 1.645
666           RS       7    FLOW      -1
667           RC   0.065   0.035   0.065  4207.0  0.0204
668           RX  9960.8  9968.0  9975.1  9975.7  9993.2 10018.2 10297.5 10343.9
669           RY  1725.2  1721.8  1718.4  1716.2  1716.4  1718.4  1719.8  1730.5
              *

670           KK    206F
671           KM   Sub-Basin   206F
672           KM
673           KM      The Clark Unit Hydrograph is used for this basin.
674           KM          The Urban time-area relation is used for this basin.
675           KM
676           KM      Time of Concentration for this sub-basin is based on the following:
677           KM          6-Hour Rainfall, Pattern No.  1.00
678           KM          An rainfall areal reduction factor of 0.998
679           KM
680           KM       EXCESS RAINFALL VALUES EXCEEDED IN 5-MINUTE INTERVALS
681           KM     5  10  15  20  25  30  35  40  45  50  55  60  65  70  75  80  85  90
682           KM   .29 .29 .28 .08 .05 .04 .02 .01 .01 .01 .01 .01 .00 .00 .00 .00 .00 .00
683           KM
684           KM          L=   0.975 miles, S=  217 feet/mile, Kb= .03
685           KM
686           BA   0.157
687           LG    0.09    0.25    4.60    0.30   24.97
688           UC   0.213   0.187
689           UA       0       5      16      30      65      77      84      90      94      97
690           UA     100
              *

691           KK    C541
692           KM      Hydrograph combine 540541 + 206F at C541
693           HC       2
              *

694           KK  541548
695           KM      Normal depth channel route from C541 to C548
696           KM      Source:  HEC-2 Cross Section: BA 0.905
697           RS       2    FLOW      -1
698           RC   0.060   0.045   0.060  1138.0  0.0316
699           RX  9761.7  9936.7  9955.2  9986.9  9994.7 10039.2 10065.3 10066.0
700           RY  1647.4  1644.1  1638.1  1637.3  1636.2  1637.5  1652.9  1653.0
              *

701           KK    206G
702           KM   Sub-Basin   206G
703           KM
704           KM      The Clark Unit Hydrograph is used for this basin.
705           KM          The Urban time-area relation is used for this basin.
706           KM
707           KM      Time of Concentration for this sub-basin is based on the following:
708           KM          6-Hour Rainfall, Pattern No.  1.00
```

```
LINE          ID.......1.......2.......3.......4.......5.......6.......7.......8.......9......10

 709          KM          An rainfall areal reduction factor of 0.999
 710          KM
 711          KM       EXCESS RAINFALL VALUES EXCEEDED IN 5-MINUTE INTERVALS
 712          KM     5  10  15  20  25  30  35  40  45  50  55  60  65  70  75  80  85  90
 713          KM   .30 .29 .29 .09 .06 .05 .02 .02 .02 .02 .02 .02 .00 .00 .00 .00 .00 .00
 714          KM
 715          KM          L=   0.950 miles, S=  132 feet/mile, Kb= .03
 716          KM
 717          BA   0.089
 718          LG    0.11    0.26    5.20    0.23   29.86
 719          UC   0.246   0.296
 720          UA       0       5      16      30      65      77      84      90      94      97
 721          UA     100
              *

 722          KK  BB523R
 723          KM      Retrieve previously diverted hydrograph at C523 in the right branch.
 724          DR   D523R
              *

 725          KK  523548
 726          KM      Normal depth channel route from C523 to C548
 727          KM      Source:  200 Scale Mapping
 728          RS      23    FLOW      -1
 729          RC   0.040   0.018   0.040  2680.0  0.0189
 730          RX  1000.0  1040.0  1090.0  1130.0  1170.0  1171.2  1181.2  1196.2
 731          RY  1646.0  1645.0  1643.8  1644.7  1644.0  1644.4  1646.0  1648.0
              *

 732          KK   C548L
 733          KM      Hydrograph combine 541548 + 206G + BB523R at C548 left branch
 734          HC       3    3.72
              *
              * *
              * * C548L is the total flow in Balboa Wash above confluence with Oxford Wash
              * *
              *

 735          KK    206H
 736          KM   Sub-Basin   206H
 737          KM
 738          KM      The Clark Unit Hydrograph is used for this basin.
 739          KM          The Urban time-area relation is used for this basin.
 740          KM
 741          KM      Time of Concentration for this sub-basin is based on the following:
 742          KM          6-Hour Rainfall, Pattern No.  1.00
 743          KM          An rainfall areal reduction factor of 0.999
 744          KM
 745          KM       EXCESS RAINFALL VALUES EXCEEDED IN 5-MINUTE INTERVALS
 746          KM     5  10  15  20  25  30  35  40  45  50  55  60  65  70  75  80  85  90
 747          KM   .31 .30 .30 .10 .07 .07 .03 .03 .03 .02 .02 .02 .01 .01 .01 .01 .01 .01
 748          KM
 749          KM          L=   0.515 miles, S=  183 feet/mile, Kb= .03
 750          KM
 751          BA   0.059
```

```
LINE          ID.......1.......2.......3.......4.......5.......6.......7.......8.......9......10

 752          LG    0.08    0.25    5.70    0.18   36.29
 753          UC   0.158   0.141
 754          UA       0       5      16      30      65      77      84      90      94      97
 755          UA     100
              *

 756          KK  542543
 757          KM      Normal depth channel route from C542 to C543
 758          KM      Source:  HEC-2 Cross Section: OX 0.931
 759          RS       2    FLOW      -1
 760          RC   0.075   0.040   0.050   686.0  0.0066
 761          RX  9846.9  9881.6  9967.5  9983.2 10010.0 10025.0 10033.8 10039.6
 762          RY  1732.3  1723.5  1724.1  1717.8  1717.0  1724.0  1728.2  1730.7
              *

 763          KK    206I
 764          KM   Sub-Basin   206I
 765          KM
 766          KM      The Clark Unit Hydrograph is used for this basin.
 767          KM          The Urban time-area relation is used for this basin.
 768          KM
 769          KM      Time of Concentration for this sub-basin is based on the following:
 770          KM          6-Hour Rainfall, Pattern No.  1.00
 771          KM          An rainfall areal reduction factor of 1.000
 772          KM
 773          KM       EXCESS RAINFALL VALUES EXCEEDED IN 5-MINUTE INTERVALS
 774          KM     5  10  15  20  25  30  35  40  45  50  55  60  65  70  75  80  85  90
 775          KM   .31 .30 .30 .10 .07 .07 .03 .03 .03 .02 .02 .02 .01 .01 .01 .01 .01 .01
 776          KM
 777          KM          L=   0.232 miles, S=  286 feet/mile, Kb= .03
 778          KM
 779          BA   0.021
 780          LG    0.08    0.25    5.70    0.18   34.78
 781          UC   0.092   0.074
 782          UA       0       5      16      30      65      77      84      90      94      97
 783          UA     100
              *

 784          KK    C543
 785          KM      Hydrograph combine 542543 + 206I at C543
 786          HC       2
              *

 787          KK   D543L
 788          KM      Hydrograph diversion at C543.  Main flow continues in the left branch.
 789          KM      Diverted flow is in the right branch.
 790          DT   D543R
 791          DI       0      38      45      50      65      85      97     122     141     162
 792          DI     194     350     395     432     475     522     570     612
 793          DQ       0      38      45      50      65      85      97     122     141     162
 794          DQ     194     350     395     425     460     500     540     575
              *
```

```
LINE          ID.......1.......2.......3.......4.......5.......6.......7.......8.......9......10

 795          KK  543544
 796          KM      Normal depth channel route from C543 to C544
 797          KM      Source:  200 Scale Mapping & Hydrology Field Reconnaissance
 798          RS       1    FLOW      -1
 799          RC   0.040   0.018   0.040   597.0  0.0277
 800          RX  1000.0  1020.0  1045.0  1075.0  1105.0  1106.2  1146.2  1266.2
 801          RY  1720.0  1718.0  1712.0  1712.3  1712.0  1712.4  1714.0  1720.0
              *

 802          KK   206K
 803          KM   Sub-Basin   206K
 804          KM
 805          KM      The Clark Unit Hydrograph is used for this basin.
 806          KM          The Urban time-area relation is used for this basin.
 807          KM
 808          KM      Time of Concentration for this sub-basin is based on the following:
 809          KM          6-Hour Rainfall, Pattern No.  1.00
 810          KM          An rainfall areal reduction factor of 0.999
 811          KM
 812          KM       EXCESS RAINFALL VALUES EXCEEDED IN 5-MINUTE INTERVALS
 813          KM     5  10  15  20  25  30  35  40  45  50  55  60  65  70  75  80  85  90
 814          KM   .30 .30 .30 .09 .07 .06 .03 .03 .02 .01 .01 .01 .00 .00 .00 .00 .00 .00
 815          KM
 816          KM          L=   0.615 miles, S=  255 feet/mile, Kb= .03
 817          KM
 818          BA   0.056
 819          LG    0.09    0.25    5.70    0.18   25.80
 820          UC   0.158   0.168
 821          UA       0       5      16      30      65      77      84      90      94      97
 822          UA     100
              *

 823          KK    C544
 824          KM      Hydrograph combine 543544 + 206K at C544
 825          HC       2
              *

 826          KK  544545
 827          KM      Normal depth channel route from C544 to C545
 828          KM      Source:  200 Scale Mapping & Hydrology Field Reconnaissance
 829          RS       2    FLOW      -1
 830          RC   0.040   0.018   0.040   985.0  0.0234
 831          RX  1000.0  1008.0  1018.0  1048.0  1078.0  1079.2  1089.2  1109.2
 832          RY  1690.0  1688.0  1686.0  1686.3  1686.0  1686.4  1688.0  1689.0
              *

 833          KK   D545L
 834          KM      Hydrograph diversion at C545.  Main flow continues in the left branch.
 835          KM      Diverted flow is in the right branch.
 836          DT   D545R
 837          DI       0      50     100     200     400     800    1600    3200    5000
 838          DQ       0      25      50     100     200     400     800    1600    2500
              *
```

```
LINE          ID.......1.......2.......3.......4.......5.......6.......7.......8.......9......10

 839          KK  545546
 840          KM      Normal depth channel route from C545 to C546
 841          KM      Source:  200 Scale Mapping & Hydrology Field Reconnaissance
 842          RS       1    FLOW      -1
 843          RC   0.040   0.018   0.040   428.0  0.0164
 844          RX  1000.0  1020.0  1050.0  1080.0  1110.0  1111.2  1121.2  1151.2
 845          RY  1680.0  1678.0  1676.0  1676.3  1676.0  1676.4  1678.0  1678.5
              *

 846          KK    206L
 847          KM   Sub-Basin   206L
 848          KM
 849          KM      The Clark Unit Hydrograph is used for this basin.
 850          KM          The Urban time-area relation is used for this basin.
 851          KM
 852          KM      Time of Concentration for this sub-basin is based on the following:
 853          KM          6-Hour Rainfall, Pattern No.  1.00
 854          KM          An rainfall areal reduction factor of 0.999
 855          KM
 856          KM       EXCESS RAINFALL VALUES EXCEEDED IN 5-MINUTE INTERVALS
 857          KM     5  10  15  20  25  30  35  40  45  50  55  60  65  70  75  80  85  90
 858          KM   .30 .30 .30 .09 .07 .06 .03 .02 .02 .01 .01 .01 .00 .00 .00 .00 .00 .00
 859          KM
 860          KM          L=   0.546 miles, S=  231 feet/mile, Kb= .03
 861          KM
 862          BA   0.060
 863          LG    0.09    0.25    5.80    0.18   25.01
 864          UC   0.154   0.143
 865          UA       0       5      16      30      65      77      84      90      94      97
 866          UA     100
              *

 867          KK    C546
 868          KM      Hydrograph combine 545546 + 206L at C546
 869          HC       2
              *

 870          KK  546547
 871          KM      Normal depth channel route from C546 to C547
 872          KM      Source:  200 Scale Mapping
 873          RS       1    FLOW      -1
 874          RC   0.040   0.018   0.040   749.0  0.0327
 875          RX  1000.0  1005.0  1011.0  1013.0  1029.0  1047.0  1052.0  1057.0
 876          RY  1666.0  1664.0  1662.0  1661.9  1662.4  1662.0  1664.0  1666.0
              *

 877          KK  BB543R
 878          KM      Retrieve previously diverted hydrograph at C543 in the right branch.
 879          DR   D543R
              *
```

```
LINE          ID.......1.......2.......3.......4.......5.......6.......7.......8.......9......10

 880          KK  543547
 881          KM      Normal depth channel route from C543 to C547
 882          KM      Source:  HEC-2 Cross Section: OX 0.638
 883          RS       5    FLOW      -1
 884          RC   0.075   0.040   0.050  2395.0  0.0278
 885          RX  9720.9  9769.0  9970.7  9985.5 10020.0 10038.1 10097.0 10102.0
 886          RY  1690.4  1681.2  1683.1  1676.2  1677.0  1687.1  1687.4  1690.0
              *

 887          KK  BB545R
 888          KM      Retrieve previously diverted hydrograph at C545 in the right branch.
 889          DR   D545R
              *

 890          KK  545547
 891          KM      Normal depth channel route from C545 to C547
 892          KM      Source:  HEC-2 Cross Section: OX 0.542
 893          RS       4    FLOW      -1
 894          RC   0.075   0.040   0.050  1216.0  0.0259
 895          RX  9668.2  9778.4  9957.9  9986.0 10012.7 10043.6 10067.6 10163.4
 896          RY  1674.1  1674.1  1673.3  1662.1  1662.2  1680.4  1680.9  1681.1
              *

 897          KK    206J
 898          KM   Sub-Basin   206J
 899          KM
 900          KM      The Clark Unit Hydrograph is used for this basin.
 901          KM          The Urban time-area relation is used for this basin.
 902          KM
 903          KM      Time of Concentration for this sub-basin is based on the following:
 904          KM          6-Hour Rainfall, Pattern No.  1.00
 905          KM          An rainfall areal reduction factor of 0.999
 906          KM
 907          KM       EXCESS RAINFALL VALUES EXCEEDED IN 5-MINUTE INTERVALS
 908          KM     5  10  15  20  25  30  35  40  45  50  55  60  65  70  75  80  85  90
 909          KM   .31 .31 .31 .10 .08 .07 .03 .03 .03 .03 .03 .03 .01 .01 .01 .01 .01 .01
 910          KM
 911          KM          L=   0.502 miles, S=  214 feet/mile, Kb= .03
 912          KM
 913          BA   0.060
 914          LG    0.08    0.25    5.70    0.18   44.51
 915          UC   0.150   0.129
 916          UA       0       5      16      30      65      77      84      90      94      97
 917          UA     100
              *

 918          KK    C547
 919          KM      Hydrograph combine 546547 + 543547 + 545547 + 206J at C547
 920          HC       4    0.26
              *
```

```
LINE          ID.......1.......2.......3.......4.......5.......6.......7.......8.......9......10

921           KK  547548
922           KM      Normal depth channel route from C547 to C548
923           KM      Source:  HEC-2 Cross Section: OX 0.235
924           RS       4    FLOW      -1
925           RC   0.075   0.040   0.050  2165.0  0.0182
926           RX  9910.0  9911.4  9968.5  9987.6 10017.4 10032.3 10077.4 10080.0
927           RY  1639.0  1638.9  1637.9  1635.7  1635.8  1641.7  1642.9  1643.0
              *

928           KK    206M
929           KM   Sub-Basin   206M
930           KM
931           KM      The Clark Unit Hydrograph is used for this basin.
932           KM          The Urban time-area relation is used for this basin.
933           KM
934           KM      Time of Concentration for this sub-basin is based on the following:
935           KM          6-Hour Rainfall, Pattern No.  1.00
936           KM          An rainfall areal reduction factor of 0.999
937           KM
938           KM       EXCESS RAINFALL VALUES EXCEEDED IN 5-MINUTE INTERVALS
939           KM     5  10  15  20  25  30  35  40  45  50  55  60  65  70  75  80  85  90
940           KM   .31 .30 .30 .10 .07 .07 .03 .03 .03 .03 .03 .03 .01 .01 .01 .01 .01 .01
941           KM
942           KM          L=   0.465 miles, S=  166 feet/mile, Kb= .03
943           KM
944           BA   0.060
945           LG    0.08    0.25    5.20    0.23   46.18
946           UC   0.158   0.129
947           UA       0       5      16      30      65      77      84      90      94      97
948           UA     100
              *

949           KK   C548R
950           KM      Hydrograph combine 547548 + 206M at C548 right branch
951           HC       2
              *
              * *
              * * C548R is the total flow in Oxford Wash above confluence with Balboa Wash
              * *
              *

952           KK    C548
953           KM      Hydrograph combine C548L + C548R at C548
954           HC       2
              *
              * *
              * * C548 is the total flow in Balboa Wash below the confluence of Balboa Wash
              * * and Oxford Wash
              * *
              *
```

```
LINE          ID.......1.......2.......3.......4.......5.......6.......7.......8.......9......10

 955          KK  548549
 956          KM      Normal depth channel route from C548 to C549
 957          KM      Source:  HEC-2 Cross Section: BA0.246
 958          RS       9    FLOW      -1
 959          RC   0.070   0.080   0.070  3258.0  0.0172
 960          RX  9889.1  9912.5  9940.2  9960.0 10026.1 10046.8 10067.8 10079.3
 961          RY  1586.2  1585.7  1577.5  1573.6  1573.2  1579.5  1585.7  1586.2
              *

 962          KK    206N
 963          KM   Sub-Basin   206N
 964          KM
 965          KM      The Clark Unit Hydrograph is used for this basin.
 966          KM          The Urban time-area relation is used for this basin.
 967          KM
 968          KM      Time of Concentration for this sub-basin is based on the following:
 969          KM          6-Hour Rainfall, Pattern No.  1.00
 970          KM          An rainfall areal reduction factor of 0.998
 971          KM
 972          KM       EXCESS RAINFALL VALUES EXCEEDED IN 5-MINUTE INTERVALS
 973          KM     5  10  15  20  25  30  35  40  45  50  55  60  65  70  75  80  85  90
 974          KM   .31 .30 .30 .10 .07 .06 .03 .03 .03 .03 .03 .03 .01 .01 .01 .01 .01 .01
 975          KM
 976          KM          L=   0.767 miles, S=  120 feet/mile, Kb= .03
 977          KM
 978          BA   0.152
 979          LG    0.11    0.27    4.65    0.29   52.66
 980          UC   0.225   0.167
 981          UA       0       5      16      30      65      77      84      90      94      97
 982          UA     100
              *

 983          KK   C549L
 984          KM      Hydrograph combine 548549 + 206N at C549 left branch
 985          HC       2
              *
              * *
              * * C549L is the total flow in Balboa Wash above confluence with Ashbrook Wash
              * *
              * * End Basin 206.  Start Basin 207
              * *
              *

 986          KK   C5990
 987          KM      The following is the design outflow hydrograph from Golden Eagle Park Dam
 988          IN       1
 989          BA    7.13
 990          QI       0       0       0       0       0       1       1       1       2       2
 991          QI       2       3       3       3       3       4       4       4       4       4
 992          QI       4       5       5       5       5       5       5       6       6       7
 993          QI       7       8       9       9      10      11      12      13      13      14
 994          QI      15      15      16      17      17      18      18      19      20      20
 995          QI      21      21      22      23      23      24      25      25      26      27
 996          QI      28      29      30      30      31      32      33      34      35      36
```

LINE	ID.....1	2	3	4	5	6	7	8	9	10
997	QI 37	38	39	40	41	42	43	44	45	47
998	QI 48	49	50	51	52	53	54	55	56	57
999	QI 58	59	60	61	62	63	64	65	66	67
1000	QI 68	70	71	72	74	75	77	79	81	82
1001	QI 84	86	87	89	91	92	94	96	97	99
1002	QI 100	102	103	105	106	107	109	110	111	113
1003	QI 114	115	117	118	119	120	121	123	124	125
1004	QI 126	127	128	130	131	132	133	134	135	136
1005	QI 137	138	139	139	140	141	142	143	144	145
1006	QI 145	146	147	148	149	149	150	151	152	153
1007	QI 154	154	155	156	157	158	159	160	161	161
1008	QI 162	163	164	165	167	168	169	171	172	175
1009	QI 176	177	180	182	183	184	187	189	191	194
1010	QI 198	202	206	210	215	220	224	228	234	240
1011	QI 246	253	262	275	292	313	336	353	375	401
1012	QI 428	456	472	491	513	538	566	598	632	664
1013	QI 682	704	729	756	785	815	825	834	843	854
1014	QI 866	879	894	909	925	942	949	956	963	970
1015	QI 977	984	991	998	1005	1012	1019	1026	1033	1039
1016	QI 1046	1052	1057	1060	1063	1066	1069	1072	1074	1076
1017	QI 1078	1080	1082	1084	1085	1086	1087	1088	1089	1090
1018	QI 1090	1091	1091	1091	1091	1091	1090	1090	1089	1089
1019	QI 1088	1087	1087	1086	1085	1084	1083	1082	1081	1080
1020	QI 1079	1078	1077	1076	1075	1074	1073	1071	1070	1069
1021	QI 1068	1067	1065	1064	1063	1062	1060	1059	1058	1057
1022	QI 1055	1053	1051	1049	1047	1045	1042	1040	1038	1036
1023	QI 1034	1032	1030	1028	1026	1024	1023	1021	1019	1017
1024	QI 1015	1013	1011	1009	1008	1006	1004	1002	1000	999
1025	QI 997	995	993	992	990	988	987	985	983	982
1026	QI 980	978	977	975	974	972	970	969	967	966
1027	QI 964	963	961	960	958	956	955	953	952	950
1028	QI 949	947	946	944	941	937	933	929	925	922
1029	QI 918	915	911	908	904	901	898	895	891	888
1030	QI 885	882	879	876	873	869	866	863	860	857
1031	QI 854	851	848	845	841	838	835	832	829	826
1032	QI 823	820	812	799	788	778	770	762	755	748
1033	QI 742	737	732	727	723	718	714	710	706	702
1034	QI 698	694	690	686	682	678	673	669	665	661
1035	QI 652	643	637	631	625	621	616	612	608	604
1036	QI 600	597	594	591	588	585	582	579	576	572
1037	QI 569	566	563	559	556	553	550	546	543	539
1038	QI 536	532	529	525	521	518	514	511	507	504
1039	QI 501	498	495	492	490	488	485	483	481	479
1040	QI 477	475	472	470	468	466	464	462	460	456
1041	QI 453	450	447	444	441	438	435	432	428	425
1042	QI 422	419	416	413	409	406	403	400	397	394
1043	QI 391	388	385	382	380	377	374	372	369	367
1044	QI 364	362	359	357	354	352	350	347	344	342
1045	QI 338	335	332	329	327	324	321	318	315	312
1046	QI 308	305	302	299	296	293	289	286	283	280
1047	QI 277	274	271	268	265	263	260	257	254	251
1048	QI 249	246	243	241	238	235	233	231	228	226
1049	QI 223	220	218	215	213	211	208	206	203	201
1050	QI 199	196	194	192	190	187	185	183	181	179
1051	QI 176	174	172	170	168	166	164	163	162	159

LINE	ID.....1	2	3	4	5	6	7	8	9	10
1052	QI 157	155	154	153	150	148	147	145	143	141
1053	QI 139	138	136	134	133	131	129	128	126	125
1054	QI 123	121	120	118	117	116	114	113	112	110
1055	QI 109	108	107	106	104	103	102	101	100	99
1056	QI 98	96	95	93	92	90	89	87	85	84
1057	QI 82	80	79	77	76	74	73	71	70	69
1058	QI 68	67	66	65	64	63	61	60	59	58
1059	QI 57	56	55	54	54	53	52	51	50	49
1060	QI 49	48	47	46	46	45	44	44	43	42
1061	QI 42	41	41	40	39	39	38	38	37	37
1062	QI 36	36	35	35	34	33	32	32	31	30
1063	QI 29	28	27	26	25	24	23	22	21	20
1064	QI 19	19	18	17	17	16	15	15	14	13
1065	QI 13	12	12	11	11	11	10	10	9	9
1066	QI 9	8	8	8	8	7	7	7	7	6
1067	QI 6	6	6	5	5	5	5	5	5	4
1068	QI 4	4	4	4	4	4	3	3	3	3
1069	QI 3	3	3	3	3	2	2	2	2	2
1070	QI 2	2	2	2	2	2	2	2	2	2
1071	QI 1	1	1	1	1	1	1	1	1	1
1072	QI 1	1	1	1	1	1	1	1	1	1
1073	QI 1	1	1	1	1	1	1	1	1	1
1074	QI 1	1	1	1	1	0	0	0	0	0
1075	QI 0	0	0	0	0	0	0	0	0	0
1076	QI 0	0	0	0	0	0	0	0	0	0
1077	QI 0	0	0	0	0	0	0	0	0	0
1078	QI 0	0	0	0	0	0	0	0	0	0
1079	QI 0	0	0	0	0	0	0	0	0	0
1080	QI 0	0	0	0	0	0	0	0	0	0
1081	QI 0	0	0	0	0	0	0	0	0	0
1082	QI 0	0	0	0	0	0	0	0	0	0
1083	QI 0	0	0	0	0	0	0	0	0	0
1084	QI 0	0	0	0	0	0	0	0	0	0
1085	QI 0	0	0	0	0	0	0	0	0	0
1086	QI 0	0	0	0	0	0	0	0	0	0
1087	QI 0	0	0	0	0	0	0	0	0	0
1088	QI 0	0	0	0	0	0	0	0	0	0
1089	QI 0	0	0	0	0	0	0	0	0	0
1090	QI 0	0	0	0	0	0	0	0	0	0
1091	QI 0	0	0	0	0	0	0	0	0	0
1092	QI 0	0	0	0	0	0	0	0	0	0
1093	QI 0	0	0	0	0	0	0	0	0	0
1094	QI 0	0	0	0	0	0	0	0	0	0
1095	QI 0	0	0	0	0	0	0	0	0	0
1096	QI 0	0	0	0	0	0	0	0	0	0
1097	QI 0	0	0	0	0	0	0	0	0	0
1098	IN 15									

```
*
* * End Basin 210.  Start Basin 211
* *
*
```

```
LINE          ID.......1.......2.......3.......4.......5.......6.......7.......8.......9......10

1099          KK  599608
1100          KM      Normal depth channel route from C599 to C608
1101          KM      Source:  HEC-2 Cross Section: AS 3.621
1102          RS       4    FLOW      -1
1103          RC   0.055   0.045   0.025  1476.0  0.0148
1104          RX  9675.4  9726.8  9929.0  9990.7 10005.9 10033.3 10061.9 10082.2
1105          RY  1691.3  1687.2  1685.5  1678.6  1678.1  1682.1  1689.8  1691.8
              *

1106          KK    211K
1107          KM   Sub-Basin   211K
1108          KM
1109          KM      The Clark Unit Hydrograph is used for this basin.
1110          KM          The Urban time-area relation is used for this basin.
1111          KM
1112          KM      Time of Concentration for this sub-basin is based on the following:
1113          KM          6-Hour Rainfall, Pattern No.  1.00
1114          KM          An rainfall areal reduction factor of 0.999
1115          KM
1116          KM       EXCESS RAINFALL VALUES EXCEEDED IN 5-MINUTE INTERVALS
1117          KM     5  10  15  20  25  30  35  40  45  50  55  60  65  70  75  80  85  90
1118          KM   .30 .30 .30 .09 .07 .06 .03 .03 .02 .02 .02 .02 .00 .00 .00 .00 .00 .00
1119          KM
1120          KM          L=   0.376 miles, S=  157 feet/mile, Kb= .03
1121          KM
1122          BA   0.102
1123          LG    0.13    0.27    6.00    0.16   31.48
1124          UC   0.146   0.073
1125          UA       0       5      16      30      65      77      84      90      94      97
1126          UA     100
              *

1127          KK   C608L
1128          KM      Hydrograph combine 599608 + 211K at C608 left branch
1129          HC       2
              *

1130          KK    211G
1131          KM   Sub-Basin   211G
1132          KM
1133          KM      The Clark Unit Hydrograph is used for this basin.
1134          KM          The Urban time-area relation is used for this basin.
1135          KM
1136          KM      Time of Concentration for this sub-basin is based on the following:
1137          KM          6-Hour Rainfall, Pattern No.  1.00
1138          KM          An rainfall areal reduction factor of 1.000
1139          KM
1140          KM       EXCESS RAINFALL VALUES EXCEEDED IN 5-MINUTE INTERVALS
1141          KM     5  10  15  20  25  30  35  40  45  50  55  60  65  70  75  80  85  90
1142          KM   .33 .33 .33 .13 .11 .10 .05 .05 .05 .05 .05 .05 .01 .01 .01 .01 .01 .01
1143          KM
1144          KM          L=   0.448 miles, S=  190 feet/mile, Kb= .04
1145          KM
1146          BA   0.008
```

```
LINE          ID.......1.......2.......3.......4.......5.......6.......7.......8.......9......10

1147          LG    0.06    0.25    5.70    0.18   90.00
1148          UC   0.167   0.430
1149          UA       0       5      16      30      65      77      84      90      94      97
1150          UA     100
              *

1151          KK  604606
1152          KM      Normal depth channel route from C604 to C606
1153          KM      Source:  200 Scale Mapping
1154          RS      11    FLOW      -1
1155          RC   0.040   0.018   0.040  2784.0  0.0647
1156          RX  1000.0  1040.0  1060.0  1076.0  1092.0  1093.2  1098.2  1113.2
1157          RY  1814.0  1811.0  1810.8  1811.1  1810.8  1811.2  1812.0  1816.0
              *

1158          KK    211I
1159          KM   Sub-Basin   211I
1160          KM
1161          KM      The Clark Unit Hydrograph is used for this basin.
1162          KM          The Urban time-area relation is used for this basin.
1163          KM
1164          KM      Time of Concentration for this sub-basin is based on the following:
1165          KM          6-Hour Rainfall, Pattern No.  1.00
1166          KM          An rainfall areal reduction factor of 0.999
1167          KM
1168          KM       EXCESS RAINFALL VALUES EXCEEDED IN 5-MINUTE INTERVALS
1169          KM     5  10  15  20  25  30  35  40  45  50  55  60  65  70  75  80  85  90
1170          KM   .31 .31 .31 .10 .08 .07 .03 .03 .03 .03 .03 .03 .01 .01 .01 .01 .01 .01
1171          KM
1172          KM          L=   0.626 miles, S=  257 feet/mile, Kb= .03
1173          KM
1174          BA   0.041
1175          LG    0.08    0.25    5.70    0.18   45.00
1176          UC   0.158   0.204
1177          UA       0       5      16      30      65      77      84      90      94      97
1178          UA     100
              *

1179          KK   C606R
1180          KM      Hydrograph combine 604606 + 211I at C606 right branch
1181          HC      2
              *

1182          KK    211H
1183          KM   Sub-Basin   211H
1184          KM
1185          KM      The Clark Unit Hydrograph is used for this basin.
1186          KM          The Urban time-area relation is used for this basin.
1187          KM
1188          KM      Time of Concentration for this sub-basin is based on the following:
1189          KM          6-Hour Rainfall, Pattern No.  1.00
1190          KM          An rainfall areal reduction factor of 0.999
1191          KM
1192          KM       EXCESS RAINFALL VALUES EXCEEDED IN 5-MINUTE INTERVALS
1193          KM     5  10  15  20  25  30  35  40  45  50  55  60  65  70  75  80  85  90
```

```
LINE          ID.......1.......2.......3.......4.......5.......6.......7.......8.......9......10

1194          KM   .30 .30 .29 .09 .07 .06 .03 .02 .02 .01 .01 .01 .00 .00 .00 .00 .00 .00
1195          KM
1196          KM          L=   0.501 miles, S=  289 feet/mile, Kb= .03
1197          KM
1198          BA   0.073
1199          LG    0.09    0.25    6.00    0.16   17.93
1200          UC   0.138   0.104
1201          UA       0       5      16      30      65      77      84      90      94      97
1202          UA     100
              *

1203          KK   C6050
1204          KM      Reservoir route at C605.
1205          RS       1    ELEV  1722.5
1206          SV    0.00    0.20    0.20    0.20    0.20    0.30    0.30    0.30    0.40    0.60
1207          SV    0.70    0.90    1.00    1.20    1.40    1.60    1.90    2.80    3.40    4.10
1208          SE  1722.5  1726.8  1727.0  1727.2  1727.4  1727.6  1727.8  1728.0  1728.2  1728.4
1209          SE  1728.6  1728.8  1729.0  1729.2  1729.4  1729.6  1730.0  1730.4  1730.7  1731.0
1210          SQ       0       0       5      10      20      43      63      73      78      85
1211          SQ     .91      96     101     105     109     113     122     130     136     200
              *

1212          KK    C606
1213          KM      Hydrograph combine C606R + C6050 at C606
1214          HC       2
              *

1215          KK  606607
1216          KM      Normal depth channel route from C606 to C607
1217          KM      Source:  200 Scale Mapping
1218          RS       2    FLOW      -1
1219          RC   0.020   0.055   0.035  1061.0  0.0286
1220          RX  1000.0  1032.0  1082.0  1095.0  1105.0  1117.0  1123.0  1153.0
1221          RY  1704.3  1704.0  1703.5  1700.0  1700.0  1703.0  1704.0  1706.0
              *

1222          KK    211J
1223          KM   Sub-Basin   211J
1224          KM
1225          KM      The Clark Unit Hydrograph is used for this basin.
1226          KM          The Urban time-area relation is used for this basin.
1227          KM
1228          KM      Time of Concentration for this sub-basin is based on the following:
1229          KM          6-Hour Rainfall, Pattern No.  1.00
1230          KM          An rainfall areal reduction factor of 1.000
1231          KM
1232          KM       EXCESS RAINFALL VALUES EXCEEDED IN 5-MINUTE INTERVALS
1233          KM     5  10  15  20  25  30  35  40  45  50  55  60  65  70  75  80  85  90
1234          KM   .31 .31 .31 .10 .08 .07 .03 .03 .03 .02 .02 .02 .01 .01 .01 .01 .01 .01
1235          KM
1236          KM          L=   0.249 miles, S=  166 feet/mile, Kb= .03
1237          KM
1238          BA   0.015
1239          LG    0.08    0.23    6.20    0.16   39.19
1240          UC   0.113   0.119
```

```
LINE          ID.......1.......2.......3.......4.......5.......6.......7.......8.......9......10

1241          UA       0       5      16      30      65      77      84      90      94      97
1242          UA     100
              *

1243          KK    C607
1244          KM      Hydrograph combine 606607 + 211J at C607
1245          HC       2
              *

1246          KK  607608
1247          KM      Normal depth channel route from C607 to C608
1248          KM      Source:  200 Scale Mapping
1249          RS       2    FLOW      -1
1250          RC   0.040   0.050   0.035  1008.0  0.0145
1251          RX  1000.0  1060.0  1070.0  1082.0  1083.0  1095.0  1115.0  1133.0
1252          RY  1688.0  1686.0  1684.0  1681.0  1681.0  1684.0  1685.0  1685.4
              *

1253          KK    C608
1254          KM      Hydrograph combine C608L + 607608 at C608
1255          HC       2
              *

1256          KK  608613
1257          KM      Normal depth channel route from C608 to C613
1258          KM      Source:  HEC-2 Cross Section: AS 3.421
1259          RS       3    FLOW      -1
1260          RC   0.100   0.045   0.100  1338.0  0.0202
1261          RX  9885.0  9887.9  9957.3  9986.7 10012.9 10054.7 10086.3 10122.2
1262          RY  1670.2  1670.1  1668.0  1660.0  1659.9  1661.6  1669.9  1670.8
              *
              * *
              * * Move to the top of Sunflower Wash
              * *
              *

1263          KK    211M
1264          KM   Sub-Basin   211M
1265          KM
1266          KM      The Clark Unit Hydrograph is used for this basin.
1267          KM          The Urban time-area relation is used for this basin.
1268          KM
1269          KM      Time of Concentration for this sub-basin is based on the following:
1270          KM          6-Hour Rainfall, Pattern No.  1.00
1271          KM          An rainfall areal reduction factor of 0.999
1272          KM
1273          KM       EXCESS RAINFALL VALUES EXCEEDED IN 5-MINUTE INTERVALS
1274          KM     5  10  15  20  25  30  35  40  45  50  55  60  65  70  75  80  85  90
1275          KM   .31 .31 .31 .10 .08 .08 .04 .04 .03 .03 .03 .03 .01 .01 .01 .01 .01 .01
1276          KM
1277          KM          L=   0.541 miles, S=  266 feet/mile, Kb= .03
1278          KM
1279          BA   0.081
1280          LG    0.07    0.25    5.70    0.18   50.05
1281          UC   0.146   0.112
```

```
LINE          ID.......1.......2.......3.......4.......5.......6.......7.......8.......9......10

1282          UA       0       5      16      30      65      77      84      90      94      97
1283          UA     100
              *

1284          KK  610611
1285          KM      Normal depth channel route from C610 to 1611
1286          KM      Source:  HEC-2 Cross Section: SU 0.216
1287          RS       1    FLOW      -1
1288          RC   0.050   0.045   0.050  1090.0  0.0211
1289          RX  9911.9  9948.1  9973.6  9988.6 10007.1 10027.0 10049.8 10143.7
1290          RY  1699.3  1691.7  1686.3  1680.1  1679.7  1686.6  1687.3  1698.6
              *

1291          KK    211N
1292          KM   Sub-Basin   211N
1293          KM
1294          KM      The Clark Unit Hydrograph is used for this basin.
1295          KM          The Urban time-area relation is used for this basin.
1296          KM
1297          KM      Time of Concentration for this sub-basin is based on the following:
1298          KM          6-Hour Rainfall, Pattern No.  1.00
1299          KM          An rainfall areal reduction factor of 1.000
1300          KM
1301          KM       EXCESS RAINFALL VALUES EXCEEDED IN 5-MINUTE INTERVALS
1302          KM     5  10  15  20  25  30  35  40  45  50  55  60  65  70  75  80  85  90
1303          KM   .32 .31 .31 .11 .09 .08 .04 .04 .04 .03 .03 .03 .01 .01 .01 .01 .01 .01
1304          KM
1305          KM          L=   0.261 miles, S=  235 feet/mile, Kb= .03
1306          KM
1307          BA   0.020
1308          LG    0.07    0.25    5.70    0.18   56.58
1309          UC   0.104   0.094
1310          UA       0       5      16      30      65      77      84      90      94      97
1311          UA     100
              *

1312          KK   C611R
1313          KM      Hydrograph combine 610611 + 211N at C611 right branch
1314          HC       2
              *

1315          KK    211O
1316          KM   Sub-Basin   211O
1317          KM
1318          KM      The Clark Unit Hydrograph is used for this basin.
1319          KM          The Urban time-area relation is used for this basin.
1320          KM
1321          KM      Time of Concentration for this sub-basin is based on the following:
1322          KM          6-Hour Rainfall, Pattern No.  1.00
1323          KM          An rainfall areal reduction factor of 0.999
1324          KM
1325          KM       EXCESS RAINFALL VALUES EXCEEDED IN 5-MINUTE INTERVALS
1326          KM     5  10  15  20  25  30  35  40  45  50  55  60  65  70  75  80  85  90
1327          KM   .31 .31 .31 .10 .08 .07 .03 .03 .03 .03 .03 .03 .01 .01 .01 .01 .01 .01
1328          KM
```

```
LINE          ID.......1.......2.......3.......4.......5.......6.......7.......8.......9......10

1329          KM          L=   0.371 miles, S=  257 feet/mile, Kb= .03
1330          KM
1331          BA   0.041
1332          LG    0.08    0.25    5.70    0.18   45.31
1333          UC   0.121   0.099
1334          UA       0       5      16      30      65      77      84      90      94      97
1335          UA     100
              *

1336          KK   C609O
1337          KM      Reservoir route at C609.
1338          RS       1    ELEV  1694.0
1339          SV    0.00    0.10    0.21    0.50    0.86    1.40    1.93    2.60    3.10    3.20
1340          SV    3.39    3.60    3.80    4.00    4.10    4.30    4.50    4.70    4.90    5.10
1341          SE  1694.0  1695.0  1696.0  1697.0  1698.0  1699.0  1700.0  1701.0  1701.6  1701.8
1342          SE  1702.0  1702.2  1702.4  1702.6  1702.8  1703.0  1703.2  1703.4  1703.6  1703.8
1343          SQ       0       6      16      33      48      59      68      75      79      85
1344          SQ     108     149     209     289     390     512     658     829    1025    1247
              *

1345          KK  609611
1346          KM      Normal depth channel route from C609 to C611
1347          KM      Source:  200 Scale Mapping
1348          RS       1    FLOW      -1
1349          RC   0.035   0.050   0.035   470.0  0.0200
1350          RX  1000.0  1025.0  1050.0  1054.0  1064.0  1068.0  1088.0  1103.0
1351          RY  1690.0  1688.0  1684.0  1682.0  1682.0  1684.0  1688.0  1690.0
              *

1352          KK   C611I
1353          KM      Hydrograph combine 609611 + C611R at C611I
1354          HC       2
              *

1355          KK   C611O
1356          KM      Reservoir route at C611.
1357          RS       1    ELEV  1668.4
1358          SV    0.00    0.41    1.10    2.49    4.34    6.64    6.72    6.81    6.89    6.97
1359          SV    7.06    7.14    7.22    7.31    7.39    7.47    7.56    7.64    7.72    7.81
1360          SE  1674.0  1676.0  1678.0  1680.0  1682.0  1684.0  1684.2  1684.4  1684.6  1684.8
1361          SE  1685.0  1685.2  1685.4  1685.6  1685.8  1686.0  1686.2  1686.4  1686.6  1686.8
1362          SQ       0       0      86     117     141     162     164     170     181     199
1363          SQ     225     262     313     378     460     558     673     807     958    1118
              *

1364          KK   D611L
1365          KM      Hydrograph diversion at C611.  Main flow continues in the left branch.
1366          KM      Diverted flow is in the right branch.
1367          DT   D611R
1368          DI       0       0      86     117     141     162     164     170     181     199
1369          DI     225     262     313     378     460     558     673     807     958    1118
1370          DQ       0       0      86     117     141     162     164     165     167     169
1371          DQ     171     173     175     176     178     180     182     183     185     187
              *
```

```
LINE          ID.......1.......2.......3.......4.......5.......6.......7.......8.......9......10

1372          KK  611612
1373          KM      Normal depth channel route from C611 to C612
1374          KM      Source:  200 Scale Mapping
1375          RS       1    FLOW      -1
1376          RC   0.040   0.018   0.040   925.0  0.0270
1377          RX  1000.0  1020.0  1023.0  1041.0  1059.0  1060.2  1071.2  1136.2
1378          RY  1666.0  1664.0  1663.5  1663.9  1663.5  1663.9  1664.0  1666.0
              *

1379          KK    211P
1380          KM   Sub-Basin   211P
1381          KM
1382          KM      The Clark Unit Hydrograph is used for this basin.
1383          KM          The Urban time-area relation is used for this basin.
1384          KM
1385          KM      Time of Concentration for this sub-basin is based on the following:
1386          KM          6-Hour Rainfall, Pattern No.  1.00
1387          KM          An rainfall areal reduction factor of 1.000
1388          KM
1389          KM       EXCESS RAINFALL VALUES EXCEEDED IN 5-MINUTE INTERVALS
1390          KM     5  10  15  20  25  30  35  40  45  50  55  60  65  70  75  80  85  90
1391          KM   .32 .32 .32 .11 .09 .09 .04 .04 .04 .04 .03 .03 .01 .01 .01 .01 .01 .01
1392          KM
1393          KM          L=   0.307 miles, S=  192 feet/mile, Kb= .03
1394          KM
1395          BA   0.033
1396          LG    0.08    0.15    7.00    0.11   45.00
1397          UC   0.121   0.096
1398          UA       0       5      16      30      65      77      84      90      94      97
1399          UA     100
              *

1400          KK    C612
1401          KM      Hydrograph combine 611612 + 211P at C612
1402          HC       2
              *
              * *
              * * NOTE: 612613 is too short to route
              * *
              *

1403          KK    C613
1404          KM      Hydrograph combine 608613 + C612 at C613
1405          HC       2
              *

1406          KK  613621
1407          KM      Normal depth channel route from C613 to C621
1408          KM      Source:  HEC-2 Cross Section: AS 3.241
1409          RS       1    FLOW      -1
1410          RC   0.100   0.045   0.100   718.0  0.0251
1411          RX  9695.4  9884.0  9985.0  9991.1 10033.8 10062.8 10097.5 10165.1
1412          RY  1655.5  1647.5  1645.8  1641.1  1640.6  1642.1  1648.7  1654.3
              *
```

```
LINE          ID.......1.......2.......3.......4.......5.......6.......7.......8.......9......10

1413          KK    211L
1414          KM   Sub-Basin   211L
1415          KM
1416          KM      The Clark Unit Hydrograph is used for this basin.
1417          KM          The Urban time-area relation is used for this basin.
1418          KM
1419          KM      Time of Concentration for this sub-basin is based on the following:
1420          KM          6-Hour Rainfall, Pattern No.  1.00
1421          KM          An rainfall areal reduction factor of 0.999
1422          KM
1423          KM       EXCESS RAINFALL VALUES EXCEEDED IN 5-MINUTE INTERVALS
1424          KM     5  10  15  20  25  30  35  40  45  50  55  60  65  70  75  80  85  90
1425          KM   .30 .29 .29 .08 .06 .05 .02 .02 .02 .02 .02 .02 .01 .01 .01 .01 .01 .01
1426          KM
1427          KM          L=   0.508 miles, S=  181 feet/mile, Kb= .03
1428          KM
1429          BA   0.096
1430          LG    0.11    0.26    4.35    0.36   42.40
1431          UC   0.163   0.109
1432          UA       0       5      16      30      65      77      84      90      94      97
1433          UA     100
              *

1434          KK   C621L
1435          KM      Hydrograph combine 613621 + 211L at C621 left branch
1436          HC       2
              *
              * *
              * * Move to the top of Arrow Wash
              * *
              *

1437          KK    211Q
1438          KM   Sub-Basin   211Q
1439          KM
1440          KM      The Clark Unit Hydrograph is used for this basin.
1441          KM          The Urban time-area relation is used for this basin.
1442          KM
1443          KM      Time of Concentration for this sub-basin is based on the following:
1444          KM          6-Hour Rainfall, Pattern No.  1.00
1445          KM          An rainfall areal reduction factor of 1.000
1446          KM
1447          KM       EXCESS RAINFALL VALUES EXCEEDED IN 5-MINUTE INTERVALS
1448          KM     5  10  15  20  25  30  35  40  45  50  55  60  65  70  75  80  85  90
1449          KM   .30 .30 .30 .09 .07 .06 .03 .03 .02 .02 .02 .02 .00 .00 .00 .00 .00 .00
1450          KM
1451          KM          L=   0.255 miles, S=  295 feet/mile, Kb= .03
1452          KM
1453          BA   0.021
1454          LG    0.08    0.25    5.70    0.18   30.04
1455          UC   0.096   0.083
1456          UA       0       5      16      30      65      77      84      90      94      97
1457          UA     100
              *
```

```
LINE          ID.......1.......2.......3.......4.......5.......6.......7.......8.......9......10

1458          KK  616617
1459          KM      Normal depth channel route from C616 to C617
1460          KM      Source:  200 Scale Mapping
1461          RS       2    FLOW      -1
1462          RC   0.070   0.060   0.070  1131.0  0.0553
1463          RX  1000.0  1008.0  1015.0  1045.0  1050.0  1080.0  1100.0  1110.0
1464          RY  1834.0  1832.0  1830.0  1826.0  1826.0  1830.0  1834.0  1836.0
              *

1465          KK    211R
1466          KM   Sub-Basin   211R
1467          KM
1468          KM      The Clark Unit Hydrograph is used for this basin.
1469          KM          The Urban time-area relation is used for this basin.
1470          KM
1471          KM      Time of Concentration for this sub-basin is based on the following:
1472          KM          6-Hour Rainfall, Pattern No.  1.00
1473          KM          An rainfall areal reduction factor of 0.999
1474          KM
1475          KM       EXCESS RAINFALL VALUES EXCEEDED IN 5-MINUTE INTERVALS
1476          KM     5  10  15  20  25  30  35  40  45  50  55  60  65  70  75  80  85  90
1477          KM   .31 .30 .30 .10 .08 .07 .03 .03 .03 .02 .02 .02 .01 .01 .01 .01 .01 .01
1478          KM
1479          KM          L=   0.572 miles, S=  271 feet/mile, Kb= .03
1480          KM
1481          BA   0.084
1482          LG    0.08    0.25    5.70    0.18   37.77
1483          UC   0.150   0.118
1484          UA       0       5      16      30      65      77      84      90      94      97
1485          UA     100
              *

1486          KK   C617L
1487          KM      Hydrograph combine 616617 + 211R at C617 left branch
1488          HC       2
              *

1489          KK    211U
1490          KM   Sub-Basin   211U
1491          KM
1492          KM      The Clark Unit Hydrograph is used for this basin.
1493          KM          The Urban time-area relation is used for this basin.
1494          KM
1495          KM      Time of Concentration for this sub-basin is based on the following:
1496          KM          6-Hour Rainfall, Pattern No.  1.00
1497          KM          An rainfall areal reduction factor of 1.000
1498          KM
1499          KM       EXCESS RAINFALL VALUES EXCEEDED IN 5-MINUTE INTERVALS
1500          KM     5  10  15  20  25  30  35  40  45  50  55  60  65  70  75  80  85  90
1501          KM   .32 .32 .32 .11 .09 .09 .04 .04 .04 .04 .04 .04 .01 .01 .01 .01 .01 .01
1502          KM
1503          KM          L=   0.831 miles, S=  214 feet/mile, Kb= .03
1504          KM
1505          BA   0.027
```

```
LINE          ID.......1.......2.......3.......4.......5.......6.......7.......8.......9......10

1506          LG    0.07    0.25    5.70    0.18   65.99
1507          UC   0.192   0.396
1508          UA       0       5      16      30      65      77      84      90      94      97
1509          UA     100
              *

1510          KK   D614L
1511          KM      Hydrograph diversion at C614.  Main flow continues in the left branch.
1512          KM      Diverted flow is in the right branch.
1513          DT   D614R
1514          DI       0     4.3     8.5    20.0    49.0    85.5
1515          DQ       0     2.5     5.0    13.5    35.0    60.0
              *

1516          KK    C617
1517          KM      Hydrograph combine C617L + D614L at C617
1518          HC       2
              *

1519          KK  617618
1520          KM      Normal depth channel route from C617 to C618
1521          KM      Source:  HEC-2 Cross Section: AR 0.836
1522          RS       4    FLOW      -1
1523          RC   0.070   0.060   0.070  1912.0  0.0345
1524          RX  9983.3  9987.2  9989.2  9991.1 10031.5 10053.5 10070.6 10097.7
1525          RY  1766.5  1762.3  1760.2  1758.1  1757.8  1760.8  1764.2  1770.6
              *

1526          KK    211S
1527          KM   Sub-Basin   211S
1528          KM
1529          KM      The Clark Unit Hydrograph is used for this basin.
1530          KM          The Urban time-area relation is used for this basin.
1531          KM
1532          KM      Time of Concentration for this sub-basin is based on the following:
1533          KM          6-Hour Rainfall, Pattern No.  1.00
1534          KM          An rainfall areal reduction factor of 0.999
1535          KM
1536          KM       EXCESS RAINFALL VALUES EXCEEDED IN 5-MINUTE INTERVALS
1537          KM     5  10  15  20  25  30  35  40  45  50  55  60  65  70  75  80  85  90
1538          KM   .30 .29 .29 .09 .06 .05 .02 .02 .02 .02..02 .02 .00 .00 .00 .00 .00 .00
1539          KM
1540          KM          L=   0.445 miles, S=  272 feet/mile, Kb= .07
1541          KM
1542          BA   0.050
1543          LG    0.11    0.31    5.70    0.19   30.06
1544          UC   0.208   0.186
1545          UA       0       5      16      30      65      77      84      90      94      97
1546          UA     100
              *
```

```
LINE          ID.......1.......2.......3.......4.......5.......6.......7.......8.......9......10

1547          KK   C618I
1548          KM      Hydrograph combine 617618 + 211S at C618I
1549          HC       2
              *

1550          KK   C618O
1551          KM      Reservoir route at C618.
1552          RS       1    ELEV  1730.6
1553          SV    0.00    0.01    0.06    0.24    0.50    0.75    1.20    1.66    2.30    2.94
1554          SV    3.20    3.30    3.40    3.60    3.80    3.90    4.10    4.30    4.50    4.65
1555          SE  1730.6  1734.0  1736.0  1738.0  1739.0  1740.0  1741.0  1742.0  1743.0  1744.0
1556          SE  1744.3  1744.4  1744.6  1744.8  1745.0  1745.2  1745.4  1745.6  1745.8  1746.0
1557          SQ       0     2.2     2.6     3.0     3.1     3.2     3.3     3.5     3.6     3.7
1558          SQ     3.7     3.8       8      21      48      88     143     212     295     390
              *

1559          KK  BB614R
1560          KM      Retrieve previously diverted hydrograph at C614 in the right branch.
1561          DR   D614R
              *

1562          KK  614615
1563          KM      Normal depth channel route from C614 to C615
1564          KM      Source:  Hydrology Field Reconnaissance
1565          RS       3    FLOW      -1
1566          RC   0.040   0.018   0.040  1114.0  0.0397
1567          RX  1000.0  1020.0  1025.0  1059.0  1091.0  1093.0  1098.0  1103.0
1568          RY  1828.0  1822.0  1821.5  1822.2  1821.8  1822.0  1824.0  1826.0
              *

1569          KK    211V
1570          KM   Sub-Basin   211V
1571          KM
1572          KM      The Clark Unit Hydrograph is used for this basin.
1573          KM          The Urban time-area relation is used for this basin.
1574          KM
1575          KM      Time of Concentration for this sub-basin is based on the following:
1576          KM          6-Hour Rainfall, Pattern No.  1.00
1577          KM          An rainfall areal reduction factor of 1.000
1578          KM
1579          KM       EXCESS RAINFALL VALUES EXCEEDED IN 5-MINUTE INTERVALS
1580          KM     5  10  15  20  25  30  35  40  45  50  55  60  65  70  75  80  85  90
1581          KM   .33 .33 .33 .13 .11 .10 .05 .05 .05 .05 .05 .05 .01 .01 .01 .01 .01 .01
1582          KM
1583          KM          L=   0.222 miles, S=  212 feet/mile, Kb= .04
1584          KM
1585          BA   0.005
1586          LG    0.06    0.25    5.80    0.18   90.00
1587          UC   0.113   0.204
1588          UA       0       5      16      30      65      77      84      90      94      97
1589          UA     100
              *
```

```
LINE          ID.......1.......2.......3.......4.......5.......6.......7.......8.......9......10

1590          KK    C615
1591          KM      Hydrograph combine 614615 + 211V at C615
1592          HC       2     0.03
              *

1593          KK   D615L
1594          KM      Hydrograph diversion at C615.  Main flow continues in the left branch.
1595          KM      Diverted flow is in the right branch.
1596          DT   D615R
1597          DI       0     1.3     2.5     5.3     8.6    14.2    23.0    36.8    55.5    77.5
1598          DQ       0       0       0     1.3     2.6     4.2     7.0    12.8    19.5    29.5
              *

1599          KK  615618
1600          KM      Normal depth channel route from C615 to C618
1601          KM      Source:  Hydrology Field Reconnaissance
1602          RS       1    FLOW      -1
1603          RC   0.040   0.018   0.040   499.0  0.1338
1604          RX  1000.0  1008.0  1009.2  1013.2  1027.2  1028.4  1036.4  1045.4
1605          RY  1800.4  1799.6  1799.2  1798.8  1798.3  1798.7  1798.9  1800.4
              *

1606          KK    C618
1607          KM      Hydrograph combine C618O + 615618 at C618
1608          HC       2     0.19
              *

1609          KK  618619
1610          KM      Normal depth channel route from C618 to C619
1611          KM      Source:  HEC-2 Cross Section: AR 0.441
1612          RS       5    FLOW      -1
1613          RC   0.070   0.060   0.070  1837.0  0.0285
1614          RX  9870.6  9928.6  9957.1  9996.9 10004.9 10022.1 10062.0 10116.4
1615          RY  1709.2  1700.9  1698.8  1690.0  1689.8  1699.6  1700.3  1711.3
              *

1616          KK    211T
1617          KM   Sub-Basin   211T
1618          KM
1619          KM      The Clark Unit Hydrograph is used for this basin.
1620          KM          The Urban time-area relation is used for this basin.
1621          KM
1622          KM      Time of Concentration for this sub-basin is based on the following:
1623          KM          6-Hour Rainfall, Pattern No.  1.00
1624          KM          An rainfall areal reduction factor of 0.999
1625          KM
1626          KM       EXCESS RAINFALL VALUES EXCEEDED IN 5-MINUTE INTERVALS
1627          KM     5  10  15  20  25  30  35  40  45  50  55  60  65  70  75  80  85  90
1628          KM   .32 .32 .32 .11 .09 .09 .04 .04 .04 .04 .04 .04 .01 .01 .01 .01 .01 .01
1629          KM
1630          KM          L=   0.488 miles, S=  250 feet/mile, Kb= .03
1631          KM
1632          BA   0.066
1633          LG    0.07    0.25    5.70    0.18   64.25
```

```
LINE          ID.......1.......2.......3.......4.......5.......6.......7.......8.......9......10

1634          UC   0.138   0.108
1635          UA       0       5      16      30      65      77      84      90      94      97
1636          UA     100
              *

1637          KK   C619L
1638          KM      Hydrograph combine 618619 + 211T at C619 left branch
1639          HC       2
              *

1640          KK  BB615R
1641          KM      Retrieve previously diverted hydrograph at C615 in the right branch.
1642          DR   D615R
              *

1643          KK  615619
1644          KM      Normal depth channel route from C615 to C619
1645          KM      Source:  Hydrology Field Reconnaissance
1646          RS       8    FLOW      -1
1647          RC   0.045   0.024   0.025  2444.0  0.0493
1648          RX  1000.0  1009.3  1018.5  1037.0  1039.3  1053.0  1065.0  1065.0
1649          RY  1727.2  1726.5  1725.8  1724.4  1724.6  1725.8  1725.9  1725.9
              *

1650          KK   C619I
1651          KM      Hydrograph combine C619L + 615619 at C619I
1652          HC       2    0.25
              *

1653          KK   C619O
1654          KM      Reservoir route at C619.
1655          RS       1    ELEV  1675.6
1656          SV    0.00    1.72    2.98    4.70    7.00    7.08    7.17    7.26    7.34    7.43
1657          SV    7.51    7.60    7.69    7.77    7.86
1658          SE  1675.6  1686.0  1688.0  1690.0  1692.0  1692.2  1692.4  1692.6  1692.8  1693.0
1659          SE  1693.2  1693.4  1693.6  1693.8  1694.0
1660          SQ       0       4      25      72     128     155     163     172     178     187
1661          SQ     195     213     238     273     318     374     441     518     606     706
1662          SE  1675.6  1676.0  1678.0  1680.0  1682.0  1684.0  1686.0  1688.0  1690.0  1692.0
1663          SE  1692.2  1692.4  1692.6  1692.8  1693.0  1693.2  1693.4  1693.6  1693.8  1694.0
              *

1664          KK   D619R
1665          KM      Hydrograph diversion at C619.  Main flow continues in the right branch.
1666          KM      Diverted flow is in the left branch.
1667          DT   D619L
1668          DI       0       4      25      72     128     155     163     172     178     187
1669          DI     195     213     238     273     318     374     441     518     606     706
1670          DQ       0       0       0       0       0       0       0       0       0       0
1671          DQ       8      24      49      83     128     182     249     326     412     512
              *
```

```
LINE          ID.......1.......2.......3.......4.......5.......6.......7.......8.......9......10

1672          KK  619620
1673          KM                 Lag route through Palisades Plaza storm drain
1674          RT       0               1
              *

1675          KK  BB619L
1676          KM      Retrieve previously diverted hydrograph at C619 in the left branch.
1677          DR   D619L
              *

1678          KK  619620
1679          KM   Normal depth channel route from C619 to C620 in Fountain Hills Blvd.
1680          KM   Source:  200 Scale Mapping. Similiar to 523548
1681          RS       1    FLOW      -1
1682          RC   0.040   0.024   0.040   800.0  0.0288
1683          RX   918.0   940.0   960.0  1000.0  1040.0  1040.1  1044.1  1088.1
1684          RY  1648.0  1645.8  1643.8  1644.7  1644.0  1644.5  1644.5  1648.0
              *

1685          KK    211W
1686          KM   Sub-Basin   211W
1687          KM
1688          KM      The Clark Unit Hydrograph is used for this basin.
1689          KM          The Urban time-area relation is used for this basin.
1690          KM
1691          KM      Time of Concentration for this sub-basin is based on the following:
1692          KM          6-Hour Rainfall, Pattern No.  1.00
1693          KM          An rainfall areal reduction factor of 1.000
1694          KM
1695          KM       EXCESS RAINFALL VALUES EXCEEDED IN 5-MINUTE INTERVALS
1696          KM     5  10  15  20  25  30  35  40  45  50  55  60  65  70  75  80  85  90
1697          KM   .32 .32 .32 .12 .10 .09 .05 .05 .04 .04 .04 .04 .01 .01 .01 .01 .01 .01
1698          KM
1699          KM          L=   0.289 miles, S=  173 feet/mile, Kb= .03
1700          KM
1701          BA   0.030
1702          LG    0.06    0.25    5.70    0.18   73.65
1703          UC   0.121   0.097
1704          UA       0       5      16      30      65      77      84      90      94      97
1705          UA     100
              *

1706          KK   C620R
1707          KM      Hydrograph combine 619620 + R619L + 211W at C620 right branch
1708          HC       3    0.28
              *

1709          KK  BB611R
1710          KM      Retrieve previously diverted hydrograph at C611 in the right branch.
1711          DR   D611R
              *
```

```
LINE          ID.......1.......2.......3.......4.......5.......6.......7.......8.......9......10

1712          KK  611620
1713          KM                 Lag route through Palisades Plaza storm drain
1714          RT       0                 1
              *

1715          KK    C620
1716          KM      Hydrograph combine 611620 + C620R at C620
1717          HC       2     0.42
              *

1718          KK  620621
1719          KM      Normal depth channel route from C620 to C621
1720          KM      Source:  HEC-2 Cross Section: AR 0.081
1721          RS       1     FLOW       -1
1722          RC   0.050    0.050    0.050    915.0   0.0394
1723          RX  9790.0   9790.1   9972.2   9994.8 10004.9 10029.7 10048.6 10125.0
1724          RY  1657.9   1657.5   1656.4   1646.8  1646.8  1657.8  1657.0  1657.9
              *

1725          KK    C621
1726          KM      Hydrograph combine C621L + 620621 at C621
1727          HC       2     7.93
              *

1728          KK  621622
1729          KM      Normal depth channel route from C621 to C622
1730          KM      Source:  HEC-2 Cross Section: AS 2.785
1731          RS       6     FLOW       -1
1732          RC   0.100    0.045    0.100   3830.0   0.0144
1733          RX  9827.3   9922.9   9951.0  10000.0 10002.7 10044.7 10071.6 10076.8
1734          RY  1615.2   1611.0   1604.1   1600.8  1601.5  1601.6  1611.0  1613.9
              *

1735          KK    211X
1736          KM   Sub-Basin    211X
1737          KM
1738          KM      The Clark Unit Hydrograph is used for this basin.
1739          KM          The Urban time-area relation is used for this basin.
1740          KM
1741          KM      Time of Concentration for this sub-basin is based on the following:
1742          KM          6-Hour Rainfall, Pattern No.  1.00
1743          KM          An rainfall areal reduction factor of 0.997
1744          KM
1745          KM       EXCESS RAINFALL VALUES EXCEEDED IN 5-MINUTE INTERVALS
1746          KM     5  10  15  20  25  30  35  40  45  50  55  60  65  70  75  80  85  90
1747          KM   .31 .31 .31 .10 .08 .07 .03 .03 .03 .03 .03 .03 .01 .01 .01 .01 .01 .01
1748          KM
1749          KM          L=   0.929 miles, S=  111 feet/mile, Kb= .03
1750          KM
1751          BA   0.214
1752          LG    0.10     0.26     4.90     0.26    56.64
1753          UC   0.250    0.180
1754          UA       0        5       16       30       65       77       84       90       94       97
1755          UA     100
              *
```

```
LINE          ID.......1.......2.......3.......4.......5.......6.......7.......8.......9......10

1756          KK   C622R
1757          KM      Hydrograph combine 621622 + 211X at C622 right branch
1758          HC       2
              *
              * *
              * * Move to the top of Tulip Wash
              * *
              *

1759          KK    211A
1760          KM   Sub-Basin   211A
1761          KM
1762          KM      The Clark Unit Hydrograph is used for this basin.
1763          KM          The Urban time-area relation is used for this basin.
1764          KM
1765          KM      Time of Concentration for this sub-basin is based on the following:
1766          KM          6-Hour Rainfall, Pattern No.  1.00
1767          KM          An rainfall areal reduction factor of 0.998
1768          KM
1769          KM       EXCESS RAINFALL VALUES EXCEEDED IN 5-MINUTE INTERVALS
1770          KM     5  10  15  20  25  30  35  40  45  50  55  60  65  70  75  80  85  90
1771          KM   .30 .30 .29 .09 .07 .06 .03 .02 .02 .01 .01 .01 .00 .00 .00 .00 .00 .00
1772          KM
1773          KM          L=   0.820 miles, S=  248 feet/mile, Kb= .03
1774          KM
1775          BA   0.143
1776          LG    0.09    0.25    5.70    0.18   23.09
1777          UC   0.188   0.149
1778          UA       0       5      16      30      65      77      84      90      94      97
1779          UA     100
              *

1780          KK   C600O
1781          KM      Reservoir route at C600.
1782          RS       1    ELEV  1754.0
1783          SV    0.00    0.14    0.62    1.52    2.95    5.06    7.98   11.80   16.61   22.67
1784          SV   30.07   38.71   40.50   40.60   41.60   42.70   43.70   44.60   45.70
1785          SE  1754.0  1756.0  1758.0  1760.0  1762.0  1764.0  1766.0  1768.0  1770.0  1772.0
1786          SE  1774.0  1776.0 1776.36  1776.4  1776.6  1776.8  1777.0  1777.2  1777.4
1787          SQ       0      55     183     320     427     513     570     620     665     709
1788          SQ     750     789     795     795     812     849     906     984    1084
              *

1789          KK  600601
1790          KM      Normal depth channel route from C600 to C601
1791          KM      Source:  HEC-2 Cross Section: TU 1.538
1792          RS       3    FLOW      -1
1793          RC   0.040   0.025   0.040  2406.0  0.0176
1794          RX  9945.6  9959.4  9968.3  9985.9 10000.0 10017.2 10038.7 10058.8
1795          RY  1734.5  1732.3  1727.9  1726.2  1725.0  1727.7  1735.2  1736.0
              *
```

```
LINE          ID.......1.......2.......3.......4.......5.......6.......7.......8.......9......10

1796          KK    211B
1797          KM   Sub-Basin   211B
1798          KM
1799          KM      The Clark Unit Hydrograph is used for this basin.
1800          KM          The Urban time-area relation is used for this basin.
1801          KM
1802          KM      Time of Concentration for this sub-basin is based on the following:
1803          KM          6-Hour Rainfall, Pattern No.  1.00
1804          KM          An rainfall areal reduction factor of 0.999
1805          KM
1806          KM       EXCESS RAINFALL VALUES EXCEEDED IN 5-MINUTE INTERVALS
1807          KM     5  10  15  20  25  30  35  40  45  50  55  60  65  70  75  80  85  90
1808          KM   .30 .29 .29 .09 .06 .06 .02 .02 .02 .01 .01 .01 .00 .00 .00 .00 .00 .00
1809          KM
1810          KM          L=   0.618 miles, S=  244 feet/mile, Kb= .03
1811          KM
1812          BA   0.109
1813          LG    0.09     0.25     5.80     0.18    20.22
1814          UC   0.163    0.119
1815          UA       0        5       16       30       65       77       84       90       94       97
1816          UA     100
              *

1817          KK    C601
1818          KM      Hydrograph combine 600601 + 211B at C601
1819          HC       2
              *

1820          KK  601602
1821          KM      Normal depth channel route from C601 to C602
1822          KM      Source:  HEC-2 Cross Section: TU 1.102
1823          RS       3    FLOW      -1
1824          RC   0.065   0.040   0.055  1765.0  0.0146
1825          RX  9916.9  9959.1  9965.8  9980.2 10004.0 10019.5 10047.3 10094.1
1826          RY  1699.9  1699.8  1696.4  1689.8  1688.9  1695.7  1698.2  1698.4
              *

1827          KK    211C
1828          KM   Sub-Basin   211C
1829          KM
1830          KM      The Clark Unit Hydrograph is used for this basin.
1831          KM          The Urban time-area relation is used for this basin.
1832          KM
1833          KM      Time of Concentration for this sub-basin is based on the following:
1834          KM          6-Hour Rainfall, Pattern No.  1.00
1835          KM          An rainfall areal reduction factor of 0.999
1836          KM
1837          KM       EXCESS RAINFALL VALUES EXCEEDED IN 5-MINUTE INTERVALS
1838          KM     5  10  15  20  25  30  35  40  45  50  55  60  65  70  75  80  85  90
1839          KM   .31 .31 .31 .10 .08 .07 .03 .03 .03 .03 .03 .03 .01 .01 .01 .01 .01 .01
1840          KM
1841          KM          L=   0.479 miles, S=  154 feet/mile, Kb= .03
1842          KM
1843          BA   0.043
```

```
LINE          ID.......1.......2.......3.......4.......5.......6.......7.......8.......9......10

1844          LG    0.08    0.25    5.70    0.18   44.48
1845          UC   0.163   0.165
1846          UA       0       5      16      30      65      77      84      90      94      97
1847          UA     100
              *

1848          KK   C602L
1849          KM      Hydrograph combine 601602 + 211C at C602 left branch
1850          HC       2
              *

1851          KK    211D
1852          KM   Sub-Basin   211D
1853          KM
1854          KM      The Clark Unit Hydrograph is used for this basin.
1855          KM          The Urban time-area relation is used for this basin.
1856          KM
1857          KM      Time of Concentration for this sub-basin is based on the following:
1858          KM          6-Hour Rainfall, Pattern No.  1.00
1859          KM          An rainfall areal reduction factor of 0.999
1860          KM
1861          KM       EXCESS RAINFALL VALUES EXCEEDED IN 5-MINUTE INTERVALS
1862          KM     5  10  15  20  25  30  35  40  45  50  55  60  65  70  75  80  85  90
1863          KM   .29 .28 .28 .07 .05 .04 .02 .02 .02 .02 .02 .02 .01 .01 .01 .01 .01 .01
1864          KM
1865          KM          L=   0.686 miles, S=  115 feet/mile, Kb= .03
1866          KM
1867          BA   0.071
1868          LG    0.08    0.25    3.85    0.46   37.42
1869          UC   0.221   0.232
1870          UA       0       5      16      30      65      77      84      90      94      97
1871          UA     100
              *

1872          KK    C602
1873          KM      Hydrograph combine C602L + 211D at C602
1874          HC       2
              *

1875          KK  602603
1876          KM      Normal depth channel route from C602 to C603
1877          KM      Source:  HEC-2 Cross Section: LE 0.672
1878          RS       4    FLOW      -1
1879          RC   0.060   0.045   0.060  2610.0  0.0211
1880          RX  9891.9  9963.9  9986.5 10000.0 10012.7 10023.8 10085.0 10176.4
1881          RY  1653.5  1653.5  1644.4  1644.1  1645.0  1649.8  1651.7  1656.7
              *

1882          KK    211E
1883          KM   Sub-Basin   211E
1884          KM
1885          KM      The Clark Unit Hydrograph is used for this basin.
1886          KM          The Urban time-area relation is used for this basin.
1887          KM
1888          KM      Time of Concentration for this sub-basin is based on the following:
```

```
LINE          ID.......1.......2.......3.......4.......5.......6.......7.......8.......9......10

1889          KM          6-Hour Rainfall, Pattern No.  1.00
1890          KM          An rainfall areal reduction factor of 0.998
1891          KM
1892          KM       EXCESS RAINFALL VALUES EXCEEDED IN 5-MINUTE INTERVALS
1893          KM     5  10  15  20  25  30  35  40  45  50  55  60  65  70  75  80  85  90
1894          KM   .30 .30 .30 .09 .07 .06 .03 .03 .02 .02 .02 .02 .01 .01 .01 .01 .01 .01
1895          KM
1896          KM          L=   0.609 miles, S=  118 feet/mile, Kb= .03
1897          KM
1898          BA   0.156
1899          LG    0.08     0.25     5.10     0.24    42.21
1900          UC   0.200    0.120
1901          UA       0        5       16       30       65       77       84       90       94       97
1902          UA     100
              *

1903          KK    C603
1904          KM      Hydrograph combine 602603 + 211E at C603
1905          HC       2
              *

1906          KK  603622
1907          KM      Normal depth channel route from C603 to C622
1908          KM      Source:  HEC-2 Cross Section: LE 0.287
1909          RS       5    FLOW      -1
1910          RC   0.060   0.045   0.060  2745.0  0.0204
1911          RX  9883.0  9929.7  9967.3  9991.6 10042.2 10073.6 10177.6 10194.5
1912          RY  1619.4  1618.7  1611.8  1602.1  1603.3  1609.4  1610.5  1610.6
              *

1913          KK    211F
1914          KM   Sub-Basin   211F
1915          KM
1916          KM      The Clark Unit Hydrograph is used for this basin.
1917          KM          The Urban time-area relation is used for this basin.
1918          KM
1919          KM      Time of Concentration for this sub-basin is based on the following:
1920          KM          6-Hour Rainfall, Pattern No.  1.00
1921          KM          An rainfall areal reduction factor of 0.999
1922          KM
1923          KM       EXCESS RAINFALL VALUES EXCEEDED IN 5-MINUTE INTERVALS
1924          KM     5  10  15  20  25  30  35  40  45  50  55  60  65  70  75  80  85  90
1925          KM   .31 .31 .31 .10 .08 .07 .04 .04 .04 .04 .04 .03 .01 .01 .01 .01 .01 .01
1926          KM
1927          KM          L=   0.770 miles, S=  134 feet/mile, Kb= .03
1928          KM
1929          BA   0.113
1930          LG    0.08     0.25     4.30     0.36    62.81
1931          UC   0.217    0.191
1932          UA       0        5       16       30       65       77       84       90       94       97
1933          UA     100
              *
```

```
LINE          ID.......1.......2.......3.......4.......5.......6.......7.......8.......9......10

1934          KK   C622L
1935          KM      Hydrograph combine 603622 + 211F at C622 left branch
1936          HC       2
              *

1937          KK    C622
1938          KM      Hydrograph combine C622R + C622L at C622
1939          HC       2
              *

1940          KK  622549
1941          KM      Normal depth channel route from C622 to C549
1942          KM      Source:  HEC-2 Cross Section: AS 2.279
1943          RS       7    FLOW      -1
1944          RC   0.113   0.125   0.120  1697.0  0.0118
1945          RX  9847.1  9851.0  9857.5  9862.8 10052.6 10062.8 10075.6 10084.6
1946          RY  1573.5  1571.3  1567.2  1564.6  1565.1  1566.7  1573.7  1573.9
              *

1947          KK    211Y
1948          KM   Sub-Basin   211Y
1949          KM
1950          KM      The Clark Unit Hydrograph is used for this basin.
1951          KM          The Urban time-area relation is used for this basin.
1952          KM
1953          KM      Time of Concentration for this sub-basin is based on the following:
1954          KM          6-Hour Rainfall, Pattern No.  1.00
1955          KM          An rainfall areal reduction factor of 0.999
1956          KM
1957          KM       EXCESS RAINFALL VALUES EXCEEDED IN 5-MINUTE INTERVALS
1958          KM     5  10  15  20  25  30  35  40  45  50  55  60  65  70  75  80  85  90
1959          KM   .32 .32 .31 .11 .09 .09 .04 .04 .04 .03 .03 .03 .01 .01 .01 .01 .01 .01
1960          KM
1961          KM          L=   0.606 miles, S=  147 feet/mile, Kb= .04
1962          KM
1963          BA   0.089
1964          LG    0.09    0.21    6.60    0.13   50.06
1965          UC   0.213   0.176
1966          UA       0       5      16      30      65      77      84      90      94      97
1967          UA     100
              *

1968          KK   C549R
1969          KM      Hydrograph combine 622549 + 211Y at C549 right branch
1970          HC       2
              *

1971          KK    C549
1972          KM      Hydrograph combine C549L + C549R at C549
1973          HC       2
              *
```

```
LINE          ID.......1.......2.......3.......4.......5.......6.......7.......8.......9......10

1974          KK  549626
1975          KM      Normal depth channel route from C549 to C626
1976          KM      Source:  HEC-2 Cross Section: AS 1.855
1977          RS       7    FLOW      -1
1978          RC   0.113   0.125   0.120  2044.0  0.0171
1979          RX  9943.2  9963.0  9985.6  9994.1 10007.6 10029.2 10150.5 10171.3
1980          RY  1539.3  1534.5  1531.2  1528.3  1528.2  1531.7  1532.5  1537.4
              *

1981          KK    211Z
1982          KM   Sub-Basin   211Z
1983          KM
1984          KM      The Clark Unit Hydrograph is used for this basin.
1985          KM          The Urban time-area relation is used for this basin.
1986          KM
1987          KM      Time of Concentration for this sub-basin is based on the following:
1988          KM          6-Hour Rainfall, Pattern No.  1.00
1989          KM          An rainfall areal reduction factor of 0.999
1990          KM
1991          KM       EXCESS RAINFALL VALUES EXCEEDED IN 5-MINUTE INTERVALS
1992          KM     5  10  15  20  25  30  35  40  45  50  55  60  65  70  75  80  85  90
1993          KM   .29 .29 .28 .07 .05 .04 .02 .02 .02 .02 .02 .02 .01 .01 .01 .01 .01 .01
1994          KM
1995          KM          L=   0.509 miles, S=  147 feet/mile, Kb= .04
1996          KM
1997          BA   0.083
1998          LG    0.14    0.27    4.50    0.34   34.43
1999          UC   0.204   0.153
2000          UA       0       5      16      30      65      77      84      90      94      97
2001          UA     100
              *

2002          KK   C626C
2003          KM      Hydrograph combine 549626 + 211Z at C626 main branch
2004          HC       2
              *

2005          KK   211AA
2006          KM   Sub-Basin  211AA
2007          KM
2008          KM      The Clark Unit Hydrograph is used for this basin.
2009          KM          The Urban time-area relation is used for this basin.
2010          KM
2011          KM      Time of Concentration for this sub-basin is based on the following:
2012          KM          6-Hour Rainfall, Pattern No.  1.00
2013          KM          An rainfall areal reduction factor of 1.000
2014          KM
2015          KM       EXCESS RAINFALL VALUES EXCEEDED IN 5-MINUTE INTERVALS
2016          KM     5  10  15  20  25  30  35  40  45  50  55  60  65  70  75  80  85  90
2017          KM   .32 .31 .31 .11 .09 .08 .04 .04 .04 .03 .02 .02 .01 .01 .01 .01 .01 .01
2018          KM
2019          KM          L=   0.480 miles, S=   85 feet/mile, Kb= .03
2020          KM
2021          BA   0.034
```

```
LINE          ID.......1.......2.......3.......4.......5.......6.......7.......8.......9......10

2022          LG    0.08    0.19    6.60    0.13   39.38
2023          UC   0.196   0.231
2024          UA       0       5      16      30      65      77      84      90      94      97
2025          UA     100
              *

2026          KK  625626
2027          KM      Normal depth channel route from C625 to C626
2028          KM      Source:  200 Scale Mapping
2029          RS       3    FLOW      -1
2030          RC   0.040   0.018   0.040  1350.0  0.0252
2031          RX  1000.0  1020.0  1021.2  1055.2  1089.2  1090.4  1100.4  1105.4
2032          RY  1527.0  1526.0  1525.6  1526.3  1525.6  1526.0  1528.0  1530.0
              *

2033          KK   211AB
2034          KM   Sub-Basin  211AB
2035          KM
2036          KM      The Clark Unit Hydrograph is used for this basin.
2037          KM          The Urban time-area relation is used for this basin.
2038          KM
2039          KM      Time of Concentration for this sub-basin is based on the following:
2040          KM          6-Hour Rainfall, Pattern No.  1.00
2041          KM          An rainfall areal reduction factor of 0.999
2042          KM
2043          KM       EXCESS RAINFALL VALUES EXCEEDED IN 5-MINUTE INTERVALS
2044          KM     5  10  15  20  25  30  35  40  45  50  55  60  65  70  75  80  85  90
2045          KM   .32 .32 .32 .12 .10 .09 .04 .04 .04 .04 .04 .03 .01 .01 .01 .01 .01 .01
2046          KM
2047          KM          L=   0.293 miles, S=  321 feet/mile, Kb= .03
2048          KM
2049          BA   0.040
2050          LG    0.07    0.17    6.80    0.12   54.72
2051          UC   0.100   0.068
2052          UA       0       5      16      30      65      77      84      90      94      97
2053          UA     100
              *

2054          KK  623624
2055          KM      Normal depth channel route from C623 to C624
2056          KM      Source:  200 Scale Mapping
2057          RS       1    FLOW      -1
2058          RC   0.040   0.018   0.040   701.0  0.0114
2059          RX  1000.0  1010.0  1011.2  1027.2  1043.2  1044.4  1059.4  1074.4
2060          RY  1534.0  1532.0  1531.6  1531.9  1531.6  1532.0  1532.5  1533.0
              *

2061          KK   211AC
2062          KM   Sub-Basin  211AC
2063          KM
2064          KM      The Clark Unit Hydrograph is used for this basin.
2065          KM          The Urban time-area relation is used for this basin.
2066          KM
2067          KM      Time of Concentration for this sub-basin is based on the following:
2068          KM          6-Hour Rainfall, Pattern No.  1.00
```

```
LINE          ID.......1.......2.......3.......4.......5.......6.......7.......8.......9......10

2069          KM          An rainfall areal reduction factor of 1.000
2070          KM
2071          KM       EXCESS RAINFALL VALUES EXCEEDED IN 5-MINUTE INTERVALS
2072          KM     5  10  15  20  25  30  35  40  45  50  55  60  65  70  75  80  85  90
2073          KM   .32 .32 .32 .12 .10 .09 .05 .05 .04 .04 .04 .04 .01 .01 .01 .01 .01 .01
2074          KM
2075          KM          L=   0.306 miles, S=   82 feet/mile, Kb= .03
2076          KM
2077          BA   0.027
2078          LG    0.08     0.15     8.40     0.07    44.76
2079          UC   0.154    0.140
2080          UA       0        5       16       30       65       77       84       90       94       97
2081          UA     100
              *

2082          KK    C624
2083          KM      Hydrograph combine 623624 + 211AC at C624
2084          HC       2
              *

2085          KK  624626
2086          KM      Normal depth channel route from C624 to C626
2087          KM      Source:  HEC-2 Cross Section: AS 1.727
2088          RS       3    FLOW      -1
2089          RC   0.080    0.060    0.080    637.0   0.0235
2090          RX  9872.9   9881.0   9893.9   9902.2   9967.6   9976.4 10076.1 10084.3
2091          RY  1526.3   1524.6   1521.7   1520.0   1520.7   1521.6   1520.7   1526.2
              *

2092          KK   211AD
2093          KM   Sub-Basin  211AD
2094          KM
2095          KM      The Clark Unit Hydrograph is used for this basin.
2096          KM          The Urban time-area relation is used for this basin.
2097          KM
2098          KM      Time of Concentration for this sub-basin is based on the following:
2099          KM          6-Hour Rainfall, Pattern No.  1.00
2100          KM          An rainfall areal reduction factor of 0.999
2101          KM
2102          KM       EXCESS RAINFALL VALUES EXCEEDED IN 5-MINUTE INTERVALS
2103          KM     5  10  15  20  25  30  35  40  45  50  55  60  65  70  75  80  85  90
2104          KM   .32 .32 .32 .12 .10 .09 .05 .05 .04 .04 .04 .04 .01 .01 .01 .01 .01 .01
2105          KM
2106          KM          L=   0.489 miles, S=  280 feet/mile, Kb= .03
2107          KM
2108          BA   0.041
2109          LG    0.08     0.15     8.00     0.08    46.16
2110          UC   0.133    0.137
2111          UA       0        5       16       30       65       77       84       90       94       97
2112          UA     100
              *
```

```
LINE          ID.......1.......2.......3.......4.......5.......6.......7.......8.......9......10

 2113         KK   C626R
 2114         KM      Hydrograph combine 624626 + 211AD at C626 right branch
 2115         HC       2
              *

 2116         KK    C626
 2117         KM      Hydrograph combine C626C + 625626 at C626R
 2118         HC       3
              *

 2119         KK  626627
 2120         KM      Normal depth channel route from C626 to C627
 2121         KM      Source:  HEC-2 Cross Section: AS 1.602
 2122         RS       2    FLOW      -1
 2123         RC   0.080   0.060   0.080   625.0  0.0208
 2124         RX  9889.8  9941.2  9963.0 10011.6 10074.8 10083.9 10191.7 10210.4
 2125         RY  1517.6  1516.9  1508.1  1506.6  1508.6  1511.7  1513.1  1518.8
              *

 2126         KK   211AE
 2127         KM   Sub-Basin  211AE
 2128         KM
 2129         KM      The Clark Unit Hydrograph is used for this basin.
 2130         KM          The Urban time-area relation is used for this basin.
 2131         KM
 2132         KM      Time of Concentration for this sub-basin is based on the following:
 2133         KM          6-Hour Rainfall, Pattern No.  1.00
 2134         KM          An rainfall areal reduction factor of 1.000
 2135         KM
 2136         KM       EXCESS RAINFALL VALUES EXCEEDED IN 5-MINUTE INTERVALS
 2137         KM     5  10  15  20  25  30  35  40  45  50  55  60  65  70  75  80  85  90
 2138         KM   .31 .31 .30 .10 .08 .07 .03 .03 .03 .02 .02 .02 .01 .01 .01 .01 .01 .01
 2139         KM
 2140         KM          L=   0.313 miles, S=  153 feet/mile, Kb= .04
 2141         KM
 2142         BA   0.034
 2143         LG    0.12    0.24    6.40    0.15   38.15
 2144         UC   0.154   0.125
 2145         UA       0       5      16      30      65      77      84      90      94      97
 2146         UA     100
              *

 2147         KK    C627
 2148         KM      Hydrograph combine 626627 + 211AE at C627
 2149         HC       2
              *
              * *
              * * C627 is the total flow in Ashbrook Wash at the Study boundary
              * *
              *
 2150         ZZ
```

```
*****************************************                    *****************************************
*                                       *                    *                                       *
*   FLOOD HYDROGRAPH PACKAGE  (HEC-1)   *                    *    U.S. ARMY CORPS OF ENGINEERS       *
*              MAY   1991               *                    *    HYDROLOGIC ENGINEERING CENTER      *
*            VERSION 4.0.1E             *                    *          609 SECOND STREET            *
*     Lahey F77L-EM/32 version 5.01     *                    *       DAVIS, CALIFORNIA 95616         *
*        Dodson & Associates, Inc.      *                    *           (916) 551-1748              *
*        DATE  09/28/99  TIME  13:51:35 *                    *                                       *
*****************************************                    *****************************************
```

```
                    Golden Eagle Park Dam Modifications
                         by Stantec: Proj. No. 28900095                File: ALTFf-6.IH1
                         for FCDMC:  FCD                               Date:07-08-99     mcg
                                                                     Revised:

                    Alternative F:
                         Addition of an auxillary spillway.  This spillway will function such
                         that the existing emergency spillway does not operate for the 100-year
                         storm.  The stage-storage relation is adjusted to reflect revised
                         grading in the park.

                         The purpose of this model is to estimate peak discharges in Ashbrook
                         Wash for evaluation of the Dam modifications impact on the floodplain.

                    10-year, 6-hour future condition watershed model for Ashbrook Wash upstream
                    of the Fort McDowell Indian Reservation boundary.
                         This model is a portion of the original Fountain Hills North FDS
                         watershed model conducted by GVSCE, 1994.  The title cards from that
                         model are included for reference.

                    Fountain Hills North Floodplain Delineation Study
                         FCD 92-04       by GVSCE                      File:   FU10-6.IH1
                    Future Condition Model                             Date:    07-21-94   dtp
                       10-Year 6-Hour Storm, Clark Unit Hydrograph   Revised:   10-31-94   dtp

26 IO          OUTPUT CONTROL VARIABLES
                     IPRNT           5  PRINT CONTROL
                     IPLOT           0  PLOT CONTROL
                     QSCAL          0.  HYDROGRAPH PLOT SCALE

   IT          HYDROGRAPH TIME DATA
                      NMIN           1  MINUTES IN COMPUTATION INTERVAL
                     IDATE      1    0  STARTING DATE
                     ITIME        0000  STARTING TIME
                        NQ        1080  NUMBER OF HYDROGRAPH ORDINATES
                    NDDATE      1    0  ENDING DATE
                    NDTIME        1759  ENDING TIME
                     ICENT          19  CENTURY MARK

              COMPUTATION INTERVAL    0.02 HOURS
                   TOTAL TIME BASE   17.98 HOURS

        ENGLISH UNITS
             DRAINAGE AREA          SQUARE MILES
             PRECIPITATION DEPTH    INCHES
             LENGTH, ELEVATION      FEET
             FLOW                   CUBIC FEET PER SECOND
             STORAGE VOLUME         ACRE-FEET
             SURFACE AREA           ACRES
             TEMPERATURE            DEGREES FAHRENHEIT

28 JD          INDEX STORM NO. 1
                     STRM        2.20  PRECIPITATION DEPTH
                     TRDA        0.01  TRANSPOSITION DRAINAGE AREA

29 PI            PRECIPITATION PATTERN
                   0.00      0.00      0.00      0.00      0.00      0.00      0.00      0.00      0.00      0.00
                   0.00      0.00      0.00      0.00      0.00      0.00      0.00      0.00      0.00      0.00
                   0.00      0.00      0.00      0.00      0.00      0.00      0.00      0.00      0.00      0.00
                   0.00      0.00      0.00      0.00      0.00      0.00      0.00      0.00      0.00      0.00
                   0.00      0.00      0.00      0.00      0.00      0.00      0.00      0.00      0.00      0.00
                   0.00      0.00      0.00      0.00      0.00      0.00      0.00      0.00      0.00      0.00
                   0.00      0.00      0.00      0.00      0.00      0.00      0.00      0.00      0.00      0.00
                   0.00      0.00      0.00      0.00      0.00      0.00      0.00      0.00      0.00      0.00
```

0.00	0.00	0.00	0.00	0.00	0.00	0.00	0.00	0.00	0.00
0.00	0.00	0.00	0.00	0.00	0.00	0.00	0.00	0.00	0.00
0.00	0.00	0.00	0.00	0.00	0.00	0.00	0.00	0.00	0.00
0.00	0.00	0.00	0.00	0.00	0.00	0.00	0.00	0.00	0.00
0.00	0.00	0.00	0.00	0.00	0.00	0.00	0.00	0.00	0.00
0.00	0.00	0.00	0.00	0.00	0.00	0.00	0.00	0.00	0.00
0.00	0.00	0.00	0.00	0.00	0.00	0.00	0.00	0.00	0.00
0.00	0.00	0.00	0.00	0.00	0.00	0.00	0.00	0.00	0.00
0.00	0.00	0.00	0.00	0.00	0.00	0.00	0.00	0.00	0.00
0.00	0.00	0.00	0.00	0.00	0.00	0.00	0.00	0.00	0.00
0.00	0.00	0.00	0.00	0.00	0.00	0.00	0.00	0.00	0.00
0.00	0.00	0.00	0.00	0.00	0.01	0.01	0.01	0.01	0.01
0.01	0.01	0.01	0.01	0.01	0.01	0.01	0.01	0.01	0.01
0.01	0.01	0.01	0.01	0.01	0.01	0.01	0.01	0.01	0.01
0.01	0.01	0.01	0.01	0.01	0.03	0.03	0.03	0.03	0.03
0.03	0.03	0.03	0.03	0.03	0.03	0.03	0.03	0.03	0.03
0.01	0.01	0.01	0.01	0.01	0.01	0.01	0.01	0.01	0.01
0.01	0.01	0.01	0.01	0.01	0.00	0.00	0.00	0.00	0.00
0.00	0.00	0.00	0.00	0.00	0.00	0.00	0.00	0.00	0.00
0.00	0.00	0.00	0.00	0.00	0.00	0.00	0.00	0.00	0.00
0.00	0.00	0.00	0.00	0.00	0.00	0.00	0.00	0.00	0.00
0.00	0.00	0.00	0.00	0.00	0.00	0.00	0.00	0.00	0.00
0.00	0.00	0.00	0.00	0.00	0.00	0.00	0.00	0.00	0.00
0.00	0.00	0.00	0.00	0.00	0.00	0.00	0.00	0.00	0.00
0.00	0.00	0.00	0.00	0.00	0.00	0.00	0.00	0.00	0.00
0.00	0.00	0.00	0.00	0.00	0.00	0.00	0.00	0.00	0.00
0.00	0.00	0.00	0.00	0.00	0.00	0.00	0.00	0.00	0.00

32 JD INDEX STORM NO. 2

STRM 2.19 PRECIPITATION DEPTH

TRDA 0.50 TRANSPOSITION DRAINAGE AREA

0 PI PRECIPITATION PATTERN

0.00	0.00	0.00	0.00	0.00	0.00	0.00	0.00	0.00	0.00
0.00	0.00	0.00	0.00	0.00	0.00	0.00	0.00	0.00	0.00
0.00	0.00	0.00	0.00	0.00	0.00	0.00	0.00	0.00	0.00
0.00	0.00	0.00	0.00	0.00	0.00	0.00	0.00	0.00	0.00
0.00	0.00	0.00	0.00	0.00	0.00	0.00	0.00	0.00	0.00
0.00	0.00	0.00	0.00	0.00	0.00	0.00	0.00	0.00	0.00
0.00	0.00	0.00	0.00	0.00	0.00	0.00	0.00	0.00	0.00
0.00	0.00	0.00	0.00	0.00	0.00	0.00	0.00	0.00	0.00
0.00	0.00	0.00	0.00	0.00	0.00	0.00	0.00	0.00	0.00
0.00	0.00	0.00	0.00	0.00	0.00	0.00	0.00	0.00	0.00
0.00	0.00	0.00	0.00	0.00	0.00	0.00	0.00	0.00	0.00
0.00	0.00	0.00	0.00	0.00	0.00	0.00	0.00	0.00	0.00
0.00	0.00	0.00	0.00	0.00	0.00	0.00	0.00	0.00	0.00
0.00	0.00	0.00	0.00	0.00	0.00	0.00	0.00	0.00	0.00
0.00	0.00	0.00	0.00	0.00	0.00	0.00	0.00	0.00	0.00
0.00	0.00	0.00	0.00	0.00	0.00	0.00	0.00	0.00	0.00
0.00	0.00	0.00	0.00	0.00	0.00	0.00	0.00	0.00	0.00
0.00	0.00	0.00	0.00	0.00	0.00	0.00	0.00	0.00	0.00
0.00	0.00	0.00	0.00	0.00	0.00	0.00	0.00	0.00	0.00
0.00	0.00	0.00	0.00	0.00	0.01	0.01	0.01	0.01	0.01
0.01	0.01	0.01	0.01	0.01	0.01	0.01	0.01	0.01	0.01
0.01	0.01	0.01	0.01	0.01	0.01	0.01	0.01	0.01	0.01
0.01	0.01	0.01	0.01	0.01	0.03	0.03	0.03	0.03	0.03
0.03	0.03	0.03	0.03	0.03	0.03	0.03	0.03	0.03	0.03
0.01	0.01	0.01	0.01	0.01	0.01	0.01	0.01	0.01	0.01
0.01	0.01	0.01	0.01	0.01	0.00	0.00	0.00	0.00	0.00
0.00	0.00	0.00	0.00	0.00	0.00	0.00	0.00	0.00	0.00
0.00	0.00	0.00	0.00	0.00	0.00	0.00	0.00	0.00	0.00
0.00	0.00	0.00	0.00	0.00	0.00	0.00	0.00	0.00	0.00
0.00	0.00	0.00	0.00	0.00	0.00	0.00	0.00	0.00	0.00
0.00	0.00	0.00	0.00	0.00	0.00	0.00	0.00	0.00	0.00
0.00	0.00	0.00	0.00	0.00	0.00	0.00	0.00	0.00	0.00
0.00	0.00	0.00	0.00	0.00	0.00	0.00	0.00	0.00	0.00
0.00	0.00	0.00	0.00	0.00	0.00	0.00	0.00	0.00	0.00
0.00	0.00	0.00	0.00	0.00	0.00	0.00	0.00	0.00	0.00

33 JD INDEX STORM NO. 3

STRM 2.16 PRECIPITATION DEPTH

TRDA 2.80 TRANSPOSITION DRAINAGE AREA

34 PI PRECIPITATION PATTERN

0.00	0.00	0.00	0.00	0.00	0.00	0.00	0.00	0.00	0.00
0.00	0.00	0.00	0.00	0.00	0.00	0.00	0.00	0.00	0.00

0.00	0.00	0.00	0.00	0.00	0.00	0.00	0.00	0.00	0.00
0.00	0.00	0.00	0.00	0.00	0.00	0.00	0.00	0.00	0.00
0.00	0.00	0.00	0.00	0.00	0.00	0.00	0.00	0.00	0.00
0.00	0.00	0.00	0.00	0.00	0.00	0.00	0.00	0.00	0.00
0.00	0.00	0.00	0.00	0.00	0.00	0.00	0.00	0.00	0.00
0.00	0.00	0.00	0.00	0.00	0.00	0.00	0.00	0.00	0.00
0.00	0.00	0.00	0.00	0.00	0.00	0.00	0.00	0.00	0.00
0.00	0.00	0.00	0.00	0.00	0.00	0.00	0.00	0.00	0.00
0.00	0.00	0.00	0.00	0.00	0.00	0.00	0.00	0.00	0.00
0.00	0.00	0.00	0.00	0.00	0.00	0.00	0.00	0.00	0.00
0.00	0.00	0.00	0.00	0.00	0.00	0.00	0.00	0.00	0.00
0.00	0.00	0.00	0.00	0.00	0.00	0.00	0.00	0.00	0.00
0.00	0.00	0.00	0.00	0.00	0.00	0.00	0.00	0.00	0.00
0.00	0.00	0.00	0.00	0.00	0.00	0.00	0.00	0.00	0.00
0.00	0.00	0.00	0.00	0.00	0.00	0.00	0.00	0.00	0.00
0.00	0.00	0.00	0.00	0.00	0.00	0.00	0.00	0.00	0.00
0.00	0.00	0.00	0.00	0.00	0.00	0.00	0.00	0.00	0.00
0.00	0.00	0.00	0.00	0.00	0.01	0.01	0.01	0.01	0.01
0.01	0.01	0.01	0.01	0.01	0.01	0.01	0.01	0.01	0.01
0.01	0.01	0.01	0.01	0.01	0.01	0.01	0.01	0.01	0.01
0.01	0.01	0.01	0.01	0.01	0.02	0.02	0.02	0.02	0.02
0.02	0.02	0.02	0.02	0.02	0.02	0.02	0.02	0.02	0.02
0.01	0.01	0.01	0.01	0.01	0.01	0.01	0.01	0.01	0.01
0.01	0.01	0.01	0.01	0.01	0.00	0.00	0.00	0.00	0.00
0.00	0.00	0.00	0.00	0.00	0.00	0.00	0.00	0.00	0.00
0.00	0.00	0.00	0.00	0.00	0.00	0.00	0.00	0.00	0.00
0.00	0.00	0.00	0.00	0.00	0.00	0.00	0.00	0.00	0.00
0.00	0.00	0.00	0.00	0.00	0.00	0.00	0.00	0.00	0.00
0.00	0.00	0.00	0.00	0.00	0.00	0.00	0.00	0.00	0.00
0.00	0.00	0.00	0.00	0.00	0.00	0.00	0.00	0.00	0.00
0.00	0.00	0.00	0.00	0.00	0.00	0.00	0.00	0.00	0.00
0.00	0.00	0.00	0.00	0.00	0.00	0.00	0.00	0.00	0.00

37 JD INDEX STORM NO. 4

STRM 2.03 PRECIPITATION DEPTH

TRDA 16.00 TRANSPOSITION DRAINAGE AREA

38 PI PRECIPITATION PATTERN

0.00	0.00	0.00	0.00	0.00	0.00	0.00	0.00	0.00	0.00
0.00	0.00	0.00	0.00	0.00	0.00	0.00	0.00	0.00	0.00
0.00	0.00	0.00	0.00	0.00	0.00	0.00	0.00	0.00	0.00
0.00	0.00	0.00	0.00	0.00	0.00	0.00	0.00	0.00	0.00
0.00	0.00	0.00	0.00	0.00	0.00	0.00	0.00	0.00	0.00
0.00	0.00	0.00	0.00	0.00	0.00	0.00	0.00	0.00	0.00
0.00	0.00	0.00	0.00	0.00	0.00	0.00	0.00	0.00	0.00
0.00	0.00	0.00	0.00	0.00	0.00	0.00	0.00	0.00	0.00
0.00	0.00	0.00	0.00	0.00	0.00	0.00	0.00	0.00	0.00
0.00	0.00	0.00	0.00	0.00	0.00	0.00	0.00	0.00	0.00
0.00	0.00	0.00	0.00	0.00	0.00	0.00	0.00	0.00	0.00
0.00	0.00	0.00	0.00	0.00	0.00	0.00	0.00	0.00	0.00
0.00	0.00	0.00	0.00	0.00	0.00	0.00	0.00	0.00	0.00
0.00	0.00	0.00	0.00	0.00	0.00	0.00	0.00	0.00	0.00
0.00	0.00	0.00	0.00	0.00	0.00	0.00	0.00	0.00	0.00
0.00	0.00	0.00	0.00	0.00	0.00	0.00	0.00	0.00	0.00
0.00	0.00	0.00	0.00	0.00	0.00	0.00	0.00	0.00	0.00
0.00	0.00	0.00	0.00	0.00	0.00	0.00	0.00	0.00	0.00
0.00	0.00	0.00	0.00	0.00	0.00	0.00	0.00	0.00	0.00
0.00	0.00	0.00	0.00	0.00	0.01	0.01	0.01	0.01	0.01
0.01	0.01	0.01	0.01	0.01	0.01	0.01	0.01	0.01	0.01
0.01	0.01	0.01	0.01	0.01	0.01	0.01	0.01	0.01	0.01
0.01	0.01	0.01	0.01	0.01	0.01	0.01	0.01	0.01	0.01
0.01	0.01	0.01	0.01	0.01	0.01	0.01	0.01	0.01	0.01
0.01	0.01	0.01	0.01	0.01	0.01	0.01	0.01	0.01	0.01
0.01	0.01	0.01	0.01	0.01	0.00	0.00	0.00	0.00	0.00
0.00	0.00	0.00	0.00	0.00	0.00	0.00	0.00	0.00	0.00
0.00	0.00	0.00	0.00	0.00	0.00	0.00	0.00	0.00	0.00
0.00	0.00	0.00	0.00	0.00	0.00	0.00	0.00	0.00	0.00
0.00	0.00	0.00	0.00	0.00	0.00	0.00	0.00	0.00	0.00
0.00	0.00	0.00	0.00	0.00	0.00	0.00	0.00	0.00	0.00
0.00	0.00	0.00	0.00	0.00	0.00	0.00	0.00	0.00	0.00
0.00	0.00	0.00	0.00	0.00	0.00	0.00	0.00	0.00	0.00
0.00	0.00	0.00	0.00	0.00	0.00	0.00	0.00	0.00	0.00
0.00	0.00	0.00	0.00	0.00	0.00	0.00	0.00	0.00	0.00
0.00	0.00	0.00	0.00	0.00	0.00	0.00	0.00	0.00	0.00

41 JD INDEX STORM NO. 5

```
STRM        1.78  PRECIPITATION DEPTH
TRDA       90.00  TRANSPOSITION DRAINAGE AREA

42 PI          PRECIPITATION PATTERN
                0.00      0.00      0.00      0.00      0.00      0.00      0.00      0.00      0.00      0.00
                0.00      0.00      0.00      0.00      0.00      0.00      0.00      0.00      0.00      0.00
                0.00      0.00      0.00      0.00      0.00      0.00      0.00      0.00      0.00      0.00
                0.00      0.00      0.00      0.00      0.00      0.00      0.00      0.00      0.00      0.00
                0.00      0.00      0.00      0.00      0.00      0.00      0.00      0.00      0.00      0.00
                0.00      0.00      0.00      0.00      0.00      0.00      0.00      0.00      0.00      0.00
                0.00      0.00      0.00      0.00      0.00      0.00      0.00      0.00      0.00      0.00
                0.00      0.00      0.00      0.00      0.00      0.00      0.00      0.00      0.00      0.00
                0.00      0.00      0.00      0.00      0.00      0.00      0.00      0.00      0.00      0.00
                0.00      0.00      0.00      0.00      0.00      0.00      0.00      0.00      0.00      0.00
                0.00      0.00      0.00      0.00      0.00      0.00      0.00      0.00      0.00      0.00
                0.00      0.00      0.00      0.00      0.00      0.00      0.00      0.00      0.00      0.00
                0.00      0.00      0.00      0.00      0.00      0.00      0.00      0.00      0.00      0.00
                0.00      0.00      0.00      0.00      0.00      0.00      0.00      0.00      0.00      0.00
                0.00      0.00      0.00      0.00      0.00      0.00      0.00      0.00      0.00      0.00
                0.00      0.00      0.00      0.00      0.00      0.00      0.00      0.00      0.00      0.00
                0.00      0.00      0.00      0.00      0.00      0.00      0.00      0.00      0.00      0.00
                0.00      0.00      0.00      0.00      0.00      0.00      0.00      0.00      0.00      0.00
                0.00      0.00      0.00      0.00      0.00      0.00      0.00      0.00      0.00      0.00
                0.00      0.00      0.00      0.00      0.00      0.00      0.00      0.00      0.00      0.00
                0.00      0.00      0.00      0.00      0.00      0.01      0.01      0.01      0.01      0.01
                0.01      0.01      0.01      0.01      0.01      0.01      0.01      0.01      0.01      0.01
                0.01      0.01      0.01      0.01      0.01      0.01      0.01      0.01      0.01      0.01
                0.01      0.01      0.01      0.01      0.01      0.01      0.01      0.01      0.01      0.01
                0.01      0.01      0.01      0.01      0.01      0.01      0.01      0.01      0.01      0.01
                0.01      0.01      0.01      0.01      0.01      0.01      0.01      0.01      0.01      0.01
                0.01      0.01      0.01      0.01      0.01      0.00      0.00      0.00      0.00      0.00
                0.00      0.00      0.00      0.00      0.00      0.00      0.00      0.00      0.00      0.00
                0.00      0.00      0.00      0.00      0.00      0.00      0.00      0.00      0.00      0.00
                0.00      0.00      0.00      0.00      0.00      0.00      0.00      0.00      0.00      0.00
                0.00      0.00      0.00      0.00      0.00      0.00      0.00      0.00      0.00      0.00
                0.00      0.00      0.00      0.00      0.00      0.00      0.00      0.00      0.00      0.00
                0.00      0.00      0.00      0.00      0.00      0.00      0.00      0.00      0.00      0.00
                0.00      0.00      0.00      0.00      0.00      0.00      0.00      0.00      0.00      0.00
                0.00      0.00      0.00      0.00      0.00      0.00      0.00      0.00      0.00      0.00
                0.00      0.00      0.00      0.00      0.00      0.00      0.00      0.00      0.00      0.00
                0.00      0.00      0.00      0.00      0.00      0.00      0.00      0.00      0.00      0.00
WARNING EXCESS AT PONDING LESS THAN ZERO FOR PERIOD. EXCESS SET TO ZERO
WARNING EXCESS AT PONDING LESS THAN ZERO FOR PERIOD. EXCESS SET TO ZERO
```

RUNOFF SUMMARY
FLOW IN CUBIC FEET PER SECOND
TIME IN HOURS, AREA IN SQUARE MILES

OPERATION	STATION	PEAK FLOW	TIME OF PEAK	AVERAGE FLOW FOR MAXIMUM PERIOD 6-HOUR	24-HOUR	72-HOUR	BASIN AREA	MAXIMUM STAGE	TIME OF MAX STAGE
HYDROGRAPH AT	204A	196.	4.05	16.	5.	5.	0.11		
ROUTED TO	522523	178.	4.22	16.	5.	5.	0.11		
HYDROGRAPH AT	204B	211.	4.07	18.	6.	6.	0.13		
2 COMBINED AT	C523I	322.	4.15	34.	11.	11.	0.23		
ROUTED TO	C523O	227.	4.33	34.	11.	11.	0.23		
DIVERSION TO	D523R	0.	4.33	0.	0.	0.	0.23		
HYDROGRAPH AT	D523L	226.	4.33	34.	11.	11.	0.23		
HYDROGRAPH AT	205A	97.	4.32	15.	5.	5.	0.12		
HYDROGRAPH AT	205B	164.	4.47	27.	9.	9.	0.21		
2 COMBINED AT	C528	247.	4.43	42.	14.	14.	0.33		
ROUTED TO	528530	246.	4.48	42.	14.	14.	0.33		
HYDROGRAPH AT	205C	50.	4.28	8.	3.	3.	0.06		
2 COMBINED AT	C530R	284.	4.47	50.	17.	17.	0.39		
HYDROGRAPH AT	205D	315.	4.33	41.	14.	14.	0.32		
HYDROGRAPH AT	205E	133.	4.48	28.	9.	9.	0.22		
2 COMBINED AT	C529	418.	4.37	68.	23.	23.	0.54		
2 COMBINED AT	C530	596.	4.42	110.	37.	37.	0.93		
ROUTED TO	530531	592.	4.47	110.	37.	37.	0.93		
HYDROGRAPH AT	205F	153.	4.30	21.	7.	7.	0.16		
2 COMBINED AT	C531	669.	4.45	127.	43.	43.	1.09		
ROUTED TO	531532	663.	4.53	127.	43.	43.	1.09		
HYDROGRAPH AT	205G	160.	4.33	23.	8.	8.	0.19		
2 COMBINED AT	C532L	735.	4.52	144.	49.	49.	1.27		
HYDROGRAPH AT	205H	151.	4.50	32.	11.	11.	0.26		
2 COMBINED AT	C532	808.	4.52	168.	57.	57.	1.53		
ROUTED TO	532533	806.	4.55	168.	57.	57.	1.53		
HYDROGRAPH AT	205I	226.	4.45	37.	12.	12.	0.35		
2 COMBINED AT	C533	907.	4.55	193.	66.	66.	1.89		
ROUTED TO	533534	892.	4.77	193.	66.	66.	1.89		
HYDROGRAPH AT	205J	204.	4.47	32.	11.	11.	0.37		
2 COMBINED AT	C534R	946.	4.75	211.	72.	72.	2.25		
HYDROGRAPH AT	205K	95.	4.60	22.	7.	7.	0.25		
2 COMBINED AT	C534	978.	4.77	224.	76.	76.	2.50		
ROUTED TO	534535	974.	4.83	224.	76.	76.	2.50		
HYDROGRAPH AT	205L	117.	4.22	10.	3.	3.	0.12		

2 COMBINED AT	C535	972.	4.83	229.	78.	78.	2.62
ROUTED TO	535536	968.	4.92	229.	78.	78.	2.62
HYDROGRAPH AT	205M	197.	4.08	18.	6.	6.	0.14
2 COMBINED AT	C536R	967.	4.92	241.	82.	82.	2.76
HYDROGRAPH AT	205N	80.	4.40	14.	5.	5.	0.16
2 COMBINED AT	C536I	983.	4.92	249.	85.	85.	2.91
ROUTED TO	C536O	271.	6.20	233.	85.	85.	2.91
ROUTED TO	536537	271.	6.25	232.	85.	85.	2.91
HYDROGRAPH AT	206A	240.	4.05	19.	6.	6.	0.13
2 COMBINED AT	C537	273.	6.05	237.	90.	90.	3.04
ROUTED TO	537538	273.	6.12	236.	90.	90.	3.04
HYDROGRAPH AT	206B	181.	4.05	15.	5.	5.	0.09
2 COMBINED AT	C538I	275.	6.05	243.	94.	94.	3.14
ROUTED TO	C538O	273.	6.15	240.	94.	94.	3.14
ROUTED TO	538540	273.	6.25	240.	94.	94.	3.14
HYDROGRAPH AT	206C	33.	4.07	3.	1.	1.	0.02
2 COMBINED AT	C540R	274.	6.25	241.	95.	95.	3.16
HYDROGRAPH AT	206D	124.	4.03	10.	3.	3.	0.06
ROUTED TO	539540	117.	4.12	10.	3.	3.	0.06
HYDROGRAPH AT	206E	40.	4.03	3.	1.	1.	0.02
2 COMBINED AT	C540L	147.	4.10	13.	4.	4.	0.09
2 COMBINED AT	C540	275.	6.23	247.	98.	98.	3.24
ROUTED TO	540541	275.	6.35	247.	98.	98.	3.24
HYDROGRAPH AT	206F	247.	4.07	21.	7.	7.	0.16
2 COMBINED AT	C541	357.	4.30	256.	103.	103.	3.40
ROUTED TO	541548	355.	4.33	256.	103.	103.	3.40
HYDROGRAPH AT	206G	116.	4.08	13.	4.	4.	0.09
HYDROGRAPH AT	BB523R	0.	4.33	0.	0.	0.	0.23
ROUTED TO	523548	0.	4.72	0.	0.	0.	0.23
3 COMBINED AT	C548L	406.	4.32	262.	106.	106.	3.72
HYDROGRAPH AT	206H	114.	4.03	9.	3.	3.	0.06
ROUTED TO	542543	110.	4.07	9.	3.	3.	0.06
HYDROGRAPH AT	206I	47.	4.00	3.	1.	1.	0.02
2 COMBINED AT	C543	150.	4.03	13.	4.	4.	0.08
DIVERSION TO	D543R	150.	4.03	13.	4.	4.	0.08
HYDROGRAPH AT	D543L	0.	0.02	0.	0.	0.	0.08
ROUTED TO	543544	0.	0.02	0.	0.	0.	0.08
HYDROGRAPH AT	206K	100.	4.03	8.	3.	3.	0.06
2 COMBINED AT	C544	100.	4.03	8.	3.	3.	0.14

ROUTED TO	544545	98.	4.07	8.	3.	3.	0.14
DIVERSION TO	D545R	49.	4.07	4.	1.	1.	0.14
HYDROGRAPH AT	D545L	49.	4.07	4.	1.	1.	0.14
ROUTED TO	545546	48.	4.08	4.	1.	1.	0.14
HYDROGRAPH AT	206L	113.	4.03	9.	3.	3.	0.06
2 COMBINED AT	C546	157.	4.05	13.	4.	4.	0.20
ROUTED TO	546547	156.	4.07	13.	4.	4.	0.20
HYDROGRAPH AT	BB543R	150.	4.03	13.	4.	4.	0.08
ROUTED TO	543547	143.	4.12	13.	4.	4.	0.08
HYDROGRAPH AT	BB545R	49.	4.07	4.	1.	1.	0.14
ROUTED TO	545547	47.	4.13	4.	1.	1.	0.14
HYDROGRAPH AT	206J	121.	4.03	10.	3.	3.	0.06
4 COMBINED AT	C547	446.	4.07	39.	13.	13.	0.26
ROUTED TO	547548	433.	4.13	39.	13.	13.	0.26
HYDROGRAPH AT	206M	119.	4.03	10.	3.	3.	0.06
2 COMBINED AT	C548R	518.	4.12	49.	16.	16.	0.32
2 COMBINED AT	C548	646.	4.23	296.	119.	119.	4.04
ROUTED TO	548549	641.	4.38	295.	119.	119.	4.04
HYDROGRAPH AT	206N	269.	4.07	26.	9.	9.	0.15
2 COMBINED AT	C549L	730.	4.32	308.	126.	126.	4.19
HYDROGRAPH AT	C599O	1091.	4.68	756.	288.	288.	7.13
ROUTED TO	599608	1091.	4.77	756.	288.	288.	7.13
HYDROGRAPH AT	211K	225.	4.02	15.	5.	5.	0.10
2 COMBINED AT	C608L	1099.	4.73	766.	292.	292.	7.23
HYDROGRAPH AT	211G	11.	4.07	2.	1.	1.	0.01
ROUTED TO	604606	10.	4.25	2.	1.	1.	0.01
HYDROGRAPH AT	211I	71.	4.05	7.	2.	2.	0.04
2 COMBINED AT	C606R	77.	4.05	9.	3.	3.	0.05
HYDROGRAPH AT	211H	150.	4.02	10.	3.	3.	0.07
ROUTED TO	C605O	103.	4.10	10.	3.	3.	0.07
2 COMBINED AT	C606	178.	4.07	18.	6.	6.	0.12
ROUTED TO	606607	175.	4.10	18.	6.	6.	0.12
HYDROGRAPH AT	211J	31.	4.02	2.	1.	1.	0.01
2 COMBINED AT	C607	199.	4.08	21.	7.	7.	0.14
ROUTED TO	607608	197.	4.12	21.	7.	7.	0.14
2 COMBINED AT	C608	1159.	4.40	782.	298.	298.	7.37
ROUTED TO	608613	1159.	4.43	782.	298.	298.	7.37
HYDROGRAPH AT	211M	171.	4.03	14.	5.	5.	0.08
ROUTED TO	610611	166.	4.05	14.	5.	5.	0.08

HYDROGRAPH AT	211N	45.	4.02	4.	1.	1.	0.02
2 COMBINED AT	C611R	208.	4.03	18.	6.	6.	0.10
HYDROGRAPH AT	211O	89.	4.02	7.	2.	2.	0.04
ROUTED TO	C609O	53.	4.12	7.	2.	2.	0.04
ROUTED TO	609611	52.	4.13	7.	2.	2.	0.04
2 COMBINED AT	C611I	255.	4.05	25.	8.	8.	0.14
ROUTED TO	C611O	133.	4.23	24.	8.	8.	0.14
DIVERSION TO	D611R	133.	4.23	24.	8.	8.	0.14
HYDROGRAPH AT	D611L	0.	0.02	0.	0.	0.	0.14
ROUTED TO	611612	0.	0.02	0.	0.	0.	0.14
HYDROGRAPH AT	211P	75.	4.02	6.	2.	2.	0.03
2 COMBINED AT	C612	75.	4.02	6.	2.	2.	0.17
2 COMBINED AT	C613	1172.	4.35	786.	299.	299.	7.54
ROUTED TO	613621	1172.	4.37	786.	299.	299.	7.54
HYDROGRAPH AT	211L	189.	4.03	15.	5.	5.	0.10
2 COMBINED AT	C621L	1211.	4.32	795.	303.	303.	7.64
HYDROGRAPH AT	211Q	46.	4.02	3.	1.	1.	0.02
ROUTED TO	616617	44.	4.05	3.	1.	1.	0.02
HYDROGRAPH AT	211R	171.	4.03	13.	4.	4.	0.08
2 COMBINED AT	C617L	215.	4.03	17.	6.	6.	0.10
HYDROGRAPH AT	211U	35.	4.07	5.	2.	2.	0.03
DIVERSION TO	D614R	25.	4.07	3.	1.	1.	0.03
HYDROGRAPH AT	D614L	10.	4.07	2.	1.	1.	0.03
2 COMBINED AT	C617	225.	4.03	18.	6.	6.	0.13
ROUTED TO	617618	214.	4.10	18.	6.	6.	0.13
HYDROGRAPH AT	211S	82.	4.07	7.	2.	2.	0.05
2 COMBINED AT	C618I	291.	4.08	26.	9.	9.	0.18
ROUTED TO	C618O	273.	4.13	20.	9.	9.	0.18
HYDROGRAPH AT	BB614R	25.	4.07	3.	1.	1.	0.03
ROUTED TO	614615	24.	4.12	3.	1.	1.	0.03
HYDROGRAPH AT	211V	10.	4.03	1.	0.	0.	0.00
2 COMBINED AT	C615	32.	4.08	4.	2.	2.	0.03
DIVERSION TO	D615R	11.	4.08	1.	0.	0.	0.03
HYDROGRAPH AT	D615L	21.	4.08	3.	1.	1.	0.03
ROUTED TO	615618	21.	4.10	3.	1.	1.	0.03
2 COMBINED AT	C618	294.	4.13	23.	10.	10.	0.19
ROUTED TO	618619	283.	4.22	23.	10.	10.	0.19
HYDROGRAPH AT	211T	145.	4.02	13.	4.	4.	0.07
2 COMBINED AT	C619L	338.	4.20	35.	14.	14.	0.26

HYDROGRAPH AT	BB615R	11.	4.08	1.	0.	0.	0.03
ROUTED TO	615619	11.	4.20	1.	0.	0.	0.03
2 COMBINED AT	C619I	349.	4.20	36.	14.	14.	0.25
ROUTED TO	C619O	175.	4.40	36.	14.	14.	0.25
DIVERSION TO	D619L	0.	0.02	0.	0.	0.	0.25
HYDROGRAPH AT	D619R	175.	4.40	36.	14.	14.	0.25
ROUTED TO	619620	175.	4.42	36.	14.	14.	0.25
HYDROGRAPH AT	BB619L	0.	0.02	0.	0.	0.	0.25
ROUTED TO	619620	0.	0.02	0.	0.	0.	0.25
HYDROGRAPH AT	211W	69.	4.02	6.	2.	2.	0.03
3 COMBINED AT	C620R	201.	4.03	42.	16.	16.	0.28
HYDROGRAPH AT	BB611R	133.	4.23	24.	8.	8.	0.14
ROUTED TO	611620	133.	4.25	24.	8.	8.	0.14
2 COMBINED AT	C620	321.	4.27	66.	24.	24.	0.42
ROUTED TO	620621	321.	4.28	66.	24.	24.	0.42
2 COMBINED AT	C621	1456.	4.37	846.	324.	324.	7.93
ROUTED TO	621622	1452.	4.48	846.	324.	324.	7.93
HYDROGRAPH AT	211X	372.	4.07	38.	13.	13.	0.21
2 COMBINED AT	C622R	1549.	4.40	871.	335.	335.	8.14
HYDROGRAPH AT	211A	260.	4.05	20.	7.	7.	0.14
ROUTED TO	C600O	236.	4.10	20.	7.	7.	0.14
ROUTED TO	600601	231.	4.15	20.	7.	7.	0.14
HYDROGRAPH AT	211B	213.	4.03	15.	5.	5.	0.11
2 COMBINED AT	C601	396.	4.07	35.	12.	12.	0.25
ROUTED TO	601602	388.	4.12	35.	12.	12.	0.25
HYDROGRAPH AT	211C	80.	4.05	7.	2.	2.	0.04
2 COMBINED AT	C602L	455.	4.10	42.	14.	14.	0.30
HYDROGRAPH AT	211D	100.	4.07	10.	3.	3.	0.07
2 COMBINED AT	C602	552.	4.10	52.	18.	18.	0.37
ROUTED TO	602603	538.	4.17	52.	18.	18.	0.37
HYDROGRAPH AT	211E	306.	4.05	25.	8.	8.	0.16
2 COMBINED AT	C603	742.	4.12	77.	26.	26.	0.52
ROUTED TO	603622	728.	4.20	77.	26.	26.	0.52
HYDROGRAPH AT	211F	196.	4.07	20.	7.	7.	0.11
2 COMBINED AT	C622L	829.	4.17	96.	32.	32.	0.63
2 COMBINED AT	C622	1958.	4.28	941.	361.	361.	8.78
ROUTED TO	622549	1954.	4.38	940.	361.	361.	8.78
HYDROGRAPH AT	211Y	164.	4.07	16.	5.	5.	0.09
2 COMBINED AT	C549R	2004.	4.37	951.	365.	365.	8.87

2 COMBINED AT	C549	2530.	4.37	1219.	471.	471.	13.06
ROUTED TO	549626	2521.	4.47	1218.	470.	470.	13.06
HYDROGRAPH AT	211Z	141.	4.05	12.	4.	4.	0.08
2 COMBINED AT	C626C	2540.	4.47	1223.	473.	473.	13.14
HYDROGRAPH AT	211AA	56.	4.07	6.	2.	2.	0.03
ROUTED TO	625626	54.	4.12	6.	2.	2.	0.03
HYDROGRAPH AT	211AB	96.	4.00	8.	3.	3.	0.04
ROUTED TO	623624	95.	4.02	8.	3.	3.	0.04
HYDROGRAPH AT	211AC	56.	4.03	5.	2.	2.	0.03
2 COMBINED AT	C624	151.	4.02	13.	4.	4.	0.07
ROUTED TO	624626	147.	4.07	13.	4.	4.	0.07
HYDROGRAPH AT	211AD	86.	4.03	8.	3.	3.	0.04
2 COMBINED AT	C626R	231.	4.05	20.	7.	7.	0.11
3 COMBINED AT	C626	2604.	4.45	1238.	480.	480.	13.28
ROUTED TO	626627	2604.	4.47	1238.	480.	480.	13.28
HYDROGRAPH AT	211AE	69.	4.03	6.	2.	2.	0.03
2 COMBINED AT	C627	2613.	4.47	1240.	482.	482.	13.32

*** NORMAL END OF HEC-1 ***

Contents of the Hydrology diskette

The files included on this diskette are the final hydrologic models used for design of the modifications to Golden Eagle Park Dam. This diskette contains three sets of hydrologic models. The first is the original FDS models for each hydrologic condition. The original models are modified to only include the portions of the watershed that contribute runoff to Ashbrook Wash. The following describes these different models which generates inflow hydrographs to the impoundment (without routing through the dam).

ALTFf-2.*	Existing watershed conditions for the 100-year, 6-hour event.
ALTFf-1.*	Existing watershed conditions for the 100-year, 24-hour event.
ALTFf-4.*	Future full build out watershed conditions for the 100-year, 6-hour event.
ALTFf-3.*	Future full build out watershed conditions for the 100-year, 24-hour event.
ALTFF-6.*	Future full build out watershed conditions for the 10-year, 6-hour event.
ALTFf-5.*	Future full build out watershed conditions for the 10-year, 24-hour event.

The second set of models is for routing using the designed modifications to the Golden Eagle Park Dam. The following describes these flood routing models.

E_10024.*	100-year, 24-hour 1994 Condition
E_100-6.*	100-year, 6-hour 1994 Condition
10024-B.*	100-year, 24-hour Future Condition
10_6-B.*	100-year, 6-hour Future Condition
10_24-B.*	10-year, 24-hour Future Condition
10_6-B.*	10-year, 6-hour Future Condition

The third set is for the inflow design flood. The following describes these models.

Dam11-RT.*	Dam break analysis (piping breach) as developed by GVSCE for North Heights Dam. This breach analysis is used to develop the inflow record for IDF1.
Dam11P.out	HEC-1 file as developed by GVSCE of the emergency spillway release from North Heights Dam prior to and concurrent with the piping breach. This hydrograph is added to the piping breach hydrograph to develop North Heights Dam QI record in IDF1.
IDF1.out	HEC-1 file for GEP Dam IDF1 (with North Heights Dam breach). Basic HEC-1 file was originally developed by GVSCE and subsequently modified by the District. Stantec added editorial comments.
IDF2.out	HEC-1 file for GEP Dam IDF2 (without upstream dam break). File was developed by GVSCE and used by the District in its January 1999 analysis. Stantec added editorial comments.
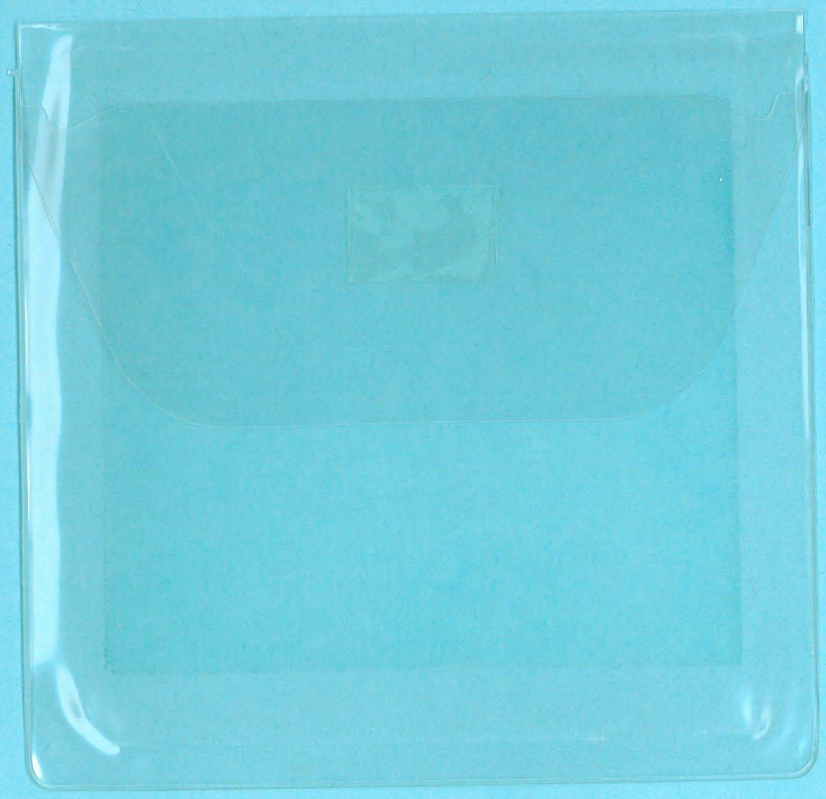
Routing of the inflow design flood (IDF1 & IDF2) through the modified dam and spillway are contained in IDF1.OUT & IDF2.OUT, respectively.