DESIGN REPORT

GOLDEN EAGLE PARK DAM MODIFICATION FINAL DESIGN

CONTRACT NO. FCD 1999C064

FOR:

FLOOD CONTROL DISTRICT OF MARICOPA COUNTY
TOWN OF FOUNTAIN HILLS
FOUNTAIN HILLS UNIFIED SCHOOL DISTRICT
AND
ARIZONA DEPARTMENT OF WATER RESOURCES

FEBRUARY 2000

Stantec

DESIGN REPORT

Property of
Flood Control District of MC Library
Please Return to
2801 W. Durango
Phoenix, AZ 85009

GOLDEN EAGLE PARK DAM
MODIFICATION FINAL DESIGN

CONTRACT NO. FCD 1999C064

FOR:

FLOOD CONTROL DISTRICT OF MARICOPA COUNTY
TOWN OF FOUNTAIN HILLS
FOUNTAIN HILLS UNIFIED SCHOOL DISTRICT
AND
ARIZONA DEPARTMENT OF WATER RESOURCES

FEBRUARY 2000

Registered Professional Engineer (Civil)
CERTIFICATE NO.
28664
CHARLES V.
GOPPERTON
Date Signed 2-4-00
ARIZONA, U.S.A.

Stantec

Table of Contents

	Page
INTRODUCTION	**1**
General	1
Purpose	1
Scope of Report	1
BACKGROUND	**3**
General	3
Description of Dam	3
Previous Studies	9
Survey & Mapping	12
ALTERATIONS TO THE DAM	**13**
Embankment Raise	13
Emergency Spillway	13
Auxiliary Outlet Works	14
Principal Outlet Works	15
GEOTECHNICAL CONSIDERATIONS	**16**
FLOOD HYDROLOGY	**17**
General	17
Consideration of the Three Upstream Dams	17
IDF Hydrology	18
10-Year & 100-Year Flood Hydrology	18
RESERVOIR AREA & STORAGE CAPACITY RELATION	**19**
SPILLWAY HYDRAULICS	**22**
Emergency Spillway	22
Auxiliary Outlet Works	26
Principal Outlet Works	26
Spillway Capacity Rating Table	27
RESERVOIR ROUTING	**28**
DEWATERING PLAN	**32**
General	32
Geotechnical Investigation	32
Dewatering Plan	32
Permits	33
Damage	33

SURFACE WATER DIVERSION PLAN **34**
General 34
Streamflow Characteristics 34
Selection of Diversion Flood 34
Methods of Diversion 35
Specification Requirements 36
Damage 37

CONSTRUCTION QUALITY ASSURANCE PLAN **38**

REFERENCES **39**

List of Tables

	Page
TABLE 1 Physical Characteristics of Existing Golden Eagle Park Dam	8
TABLE 2 Area and Storage Capacity Relations	20
TABLE 3 Spillway Capacity Table	23
TABLE 4 Results of Flood Routings through GEP Dam with Alterations	31

List of Figures

	Page
FIGURE 1	
Location of GEP Dam and the Three Upstream Dams in the Town of Fountain Hills	**4**
FIGURE 2	
GEP Dam Watershed Including Upstream Dams and Fountain Hills High School	**5**
FIGURE 3	
Sketch of Critical Features of GEP Dam	**7**
FIGURE 4	
Typical Section Through Enlarged Portion of Emergency Spillway	**10**
FIGURE 5	
GEP Dam Stage-Capacity Relation as of 1999	**21**
FIGURE 6	
GEP Dam Stage-Area Relation as of 1999	**21**
FIGURE 7	
GEP Dam Discharge Capacity Relation	**24**
FIGURE 8	
GEP Dam Inflow and Outflow Hydrographs for the two IDF Design Floods	**29**
FIGURE 9	
GEP Dam Inflow and Outflow Hydrographs (100-year future, 100-year existing and 10-year future condition floods)	**30**

List of Appendices

APPENDIX A

IDF Hydrology Memo, 4 March 1999

APPENDIX B

Flood Hydrology (HEC-1)

APPENDIX C

Flood Routing Models (HEC-1)

APPENDIX D

Hydraulic Analyses of Emergency, Spillways Principal & Auxiliary Outlet Works

APPENDIX E

Hydraulic Analyses of Trashracks for Principal & Auxiliary Outlet Works

APPENDIX F

Hydraulic Analyses of Auxiliary Outlet Works Energy Dissipator

APPENDIX G

Hydraulic Analysis of Access Barrier for Auxiliary Spillway

APPENDIX H

Report on Structural Analysis of Principal Spillway conduits by T.Y. Lin International, Inc.

APPENDIX I

Draft Construction Quality Assurance Plan

APPENDIX J

Electronic Files of HEC-1 Models for Flood Hydrology & Flood Routing through the Modified Dam

APPENDIX K

Structure Analysis for Auxiliary Outlet Works and Floodwall

APPENDIX L

Permit Application and Checklist for ADWR Construction Permit

APPENDIX M

Dam Embankment Erosion Protection; Riprap Erosion Protection; Emergency Spillway Erosion Protection; Emergency Spillway Fuseplug

INTRODUCTION

GENERAL

Deficiency with the Golden Eagle Park Dam (GEP Dam) principal spillway and related flood hazards to the Fountain Hills High School were originally identified in the Fountain Hills (North) Floodplain Delineation Study (Contract FCD 92-04) performed by George V. Sabol Consulting Engineers, Inc. (GVSCE, 1994). That study identified that the principal outlet works (two 60" reinforced concrete pipes) could not pass the 100-year flood without causing the emergency spillway to operate. Flow through the emergency spillway (which was originally designed to operate only for floods of magnitudes greater than the 100-year flood) resulted in discharge onto and through the athletic field and flood hazard to the high school buildings. The problem, which was discovered in 1994, had been exacerbated in 1991 when a 14" sewer line was placed through one of the 60" principal outlet work pipes, reducing the capacity of that pipe by half.

Deficiency with the emergency spillway, and the resultant dam safety issue was identified in a dam break study of GEP Dam and four other dams that was performed by GVSCE (1996a). That study identified that the emergency spillway could not pass a 0.5 probable maximum flood (PMF) inflow design flood without overtopping the earthen embankment of the dam. The consequences were that it was reasonable to assume that the dam could be overtopped and fail during a severe storm event. Significant property loss and hazard to the Town of Fountain Hills could result from such a failure. Subsequently, the dam was classified as unsafe, non-emergency by the Arizona Department of Water Resources (ADWR).

PURPOSE

The primary purpose of this project is to design alterations to the GEP dam and spillway that meet ADWR dam safety requirements. The secondary purpose is to diminish the flood hazard to the Fountain Hills High School located immediately to the south (right abutment) of the dam and emergency spillway, and to the high school athletic field that is located immediately below the emergency spillway.

SCOPE OF REPORT

This design report presents the results of analyses that were performed for the alterations of GEP Dam and documentation relative to those alterations. The report is

to correspond to 90 percent design plans as of February 2000. The design report will be expanded and modified, as appropriate, upon completion of the final design. The design report is to present the major design issues for the purpose of design review and to present the design conditions and assumptions. Supporting material is contained in appendices at the end of the report. Design drawings, specifications and special provisions are contained in separate submittals and are an essential part of the design report by reference. A separate geotechnical report, Final Geotechnical Investigation & Engineering Analysis Report Golden Eagle Park Dam 10 December 1999, is a supplement to this design report, and was submitted by AGRA Earth & Environmental, Inc. (AEE).

BACKGROUND

GENERAL

Golden Eagle Park Dam, previously known as Dam 4, is situated 600 feet east of Golden Eagle Boulevard, between Palisades Boulevard and Bainbridge Avenue. Fountain Hills High School is located immediately east and south of the dam. The upstream impoundment area between the dam embankment and Golden Eagle Boulevard is Golden Eagle Park with softball fields, tennis and volleyball courts, concession and equipment storage buildings, bathroom facilities, a playground area and parking lots. An approximate 7.13 square mile watershed comprised of natural desert, urban development and golf courses is tributary to the dam. Situated within the watershed are three other dams named Aspen Dam (Dam 6), North Heights Dam (Dam 11), and SunRidge Canyon Dam (Dam 7) which are located at various upstream locations west of GEP Dam.

Figure 1, on page 4 is a map of the Town of Fountain Hills showing the location of GEP Dam and the three upstream dams. The overall land surface slope is from west to east and, as illustrated by Figure 1, failure of GEP Dam would cause a significant flood hazard to the densely developed area to the east (downslope) of GEP Dam.

Figure 2, on page 5 is a map of the contributing watershed to GEP Dam. The location of the primary washes and the three upstream dams are identified as well as the 1.38 square mile drainage area to GEP Dam that is not controlled by any of the three upstream dams. The map also shows the location of the Fountain Hills High School adjacent to and downstream of GEP Dam.

DESCRIPTION OF DAM

Golden Eagle Park Dam was designed by Trico International, Inc. (Trico) and constructed by McCulloch Properties, Inc. during a period from 1970 – 1974. Construction of the dam and preparation of as-built drawings was completed in late 1974 to early 1975. GEP Dam is presently owned and maintained by the Town of Fountain Hills and the Fountain Hills Unified School District.

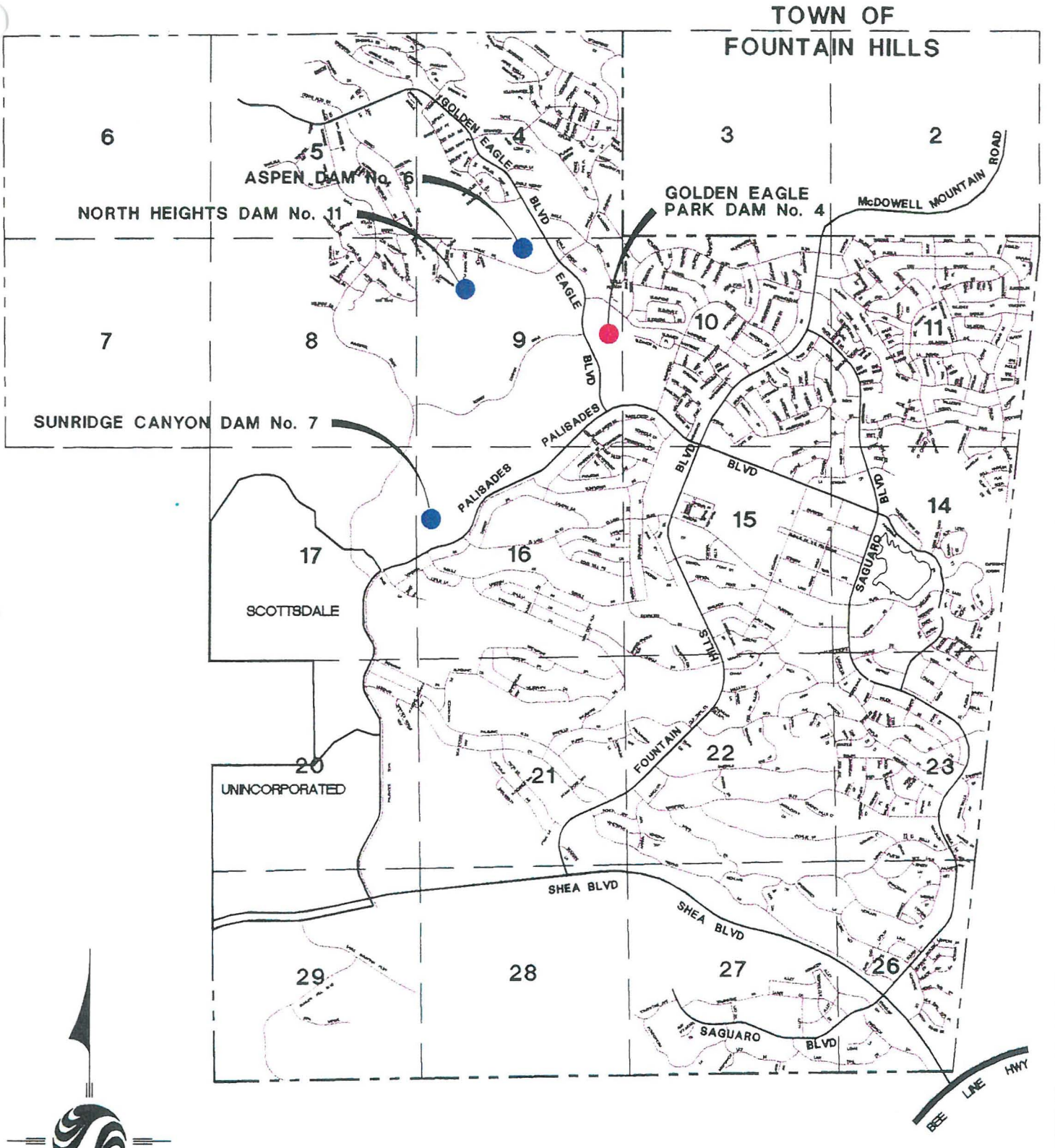

FIGURE 1
LOCATION OF GOLDEN EAGLE PARK DAM
AND THE THREE UPSTREAM DAMS
IN THE TOWN OF FOUNTAIN HILLS

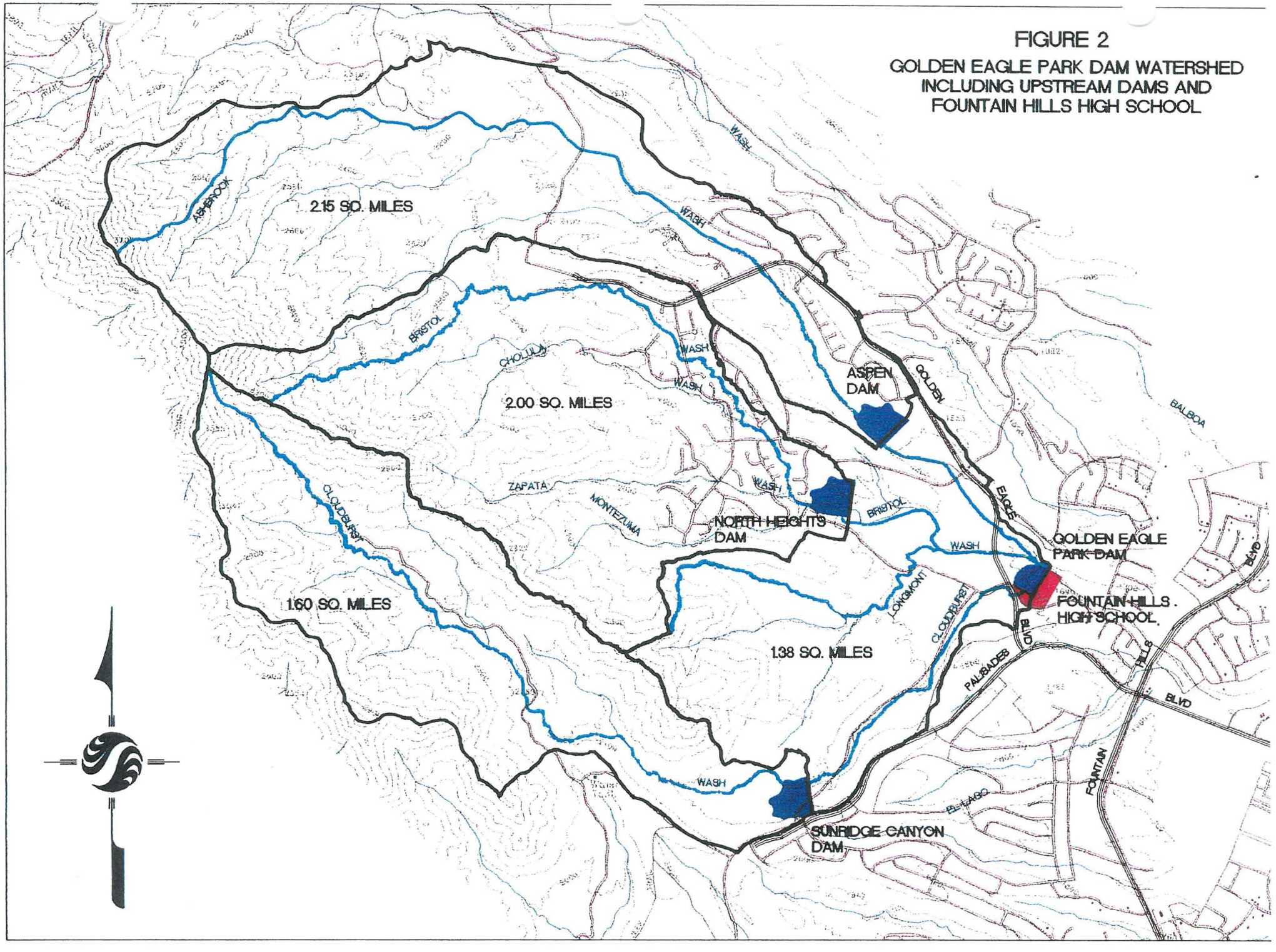

FIGURE 2

GOLDEN EAGLE PARK DAM WATERSHED INCLUDING UPSTREAM DAMS AND FOUNTAIN HILLS HIGH SCHOOL

Information concerning the physical characteristics of GEP Dam and the geotechnical properties of the earthen embankment were obtained from file data of the dam's design and construction, the Phase I Inspection Reports under the National Dam Safety Program by the Arizona Water Commission (presently ADWR), the three previous GVSCE studies of GEP Dam, the recent AGRA Earth & Environmental, Inc. (AEE) studies, and field reconnaissance.

Golden Eagle Park Dam is a zoned earthen embankment with a central inner core and upstream and downstream shells. According to available information, the inner core is comprised of fine, high percentage clay material, while the outer zones are coarser material with higher percentages of gravel and some cobble. The dam is equipped with an uncontrolled principal outlet works near the left abutment and an emergency spillway in the right abutment (see Figure 3, page 7 for a sketch of critical features of the dam). The principal outlet works is comprised of two 60-inch reinforced concrete pipes (RCP) located at the base of the maximum embankment section near the left abutment. The RCP's discharge to a concrete stilling basin with an end sill acting as an energy dissipater. Wooden piles at the inlet serve as a trashrack to prevent large debris such as trees, from entering the conduit. Smaller debris is allowed to pass through the conduit. In 1991, a 14-inch ductile iron pipe (DIP) sanitary sewer line was installed at the flowline of the right principal outlet pipe. A concrete encasement was poured around the 14-inch DIP pipeline resulting in an approximate 25 percent reduction of the total principal outlet capacity (see Table 1). The impact of that modification was analyzed and reported by Anderson-Nelson, Inc., and accepted by ADWR. Recent structural analysis of the principal outlet RCP's indicates that they are structurally sound as designed.

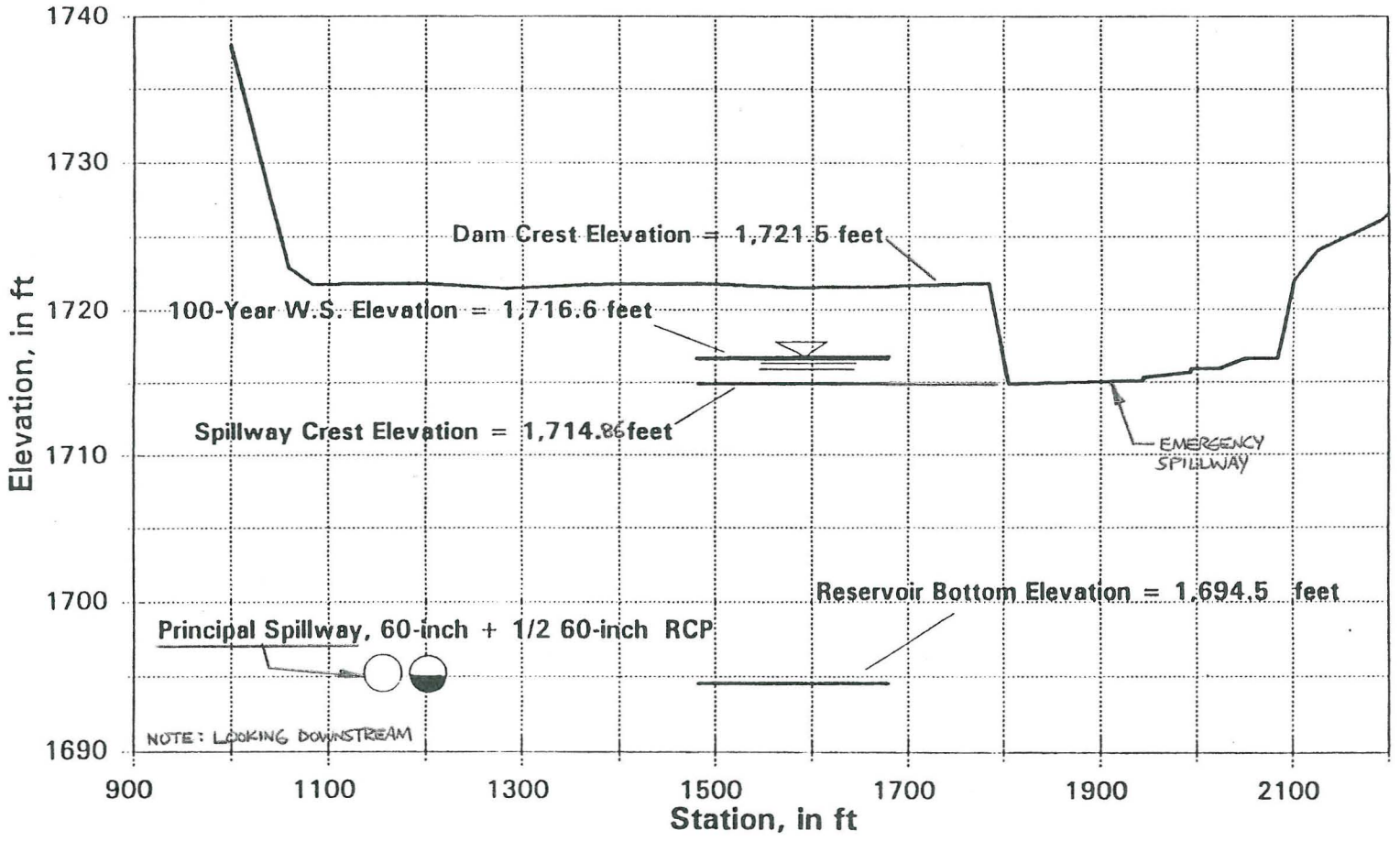

FIGURE 3

Sketch of critical features of Golden Eagle Park Dam (No. 4)

TABLE 1
Physical Characteristics of Existing Golden Eagle Park Dam

Item	Description
(1)	(2)
Dam Type	Zoned Earthfill
Dam Crest Length	660 Feet
Dam Slopes	1V:2H upstream; 1V:2H downstream
Dam Height (Max)	26.8 feet
Dam Crest Elevation (MSL)	1721.5 feet
Dam Crest Width	12 Feet
Drainage Area	7.13 square miles
Storage at Emergency Spillway Crest	95.8 acre-feet
Emergency Spillway Type	Unlined earth w/ concrete sill
Emergency Spillway Width	266 feet
Emergency Spillway Capacity at Dam Crest	12,750 cfs
Emergency Spillway Side Slopes	3:1
Emergency Spillway Crest Elevation	1714.86 feet
Principal Outlet Works	2-60 inch diameter RCP's, uncontrolled
Principal Outlet Works Capacity at Dam Crest	955 cfs **, 750 cfs*

*With sewer line in place

**Full capacity, no sewer line

The emergency spillway is an earthen trapezoidal section with a 4.5-foot deep concrete cut-off wall and is located at the southern (right) abutment of the dam. Flow over the emergency spillway discharges directly onto and through the Fountain Hills High School athletic field. The less frequent, higher peak discharges attain depths that may cause a significant portion of the flows to spill southeasterly past the high school cafeteria and into the campus area. Table 1 above summarizes the various physical characteristics of the existing GEP Dam.

A pressure transducer water level recorder was installed at the inlet side of the principal outlet works in December 1996 by the Flood Control District of Maricopa County (FCDMC) as part of the Fountain Hills Flood Warning System. A piezometer was installed at the downstream toe of the dam in 1998 to monitor ground water levels under the dam. There are no other monitoring devices for the dam.

PREVIOUS STUDIES

The most recent study of GEP Dam is the Design Issues & Alternatives Report (Stantec, 1999). That report presents the evaluation of seven alternatives for achieving resolution of the dam safety and related flood hazard problems of GEP Dam. The report also addresses design issues that are largely reflective of conditions and desires relative to the Town's Golden Eagle Park and the Fountain Hills Unified School District's flooding issues for the school. That report recommended Alternative F be selected for design, and this design report provides engineering analyses and design information for the selected alternative.

In addition to the Stantec report, as referenced above, three recent studies of the Fountain Hills area document flooding and dam safety issues for GEP Dam. The first is a floodplain delineation study of the northern Fountain Hills area conducted by GVSCE (1994). The results of this study indicate that for existing watershed conditions, GEP Dam's emergency spillway operates for about 5.3 hours with a peak discharge of about 320 cfs during the 100-year flood. Under future watershed conditions (ultimate development of the Fountain Hills community), the emergency spillway will discharge about 480 cfs during the 100-year flood and will also operate during lesser floods such as the 10-year event. It is evident that the existing principal outlet works of

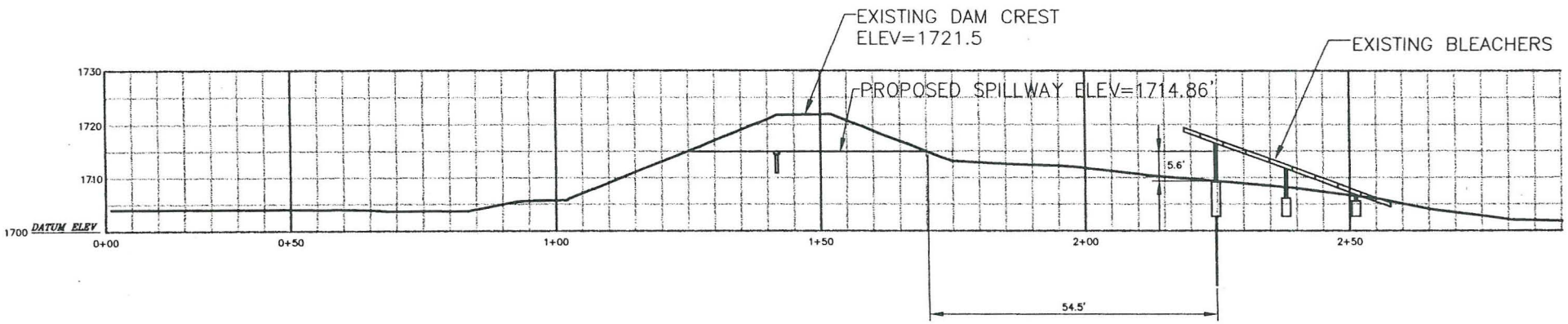

FIGURE 4

TYPICAL SECTION THROUGH ENLARGED PORTION OF EMERGENCY SPILLWAY

GEP Dam does not have adequate capacity to convey the 100-year flood (nor the 10-year flood under future conditions,) without forcing flow over the emergency spillway. Operation of the emergency spillway may result in flooding of the adjacent high school campus and athletic field. This condition, especially for the more frequent floods, is undesirable.

The second study is a dam break analysis conducted by GVSCE, under contract with Anderson-Nelson, Inc., for five dams within the Town of Fountain Hills. The report documenting the results of that study is entitled; Town of Fountain Hills Dam Break Analysis for Golden Eagle Park Dam, Hesperus Wash Dam, Aspen Dam, North Heights Dam and SunRidge Dam, (GVSCE, 1996a). The purpose of the study was to prepare an Emergency Action Plan for each of the five dams, including dam break inundation mapping. The dam breach analysis indicates that GEP Dam is overtopped by about 3.9 feet during a 0.5 PMF inflow flood. The inflow design flood (IDF) used in that analysis is a result of 0.5 PMF spillway releases from Aspen Dam (Dam 6) and SunRidge Canyon Dam (Dam 7), inflow from an assumed piping breach of North Heights Dam (Dam 11) and the 0.5 PMF runoff from the intermediate 1.38 square mile subbasin between GEP Dam and the upstream dams. The assumption that North Heights Dam fails by piping, although reasonable for a dam break analysis, is considered too severe a spillway design criteria for use in designing modifications to GEP Dam. A third study, described below, estimated the 0.5 PMF spillway design flood without the assumption of a piping breach of any of the three upstream dams. The analysis without the North Heights Dam breach results in 2.4 feet of overtopping of GEP Dam. Therefore, prudent assumptions for flood hydrology indicate that GEP Dam will be overtopped by a spillway design flood resulting in likely dam breach.

The third study is reported in the Reconnaissance Study and Alternative Evaluation for Golden Eagle Park Dam, Interim Report (GVSCE, 1996b) and the Fountain Hills ADMP, Final Report (GVSCE, 1997). The reconnaissance level study evaluated five alternatives:

Alternative No. 1 – Do nothing.

Alternative No. 2 – Remove GEP Dam.

Alternative No. 3 – Modify the upstream dams.

Alternative No. 4 – Construct an additional upstream dam.

Alternative No. 5 – Modify GEP Dam.

The reconnaissance level study recommended Alternative No. 5, and two options for modifying GEP Dam were presented.

The feasibility level design for modifications to GEP Dam and supplemental information for the recommended alternative are presented in the Final Report. The recommended modifications included enlarging the principal outlet works by adding a box culvert parallel to the existing principal outlet works thus avoiding the relocation of the sewer line. It was recommended that the emergency spillway be modified by increasing the crest length while maintaining the crest elevation throughout the enlargement. These suggestions for dam modifications have been carried over to be developed into a final design as described in this report.

AEE recently completed a safety inspection (AEE, 1998b) and geotechnical investigation (AEE, 1998a) of the dam. Based on those studies, it is AEE's opinion that there are no significant geotechnical deficiencies in the dam or its spillway, that the foundation and embankment of the dam are functioning properly and that the dam is safe. The geotechnical work associated with the proposed modifications to increase the height of the dam, modify existing spillways, and add an auxiliary spillway are reported in the separate AEE geotechnical report.

SURVEY & MAPPING

Mapping for the hydrology studies is described in the Fountain Hills (North) Floodplain Delineation Study (GVSCE, 1994). Mapping of the impoundment area is based on September 1996 aerial photography that was obtained as part of the Fountain Hills Area Drainage Master Study, (GVSCE, 1997). Surveying was conducted as part of the present study to verify elevations in the ball field areas of the 1996 map.

Field surveys were conducted during February through April 1999 to obtain data to map the area of the dam, its appurtenant structures, park facilities that are not represented in the 1996 map, and certain features in the athletic field. The map that was generated from the field surveys was used for design purposes. The 1999 mapping of the dam and vicinity has been integrated into the 1996 map as a composite for the impoundment area.

EMBANKMENT RAISE

The earthen embankment of the dam will be raised five feet from its present elevation of 1721.5 feet to elevation 1726.5. The existing dam has 1V:2.3H slopes on both the upstream and downstream embankment, and has a 12-foot crest width. The raise will be accomplished by adding new embankment to the upstream slope only using a 1V:2H slope and a 12-foot crest width.

Rainfall induced erosion of the downstream slope will be repaired by earthen fill and compaction. The upstream slope will be stripped to a depth of approximately 2 feet prior to raising the embankment. All trees and deep-rooted brush will be cleared from the slopes prior to construction. A layer of rip-rap will be placed at the toe of the upstream toe of the raised embankment in Cloudburst Wash to protect the toe of the dam (see Appendix M for analysis and sizing of erosion protection at the upstream toe of the dam).

The raise of the embankment will provide increased surcharge head on the emergency spillway during the inflow design flood and will maintain a minimum of 3 feet of residual freeboard for the inflow design flood.

The hydraulic height of the dam, measured as the vertical distance from the lowest elevation of the outside limit of the downstream toe of the embankment at its intersection with the natural ground surface to the emergency spillway crest elevation, will remain unchanged after the dam alterations.

EMERGENCY SPILLWAY

The emergency spillway, constructed in the right abutment of the dam, will be enlarged 90 feet (from an overall crest length of 266 feet to 356 feet). The enlargement will be achieved by removing the top 8.6 feet of existing dam embankment for a length of 90 feet. The existing spillway has a 4.5' deep concrete cutoff wall extending along the 266 feet of spillway crest. This existing concrete cutoff wall will be extended the full 90-foot length of the spillway enlargement. The widened section of the spillway cutoff wall will be 2.0 feet lower than the existing spillway cutoff wall. This widened section of the spillway will be backfilled level with the existing spillway with an erodible "fuse plug" fill. This fill will consist of a uniform gravel which will wash away rapidly when water begins to flow over the spillway (see Appendix M for analysis of emergency spillway "fuse plug"). The new

90-foot wide section of the emergency spillway will have a greater capacity due to the erosion of the "fuse plug" and corresponding increased depth of flow over the spillway crest (analysis of this "fuse plug" fill is presented in Appendix M).

The right end of the embankment where it forms the left side of the emergency spillway will be protected by a gabion slope that is tied to the concrete cutoff wall. The right side of the emergency spillway, adjacent to the school grounds, will be defined by a concrete floodwall that will begin at the sidewalk access to the amphitheater and extend upslope into the existing high ground. The floodwall will provide protection to the school grounds during spillway discharges. The height of the concrete floodwall will be set at the design water surface elevation (see Appendix K for structural analysis calculations of the floodwall).

Erosion protection of the emergency spillway immediately downstream of the concrete cutoff wall consists of a one-foot thick gabion mattress anchored to the slope with steel posts (see Appendix M for analysis and sizing of the gabion erosion protection).

AUXILIARY OUTLET WORKS

An auxiliary outlet works will be added to the dam to provide increased discharge capacity for the more frequent floods (less than the 100-year). The auxiliary outlet works will consist of a concrete box culvert structure installed in the embankment about 110 feet to the south of the existing principal outlet works. The box culvert will be 4 feet high by 10 feet wide and 115 feet long. The auxiliary outlet works will include upstream headwalls and a steel trashrack (see Appendix K for structural analysis of auxiliary outlet works). It will discharge to a concrete energy dissipator and into an excavated channel that will return flow to Ashbrook Wash downstream of the principal outlet works. This excavated channel will be lined with rip-rap erosion protection to prevent scour during operation of the outlet works (see Appendix M for analysis and sizing of the rip-rap erosion protection).

Installation of the auxiliary outlet works will require excavation of the earthen embankment near its maximum section. The excavated embankment is to be rebuilt to conform to the existing and raised embankment sections. Placement of embankment fill is discussed in the geotechnical report. A sand diaphragm around the culvert will be used for seepage control.

A downstream access barrier on the box culvert is not proposed, but hydraulic analysis indicates that an appropriately designed barrier could be installed without adversely impacting the hydraulic performance (see Appendix G).

PRINCIPAL OUTLET WORKS

A structural analysis of the principal outlet works was performed by T.Y. Lin International, Inc. assuming a 7-foot raise of the embankment. The analysis indicates that an acceptable factor of safety is available for that load condition. The actual raise is 5 feet, thus the factor of safety is higher than calculated for the design condition. Documentation for the structural analysis is provided in Appendix H. A utility casing will be installed in the 60 inch pipe containing the encased sewer. The pipe will then be grouted shut at both ends. The other 60 inch pipe will be extended upstream through the new dam embankment. The downstream energy dissipater will be left intact. New concrete headwalls will be installed to accommodate the upstream embankment raise. The existing timber trashrack will be removed and a steel trashrack incorporated into the new inlet headwalls.

The existing principal outlet works, in conjunction with the proposed auxiliary outlet works, will have adequate capacity to route the 100-year, future (full build-out condition) flood through the impoundment and outlets without initiating flow over the emergency spillway. It should be noted however, that the auxiliary and principal outlet works provide relatively small discharge capacity during large floods, such as the Inflow Design Flood, compared to the capacity of the enlarged emergency spillway.

GEOTECHNICAL CONSIDERATIONS

A separate geotechnical report is provided as a supplement to the design report. The geotechnical report was prepared by AGRA Earth & Environmental (AEE) and is titled Geotechnical Investigation Report & Engineering Analysis (December 10th, 1999). The geotechnical report addresses the following topics:

- Embankment raise, including stability analyses and seismic hazard and earthquake design.
- Seepage analysis.
- Excavation of the embankment for construction of the auxiliary spillway and reconstruction of the embankment.
- Seepage control (sand diaphragm) for the auxiliary spillway.
- Geotechnical investigations for erosion protection at the emergency spillway.

GENERAL

Alterations to GEP Dam are required to meet current State of Arizona dam safety regulations as administered by ADWR. The inflow design flood (IDF) requirement for GEP Dam based on its size and hazard classification is the 0.5 probable maximum flood (0.5 PMF). Alterations to the principal spillway and installation of an auxiliary spillway were based on the 100-year, future condition flood (full build-out condition in the watershed). The 100-year, future condition flood was also used to evaluate cumulative impacts to the floodplain of Ashbrook Wash in conjunction with GEP Dam alterations, modifications to Ashbrook Wash, and urbanization in the watershed. The 100-year, existing condition flood (using 1994 watershed conditions) was used to evaluate floodplain impacts to Ashbrook Wash as a result of alterations to GEP Dam. The 10-year, future condition flood was used to evaluate flood impacts to Golden Eagle Park.

CONSIDERATION OF THE THREE UPSTREAM DAMS

There are three existing urban flood control dams, SunRidge Canyon, North Heights and Aspen Dams, within the contributing drainage area upstream of GEP Dam. These dams were designed using the same criteria as GEP Dam and were constructed during the same general time period. The purpose of these dams is to provide urban flood attenuation. Although dam safety studies do not indicate that any of the three upstream dams is expected to be overtopped during the inflow design flood (0.5 PMF), they do not necessarily meet the current dam safety requirements of ADWR. Specifically, less than three feet of residual freeboard is available within the impoundment areas of the dams when routing the inflow design flood (IDF). Additionally, failure of one or more of the three upstream earthen dams by piping during the inflow design flood could be a possibility (though highly unlikely). Therefore, reasonably prudent assumptions must be made regarding the hydrologic and hydraulic conditions for the three upstream dams in order to analyze and design the modifications to GEP Dam. Considerations of the three upstream dams and the recommended approach is presented in the IDF Hydrology section. Other than the potential impact of the three upstream dams on the magnitude of the IDF for GEP Dam, there are no other interrelated design issues between those dams and GEP Dam.

IDF HYDROLOGY

The recommended selection of the inflow design (IDF) for GEP Dam is presented in a memorandum dated 4 March 1999 (See Appendix A). Two IDF's have been recommended for evaluating and designing the emergency spillway. The first (IDF1) assumes a concurrent piping breach of the North Heights Dam during the 0.5 PMF event. The second (IDF2) is also based on the 0.5 PMF event but without a concurrent upstream dam break. Assumptions and documentation of the two IDF's are provided in Appendix A.

For this final design report, modifications to GEP Dam have been based on routing the IDF2 through the modified dam while maintaining a minimum of 3 feet of residual freeboard. IDF1 was used to evaluate the performance of the modified dam with regard to overtopping or allowing encroachment into the 3 feet of residual freeboard only.

10-YEAR & 100-YEAR FLOOD HYDROLOGY

Flood hydrology, other than IDF hydrology as previously discussed, needed to be defined to complete the analysis and design of alterations to GEP Dam. The following additional flood hydrology was used to evaluate modifications:

100-year, future condition – for design of the principal and auxiliary spillway, and evaluation of the impact of spillway modifications on the Ashbrook Wash floodplain.

100-year, existing condition – for evaluation of spillway modifications to the existing (1994) Fountain Hills (North) FDS and current FEMA flood insurance rate maps.

10-year, future condition – for evaluation of spillway modifications on recent downstream roadway crossing improvements and for evaluation of frequent flooding impacts on the park facilities.

The 10-year and 100-year hydrologic analyses were obtained from HEC-1 models developed during the Fountain Hills (North) FDS (GVSCE, 1994). Appendix B contains the HEC-1 files that were used to estimate the three floods defined above. The hydrologic models contain watershed parameter input as prepared for the Fountain Hills (North) FDS. Electronic files of all HEC-1 models are provided in Appendix J.

RESERVOIR AREA & STORAGE CAPACITY RELATION

The Town of Fountain Hills has improved the storage impoundment area of GEP Dam by developing it into a recreational facility called Golden Eagle Park. This development occurred since the dam was constructed, and for the most part, since completion of the floodplain delineation study (GVSCE, 1994). As part of this study, the park area was field surveyed for the purpose of verifying and updating the previous mapping (September 1996). This updated mapping was used to establish the storage capacity relation for the dam. The stage/storage data was obtained graphically from the electronic mapping files (Auto CAD R14). This relation is shown in Figure 5, page 21, along with the original storage capacity relation from the floodplain delineation study (GVSCE, 1994). The current and original storage capacity relations are nearly identical indicating that park improvements were accomplished with no significant importation or removal of soil within the park and that sedimentation of the impoundment has not become a factor at this time. The current storage capacity relation as listed in Table 2, page 20, is used in all the flood routing analyses.

The corresponding area capacity relation is shown in Figure 6, page 21, and is also listed in Table 2, page 20. The storage and area capacity relations for GEP Dam as of 1999 are also shown in Stantec "Plans For The Construction Of Golden Eagle Park Dam Modifications", PCN.6700331, FCD Contract No. 1999CO71, February 2000.

Table 2

Golden Eagle Park Dam

Stage-Area and Stage-Capacity Relations as of 1999

Elevation feet (1)	Area acres (2)	Volume acre-feet (3)
1695.00	0.00	0.00
1697.00	0.01	0.00
1698.00	0.02	0.02
1699.00	0.10	0.08
1700.00	0.23	0.24
1702.00	0.47	0.93
1704.00	0.91	2.29
1706.00	4.40	7.17
1708.00	7.46	18.89
1710.00	9.78	36.80
1712.00	12.61	58.41
1714.00	15.43	86.41
1714.80	16.60	99.21
1715.20	17.18	105.97
1715.60	17.76	112.96
1716.00	18.34	120.18
1716.40	18.75	127.60
1717.40	19.78	146.86
1717.80	20.20	154.86
1718.00	20.40	158.92
1720.00	21.44	200.75
1722.00	21.55	243.75
1724.00	21.97	287.27
1726.00	22.93	332.16
1728.00	23.19	378.27

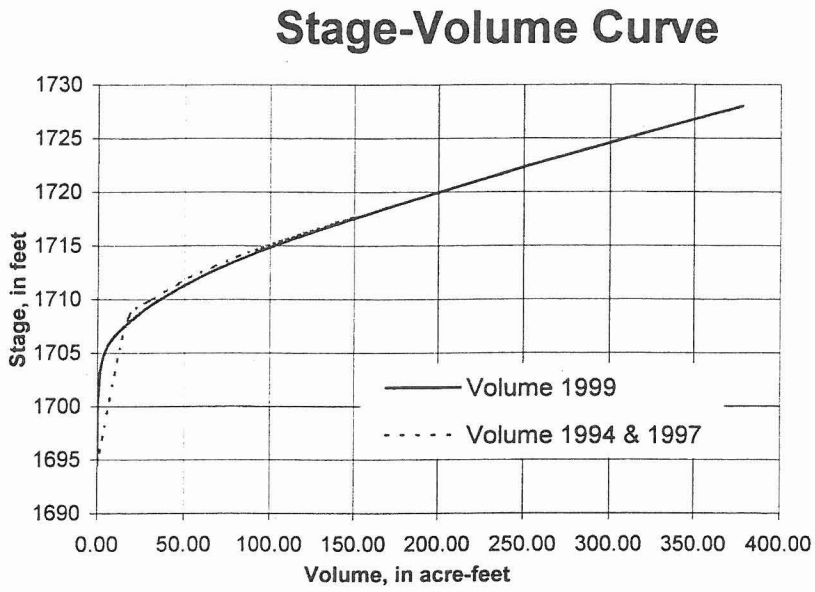

Figure 5
Golden Eagle Park Dam Stage-Capacity Relation as of 1999

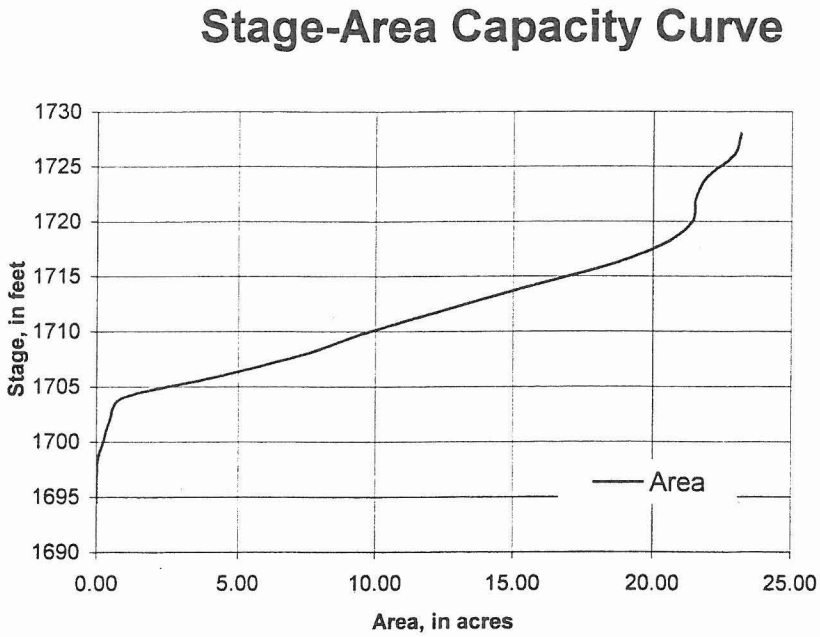

Figure 6
Golden Eagle Park Dam Stage-Area Relation as of 1999

EMERGENCY SPILLWAY

Hydraulic capacity of the emergency spillway is analyzed by the weir equation, $Q = CLH^{3/2}$. The enlarged emergency spillway consists of the existing emergency spillway with a crest length (L) of 266 feet (measured along the length of the concrete cutoff wall) and the expanded portion with a crest length (L) of 90 feet. The hydraulic head (H) is measured from the crest of the concrete cutoff wall (elevation 1714.86 feet for the existing spillway and 1712.86 for the enlarged section) to the water surface elevation in the impoundment sufficiently upstream of the crest such that the velocity head is essentially zero. The discharge coefficient (C) is selected as 2.6 for the enlarged portion of the emergency spillway (see Figure 4, on page 10 for a typical section through the enlarged portion of the emergency spillway). That portion of the spillway acts hydraulically as a broadcrested weir for which a coefficient of 2.6 is reasonable. For the existing portion of the emergency spillway, field observation indicates that development of facilities within the park and regrading of the land surface within the approach to the spillway could affect the discharge capacity of the existing portion of the emergency spillway. The park facilities in this area were surveyed as part of this project and the 1996 mapping was revised to represent the regraded land surface and the park facilities. Those facilities include vertical block retaining walls for volleyball courts, ramadas with picnic tables, a bridge across Cloudburst Wash, a parking lot and landscaping. These facilities, constructed since the dam was built and after the 1994 floodplain delineation study could result in reduced hydraulic capacity of the emergency spillway due to flow obstructions and reduction in flow momentum. An unobstructed broadcrested weir would have a discharge coefficient of about 2.6. However, due to the recently constructed park facilities, a weir coefficient of 2.4 was used to estimate the discharge capacity of the existing emergency spillway This results in about an 8 percent reduction in the discharge capacity as compared to an equivalent, unobstructed spillway.

Calculation of the emergency spillway capacity is listed in Table 3 and graphed in Figure 7. Interpolating from Table 3, the maximum discharge through the emergency spillway for IDF2 is about 24,200 cfs. Using a total crest length of 356 feet (266 feet plus 90 feet), the unit discharge is 68 cfs/ft. At peak discharge, the hydraulic head on the existing portion of the spillway is about 8.6 feet (1,723.45 feet minus 1,714.86 feet) with a critical depth of 5.7 feet and a flow velocity at critical depth of about

Table 3

Golden Eagle Park Dam
Spillway Capacity Table (with alterations to spillway & outlets)

	Discharge, in cfs					
Reservoir Water Surface Elevation (feet)	**Existing Emergency Spillway**	**Enlarged (d) Emergency Spillway**	**Combined Emergency Spillway**	**Auxiliary Outlet (Unclogged)**	**Principal Outlet (Unclogged)**	**Total of all Spillways**
(1)	**(2)**	**(3)**	**(4)**	**(5)**	**(6)**	**(7)**
1695.00[a]	0	0	0	0	0	0
1700.00	0	0	0	283	131	414
1706.00	0	0	0	613	276	889
1712.00	0	0	0	803	365	1168
1714.86[b]	0	0	0	879	402	1281
1715.00	20	764	784	881	403	2068
1717.50	2676	2384	5061	945	429	6435
1722.00	12078	6530	18607	1041	474	20122
1724.00	17525	8771	26296	1082	488	27866
1726.50[c]	25222	11866	37088	1127	507	38722

a = Principal outlet works invert elevation
b = Emergency spillway crest elevation
c = Embankment top elevation
d = Assume fuse plug fill has eroded away

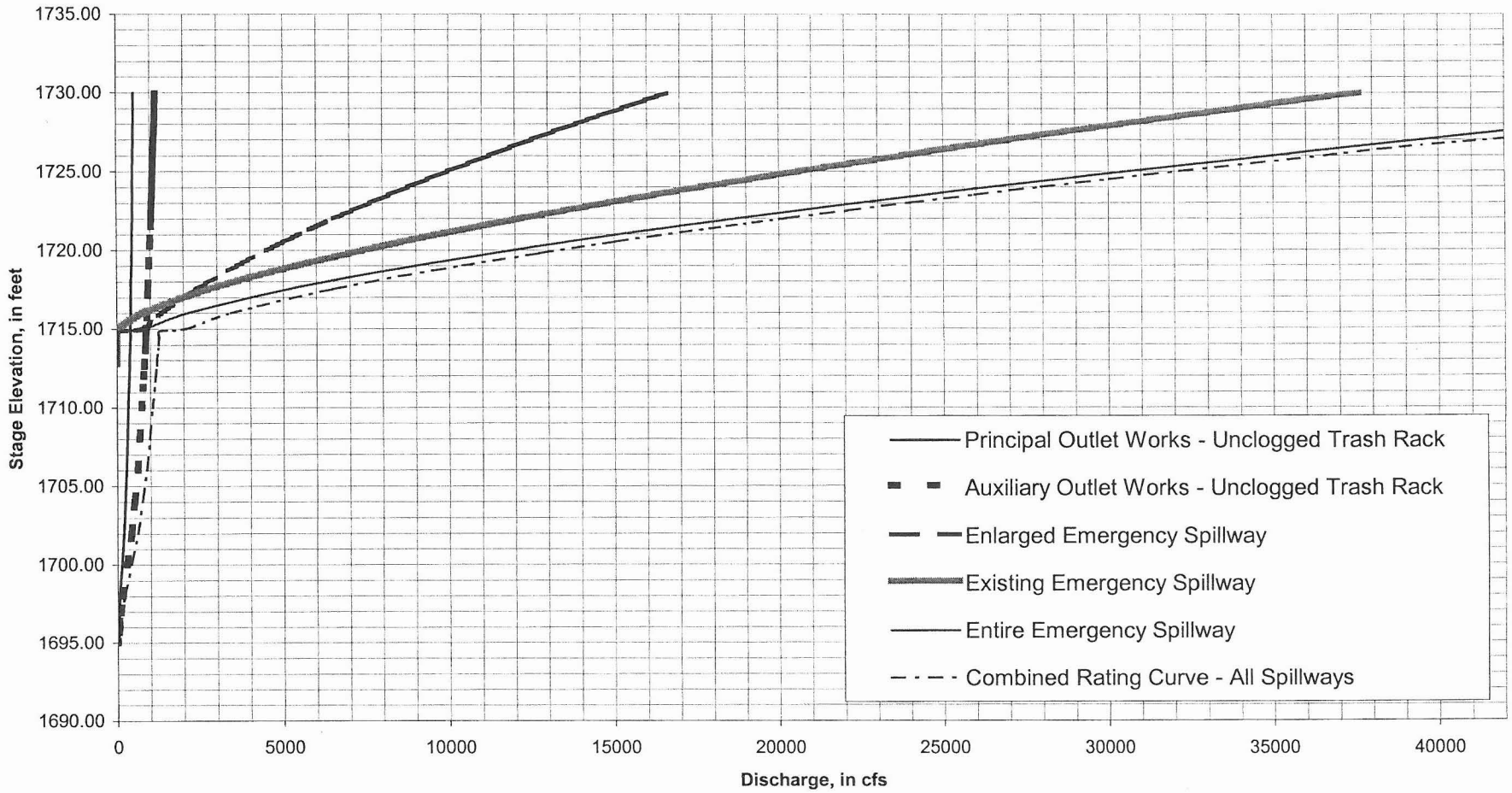

FIGURE 7

Golden Eagle Park Dam spillway
Discharge - Capacity Relation

13.6 fps. At the break of the horizontal crest of the spillway and at the downstream slope of the spillway chute the flow depth is estimated at 0.7 critical depth (about 4 feet). The flow velocity over the spillway chute is estimated at about 20 fps. The flows would then accelerate down the chute reaching estimated maximum velocities of about 25 fps at the toe. These estimated flow depths and velocities would be erosive to an earthen spillway and chute.

On the enlarged portion of the spillway, the hydraulic head is about 10.6 feet (1723.45 feet minus 1712.86 feet) for which critical depth is about 6.4 feet with a flow velocity of about 14.31 fps. At the break of the horizontal crest of the spillway and the down stream slope of the chute the flow depth is estimated at 0.7 critical depth or about 4.5 feet.

Based on anticipated spillway hydraulics, the need for spillway erosion protection was investigated. Field exploration of conditions in the existing emergency spillway were conducted. Excavation of test pits in the crest and amphitheater area under the direction of AEE were performed (see the AEE geotechnical report). Although the spillway was originally designed and presumably constructed with a grouted riprap spillway crest and chute, such erosion protection does not currently exist. Furthermore, the masonry amphitheater steps would not withstand even moderate flows much less the spillway design flows. It was concluded that the spillway would experience erosion during spillway operation. Further consideration of spillway erosion potential indicates the following:

1. Although spillway flows are erosive to the earthen structure, the duration of spillway operation is expected to be short (see Figure 8). Therefore, there will be limited opportunity for erosion to propagate through the earthen structure to cause breach of the impounded waters below elevation 1714.86 feet.
2. The likely erosion path through the existing emergency spillway is quite long and would require a massive headcut through that earthen section to breach the dam.
3. The shortest erosion path is where the spillway is being enlarged and a portion of that erosion path would be through embankment fill.

Based on the above considerations the recommended spillway erosion protection will consist of rock-filled gabions and Reno mattresses on the crest and chute of the enlarged portion of the emergency spillway and extending approximately 20 feet into the existing portion of the emergency spillway. The estimated limiting velocity for the one-foot thick gabion mattress is 21 fps (see Appendix M for analysis of emergency spillway erosion protection). The gabions will be anchored to the slope

with steel posts, to prevent high velocity flows from shifting the gabions down the chute.

AUXILIARY OUTLET WORKS

The proposed auxiliary outlet works is to be a 4-foot high by 10-foot wide reinforced concrete box culvert with a drop inlet. The hydraulic capacity of the auxiliary spillway was analyzed using the methodology set forth in the Hydraulic Design of Highway Culverts (Federal Highway Administration, 1985) and implemented with the FHWA's HY8 program. Hydraulic calculations are provided in Appendix D.

The auxiliary outlet works is equipped with an inclined, steel bar trashrack within the headwall and wingwalls of the inlet. The trashrack was designed so as not to reduce the capacity of the box culvert even after trapping debris (a 50 percent clogging factor was used). Analysis of the trashrack is provided in Appendix E. An access barrier for the outlet of the box structure was not specified in the design but a hydraulic analysis was performed to determine that if one was installed at a later time whether it would adversely affect the hydraulic performance of the auxiliary outlet works. It was determined that an access barrier of the same configuration as the trashrack would not impede the hydraulic performance of the outlet works (see Appendix G). A future installation of an access barrier would require an appropriate hydraulic analysis depending upon the actual configuration of the proposed structure.

For the outlet of the box culvert, a concrete "hydraulic jump" energy dissipator was analyzed and designed for the 100-year discharge (see Appendix F). Results of the analysis indicate that a hydraulic jump would be contained on the apron of the proposed dissipator and the conjugate depth downstream of the jump would coincide with the tailwater depth in the return channel to Ashbrook Wash, thus producing no adverse scour effects downstream of the dissapator.

PRINCIPAL OUTLET WORKS

The existing principal outlet works (two 60" RCP's) will be modified at the upstream end only. Alterations include removal of the existing timber trashrack, plugging one of the barrels of the outlet works, and installing a new concrete headwall, wingwalls and an inclined steel-bar trashrack at the inlet. The trashrack is designed to provide full discharge capacity with a 50 percent clogging factor due to debris (see Appendix E). The outlet energy dissipator of the principal spillway will remain un-altered. The existing 14-inch concrete encased DIP sewer line will be left in place within the 60 inch concrete pipe, and the pipe will be grouted shut at both ends. The hydraulic

capacity of the principal spillway was calculated to account for the reduction of flow area.

The hydraulic capacity of the principal outlet works was analyzed using the methodology set forth in the Hydraulic Design of Highway Culverts (Federal Highway Administration, 1985) and implemented with the HY8 program. Hydraulic calculations are provided in Appendix D.

The capacity of both outlet works structures (principal and auxiliary) would be affected by tailwater conditions during operation of the emergency spillway. The outlet works rating curves reflect the proper discharge values based on tailwater conditions incorporated into the HY8 calculations (see Appendix D).

SPILLWAY CAPACITY RATING TABLE

The capacity of the enlarged emergency spillway, new auxiliary outlet works, and the reduced principal outlet works are shown in Table 3 and illustrated in Figure 7. That combined spillway capacity relation is used in the HEC-1 routings of the various design floods through the reservoir and spillways.

RESERVOIR ROUTING

Routing of the two inflow design floods (IDF1 and IDF2) and the 100-year and 10-year future condition floods were performed using reservoir routing methodology in the HEC-1 models (mentioned in the "Previous Studies" section, pages 9-11 and in the "10-year & 100-year Flood Hydrology" section on page 18). The spillway capacity and storage capacity relations for the enlarged spillway and raised embankment were also obtained from the HEC-1 models (model output is provided in Appendix C).

Comparison of the inflow and outflow hydrographs for the two IDF's and the two design floods are shown in Figure 8 and Figure 9 on pages 29 and 30. The inflow and outflow hydrographs for the 100-year, existing condition flood is shown in Figure 9 for reference purposes only. That hydrologic condition was not used for design. Maximum water surface elevations for each flood along with peak discharges for the dam's combined outlet works and spillway are listed in Table 4, page 31. The elevation of the raised dam embankment is 1726.5 feet. IDF2 was used to define the elevation of the emergency spillway and the height of the embankment raise. The residual freeboard for IDF2 was set at three feet (design elevation 1726.5). For IDF1, the residual freeboard was calculated to be 0.42 feet.

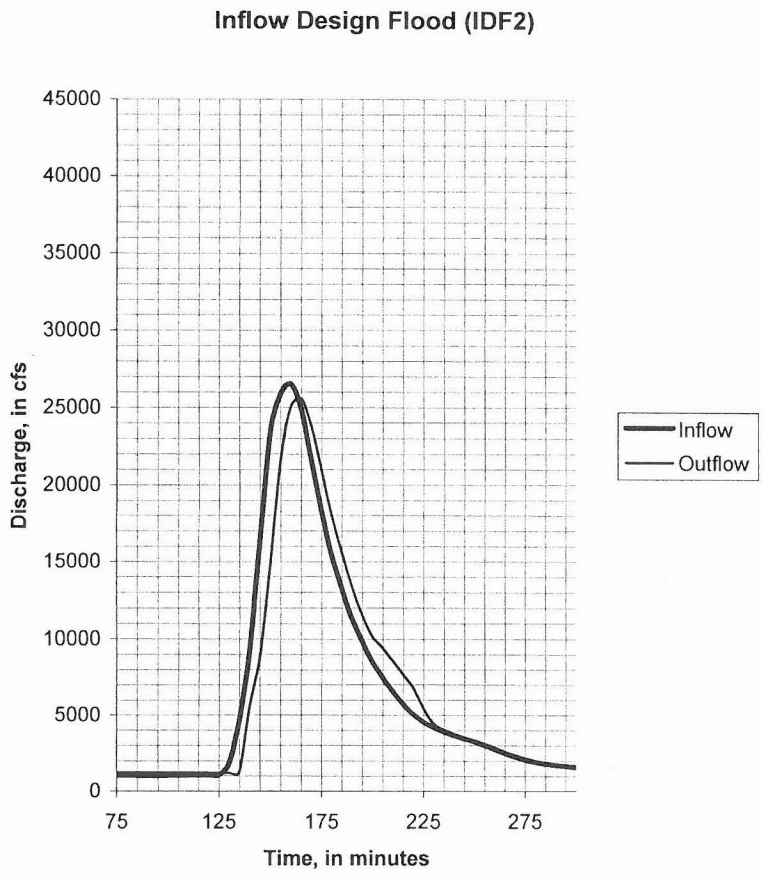

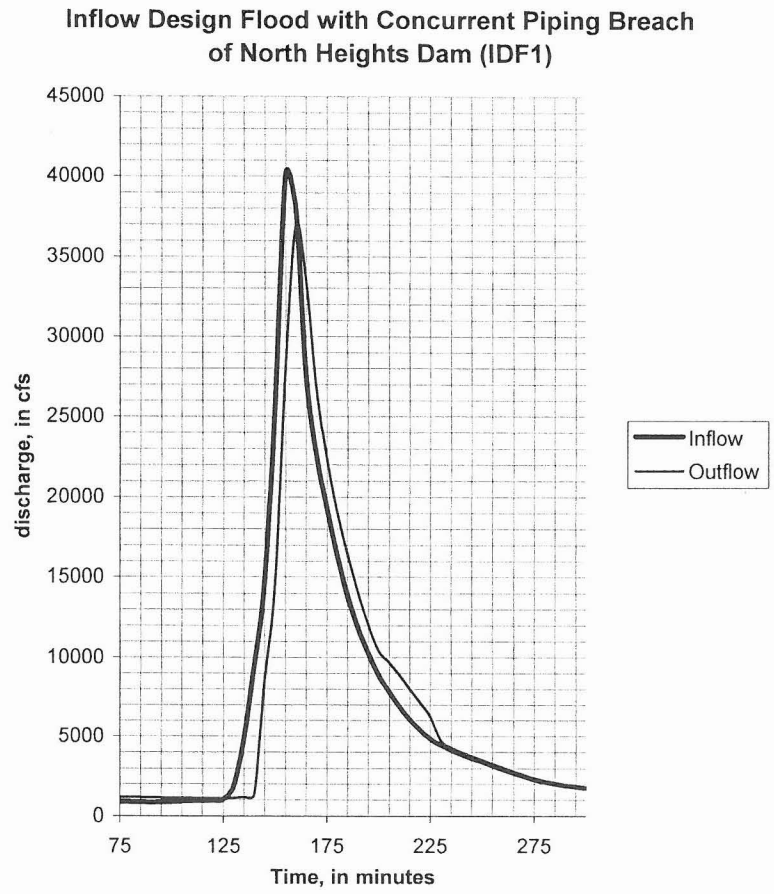

Figure 8

Inflow and outflow hydrographs for the two Inflow Design Floods for Golden Eagle Park Dam with alterations (Inflow Design Floods - IDF2 and IDF1)

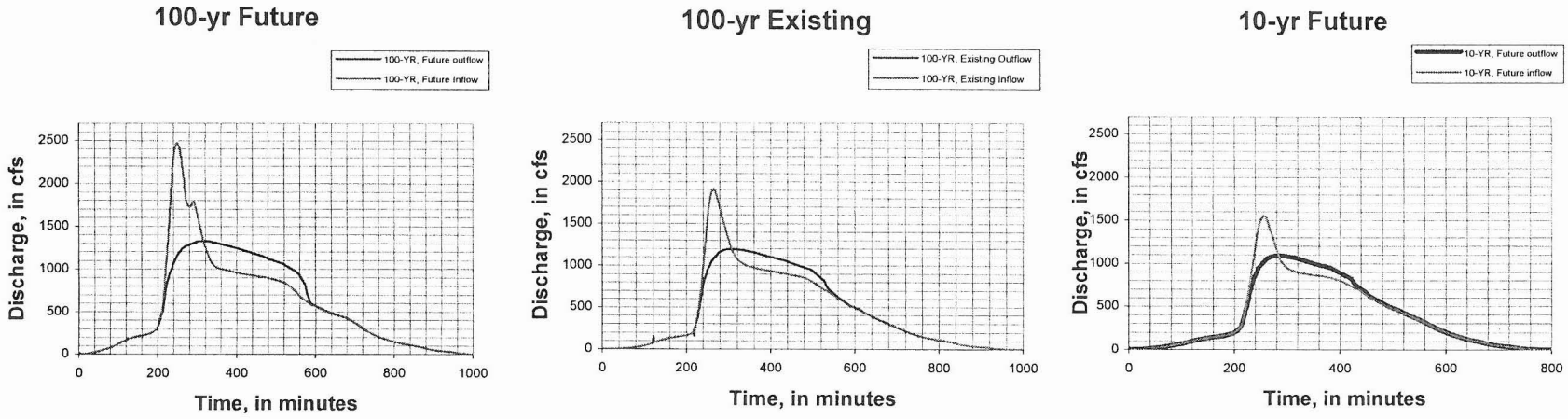

Figure 9

Inflow and Outflow Hydrographs for Golden Eagle Park Dam with Alterations (100-year future, 100-yr existing and 10-yr future condition floods)

Table 4

Golden Eagle Park Dam

Results of Reservoir Flood Routings (with alterations to dam)

	IDF2 (1)	IDF1 (2)	100-year Future (3)	10-year Future (4)
Maximum Water Surface Elevation, ft	1723.39	1726.07	1714.61	1709.18
Peak Discharges, cfs				
Combined Spillways	25595	37009	1271	1038

GENERAL

Dewatering is required to allow construction of the proposed auxiliary outlet works reinforced concrete box culvert, sand diaphragm, subdrain system, and backfill and the inlet structure for the principal outlet works on firm dry ground. Construction on a saturated subgrade or under water will not be allowed.

GEOTECHNICAL INVESTIGATION

The Geotechnical Investigation Report (AEE 1998) identifies water in three borings through the dam embankment. An artesian aquiclude was encountered in Boring No. 3 at an elevation of 1679.0 feet. The water level eventually stabilized at elevation 1691.5 feet. Boring No. 2 also had water at elevation 1695.4 feet. Boring No. 1 was dry to a depth of 45 feet or elevation 1677.0. Boring No. 1 is located approximately at the existing principal spillway outlet, Boring No. 2 is located in the vicinity of the proposed auxiliary spillway outlet and Boring No. 3 is located south of the proposed auxiliary spillway outlet, closer to the emergency spillway. Estimated levels of groundwater in the general project site vicinity, based on maps presented by Hammett and Heather (1995), varies from elevation 1324 to 1338 which is approximately 350 feet lower than the levels measured in the borings. The water encountered in the borings is most likely a perched water table due to irrigation of the park and possibly from the golf course and lake upgradient from the dam. Nevertheless, some level of dewatering will be required.

DEWATERING PLAN

The Contractor is required to prepare plans for surface water diversion and dewatering during construction and to take responsibility for the plan. The dewatering plan must address the handling and removal of water from all sources including groundwater. A proposed plan for dewatering will not be prepared by the Engineer, and design, construction, implementation, and operation of the dewatering plan is the sole responsibility of the Contractor.

Water must be removed so work can be performed in the dry without damage to foundation soils. Prior to beginning any work on dewatering the worksite excavations and foundations, the Contractor must submit the plan for approval by the Engineer. The plan must show the proposed method for dewatering; and removal of water from excavation and foundations. The Contractor must construct and maintain all

necessary cutoffs, cofferdams, channels, dikes, berms, flumes, drains, sumps, pumps, erosion control measures and/or other temporary diversion and protection works necessary for dewatering during construction. The Contractor must furnish, install, maintain, and operate all necessary pumps, equipment, and other facilities for dewatering and removal of water from the various parts of the project and for maintaining the foundations, excavations, and embankment free from water as necessary for constructing each part of the project in the dry.

The Contractor must drain or otherwise positively dewater borrow areas, embankment areas, structural excavations, trenches, and other areas as necessary to permit satisfactory construction at all times. When an excavation extends below the water table, dewatering must be accomplished in a manner that will maintain stability of the excavated slopes and bottom of the excavation, and will result in all construction operations being performed in the dry. The use of a sufficient number of properly screened sumps, wells, or other equivalent methods may be necessary for dewatering. During the excavating, placing, and compacting of the embankment materials and concrete, trench excavation, placing pipe, trench backfill, or structural excavation, the water level at every point in the excavation must be maintained below the bottom of the excavation.

PERMITS

A temporary dewatering permit from ADWR is required and, the Contractor must familiarize himself with, and comply with, all applicable codes, ordinances, and statutes and bear sole responsibility for penalties imposed for noncompliance.

DAMAGE

The Contractor will be responsible for, and must repair at his expense, any damage to the embankments, foundations, structures, or any other part of the project caused by excessive groundwater. In the event the construction area is flooded or otherwise damaged by water, Contractor must clean up and repair the damage, dry out or remove material in foundations and embankments deemed too wet, weakened, or contaminated for proper foundation or fill material by the Engineer, all at the Contractor's expense.

GENERAL

Diversion of surface water from Ashbrook Wash and Cloudburst Wash as well as local runoff is required to allow construction of the proposed auxiliary outlet works reinforced concrete box culvert, sand diaphragm, subdrain system, and backfill and the inlet structure for the principal outlet works on firm dry ground and to prevent damage to the existing embankment or overtopping of the emergency spillway.

The diversion plan selected will represent a compromise between the cost of the diversion facilities and the amount of risk involved. The diversion plan must minimize the potential for serious flood damage to the work in progress at a minimum of expense. The following factors should be considered to determine the best diversion plan:

1. Streamflow characteristics such as frequency, duration and magnitude of runoff
2. Size and frequency of the desired diversion flood
3. Methods of diversion
4. Specifications requirements

STREAMFLOW CHARACTERISTICS

Streamflow records provide the most reliable information regarding streamflow characteristics and should be considered in developing the diversion plan. The District operates an Alert station at the dam and will provide data on streamflow and reservoir levels that have been recorded at this station. However, this data is limited since the Alert station was installed only recently. It is doubtful that any other streamflow data is available for the watershed. A statistical method of predicting the streamflow using standard hydrology methods is recommended. Use of previously performed 10-year flood estimation is also recommended.

SELECTION OF DIVERSION FLOOD

It is not economically feasible to divert the largest flood that is expected to occur at the site and consequently a lesser requirement is used. The cost of the diversion works must be less than or equal to the anticipated damage that would occur if a flood occurred during construction. Additionally, a smaller diversion works will cause less

damage downstream and pose a smaller safety threat if it fails due to a larger event. It is recommended that at the minimum, the diversion works should safely divert flows from the average annual runoff event. Additionally, if the diversion works can be built larger to handle the 5 or 10 year event with minimal increase in cost over the average annual event, the decreased risk (both monetary and safety) may be desirable to both the Contractor and the District.

METHODS OF DIVERSION

Common methods for diverting streams during construction involve one or more of the following provisions: an embankment or cofferdam upstream of the dam with provisions to outlet the water through tunnels driven through the abutments, conduits through or under the dam, temporary channels through the dam.

Alternative A - A cofferdam is constructed upstream of both the principal and auxiliary spillways. A pipe or channel drains the cofferdam through the dam next to the auxiliary spillway conduit. An advantage of this diversion is that it allows construction to proceed simultaneously on both the auxiliary and principal spillway. A disadvantage is that failure of this diversion will result in potentially a large flow downstream and increased damage to the dam and downstream due to this higher flow. The design of the cofferdam should be such that this flow is limited to less than the 100-year runoff. This method is also more costly as it requires a higher cofferdam and construction of the pipe or channel outlet works.

Alternative B - Since the principal spillway for the dam is already in place, diversion of runoff can be directed by berms and dikes to the principal spillway during construction of the auxiliary spillway. During, construction of the new inlet structure on the principal spillway, a second diversion is required to direct the runoff to the completed auxiliary spillway. The advantages of this method are that it is less expensive and easy to construct since it requires no temporary conduits or channels. It also poses less of a threat of damage to the dam or downstream since less water is impounded and the flow through the spillway is no higher than it normally would be without the diversion. A disadvantage is that it does require that the construction be phased and the diversion be moved from the principal to the auxiliary spillway after construction is finished on the auxiliary spillway. This may result in an increase in construction time.

SPECIFICATION REQUIREMENTS

The Contractor is required to prepare plans for diversion and care of water during construction and to take responsibility for the plan. The plan must address the handling and removal of water from all sources including surface and groundwater. A proposed plan for diversion has been prepared but will not be part of the bid package. Final design, construction, implementation, and operation of the diversion and care of water plan is the sole responsibility of the Contractor.

Water must be removed so work can be performed in the dry without damage to foundation soils. Prior to beginning any work on diverting and dewatering the worksite excavations and foundations, the Contractor must submit the plan for approval by the Engineer. The plan must show the proposed method for diversion of surface water from around the construction site and protection of the site from surface water and all other water during construction; dewatering; and removal of water from excavation and foundations. The Contractor must construct and maintain all necessary cutoffs, cofferdams, channels, dikes, berms, flumes, drains, sumps, pumps, erosion control measures and/or other temporary diversion and protection works necessary for diversion and care of all water during construction, and until the project is completed. The Contractor must furnish, install, maintain, and operate all necessary pumps, equipment, and other facilities for dewatering and removal of water from the various parts of the project and for maintaining the foundations, excavations, and embankment free from water as necessary for constructing each part of the project in the dry.

The Contractor must drain or otherwise positively dewater borrow areas, embankment areas, structural excavations, trenches, and other areas as necessary to permit satisfactory construction at all times. When an excavation extends below the water table, dewatering must be accomplished in a manner that will maintain stability of the excavated slopes and bottom of the excavation, and will result in all construction operations being performed in the dry. The use of a sufficient number of properly screened sumps, wells, or other equivalent methods may be necessary for dewatering. During the excavating, placing, and compacting of the embankment materials and concrete, trench excavation, placing pipe, trench backfill, or structural excavation, the water level at every point in the excavation must be maintained below the bottom of the excavation.

DAMAGE

The Contractor will be responsible for, and must repair at his expense, any damage to the embankments, foundations, structures, or any other part of the project caused by surface water, groundwater, or failure of any part of the diversion or protective works. In the event the construction area is flooded or otherwise damaged by water, Contractor must clean up and repair the damage, dry out or remove material in foundations and embankments deemed too wet, weakened, or contaminated for proper foundation or fill material by the Engineer, all at the Contractor's expense. The Contractor will be responsible for, and must repair at his expense, any damage to areas downstream of the construction site caused by failure of any part of the diversion or protective work. The Contractor must inspect, monitor, and repair cofferdam and other diversion works to maintain them in a safe condition. Erosion damage to any fills must be repaired using materials and methods approved by the Engineer. Contractor shall repair all erosion damage to a condition that existed prior to erosion occurring. The only exception to this is in the event damage to the work is caused by a storm, flood, or earthquake which constitutes an "Occurrence," the Contractor may apply in writing to the Engineer for the District to pay or participate in the cost of repairing damage to the work from such cause or, in lieu thereof, and at the sole discretion of the District, terminate the contract and relieve the Contractor of further obligation to perform the work. See Sections 107.19 and 107.20 of the Supplementary General Conditions.

The Construction Quality Assurance (CQA) plan is presented in manual form and the manual provides the general policy and guidance for establishing quality management procedures in the construction of the improvements to the dam.

The objective of the manual is to provide a plan to verify that proper materials, construction techniques, and procedures are followed by the contractor and the contract administrator and that the completed structure meets the requirements and intent of the plans and specifications.

A draft CQA plan is presented in Appendix I. The ADWR construction permit application is presented in Appendix L.

REFERENCES

1. AGRA Earth & Environmental, Inc., 1998a, Geotechnical Investigation Report, Golden Eagle Park Dam, Assignment No. 5 near Golden Eagle Boulevard and Palisades Boulevard, Fountain Hills, Arizona: for Flood Control District of Maricopa County.

2. AGRA Earth & Environmental, Inc., 1998b, Dam Safety Inspection, Golden Eagle Park Dam, Assignment No. 5 near Golden Eagle Boulevard and Palisades Boulevard, Fountain Hills, Arizona: for Flood Control District of Maricopa County.

3. Federal Highway Administration, 1985, Hydraulic Design of Highway Culverts.

4. George V. Sabol Consulting Engineers, Inc., 1994, Fountain Hills (North) Floodplain Delineation Study: for Flood Control District of Maricopa County, Phoenix, Arizona.

5. George V. Sabol Consulting Engineers, Inc., 1996a, Fountain Hills Dam Break Analysis for Golden Eagle Park Dam, Hesperus Dam, Aspen Dam, North Heights Dam, SunRidge Canyon Dam: for Anderson-Nelson, Inc., Phoenix, Arizona.

6. George V. Sabol Consulting Engineers, Inc., 1996b, Fountain Hills Area Drainage Master Plan, Interim Report, Reconnaissance Study and Alternative Evaluation for Golden Eagle Park Dam: for Flood Control District of Maricopa County.

7. George V. Sabol Consulting Engineers, Inc., 1997, Final Report, Part B: Golden Eagle Park Dam, Feasibility Study: for Flood Control District of Maricopa County.

8. Hammet, B.A. and Heather, R.L., 1995, Maps showing Groundwater Conditions in the Phoenix Active Management Area, Maricopa, Pinal and Yavapai Counties, Arizona – 1992, Department of Water Resources, Hydrologic Map Series Report Number 27, Phoenix, Arizona, July.

9. Stantec, 1999, Design Issues & Alternatives Report, Golden Eagle Park Dam Modification Pre-Design: for Flood Control District of Maricopa County.

10. Stantec, 2000, "Plans For The Construction Of Golden Eagle Park Dam Modifications", PCN. 670031, FCD Contract No. 1999C071.

APPENDIX A

IDF HYDROLOGY MEMO, 4 MARCH 1999

Memo

Stantec

To: Tom Renckly, FCDMC
Kathryn Gross, FCDMC
Jim Leubner, Town of Fountain Hills
Rich Dobson, Ftn. Hills Unified School Dist.
Larry Lambert, ADWR

From: George Sabol

File: 28900095

Date: 04 March 1999

Re: Golden Eagle Park Dam – Selection of IDF

Background

The scope of work (3.5.1) requires selection of two inflow design floods (IDF). One IDF (IDF1) is to be based on the assumption of breach of one of the three upstream dams. The other (IDF2) is to be based on other assumptions. Those two IDF's will be used in developing and evaluating various alternatives for dam modification.

Review of Hydrology Studies

Inflow floods for Golden Eagle Park Dam (GEP Dam) were defined in previous studies by George V. Sabol Consulting Engineers, Inc. (GVSCE). Those are summarized as follows:

1. Fountain Hills (North) Floodplain Delineation Study (Fountain Hills FDS) performed by GVSCE and completed in 1994 for the Flood Control District of Maricopa County (FCD 92-04).

   100-year existing (1993) and future condition hydrographs were developed based on watershed parameters as documented in that report.

2. Town of Fountain Hills Dam Break Analysis for Golden Eagle Park Dam, Hesperus Wash Dam, Aspen Dam, North Heights Dam and Sunridge Canyon Dam performed by GVSCE and completed in 1996 for Anderson-Nelson, Inc.

   Dam break analysis of GEP Dam was performed using a 0.5 PMF inflow based on the following assumptions:

   a. Storm producing a 0.5 PMF event over the entire watershed including the watersheds to the three upstream dams.

   b. 0.5 PMF spillway releases from both Sunridge Canyon and Aspen Dams.

   c. Combined 0.5 PMF spillway release and piping breach of North Heights Dam.

3. Fountain Hills Area Drainage Master Plan (Fountain Hills ADMP) performed by GVSCE and completed in 1997 for the Flood Control District of Maricopa County (FCD 94-16).

   IDF for GEP Dam was developed based on the same hydrologic model as the dam break analysis except that concurrent breach of the North Heights Dam was not assumed.

ADWR reviewed the Fountain Hills ADMP report and provided comments regarding certain assumptions and spillway hydraulics. Based on those comments and previous GVSCE reports, the District analyzed numerous hydraulic conditions and assumptions in evaluating IDF's for GEP Dam. Those results are presented in Development of Inflow Design Floods for use in Alternatives Analysis Studies (FCDMC, January 1999).

For the present study, Stantec is to review the previous hydrology by GVSCE and the District, and to recommend the two IDF's that are to be used. This District report (January 1999) uses the hydrologic models developed by GVSCE with modifications for various additional assumptions and conditions, and the results are presented in Tables 1.1, 1.2 and 1.3 of the District report. Each table is based on the use of a weir coefficient for emergency spillway hydraulics for all four dams in the study area. Those coefficients being 3.0, 2.63 and 2.60, respectively. A summary of the various assumptions and conditions evaluated by the District is shown in Table 1.

Evaluation of the IDF results presented by the District in Tables 1.1, 1.2 and 1.3 are summarized as follows:

A. The assumption of emergency spillway weir coefficient (3.0, 2.63 or 2.60) is not sensitive to the estimated magnitude of the IDF at GEP Dam. A "C" coefficient of 2.60 is reasonable and the District's results presented in Table 1.3 are adopted.

B. The assumption of clogged principal spillways (Sunridge Canyon and Aspen Dams) (IDF1A and IDF2A) result in only a 5 - 6% increase in the IDF at GEP Dam. In view of the error and uncertainty in PMF hydrology, spillway hydraulics, and dam breach analysis, such small increases in IDF results is not considered relevant.

C. The assumption of inflow equals outflow at Sunridge Canyon Dam (IDF1B and IDF2B) results in only a 1 – 2% increase in the IDF at GEP Dam. That increase is not relevant, nor is the assumption justified.

D. The assumption that the Sunridge Canyon and Aspen Dam reservoirs are empty at the onset of the IDF storm (IDF1C) results in a 10% reduction in the IDF at GEP Dam for the with breach at North Heights Dam condition. That assumption coupled with the assumption of breach of North heights Dam due to piping (and a full reservoir) is hydrologically inconsistent, somewhat unconservative, and not in line with usual dam safety practices for upstream dams.

E. The assumption that all three reservoirs are empty at the onset of the IDF storm (IDF2C) results in a 29% reduction in the IDF at GEP Dam. That assumption is not in line with usual dam safety practices for upstream dams.

TABLE 1

Summary of assumptions and conditions analyzed by the District (January 1999)

North Heights Dam								
Assumptions	**IDF1**	**IDF1A**	**IDF1B**	**IDF1C**	**IDF2**	**IDF2A**	**IDF2B**	**IDF2C**
Piping Breach	YES	YES	YES	YES	NO	NO	NO	NO
Initial WSE	100-YEAR	100-YEAR	100-YEAR	100-YEAR	100-YEAR	100-YEAR	100-YEAR	EMPTY
Principal Spillway	CLOGGED	CLOGGED	CLOGGED	CLOGGED	OPEN	CLOGGED	CLOGGED	OPEN
Sunridge Canyon & Aspen Dams								
Assumptions	**IDF1**	**IDF1A**	**IDF1B**	**IDF1C**	**IDF2**	**IDF2A**	**IDF2B**	**IDF2C**
Breach	NO	NO	NO	NO	NO	NO	NO	NO
Initial WSE	100-YEAR	100-YEAR	100-YEAR	EMPTY	100-YEAR	100-YEAR	100-YEAR	EMPTY
Principal Spillway	OPEN	CLOGGED	CLOGGED	OPEN	OPEN	CLOGGED	CLOGGED	OPEN
Reservoir Routing at Aspen	YES	YES	YES	YES	YES	YES	YES	YES
Reservoir Routing at Sunridge	YES	YES	NO*	YES	YES	YES	NO*	YES

*Inflow to Sunridge Canyon Dam is set to equal outflow (no reservoir routing)

Recommended IDF's

Therefore, based on the results presented by the District (January 1999) and the summary and discussion presented herein, the two recommended IDF's for GEP Dam are IDF1 for the with upstream dam breach and IDF2 for no upstream dam breach. Those IDF hydrographs are shown in Figures 1 and 2, respectively.

Description of Hydrologic Models for the Recommended IDF's

A brief description of the hydrologic modeling for IDF1 and IDF2 is presented. Complete model development including parameter estimation is provided in the three previously referenced GVSCE reports.

In developing the GEP Dam IDF hydrologic models, the following were performed:

1. Watershed mapping and parameter estimation was adopted from the Fountain Hills FDS study. An HEC-1 model for future (full build-out conditions) was developed. Multiple subbasins are used in that model so as to define 100-year discharges at numerous flow concentration points for purposes of floodplain delineation.
2. Using information from the Fountain Hills FDS, an HEC-1 model was developed wherein the multiple subbasin model was converted to single basins for each of the four dams. The simplified HEC-1 model was demonstrated to reproduce 100-year discharges at the dams as compared to the more complex multiple subbasin model of the Fountain Hills FDS. Those results are reported in the 1996 dam break report.
3. Dam breach during 0.5 PMF storm events were developed for each of the four dams and those are reported in the 1996 dam break report. For GEP Dam, it was assumed that for the purpose of dam break analysis, one of the three upstream dams would fail concurrently with the 0.5 PMF event. It was determined that piping breach of North Heights Dam constituted the most severe flood at GEP Dam. The timing of the peak outflow due to piping breach was adjusted to coincide with the peak spillway outflow from North Heights Dam so as to produce the largest combined outflow hydrograph from North Heights Dam. That dam breach hydrograph is incorporated into IDF1, as recommended herein.

4. The North Heights Dam breach (QI records in IDF1) is based on the following:
    - Plugged principal spillway.

- Initial 100-year (future condition) water surface elevation with flow passing over the emergency spillway.
- Piping breach during 0.5 PMF to maximize the North Heights Dam peak discharge.

5. For the purpose of reconnaissance and feasibility level studies for GEP Dam as part of the Fountain Hills ADMP, an IDF was developed from the previous dam break modeling. The IDF does not assume that any of the three upstream dams fail during the 0.5 PMF. That assumption is consistent with IDF2, as reported herein. Background and hydrologic modeling information in regard to the development of the IDF models are presented in Appendices A and B. Appendix A is from the GVSCE (November 1996) Fountain Hills ADMP report, and it includes a watershed map, PMP estimation worksheets, and discussion of parameter estimation. Appendix B is from the GVSCE (July 1997) Fountain Hills ADMP report, and it provides the HEC-1 file that the District revised in performing its study.

6. Based on ADWR comments, the District modified the previous IDF's as prepared by GVSCE, and analyzed various conditions and assumptions as shown in Table 1. Four IDF's were defined for a with dam breach (North Heights Dam) condition, and four for a without dam breach condition.

7. As discussed, herein, Stantec reviewed the previous GVSCE and District models and recommended IDF1 (with dam breach) and IDF2 (without dam breach).

The HEC-1 files that were developed by the District in developing IDF1 and IDF2 are provided in Appendices C and D, respectively. Stantec provided additional editorial comments to the District provided files to document the development of those models. A diskette of the HEC-1 files for IDF1 and IDF2 is attached. That diskette contains the following files:

	FILE	COMMENT
A.	DAM4-PMF.IH1	HEC-1 file by GVSCE (July 1997) used to develop IDF for GEP Dam for reconnaisance and feasibility level studies. This file does not include upstream dam break, and is the file that the District modified for its studies (Jan. 1999). This file is shown in Appendix B.

	FILE	COMMENT
B.	DAM11-RT.IH1/OH1	Dam break analysis (piping breach) as developed by GVSCE (Jan. 1996) for North Heights Dam. This breach outflow hydrograph is used to develop the QI record in IDF1.
C.	DAM11P.OUT	HEC-1 file as developed by GVSCE (Jan. 1996) of the emergency spillway release from North Heights Dam prior to and concurrent with the piping breach. This hydrograph is added to the piping breach hydrograph to develop North Heights Dam QI record in IDF1.
D.	QI.xls	Spreadsheet development of QI record in IDF1.
E.	IDF1.OUT	HEC-1 file for GEP Dam IDF1 (with North Heights Dam breach). Basic HEC-1 file was originally developed by GVSCE (DAM4-PMF.IH1) and subsequently modified by the District (addition of QI record). Stantec added editorial comments to the District's file.
F.	IDF2.OUT	HEC-1 file for GEP Dam IDF2 (without upstream dam break). File was developed by GVSCE (DAM4-PMF.IH1) and used by the District in its January 1999 analysis. Stantec added editorial comments.

STANTEC CONSULTING INC.

George V. Sabol, PhD, PE
Senior Associate
gsabol@stantec.com

c. Jon Benoist, ADWR
John Linkswiler, ADWR
Randy Harrell, TOFH
Norm Wetz, AEE

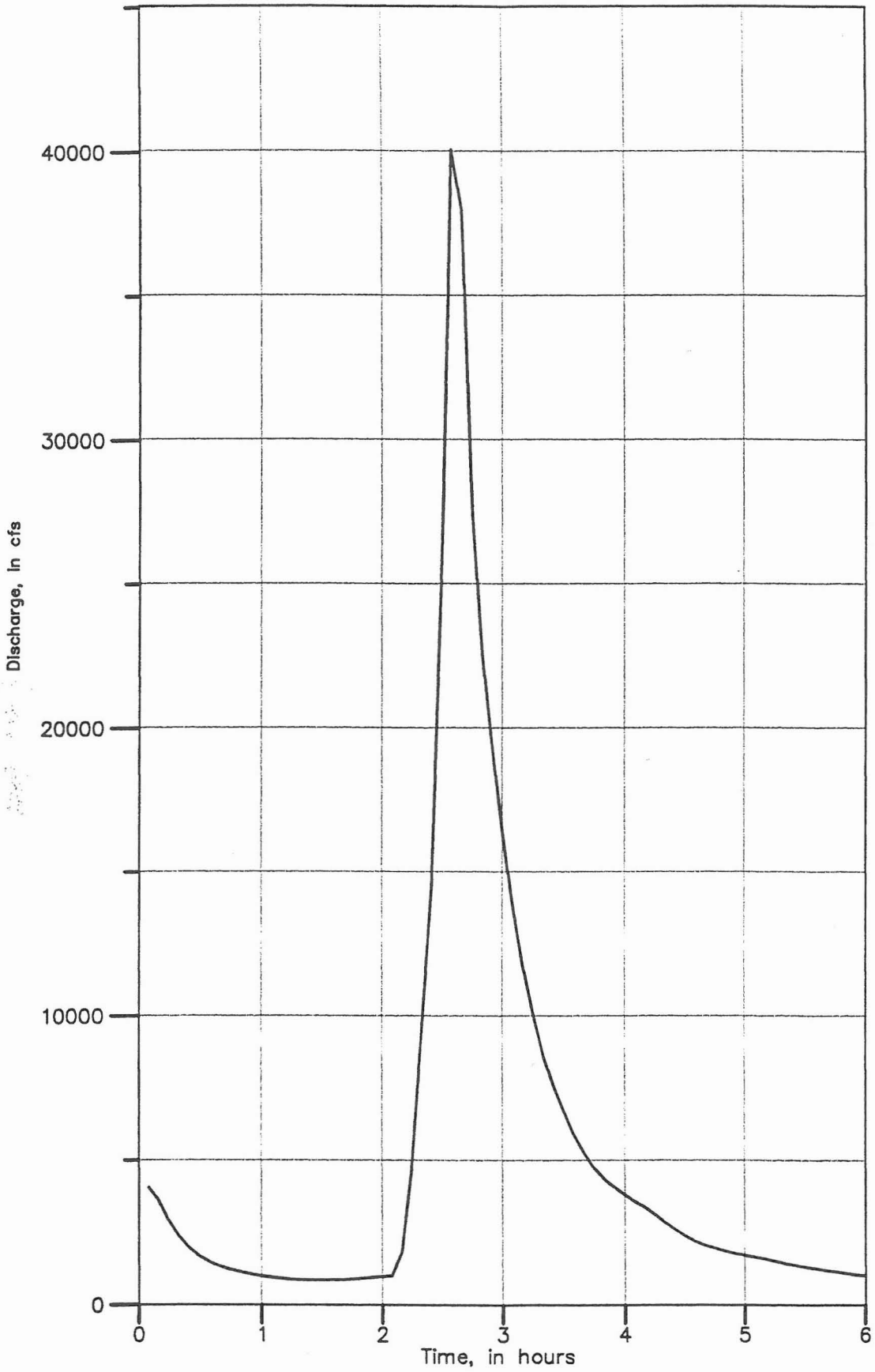

FIGURE 1

IDF1 for Golden Eagle Park Dam
With North Heights Dam Break

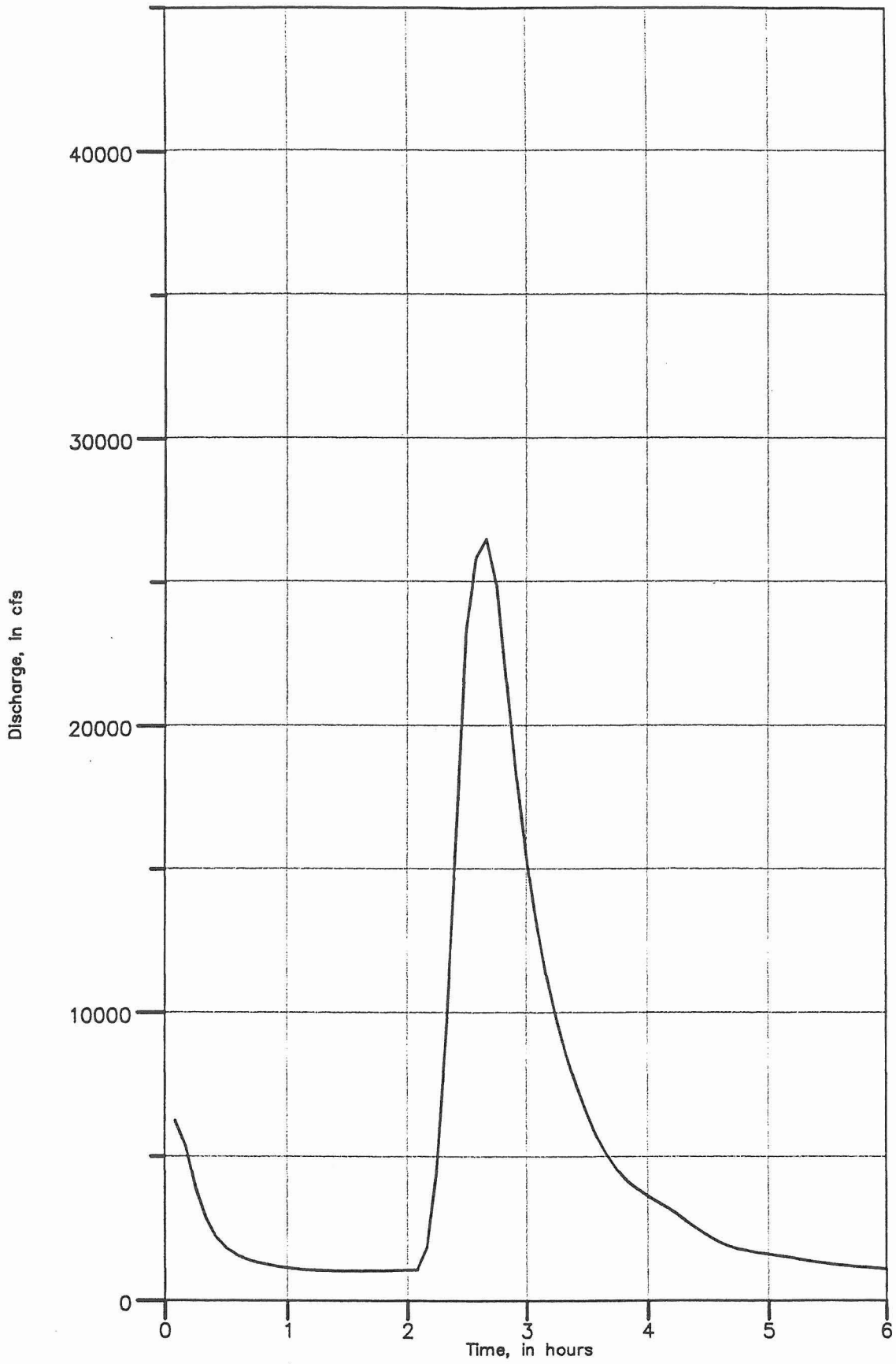

FIGURE 2

IDF2 for Golden Eagle Park Dam
Without Upstream Dam Break

Appendix A

Hydrologic model information from the Fountain Hills ADMP Report
(GVSCE, November 1996)

FLOOD CONTROL DISTRICT OF MARICOPA COUNTY
PHOENIX, ARIZONA

FOUNTAIN HILLS AREA DRAINAGE MASTER PLAN FCD 94-16

RECONNAISSANCE STUDY
and
ALTERNATIVE EVALUATION
for
GOLDEN EAGLE PARK DAM

INTERIM REPORT

George V. Sabol Consulting Engineers, Inc.
Scottsdale, Arizona

NOVEMBER 1996

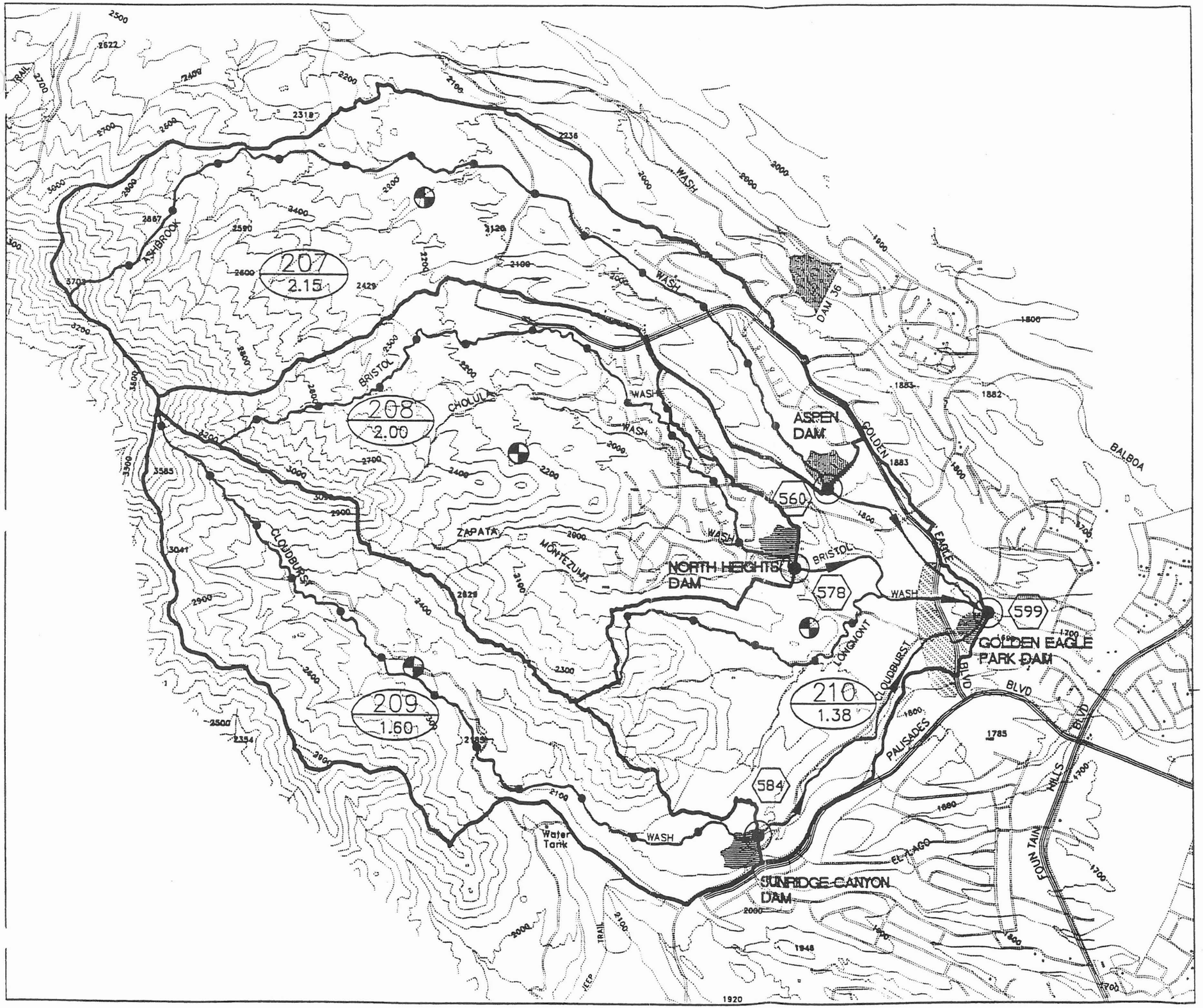

FLOOD CONTROL DISTRICT OF MARICOPA COUNTY

FOUNTAIN HILLS ADMP

F.C.D. CONTRACT NO. 94-16

LEGEND

Major Basin ID / Area In Square Miles	207 / 2.15
Major Road	
HEC-1 Concentration Point	560
Basin Centroid	
Lag Flow Path	
HEC-1 Routing Path	
Minor Road	
Major Subbasin Boundary	
Existing Dam	
Proposed Dam	

SCALE: 1" = 2000'

CONTOUR INTERVAL = 100'

FIGURE 1

WATERSHED DRAINAGE MAP

George V. Sabol Consulting Engineers, Inc.

BASE TOPOGRAPHY COMPILED FROM USGS QUADRANGLE MAPS

FLOOD HYDROLOGY

Existing Hydrology Models

The existing Ftn Hills FDS HEC-1 models developed by GVSCE for the Flood Control District of Maricopa County (Contract FCD 92-04) are used and modified as required to provide inflow design hydrographs for the study alternatives. Those models were developed using the HEC-1 Flood Hydrology Program, version 4.0.1E, dated May 1991 (U.S. Army Corps of Engineers, 1991), and the methodology contained in the FCDMC Design Manual. The 100-year precipitation, distribution and areal reduction factors were obtained from the FCDMC Design Manual and modeled using JD Records. Rainfall losses were estimated using the Green and Ampt infiltration equation with an estimate for surface retention and effective imperviousness. Hydrographs were generated using Clark unit hydrograph methodology. Channel routing was accomplished using the Modified Puls method with the normal depth option. Reservoir routing through the various detention areas was accomplished using the Modified Puls method with the level pool option. The Ftn Hills FDS models were also verified by indirect methods and those verifications provided no reason to reject the modeling results. Based on a review of that modeling and the verification results, the Ftn Hills FDS watershed hydrology modeling is adopted for use in this study.

As previously referenced, the results of the Ftn Hills FDS existing condition watershed hydrology is summarized in a three volume report and the future condition hydrology is bound separately as a fourth document. Unless otherwise noted, all references made in this report to the Ftn Hills FDS watershed hydrology and/or modeling, specifically refer to the Fountain Hills North Floodplain Delineation Study, Technical Data Notebook-Hydrology, Future Conditions (GVSCE, 1994). Excerpts from that report (and others where applicable) are included herein as appendices when considered pertinent or required.

Multiple Basin Models

Major Basins 207, 208, 209 and 210 are extracted from the overall Ftn Hills FDS multiple basin model to facilitate generation of the single basin models as discussed below. A separate multiple basin model for Major Basin 210 is developed without the inclusion of the routed hydrographs from Aspen, North Heights, and SunRidge Canyon Dams, in order to provide a runoff hydrograph for development of the single basin model for this area. Printouts of the HEC-1 output files for each multiple basin model are provided in Appendix B.

Single Basin Model Generation

General

The Ftn Hills FDS hydrology models were developed for the 100-year, 6-hour and 24-hour storms. Those models include extensive detail in the form of numerous subbasins, concentration points, flowsplits, channel and storage routing. Although that level of detail is normal for the identification of peak discharges at frequent locations along a floodplain delineation reach, it results in large and tedious computer models, especially with respect to the requirements of this study. In order to simplify the 100-year hydrology modeling effort and facilitate a conversion of those models to generate 0.5 PMF inflow hydrographs, it is desirable to develop single basin hydrology models for the respective areas tributary to Aspen, North Heights, and SunRidge Canyon Dams, and the intermediate area between the upstream dams and GEPD. Those drainage basins are shown on Figure 1 and are respectively identified from the Ftn Hills FDS report as Major Basins 207, 208, 209 and 210. Single basin models of those major basins can then be more efficiently combined and routed as required for evaluation of the alternatives.

The procedure for generation of the single basin 100-year and PMF models is to first develop 100-year models that duplicate the Ftn Hills FDS multiple basin model runoff hydrographs at the desired locations (concentration points) using the methodology in the FCDMC Design Manual and parameters from the Ftn Hills FDS. The PMF models are then developed from the 100-year single basin models by replacement of the 100-year precipitation with the probable maximum precipitation (PMP) and distribution, and modification of the unit hydrograph lag parameter to reflect a PMF magnitude runoff. Those procedures are presented with more detail in the following sections.

100-Year Models

Precipitation Data - Precipitation and rainfall distributions are coded per the original Ftn Hills FDS models with appropriate areal reduction factors directly applied and the JD records removed. According to the Ftn Hills FDS results, 100-year, 6-hour storms controlled the peak discharges for the study basins. The combined inflow to GEPD, however, is controlled by the 100-year, 24-hour storm, therefore, both 6- and 24-hour single basin models are developed.

Basin Areas - Basin areas for the single basin models are estimated by summing the areas of Ftn Hills FDS subbasins encompassed by the major basin boundary. Refer to Exhibits "A" and "D" in Appendix A for detailed delineations of each subbasin and their relation to the major basin boundary. The single basin (referred to herein as study basin) boundaries are indicated on Figure 1 and correspond to the major basin boundaries of Exhibits "A" and "D". The composite areas for each study basin are summarized in Table 2. The individual subbasin areas as reported in the Ftn Hills FDS are summarized in Tables C1, C2, C3 and C4 of Appendix C, which respectively correspond to Study Basins 207, 208, 209 and 210.

Rainfall Loss Parameters - Rainfall losses are estimated by the Green and Ampt method, assuming that the watershed is fully developed. Green and Ampt rainfall loss parameters developed for the individual subbasins reported in the Ftn Hills FDS future condition hydrology report are composited for each study basin. The procedures used for compositing those values are summarized as follows:

1. **IA, RTIMP, DTHETA, Vegetative Cover** - The surface retention loss (IA), percentage of effective impervious area (RTIMP) and the antecedent volumetric soil moisture deficit (DTHETA) parameters are all estimated by area averaging the individual Ftn Hills FDS values for the subbasins encompassed by the study basin. The composite vegetative cover percentage is also estimated by area averaging the individual subbasin values.

2. **Bare Ground XKSAT** - The composite bare ground XKSAT value for each study basin is obtained by log-averaging the individual Ftn Hills FDS subbasin bare ground XKSAT values.

3. **PSIF** - The wetting front capillary suction (PSIF) is assigned based on the composite bare ground XKSAT value. That assignment is made using Figure 4.3 of the FCDMC Design Manual.

4. **Vegetation Adjusted XKSAT** - The composite bare ground XKSAT is adjusted for the effects of vegetation by the curve in Figure 4.4 of the FCDMC Design Manual. The composite vegetative cover percentage is used for that adjustment.

Table C1 in Appendix C, summarizes the Ftn Hills FDS individual parameter values for each subbasin included in Study Basin 207. Tables C2, C3 and C4 provide similar summaries for Study Basins 208, 209 and 210, respectively. The composite values for each study basin are summarized at the bottom of those tables and in Table 2. Excerpts of the supporting parameter calculation worksheets and tables from the Ftn Hills FDS hydrology report are also provided in Appendix C for reference.

TABLE 2

Summary of area and composite rainfall loss parameters for each study basin

Study Basin ID (1)	Area sq. miles (2)	Rainfall Loss Parameters: IA inches (3)	DTHETA (4)	PSIF inches (5)	Adjusted XKSAT in/hr (6)	RTIMP % (7)
207	2.149	0.17	0.31	4.90	0.29	31.55
208	2.000	0.10	0.25	4.80	0.28	50.48
209	1.603	0.13	0.28	4.62	0.32	41.50
210	1.382	0.09	0.24	5.61	0.19	24.82

Unit Hydrographs - The unit hydrographs for the single basin models are developed using the S-graph methodology outlined in the FCDMC Design Manual. The Phoenix Mountain S-graph is selected for modeling each study basin and the U.S. Army Corps of Engineers' lag equation is used. The lag equation physical parameters (except Kn) are measured from Figure 1 with guidance from the reach data summarized in the Ftn Hills FDS. Exhibits "A" and "D" were also referenced for verification of elevations and lengths. The basin hydraulic roughness value, Kn, is used as a calibration parameter in defining the unit hydrograph shape. That calibration process is accomplished by first assuming a reasonable value for Kn using the references provided in the FCDMC Design Manual and running the single basin model. The resulting runoff hydrograph from that run is then compared to the Ftn Hills FDS multiple basin runoff hydrograph at the same location, and the Kn value is adjusted accordingly. By reasonably varying the Kn value, the unit hydrograph is calibrated to produce a runoff hydrograph that closely approximates its target hydrograph from the Ftn Hills FDS multiple basin hydrology model. Table 3 summarizes the final unit hydrograph lag parameters developed for each study subbasin, including the calibrated Kn value.

TABLE 3

Summary of unit hydrograph lag parameters for each study basin for the 100-yr and PMF storms

Study Basin ID (1)	Area sq. miles (2)	Length miles (3)	Lca miles (4)	Slope ft/mi (5)	100-year Kn (6)	100-year Lag hours (7)	PMF Kn (8)	PMF Lag hours (9)
207	2.149	3.890	2.160	464.7	0.038	0.64	0.030	0.51
208	2.000	2.980	1.610	488.9	0.022	0.30	0.018	0.24
209	1.603	3.240	1.730	582.3	0.024	0.33	0.019	0.27
210	1.382	1.930	0.852	360.7	0.030	0.28	0.024	0.23

Final Results

Table 4 summarizes a comparison of the 100-year, 6-hour multiple basin versus single basin modeling results. Data reported for the Ftn Hills FDS multiple basin model is taken from the last HEC-1 operation. Table 5 provides a similar comparison of the 100-year, 24-hour results. Plots of the single basin versus Ftn Hills FDS multiple basin runoff hydrographs for each of the four study basin concentration point locations, are provided in Appendix D for inspection and comparison of the hydrograph shapes. Printouts of both sets of the HEC-1 single basin output files are also included in Appendix D. Plots and printouts for both the 100-year, 6- and 24-hour models are included.

PMF Models

Precipitation Data - The probable maximum precipitation (PMP) and temporal distribution for each study basin is estimated using the methods in Hydrometeorological Report No. 49 (HMR 49) (Hansen and others, 1984). The local, 6-hour PMP is the critical storm for all of the study basins. Worksheets for PMP estimation are provided in Appendix E.

Rainfall Loss Parameters - Rainfall loss parameters for the PMF modeling are the same as those used for the 100-year models. See Table 2 for those values.

TABLE 4

Comparison of single basin and multiple basin HEC-1 model results for the 100-year, 6-hour storm for each study basin

Study Basin ID (1)	Multiple Basin Conc. Pt ID (2)	Area sq. miles (3)	Multiple Basin Peak Discharge cfs (4)	Multiple Basin Time to Peak hours (5)	Multiple Basin Rainfall Excess inches (6)	Multiple Basin Runoff Volume acre-ft (7)	Single Basin Peak Discharge cfs (8)	Single Basin Time to Peak hours (9)	Single Basin Rainfall Excess inches (10)	Single Basin Runoff Volume acre-ft (11)
207	C560I	2.149	2,201	4.37	1.97	226	2,225	4.42	1.99	228
208	C578I	2.000	3,351	4.08	2.40	256	3,241	4.08	2.39	255
209	C584I	1.603	2,615	4.17	2.21	189	2,565	4.17	2.20	188
210	C210I	1.382	2,576	4.08	2.16	159	2,602	4.08	2.24	165

TABLE 5

Comparison of single basin and multiple basin HEC-1 model results for the 100-year, 24-hour storm for each study basin

Study Basin ID (1)	Multiple Basin Conc. Pt ID (2)	Area sq. miles (3)	Multiple Basin Peak Discharge cfs (4)	Multiple Basin Time to Peak hours (5)	Multiple Basin Rainfall Excess inches (6)	Multiple Basin Runoff Volume acre-ft (7)	Single Basin Peak Discharge cfs (8)	Single Basin Time to Peak hours (9)	Single Basin Rainfall Excess inches (10)	Single Basin Runoff Volume acre-ft (11)
207	C560I	2.149	1,871	12.33	2.14	245	2,012	12.25	2.13	244
208	C578I	2.000	3,011	12.08	2.73	291	3,049	12.08	2.71	289
209	C584I	1.603	2,166	12.17	2.44	208	2,025	12.08	2.43	208
210	C210I	1.382	2,141	12.08	2.14	157	2,121	12.08	2.13	157

Unit Hydrographs - It is documented in literature that Kn does not remain constant for all magnitudes of discharge (Cudworth, 1989). Rather, it decreases in value due to increased hydraulic efficiency associated with larger magnitude discharges. For the PMF, the Kn value is estimated as 80 percent of the 100-year Kn value, in order to account for the larger flows associated with that event. Those reduced values and resultant lag times are reported in Table 3 for each of the study basins.

Final Results - The final single basin PMF results for each study basin are presented in Table 6. Printouts of the HEC-1 model output for each PMF model are provided in Appendix E.

TABLE 6

Summary of single basin HEC-1 model results for the PMF by study basin

Study Basin	HEC-1 Concentration Point	Drainage Area sq. miles	Single Basin PMF Results: Peak Discharge cfs	Time to Peak hours	Rainfall Excess inches	Runoff Volume acre-feet
(1)	(2)	(3)	(4)	(5)	(6)	(7)
207	C560I	2.15	17,974	2.58	12.57	1,440
208	C578I	2.00	26,969	2.33	13.28	1,416
209	C584I	1.60	20,238	2.33	13.20	1,125
210	C599I	1.38	19,580	2.33	13.22	971

Golden Eagle Park Dam Inflow Hydrographs

General

The 100-year, 6-hour, 100-year, 24-hour and PMF inflow hydrographs to Golden Eagle Park Dam and the proposed dam of Alternative No. 4, are developed by creating an HEC-1 routing model that hydrologically routes and combines each of the previously discussed single basin models. That modeling is accomplished by first reservoir routing hydrographs from Study Basins 207, 208 and 209 through each of their respective dams, channel routing those outflow hydrographs to GEPD, and combining the resultant hydrographs with the single basin hydrograph for Study Basin 210. Point precipitation

values are adjusted according to the total watershed area (7.13 square miles) that is tributary to GEPD. Storage routing methodologies and parameter estimations are summarized in the following sections.

Physical Data

Ftn Hills FDS Data - The physical data used in the routing analyses for existing facilities are taken directly from the Ftn Hills FDS, which were gathered by performing field surveys of the dams, and by extraction from the project mapping. Those data are presented in the form of stage versus storage and stage versus discharge relations for each dam, and cross section geometry for the channel reaches. In some cases, additional reservoir and channel route data are required to expand the capacities of those relations to correspond to the magnitudes of flow associated with a PMF event. Additional area data for use in the dams' stage versus storage relations are obtained by plainmetering the project mapping. Additional cross section geometry information for channel routing are obtained by lateral extension of the representative cross sections on the project mapping and adding the new information to the cross section data set.

Physical Data for Alternatives - Physical data representing the proposed improvements for each alternative are taken from Plates 1 through 12, which as previously discussed, are generated using the project mapping. Ponded surface area data are obtained by use of a planimeter.

Reservoir Routes

Reservoir routing through each of the dams is accomplished using the Modified Puls, level pool option of HEC-1. Stage versus storage relations are derived using the data previously discussed, with the storage volumes estimated by the conic method. Stage versus discharge relations are developed based on the principal and emergency spillway data and the use of the following programs:

HY-8 Program - The stage versus discharge relations for the ungated principal spillway conduits are determined by use of the HY-8 computer program, version 4.1, which is based on the Federal Highway Administration's Hydraulic Design Series No. 5.

Uneven Weir Program - This program is used to analyze the emergency spillway and one dimensional dam overtopping hydraulics. The program is based on uneven weir methodology and employs weir discharge coefficient rating curves developed by the Army Corps of Engineers. The results of this program are used to generate stage versus discharge relations for the emergency spillway and dam overtopping flow segments.

The results from each of the above programs are combined to generate an overall stage versus discharge relation for the subject dam. Pre-alternative condition tabular and graphic summaries of the stage versus discharge and stage versus storage relations for each of Aspen, North Heights, SunRidge Canyon and Golden Eagle Park Dams are provided in Appendix F. Pertinent HY-8 and Uneven Weir program output are also provided in Appendix F.

Channel Routes

Channel routing is accomplished using the Modified Puls, normal depth channel option of HEC-1 and a single cross section that is considered representative of the study reach. That cross section is based on a review of the cross sections documented in the Ftn Hills FDS for that study reach, and selection of the one that best represents the routing reach. In some cases, the channel cross section is augmented, as previously discussed, to provide adequate capacity for the PMF flows. Physical data (Table G1) and cross section plots for each routing reach are provided in Appendix G. Tables G2, G3, and G4 respectively summarize the reach route hydraulic data calculated by HEC-1 for the PMF and 100-year, 6- and 24-hour models.

Final Results

Table 7 summarizes the GEPD inflow hydrograph results from the single basin hydrologic routing models for each of the 100-year, 6- and 24-hour, and PMF storms. Comparative plots of the routed single basin GEPD inflow hydrographs versus the Ftn Hills FDS multiple basin results (HEC-1 operation C599I), and HEC-1 output for each routing model and design storm, are provided in Appendix H.

TABLE 7

Summary of GEPD single basin routing model results for the 100-year, 6- and 24-hour, and PMF storms

Storm (1)	Peak Discharge cfs (2)	Time to Peak hours (3)	Rainfall Excess inches (4)	Runoff Volume acre-feet (5)
100-year, 6-hour	2,444	4.17	1.99	758
100-year, 24-hour	2,697	12.08	2.30	874
PMF	58,754	2.50	13.24	5,033

Summary and Conclusions

By inspection of the graphical hydrograph comparisons and direct comparison of modeling results, it is demonstrated that the single basin models reasonably reproduce the Ftn Hills FDS report results. Differences between results are much less than five percent in all cases, and the single basin modeling technique provides a much simpler tool for evaluation of the various alternatives, therefore, the single basin models are used for this study.

179

Table 6.3A.--Local-storm PMP computation, Colorado River, Great Basin and California drainages. For drainage average depth PMP. Go to table 6.3B if areal variation is required.

Drainage GOLDEN EAGLE PARK (# 4) Area 7.13 mi^2 (km^2)
Latitude 33° 35' Longitude 111° 45' Minimum Elevation 1706 ft (m)

Steps correspond to those in sec. 6.3A.

1. Average 1-hr 1-mi^2 (2.6-km^2) PMP for drainage [fig. 4.5]. 11.5 in. (mm)

2. a. Reduction for elevation. [No adjustment for elevations up to 5,000 feet (1,524 m): 5% decrease per 1,000 feet (305 m) above 5,000 feet (1,524 m)]. 100 %

   b. Multiply step 1 by step 2a. 11.5 in. (mm)

3. Average 6/1-hr ratio for drainage [fig. 4.7]. 1.3

	Duration (hr)									
	1/4	1/2	3/4	1	2	3	4	5	6	
4. Durational variation for 6/1-hr ratio of step 3 [table 4.4].	74	89	95	100	114	121	125	128	130	%
5. 1-mi^2 (2.6-km^2) PMP for indicated durations [step 2b X step 4].	8.5	10.2	10.9	11.5	13.1	13.9	14.4	14.7	15.0	in. (mm)
6. Areal reduction [fig. 4.9].	78	83	85	86	88	89	90	90	91	%
7. Areal reduced PMP [steps 5 X 6].	6.6	8.5	9.3	9.9	11.5	12.4	13.0	13.2	13.7	in. (mm)
8. Incremental PMP [successive subtraction in step 7].				9.9	1.6	0.9	0.6	0.2	0.5	in. (mm)
	6.6	1.9	0.8	0.6	} 15-min. increments					

9. Time sequence of incremental PMP according to:

Hourly increments [table 4.7].	0.5	0.9	9.9	1.6	0.6	0.2	in. (mm)
Four largest 15-min. increments [table 4.8].	6.6	1.9	0.8	0.6			in. (mm)

Table 6.3A.--Local-storm PMP computation, Colorado River, Great Basin and California drainages. For drainage average depth PMP. Go to table 6.3B if areal variation is required.

Drainage DRAINAGE AREA ABOVE DAM #4 Area 1,38 mi^2 (km^2)
Latitude 33°35' Longitude 111°45 Minimum Elevation 1706 ft (m)

Steps correspond to those in sec. 6.3A.

1. Average 1-hr 1-mi^2 (2.6-km^2) PMP for drainage [fig. 4.5]. 11.5 in. (mm)

2. a. Reduction for elevation. [No adjustment for elevations up to 5,000 feet (1,524 m): 5% decrease per 1,000 feet (305 m) above 5,000 feet (1,524 m)]. 100 %

   b. Multiply step 1 by step 2a. 11.5 in. (mm)

3. Average 6/1-hr ratio for drainage [fig. 4.7]. 1.8

	Duration (hr)									
	1/4	1/2	3/4	1	2	3	4	5	6	
4. Durational variation for 6/1-hr ratio of step 3 [table 4.4].	74	87	95	100	114	121	125	128	130	%
5. 1-mi^2 (2.6-km^2) PMP for indicated durations [step 2b X step 4].	8.5	10.2	10.9	11.5	13.1	13.9	14.4	14.7	15.0	in. (mm)
6. Areal reduction [fig. 4.9].	98	99	99	99	99.5	99.5	99.5	99.5	100	%
7. Areal reduced PMP [steps 5 X 6].	8.3	10.1	10.8	11.4	13.0	13.8	14.3	14.6	15.0	in. (mm)
8. Incremental PMP [successive subtraction in step 7].				11.4	1.6	0.8	0.5	0.3	0.4	in. (mm)
	8.3	1.8	0.7	0.6	} 15-min. increments					

9. Time sequence of incremental PMP according to:

Hourly increments [table 4.7].	0.4	0.8	11.4	1.6	0.5	0.3	in. (mm)
Four largest 15-min. increments [table 4.8].	8.3	1.8	0.7	0.6			in. (mm)

Table 6.3A.--Local-storm PMP computation, Colorado River, Great Basin and California drainages. For drainage average depth PMP. Go to table 6.3B if areal variation is required.

Drainage NORTH HEIGHTS (DAM # 11) Area 2.0 mi^2 (km^2)
Latitude 33°35' Longitude 111°45' Minimum Elevation ____ ft (m)

Steps correspond to those in sec. 6.3A.

1. Average 1-hr 1-mi^2 (2.6-km^2) PMP for drainage [fig. 4.5]. 11.5 in. (mm)

2. a. Reduction for elevation. [No adjustment for elevations up to 5,000 feet (1,524 m): 5% decrease per 1,000 feet (305 m) above 5,000 feet (1,524 m)]. 100 %

   b. Multiply step 1 by step 2a. 11.5 in. (mm)

3. Average 6/1-hr ratio for drainage [fig. 4.7]. 1.3

	Duration (hr)									
	1/4	1/2	3/4	1	2	3	4	5	6	
4. Durational variation for 6/1-hr ratio of step 3 [table 4.4].	74	89	95	100	114	121	125	128	130	%
5. 1-mi^2 (2.6-km^2) PMP for indicated durations [step 2b X step 4].	8.5	10.2	10.9	11.5	13.1	13.9	14.4	14.7	15.0	in. (mm)
6. Areal reduction [fig. 4.9].	94	96	96	97	97	97	98	98	98	%
7. Areal reduced PMP [steps 5 X 6].	8.0	9.8	10.5	11.2	12.7	13.5	14.1	14.4	14.7	in. (mm)
8. Incremental PMP [successive subtraction in step 7].				11.2	1.5	0.8	0.6	0.3	0.3	in. (mm)
	8.0	1.8	0.7	0.7	} 15-min. increments					

9. Time sequence of incremental PMP according to:

   Hourly increments [table 4.7]. 0.3 0.8 11.2 1.5 0.6 0.3 in. (mm)

   Four largest 15-min. increments [table 4.8]. 8.0 1.8 0.7 0.7 in. (mm)

Table 6.3A.--Local-storm PMP computation, Colorado River, Great Basin and California drainages. For drainage average depth PMP. Go to table 6.3B if areal variation is required.

Drainage ASPEN DAM - DAM # 6 Area 2.15 mi^2 (km^2)
Latitude 33°37' Longitude 111°45' Minimum Elevation 1910 ft (m)

Steps correspond to those in sec. 6.3A.

1. Average 1-hr 1-mi^2 (2.6-km^2) PMP for drainage [fig. 4.5]. 11.5 in. (mm)

2. a. Reduction for elevation. [No adjustment for elevations up to 5,000 feet (1,524 m): 5% decrease per 1,000 feet (305 m) above 5,000 feet (1,524 m)]. 100 %

   b. Multiply step 1 by step 2a. 11.5 in. (mm)

3. Average 6/1-hr ratio for drainage [fig. 4.7]. 1.3

	Duration (hr)									
	1/4	1/2	3/4	1	2	3	4	5	6	
4. Durational variation for 6/1-hr ratio of step 3 [table 4.4].	74	89	95	100	114	121	125	128	130	%
5. 1-mi^2 (2.6-km^2) PMP for indicated durations [step 2b X step 4].	8.5	10.2	10.9	11.5	13.1	13.9	14.4	14.7	15.0	in. (mm)
6. Areal reduction [fig. 4.9].	94	96	96	96	97	97	97	98	98	%
7. Areal reduced PMP [steps 5 X 6].	8.0	9.8	10.5	11.0	12.7	13.5	14.0	14.4	14.7	in. (mm)
8. Incremental PMP [successive subtraction in step 7].				11.0	1.7	0.8	0.5	0.4	0.3	in. (mm)
	8	1.8	0.7	0.5	} 15-min. increments					

9. Time sequence of incremental PMP according to:

   Hourly increments [table 4.7]. 0.4 0.8 11.0 1.7 0.5 0.3 in. (mm)

   Four largest 15-min. increments [table 4.8]. 8 1.8 0.7 0.5 in. (mm)

DAM 7 – SUNRIDGE CANYON DAM

Table 6.3A.--Local-storm PMP computation, Colorado River, Great Basin and California drainages. For drainage average depth PMP. Go to table 6.3B if areal variation is required.

Drainage SUNRIDGE CANYON (DAM #7) Area 1.6 mi^2 (km

Latitude 38°25' Longitude 111°45' Minimum Elevation ____ ft (

Steps correspond to those in sec. 6.3A.

1. Average 1-hr 1-mi^2 (2.6-km^2) PMP for drainage [fig. 4.5]. 11.5 in. (mm

2. a. Reduction for elevation. [No adjustment for elevations up to 5,000 feet (1,524 m): 5% decrease per 1,000 feet (305 m) above 5,000 feet (1,524 m)]. 100 %

   b. Multiply step 1 by step 2a. 11.5 in. (mm)

3. Average 6/1-hr ratio for drainage [fig. 4.7]. 1.3

	Duration (hr)									
	1/4	1/2	3/4	1	2	3	4	5	6	
4. Durational variation for 6/1-hr ratio of step 3 [table 4.4].	74	89	95	100	114	121	125	128	130	%
5. 1-mi^2 (2.6-km^2) PMP for indicated durations [step 2b X step 4].	8.5	10.2	10.9	11.5	13.1	13.9	14.4	14.7	15.0	in. (m
6. Areal reduction [fig. 4.9].	97	98	98	99	99	99	[illegible]	100	100	%
7. Areal reduced PMP [steps 5 X 6].	8.2	10.0	10.7	11.4	13.0	13.8	[illegible]	14.7	15	in. (mm
8. Incremental PMP [successive subtraction in step 7].				11.4	1.6	0.8	0.6	0.2	0.3	in. (mm
	8.2	1.8	0.7	0.7	} 15-min. increments					

9. Time sequence of incremental PMP according to:

Hourly increments [table 4.7].	0.3	0.8	11.4	1.6	0.6	0.3	in. (mm
Four largest 15-min. increments [table 4.8].	8.2	1.8	0.7	0.7			in. (mm)

Appendix B

HEC-1 model for Golden Eagle Park Dam from the Fountain Hills ADMP Report
(GVSCE, July 1997)

FLOOD CONTROL DISTRICT OF MARICOPA COUNTY
PHOENIX, ARIZONA

FOUNTAIN HILLS AREA DRAINAGE MASTER PLAN FCD 94-16

FINAL REPORT

Part A: Project Summary

Part B: Golden Eagle Park Dam, Feasibility Study

Registered Professional Engineer (Civil)
CERTIFICATE NO.
17928
GEORGE V.
SABOL
Date Signed 30 July 97
ARIZONA, U.S.A.

George V. Sabol Consulting Engineers, Inc.
Scottsdale, Arizona

JULY 1997

Appendix C

HEC-1 File for IDF1

```
1*************************************
*                                   *
*   FLOOD HYDROGRAPH PACKAGE  (HEC-1)*
*              MAY   1991           *
*           VERSION 4.0.1E          *
*                                   *
*  RUN DATE  10/15/96  TIME  11:46:31*
*                                   *
*************************************
```

```
*************************************
*                                   *
*    U.S. ARMY CORPS OF ENGINEERS   *
*    HYDROLOGIC ENGINEERING CENTER  *
*          609 SECOND STREET        *
*       DAVIS, CALIFORNIA 95616     *
*          (916) 551-1748           *
*                                   *
*************************************
```

```
X     X  XXXXXXX   XXXXX          X
X     X  X        X     X        XX
X     X  X        X                X
XXXXXXX  XXXX     X        XXXXX   X
X     X  X        X                X
X     X  X        X     X          X
X     X  XXXXXXX   XXXXX         XXX
```

THIS PROGRAM REPLACES ALL PREVIOUS VERSIONS OF HEC-1 KNOWN AS HEC1 (JAN 73), HEC1GS, HEC1DB, AND HEC1KW.

THE DEFINITIONS OF VARIABLES -RTIMP- AND -RTIOR- HAVE CHANGED FROM THOSE USED WITH THE 1973-STYLE INPUT STRUCTURE.
THE DEFINITION OF -AMSKK- ON RM-CARD WAS CHANGED WITH REVISIONS DATED 28 SEP 81. THIS IS THE FORTRAN77 VERSION
NEW OPTIONS: DAMBREAK OUTFLOW SUBMERGENCE , SINGLE EVENT DAMAGE CALCULATION, DSS:WRITE STAGE FREQUENCY,
DSS:READ TIME SERIES AT DESIRED CALCULATION INTERVAL LOSS RATE:GREEN AND AMPT INFILTRATION
KINEMATIC WAVE: NEW FINITE DIFFERENCE ALGORITHM

1 HEC-1 INPUT PAGE 1

```
LINE          ID.......1.......2.......3.......4.......5.......6.......7.......8.......9......10

  1           ID        FOUNTAIN HILLS ADMP
  2           ID        Model for the Computation of PMF for Dam 4      FILE NAME: DAM4-PMF.IH1
  3           ID        ***************************************************************
  4           ID        Analytical Considerations:
  5           ID            Single Basin Models
  6           ID            This model considers areal reduction method.
  7           ID        ***************************************************************
              *DIAGRAM
  8           IT       5       0       0     200
  9           IO       5
 10           IN      15
              *
 11           JD   15.00    0.01
 12           PI   0.075   0.075   0.075   0.075     0.2     0.2     0.2     0.2     0.2     1.8
 13           PI     0.7     0.7     0.4     0.4     0.4     0.4    0.15    0.15    0.15    0.15
 14           PI   0.075   0.075   0.075   0.075
 15           JD   15.00   1.603
 16           PI   0.075   0.075   0.075   0.075     0.2     0.2     0.2     0.2     0.2     1.8
 17           PI     0.7     0.7     0.4     0.4     0.4     0.4    0.15    0.15    0.15    0.15
 18           PI   0.075   0.075   0.075   0.075
 19           JD   14.70   2.300
 20           PI     0.1     0.1     0.1     0.1     0.2     0.2     0.2     0.2     0.0     1.8
 21           PI     0.7     0.5   0.425   0.425   0.425   0.425   0.125   0.125   0.125   0.125
 22           PI   0.075   0.075   0.075   0.075
 23           JD   14.70   2.150
 24           PI     0.1     0.1     0.1     0.1     0.2     0.2     0.2     0.2     0.0     1.8
 25           PI     0.7     0.5   0.425   0.425   0.425   0.425   0.125   0.125   0.125   0.125
 26           PI   0.075   0.075   0.075   0.075
 27           JD   13.70   7.150
 28           PI   0.075   0.075   0.075   0.075     0.2     0.2     0.2     0.2     0.0     1.8
 29           PI     0.7     0.7   0.375   0.375   0.375   0.375    0.15    0.15    0.15    0.15
 30           PI   0.075   0.075   0.075   0.075

 31           KK   C560I
 32           KM        BASIN S207
 33           KM        THE FOLLOWING PARAMETERS WERE PROVIDED FOR THIS BASIN
 34           KM        L=      3.9  Lca=      2.2   S=  464.7  Kn= .030  LAG=  30.6
 35           KM        PHOENIX MOUNTAIN S-GRAPH WAS USED FOR THIS BASIN
 36           BA    2.15
 37           LG     .17     .31    4.90    0.29   31.55
 38           UI    237.    523.   1170.   1651.   2163.   2377.   1509.   1274.   1082.    897.
 39           UI    699.    573.    507.    374.    299.    259.    198.    131.    119.    116.
 40           UI    111.     45.     45.     45.     45.     45.     45.     45.      0.      0.
 41           UI      0.      0.      0.      0.      0.      0.      0.      0.      0.      0.
 42           UI      0.      0.      0.      0.      0.      0.      0.      0.      0.      0.
              *

 43           KK   C560O
 44           KM      Reservoir route at C560 (Dam 6).
 45           RS       1     ELEV 1835.36
```

```
 46          SV    0.00     7.09    34.65    75.98   135.64   191.44   208.31   226.53   246.00   266.28
 47          SV  289.00   310.81   336.00   360.88   389.00   416.30   446.00   476.39   509.00   540.78
 48          SE  1808.8 1814.00 1820.00 1826.00 1832.00 1836.00 1837.00 1838.00 1839.00 1840.00
 49          SE  1841.0 1842.00 1843.00 1844.00 1845.00 1846.00 1847.00 1848.00 1849.00 1850.00
 50          SQ       0      102      184      242      285      429     1239     2559     4265     6311
```



```
LINE         ID.......1.......2.......3.......4.......5.......6.......7.......8.......9......10

 51          SQ    8674    11339    14292    18440    25207    33643    43471    54561    66835    80241
             *

 52          KK  560599
 53          KM      Normal depth channel route
 54          RS       1     FLOW      -1
 55          RC   0.050    0.025    0.050   3127.0   0.0272
 56          RX  9850.4   9950.4   9974.4  10000.0  10035.5  10059.8  10080.4  10104.4
 57          RY  1772.0   1771.7   1765.3   1765.3   1765.9   1768.5   1773.3   1773.7
             *

 58          KK   C578I
 59          KM        BASIN S208
 60          KM        THE FOLLOWING PARAMETERS WERE PROVIDED FOR THIS BASIN
 61          KM        L=       3.0  Lca=       1.6   S=  488.9  Kn= .018  LAG=   14.2
 62          KM        PHOENIX MOUNTAIN S-GRAPH WAS USED FOR THIS BASIN
 63          BA    2.00
 64          LG     .10      .25     4.80      .28    50.48
 65          UI    837.    3038.    4371.    2543.    1714.    1106.     677.     446.     282.     192.
 66          UI     91.      91.      91.       0.       0.       0.       0.       0.       0.       0.
 67          UI      0.       0.       0.       0.       0.       0.       0.       0.       0.       0.
             *

 68          KK   C578O
 69          KM      Reservoir route at C578 (Dam 11).
 70          KO       5
 71          RS       1     ELEV 1812.29
 72          SV    0.00     2.77    16.38    41.49    84.39   133.00   154.47   171.00   187.43   205.00
 73          SV  223.03   242.00   261.38   282.00   302.00   324.00   345.87   370.00   394.23   419.79
 74          SE  1779.2 1788.00 1794.00 1800.00 1806.00  1810.5 1812.00 1813.00 1814.00 1815.00
 75          SE  1816.0 1817.00 1818.00 1819.00 1820.00 1821.00 1822.00 1823.00 1824.00 1825.00
 76          SQ       0      160      221      269      305      327      799     1888     3383     5222
 77          SQ    7376     9826    12563    15670    21045    28479    37392    47596    58989    71509
 78          SE  1779.2 1788.00 1794.00 1800.00 1806.00  1810.5 1812.00 1813.00 1814.00 1815.00
 79          SE  1816.0 1817.00 1818.00 1819.00 1820.00 1821.00 1822.00 1823.00 1824.00 1825.00
             *

 80          KK  578599
 81          KM      Normal depth channel route
 82          RS       1     FLOW      -1
 83          RC   0.055    0.045    0.055   3762.0  0.01624
 84          RX  9928.9   9945.0   9963.1   9990.6  10012.2  10035.4  10052.8  10069.6
 85          RY  1755.7   1746.3   1746.1   1741.7   1743.3   1743.7   1744.6   1755.7
             *

 86          KK   C584I
 87          KM        BASIN S209
 88          KM        THE FOLLOWING PARAMETERS WERE PROVIDED FOR THIS BASIN
 89          KM        L=       3.2  Lca=       1.7   S=  582.3  Kn= .019  LAG=   15.9
 90          KM        PHOENIX MOUNTAIN S-GRAPH WAS USED FOR THIS BASIN
 91          BA    1.60
 92          LG     .13      .28     4.62      .32    41.50
 93          UI    515.    1951.    3289.    2104.    1510.     997.     702.     442.     308.     202.
 94          UI    154.      65.      65.      65.       0.       0.       0.       0.       0.       0.
 95          UI      0.       0.       0.       0.       0.       0.       0.       0.       0.       0.
             *
```



```
LINE         ID.......1.......2.......3.......4.......5.......6.......7.......8.......9......10

 96          KK   C584O
 97          KM      Reservoir route at C584 (Dam 7).
 98          RS       1     ELEV 1926.31
 99          SV    0.00     0.60     4.30    11.27    23.74    46.29    86.65    96.00   104.90   126.25
100          SV  151.07   165.00   179.50   195.00   211.23   229.00   246.62   266.00   285.59   306.14
101          SE  1884.8 1894.00 1900.00 1906.00 1912.00 1918.00 1924.00 1925.00 1926.00 1928.00
102          SE  1930.0 1931.00 1932.00 1933.00 1934.00 1935.00 1936.00 1937.00 1938.00 1939.00
103          SQ       0      163      223      272      307      333      355      363      690     2921
104          SQ    6650     9013    11702    14897    19772    25998    33315    41618    50847    60966
105          SE  1884.8 1894.00 1900.00 1906.00 1912.00 1918.00 1924.00 1925.00 1926.00 1928.00
106          SE  1930.0 1931.00 1932.00 1933.00 1934.00 1935.00 1936.00 1937.00 1938.00 1939.00
             *

107          KK  584599
108          KM      Normal depth channel route
109          RS       1     FLOW      -1
110          RC   0.065    0.050    0.065   6526.0  0.02571
111          RX  9927.6   9939.8   9951.9   9985.3  10036.0  10067.5  10119.2  10188.7
```

```
112          RY  1796.3  1791.2  1788.3  1784.1  1784.9  1788.0  1790.2  1796.4
             *

113          KK   C210
114          KM        BASIN S210
115          KM        THE FOLLOWING PARAMETERS WERE PROVIDED FOR THIS BASIN
116          KM        L=      1.9  Lca=       .9   S=  360.7  Kn= .024  LAG=  13.6
117          KM        PHOENIX MOUNTAIN S-GRAPH WAS USED FOR THIS BASIN
118          BA    1.38
119          LG     .09     .24    5.61     .19   24.82
120          UI    634.   2291.   3040.   1739.   1122.    723.    433.    286.    170.     96.
121          UI     66.     66.      0.      0.      0.      0.      0.      0.      0.      0.
122          UI      0.      0.      0.      0.      0.      0.      0.      0.      0.      0.
             *

123          KK   C599I
124          KO       1                                  21
125          KM      Hydrograph combine C584O + C560O + C578O + C599
126          HC       4
127          ZZ
```

1

SCHEMATIC DIAGRAM OF STREAM NETWORK

```
INPUT
 LINE      (V) ROUTING          (--->) DIVERSION OR PUMP FLOW

  NO.      (.) CONNECTOR        (<---) RETURN OF DIVERTED OR PUMPED FLOW

   31       C560I
                V
                V
   43       C560O
                V
                V
   52      560599
                .
                .
   58           .       C578I
                .           V
                .           V
   68           .       C578O
                .           V
                .           V
   80           .      578599
                .           .
                .           .
   86           .           .       C584I
                .           .           V
                .           .           V
   96           .           .       C584O
                .           .           V
                .           .           V
  107           .           .      584599
                .           .           .
                .           .           .
  113           .           .           .        C210
                .           .           .          .
                .           .           .          .
  123       C599I.................................
```

(***) RUNOFF ALSO COMPUTED AT THIS LOCATION

```
1*************************************                    *************************************
*                                   *                    *                                   *
*   FLOOD HYDROGRAPH PACKAGE  (HEC-1)*                    *   U.S. ARMY CORPS OF ENGINEERS    *
*              MAY   1991           *                    *   HYDROLOGIC ENGINEERING CENTER   *
*            VERSION 4.0.1E         *                    *         609 SECOND STREET         *
*                                   *                    *      DAVIS, CALIFORNIA 95616      *
*  RUN DATE  10/15/96  TIME  11:46:31*                    *          (916) 551-1748           *
*                                   *                    *                                   *
*************************************                    *************************************
```

```
FOUNTAIN HILLS ADMP
Model for the Computation of PMF for Dam 4      FILE NAME: DAM4-PMF.IH1
*************************************************************
Analytical Considerations:
    Single Basin Models
    This model considers areal reduction method.
*************************************************************

  9 IO        OUTPUT CONTROL VARIABLES
                IPRNT          5  PRINT CONTROL
                IPLOT          0  PLOT CONTROL
                QSCAL         0.  HYDROGRAPH PLOT SCALE

    IT        HYDROGRAPH TIME DATA
```

```
          NMIN          5  MINUTES IN COMPUTATION INTERVAL
         IDATE     1    0  STARTING DATE
         ITIME        0000  STARTING TIME
            NQ         200  NUMBER OF HYDROGRAPH ORDINATES
        NDDATE     1    0  ENDING DATE
        NDTIME        1635  ENDING TIME
         ICENT          19  CENTURY MARK

     COMPUTATION INTERVAL    0.08 HOURS
          TOTAL TIME BASE   16.58 HOURS

ENGLISH UNITS
     DRAINAGE AREA          SQUARE MILES
     PRECIPITATION DEPTH    INCHES
     LENGTH, ELEVATION      FEET
     FLOW                   CUBIC FEET PER SECOND
     STORAGE VOLUME         ACRE-FEET
     SURFACE AREA           ACRES
     TEMPERATURE            DEGREES FAHRENHEIT

11 JD      INDEX STORM NO. 1
              STRM       15.00  PRECIPITATION DEPTH
              TRDA        0.01  TRANSPOSITION DRAINAGE AREA

12 PI        PRECIPITATION PATTERN
              0.03       0.03       0.02       0.03       0.03       0.02       0.03       0.03       0.02       0.02
              0.03       0.03       0.07       0.07       0.07       0.07       0.07       0.07       0.07       0.07
              0.07       0.07       0.07       0.07       2.73       2.73       2.73       0.60       0.60       0.60
              0.23       0.23       0.23       0.23       0.23       0.23       0.13       0.13       0.13       0.13
              0.13       0.13       0.13       0.13       0.13       0.13       0.13       0.13       0.05       0.05
              0.05       0.05       0.05       0.05       0.05       0.05       0.05       0.05       0.05       0.05
              0.02       0.03       0.02       0.02       0.03       0.02       0.02       0.03       0.02       0.02
              0.03       0.02

15 JD      INDEX STORM NO. 2
              STRM       15.00  PRECIPITATION DEPTH
              TRDA        1.60  TRANSPOSITION DRAINAGE AREA

16 PI        PRECIPITATION PATTERN
              0.03       0.03       0.02       0.03       0.03       0.02       0.03       0.03       0.02       0.02
              0.03       0.03       0.07       0.07       0.07       0.07       0.07       0.07       0.07       0.07
              0.07       0.07       0.07       0.07       2.73       2.73       2.73       0.60       0.60       0.60
              0.23       0.23       0.23       0.23       0.23       0.23       0.13       0.13       0.13       0.13
              0.13       0.13       0.13       0.13       0.13       0.13       0.13       0.13       0.05       0.05
              0.05       0.05       0.05       0.05       0.05       0.05       0.05       0.05       0.05       0.05
              0.02       0.03       0.02       0.02       0.03       0.02       0.02       0.03       0.02       0.02
              0.03       0.02

19 JD      INDEX STORM NO. 3
              STRM       14.70  PRECIPITATION DEPTH
              TRDA        2.00  TRANSPOSITION DRAINAGE AREA

20 PI        PRECIPITATION PATTERN
              0.03       0.03       0.03       0.03       0.03       0.03       0.03       0.03       0.03       0.03
              0.03       0.03       0.07       0.07       0.07       0.07       0.07       0.07       0.07       0.07
              0.07       0.07       0.07       0.07       2.67       2.67       2.67       0.60       0.60       0.60
              0.23       0.23       0.23       0.17       0.17       0.17       0.14       0.14       0.14       0.14
              0.14       0.14       0.14       0.14       0.14       0.14       0.14       0.14       0.04       0.04
              0.04       0.04       0.04       0.04       0.04       0.04       0.04       0.04       0.04       0.04
              0.02       0.03       0.02       0.02       0.03       0.02       0.02       0.03       0.02       0.02
              0.03       0.02

23 JD      INDEX STORM NO. 4
              STRM       14.70  PRECIPITATION DEPTH
              TRDA        2.15  TRANSPOSITION DRAINAGE AREA

24 PI        PRECIPITATION PATTERN
              0.03       0.03       0.03       0.03       0.03       0.03       0.03       0.03       0.03       0.03
              0.03       0.03       0.07       0.07       0.07       0.07       0.07       0.07       0.07       0.07
              0.07       0.07       0.07       0.07       2.67       2.67       2.67       0.60       0.60       0.60
              0.23       0.23       0.23       0.17       0.17       0.17       0.14       0.14       0.14       0.14
              0.14       0.14       0.14       0.14       0.14       0.14       0.14       0.14       0.04       0.04
              0.04       0.04       0.04       0.04       0.04       0.04       0.04       0.04       0.04       0.04
              0.02       0.03       0.02       0.02       0.03       0.02       0.02       0.03       0.02       0.02
              0.03       0.02

27 JD      INDEX STORM NO. 5
              STRM       13.70  PRECIPITATION DEPTH
              TRDA        7.15  TRANSPOSITION DRAINAGE AREA

28 PI        PRECIPITATION PATTERN
              0.03       0.03       0.02       0.03       0.03       0.02       0.03       0.03       0.02       0.02
              0.03       0.03       0.07       0.07       0.07       0.07       0.07       0.07       0.07       0.07
              0.07       0.07       0.07       0.07       2.67       2.67       2.67       0.60       0.60       0.60
              0.23       0.23       0.23       0.23       0.23       0.23       0.13       0.13       0.13       0.13
              0.13       0.13       0.13       0.13       0.13       0.13       0.13       0.13       0.05       0.05
              0.05       0.05       0.05       0.05       0.05       0.05       0.05       0.05       0.05       0.05
              0.02       0.03       0.02       0.02       0.03       0.02       0.02       0.03       0.02       0.02
```

```
                    0.03       0.02

 70 KO          OUTPUT CONTROL VARIABLES
                      IPRNT           5  PRINT CONTROL
                      IPLOT           0  PLOT CONTROL
                      QSCAL          0.  HYDROGRAPH PLOT SCALE


*** *** *** *** *** *** *** *** *** *** *** *** *** *** *** *** *** *** *** *** *** *** *** *** *** *** *** *** *** *** *** *** *** *** *** ***


            **************
            *            *
123 KK      *     C599I  *
            *            *
            **************

124 KO          OUTPUT CONTROL VARIABLES
                      IPRNT           1  PRINT CONTROL
                      IPLOT           0  PLOT CONTROL
                      QSCAL          0.  HYDROGRAPH PLOT SCALE
                      IPNCH           0  PUNCH COMPUTED HYDROGRAPH
                       IOUT          21  SAVE HYDROGRAPH ON THIS UNIT
                      ISAV1           1  FIRST ORDINATE PUNCHED OR SAVED
                      ISAV2         200  LAST ORDINATE PUNCHED OR SAVED
                     TIMINT       0.083  TIME INTERVAL IN HOURS

                        Hydrograph combine C5840 + C5600 + C5780 + C599

126 HC          HYDROGRAPH COMBINATION
                      ICOMP           4  NUMBER OF HYDROGRAPHS TO COMBINE

                                                    ***

*****************************************************************************************************************************************

                                          HYDROGRAPH AT     C599I
                                     TRANSPOSITION AREA      0.0 SQ MI

*****************************************************************************************************************************************
```

DA	MON	HRMN	ORD	FLOW	DA	MON	HRMN	ORD	FLOW	DA	MON	HRMN	ORD	FLOW	DA	MON	HRMN	ORD	FLOW
1		0000	1	2557.	1		0410	51	6634.	1		0820	101	894.	1		1230	151	250.
1		0005	2	2392.	1		0415	52	6085.	1		0825	102	888.	1		1235	152	237.
1		0010	3	2091.	1		0420	53	5555.	1		0830	103	880.	1		1240	153	226.
1		0015	4	1842.	1		0425	54	4994.	1		0835	104	873.	1		1245	154	217.
1		0020	5	1640.	1		0430	55	4438.	1		0840	105	865.	1		1250	155	210.
1		0025	6	1506.	1		0435	56	3918.	1		0845	106	857.	1		1255	156	204.
1		0030	7	1408.	1		0440	57	3456.	1		0850	107	848.	1		1300	157	199.
1		0035	8	1327.	1		0445	58	3105.	1		0855	108	838.	1		1305	158	196.
1		0040	9	1261.	1		0450	59	2850.	1		0900	109	827.	1		1310	159	192.
1		0045	10	1206.	1		0455	60	2639.	1		0905	110	814.	1		1315	160	188.
1		0050	11	1164.	1		0500	61	2463.	1		0910	111	801.	1		1320	161	183.
1		0055	12	1135.	1		0505	62	2301.	1		0915	112	785.	1		1325	162	179.
1		0100	13	1115.	1		0510	63	2118.	1		0920	113	767.	1		1330	163	174.
1		0105	14	1108.	1		0515	64	1930.	1		0925	114	745.	1		1335	164	170.
1		0110	15	1121.	1		0520	65	1775.	1		0930	115	710.	1		1340	165	166.
1		0115	16	1145.	1		0525	66	1646.	1		0935	116	673.	1		1345	166	163.
1		0120	17	1157.	1		0530	67	1529.	1		0940	117	643.	1		1350	167	159.
1		0125	18	1171.	1		0535	68	1425.	1		0945	118	618.	1		1355	168	155.
1		0130	19	1193.	1		0540	69	1348.	1		0950	119	598.	1		1400	169	152.
1		0135	20	1221.	1		0545	70	1299.	1		0955	120	580.	1		1405	170	149.
1		0140	21	1251.	1		0550	71	1259.	1		1000	121	565.	1		1410	171	145.
1		0145	22	1286.	1		0555	72	1224.	1		1005	122	552.	1		1415	172	142.
1		0150	23	1324.	1		0600	73	1195.	1		1010	123	543.	1		1420	173	139.
1		0155	24	1362.	1		0605	74	1173.	1		1015	124	535.	1		1425	174	136.
1		0200	25	1400.	1		0610	75	1146.	1		1020	125	528.	1		1430	175	134.
1		0205	26	3162.	1		0615	76	1117.	1		1025	126	521.	1		1435	176	131.
1		0210	27	9986.	1		0620	77	1097.	1		1030	127	514.	1		1440	177	128.
1		0215	28	23393.	1		0625	78	1082.	1		1035	128	508.	1		1445	178	125.
1		0220	29	43113.	1		0630	79	1070.	1		1040	129	502.	1		1450	179	123.
1		0225	30	60927.	1		0635	80	1059.	1		1045	130	496.	1		1455	180	120.
1		0230	31	65342.	1		0640	81	1050.	1		1050	131	489.	1		1500	181	118.
1		0235	32	61517.	1		0645	82	1041.	1		1055	132	483.	1		1505	182	115.
1		0240	33	55043.	1		0650	83	1032.	1		1100	133	476.	1		1510	183	113.
1		0245	34	47603.	1		0655	84	1024.	1		1105	134	470.	1		1515	184	111.
1		0250	35	39951.	1		0700	85	1015.	1		1110	135	463.	1		1520	185	108.
1		0255	36	33485.	1		0705	86	1007.	1		1115	136	456.	1		1525	186	106.
1		0300	37	28766.	1		0710	87	999.	1		1120	137	449.	1		1530	187	103.
1		0305	38	24596.	1		0715	88	992.	1		1125	138	441.	1		1535	188	98.
1		0310	39	21131.	1		0720	89	985.	1		1130	139	433.	1		1540	189	91.
1		0315	40	18187.	1		0725	90	977.	1		1135	140	425.	1		1545	190	83.
1		0320	41	15851.	1		0730	91	969.	1		1140	141	416.	1		1550	191	78.
1		0325	42	13827.	1		0735	92	961.	1		1145	142	408.	1		1555	192	73.
1		0330	43	12145.	1		0740	93	952.	1		1150	143	400.	1		1600	193	67.
1		0335	44	10840.	1		0745	94	944.	1		1155	144	393.	1		1605	194	62.

1	0340	45	9786.	1	0750	95	935.	1	1200	145	379.	1	1610	195	57.
1	0345	46	8967.	1	0755	96	927.	1	1205	146	357.	1	1615	196	52.
1	0350	47	8378.	1	0800	97	919.	1	1210	147	331.	1	1620	197	47.
1	0355	48	7888.	1	0805	98	912.	1	1215	148	306.	1	1625	198	43.
1	0400	49	7474.	1	0810	99	906.	1	1220	149	283.	1	1630	199	39.
1	0405	50	7096.	1	0815	100	900.	1	1225	150	265.	1	1635	200	35.

PEAK FLOW (CFS)	TIME (HR)		MAXIMUM AVERAGE FLOW 6-HR	24-HR	72-HR	16.58-HR
65342.	2.50	(CFS)	10238.	4023.	4023.	4023.
		(INCHES)	13.351	14.498	14.498	14.498
		(AC-FT)	5077.	5513.	5513.	5513.

CUMULATIVE AREA = 7.13 SQ MI

HYDROGRAPH AT C599I
TRANSPOSITION AREA 1.6 SQ MI

DA	MON	HRMN	ORD	FLOW	DA	MON	HRMN	ORD	FLOW	DA	MON	HRMN	ORD	FLOW	DA	MON	HRMN	ORD	FLOW
1		0000	1	2557.	1		0410	51	6634.	1		0820	101	894.	1		1230	151	250.
1		0005	2	2392.	1		0415	52	6085.	1		0825	102	888.	1		1235	152	237.
1		0010	3	2091.	1		0420	53	5555.	1		0830	103	880.	1		1240	153	226.
1		0015	4	1842.	1		0425	54	4994.	1		0835	104	873.	1		1245	154	217.
1		0020	5	1640.	1		0430	55	4438.	1		0840	105	865.	1		1250	155	210.
1		0025	6	1506.	1		0435	56	3918.	1		0845	106	857.	1		1255	156	204.
1		0030	7	1408.	1		0440	57	3456.	1		0850	107	848.	1		1300	157	199.
1		0035	8	1327.	1		0445	58	3105.	1		0855	108	838.	1		1305	158	196.
1		0040	9	1261.	1		0450	59	2850.	1		0900	109	827.	1		1310	159	192.
1		0045	10	1206.	1		0455	60	2639.	1		0905	110	814.	1		1315	160	188.
1		0050	11	1164.	1		0500	61	2463.	1		0910	111	801.	1		1320	161	183.
1		0055	12	1135.	1		0505	62	2301.	1		0915	112	785.	1		1325	162	179.
1		0100	13	1115.	1		0510	63	2118.	1		0920	113	767.	1		1330	163	174.
1		0105	14	1108.	1		0515	64	1930.	1		0925	114	745.	1		1335	164	170.
1		0110	15	1121.	1		0520	65	1775.	1		0930	115	710.	1		1340	165	166.
1		0115	16	1145.	1		0525	66	1646.	1		0935	116	673.	1		1345	166	163
1		0120	17	1157.	1		0530	67	1529.	1		0940	117	643.	1		1350	167	159.
1		0125	18	1171.	1		0535	68	1425.	1		0945	118	618.	1		1355	168	155.
1		0130	19	1193.	1		0540	69	1348.	1		0950	119	598.	1		1400	169	152.
1		0135	20	1221.	1		0545	70	1299.	1		0955	120	580.	1		1405	170	149.
1		0140	21	1251.	1		0550	71	1259.	1		1000	121	565.	1		1410	171	145.
1		0145	22	1286.	1		0555	72	1224.	1		1005	122	552.	1		1415	172	142.
1		0150	23	1324.	1		0600	73	1195.	1		1010	123	543.	1		1420	173	139.
1		0155	24	1362.	1		0605	74	1173.	1		1015	124	535.	1		1425	174	136.
1		0200	25	1400.	1		0610	75	1146.	1		1020	125	528.	1		1430	175	134.
1		0205	26	3162.	1		0615	76	1117.	1		1025	126	521.	1		1435	176	131.
1		0210	27	9986.	1		0620	77	1097.	1		1030	127	514.	1		1440	177	128.
1		0215	28	23393.	1		0625	78	1082.	1		1035	128	508.	1		1445	178	125.
1		0220	29	43113.	1		0630	79	1070.	1		1040	129	502.	1		1450	179	123.
1		0225	30	60927.	1		0635	80	1059.	1		1045	130	496.	1		1455	180	120.
1		0230	31	65342.	1		0640	81	1050.	1		1050	131	489.	1		1500	181	118.
1		0235	32	61517.	1		0645	82	1041.	1		1055	132	483.	1		1505	182	115.
1		0240	33	55043.	1		0650	83	1032.	1		1100	133	476.	1		1510	183	113.
1		0245	34	47603.	1		0655	84	1024.	1		1105	134	470.	1		1515	184	111.
1		0250	35	39951.	1		0700	85	1015.	1		1110	135	463.	1		1520	185	108.
1		0255	36	33485.	1		0705	86	1007.	1		1115	136	456.	1		1525	186	106.
1		0300	37	28766.	1		0710	87	999.	1		1120	137	449.	1		1530	187	103.
1		0305	38	24596.	1		0715	88	992.	1		1125	138	441.	1		1535	188	98.
1		0310	39	21131.	1		0720	89	985.	1		1130	139	433.	1		1540	189	91.
1		0315	40	18187.	1		0725	90	977.	1		1135	140	425.	1		1545	190	83.
1		0320	41	15851.	1		0730	91	969.	1		1140	141	416.	1		1550	191	78.
1		0325	42	13827.	1		0735	92	961.	1		1145	142	408.	1		1555	192	73.
1		0330	43	12145.	1		0740	93	952.	1		1150	143	400.	1		1600	193	67.
1		0335	44	10840.	1		0745	94	944.	1		1155	144	393.	1		1605	194	62.
1		0340	45	9786.	1		0750	95	935.	1		1200	145	379.	1		1610	195	57.
1		0345	46	8967.	1		0755	96	927.	1		1205	146	357.	1		1615	196	52.
1		0350	47	8378.	1		0800	97	919.	1		1210	147	331.	1		1620	197	47.
1		0355	48	7888.	1		0805	98	912.	1		1215	148	306.	1		1625	198	43.
1		0400	49	7474.	1		0810	99	906.	1		1220	149	283.	1		1630	199	39.
1		0405	50	7096.	1		0815	100	900.	1		1225	150	265.	1		1635	200	35.

PEAK FLOW (CFS)	TIME (HR)		MAXIMUM AVERAGE FLOW 6-HR	24-HR	72-HR	16.58-HR
65342.	2.50	(CFS)	10238.	4023.	4023.	4023.
		(INCHES)	13.351	14.498	14.498	14.498

(AC-FT) 5077. 5513. 5513. 5513.

CUMULATIVE AREA = 7.13 SQ MI

HYDROGRAPH AT C599I
TRANSPOSITION AREA 2.0 SQ MI

DA	MON	HRMN	ORD	FLOW	DA	MON	HRMN	ORD	FLOW	DA	MON	HRMN	ORD	FLOW	DA	MON	HRMN	ORD	FLOW
1		0000	1	2557.	1		0410	51	6866.	1		0820	101	885.	1		1230	151	239.
1		0005	2	2393.	1		0415	52	6272.	1		0825	102	878.	1		1235	152	228.
1		0010	3	2098.	1		0420	53	5688.	1		0830	103	870.	1		1240	153	219.
1		0015	4	1857.	1		0425	54	5055.	1		0835	104	862.	1		1245	154	211.
1		0020	5	1662.	1		0430	55	4418.	1		0840	105	854.	1		1250	155	205.
1		0025	6	1533.	1		0435	56	3837.	1		0845	106	845.	1		1255	156	199.
1		0030	7	1441.	1		0440	57	3328.	1		0850	107	834.	1		1300	157	196.
1		0035	8	1366.	1		0445	58	2947.	1		0855	108	822.	1		1305	158	192.
1		0040	9	1306.	1		0450	59	2660.	1		0900	109	809.	1		1310	159	187.
1		0045	10	1257.	1		0455	60	2420.	1		0905	110	794.	1		1315	160	183.
1		0050	11	1218.	1		0500	61	2213.	1		0910	111	777.	1		1320	161	178.
1		0055	12	1185.	1		0505	62	2034.	1		0915	112	759.	1		1325	162	174.
1		0100	13	1159.	1		0510	63	1865.	1		0920	113	730.	1		1330	163	170.
1		0105	14	1144.	1		0515	64	1699.	1		0925	114	690.	1		1335	164	166.
1		0110	15	1149.	1		0520	65	1564.	1		0930	115	657.	1		1340	165	162.
1		0115	16	1168.	1		0525	66	1449.	1		0935	116	630.	1		1345	166	158.
1		0120	17	1190.	1		0530	67	1362.	1		0940	117	607.	1		1350	167	155.
1		0125	18	1223.	1		0535	68	1306.	1		0945	118	589.	1		1355	168	151.
1		0130	19	1263.	1		0540	69	1264.	1		0950	119	574.	1		1400	169	148.
1		0135	20	1303.	1		0545	70	1228.	1		0955	120	560.	1		1405	170	145.
1		0140	21	1343.	1		0550	71	1199.	1		1000	121	549.	1		1410	171	142.
1		0145	22	1380.	1		0555	72	1179.	1		1005	122	542.	1		1415	172	139.
1		0150	23	1416.	1		0600	73	1165.	1		1010	123	534.	1		1420	173	136.
1		0155	24	1449.	1		0605	74	1151.	1		1015	124	527.	1		1425	174	133.
1		0200	25	1481.	1		0610	75	1129.	1		1020	125	521.	1		1430	175	130.
1		0205	26	3194.	1		0615	76	1102.	1		1025	126	514.	1		1435	176	128.
1		0210	27	9901.	1		0620	77	1084.	1		1030	127	508.	1		1440	177	125.
1		0215	28	23058.	1		0625	78	1070.	1		1035	128	501.	1		1445	178	122.
1		0220	29	42115.	1		0630	79	1059.	1		1040	129	495.	1		1450	179	120.
1		0225	30	59467.	1		0635	80	1048.	1		1045	130	489.	1		1455	180	117.
1		0230	31	63996.	1		0640	81	1039.	1		1050	131	483.	1		1500	181	115.
1		0235	32	60363.	1		0645	82	1030.	1		1055	132	476.	1		1505	182	113.
1		0240	33	54212.	1		0650	83	1022.	1		1100	133	470.	1		1510	183	110.
1		0245	34	46934.	1		0655	84	1013.	1		1105	134	463.	1		1515	184	108.
1		0250	35	39384.	1		0700	85	1005.	1		1110	135	457.	1		1520	185	106.
1		0255	36	32884.	1		0705	86	997.	1		1115	136	449.	1		1525	186	103.
1		0300	37	27789.	1		0710	87	990.	1		1120	137	442.	1		1530	187	97.
1		0305	38	23307.	1		0715	88	983.	1		1125	138	434.	1		1535	188	89.
1		0310	39	19712.	1		0720	89	975.	1		1130	139	425.	1		1540	189	82.
1		0315	40	16841.	1		0725	90	967.	1		1135	140	417.	1		1545	190	77.
1		0320	41	14710.	1		0730	91	959.	1		1140	141	409.	1		1550	191	72.
1		0325	42	12886.	1		0735	92	951.	1		1145	142	401.	1		1555	192	66.
1		0330	43	11484.	1		0740	93	942.	1		1150	143	393.	1		1600	193	61.
1		0335	44	10391.	1		0745	94	933.	1		1155	144	382.	1		1605	194	56.
1		0340	45	9527.	1		0750	95	925.	1		1200	145	362.	1		1610	195	51.
1		0345	46	8874.	1		0755	96	917.	1		1205	146	337.	1		1615	196	46.
1		0350	47	8409.	1		0800	97	910.	1		1210	147	311.	1		1620	197	42.
1		0355	48	8004.	1		0805	98	904.	1		1215	148	288.	1		1625	198	38.
1		0400	49	7668.	1		0810	99	899.	1		1220	149	268.	1		1630	199	35.
1		0405	50	7335.	1		0815	100	892.	1		1225	150	253.	1		1635	200	31.

PEAK FLOW (CFS)	TIME (HR)		MAXIMUM AVERAGE FLOW 6-HR	24-HR	72-HR	16.58-HR
		(CFS)				
63996.	2.50		10002.	3931.	3931.	3931.
		(INCHES)	13.043	14.166	14.166	14.166
		(AC-FT)	4960.	5387.	5387.	5387.

CUMULATIVE AREA = 7.13 SQ MI

HYDROGRAPH AT C599I
TRANSPOSITION AREA 2.2 SQ MI

DA	MON	HRMN	ORD	FLOW	DA	MON	HRMN	ORD	FLOW	DA	MON	HRMN	ORD	FLOW	DA	MON	HRMN	ORD	FLOW
1		0000	1	2557.	1		0410	51	6866.	1		0820	101	885.	1		1230	151	239.

DA	MON	HRMN	ORD	FLOW	DA	MON	HRMN	ORD	FLOW	DA	MON	HRMN	ORD	FLOW	DA	MON	HRMN	ORD	FLOW
1		0005	2	2393.	1		0415	52	6272.	1		0825	102	878.	1		1235	152	228.
1		0010	3	2098.	1		0420	53	5688.	1		0830	103	870.	1		1240	153	219.
1		0015	4	1857.	1		0425	54	5055.	1		0835	104	862.	1		1245	154	211.
1		0020	5	1662.	1		0430	55	4418.	1		0840	105	854.	1		1250	155	205.
1		0025	6	1533.	1		0435	56	3837.	1		0845	106	845.	1		1255	156	199.
1		0030	7	1441.	1		0440	57	3328.	1		0850	107	834.	1		1300	157	196.
1		0035	8	1366.	1		0445	58	2947.	1		0855	108	822.	1		1305	158	192.
1		0040	9	1306.	1		0450	59	2660.	1		0900	109	809.	1		1310	159	187.
1		0045	10	1257.	1		0455	60	2420.	1		0905	110	794.	1		1315	160	183.
1		0050	11	1218.	1		0500	61	2213.	1		0910	111	777.	1		1320	161	178.
1		0055	12	1185.	1		0505	62	2034.	1		0915	112	759.	1		1325	162	174.
1		0100	13	1159.	1		0510	63	1865.	1		0920	113	730.	1		1330	163	170.
1		0105	14	1144.	1		0515	64	1699.	1		0925	114	690.	1		1335	164	166.
1		0110	15	1149.	1		0520	65	1564.	1		0930	115	657.	1		1340	165	162.
1		0115	16	1168.	1		0525	66	1449.	1		0935	116	630.	1		1345	166	158.
1		0120	17	1190.	1		0530	67	1362.	1		0940	117	607.	1		1350	167	155.
1		0125	18	1223.	1		0535	68	1306.	1		0945	118	589.	1		1355	168	151.
1		0130	19	1263.	1		0540	69	1264.	1		0950	119	574.	1		1400	169	148.
1		0135	20	1303.	1		0545	70	1228.	1		0955	120	560.	1		1405	170	145.
1		0140	21	1343.	1		0550	71	1199.	1		1000	121	549.	1		1410	171	142.
1		0145	22	1380.	1		0555	72	1179.	1		1005	122	542.	1		1415	172	139.
1		0150	23	1416.	1		0600	73	1165.	1		1010	123	534.	1		1420	173	136.
1		0155	24	1449.	1		0605	74	1151.	1		1015	124	527.	1		1425	174	133.
1		0200	25	1481.	1		0610	75	1129.	1		1020	125	521.	1		1430	175	130.
1		0205	26	3194.	1		0615	76	1102.	1		1025	126	514.	1		1435	176	128.
1		0210	27	9901.	1		0620	77	1084.	1		1030	127	508.	1		1440	177	125.
1		0215	28	23058.	1		0625	78	1070.	1		1035	128	501.	1		1445	178	122.
1		0220	29	42115.	1		0630	79	1059.	1		1040	129	495.	1		1450	179	120.
1		0225	30	59467.	1		0635	80	1048.	1		1045	130	489.	1		1455	180	117.
1		0230	31	63996.	1		0640	81	1039.	1		1050	131	483.	1		1500	181	115.
1		0235	32	60363.	1		0645	82	1030.	1		1055	132	476.	1		1505	182	113.
1		0240	33	54212.	1		0650	83	1022.	1		1100	133	470.	1		1510	183	110.
1		0245	34	46934.	1		0655	84	1013.	1		1105	134	463.	1		1515	184	108.
1		0250	35	39384.	1		0700	85	1005.	1		1110	135	457.	1		1520	185	106.
1		0255	36	32884.	1		0705	86	997.	1		1115	136	449.	1		1525	186	103.
1		0300	37	27789.	1		0710	87	990.	1		1120	137	442.	1		1530	187	97.
1		0305	38	23307.	1		0715	88	983.	1		1125	138	434.	1		1535	188	89.
1		0310	39	19712.	1		0720	89	975.	1		1130	139	425.	1		1540	189	82.
1		0315	40	16841.	1		0725	90	967.	1		1135	140	417.	1		1545	190	77.
1		0320	41	14710.	1		0730	91	959.	1		1140	141	409.	1		1550	191	72.
1		0325	42	12886.	1		0735	92	951.	1		1145	142	401.	1		1555	192	66.
1		0330	43	11484.	1		0740	93	942.	1		1150	143	393.	1		1600	193	61.
1		0335	44	10391.	1		0745	94	933.	1		1155	144	382.	1		1605	194	56.
1		0340	45	9527.	1		0750	95	925.	1		1200	145	362.	1		1610	195	51.
1		0345	46	8874.	1		0755	96	917.	1		1205	146	337.	1		1615	196	46
1		0350	47	8409.	1		0800	97	910.	1		1210	147	311.	1		1620	197	42.
1		0355	48	8004.	1		0805	98	904.	1		1215	148	288.	1		1625	198	38.
1		0400	49	7668.	1		0810	99	899.	1		1220	149	268.	1		1630	199	35.
1		0405	50	7335.	1		0815	100	892.	1		1225	150	253.	1		1635	200	31.

PEAK FLOW (CFS)	TIME (HR)		MAXIMUM AVERAGE FLOW 6-HR	24-HR	72-HR	16.58-HR
		(CFS)				
63996.	2.50		10002.	3931.	3931.	3931.
		(INCHES)	13.043	14.166	14.166	14.166
		(AC-FT)	4960.	5387.	5387.	5387.

CUMULATIVE AREA = 7.13 SQ MI

HYDROGRAPH AT C599I
TRANSPOSITION AREA 7.2 SQ MI

DA	MON	HRMN	ORD	FLOW	DA	MON	HRMN	ORD	FLOW	DA	MON	HRMN	ORD	FLOW	DA	MON	HRMN	ORD	FLOW
1		0000	1	2557.	1		0410	51	5740.	1		0820	101	888.	1		1230	151	239.
1		0005	2	2391.	1		0415	52	5247.	1		0825	102	880.	1		1235	152	228.
1		0010	3	2090.	1		0420	53	4786.	1		0830	103	873.	1		1240	153	219.
1		0015	4	1839.	1		0425	54	4319.	1		0835	104	865.	1		1245	154	211.
1		0020	5	1635.	1		0430	55	3859.	1		0840	105	857.	1		1250	155	205.
1		0025	6	1500.	1		0435	56	3423.	1		0845	106	848.	1		1255	156	200.
1		0030	7	1401.	1		0440	57	3063.	1		0850	107	838.	1		1300	157	196.
1		0035	8	1319.	1		0445	58	2791.	1		0855	108	827.	1		1305	158	192.
1		0040	9	1251.	1		0450	59	2565.	1		0900	109	814.	1		1310	159	188.
1		0045	10	1196.	1		0455	60	2375.	1		0905	110	801.	1		1315	160	183.
1		0050	11	1155.	1		0500	61	2209.	1		0910	111	785.	1		1320	161	179.
1		0055	12	1127.	1		0505	62	2062.	1		0915	112	766.	1		1325	162	174
1		0100	13	1108.	1		0510	63	1898.	1		0920	113	744.	1		1330	163	170
1		0105	14	1101.	1		0515	64	1733.	1		0925	114	709.	1		1335	164	166.
1		0110	15	1113.	1		0520	65	1604.	1		0930	115	673.	1		1340	165	162.
1		0115	16	1134.	1		0525	66	1491.	1		0935	116	642.	1		1345	166	159.

1	0120	17	1144.	*	1	0530	67	1399.	*	1	0940	117	618.	*	1	1350	167	155.
1	0125	18	1150.	*	1	0535	68	1334.	*	1	0945	118	597.	*	1	1355	168	152.
1	0130	19	1158.	*	1	0540	69	1286.	*	1	0950	119	580.	*	1	1400	169	148.
1	0135	20	1171.	*	1	0545	70	1246.	*	1	0955	120	565.	*	1	1405	170	145.
1	0140	21	1192.	*	1	0550	71	1212.	*	1	1000	121	552.	*	1	1410	171	142.
1	0145	22	1214.	*	1	0555	72	1185.	*	1	1005	122	544.	*	1	1415	172	139.
1	0150	23	1238.	*	1	0600	73	1167.	*	1	1010	123	536.	*	1	1420	173	136.
1	0155	24	1267.	*	1	0605	74	1152.	*	1	1015	124	529.	*	1	1425	174	133.
1	0200	25	1298.	*	1	0610	75	1129.	*	1	1020	125	522.	*	1	1430	175	131.
1	0205	26	2898.	*	1	0615	76	1103.	*	1	1025	126	515.	*	1	1435	176	128.
1	0210	27	8998.	*	1	0620	77	1085.	*	1	1030	127	509.	*	1	1440	177	125.
1	0215	28	20729.	*	1	0625	78	1072.	*	1	1035	128	502.	*	1	1445	178	123.
1	0220	29	37579.	*	1	0630	79	1060.	*	1	1040	129	496.	*	1	1450	179	120.
1	0225	30	53555.	*	1	0635	80	1050.	*	1	1045	130	490.	*	1	1455	180	118.
1	0230	31	58742.	*	1	0640	81	1040.	*	1	1050	131	483.	*	1	1500	181	115.
1	0235	32	55827.	*	1	0645	82	1032.	*	1	1055	132	477.	*	1	1505	182	113.
1	0240	33	50573.	*	1	0650	83	1023.	*	1	1100	133	471.	*	1	1510	183	111.
1	0245	34	43762.	*	1	0655	84	1015.	*	1	1105	134	464.	*	1	1515	184	108.
1	0250	35	36833.	*	1	0700	85	1007.	*	1	1110	135	457.	*	1	1520	185	106.
1	0255	36	31126.	*	1	0705	86	999.	*	1	1115	136	450.	*	1	1525	186	103.
1	0300	37	26524.	*	1	0710	87	991.	*	1	1120	137	442.	*	1	1530	187	98.
1	0305	38	22645.	*	1	0715	88	984.	*	1	1125	138	434.	*	1	1535	188	90.
1	0310	39	19477.	*	1	0720	89	977.	*	1	1130	139	426.	*	1	1540	189	82.
1	0315	40	16714.	*	1	0725	90	969.	*	1	1135	140	418.	*	1	1545	190	77.
1	0320	41	14531.	*	1	0730	91	961.	*	1	1140	141	410.	*	1	1550	191	72.
1	0325	42	12595.	*	1	0735	92	952.	*	1	1145	142	402.	*	1	1555	192	67.
1	0330	43	11015.	*	1	0740	93	944.	*	1	1150	143	394.	*	1	1600	193	62.
1	0335	44	9741.	*	1	0745	94	935.	*	1	1155	144	382.	*	1	1605	194	56.
1	0340	45	8722.	*	1	0750	95	927.	*	1	1200	145	363.	*	1	1610	195	51.
1	0345	46	7988.	*	1	0755	96	919.	*	1	1205	146	337.	*	1	1615	196	47.
1	0350	47	7401.	*	1	0800	97	912.	*	1	1210	147	311.	*	1	1620	197	42.
1	0355	48	6907.	*	1	0805	98	906.	*	1	1215	148	288.	*	1	1625	198	39.
1	0400	49	6511.	*	1	0810	99	900.	*	1	1220	149	268.	*	1	1630	199	35.
1	0405	50	6157.	*	1	0815	100	894.	*	1	1225	150	253.	*	1	1635	200	32.

PEAK FLOW (CFS)	TIME (HR)		MAXIMUM AVERAGE FLOW 6-HR	24-HR	72-HR	16.58-HR
+ 58742.	2.50	(CFS)	9284.	3672.	3672.	3672.
		(INCHES)	12.106	13.234	13.234	13.234
		(AC-FT)	4604.	5032.	5032.	5032.

CUMULATIVE AREA = 7.13 SQ MI

INTERPOLATED HYDROGRAPH AT C599I

DA	MON	HRMN	ORD	FLOW	DA	MON	HRMN	ORD	FLOW	DA	MON	HRMN	ORD	FLOW	DA	MON	HRMN	ORD	FLOW
1		0000	1	2557.	1		0410	51	5743.	1		0820	101	888.	1		1230	151	239.
1		0005	2	2391.	1		0415	52	5250.	1		0825	102	880.	1		1235	152	228.
1		0010	3	2090.	1		0420	53	4788.	1		0830	103	873.	1		1240	153	219.
1		0015	4	1839.	1		0425	54	4320.	1		0835	104	865.	1		1245	154	211.
1		0020	5	1635.	1		0430	55	3861.	1		0840	105	857.	1		1250	155	205.
1		0025	6	1501.	1		0435	56	3424.	1		0845	106	848.	1		1255	156	200.
1		0030	7	1401.	1		0440	57	3064.	1		0850	107	838.	1		1300	157	196.
1		0035	8	1319.	1		0445	58	2792.	1		0855	108	827.	1		1305	158	192.
1		0040	9	1252.	1		0450	59	2565.	1		0900	109	814.	1		1310	159	188.
1		0045	10	1196.	1		0455	60	2375.	1		0905	110	801.	1		1315	160	183.
1		0050	11	1155.	1		0500	61	2209.	1		0910	111	785.	1		1320	161	179.
1		0055	12	1127.	1		0505	62	2062.	1		0915	112	766.	1		1325	162	174.
1		0100	13	1109.	1		0510	63	1898.	1		0920	113	744.	1		1330	163	170.
1		0105	14	1101.	1		0515	64	1733.	1		0925	114	709.	1		1335	164	166.
1		0110	15	1113.	1		0520	65	1604.	1		0930	115	673.	1		1340	165	162.
1		0115	16	1134.	1		0525	66	1491.	1		0935	116	642.	1		1345	166	159.
1		0120	17	1144.	1		0530	67	1399.	1		0940	117	618.	1		1350	167	155.
1		0125	18	1151.	1		0535	68	1334.	1		0945	118	597.	1		1355	168	152.
1		0130	19	1158.	1		0540	69	1286.	1		0950	119	580.	1		1400	169	148.
1		0135	20	1172.	1		0545	70	1246.	1		0955	120	565.	1		1405	170	145.
1		0140	21	1192.	1		0550	71	1212.	1		1000	121	552.	1		1410	171	142.
1		0145	22	1214.	1		0555	72	1185.	1		1005	122	544.	1		1415	172	139.
1		0150	23	1239.	1		0600	73	1167.	1		1010	123	536.	1		1420	173	136.
1		0155	24	1267.	1		0605	74	1152.	1		1015	124	529.	1		1425	174	133.
1		0200	25	1298.	1		0610	75	1129.	1		1020	125	522.	1		1430	175	131.
1		0205	26	2898.	1		0615	76	1103.	1		1025	126	515.	1		1435	176	128.
1		0210	27	9000.	1		0620	77	1085.	1		1030	127	509.	1		1440	177	125.
1		0215	28	20735.	1		0625	78	1072.	1		1035	128	502.	1		1445	178	123.
1		0220	29	37590.	1		0630	79	1060.	1		1040	129	496.	1		1450	179	120.
1		0225	30	53569.	1		0635	80	1050.	1		1045	130	490.	1		1455	180	118.
1		0230	31	58754.	1		0640	81	1040.	1		1050	131	483.	1		1500	181	115.
1		0235	32	55837.	1		0645	82	1032.	1		1055	132	477.	1		1505	182	113.

1	0240	33	52581.	*	1	0650	83	1023.	*	1	1100	133	471.	*	1	1510	183	111.
1	0245	34	43769.	*	1	0655	84	1015.	*	1	1105	134	464.	*	1	1515	184	108.
1	0250	35	36839.	*	1	0700	85	1007.	*	1	1110	135	457.	*	1	1520	185	106.
1	0255	36	31131.	*	1	0705	86	999.	*	1	1115	136	450.	*	1	1525	186	103.
1	0300	37	26527.	*	1	0710	87	991.	*	1	1120	137	442.	*	1	1530	187	98.
1	0305	38	22646.	*	1	0715	88	984.	*	1	1125	138	434.	*	1	1535	188	90.
1	0310	39	19477.	*	1	0720	89	977.	*	1	1130	139	426.	*	1	1540	189	82.
1	0315	40	16714.	*	1	0725	90	969.	*	1	1135	140	418.	*	1	1545	190	77.
1	0320	41	14532.	*	1	0730	91	961.	*	1	1140	141	410.	*	1	1550	191	72.
1	0325	42	12596.	*	1	0735	92	952.	*	1	1145	142	402.	*	1	1555	192	67.
1	0330	43	11016.	*	1	0740	93	944.	*	1	1150	143	394.	*	1	1600	193	62.
1	0335	44	9743.	*	1	0745	94	935.	*	1	1155	144	382.	*	1	1605	194	56.
1	0340	45	8724.	*	1	0750	95	927.	*	1	1200	145	363.	*	1	1610	195	51.
1	0345	46	7991.	*	1	0755	96	919.	*	1	1205	146	337.	*	1	1615	196	47.
1	0350	47	7404.	*	1	0800	97	912.	*	1	1210	147	311.	*	1	1620	197	42.
1	0355	48	6910.	*	1	0805	98	906.	*	1	1215	148	288.	*	1	1625	198	39.
1	0400	49	6514.	*	1	0810	99	900.	*	1	1220	149	268.	*	1	1630	199	35.
1	0405	50	6160.	*	1	0815	100	894.	*	1	1225	150	253.	*	1	1635	200	32.
				*					*					*				

****

PEAK FLOW (CFS)	TIME (HR)		MAXIMUM AVERAGE FLOW 6-HR	24-HR	72-HR	16.58-HR
		(CFS)				
58754.	2.50		9286.	3673.	3673.	3673.
		(INCHES)	12.108	13.236	13.236	13.236
		(AC-FT)	4604.	5033.	5033.	5033.

CUMULATIVE AREA = 7.13 SQ MI

1

RUNOFF SUMMARY
FLOW IN CUBIC FEET PER SECOND
TIME IN HOURS, AREA IN SQUARE MILES

	OPERATION	STATION	PEAK FLOW	TIME OF PEAK	AVERAGE FLOW FOR MAXIMUM PERIOD 6-HOUR	24-HOUR	72-HOUR	BASIN AREA	MAXIMUM STAGE	TIME OF MAX STAGE
+	HYDROGRAPH AT	C560I	17974.	2.58	2897.	1051.	1051.	2.15		
+	ROUTED TO	C560O	16821.	2.67	2891.	1183.	1183.	2.15		
+	ROUTED TO	560599	16460.	2.67	2891.	1185.	1185.	2.15		
+	HYDROGRAPH AT	C578I	26969.	2.33	2850.	1033.	1033.	2.00		
+	ROUTED TO	C578O	26375.	2.42	2903.	1149.	1149.	2.00		
+	ROUTED TO	578599	24197.	2.42	2920.	1160.	1160.	2.00		
+	HYDROGRAPH AT	C584I	20238.	2.33	2265.	821.	821.	1.60		
+	ROUTED TO	C584O	20283.	2.42	2311.	899.	899.	1.60		
+	ROUTED TO	584599	17009.	2.50	2335.	916.	916.	1.60		
+	HYDROGRAPH AT	C210	19580.	2.33	1956.	708.	708.	1.38		
+	4 COMBINED AT	C599I	58754.	2.50	9286.	3673.	3673.	7.13		

*** NORMAL END OF HEC-1 ***

```
****************************************
                                       *
  FLOOD HYDROGRAPH PACKAGE  (HEC-1)    *
            MAY   1991                 *
         VERSION 4.0.1E                *
    Lahey F77L-EM/32 version 5.01      *
      Dodson & Associates, Inc.        *
 RUN DATE  03/02/99  TIME  16:00:49    *
****************************************
```

```
****************************************
*                                      *
*    U.S. ARMY CORPS OF ENGINEERS      *
*    HYDROLOGIC ENGINEERING CENTER     *
*          609 SECOND STREET           *
*       DAVIS, CALIFORNIA 95616        *
*           (916) 551-1748             *
*                                      *
****************************************
```

```
X     X  XXXXXXX   XXXXX           X
X     X  X        X     X         XX
X     X  X        X                X
XXXXXXX  XXXX     X        XXXXX   X
X     X  X        X                X
X     X  X        X     X          X
X     X  XXXXXXX   XXXXX          XXX
```

THIS PROGRAM REPLACES ALL PREVIOUS VERSIONS OF HEC-1 KNOWN AS HEC1 (JAN 73), HEC1GS, HEC1DB, AND HEC1KW.

THE DEFINITIONS OF VARIABLES -RTIMP- AND -RTIOR- HAVE CHANGED FROM THOSE USED WITH THE 1973-STYLE INPUT STRUCTURE.
THE DEFINITION OF -AMSKK- ON RM-CARD WAS CHANGED WITH REVISIONS DATED 28 SEP 81. THIS IS THE FORTRAN77 VERSION
NEW OPTIONS: DAMBREAK OUTFLOW SUBMERGENCE , SINGLE EVENT DAMAGE CALCULATION, DSS:WRITE STAGE FREQUENCY,
DSS:READ TIME SERIES AT DESIRED CALCULATION INTERVAL LOSS RATE:GREEN AND AMPT INFILTRATION
KINEMATIC WAVE: NEW FINITE DIFFERENCE ALGORITHM

```
LINE          ID.......1.......2.......3.......4.......5.......6.......7.......8.......9......10

  1           ID        Golden Eagle Park Dam (FCD 97-44)
  2           ID        IDF1 Model for the Computation of IDF for Golden Eagle Park Dam
  3           ID        ****************************************************************
  4           ID        Analytical Considerations:
  5           ID            Includes Breach of North Heights Dam
  6           ID            Single Basin Model
  7           ID            This model considers areal reduction method.
  8           ID        ****************************************************************
  9           ID
 10           ID      FILE:  IDF1.DAT
 11           ID      DATE: OCTOBER 1998 (by FCDMC)
 12           ID      Modified by Stantec - February 1999
 13           ID
 14           ID     THIS MODEL WAS ALTERED BY FCDMC FROM THE ORIGINAL MODEL- GEPD-PMF.DAT
 15           ID     FROM THE GOLDEN EAGLE PARK DAM FEASIBILITY STUDY DONE BY GEORGE V.
 16           ID     SABOL CONSULTING ENGINEERS, INC. (GVSCE), JULY 1997
 17           ID
 18           ID    THE MODEL HAS THE FOLLOWING ADJUSTMENTS (BY FCDMC):FROM THE ORIGINAL
 19           ID     1.)  THE SINGLE BASIN FOR THE NORTH HEIGHTS DAM WATERSHED HAS BEEN
 20           ID          REMOVED.  IN ITS PLACE ARE QI CARDS TAKEN FROM THE DAM BREACH
 21           ID          HEC-1 FOR NORTH HEIGHTS DAM (GVSCE, JANUARY 1996).
 22           ID     2.)  BEFORE EACH WATERSHED IS ROUTED THROUGH ITS RESPECTIVE DAM,
 23           ID          HALF OF THE FLOW IS DIVERTED OUT TO REFLECT THE HALF PMF EVENT.
 24           ID          THE SAME WAS ALSO DONE ON THE WATERSHED (BASIN S210) BETWEEN THE THREE
 25           ID          UPPER DAMS AND GEPD.THE BREACH HYDROGRAPH ALREADY IS HALF PMF.
 26           ID     3.)  THE RATING CURVES FOR ASPEN AND SUNRIDGE CANYON DAMS WERE ALTERED
 27           ID          THE NEW RATING CURVES WERE DEVELOPED USING THE EQUATION Q=CLH3/2.
 28           ID          THE RATING CURVES WERE ALTERED TO MAKE THE SPILLWAY LENGTH LONG
 29           ID          ENOUGH TO PASS THE HALF PMF THROUGH THE DAM WITH THE REQUIRED
 30           ID          THREE FEET OF FREEBOARD.
 31           ID          C = 2.6
 32           ID     4.)  IN THIS MODEL THE PRINCIPLE SPILLWAYS OF ASPEN AND SUNRIDGE CANYON DAM
 33           ID          ARE UNCLOGGED.
 34           ID     5.)  THE INITIAL WATER SURFACE ELEVATION FOR EACH OF THE DAMS WAS
 35           ID          SET TO THE WSEL OF THE 100 YEAR EVENT
 36           ID     NOTE:MODIFICATIONS BY STANTEC ARE EDITORIAL ONLY.  THE ORIGINAL GVSCE MODEL
 37           ID          AND REVISIONS BY FCDMC ARE ACCEPTED.  THE ROUTING (BY FCDMC) OF THE
 38           ID          IDF1 HYDROGRAPH THROUGH THE EXISTING GEP DAM IS DELETED.
              *DIAGRAM
 39           IT       5 02JUN98             210
 40           IO       4
 41           IN      15
              *
 42           JD   15.00    0.01
 43           PI   0.075   0.075   0.075   0.075     0.2     0.2     0.2     0.2     8.2     1.8
 44           PI     0.7     0.7     0.4     0.4     0.4     0.4    0.15    0.15    0.15    0.15
 45           PI   0.075   0.075   0.075   0.075
 46           JD   15.00   1.603
 47           PI   0.075   0.075   0.075   0.075     0.2     0.2     0.2     0.2     8.2     1.8
 48           PI     0.7     0.7     0.4     0.4     0.4     0.4    0.15    0.15    0.15    0.15
 49           PI   0.075   0.075   0.075   0.075
 50           JD   14.70   2.000
 51           PI     0.1     0.1     0.1     0.1     0.2     0.2     0.2     0.2     8.0     1.8
 52           PI     0.7     0.5   0.425   0.425   0.425   0.425   0.125   0.125   0.125   0.125
 53           PI   0.075   0.075   0.075   0.075
```

```
LINE          ID.......1.......2.......3.......4.......5.......6.......7.......8.......9......10

  54          JD   14.70   2.150
  55          PI     0.1     0.1     0.1     0.1     0.2     0.2     0.2     0.2     8.0     1.8
  56          PI     0.7     0.5   0.425   0.425   0.425   0.425   0.125   0.125   0.125   0.125
  57          PI   0.075   0.075   0.075   0.075
  58          JD   13.70   7.150
  59          PI   0.075   0.075   0.075   0.075     0.2     0.2     0.2     0.2     8.0     1.8
  60          PI     0.7     0.7   0.375   0.375   0.375   0.375    0.15    0.15    0.15    0.15
  61          PI   0.075   0.075   0.075   0.075

  62          KK   C560I
  63          KM        BASIN S207 (ASPEN DAM)
  64          KM        THE FOLLOWING PARAMETERS WERE PROVIDED FOR THIS BASIN
  65          KM        L=      3.9  Lca=      2.2   S=  464.7  Kn= .030  LAG=  30.6
  66          KM        PHOENIX MOUNTAIN S-GRAPH WAS USED FOR THIS BASIN
  67          BA    2.15
  68          LG     .17     .31    4.90    0.29   31.55
  69          UI    237.    523.   1170.   1651.   2163.   2377.   1509.   1274.   1082.    897.
  70          UI    699.    573.    507.    374.    299.    259.    198.    181.    119.    116.
  71          UI    111.     45.     45.     45.     45.     45.     45.     45.      0.      0.
  72          UI      0.      0.      0.      0.      0.      0.      0.      0.      0.      0.
  73          UI      0.      0.      0.      0.      0.      0.      0.      0.      0.      0.

  74          KK   0.5PMF
  75          KM    THIS DIVERT IS USED TO REMOVE HALF THE FLOWS BEFORE ROUTING THROUGH
  76          KM    THE DAM
  77          DT   .5PMF
  78          DI       0      50     100   10000
  79          DQ       0      25      50    5000
              *

  80          KK   C560O
  81          KM      Reservoir route at C560 (ASPEN DAM).
  82          KM    THE SQ CARDS HAVE BEEN ALTERED FROM THE ORIGINAL MODEL (GEPD-PMF.DAT) FROM
  83          KM    THE GEPD FEASIBILITY STUDY (GVSCE, 1997)
  84          KM     SEE COMMENT NUMBER 3 ABOVE
  85          RS       1    ELEV 1835.36
  86          SV    0.00    7.09   34.65   75.98  135.64  191.44  208.31  226.53  246.00  266.28
  87          SV  289.00  310.81  336.00
  88          SE  1808.8 1814.00 1820.00 1826.00 1832.00 1836.00 1837.00 1838.00 1839.00 1840.00
  89          SE  1841.0 1842.00 1843.00
  90          SQ       0     102     184     242     285     907    1913    3718    5913    8428
  91          SQ   11432   14486   17540
              *

  92          KK  560599
  93          KM      Normal depth channel route (ASPEN DAM TO GEP DAM)
  94          RS       1    FLOW      -1
  95          RC   0.050   0.025   0.050  3127.0  0.0272
  96          RX  9850.4  9950.4  9974.4 10000.0 10035.5 10059.8 10080.4 10104.4
  97          RY  1772.0  1771.7  1765.3  1765.3  1765.9  1768.5  1773.3  1773.7
              *
```

```
LINE          ID.......1.......2.......3.......4.......5.......6.......7.......8.......9......10

 98           KK  DAMFLO
 99           KM    OUTFLOW FROM DAM BREACH OF NORTH HEIGHTS DAM
100           KM    THESE OUTFLOWS WERE TAKEN FROM THE DAM BREAK ANALYSIS STUDY (GVSCE, JANUARY
101           KM    FOR THE FOUNTAIN HILLS DAMS.  THE NUMBERS WERE TAKEN FROM THE DAM BREAK MODE
102           KM    FOR GOLDEN EAGLE PARK DAM
103           IN       5
104           KO       1
105           BA    2.02
106           QI     781     493     408     353     306     267     235     210     189     172
107           QI     159     148     140     134     131     133     140     153     170     190
108           QI     212     234     254     274     292     415    1175    3086  6860.3   21573
109           QI   29206 13111.4  7068.4  6196.2  5139.0  4067.1  3127.9    2838    2412    2076
110           QI    1801    1569    1410    1275    1172    1092    1029     983     951     922
111           QI     887     841     779     707     631     560     499     460     444     429
112           QI     414     399     384     369     352     334     314     294     275     257
113           QI     241     226     212     199     187     175     163     150     138     126
114           QI     115     104      94      84      75      68      60      54      48      43
115           QI      38      34      30      27      23      21      18      16      14      12
116           QI      11      10       8       7       6       6       5       4       4       3
117           QI       3       3       2       2       2       2       1       1       1       1
118           QI       1       1       1       1       1       1       1       1       1       1
119           QI       1

120           KK  578599
121           KM      Normal depth channel route (North Heights Dam to GEP Dam)
122           RS       1    FLOW      -1
123           RC   0.055   0.045   0.055  3762.0 0.01624
124           RX  9928.9  9945.0  9963.1  9990.6 10012.2 10035.4 10052.8 10069.6
125           RY  1755.7  1746.3  1746.1  1741.7  1743.3  1743.7  1744.6  1755.7
              *

126           KK   C584I
127           KM        BASIN S209 (Sunridge Canyon Dam)
128           KM        THE FOLLOWING PARAMETERS WERE PROVIDED FOR THIS BASIN
129           KM        L=      3.2  Lca=      1.7   S=  582.3  Kn= .019  LAG=  15.9
130           KM        PHOENIX MOUNTAIN S-GRAPH WAS USED FOR THIS BASIN
131           BA    1.60
132           LG     .13     .28    4.62     .32   41.50
133           UI    515.   1951.   3289.   2104.   1510.    997.    702.    442.    308.    202.
134           UI    154.     65.     65.     65.      0.      0.      0.      0.      0.      0.
135           UI      0.      0.      0.      0.      0.      0.      0.      0.      0.      0.

136           KK   0.5PMF
137           KM    THIS DIVERT REMOVES HALF THE PMF FLOWS CREATING THE .5 PMF BEFORE
138           KM    BEING ROUTED THROUGH THE DAM
139           DT   .5PMF
140           DI       0      50     100   10000
141           DQ       0      25      50    5000
              *
```

```
LINE          ID.......1.......2.......3.......4.......5.......6.......7.......8.......9......10

 142          KK   C584O
 143          KM      Reservoir route at C584 (Sunridge Canyon Dam).
 144          KM    THE SQ CARDS HAVE BEEN ALTERED FROM THE ORIGINAL MODEL (GEPD-PMF.DAT) FROM
 145          KM    THE GEPD FEASIBILITY STUDY (GVSCE, JULY 1997)
 146          KM    PLEASE SEE COMMENT NUMBER 3 ABOVE
 147          RS       1    ELEV 1926.31
 148          SV    0.00     0.60     4.30    11.27    23.74    46.29    86.65    96.00   104.90   126.25
 149          SV  151.07   165.00   179.50
 150          SE  1884.8 1894.00 1900.00 1906.00 1912.00 1918.00 1924.00 1925.00 1926.00 1928.00
 151          SE  1930.0 1931.00 1932.00
 152          SQ       0      163      223      272      307      333      355      959     1762     6368
 153          SQ   12373    16175    20178
 154          SE  1884.8 1894.00 1900.00 1906.00 1912.00 1918.00 1924.00 1925.00 1926.00 1928.00
 155          SE  1930.0 1931.00 1932.00
              *

 156          KK  584599
 157          KM      Normal depth channel route (Sunridge Canyon Dam to GEP Dam)
 158          RS       1    FLOW      -1
 159          RC   0.065    0.050    0.065   6526.0 0.02571
 160          RX  9927.6   9939.8   9951.9   9985.3 10036.0 10067.5 10119.2 10188.7
 161          RY  1796.3   1791.2   1788.3   1784.1  1784.9  1788.0  1790.2  1796.4
              *

 162          KK    C210
 163          KM        BASIN S210 (GOLDEN EAGLE PARK DAM)
 164          KM        THE FOLLOWING PARAMETERS WERE PROVIDED FOR THIS BASIN
 165          KM        L=       1.9  Lca=        .9   S=  360.7  Kn= .024  LAG=  13.6
 166          KM        PHOENIX MOUNTAIN S-GRAPH WAS USED FOR THIS BASIN
 167          BA    1.38
 168          LG     .09      .24     5.61      .19    24.82
 169          UI    634.    2291.    3040.    1739.    1122.     723.     433.     286.     170.      96.
 170          UI     66.      66.       0.       0.       0.       0.       0.       0.       0.       0.
 171          UI      0.       0.       0.       0.       0.       0.       0.       0.       0.       0.

 172          KK  0.5PMF
 173          KM    THIS DIVERT REMOVES HALF THE FLOWS FROM THIS AREA TO CREATE THE .5PMF
 174          DT  0.5PMF
 175          DI       0       50      100    10000
 176          DQ       0       25       50     5000
              *

 177          KK   C599I
 178          KO       1        2                          21
 179          KM      Hydrograph combine C584O + C560O + C578O + C599
 180          HC       4
 181          ZZ
```

```
                SCHEMATIC DIAGRAM OF STREAM NETWORK
INPUT
 LINE      (V) ROUTING          (--->) DIVERSION OR PUMP FLOW

  NO.      (.) CONNECTOR        (<---) RETURN OF DIVERTED OR PUMPED FLOW

   62       C560I
                .
                .
   77           .-------->   .5PMF
   74       0.5PM
                V
                V
   80       C560O
                V
                V
   92      560599
                .
                .
   98           .      DAMFLO
                .           V
                .           V
  120           .      578599
                .           .
                .           .
  126           .           .       C584I
                .           .           .
                .           .           .
  139           .           .           .-------->   .5PMF
  136           .           .       0.5PM
                .           .           V
                .           .           V
  142           .           .       C584O
                .           .           V
                .           .           V
  156           .           .      584599
                .           .           .
                .           .           .
  162           .           .           .        C210
                .           .           .           .
                .           .           .           .
  174           .           .           .           .-------->  0.5PMF
  172           .           .           .      0.5PMF
                .           .           .           .
                .           .           .           .
  177       C599I.................................
```

(***) RUNOFF ALSO COMPUTED AT THIS LOCATION

```
*****************************************                    *****************************************
*                                       *                    *                                       *
*  FLOOD HYDROGRAPH PACKAGE  (HEC-1)    *                    *   U.S. ARMY CORPS OF ENGINEERS        *
*             MAY   1991                *                    *   HYDROLOGIC ENGINEERING CENTER       *
*          VERSION 4.0.1E               *                    *         609 SECOND STREET             *
*     Lahey F77L-EM/32 version 5.01     *                    *      DAVIS, CALIFORNIA 95616          *
*       Dodson & Associates, Inc.       *                    *          (916) 551-1748               *
*  RUN DATE  03/02/99  TIME  16:00:49   *                    *                                       *
*****************************************                    *****************************************
```

```
                    Golden Eagle Park Dam (FCD 97-44)
                    IDF1 Model for the Computation of IDF for Golden Eagle Park Dam
                    ******************************************************************
                    Analytical Considerations:
                        Includes Breach of North Heights Dam
                        Single Basin Model
                        This model considers areal reduction method.
                    ******************************************************************

                   FILE:  IDF1.DAT
                   DATE: OCTOBER 1998 (by FCDMC)
                   Modified by Stantec - February 1999

                  THIS MODEL WAS ALTERED BY FCDMC FROM THE ORIGINAL MODEL- GEPD-PMF.DAT
                  FROM THE GOLDEN EAGLE PARK DAM FEASIBILITY STUDY DONE BY GEORGE V.
                  SABOL CONSULTING ENGINEERS, INC. (GVSCE), JULY 1997

                 THE MODEL HAS THE FOLLOWING ADJUSTMENTS (BY FCDMC):FROM THE ORIGINAL
                  1.)  THE SINGLE BASIN FOR THE NORTH HEIGHTS DAM WATERSHED HAS BEEN
                       REMOVED.  IN ITS PLACE ARE QI CARDS TAKEN FROM THE DAM BREACH
                       HEC-1 FOR NORTH HEIGHTS DAM (GVSCE, JANUARY 1996).
                  2.)  BEFORE EACH WATERSHED IS ROUTED THROUGH ITS RESPECTIVE DAM,
                       HALF OF THE FLOW IS DIVERTED OUT TO REFLECT THE HALF PMF EVENT.
                       THE SAME WAS ALSO DONE ON THE WATERSHED (BASIN S210) BETWEEN THE THREE
                       UPPER DAMS AND GEPD.THE BREACH HYDROGRAPH ALREADY IS HALF PMF.
                  3.)  THE RATING CURVES FOR ASPEN AND SUNRIDGE CANYON DAMS WERE ALTERED
                       THE NEW RATING CURVES WERE DEVELOPED USING THE EQUATION Q=CLH3/2.
                       THE RATING CURVES WERE ALTERED TO MAKE THE SPILLWAY LENGTH LONG
                       ENOUGH TO PASS THE HALF PMF THROUGH THE DAM WITH THE REQUIRED
                       THREE FEET OF FREEBOARD.
                       C = 2.6
                  4.)  IN THIS MODEL THE PRINCIPLE SPILLWAYS OF ASPEN AND SUNRIDGE CANYON DAM
                       ARE UNCLOGGED.
                  5.)  THE INITIAL WATER SURFACE ELEVATION FOR EACH OF THE DAMS WAS
                       SET TO THE WSEL OF THE 100 YEAR EVENT
                  NOTE:MODIFICATIONS BY STANTEC ARE EDITORIAL ONLY.  THE ORIGINAL GVSCE MODEL
                       AND REVISIONS BY FCDMC ARE ACCEPTED.  THE ROUTING (BY FCDMC) OF THE
                       IDF1 HYDROGRAPH THROUGH THE EXISTING GEP DAM IS DELETED.

40 IO          OUTPUT CONTROL VARIABLES
                     IPRNT           4  PRINT CONTROL
                     IPLOT           0  PLOT CONTROL
                     QSCAL          0.  HYDROGRAPH PLOT SCALE

41 IN          TIME DATA FOR INPUT TIME SERIES
                     JXMIN          15  TIME INTERVAL IN MINUTES
                    JXDATE      2JUN98  STARTING DATE
                    JXTIME           0  STARTING TIME

   IT          HYDROGRAPH TIME DATA
                      NMIN           5  MINUTES IN COMPUTATION INTERVAL
                     IDATE      2JUN98  STARTING DATE
                     ITIME        0000  STARTING TIME
                        NQ         210  NUMBER OF HYDROGRAPH ORDINATES
                    NDDATE      2JUN98  ENDING DATE
                    NDTIME        1725  ENDING TIME
                     ICENT          19  CENTURY MARK

              COMPUTATION INTERVAL    0.08 HOURS
                   TOTAL TIME BASE   17.42 HOURS

        ENGLISH UNITS
            DRAINAGE AREA          SQUARE MILES
            PRECIPITATION DEPTH    INCHES
```

```
LENGTH, ELEVATION      FEET
FLOW                   CUBIC FEET PER SECOND
STORAGE VOLUME         ACRE-FEET
SURFACE AREA           ACRES
TEMPERATURE            DEGREES FAHRENHEIT

42 JD        INDEX STORM NO. 1
                 STRM       15.00  PRECIPITATION DEPTH
                 TRDA        0.01  TRANSPOSITION DRAINAGE AREA

43 PI          PRECIPITATION PATTERN
                 0.03       0.03       0.02       0.03       0.03       0.02       0.03       0.03       0.02       0.02
                 0.03       0.03       0.07       0.07       0.07       0.07       0.07       0.07       0.07       0.07
                 0.07       0.07       0.07       0.07       2.73       2.73       2.73       0.60       0.60       0.60
                 0.23       0.23       0.23       0.23       0.23       0.23       0.13       0.13       0.13       0.13
                 0.13       0.13       0.13       0.13       0.13       0.13       0.13       0.13       0.05       0.05
                 0.05       0.05       0.05       0.05       0.05       0.05       0.05       0.05       0.05       0.05
                 0.02       0.03       0.02       0.02       0.03       0.02       0.02       0.03       0.02       0.02
                 0.03       0.02

46 JD        INDEX STORM NO. 2
                 STRM       15.00  PRECIPITATION DEPTH
                 TRDA        1.60  TRANSPOSITION DRAINAGE AREA

47 PI          PRECIPITATION PATTERN
                 0.03       0.03       0.02       0.03       0.03       0.02       0.03       0.03       0.02       0.02
                 0.03       0.03       0.07       0.07       0.07       0.07       0.07       0.07       0.07       0.07
                 0.07       0.07       0.07       0.07       2.73       2.73       2.73       0.60       0.60       0.60
                 0.23       0.23       0.23       0.23       0.23       0.23       0.13       0.13       0.13       0.13
                 0.13       0.13       0.13       0.13       0.13       0.13       0.13       0.13       0.05       0.05
                 0.05       0.05       0.05       0.05       0.05       0.05       0.05       0.05       0.05       0.05
                 0.02       0.03       0.02       0.02       0.03       0.02       0.02       0.03       0.02       0.02
                 0.03       0.02

50 JD        INDEX STORM NO. 3
                 STRM       14.70  PRECIPITATION DEPTH
                 TRDA        2.00  TRANSPOSITION DRAINAGE AREA

51 PI          PRECIPITATION PATTERN
                 0.03       0.03       0.03       0.03       0.03       0.03       0.03       0.03       0.03       0.03
                 0.03       0.03       0.07       0.07       0.07       0.07       0.07       0.07       0.07       0.07
                 0.07       0.07       0.07       0.07       2.67       2.67       2.67       0.60       0.60       0.60
                 0.23       0.23       0.23       0.17       0.17       0.17       0.14       0.14       0.14       0.14
                 0.14       0.14       0.14       0.14       0.14       0.14       0.14       0.14       0.04       0.04
                 0.04       0.04       0.04       0.04       0.04       0.04       0.04       0.04       0.04       0.04
                 0.02       0.03       0.02       0.02       0.03       0.02       0.02       0.03       0.02       0.02
                 0.03       0.02

54 JD        INDEX STORM NO. 4
                 STRM       14.70  PRECIPITATION DEPTH
                 TRDA        2.15  TRANSPOSITION DRAINAGE AREA

55 PI          PRECIPITATION PATTERN
                 0.03       0.03       0.03       0.03       0.03       0.03       0.03       0.03       0.03       0.03
                 0.03       0.03       0.07       0.07       0.07       0.07       0.07       0.07       0.07       0.07
                 0.07       0.07       0.07       0.07       2.67       2.67       2.67       0.60       0.60       0.60
                 0.23       0.23       0.23       0.17       0.17       0.17       0.14       0.14       0.14       0.14
                 0.14       0.14       0.14       0.14       0.14       0.14       0.14       0.14       0.04       0.04
                 0.04       0.04       0.04       0.04       0.04       0.04       0.04       0.04       0.04       0.04
                 0.02       0.03       0.02       0.02       0.03       0.02       0.02       0.03       0.02       0.02
                 0.03       0.02

58 JD        INDEX STORM NO. 5
                 STRM       13.70  PRECIPITATION DEPTH
                 TRDA        7.15  TRANSPOSITION DRAINAGE AREA

59 PI          PRECIPITATION PATTERN
                 0.03       0.03       0.02       0.03       0.03       0.02       0.03       0.03       0.02       0.02
                 0.03       0.03       0.07       0.07       0.07       0.07       0.07       0.07       0.07       0.07
                 0.07       0.07       0.07       0.07       2.67       2.67       2.67       0.60       0.60       0.60
                 0.23       0.23       0.23       0.23       0.23       0.23       0.13       0.13       0.13       0.13
                 0.13       0.13       0.13       0.13       0.13       0.13       0.13       0.13       0.05       0.05
                 0.05       0.05       0.05       0.05       0.05       0.05       0.05       0.05       0.05       0.05
                 0.02       0.03       0.02       0.02       0.03       0.02       0.02       0.03       0.02       0.02
                 0.03       0.02
```

```
*** *** *** *** *** *** *** *** *** *** *** *** *** *** *** *** *** *** *** *** *** *** *** *** *** *** *** *** *** *** *** *** *** ***

          **************
          *            *
    KK    *     C560I  *
          *            *
          **************
                              BASIN S207 (ASPEN DAM)
                              THE FOLLOWING PARAMETERS WERE PROVIDED FOR THIS BASIN
                              L=      3.9  Lca=      2.2   S=  464.7  Kn= .030  LAG=  30.6
                              PHOENIX MOUNTAIN S-GRAPH WAS USED FOR THIS BASIN

            SUBBASIN RUNOFF DATA

 67 BA        SUBBASIN CHARACTERISTICS
                    TAREA        2.15  SUBBASIN AREA

 68 LG        GREEN AND AMPT LOSS RATE
                    STRTL        0.17  STARTING LOSS
                      DTH        0.31  MOISTURE DEFICIT
                     PSIF        4.90  WETTING FRONT SUCTION
                    XKSAT        0.29  HYDRAULIC CONDUCTIVITY
                    RTIMP       31.55  PERCENT IMPERVIOUS AREA

 63 UI        INPUT UNITGRAPH,  28 ORDINATES,  VOLUME = 1.00
                 237.0     523.0    1170.0    1651.0    2163.0    2377.0    1509.0    1274.0    1082.0     897.0
                 699.0     573.0     507.0     374.0     299.0     259.0     198.0     181.0     119.0     116.0
                 111.0      45.0      45.0      45.0      45.0      45.0      45.0      45.0

                                                                  ***

*** *** *** *** *** *** *** *** *** *** *** *** *** *** *** *** *** *** *** *** *** *** *** *** *** *** *** *** *** *** *** *** *** ***

          **************
          *            *
    KK    *     0.5PM  *     F
          *            *
          **************
                            THIS DIVERT IS USED TO REMOVE HALF THE FLOWS BEFORE ROUTING THROUGH
                            THE DAM

    DT        DIVERSION
                    ISTAD       .5PMF  DIVERSION HYDROGRAPH IDENTIFICATION

    DI           INFLOW        0.00     50.00    100.00  10000.00

    DQ     DIVERTED FLOW       0.00     25.00     50.00   5000.00

                                                                  ***

*** *** *** *** *** *** *** *** *** *** *** *** *** *** *** *** *** *** *** *** *** *** *** *** *** *** *** *** *** *** *** *** *** ***

          **************
          *            *
 80 KK    *     C560O  *
          *            *
          **************
                              Reservoir route at C560 (ASPEN DAM).
                            THE SQ CARDS HAVE BEEN ALTERED FROM THE ORIGINAL MODEL (GEPD-PMF.DAT) FROM
                            THE GEPD FEASIBILITY STUDY (GVSCE, 1997)
                             SEE COMMENT NUMBER 3 ABOVE

            HYDROGRAPH ROUTING DATA

 85 RS        STORAGE ROUTING
                    NSTPS           1  NUMBER OF SUBREACHES
                     ITYP        ELEV  TYPE OF INITIAL CONDITION
                   RSVRIC     1835.36  INITIAL CONDITION
                        X        0.00 WORKING R AND D COEFFICIENT

 86 SV          STORAGE         0.0       7.1      34.7      76.0     135.6     191.4     208.3     226.5     246.0     266.3
```

```
                                289.0     310.8     336.0

 88 SE          ELEVATION     1808.80   1814.00   1820.00   1826.00   1832.00   1836.00   1837.00   1838.00   1839.00   1840.00
                              1841.00   1842.00   1843.00

 90 SQ          DISCHARGE          0.      102.      184.      242.      285.      907.     1913.     3718.     5913.     8428.
                               11432.    14486.    17540.

                                                          ***

*** *** *** *** *** *** *** *** *** *** *** *** *** *** *** *** *** *** *** *** *** *** *** *** *** *** *** *** *** *** *** *** ***


            **************
            *            *
 92 KK      *    560599  *
            *            *
            **************
                            Normal depth channel route (ASPEN DAM TO GEP DAM)

              HYDROGRAPH ROUTING DATA

 94 RS          STORAGE ROUTING
                      NSTPS           1  NUMBER OF SUBREACHES
                       ITYP        FLOW  TYPE OF INITIAL CONDITION
                     RSVRIC       -1.00  INITIAL CONDITION
                          X        0.00 WORKING R AND D COEFFICIENT

 95 RC          NORMAL DEPTH CHANNEL
                        ANL       0.050  LEFT OVERBANK N-VALUE
                       ANCH       0.025  MAIN CHANNEL N-VALUE
                        ANR       0.050  RIGHT OVERBANK N-VALUE
                      RLNTH       3127.  REACH LENGTH
                        SEL      0.0272  ENERGY SLOPE
                      ELMAX         0.0  MAX. ELEV. FOR STORAGE/OUTFLOW CALCULATION

                                      CROSS-SECTION DATA
                          --- LEFT OVERBANK --- + ------ MAIN CHANNEL ------- + --- RIGHT OVERBANK ---
 97 RY        ELEVATION   1772.00   1771.70   1765.30   1765.30   1765.90   1768.50   1773.30   1773.70
 96 RX        DISTANCE    9850.40   9950.40   9974.40  10000.00  10035.50  10059.80  10080.40  10104.40

                                                          ***

                                      COMPUTED STORAGE-OUTFLOW-ELEVATION DATA

          STORAGE       0.00      1.25      3.25      5.47      7.87     10.46     13.23     16.19     19.31     22.54
          OUTFLOW       0.00     80.98    338.67    762.45   1326.75   2026.43   2859.90   3827.44   5030.18   6405.37
        ELEVATION    1765.30   1765.74   1766.18   1766.63   1767.07   1767.51   1767.95   1768.40   1768.84   1769.28

          STORAGE      25.89     29.35     32.92     36.60     40.40     44.95     52.04     59.24     66.51     74.15
          OUTFLOW    7919.95   9571.50  11358.09  13278.22  15330.69  17050.24  19574.03  22392.59  25434.73  28542.28
        ELEVATION    1769.72   1770.16   1770.61   1771.05   1771.49   1771.93   1772.37   1772.82   1773.26   1773.70


*** WARNING *** MODIFIED PULS ROUTING MAY BE NUMERICALLY UNSTABLE FOR OUTFLOWS BETWEEN     2026. TO    28542.
                THE ROUTED HYDROGRAPH SHOULD BE EXAMINED FOR OSCILLATIONS OR OUTFLOWS GREATER THAN PEAK INFLOWS.
                THIS CAN BE CORRECTED BY DECREASING THE TIME INTERVAL OR INCREASING STORAGE (USE A LONGER REACH.)


*** *** *** *** *** *** *** *** *** *** *** *** *** *** *** *** *** *** *** *** *** *** *** *** *** *** *** *** *** *** *** *** ***


            **************
            *            *
 98 KK      *    DAMFLO  *
            *            *
            **************
                            OUTFLOW FROM DAM BREACH OF NORTH HEIGHTS DAM
                            THESE OUTFLOWS WERE TAKEN FROM THE DAM BREAK ANALYSIS STUDY (GVSCE, JANUARY
                            FOR THE FOUNTAIN HILLS DAMS.  THE NUMBERS WERE TAKEN FROM THE DAM BREAK MODE
                            FOR GOLDEN EAGLE PARK DAM

104 KO          OUTPUT CONTROL VARIABLES
                      IPRNT           1  PRINT CONTROL
                      IPLOT           0  PLOT CONTROL
```

```
                QSCAL          0.  HYDROGRAPH PLOT SCALE

103 IN        TIME DATA FOR INPUT TIME SERIES
                JXMIN          5  TIME INTERVAL IN MINUTES
               JXDATE     2JUN98  STARTING DATE
               JXTIME          0  STARTING TIME

            SUBBASIN RUNOFF DATA

105 BA        SUBBASIN CHARACTERISTICS
                TAREA       2.02  SUBBASIN AREA

                                                    ***
```

****

HYDROGRAPH AT DAMFLO
TRANSPOSITION AREA 0.0 SQ MI

****

DA	MON	HRMN	ORD	FLOW	DA	MON	HRMN	ORD	FLOW	DA	MON	HRMN	ORD	FLOW	DA	MON	HRMN	ORD	FLOW
2	JUN	0000	1	781.	2	JUN	0425	54	707.	2	JUN	0850	107	5.	2	JUN	1315	160	1.
2	JUN	0005	2	493.	2	JUN	0430	55	631.	2	JUN	0855	108	4.	2	JUN	1320	161	1.
2	JUN	0010	3	408.	2	JUN	0435	56	560.	2	JUN	0900	109	4.	2	JUN	1325	162	1.
2	JUN	0015	4	353.	2	JUN	0440	57	499.	2	JUN	0905	110	3.	2	JUN	1330	163	1.
2	JUN	0020	5	306.	2	JUN	0445	58	460.	2	JUN	0910	111	3.	2	JUN	1335	164	1.
2	JUN	0025	6	267.	2	JUN	0450	59	444.	2	JUN	0915	112	3.	2	JUN	1340	165	1.
2	JUN	0030	7	235.	2	JUN	0455	60	429.	2	JUN	0920	113	2.	2	JUN	1345	166	1.
2	JUN	0035	8	210.	2	JUN	0500	61	414.	2	JUN	0925	114	2.	2	JUN	1350	167	1.
2	JUN	0040	9	189.	2	JUN	0505	62	399.	2	JUN	0930	115	2.	2	JUN	1355	168	1.
2	JUN	0045	10	172.	2	JUN	0510	63	384.	2	JUN	0935	116	2.	2	JUN	1400	169	1.
2	JUN	0050	11	159.	2	JUN	0515	64	369.	2	JUN	0940	117	1.	2	JUN	1405	170	1.
2	JUN	0055	12	148.	2	JUN	0520	65	352.	2	JUN	0945	118	1.	2	JUN	1410	171	1.
2	JUN	0100	13	140.	2	JUN	0525	66	334.	2	JUN	0950	119	1.	2	JUN	1415	172	1.
2	JUN	0105	14	134.	2	JUN	0530	67	314.	2	JUN	0955	120	1.	2	JUN	1420	173	1.
2	JUN	0110	15	131.	2	JUN	0535	68	294.	2	JUN	1000	121	1.	2	JUN	1425	174	1.
2	JUN	0115	16	133.	2	JUN	0540	69	275.	2	JUN	1005	122	1.	2	JUN	1430	175	1.
2	JUN	0120	17	140.	2	JUN	0545	70	257.	2	JUN	1010	123	1.	2	JUN	1435	176	1.
2	JUN	0125	18	153.	2	JUN	0550	71	241.	2	JUN	1015	124	1.	2	JUN	1440	177	1.
2	JUN	0130	19	170.	2	JUN	0555	72	226.	2	JUN	1020	125	1.	2	JUN	1445	178	1.
2	JUN	0135	20	190.	2	JUN	0600	73	212.	2	JUN	1025	126	1.	2	JUN	1450	179	1.
2	JUN	0140	21	212.	2	JUN	0605	74	199.	2	JUN	1030	127	1.	2	JUN	1455	180	1.
2	JUN	0145	22	234.	2	JUN	0610	75	187.	2	JUN	1035	128	1.	2	JUN	1500	181	1.
2	JUN	0150	23	254.	2	JUN	0615	76	175.	2	JUN	1040	129	1.	2	JUN	1505	182	1.
2	JUN	0155	24	274.	2	JUN	0620	77	163.	2	JUN	1045	130	1.	2	JUN	1510	183	1.
2	JUN	0200	25	292.	2	JUN	0625	78	150.	2	JUN	1050	131	1.	2	JUN	1515	184	1.
2	JUN	0205	26	415.	2	JUN	0630	79	138.	2	JUN	1055	132	1.	2	JUN	1520	185	1.
2	JUN	0210	27	1175.	2	JUN	0635	80	126.	2	JUN	1100	133	1.	2	JUN	1525	186	1.
2	JUN	0215	28	3086.	2	JUN	0640	81	115.	2	JUN	1105	134	1.	2	JUN	1530	187	1.
2	JUN	0220	29	6860.	2	JUN	0645	82	104.	2	JUN	1110	135	1.	2	JUN	1535	188	1.
2	JUN	0225	30	21573.	2	JUN	0650	83	94.	2	JUN	1115	136	1.	2	JUN	1540	189	1.
2	JUN	0230	31	29206.	2	JUN	0655	84	84.	2	JUN	1120	137	1.	2	JUN	1545	190	1.
2	JUN	0235	32	13111.	2	JUN	0700	85	75.	2	JUN	1125	138	1.	2	JUN	1550	191	1.
2	JUN	0240	33	7068.	2	JUN	0705	86	68.	2	JUN	1130	139	1.	2	JUN	1555	192	1.
2	JUN	0245	34	6196.	2	JUN	0710	87	60.	2	JUN	1135	140	1.	2	JUN	1600	193	1.
2	JUN	0250	35	5139.	2	JUN	0715	88	54.	2	JUN	1140	141	1.	2	JUN	1605	194	1.
2	JUN	0255	36	4067.	2	JUN	0720	89	48.	2	JUN	1145	142	1.	2	JUN	1610	195	1.
2	JUN	0300	37	3128.	2	JUN	0725	90	43.	2	JUN	1150	143	1.	2	JUN	1615	196	1.
2	JUN	0305	38	2838.	2	JUN	0730	91	38.	2	JUN	1155	144	1.	2	JUN	1620	197	1.
2	JUN	0310	39	2412.	2	JUN	0735	92	34.	2	JUN	1200	145	1.	2	JUN	1625	198	1.
2	JUN	0315	40	2076.	2	JUN	0740	93	30.	2	JUN	1205	146	1.	2	JUN	1630	199	1.
2	JUN	0320	41	1801.	2	JUN	0745	94	27.	2	JUN	1210	147	1.	2	JUN	1635	200	1.
2	JUN	0325	42	1569.	2	JUN	0750	95	23.	2	JUN	1215	148	1.	2	JUN	1640	201	1.
2	JUN	0330	43	1410.	2	JUN	0755	96	21.	2	JUN	1220	149	1.	2	JUN	1645	202	1.
2	JUN	0335	44	1275.	2	JUN	0800	97	18.	2	JUN	1225	150	1.	2	JUN	1650	203	1.
2	JUN	0340	45	1172.	2	JUN	0805	98	16.	2	JUN	1230	151	1.	2	JUN	1655	204	1.
2	JUN	0345	46	1092.	2	JUN	0810	99	14.	2	JUN	1235	152	1.	2	JUN	1700	205	1.
2	JUN	0350	47	1029.	2	JUN	0815	100	12.	2	JUN	1240	153	1.	2	JUN	1705	206	1.
2	JUN	0355	48	983.	2	JUN	0820	101	11.	2	JUN	1245	154	1.	2	JUN	1710	207	1.
2	JUN	0400	49	951.	2	JUN	0825	102	10.	2	JUN	1250	155	1.	2	JUN	1715	208	1.
2	JUN	0405	50	922.	2	JUN	0830	103	8.	2	JUN	1255	156	1.	2	JUN	1720	209	1.
2	JUN	0410	51	887.	2	JUN	0835	104	7.	2	JUN	1300	157	1.	2	JUN	1725	210	1.
2	JUN	0415	52	841.	2	JUN	0840	105	6.	2	JUN	1305	158	1.					
2	JUN	0420	53	779.	2	JUN	0845	106	6.	2	JUN	1310	159	1.					

****

PEAK FLOW (CFS)	TIME (HR)		MAXIMUM AVERAGE FLOW 6-HR	24-HR	72-HR	17.42-HR
29206.	2.50	(CFS)	1896.	665.	665.	665.
		(INCHES)	8.729	8.882	8.882	8.882
		(AC-FT)	940.	957.	957.	957.

CUMULATIVE AREA = 2.02 SQ MI

****

HYDROGRAPH AT DAMFLO
TRANSPOSITION AREA 1.6 SQ MI

****

DA MON HRMN	ORD	FLOW	DA MON HRMN	ORD	FLOW	DA MON HRMN	ORD	FLOW	DA MON HRMN	ORD	FLOW
2 JUN 0000	1	781.	2 JUN 0425	54	707.	2 JUN 0850	107	5.	2 JUN 1315	160	1.
2 JUN 0005	2	493.	2 JUN 0430	55	631.	2 JUN 0855	108	4.	2 JUN 1320	161	1.
2 JUN 0010	3	408.	2 JUN 0435	56	560.	2 JUN 0900	109	4.	2 JUN 1325	162	1.
2 JUN 0015	4	353.	2 JUN 0440	57	499.	2 JUN 0905	110	3.	2 JUN 1330	163	1.
2 JUN 0020	5	306.	2 JUN 0445	58	460.	2 JUN 0910	111	3.	2 JUN 1335	164	1.
2 JUN 0025	6	267.	2 JUN 0450	59	444.	2 JUN 0915	112	3.	2 JUN 1340	165	1.
2 JUN 0030	7	235.	2 JUN 0455	60	429.	2 JUN 0920	113	2.	2 JUN 1345	166	1.
2 JUN 0035	8	210.	2 JUN 0500	61	414.	2 JUN 0925	114	2.	2 JUN 1350	167	1.
2 JUN 0040	9	189.	2 JUN 0505	62	399.	2 JUN 0930	115	2.	2 JUN 1355	168	1.
2 JUN 0045	10	172.	2 JUN 0510	63	384.	2 JUN 0935	116	2.	2 JUN 1400	169	1.
2 JUN 0050	11	159.	2 JUN 0515	64	369.	2 JUN 0940	117	1.	2 JUN 1405	170	1.
2 JUN 0055	12	148.	2 JUN 0520	65	352.	2 JUN 0945	118	1.	2 JUN 1410	171	1.
2 JUN 0100	13	140.	2 JUN 0525	66	334.	2 JUN 0950	119	1.	2 JUN 1415	172	1.
2 JUN 0105	14	134.	2 JUN 0530	67	314.	2 JUN 0955	120	1.	2 JUN 1420	173	1.
2 JUN 0110	15	131.	2 JUN 0535	68	294.	2 JUN 1000	121	1.	2 JUN 1425	174	1.
2 JUN 0115	16	133.	2 JUN 0540	69	275.	2 JUN 1005	122	1.	2 JUN 1430	175	1.
2 JUN 0120	17	140.	2 JUN 0545	70	257.	2 JUN 1010	123	1.	2 JUN 1435	176	1.
2 JUN 0125	18	153.	2 JUN 0550	71	241.	2 JUN 1015	124	1.	2 JUN 1440	177	1.
2 JUN 0130	19	170.	2 JUN 0555	72	226.	2 JUN 1020	125	1.	2 JUN 1445	178	1.
2 JUN 0135	20	190.	2 JUN 0600	73	212.	2 JUN 1025	126	1.	2 JUN 1450	179	1.
2 JUN 0140	21	212.	2 JUN 0605	74	199.	2 JUN 1030	127	1.	2 JUN 1455	180	1.
2 JUN 0145	22	234.	2 JUN 0610	75	187.	2 JUN 1035	128	1.	2 JUN 1500	181	1.
2 JUN 0150	23	254.	2 JUN 0615	76	175.	2 JUN 1040	129	1.	2 JUN 1505	182	1.
2 JUN 0155	24	274.	2 JUN 0620	77	163.	2 JUN 1045	130	1.	2 JUN 1510	183	1.
2 JUN 0200	25	292.	2 JUN 0625	78	150.	2 JUN 1050	131	1.	2 JUN 1515	184	1.
2 JUN 0205	26	415.	2 JUN 0630	79	138.	2 JUN 1055	132	1.	2 JUN 1520	185	1.
2 JUN 0210	27	1175.	2 JUN 0635	80	126.	2 JUN 1100	133	1.	2 JUN 1525	186	1.
2 JUN 0215	28	3086.	2 JUN 0640	81	115.	2 JUN 1105	134	1.	2 JUN 1530	187	1.
2 JUN 0220	29	6860.	2 JUN 0645	82	104.	2 JUN 1110	135	1.	2 JUN 1535	188	1.
2 JUN 0225	30	21573.	2 JUN 0650	83	94.	2 JUN 1115	136	1.	2 JUN 1540	189	1.
2 JUN 0230	31	29206.	2 JUN 0655	84	84.	2 JUN 1120	137	1.	2 JUN 1545	190	1.
2 JUN 0235	32	13111.	2 JUN 0700	85	75.	2 JUN 1125	138	1.	2 JUN 1550	191	1.
2 JUN 0240	33	7068.	2 JUN 0705	86	68.	2 JUN 1130	139	1.	2 JUN 1555	192	1.
2 JUN 0245	34	6196.	2 JUN 0710	87	60.	2 JUN 1135	140	1.	2 JUN 1600	193	1.
2 JUN 0250	35	5139.	2 JUN 0715	88	54.	2 JUN 1140	141	1.	2 JUN 1605	194	1.
2 JUN 0255	36	4067.	2 JUN 0720	89	48.	2 JUN 1145	142	1.	2 JUN 1610	195	1.
2 JUN 0300	37	3128.	2 JUN 0725	90	43.	2 JUN 1150	143	1.	2 JUN 1615	196	1.
2 JUN 0305	38	2838.	2 JUN 0730	91	38.	2 JUN 1155	144	1.	2 JUN 1620	197	1.
2 JUN 0310	39	2412.	2 JUN 0735	92	34.	2 JUN 1200	145	1.	2 JUN 1625	198	1.
2 JUN 0315	40	2076.	2 JUN 0740	93	30.	2 JUN 1205	146	1.	2 JUN 1630	199	1.
2 JUN 0320	41	1801.	2 JUN 0745	94	27.	2 JUN 1210	147	1.	2 JUN 1635	200	1.
2 JUN 0325	42	1569.	2 JUN 0750	95	23.	2 JUN 1215	148	1.	2 JUN 1640	201	1.
2 JUN 0330	43	1410.	2 JUN 0755	96	21.	2 JUN 1220	149	1.	2 JUN 1645	202	1.
2 JUN 0335	44	1275.	2 JUN 0800	97	18.	2 JUN 1225	150	1.	2 JUN 1650	203	1.
2 JUN 0340	45	1172.	2 JUN 0805	98	16.	2 JUN 1230	151	1.	2 JUN 1655	204	1.
2 JUN 0345	46	1092.	2 JUN 0810	99	14.	2 JUN 1235	152	1.	2 JUN 1700	205	1.
2 JUN 0350	47	1029.	2 JUN 0815	100	12.	2 JUN 1240	153	1.	2 JUN 1705	206	1.
2 JUN 0355	48	983.	2 JUN 0820	101	11.	2 JUN 1245	154	1.	2 JUN 1710	207	1.
2 JUN 0400	49	951.	2 JUN 0825	102	10.	2 JUN 1250	155	1.	2 JUN 1715	208	1.
2 JUN 0405	50	922.	2 JUN 0830	103	8.	2 JUN 1255	156	1.	2 JUN 1720	209	1.
2 JUN 0410	51	887.	2 JUN 0835	104	7.	2 JUN 1300	157	1.	2 JUN 1725	210	1.
2 JUN 0415	52	841.	2 JUN 0840	105	6.	2 JUN 1305	158	1.			
2 JUN 0420	53	779.	2 JUN 0845	106	6.	2 JUN 1310	159	1.			

****

PEAK FLOW (CFS)	TIME (HR)		MAXIMUM AVERAGE FLOW 6-HR	24-HR	72-HR	17.42-HR
29206.	2.50	(CFS)	1896.	665.	665.	665.

(INCHES)	8.729	8.882	8.882	8.882
(AC-FT)	940.	957.	957.	957.

CUMULATIVE AREA = 2.02 SQ MI

HYDROGRAPH AT DAMFLO
TRANSPOSITION AREA 2.0 SQ MI

DA MON HRMN	ORD	FLOW	DA MON HRMN	ORD	FLOW	DA MON HRMN	ORD	FLOW	DA MON HRMN	ORD	FLOW
2 JUN 0000	1	781.	2 JUN 0425	54	707.	2 JUN 0850	107	5.	2 JUN 1315	160	1.
2 JUN 0005	2	493.	2 JUN 0430	55	631.	2 JUN 0855	108	4.	2 JUN 1320	161	1.
2 JUN 0010	3	408.	2 JUN 0435	56	560.	2 JUN 0900	109	4.	2 JUN 1325	162	1.
2 JUN 0015	4	353.	2 JUN 0440	57	499.	2 JUN 0905	110	3.	2 JUN 1330	163	1.
2 JUN 0020	5	306.	2 JUN 0445	58	460.	2 JUN 0910	111	3.	2 JUN 1335	164	1.
2 JUN 0025	6	267.	2 JUN 0450	59	444.	2 JUN 0915	112	3.	2 JUN 1340	165	1.
2 JUN 0030	7	235.	2 JUN 0455	60	429.	2 JUN 0920	113	2.	2 JUN 1345	166	1.
2 JUN 0035	8	210.	2 JUN 0500	61	414.	2 JUN 0925	114	2.	2 JUN 1350	167	1.
2 JUN 0040	9	189.	2 JUN 0505	62	399.	2 JUN 0930	115	2.	2 JUN 1355	168	1.
2 JUN 0045	10	172.	2 JUN 0510	63	384.	2 JUN 0935	116	2.	2 JUN 1400	169	1.
2 JUN 0050	11	159.	2 JUN 0515	64	369.	2 JUN 0940	117	1.	2 JUN 1405	170	1.
2 JUN 0055	12	148.	2 JUN 0520	65	352.	2 JUN 0945	118	1.	2 JUN 1410	171	1.
2 JUN 0100	13	140.	2 JUN 0525	66	334.	2 JUN 0950	119	1.	2 JUN 1415	172	1.
2 JUN 0105	14	134.	2 JUN 0530	67	314.	2 JUN 0955	120	1.	2 JUN 1420	173	1.
2 JUN 0110	15	131.	2 JUN 0535	68	294.	2 JUN 1000	121	1.	2 JUN 1425	174	1.
2 JUN 0115	16	133.	2 JUN 0540	69	275.	2 JUN 1005	122	1.	2 JUN 1430	175	1.
2 JUN 0120	17	140.	2 JUN 0545	70	257.	2 JUN 1010	123	1.	2 JUN 1435	176	1.
2 JUN 0125	18	153.	2 JUN 0550	71	241.	2 JUN 1015	124	1.	2 JUN 1440	177	1.
2 JUN 0130	19	170.	2 JUN 0555	72	226.	2 JUN 1020	125	1.	2 JUN 1445	178	1.
2 JUN 0135	20	190.	2 JUN 0600	73	212.	2 JUN 1025	126	1.	2 JUN 1450	179	1.
2 JUN 0140	21	212.	2 JUN 0605	74	199.	2 JUN 1030	127	1.	2 JUN 1455	180	1.
2 JUN 0145	22	234.	2 JUN 0610	75	187.	2 JUN 1035	128	1.	2 JUN 1500	181	1.
2 JUN 0150	23	254.	2 JUN 0615	76	175.	2 JUN 1040	129	1.	2 JUN 1505	182	1.
JUN 0155	24	274.	2 JUN 0620	77	163.	2 JUN 1045	130	1.	2 JUN 1510	183	1.
JUN 0200	25	292.	2 JUN 0625	78	150.	2 JUN 1050	131	1.	2 JUN 1515	184	1.
JUN 0205	26	415.	2 JUN 0630	79	138.	2 JUN 1055	132	1.	2 JUN 1520	185	1.
2 JUN 0210	27	1175.	2 JUN 0635	80	126.	2 JUN 1100	133	1.	2 JUN 1525	186	1.
2 JUN 0215	28	3086.	2 JUN 0640	81	115.	2 JUN 1105	134	1.	2 JUN 1530	187	1.
2 JUN 0220	29	6860.	2 JUN 0645	82	104.	2 JUN 1110	135	1.	2 JUN 1535	188	1.
2 JUN 0225	30	21573.	2 JUN 0650	83	94.	2 JUN 1115	136	1.	2 JUN 1540	189	1.
2 JUN 0230	31	29206.	2 JUN 0655	84	84.	2 JUN 1120	137	1.	2 JUN 1545	190	1.
2 JUN 0235	32	13111.	2 JUN 0700	85	75.	2 JUN 1125	138	1.	2 JUN 1550	191	1.
2 JUN 0240	33	7068.	2 JUN 0705	86	68.	2 JUN 1130	139	1.	2 JUN 1555	192	1.
2 JUN 0245	34	6196.	2 JUN 0710	87	60.	2 JUN 1135	140	1.	2 JUN 1600	193	1.
2 JUN 0250	35	5139.	2 JUN 0715	88	54.	2 JUN 1140	141	1.	2 JUN 1605	194	1.
2 JUN 0255	36	4067.	2 JUN 0720	89	48.	2 JUN 1145	142	1.	2 JUN 1610	195	1.
2 JUN 0300	37	3128.	2 JUN 0725	90	43.	2 JUN 1150	143	1.	2 JUN 1615	196	1.
2 JUN 0305	38	2838.	2 JUN 0730	91	38.	2 JUN 1155	144	1.	2 JUN 1620	197	1.
2 JUN 0310	39	2412.	2 JUN 0735	92	34.	2 JUN 1200	145	1.	2 JUN 1625	198	1.
2 JUN 0315	40	2076.	2 JUN 0740	93	30.	2 JUN 1205	146	1.	2 JUN 1630	199	1.
2 JUN 0320	41	1801.	2 JUN 0745	94	27.	2 JUN 1210	147	1.	2 JUN 1635	200	1.
2 JUN 0325	42	1569.	2 JUN 0750	95	23.	2 JUN 1215	148	1.	2 JUN 1640	201	1.
2 JUN 0330	43	1410.	2 JUN 0755	96	21.	2 JUN 1220	149	1.	2 JUN 1645	202	1.
2 JUN 0335	44	1275.	2 JUN 0800	97	18.	2 JUN 1225	150	1.	2 JUN 1650	203	1.
2 JUN 0340	45	1172.	2 JUN 0805	98	16.	2 JUN 1230	151	1.	2 JUN 1655	204	1.
2 JUN 0345	46	1092.	2 JUN 0810	99	14.	2 JUN 1235	152	1.	2 JUN 1700	205	1.
2 JUN 0350	47	1029.	2 JUN 0815	100	12.	2 JUN 1240	153	1.	2 JUN 1705	206	1.
2 JUN 0355	48	983.	2 JUN 0820	101	11.	2 JUN 1245	154	1.	2 JUN 1710	207	1.
2 JUN 0400	49	951.	2 JUN 0825	102	10.	2 JUN 1250	155	1.	2 JUN 1715	208	1.
2 JUN 0405	50	922.	2 JUN 0830	103	8.	2 JUN 1255	156	1.	2 JUN 1720	209	1.
2 JUN 0410	51	887.	2 JUN 0835	104	7.	2 JUN 1300	157	1.	2 JUN 1725	210	1.
2 JUN 0415	52	841.	2 JUN 0840	105	6.	2 JUN 1305	158	1.			
2 JUN 0420	53	779.	2 JUN 0845	106	6.	2 JUN 1310	159	1.			

PEAK FLOW (CFS)	TIME (HR)		MAXIMUM AVERAGE FLOW 6-HR	24-HR	72-HR	17.42-HR
06.	2.50	(CFS)	1896.	665.	665.	665.
		(INCHES)	8.729	8.882	8.882	8.882
		(AC-FT)	940.	957.	957.	957.

CUMULATIVE AREA = 2.02 SQ MI

HYDROGRAPH AT DAMFLO
TRANSPOSITION AREA 2.2 SQ MI

DA MON HRMN	ORD	FLOW	DA MON HRMN	ORD	FLOW	DA MON HRMN	ORD	FLOW	DA MON HRMN	ORD	FLOW
2 JUN 0000	1	781.	2 JUN 0425	54	707.	2 JUN 0850	107	5.	2 JUN 1315	160	1.
2 JUN 0005	2	493.	2 JUN 0430	55	631.	2 JUN 0855	108	4.	2 JUN 1320	161	1.
2 JUN 0010	3	408.	2 JUN 0435	56	560.	2 JUN 0900	109	4.	2 JUN 1325	162	1.
2 JUN 0015	4	353.	2 JUN 0440	57	499.	2 JUN 0905	110	3.	2 JUN 1330	163	1.
2 JUN 0020	5	306.	2 JUN 0445	58	460.	2 JUN 0910	111	3.	2 JUN 1335	164	1.
2 JUN 0025	6	267.	2 JUN 0450	59	444.	2 JUN 0915	112	3.	2 JUN 1340	165	1.
2 JUN 0030	7	235.	2 JUN 0455	60	429.	2 JUN 0920	113	2.	2 JUN 1345	166	1.
2 JUN 0035	8	210.	2 JUN 0500	61	414.	2 JUN 0925	114	2.	2 JUN 1350	167	1.
2 JUN 0040	9	189.	2 JUN 0505	62	399.	2 JUN 0930	115	2.	2 JUN 1355	168	1.
2 JUN 0045	10	172.	2 JUN 0510	63	384.	2 JUN 0935	116	2.	2 JUN 1400	169	1.
2 JUN 0050	11	159.	2 JUN 0515	64	369.	2 JUN 0940	117	1.	2 JUN 1405	170	1.
2 JUN 0055	12	148.	2 JUN 0520	65	352.	2 JUN 0945	118	1.	2 JUN 1410	171	1.
2 JUN 0100	13	140.	2 JUN 0525	66	334.	2 JUN 0950	119	1.	2 JUN 1415	172	1.
2 JUN 0105	14	134.	2 JUN 0530	67	314.	2 JUN 0955	120	1.	2 JUN 1420	173	1.
2 JUN 0110	15	131.	2 JUN 0535	68	294.	2 JUN 1000	121	1.	2 JUN 1425	174	1.
2 JUN 0115	16	133.	2 JUN 0540	69	275.	2 JUN 1005	122	1.	2 JUN 1430	175	1.
2 JUN 0120	17	140.	2 JUN 0545	70	257.	2 JUN 1010	123	1.	2 JUN 1435	176	1.
2 JUN 0125	18	153.	2 JUN 0550	71	241.	2 JUN 1015	124	1.	2 JUN 1440	177	1.
2 JUN 0130	19	170.	2 JUN 0555	72	226.	2 JUN 1020	125	1.	2 JUN 1445	178	1.
2 JUN 0135	20	190.	2 JUN 0600	73	212.	2 JUN 1025	126	1.	2 JUN 1450	179	1.
2 JUN 0140	21	212.	2 JUN 0605	74	199.	2 JUN 1030	127	1.	2 JUN 1455	180	1.
2 JUN 0145	22	234.	2 JUN 0610	75	187.	2 JUN 1035	128	1.	2 JUN 1500	181	1.
2 JUN 0150	23	254.	2 JUN 0615	76	175.	2 JUN 1040	129	1.	2 JUN 1505	182	1.
2 JUN 0155	24	274.	2 JUN 0620	77	163.	2 JUN 1045	130	1.	2 JUN 1510	183	1.
2 JUN 0200	25	292.	2 JUN 0625	78	150.	2 JUN 1050	131	1.	2 JUN 1515	184	1.
2 JUN 0205	26	415.	2 JUN 0630	79	138.	2 JUN 1055	132	1.	2 JUN 1520	185	1.
2 JUN 0210	27	1175.	2 JUN 0635	80	126.	2 JUN 1100	133	1.	2 JUN 1525	186	1.
2 JUN 0215	28	3086.	2 JUN 0640	81	115.	2 JUN 1105	134	1.	2 JUN 1530	187	1.
2 JUN 0220	29	6860.	2 JUN 0645	82	104.	2 JUN 1110	135	1.	2 JUN 1535	188	1
2 JUN 0225	30	21573.	2 JUN 0650	83	94.	2 JUN 1115	136	1.	2 JUN 1540	189	1.
2 JUN 0230	31	29206.	2 JUN 0655	84	84.	2 JUN 1120	137	1.	2 JUN 1545	190	1.
2 JUN 0235	32	13111.	2 JUN 0700	85	75.	2 JUN 1125	138	1.	2 JUN 1550	191	1.
2 JUN 0240	33	7068.	2 JUN 0705	86	68.	2 JUN 1130	139	1.	2 JUN 1555	192	1.
2 JUN 0245	34	6196.	2 JUN 0710	87	60.	2 JUN 1135	140	1.	2 JUN 1600	193	1.
2 JUN 0250	35	5139.	2 JUN 0715	88	54.	2 JUN 1140	141	1.	2 JUN 1605	194	1.
2 JUN 0255	36	4067.	2 JUN 0720	89	48.	2 JUN 1145	142	1.	2 JUN 1610	195	1.
2 JUN 0300	37	3128.	2 JUN 0725	90	43.	2 JUN 1150	143	1.	2 JUN 1615	196	1.
2 JUN 0305	38	2838.	2 JUN 0730	91	38.	2 JUN 1155	144	1.	2 JUN 1620	197	1.
2 JUN 0310	39	2412.	2 JUN 0735	92	34.	2 JUN 1200	145	1.	2 JUN 1625	198	1.
2 JUN 0315	40	2076.	2 JUN 0740	93	30.	2 JUN 1205	146	1.	2 JUN 1630	199	1.
2 JUN 0320	41	1801.	2 JUN 0745	94	27.	2 JUN 1210	147	1.	2 JUN 1635	200	1.
2 JUN 0325	42	1569.	2 JUN 0750	95	23.	2 JUN 1215	148	1.	2 JUN 1640	201	1.
2 JUN 0330	43	1410.	2 JUN 0755	96	21.	2 JUN 1220	149	1.	2 JUN 1645	202	1.
2 JUN 0335	44	1275.	2 JUN 0800	97	18.	2 JUN 1225	150	1.	2 JUN 1650	203	1.
2 JUN 0340	45	1172.	2 JUN 0805	98	16.	2 JUN 1230	151	1.	2 JUN 1655	204	1.
2 JUN 0345	46	1092.	2 JUN 0810	99	14.	2 JUN 1235	152	1.	2 JUN 1700	205	1.
2 JUN 0350	47	1029.	2 JUN 0815	100	12.	2 JUN 1240	153	1.	2 JUN 1705	206	1.
2 JUN 0355	48	983.	2 JUN 0820	101	11.	2 JUN 1245	154	1.	2 JUN 1710	207	1.
2 JUN 0400	49	951.	2 JUN 0825	102	10.	2 JUN 1250	155	1.	2 JUN 1715	208	1.
2 JUN 0405	50	922.	2 JUN 0830	103	8.	2 JUN 1255	156	1.	2 JUN 1720	209	1.
2 JUN 0410	51	887.	2 JUN 0835	104	7.	2 JUN 1300	157	1.	2 JUN 1725	210	1.
2 JUN 0415	52	841.	2 JUN 0840	105	6.	2 JUN 1305	158	1.			
2 JUN 0420	53	779.	2 JUN 0845	106	6.	2 JUN 1310	159	1.			

PEAK FLOW (CFS)	TIME (HR)		MAXIMUM AVERAGE FLOW 6-HR	24-HR	72-HR	17.42-HR
29206.	2.50	(CFS)	1896.	665.	665.	665.
		(INCHES)	8.729	8.882	8.882	8.882
		(AC-FT)	940.	957.	957.	957.

CUMULATIVE AREA = 2.02 SQ MI

HYDROGRAPH AT DAMFLO
TRANSPOSITION AREA 7.2 SQ MI

DA MON HRMN	ORD	FLOW	DA MON HRMN	ORD	FLOW	DA MON HRMN	ORD	FLOW	DA MON HRMN	ORD	FLOW
2 JUN 0000	1	781.	2 JUN 0425	54	707.	2 JUN 0850	107	5.	2 JUN 1315	160	1.
2 JUN 0005	2	493.	2 JUN 0430	55	631.	2 JUN 0855	108	4.	2 JUN 1320	161	1.
2 JUN 0010	3	408.	2 JUN 0435	56	560.	2 JUN 0900	109	4.	2 JUN 1325	162	1.
2 JUN 0015	4	353.	2 JUN 0440	57	499.	2 JUN 0905	110	3.	2 JUN 1330	163	1.
2 JUN 0020	5	306.	2 JUN 0445	58	460.	2 JUN 0910	111	3.	2 JUN 1335	164	1.
2 JUN 0025	6	267.	2 JUN 0450	59	444.	2 JUN 0915	112	3.	2 JUN 1340	165	1.
2 JUN 0030	7	235.	2 JUN 0455	60	429.	2 JUN 0920	113	2.	2 JUN 1345	166	1.
2 JUN 0035	8	210.	2 JUN 0500	61	414.	2 JUN 0925	114	2.	2 JUN 1350	167	1.
2 JUN 0040	9	189.	2 JUN 0505	62	399.	2 JUN 0930	115	2.	2 JUN 1355	168	1.
2 JUN 0045	10	172.	2 JUN 0510	63	384.	2 JUN 0935	116	2.	2 JUN 1400	169	1.
2 JUN 0050	11	159.	2 JUN 0515	64	369.	2 JUN 0940	117	1.	2 JUN 1405	170	1.
2 JUN 0055	12	148.	2 JUN 0520	65	352.	2 JUN 0945	118	1.	2 JUN 1410	171	1.
2 JUN 0100	13	140.	2 JUN 0525	66	334.	2 JUN 0950	119	1.	2 JUN 1415	172	1.
2 JUN 0105	14	134.	2 JUN 0530	67	314.	2 JUN 0955	120	1.	2 JUN 1420	173	1.
2 JUN 0110	15	131.	2 JUN 0535	68	294.	2 JUN 1000	121	1.	2 JUN 1425	174	1.
2 JUN 0115	16	133.	2 JUN 0540	69	275.	2 JUN 1005	122	1.	2 JUN 1430	175	1.
2 JUN 0120	17	140.	2 JUN 0545	70	257.	2 JUN 1010	123	1.	2 JUN 1435	176	1.
2 JUN 0125	18	153.	2 JUN 0550	71	241.	2 JUN 1015	124	1.	2 JUN 1440	177	1.
2 JUN 0130	19	170.	2 JUN 0555	72	226.	2 JUN 1020	125	1.	2 JUN 1445	178	1.
2 JUN 0135	20	190.	2 JUN 0600	73	212.	2 JUN 1025	126	1.	2 JUN 1450	179	1.
2 JUN 0140	21	212.	2 JUN 0605	74	199.	2 JUN 1030	127	1.	2 JUN 1455	180	1.
2 JUN 0145	22	234.	2 JUN 0610	75	187.	2 JUN 1035	128	1.	2 JUN 1500	181	1.
2 JUN 0150	23	254.	2 JUN 0615	76	175.	2 JUN 1040	129	1.	2 JUN 1505	182	1.
2 JUN 0155	24	274.	2 JUN 0620	77	163.	2 JUN 1045	130	1.	2 JUN 1510	183	1.
2 JUN 0200	25	292.	2 JUN 0625	78	150.	2 JUN 1050	131	1.	2 JUN 1515	184	1.
2 JUN 0205	26	415.	2 JUN 0630	79	138.	2 JUN 1055	132	1.	2 JUN 1520	185	1.
2 JUN 0210	27	1175.	2 JUN 0635	80	126.	2 JUN 1100	133	1.	2 JUN 1525	186	1.
2 JUN 0215	28	3086.	2 JUN 0640	81	115.	2 JUN 1105	134	1.	2 JUN 1530	187	1.
2 JUN 0220	29	6860.	2 JUN 0645	82	104.	2 JUN 1110	135	1.	2 JUN 1535	188	1.
2 JUN 0225	30	21573.	2 JUN 0650	83	94.	2 JUN 1115	136	1.	2 JUN 1540	189	1.
2 JUN 0230	31	29206.	2 JUN 0655	84	84.	2 JUN 1120	137	1.	2 JUN 1545	190	1.
2 JUN 0235	32	13111.	2 JUN 0700	85	75.	2 JUN 1125	138	1.	2 JUN 1550	191	1.
2 JUN 0240	33	7068.	2 JUN 0705	86	68.	2 JUN 1130	139	1.	2 JUN 1555	192	1.
2 JUN 0245	34	6196.	2 JUN 0710	87	60.	2 JUN 1135	140	1.	2 JUN 1600	193	1.
2 JUN 0250	35	5139.	2 JUN 0715	88	54.	2 JUN 1140	141	1.	2 JUN 1605	194	1.
2 JUN 0255	36	4067.	2 JUN 0720	89	48.	2 JUN 1145	142	1.	2 JUN 1610	195	1.
2 JUN 0300	37	3128.	2 JUN 0725	90	43.	2 JUN 1150	143	1.	2 JUN 1615	196	1.
2 JUN 0305	38	2838.	2 JUN 0730	91	38.	2 JUN 1155	144	1.	2 JUN 1620	197	1.
2 JUN 0310	39	2412.	2 JUN 0735	92	34.	2 JUN 1200	145	1.	2 JUN 1625	198	1.
2 JUN 0315	40	2076.	2 JUN 0740	93	30.	2 JUN 1205	146	1.	2 JUN 1630	199	1.
2 JUN 0320	41	1801.	2 JUN 0745	94	27.	2 JUN 1210	147	1.	2 JUN 1635	200	1.
2 JUN 0325	42	1569.	2 JUN 0750	95	23.	2 JUN 1215	148	1.	2 JUN 1640	201	1.
2 JUN 0330	43	1410.	2 JUN 0755	96	21.	2 JUN 1220	149	1.	2 JUN 1645	202	1.
2 JUN 0335	44	1275.	2 JUN 0800	97	18.	2 JUN 1225	150	1.	2 JUN 1650	203	1.
2 JUN 0340	45	1172.	2 JUN 0805	98	16.	2 JUN 1230	151	1.	2 JUN 1655	204	1.
2 JUN 0345	46	1092.	2 JUN 0810	99	14.	2 JUN 1235	152	1.	2 JUN 1700	205	1.
2 JUN 0350	47	1029.	2 JUN 0815	100	12.	2 JUN 1240	153	1.	2 JUN 1705	206	1.
2 JUN 0355	48	983.	2 JUN 0820	101	11.	2 JUN 1245	154	1.	2 JUN 1710	207	1.
2 JUN 0400	49	951.	2 JUN 0825	102	10.	2 JUN 1250	155	1.	2 JUN 1715	208	1.
2 JUN 0405	50	922.	2 JUN 0830	103	8.	2 JUN 1255	156	1.	2 JUN 1720	209	1.
2 JUN 0410	51	887.	2 JUN 0835	104	7.	2 JUN 1300	157	1.	2 JUN 1725	210	1.
2 JUN 0415	52	841.	2 JUN 0840	105	6.	2 JUN 1305	158	1.			
2 JUN 0420	53	779.	2 JUN 0845	106	6.	2 JUN 1310	159	1.			

PEAK FLOW (CFS)	TIME (HR)		MAXIMUM AVERAGE FLOW 6-HR	24-HR	72-HR	17.42-HR
29206.	2.50	(CFS)	1896.	665.	665.	665.
		(INCHES)	8.729	8.882	8.882	8.882
		(AC-FT)	940.	957.	957.	957.

CUMULATIVE AREA = 2.02 SQ MI

INTERPOLATED HYDROGRAPH AT DAMFLO

DA	MON	HRMN	ORD	FLOW	DA	MON	HRMN	ORD	FLOW	DA	MON	HRMN	ORD	FLOW	DA	MON	HRMN	ORD	FLOW
2	JUN	0000	1	781.	2	JUN	0425	54	707.	2	JUN	0850	107	5.	2	JUN	1315	160	1.
2	JUN	0005	2	493.	2	JUN	0430	55	631.	2	JUN	0855	108	4.	2	JUN	1320	161	1.
2	JUN	0010	3	408.	2	JUN	0435	56	560.	2	JUN	0900	109	4.	2	JUN	1325	162	1.
2	JUN	0015	4	353.	2	JUN	0440	57	499.	2	JUN	0905	110	3.	2	JUN	1330	163	1.
2	JUN	0020	5	306.	2	JUN	0445	58	460.	2	JUN	0910	111	3.	2	JUN	1335	164	1.
2	JUN	0025	6	267.	2	JUN	0450	59	444.	2	JUN	0915	112	3.	2	JUN	1340	165	1.
2	JUN	0030	7	235.	2	JUN	0455	60	429.	2	JUN	0920	113	2.	2	JUN	1345	166	1.
2	JUN	0035	8	210.	2	JUN	0500	61	414.	2	JUN	0925	114	2.	2	JUN	1350	167	1.
2	JUN	0040	9	189.	2	JUN	0505	62	399.	2	JUN	0930	115	2.	2	JUN	1355	168	1.
2	JUN	0045	10	172.	2	JUN	0510	63	384.	2	JUN	0935	116	2.	2	JUN	1400	169	1.
2	JUN	0050	11	159.	2	JUN	0515	64	369.	2	JUN	0940	117	1.	2	JUN	1405	170	1.
2	JUN	0055	12	148.	2	JUN	0520	65	352.	2	JUN	0945	118	1.	2	JUN	1410	171	1.
2	JUN	0100	13	140.	2	JUN	0525	66	334.	2	JUN	0950	119	1.	2	JUN	1415	172	1.
2	JUN	0105	14	134.	2	JUN	0530	67	314.	2	JUN	0955	120	1.	2	JUN	1420	173	1.
2	JUN	0110	15	131.	2	JUN	0535	68	294.	2	JUN	1000	121	1.	2	JUN	1425	174	1.
2	JUN	0115	16	133.	2	JUN	0540	69	275.	2	JUN	1005	122	1.	2	JUN	1430	175	1.
2	JUN	0120	17	140.	2	JUN	0545	70	257.	2	JUN	1010	123	1.	2	JUN	1435	176	1.
2	JUN	0125	18	153.	2	JUN	0550	71	241.	2	JUN	1015	124	1.	2	JUN	1440	177	1.
2	JUN	0130	19	170.	2	JUN	0555	72	226.	2	JUN	1020	125	1.	2	JUN	1445	178	1.
2	JUN	0135	20	190.	2	JUN	0600	73	212.	2	JUN	1025	126	1.	2	JUN	1450	179	1.
2	JUN	0140	21	212.	2	JUN	0605	74	199.	2	JUN	1030	127	1.	2	JUN	1455	180	1.
2	JUN	0145	22	234.	2	JUN	0610	75	187.	2	JUN	1035	128	1.	2	JUN	1500	181	1.
2	JUN	0150	23	254.	2	JUN	0615	76	175.	2	JUN	1040	129	1.	2	JUN	1505	182	1.
2	JUN	0155	24	274.	2	JUN	0620	77	163.	2	JUN	1045	130	1.	2	JUN	1510	183	1.
2	JUN	0200	25	292.	2	JUN	0625	78	150.	2	JUN	1050	131	1.	2	JUN	1515	184	1.
2	JUN	0205	26	415.	2	JUN	0630	79	138.	2	JUN	1055	132	1.	2	JUN	1520	185	1.
2	JUN	0210	27	1175.	2	JUN	0635	80	126.	2	JUN	1100	133	1.	2	JUN	1525	186	1.
2	JUN	0215	28	3086.	2	JUN	0640	81	115.	2	JUN	1105	134	1.	2	JUN	1530	187	1.
2	JUN	0220	29	6860.	2	JUN	0645	82	104.	2	JUN	1110	135	-1.	2	JUN	1535	188	1.
2	JUN	0225	30	21573.	2	JUN	0650	83	94.	2	JUN	1115	136	1.	2	JUN	1540	189	1.
2	JUN	0230	31	29206.	2	JUN	0655	84	84.	2	JUN	1120	137	1.	2	JUN	1545	190	1.
2	JUN	0235	32	13111.	2	JUN	0700	85	75.	2	JUN	1125	138	1.	2	JUN	1550	191	1.
2	JUN	0240	33	7068.	2	JUN	0705	86	68.	2	JUN	1130	139	1.	2	JUN	1555	192	1.
2	JUN	0245	34	6196.	2	JUN	0710	87	60.	2	JUN	1135	140	1.	2	JUN	1600	193	1.
2	JUN	0250	35	5139.	2	JUN	0715	88	54.	2	JUN	1140	141	1.	2	JUN	1605	194	1.
2	JUN	0255	36	4067.	2	JUN	0720	89	48.	2	JUN	1145	142	1.	2	JUN	1610	195	1.
2	JUN	0300	37	3128.	2	JUN	0725	90	43.	2	JUN	1150	143	1.	2	JUN	1615	196	1.
2	JUN	0305	38	2838.	2	JUN	0730	91	38.	2	JUN	1155	144	1.	2	JUN	1620	197	1.
2	JUN	0310	39	2412.	2	JUN	0735	92	34.	2	JUN	1200	145	1.	2	JUN	1625	198	1.
2	JUN	0315	40	2076.	2	JUN	0740	93	30.	2	JUN	1205	146	1.	2	JUN	1630	199	1.
2	JUN	0320	41	1801.	2	JUN	0745	94	27.	2	JUN	1210	147	1.	2	JUN	1635	200	1.
2	JUN	0325	42	1569.	2	JUN	0750	95	23.	2	JUN	1215	148	1.	2	JUN	1640	201	1.
2	JUN	0330	43	1410.	2	JUN	0755	96	21.	2	JUN	1220	149	1.	2	JUN	1645	202	1.
2	JUN	0335	44	1275.	2	JUN	0800	97	18.	2	JUN	1225	150	1.	2	JUN	1650	203	1.
2	JUN	0340	45	1172.	2	JUN	0805	98	16.	2	JUN	1230	151	1.	2	JUN	1655	204	1.
2	JUN	0345	46	1092.	2	JUN	0810	99	14.	2	JUN	1235	152	1.	2	JUN	1700	205	1.
2	JUN	0350	47	1029.	2	JUN	0815	100	12.	2	JUN	1240	153	1.	2	JUN	1705	206	1.
2	JUN	0355	48	983.	2	JUN	0820	101	11.	2	JUN	1245	154	1.	2	JUN	1710	207	1.
2	JUN	0400	49	951.	2	JUN	0825	102	10.	2	JUN	1250	155	1.	2	JUN	1715	208	1.
2	JUN	0405	50	922.	2	JUN	0830	103	8.	2	JUN	1255	156	1.	2	JUN	1720	209	1.
2	JUN	0410	51	887.	2	JUN	0835	104	7.	2	JUN	1300	157	1.	2	JUN	1725	210	1.
2	JUN	0415	52	841.	2	JUN	0840	105	6.	2	JUN	1305	158	1.					
2	JUN	0420	53	779.	2	JUN	0845	106	6.	2	JUN	1310	159	1.					

****

PEAK FLOW (CFS)	TIME (HR)		MAXIMUM AVERAGE FLOW 6-HR	24-HR	72-HR	17.42-HR
29206.	2.50	(CFS)	1896.	665.	665.	665.
		(INCHES)	8.729	8.882	8.882	8.882
		(AC-FT)	940.	957.	957.	957.

CUMULATIVE AREA = 2.02 SQ MI

*** ***

```
            **************
            *            *
120 KK      *    578599  *
            *            *
            **************
```

Normal depth channel route (North Heights Dam to GEP Dam)

```
            HYDROGRAPH ROUTING DATA

122 RS        STORAGE ROUTING
                   NSTPS          1  NUMBER OF SUBREACHES
                    ITYP       FLOW  TYPE OF INITIAL CONDITION
                  RSVRIC      -1.00  INITIAL CONDITION
                       X       0.00 WORKING R AND D COEFFICIENT

123 RC        NORMAL DEPTH CHANNEL
                     ANL      0.055  LEFT OVERBANK N-VALUE
                    ANCH      0.045  MAIN CHANNEL N-VALUE
                     ANR      0.055  RIGHT OVERBANK N-VALUE
                   RLNTH      3762.  REACH LENGTH
                     SEL     0.0162  ENERGY SLOPE
                   ELMAX        0.0  MAX. ELEV. FOR STORAGE/OUTFLOW CALCULATION

                                  CROSS-SECTION DATA
                     --- LEFT OVERBANK --- + ------ MAIN CHANNEL ------- + --- RIGHT OVERBANK ---
125 RY      ELEVATION   1755.70   1746.30   1746.10   1741.70   1743.30   1743.70   1744.60   1755.70
124 RX      DISTANCE    9928.90   9945.00   9963.10   9990.60  10012.20  10035.40  10052.80  10069.60

                                                  ***

                                  COMPUTED STORAGE-OUTFLOW-ELEVATION DATA

        STORAGE       0.00      0.46      1.85      4.81      9.40     14.71     20.40     27.33     34.55     41.91
        OUTFLOW       0.00     11.58     73.53    223.88    591.07   1135.72   1841.12   2800.82   3956.89   5289.59
      ELEVATION    1741.70   1742.44   1743.17   1743.91   1744.65   1745.38   1746.12   1746.86   1747.59   1748.33

        STORAGE      49.43     57.10     64.91     72.88     81.01     89.28     97.70    106.28    115.00    123.88
        OUTFLOW    6789.08   8448.74  10263.80  12230.66  14346.52  16609.22  19017.04  21568.64  24262.94  27099.13
      ELEVATION    1749.07   1749.80   1750.54   1751.28   1752.02   1752.75   1753.49   1754.23   1754.96   1755.70

*** WARNING *** MODIFIED PULS ROUTING MAY BE NUMERICALLY UNSTABLE FOR OUTFLOWS BETWEEN    19017. TO    27099.
               THE ROUTED HYDROGRAPH SHOULD BE EXAMINED FOR OSCILLATIONS OR OUTFLOWS GREATER THAN PEAK INFLOWS.
               THIS CAN BE CORRECTED BY DECREASING THE TIME INTERVAL OR INCREASING STORAGE (USE A LONGER REACH.)

*** *** *** *** *** *** *** *** *** *** *** *** *** *** *** *** *** *** *** *** *** *** *** *** *** *** *** *** *** *** *** *** *** *** ***

            **************
            *            *
126 KK      *     C584I  *
            *            *
            **************
                                BASIN S209 (Sunridge Canyon Dam)
                                THE FOLLOWING PARAMETERS WERE PROVIDED FOR THIS BASIN
                                L=      3.2  Lca=      1.7   S=  582.3  Kn= .019  LAG=  15.9
                                PHOENIX MOUNTAIN S-GRAPH WAS USED FOR THIS BASIN

            SUBBASIN RUNOFF DATA

131 BA        SUBBASIN CHARACTERISTICS
                   TAREA        1.60  SUBBASIN AREA

132 LG        GREEN AND AMPT LOSS RATE
                   STRTL        0.13  STARTING LOSS
                     DTH        0.28  MOISTURE DEFICIT
                    PSIF        4.62  WETTING FRONT SUCTION
                   XKSAT        0.32  HYDRAULIC CONDUCTIVITY
                   RTIMP       41.50  PERCENT IMPERVIOUS AREA

127 UI        INPUT UNITGRAPH,  14 ORDINATES,  VOLUME = 1.00
                  515.0    1951.0    3289.0    2104.0    1510.0     997.0     702.0     442.0     308.0     202.0
                  154.0      65.0      65.0      65.0

                                                  ***

*** *** *** *** *** *** *** *** *** *** *** *** *** *** *** *** *** *** *** *** *** *** *** *** *** *** *** *** *** *** *** *** *** *** ***

            **************
```

```
          *            *
136 KK    *     0.5PM  *     F
          *            *
          **************
                         THIS DIVERT REMOVES HALF THE PMF FLOWS CREATING THE .5 PMF BEFORE
                         BEING ROUTED THROUGH THE DAM

    DT          DIVERSION
                     ISTAD       .5PMF  DIVERSION HYDROGRAPH IDENTIFICATION

    DI             INFLOW        0.00     50.00    100.00  10000.00

    DQ      DIVERTED FLOW        0.00     25.00     50.00   5000.00

                                                                 ***


*** *** *** *** *** *** *** *** *** *** *** *** *** *** *** *** *** *** *** *** *** *** *** *** *** *** *** *** *** *** *** *** *** *** ***


          **************
          *            *
142 KK    *     C584O  *
          *            *
          **************
                           Reservoir route at C584 (Sunridge Canyon Dam).
                         THE SQ CARDS HAVE BEEN ALTERED FROM THE ORIGINAL MODEL (GEPD-PMF.DAT) FROM
                         THE GEPD FEASIBILITY STUDY (GVSCE, JULY 1997)
                         PLEASE SEE COMMENT NUMBER 3 ABOVE

             HYDROGRAPH ROUTING DATA

147 RS          STORAGE ROUTING
                      NSTPS           1  NUMBER OF SUBREACHES
                       ITYP        ELEV  TYPE OF INITIAL CONDITION
                     RSVRIC     1926.31  INITIAL CONDITION
                          X        0.00 WORKING R AND D COEFFICIENT

148 SV            STORAGE         0.0       0.6       4.3      11.3      23.7      46.3      86.7      96.0     104.9     126.
                                151.1     165.0     179.5

150 SE          ELEVATION     1884.80   1894.00   1900.00   1906.00   1912.00   1918.00   1924.00   1925.00   1926.00   1928.00
                              1930.00   1931.00   1932.00

152 SQ          DISCHARGE          0.      163.      223.      272.      307.      333.      355.      959.     1762.     6368.
                                12373.    16175.    20178.

154 SE          ELEVATION     1884.80   1894.00   1900.00   1906.00   1912.00   1918.00   1924.00   1925.00   1926.00   1928.00
                              1930.00   1931.00   1932.00

                                                                 ***

                                          COMPUTED STORAGE-OUTFLOW-ELEVATION DATA

          STORAGE       0.00      0.60      4.30     11.27     23.74     46.29     86.65     96.00    104.90    126.25
          OUTFLOW       0.00    163.00    223.00    272.00    307.00    333.00    355.00    959.00   1762.00   6368.00
        ELEVATION    1884.80   1894.00   1900.00   1906.00   1912.00   1918.00   1924.00   1925.00   1926.00   1928.00

          STORAGE     151.07    165.00    179.50
          OUTFLOW   12373.00  16175.00  20178.00
        ELEVATION    1930.00   1931.00   1932.00


*** *** *** *** *** *** *** *** *** *** *** *** *** *** *** *** *** *** *** *** *** *** *** *** *** *** *** *** *** *** *** *** *** *** ***


          **************
          *            *
156 KK    *    584599  *
          *            *
          **************
                         Normal depth channel route (Sunridge Canyon Dam to GEP Dam)

             HYDROGRAPH ROUTING DATA

158 RS          STORAGE ROUTING
```

```
                NSTPS          1  NUMBER OF SUBREACHES
                 ITYP       FLOW  TYPE OF INITIAL CONDITION
                RSVRIC      -1.00  INITIAL CONDITION
                    X       0.00 WORKING R AND D COEFFICIENT

C          NORMAL DEPTH CHANNEL
                  ANL      0.065  LEFT OVERBANK N-VALUE
                 ANCH      0.050  MAIN CHANNEL N-VALUE
                  ANR      0.065  RIGHT OVERBANK N-VALUE
                RLNTH      6526.  REACH LENGTH
                  SEL     0.0257  ENERGY SLOPE
                ELMAX        0.0  MAX. ELEV. FOR STORAGE/OUTFLOW CALCULATION

                                  CROSS-SECTION DATA
                      --- LEFT OVERBANK --- + ------ MAIN CHANNEL ------- + --- RIGHT OVERBANK ---
161 RY      ELEVATION   1796.30   1791.20   1788.30   1784.10   1784.90   1788.00   1790.20   1796.40
160 RX      DISTANCE    9927.60   9939.80   9951.90   9985.30  10036.00  10067.50  10119.20  10188.70

                                                  ***

                                  COMPUTED STORAGE-OUTFLOW-ELEVATION DATA

        STORAGE       0.00      2.24      7.98     14.95     23.06     32.31     42.69     54.58     68.23     83.62
        OUTFLOW       0.00     33.64    220.33    562.36   1053.96   1702.52   2517.57   3657.11   5058.06   6692.23
      ELEVATION    1784.10   1784.75   1785.39   1786.04   1786.69   1787.34   1787.98   1788.63   1789.28   1789.93

        STORAGE     100.62    118.65    137.59    157.39    178.03    199.54    221.89    245.10    269.16    294.08
        OUTFLOW    8585.16  10733.76  13130.79  15770.61  18653.94  21782.37  25158.02  28783.38  32661.21  36801.66
      ELEVATION    1790.57   1791.22   1791.87   1792.52   1793.16   1793.81   1794.46   1795.10   1795.75   1796.40


*** *** *** *** *** *** *** *** *** *** *** *** *** *** *** *** *** *** *** *** *** *** *** *** *** *** *** *** *** *** *** *** *** ***


        **************
        *            *
166 KK  *     C210   *
        *            *
        **************
                          BASIN S210 (GOLDEN EAGLE PARK DAM)
                          THE FOLLOWING PARAMETERS WERE PROVIDED FOR THIS BASIN
                          L=      1.9  Lca=       .9   S=  360.7  Kn= .024  LAG=  13.6
                          PHOENIX MOUNTAIN S-GRAPH WAS USED FOR THIS BASIN

            SUBBASIN RUNOFF DATA

167 BA         SUBBASIN CHARACTERISTICS
                    TAREA        1.38  SUBBASIN AREA

168 LG         GREEN AND AMPT LOSS RATE
                    STRTL        0.09  STARTING LOSS
                      DTH        0.24  MOISTURE DEFICIT
                     PSIF        5.61  WETTING FRONT SUCTION
                    XKSAT        0.19  HYDRAULIC CONDUCTIVITY
                    RTIMP       24.82  PERCENT IMPERVIOUS AREA

163 UI         INPUT UNITGRAPH,  12 ORDINATES,  VOLUME = 1.00
                   634.0    2291.0    3040.0    1739.0    1122.0     723.0     433.0     286.0     170.0      96.0
                    66.0      66.0

                                                  ***


*** *** *** *** *** *** *** *** *** *** *** *** *** *** *** *** *** *** *** *** *** *** *** *** *** *** *** *** *** *** *** *** *** ***


        **************
        *            *
172 KK  *   0.5PMF   *
        *            *
        **************
                          THIS DIVERT REMOVES HALF THE FLOWS FROM THIS AREA TO CREATE THE .5PMF

DT         DIVERSION
                ISTAD      0.5PMF  DIVERSION HYDROGRAPH IDENTIFICATION
```

```
    DI              INFLOW        0.00      50.00     100.00  10000.00

    DQ       DIVERTED FLOW        0.00      25.00      50.00   5000.00

                                                          ***


*** *** *** *** *** *** *** *** *** *** *** *** *** *** *** *** *** *** *** *** *** *** *** *** *** *** *** *** *** *** *** *** *** *** ***


            **************
            *            *
 177 KK     *     C599I  *
            *            *
            **************

 178 KO          OUTPUT CONTROL VARIABLES
                      IPRNT           1  PRINT CONTROL
                      IPLOT           2  PLOT CONTROL
                      QSCAL          0.  HYDROGRAPH PLOT SCALE
                      IPNCH           0  PUNCH COMPUTED HYDROGRAPH
                       IOUT          21  SAVE HYDROGRAPH ON THIS UNIT
                      ISAV1           1  FIRST ORDINATE PUNCHED OR SAVED
                      ISAV2         210  LAST ORDINATE PUNCHED OR SAVED
                     TIMINT       0.083  TIME INTERVAL IN HOURS

                            Hydrograph combine C5840 + C5600 + C5780 + C599

 180 HC          HYDROGRAPH COMBINATION
                      ICOMP           4  NUMBER OF HYDROGRAPHS TO COMBINE

                                                          ***
```

****

HYDROGRAPH AT C599I
TRANSPOSITION AREA 0.0 SQ MI

****

DA	MON	HRMN	ORD	FLOW	DA	MON	HRMN	ORD	FLOW	DA	MON	HRMN	ORD	FLOW	DA	MON	HRMN	ORD	FLOW
2	JUN	0000	1	4065.	2	JUN	0425	54	2727.	2	JUN	0850	107	352.	2	JUN	1315	160	126.
2	JUN	0005	2	3648.	2	JUN	0430	55	2476.	2	JUN	0855	108	331.	2	JUN	1320	161	124.
2	JUN	0010	3	2909.	2	JUN	0435	56	2254.	2	JUN	0900	109	314.	2	JUN	1325	162	121.
2	JUN	0015	4	2363.	2	JUN	0440	57	2091.	2	JUN	0905	110	300.	2	JUN	1330	163	119.
2	JUN	0020	5	1962.	2	JUN	0445	58	1976.	2	JUN	0910	111	289.	2	JUN	1335	164	116.
2	JUN	0025	6	1678.	2	JUN	0450	59	1881.	2	JUN	0915	112	281.	2	JUN	1340	165	114.
2	JUN	0030	7	1469.	2	JUN	0455	60	1802.	2	JUN	0920	113	276.	2	JUN	1345	166	112.
2	JUN	0035	8	1323.	2	JUN	0500	61	1735.	2	JUN	0925	114	270.	2	JUN	1350	167	110.
2	JUN	0040	9	1210.	2	JUN	0505	62	1671.	2	JUN	0930	115	265.	2	JUN	1355	168	107.
2	JUN	0045	10	1121.	2	JUN	0510	63	1589.	2	JUN	0935	116	260.	2	JUN	1400	169	105.
2	JUN	0050	11	1053.	2	JUN	0515	64	1501.	2	JUN	0940	117	255.	2	JUN	1405	170	100.
2	JUN	0055	12	994.	2	JUN	0520	65	1430.	2	JUN	0945	118	251.	2	JUN	1410	171	92.
2	JUN	0100	13	944.	2	JUN	0525	66	1367.	2	JUN	0950	119	246.	2	JUN	1415	172	85.
2	JUN	0105	14	905.	2	JUN	0530	67	1309.	2	JUN	0955	120	242.	2	JUN	1420	173	79.
2	JUN	0110	15	884.	2	JUN	0535	68	1254.	2	JUN	1000	121	239.	2	JUN	1425	174	74.
2	JUN	0115	16	871.	2	JUN	0540	69	1201.	2	JUN	1005	122	235.	2	JUN	1430	175	69.
2	JUN	0120	17	861.	2	JUN	0545	70	1152.	2	JUN	1010	123	232.	2	JUN	1435	176	63.
2	JUN	0125	18	863.	2	JUN	0550	71	1105.	2	JUN	1015	124	228.	2	JUN	1440	177	58.
2	JUN	0130	19	876.	2	JUN	0555	72	1060.	2	JUN	1020	125	225.	2	JUN	1445	178	53.
2	JUN	0135	20	897.	2	JUN	0600	73	1018.	2	JUN	1025	126	222.	2	JUN	1450	179	48.
2	JUN	0140	21	921.	2	JUN	0605	74	978.	2	JUN	1030	127	219.	2	JUN	1455	180	44.
2	JUN	0145	22	948.	2	JUN	0610	75	938.	2	JUN	1035	128	217.	2	JUN	1500	181	40.
2	JUN	0150	23	975.	2	JUN	0615	76	897.	2	JUN	1040	129	214.	2	JUN	1505	182	37.
2	JUN	0155	24	1001.	2	JUN	0620	77	864.	2	JUN	1045	130	211.	2	JUN	1510	183	33.
2	JUN	0200	25	1034.	2	JUN	0625	78	831.	2	JUN	1050	131	209.	2	JUN	1515	184	30.
2	JUN	0205	26	1932.	2	JUN	0630	79	804.	2	JUN	1055	132	206.	2	JUN	1520	185	27.
2	JUN	0210	27	5211.	2	JUN	0635	80	784.	2	JUN	1100	133	204.	2	JUN	1525	186	25.
2	JUN	0215	28	10285.	2	JUN	0640	81	767.	2	JUN	1105	134	202.	2	JUN	1530	187	23.
2	JUN	0220	29	15886.	2	JUN	0645	82	751.	2	JUN	1110	135	199.	2	JUN	1535	188	21
2	JUN	0225	30	27630.	2	JUN	0650	83	736.	2	JUN	1115	136	197.	2	JUN	1540	189	19
2	JUN	0230	31	42264.	2	JUN	0655	84	721.	2	JUN	1120	137	195.	2	JUN	1545	190	17.
2	JUN	0235	32	40271.	2	JUN	0700	85	707.	2	JUN	1125	138	193.	2	JUN	1550	191	16.
2	JUN	0240	33	29538.	2	JUN	0705	86	694.	2	JUN	1130	139	191.	2	JUN	1555	192	14.
2	JUN	0245	34	24219.	2	JUN	0710	87	681.	2	JUN	1135	140	189.	2	JUN	1600	193	13.

2 JUN 0250	35	20739.	*	2 JUN 0715	88	669.	*	2 JUN 1140	141	186.	*	2 JUN 1605	194	12.
2 JUN 0255	36	17568.	*	2 JUN 0720	89	658.	*	2 JUN 1145	142	183.	*	2 JUN 1610	195	11.
2 JUN 0300	37	14842.	*	2 JUN 0725	90	647.	*	2 JUN 1150	143	180.	*	2 JUN 1615	196	10.
2 JUN 0305	38	12671.	*	2 JUN 0730	91	637.	*	2 JUN 1155	144	176.	*	2 JUN 1620	197	9.
2 JUN 0310	39	10956.	*	2 JUN 0735	92	626.	*	2 JUN 1200	145	172.	*	2 JUN 1625	198	8.
JUN 0315	40	9497.	*	2 JUN 0740	93	615.	*	2 JUN 1205	146	169.	*	2 JUN 1630	199	8.
JUN 0320	41	8337.	*	2 JUN 0745	94	604.	*	2 JUN 1210	147	165.	*	2 JUN 1635	200	7.
2 JUN 0325	42	7364.	*	2 JUN 0750	95	593.	*	2 JUN 1215	148	162.	*	2 JUN 1640	201	6.
2 JUN 0330	43	6523.	*	2 JUN 0755	96	583.	*	2 JUN 1220	149	159.	*	2 JUN 1645	202	6.
2 JUN 0335	44	5829.	*	2 JUN 0800	97	572.	*	2 JUN 1225	150	155.	*	2 JUN 1650	203	5.
2 JUN 0340	45	5241.	*	2 JUN 0805	98	559.	*	2 JUN 1230	151	152.	*	2 JUN 1655	204	5.
2 JUN 0345	46	4784.	*	2 JUN 0810	99	545.	*	2 JUN 1235	152	149.	*	2 JUN 1700	205	5.
2 JUN 0350	47	4459.	*	2 JUN 0815	100	532.	*	2 JUN 1240	153	146.	*	2 JUN 1705	206	4.
2 JUN 0355	48	4206.	*	2 JUN 0820	101	516.	*	2 JUN 1245	154	143.	*	2 JUN 1710	207	4.
2 JUN 0400	49	3977.	*	2 JUN 0825	102	498.	*	2 JUN 1250	155	140.	*	2 JUN 1715	208	4.
2 JUN 0405	50	3754.	*	2 JUN 0830	103	479.	*	2 JUN 1255	156	137.	*	2 JUN 1720	209	3.
2 JUN 0410	51	3491.	*	2 JUN 0835	104	448.	*	2 JUN 1300	157	134.	*	2 JUN 1725	210	3.
2 JUN 0415	52	3211.	*	2 JUN 0840	105	409.	*	2 JUN 1305	158	132.	*			
2 JUN 0420	53	2970.	*	2 JUN 0845	106	378.	*	2 JUN 1310	159	129.	*			
			*				*				*			

****

PEAK FLOW (CFS)	TIME (HR)		MAXIMUM AVERAGE FLOW 6-HR	24-HR	72-HR	17.42-HR
42264.	2.50	(CFS)	5743.	2149.	2149.	2149.
		(INCHES)	7.468	8.113	8.113	8.113
		(AC-FT)	2848.	3094.	3094.	3094.

CUMULATIVE AREA = 7.15 SQ MI

****

HYDROGRAPH AT C599I
TRANSPOSITION AREA 1.6 SQ MI

****

DA MON HRMN	ORD	FLOW	*	DA MON HRMN	ORD	FLOW	*	DA MON HRMN	ORD	FLOW	*	DA MON HRMN	ORD	FLOW
JUN 0000	1	4065.	*	2 JUN 0425	54	2727.	*	2 JUN 0850	107	352.	*	2 JUN 1315	160	126.
2 JUN 0005	2	3648.	*	2 JUN 0430	55	2476.	*	2 JUN 0855	108	331.	*	2 JUN 1320	161	124.
2 JUN 0010	3	2909.	*	2 JUN 0435	56	2254.	*	2 JUN 0900	109	314.	*	2 JUN 1325	162	121.
2 JUN 0015	4	2363.	*	2 JUN 0440	57	2091.	*	2 JUN 0905	110	300.	*	2 JUN 1330	163	119.
2 JUN 0020	5	1962.	*	2 JUN 0445	58	1976.	*	2 JUN 0910	111	289.	*	2 JUN 1335	164	116.
2 JUN 0025	6	1678.	*	2 JUN 0450	59	1881.	*	2 JUN 0915	112	281.	*	2 JUN 1340	165	114.
2 JUN 0030	7	1469.	*	2 JUN 0455	60	1802.	*	2 JUN 0920	113	276.	*	2 JUN 1345	166	112.
2 JUN 0035	8	1323.	*	2 JUN 0500	61	1735.	*	2 JUN 0925	114	270.	*	2 JUN 1350	167	110.
2 JUN 0040	9	1210.	*	2 JUN 0505	62	1671.	*	2 JUN 0930	115	265.	*	2 JUN 1355	168	107.
2 JUN 0045	10	1121.	*	2 JUN 0510	63	1589.	*	2 JUN 0935	116	260.	*	2 JUN 1400	169	105.
2 JUN 0050	11	1053.	*	2 JUN 0515	64	1501.	*	2 JUN 0940	117	255.	*	2 JUN 1405	170	100.
2 JUN 0055	12	994.	*	2 JUN 0520	65	1430.	*	2 JUN 0945	118	251.	*	2 JUN 1410	171	92.
2 JUN 0100	13	944.	*	2 JUN 0525	66	1367.	*	2 JUN 0950	119	246.	*	2 JUN 1415	172	85.
2 JUN 0105	14	905.	*	2 JUN 0530	67	1309.	*	2 JUN 0955	120	242.	*	2 JUN 1420	173	79.
2 JUN 0110	15	884.	*	2 JUN 0535	68	1254.	*	2 JUN 1000	121	239.	*	2 JUN 1425	174	74.
2 JUN 0115	16	871.	*	2 JUN 0540	69	1201.	*	2 JUN 1005	122	235.	*	2 JUN 1430	175	69.
2 JUN 0120	17	861.	*	2 JUN 0545	70	1152.	*	2 JUN 1010	123	232.	*	2 JUN 1435	176	63.
2 JUN 0125	18	863.	*	2 JUN 0550	71	1105.	*	2 JUN 1015	124	228.	*	2 JUN 1440	177	58.
2 JUN 0130	19	876.	*	2 JUN 0555	72	1060.	*	2 JUN 1020	125	225.	*	2 JUN 1445	178	53.
2 JUN 0135	20	897.	*	2 JUN 0600	73	1018.	*	2 JUN 1025	126	222.	*	2 JUN 1450	179	48.
2 JUN 0140	21	921.	*	2 JUN 0605	74	978.	*	2 JUN 1030	127	219.	*	2 JUN 1455	180	44.
2 JUN 0145	22	948.	*	2 JUN 0610	75	938.	*	2 JUN 1035	128	217.	*	2 JUN 1500	181	40.
2 JUN 0150	23	975.	*	2 JUN 0615	76	897.	*	2 JUN 1040	129	214.	*	2 JUN 1505	182	37.
2 JUN 0155	24	1001.	*	2 JUN 0620	77	864.	*	2 JUN 1045	130	211.	*	2 JUN 1510	183	33.
2 JUN 0200	25	1034.	*	2 JUN 0625	78	831.	*	2 JUN 1050	131	209.	*	2 JUN 1515	184	30.
2 JUN 0205	26	1932.	*	2 JUN 0630	79	804.	*	2 JUN 1055	132	206.	*	2 JUN 1520	185	27.
2 JUN 0210	27	5211.	*	2 JUN 0635	80	784.	*	2 JUN 1100	133	204.	*	2 JUN 1525	186	25.
2 JUN 0215	28	10285.	*	2 JUN 0640	81	767.	*	2 JUN 1105	134	202.	*	2 JUN 1530	187	23.
2 JUN 0220	29	15886.	*	2 JUN 0645	82	751.	*	2 JUN 1110	135	199.	*	2 JUN 1535	188	21.
2 JUN 0225	30	27630.	*	2 JUN 0650	83	736.	*	2 JUN 1115	136	197.	*	2 JUN 1540	189	19.
2 JUN 0230	31	42264.	*	2 JUN 0655	84	721.	*	2 JUN 1120	137	195.	*	2 JUN 1545	190	17.
2 JUN 0235	32	40271.	*	2 JUN 0700	85	707.	*	2 JUN 1125	138	193.	*	2 JUN 1550	191	16.
JUN 0240	33	29538.	*	2 JUN 0705	86	694.	*	2 JUN 1130	139	191.	*	2 JUN 1555	192	14.
JUN 0245	34	24219.	*	2 JUN 0710	87	681.	*	2 JUN 1135	140	189.	*	2 JUN 1600	193	13.
2 JUN 0250	35	20739.	*	2 JUN 0715	88	669.	*	2 JUN 1140	141	186.	*	2 JUN 1605	194	12.
2 JUN 0255	36	17568.	*	2 JUN 0720	89	658.	*	2 JUN 1145	142	183.	*	2 JUN 1610	195	11.
2 JUN 0300	37	14842.	*	2 JUN 0725	90	647.	*	2 JUN 1150	143	180.	*	2 JUN 1615	196	10.
2 JUN 0305	38	12671.	*	2 JUN 0730	91	637.	*	2 JUN 1155	144	176.	*	2 JUN 1620	197	9.

2 JUN 0310	39	10956.	*	2 JUN 0735	92	626.	*	2 JUN 1200	145	172.	*	2 JUN 1625	198	8.
2 JUN 0315	40	9497.	*	2 JUN 0740	93	615.	*	2 JUN 1205	146	169.	*	2 JUN 1630	199	8.
2 JUN 0320	41	8337.	*	2 JUN 0745	94	604.	*	2 JUN 1210	147	165.	*	2 JUN 1635	200	7.
2 JUN 0325	42	7364.	*	2 JUN 0750	95	593.	*	2 JUN 1215	148	162.	*	2 JUN 1640	201	6.
2 JUN 0330	43	6523.	*	2 JUN 0755	96	583.	*	2 JUN 1220	149	159.	*	2 JUN 1645	202	6.
2 JUN 0335	44	5829.	*	2 JUN 0800	97	572.	*	2 JUN 1225	150	155.	*	2 JUN 1650	203	5
2 JUN 0340	45	5241.	*	2 JUN 0805	98	559.	*	2 JUN 1230	151	152.	*	2 JUN 1655	204	5.
2 JUN 0345	46	4784.	*	2 JUN 0810	99	545.	*	2 JUN 1235	152	149.	*	2 JUN 1700	205	5.
2 JUN 0350	47	4459.	*	2 JUN 0815	100	532.	*	2 JUN 1240	153	146.	*	2 JUN 1705	206	4.
2 JUN 0355	48	4206.	*	2 JUN 0820	101	516.	*	2 JUN 1245	154	143.	*	2 JUN 1710	207	4.
2 JUN 0400	49	3977.	*	2 JUN 0825	102	498.	*	2 JUN 1250	155	140.	*	2 JUN 1715	208	4.
2 JUN 0405	50	3754.	*	2 JUN 0830	103	479.	*	2 JUN 1255	156	137.	*	2 JUN 1720	209	3.
2 JUN 0410	51	3491.	*	2 JUN 0835	104	448.	*	2 JUN 1300	157	134.	*	2 JUN 1725	210	3.
2 JUN 0415	52	3211.	*	2 JUN 0840	105	409.	*	2 JUN 1305	158	132.	*			
2 JUN 0420	53	2970.	*	2 JUN 0845	106	378.	*	2 JUN 1310	159	129.	*			
			*				*				*			

****

PEAK FLOW (CFS)	TIME (HR)		MAXIMUM AVERAGE FLOW 6-HR	24-HR	72-HR	17.42-HR
42264.	2.50	(CFS)	5743.	2149.	2149.	2149.
		(INCHES)	7.468	8.113	8.113	8.113
		(AC-FT)	2848.	3094.	3094.	3094.

CUMULATIVE AREA = 7.15 SQ MI

****

HYDROGRAPH AT C599I
TRANSPOSITION AREA 2.0 SQ MI

****

DA MON HRMN	ORD	FLOW	*	DA MON HRMN	ORD	FLOW	*	DA MON HRMN	ORD	FLOW	*	DA MON HRMN	ORD	FLOW
2 JUN 0000	1	4065.	*	2 JUN 0425	54	2739.	*	2 JUN 0850	107	327.	*	2 JUN 1315	160	124.
2 JUN 0005	2	3648.	*	2 JUN 0430	55	2467.	*	2 JUN 0855	108	311.	*	2 JUN 1320	161	122.
2 JUN 0010	3	2912.	*	2 JUN 0435	56	2230.	*	2 JUN 0900	109	298.	*	2 JUN 1325	162	119
2 JUN 0015	4	2371.	*	2 JUN 0440	57	2056.	*	2 JUN 0905	110	287.	*	2 JUN 1330	163	11[illegible]
2 JUN 0020	5	1972.	*	2 JUN 0445	58	1936.	*	2 JUN 0910	111	281.	*	2 JUN 1335	164	115.
2 JUN 0025	6	1688.	*	2 JUN 0450	59	1837.	*	2 JUN 0915	112	276.	*	2 JUN 1340	165	112.
2 JUN 0030	7	1481.	*	2 JUN 0455	60	1754.	*	2 JUN 0920	113	270.	*	2 JUN 1345	166	110.
2 JUN 0035	8	1336.	*	2 JUN 0500	61	1684.	*	2 JUN 0925	114	265.	*	2 JUN 1350	167	108.
2 JUN 0040	9	1224.	*	2 JUN 0505	62	1618.	*	2 JUN 0930	115	260.	*	2 JUN 1355	168	106.
2 JUN 0045	10	1136.	*	2 JUN 0510	63	1542.	*	2 JUN 0935	116	255.	*	2 JUN 1400	169	101.
2 JUN 0050	11	1068.	*	2 JUN 0515	64	1463.	*	2 JUN 0940	117	251.	*	2 JUN 1405	170	94.
2 JUN 0055	12	1011.	*	2 JUN 0520	65	1397.	*	2 JUN 0945	118	247.	*	2 JUN 1410	171	86.
2 JUN 0100	13	962.	*	2 JUN 0525	66	1336.	*	2 JUN 0950	119	243.	*	2 JUN 1415	172	80.
2 JUN 0105	14	922.	*	2 JUN 0530	67	1280.	*	2 JUN 0955	120	239.	*	2 JUN 1420	173	75.
2 JUN 0110	15	899.	*	2 JUN 0535	68	1226.	*	2 JUN 1000	121	235.	*	2 JUN 1425	174	70.
2 JUN 0115	16	886.	*	2 JUN 0540	69	1174.	*	2 JUN 1005	122	232.	*	2 JUN 1430	175	64.
2 JUN 0120	17	878.	*	2 JUN 0545	70	1125.	*	2 JUN 1010	123	229.	*	2 JUN 1435	176	59.
2 JUN 0125	18	884.	*	2 JUN 0550	71	1079.	*	2 JUN 1015	124	225.	*	2 JUN 1440	177	54.
2 JUN 0130	19	899.	*	2 JUN 0555	72	1035.	*	2 JUN 1020	125	222.	*	2 JUN 1445	178	49.
2 JUN 0135	20	919.	*	2 JUN 0600	73	995.	*	2 JUN 1025	126	220.	*	2 JUN 1450	179	45.
2 JUN 0140	21	942.	*	2 JUN 0605	74	955.	*	2 JUN 1030	127	217.	*	2 JUN 1455	180	41.
2 JUN 0145	22	966.	*	2 JUN 0610	75	916.	*	2 JUN 1035	128	214.	*	2 JUN 1500	181	37.
2 JUN 0150	23	991.	*	2 JUN 0615	76	880.	*	2 JUN 1040	129	212.	*	2 JUN 1505	182	34.
2 JUN 0155	24	1016.	*	2 JUN 0620	77	846.	*	2 JUN 1045	130	209.	*	2 JUN 1510	183	31.
2 JUN 0200	25	1047.	*	2 JUN 0625	78	818.	*	2 JUN 1050	131	207.	*	2 JUN 1515	184	28.
2 JUN 0205	26	1922.	*	2 JUN 0630	79	797.	*	2 JUN 1055	132	204.	*	2 JUN 1520	185	25.
2 JUN 0210	27	5124.	*	2 JUN 0635	80	779.	*	2 JUN 1100	133	202.	*	2 JUN 1525	186	23.
2 JUN 0215	28	10103.	*	2 JUN 0640	81	763.	*	2 JUN 1105	134	200.	*	2 JUN 1530	187	21.
2 JUN 0220	29	15643.	*	2 JUN 0645	82	747.	*	2 JUN 1110	135	198.	*	2 JUN 1535	188	19.
2 JUN 0225	30	27312.	*	2 JUN 0650	83	732.	*	2 JUN 1115	136	195.	*	2 JUN 1540	189	17.
2 JUN 0230	31	41900.	*	2 JUN 0655	84	717.	*	2 JUN 1120	137	193.	*	2 JUN 1545	190	16.
2 JUN 0235	32	39858.	*	2 JUN 0700	85	703.	*	2 JUN 1125	138	191.	*	2 JUN 1550	191	14.
2 JUN 0240	33	29183.	*	2 JUN 0705	86	689.	*	2 JUN 1130	139	189.	*	2 JUN 1555	192	13.
2 JUN 0245	34	23936.	*	2 JUN 0710	87	677.	*	2 JUN 1135	140	187.	*	2 JUN 1600	193	12.
2 JUN 0250	35	20500.	*	2 JUN 0715	88	665.	*	2 JUN 1140	141	184.	*	2 JUN 1605	194	11.
2 JUN 0255	36	17282.	*	2 JUN 0720	89	653.	*	2 JUN 1145	142	180.	*	2 JUN 1610	195	10.
2 JUN 0300	37	14453.	*	2 JUN 0725	90	642.	*	2 JUN 1150	143	176.	*	2 JUN 1615	196	[illegible]
2 JUN 0305	38	12191.	*	2 JUN 0730	91	630.	*	2 JUN 1155	144	173.	*	2 JUN 1620	197	
2 JUN 0310	39	10504.	*	2 JUN 0735	92	619.	*	2 JUN 1200	145	169.	*	2 JUN 1625	198	8.
2 JUN 0315	40	9094.	*	2 JUN 0740	93	608.	*	2 JUN 1205	146	166.	*	2 JUN 1630	199	7.
2 JUN 0320	41	7987.	*	2 JUN 0745	94	597.	*	2 JUN 1210	147	162.	*	2 JUN 1635	200	7.
2 JUN 0325	42	7049.	*	2 JUN 0750	95	585.	*	2 JUN 1215	148	159.	*	2 JUN 1640	201	6.

2 JUN 0330	43	6269.	*	2 JUN 0755	96	573.	*	2 JUN 1220	149	156.	*	2 JUN 1645	202	6.
2 JUN 0335	44	5637.	*	2 JUN 0800	97	560.	*	2 JUN 1225	150	153.	*	2 JUN 1650	203	5.
2 JUN 0340	45	5116.	*	2 JUN 0805	98	546.	*	2 JUN 1230	151	150.	*	2 JUN 1655	204	5.
2 JUN 0345	46	4727.	*	2 JUN 0810	99	531.	*	2 JUN 1235	152	146.	*	2 JUN 1700	205	4.
2 JUN 0350	47	4445.	*	2 JUN 0815	100	514.	*	2 JUN 1240	153	143.	*	2 JUN 1705	206	4.
JUN 0355	48	4218.	*	2 JUN 0820	101	495.	*	2 JUN 1245	154	141.	*	2 JUN 1710	207	4.
JUN 0400	49	4015.	*	2 JUN 0825	102	473.	*	2 JUN 1250	155	138.	*	2 JUN 1715	208	3.
JUN 0405	50	3809.	*	2 JUN 0830	103	438.	*	2 JUN 1255	156	135.	*	2 JUN 1720	209	3.
2 JUN 0410	51	3544.	*	2 JUN 0835	104	401.	*	2 JUN 1300	157	132.	*	2 JUN 1725	210	3.
2 JUN 0415	52	3249.	*	2 JUN 0840	105	371.	*	2 JUN 1305	158	129.	*			
2 JUN 0420	53	2997.	*	2 JUN 0845	106	347.	*	2 JUN 1310	159	127.	*			
			*				*				*			

****

PEAK FLOW (CFS)	TIME (HR)		MAXIMUM AVERAGE FLOW 6-HR	24-HR	72-HR	17.42-HR
41900.	2.50	(CFS)	5662.	2117.	2117.	2117.
		(INCHES)	7.362	7.993	7.993	7.993
		(AC-FT)	2807.	3048.	3048.	3048.

CUMULATIVE AREA = 7.15 SQ MI

****

HYDROGRAPH AT C599I
TRANSPOSITION AREA 2.2 SQ MI

****

DA MON HRMN	ORD	FLOW	*	DA MON HRMN	ORD	FLOW	*	DA MON HRMN	ORD	FLOW	*	DA MON HRMN	ORD	FLOW
2 JUN 0000	1	4065.	*	2 JUN 0425	54	2739.	*	2 JUN 0850	107	327.	*	2 JUN 1315	160	124.
2 JUN 0005	2	3648.	*	2 JUN 0430	55	2467.	*	2 JUN 0855	108	311.	*	2 JUN 1320	161	122.
2 JUN 0010	3	2912.	*	2 JUN 0435	56	2230.	*	2 JUN 0900	109	298.	*	2 JUN 1325	162	119.
2 JUN 0015	4	2371.	*	2 JUN 0440	57	2056.	*	2 JUN 0905	110	287.	*	2 JUN 1330	163	117.
2 JUN 0020	5	1972.	*	2 JUN 0445	58	1936.	*	2 JUN 0910	111	281.	*	2 JUN 1335	164	115.
2 JUN 0025	6	1688.	*	2 JUN 0450	59	1837.	*	2 JUN 0915	112	276.	*	2 JUN 1340	165	112.
2 JUN 0030	7	1481.	*	2 JUN 0455	60	1754.	*	2 JUN 0920	113	270.	*	2 JUN 1345	166	110.
JUN 0035	8	1336.	*	2 JUN 0500	61	1684.	*	2 JUN 0925	114	265.	*	2 JUN 1350	167	108.
JUN 0040	9	1224.	*	2 JUN 0505	62	1618.	*	2 JUN 0930	115	260.	*	2 JUN 1355	168	106.
2 JUN 0045	10	1136.	*	2 JUN 0510	63	1542.	*	2 JUN 0935	116	255.	*	2 JUN 1400	169	101.
2 JUN 0050	11	1068.	*	2 JUN 0515	64	1463.	*	2 JUN 0940	117	251.	*	2 JUN 1405	170	94.
2 JUN 0055	12	1011.	*	2 JUN 0520	65	1397.	*	2 JUN 0945	118	247.	*	2 JUN 1410	171	86.
2 JUN 0100	13	962.	*	2 JUN 0525	66	1336.	*	2 JUN 0950	119	243.	*	2 JUN 1415	172	80.
2 JUN 0105	14	922.	*	2 JUN 0530	67	1280.	*	2 JUN 0955	120	239.	*	2 JUN 1420	173	75.
2 JUN 0110	15	899.	*	2 JUN 0535	68	1226.	*	2 JUN 1000	121	235.	*	2 JUN 1425	174	70.
2 JUN 0115	16	886.	*	2 JUN 0540	69	1174.	*	2 JUN 1005	122	232.	*	2 JUN 1430	175	64.
2 JUN 0120	17	878.	*	2 JUN 0545	70	1125.	*	2 JUN 1010	123	229.	*	2 JUN 1435	176	59.
2 JUN 0125	18	884.	*	2 JUN 0550	71	1079.	*	2 JUN 1015	124	225.	*	2 JUN 1440	177	54.
2 JUN 0130	19	899.	*	2 JUN 0555	72	1035.	*	2 JUN 1020	125	222.	*	2 JUN 1445	178	49.
2 JUN 0135	20	919.	*	2 JUN 0600	73	995.	*	2 JUN 1025	126	220.	*	2 JUN 1450	179	45.
2 JUN 0140	21	942.	*	2 JUN 0605	74	955.	*	2 JUN 1030	127	217.	*	2 JUN 1455	180	41.
2 JUN 0145	22	966.	*	2 JUN 0610	75	916.	*	2 JUN 1035	128	214.	*	2 JUN 1500	181	37.
2 JUN 0150	23	991.	*	2 JUN 0615	76	880.	*	2 JUN 1040	129	212.	*	2 JUN 1505	182	34.
2 JUN 0155	24	1016.	*	2 JUN 0620	77	846.	*	2 JUN 1045	130	209.	*	2 JUN 1510	183	31.
2 JUN 0200	25	1047.	*	2 JUN 0625	78	818.	*	2 JUN 1050	131	207.	*	2 JUN 1515	184	28.
2 JUN 0205	26	1922.	*	2 JUN 0630	79	797.	*	2 JUN 1055	132	204.	*	2 JUN 1520	185	25.
2 JUN 0210	27	5124.	*	2 JUN 0635	80	779.	*	2 JUN 1100	133	202.	*	2 JUN 1525	186	23.
2 JUN 0215	28	10103.	*	2 JUN 0640	81	763.	*	2 JUN 1105	134	200.	*	2 JUN 1530	187	21.
2 JUN 0220	29	15643.	*	2 JUN 0645	82	747.	*	2 JUN 1110	135	198.	*	2 JUN 1535	188	19.
2 JUN 0225	30	27312.	*	2 JUN 0650	83	732.	*	2 JUN 1115	136	195.	*	2 JUN 1540	189	17.
2 JUN 0230	31	41900.	*	2 JUN 0655	84	717.	*	2 JUN 1120	137	193.	*	2 JUN 1545	190	16.
2 JUN 0235	32	39858.	*	2 JUN 0700	85	703.	*	2 JUN 1125	138	191.	*	2 JUN 1550	191	14.
2 JUN 0240	33	29183.	*	2 JUN 0705	86	689.	*	2 JUN 1130	139	189.	*	2 JUN 1555	192	13.
2 JUN 0245	34	23936.	*	2 JUN 0710	87	677.	*	2 JUN 1135	140	187.	*	2 JUN 1600	193	12.
2 JUN 0250	35	20500.	*	2 JUN 0715	88	665.	*	2 JUN 1140	141	184.	*	2 JUN 1605	194	11.
2 JUN 0255	36	17282.	*	2 JUN 0720	89	653.	*	2 JUN 1145	142	180.	*	2 JUN 1610	195	10.
2 JUN 0300	37	14453.	*	2 JUN 0725	90	642.	*	2 JUN 1150	143	176.	*	2 JUN 1615	196	9.
2 JUN 0305	38	12191.	*	2 JUN 0730	91	630.	*	2 JUN 1155	144	173.	*	2 JUN 1620	197	8.
2 JUN 0310	39	10504.	*	2 JUN 0735	92	619.	*	2 JUN 1200	145	169.	*	2 JUN 1625	198	8.
2 JUN 0315	40	9094.	*	2 JUN 0740	93	608.	*	2 JUN 1205	146	166.	*	2 JUN 1630	199	7.
2 JUN 0320	41	7987.	*	2 JUN 0745	94	597.	*	2 JUN 1210	147	162.	*	2 JUN 1635	200	7.
JUN 0325	42	7049.	*	2 JUN 0750	95	585.	*	2 JUN 1215	148	159.	*	2 JUN 1640	201	6.
JUN 0330	43	6269.	*	2 JUN 0755	96	573.	*	2 JUN 1220	149	156.	*	2 JUN 1645	202	6.
2 JUN 0335	44	5637.	*	2 JUN 0800	97	560.	*	2 JUN 1225	150	153.	*	2 JUN 1650	203	5.
2 JUN 0340	45	5116.	*	2 JUN 0805	98	546.	*	2 JUN 1230	151	150.	*	2 JUN 1655	204	5.
2 JUN 0345	46	4727.	*	2 JUN 0810	99	531.	*	2 JUN 1235	152	146.	*	2 JUN 1700	205	4.

2 JUN 0350	47	4445.	*	2 JUN 0815	100	514.	*	2 JUN 1240	153	143.	*	2 JUN 1705	206	4.
2 JUN 0355	48	4218.	*	2 JUN 0820	101	495.	*	2 JUN 1245	154	141.	*	2 JUN 1710	207	4.
2 JUN 0400	49	4015.	*	2 JUN 0825	102	473.	*	2 JUN 1250	155	138.	*	2 JUN 1715	208	3.
2 JUN 0405	50	3809.	*	2 JUN 0830	103	438.	*	2 JUN 1255	156	135.	*	2 JUN 1720	209	3.
2 JUN 0410	51	3544.	*	2 JUN 0835	104	401.	*	2 JUN 1300	157	132.	*	2 JUN 1725	210	3.
2 JUN 0415	52	3249.	*	2 JUN 0840	105	371.	*	2 JUN 1305	158	129.	*			
2 JUN 0420	53	2997.	*	2 JUN 0845	106	347.	*	2 JUN 1310	159	127.	*			
			*				*				*			

****

PEAK FLOW (CFS)	TIME (HR)		MAXIMUM AVERAGE FLOW 6-HR	24-HR	72-HR	17.42-HR
41900.	2.50	(CFS)	5662.	2117.	2117.	2117.
		(INCHES)	7.362	7.993	7.993	7.993
		(AC-FT)	2807.	3048.	3048.	3048.

CUMULATIVE AREA = 7.15 SQ MI

****

HYDROGRAPH AT C599I
TRANSPOSITION AREA 7.2 SQ MI

****

DA MON HRMN	ORD	FLOW	*	DA MON HRMN	ORD	FLOW	*	DA MON HRMN	ORD	FLOW	*	DA MON HRMN	ORD	FLOW
2 JUN 0000	1	4065.	*	2 JUN 0425	54	2469.	*	2 JUN 0850	107	329.	*	2 JUN 1315	160	124.
2 JUN 0005	2	3647.	*	2 JUN 0430	55	2280.	*	2 JUN 0855	108	312.	*	2 JUN 1320	161	121.
2 JUN 0010	3	2908.	*	2 JUN 0435	56	2132.	*	2 JUN 0900	109	299.	*	2 JUN 1325	162	119.
2 JUN 0015	4	2362.	*	2 JUN 0440	57	2000.	*	2 JUN 0905	110	288.	*	2 JUN 1330	163	116.
2 JUN 0020	5	1960.	*	2 JUN 0445	58	1896.	*	2 JUN 0910	111	281.	*	2 JUN 1335	164	114.
2 JUN 0025	6	1676.	*	2 JUN 0450	59	1806.	*	2 JUN 0915	112	275.	*	2 JUN 1340	165	112.
2 JUN 0030	7	1467.	*	2 JUN 0455	60	1734.	*	2 JUN 0920	113	270.	*	2 JUN 1345	166	109.
2 JUN 0035	8	1321.	*	2 JUN 0500	61	1670.	*	2 JUN 0925	114	265.	*	2 JUN 1350	167	107.
2 JUN 0040	9	1208.	*	2 JUN 0505	62	1607.	*	2 JUN 0930	115	260.	*	2 JUN 1355	168	104.
2 JUN 0045	10	1118.	*	2 JUN 0510	63	1530.	*	2 JUN 0935	116	255.	*	2 JUN 1400	169	99.
2 JUN 0050	11	1050.	*	2 JUN 0515	64	1447.	*	2 JUN 0940	117	250.	*	2 JUN 1405	170	92.
2 JUN 0055	12	991.	*	2 JUN 0520	65	1380.	*	2 JUN 0945	118	246.	*	2 JUN 1410	171	84
2 JUN 0100	13	941.	*	2 JUN 0525	66	1320.	*	2 JUN 0950	119	242.	*	2 JUN 1415	172	79
2 JUN 0105	14	901.	*	2 JUN 0530	67	1264.	*	2 JUN 0955	120	238.	*	2 JUN 1420	173	74.
2 JUN 0110	15	879.	*	2 JUN 0535	68	1211.	*	2 JUN 1000	121	235.	*	2 JUN 1425	174	68.
2 JUN 0115	16	865.	*	2 JUN 0540	69	1161.	*	2 JUN 1005	122	231.	*	2 JUN 1430	175	63.
2 JUN 0120	17	855.	*	2 JUN 0545	70	1113.	*	2 JUN 1010	123	228.	*	2 JUN 1435	176	58.
2 JUN 0125	18	853.	*	2 JUN 0550	71	1067.	*	2 JUN 1015	124	225.	*	2 JUN 1440	177	53.
2 JUN 0130	19	859.	*	2 JUN 0555	72	1025.	*	2 JUN 1020	125	222.	*	2 JUN 1445	178	48.
2 JUN 0135	20	873.	*	2 JUN 0600	73	984.	*	2 JUN 1025	126	219.	*	2 JUN 1450	179	44.
2 JUN 0140	21	894.	*	2 JUN 0605	74	945.	*	2 JUN 1030	127	216.	*	2 JUN 1455	180	40.
2 JUN 0145	22	919.	*	2 JUN 0610	75	909.	*	2 JUN 1035	128	214.	*	2 JUN 1500	181	36.
2 JUN 0150	23	946.	*	2 JUN 0615	76	873.	*	2 JUN 1040	129	211.	*	2 JUN 1505	182	33.
2 JUN 0155	24	972.	*	2 JUN 0620	77	841.	*	2 JUN 1045	130	208.	*	2 JUN 1510	183	30.
2 JUN 0200	25	1005.	*	2 JUN 0625	78	815.	*	2 JUN 1050	131	206.	*	2 JUN 1515	184	27.
2 JUN 0205	26	1826.	*	2 JUN 0630	79	796.	*	2 JUN 1055	132	204.	*	2 JUN 1520	185	25.
2 JUN 0210	27	4826.	*	2 JUN 0635	80	778.	*	2 JUN 1100	133	201.	*	2 JUN 1525	186	22.
2 JUN 0215	28	9464.	*	2 JUN 0640	81	762.	*	2 JUN 1105	134	199.	*	2 JUN 1530	187	20.
2 JUN 0220	29	14562.	*	2 JUN 0645	82	747.	*	2 JUN 1110	135	197.	*	2 JUN 1535	188	19.
2 JUN 0225	30	25783.	*	2 JUN 0650	83	732.	*	2 JUN 1115	136	195.	*	2 JUN 1540	189	17.
2 JUN 0230	31	40111.	*	2 JUN 0655	84	717.	*	2 JUN 1120	137	193.	*	2 JUN 1545	190	15.
2 JUN 0235	32	37985.	*	2 JUN 0700	85	703.	*	2 JUN 1125	138	191.	*	2 JUN 1550	191	14.
2 JUN 0240	33	27674.	*	2 JUN 0705	86	689.	*	2 JUN 1130	139	189.	*	2 JUN 1555	192	13.
2 JUN 0245	34	22673.	*	2 JUN 0710	87	677.	*	2 JUN 1135	140	186.	*	2 JUN 1600	193	12.
2 JUN 0250	35	19451.	*	2 JUN 0715	88	664.	*	2 JUN 1140	141	183.	*	2 JUN 1605	194	11.
2 JUN 0255	36	16481.	*	2 JUN 0720	89	653.	*	2 JUN 1145	142	179.	*	2 JUN 1610	195	10.
2 JUN 0300	37	13950.	*	2 JUN 0725	90	642.	*	2 JUN 1150	143	175.	*	2 JUN 1615	196	9.
2 JUN 0305	38	11905.	*	2 JUN 0730	91	631.	*	2 JUN 1155	144	172.	*	2 JUN 1620	197	8.
2 JUN 0310	39	10317.	*	2 JUN 0735	92	619.	*	2 JUN 1200	145	168.	*	2 JUN 1625	198	8.
2 JUN 0315	40	8927.	*	2 JUN 0740	93	608.	*	2 JUN 1205	146	165.	*	2 JUN 1630	199	7.
2 JUN 0320	41	7849.	*	2 JUN 0745	94	597.	*	2 JUN 1210	147	161.	*	2 JUN 1635	200	6.
2 JUN 0325	42	6892.	*	2 JUN 0750	95	586.	*	2 JUN 1215	148	158.	*	2 JUN 1640	201	6.
2 JUN 0330	43	6081.	*	2 JUN 0755	96	573.	*	2 JUN 1220	149	155.	*	2 JUN 1645	202	5.
2 JUN 0335	44	5400.	*	2 JUN 0800	97	560.	*	2 JUN 1225	150	152.	*	2 JUN 1650	203	5.
2 JUN 0340	45	4842.	*	2 JUN 0805	98	546.	*	2 JUN 1230	151	149.	*	2 JUN 1655	204	5
2 JUN 0345	46	4440.	*	2 JUN 0810	99	532.	*	2 JUN 1235	152	146.	*	2 JUN 1700	205	
2 JUN 0350	47	4128.	*	2 JUN 0815	100	515.	*	2 JUN 1240	153	143.	*	2 JUN 1705	206	
2 JUN 0355	48	3862.	*	2 JUN 0820	101	496.	*	2 JUN 1245	154	140.	*	2 JUN 1710	207	4.
2 JUN 0400	49	3626.	*	2 JUN 0825	102	475.	*	2 JUN 1250	155	137.	*	2 JUN 1715	208	3.
2 JUN 0405	50	3408.	*	2 JUN 0830	103	442.	*	2 JUN 1255	156	134.	*	2 JUN 1720	209	3.

2 JUN 0410	51	3165.	*	2 JUN 0835	104	404.	*	2 JUN 1300	157	131.	*	2 JUN 1725	210	3.
2 JUN 0415	52	2905.	*	2 JUN 0840	105	373.	*	2 JUN 1305	158	129.	*			
2 JUN 0420	53	2683.	*	2 JUN 0845	106	349.	*	2 JUN 1310	159	126.	*			

K FLOW (CFS)	TIME (HR)		MAXIMUM AVERAGE FLOW 6-HR	24-HR	72-HR	17.42-HR
40111.	2.50	(CFS)	5407.	2029.	2029.	2029.
		(INCHES)	7.031	7.660	7.660	7.660
		(AC-FT)	2681.	2921.	2921.	2921.

CUMULATIVE AREA = 7.15 SQ MI

INTERPOLATED HYDROGRAPH AT C599I

DA MON HRMN	ORD	FLOW	DA MON HRMN	ORD	FLOW	DA MON HRMN	ORD	FLOW	DA MON HRMN	ORD	FLOW
2 JUN 0000	1	4065.	2 JUN 0425	54	2469.	2 JUN 0850	107	329.	2 JUN 1315	160	124.
2 JUN 0005	2	3647.	2 JUN 0430	55	2280.	2 JUN 0855	108	312.	2 JUN 1320	161	121.
2 JUN 0010	3	2908.	2 JUN 0435	56	2132.	2 JUN 0900	109	299.	2 JUN 1325	162	119.
2 JUN 0015	4	2362.	2 JUN 0440	57	2000.	2 JUN 0905	110	288.	2 JUN 1330	163	116.
2 JUN 0020	5	1960.	2 JUN 0445	58	1896.	2 JUN 0910	111	281.	2 JUN 1335	164	114.
2 JUN 0025	6	1676.	2 JUN 0450	59	1806.	2 JUN 0915	112	275.	2 JUN 1340	165	112.
2 JUN 0030	7	1467.	2 JUN 0455	60	1734.	2 JUN 0920	113	270.	2 JUN 1345	166	109.
2 JUN 0035	8	1321.	2 JUN 0500	61	1670.	2 JUN 0925	114	265.	2 JUN 1350	167	107.
2 JUN 0040	9	1208.	2 JUN 0505	62	1607.	2 JUN 0930	115	260.	2 JUN 1355	168	104.
2 JUN 0045	10	1118.	2 JUN 0510	63	1530.	2 JUN 0935	116	255.	2 JUN 1400	169	99.
2 JUN 0050	11	1050.	2 JUN 0515	64	1447.	2 JUN 0940	117	250.	2 JUN 1405	170	92.
2 JUN 0055	12	991.	2 JUN 0520	65	1380.	2 JUN 0945	118	246.	2 JUN 1410	171	84.
2 JUN 0100	13	941.	2 JUN 0525	66	1320.	2 JUN 0950	119	242.	2 JUN 1415	172	79.
2 JUN 0105	14	901.	2 JUN 0530	67	1264.	2 JUN 0955	120	238.	2 JUN 1420	173	74.
2 JUN 0110	15	879.	2 JUN 0535	68	1211.	2 JUN 1000	121	235.	2 JUN 1425	174	68.
2 JUN 0115	16	865.	2 JUN 0540	69	1161.	2 JUN 1005	122	231.	2 JUN 1430	175	63.
2 JUN 0120	17	855.	2 JUN 0545	70	1113.	2 JUN 1010	123	228.	2 JUN 1435	176	58.
2 JUN 0125	18	853.	2 JUN 0550	71	1067.	2 JUN 1015	124	225.	2 JUN 1440	177	53.
2 JUN 0130	19	859.	2 JUN 0555	72	1025.	2 JUN 1020	125	222.	2 JUN 1445	178	48.
2 JUN 0135	20	873.	2 JUN 0600	73	984.	2 JUN 1025	126	219.	2 JUN 1450	179	44.
2 JUN 0140	21	894.	2 JUN 0605	74	945.	2 JUN 1030	127	216.	2 JUN 1455	180	40.
2 JUN 0145	22	919.	2 JUN 0610	75	909.	2 JUN 1035	128	214.	2 JUN 1500	181	36.
2 JUN 0150	23	946.	2 JUN 0615	76	873.	2 JUN 1040	129	211.	2 JUN 1505	182	33.
2 JUN 0155	24	972.	2 JUN 0620	77	841.	2 JUN 1045	130	208.	2 JUN 1510	183	30.
2 JUN 0200	25	1005.	2 JUN 0625	78	815.	2 JUN 1050	131	206.	2 JUN 1515	184	27.
2 JUN 0205	26	1826.	2 JUN 0630	79	796.	2 JUN 1055	132	204.	2 JUN 1520	185	25.
2 JUN 0210	27	4826.	2 JUN 0635	80	778.	2 JUN 1100	133	201.	2 JUN 1525	186	22.
2 JUN 0215	28	9464.	2 JUN 0640	81	762.	2 JUN 1105	134	199.	2 JUN 1530	187	20.
2 JUN 0220	29	14562.	2 JUN 0645	82	747.	2 JUN 1110	135	197.	2 JUN 1535	188	19.
2 JUN 0225	30	25783.	2 JUN 0650	83	732.	2 JUN 1115	136	195.	2 JUN 1540	189	17.
2 JUN 0230	31	40111.	2 JUN 0655	84	717.	2 JUN 1120	137	193.	2 JUN 1545	190	15.
2 JUN 0235	32	37985.	2 JUN 0700	85	703.	2 JUN 1125	138	191.	2 JUN 1550	191	14.
2 JUN 0240	33	27674.	2 JUN 0705	86	689.	2 JUN 1130	139	189.	2 JUN 1555	192	13.
2 JUN 0245	34	22673.	2 JUN 0710	87	677.	2 JUN 1135	140	186.	2 JUN 1600	193	12.
2 JUN 0250	35	19451.	2 JUN 0715	88	664.	2 JUN 1140	141	183.	2 JUN 1605	194	11.
2 JUN 0255	36	16481.	2 JUN 0720	89	653.	2 JUN 1145	142	179.	2 JUN 1610	195	10.
2 JUN 0300	37	13950.	2 JUN 0725	90	642.	2 JUN 1150	143	175.	2 JUN 1615	196	9.
2 JUN 0305	38	11905.	2 JUN 0730	91	631.	2 JUN 1155	144	172.	2 JUN 1620	197	8.
2 JUN 0310	39	10317.	2 JUN 0735	92	619.	2 JUN 1200	145	168.	2 JUN 1625	198	8.
2 JUN 0315	40	8927.	2 JUN 0740	93	608.	2 JUN 1205	146	165.	2 JUN 1630	199	7.
2 JUN 0320	41	7849.	2 JUN 0745	94	597.	2 JUN 1210	147	161.	2 JUN 1635	200	6.
2 JUN 0325	42	6892.	2 JUN 0750	95	586.	2 JUN 1215	148	158.	2 JUN 1640	201	6.
2 JUN 0330	43	6081.	2 JUN 0755	96	573.	2 JUN 1220	149	155.	2 JUN 1645	202	5.
2 JUN 0335	44	5400.	2 JUN 0800	97	560.	2 JUN 1225	150	152.	2 JUN 1650	203	5.
2 JUN 0340	45	4842.	2 JUN 0805	98	546.	2 JUN 1230	151	149.	2 JUN 1655	204	5.
2 JUN 0345	46	4440.	2 JUN 0810	99	532.	2 JUN 1235	152	146.	2 JUN 1700	205	4.
2 JUN 0350	47	4128.	2 JUN 0815	100	515.	2 JUN 1240	153	143.	2 JUN 1705	206	4.
2 JUN 0355	48	3862.	2 JUN 0820	101	496.	2 JUN 1245	154	140.	2 JUN 1710	207	4.
2 JUN 0400	49	3626.	2 JUN 0825	102	475.	2 JUN 1250	155	137.	2 JUN 1715	208	3.
2 JUN 0405	50	3408.	2 JUN 0830	103	442.	2 JUN 1255	156	134.	2 JUN 1720	209	3.
2 JUN 0410	51	3165.	2 JUN 0835	104	404.	2 JUN 1300	157	131.	2 JUN 1725	210	3.
2 JUN 0415	52	2905.	2 JUN 0840	105	373.	2 JUN 1305	158	129.			
2 JUN 0420	53	2683.	2 JUN 0845	106	349.	2 JUN 1310	159	126.			

PEAK FLOW (CFS)	TIME (HR)		MAXIMUM AVERAGE FLOW 6-HR	24-HR	72-HR	17.42-HR
40111.	2.50	(CFS)	5407.	2029.	2029.	2029.
		(INCHES)	7.031	7.660	7.660	7.660
		(AC-FT)	2681.	2921.	2921.	2921.

CUMULATIVE AREA = 7.15 SQ MI

STATION C599I

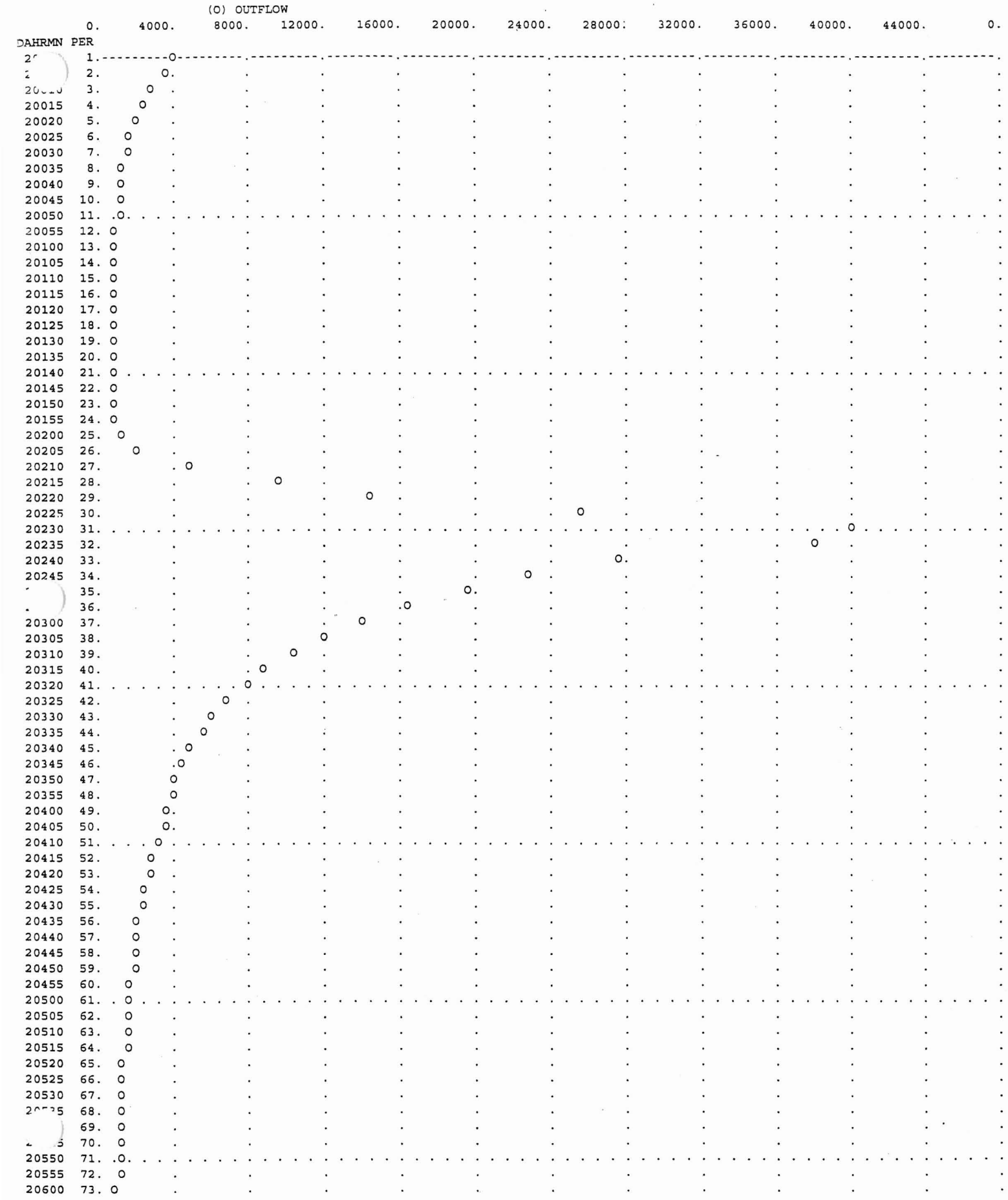

20605 74. O
20610 75. O
20615 76. O
20620 77. O
20625 78. O
20630 79. O
20635 80. O
20640 81. O
20645 82. O
20650 83. O
20655 84. O
20700 85. O
20705 86. O
20710 87. O
20715 88. O
20720 89. O
20725 90. O
20730 91. O
20735 92. O
20740 93. O
20745 94.O
20750 95.O
20755 96.O
20800 97.O
20805 98.O
20810 99.O
20815 100.O
20820 101.O.
20825 102.O
20830 103.O
20835 104.O
20840 105.O
20845 106.O
20850 107.O
20855 108.O
20900 109.O
20905 110.O
20910 111.O.
20915 112.O
20920 113.O
20925 114.O
20930 115.O
20935 116.O
20940 117.O
20945 118.O
20950 119.O
20955 120.O
21000 121.O.
21005 122.O
21010 123.O
21015 124.O
21020 125.O
21025 126.O
21030 127.O
21035 128.O
21040 129.O
21045 130.O
21050 131.O.
21055 132.O
21100 133.O
21105 134O
21110 135O
21115 136O
21120 137O
21125 138O
21130 139O
21135 140O
21140 141O
21145 142O
21150 143O
21155 144O
21200 145O
21205 146O
21210 147O
21215 148O
21220 149O
21225 150O
21230 151O

21235 1520
21240 1530
21245 1540
21250 1550
21255 1560
[illegible] 1570
[illegible] 1580
21310 1590
21315 1600
21320 1610
21325 1620
21330 1630
21335 1640
21340 1650
21345 1660
21350 1670
21355 1680
21400 1690
21405 1700
21410 1710
21415 1720
21420 1730
21425 1740
21430 1750
21435 1760
21440 1770
21445 1780
21450 1790
21455 1800
21500 1810
21505 1820
21510 1830
21515 1840
21520 1850
21525 1860
21530 1870
21535 1880
21540 1890
[illegible] 1900
[illegible] 1910
[illegible] 1920
21600 1930
21605 1940
21610 1950
21615 1960
21620 1970
21625 1980
21630 1990
21635 2000
21640 2010
21645 2020
21650 2030
21655 2040
21700 2050
21705 2060
21710 2070
21715 2080
21720 2090
21725 2100

RUNOFF SUMMARY
FLOW IN CUBIC FEET PER SECOND
TIME IN HOURS, AREA IN SQUARE MILES

OPERATION	STATION	PEAK FLOW	TIME OF PEAK	AVERAGE FLOW FOR MAXIMUM PERIOD 6-HOUR	24-HOUR	72-HOUR	BASIN AREA	MAXIMUM STAGE	TIME OF MAX STAGE
HYDROGRAPH AT	C560I	17974.	2.58	2897.	1001.	1001.	2.15		
DIVERSION TO	.5PMF	8987.	2.58	1449.	500.	500.	2.15		
HYDROGRAPH AT	0.5PM	8987.	2.58	1449.	500.	500.	2.15		
ROUTED TO	C560O	7963.	2.67	1525.	627.	627.	2.15		
ROUTED TO	560599	7909.	2.75	1529.	631.	631.	2.15		
HYDROGRAPH AT	DAMFLO	29206.	2.50	1896.	665.	665.	2.02		
ROUTED TO	578599	25366.	2.50	1909.	673.	673.	2.02		
HYDROGRAPH AT	C584I	20238.	2.33	2265.	781.	781.	1.60		
DIVERSION TO	.5PMF	10119.	2.33	1132.	391.	391.	1.60		
HYDROGRAPH AT	0.5PM	10119.	2.33	1132.	391.	391.	1.60		
ROUTED TO	C584O	9855.	2.42	1229.	466.	466.	1.60		
ROUTED TO	584599	7907.	2.58	1293.	495.	495.	1.60		
HYDROGRAPH AT	C210	19580.	2.33	1956.	674.	674.	1.38		
DIVERSION TO	0.5PMF	9790.	2.33	978.	337.	337.	1.38		
HYDROGRAPH AT	0.5PMF	9790.	2.33	978.	337.	337.	1.38		
4 COMBINED AT	C599I	40111.	2.50	5407.	2029.	2029.	7.15		

*** NORMAL END OF HEC-1 ***

Appendix D

HEC-1 file for IDF2

```
*****************************************
*                                       *
*   FLOOD HYDROGRAPH PACKAGE  (HEC-1)   *
*              MAY   1991               *
*            VERSION 4.0.1E             *
*     Lahey F77L-EM/32 version 5.01     *
*       Dodson & Associates, Inc.       *
*  RUN DATE  02/18/99  TIME  14:40:32   *
*****************************************
```

```
*****************************************
*                                       *
*    U.S. ARMY CORPS OF ENGINEERS       *
*    HYDROLOGIC ENGINEERING CENTER      *
*          609 SECOND STREET            *
*       DAVIS, CALIFORNIA 95616         *
*           (916) 551-1748              *
*                                       *
*****************************************
```

```
X     X  XXXXXXX   XXXXX          X
X     X  X        X     X        XX
X     X  X        X               X
XXXXXXX  XXXX     X        XXXXX  X
X     X  X        X               X
X     X  X        X     X         X
X     X  XXXXXXX   XXXXX         XXX
```

THIS PROGRAM REPLACES ALL PREVIOUS VERSIONS OF HEC-1 KNOWN AS HEC1 (JAN 73), HEC1GS, HEC1DB, AND HEC1KW.

THE DEFINITIONS OF VARIABLES -RTIMP- AND -RTIOR- HAVE CHANGED FROM THOSE USED WITH THE 1973-STYLE INPUT STRUCTURE.
THE DEFINITION OF -AMSKK- ON RM-CARD WAS CHANGED WITH REVISIONS DATED 28 SEP 81. THIS IS THE FORTRAN77 VERSION
NEW OPTIONS: DAMBREAK OUTFLOW SUBMERGENCE , SINGLE EVENT DAMAGE CALCULATION, DSS:WRITE STAGE FREQUENCY,
DSS:READ TIME SERIES AT DESIRED CALCULATION INTERVAL LOSS RATE:GREEN AND AMPT INFILTRATION
KINEMATIC WAVE: NEW FINITE DIFFERENCE ALGORITHM

```
LINE          ID.......1.......2.......3.......4.......5.......6.......7.......8.......9......10

  1           ID        GOLDEN EAGLE PARK DAM (FCD 97-44)
  2           ID        IDF2 Model for the Computation of IDF for Golden Eagle Park Dam
  3           ID        ****************************************************************
  4           ID        Analytical Considerations:
  5           ID            Without Upstream Dam Breach
  6           ID            Single Basin Models
  7           ID            This model considers areal reduction method.
  8           ID        ****************************************************************
  9           ID
 10           ID    FILE: IDF2.DAT (by FCDMC)
 11           ID    DATE: OCTOBER 1998
 12           ID    MODIFIED BY STANTEC - FEBRUARY 1999
 13           ID
 14           ID    THIS MODEL WAS ALTERED BY FCDMC FROM THE ORIGINAL MODEL- GEPD-PMF.DAT
 15           ID    FROM THE GOLDEN EAGLE PARK DAM FEASIBILITY STUDY DONE BY GEORGE V.
 16           ID    SABOL CONSULTING ENGINEERS, INC. (GVSCE), JULY 1997
 17           ID
 18           ID       THIS MODEL HAS UNDERGONE THE FOLLOWING ADJUSTMENTS (BY FCDMC):
 19           ID          1.)  NORTH HEIGHTS DAM IN THIS MODEL DOES NOT BREACH
 20           ID          2.)  BEFORE THE FLOW FROM EACH WATERSHED IS ROUTED THROUGH THEIR
 21           ID               RESPECTIVE DAMS,  HALF THE FLOW IS DIVERTED OUT TO REFLECT
 22           ID               THE HALF PMF EVENT.
 23           ID               THE FLOWS FROM BETWEEN THE UPPER DAMS AND GEPD HAS ALSO BEEN
 24           ID               HALVED
 25           ID          3.)  THE RATING CURVES FOR THE DAMS WERE ALTERED USING THE
 26           ID               EQUATION Q=CLH3/2 TO INCREASE THE LENGTH OF THE SPILLWAY
 27           ID               SO THAT THE HALF PMF WILL PASS THROUGH THE SPILLWAY WITH
 28           ID               THE REQUIRED THREE FEET OF FREEBOARD
 29           ID               C = 2.6
 30           ID          4.)  THE PRINCIPLE SPILLWAYS WERE MODELED AS UNCLOGGED
 31           ID          5.)  THE INITIAL WATER SURFACE ELEVATION WAS SET TO THE
 32           ID               HEIGHT OF THE 100 YEAR EVENT WSEL
 33           ID          NOTE:MODIFICATIONS BY STANTEC ARE EDITORIAL ONLY. THE ORIGINAL GVSCE
 34           ID               MODEL AND REVISIONS BY FCDMC ARE ACCEPTED. THE ROUTING (BY FCDMC)
 35           ID               OF THE IDF2 HYDROGRAPH THROUGH THE EXISTING GEP DAM IS DELETED.
              *DIAGRAM
 36           IT       5 02JUN98             200
 37           IO       4
 38           IN      15
              *
 39           JD   15.00    0.01
 40           PI   0.075   0.075   0.075   0.075     0.2     0.2     0.2     0.2     8.2     1.8
 41           PI     0.7     0.7     0.4     0.4     0.4     0.4    0.15    0.15    0.15    0.15
 42           PI   0.075   0.075   0.075   0.075
 43           JD   15.00   1.603
 44           PI   0.075   0.075   0.075   0.075     0.2     0.2     0.2     0.2     8.2     1.8
 45           PI     0.7     0.7     0.4     0.4     0.4     0.4    0.15    0.15    0.15    0.15
 46           PI   0.075   0.075   0.075   0.075
 47           JD   14.70   2.000
 48           PI     0.1     0.1     0.1     0.1     0.2     0.2     0.2     0.2     8.0     1.8
 49           PI     0.7     0.5   0.425   0.425   0.425   0.425   0.125   0.125   0.125   0.125
 50           PI   0.075   0.075   0.075   0.075
 51           JD   14.70   2.150
 52           PI     0.1     0.1     0.1     0.1     0.2     0.2     0.2     0.2     8.0     1.8
 53           PI     0.7     0.5   0.425   0.425   0.425   0.425   0.125   0.125   0.125   0.125
```

```
LINE          ID.......1.......2.......3.......4.......5.......6.......7.......8.......9......10

  54          PI   0.075   0.075   0.075   0.075
  55          JD   13.70   7.150
  56          PI   0.075   0.075   0.075   0.075     0.2     0.2     0.2     0.2     8.0     1.8
  57          PI     0.7     0.7   0.375   0.375   0.375   0.375    0.15    0.15    0.15    0.15
  58          PI   0.075   0.075   0.075   0.075

  59          KK   C560I (ASPEN DAM)
  60          KM        BASIN S207
  61          KM        THE FOLLOWING PARAMETERS WERE PROVIDED FOR THIS BASIN
  62          KM        L=      3.9  Lca=      2.2   S=  464.7  Kn= .030  LAG=  30.6
  63          KM        PHOENIX MOUNTAIN S-GRAPH WAS USED FOR THIS BASIN
  64          BA    2.15
  65          LG     .17     .31    4.90    0.29   31.55
  66          UI    237.    523.   1170.   1651.   2163.   2377.   1509.   1274.   1082.    897.
  67          UI    699.    573.    507.    374.    299.    259.    198.    181.    119.    116.
  68          UI    111.     45.     45.     45.     45.     45.     45.     45.      0.      0.
  69          UI      0.      0.      0.      0.      0.      0.      0.      0.      0.      0.
  70          UI      0.      0.      0.      0.      0.      0.      0.      0.      0.      0.

  71          KK  0.5PMF
  72          KM    THIS DIVERT IS USED TO REMOVE HALF THE FLOWS BEFORE ROUTING THROUGH
  73          KM    THE DAM
  74          DT  0.5PMF
  75          DI       0      50     100   10000
  76          DQ       0      25      50    5000
              *

  77          KK   C560O
  78          KM      Reservoir route at C560 (Aspen Dam).
  79          KM    THE SQ CARDS HAVE BEEN ALTERED FROM THE ORIGINAL MODEL (GEPD - PMF.DAT) FROM
  80          KM    THE GEPD FEASIBILITY STUDY (GVSCE, JULY 1997)
  81          RS       1    ELEV 1835.36
  82          SV    0.00    7.09   34.65   75.98  135.64  191.44  208.31  226.53  246.00  266.28
  83          SV  289.00  310.81  336.00
  84          SE  1808.8 1814.00 1820.00 1826.00 1832.00 1836.00 1837.00 1838.00 1839.00 1840.00
  85          SE  1841.0 1842.00 1843.00
  86          SQ       0     102     184     242     285     907    1913    3718    5913    8428
  87          SQ   11432   14486   17540
              *

  88          KK  560599
  89          KM      Normal depth channel route (Aspen Dam to GEP Dam)
  90          RS       1    FLOW      -1
  91          RC   0.050   0.025   0.050  3127.0  0.0272
  92          RX  9850.4  9950.4  9974.4 10000.0 10035.5 10059.8 10080.4 10104.4
  93          RY  1772.0  1771.7  1765.3  1765.3  1765.9  1768.5  1773.3  1773.7
              *

  94          KK   C578I
  95          KM        BASIN S208 (NORTH HEIGHTS DAM)
  96          KM        THE FOLLOWING PARAMETERS WERE PROVIDED FOR THIS BASIN
  97          KM        L=      3.0  Lca=      1.6   S=  488.9  Kn= .018  LAG=  14.2
  98          KM        PHOENIX MOUNTAIN S-GRAPH WAS USED FOR THIS BASIN
  99          BA    2.00
 100          LG     .10     .25    4.80     .28   50.48
```

```
LINE          ID.......1.......2.......3.......4.......5.......6.......7.......8.......9......10

 101          UI    837.   3038.   4371.   2543.   1714.   1106.    677.    446.    282.    192.
 102          UI     91.     91.     91.      0.      0.      0.      0.      0.      0.      0.
 103          UI      0.      0.      0.      0.      0.      0.      0.      0.      0.      0.

 104          KK  0.5PMF
 105          KM    THIS DIVERT REMOVES HALF THE FLOWS TO REPRESENT THE .5 PMF BEFORE BEING
 106          KM    ROUTED THROUGH THE DAM
 107          DT  0.5PMF
 108          DI       0      50     100   10000
 109          DQ       0      25      50    5000
              *

 110          KK   C578O
 111          KM      Reservoir route at C578 (North Heights Dam).
 112          KM    THE SQ CARDS HAVE BEEN ALTERED FROM THE ORIGINAL MODEL (GEPD-PMF.DAT) FROM
 113          KM    THE GEPD FEASIBILITY STUDY (GVSCE, JULY 1997)
 114          KO       3
 115          RS       1    ELEV 1812.29
 116          SV    0.00    2.77   16.38   41.49   84.39  133.00  154.47  171.00  187.43    205.
 117          SV  223.03  242.00  261.38
 118          SE  1779.2 1788.00 1794.00 1800.00 1806.00  1810.5 1812.00 1813.00 1814.00   1815.
 119          SE  1816.0 1817.00 1818.00
 120          SQ       0     160     221     269     305     327    2323    4539    8141   12045
 121          SQ   16339   21352   26505
 122          SE  1779.2 1788.00 1794.00 1800.00 1806.00  1810.5 1812.00 1813.00 1814.00   1815.
 123          SE  1816.0 1817.00 1818.00
              *

 124          KK  578599
 125          KM      Normal depth channel route (North Heights Dam to GEP Dam)
 126          RS       1    FLOW      -1
 127          RC   0.055   0.045   0.055  3762.0 0.01624
 128          RX  9928.9  9945.0  9963.1  9990.6 10012.2 10035.4 10052.8 10069.6
 129          RY  1755.7  1746.3  1746.1  1741.7  1743.3  1743.7  1744.6  1755.7
              *

 130          KK   C584I
 131          KM        BASIN S209 (SUNRIDGE CANYON DAM)
 132          KM        THE FOLLOWING PARAMETERS WERE PROVIDED FOR THIS BASIN
 133          KM        L=      3.2  Lca=      1.7   S=  582.3  Kn= .019  LAG=  15.9
 134          KM        PHOENIX MOUNTAIN S-GRAPH WAS USED FOR THIS BASIN
 135          BA    1.60
 136          LG     .13     .28    4.62     .32   41.50
 137          UI    515.   1951.   3289.   2104.   1510.    997.    702.    442.    308.    202.
 138          UI    154.     65.     65.     65.      0.      0.      0.      0.      0.      0.
 139          UI      0.      0.      0.      0.      0.      0.      0.      0.      0.      0.

 140          KK  0.5PMF
 141          KM    THIS DIVERT REMOVES HALF THE PMF FLOWS CREATING THE .5 PMF BEFORE
 142          KM    BEING ROUTED THROUGH THE DAM
 143          DT  0.5PMF
 144          DI       0      50     100   10000
 145          DQ       0      25      50    5000
              *
```

```
LINE          ID.......1.......2.......3.......4.......5.......6.......7.......8.......9......10

 146          KK   C5840
 147          KM      Reservoir route at C584. (Sunridge Canyon Dam)
 148          KM    THE SQ CARDS HAVE BEEN ALTERED FROM THE ORIGINAL MODEL (GEPD-PMF.DAT) FROM
 149          KM    THE GEPD FEASIBILITY STUDY (GVSCE, JULY 1997)
 150          RS       1    ELEV 1926.31
 151          SV    0.00     0.60     4.30    11.27    23.74    46.29    86.65    96.00   104.90   126.25
 152          SV  151.07   165.00   179.50
 153          SE  1884.8 1894.00 1900.00 1906.00 1912.00 1918.00 1924.00 1925.00 1926.00 1928.00
 154          SE  1930.0 1931.00 1932.00
 155          SQ       0      163      223      272      307      333      355      959     1762     6368
 156          SQ   12373    16175    20178
 157          SE  1884.8 1894.00 1900.00 1906.00 1912.00 1918.00 1924.00 1925.00 1926.00 1928.00
 158          SE  1930.0 1931.00 1932.00
              *

 159          KK  584599
 160          KM      Normal depth channel route (Sunridge Canyon Dam to GEP Dam)
 161          RS       1    FLOW      -1
 162          RC   0.065    0.050    0.065   6526.0 0.02571
 163          RX  9927.6   9939.8   9951.9   9985.3 10036.0 10067.5 10119.2 10188.7
 164          RY  1796.3   1791.2   1788.3   1784.1  1784.9  1788.0  1790.2  1796.4
              *

 165          KK    C210
 166          KM        BASIN S210 (GOLDEN EAGLE PARK DAM)
 167          KM        THE FOLLOWING PARAMETERS WERE PROVIDED FOR THIS BASIN
 168          KM        L=       1.9  Lca=        .9   S=  360.7  Kn= .024  LAG=  13.6
 169          KM        PHOENIX MOUNTAIN S-GRAPH WAS USED FOR THIS BASIN
 170          BA    1.38
 171          LG     .09      .24     5.61      .19    24.82
 172          UI    634.    2291.    3040.    1739.    1122.     723.     433.     286.     170.      96.
 173          UI     66.      66.       0.       0.       0.       0.       0.       0.       0.       0.
 174          UI      0.       0.       0.       0.       0.       0.       0.       0.       0.       0.

 175          KK  0.5PMF
 176          KM    THIS DIVERT REMOVES HALF THE FLOWS FROM THIS AREA TO CREATE THE .5PMF
 177          DT  0.5PMF
 178          DI       0       50      100    10000
 179          DQ       0       25       50     5000
              *

 180          KK   C599I
 181          KO       1        2                          21
 182          KM      Hydrograph combine C5840 + C5600 + C5780 + C599
 183          HC       4
 184          ZZ
```

```
                SCHEMATIC DIAGRAM OF STREAM NETWORK
INPUT
 LINE      (V) ROUTING          (--->) DIVERSION OR PUMP FLOW

  NO.      (.) CONNECTOR        (<---) RETURN OF DIVERTED OR PUMPED FLOW

   59       C560I
                .
                .
   74           .-------> 0.5PMF
   71      0.5PMF
                V
                V
   77       C560O
                V
                V
   88      560599
                .
                .
   94           .       C578I
                .           .
                .           .
  107           .           .-------> 0.5PMF
  104           .      0.5PMF
                .           V
                .           V
  110           .       C578O
                .           V
                .           V
  124           .      578599
                .           .
                .           .
  130           .           .       C584I
                .           .           .
                .           .           .
  143           .           .           .-------> 0.5PMF
  140           .           .      0.5PMF
                .           .           V
                .           .           V
  146           .           .       C584O
                .           .           V
                .           .           V
  159           .           .      584599
                .           .           .
                .           .           .
  165           .           .           .        C210
                .           .           .           .
                .           .           .           .
  177           .           .           .           .-------> 0.5PMF
  175           .           .           .      0.5PMF
                .           .           .           .
                .           .           .           .
  180      C599I.................................
```

(***) RUNOFF ALSO COMPUTED AT THIS LOCATION

```
*****************************************                    *****************************************
*                                       *                    *                                       *
*   FLOOD HYDROGRAPH PACKAGE  (HEC-1)   *                    *    U.S. ARMY CORPS OF ENGINEERS       *
*              MAY   1991               *                    *    HYDROLOGIC ENGINEERING CENTER      *
*            VERSION 4.0.1E             *                    *          609 SECOND STREET            *
*     Lahey F77L-EM/32 version 5.01     *                    *       DAVIS, CALIFORNIA 95616         *
*       Dodson & Associates, Inc.       *                    *           (916) 551-1748              *
*  RUN DATE  02/18/99  TIME  14:40:32   *                    *                                       *
*****************************************                    *****************************************
```

```
                    GOLDEN EAGLE PARK DAM (FCD 97-44)
                    IDF2 Model for the Computation of IDF for Golden Eagle Park Dam
                    ****************************************************************
                    Analytical Considerations:
                        Without Upstream Dam Breach
                        Single Basin Models
                        This model considers areal reduction method.
                    ****************************************************************

                FILE: IDF2.DAT (by FCDMC)
                DATE: OCTOBER 1998
                MODIFIED BY STANTEC - FEBRUARY 1999

                THIS MODEL WAS ALTERED BY FCDMC FROM THE ORIGINAL MODEL- GEPD-PMF.DAT
                FROM THE GOLDEN EAGLE PARK DAM FEASIBILITY STUDY DONE BY GEORGE V.
                SABOL CONSULTING ENGINEERS, INC. (GVSCE), JULY 1997

                   THIS MODEL HAS UNDERGONE THE FOLLOWING ADJUSTMENTS (BY FCDMC):
                      1.)  NORTH HEIGHTS DAM IN THIS MODEL DOES NOT BREACH
                      2.)  BEFORE THE FLOW FROM EACH WATERSHED IS ROUTED THROUGH THEIR
                           RESPECTIVE DAMS,  HALF THE FLOW IS DIVERTED OUT TO REFLECT
                           THE HALF PMF EVENT.
                           THE FLOWS FROM BETWEEN THE UPPER DAMS AND GEPD HAS ALSO BEEN
                           HALVED
                      3.)  THE RATING CURVES FOR THE DAMS WERE ALTERED USING THE
                           EQUATION Q=CLH3/2 TO INCREASE THE LENGTH OF THE SPILLWAY
                           SO THAT THE HALF PMF WILL PASS THROUGH THE SPILLWAY WITH
                           THE REQUIRED THREE FEET OF FREEBOARD
                           C = 2.6
                      4.)  THE PRINCIPLE SPILLWAYS WERE MODELED AS UNCLOGGED
                      5.)  THE INITIAL WATER SURFACE ELEVATION WAS SET TO THE
                           HEIGHT OF THE 100 YEAR EVENT WSEL
                      NOTE:MODIFICATIONS BY STANTEC ARE EDITORIAL ONLY.  THE ORIGINAL GVSCE
                           AND REVISIONS BY FCDMC ARE ACCEPTED.  THE ROUTING (BY FCDMC)
                           OF THE IDF2 HYDROGRAPH THROUGH THE EXISTING GEP DAM IS DELETED.

 37 IO          OUTPUT CONTROL VARIABLES
                      IPRNT           4  PRINT CONTROL
                      IPLOT           0  PLOT CONTROL
                      QSCAL          0.  HYDROGRAPH PLOT SCALE

 38 IN          TIME DATA FOR INPUT TIME SERIES
                      JXMIN          15  TIME INTERVAL IN MINUTES
                     JXDATE      2JUN98  STARTING DATE
                     JXTIME           0  STARTING TIME

    IT          HYDROGRAPH TIME DATA
                       NMIN           5  MINUTES IN COMPUTATION INTERVAL
                      IDATE      2JUN98  STARTING DATE
                      ITIME        0000  STARTING TIME
                         NQ         200  NUMBER OF HYDROGRAPH ORDINATES
                     NDDATE      2JUN98  ENDING DATE
                     NDTIME        1635  ENDING TIME
                      ICENT          19  CENTURY MARK

                 COMPUTATION INTERVAL    0.08 HOURS
                      TOTAL TIME BASE   16.58 HOURS

          ENGLISH UNITS
               DRAINAGE AREA          SQUARE MILES
               PRECIPITATION DEPTH    INCHES
               LENGTH, ELEVATION      FEET
               FLOW                   CUBIC FEET PER SECOND
               STORAGE VOLUME         ACRE-FEET
```

```
SURFACE AREA          ACRES
TEMPERATURE           DEGREES FAHRENHEIT

39 JD        INDEX STORM NO. 1
                STRM       15.00  PRECIPITATION DEPTH
                TRDA        0.01  TRANSPOSITION DRAINAGE AREA

40 PI          PRECIPITATION PATTERN
                 0.03       0.03       0.02       0.03       0.03       0.02       0.03       0.03       0.02       0.02
                 0.03       0.03       0.07       0.07       0.07       0.07       0.07       0.07       0.07       0.07
                 0.07       0.07       0.07       0.07       2.73       2.73       2.73       0.60       0.60       0.60
                 0.23       0.23       0.23       0.23       0.23       0.23       0.13       0.13       0.13       0.13
                 0.13       0.13       0.13       0.13       0.13       0.13       0.13       0.13       0.05       0.05
                 0.05       0.05       0.05       0.05       0.05       0.05       0.05       0.05       0.05       0.05
                 0.02       0.03       0.02       0.02       0.03       0.02       0.02       0.03       0.02       0.02
                 0.03       0.02

43 JD        INDEX STORM NO. 2
                STRM       15.00  PRECIPITATION DEPTH
                TRDA        1.60  TRANSPOSITION DRAINAGE AREA

44 PI          PRECIPITATION PATTERN
                 0.03       0.03       0.02       0.03       0.03       0.02       0.03       0.03       0.02       0.02
                 0.03       0.03       0.07       0.07       0.07       0.07       0.07       0.07       0.07       0.07
                 0.07       0.07       0.07       0.07       2.73       2.73       2.73       0.60       0.60       0.60
                 0.23       0.23       0.23       0.23       0.23       0.23       0.13       0.13       0.13       0.13
                 0.13       0.13       0.13       0.13       0.13       0.13       0.13       0.13       0.05       0.05
                 0.05       0.05       0.05       0.05       0.05       0.05       0.05       0.05       0.05       0.05
                 0.02       0.03       0.02       0.02       0.03       0.02       0.02       0.03       0.02       0.02
                 0.03       0.02

47 JD        INDEX STORM NO. 3
                STRM       14.70  PRECIPITATION DEPTH
                TRDA        2.00  TRANSPOSITION DRAINAGE AREA

48 PI          PRECIPITATION PATTERN
                 0.03       0.03       0.03       0.03       0.03       0.03       0.03       0.03       0.03       0.03
                 0.03       0.03       0.07       0.07       0.07       0.07       0.07       0.07       0.07       0.07
                 0.07       0.07       0.07       0.07       2.67       2.67       2.67       0.60       0.60       0.60
                 0.23       0.23       0.23       0.17       0.17       0.17       0.14       0.14       0.14       0.14
                 0.14       0.14       0.14       0.14       0.14       0.14       0.14       0.14       0.04       0.04
                 0.04       0.04       0.04       0.04       0.04       0.04       0.04       0.04       0.04       0.04
                 0.02       0.03       0.02       0.02       0.03       0.02       0.02       0.03       0.02       0.02
                 0.03       0.02

51 JD        INDEX STORM NO. 4
                STRM       14.70  PRECIPITATION DEPTH
                TRDA        2.15  TRANSPOSITION DRAINAGE AREA

52 PI          PRECIPITATION PATTERN
                 0.03       0.03       0.03       0.03       0.03       0.03       0.03       0.03       0.03       0.03
                 0.03       0.03       0.07       0.07       0.07       0.07       0.07       0.07       0.07       0.07
                 0.07       0.07       0.07       0.07       2.67       2.67       2.67       0.60       0.60       0.60
                 0.23       0.23       0.23       0.17       0.17       0.17       0.14       0.14       0.14       0.14
                 0.14       0.14       0.14       0.14       0.14       0.14       0.14       0.14       0.04       0.04
                 0.04       0.04       0.04       0.04       0.04       0.04       0.04       0.04       0.04       0.04
                 0.02       0.03       0.02       0.02       0.03       0.02       0.02       0.03       0.02       0.02
                 0.03       0.02

55 JD        INDEX STORM NO. 5
                STRM       13.70  PRECIPITATION DEPTH
                TRDA        7.15  TRANSPOSITION DRAINAGE AREA

56 PI          PRECIPITATION PATTERN
                 0.03       0.03       0.02       0.03       0.03       0.02       0.03       0.03       0.02       0.02
                 0.03       0.03       0.07       0.07       0.07       0.07       0.07       0.07       0.07       0.07
                 0.07       0.07       0.07       0.07       2.67       2.67       2.67       0.60       0.60       0.60
                 0.23       0.23       0.23       0.23       0.23       0.23       0.13       0.13       0.13       0.13
                 0.13       0.13       0.13       0.13       0.13       0.13       0.13       0.13       0.05       0.05
                 0.05       0.05       0.05       0.05       0.05       0.05       0.05       0.05       0.05       0.05
                 0.02       0.03       0.02       0.02       0.03       0.02       0.02       0.03       0.02       0.02
                 0.03       0.02

*** *** *** *** *** *** *** *** *** *** *** *** *** *** *** *** *** *** *** *** *** *** *** *** *** *** *** *** *** *** *** *** *** ***
```

```
          **************
          *            *
 59 KK    *     C560I  *      (ASPEN DAM)
          *            *
          **************
                              BASIN S207
                              THE FOLLOWING PARAMETERS WERE PROVIDED FOR THIS BASIN
                              L=      3.9  Lca=      2.2   S=  464.7  Kn= .030  LAG=  30.6
                              PHOENIX MOUNTAIN S-GRAPH WAS USED FOR THIS BASIN

            SUBBASIN RUNOFF DATA

 64 BA        SUBBASIN CHARACTERISTICS
                    TAREA        2.15  SUBBASIN AREA

 65 LG        GREEN AND AMPT LOSS RATE
                    STRTL        0.17  STARTING LOSS
                      DTH        0.31  MOISTURE DEFICIT
                     PSIF        4.90  WETTING FRONT SUCTION
                    XKSAT        0.29  HYDRAULIC CONDUCTIVITY
                    RTIMP       31.55  PERCENT IMPERVIOUS AREA

 60 UI        INPUT UNITGRAPH,  28 ORDINATES,  VOLUME = 1.00
                 237.0     523.0    1170.0    1651.0    2163.0    2377.0    1509.0    1274.0    1082.0     897.0
                 699.0     573.0     507.0     374.0     299.0     259.0     198.0     181.0     119.0     116.0
                 111.0      45.0      45.0      45.0      45.0      45.0      45.0      45.0
                                                                   ***

*** *** *** *** *** *** *** *** *** *** *** *** *** *** *** *** *** *** *** *** *** *** *** *** *** *** *** *** *** *** *** *** *** *** ***

          **************
          *            *
 71 KK    *    0.5PMF  *
          *            *
          **************
                              THIS DIVERT IS USED TO REMOVE HALF THE FLOWS BEFORE ROUTING THROUGH
                              THE DAM

   DT         DIVERSION
                    ISTAD      0.5PMF  DIVERSION HYDROGRAPH IDENTIFICATION

   DI            INFLOW        0.00     50.00    100.00  10000.00

   DQ      DIVERTED FLOW       0.00     25.00     50.00   5000.00
                                                                   ***

*** *** *** *** *** *** *** *** *** *** *** *** *** *** *** *** *** *** *** *** *** *** *** *** *** *** *** *** *** *** *** *** *** *** ***

          **************
          *            *
 77 KK    *     C560O  *
          *            *
          **************
                               Reservoir route at C560 (Aspen Dam).
                              THE SQ CARDS HAVE BEEN ALTERED FROM THE ORIGINAL MODEL (GEPD - PMF.DAT) FROM
                              THE GEPD FEASIBILITY STUDY (GVSCE, JULY 1997)

            HYDROGRAPH ROUTING DATA

 81 RS        STORAGE ROUTING
                    NSTPS           1  NUMBER OF SUBREACHES
                     ITYP        ELEV  TYPE OF INITIAL CONDITION
                   RSVRIC     1835.36  INITIAL CONDITION
                        X        0.00 WORKING R AND D COEFFICIENT

 SV           STORAGE          0.0       7.1      34.7      76.0     135.6     191.4     208.3     226.5     246.0     266.3
                             289.0     310.8     336.0

 84 SE        ELEVATION     1808.80   1814.00   1820.00   1826.00   1832.00   1836.00   1837.00   1838.00   1839.00   1840.00
                            1841.00   1842.00   1843.00
```

```
 86 SQ          DISCHARGE          0.      102.      184.      242.      285.      907.     1913.     3718.     5913.     8428.
                              11432.    14486.    17540.

                                                        ***

*** *** *** *** *** *** *** *** *** *** *** *** *** *** *** *** *** *** *** *** *** *** *** *** *** *** *** *** *** *** *** *** *** ***

            **************
            *            *
 88 KK      *    560599  *
            *            *
            **************
                                 Normal depth channel route (Aspen Dam to GEP Dam)

               HYDROGRAPH ROUTING DATA

 90 RS          STORAGE ROUTING
                      NSTPS           1  NUMBER OF SUBREACHES
                       ITYP        FLOW  TYPE OF INITIAL CONDITION
                     RSVRIC       -1.00  INITIAL CONDITION
                          X        0.00 WORKING R AND D COEFFICIENT

 91 RC          NORMAL DEPTH CHANNEL
                        ANL       0.050  LEFT OVERBANK N-VALUE
                       ANCH       0.025  MAIN CHANNEL N-VALUE
                        ANR       0.050  RIGHT OVERBANK N-VALUE
                      RLNTH       3127.  REACH LENGTH
                        SEL      0.0272  ENERGY SLOPE
                      ELMAX         0.0  MAX. ELEV. FOR STORAGE/OUTFLOW CALCULATION

                                          CROSS-SECTION DATA
                          --- LEFT OVERBANK --- + ------ MAIN CHANNEL ------- + --- RIGHT OVERBANK ---
 93 RY        ELEVATION   1772.00   1771.70   1765.30   1765.30   1765.90   1768.50   1773.30   1773.70
 92 RX        DISTANCE    9850.40   9950.40   9974.40  10000.00  10035.50  10059.80  10080.40  10104.40

                                                        ***

                                          COMPUTED STORAGE-OUTFLOW-ELEVATION DATA

          STORAGE       0.00      1.25      3.25      5.47      7.87     10.46     13.23     16.19     19.31     22.54
          OUTFLOW       0.00     80.98    338.67    762.45   1326.75   2026.43   2859.90   3827.44   5030.18   6405.37
        ELEVATION    1765.30   1765.74   1766.18   1766.63   1767.07   1767.51   1767.95   1768.40   1768.84   1769.28

          STORAGE      25.89     29.35     32.92     36.60     40.40     44.95     52.04     59.24     66.51     74.15
          OUTFLOW    7919.95   9571.50  11358.09  13278.22  15330.69  17050.24  19574.03  22392.59  25434.73  28542.28
        ELEVATION    1769.72   1770.16   1770.61   1771.05   1771.49   1771.93   1772.37   1772.82   1773.26   1773.70

*** WARNING *** MODIFIED PULS ROUTING MAY BE NUMERICALLY UNSTABLE FOR OUTFLOWS BETWEEN     2026. TO    28542.
                THE ROUTED HYDROGRAPH SHOULD BE EXAMINED FOR OSCILLATIONS OR OUTFLOWS GREATER THAN PEAK INFLOWS.
                THIS CAN BE CORRECTED BY DECREASING THE TIME INTERVAL OR INCREASING STORAGE (USE A LONGER REACH.)

*** *** *** *** *** *** *** *** *** *** *** *** *** *** *** *** *** *** *** *** *** *** *** *** *** *** *** *** *** *** *** *** *** ***

            **************
            *            *
 94 KK      *     C578I  *
            *            *
            **************
                                 BASIN S208 (NORTH HEIGHTS DAM)
                                 THE FOLLOWING PARAMETERS WERE PROVIDED FOR THIS BASIN
                                 L=      3.0  Lca=      1.6   S=  488.9  Kn= .018  LAG=  14.2
                                 PHOENIX MOUNTAIN S-GRAPH WAS USED FOR THIS BASIN

               SUBBASIN RUNOFF DATA

 99 BA          SUBBASIN CHARACTERISTICS
                      TAREA        2.00  SUBBASIN AREA

100 LG          GREEN AND AMPT LOSS RATE
                      STRTL        0.10  STARTING LOSS
```

```
                DTH        0.25  MOISTURE DEFICIT
               PSIF        4.80  WETTING FRONT SUCTION
              XKSAT        0.28  HYDRAULIC CONDUCTIVITY
              RTIMP       50.48  PERCENT IMPERVIOUS AREA

 'I        INPUT UNITGRAPH,  13 ORDINATES,  VOLUME = 1.00
              837.0    3038.0    4371.0    2543.0    1714.0    1106.0     677.0     446.0     282.0     192.0
               91.0      91.0      91.0

                                                    ***

** *** *** *** *** *** *** *** *** *** *** *** *** *** *** *** *** *** *** *** *** *** *** *** *** *** *** *** *** *** *** *** *** ***

          **************
          *            *
104 KK    *    0.5PMF  *
          *            *
          **************
                         THIS DIVERT REMOVES HALF THE FLOWS TO REPRESENT THE .5 PMF BEFORE BEING
                         ROUTED THROUGH THE DAM

   DT        DIVERSION
                 ISTAD      0.5PMF  DIVERSION HYDROGRAPH IDENTIFICATION

   DI           INFLOW        0.00     50.00    100.00  10000.00

   DQ     DIVERTED FLOW       0.00     25.00     50.00   5000.00

                                                    ***

*** *** *** *** *** *** *** *** *** *** *** *** *** *** *** *** *** *** *** *** *** *** *** *** *** *** *** *** *** *** *** *** ***

          **************
          *            *
   K      *     C578O  *
          *            *
          **************
                           Reservoir route at C578 (North Heights Dam).
                         THE SQ CARDS HAVE BEEN ALTERED FROM THE ORIGINAL MODEL (GEPD-PMF.DAT) FROM
                         THE GEPD FEASIBILITY STUDY (GVSCE, JULY 1997)

114 KO        OUTPUT CONTROL VARIABLES
                 IPRNT           3  PRINT CONTROL
                 IPLOT           0  PLOT CONTROL
                 QSCAL          0.  HYDROGRAPH PLOT SCALE

            HYDROGRAPH ROUTING DATA

115 RS        STORAGE ROUTING
                 NSTPS           1  NUMBER OF SUBREACHES
                  ITYP        ELEV  TYPE OF INITIAL CONDITION
                RSVRIC     1812.29  INITIAL CONDITION
                     X        0.00 WORKING R AND D COEFFICIENT

116 SV          STORAGE         0.0       2.8      16.4      41.5      84.4     133.0     154.5     171.0     187.4     205.0
                              223.0     242.0     261.4

118 SE        ELEVATION     1779.20   1788.00   1794.00   1800.00   1806.00   1810.50   1812.00   1813.00   1814.00   1815.00
                            1816.00   1817.00   1818.00

120 SQ        DISCHARGE          0.       160.      221.      269.      305.      327.     2323.     4539.     8141.    12045.
                             16339.    21352.    26505.

122 SE        ELEVATION     1779.20   1788.00   1794.00   1800.00   1806.00   1810.50   1812.00   1813.00   1814.00   1815.00
                            1816.00   1817.00   1818.00

                                                    ***

                                     COMPUTED STORAGE-OUTFLOW-ELEVATION DATA

          STORAGE       0.00      2.77     16.38     41.49     84.39    133.00    154.47    171.00    187.43    205.00
          OUTFLOW       0.00    160.00    221.00    269.00    305.00    327.00   2323.00   4539.00   8141.00  12045.00
```

ELEVATION	1779.20	1788.00	1794.00	1800.00	1806.00	1810.50	1812.00	1813.00	1814.00	1815.00

STORAGE	223.03	242.00	261.38
OUTFLOW	16339.00	21352.00	26505.00
ELEVATION	1816.00	1817.00	1818.00

*** *** *** *** ***

HYDROGRAPH AT STATION C578O
TRANSPOSITION AREA 0.0 SQ MI

PEAK FLOW (CFS)	TIME (HR)		MAXIMUM AVERAGE FLOW 6-HR	24-HR	72-HR	16.58-HR
13136.	2.42	(CFS)	1544.	645.	645.	645.
		(INCHES)	7.179	8.292	8.292	8.292
		(AC-FT)	766.	884.	884.	884.

PEAK STORAGE (AC-FT)	TIME (HR)	MAXIMUM AVERAGE STORAGE 6-HR	24-HR	72-HR	16.58-HR
210.	2.42	137.	67.	67.	67.

PEAK STAGE (FEET)	TIME (HR)	MAXIMUM AVERAGE STAGE 6-HR	24-HR	72-HR	16.58-HR
1815.25	2.42	1810.57	1797.46	1797.46	1797.46

CUMULATIVE AREA = 2.00 SQ MI

*** *** *** *** ***

HYDROGRAPH AT STATION C578O
TRANSPOSITION AREA 1.6 SQ MI

PEAK FLOW (CFS)	TIME (HR)		MAXIMUM AVERAGE FLOW 6-HR	24-HR	72-HR	16.58-HR
13136.	2.42	(CFS)	1544.	645.	645.	645.
		(INCHES)	7.179	8.292	8.292	8.292
		(AC-FT)	766.	884.	884.	884.

PEAK STORAGE (AC-FT)	TIME (HR)	MAXIMUM AVERAGE STORAGE 6-HR	24-HR	72-HR	16.58-HR
210.	2.42	137.	67.	67.	67.

PEAK STAGE (FEET)	TIME (HR)	MAXIMUM AVERAGE STAGE 6-HR	24-HR	72-HR	16.58-HR
1815.25	2.42	1810.57	1797.46	1797.46	1797.46

CUMULATIVE AREA = 2.00 SQ MI

*** *** *** *** ***

HYDROGRAPH AT STATION C578O
TRANSPOSITION AREA 2.0 SQ MI

PEAK FLOW (CFS)	TIME (HR)		MAXIMUM AVERAGE FLOW 6-HR	24-HR	72-HR	16.58-HR
12828.	2.42	(CFS)	1517.	633.	633.	633.
		(INCHES)	7.051	8.129	8.129	8.129
		(AC-FT)	752.	867.	867.	867.

PEAK STORAGE (AC-FT)	TIME (HR)	MAXIMUM AVERAGE STORAGE 6-HR	24-HR	72-HR	16.58-HR
208.	2.42	136.	66.	66.	66.

PEAK STAGE (FEET)	TIME (HR)	MAXIMUM AVERAGE STAGE 6-HR	24-HR	72-HR	16.58-HR
1815.18	2.42	1810.55	1797.20	1797.20	1797.20

CUMULATIVE AREA = 2.00 SQ MI

*** *** *** *** ***

HYDROGRAPH AT STATION C578O
TRANSPOSITION AREA 2.2 SQ MI

PEAK FLOW TIME MAXIMUM AVERAGE FLOW

```
  (CFS)       (HR)                  6-HR       24-HR       72-HR     16.58-HR
  12828.      2.42        (CFS)     1517.       633.        633.        633.
                        (INCHES)    7.051      8.129       8.129       8.129
                         (AC-FT)     752.       867.        867.        867.

      TORAGE  TIME                          MAXIMUM AVERAGE STORAGE
      FT)     (HR)                  6-HR       24-HR       72-HR     16.58-HR
     208.     2.42                  136.        66.         66.         66.

 PEAK STAGE   TIME                          MAXIMUM AVERAGE STAGE
  (FEET)      (HR)                  6-HR       24-HR       72-HR     16.58-HR
 1815.18      2.42               1810.55     1797.20     1797.20     1797.20

                        CUMULATIVE AREA =    2.00 SQ MI


     ***            ***            ***            ***            ***

                        HYDROGRAPH AT STATION    C5780
                       TRANSPOSITION AREA      7.2 SQ MI

 PEAK FLOW    TIME                          MAXIMUM AVERAGE FLOW
  (CFS)       (HR)                  6-HR       24-HR       72-HR     16.58-HR
  11872.      2.42        (CFS)     1412.       596.        596.        596.
                        (INCHES)    6.565      7.655       7.655       7.655
                         (AC-FT)     700.       816.        816.        816.

PEAK STORAGE   TIME                          MAXIMUM AVERAGE STORAGE
 (AC-FT)       (HR)                  6-HR       24-HR       72-HR     16.58-HR
    204.       2.42                  135.        66.         66.         66.

 PEAK STAGE   TIME                          MAXIMUM AVERAGE STAGE
  (FEET)      (HR)                  6-HR       24-HR       72-HR     16.58-HR
 1814.96      2.42               1810.46     1797.25     1797.25     1797.25

                        CUMULATIVE AREA =    2.00 SQ MI

     ***            ***            ***            ***            ***


                        INTERPOLATED HYDROGRAPH AT    C5780

 PEAK FLOW    TIME                          MAXIMUM AVERAGE FLOW
  (CFS)       (HR)                  6-HR       24-HR       72-HR     16.58-HR
  12828.      2.42        (CFS)     1517.       633.        633.        633.
                        (INCHES)    7.051      8.129       8.129       8.129
                         (AC-FT)     752.       867.        867.        867.

                        CUMULATIVE AREA =    2.00 SQ MI


*** *** *** *** *** *** *** *** *** *** *** *** *** *** *** *** *** *** *** *** *** *** *** *** *** *** *** *** *** *** *** *** *** *** ***


            **************
            *            *
 124 KK     *   578599   *
            *            *
            **************
                        Normal depth channel route (North Heights Dam to GEP Dam)

            HYDROGRAPH ROUTING DATA

 126 RS       STORAGE ROUTING
                   NSTPS          1  NUMBER OF SUBREACHES
                    ITYP       FLOW  TYPE OF INITIAL CONDITION
                  RSVRIC      -1.00  INITIAL CONDITION
                       X       0.00 WORKING R AND D COEFFICIENT

    RC        NORMAL DEPTH CHANNEL
                     ANL      0.055  LEFT OVERBANK N-VALUE
                    ANCH      0.045  MAIN CHANNEL N-VALUE
                     ANR      0.055  RIGHT OVERBANK N-VALUE
                   RLNTH      3762.  REACH LENGTH
                     SEL     0.0162  ENERGY SLOPE
```

```
                    ELMAX          0.0  MAX. ELEV. FOR STORAGE/OUTFLOW CALCULATION

                                          CROSS-SECTION DATA
                          --- LEFT OVERBANK --- + ------ MAIN CHANNEL ------- + --- RIGHT OVERBANK ---
129 RY        ELEVATION   1755.70   1746.30   1746.10   1741.70   1743.30   1743.70   1744.60   1755.70
128 RX        DISTANCE    9928.90   9945.00   9963.10   9990.60  10012.20  10035.40  10052.80  10069.60

                                                    ***

                                       COMPUTED STORAGE-OUTFLOW-ELEVATION DATA

          STORAGE       0.00      0.46      1.85      4.81      9.40     14.71     20.40     27.33     34.55     41.91
          OUTFLOW       0.00     11.58     73.53    223.88    591.07   1135.72   1841.12   2800.82   3956.89   5289.59
        ELEVATION    1741.70   1742.44   1743.17   1743.91   1744.65   1745.38   1746.12   1746.86   1747.59   1748.33

          STORAGE      49.43     57.10     64.91     72.88     81.01     89.28     97.70    106.28    115.00    123.88
          OUTFLOW    6789.08   8448.74  10263.80  12230.66  14346.52  16609.22  19017.04  21568.64  24262.94  27099.13
        ELEVATION    1749.07   1749.80   1750.54   1751.28   1752.02   1752.75   1753.49   1754.23   1754.96   1755.70


*** WARNING *** MODIFIED PULS ROUTING MAY BE NUMERICALLY UNSTABLE FOR OUTFLOWS BETWEEN    19017. TO    27099.
                THE ROUTED HYDROGRAPH SHOULD BE EXAMINED FOR OSCILLATIONS OR OUTFLOWS GREATER THAN PEAK INFLOWS.
                THIS CAN BE CORRECTED BY DECREASING THE TIME INTERVAL OR INCREASING STORAGE (USE A LONGER REACH.)


*** *** *** *** *** *** *** *** *** *** *** *** *** *** *** *** *** *** *** *** *** *** *** *** *** *** *** *** *** *** *** *** ***


          **************
          *            *
130 KK    *     C584I  *
          *            *
          **************
                             BASIN S209 (SUNRIDGE CANYON DAM)
                             THE FOLLOWING PARAMETERS WERE PROVIDED FOR THIS BASIN
                             L=      3.2  Lca=      1.7   S=  582.3  Kn= .019  LAG=  15.9
                             PHOENIX MOUNTAIN S-GRAPH WAS USED FOR THIS BASIN

             SUBBASIN RUNOFF DATA

135 BA          SUBBASIN CHARACTERISTICS
                      TAREA        1.60  SUBBASIN AREA

136 LG          GREEN AND AMPT LOSS RATE
                      STRTL        0.13  STARTING LOSS
                        DTH        0.28  MOISTURE DEFICIT
                       PSIF        4.62  WETTING FRONT SUCTION
                      XKSAT        0.32  HYDRAULIC CONDUCTIVITY
                      RTIMP       41.50  PERCENT IMPERVIOUS AREA

131 UI          INPUT UNITGRAPH,  14 ORDINATES,  VOLUME = 1.00
                    515.0    1951.0    3289.0    2104.0    1510.0     997.0     702.0     442.0     308.0     202.0
                    154.0      65.0      65.0      65.0

                                                    ***


*** *** *** *** *** *** *** *** *** *** *** *** *** *** *** *** *** *** *** *** *** *** *** *** *** *** *** *** *** *** *** *** ***


          **************
          *            *
140 KK    *    0.5PMF  *
          *            *
          **************
                             THIS DIVERT REMOVES HALF THE PMF FLOWS CREATING THE .5 PMF BEFORE
                             BEING ROUTED THROUGH THE DAM

    DT          DIVERSION
                      ISTAD      0.5PMF  DIVERSION HYDROGRAPH IDENTIFICATION

    DI             INFLOW        0.00     50.00    100.00  10000.00

    DQ      DIVERTED FLOW        0.00     25.00     50.00   5000.00

                                                    ***
```

```
*** *** *** *** *** *** *** *** *** *** *** *** *** *** *** *** *** *** *** *** *** *** *** *** *** *** *** *** *** *** *** *** *** ***

              **************
              *            *
146 KK        *     C5840  *
              *            *
              **************
                                Reservoir route at C584. (Sunridge Canyon Dam)
                              THE SQ CARDS HAVE BEEN ALTERED FROM THE ORIGINAL MODEL (GEPD-PMF.DAT) FROM
                              THE GEPD FEASIBILITY STUDY (GVSCE, JULY 1997)

                HYDROGRAPH ROUTING DATA

150 RS            STORAGE ROUTING
                       NSTPS           1  NUMBER OF SUBREACHES
                        ITYP        ELEV  TYPE OF INITIAL CONDITION
                      RSVRIC     1926.31  INITIAL CONDITION
                           X        0.00 WORKING R AND D COEFFICIENT

151 SV              STORAGE         0.0       0.6       4.3      11.3      23.7      46.3      86.7      96.0     104.9     126.3
                                  151.1     165.0     179.5

153 SE            ELEVATION     1884.80   1894.00   1900.00   1906.00   1912.00   1918.00   1924.00   1925.00   1926.00   1928.00
                                1930.00   1931.00   1932.00

155 SQ            DISCHARGE          0.       163.      223.      272.      307.      333.      355.      959.     1762.     6368.
                                 12373.    16175.    20178.

157 SE            ELEVATION     1884.80   1894.00   1900.00   1906.00   1912.00   1918.00   1924.00   1925.00   1926.00   1928.00
                                1930.00   1931.00   1932.00

                                                                  ***

                                                  COMPUTED STORAGE-OUTFLOW-ELEVATION DATA

          STORAGE       0.00      0.60      4.30     11.27     23.74     46.29     86.65     96.00    104.90    126.25
          OUTFLOW       0.00    163.00    223.00    272.00    307.00    333.00    355.00    959.00   1762.00   6368.00
        ELEVATION    1884.80   1894.00   1900.00   1906.00   1912.00   1918.00   1924.00   1925.00   1926.00   1928.00

          STORAGE     151.07    165.00    179.50
          OUTFLOW   12373.00  16175.00  20178.00
        ELEVATION    1930.00   1931.00   1932.00


*** *** *** *** *** *** *** *** *** *** *** *** *** *** *** *** *** *** *** *** *** *** *** *** *** *** *** *** *** *** *** *** *** ***

              **************
              *            *
159 KK        *    584599  *
              *            *
              **************
                                Normal depth channel route (Sunridge Canyon Dam to GEP Dam)

                HYDROGRAPH ROUTING DATA

161 RS            STORAGE ROUTING
                       NSTPS           1  NUMBER OF SUBREACHES
                        ITYP        FLOW  TYPE OF INITIAL CONDITION
                      RSVRIC       -1.00  INITIAL CONDITION
                           X        0.00 WORKING R AND D COEFFICIENT

162 RC            NORMAL DEPTH CHANNEL
                         ANL       0.065  LEFT OVERBANK N-VALUE
                        ANCH       0.050  MAIN CHANNEL N-VALUE
                         ANR       0.065  RIGHT OVERBANK N-VALUE
                       RLNTH       6526.  REACH LENGTH
                         SEL      0.0257  ENERGY SLOPE
                       ELMAX         0.0  MAX. ELEV. FOR STORAGE/OUTFLOW CALCULATION

                                                  CROSS-SECTION DATA
                                --- LEFT OVERBANK --- + ------ MAIN CHANNEL ------- + --- RIGHT OVERBANK ---
164 RY          ELEVATION   1796.30   1791.20   1788.30   1784.10   1784.90   1788.00   1790.20   1796.40
```

```
163 RX        DISTANCE    9927.60   9939.80   9951.90   9985.30  10036.00  10067.50  10119.20  10188.70

                                                  ***

                                    COMPUTED STORAGE-OUTFLOW-ELEVATION DATA

          STORAGE       0.00      2.24      7.98     14.95     23.06     32.31     42.69     54.58     68.23     83.62
          OUTFLOW       0.00     33.64    220.33    562.36   1053.96   1702.52   2517.57   3657.11   5058.06   6692.23
        ELEVATION    1784.10   1784.75   1785.39   1786.04   1786.69   1787.34   1787.98   1788.63   1789.28   1789.93

          STORAGE     100.62    118.65    137.59    157.39    178.03    199.54    221.89    245.10    269.16    294.08
          OUTFLOW    8585.16  10733.76  13130.79  15770.61  18653.94  21782.37  25158.02  28783.38  32661.21  36801.66
        ELEVATION    1790.57   1791.22   1791.87   1792.52   1793.16   1793.81   1794.46   1795.10   1795.75   1796.40


*** *** *** *** *** *** *** *** *** *** *** *** *** *** *** *** *** *** *** *** *** *** *** *** *** *** *** *** *** *** *** *** *** *** *** ***


          **************
          *            *
165 KK    *      C210  *
          *            *
          **************
                          BASIN S210 (GOLDEN EAGLE PARK DAM)
                          THE FOLLOWING PARAMETERS WERE PROVIDED FOR THIS BASIN
                          L=      1.9  Lca=       .9   S=  360.7  Kn= .024  LAG=  13.6
                          PHOENIX MOUNTAIN S-GRAPH WAS USED FOR THIS BASIN

             SUBBASIN RUNOFF DATA

170 BA          SUBBASIN CHARACTERISTICS
                      TAREA        1.38  SUBBASIN AREA

171 LG          GREEN AND AMPT LOSS RATE
                      STRTL        0.09  STARTING LOSS
                        DTH        0.24  MOISTURE DEFICIT
                       PSIF        5.61  WETTING FRONT SUCTION
                      XKSAT        0.19  HYDRAULIC CONDUCTIVITY
                      RTIMP       24.82  PERCENT IMPERVIOUS AREA

166 UI          INPUT UNITGRAPH,  12 ORDINATES,  VOLUME = 1.00
                    634.0    2291.0    3040.0    1739.0    1122.0     723.0     433.0     286.0     170.0      96.0
                     66.0      66.0

                                                  ***


*** *** *** *** *** *** *** *** *** *** *** *** *** *** *** *** *** *** *** *** *** *** *** *** *** *** *** *** *** *** *** *** *** *** ***


          **************
          *            *
175 KK    *    0.5PMF  *
          *            *
          **************
                          THIS DIVERT REMOVES HALF THE FLOWS FROM THIS AREA TO CREATE THE .5PMF

    DT          DIVERSION
                      ISTAD      0.5PMF  DIVERSION HYDROGRAPH IDENTIFICATION

    DI             INFLOW        0.00     50.00    100.00  10000.00

    DQ      DIVERTED FLOW        0.00     25.00     50.00   5000.00

                                                  ***


*** *** *** *** *** *** *** *** *** *** *** *** *** *** *** *** *** *** *** *** *** *** *** *** *** *** *** *** *** *** *** *** *** *** ***


          **************
          *            *
180 KK    *     C599I  *
          *            *
```

```
**************

181 KO          OUTPUT CONTROL VARIABLES
                      IPRNT          1  PRINT CONTROL
                      IPLOT          2  PLOT CONTROL
                      QSCAL         0.  HYDROGRAPH PLOT SCALE
                      IPNCH          0  PUNCH COMPUTED HYDROGRAPH
                       IOUT         21  SAVE HYDROGRAPH ON THIS UNIT
                      ISAV1          1  FIRST ORDINATE PUNCHED OR SAVED
                      ISAV2        200  LAST ORDINATE PUNCHED OR SAVED
                     TIMINT      0.083  TIME INTERVAL IN HOURS

                 Hydrograph combine C5840 + C5600 + C5780 + C599

183 HC          HYDROGRAPH COMBINATION
                      ICOMP          4  NUMBER OF HYDROGRAPHS TO COMBINE

                                                  ***
```

****

HYDROGRAPH AT C599I
TRANSPOSITION AREA 0.0 SQ MI

****

DA	MON	HRMN	ORD	FLOW	DA	MON	HRMN	ORD	FLOW	DA	MON	HRMN	ORD	FLOW	DA	MON	HRMN	ORD	FLOW
2	JUN	0000	1	6249.	2	JUN	0410	51	3440.	2	JUN	0820	101	785.	2	JUN	1230	151	159.
2	JUN	0005	2	5380.	2	JUN	0415	52	3148.	2	JUN	0825	102	768.	2	JUN	1235	152	154.
2	JUN	0010	3	3896.	2	JUN	0420	53	2871.	2	JUN	0830	103	749.	2	JUN	1240	153	150.
2	JUN	0015	4	2853.	2	JUN	0425	54	2588.	2	JUN	0835	104	718.	2	JUN	1245	154	147.
2	JUN	0020	5	2196.	2	JUN	0430	55	2313.	2	JUN	0840	105	679.	2	JUN	1250	155	143.
2	JUN	0025	6	1817.	2	JUN	0435	56	2091.	2	JUN	0845	106	647.	2	JUN	1255	156	139.
2	JUN	0030	7	1580.	2	JUN	0440	57	1933.	2	JUN	0850	107	620.	2	JUN	1300	157	136.
2	JUN	0035	8	1430.	2	JUN	0445	58	1822.	2	JUN	0855	108	599.	2	JUN	1305	158	133.
2	JUN	0040	9	1325.	2	JUN	0450	59	1739.	2	JUN	0900	109	581.	2	JUN	1310	159	130.
2	JUN	0045	10	1245.	2	JUN	0455	60	1674.	2	JUN	0905	110	566.	2	JUN	1315	160	127.
2	JUN	0050	11	1184.	2	JUN	0500	61	1621.	2	JUN	0910	111	553.	2	JUN	1320	161	124.
2	JUN	0055	12	1135.	2	JUN	0505	62	1571.	2	JUN	0915	112	544.	2	JUN	1325	162	121.
2	JUN	0100	13	1095.	2	JUN	0510	63	1504.	2	JUN	0920	113	536.	2	JUN	1330	163	119.
2	JUN	0105	14	1064.	2	JUN	0515	64	1431.	2	JUN	0925	114	528.	2	JUN	1335	164	116.
2	JUN	0110	15	1052.	2	JUN	0520	65	1375.	2	JUN	0930	115	520.	2	JUN	1340	165	114.
2	JUN	0115	16	1044.	2	JUN	0525	66	1328.	2	JUN	0935	116	513.	2	JUN	1345	166	111.
2	JUN	0120	17	1037.	2	JUN	0530	67	1287.	2	JUN	0940	117	505.	2	JUN	1350	167	109.
2	JUN	0125	18	1037.	2	JUN	0535	68	1250.	2	JUN	0945	118	498.	2	JUN	1355	168	107.
2	JUN	0130	19	1045.	2	JUN	0540	69	1215.	2	JUN	0950	119	490.	2	JUN	1400	169	104.
2	JUN	0135	20	1056.	2	JUN	0545	70	1184.	2	JUN	0955	120	483.	2	JUN	1405	170	99.
2	JUN	0140	21	1068.	2	JUN	0550	71	1154.	2	JUN	1000	121	477.	2	JUN	1410	171	92.
2	JUN	0145	22	1079.	2	JUN	0555	72	1126.	2	JUN	1005	122	470.	2	JUN	1415	172	84.
2	JUN	0150	23	1088.	2	JUN	0600	73	1099.	2	JUN	1010	123	464.	2	JUN	1420	173	78.
2	JUN	0155	24	1097.	2	JUN	0605	74	1073.	2	JUN	1015	124	458.	2	JUN	1425	174	73.
2	JUN	0200	25	1104.	2	JUN	0610	75	1042.	2	JUN	1020	125	452.	2	JUN	1430	175	68.
2	JUN	0205	26	1956.	2	JUN	0615	76	1011.	2	JUN	1025	126	445.	2	JUN	1435	176	62.
2	JUN	0210	27	5059.	2	JUN	0620	77	988.	2	JUN	1030	127	439.	2	JUN	1440	177	57.
2	JUN	0215	28	10561.	2	JUN	0625	78	965.	2	JUN	1035	128	433.	2	JUN	1445	178	52.
2	JUN	0220	29	18641.	2	JUN	0630	79	949.	2	JUN	1040	129	425.	2	JUN	1450	179	48.
2	JUN	0225	30	26592.	2	JUN	0635	80	940.	2	JUN	1045	130	418.	2	JUN	1455	180	43.
2	JUN	0230	31	29150.	2	JUN	0640	81	933.	2	JUN	1050	131	410.	2	JUN	1500	181	39.
2	JUN	0235	32	29679.	2	JUN	0645	82	928.	2	JUN	1055	132	402.	2	JUN	1505	182	36.
2	JUN	0240	33	27459.	2	JUN	0650	83	923.	2	JUN	1100	133	394.	2	JUN	1510	183	32.
2	JUN	0245	34	23698.	2	JUN	0655	84	918.	2	JUN	1105	134	387.	2	JUN	1515	184	29.
2	JUN	0250	35	19963.	2	JUN	0700	85	914.	2	JUN	1110	135	379.	2	JUN	1520	185	26.
2	JUN	0255	36	16840.	2	JUN	0705	86	909.	2	JUN	1115	136	371.	2	JUN	1525	186	24.
2	JUN	0300	37	14395.	2	JUN	0710	87	904.	2	JUN	1120	137	357.	2	JUN	1530	187	22.
2	JUN	0305	38	12328.	2	JUN	0715	88	900.	2	JUN	1125	138	334.	2	JUN	1535	188	20.
2	JUN	0310	39	10674.	2	JUN	0720	89	895.	2	JUN	1130	139	308.	2	JUN	1540	189	18.
2	JUN	0315	40	9266.	2	JUN	0725	90	890.	2	JUN	1135	140	283.	2	JUN	1545	190	16.
2	JUN	0320	41	8133.	2	JUN	0730	91	884.	2	JUN	1140	141	260.	2	JUN	1550	191	15.
2	JUN	0325	42	7174.	2	JUN	0735	92	877.	2	JUN	1145	142	242.	2	JUN	1555	192	13.
2	JUN	0330	43	6321.	2	JUN	0740	93	870.	2	JUN	1150	143	225.	2	JUN	1600	193	12.
2	JUN	0335	44	5626.	2	JUN	0745	94	862.	2	JUN	1155	144	211.	2	JUN	1605	194	11.
2	JUN	0340	45	5053.	2	JUN	0750	95	854.	2	JUN	1200	145	200.	2	JUN	1610	195	10.
2	JUN	0345	46	4631.	2	JUN	0755	96	846.	2	JUN	1205	146	189.	2	JUN	1615	196	9.
2	JUN	0350	47	4335.	2	JUN	0800	97	836.	2	JUN	1210	147	181.	2	JUN	1620	197	8.
2	JUN	0355	48	4102.	2	JUN	0805	98	825.	2	JUN	1215	148	173.	2	JUN	1625	198	7.
2	JUN	0400	49	3896.	2	JUN	0810	99	813.	2	JUN	1220	149	168.	2	JUN	1630	199	7.
2	JUN	0405	50	3693.	2	JUN	0815	100	800.	2	JUN	1225	150	163.	2	JUN	1635	200	6.

PEAK FLOW (CFS)	TIME (HR)		MAXIMUM AVERAGE FLOW 6-HR	24-HR	72-HR	16.58-HR
29679.	2.58	(CFS)	5423.	2217.	2217.	2217.
		(INCHES)	7.072	7.989	7.989	7.989
		(AC-FT)	2689.	3038.	3038.	3038.

CUMULATIVE AREA = 7.13 SQ MI

HYDROGRAPH AT C599I
TRANSPOSITION AREA 1.6 SQ MI

DA	MON	HRMN	ORD	FLOW	DA	MON	HRMN	ORD	FLOW	DA	MON	HRMN	ORD	FLOW	DA	MON	HRMN	ORD	FLOW
2	JUN	0000	1	6249.	2	JUN	0410	51	3440.	2	JUN	0820	101	785.	2	JUN	1230	151	159.
2	JUN	0005	2	5380.	2	JUN	0415	52	3148.	2	JUN	0825	102	768.	2	JUN	1235	152	154.
2	JUN	0010	3	3896.	2	JUN	0420	53	2871.	2	JUN	0830	103	749.	2	JUN	1240	153	150.
2	JUN	0015	4	2853.	2	JUN	0425	54	2588.	2	JUN	0835	104	718.	2	JUN	1245	154	147.
2	JUN	0020	5	2196.	2	JUN	0430	55	2313.	2	JUN	0840	105	679.	2	JUN	1250	155	143.
2	JUN	0025	6	1817.	2	JUN	0435	56	2091.	2	JUN	0845	106	647.	2	JUN	1255	156	139.
2	JUN	0030	7	1580.	2	JUN	0440	57	1933.	2	JUN	0850	107	620.	2	JUN	1300	157	136.
2	JUN	0035	8	1430.	2	JUN	0445	58	1822.	2	JUN	0855	108	599.	2	JUN	1305	158	133.
2	JUN	0040	9	1325.	2	JUN	0450	59	1739.	2	JUN	0900	109	581.	2	JUN	1310	159	130.
2	JUN	0045	10	1245.	2	JUN	0455	60	1674.	2	JUN	0905	110	566.	2	JUN	1315	160	127.
2	JUN	0050	11	1184.	2	JUN	0500	61	1621.	2	JUN	0910	111	553.	2	JUN	1320	161	124.
2	JUN	0055	12	1135.	2	JUN	0505	62	1571.	2	JUN	0915	112	544.	2	JUN	1325	162	121.
2	JUN	0100	13	1095.	2	JUN	0510	63	1504.	2	JUN	0920	113	536.	2	JUN	1330	163	119.
2	JUN	0105	14	1064.	2	JUN	0515	64	1431.	2	JUN	0925	114	528.	2	JUN	1335	164	116.
2	JUN	0110	15	1052.	2	JUN	0520	65	1375.	2	JUN	0930	115	520.	2	JUN	1340	165	114.
2	JUN	0115	16	1044.	2	JUN	0525	66	1328.	2	JUN	0935	116	513.	2	JUN	1345	166	111.
2	JUN	0120	17	1037.	2	JUN	0530	67	1287.	2	JUN	0940	117	505.	2	JUN	1350	167	109.
2	JUN	0125	18	1037.	2	JUN	0535	68	1250.	2	JUN	0945	118	498.	2	JUN	1355	168	107.
2	JUN	0130	19	1045.	2	JUN	0540	69	1215.	2	JUN	0950	119	490.	2	JUN	1400	169	104
2	JUN	0135	20	1056.	2	JUN	0545	70	1184.	2	JUN	0955	120	483.	2	JUN	1405	170	99.
2	JUN	0140	21	1068.	2	JUN	0550	71	1154.	2	JUN	1000	121	477.	2	JUN	1410	171	92.
2	JUN	0145	22	1079.	2	JUN	0555	72	1126.	2	JUN	1005	122	470.	2	JUN	1415	172	84.
2	JUN	0150	23	1088.	2	JUN	0600	73	1099.	2	JUN	1010	123	464.	2	JUN	1420	173	78.
2	JUN	0155	24	1097.	2	JUN	0605	74	1073.	2	JUN	1015	124	458.	2	JUN	1425	174	73.
2	JUN	0200	25	1104.	2	JUN	0610	75	1042.	2	JUN	1020	125	452.	2	JUN	1430	175	68.
2	JUN	0205	26	1956.	2	JUN	0615	76	1011.	2	JUN	1025	126	445.	2	JUN	1435	176	62.
2	JUN	0210	27	5059.	2	JUN	0620	77	988.	2	JUN	1030	127	439.	2	JUN	1440	177	57.
2	JUN	0215	28	10561.	2	JUN	0625	78	965.	2	JUN	1035	128	433.	2	JUN	1445	178	52.
2	JUN	0220	29	18641.	2	JUN	0630	79	949.	2	JUN	1040	129	425.	2	JUN	1450	179	48.
2	JUN	0225	30	26592.	2	JUN	0635	80	940.	2	JUN	1045	130	418.	2	JUN	1455	180	43.
2	JUN	0230	31	29150.	2	JUN	0640	81	933.	2	JUN	1050	131	410.	2	JUN	1500	181	39.
2	JUN	0235	32	29679.	2	JUN	0645	82	928.	2	JUN	1055	132	402.	2	JUN	1505	182	36.
2	JUN	0240	33	27459.	2	JUN	0650	83	923.	2	JUN	1100	133	394.	2	JUN	1510	183	32.
2	JUN	0245	34	23698.	2	JUN	0655	84	918.	2	JUN	1105	134	387.	2	JUN	1515	184	29.
2	JUN	0250	35	19963.	2	JUN	0700	85	914.	2	JUN	1110	135	379.	2	JUN	1520	185	26.
2	JUN	0255	36	16840.	2	JUN	0705	86	909.	2	JUN	1115	136	371.	2	JUN	1525	186	24.
2	JUN	0300	37	14395.	2	JUN	0710	87	904.	2	JUN	1120	137	357.	2	JUN	1530	187	22.
2	JUN	0305	38	12328.	2	JUN	0715	88	900.	2	JUN	1125	138	334.	2	JUN	1535	188	20.
2	JUN	0310	39	10674.	2	JUN	0720	89	895.	2	JUN	1130	139	308.	2	JUN	1540	189	18.
2	JUN	0315	40	9266.	2	JUN	0725	90	890.	2	JUN	1135	140	283.	2	JUN	1545	190	16.
2	JUN	0320	41	8133.	2	JUN	0730	91	884.	2	JUN	1140	141	260.	2	JUN	1550	191	15.
2	JUN	0325	42	7174.	2	JUN	0735	92	877.	2	JUN	1145	142	242.	2	JUN	1555	192	13.
2	JUN	0330	43	6321.	2	JUN	0740	93	870.	2	JUN	1150	143	225.	2	JUN	1600	193	12.
2	JUN	0335	44	5626.	2	JUN	0745	94	862.	2	JUN	1155	144	211.	2	JUN	1605	194	11.
2	JUN	0340	45	5053.	2	JUN	0750	95	854.	2	JUN	1200	145	200.	2	JUN	1610	195	10.
2	JUN	0345	46	4631.	2	JUN	0755	96	846.	2	JUN	1205	146	189.	2	JUN	1615	196	9.
2	JUN	0350	47	4335.	2	JUN	0800	97	836.	2	JUN	1210	147	181.	2	JUN	1620	197	8.
2	JUN	0355	48	4102.	2	JUN	0805	98	825.	2	JUN	1215	148	173.	2	JUN	1625	198	7.
2	JUN	0400	49	3896.	2	JUN	0810	99	813.	2	JUN	1220	149	168.	2	JUN	1630	199	7.
2	JUN	0405	50	3693.	2	JUN	0815	100	800.	2	JUN	1225	150	163.	2	JUN	1635	200	6.

PEAK FLOW (CFS)	TIME (HR)		MAXIMUM AVERAGE FLOW 6-HR	24-HR	72-HR	16.58-HR
29679.	2.58	(CFS)	5423.	2217.	2217.	2217.
		(INCHES)	7.072	7.989	7.989	7.989

(AC-FT) 2689. 3038. 3038. 3038.

CUMULATIVE AREA = 7.13 SQ MI

HYDROGRAPH AT C599I
TRANSPOSITION AREA 2.0 SQ MI

DA MON HRMN	ORD	FLOW	DA MON HRMN	ORD	FLOW	DA MON HRMN	ORD	FLOW	DA MON HRMN	ORD	FLOW
2 JUN 0000	1	6249.	2 JUN 0410	51	3546.	2 JUN 0820	101	762.	2 JUN 1230	151	154.
2 JUN 0005	2	5381.	2 JUN 0415	52	3234.	2 JUN 0825	102	740.	2 JUN 1235	152	150.
2 JUN 0010	3	3900.	2 JUN 0420	53	2933.	2 JUN 0830	103	706.	2 JUN 1240	153	147.
2 JUN 0015	4	2863.	2 JUN 0425	54	2618.	2 JUN 0835	104	669.	2 JUN 1245	154	143.
2 JUN 0020	5	2209.	2 JUN 0430	55	2304.	2 JUN 0840	105	638.	2 JUN 1250	155	140.
2 JUN 0025	6	1829.	2 JUN 0435	56	2053.	2 JUN 0845	106	613.	2 JUN 1255	156	136.
2 JUN 0030	7	1593.	2 JUN 0440	57	1881.	2 JUN 0850	107	593.	2 JUN 1300	157	133.
2 JUN 0035	8	1443.	2 JUN 0445	58	1771.	2 JUN 0855	108	576.	2 JUN 1305	158	130.
2 JUN 0040	9	1339.	2 JUN 0450	59	1688.	2 JUN 0900	109	562.	2 JUN 1310	159	127.
2 JUN 0045	10	1260.	2 JUN 0455	60	1622.	2 JUN 0905	110	550.	2 JUN 1315	160	125.
2 JUN 0050	11	1200.	2 JUN 0500	61	1567.	2 JUN 0910	111	541.	2 JUN 1320	161	122.
2 JUN 0055	12	1152.	2 JUN 0505	62	1516.	2 JUN 0915	112	534.	2 JUN 1325	162	119.
2 JUN 0100	13	1113.	2 JUN 0510	63	1455.	2 JUN 0920	113	526.	2 JUN 1330	163	117.
2 JUN 0105	14	1083.	2 JUN 0515	64	1391.	2 JUN 0925	114	518.	2 JUN 1335	164	114.
2 JUN 0110	15	1067.	2 JUN 0520	65	1340.	2 JUN 0930	115	510.	2 JUN 1340	165	112.
2 JUN 0115	16	1060.	2 JUN 0525	66	1295.	2 JUN 0935	116	503.	2 JUN 1345	166	109.
2 JUN 0120	17	1055.	2 JUN 0530	67	1256.	2 JUN 0940	117	495.	2 JUN 1350	167	107.
2 JUN 0125	18	1059.	2 JUN 0535	68	1220.	2 JUN 0945	118	488.	2 JUN 1355	168	105.
2 JUN 0130	19	1069.	2 JUN 0540	69	1186.	2 JUN 0950	119	481.	2 JUN 1400	169	100.
2 JUN 0135	20	1079.	2 JUN 0545	70	1155.	2 JUN 0955	120	475.	2 JUN 1405	170	93.
2 JUN 0140	21	1089.	2 JUN 0550	71	1127.	2 JUN 1000	121	468.	2 JUN 1410	171	85.
2 JUN 0145	22	1098.	2 JUN 0555	72	1099.	2 JUN 1005	122	462.	2 JUN 1415	172	79.
2 JUN 0150	23	1106.	2 JUN 0600	73	1074.	2 JUN 1010	123	456.	2 JUN 1420	173	74.
2 JUN 0155	24	1112.	2 JUN 0605	74	1048.	2 JUN 1015	124	450.	2 JUN 1425	174	69.
JUN 0200	25	1118.	2 JUN 0610	75	1019.	2 JUN 1020	125	444.	2 JUN 1430	175	63.
JUN 0205	26	1947.	2 JUN 0615	76	992.	2 JUN 1025	126	437.	2 JUN 1435	176	58.
2 JUN 0210	27	5009.	2 JUN 0620	77	968.	2 JUN 1030	127	430.	2 JUN 1440	177	53.
2 JUN 0215	28	10453.	2 JUN 0625	78	950.	2 JUN 1035	128	422.	2 JUN 1445	178	48.
2 JUN 0220	29	18327.	2 JUN 0630	79	940.	2 JUN 1040	129	415.	2 JUN 1450	179	44.
2 JUN 0225	30	26000.	2 JUN 0635	80	933.	2 JUN 1045	130	407.	2 JUN 1455	180	40.
2 JUN 0230	31	28517.	2 JUN 0640	81	927.	2 JUN 1050	131	399.	2 JUN 1500	181	36.
2 JUN 0235	32	29072.	2 JUN 0645	82	922.	2 JUN 1055	132	391.	2 JUN 1505	182	33.
2 JUN 0240	33	26982.	2 JUN 0650	83	917.	2 JUN 1100	133	383.	2 JUN 1510	183	30.
2 JUN 0245	34	23334.	2 JUN 0655	84	913.	2 JUN 1105	134	376.	2 JUN 1515	184	27.
2 JUN 0250	35	19672.	2 JUN 0700	85	908.	2 JUN 1110	135	364.	2 JUN 1520	185	24.
2 JUN 0255	36	16499.	2 JUN 0705	86	903.	2 JUN 1115	136	343.	2 JUN 1525	186	22.
2 JUN 0300	37	13909.	2 JUN 0710	87	898.	2 JUN 1120	137	318.	2 JUN 1530	187	20.
2 JUN 0305	38	11686.	2 JUN 0715	88	894.	2 JUN 1125	138	293.	2 JUN 1535	188	18.
2 JUN 0310	39	10025.	2 JUN 0720	89	888.	2 JUN 1130	139	270.	2 JUN 1540	189	16.
2 JUN 0315	40	8646.	2 JUN 0725	90	882.	2 JUN 1135	140	250.	2 JUN 1545	190	15.
2 JUN 0320	41	7591.	2 JUN 0730	91	875.	2 JUN 1140	141	234.	2 JUN 1550	191	13.
2 JUN 0325	42	6707.	2 JUN 0735	92	867.	2 JUN 1145	142	219.	2 JUN 1555	192	12.
2 JUN 0330	43	5956.	2 JUN 0740	93	859.	2 JUN 1150	143	206.	2 JUN 1600	193	11.
2 JUN 0335	44	5367.	2 JUN 0745	94	851.	2 JUN 1155	144	196.	2 JUN 1605	194	10.
2 JUN 0340	45	4902.	2 JUN 0750	95	843.	2 JUN 1200	145	187.	2 JUN 1610	195	9.
2 JUN 0345	46	4572.	2 JUN 0755	96	833.	2 JUN 1205	146	179.	2 JUN 1615	196	8.
2 JUN 0350	47	4337.	2 JUN 0800	97	821.	2 JUN 1210	147	172.	2 JUN 1620	197	7.
2 JUN 0355	48	4146.	2 JUN 0805	98	809.	2 JUN 1215	148	167.	2 JUN 1625	198	7.
2 JUN 0400	49	3976.	2 JUN 0810	99	796.	2 JUN 1220	149	163.	2 JUN 1630	199	6.
2 JUN 0405	50	3798.	2 JUN 0815	100	780.	2 JUN 1225	150	158.	2 JUN 1635	200	6.

PEAK FLOW (CFS)	TIME (HR)		MAXIMUM AVERAGE FLOW 6-HR	24-HR	72-HR	16.58-HR
29072.	2.58	(CFS)	5314.	2171.	2171.	2171.
		(INCHES)	6.930	7.823	7.823	7.823
		(AC-FT)	2635.	2975.	2975.	2975.

CUMULATIVE AREA = 7.13 SQ MI

HYDROGRAPH AT C599I
TRANSPOSITION AREA 2.2 SQ MI

DA MON HRMN	ORD	FLOW	DA MON HRMN	ORD	FLOW	DA MON HRMN	ORD	FLOW	DA MON HRMN	ORD	FLO
2 JUN 0000	1	6249.	2 JUN 0410	51	3546.	2 JUN 0820	101	762.	2 JUN 1230	151	154.
2 JUN 0005	2	5381.	2 JUN 0415	52	3234.	2 JUN 0825	102	740.	2 JUN 1235	152	150.
2 JUN 0010	3	3900.	2 JUN 0420	53	2933.	2 JUN 0830	103	706.	2 JUN 1240	153	147.
2 JUN 0015	4	2863.	2 JUN 0425	54	2618.	2 JUN 0835	104	669.	2 JUN 1245	154	143.
2 JUN 0020	5	2209.	2 JUN 0430	55	2304.	2 JUN 0840	105	638.	2 JUN 1250	155	140.
2 JUN 0025	6	1829.	2 JUN 0435	56	2053.	2 JUN 0845	106	613.	2 JUN 1255	156	136.
2 JUN 0030	7	1593.	2 JUN 0440	57	1881.	2 JUN 0850	107	593.	2 JUN 1300	157	133.
2 JUN 0035	8	1443.	2 JUN 0445	58	1771.	2 JUN 0855	108	576.	2 JUN 1305	158	130.
2 JUN 0040	9	1339.	2 JUN 0450	59	1688.	2 JUN 0900	109	562.	2 JUN 1310	159	127.
2 JUN 0045	10	1260.	2 JUN 0455	60	1622.	2 JUN 0905	110	550.	2 JUN 1315	160	125.
2 JUN 0050	11	1200.	2 JUN 0500	61	1567.	2 JUN 0910	111	541.	2 JUN 1320	161	122.
2 JUN 0055	12	1152.	2 JUN 0505	62	1516.	2 JUN 0915	112	534.	2 JUN 1325	162	119.
2 JUN 0100	13	1113.	2 JUN 0510	63	1455.	2 JUN 0920	113	526.	2 JUN 1330	163	117.
2 JUN 0105	14	1083.	2 JUN 0515	64	1391.	2 JUN 0925	114	518.	2 JUN 1335	164	114.
2 JUN 0110	15	1067.	2 JUN 0520	65	1340.	2 JUN 0930	115	510.	2 JUN 1340	165	112.
2 JUN 0115	16	1060.	2 JUN 0525	66	1295.	2 JUN 0935	116	503.	2 JUN 1345	166	109.
2 JUN 0120	17	1055.	2 JUN 0530	67	1256.	2 JUN 0940	117	495.	2 JUN 1350	167	107.
2 JUN 0125	18	1059.	2 JUN 0535	68	1220.	2 JUN 0945	118	488.	2 JUN 1355	168	105.
2 JUN 0130	19	1069.	2 JUN 0540	69	1186.	2 JUN 0950	119	481.	2 JUN 1400	169	100.
2 JUN 0135	20	1079.	2 JUN 0545	70	1155.	2 JUN 0955	120	475.	2 JUN 1405	170	93.
2 JUN 0140	21	1089.	2 JUN 0550	71	1127.	2 JUN 1000	121	468.	2 JUN 1410	171	85.
2 JUN 0145	22	1098.	2 JUN 0555	72	1099.	2 JUN 1005	122	462.	2 JUN 1415	172	79.
2 JUN 0150	23	1106.	2 JUN 0600	73	1074.	2 JUN 1010	123	456.	2 JUN 1420	173	74.
2 JUN 0155	24	1112.	2 JUN 0605	74	1048.	2 JUN 1015	124	450.	2 JUN 1425	174	69.
2 JUN 0200	25	1118.	2 JUN 0610	75	1019.	2 JUN 1020	125	444.	2 JUN 1430	175	63.
2 JUN 0205	26	1947.	2 JUN 0615	76	992.	2 JUN 1025	126	437.	2 JUN 1435	176	58.
2 JUN 0210	27	5009.	2 JUN 0620	77	968.	2 JUN 1030	127	430.	2 JUN 1440	177	53.
2 JUN 0215	28	10453.	2 JUN 0625	78	950.	2 JUN 1035	128	422.	2 JUN 1445	178	48.
2 JUN 0220	29	18327.	2 JUN 0630	79	940.	2 JUN 1040	129	415.	2 JUN 1450	179	44.
2 JUN 0225	30	26000.	2 JUN 0635	80	933.	2 JUN 1045	130	407.	2 JUN 1455	180	40.
2 JUN 0230	31	28517.	2 JUN 0640	81	927.	2 JUN 1050	131	399.	2 JUN 1500	181	36.
2 JUN 0235	32	29072.	2 JUN 0645	82	922.	2 JUN 1055	132	391.	2 JUN 1505	182	33
2 JUN 0240	33	26982.	2 JUN 0650	83	917.	2 JUN 1100	133	383.	2 JUN 1510	183	3
2 JUN 0245	34	23334.	2 JUN 0655	84	913.	2 JUN 1105	134	376.	2 JUN 1515	184	2.
2 JUN 0250	35	19672.	2 JUN 0700	85	908.	2 JUN 1110	135	364.	2 JUN 1520	185	24.
2 JUN 0255	36	16499.	2 JUN 0705	86	903.	2 JUN 1115	136	343.	2 JUN 1525	186	22.
2 JUN 0300	37	13909.	2 JUN 0710	87	898.	2 JUN 1120	137	318.	2 JUN 1530	187	20.
2 JUN 0305	38	11686.	2 JUN 0715	88	894.	2 JUN 1125	138	293.	2 JUN 1535	188	18.
2 JUN 0310	39	10025.	2 JUN 0720	89	888.	2 JUN 1130	139	270.	2 JUN 1540	189	16.
2 JUN 0315	40	8646.	2 JUN 0725	90	882.	2 JUN 1135	140	250.	2 JUN 1545	190	15.
2 JUN 0320	41	7591.	2 JUN 0730	91	875.	2 JUN 1140	141	234.	2 JUN 1550	191	13.
2 JUN 0325	42	6707.	2 JUN 0735	92	867.	2 JUN 1145	142	219.	2 JUN 1555	192	12.
2 JUN 0330	43	5956.	2 JUN 0740	93	859.	2 JUN 1150	143	206.	2 JUN 1600	193	11.
2 JUN 0335	44	5367.	2 JUN 0745	94	851.	2 JUN 1155	144	196.	2 JUN 1605	194	10.
2 JUN 0340	45	4902.	2 JUN 0750	95	843.	2 JUN 1200	145	187.	2 JUN 1610	195	9.
2 JUN 0345	46	4572.	2 JUN 0755	96	833.	2 JUN 1205	146	179.	2 JUN 1615	196	8.
2 JUN 0350	47	4337.	2 JUN 0800	97	821.	2 JUN 1210	147	172.	2 JUN 1620	197	7.
2 JUN 0355	48	4146.	2 JUN 0805	98	809.	2 JUN 1215	148	167.	2 JUN 1625	198	7.
2 JUN 0400	49	3976.	2 JUN 0810	99	796.	2 JUN 1220	149	163.	2 JUN 1630	199	6.
2 JUN 0405	50	3798.	2 JUN 0815	100	780.	2 JUN 1225	150	158.	2 JUN 1635	200	6.

PEAK FLOW (CFS)	TIME (HR)		MAXIMUM AVERAGE FLOW 6-HR	24-HR	72-HR	16.58-HR
29072.	2.58	(CFS)	5314.	2171.	2171.	2171.
		(INCHES)	6.930	7.823	7.823	7.823
		(AC-FT)	2635.	2975.	2975.	2975.

CUMULATIVE AREA = 7.13 SQ MI

HYDROGRAPH AT C599I
TRANSPOSITION AREA 7.2 SQ MI

DA MON HRMN	ORD	FLOW	DA MON HRMN	ORD	FLOW	DA MON HRMN	ORD	FLOW	DA MON HRMN	ORD	FLOW

2 JUN 0000	1	6249.	*	2 JUN 0410	51	2986.	*	2 JUN 0820	101	764.	*	2 JUN 1230	151	154.
2 JUN 0005	2	5380.	*	2 JUN 0415	52	2720.	*	2 JUN 0825	102	743.	*	2 JUN 1235	152	150.
2 JUN 0010	3	3895.	*	2 JUN 0420	53	2475.	*	2 JUN 0830	103	710.	*	2 JUN 1240	153	146.
2 JUN 0015	4	2851.	*	2 JUN 0425	54	2242.	*	2 JUN 0835	104	672.	*	2 JUN 1245	154	142.
2 JUN 0020	5	2194.	*	2 JUN 0430	55	2050.	*	2 JUN 0840	105	641.	*	2 JUN 1250	155	139.
2 JUN 0025	6	1815.	*	2 JUN 0435	56	1908.	*	2 JUN 0845	106	616.	*	2 JUN 1255	156	136.
2 JUN 0030	7	1578.	*	2 JUN 0440	57	1797.	*	2 JUN 0850	107	595.	*	2 JUN 1300	157	133.
2 JUN 0035	8	1428.	*	2 JUN 0445	58	1714.	*	2 JUN 0855	108	578.	*	2 JUN 1305	158	130.
2 JUN 0040	9	1322.	*	2 JUN 0450	59	1649.	*	2 JUN 0900	109	563.	*	2 JUN 1310	159	127.
2 JUN 0045	10	1242.	*	2 JUN 0455	60	1597.	*	2 JUN 0905	110	551.	*	2 JUN 1315	160	124.
2 JUN 0050	11	1181.	*	2 JUN 0500	61	1551.	*	2 JUN 0910	111	543.	*	2 JUN 1320	161	121.
2 JUN 0055	12	1131.	*	2 JUN 0505	62	1504.	*	2 JUN 0915	112	535.	*	2 JUN 1325	162	119.
2 JUN 0100	13	1091.	*	2 JUN 0510	63	1443.	*	2 JUN 0920	113	527.	*	2 JUN 1330	163	116.
2 JUN 0105	14	1061.	*	2 JUN 0515	64	1376.	*	2 JUN 0925	114	519.	*	2 JUN 1335	164	114.
2 JUN 0110	15	1047.	*	2 JUN 0520	65	1324.	*	2 JUN 0930	115	511.	*	2 JUN 1340	165	111.
2 JUN 0115	16	1038.	*	2 JUN 0525	66	1280.	*	2 JUN 0935	116	504.	*	2 JUN 1345	166	109.
2 JUN 0120	17	1030.	*	2 JUN 0530	67	1241.	*	2 JUN 0940	117	497.	*	2 JUN 1350	167	106.
2 JUN 0125	18	1027.	*	2 JUN 0535	68	1206.	*	2 JUN 0945	118	489.	*	2 JUN 1355	168	104.
2 JUN 0130	19	1027.	*	2 JUN 0540	69	1174.	*	2 JUN 0950	119	483.	*	2 JUN 1400	169	98.
2 JUN 0135	20	1032.	*	2 JUN 0545	70	1144.	*	2 JUN 0955	120	476.	*	2 JUN 1405	170	91.
2 JUN 0140	21	1040.	*	2 JUN 0550	71	1116.	*	2 JUN 1000	121	469.	*	2 JUN 1410	171	83.
2 JUN 0145	22	1050.	*	2 JUN 0555	72	1089.	*	2 JUN 1005	122	463.	*	2 JUN 1415	172	78.
2 JUN 0150	23	1059.	*	2 JUN 0600	73	1064.	*	2 JUN 1010	123	457.	*	2 JUN 1420	173	73.
2 JUN 0155	24	1067.	*	2 JUN 0605	74	1039.	*	2 JUN 1015	124	451.	*	2 JUN 1425	174	67.
2 JUN 0200	25	1074.	*	2 JUN 0610	75	1013.	*	2 JUN 1020	125	445.	*	2 JUN 1430	175	62.
2 JUN 0205	26	1849.	*	2 JUN 0615	76	986.	*	2 JUN 1025	126	439.	*	2 JUN 1435	176	57.
2 JUN 0210	27	4635.	*	2 JUN 0620	77	963.	*	2 JUN 1030	127	432.	*	2 JUN 1440	177	52.
2 JUN 0215	28	9372.	*	2 JUN 0625	78	948.	*	2 JUN 1035	128	425.	*	2 JUN 1445	178	47.
2 JUN 0220	29	16208.	*	2 JUN 0630	79	939.	*	2 JUN 1040	129	417.	*	2 JUN 1450	179	43.
2 JUN 0225	30	23343.	*	2 JUN 0635	80	933.	*	2 JUN 1045	130	409.	*	2 JUN 1455	180	39.
2 JUN 0230	31	25844.	*	2 JUN 0640	81	927.	*	2 JUN 1050	131	401.	*	2 JUN 1500	181	35.
2 JUN 0235	32	26510.	*	2 JUN 0645	82	922.	*	2 JUN 1055	132	393.	*	2 JUN 1505	182	32.
2 JUN 0240	33	24920.	*	2 JUN 0650	83	918.	*	2 JUN 1100	133	386.	*	2 JUN 1510	183	29.
2 JUN 0245	34	21636.	*	2 JUN 0655	84	913.	*	2 JUN 1105	134	378.	*	2 JUN 1515	184	26.
2 JUN 0250	35	18320.	*	2 JUN 0700	85	908.	*	2 JUN 1110	135	370.	*	2 JUN 1520	185	24.
2 JUN 0255	36	15490.	*	2 JUN 0705	86	903.	*	2 JUN 1115	136	355.	*	2 JUN 1525	186	21.
2 JUN 0300	37	13276.	*	2 JUN 0710	87	899.	*	2 JUN 1120	137	331.	*	2 JUN 1530	187	19.
2 JUN 0305	38	11363.	*	2 JUN 0715	88	894.	*	2 JUN 1125	138	305.	*	2 JUN 1535	188	18.
2 JUN 0310	39	9871.	*	2 JUN 0720	89	889.	*	2 JUN 1130	139	280.	*	2 JUN 1540	189	16.
2 JUN 0315	40	8547.	*	2 JUN 0725	90	883.	*	2 JUN 1135	140	258.	*	2 JUN 1545	190	14.
2 JUN 0320	41	7506.	*	2 JUN 0730	91	876.	*	2 JUN 1140	141	240.	*	2 JUN 1550	191	13.
2 JUN 0325	42	6568.	*	2 JUN 0735	92	868.	*	2 JUN 1145	142	224.	*	2 JUN 1555	192	12.
2 JUN 0330	43	5744.	*	2 JUN 0740	93	860.	*	2 JUN 1150	143	210.	*	2 JUN 1600	193	11.
2 JUN 0335	44	5065.	*	2 JUN 0745	94	852.	*	2 JUN 1155	144	198.	*	2 JUN 1605	194	10.
2 JUN 0340	45	4537.	*	2 JUN 0750	95	844.	*	2 JUN 1200	145	188.	*	2 JUN 1610	195	9.
2 JUN 0345	46	4162.	*	2 JUN 0755	96	834.	*	2 JUN 1205	146	180.	*	2 JUN 1615	196	8.
2 JUN 0350	47	3875.	*	2 JUN 0800	97	823.	*	2 JUN 1210	147	173.	*	2 JUN 1620	197	7.
2 JUN 0355	48	3628.	*	2 JUN 0805	98	811.	*	2 JUN 1215	148	167.	*	2 JUN 1625	198	7.
2 JUN 0400	49	3415.	*	2 JUN 0810	99	797.	*	2 JUN 1220	149	163.	*	2 JUN 1630	199	6.
2 JUN 0405	50	3217.	*	2 JUN 0815	100	782.	*	2 JUN 1225	150	158.	*	2 JUN 1635	200	5.
			*				*				*			

****

PEAK FLOW (CFS)	TIME (HR)		MAXIMUM AVERAGE FLOW 6-HR	24-HR	72-HR	16.58-HR
26510.	2.58	(CFS)	4956.	2041.	2041.	2041.
		(INCHES)	6.462	7.357	7.357	7.357
		(AC-FT)	2457.	2798.	2798.	2798.

CUMULATIVE AREA = 7.13 SQ MI

****

INTERPOLATED HYDROGRAPH AT C599I

****

DA MON HRMN	ORD	FLOW	*	DA MON HRMN	ORD	FLOW	*	DA MON HRMN	ORD	FLOW	*	DA MON HRMN	ORD	FLOW
2 JUN 0000	1	6249.	*	2 JUN 0410	51	2987.	*	2 JUN 0820	101	764.	*	2 JUN 1230	151	154.
2 JUN 0005	2	5380.	*	2 JUN 0415	52	2721.	*	2 JUN 0825	102	743.	*	2 JUN 1235	152	150.
2 JUN 0010	3	3895.	*	2 JUN 0420	53	2477.	*	2 JUN 0830	103	710.	*	2 JUN 1240	153	146.
2 JUN 0015	4	2851.	*	2 JUN 0425	54	2242.	*	2 JUN 0835	104	672.	*	2 JUN 1245	154	142.
2 JUN 0020	5	2194.	*	2 JUN 0430	55	2051.	*	2 JUN 0840	105	641.	*	2 JUN 1250	155	139.
2 JUN 0025	6	1815.	*	2 JUN 0435	56	1908.	*	2 JUN 0845	106	616.	*	2 JUN 1255	156	136.
2 JUN 0030	7	1578.	*	2 JUN 0440	57	1797.	*	2 JUN 0850	107	595.	*	2 JUN 1300	157	133.
2 JUN 0035	8	1428.	*	2 JUN 0445	58	1714.	*	2 JUN 0855	108	578.	*	2 JUN 1305	158	130.

2 JUN 0040	9	1322.	*	2 JUN 0450	59	1649.	*	2 JUN 0900	109	563.	*	2 JUN 1310	159	127.
2 JUN 0045	10	1242.	*	2 JUN 0455	60	1597.	*	2 JUN 0905	110	551.	*	2 JUN 1315	160	124.
2 JUN 0050	11	1181.	*	2 JUN 0500	61	1551.	*	2 JUN 0910	111	543.	*	2 JUN 1320	161	121.
2 JUN 0055	12	1131.	*	2 JUN 0505	62	1504.	*	2 JUN 0915	112	535.	*	2 JUN 1325	162	119.
2 JUN 0100	13	1091.	*	2 JUN 0510	63	1443.	*	2 JUN 0920	113	527.	*	2 JUN 1330	163	116.
2 JUN 0105	14	1061.	*	2 JUN 0515	64	1376.	*	2 JUN 0925	114	519.	*	2 JUN 1335	164	114.
2 JUN 0110	15	1047.	*	2 JUN 0520	65	1324.	*	2 JUN 0930	115	511.	*	2 JUN 1340	165	111.
2 JUN 0115	16	1038.	*	2 JUN 0525	66	1280.	*	2 JUN 0935	116	504.	*	2 JUN 1345	166	109.
2 JUN 0120	17	1030.	*	2 JUN 0530	67	1241.	*	2 JUN 0940	117	497.	*	2 JUN 1350	167	106.
2 JUN 0125	18	1027.	*	2 JUN 0535	68	1206.	*	2 JUN 0945	118	489.	*	2 JUN 1355	168	104.
2 JUN 0130	19	1028.	*	2 JUN 0540	69	1174.	*	2 JUN 0950	119	483.	*	2 JUN 1400	169	98.
2 JUN 0135	20	1032.	*	2 JUN 0545	70	1144.	*	2 JUN 0955	120	476.	*	2 JUN 1405	170	91.
2 JUN 0140	21	1041.	*	2 JUN 0550	71	1116.	*	2 JUN 1000	121	469.	*	2 JUN 1410	171	83.
2 JUN 0145	22	1050.	*	2 JUN 0555	72	1089.	*	2 JUN 1005	122	463.	*	2 JUN 1415	172	78.
2 JUN 0150	23	1059.	*	2 JUN 0600	73	1064.	*	2 JUN 1010	123	457.	*	2 JUN 1420	173	73.
2 JUN 0155	24	1067.	*	2 JUN 0605	74	1039.	*	2 JUN 1015	124	451.	*	2 JUN 1425	174	67.
2 JUN 0200	25	1074.	*	2 JUN 0610	75	1013.	*	2 JUN 1020	125	445.	*	2 JUN 1430	175	62.
2 JUN 0205	26	1849.	*	2 JUN 0615	76	986.	*	2 JUN 1025	126	439.	*	2 JUN 1435	176	57.
2 JUN 0210	27	4636.	*	2 JUN 0620	77	963.	*	2 JUN 1030	127	432.	*	2 JUN 1440	177	52.
2 JUN 0215	28	9374.	*	2 JUN 0625	78	948.	*	2 JUN 1035	128	425.	*	2 JUN 1445	178	47.
2 JUN 0220	29	16212.	*	2 JUN 0630	79	939.	*	2 JUN 1040	129	417.	*	2 JUN 1450	179	43.
2 JUN 0225	30	23350.	*	2 JUN 0635	80	933.	*	2 JUN 1045	130	409.	*	2 JUN 1455	180	39.
2 JUN 0230	31	25850.	*	2 JUN 0640	81	927.	*	2 JUN 1050	131	401.	*	2 JUN 1500	181	35.
2 JUN 0235	32	26516.	*	2 JUN 0645	82	922.	*	2 JUN 1055	132	393.	*	2 JUN 1505	182	32.
2 JUN 0240	33	24925.	*	2 JUN 0650	83	918.	*	2 JUN 1100	133	386.	*	2 JUN 1510	183	29.
2 JUN 0245	34	21640.	*	2 JUN 0655	84	913.	*	2 JUN 1105	134	378.	*	2 JUN 1515	184	26.
2 JUN 0250	35	18324.	*	2 JUN 0700	85	908.	*	2 JUN 1110	135	370.	*	2 JUN 1520	185	24.
2 JUN 0255	36	15492.	*	2 JUN 0705	86	903.	*	2 JUN 1115	136	355.	*	2 JUN 1525	186	21.
2 JUN 0300	37	13277.	*	2 JUN 0710	87	899.	*	2 JUN 1120	137	331.	*	2 JUN 1530	187	19.
2 JUN 0305	38	11364.	*	2 JUN 0715	88	894.	*	2 JUN 1125	138	304.	*	2 JUN 1535	188	18.
2 JUN 0310	39	9872.	*	2 JUN 0720	89	889.	*	2 JUN 1130	139	280.	*	2 JUN 1540	189	16.
2 JUN 0315	40	8548.	*	2 JUN 0725	90	883.	*	2 JUN 1135	140	258.	*	2 JUN 1545	190	14.
2 JUN 0320	41	7506.	*	2 JUN 0730	91	876.	*	2 JUN 1140	141	240.	*	2 JUN 1550	191	13.
2 JUN 0325	42	6569.	*	2 JUN 0735	92	868.	*	2 JUN 1145	142	224.	*	2 JUN 1555	192	12.
2 JUN 0330	43	5744.	*	2 JUN 0740	93	860.	*	2 JUN 1150	143	210.	*	2 JUN 1600	193	11.
2 JUN 0335	44	5066.	*	2 JUN 0745	94	852.	*	2 JUN 1155	144	198.	*	2 JUN 1605	194	10.
2 JUN 0340	45	4538.	*	2 JUN 0750	95	844.	*	2 JUN 1200	145	188.	*	2 JUN 1610	195	9.
2 JUN 0345	46	4163.	*	2 JUN 0755	96	834.	*	2 JUN 1205	146	180.	*	2 JUN 1615	196	8.
2 JUN 0350	47	3877.	*	2 JUN 0800	97	823.	*	2 JUN 1210	147	173.	*	2 JUN 1620	197	7.
2 JUN 0355	48	3630.	*	2 JUN 0805	98	811.	*	2 JUN 1215	148	167.	*	2 JUN 1625	198	7
2 JUN 0400	49	3416.	*	2 JUN 0810	99	797.	*	2 JUN 1220	149	163.	*	2 JUN 1630	199	6.
2 JUN 0405	50	3218.	*	2 JUN 0815	100	782.	*	2 JUN 1225	150	158.	*	2 JUN 1635	200	5.
			*				*				*			

****

PEAK FLOW (CFS)	TIME (HR)		MAXIMUM AVERAGE FLOW 6-HR	24-HR	72-HR	16.58-HR
26516.	2.58	(CFS)	4956.	2042.	2042.	2042.
		(INCHES)	6.463	7.358	7.358	7.358
		(AC-FT)	2458.	2798.	2798.	2798.

CUMULATIVE AREA = 7.13 SQ MI

STATION C599I

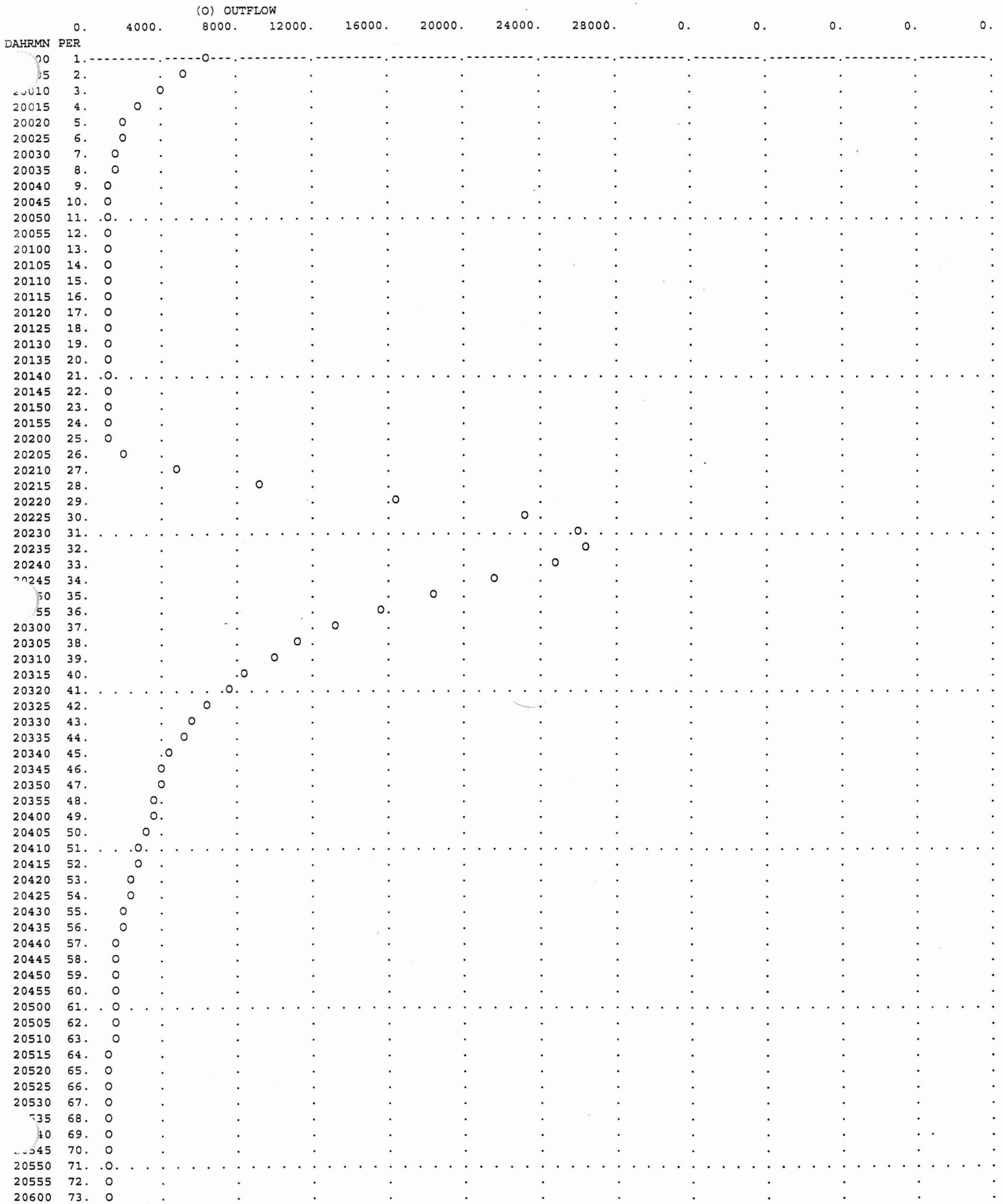

20605 74. O
20610 75. O
20615 76. O
20620 77. O
20625 78. O
20630 79. O
20635 80. O
20640 81. O
20645 82. O
20650 83. O
20655 84. O
20700 85. O
20705 86. O
20710 87. O
20715 88. O
20720 89. O
20725 90. O
20730 91. O
20735 92. O
20740 93. O
20745 94. O
20750 95. O
20755 96. O
20800 97. O
20805 98. O
20810 99. O
20815 100. O
20820 101. O
20825 102. O
20830 103. O
20835 104. O
20840 105. O
20845 106. O
20850 107.O
20855 108.O
20900 109.O
20905 110.O
20910 111.O
20915 112.O
20920 113.O
20925 114.O
20930 115.O
20935 116.O
20940 117.O
20945 118.O
20950 119.O
20955 120.O
21000 121.O
21005 122.O
21010 123.O
21015 124.O
21020 125.O
21025 126.O
21030 127.O
21035 128.O
21040 129.O
21045 130.O
21050 131.O
21055 132.O
21100 133.O
21105 134.O
21110 135.O
21115 136.O
21120 137.O
21125 138.O
21130 139.O
21135 140.O
21140 141.O
21145 142.O
21150 143.O
21155 144O
21200 145O
21205 146O
21210 147O
21215 148O
21220 149O
21225 150O
21230 151O

21235 1520
21240 1530
21245 1540
21250 1550
21255 1560
21300 1570
[illegible]5 1580
[illegible]10 1590
21315 1600
21320 1610
21325 1620
21330 1630
21335 1640
21340 1650
21345 1660
21350 1670
21355 1680
21400 1690
21405 1700
21410 1710
21415 1720
21420 1730
21425 1740
21430 1750
21435 1760
21440 1770
21445 1780
21450 1790
21455 1800
21500 1810
21505 1820
21510 1830
21515 1840
21520 1850
21525 1860
21530 1870
21535 1880
21540 1890
21545 1900
[illegible]50 1910
[illegible]55 1920
21600 1930
21605 1940
21610 1950
21615 1960
21620 1970
21625 1980
21630 1990
21635 2000

RUNOFF SUMMARY
FLOW IN CUBIC FEET PER SECOND
TIME IN HOURS, AREA IN SQUARE MILES

OPERATION	STATION	PEAK FLOW	TIME OF PEAK	AVERAGE FLOW FOR MAXIMUM PERIOD 6-HOUR	24-HOUR	72-HOUR	BASIN AREA	MAXIMUM STAGE	TIME OF MAX STAGE
HYDROGRAPH AT	C560I	17974.	2.58	2897.	1051.	1051.	2.15		
DIVERSION TO	0.5PMF	8987.	2.58	1449.	525.	525.	2.15		
HYDROGRAPH AT	0.5PMF	8987.	2.58	1449.	525.	525.	2.15		
ROUTED TO	C560O	7963.	2.67	1525.	658.	658.	2.15		
ROUTED TO	560599	7909.	2.75	1529.	662.	662.	2.15		
HYDROGRAPH AT	C578I	26969.	2.33	2850.	1033.	1033.	2.00		
DIVERSION TO	0.5PMF	13484.	2.33	1425.	516.	516.	2.00		
HYDROGRAPH AT	0.5PMF	13484.	2.33	1425.	516.	516.	2.00		
ROUTED TO	C578O	12828.	2.42	1517.	633.	633.	2.00		
ROUTED TO	578599	11984.	2.50	1562.	653.	653.	2.00		
HYDROGRAPH AT	C584I	20238.	2.33	2265.	821.	821.	1.60		
DIVERSION TO	0.5PMF	10119.	2.33	1132.	410.	410.	1.60		
HYDROGRAPH AT	0.5PMF	10119.	2.33	1132.	410.	410.	1.60		
ROUTED TO	C584O	9855.	2.42	1229.	489.	489.	1.60		
ROUTED TO	584599	7907.	2.58	1293.	520.	520.	1.60		
HYDROGRAPH AT	C210	19580.	2.33	1956.	708.	708.	1.38		
DIVERSION TO	0.5PMF	9790.	2.33	978.	354.	354.	1.38		
HYDROGRAPH AT	0.5PMF	9790.	2.33	978.	354.	354.	1.38		
4 COMBINED AT	C599I	26516.	2.58	4956.	2042.	2042.	7.13		

*** NORMAL END OF HEC-1 ***

APPENDIX B

FLOOD HYDROLOGY (HEC-1)

100-YEAR, EXISTING CONDITION (24-HOUR)

100-YEAR, EXISTING CONDITION (6-HOUR)

100-YEAR, FUTURE CONDITION (24-HOUR)

100-YEAR, FUTURE CONDITION (6-HOUR)

10-YEAR, FUTURE CONDITION (6-HOUR)

100-Year, Existing Condition (24-Hour)

```
1*****************************************                                    *****************************************
 *                                       *                                    *                                       *
 *   FLOOD HYDROGRAPH PACKAGE  (HEC-1)   *                                    *    U.S. ARMY CORPS OF ENGINEERS       *
 *              MAY   1991               *                                    *    HYDROLOGIC ENGINEERING CENTER      *
 *           VERSION 4.0.1E              *                                    *          609 SECOND STREET            *
 *                                       *                                    *       DAVIS, CALIFORNIA 95616         *
 * RUN DATE  02/18/:0  TIME  08:29:37    *                                    *           (916) 551-1748              *
 *                                       *                                    *                                       *
 *****************************************                                    *****************************************


                                        X     X  XXXXXXX   XXXXX          X
                                        X     X  X        X     X        XX
                                        X     X  X        X               X
                                        XXXXXXX  XXXX     X        XXXXX  X
                                        X     X  X        X               X
                                        X     X  X        X     X         X
                                        X     X  XXXXXXX   XXXXX         XXX


          THIS PROGRAM REPLACES ALL PREVIOUS VERSIONS OF HEC-1 KNOWN AS HEC1 (JAN 73), HEC1GS, HEC1DB, AND HEC1KW.

          THE DEFINITIONS OF VARIABLES -RTIMP- AND -RTIOR- HAVE CHANGED FROM THOSE USED WITH THE 1973-STYLE INPUT STRUCTURE.
          THE DEFINITION OF -AMSKK- ON RM-CARD WAS CHANGED WITH REVISIONS DATED 28 SEP 81. THIS IS THE FORTRAN77 VERSION
          NEW OPTIONS: DAMBREAK OUTFLOW SUBMERGENCE , SINGLE EVENT DAMAGE CALCULATION, DSS:WRITE STAGE FREQUENCY,
          DSS:READ TIME SERIES AT DESIRED CALCULATION INTERVAL   LOSS RATE:GREEN AND AMPT INFILTRATION
          KINEMATIC WAVE: NEW FINITE DIFFERENCE ALGORITHM

1                                                   HEC-1 INPUT                                                    PAGE  1

        LINE          ID.......1.......2.......3.......4.......5.......6.......7.......8.......9......10

          1           ID   Golden Eagle Park Dam Modifications
          2           ID        by Stantec: Proj. No. 28900095                    File: ALTFf-1.IH1
          3           ID        for FCDMC:  FCD                                   Date:07-08-99     mcg
          4           ID                                                        Revised:
          5           ID
          6           ID   Alternative F:
          7           ID        Addition of an auxillary spillway.  This spillway will function such
          8           ID        that the existing emergency spillway does not operate for the 100-year
          9           ID        storm.  The stage-storage relation is adjusted to reflect revised
         10           ID        grading in the park.
         11           ID
         12           ID        The purpose of this model is to estimate peak discharges in Ashbrook
         13           ID        Wash for evaluation of the Dam modifications impact on the floodplain.
         14           ID
         15           ID   100-year, 24-hour existing condition watershed model for Ashbrook Wash
         16           ID   upstream of the Fort McDowell Indian Reservation boundary.
         17           ID        This model is a portion of the original Fountain Hills North FDS
         18           ID        watershed model conducted by GVSCE, 1994.  The title cards from that
         19           ID        model are included for reference.
         20           ID
         21           ID   Fountain Hills North Floodplain Delineation Study
         22           ID        FCD 92-04       by GVSCE                          File:  EX100-24.IH1
         23           ID    Existing Condition Model                              Date:    07-21-94   dtp
         24           ID    100-Year 24-Hour Storm, Clark Unit Hydrograph     Revised:    09-14-94   trl
                      *
         25           IT       1                    1800
         26           IO       5
         27           IN      15
                      *DIAGRAM
                      * Point precipitation values are are based on Hydro-40 DARF.
                      *   0.01    5.00   10.00   50.00   80.00  100.00  200.00
                      *  1.000   0.980   0.949   0.883   0.861   0.850   0.819
                      *
         28           JD    4.20    0.01
                      * The following PC records are a 24-hour SCS Type II rainfall distribution.
         29           PC   0.000   0.002   0.005   0.008   0.011   0.013   0.016   0.019   0.022   0.025
         30           PC   0.028   0.032   0.035   0.038   0.041   0.044   0.048   0.053   0.056   0.060
         31           PC   0.063   0.067   0.071   0.075   0.080   0.084   0.089   0.093   0.098   0.103
         32           PC   0.109   0.114   0.120   0.127   0.133   0.140   0.147   0.155   0.163   0.172
         33           PC   0.181   0.192   0.204   0.220   0.235   0.259   0.283   0.473   0.663   0.699
         34           PC   0.735   0.754   0.772   0.785   0.799   0.810   0.820   0.829   0.838   0.846
         35           PC   0.854   0.861   0.868   0.874   0.880   0.885   0.891   0.900   0.902   0.910
         36           PC   0.912   0.920   0.921   0.926   0.929   0.930   0.937   0.941   0.945   0.950
         37           PC   0.952   0.957   0.959   0.962   0.965   0.970   0.972   0.973   0.978   0.981
         38           PC   0.984   0.987   0.989   0.992   0.995   0.998   1.000
         39           JD    4.12    5.00
         40           JD    3.99   10.00
         41           JD    3.71   50.00
                      *
1                                                   HEC-1 INPUT                                                    PAGE  2

        LINE          ID.......1.......2.......3.......4.......5.......6.......7.......8.......9......10


         42           KK    204A
         43           KM   Sub-Basin   204A
         44           KM
```

```
 45          KM      The Clark Unit Hydrograph is used for this basin.
 46          KM          The Natural time-area relation is used for this basin.
 47          KM
 48          KM      Time of Concentration for this sub-basin is based on the following:
 49          KM          An rainfall areal reduction factor of 1.000
 50          KM
 51          KM        EXCESS RAINFALL VALUES EXCEEDED IN 5-MINUTE INTERVALS
 52          KM     5  10  15  20  25  30  35  40  45  50  55  60  65  70  75  80  85  90
 53          KM   .25 .25 .25 .25 .25 .24 .01 .01 .01 .01 .01 .01 .00 .00 .00 .00 .00 .00
 54          KM
 55          KM          L=   0.687 miles, S=  175 feet/mile, Kb= .10
 56          KM
 57          BA   0.108
 58          LG    0.15    0.39    5.80    0.19    0.00
 59          UC   0.379   0.333
 60          UA       0       3       5       8      12      20      43      75      90      96
 61          UA     100
             *

 62          KK  522523
 63          KM      Normal depth channel route from C522 to C523
 64          KM      Source:  200 Scale Mapping
 65          RS      12    FLOW      -1
 66          RC   0.060   0.050   0.060  3275.0  0.0197
 67          RX  1000.0  1020.0  1035.0  1065.0  1080.0  1120.0  1160.0  1185.0
 68          RY  1678.0  1676.0  1674.0  1672.0  1672.0  1674.0  1676.0  1678.0
             *

 69          KK    204B
 70          KM   Sub-Basin   204B
 71          KM
 72          KM      The Clark Unit Hydrograph is used for this basin.
 73          KM          The Natural time-area relation is used for this basin.
 74          KM
 75          KM      Time of Concentration for this sub-basin is based on the following:
 76          KM          An rainfall areal reduction factor of 1.000
 77          KM
 78          KM        EXCESS RAINFALL VALUES EXCEEDED IN 5-MINUTE INTERVALS
 79          KM     5  10  15  20  25  30  35  40  45  50  55  60  65  70  75  80  85  90
 80          KM   .25 .25 .25 .24 .24 .24 .01 .01 .01 .01 .00 .00 .00 .00 .00 .00 .00 .00
 81          KM
 82          KM          L=   0.775 miles, S=  128 feet/mile, Kb= .10
 83          KM
 84          BA   0.126
 85          LG    0.15    0.39    5.80    0.21    0.20
 86          UC   0.446   0.401
 87          UA       0       3       5       8      12      20      43      75      90      96
 88          UA     100
             *
```



```
LINE         ID.......1.......2.......3.......4.......5.......6.......7.......8.......9......10

 89          KK   C523I
 90          KM      Hydrograph combine 522523 + 204B at C523I
 91          HC       2
             *

 92          KK   C523O
 93          KM      Reservoir route at C523.
 94          RS       1    ELEV  1650.3
 95          SV    0.00    0.01    0.12    0.71    2.23    2.50    2.80    3.10    3.20    3.40
 96          SV    3.70    4.00    4.30    4.60    4.90    5.20    5.50
 97          SE  1650.3  1652.0  1654.0  1656.0  1658.0  1658.2  1658.4  1658.6  1658.7  1658.8
 98          SE  1659.0  1659.2  1659.4  1659.6  1659.8  1660.0  1660.2
 99          SQ       0      22      78     144     209     214     220     224     226     232
100          SQ     239     249     288     384     529     726     960
             *

101          KK   D523L
102          KM      Hydrograph diversion at C523.  Main flow continues in the left branch.
103          KM      Diverted flow is in the right branch.
104          DT   D523R
105          DI       0      22      78     144     209     214     220     224     226     232
106          DI     239     249     288     384     529     726     960
107          DQ       0       0       0       0       0       0       0       0       0       3
108          DQ       5      10      20      37      61      96     139
             *

109          KK    205A
110          KM   Sub-Basin   205A
111          KM
112          KM      The Clark Unit Hydrograph is used for this basin.
113          KM          The Natural time-area relation is used for this basin.
114          KM
115          KM      Time of Concentration for this sub-basin is based on the following:
116          KM          An rainfall areal reduction factor of 1.000
117          KM
118          KM        EXCESS RAINFALL VALUES EXCEEDED IN 5-MINUTE INTERVALS
119          KM     5  10  15  20  25  30  35  40  45  50  55  60  65  70  75  80  85  90
120          KM   .25 .25 .25 .25 .24 .24 .02 .02 .02 .02 .02 .02 .01 .01 .01 .01 .01 .01
121          KM
122          KM          L=   0.870 miles, S=  378 feet/mile, Kb= .14
123          KM
```

```
 124          BA   0.118
 125          LG    0.25    0.35    4.35    0.40   35.00
 126          UC   0.400   0.406
 127          UA       0       3       5       8      12      20      43      75      90      96
 128          UA     100
              *

 129          KK    205B
 130          KM   Sub-Basin   205B
 131          KM
 132          KM      The Clark Unit Hydrograph is used for this basin.
 133          KM          The Natural time-area relation is used for this basin.
 134          KM
```



```
LINE          ID.......1.......2.......3.......4.......5.......6.......7.......8.......9......10

 135          KM      Time of Concentration for this sub-basin is based on the following:
 136          KM          An rainfall areal reduction factor of 1.000
 137          KM
 138          KM       EXCESS RAINFALL VALUES EXCEEDED IN 5-MINUTE INTERVALS
 139          KM     5  10  15  20  25  30  35  40  45  50  55  60  65  70  75  80  85  90
 140          KM   .25 .25 .25 .25 .24 .24 .02 .02 .02 .02 .02 .02 .01 .01 .01 .01 .01 .01
 141          KM
 142          KM          L=   0.759 miles, S=  373 feet/mile, Kb= .14
 143          KM
 144          BA   0.211
 145          LG    0.25    0.35    4.35    0.40   35.00
 146          UC   0.375   0.242
 147          UA       0       3       5       8      12      20      43      75      90      96
 148          UA     100
              *

 149          KK    C528
 150          KM      Hydrograph combine 205A + 205B at C528
 151          HC       2
              *

 152          KK  528530
 153          KM      Normal depth channel route from C528 to C530
 154          KM      Source:  Hydrology Field Reconnaissance
 155          RS       2    FLOW      -1
 156          RC   0.060   0.043   0.060  2594.0  0.0709
 157          RX  1000.0  1018.0  1031.0  1042.0  1052.0  1066.0  1093.0  1107.0
 158          RY    96.3    92.2    89.9    85.9    85.7    91.5    91.2    96.3
              *

 159          KK    205C
 160          KM   Sub-Basin   205C
 161          KM
 162          KM      The Clark Unit Hydrograph is used for this basin.
 163          KM          The Natural time-area relation is used for this basin.
 164          KM
 165          KM      Time of Concentration for this sub-basin is based on the following:
 166          KM          An rainfall areal reduction factor of 1.000
 167          KM
 168          KM       EXCESS RAINFALL VALUES EXCEEDED IN 5-MINUTE INTERVALS
 169          KM     5  10  15  20  25  30  35  40  45  50  55  60  65  70  75  80  85  90
 170          KM   .25 .25 .24 .24 .24 .24 .02 .02 .02 .02 .02 .02 .01 .01 .01 .01 .01 .01
 171          KM
 172          KM          L=   0.618 miles, S=  331 feet/mile, Kb= .15
 173          KM
 174          BA   0.059
 175          LG    0.25    0.35    4.35    0.41   35.00
 176          UC   0.367   0.416
 177          UA       0       3       5       8      12      20      43      75      90      96
 178          UA     100
              *
```



```
LINE          ID.......1.......2.......3.......4.......5.......6.......7.......8.......9......10

 179          KK   C530R
 180          KM      Hydrograph combine 528530 + 205C at C530 right branch
 181          HC       2
              *

 182          KK    205D
 183          KM   Sub-Basin   205D
 184          KM
 185          KM      The Clark Unit Hydrograph is used for this basin.
 186          KM          The Natural time-area relation is used for this basin.
 187          KM
 188          KM      Time of Concentration for this sub-basin is based on the following:
 189          KM          An rainfall areal reduction factor of 1.000
 190          KM
 191          KM       EXCESS RAINFALL VALUES EXCEEDED IN 5-MINUTE INTERVALS
 192          KM     5  10  15  20  25  30  35  40  45  50  55  60  65  70  75  80  85  90
 193          KM   .25 .25 .25 .25 .24 .24 .02 .02 .02 .02 .02 .02 .01 .01 .01 .01 .01 .01
 194          KM
 195          KM          L=   1.020 miles, S=  361 feet/mile, Kb= .13
 196          KM
 197          BA   0.319
 198          LG    0.25    0.35    4.35    0.40   35.00
```

```
 199          UC   0.425   0.279
 200          UA       0       3       5       8      12      20      43      75      90      96
 201          UA     100
              *

 202          KK    205E
 203          KM   Sub-Basin   205E
 204          KM
 205          KM      The Clark Unit Hydrograph is used for this basin.
 206          KM          The Natural time-area relation is used for this basin.
 207          KM
 208          KM      Time of Concentration for this sub-basin is based on the following:
 209          KM          An rainfall areal reduction factor of 1.000
 210          KM
 211          KM       EXCESS RAINFALL VALUES EXCEEDED IN 5-MINUTE INTERVALS
 212          KM     5  10  15  20  25  30  35  40  45  50  55  60  65  70  75  80  85  90
 213          KM   .25 .25 .25 .25 .24 .24 .02 .02 .02 .02 .02 .02 .01 .01 .01 .01 .01 .01
 214          KM
 215          KM          L=   1.357 miles, S=  358 feet/mile, Kb= .14
 216          KM
 217          BA   0.218
 218          LG    0.25    0.35    4.35    0.40   35.00
 219          UC   0.517   0.541
 220          UA       0       3       5       8      12      20      43      75      90      96
 221          UA     100
              *
1                                          HEC-1 INPUT                                          PAGE  6

LINE          ID.......1.......2.......3.......4.......5.......6.......7.......8.......9......10


 222          KK    C529
 223          KM      Hydrograph combine 205D + 205E at C529
 224          HC       2
              *
              * *
              * * NOTE:  529530 too short to route
              * *
              *

 225          KK    C530
 226          KM      Hydrograph combine C529 + C530R at C530
 227          HC       2
              *

 228          KK  530531
 229          KM      Normal depth channel route from C530 to C531
 230          KM      Source:  Hydrology Field Reconnaissance
 231          RS       3    FLOW      -1
 232          RC   0.060   0.059   0.060  2426.0  0.0404
 233          RX  1000.0  1035.0  1050.0  1060.0  1075.0  1081.0  1088.0  1094.0
 234          RY    95.9    86.5    86.2    83.1    84.0    90.2    95.6    99.3
              *

 235          KK    205F
 236          KM   Sub-Basin   205F
 237          KM
 238          KM      The Clark Unit Hydrograph is used for this basin.
 239          KM          The Natural time-area relation is used for this basin.
 240          KM
 241          KM      Time of Concentration for this sub-basin is based on the following:
 242          KM          An rainfall areal reduction factor of 1.000
 243          KM
 244          KM       EXCESS RAINFALL VALUES EXCEEDED IN 5-MINUTE INTERVALS
 245          KM     5  10  15  20  25  30  35  40  45  50  55  60  65  70  75  80  85  90
 246          KM   .25 .25 .24 .24 .24 .24 .02 .02 .02 .02 .02 .02 .01 .01 .01 .01 .01 .01
 247          KM
 248          KM          L=   0.786 miles, S=  326 feet/mile, Kb= .14
 249          KM
 250          BA   0.161
 251          LG    0.25    0.35    4.35    0.41   35.00
 252          UC   0.400   0.312
 253          UA       0       3       5       8      12      20      43      75      90      96
 254          UA     100
              *

 255          KK    C531
 256          KM      Hydrograph combine 530531 + 205F at C531
 257          HC       2
              *
1                                          HEC-1 INPUT                                          PAGE  7

LINE          ID.......1.......2.......3.......4.......5.......6.......7.......8.......9......10


 258          KK  531532
 259          KM      Normal depth channel route from C531 to C532
 260          KM      Source:  Hydrology Field Reconnaissance
 261          RS       4    FLOW      -1
 262          RC   0.060   0.065   0.060  3391.0  0.0463
 263          RX  1000.0  1012.0  1022.0  1032.0  1050.0  1056.0  1068.0  1092.0
 264          RY    98.8    93.8    89.1    86.4    86.5    89.1    91.0    97.6
              *

 265          KK    205G
```

```
266          KM   Sub-Basin   205G
267          KM
268          KM      The Clark Unit Hydrograph is used for this basin.
269          KM          The Natural time-area relation is used for this basin.
270          KM
271          KM      Time of Concentration for this sub-basin is based on the following:
272          KM          An rainfall areal reduction factor of 1.000
273          KM
274          KM       EXCESS RAINFALL VALUES EXCEEDED IN 5-MINUTE INTERVALS
275          KM     5  10  15  20  25  30  35  40  45  50  55  60  65  70  75  80  85  90
276          KM   .25 .25 .24 .24 .24 .24 .02 .02 .02 .02 .02 .02 .01 .01 .01 .01 .01 .01
277          KM
278          KM          L=   0.924 miles, S=  338 feet/mile, Kb= .13
279          KM
280          BA   0.185
281          LG    0.24    0.35    4.50    0.40   31.20
282          UC   0.417   0.343
283          UA       0       3       5       8      12      20      43      75      90      96
284          UA     100
             *

285          KK   C532L
286          KM      Hydrograph combine 531532 + 205G at C532 left branch
287          HC       2
             *

288          KK    205H
289          KM   Sub-Basin   205H
290          KM
291          KM      The Clark Unit Hydrograph is used for this basin.
292          KM          The Natural time-area relation is used for this basin.
293          KM
294          KM      Time of Concentration for this sub-basin is based on the following:
295          KM          An rainfall areal reduction factor of 1.000
296          KM
297          KM       EXCESS RAINFALL VALUES EXCEEDED IN 5-MINUTE INTERVALS
298          KM     5  10  15  20  25  30  35  40  45  50  55  60  65  70  75  80  85  90
299          KM   .25 .25 .24 .24 .24 .24 .02 .02 .02 .02 .02 .02 .01 .01 .01 .01 .01 .01
300          KM
301          KM          L=   1.464 miles, S=  325 feet/mile, Kb= .13
302          KM
303          BA   0.261
304          LG    0.24    0.35    4.50    0.39   31.60
305          UC   0.542   0.547
```



```
LINE         ID.......1.......2.......3.......4.......5.......6.......7.......8.......9......10

306          UA       0       3       5       8      12      20      43      75      90      96
307          UA     100
             *

308          KK    C532
309          KM      Hydrograph combine C532L + 205H at C532
310          HC       2
             *

311          KK  532533
312          KM      Normal depth channel route from C532 to C533
313          KM      Source:  Hydrology Field Reconnaissance
314          RS       2    FLOW      -1
315          RC   0.060   0.045   0.060  1555.0  0.0283
316          RX  1000.0  1020.0  1030.0  1048.0  1065.0  1077.0  1092.0  1119.0
317          RY    98.0    89.4    88.1    85.6    85.9    92.2    93.8    97.0
             *

318          KK    205I
319          KM   Sub-Basin   205I
320          KM
321          KM      The Clark Unit Hydrograph is used for this basin.
322          KM          The Natural time-area relation is used for this basin.
323          KM
324          KM      Time of Concentration for this sub-basin is based on the following:
325          KM          An rainfall areal reduction factor of 1.000
326          KM
327          KM       EXCESS RAINFALL VALUES EXCEEDED IN 5-MINUTE INTERVALS
328          KM     5  10  15  20  25  30  35  40  45  50  55  60  65  70  75  80  85  90
329          KM   .25 .25 .24 .24 .24 .24 .01 .01 .01 .01 .01 .01 .01 .01 .01 .01 .01 .01
330          KM
331          KM          L=   1.487 miles, S=  326 feet/mile, Kb= .11
332          KM
333          BA   0.354
334          LG    0.20    0.37    5.20    0.28   15.20
335          UC   0.488   0.414
336          UA       0       3       5       8      12      20      43      75      90      96
337          UA     100
             *

338          KK    C533
339          KM      Hydrograph combine 532533 + 205I at C533
340          HC       2
             *

341          KK  533534
342          KM      Normal depth channel route from C533 to C534
```

```
 343          KM      Source:  Hydrology Field Reconnaissance
 344          RS       9    FLOW      -1
 345          RC   0.060   0.046   0.060  7145.0  0.0241
 346          RX  1000.0  1010.0  1060.0  1073.0  1160.0  1181.0  1223.0  1237.0
 347          RY    97.8    93.7    94.7    90.8    89.9    92.4    94.0    96.8
              *
1                                        HEC-1 INPUT                                                    PAGE  9

LINE          ID.......1.......2.......3.......4.......5.......6.......7.......8.......9......10


 348          KK    205J
 349          KM   Sub-Basin   205J
 350          KM
 351          KM      The Clark Unit Hydrograph is used for this basin.
 352          KM          The Natural time-area relation is used for this basin.
 353          KM
 354          KM      Time of Concentration for this sub-basin is based on the following:
 355          KM          An rainfall areal reduction factor of 1.000
 356          KM
 357          KM       EXCESS RAINFALL VALUES EXCEEDED IN 5-MINUTE INTERVALS
 358          KM     5  10  15  20  25  30  35  40  45  50  55  60  65  70  75  80  85  90
 359          KM   .24 .24 .24 .24 .23 .23 .00 .00 .00 .00 .00 .00 .00 .00 .00 .00 .00 .00
 360          KM
 361          KM          L=   1.633 miles, S=  243 feet/mile, Kb= .08
 362          KM
 363          BA   0.369
 364          LG    0.21    0.35    4.90    0.30    3.50
 365          UC   0.479   0.427
 366          UA       0       3       5       8      12      20      43      75      90      96
 367          UA     100
              *

 368          KK   C534R
 369          KM      Hydrograph combine 533534 + 205J at C534 right branch
 370          HC       2
              *

 371          KK    205K
 372          KM   Sub-Basin   205K
 373          KM
 374          KM      The Clark Unit Hydrograph is used for this basin.
 375          KM          The Natural time-area relation is used for this basin.
 376          KM
 377          KM      Time of Concentration for this sub-basin is based on the following:
 378          KM          An rainfall areal reduction factor of 1.000
 379          KM
 380          KM       EXCESS RAINFALL VALUES EXCEEDED IN 5-MINUTE INTERVALS
 381          KM     5  10  15  20  25  30  35  40  45  50  55  60  65  70  75  80  85  90
 382          KM   .25 .25 .25 .24 .24 .24 .01 .01 .01 .01 .00 .00 .00 .00 .00 .00 .00 .00
 383          KM
 384          KM          L=   1.772 miles, S=  249 feet/mile, Kb= .10
 385          KM
 386          BA   0.245
 387          LG    0.16    0.38    5.60    0.22    1.50
 388          UC   0.579   0.710
 389          UA       0       3       5       8      12      20      43      75      90      96
 390          UA     100
              *
1                                        HEC-1 INPUT                                                    PAGE 10

LINE          ID.......1.......2.......3.......4.......5.......6.......7.......8.......9......10


 391          KK    C534
 392          KM      Hydrograph combine C534R + 205K at C534
 393          HC       2
              *

 394          KK  534535
 395          KM      Normal depth channel route from C534 to C535
 396          KM      Source:  Hydrology Field Reconnaissance
 397          RS       3    FLOW      -1
 398          RC   0.065   0.046   0.065  2037.0  0.0221
 399          RX  1000.0  1010.0  1016.0  1075.0  1150.0  1162.0  1174.0  1182.0
 400          RY    97.1    93.4    91.6    89.6    86.9    90.8    92.2    92.3
              *

 401          KK    205L
 402          KM   Sub-Basin   205L
 403          KM
 404          KM      The Clark Unit Hydrograph is used for this basin.
 405          KM          The Natural time-area relation is used for this basin.
 406          KM
 407          KM      Time of Concentration for this sub-basin is based on the following:
 408          KM          An rainfall areal reduction factor of 1.000
 409          KM
 410          KM       EXCESS RAINFALL VALUES EXCEEDED IN 5-MINUTE INTERVALS
 411          KM     5  10  15  20  25  30  35  40  45  50  55  60  65  70  75  80  85  90
 412          KM   .24 .24 .23 .23 .23 .23 .00 .00 .00 .00 .00 .00 .00 .00 .00 .00 .00 .00
 413          KM
 414          KM          L=   0.701 miles, S=  284 feet/mile, Kb= .09
 415          KM
 416          BA   0.118
 417          LG    0.19    0.36    5.00    0.29    0.00
```

```
418          UC   0.317   0.263
419          UA       0       3       5       8      12      20      43      75      90      96
420          UA     100
             *

421          KK    C535
422          KM      Hydrograph combine 534535 + 205L at C535
423          HC       2
             *

424          KK  535536
425          KM      Normal depth channel route from C535 to C536
426          KM      Source:  HEC-2 Cross Section: HE 3.275
427          RS       8    FLOW      -1
428          RC   0.075   0.050   0.075  2975.0  0.0236
429          RX  9852.8  9871.5  9957.7 10000.0 10015.6 10052.4 10142.4 10183.6
430          RY  1911.6  1904.3  1906.9  1900.8  1900.8  1905.4  1905.2  1912.6
             *
```



```
LINE         ID.......1.......2.......3.......4.......5.......6.......7.......8.......9......10

431          KK    205M
432          KM   Sub-Basin   205M
433          KM
434          KM      The Clark Unit Hydrograph is used for this basin.
435          KM          The HEC-1 time-area relation is used for this basin.
436          KM
437          KM      Time of Concentration for this sub-basin is based on the following:
438          KM          An rainfall areal reduction factor of 1.000
439          KM
440          KM       EXCESS RAINFALL VALUES EXCEEDED IN 5-MINUTE INTERVALS
441          KM     5  10  15  20  25  30  35  40  45  50  55  60  65  70  75  80  85  90
442          KM   .26 .26 .26 .26 .26 .26 .02 .02 .02 .02 .02 .02 .01 .01 .01 .01 .01 .01
443          KM
444          KM          L=   0.839 miles, S=  230 feet/mile, Kb= .06
445          KM
446          BA   0.139
447          LG    0.15    0.33    5.40    0.22   21.00
448          UC   0.292   0.253
             *

449          KK   C536R
450          KM      Hydrograph combine 535536 + 205M at C536 right branch
451          HC       2
             *

452          KK    205N
453          KM   Sub-Basin   205N
454          KM
455          KM      The Clark Unit Hydrograph is used for this basin.
456          KM          The HEC-1 time-area relation is used for this basin.
457          KM
458          KM      Time of Concentration for this sub-basin is based on the following:
459          KM          An rainfall areal reduction factor of 1.000
460          KM
461          KM       EXCESS RAINFALL VALUES EXCEEDED IN 5-MINUTE INTERVALS
462          KM     5  10  15  20  25  30  35  40  45  50  55  60  65  70  75  80  85  90
463          KM   .25 .25 .25 .25 .24 .24 .01 .01 .01 .01 .01 .00 .00 .00 .00 .00 .00 .00
464          KM
465          KM          L=   1.183 miles, S=  245 feet/mile, Kb= .10
466          KM
467          BA   0.156
468          LG    0.15    0.39    5.70    0.21    0.80
469          UC   0.450   0.503
             *

470          KK   C536I
471          KM      Hydrograph combine C536R + 205N at C536I
472          HC       2
             *
             * *
             * * C536I is the total flow in Hesperus Wash upstream of Dam 36
             * *
             *
```



```
LINE         ID.......1.......2.......3.......4.......5.......6.......7.......8.......9......10

473          KK   C536O
474          KM      Reservoir route at C536 (Dam 36).
475          RS       1    ELEV  1852.1
476          SV    0.00   14.41   35.94   67.64  108.61  158.07  218.14  276.00  280.00  289.00
477          SV  298.02  308.00  317.00  327.00  337.00  346.95  358.00  374.00
478          SE  1852.1  1866.0  1870.0  1874.0  1878.0  1882.0  1886.0  1889.0  1889.2  1889.6
479          SE  1890.0  1890.4  1890.8  1891.2  1891.6  1892.0  1892.4  1893.0
480          SQ       0     108     168     211     245     276     301     320     338     347
481          SQ     356     459     679     995    1408    1905    2477    3119    3826    5009
482          SE  1852.1  1858.0  1862.0  1866.0  1870.0  1874.0  1878.0  1882.0  1886.0  1889.0
483          SE  1889.2  1889.6  1890.0  1890.4  1890.8  1891.2  1891.6  1892.0  1892.4  1893.0
484          RL                   0.17
             *
             * *
```

```
                 * * End Basin 205.  Start Basin 206
                 * *
                 *

 485             KK  536537
 486             KM      Normal depth channel route from C536 to C537
 487             KM      Source:  HEC-2 Cross Section: HE 2.729
 488             RS       4    FLOW      -1
 489             RC   0.075   0.050   0.075  1480.0  0.0209
 490             RX  9900.0  9912.0  9947.3  9979.3 10025.0 10044.5 10051.0 10060.0
 491             RY  1846.5  1845.4  1843.1  1834.3  1833.6  1840.5  1843.3  1843.5
                 *

 492             KK    206A
 493             KM   Sub-Basin   206A
 494             KM
 495             KM      The Clark Unit Hydrograph is used for this basin.
 496             KM          The Urban time-area relation is used for this basin.
 497             KM
 498             KM      Time of Concentration for this sub-basin is based on the following:
 499             KM          An rainfall areal reduction factor of 1.000
 500             KM
 501             KM       EXCESS RAINFALL VALUES EXCEEDED IN 5-MINUTE INTERVALS
 502             KM     5  10  15  20  25  30  35  40  45  50  55  60  65  70  75  80  85  90
 503             KM   .27 .27 .27 .27 .27 .26 .03 .02 .02 .02 .02 .02 .01 .01 .01 .01 .01 .01
 504             KM
 505             KM          L=   0.631 miles, S=  256 feet/mile, Kb= .04
 506             KM
 507             BA   0.128
 508             LG    0.13    0.28    5.30    0.23   32.80
 509             UC   0.196   0.135
 510             UA       0       5      16      30      65      77      84      90      94      97
 511             UA     100
                 *
1                                          HEC-1 INPUT                                          PAGE 13

LINE             ID.......1.......2.......3.......4.......5.......6.......7.......8.......9......10


 512             KK    C537
 513             KM      Hydrograph combine 536537 + 206A at C537
 514             HC       2
                 *

 515             KK  537538
 516             KM      Normal depth channel route from C537 to C538
 517             KM      Source:  HEC-2 Cross Section: HE 2.493
 518             RS       3    FLOW      -1
 519             RC   0.075   0.050   0.075  2155.0  0.0210
 520             RX  9946.0  9957.6  9984.8  9994.8 10000.0 10036.5 10070.1 10107.3
 521             RY  1817.0  1815.2  1807.4  1803.2  1803.2  1805.5  1814.3  1815.4
                 *

 522             KK    206B
 523             KM   Sub-Basin   206B
 524             KM
 525             KM      The Clark Unit Hydrograph is used for this basin.
 526             KM          The Urban time-area relation is used for this basin.
 527             KM
 528             KM      Time of Concentration for this sub-basin is based on the following:
 529             KM          An rainfall areal reduction factor of 1.000
 530             KM
 531             KM       EXCESS RAINFALL VALUES EXCEEDED IN 5-MINUTE INTERVALS
 532             KM     5  10  15  20  25  30  35  40  45  50  55  60  65  70  75  80  85  90
 533             KM   .28 .27 .27 .27 .27 .27 .03 .03 .03 .03 .03 .03 .01 .01 .01 .01 .01 .01
 534             KM
 535             KM          L=   0.570 miles, S=  139 feet/mile, Kb= .03
 536             KM
 537             BA   0.095
 538             LG    0.10    0.26    5.20    0.23   41.30
 539             UC   0.192   0.144
 540             UA       0       5      16      30      65      77      84      90      94      97
 541             UA     100
                 *

 542             KK   C538I
 543             KM      Hydrograph combine 537538 + 206B at C538I
 544             HC       2
                 *

 545             KK   C538O
 546             KM      Reservoir route at C538.
 547             RS       1    ELEV  1778.2
 548             SV    0.00    0.10    0.57    1.69    2.60    2.70    2.90    3.00    3.20    3.38
 549             SV    3.60    3.90    4.10    4.30    4.60    5.10    5.60    6.10    7.10    8.10
 550             SE  1778.2  1782.0  1784.0  1786.0  1787.1  1787.2  1787.4  1787.6  1787.8  1788.0
 551             SE  1788.2  1788.4  1788.6  1788.8  1789.0  1789.4  1789.8  1790.2  1790.8  1791.4
 552             SQ       0      82     133     185     207     208     212     218     226     235
 553             SQ     249     265     286     310     338     400     482     611     942    1439
                 *
1                                          HEC-1 INPUT                                          PAGE 14

LINE             ID.......1.......2.......3.......4.......5.......6.......7.......8.......9......10
```

```
554          KK  538540
555          KM      Normal depth channel route from C538 to C540
556          KM      Source:  HEC-2 Cross Section: HE 1.990
557          RS       6    FLOW      -1
558          RC   0.075   0.050   0.075  2176.0  0.0210
559          RX  9907.7  9931.8  9978.4 10000.0 10041.1 10056.9 10143.7 10164.9
560          RY  1767.5  1754.9  1755.2  1753.2  1753.1  1755.1  1757.3  1769.4
             *

561          KK    206C
562          KM   Sub-Basin   206C
563          KM
564          KM      The Clark Unit Hydrograph is used for this basin.
565          KM          The HEC-1 time-area relation is used for this basin.
566          KM
567          KM      Time of Concentration for this sub-basin is based on the following:
568          KM          An rainfall areal reduction factor of 1.000
569          KM
570          KM       EXCESS RAINFALL VALUES EXCEEDED IN 5-MINUTE INTERVALS
571          KM     5  10  15  20  25  30  35  40  45  50  55  60  65  70  75  80  85  90
572          KM   .24 .24 .23 .23 .23 .23 .01 .01 .01 .01 .01 .01 .00 .00 .00 .00 .00 .00
573          KM
574          KM          L=   0.427 miles, S=  138 feet/mile, Kb= .07
575          KM
576          BA   0.024
577          LG    0.21    0.32    4.35    0.40   12.40
578          UC   0.275   0.376
             *

579          KK   C540R
580          KM      Hydrograph combine 538540 + 206C at C540 right branch
581          HC       2
             *

582          KK    206D
583          KM   Sub-Basin   206D
584          KM
585          KM      The Clark Unit Hydrograph is used for this basin.
586          KM          The Urban time-area relation is used for this basin.
587          KM
588          KM      Time of Concentration for this sub-basin is based on the following:
589          KM          An rainfall areal reduction factor of 1.000
590          KM
591          KM       EXCESS RAINFALL VALUES EXCEEDED IN 5-MINUTE INTERVALS
592          KM     5  10  15  20  25  30  35  40  45  50  55  60  65  70  75  80  85  90
593          KM   .28 .28 .28 .28 .27 .27 .03 .03 .03 .03 .03 .03 .01 .01 .01 .01 .01 .01
594          KM
595          KM          L=   0.531 miles, S=  236 feet/mile, Kb= .04
596          KM
597          BA   0.062
598          LG    0.08    0.26    5.70    0.18   41.20
599          UC   0.179   0.162
600          UA       0       5      16      30      65      77      84      90      94      97
601          UA     100
             *
```



```
LINE         ID.......1.......2.......3.......4.......5.......6.......7.......8.......9......10

602          KK  539540
603          KM      Normal depth channel route from C539 to C540
604          KM      Source:  200 Scale Mapping
605          RS       5    FLOW      -1
606          RC   0.060   0.050   0.055  1872.0  0.0256
607          RX  1000.0  1007.0  1016.0  1036.0  1046.0  1080.0  1150.0  1210.0
608          RY  1750.0  1748.0  1746.0  1744.0  1744.0  1746.0  1748.0  1750.0
             *

609          KK    206E
610          KM   Sub-Basin   206E
611          KM
612          KM      The Clark Unit Hydrograph is used for this basin.
613          KM          The HEC-1 time-area relation is used for this basin.
614          KM
615          KM      Time of Concentration for this sub-basin is based on the following:
616          KM          An rainfall areal reduction factor of 1.000
617          KM
618          KM       EXCESS RAINFALL VALUES EXCEEDED IN 5-MINUTE INTERVALS
619          KM     5  10  15  20  25  30  35  40  45  50  55  60  65  70  75  80  85  90
620          KM   .23 .23 .22 .22 .22 .21 .00 .00 .00 .00 .00 .00 .00 .00 .00 .00 .00 .00
621          KM
622          KM          L=   0.343 miles, S=  175 feet/mile, Kb= .09
623          KM
624          BA   0.023
625          LG    0.23    0.35    4.30    0.40    1.70
626          UC   0.263   0.308
             *

627          KK   C540L
628          KM      Hydrograph combine 539540 + 206E at C540 left branch
629          HC       2
             *

630          KK    C540
```

```
 631          KM      Hydrograph combine C540R + C540L at C540
 632          HC       2
              *
              * *
              * * C540 is the end of Hesperus Wash and the start of Balboa Wash
              * *
              *

 633          KK  540541
 634          KM      Normal depth channel route from C540 to C541
 635          KM      Source:  HEC-2 Cross Section: BA 1.645
 636          RS      11    FLOW      -1
 637          RC   0.065   0.035   0.065  4207.0  0.0204
 638          RX  9960.8  9968.0  9975.1  9975.7  9993.2 10018.2 10297.5 10343.9
 639          RY  1725.2  1721.8  1718.4  1716.2  1716.4  1718.4  1719.8  1730.5
              *
```



```
LINE          ID.......1.......2.......3.......4.......5.......6.......7.......8.......9......10

 640          KK    206F
 641          KM   Sub-Basin   206F
 642          KM
 643          KM      The Clark Unit Hydrograph is used for this basin.
 644          KM          The HEC-1 time-area relation is used for this basin.
 645          KM
 646          KM      Time of Concentration for this sub-basin is based on the following:
 647          KM          An rainfall areal reduction factor of 1.000
 648          KM
 649          KM       EXCESS RAINFALL VALUES EXCEEDED IN 5-MINUTE INTERVALS
 650          KM     5  10  15  20  25  30  35  40  45  50  55  60  65  70  75  80  85  90
 651          KM   .24 .23 .23 .23 .23 .22 .00 .00 .00 .00 .00 .00 .00 .00 .00 .00 .00 .00
 652          KM
 653          KM          L=   0.975 miles, S=  217 feet/mile, Kb= .08
 654          KM
 655          BA   0.157
 656          LG    0.21    0.35    4.60    0.35    5.10
 657          UC   0.388   0.364
              *

 658          KK    C541
 659          KM      Hydrograph combine 540541 + 206F at C541
 660          HC       2
              *

 661          KK  541548
 662          KM      Normal depth channel route from C541 to C548
 663          KM      Source:  HEC-2 Cross Section: BA 0.905
 664          RS       1    FLOW      -1
 665          RC   0.060   0.045   0.060  1138.0  0.0316
 666          RX  9761.7  9936.7  9955.2  9986.9  9994.7 10039.2 10065.3 10066.0
 667          RY  1647.4  1644.1  1638.1  1637.3  1636.2  1637.5  1652.9  1653.0
              *

 668          KK    206G
 669          KM   Sub-Basin   206G
 670          KM
 671          KM      The Clark Unit Hydrograph is used for this basin.
 672          KM          The HEC-1 time-area relation is used for this basin.
 673          KM
 674          KM      Time of Concentration for this sub-basin is based on the following:
 675          KM          An rainfall areal reduction factor of 1.000
 676          KM
 677          KM       EXCESS RAINFALL VALUES EXCEEDED IN 5-MINUTE INTERVALS
 678          KM     5  10  15  20  25  30  35  40  45  50  55  60  65  70  75  80  85  90
 679          KM   .25 .25 .25 .25 .25 .24 .01 .01 .01 .01 .01 .01 .00 .00 .00 .00 .00 .00
 680          KM
 681          KM          L=   0.950 miles, S=  132 feet/mile, Kb= .09
 682          KM
 683          BA   0.089
 684          LG    0.16    0.35    5.20    0.25   12.50
 685          UC   0.463   0.597
              *
```



```
LINE          ID.......1.......2.......3.......4.......5.......6.......7.......8.......9......10

 686          KK  BB523R
 687          KM      Retrieve previously diverted hydrograph at C523 in the right branch.
 688          DR   D523R
              *

 689          KK  523548
 690          KM      Normal depth channel route from C523 to C548
 691          KM      Source:  200 Scale Mapping
 692          RS       1    FLOW      -1
 693          RC   0.040   0.018   0.040  2680.0  0.0189
 694          RX  1000.0  1040.0  1090.0  1130.0  1170.0  1171.2  1181.2  1196.2
 695          RY  1646.0  1645.0  1643.8  1644.7  1644.0  1644.4  1646.0  1648.0
              *

 696          KK   C548L
 697          KM      Hydrograph combine 541548 + 206G + BB523R at C548 left branch
```

```
698          HC       3    3.72
             *
             * *
             * * C548L is the total flow in Balboa Wash above confluence with Oxford Wash
             * *
             *

699          KK    206H
700          KM   Sub-Basin   206H
701          KM
702          KM      The Clark Unit Hydrograph is used for this basin.
703          KM          The Urban time-area relation is used for this basin.
704          KM
705          KM      Time of Concentration for this sub-basin is based on the following:
706          KM          An rainfall areal reduction factor of 1.000
707          KM
708          KM       EXCESS RAINFALL VALUES EXCEEDED IN 5-MINUTE INTERVALS
709          KM     5  10  15  20  25  30  35  40  45  50  55  60  65  70  75  80  85  90
710          KM   .27 .27 .27 .27 .27 .26 .02 .02 .02 .02 .02 .02 .01 .01 .01 .01 .01 .01
711          KM
712          KM          L=   0.515 miles, S=  183 feet/mile, Kb= .07
713          KM
714          BA   0.059
715          LG    0.11    0.31    5.70    0.19   26.10
716          UC   0.263   0.248
717          UA       0       5      16      30      65      77      84      90      94      97
718          UA     100
             *

719          KK  542543
720          KM      Normal depth channel route from C542 to C543
721          KM      Source:  HEC-2 Cross Section: OX 0.931
722          RS       2    FLOW      -1
723          RC   0.075   0.040   0.050   686.0  0.0066
724          RX  9846.9  9881.6  9967.5  9983.2 10010.0 10025.0 10033.8 10039.6
725          RY  1732.3  1723.5  1724.1  1717.8  1717.0  1724.0  1728.2  1730.7
             *
```



```
LINE         ID.......1.......2.......3.......4.......5.......6.......7.......8.......9......10

726          KK    206I
727          KM   Sub-Basin   206I
728          KM
729          KM      The Clark Unit Hydrograph is used for this basin.
730          KM          The HEC-1 time-area relation is used for this basin.
731          KM
732          KM      Time of Concentration for this sub-basin is based on the following:
733          KM          An rainfall areal reduction factor of 1.000
734          KM
735          KM       EXCESS RAINFALL VALUES EXCEEDED IN 5-MINUTE INTERVALS
736          KM     5  10  15  20  25  30  35  40  45  50  55  60  65  70  75  80  85  90
737          KM   .27 .27 .27 .27 .27 .27 .03 .03 .03 .03 .03 .03 .01 .01 .01 .01 .01 .01
738          KM
739          KM          L=   0.232 miles, S=  286 feet/mile, Kb= .08
740          KM
741          BA   0.021
742          LG    0.11    0.32    5.70    0.19   35.70
743          UC   0.163   0.139
             *

744          KK    C543
745          KM      Hydrograph combine 542543 + 206I at C543
746          HC       2
             *

747          KK   D543L
748          KM      Hydrograph diversion at C543.  Main flow continues in the left branch.
749          KM      Diverted flow is in the right branch.
750          DT   D543R
751          DI       0      38      45      50      65      85      97     122     141     162
752          DI     194     350     395     432     475     522     570     612
753          DQ       0      38      45      50      65      85      97     122     141     162
754          DQ     194     350     395     425     460     500     540     575
             *

755          KK  543544
756          KM      Normal depth channel route from C543 to C544
757          KM      Source:  200 Scale Mapping & Hydrology Field Reconnaissance
758          RS       1    FLOW      -1
759          RC   0.040   0.018   0.040   597.0  0.0277
760          RX  1000.0  1020.0  1045.0  1075.0  1105.0  1106.2  1146.2  1266.2
761          RY  1720.0  1718.0  1712.0  1712.3  1712.0  1712.4  1714.0  1720.0
             *

762          KK    206K
763          KM   Sub-Basin   206K
764          KM
765          KM      The Clark Unit Hydrograph is used for this basin.
766          KM          The HEC-1 time-area relation is used for this basin.
767          KM
768          KM      Time of Concentration for this sub-basin is based on the following:
769          KM          An rainfall areal reduction factor of 1.000
770          KM
```

```
 771          KM       EXCESS RAINFALL VALUES EXCEEDED IN 5-MINUTE INTERVALS
1                                          HEC-1 INPUT                                                          PAGE 19

LINE          ID.......1.......2.......3.......4.......5.......6.......7.......8.......9......10

 772          KM     5  10  15  20  25  30  35  40  45  50  55  60  65  70  75  80  85  90
 773          KM   .25 .25 .25 .25 .25 .24 .01 .01 .01 .01 .01 .01 .00 .00 .00 .00 .00 .00
 774          KM
 775          KM          L=   0.615 miles, S=  255 feet/mile, Kb= .11
 776          KM
 777          BA   0.056
 778          LG    0.15    0.38    5.70    0.21    5.60
 779          UC   0.333   0.384
              *

 780          KK    C544
 781          KM      Hydrograph combine 543544 + 206K at C544
 782          HC       2
              *

 783          KK  544545
 784          KM      Normal depth channel route from C544 to C545
 785          KM      Source:  200 Scale Mapping & Hydrology Field Reconnaissance
 786          RS       3    FLOW      -1
 787          RC   0.040   0.018   0.040   985.0  0.0234
 788          RX  1000.0  1008.0  1018.0  1048.0  1078.0  1079.2  1089.2  1109.2
 789          RY  1690.0  1688.0  1686.0  1686.3  1686.0  1686.4  1688.0  1689.0
              *

 790          KK   D545L
 791          KM      Hydrograph diversion at C545.  Main flow continues in the left branch.
 792          KM      Diverted flow is in the right branch.
 793          DT   D545R
 794          DI       0      50     100     200     400     800    1600    3200    5000
 795          DQ       0      25      50     100     200     400     800    1600    2500
              *

 796          KK  545546
 797          KM      Normal depth channel route from C545 to C546
 798          KM      Source:  200 Scale Mapping & Hydrology Field Reconnaissance
 799          RS       1    FLOW      -1
 800          RC   0.040   0.018   0.040   428.0  0.0164
 801          RX  1000.0  1020.0  1050.0  1080.0  1110.0  1111.2  1121.2  1151.2
 802          RY  1680.0  1678.0  1676.0  1676.3  1676.0  1676.4  1678.0  1678.5
              *

 803          KK    206L
 804          KM   Sub-Basin   206L
 805          KM
 806          KM      The Clark Unit Hydrograph is used for this basin.
 807          KM          The HEC-1 time-area relation is used for this basin.
 808          KM
 809          KM      Time of Concentration for this sub-basin is based on the following:
 810          KM          An rainfall areal reduction factor of 1.000
 811          KM
 812          KM       EXCESS RAINFALL VALUES EXCEEDED IN 5-MINUTE INTERVALS
 813          KM     5  10  15  20  25  30  35  40  45  50  55  60  65  70  75  80  85  90
 814          KM   .26 .25 .25 .25 .25 .25 .01 .01 .01 .01 .01 .01 .00 .00 .00 .00 .00 .00
 815          KM
 816          KM          L=   0.546 miles, S=  231 feet/mile, Kb= .11
1                                          HEC-1 INPUT                                                          PAGE 20

LINE          ID.......1.......2.......3.......4.......5.......6.......7.......8.......9......10

 817          KM
 818          BA   0.060
 819          LG    0.14    0.39    5.80    0.21   14.70
 820          UC   0.325   0.327
              *

 821          KK    C546
 822          KM      Hydrograph combine 545546 + 206L at C546
 823          HC       2
              *

 824          KK  546547
 825          KM      Normal depth channel route from C546 to C547
 826          KM      Source:  200 Scale Mapping
 827          RS       2    FLOW      -1
 828          RC   0.040   0.018   0.040   749.0  0.0327
 829          RX  1000.0  1005.0  1011.0  1013.0  1029.0  1047.0  1052.0  1057.0
 830          RY  1666.0  1664.0  1662.0  1661.9  1662.4  1662.0  1664.0  1666.0
              *

 831          KK  BB543R
 832          KM      Retrieve previously diverted hydrograph at C543 in the right branch.
 833          DR   D543R
              *

 834          KK  543547
 835          KM      Normal depth channel route from C543 to C547
 836          KM      Source:  HEC-2 Cross Section: OX 0.638
 837          RS       5    FLOW      -1
 838          RC   0.075   0.040   0.050  2395.0  0.0278
 839          RX  9720.9  9769.0  9970.7  9985.5 10020.0 10038.1 10097.0 10102.0
```

```
 840          RY  1690.4  1681.2  1683.1  1676.2  1677.0  1687.1  1687.4  1690.0
              *

 841          KK  BB545R
 842          KM      Retrieve previously diverted hydrograph at C545 in the right branch.
 843          DR   D545R
              *

 844          KK  545547
 845          KM      Normal depth channel route from C545 to C547
 846          KM      Source:  HEC-2 Cross Section: OX 0.542
 847          RS       3    FLOW      -1
 848          RC   0.075   0.040   0.050  1216.0  0.0259
 849          RX  9668.2  9778.4  9957.9  9986.0 10012.7 10043.6 10067.6 10163.4
 850          RY  1674.1  1674.1  1673.3  1662.1  1662.2  1680.4  1680.9  1681.1
              *

 851          KK    206J
 852          KM   Sub-Basin   206J
 853          KM
 854          KM      The Clark Unit Hydrograph is used for this basin.
 855          KM          The Urban time-area relation is used for this basin.
 856          KM
 857          KM      Time of Concentration for this sub-basin is based on the following:
1                                        HEC-1 INPUT                                          PAGE 21

LINE          ID.......1.......2.......3.......4.......5.......6.......7.......8.......9......10

 858          KM          An rainfall areal reduction factor of 1.000
 859          KM
 860          KM       EXCESS RAINFALL VALUES EXCEEDED IN 5-MINUTE INTERVALS
 861          KM     5  10  15  20  25  30  35  40  45  50  55  60  65  70  75  80  85  90
 862          KM   .28 .28 .28 .28 .28 .28 .03 .03 .03 .03 .03 .03 .01 .01 .01 .01 .01 .01
 863          KM
 864          KM          L=   0.502 miles, S=  214 feet/mile, Kb= .03
 865          KM
 866          BA   0.060
 867          LG    0.08    0.25    5.70    0.18   44.60
 868          UC   0.154   0.133
 869          UA       0       5      16      30      65      77      84      90      94      97
 870          UA     100
              *

 871          KK    C547
 872          KM      Hydrograph combine 546547 + 543547 + 545547 + 206J at C547
 873          HC       4    0.26
              *

 874          KK  547548
 875          KM      Normal depth channel route from C547 to C548
 876          KM      Source:  HEC-2 Cross Section: OX 0.235
 877          RS       4    FLOW      -1
 878          RC   0.075   0.040   0.050  2165.0  0.0182
 879          RX  9910.0  9911.4  9968.5  9987.6 10017.4 10032.3 10077.4 10080.0
 880          RY  1639.0  1638.9  1637.9  1635.7  1635.8  1641.7  1642.9  1643.0
              *

 881          KK    206M
 882          KM   Sub-Basin   206M
 883          KM
 884          KM      The Clark Unit Hydrograph is used for this basin.
 885          KM          The Urban time-area relation is used for this basin.
 886          KM
 887          KM      Time of Concentration for this sub-basin is based on the following:
 888          KM          An rainfall areal reduction factor of 1.000
 889          KM
 890          KM       EXCESS RAINFALL VALUES EXCEEDED IN 5-MINUTE INTERVALS
 891          KM     5  10  15  20  25  30  35  40  45  50  55  60  65  70  75  80  85  90
 892          KM   .28 .28 .27 .27 .27 .27 .03 .03 .03 .03 .03 .03 .02 .02 .02 .02 .02 .02
 893          KM
 894          KM          L=   0.465 miles, S=  166 feet/mile, Kb= .03
 895          KM
 896          BA   0.060
 897          LG    0.08    0.25    5.20    0.23   46.20
 898          UC   0.163   0.133
 899          UA       0       5      16      30      65      77      84      90      94      97
 900          UA     100
              *
1                                        HEC-1 INPUT                                          PAGE 22

LINE          ID.......1.......2.......3.......4.......5.......6.......7.......8.......9......10

 901          KK   C548R
 902          KM      Hydrograph combine 547548 + 206M at C548 right branch
 903          HC       2
              *
              * *
              * * C548R is the total flow in Oxford Wash above confluence with Balboa Wash
              * *
              *

 904          KK    C548
 905          KM      Hydrograph combine C548L + C548R at C548
 906          HC       2
```

```
                 *
                 * *
                 * * C548 is the total flow in Balboa Wash below the confluence of Balboa Wash
                 * * and Oxford Wash
                 * *
                 *

907              KK  548549
908              KM      Normal depth channel route from C548 to C549
909              KM      Source:  HEC-2 Cross Section: BA0.246
910              RS       7    FLOW      -1
911              RC   0.070   0.080   0.070  3258.0  0.0172
912              RX  9889.1  9912.5  9940.2  9960.0 10026.1 10046.8 10067.8 10079.3
913              RY  1586.2  1585.7  1577.5  1573.6  1573.2  1579.5  1585.7  1586.2
                 *

914              KK    206N
915              KM   Sub-Basin   206N
916              KM
917              KM      The Clark Unit Hydrograph is used for this basin.
918              KM          The Urban time-area relation is used for this basin.
919              KM
920              KM      Time of Concentration for this sub-basin is based on the following:
921              KM          An rainfall areal reduction factor of 1.000
922              KM
923              KM       EXCESS RAINFALL VALUES EXCEEDED IN 5-MINUTE INTERVALS
924              KM     5  10  15  20  25  30  35  40  45  50  55  60  65  70  75  80  85  90
925              KM   .28 .27 .27 .27 .27 .27 .03 .03 .03 .03 .03 .03 .02 .02 .02 .02 .02 .02
926              KM
927              KM          L=   0.767 miles, S=  120 feet/mile, Kb= .03
928              KM
929              BA   0.152
930              LG    0.12    0.27    4.65    0.29   51.60
931              UC   0.233   0.174
932              UA       0       5      16      30      65      77      84      90      94      97
933              UA     100
                 *
```



```
LINE             ID.......1.......2.......3.......4.......5.......6.......7.......8.......9......10

934              KK   C549L
935              KM      Hydrograph combine 548549 + 206N at C549 left branch
936              HC       2
                 *
                 * *
                 * * C549L is the total flow in Balboa Wash above confluence with Ashbrook Wash
                 * *
                 * * End Basin 206.  Start Basin 207
                 * *
                 *

937              KK   C599O
938              KM      The following is the design outflow hydrograph from Golden Eagle Park Dam
939              IN       1
940              BA    7.13
941              QI       0       0       0       0       0       0       0       0       0       0
942              QI       0       0       0       0       0       0       0       0       0       0
943              QI       0       0       0       0       0       0       0       0       0       0
944              QI       0       0       0       0       0       0       1       1       1       1
945              QI       1       1       1       1       1       1       1       1       1       1
946              QI       1       2       2       2       2       2       2       2       2       3
947              QI       3       3       3       3       3       3       4       4       4       4
948              QI       4       4       5       5       5       5       6       6       6       6
949              QI       7       7       7       8       8       8       8       9       9       9
950              QI       9      10      10      10      10      11      11      11      12      12
951              QI      12      12      13      13      13      14      14      14      15      15
952              QI      15      15      16      16      16      17      17      18      18      18
953              QI      19      19      19      20      20      21      21      22      22      23
954              QI      23      24      24      24      25      25      26      26      27      27
955              QI      28      28      28      29      29      30      30      30      31      31
956              QI      32      32      33      33      33      34      34      35      35      35
957              QI      36      36      36      37      37      38      38      38      39      39
958              QI      39      40      40      40      41      41      41      41      42      42
959              QI      42      43      43      43      44      44      45      45      45      46
960              QI      46      46      47      47      47      47      48      48      48      48
961              QI      48      49      49      49      49      49      50      50      50      50
962              QI      50      51      51      51      51      51      51      52      52      52
963              QI      52      52      52      52      53      53      53      53      53      53
964              QI      53      53      54      54      54      54      54      54      54      54
965              QI      55      55      55      55      55      55      55      55      56      56
966              QI      56      56      56      56      56      56      56      57      57      57
967              QI      57      57      57      57      57      57      57      58      58      58
968              QI      58      58      58      58      58      58      59      59      59      59
969              QI      59      59      59      59      60      60      60      60      60      60
970              QI      60      60      60      61      61      61      61      61      61      61
971              QI      61      61      61      61      61      61      62      62      62      62
972              QI      62      62      62      62      62      62      62      62      62      63
973              QI      63      63      63      63      63      63      63      63      63      63
974              QI      64      64      64      64      64      64      64      64      64      64
975              QI      65      65      65      65      65      65      65      65      66      66
976              QI      66      66      66      66      66      66      67      67      67      67
977              QI      67      67      67      67      68      68      68      68      68      68
978              QI      68      68      68      68      69      69      69      69      69      69
```

979	QI	69	69	69	69	69	69	70	70	70	70

LINE	ID.....1	2	3	4	5	6	7	8	9	10
980	QI 70	70	70	70	70	70	70	71	71	71
981	QI 71	71	71	71	71	71	71	71	71	153
982	QI 72	72	72	72	72	72	72	72	72	73
983	QI 73	73	73	73	73	73	73	74	74	74
984	QI 74	74	74	74	74	75	75	75	75	75
985	QI 75	75	75	76	76	76	76	76	76	77
986	QI 77	77	77	77	77	78	78	78	78	78
987	QI 78	79	79	79	79	79	80	80	80	80
988	QI 80	80	81	81	81	81	81	82	82	82
989	QI 82	82	83	83	83	83	83	84	84	84
990	QI 84	84	84	85	85	85	85	85	86	86
991	QI 86	86	86	87	87	87	87	87	88	88
992	QI 88	88	89	89	89	89	90	90	90	90
993	QI 91	91	91	91	92	92	92	93	93	93
994	QI 93	94	94	94	95	95	95	95	96	96
995	QI 96	97	97	97	97	98	98	98	99	99
996	QI 99	99	100	100	100	101	101	101	102	102
997	QI 102	103	103	103	104	104	104	105	105	105
998	QI 106	106	106	107	107	107	108	108	108	109
999	QI 109	110	110	110	111	111	112	112	112	113
1000	QI 113	114	114	115	115	115	116	116	117	117
1001	QI 117	118	118	119	119	119	120	120	121	121
1002	QI 121	122	122	123	123	124	124	125	125	125
1003	QI 126	126	127	127	128	128	129	129	130	130
1004	QI 131	131	132	132	133	133	134	134	135	135
1005	QI 136	136	137	138	138	139	139	140	141	141
1006	QI 142	143	143	144	145	145	146	147	147	148
1007	QI 149	150	150	151	152	153	153	154	155	156
1008	QI 157	158	159	160	161	162	163	164	165	166
1009	QI 167	168	169	170	172	173	174	175	176	178
1010	QI 179	181	183	186	189	193	197	203	210	219
1011	QI 157	265	257	284	308	337	358	384	416	451
1012	QI 475	500	532	571	615	662	684	712	744	781
1013	QI 820	830	842	856	871	888	906	926	947	956
1014	QI 965	975	986	997	1009	1021	1033	1045	1057	1064
1015	QI 1071	1078	1085	1091	1098	1104	1110	1116	1122	1128
1016	QI 1133	1138	1143	1147	1152	1155	1158	1161	1163	1165
1017	QI 1168	1170	1172	1174	1175	1177	1179	1180	1181	1183
1018	QI 1184	1185	1186	1186	1187	1188	1188	1189	1189	1190
1019	QI 1190	1190	1190	1190	1190	1190	1190	1190	1189	1189
1020	QI 1189	1188	1188	1187	1187	1187	1186	1185	1185	1184
1021	QI 1184	1183	1182	1182	1181	1180	1179	1179	1178	1177
1022	QI 1176	1176	1175	1174	1173	1172	1171	1171	1170	1169
1023	QI 1168	1167	1166	1165	1164	1163	1163	1162	1161	1160
1024	QI 1159	1158	1157	1156	1155	1154	1153	1151	1150	1149
1025	QI 1147	1146	1145	1144	1142	1141	1140	1138	1137	1136
1026	QI 1134	1133	1132	1130	1129	1128	1127	1125	1124	1123
1027	QI 1121	1120	1119	1118	1116	1115	1114	1112	1111	1110
1028	QI 1109	1107	1106	1105	1104	1102	1101	1100	1099	1098
1029	QI 1096	1095	1094	1093	1092	1090	1089	1088	1087	1086
1030	QI 1084	1083	1082	1081	1080	1079	1077	1076	1075	1074
1031	QI 1073	1072	1071	1070	1068	1067	1066	1065	1064	1063
1032	QI 1062	1061	1060	1058	1057	1055	1053	1051	1050	1048
1033	QI 1046	1044	1043	1041	1039	1037	1036	1034	1032	1031
1034	QI 1029	1028	1026	1024	1023	1021	1020	1018	1016	1015

LINE	ID.....1	2	3	4	5	6	7	8	9	10
1035	QI 1013	1012	1010	1009	1007	1006	1004	1003	1001	1000
1036	QI 998	997	995	994	992	991	989	988	986	985
1037	QI 984	982	981	979	978	976	975	974	972	971
1038	QI 969	968	966	965	964	962	961	959	958	957
1039	QI 955	954	952	951	950	948	947	945	941	938
1040	QI 934	931	927	924	921	917	914	911	908	904
1041	QI 901	898	895	892	889	885	882	879	876	873
1042	QI 869	866	863	859	856	852	849	845	842	838
1043	QI 835	831	828	824	820	810	795	783	771	761
1044	QI 752	743	735	728	721	715	709	704	698	693
1045	QI 688	684	679	674	670	666	660	651	644	638
1046	QI 632	627	623	619	616	612	609	606	603	600
1047	QI 598	595	593	591	588	586	584	583	581	579
1048	QI 577	576	574	573	571	570	569	567	566	564
1049	QI 563	561	560	558	556	555	553	551	549	548
1050	QI 546	544	543	541	539	537	535	534	532	530
1051	QI 528	526	524	523	521	519	517	515	513	511
1052	QI 510	508	506	504	502	501	499	497	496	494
1053	QI 492	491	489	488	486	485	483	482	480	479
1054	QI 477	476	475	473	472	470	469	467	466	464
1055	QI 462	459	456	454	452	450	448	446	444	442
1056	QI 440	438	435	433	431	429	426	423	421	418
1057	QI 415	413	410	408	405	403	400	398	396	393
1058	QI 391	389	386	384	382	379	377	374	372	370
1059	QI 367	365	363	360	358	355	353	350	348	345
1060	QI 342	339	337	334	332	329	327	325	322	320
1061	QI 317	315	312	310	308	305	303	301	298	296
1062	QI 294	292	289	287	285	283	281	279	278	276
1063	QI 274	272	271	269	267	265	264	262	260	259
1064	QI 257	256	254	253	251	250	248	247	246	245
1065	QI 243	242	241	240	239	237	236	235	234	233

```
1066        QI     232     231     230     229     228     227     226     225     224     223
1067        QI     222     221     220     219     218     217     216     215     214     214
1068        QI     213     212     211     210     210     209     208     207     207     206
1069        QI     205     204     203     202     201     200     199     198     197     196
1070        QI     196     195     194     193     192     191     190     189     188     187
1071        QI     186     186     185     183     182     181     180     179     178     177
1072        QI     176     175     174     173     172     171     169     168     167     166
1073        QI     165     164     163     162     161     160     159     158     157     156
1074        QI     155     154     154     153     152     151     150     149     148     147
1075        QI     146     145     145     144     143     142     141     140     140     139
1076        QI     138     138     137     136     135     135     134     133     133     132
1077        QI     132     131     131     130     130     129     129     128     128     127
1078        QI     126     126     125     125     124     123     123     122     122     121
1079        QI     121     120     120     120     119     119     118     118     117     117
1080        QI     116     116     115     114     114     113     113     112     112     111
1081        QI     111     110     110     109     109     108     108     107     107     106
1082        QI     106     106     105     105     104     104     103     102     102     101
1083        QI     100     100      99      98      97      96      96      95      94      93
1084        QI      92      91      91      90      89      88      88      87      86      85
1085        QI      85      84      83      82      81      80      79      78      77      76
1086        QI      75      75      74      73      72      71      71      70      69      69
1087        QI      68      68      67      66      66      65      65      64      64      63
1088        QI      63      62      62      61      61      61      60      60      59      59
1089        QI      59      58      58      57      57      57      56      56      56      55
```



```
LINE        ID.......1.......2.......3.......4.......5.......6.......7.......8.......9......10

1090        QI      55      55      54      54      54      53      53      53      52      52
1091        QI      52      51      51      51      50      50      50      49      49      49
1092        QI      48      48      48      47      47      47      46      46      46      45
1093        QI      45      45      44      44      44      43      43      43      42      42
1094        QI      42      41      41      41      40      40      40      39      39      38
1095        QI      38      38      37      37      37      36      36      35      35      34
1096        QI      34      34      33      33      32      32      31      31      31      30
1097        QI      30      30      29      29      29      28      28      28      27      27
1098        QI      27      27      26      26      25      25      25      24      24      24
1099        QI      23      23      23      22      22      21      21      21      20      20
1100        QI      19      19      19      18      18      18      17      17      17      16
1101        QI      16      16      15      15      15      14      14      14      13      13
1102        QI      13      12      12      12      12      11      11      11      11      10
1103        QI      10      10      10      10       9       9       9       9       8       8
1104        QI       8       8       8       7       7       7       7       7       7       6
1105        QI       6       6       6       6       6       5       5       5       5       5
1106        QI       5       5       4       4       4       4       4       4       4       4
1107        QI       4       3       3       3       3       3       3       3       3       3
1108        QI       3       3       3       2       2       2       2       2       2       2
1109        QI       2       2       2       2       2       2       2       2       2       2
1110        QI       2       1       1       1       1       1       1       1       1       1
1111        QI       1       1       1       1       1       1       1       1       1       1
1112        QI       1       1       1       1       1       1       1       1       1       1
1113        QI       1       1       1       1       1       1       1       1       0       0
1114        QI       0       0       0       0       0       0       0       0       0       0
1115        QI       0       0       0       0       0       0       0       0       0       0
1116        QI       0       0       0       0       0       0       0       0       0       0
1117        QI       0       0       0       0       0       0       0       0       0       0
1118        QI       0       0       0       0       0       0       0       0       0       0
1119        QI       0       0       0       0       0       0       0       0       0       0
1120        QI       0       0       0       0       0       0       0       0       0       0
1121        IN      15
            *
            * * End Basin 210.  Start Basin 211
            * *
            *

1122        KK  599608
1123        KM      Normal depth channel route from C599 to C608
1124        KM      Source:  HEC-2 Cross Section: AS 3.621
1125        RS       2    FLOW      -1
1126        RC   0.055   0.045   0.025  1476.0  0.0148
1127        RX  9675.4  9726.8  9929.0  9990.7 10005.9 10033.3 10061.9 10082.2
1128        RY  1691.3  1687.2  1685.5  1678.6  1678.1  1682.1  1689.8  1691.8
            *

1129        KK    211K
1130        KM   Sub-Basin   211K
1131        KM
1132        KM      The Clark Unit Hydrograph is used for this basin.
1133        KM          The HEC-1 time-area relation is used for this basin.
1134        KM
1135        KM      Time of Concentration for this sub-basin is based on the following:
1136        KM          An rainfall areal reduction factor of 1.000
1137        KM
```



```
LINE        ID.......1.......2.......3.......4.......5.......6.......7.......8.......9......10

1138        KM       EXCESS RAINFALL VALUES EXCEEDED IN 5-MINUTE INTERVALS
1139        KM     5  10  15  20  25  30  35  40  45  50  55  60  65  70  75  80  85  90
1140        KM   .26 .26 .26 .26 .26 .25 .02 .02 .02 .02 .02 .02 .01 .01 .01 .01 .01 .01
1141        KM
1142        KM          L=   0.376 miles, S=  157 feet/mile, Kb= .08
1143        KM
1144        BA   0.102
1145        LG    0.18    0.38    6.00    0.18   17.80
```

```
1146          UC   0.254   0.136
              *

1147          KK   C608L
1148          KM      Hydrograph combine 599608 + 211K at C608 left branch
1149          HC       2
              *

1150          KK    211G
1151          KM   Sub-Basin   211G
1152          KM
1153          KM      The Clark Unit Hydrograph is used for this basin.
1154          KM          The Urban time-area relation is used for this basin.
1155          KM
1156          KM      Time of Concentration for this sub-basin is based on the following:
1157          KM          An rainfall areal reduction factor of 1.000
1158          KM
1159          KM       EXCESS RAINFALL VALUES EXCEEDED IN 5-MINUTE INTERVALS
1160          KM     5  10  15  20  25  30  35  40  45  50  55  60  65  70  75  80  85  90
1161          KM   .30 .30 .29 .29 .29 .29 .05 .05 .05 .05 .05 .05 .03 .03 .03 .03 .03 .03
1162          KM
1163          KM          L=   0.448 miles, S=  190 feet/mile, Kb= .04
1164          KM
1165          BA   0.008
1166          LG    0.06    0.25    5.70    0.18   90.00
1167          UC   0.175   0.454
1168          UA       0       5      16      30      65      77      84      90      94      97
1169          UA     100
              *

1170          KK  604606
1171          KM      Normal depth channel route from C604 to C606
1172          KM      Source:  200 Scale Mapping
1173          RS      11    FLOW     -1
1174          RC   0.040   0.018   0.040  2784.0  0.0647
1175          RX  1000.0  1040.0  1060.0  1076.0  1092.0  1093.2  1098.2  1113.2
1176          RY  1814.0  1811.0  1810.8  1811.1  1810.8  1811.2  1812.0  1816.0
              *

1177          KK    211I
1178          KM   Sub-Basin   211I
1179          KM
1180          KM      The Clark Unit Hydrograph is used for this basin.
1181          KM          The Natural time-area relation is used for this basin.
1182          KM
1183          KM      Time of Concentration for this sub-basin is based on the following:
1184          KM          An rainfall areal reduction factor of 1.000
```



```
LINE          ID.......1.......2.......3.......4.......5.......6.......7.......8.......9......10

1185          KM
1186          KM       EXCESS RAINFALL VALUES EXCEEDED IN 5-MINUTE INTERVALS
1187          KM     5  10  15  20  25  30  35  40  45  50  55  60  65  70  75  80  85  90
1188          KM   .27 .27 .27 .26 .26 .26 .02 .02 .02 .02 .02 .02 .01 .01 .01 .01 .01 .01
1189          KM
1190          KM          L=   0.626 miles, S=  257 feet/mile, Kb= .11
1191          KM
1192          BA   0.041
1193          LG    0.13    0.39    5.70    0.20   35.00
1194          UC   0.329   0.459
1195          UA       0       3       5       8      12      20      43      75      90      96
1196          UA     100
              *

1197          KK   C606R
1198          KM      Hydrograph combine 604606 + 211I at C606 right branch
1199          HC       2
              *

1200          KK    211H
1201          KM   Sub-Basin   211H
1202          KM
1203          KM      The Clark Unit Hydrograph is used for this basin.
1204          KM          The Natural time-area relation is used for this basin.
1205          KM
1206          KM      Time of Concentration for this sub-basin is based on the following:
1207          KM          An rainfall areal reduction factor of 1.000
1208          KM
1209          KM       EXCESS RAINFALL VALUES EXCEEDED IN 5-MINUTE INTERVALS
1210          KM     5  10  15  20  25  30  35  40  45  50  55  60  65  70  75  80  85  90
1211          KM   .26 .25 .25 .25 .25 .25 .01 .01 .01 .01 .01 .01 .00 .00 .00 .00 .00 .00
1212          KM
1213          KM          L=   0.501 miles, S=  289 feet/mile, Kb= .11
1214          KM
1215          BA   0.073
1216          LG    0.15    0.40    6.00    0.18    3.40
1217          UC   0.288   0.236
1218          UA       0       3       5       8      12      20      43      75      90      96
1219          UA     100
              *

1220          KK   C605O
1221          KM      Reservoir route at C605.
1222          RS       1    ELEV  1722.5
```

```
1223          SV    0.00    0.20    0.20    0.20    0.20    0.30    0.30    0.30    0.40    0.60
1224          SV    0.70    0.90    1.00    1.20    1.40    1.60    1.90    2.80    3.40    4.10
1225          SE  1722.5  1726.8  1727.0  1727.2  1727.4  1727.6  1727.8  1728.0  1728.2  1728.4
1226          SE  1728.6  1728.8  1729.0  1729.2  1729.4  1729.6  1730.0  1730.4  1730.7  1731.0
1227          SQ       0       0       5      10      20      43      63      73      78      85
1228          SQ      91      96     101     105     109     113     122     130     136     200
              *
```



```
LINE          ID.......1.......2.......3.......4.......5.......6.......7.......8.......9......10

1229          KK    C606
1230          KM      Hydrograph combine C606R + C605O at C606
1231          HC       2
              *

1232          KK  606607
1233          KM      Normal depth channel route from C606 to C607
1234          KM      Source:  200 Scale Mapping
1235          RS       2    FLOW      -1
1236          RC   0.020   0.055   0.035  1061.0  0.0286
1237          RX  1000.0  1032.0  1082.0  1095.0  1105.0  1117.0  1123.0  1153.0
1238          RY  1704.3  1704.0  1703.5  1700.0  1700.0  1703.0  1704.0  1706.0
              *

1239          KK    211J
1240          KM   Sub-Basin   211J
1241          KM
1242          KM      The Clark Unit Hydrograph is used for this basin.
1243          KM          The HEC-1 time-area relation is used for this basin.
1244          KM
1245          KM      Time of Concentration for this sub-basin is based on the following:
1246          KM          An rainfall areal reduction factor of 1.000
1247          KM
1248          KM       EXCESS RAINFALL VALUES EXCEEDED IN 5-MINUTE INTERVALS
1249          KM     5  10  15  20  25  30  35  40  45  50  55  60  65  70  75  80  85  90
1250          KM   .27 .27 .27 .27 .26 .26 .03 .02 .02 .02 .02 .02 .01 .01 .01 .01 .01 .01
1251          KM
1252          KM          L=   0.249 miles, S=  166 feet/mile, Kb= .11
1253          KM
1254          BA   0.015
1255          LG    0.13    0.37    6.20    0.18   32.40
1256          UC   0.238   0.272
              *

1257          KK    C607
1258          KM      Hydrograph combine 606607 + 211J at C607
1259          HC       2
              *

1260          KK  607608
1261          KM      Normal depth channel route from C607 to C608
1262          KM      Source:  200 Scale Mapping
1263          RS       2    FLOW      -1
1264          RC   0.040   0.050   0.035  1008.0  0.0145
1265          RX  1000.0  1060.0  1070.0  1082.0  1083.0  1095.0  1115.0  1133.0
1266          RY  1688.0  1686.0  1684.0  1681.0  1681.0  1684.0  1685.0  1685.4
              *

1267          KK    C608
1268          KM      Hydrograph combine C608L + 607608 at C608
1269          HC       2
              *
```



```
LINE          ID.......1.......2.......3.......4.......5.......6.......7.......8.......9......10

1270          KK  608613
1271          KM      Normal depth channel route from C608 to C613
1272          KM      Source:  HEC-2 Cross Section: AS 3.421
1273          RS       1    FLOW      -1
1274          RC   0.100   0.045   0.100  1338.0  0.0202
1275          RX  9885.0  9887.9  9957.3  9986.7 10012.9 10054.7 10086.3 10122.2
1276          RY  1670.2  1670.1  1668.0  1660.0  1659.9  1661.6  1669.9  1670.8
              *
              * *
              * * Move to the top of Sunflower Wash
              * *
              *

1277          KK    211M
1278          KM   Sub-Basin   211M
1279          KM
1280          KM      The Clark Unit Hydrograph is used for this basin.
1281          KM          The Natural time-area relation is used for this basin.
1282          KM
1283          KM      Time of Concentration for this sub-basin is based on the following:
1284          KM          An rainfall areal reduction factor of 1.000
1285          KM
1286          KM       EXCESS RAINFALL VALUES EXCEEDED IN 5-MINUTE INTERVALS
1287          KM     5  10  15  20  25  30  35  40  45  50  55  60  65  70  75  80  85  90
1288          KM   .27 .26 .26 .26 .26 .26 .02 .02 .02 .02 .02 .02 .01 .01 .01 .01 .01 .01
1289          KM
```

```
1290          KM          L=   0.541 miles, S=  266 feet/mile, Kb= .11
1291          KM
1292          BA   0.081
1293          LG    0.13    0.39    5.70    0.21   30.30
1294          UC   0.304   0.252
1295          UA       0       3       5       8      12      20      43      75      90      96
1296          UA     100
              *

1297          KK  610611
1298          KM      Normal depth channel route from C610 to 1611
1299          KM      Source:  HEC-2 Cross Section: SU 0.216
1300          RS       2    FLOW      -1
1301          RC   0.050   0.045   0.050  1090.0  0.0211
1302          RX  9911.9  9948.1  9973.6  9988.6 10007.1 10027.0 10049.8 10143.7
1303          RY  1699.3  1691.7  1686.3  1680.1  1679.7  1686.6  1687.3  1698.6
              *

1304          KK    211N
1305          KM   Sub-Basin   211N
1306          KM
1307          KM      The Clark Unit Hydrograph is used for this basin.
1308          KM          The HEC-1 time-area relation is used for this basin.
1309          KM
1310          KM      Time of Concentration for this sub-basin is based on the following:
1311          KM          An rainfall areal reduction factor of 1.000
1312          KM
1313          KM       EXCESS RAINFALL VALUES EXCEEDED IN 5-MINUTE INTERVALS
```



```
LINE          ID.......1.......2.......3.......4.......5.......6.......7.......8.......9......10

1314          KM     5  10  15  20  25  30  35  40  45  50  55  60  65  70  75  80  85  90
1315          KM   .26 .26 .26 .26 .26 .25 .02 .02 .02 .02 .02 .02 .01 .01 .01 .01 .01 .01
1316          KM
1317          KM          L=   0.261 miles, S=  235 feet/mile, Kb= .12
1318          KM
1319          BA   0.020
1320          LG    0.14    0.39    5.70    0.20   20.20
1321          UC   0.229   0.226
              *

1322          KK   C611R
1323          KM      Hydrograph combine 610611 + 211N at C611 right branch
1324          HC       2
              *

1325          KK    211O
1326          KM   Sub-Basin   211O
1327          KM
1328          KM      The Clark Unit Hydrograph is used for this basin.
1329          KM          The HEC-1 time-area relation is used for this basin.
1330          KM
1331          KM      Time of Concentration for this sub-basin is based on the following:
1332          KM          An rainfall areal reduction factor of 1.000
1333          KM
1334          KM       EXCESS RAINFALL VALUES EXCEEDED IN 5-MINUTE INTERVALS
1335          KM     5  10  15  20  25  30  35  40  45  50  55  60  65  70  75  80  85  90
1336          KM   .27 .27 .27 .26 .26 .26 .02 .02 .02 .02 .02 .02 .01 .01 .01 .01 .01 .01
1337          KM
1338          KM          L=   0.371 miles, S=  257 feet/mile, Kb= .11
1339          KM
1340          BA   0.041
1341          LG    0.13    0.39    5.70    0.20   34.60
1342          UC   0.254   0.225
              *

1343          KK   C609O
1344          KM      Reservoir route at C609.
1345          RS       1    ELEV  1694.0
1346          SV    0.00    0.10    0.21    0.50    0.86    1.40    1.93    2.60    3.10    3.20
1347          SV    3.39    3.60    3.80    4.00    4.10    4.30    4.50    4.70    4.90    5.10
1348          SE  1694.0  1695.0  1696.0  1697.0  1698.0  1699.0  1700.0  1701.0  1701.6  1701.8
1349          SE  1702.0  1702.2  1702.4  1702.6  1702.8  1703.0  1703.2  1703.4  1703.6  1703.8
1350          SQ       0       6      16      33      48      59      68      75      79      85
1351          SQ     108     149     209     289     390     512     658     829    1025    1247
              *

1352          KK  609611
1353          KM      Normal depth channel route from C609 to C611
1354          KM      Source:  200 Scale Mapping
1355          RS       1    FLOW      -1
1356          RC   0.035   0.050   0.035   470.0  0.0200
1357          RX  1000.0  1025.0  1050.0  1054.0  1064.0  1068.0  1088.0  1103.0
1358          RY  1690.0  1688.0  1684.0  1682.0  1682.0  1684.0  1688.0  1690.0
              *
```



```
LINE          ID.......1.......2.......3.......4.......5.......6.......7.......8.......9......10

1359          KK   C611I
1360          KM      Hydrograph combine 609611 + C611R at C611I
1361          HC       2
              *
```

```
1362          KK   C611O
1363          KM      Reservoir route at C611.
1364          RS       1    ELEV  1668.4
1365          SV    0.00    0.41    1.10    2.49    4.34    6.64    6.72    6.81    6.89    6.97
1366          SV    7.06    7.14    7.22    7.31    7.39    7.47    7.56    7.64    7.72    7.81
1367          SE  1674.0  1676.0  1678.0  1680.0  1682.0  1684.0  1684.2  1684.4  1684.6  1684.8
1368          SE  1685.0  1685.2  1685.4  1685.6  1685.8  1686.0  1686.2  1686.4  1686.6  1686.8
1369          SQ       0       0      86     117     141     162     164     170     181     199
1370          SQ     225     262     313     378     460     558     673     807     958    1118
              *

1371          KK   D611L
1372          KM      Hydrograph diversion at C611.  Main flow continues in the left branch.
1373          KM      Diverted flow is in the right branch.
1374          DT   D611R
1375          DI       0       0      86     117     141     162     164     170     181     199
1376          DI     225     262     313     378     460     558     673     807     958    1118
1377          DQ       0       0      86     117     141     162     164     165     167     169
1378          DQ     171     173     175     176     178     180     182     183     185     187
              *

1379          KK  611612
1380          KM      Normal depth channel route from C611 to C612
1381          KM      Source:  200 Scale Mapping
1382          RS       1    FLOW      -1
1383          RC   0.040   0.018   0.040   925.0  0.0270
1384          RX  1000.0  1020.0  1023.0  1041.0  1059.0  1060.2  1071.2  1136.2
1385          RY  1666.0  1664.0  1663.5  1663.9  1663.5  1663.9  1664.0  1666.0
              *

1386          KK    211P
1387          KM   Sub-Basin   211P
1388          KM
1389          KM      The Clark Unit Hydrograph is used for this basin.
1390          KM          The Urban time-area relation is used for this basin.
1391          KM
1392          KM      Time of Concentration for this sub-basin is based on the following:
1393          KM          An rainfall areal reduction factor of 1.000
1394          KM
1395          KM       EXCESS RAINFALL VALUES EXCEEDED IN 5-MINUTE INTERVALS
1396          KM     5  10  15  20  25  30  35  40  45  50  55  60  65  70  75  80  85  90
1397          KM   .29 .29 .28 .28 .28 .28 .04 .04 .04 .04 .04 .04 .02 .02 .02 .02 .02 .02
1398          KM
1399          KM          L=   0.307 miles, S=  192 feet/mile, Kb= .03
1400          KM
1401          BA   0.033
1402          LG    0.08    0.15    7.00    0.11   44.90
1403          UC   0.125   0.099
1404          UA       0       5      16      30      65      77      84      90      94      97
```



```
LINE          ID.......1.......2.......3.......4.......5.......6.......7.......8.......9......10

1405          UA     100
              *

1406          KK    C612
1407          KM      Hydrograph combine 611612 + 211P at C612
1408          HC       2
              *
              * *
              * * NOTE: 612613 is too short to route
              * *
              *

1409          KK    C613
1410          KM      Hydrograph combine 608613 + C612 at C613
1411          HC       2
              *

1412          KK  613621
1413          KM      Normal depth channel route from C613 to C621
1414          KM      Source:  HEC-2 Cross Section: AS 3.241
1415          RS       1    FLOW      -1
1416          RC   0.100   0.045   0.100   718.0  0.0251
1417          RX  9695.4  9884.0  9985.0  9991.1 10033.8 10062.8 10097.5 10165.1
1418          RY  1655.5  1647.5  1645.8  1641.1  1640.6  1642.1  1648.7  1654.3
              *

1419          KK    211L
1420          KM   Sub-Basin   211L
1421          KM
1422          KM      The Clark Unit Hydrograph is used for this basin.
1423          KM          The Urban time-area relation is used for this basin.
1424          KM
1425          KM      Time of Concentration for this sub-basin is based on the following:
1426          KM          An rainfall areal reduction factor of 1.000
1427          KM
1428          KM       EXCESS RAINFALL VALUES EXCEEDED IN 5-MINUTE INTERVALS
1429          KM     5  10  15  20  25  30  35  40  45  50  55  60  65  70  75  80  85  90
1430          KM   .26 .26 .26 .26 .26 .25 .02 .02 .02 .02 .02 .02 .01 .01 .01 .01 .01 .01
1431          KM
1432          KM          L=   0.508 miles, S=  181 feet/mile, Kb= .04
1433          KM
```

```
1434          BA   0.096
1435          LG    0.16    0.28    4.35    0.36   37.80
1436          UC   0.196   0.134
1437          UA       0       5      16      30      65      77      84      90      94      97
1438          UA     100
              *

1439          KK   C621L
1440          KM      Hydrograph combine 613621 + 211L at C621 left branch
1441          HC       2
              *
              * *
              * * Move to the top of Arrow Wash
              * *
              *
```



```
LINE          ID.......1.......2.......3.......4.......5.......6.......7.......8.......9......10

1442          KK    211Q
1443          KM   Sub-Basin   211Q
1444          KM
1445          KM      The Clark Unit Hydrograph is used for this basin.
1446          KM          The HEC-1 time-area relation is used for this basin.
1447          KM
1448          KM      Time of Concentration for this sub-basin is based on the following:
1449          KM          An rainfall areal reduction factor of 1.000
1450          KM
1451          KM       EXCESS RAINFALL VALUES EXCEEDED IN 5-MINUTE INTERVALS
1452          KM     5  10  15  20  25  30  35  40  45  50  55  60  65  70  75  80  85  90
1453          KM   .26 .25 .25 .25 .25 .25 .01 .01 .01 .01 .01 .01 .00 .00 .00 .00 .00 .00
1454          KM
1455          KM          L=   0.255 miles, S=  295 feet/mile, Kb= .12
1456          KM
1457          BA   0.021
1458          LG    0.14    0.38    5.70    0.20    8.50
1459          UC   0.213   0.201
              *

1460          KK  616617
1461          KM      Normal depth channel route from C616 to C617
1462          KM      Source:  200 Scale Mapping
1463          RS       3    FLOW      -1
1464          RC   0.070   0.060   0.070  1131.0  0.0553
1465          RX  1000.0  1008.0  1015.0  1045.0  1050.0  1080.0  1100.0  1110.0
1466          RY  1834.0  1832.0  1830.0  1826.0  1826.0  1830.0  1834.0  1836.0
              *

1467          KK    211R
1468          KM   Sub-Basin   211R
1469          KM
1470          KM      The Clark Unit Hydrograph is used for this basin.
1471          KM          The HEC-1 time-area relation is used for this basin.
1472          KM
1473          KM      Time of Concentration for this sub-basin is based on the following:
1474          KM          An rainfall areal reduction factor of 1.000
1475          KM
1476          KM       EXCESS RAINFALL VALUES EXCEEDED IN 5-MINUTE INTERVALS
1477          KM     5  10  15  20  25  30  35  40  45  50  55  60  65  70  75  80  85  90
1478          KM   .26 .26 .26 .26 .26 .26 .02 .02 .02 .02 .02 .02 .01 .01 .01 .01 .01 .01
1479          KM
1480          KM          L=   0.572 miles, S=  271 feet/mile, Kb= .10
1481          KM
1482          BA   0.084
1483          LG    0.13    0.38    5.70    0.20   22.00
1484          UC   0.296   0.251
              *
```



```
LINE          ID.......1.......2.......3.......4.......5.......6.......7.......8.......9......10

1485          KK   C617L
1486          KM      Hydrograph combine 616617 + 211R at C617 left branch
1487          HC       2
              *

1488          KK    211U
1489          KM   Sub-Basin   211U
1490          KM
1491          KM      The Clark Unit Hydrograph is used for this basin.
1492          KM          The Urban time-area relation is used for this basin.
1493          KM
1494          KM      Time of Concentration for this sub-basin is based on the following:
1495          KM          An rainfall areal reduction factor of 1.000
1496          KM
1497          KM       EXCESS RAINFALL VALUES EXCEEDED IN 5-MINUTE INTERVALS
1498          KM     5  10  15  20  25  30  35  40  45  50  55  60  65  70  75  80  85  90
1499          KM   .29 .29 .28 .28 .28 .28 .04 .04 .04 .04 .04 .04 .02 .02 .02 .02 .02 .02
1500          KM
1501          KM          L=   0.831 miles, S=  214 feet/mile, Kb= .04
1502          KM
1503          BA   0.027
1504          LG    0.07    0.26    5.70    0.18   65.50
```

```
1505          UC   0.229   0.483
1506          UA       0       5      16      30      65      77      84      90      94      97
1507          UA     100
              *

1508          KK   D614L
1509          KM      Hydrograph diversion at C614.  Main flow continues in the left branch.
1510          KM      Diverted flow is in the right branch.
1511          DT   D614R
1512          DI       0     4.3     8.5    20.0    49.0    85.5
1513          DQ       0     2.5     5.0    13.5    35.0    60.0
              *

1514          KK    C617
1515          KM      Hydrograph combine C617L + D614L at C617
1516          HC       2
              *

1517          KK  617618
1518          KM      Normal depth channel route from C617 to C618
1519          KM      Source:  HEC-2 Cross Section: AR 0.836
1520          RS       5    FLOW      -1
1521          RC   0.070   0.060   0.070  1912.0  0.0345
1522          RX  9983.3  9987.2  9989.2  9991.1 10031.5 10053.5 10070.6 10097.7
1523          RY  1766.5  1762.3  1760.2  1758.1  1757.8  1760.8  1764.2  1770.6
              *
1                                          HEC-1 INPUT                                          PAGE 36

LINE          ID.......1.......2.......3.......4.......5.......6.......7.......8.......9......10

1524          KK    211S
1525          KM   Sub-Basin   211S
1526          KM
1527          KM      The Clark Unit Hydrograph is used for this basin.
1528          KM          The HEC-1 time-area relation is used for this basin.
1529          KM
1530          KM      Time of Concentration for this sub-basin is based on the following:
1531          KM          An rainfall areal reduction factor of 1.000
1532          KM
1533          KM       EXCESS RAINFALL VALUES EXCEEDED IN 5-MINUTE INTERVALS
1534          KM     5  10  15  20  25  30  35  40  45  50  55  60  65  70  75  80  85  90
1535          KM   .27 .26 .26 .26 .26 .26 .02 .02 .02 .02 .02 .02 .01 .01 .01 .01 .01 .01
1536          KM
1537          KM          L=   0.445 miles, S=  272 feet/mile, Kb= .10
1538          KM
1539          BA   0.050
1540          LG    0.13    0.36    5.70    0.20   26.10
1541          UC   0.263   0.241
              *

1542          KK   C618I
1543          KM      Hydrograph combine 617618 + 211S at C618I
1544          HC       2
              *

1545          KK   C618O
1546          KM      Reservoir route at C618.
1547          RS       1    ELEV  1730.6
1548          SV    0.00    0.01    0.06    0.24    0.50    0.75    1.20    1.66    2.30    2.94
1549          SV    3.20    3.30    3.40    3.60    3.80    3.90    4.10    4.30    4.50    4.65
1550          SE  1730.6  1734.0  1736.0  1738.0  1739.0  1740.0  1741.0  1742.0  1743.0  1744.0
1551          SE  1744.3  1744.4  1744.6  1744.8  1745.0  1745.2  1745.4  1745.6  1745.8  1746.0
1552          SQ       0     2.2     2.6     3.0     3.1     3.2     3.3     3.5     3.6     3.7
1553          SQ     3.7     3.8       8      21      48      88     143     212     295     390
              *

1554          KK  BB614R
1555          KM      Retrieve previously diverted hydrograph at C614 in the right branch.
1556          DR   D614R
              *

1557          KK  614615
1558          KM      Normal depth channel route from C614 to C615
1559          KM      Source:  Hydrology Field Reconnaissance
1560          RS       2    FLOW      -1
1561          RC   0.040   0.018   0.040  1114.0  0.0397
1562          RX  1000.0  1020.0  1025.0  1059.0  1091.0  1093.0  1098.0  1103.0
1563          RY  1828.0  1822.0  1821.5  1822.2  1821.8  1822.0  1824.0  1826.0
              *
1                                          HEC-1 INPUT                                          PAGE 37

LINE          ID.......1.......2.......3.......4.......5.......6.......7.......8.......9......10

1564          KK    211V
1565          KM   Sub-Basin   211V
1566          KM
1567          KM      The Clark Unit Hydrograph is used for this basin.
1568          KM          The Urban time-area relation is used for this basin.
1569          KM
1570          KM      Time of Concentration for this sub-basin is based on the following:
1571          KM          An rainfall areal reduction factor of 1.000
1572          KM
1573          KM       EXCESS RAINFALL VALUES EXCEEDED IN 5-MINUTE INTERVALS
```

```
1574          KM     5  10  15  20  25  30  35  40  45  50  55  60  65  70  75  80  85  90
1575          KM   .30 .30 .29 .29 .29 .29 .05 .05 .05 .05 .05 .05 .03 .03 .03 .03 .03 .03
1576          KM
1577          KM          L=   0.222 miles, S=  212 feet/mile, Kb= .04
1578          KM
1579          BA   0.005
1580          LG    0.06    0.25    5.80    0.18   90.00
1581          UC   0.117   0.212
1582          UA       0       5      16      30      65      77      84      90      94      97
1583          UA     100
              *

1584          KK    C615
1585          KM      Hydrograph combine 614615 + 211V at C615
1586          HC       2    0.03
              *

1587          KK   D615L
1588          KM      Hydrograph diversion at C615.  Main flow continues in the left branch.
1589          KM      Diverted flow is in the right branch.
1590          DT   D615R
1591          DI       0     1.3     2.5     5.3     8.6    14.2    23.0    36.8    55.5    77.5
1592          DQ       0       0       0     1.3     2.6     4.2     7.0    12.8    19.5    29.5
              *

1593          KK  615618
1594          KM      Normal depth channel route from C615 to C618
1595          KM      Source:  Hydrology Field Reconnaissance
1596          RS       1    FLOW      -1
1597          RC   0.040   0.018   0.040   499.0  0.1338
1598          RX  1000.0  1008.0  1009.2  1013.2  1027.2  1028.4  1036.4  1045.4
1599          RY  1800.4  1799.6  1799.2  1798.8  1798.3  1798.7  1798.9  1800.4
              *

1600          KK    C618
1601          KM      Hydrograph combine C618O + 615618 at C618
1602          HC       2    0.19
              *
```



```
LINE          ID.......1.......2.......3.......4.......5.......6.......7.......8.......9......10

1603          KK  618619
1604          KM      Normal depth channel route from C618 to C619
1605          KM      Source:  HEC-2 Cross Section: AR 0.441
1606          RS       4    FLOW      -1
1607          RC   0.070   0.060   0.070  1837.0  0.0285
1608          RX  9870.6  9928.6  9957.1  9996.9 10004.9 10022.1 10062.0 10116.4
1609          RY  1709.2  1700.9  1698.8  1690.0  1689.8  1699.6  1700.3  1711.3
              *

1610          KK    211T
1611          KM   Sub-Basin   211T
1612          KM
1613          KM      The Clark Unit Hydrograph is used for this basin.
1614          KM          The HEC-1 time-area relation is used for this basin.
1615          KM
1616          KM      Time of Concentration for this sub-basin is based on the following:
1617          KM          An rainfall areal reduction factor of 1.000
1618          KM
1619          KM       EXCESS RAINFALL VALUES EXCEEDED IN 5-MINUTE INTERVALS
1620          KM     5  10  15  20  25  30  35  40  45  50  55  60  65  70  75  80  85  90
1621          KM   .26 .26 .26 .26 .26 .26 .02 .02 .02 .02 .02 .02 .01 .01 .01 .01 .01 .01
1622          KM
1623          KM          L=   0.488 miles, S=  250 feet/mile, Kb= .10
1624          KM
1625          BA   0.066
1626          LG    0.13    0.37    5.70    0.20   21.00
1627          UC   0.283   0.241
              *

1628          KK   C619L
1629          KM      Hydrograph combine 618619 + 211T at C619 left branch
1630          HC       2
              *

1631          KK  BB615R
1632          KM      Retrieve previously diverted hydrograph at C615 in the right branch.
1633          DR   D615R
              *

1634          KK  615619
1635          KM      Normal depth channel route from C615 to C619
1636          KM      Source:  Hydrology Field Reconnaissance
1637          RS       7    FLOW      -1
1638          RC   0.045   0.024   0.025  2444.0  0.0493
1639          RX  1000.0  1009.3  1018.5  1037.0  1039.3  1053.0  1065.0  1065.0
1640          RY  1727.2  1726.5  1725.8  1724.4  1724.6  1725.8  1725.9  1725.9
              *

1641          KK   C619I
1642          KM      Hydrograph combine C619L + 615619 at C619I
1643          HC       2    0.25
              *
```

```
LINE          ID.......1.......2.......3.......4.......5.......6.......7.......8.......9......10

1644          KK   C619O
1645          KM      Reservoir route at C619.
1646          RS       1    ELEV  1675.6
1647          SV    0.00    1.72    2.98    4.70    7.00    7.08    7.17    7.26    7.34    7.43
1648          SV    7.51    7.60    7.69    7.77    7.86
1649          SE  1675.6  1686.0  1688.0  1690.0  1692.0  1692.2  1692.4  1692.6  1692.8  1693.0
1650          SE  1693.2  1693.4  1693.6  1693.8  1694.0
1651          SQ       0       4      25      72     128     155     163     172     178     187
1652          SQ     195     213     238     273     318     374     441     518     606     706
1653          SE  1675.6  1676.0  1678.0  1680.0  1682.0  1684.0  1686.0  1688.0  1690.0  1692.0
1654          SE  1692.2  1692.4  1692.6  1692.8  1693.0  1693.2  1693.4  1693.6  1693.8  1694.0
              *

1655          KK   D619R
1656          KM      Hydrograph diversion at C619.  Main flow continues in the right branch.
1657          KM      Diverted flow is in the left branch.
1658          DT   D619L
1659          DI       0       4      25      72     128     155     163     172     178     187
1660          DI     195     213     238     273     318     374     441     518     606     706
1661          DQ       0       0       0       0       0       0       0       0       0       0
1662          DQ       8      24      49      83     128     182     249     326     412     512
              *

1663          KK  619620
1664          KM                Lag route through Palisades Plaza storm drain
1665          RT       0               1
              *

1666          KK  BB619L
1667          KM      Retrieve previously diverted hydrograph at C619 in the left branch.
1668          DR   D619L
              *

1669          KK  619620
1670          KM   Normal depth channel route from C619 to C620 in Fountain Hills Blvd.
1671          KM   Source:  200 Scale Mapping. Similiar to 523548
1672          RS       1    FLOW      -1
1673          RC   0.040   0.024   0.040   800.0  0.0288
1674          RX   918.0   940.0   960.0  1000.0  1040.0  1040.1  1044.1  1088.1
1675          RY  1648.0  1645.8  1643.8  1644.7  1644.0  1644.5  1644.5  1648.0
              *

1676          KK    211W
1677          KM   Sub-Basin   211W
1678          KM
1679          KM      The Clark Unit Hydrograph is used for this basin.
1680          KM          The Urban time-area relation is used for this basin.
1681          KM
1682          KM      Time of Concentration for this sub-basin is based on the following:
1683          KM          An rainfall areal reduction factor of 1.000
1684          KM
1685          KM       EXCESS RAINFALL VALUES EXCEEDED IN 5-MINUTE INTERVALS
1686          KM     5  10  15  20  25  30  35  40  45  50  55  60  65  70  75  80  85  90
1687          KM   .29 .29 .28 .28 .28 .28 .04 .04 .04 .04 .04 .04 .02 .02 .02 .02 .02 .02
```



```
LINE          ID.......1.......2.......3.......4.......5.......6.......7.......8.......9......10

1688          KM
1689          KM          L=   0.289 miles, S=  173 feet/mile, Kb= .04
1690          KM
1691          BA   0.030
1692          LG    0.07    0.27    5.70    0.18   69.90
1693          UC   0.146   0.120
1694          UA       0       5      16      30      65      77      84      90      94      97
1695          UA     100
              *

1696          KK   C620R
1697          KM      Hydrograph combine 619620 + R619L + 211W at C620 right branch
1698          HC       3    0.28
              *

1699          KK  BB611R
1700          KM      Retrieve previously diverted hydrograph at C611 in the right branch.
1701          DR   D611R
              *

1702          KK  611620
1703          KM                Lag route through Palisades Plaza storm drain
1704          RT       0               1
              *

1705          KK    C620
1706          KM      Hydrograph combine 611620 + C620R at C620
1707          HC       2    0.42
              *

1708          KK  620621
1709          KM      Normal depth channel route from C620 to C621
```

```
1710          KM      Source:  HEC-2 Cross Section: AR 0.081
1711          RS       1    FLOW      -1
1712          RC   0.050   0.050   0.050   915.0  0.0394
1713          RX  9790.0  9790.1  9972.2  9994.8 10004.9 10029.7 10048.6 10125.0
1714          RY  1657.9  1657.5  1656.4  1646.8  1646.8  1657.8  1657.0  1657.9
              *

1715          KK    C621
1716          KM      Hydrograph combine C621L + 620621 at C621
1717          HC       2    7.93
              *

1718          KK  621622
1719          KM      Normal depth channel route from C621 to C622
1720          KM      Source:  HEC-2 Cross Section: AS 2.785
1721          RS       6    FLOW      -1
1722          RC   0.100   0.045   0.100  3830.0  0.0144
1723          RX  9827.3  9922.9  9951.0 10000.0 10002.7 10044.7 10071.6 10076.8
1724          RY  1615.2  1611.0  1604.1  1600.8  1601.5  1601.6  1611.0  1613.9
              *
```



```
LINE          ID.......1.......2.......3.......4.......5.......6.......7.......8.......9......10

1725          KK    211X
1726          KM   Sub-Basin   211X
1727          KM
1728          KM      The Clark Unit Hydrograph is used for this basin.
1729          KM          The HEC-1 time-area relation is used for this basin.
1730          KM
1731          KM      Time of Concentration for this sub-basin is based on the following:
1732          KM          An rainfall areal reduction factor of 1.000
1733          KM
1734          KM       EXCESS RAINFALL VALUES EXCEEDED IN 5-MINUTE INTERVALS
1735          KM     5  10  15  20  25  30  35  40  45  50  55  60  65  70  75  80  85  90
1736          KM   .27 .27 .27 .27 .27 .26 .03 .03 .03 .02 .02 .02 .01 .01 .01 .01 .01 .01
1737          KM
1738          KM          L=   0.929 miles, S=  111 feet/mile, Kb= .05
1739          KM
1740          BA   0.214
1741          LG    0.16    0.30    4.90    0.27   43.20
1742          UC   0.346   0.259
              *

1743          KK   C622R
1744          KM      Hydrograph combine 621622 + 211X at C622 right branch
1745          HC       2
              *
              * *
              * * Move to the top of Tulip Wash
              * *
              *

1746          KK    211A
1747          KM   Sub-Basin   211A
1748          KM
1749          KM      The Clark Unit Hydrograph is used for this basin.
1750          KM          The HEC-1 time-area relation is used for this basin.
1751          KM
1752          KM      Time of Concentration for this sub-basin is based on the following:
1753          KM          An rainfall areal reduction factor of 1.000
1754          KM
1755          KM       EXCESS RAINFALL VALUES EXCEEDED IN 5-MINUTE INTERVALS
1756          KM     5  10  15  20  25  30  35  40  45  50  55  60  65  70  75  80  85  90
1757          KM   .26 .25 .25 .25 .25 .25 .01 .01 .01 .01 .01 .01 .00 .00 .00 .00 .00 .00
1758          KM
1759          KM          L=   0.820 miles, S=  248 feet/mile, Kb= .10
1760          KM
1761          BA   0.143
1762          LG    0.14    0.38    5.70    0.21   13.80
1763          UC   0.371   0.318
              *
```



```
LINE          ID.......1.......2.......3.......4.......5.......6.......7.......8.......9......10

1764          KK   C6000
1765          KM      Reservoir route at C600.
1766          RS       1    ELEV  1754.0
1767          SV    0.00    0.14    0.62    1.52    2.95    5.06    7.98   11.80   16.61   22.67
1768          SV   30.07   38.71   40.50   40.60   41.60   42.70   43.70   44.60   45.70
1769          SE  1754.0  1756.0  1758.0  1760.0  1762.0  1764.0  1766.0  1768.0  1770.0  1772.0
1770          SE  1774.0  1776.0 1776.36  1776.4  1776.6  1776.8  1777.0  1777.2  1777.4
1771          SQ       0      55     183     320     427     513     570     620     665     709
1772          SQ     750     789     795     795     812     849     906     984    1084
              *

1773          KK  600601
1774          KM      Normal depth channel route from C600 to C601
1775          KM      Source:  HEC-2 Cross Section: TU 1.538
1776          RS       4    FLOW      -1
1777          RC   0.040   0.025   0.040  2406.0  0.0176
1778          RX  9945.6  9959.4  9968.3  9985.9 10000.0 10017.2 10038.7 10058.8
```

```
1779          RY  1734.5  1732.3  1727.9  1726.2  1725.0  1727.7  1735.2  1736.0
              *

1780          KK    211B
1781          KM   Sub-Basin   211B
1782          KM
1783          KM      The Clark Unit Hydrograph is used for this basin.
1784          KM          The HEC-1 time-area relation is used for this basin.
1785          KM
1786          KM      Time of Concentration for this sub-basin is based on the following:
1787          KM          An rainfall areal reduction factor of 1.000
1788          KM
1789          KM       EXCESS RAINFALL VALUES EXCEEDED IN 5-MINUTE INTERVALS
1790          KM     5  10  15  20  25  30  35  40  45  50  55  60  65  70  75  80  85  90
1791          KM   .26 .25 .25 .25 .25 .25 .01 .01 .01 .01 .01 .01 .00 .00 .00 .00 .00 .00
1792          KM
1793          KM          L=   0.618 miles, S=  244 feet/mile, Kb= .10
1794          KM
1795          BA   0.109
1796          LG    0.14    0.37    5.80    0.21   13.40
1797          UC   0.321   0.253
              *

1798          KK    C601
1799          KM      Hydrograph combine 600601 + 211B at C601
1800          HC       2
              *

1801          KK  601602
1802          KM      Normal depth channel route from C601 to C602
1803          KM      Source:  HEC-2 Cross Section: TU 1.102
1804          RS       4    FLOW      -1
1805          RC   0.065   0.040   0.055  1765.0  0.0146
1806          RX  9916.9  9959.1  9965.8  9980.2 10004.0 10019.5 10047.3 10094.1
1807          RY  1699.9  1699.8  1696.4  1689.8  1688.9  1695.7  1698.2  1698.4
              *
```



```
LINE          ID.......1.......2.......3.......4.......5.......6.......7.......8.......9......10

1808          KK    211C
1809          KM   Sub-Basin   211C
1810          KM
1811          KM      The Clark Unit Hydrograph is used for this basin.
1812          KM          The Urban time-area relation is used for this basin.
1813          KM
1814          KM      Time of Concentration for this sub-basin is based on the following:
1815          KM          An rainfall areal reduction factor of 1.000
1816          KM
1817          KM       EXCESS RAINFALL VALUES EXCEEDED IN 5-MINUTE INTERVALS
1818          KM     5  10  15  20  25  30  35  40  45  50  55  60  65  70  75  80  85  90
1819          KM   .28 .28 .28 .28 .28 .28 .03 .03 .03 .03 .03 .03 .01 .01 .01 .01 .01 .01
1820          KM
1821          KM          L=   0.479 miles, S=  154 feet/mile, Kb= .03
1822          KM
1823          BA   0.043
1824          LG    0.08    0.25    5.70    0.18   44.50
1825          UC   0.167   0.169
1826          UA       0       5      16      30      65      77      84      90      94      97
1827          UA     100
              *

1828          KK   C602L
1829          KM      Hydrograph combine 601602 + 211C at C602 left branch
1830          HC       2
              *

1831          KK    211D
1832          KM   Sub-Basin   211D
1833          KM
1834          KM      The Clark Unit Hydrograph is used for this basin.
1835          KM          The Urban time-area relation is used for this basin.
1836          KM
1837          KM      Time of Concentration for this sub-basin is based on the following:
1838          KM          An rainfall areal reduction factor of 1.000
1839          KM
1840          KM       EXCESS RAINFALL VALUES EXCEEDED IN 5-MINUTE INTERVALS
1841          KM     5  10  15  20  25  30  35  40  45  50  55  60  65  70  75  80  85  90
1842          KM   .24 .24 .24 .24 .24 .23 .01 .01 .01 .01 .01 .01 .01 .01 .01 .01 .01 .01
1843          KM
1844          KM          L=   0.686 miles, S=  115 feet/mile, Kb= .04
1845          KM
1846          BA   0.071
1847          LG    0.21    0.30    3.85    0.49   28.30
1848          UC   0.271   0.291
1849          UA       0       5      16      30      65      77      84      90      94      97
1850          UA     100
              *
```



```
LINE          ID.......1.......2.......3.......4.......5.......6.......7.......8.......9......10

1851          KK    C602
```

```
1852          KM      Hydrograph combine C602L + 211D at C602
1853          HC       2
              *

1854          KK  602603
1855          KM      Normal depth channel route from C602 to C603
1856          KM      Source:  HEC-2 Cross Section: LE 0.672
1857          RS       4    FLOW      -1
1858          RC   0.060   0.045   0.060  2610.0  0.0211
1859          RX  9891.9  9963.9  9986.5 10000.0 10012.7 10023.8 10085.0 10176.4
1860          RY  1653.5  1653.5  1644.4  1644.1  1645.0  1649.8  1651.7  1656.7
              *

1861          KK    211E
1862          KM   Sub-Basin   211E
1863          KM
1864          KM      The Clark Unit Hydrograph is used for this basin.
1865          KM          The Urban time-area relation is used for this basin.
1866          KM
1867          KM      Time of Concentration for this sub-basin is based on the following:
1868          KM          An rainfall areal reduction factor of 1.000
1869          KM
1870          KM       EXCESS RAINFALL VALUES EXCEEDED IN 5-MINUTE INTERVALS
1871          KM     5  10  15  20  25  30  35  40  45  50  55  60  65  70  75  80  85  90
1872          KM   .27 .27 .27 .27 .27 .27 .03 .03 .03 .03 .03 .03 .01 .01 .01 .01 .01 .01
1873          KM
1874          KM          L=   0.609 miles, S=  118 feet/mile, Kb= .03
1875          KM
1876          BA   0.156
1877          LG    0.11    0.27    5.10    0.24   42.20
1878          UC   0.208   0.126
1879          UA       0       5      16      30      65      77      84      90      94      97
1880          UA     100
              *

1881          KK    C603
1882          KM      Hydrograph combine 602603 + 211E at C603
1883          HC       2
              *

1884          KK  603622
1885          KM      Normal depth channel route from C603 to C622
1886          KM      Source:  HEC-2 Cross Section: LE 0.287
1887          RS       5    FLOW      -1
1888          RC   0.060   0.045   0.060  2745.0  0.0204
1889          RX  9883.0  9929.7  9967.3  9991.6 10042.2 10073.6 10177.6 10194.5
1890          RY  1619.4  1618.7  1611.8  1602.1  1603.3  1609.4  1610.5  1610.6
              *
```



```
LINE          ID.......1.......2.......3.......4.......5.......6.......7.......8.......9......10

1891          KK    211F
1892          KM   Sub-Basin   211F
1893          KM
1894          KM      The Clark Unit Hydrograph is used for this basin.
1895          KM          The Urban time-area relation is used for this basin.
1896          KM
1897          KM      Time of Concentration for this sub-basin is based on the following:
1898          KM          An rainfall areal reduction factor of 1.000
1899          KM
1900          KM       EXCESS RAINFALL VALUES EXCEEDED IN 5-MINUTE INTERVALS
1901          KM     5  10  15  20  25  30  35  40  45  50  55  60  65  70  75  80  85  90
1902          KM   .28 .28 .27 .27 .27 .27 .03 .03 .03 .03 .03 .03 .02 .02 .02 .02 .02 .02
1903          KM
1904          KM          L=   0.770 miles, S=  134 feet/mile, Kb= .03
1905          KM
1906          BA   0.113
1907          LG    0.08    0.25    4.30    0.36   62.70
1908          UC   0.225   0.199
1909          UA       0       5      16      30      65      77      84      90      94      97
1910          UA     100
              *

1911          KK   C622L
1912          KM      Hydrograph combine 603622 + 211F at C622 left branch
1913          HC       2
              *

1914          KK    C622
1915          KM      Hydrograph combine C622R + C622L at C622
1916          HC       2
              *

1917          KK  622549
1918          KM      Normal depth channel route from C622 to C549
1919          KM      Source:  HEC-2 Cross Section: AS 2.279
1920          RS       6    FLOW      -1
1921          RC   0.113   0.125   0.120  1697.0  0.0118
1922          RX  9847.1  9851.0  9857.5  9862.8 10052.6 10062.8 10075.6 10084.6
1923          RY  1573.5  1571.3  1567.2  1564.6  1565.1  1566.7  1573.7  1573.9
              *

1924          KK    211Y
```

```
1925          KM   Sub-Basin   211Y
1926          KM
1927          KM      The Clark Unit Hydrograph is used for this basin.
1928          KM          The HEC-1 time-area relation is used for this basin.
1929          KM
1930          KM      Time of Concentration for this sub-basin is based on the following:
1931          KM          An rainfall areal reduction factor of 1.000
1932          KM
1933          KM       EXCESS RAINFALL VALUES EXCEEDED IN 5-MINUTE INTERVALS
1934          KM     5  10  15  20  25  30  35  40  45  50  55  60  65  70  75  80  85  90
1935          KM   .27 .27 .27 .27 .27 .27 .03 .03 .03 .03 .03 .03 .01 .01 .01 .01 .01 .01
1936          KM
```



```
LINE          ID.......1.......2.......3.......4.......5.......6.......7.......8.......9......10

1937          KM          L=   0.606 miles, S=  147 feet/mile, Kb= .07
1938          KM
1939          BA   0.089
1940          LG    0.13    0.30    6.60    0.14   16.80
1941          UC   0.304   0.262
              *

1942          KK   C549R
1943          KM      Hydrograph combine 622549 + 211Y at C549 right branch
1944          HC       2
              *

1945          KK    C549
1946          KM      Hydrograph combine C549L + C549R at C549
1947          HC       2
              *

1948          KK  549626
1949          KM      Normal depth channel route from C549 to C626
1950          KM      Source:  HEC-2 Cross Section: AS 1.855
1951          RS       6    FLOW      -1
1952          RC   0.113   0.125   0.120  2044.0  0.0171
1953          RX  9943.2  9963.0  9985.6  9994.1 10007.6 10029.2 10150.5 10171.3
1954          RY  1539.3  1534.5  1531.2  1528.3  1528.2  1531.7  1532.5  1537.4
              *

1955          KK    211Z
1956          KM   Sub-Basin   211Z
1957          KM
1958          KM      The Clark Unit Hydrograph is used for this basin.
1959          KM          The Urban time-area relation is used for this basin.
1960          KM
1961          KM      Time of Concentration for this sub-basin is based on the following:
1962          KM          An rainfall areal reduction factor of 1.000
1963          KM
1964          KM       EXCESS RAINFALL VALUES EXCEEDED IN 5-MINUTE INTERVALS
1965          KM     5  10  15  20  25  30  35  40  45  50  55  60  65  70  75  80  85  90
1966          KM   .26 .26 .26 .26 .26 .26 .02 .02 .02 .02 .02 .02 .01 .01 .01 .01 .01 .01
1967          KM
1968          KM          L=   0.509 miles, S=  147 feet/mile, Kb= .04
1969          KM
1970          BA   0.083
1971          LG    0.14    0.27    4.50    0.34   34.40
1972          UC   0.208   0.157
1973          UA       0       5      16      30      65      77      84      90      94      97
1974          UA     100
              *

1975          KK   C626C
1976          KM      Hydrograph combine 549626 + 211Z at C626 main branch
1977          HC       2
              *
```



```
LINE          ID.......1.......2.......3.......4.......5.......6.......7.......8.......9......10

1978          KK   211AA
1979          KM   Sub-Basin  211AA
1980          KM
1981          KM      The Clark Unit Hydrograph is used for this basin.
1982          KM          The Urban time-area relation is used for this basin.
1983          KM
1984          KM      Time of Concentration for this sub-basin is based on the following:
1985          KM          An rainfall areal reduction factor of 1.000
1986          KM
1987          KM       EXCESS RAINFALL VALUES EXCEEDED IN 5-MINUTE INTERVALS
1988          KM     5  10  15  20  25  30  35  40  45  50  55  60  65  70  75  80  85  90
1989          KM   .28 .28 .28 .28 .28 .28 .04 .03 .03 .03 .03 .03 .02 .02 .02 .01 .01 .01
1990          KM
1991          KM          L=   0.480 miles, S=   85 feet/mile, Kb= .06
1992          KM
1993          BA   0.034
1994          LG    0.09    0.24    6.60    0.14   38.80
1995          UC   0.292   0.360
1996          UA       0       5      16      30      65      77      84      90      94      97
1997          UA     100
              *
```

```
1998          KK  625626
1999          KM      Normal depth channel route from C625 to C626
2000          KM      Source:  200 Scale Mapping
2001          RS       4    FLOW      -1
2002          RC   0.040   0.018   0.040  1350.0  0.0252
2003          RX  1000.0  1020.0  1021.2  1055.2  1089.2  1090.4  1100.4  1105.4
2004          RY  1527.0  1526.0  1525.6  1526.3  1525.6  1526.0  1528.0  1530.0
              *

2005          KK   211AB
2006          KM   Sub-Basin  211AB
2007          KM
2008          KM      The Clark Unit Hydrograph is used for this basin.
2009          KM          The Urban time-area relation is used for this basin.
2010          KM
2011          KM      Time of Concentration for this sub-basin is based on the following:
2012          KM          An rainfall areal reduction factor of 1.000
2013          KM
2014          KM       EXCESS RAINFALL VALUES EXCEEDED IN 5-MINUTE INTERVALS
2015          KM     5  10  15  20  25  30  35  40  45  50  55  60  65  70  75  80  85  90
2016          KM   .28 .28 .27 .27 .27 .27 .03 .03 .03 .03 .03 .03 .01 .01 .01 .01 .01 .01
2017          KM
2018          KM          L=   0.293 miles, S=  321 feet/mile, Kb= .07
2019          KM
2020          BA   0.040
2021          LG    0.11    0.26    6.80    0.13   23.10
2022          UC   0.163   0.116
2023          UA       0       5      16      30      65      77      84      90      94      97
2024          UA     100
              *
```



```
LINE          ID.......1.......2.......3.......4.......5.......6.......7.......8.......9......10

2025          KK  623624
2026          KM      Normal depth channel route from C623 to C624
2027          KM      Source:  200 Scale Mapping
2028          RS       1    FLOW      -1
2029          RC   0.040   0.018   0.040   701.0  0.0114
2030          RX  1000.0  1010.0  1011.2  1027.2  1043.2  1044.4  1059.4  1074.4
2031          RY  1534.0  1532.0  1531.6  1531.9  1531.6  1532.0  1532.5  1533.0
              *

2032          KK   211AC
2033          KM   Sub-Basin  211AC
2034          KM
2035          KM      The Clark Unit Hydrograph is used for this basin.
2036          KM          The Urban time-area relation is used for this basin.
2037          KM
2038          KM      Time of Concentration for this sub-basin is based on the following:
2039          KM          An rainfall areal reduction factor of 1.000
2040          KM
2041          KM       EXCESS RAINFALL VALUES EXCEEDED IN 5-MINUTE INTERVALS
2042          KM     5  10  15  20  25  30  35  40  45  50  55  60  65  70  75  80  85  90
2043          KM   .29 .29 .29 .29 .29 .29 .04 .04 .04 .04 .04 .04 .03 .03 .03 .03 .03 .03
2044          KM
2045          KM          L=   0.306 miles, S=   82 feet/mile, Kb= .03
2046          KM
2047          BA   0.027
2048          LG    0.08    0.15    8.40    0.07   44.80
2049          UC   0.163   0.148
2050          UA       0       5      16      30      65      77      84      90      94      97
2051          UA     100
              *

2052          KK    C624
2053          KM      Hydrograph combine 623624 + 211AC at C624
2054          HC       2
              *

2055          KK  624626
2056          KM      Normal depth channel route from C624 to C626
2057          KM      Source:  HEC-2 Cross Section: AS 1.727
2058          RS       3    FLOW      -1
2059          RC   0.080   0.060   0.080   637.0  0.0235
2060          RX  9872.9  9881.0  9893.9  9902.2  9967.6  9976.4 10076.1 10084.3
2061          RY  1526.3  1524.6  1521.7  1520.0  1520.7  1521.6  1520.7  1526.2
              *

2062          KK   211AD
2063          KM   Sub-Basin  211AD
2064          KM
2065          KM      The Clark Unit Hydrograph is used for this basin.
2066          KM          The Urban time-area relation is used for this basin.
2067          KM
2068          KM      Time of Concentration for this sub-basin is based on the following:
2069          KM          An rainfall areal reduction factor of 1.000
2070          KM
```



```
LINE          ID.......1.......2.......3.......4.......5.......6.......7.......8.......9......10

2071          KM       EXCESS RAINFALL VALUES EXCEEDED IN 5-MINUTE INTERVALS
2072          KM     5  10  15  20  25  30  35  40  45  50  55  60  65  70  75  80  85  90
```

```
2073          KM   .29 .29 .29 .29 .29 .29 .04 .04 .04 .04 .04 .04 .02 .02 .02 .02 .02 .02
2074          KM
2075          KM          L=   0.489 miles, S=  280 feet/mile, Kb= .04
2076          KM
2077          BA   0.041
2078          LG    0.08    0.16    8.00    0.08   42.40
2079          UC   0.163   0.171
2080          UA       0       5      16      30      65      77      84      90      94      97
2081          UA     100
              *

2082          KK   C626R
2083          KM      Hydrograph combine 624626 + 211AD at C626 right branch
2084          HC       2
              *

2085          KK    C626
2086          KM      Hydrograph combine C626C + 625626 at C626R
2087          HC       3
              *

2088          KK  626627
2089          KM      Normal depth channel route from C626 to C627
2090          KM      Source:  HEC-2 Cross Section: AS 1.602
2091          RS       1    FLOW      -1
2092          RC   0.080   0.060   0.080   625.0  0.0208
2093          RX  9889.8  9941.2  9963.0 10011.6 10074.8 10083.9 10191.7 10210.4
2094          RY  1517.6  1516.9  1508.1  1506.6  1508.6  1511.7  1513.1  1518.8
              *

2095          KK   211AE
2096          KM   Sub-Basin  211AE
2097          KM
2098          KM      The Clark Unit Hydrograph is used for this basin.
2099          KM          The Urban time-area relation is used for this basin.
2100          KM
2101          KM      Time of Concentration for this sub-basin is based on the following:
2102          KM          An rainfall areal reduction factor of 1.000
2103          KM
2104          KM       EXCESS RAINFALL VALUES EXCEEDED IN 5-MINUTE INTERVALS
2105          KM     5  10  15  20  25  30  35  40  45  50  55  60  65  70  75  80  85  90
2106          KM   .28 .28 .28 .28 .28 .28 .03 .03 .03 .03 .03 .03 .01 .01 .01 .01 .01 .01
2107          KM
2108          KM          L=   0.313 miles, S=  153 feet/mile, Kb= .04
2109          KM
2110          BA   0.034
2111          LG    0.12    0.24    6.40    0.15   38.20
2112          UC   0.158   0.129
2113          UA       0       5      16      30      65      77      84      90      94      97
2114          UA     100
              *
```



```
LINE          ID.......1.......2.......3.......4.......5.......6.......7.......8.......9......10

2115          KK    C627
2116          KM      Hydrograph combine 626627 + 211AE at C627
2117          HC       2
              *
              * *
              * * C627 is the total flow in Ashbrook Wash at the Study boundary
              * *
              *
2118          ZZ
```

1

SCHEMATIC DIAGRAM OF STREAM NETWORK

```
INPUT
 LINE     (V) ROUTING          (--->) DIVERSION OR PUMP FLOW

  NO.     (.) CONNECTOR        (<---) RETURN OF DIVERTED OR PUMPED FLOW

   42       204A
               V
               V
   62      522523
               .
               .
   69          .        204B
               .           .
               .           .
   89      C523I...........
               V
               V
   92      C523O
               .
               .
  104          .-------->   D523R
  101      D523L
               .
               .
  109          .        205A
               .           .
               .           .
  129          .           .        205B
```

```
                .          .          .
                .          .          .
149             .     C528.....
                .        V
                .        V
152             .   528530
                .          .
                .          .
159             .          .       205C
                .          .          .
                .          .          .
179             .    C530R.....
                .          .
                .          .
182             .          .       205D
                .          .          .
                .          .          .
202             .          .          .       205E
                .          .          .          .
                .          .          .          .
222             .          .       C529.....
                .          .          .
                .          .          .
225             .     C530.....
                .        V
                .        V
228             .   530531
                .          .
                .          .
235             .          .       205F
                .          .          .
                .          .          .
255             .     C531.....
                .        V
                .        V
258             .   531532
                .          .
                .          .
265             .          .       205G
                .          .          .
                .          .          .
285             .    C532L.....
                .          .
                .          .
288             .          .       205H
                .          .          .
                .          .          .
308             .     C532.....
                .        V
                .        V
311             .   532533
                .          .
                .          .
318             .          .       205I
                .          .          .
                .          .          .
338             .     C533.....
                .        V
                .        V
341             .   533534
                .          .
                .          .
348             .          .       205J
                .          .          .
                .          .          .
368             .    C534R.....
                .          .
                .          .
371             .          .       205K
                .          .          .
                .          .          .
391             .     C534.....
                .        V
                .        V
394             .   534535
                .          .
                .          .
401             .          .       205L
                .          .          .
                .          .          .
421             .     C535.....
                .        V
                .        V
424             .   535536
                .          .
                .          .
431             .          .       205M
                .          .          .
                .          .          .
449             .    C536R.....
                .          .
                .          .
452             .          .       205N
                .          .          .
                .          .          .
```

```
470          .       C536I............
             .           V
             .           V
473          .       C536O
             .           V
             .           V
485          .      536537
             .           .
             .           .
492          .           .        206A
             .           .           .
             .           .           .
512          .        C537............
             .           V
             .           V
515          .      537538
             .           .
             .           .
522          .           .        206B
             .           .           .
             .           .           .
542          .       C538I............
             .           V
             .           V
545          .       C538O
             .           V
             .           V
554          .      538540
             .           .
             .           .
561          .           .        206C
             .           .           .
             .           .           .
579          .       C540R............
             .           .
             .           .
582          .           .        206D
             .           .           V
             .           .           V
602          .           .      539540
             .           .           .
             .           .           .
609          .           .           .        206E
             .           .           .           .
             .           .           .           .
627          .           .       C540L............
             .           .           .
             .           .           .
630          .        C540............
             .           V
             .           V
633          .      540541
             .           .
             .           .
640          .           .        206F
             .           .           .
             .           .           .
658          .        C541............
             .           V
             .           V
661          .      541548
             .           .
             .           .
668          .           .        206G
             .           .           .
             .           .           .
688          .           .           .           .<-------   D523R
686          .           .           .      BB523R
             .           .           .           V
             .           .           .           V
689          .           .           .      523548
             .           .           .           .
             .           .           .           .
696          .       C548L........................
             .           .
             .           .
699          .           .        206H
             .           .           V
             .           .           V
719          .           .      542543
             .           .           .
             .           .           .
726          .           .           .        206I
             .           .           .           .
             .           .           .           .
744          .           .        C543............
             .           .           .
             .           .           .
750          .           .           .-------->   D543R
747          .           .       D543L
             .           .           V
             .           .           V
755          .           .      543544
             .           .           .
             .           .           .
```

```
762          .          .          .        206K
             .          .          .           .
             .          .          .           .
780          .          .       C544............
             .          .          V
             .          .          V
783          .          .     544545
             .          .          .
             .          .          .
793          .          .          .-------->   D545R
790          .          .      D545L
             .          .          V
             .          .          V
796          .          .     545546
             .          .          .
             .          .          .
803          .          .          .        206L
             .          .          .           .
             .          .          .           .
821          .          .       C546............
             .          .          V
             .          .          V
824          .          .     546547
             .          .          .
             .          .          .
833          .          .          .           .<-------   D543R
831          .          .          .     BB543R
             .          .          .          V
             .          .          .          V
834          .          .          .     543547
             .          .          .          .

             .          .          .          .
843          .          .          .          .           .<-------   D545R
841          .          .          .          .     BB545R
             .          .          .          .          V
             .          .          .          .          V
844          .          .          .          .     545547
             .          .          .          .          .
             .          .          .          .          .
851          .          .          .          .          .        206J
             .          .          .          .          .           .
             .          .          .          .          .           .
871          .          .       C547.....................................
             .          .          V
             .          .          V
874          .          .     547548
             .          .          .
             .          .          .
881          .          .          .        206M
             .          .          .           .
             .          .          .           .
901          .          .      C548R............
             .          .          .
             .          .          .
904          .       C548............
             .          V
             .          V
907          .     548549
             .          .
             .          .
914          .          .       206N
             .          .          .
             .          .          .
934          .      C549L............
             .          .
             .          .
937          .          .      C599O
             .          .          V
             .          .          V
1122         .          .     599608
             .          .          .
             .          .          .
1129         .          .          .        211K
             .          .          .           .
             .          .          .           .
1147         .          .      C608L............
             .          .          .
             .          .          .
1150         .          .          .        211G
             .          .          .           V
             .          .          .           V
1170         .          .          .     604606
             .          .          .          .
             .          .          .          .
1177         .          .          .          .        211I
             .          .          .          .           .
             .          .          .          .           .
1197         .          .          .      C606R............
             .          .          .          .
             .          .          .          .
1200         .          .          .          .        211H
             .          .          .          .           V
             .          .          .          .           V
1220         .          .          .          .      C605O
```

```
                .         .         .         .         .
                .         .         .         .         .
1229            .         .         .      C606.........
                .         .         .         V
                .         .         .         V
1232            .         .         .    606607
                .         .         .         .
                .         .         .         .
1239            .         .         .         .      211J
                .         .         .         .         .
                .         .         .         .         .
1257            .         .         .      C607.........
                .         .         .         V
                .         .         .         V
1260            .         .         .    607608
                .         .         .         .
                .         .         .         .
1267            .         .      C608.........
                .         .         V
                .         .         V
1270            .         .    608613
                .         .         .
                .         .         .
1277            .         .         .      211M
                .         .         .         V
                .         .         .         V
1297            .         .         .    610611
                .         .         .         .
                .         .         .         .
1304            .         .         .         .      211N
                .         .         .         .         .
                .         .         .         .         .
1322            .         .         .     C611R........
                .         .         .         .
                .         .         .         .
1325            .         .         .         .      211O
                .         .         .         .         V
                .         .         .         .         V
1343            .         .         .         .     C609O
                .         .         .         .         V
                .         .         .         .         V
1352            .         .         .         .    609611
                .         .         .         .         .
                .         .         .         .         .
1359            .         .         .     C611I........
                .         .         .         V
                .         .         .         V
1362            .         .         .     C611O
                .         .         .         .
                .         .         .         .
1374            .         .         .         .-------> D611R
1371            .         .         .     D611L
                .         .         .         V
                .         .         .         V
1379            .         .         .    611612
                .         .         .         .
                .         .         .         .
1386            .         .         .         .      211P
                .         .         .         .         .
                .         .         .         .         .
1406            .         .         .      C612.........
                .         .         .         .
                .         .         .         .
1409            .         .      C613.........
                .         .         V
                .         .         V
1412            .         .    613621
                .         .         .
                .         .         .
1419            .         .         .      211L
                .         .         .         .
                .         .         .         .
1439            .         .    C621L........
                .         .         .
                .         .         .
1442            .         .         .      211Q
                .         .         .         V
                .         .         .         V
1460            .         .         .    616617
                .         .         .         .
                .         .         .         .
1467            .         .         .         .      211R
                .         .         .         .         .
                .         .         .         .         .
1485            .         .         .     C617L........
                .         .         .         .
                .         .         .         .
1488            .         .         .         .      211U
                .         .         .         .         .
                .         .         .         .         .
1511            .         .         .         .         .-------> D614R
1508            .         .         .         .     D614L
                .         .         .         .         .
                .         .         .         .         .
1514            .         .         .      C617.........
```

```
                 .         .         .         V
                 .         .         .         V
1517             .         .         .    617618
                 .         .         .         .
                 .         .         .         .
1524             .         .         .         .        211S
                 .         .         .         .          .
                 .         .         .         .          .
1542             .         .         .    C618I............
                 .         .         .         V
                 .         .         .         V
1545             .         .         .    C618O
                 .         .         .         .
                 .         .         .         .
1556             .         .         .         .          .<-------   D614R
1554             .         .         .         .    BB614R
                 .         .         .         .          V
                 .         .         .         .          V
1557             .         .         .         .    614615
                 .         .         .         .          .
                 .         .         .         .          .
1564             .         .         .         .          .        211V
                 .         .         .         .          .          .
                 .         .         .         .          .          .
1584             .         .         .         .      C615............
                 .         .         .         .          .
                 .         .         .         .          .
1590             .         .         .         .          .------->   D615R
1587             .         .         .         .     D615L
                 .         .         .         .          V
                 .         .         .         .          V
1593             .         .         .         .    615618
                 .         .         .         .          .
                 .         .         .         .          .
1600             .         .         .      C618............
                 .         .         .         V
                 .         .         .         V
1603             .         .         .    618619
                 .         .         .         .
                 .         .         .         .
1610             .         .         .         .      211T
                 .         .         .         .          .
                 .         .         .         .          .
1628             .         .         .    C619L............
                 .         .         .         .
                 .         .         .         .
1633             .         .         .         .          .<-------   D615R
1631             .         .         .         .    BB615R
                 .         .         .         .          V

                 .         .         .         .          V
1634             .         .         .         .    615619
                 .         .         .         .          .
                 .         .         .         .          .
1641             .         .         .    C619I............
                 .         .         .         V
                 .         .         .         V
1644             .         .         .    C619O
                 .         .         .         .
                 .         .         .         .
1658             .         .         .         .------->   D619L
1655             .         .         .    D619R
                 .         .         .         V
                 .         .         .         V
1663             .         .         .    619620
                 .         .         .         .
                 .         .         .         .
1668             .         .         .         .          .<-------   D619L
1666             .         .         .         .    BB619L
                 .         .         .         .          V
                 .         .         .         .          V
1669             .         .         .         .    619620
                 .         .         .         .          .
                 .         .         .         .          .
1676             .         .         .         .          .        211W
                 .         .         .         .          .          .
                 .         .         .         .          .          .
1696             .         .         .    C620R........................
                 .         .         .         .
                 .         .         .         .
1701             .         .         .         .          .<-------   D611R
1699             .         .         .         .    BB611R
                 .         .         .         .          V
                 .         .         .         .          V
1702             .         .         .         .    611620
                 .         .         .         .          .
                 .         .         .         .          .
1705             .         .         .      C620............
                 .         .         .         V
                 .         .         .         V
1708             .         .         .    620621
                 .         .         .         .
                 .         .         .         .
1715             .         .      C621............
                 .         .         V
```

```
                 .          .          V
1718             .          .     621622
                 .          .          .
                 .          .          .
1725             .          .          .       211X
                 .          .          .          .
                 .          .          .          .
1743             .          .     C622R............
                 .          .          .
                 .          .          .
1746             .          .          .       211A
                 .          .          .          V
                 .          .          .          V
1764             .          .          .      C600O
                 .          .          .          V
                 .          .          .          V
1773             .          .          .     600601
                 .          .          .          .
                 .          .          .          .
1780             .          .          .          .        211B
                 .          .          .          .           .
                 .          .          .          .           .
1798             .          .          .       C601............
                 .          .          .          V
                 .          .          .          V
1801             .          .          .     601602
                 .          .          .          .
                 .          .          .          .
1808             .          .          .          .        211C
                 .          .          .          .           .
                 .          .          .          .           .
1828             .          .          .      C602L............
                 .          .          .          .
                 .          .          .          .
1831             .          .          .          .        211D
                 .          .          .          .           .
                 .          .          .          .           .
1851             .          .          .       C602............
                 .          .          .          V
                 .          .          .          V
1854             .          .          .     602603
                 .          .          .          .
                 .          .          .          .
1861             .          .          .          .        211E
                 .          .          .          .           .
                 .          .          .          .           .
1881             .          .          .       C603............
                 .          .          .          V
                 .          .          .          V
1884             .          .          .     603622
                 .          .          .          .
                 .          .          .          .
1891             .          .          .          .        211F
                 .          .          .          .           .
                 .          .          .          .           .
1911             .          .          .      C622L............
                 .          .          .          .
                 .          .          .          .
1914             .          .       C622............
                 .          .          V
                 .          .          V
1917             .          .     622549
                 .          .          .
                 .          .          .
1924             .          .          .       211Y
                 .          .          .          .
                 .          .          .          .
1942             .          .     C549R............
                 .          .          .
                 .          .          .
1945             .       C549............
                 .          V
                 .          V
1948             .     549626
                 .          .
                 .          .
1955             .          .       211Z
                 .          .          .
                 .          .          .
1975             .     C626C............
                 .          .
                 .          .
1978             .          .      211AA
                 .          .          V
                 .          .          V
1998             .          .     625626
                 .          .          .
                 .          .          .
2005             .          .          .      211AB
                 .          .          .          V
                 .          .          .          V
2025             .          .          .     623624
                 .          .          .          .
                 .          .          .          .
2032             .          .          .          .        211AC
```

```
                .          .          .          .          .
                .          .          .          .          .
 2052           .          .          .       C624...........
                .          .          .          V
                .          .          .          V
 2055           .          .          .     624626
                .          .          .          .
                .          .          .          .
 2062           .          .          .          .      211AD
                .          .          .          .          .
                .          .          .          .          .
 2082           .          .          .      C626R...........
                .          .          .          .
                .          .          .          .
 2085           .       C626........................
                .          V
                .          V
 2088           .     626627
                .          .
                .          .
 2095           .          .      211AE
                .          .          .
                .          .          .
 2115           .       C627............
```

(***) RUNOFF ALSO COMPUTED AT THIS LOCATION

```
1****************************************                    ****************************************
*                                        *                    *                                      *
*   FLOOD HYDROGRAPH PACKAGE  (HEC-1)    *                    *   U.S. ARMY CORPS OF ENGINEERS       *
*               MAY   1991               *                    *   HYDROLOGIC ENGINEERING CENTER      *
*            VERSION 4.0.1E              *                    *         609 SECOND STREET            *
*                                        *                    *      DAVIS, CALIFORNIA 95616         *
*  RUN DATE  02/18/:0  TIME  08:29:37    *                    *          (916) 551-1748              *
*                                        *                    *                                      *
****************************************                    ****************************************
```

```
                    Golden Eagle Park Dam Modifications
                         by Stantec: Proj. No. 28900095                File: ALTFf-1.IH1
                         for FCDMC:  FCD                               Date:07-08-99     mcg
                                                                     Revised:

                    Alternative F:
                         Addition of an auxillary spillway.  This spillway will function such
                         that the existing emergency spillway does not operate for the 100-year
                         storm.  The stage-storage relation is adjusted to reflect revised
                         grading in the park.

                         The purpose of this model is to estimate peak discharges in Ashbrook
                         Wash for evaluation of the Dam modifications impact on the floodplain.

                    100-year, 24-hour existing condition watershed model for Ashbrook Wash
                    upstream of the Fort McDowell Indian Reservation boundary.
                         This model is a portion of the original Fountain Hills North FDS
                         watershed model conducted by GVSCE, 1994.  The title cards from that
                         model are included for reference.

                    Fountain Hills North Floodplain Delineation Study
                         FCD 92-04        by GVSCE                     File:  EX100-24.IH1
                     Existing Condition Model                          Date:    07-21-94   dtp
                     100-Year 24-Hour Storm, Clark Unit Hydrograph   Revised:   09-14-94   trl

 26 IO          OUTPUT CONTROL VARIABLES
                      IPRNT          5  PRINT CONTROL
                      IPLOT          0  PLOT CONTROL
                      QSCAL         0.  HYDROGRAPH PLOT SCALE

    IT          HYDROGRAPH TIME DATA
                       NMIN          1  MINUTES IN COMPUTATION INTERVAL
                      IDATE      1    0  STARTING DATE
                      ITIME       0000  STARTING TIME
                         NQ       1800  NUMBER OF HYDROGRAPH ORDINATES
                     NDDATE      2    0  ENDING DATE
                     NDTIME       0559  ENDING TIME
                      ICENT         19  CENTURY MARK

                 COMPUTATION INTERVAL    0.02 HOURS
                      TOTAL TIME BASE   29.98 HOURS

          ENGLISH UNITS
               DRAINAGE AREA          SQUARE MILES
               PRECIPITATION DEPTH    INCHES
               LENGTH, ELEVATION      FEET
               FLOW                   CUBIC FEET PER SECOND
               STORAGE VOLUME         ACRE-FEET
               SURFACE AREA           ACRES
               TEMPERATURE            DEGREES FAHRENHEIT

 28 JD          INDEX STORM NO. 1
                       STRM       4.20  PRECIPITATION DEPTH
                       TRDA       0.01  TRANSPOSITION DRAINAGE AREA
```

```
39 JD          INDEX STORM NO. 2
                     STRM        4.12  PRECIPITATION DEPTH
                     TRDA        5.00  TRANSPOSITION DRAINAGE AREA

40 JD          INDEX STORM NO. 3
                     STRM        3.99  PRECIPITATION DEPTH
                     TRDA       10.00  TRANSPOSITION DRAINAGE AREA

41 JD          INDEX STORM NO. 4
                     STRM        3.71  PRECIPITATION DEPTH
                     TRDA       50.00  TRANSPOSITION DRAINAGE AREA

        WARNING EXCESS AT PONDING LESS THAN ZERO FOR PERIOD. EXCESS SET TO ZERO
        WARNING EXCESS AT PONDING LESS THAN ZERO FOR PERIOD. EXCESS SET TO ZERO
        WARNING EXCESS AT PONDING LESS THAN ZERO FOR PERIOD. EXCESS SET TO ZERO
        WARNING EXCESS AT PONDING LESS THAN ZERO FOR PERIOD. EXCESS SET TO ZERO
```

1

RUNOFF SUMMARY
FLOW IN CUBIC FEET PER SECOND
TIME IN HOURS, AREA IN SQUARE MILES

	OPERATION	STATION	PEAK FLOW	TIME OF PEAK	AVERAGE FLOW FOR MAXIMUM PERIOD 6-HOUR	24-HOUR	72-HOUR	BASIN AREA	MAXIMUM STAGE	TIME OF MAX STAGE
+	HYDROGRAPH AT	204A	130.	12.20	16.	4.	3.	0.11		
+	ROUTED TO	522523	126.	12.40	16.	4.	3.	0.11		
+	HYDROGRAPH AT	204B	134.	12.25	18.	4.	4.	0.13		
+	2 COMBINED AT	C523I	248.	12.30	33.	8.	7.	0.23		
+	ROUTED TO	C523O	202.	12.50	33.	8.	7.	0.23		
+	DIVERSION TO	D523R	0.	0.02	0.	0.	0.	0.23		
+	HYDROGRAPH AT	D523L	202.	12.50	33.	8.	7.	0.23		
+	HYDROGRAPH AT	205A	130.	12.23	22.	7.	6.	0.12		
+	HYDROGRAPH AT	205B	284.	12.18	40.	12.	10.	0.21		
+	2 COMBINED AT	C528	411.	12.20	62.	19.	15.	0.33		
+	ROUTED TO	528530	408.	12.23	62.	19.	15.	0.33		
+	HYDROGRAPH AT	205C	65.	12.22	11.	3.	3.	0.06		
+	2 COMBINED AT	C530R	472.	12.23	73.	23.	18.	0.39		
+	HYDROGRAPH AT	205D	405.	12.22	60.	19.	15.	0.32		
+	HYDROGRAPH AT	205E	203.	12.32	41.	13.	10.	0.22		
+	2 COMBINED AT	C529	596.	12.25	100.	31.	25.	0.54		
+	2 COMBINED AT	C530	1064.	12.23	173.	54.	43.	0.93		
+	ROUTED TO	530531	1056.	12.28	173.	54.	43.	0.93		
+	HYDROGRAPH AT	205F	197.	12.22	30.	9.	8.	0.16		
+	2 COMBINED AT	C531	1241.	12.27	202.	63.	50.	1.09		
+	ROUTED TO	531532	1230.	12.33	202.	63.	50.	1.09		
+	HYDROGRAPH AT	205G	214.	12.23	33.	10.	8.	0.19		

+	2 COMBINED AT	C532L	1420.	12.32	235.	73.	59.	1.27
+	HYDROGRAPH AT	205H	237.	12.33	47.	14.	12.	0.26
+	2 COMBINED AT	C532	1654.	12.32	282.	87.	70.	1.53
+	ROUTED TO	532533	1649.	12.35	282.	87.	70.	1.53
+	HYDROGRAPH AT	205I	367.	12.28	56.	16.	13.	0.35
+	2 COMBINED AT	C533	2000.	12.33	337.	103.	82.	1.89
+	ROUTED TO	533534	1959.	12.48	337.	103.	82.	1.89
+	HYDROGRAPH AT	205J	361.	12.28	50.	13.	10.	0.37
+	2 COMBINED AT	C534R	2220.	12.47	386.	115.	93.	2.25
+	HYDROGRAPH AT	205K	183.	12.37	35.	9.	7.	0.25
+	2 COMBINED AT	C534	2390.	12.47	420.	124.	100.	2.50
+	ROUTED TO	534535	2378.	12.52	420.	124.	100.	2.50
+	HYDROGRAPH AT	205L	147.	12.17	15.	4.	3.	0.12
+	2 COMBINED AT	C535	2425.	12.50	435.	128.	103.	2.62
+	ROUTED TO	535536	2397.	12.63	435.	128.	103.	2.62
+	HYDROGRAPH AT	205M	195.	12.08	25.	7.	6.	0.14
+	2 COMBINED AT	C536R	2443.	12.63	460.	135.	108.	2.76
+	HYDROGRAPH AT	205N	141.	12.22	22.	6.	4.	0.16
+	2 COMBINED AT	C536I	2520.	12.62	481.	140.	113.	2.91
+	ROUTED TO	C536O	321.	14.02	307.	140.	113.	2.91
+	ROUTED TO	536537	321.	14.08	307.	140.	113.	2.91
+	HYDROGRAPH AT	206A	224.	12.02	26.	8.	6.	0.13
+	2 COMBINED AT	C537	348.	12.07	312.	148.	119.	3.04
+	ROUTED TO	537538	341.	12.12	312.	148.	119.	3.04
+	HYDROGRAPH AT	206B	168.	12.02	21.	6.	5.	0.09
+	2 COMBINED AT	C538I	489.	12.07	327.	154.	124.	3.14
+	ROUTED TO	C538O	446.	12.15	324.	154.	124.	3.14
+	ROUTED TO	538540	438.	12.25	324.	154.	124.	3.14
+	HYDROGRAPH AT	206C	26.	12.10	4.	1.	1.	0.02
+	2 COMBINED AT	C540R	459.	12.25	326.	155.	125.	3.16
+	HYDROGRAPH AT	206D	110.	12.02	14.	4.	3.	0.06
+	ROUTED TO	539540	108.	12.10	14.	4.	3.	0.06

+	HYDROGRAPH AT 206E	25.	12.08	3.	1.	1.	0.02
+	2 COMBINED AT C540L	133.	12.10	17.	5.	4.	0.09
+	2 COMBINED AT C540	560.	12.22	338.	160.	129.	3.24
+	ROUTED TO 540541	545.	12.40	338.	160.	129.	3.24
+	HYDROGRAPH AT 206F	159.	12.15	21.	6.	4.	0.16
+	2 COMBINED AT C541	655.	12.37	354.	165.	133.	3.40
+	ROUTED TO 541548	654.	12.38	354.	165.	133.	3.40
+	HYDROGRAPH AT 206G	75.	12.23	14.	4.	3.	0.09
+	HYDROGRAPH AT BB523R	0.	0.02	0.	0.	0.	0.23
+	ROUTED TO 523548	0.	0.02	0.	0.	0.	0.23
+	3 COMBINED AT C548L	721.	12.37	367.	169.	136.	3.72
+	HYDROGRAPH AT 206H	89.	12.07	12.	3.	3.	0.06
+	ROUTED TO 542543	88.	12.10	12.	3.	3.	0.06
+	HYDROGRAPH AT 206I	37.	12.02	4.	1.	1.	0.02
+	2 COMBINED AT C543	122.	12.07	16.	5.	4.	0.08
+	DIVERSION TO D543R	122.	12.07	16.	5.	4.	0.08
+	HYDROGRAPH AT D543L	0.	0.02	0.	0.	0.	0.08
+	ROUTED TO 543544	0.	0.02	0.	0.	0.	0.08
+	HYDROGRAPH AT 206K	62.	12.13	9.	2.	2.	0.06
+	2 COMBINED AT C544	62.	12.13	8.	2.	2.	0.14
+	ROUTED TO 544545	61.	12.18	8.	2.	2.	0.14
+	DIVERSION TO D545R	31.	12.18	4.	1.	1.	0.14
+	HYDROGRAPH AT D545L	31.	12.18	4.	1.	1.	0.14
+	ROUTED TO 545546	31.	12.20	4.	1.	1.	0.14
+	HYDROGRAPH AT 206L	73.	12.12	10.	3.	2.	0.06
+	2 COMBINED AT C546	102.	12.13	14.	4.	3.	0.20
+	ROUTED TO 546547	102.	12.17	14.	4.	3.	0.20
+	HYDROGRAPH AT BB543R	122.	12.07	16.	5.	4.	0.08
+	ROUTED TO 543547	121.	12.15	16.	5.	4.	0.08
+	HYDROGRAPH AT BB545R	31.	12.18	4.	1.	1.	0.14
+	ROUTED TO 545547	30.	12.23	4.	1.	1.	0.14
	HYDROGRAPH AT						

+		206J	111.	12.02	14.	4.	3.	0.06
	4 COMBINED AT							
+		C547	335.	12.07	48.	14.	11.	0.26
	ROUTED TO							
+		547548	330.	12.13	48.	14.	11.	0.26
	HYDROGRAPH AT							
+		206M	109.	12.02	14.	4.	3.	0.06
	2 COMBINED AT							
+		C548R	412.	12.08	62.	18.	15.	0.32
	2 COMBINED AT							
+		C548	1038.	12.27	420.	186.	151.	4.04
	ROUTED TO							
+		548549	1025.	12.38	419.	186.	150.	4.04
	HYDROGRAPH AT							
+		206N	259.	12.03	35.	11.	9.	0.15
	2 COMBINED AT							
+		C549L	1105.	12.35	443.	197.	159.	4.19
	HYDROGRAPH AT							
+		C599O	1190.	12.98	1000.	360.	290.	7.13
	ROUTED TO							
+		599608	1190.	13.12	1000.	360.	290.	7.13
	HYDROGRAPH AT							
+		211K	169.	12.03	18.	5.	4.	0.10
	2 COMBINED AT							
+		C608L	1194.	13.07	1012.	365.	294.	7.23
	HYDROGRAPH AT							
+		211G	11.	12.05	2.	1.	1.	0.01
	ROUTED TO							
+		604606	11.	12.23	2.	1.	1.	0.01
	HYDROGRAPH AT							
+		211I	47.	12.20	8.	3.	2.	0.04
	2 COMBINED AT							
+		C606R	58.	12.20	11.	3.	3.	0.05
	HYDROGRAPH AT							
+		211H	103.	12.13	11.	3.	2.	0.07
	ROUTED TO							
+		C605O	89.	12.23	11.	3.	2.	0.07
	2 COMBINED AT							
+		C606	146.	12.22	22.	6.	5.	0.12
	ROUTED TO							
+		606607	145.	12.25	22.	6.	5.	0.12
	HYDROGRAPH AT							
+		211J	22.	12.07	3.	1.	1.	0.01
	2 COMBINED AT							
+		C607	161.	12.23	25.	7.	6.	0.14
	ROUTED TO							
+		607608	160.	12.27	25.	7.	6.	0.14
	2 COMBINED AT							
+		C608	1258.	12.42	1035.	372.	299.	7.37
	ROUTED TO							
+		608613	1257.	12.45	1034.	372.	299.	7.37
	HYDROGRAPH AT							
+		211M	117.	12.15	16.	5.	4.	0.08
	ROUTED TO							
+		610611	116.	12.18	16.	5.	4.	0.08
	HYDROGRAPH AT							
+		211N	30.	12.05	4.	1.	1.	0.02
	2 COMBINED AT							
+		C611R	142.	12.15	19.	6.	5.	0.10
	HYDROGRAPH AT							
+		211O	62.	12.07	8.	3.	2.	0.04
	ROUTED TO							
+		C609O	48.	12.22	8.	3.	2.	0.04

+	ROUTED TO 609611	48.	12.23	8.	3.	2.	0.04
+	2 COMBINED AT C611I	188.	12.17	28.	8.	7.	0.14
+	ROUTED TO C611O	126.	12.38	28.	8.	6.	0.14
+	DIVERSION TO D611R	126.	12.38	28.	8.	6.	0.14
+	HYDROGRAPH AT D611L	0.	0.02	0.	0.	0.	0.14
+	ROUTED TO 611612	0.	0.02	0.	0.	0.	0.14
+	HYDROGRAPH AT 211P	65.	12.00	8.	3.	2.	0.03
+	2 COMBINED AT C612	64.	12.00	8.	3.	2.	0.17
+	2 COMBINED AT C613	1267.	12.45	1039.	374.	301.	7.54
+	ROUTED TO 613621	1267.	12.47	1039.	374.	301.	7.54
+	HYDROGRAPH AT 211L	162.	12.02	19.	6.	5.	0.10
+	2 COMBINED AT C621L	1289.	12.43	1052.	380.	306.	7.64
+	HYDROGRAPH AT 211Q	32.	12.05	3.	1.	1.	0.02
+	ROUTED TO 616617	31.	12.10	3.	1.	1.	0.02
+	HYDROGRAPH AT 211R	118.	12.08	15.	4.	4.	0.08
+	2 COMBINED AT C617L	149.	12.08	19.	5.	4.	0.10
+	HYDROGRAPH AT 211U	34.	12.08	7.	2.	2.	0.03
+	DIVERSION TO D614R	24.	12.08	5.	1.	1.	0.03
+	HYDROGRAPH AT D614L	10.	12.08	2.	1.	1.	0.03
+	2 COMBINED AT C617	159.	12.08	21.	6.	5.	0.13
+	ROUTED TO 617618	157.	12.17	21.	6.	5.	0.13
+	HYDROGRAPH AT 211S	73.	12.07	10.	3.	2.	0.05
+	2 COMBINED AT C618I	225.	12.13	31.	9.	7.	0.18
+	ROUTED TO C618O	220.	12.18	24.	8.	7.	0.18
+	HYDROGRAPH AT BB614R	24.	12.08	5.	1.	1.	0.03
+	ROUTED TO 614615	24.	12.12	5.	1.	1.	0.03
+	HYDROGRAPH AT 211V	9.	12.02	2.	1.	0.	0.00
+	2 COMBINED AT C615	31.	12.07	6.	2.	2.	0.03
+	DIVERSION TO D615R	11.	12.07	1.	0.	0.	0.03
+	HYDROGRAPH AT D615L	21.	12.07	5.	2.	1.	0.03
+	ROUTED TO 615618	21.	12.08	5.	2.	1.	0.03
+	2 COMBINED AT C618	239.	12.18	29.	10.	8.	0.19

+	ROUTED TO 618619	235.	12.25	29.	10.	8.	0.19
+	HYDROGRAPH AT 211T	95.	12.08	12.	3.	3.	0.07
+	2 COMBINED AT C619L	307.	12.23	41.	13.	11.	0.26
+	HYDROGRAPH AT BB615R	11.	12.07	1.	0.	0.	0.03
+	ROUTED TO 615619	10.	12.18	1.	0.	0.	0.03
+	2 COMBINED AT C619I	317.	12.23	42.	14.	11.	0.25
+	ROUTED TO C619O	176.	12.53	42.	14.	11.	0.25
+	DIVERSION TO D619L	0.	0.02	0.	0.	0.	0.25
+	HYDROGRAPH AT D619R	176.	12.53	42.	14.	11.	0.25
+	ROUTED TO 619620	176.	12.55	42.	14.	11.	0.25
+	HYDROGRAPH AT BB619L	0.	0.02	0.	0.	0.	0.25
+	ROUTED TO 619620	0.	0.02	0.	0.	0.	0.25
+	HYDROGRAPH AT 211W	58.	12.00	8.	3.	2.	0.03
+	3 COMBINED AT C620R	187.	12.33	50.	16.	13.	0.28
+	HYDROGRAPH AT BB611R	126.	12.38	28.	8.	6.	0.14
+	ROUTED TO 611620	126.	12.40	28.	8.	6.	0.14
+	2 COMBINED AT C620	312.	12.40	77.	24.	20.	0.42
+	ROUTED TO 620621	312.	12.42	77.	24.	20.	0.42
+	2 COMBINED AT C621	1597.	12.42	1122.	403.	325.	7.93
+	ROUTED TO 621622	1596.	12.52	1122.	403.	325.	7.93
+	HYDROGRAPH AT 211X	304.	12.10	46.	15.	12.	0.21
+	2 COMBINED AT C622R	1782.	12.28	1158.	417.	336.	8.14
+	HYDROGRAPH AT 211A	173.	12.13	24.	7.	5.	0.14
+	ROUTED TO C600O	171.	12.18	24.	7.	5.	0.14
+	ROUTED TO 600601	169.	12.25	24.	7.	5.	0.14
+	HYDROGRAPH AT 211B	147.	12.10	18.	5.	4.	0.11
+	2 COMBINED AT C601	300.	12.17	42.	12.	9.	0.25
+	ROUTED TO 601602	298.	12.23	42.	12.	9.	0.25
+	HYDROGRAPH AT 211C	77.	12.02	10.	3.	2.	0.04
+	2 COMBINED AT C602L	338.	12.18	51.	15.	12.	0.30
+	HYDROGRAPH AT 211D	89.	12.07	12.	4.	3.	0.07
	2 COMBINED AT						

+		C602	418.	12.13	64.	18.	15.	0.37
+	ROUTED TO	602603	415.	12.20	64.	18.	15.	0.37
+	HYDROGRAPH AT	211E	279.	12.02	34.	11.	9.	0.16
+	2 COMBINED AT	C603	617.	12.08	97.	29.	23.	0.52
+	ROUTED TO	603622	605.	12.17	97.	29.	23.	0.52
+	HYDROGRAPH AT	211F	190.	12.03	28.	9.	7.	0.11
+	2 COMBINED AT	C622L	753.	12.13	125.	38.	31.	0.63
+	2 COMBINED AT	C622	2448.	12.20	1268.	453.	365.	8.78
+	ROUTED TO	622549	2427.	12.30	1266.	453.	365.	8.78
+	HYDROGRAPH AT	211Y	128.	12.10	17.	5.	4.	0.09
+	2 COMBINED AT	C549R	2512.	12.30	1279.	457.	368.	8.87
+	2 COMBINED AT	C549	3503.	12.32	1699.	641.	517.	13.06
+	ROUTED TO	549626	3481.	12.42	1697.	641.	517.	13.06
+	HYDROGRAPH AT	211Z	137.	12.02	16.	5.	4.	0.08
+	2 COMBINED AT	C626C	3507.	12.40	1705.	645.	521.	13.14
+	HYDROGRAPH AT	211AA	47.	12.08	8.	2.	2.	0.03
+	ROUTED TO	625626	46.	12.15	8.	2.	2.	0.03
+	HYDROGRAPH AT	211AB	74.	12.02	8.	2.	2.	0.04
+	ROUTED TO	623624	73.	12.02	8.	2.	2.	0.04
+	HYDROGRAPH AT	211AC	51.	12.02	7.	2.	2.	0.03
+	2 COMBINED AT	C624	125.	12.02	15.	5.	4.	0.07
+	ROUTED TO	624626	124.	12.07	15.	5.	4.	0.07
+	HYDROGRAPH AT	211AD	76.	12.02	10.	3.	3.	0.04
+	2 COMBINED AT	C626R	198.	12.03	26.	8.	6.	0.11
+	3 COMBINED AT	C626	3591.	12.40	1724.	654.	528.	13.28
+	ROUTED TO	626627	3587.	12.42	1724.	654.	528.	13.28
+	HYDROGRAPH AT	211AE	63.	12.02	8.	2.	2.	0.03
+	2 COMBINED AT	C627	3598.	12.42	1728.	656.	530.	13.32

*** NORMAL END OF HEC-1 ***

100-Year, Existing Condition (6-Hour)

```
1*****************************************                    *****************************************
 *                                       *                    *                                       *
 *   FLOOD HYDROGRAPH PACKAGE  (HEC-1)   *                    *    U.S. ARMY CORPS OF ENGINEERS       *
 *              MAY   1991               *                    *    HYDROLOGIC ENGINEERING CENTER      *
 *            VERSION 4.0.1E             *                    *          609 SECOND STREET            *
 *                                       *                    *       DAVIS, CALIFORNIA 95616         *
 *  RUN DATE  02/21/:0  TIME  09:29:06   *                    *           (916) 551-1748              *
 *                                       *                    *                                       *
 *****************************************                    *****************************************
```

```
X     X  XXXXXXX   XXXXX           X
X     X  X        X     X         XX
X     X  X        X                X
XXXXXXX  XXXX     X        XXXXX   X
X     X  X        X                X
X     X  X        X     X          X
X     X  XXXXXXX   XXXXX          XXX
```

THIS PROGRAM REPLACES ALL PREVIOUS VERSIONS OF HEC-1 KNOWN AS HEC1 (JAN 73), HEC1GS, HEC1DB, AND HEC1KW.

THE DEFINITIONS OF VARIABLES -RTIMP- AND -RTIOR- HAVE CHANGED FROM THOSE USED WITH THE 1973-STYLE INPUT STRUCTURE.
THE DEFINITION OF -AMSKK- ON RM-CARD WAS CHANGED WITH REVISIONS DATED 28 SEP 81. THIS IS THE FORTRAN77 VERSION
NEW OPTIONS: DAMBREAK OUTFLOW SUBMERGENCE , SINGLE EVENT DAMAGE CALCULATION, DSS:WRITE STAGE FREQUENCY,
DSS:READ TIME SERIES AT DESIRED CALCULATION INTERVAL LOSS RATE:GREEN AND AMPT INFILTRATION
KINEMATIC WAVE: NEW FINITE DIFFERENCE ALGORITHM


```
LINE          ID.......1.......2.......3.......4.......5.......6.......7.......8.......9......10

  1           ID   Golden Eagle Park Dam Modifications
  2           ID        by Stantec: Proj. No. 28900095                    File: ALTFf-2.IH1
  3           ID        for FCDMC:  FCD                                   Date:07-08-99     mcg
  4           ID                                                        Revised:
  5           ID
  6           ID   Alternative F:
  7           ID        Addition of an auxillary spillway.  This spillway will function such
  8           ID        that the existing emergency spillway does not operate for the 100-year
  9           ID        storm.  The stage-storage relation is adjusted to reflect revised
 10           ID        grading in the park.
 11           ID
 12           ID        The purpose of this model is to estimate peak discharges in Ashbrook
 13           ID        Wash for evaluation of the Dam modifications impact on the floodplain.
 14           ID
 15           ID   100-year, 6-hour existing condition watershed model for Ashbrook Wash
 16           ID   upstream of the Fort McDowell Indian Reservation boundary.
 17           ID        This model is a portion of the original Fountain Hills North FDS
 18           ID        watershed model conducted by GVSCE, 1994.  The title cards from that
 19           ID        model are included for reference.
 20           ID
 21           ID   Fountain Hills North Floodplain Delineation Study
 22           ID        FCD 92-04       by GVSCE                          File:  EX100-6.IH1
 23           ID     Existing Condition                                   Date:    02-25-94   trl
 24           ID     100-Year 6-Hour Storm, Clark Unit Hydrograph     Revised:    09-14-94   trl
              *
 25           IT       1                    1080
 26           IO       5
 27           IN      15
              *DIAGRAM
              *
 28           JD    3.30    0.01
 29           PC   0.000   0.008   0.016   0.025   0.033   0.041   0.050   0.058   0.066   0.074
 30           PC   0.087   0.099   0.118   0.138   0.216   0.377   0.834   0.911   0.931   0.950
 31           PC   0.962   0.972   0.983   0.991   1.000
 32           JD    3.28    0.50
 33           JD    3.23    2.80
 34           PC   0.000   0.009   0.016   0.025   0.034   0.042   0.051   0.059   0.067   0.076
 35           PC   0.087   0.100   0.120   0.163   0.252   0.451   0.694   0.837   0.900   0.938
 36           PC   0.950   0.963   0.975   0.988   1.000
 37           JD    3.04    16.0
 38           PC   0.000   0.015   0.020   0.030   0.048   0.063   0.076   0.090   0.105   0.119
 39           PC   0.135   0.152   0.175   0.222   0.304   0.472   0.670   0.796   0.868   0.912
 40           PC   0.946   0.960   0.973   0.987   1.000
 41           JD    2.67    90.0
 42           PC   0.000   0.021   0.035   0.051   0.071   0.087   0.105   0.125   0.143   0.160
 43           PC   0.179   0.201   0.232   0.281   0.364   0.500   0.658   0.773   0.841   0.888
 44           PC   0.927   0.945   0.964   0.982   1.000
              *

 45           KK    204A
 46           KM   Sub-Basin   204A
 47           KM
 48           KM      The Clark Unit Hydrograph is used for this basin.
 49           KM          The Natural time-area relation is used for this basin.
 50           KM
```



```
LINE          ID.......1.......2.......3.......4.......5.......6.......7.......8.......9......10

 51           KM      Time of Concentration for this sub-basin is based on the following:
```

```
 52          KM          6-Hour Rainfall, Pattern No.  1.00
 53          KM          An rainfall areal reduction factor of 0.999
 54          KM
 55          KM       EXCESS RAINFALL VALUES EXCEEDED IN 5-MINUTE INTERVALS
 56          KM     5  10  15  20  25  30  35  40  45  50  55  60  65  70  75  80  85  90
 57          KM   .45 .44 .44 .13 .10 .09 .04 .03 .03 .00 .00 .00 .00 .00 .00 .00 .00 .00
 58          KM
 59          KM          L=   0.687 miles, S=  175 feet/mile, Kb= .10
 60          KM
 61          BA   0.108
 62          LG    0.15    0.39    5.80    0.19    0.00
 63          UC   0.325   0.280
 64          UA       0       3       5       8      12      20      43      75      90      96
 65          UA     100
             *

 66          KK  522523
 67          KM      Normal depth channel route from C522 to C523
 68          KM      Source:  200 Scale Mapping
 69          RS      10    FLOW      -1
 70          RC   0.060   0.050   0.060  3275.0  0.0197
 71          RX  1000.0  1020.0  1035.0  1065.0  1080.0  1120.0  1160.0  1185.0
 72          RY  1678.0  1676.0  1674.0  1672.0  1672.0  1674.0  1676.0  1678.0
             *

 73          KK    204B
 74          KM   Sub-Basin   204B
 75          KM
 76          KM      The Clark Unit Hydrograph is used for this basin.
 77          KM          The Natural time-area relation is used for this basin.
 78          KM
 79          KM      Time of Concentration for this sub-basin is based on the following:
 80          KM          6-Hour Rainfall, Pattern No.  1.00
 81          KM          An rainfall areal reduction factor of 0.998
 82          KM
 83          KM       EXCESS RAINFALL VALUES EXCEEDED IN 5-MINUTE INTERVALS
 84          KM     5  10  15  20  25  30  35  40  45  50  55  60  65  70  75  80  85  90
 85          KM   .44 .44 .43 .13 .09 .08 .03 .03 .03 .00 .00 .00 .00 .00 .00 .00 .00 .00
 86          KM
 87          KM          L=   0.775 miles, S=  128 feet/mile, Kb= .10
 88          KM
 89          BA   0.126
 90          LG    0.15    0.39    5.80    0.21    0.20
 91          UC   0.408   0.364
 92          UA       0       3       5       8      12      20      43      75      90      96
 93          UA     100
             *

 94          KK   C523I
 95          KM      Hydrograph combine 522523 + 204B at C523I
 96          HC       2
             *
```



```
LINE         ID.......1.......2.......3.......4.......5.......6.......7.......8.......9......10

 97          KK   C523O
 98          KM      Reservoir route at C523.
 99          RS       1    ELEV  1650.3
100          SV    0.00    0.01    0.12    0.71    2.23    2.50    2.80    3.10    3.20    3.40
101          SV    3.70    4.00    4.30    4.60    4.90    5.20    5.50
102          SE  1650.3  1652.0  1654.0  1656.0  1658.0  1658.2  1658.4  1658.6  1658.7  1658.8
103          SE  1659.0  1659.2  1659.4  1659.6  1659.8  1660.0  1660.2
104          SQ       0      22      78     144     209     214     220     224     226     232
105          SQ     239     249     288     384     529     726     960
             *

106          KK   D523L
107          KM      Hydrograph diversion at C523.  Main flow continues in the left branch.
108          KM      Diverted flow is in the right branch.
109          DT   D523R
110          DI       0      22      78     144     209     214     220     224     226     232
111          DI     239     249     288     384     529     726     960
112          DQ       0       0       0       0       0       0       0       0       0       3
113          DQ       5      10      20      37      61      96     139
             *

114          KK    205A
115          KM   Sub-Basin   205A
116          KM
117          KM      The Clark Unit Hydrograph is used for this basin.
118          KM          The Natural time-area relation is used for this basin.
119          KM
120          KM      Time of Concentration for this sub-basin is based on the following:
121          KM          6-Hour Rainfall, Pattern No.  1.00
122          KM          An rainfall areal reduction factor of 0.998
123          KM
124          KM       EXCESS RAINFALL VALUES EXCEEDED IN 5-MINUTE INTERVALS
125          KM     5  10  15  20  25  30  35  40  45  50  55  60  65  70  75  80  85  90
126          KM   .45 .44 .44 .13 .09 .08 .04 .04 .03 .03 .03 .03 .01 .01 .01 .01 .01 .01
127          KM
128          KM          L=   0.870 miles, S=  378 feet/mile, Kb= .14
129          KM
130          BA   0.118
131          LG    0.25    0.35    4.35    0.40   35.00
132          UC   0.350   0.350
133          UA       0       3       5       8      12      20      43      75      90      96
```

```
 134          UA     100
              *

 135          KK    205B
 136          KM   Sub-Basin   205B
 137          KM
 138          KM      The Clark Unit Hydrograph is used for this basin.
 139          KM          The Natural time-area relation is used for this basin.
 140          KM
 141          KM      Time of Concentration for this sub-basin is based on the following:
 142          KM          6-Hour Rainfall, Pattern No.  1.00
 143          KM          An rainfall areal reduction factor of 0.997
 144          KM
1                                          HEC-1 INPUT                                                    PAGE  4

LINE          ID.......1.......2.......3.......4.......5.......6.......7.......8.......9......10

 145          KM        EXCESS RAINFALL VALUES EXCEEDED IN 5-MINUTE INTERVALS
 146          KM     5  10  15  20  25  30  35  40  45  50  55  60  65  70  75  80  85  90
 147          KM   .45 .44 .44 .13 .09 .08 .04 .04 .03 .03 .03 .03 .01 .01 .01 .01 .01 .01
 148          KM
 149          KM          L=   0.759 miles, S=  373 feet/mile, Kb= .14
 150          KM
 151          BA   0.211
 152          LG    0.25    0.35    4.35    0.40   35.00
 153          UC   0.321   0.204
 154          UA       0       3       5       8      12      20      43      75      90      96
 155          UA     100
              *

 156          KK    C528
 157          KM      Hydrograph combine 205A + 205B at C528
 158          HC       2
              *

 159          KK  528530
 160          KM      Normal depth channel route from C528 to C530
 161          KM      Source:  Hydrology Field Reconnaissance
 162          RS       2    FLOW      -1
 163          RC   0.060   0.043   0.060  2594.0  0.0709
 164          RX  1000.0  1018.0  1031.0  1042.0  1052.0  1066.0  1093.0  1107.0
 165          RY    96.3    92.2    89.9    85.9    85.7    91.5    91.2    96.3
              *

 166          KK    205C
 167          KM   Sub-Basin   205C
 168          KM
 169          KM      The Clark Unit Hydrograph is used for this basin.
 170          KM          The Natural time-area relation is used for this basin.
 171          KM
 172          KM      Time of Concentration for this sub-basin is based on the following:
 173          KM          6-Hour Rainfall, Pattern No.  1.00
 174          KM          An rainfall areal reduction factor of 0.999
 175          KM
 176          KM        EXCESS RAINFALL VALUES EXCEEDED IN 5-MINUTE INTERVALS
 177          KM     5  10  15  20  25  30  35  40  45  50  55  60  65  70  75  80  85  90
 178          KM   .45 .44 .44 .13 .09 .08 .04 .04 .03 .03 .03 .03 .01 .01 .01 .01 .01 .01
 179          KM
 180          KM          L=   0.618 miles, S=  331 feet/mile, Kb= .15
 181          KM
 182          BA   0.059
 183          LG    0.25    0.35    4.35    0.41   35.00
 184          UC   0.308   0.343
 185          UA       0       3       5       8      12      20      43      75      90      96
 186          UA     100
              *
1                                          HEC-1 INPUT                                                    PAGE  5

LINE          ID.......1.......2.......3.......4.......5.......6.......7.......8.......9......10

 187          KK   C530R
 188          KM      Hydrograph combine 528530 + 205C at C530 right branch
 189          HC       2
              *

 190          KK    205D
 191          KM   Sub-Basin   205D
 192          KM
 193          KM      The Clark Unit Hydrograph is used for this basin.
 194          KM          The Natural time-area relation is used for this basin.
 195          KM
 196          KM      Time of Concentration for this sub-basin is based on the following:
 197          KM          6-Hour Rainfall, Pattern No.  1.00
 198          KM          An rainfall areal reduction factor of 0.996
 199          KM
 200          KM        EXCESS RAINFALL VALUES EXCEEDED IN 5-MINUTE INTERVALS
 201          KM     5  10  15  20  25  30  35  40  45  50  55  60  65  70  75  80  85  90
 202          KM   .45 .44 .44 .13 .09 .08 .04 .04 .03 .03 .03 .03 .01 .01 .01 .01 .01 .01
 203          KM
 204          KM          L=   1.020 miles, S=  361 feet/mile, Kb= .13
 205          KM
 206          BA   0.319
 207          LG    0.25    0.35    4.35    0.40   35.00
 208          UC   0.379   0.246
 209          UA       0       3       5       8      12      20      43      75      90      96
 210          UA     100
              *
```

```
 211          KK    205E
 212          KM   Sub-Basin    205E
 213          KM
 214          KM      The Clark Unit Hydrograph is used for this basin.
 215          KM          The Natural time-area relation is used for this basin.
 216          KM
 217          KM      Time of Concentration for this sub-basin is based on the following:
 218          KM          6-Hour Rainfall, Pattern No.  1.00
 219          KM          An rainfall areal reduction factor of 0.997
 220          KM
 221          KM       EXCESS RAINFALL VALUES EXCEEDED IN 5-MINUTE INTERVALS
 222          KM     5  10  15  20  25  30  35  40  45  50  55  60  65  70  75  80  85  90
 223          KM   .45 .44 .44 .13 .09 .08 .04 .04 .03 .03 .03 .03 .01 .01 .01 .01 .01 .01
 224          KM
 225          KM          L=   1.357 miles, S=  358 feet/mile, Kb= .14
 226          KM
 227          BA   0.218
 228          LG    0.25    0.35    4.35    0.40   35.00
 229          UC   0.488   0.508
 230          UA       0       3       5       8      12      20      43      75      90      96
 231          UA     100
              *
1                                          HEC-1 INPUT                                          PAGE  6

LINE          ID.......1.......2.......3.......4.......5.......6.......7.......8.......9......10


 232          KK    C529
 233          KM      Hydrograph combine 205D + 205E at C529
 234          HC       2
              *
              * *
              * * NOTE:  529530 too short to route
              * *
              *

 235          KK    C530
 236          KM      Hydrograph combine C529 + C530R at C530
 237          HC       2
              *

 238          KK  530531
 239          KM      Normal depth channel route from C530 to C531
 240          KM      Source:  Hydrology Field Reconnaissance
 241          RS       3    FLOW      -1
 242          RC   0.060   0.059   0.060  2426.0  0.0404
 243          RX  1000.0  1035.0  1050.0  1060.0  1075.0  1081.0  1088.0  1094.0
 244          RY    95.9    86.5    86.2    83.1    84.0    90.2    95.6    99.3
              *

 245          KK    205F
 246          KM   Sub-Basin    205F
 247          KM
 248          KM      The Clark Unit Hydrograph is used for this basin.
 249          KM          The Natural time-area relation is used for this basin.
 250          KM
 251          KM      Time of Concentration for this sub-basin is based on the following:
 252          KM          6-Hour Rainfall, Pattern No.  1.00
 253          KM          An rainfall areal reduction factor of 0.998
 254          KM
 255          KM       EXCESS RAINFALL VALUES EXCEEDED IN 5-MINUTE INTERVALS
 256          KM     5  10  15  20  25  30  35  40  45  50  55  60  65  70  75  80  85  90
 257          KM   .45 .44 .44 .13 .09 .08 .04 .04 .03 .03 .03 .03 .01 .01 .01 .01 .01 .01
 258          KM
 259          KM          L=   0.786 miles, S=  326 feet/mile, Kb= .14
 260          KM
 261          BA   0.161
 262          LG    0.25    0.35    4.35    0.41   35.00
 263          UC   0.350   0.269
 264          UA       0       3       5       8      12      20      43      75      90      96
 265          UA     100
              *

 266          KK    C531
 267          KM      Hydrograph combine 530531 + 205F at C531
 268          HC       2
              *
1                                          HEC-1 INPUT                                          PAGE  7

LINE          ID.......1.......2.......3.......4.......5.......6.......7.......8.......9......10


 269          KK  531532
 270          KM      Normal depth channel route from C531 to C532
 271          KM      Source:  Hydrology Field Reconnaissance
 272          RS       4    FLOW      -1
 273          RC   0.060   0.065   0.060  3391.0  0.0463
 274          RX  1000.0  1012.0  1022.0  1032.0  1050.0  1056.0  1068.0  1092.0
 275          RY    98.8    93.8    89.1    86.4    86.5    89.1    91.0    97.6
              *

 276          KK    205G
 277          KM   Sub-Basin    205G
 278          KM
 279          KM      The Clark Unit Hydrograph is used for this basin.
 280          KM          The Natural time-area relation is used for this basin.
 281          KM
```

```
 282          KM      Time of Concentration for this sub-basin is based on the following:
 283          KM          6-Hour Rainfall, Pattern No.  1.00
 284          KM          An rainfall areal reduction factor of 0.998
 285          KM
 286          KM       EXCESS RAINFALL VALUES EXCEEDED IN 5-MINUTE INTERVALS
 287          KM     5  10  15  20  25  30  35  40  45  50  55  60  65  70  75  80  85  90
 288          KM   .45 .44 .44 .13 .09 .07 .03 .03 .03 .03 .03 .03 .01 .01 .01 .01 .01 .01
 289          KM
 290          KM          L=   0.924 miles, S=  338 feet/mile, Kb= .13
 291          KM
 292          BA   0.185
 293          LG    0.24    0.35    4.50    0.40   31.20
 294          UC   0.367   0.298
 295          UA       0       3       5       8      12      20      43      75      90      96
 296          UA     100
              *

 297          KK   C532L
 298          KM      Hydrograph combine 531532 + 205G at C532 left branch
 299          HC       2
              *

 300          KK    205H
 301          KM   Sub-Basin   205H
 302          KM
 303          KM      The Clark Unit Hydrograph is used for this basin.
 304          KM          The Natural time-area relation is used for this basin.
 305          KM
 306          KM      Time of Concentration for this sub-basin is based on the following:
 307          KM          6-Hour Rainfall, Pattern No.  1.00
 308          KM          An rainfall areal reduction factor of 0.997
 309          KM
 310          KM       EXCESS RAINFALL VALUES EXCEEDED IN 5-MINUTE INTERVALS
 311          KM     5  10  15  20  25  30  35  40  45  50  55  60  65  70  75  80  85  90
 312          KM   .45 .44 .44 .13 .09 .08 .04 .03 .03 .03 .03 .03 .01 .01 .01 .01 .01 .01
 313          KM
 314          KM          L=   1.464 miles, S=  325 feet/mile, Kb= .13
 315          KM
 316          BA   0.261
```



```
LINE          ID.......1.......2.......3.......4.......5.......6.......7.......8.......9......10

 317          LG    0.24    0.35    4.50    0.39   31.60
 318          UC   0.513   0.514
 319          UA       0       3       5       8      12      20      43      75      90      96
 320          UA     100
              *

 321          KK    C532
 322          KM      Hydrograph combine C532L + 205H at C532
 323          HC       2
              *

 324          KK  532533
 325          KM      Normal depth channel route from C532 to C533
 326          KM      Source:  Hydrology Field Reconnaissance
 327          RS       1    FLOW      -1
 328          RC   0.060   0.045   0.060  1555.0  0.0283
 329          RX  1000.0  1020.0  1030.0  1048.0  1065.0  1077.0  1092.0  1119.0
 330          RY    98.0    89.4    88.1    85.6    85.9    92.2    93.8    97.0
              *

 331          KK    205I
 332          KM   Sub-Basin   205I
 333          KM
 334          KM      The Clark Unit Hydrograph is used for this basin.
 335          KM          The Natural time-area relation is used for this basin.
 336          KM
 337          KM      Time of Concentration for this sub-basin is based on the following:
 338          KM          6-Hour Rainfall, Pattern No.  1.00
 339          KM          An rainfall areal reduction factor of 0.995
 340          KM
 341          KM       EXCESS RAINFALL VALUES EXCEEDED IN 5-MINUTE INTERVALS
 342          KM     5  10  15  20  25  30  35  40  45  50  55  60  65  70  75  80  85  90
 343          KM   .44 .44 .43 .13 .09 .08 .03 .03 .03 .01 .01 .01 .00 .00 .00 .00 .00 .00
 344          KM
 345          KM          L=   1.487 miles, S=  326 feet/mile, Kb= .11
 346          KM
 347          BA   0.354
 348          LG    0.20    0.37    5.20    0.28   15.20
 349          UC   0.458   0.386
 350          UA       0       3       5       8      12      20      43      75      90      96
 351          UA     100
              *

 352          KK    C533
 353          KM      Hydrograph combine 532533 + 205I at C533
 354          HC       2
              *

 355          KK  533534
 356          KM      Normal depth channel route from C533 to C534
 357          KM      Source:  Hydrology Field Reconnaissance
 358          RS      10    FLOW      -1
 359          RC   0.060   0.046   0.060  7145.0  0.0241
 360          RX  1000.0  1010.0  1060.0  1073.0  1160.0  1181.0  1223.0  1237.0
 361          RY    97.8    93.7    94.7    90.8    89.9    92.4    94.0    96.8
```

```
                *
LINE            ID.......1.......2.......3.......4.......5.......6.......7.......8.......9......10

 362            KK    205J
 363            KM   Sub-Basin   205J
 364            KM
 365            KM      The Clark Unit Hydrograph is used for this basin.
 366            KM          The Natural time-area relation is used for this basin.
 367            KM
 368            KM      Time of Concentration for this sub-basin is based on the following:
 369            KM          6-Hour Rainfall, Pattern No.  1.00
 370            KM          An rainfall areal reduction factor of 0.995
 371            KM
 372            KM       EXCESS RAINFALL VALUES EXCEEDED IN 5-MINUTE INTERVALS
 373            KM     5  10  15  20  25  30  35  40  45  50  55  60  65  70  75  80  85  90
 374            KM   .44 .43 .42 .12 .08 .06 .03 .02 .02 .00 .00 .00 .00 .00 .00 .00 .00 .00
 375            KM
 376            KM          L=   1.633 miles, S=  243 feet/mile, Kb= .08
 377            KM
 378            BA   0.369
 379            LG    0.21    0.35    4.90    0.30    3.50
 380            UC   0.450   0.398
 381            UA       0       3       5       8      12      20      43      75      90      96
 382            UA     100
                *

 383            KK   C534R
 384            KM      Hydrograph combine 533534 + 205J at C534 right branch
 385            HC       2
                *

 386            KK    205K
 387            KM   Sub-Basin   205K
 388            KM
 389            KM      The Clark Unit Hydrograph is used for this basin.
 390            KM          The Natural time-area relation is used for this basin.
 391            KM
 392            KM      Time of Concentration for this sub-basin is based on the following:
 393            KM          6-Hour Rainfall, Pattern No.  1.00
 394            KM          An rainfall areal reduction factor of 0.997
 395            KM
 396            KM       EXCESS RAINFALL VALUES EXCEEDED IN 5-MINUTE INTERVALS
 397            KM     5  10  15  20  25  30  35  40  45  50  55  60  65  70  75  80  85  90
 398            KM   .44 .44 .43 .13 .09 .08 .03 .03 .03 .00 .00 .00 .00 .00 .00 .00 .00 .00
 399            KM
 400            KM          L=   1.772 miles, S=  249 feet/mile, Kb= .10
 401            KM
 402            BA   0.245
 403            LG    0.16    0.38    5.60    0.22    1.50
 404            UC   0.546   0.665
 405            UA       0       3       5       8      12      20      43      75      90      96
 406            UA     100
                *
```



```
LINE            ID.......1.......2.......3.......4.......5.......6.......7.......8.......9......10

 407            KK    C534
 408            KM      Hydrograph combine C534R + 205K at C534
 409            HC       2
                *

 410            KK  534535
 411            KM      Normal depth channel route from C534 to C535
 412            KM      Source:  Hydrology Field Reconnaissance
 413            RS       3    FLOW      -1
 414            RC   0.065   0.046   0.065  2037.0  0.0221
 415            RX  1000.0  1010.0  1016.0  1075.0  1150.0  1162.0  1174.0  1182.0
 416            RY    97.1    93.4    91.6    89.6    86.9    90.8    92.2    92.3
                *

 417            KK    205L
 418            KM   Sub-Basin   205L
 419            KM
 420            KM      The Clark Unit Hydrograph is used for this basin.
 421            KM          The Natural time-area relation is used for this basin.
 422            KM
 423            KM      Time of Concentration for this sub-basin is based on the following:
 424            KM          6-Hour Rainfall, Pattern No.  1.00
 425            KM          An rainfall areal reduction factor of 0.998
 426            KM
 427            KM       EXCESS RAINFALL VALUES EXCEEDED IN 5-MINUTE INTERVALS
 428            KM     5  10  15  20  25  30  35  40  45  50  55  60  65  70  75  80  85  90
 429            KM   .44 .43 .42 .12 .08 .06 .02 .02 .02 .00 .00 .00 .00 .00 .00 .00 .00 .00
 430            KM
 431            KM          L=   0.701 miles, S=  284 feet/mile, Kb= .09
 432            KM
 433            BA   0.118
 434            LG    0.19    0.36    5.00    0.29    0.00
 435            UC   0.254   0.206
 436            UA       0       3       5       8      12      20      43      75      90      96
 437            UA     100
                *
```

```
438          KK    C535
439          KM      Hydrograph combine 534535 + 205L at C535
440          HC       2
             *

441          KK  535536
442          KM      Normal depth channel route from C535 to C536
443          KM      Source:  HEC-2 Cross Section: HE 3.275
444          RS       8    FLOW      -1
445          RC   0.075   0.050   0.075  2975.0  0.0236
446          RX  9852.8  9871.5  9957.7 10000.0 10015.6 10052.4 10142.4 10183.6
447          RY  1911.6  1904.3  1906.9  1900.8  1900.8  1905.4  1905.2  1912.6
             *
```



```
LINE         ID.......1.......2.......3.......4.......5.......6.......7.......8.......9......10

448          KK    205M
449          KM   Sub-Basin   205M
450          KM
451          KM      The Clark Unit Hydrograph is used for this basin.
452          KM          The HEC-1 time-area relation is used for this basin.
453          KM
454          KM      Time of Concentration for this sub-basin is based on the following:
455          KM          6-Hour Rainfall, Pattern No.  1.00
456          KM          An rainfall areal reduction factor of 0.998
457          KM
458          KM       EXCESS RAINFALL VALUES EXCEEDED IN 5-MINUTE INTERVALS
459          KM     5  10  15  20  25  30  35  40  45  50  55  60  65  70  75  80  85  90
460          KM   .46 .46 .45 .15 .11 .11 .05 .05 .04 .02 .02 .02 .00 .00 .00 .00 .00 .00
461          KM
462          KM          L=   0.839 miles, S=  230 feet/mile, Kb= .06
463          KM
464          BA   0.139
465          LG    0.15    0.33    5.40    0.22   21.00
466          UC   0.233   0.197
             *

467          KK   C536R
468          KM      Hydrograph combine 535536 + 205M at C536 right branch
469          HC       2
             *

470          KK    205N
471          KM   Sub-Basin   205N
472          KM
473          KM      The Clark Unit Hydrograph is used for this basin.
474          KM          The HEC-1 time-area relation is used for this basin.
475          KM
476          KM      Time of Concentration for this sub-basin is based on the following:
477          KM          6-Hour Rainfall, Pattern No.  1.00
478          KM          An rainfall areal reduction factor of 0.998
479          KM
480          KM       EXCESS RAINFALL VALUES EXCEEDED IN 5-MINUTE INTERVALS
481          KM     5  10  15  20  25  30  35  40  45  50  55  60  65  70  75  80  85  90
482          KM   .45 .44 .44 .13 .09 .08 .03 .03 .03 .00 .00 .00 .00 .00 .00 .00 .00 .00
483          KM
484          KM          L=   1.183 miles, S=  245 feet/mile, Kb= .10
485          KM
486          BA   0.156
487          LG    0.15    0.39    5.70    0.21    0.80
488          UC   0.413   0.457
             *

489          KK   C536I
490          KM      Hydrograph combine C536R + 205N at C536I
491          HC       2
             *
             * *
             * * C536I is the total flow in Hesperus Wash upstream of Dam 36
             * *
             *
```



```
LINE         ID.......1.......2.......3.......4.......5.......6.......7.......8.......9......10

492          KK   C536O
493          KM      Reservoir route at C536 (Dam 36).
494          RS       1    ELEV  1852.1
495          SV    0.00   14.41   35.94   67.64  108.61  158.07  218.14  276.00  280.00  289.00
496          SV  298.02  308.00  317.00  327.00  337.00  346.95  358.00  374.00
497          SE  1852.1  1866.0  1870.0  1874.0  1878.0  1882.0  1886.0  1889.0  1889.2  1889.6
498          SE  1890.0  1890.4  1890.8  1891.2  1891.6  1892.0  1892.4  1893.0
499          SQ       0     108     168     211     245     276     301     320     338     347
500          SQ     356     459     679     995    1408    1905    2477    3119    3826    5009
501          SE  1852.1  1858.0  1862.0  1866.0  1870.0  1874.0  1878.0  1882.0  1886.0  1889.0
502          SE  1889.2  1889.6  1890.0  1890.4  1890.8  1891.2  1891.6  1892.0  1892.4  1893.0
503          RL                   0.17
             *
             * *
             * * End Basin 205.  Start Basin 206
             * *
             *

504          KK  536537
505          KM      Normal depth channel route from C536 to C537
```

```
506          KM      Source:  HEC-2 Cross Section: HE 2.729
507          RS       3    FLOW      -1
508          RC   0.075   0.050   0.075  1480.0  0.0209
509          RX  9900.0  9912.0  9947.3  9979.3 10025.0 10044.5 10051.0 10060.0
510          RY  1846.5  1845.4  1843.1  1834.3  1833.6  1840.5  1843.3  1843.5
             *

511          KK    206A
512          KM   Sub-Basin   206A
513          KM
514          KM      The Clark Unit Hydrograph is used for this basin.
515          KM          The Urban time-area relation is used for this basin.
516          KM
517          KM      Time of Concentration for this sub-basin is based on the following:
518          KM          6-Hour Rainfall, Pattern No.  1.00
519          KM          An rainfall areal reduction factor of 0.998
520          KM
521          KM       EXCESS RAINFALL VALUES EXCEEDED IN 5-MINUTE INTERVALS
522          KM     5  10  15  20  25  30  35  40  45  50  55  60  65  70  75  80  85  90
523          KM   .47 .46 .46 .16 .13 .12 .05 .05 .05 .04 .03 .03 .01 .01 .01 .01 .01 .01
524          KM
525          KM          L=   0.631 miles, S=  256 feet/mile, Kb= .04
526          KM
527          BA   0.128
528          LG    0.13    0.28    5.30    0.23   32.80
529          UC   0.158   0.107
530          UA       0       5      16      30      65      77      84      90      94      97
531          UA     100
             *
```



```
LINE         ID.......1.......2.......3.......4.......5.......6.......7.......8.......9......10

532          KK    C537
533          KM      Hydrograph combine 536537 + 206A at C537
534          HC       2
             *

535          KK  537538
536          KM      Normal depth channel route from C537 to C538
537          KM      Source:  HEC-2 Cross Section: HE 2.493
538          RS       3    FLOW      -1
539          RC   0.075   0.050   0.075  2155.0  0.0210
540          RX  9946.0  9957.6  9984.8  9994.8 10000.0 10036.5 10070.1 10107.3
541          RY  1817.0  1815.2  1807.4  1803.2  1803.2  1805.5  1814.3  1815.4
             *

542          KK    206B
543          KM   Sub-Basin   206B
544          KM
545          KM      The Clark Unit Hydrograph is used for this basin.
546          KM          The Urban time-area relation is used for this basin.
547          KM
548          KM      Time of Concentration for this sub-basin is based on the following:
549          KM          6-Hour Rainfall, Pattern No.  1.00
550          KM          An rainfall areal reduction factor of 0.999
551          KM
552          KM       EXCESS RAINFALL VALUES EXCEEDED IN 5-MINUTE INTERVALS
553          KM     5  10  15  20  25  30  35  40  45  50  55  60  65  70  75  80  85  90
554          KM   .48 .47 .47 .17 .13 .13 .06 .06 .05 .05 .04 .04 .01 .01 .01 .01 .01 .01
555          KM
556          KM          L=   0.570 miles, S=  139 feet/mile, Kb= .03
557          KM
558          BA   0.095
559          LG    0.10    0.26    5.20    0.23   41.30
560          UC   0.154   0.113
561          UA       0       5      16      30      65      77      84      90      94      97
562          UA     100
             *

563          KK   C538I
564          KM      Hydrograph combine 537538 + 206B at C538I
565          HC       2
             *

566          KK   C538O
567          KM      Reservoir route at C538.
568          RS       1    ELEV  1778.2
569          SV    0.00    0.10    0.57    1.69    2.60    2.70    2.90    3.00    3.20    3.38
570          SV    3.60    3.90    4.10    4.30    4.60    5.10    5.60    6.10    7.10    8.10
571          SE  1778.2  1782.0  1784.0  1786.0  1787.1  1787.2  1787.4  1787.6  1787.8  1788.0
572          SE  1788.2  1788.4  1788.6  1788.8  1789.0  1789.4  1789.8  1790.2  1790.8  1791.4
573          SQ       0      82     133     185     207     208     212     218     226     235
574          SQ     249     265     286     310     338     400     482     611     942    1439
             *
```



```
LINE         ID.......1.......2.......3.......4.......5.......6.......7.......8.......9......10

575          KK  538540
576          KM      Normal depth channel route from C538 to C540
577          KM      Source:  HEC-2 Cross Section: HE 1.990
578          RS       5    FLOW      -1
579          RC   0.075   0.050   0.075  2176.0  0.0210
580          RX  9907.7  9931.8  9978.4 10000.0 10041.1 10056.9 10143.7 10164.9
581          RY  1767.5  1754.9  1755.2  1753.2  1753.1  1755.1  1757.3  1769.4
```

```
                 *
582              KK    206C
583              KM   Sub-Basin   206C
584              KM
585              KM      The Clark Unit Hydrograph is used for this basin.
586              KM          The HEC-1 time-area relation is used for this basin.
587              KM
588              KM      Time of Concentration for this sub-basin is based on the following:
589              KM          6-Hour Rainfall, Pattern No.  1.00
590              KM          An rainfall areal reduction factor of 1.000
591              KM
592              KM       EXCESS RAINFALL VALUES EXCEEDED IN 5-MINUTE INTERVALS
593              KM     5  10  15  20  25  30  35  40  45  50  55  60  65  70  75  80  85  90
594              KM   .44 .43 .42 .12 .08 .06 .02 .02 .02 .01 .01 .01 .00 .00 .00 .00 .00 .00
595              KM
596              KM          L=   0.427 miles, S=  138 feet/mile, Kb= .07
597              KM
598              BA   0.024
599              LG    0.21    0.32    4.35    0.40   12.40
600              UC   0.217   0.289
                 *

601              KK   C540R
602              KM      Hydrograph combine 538540 + 206C at C540 right branch
603              HC       2
                 *

604              KK    206D
605              KM   Sub-Basin   206D
606              KM
607              KM      The Clark Unit Hydrograph is used for this basin.
608              KM          The Urban time-area relation is used for this basin.
609              KM
610              KM      Time of Concentration for this sub-basin is based on the following:
611              KM          6-Hour Rainfall, Pattern No.  1.00
612              KM          An rainfall areal reduction factor of 0.999
613              KM
614              KM       EXCESS RAINFALL VALUES EXCEEDED IN 5-MINUTE INTERVALS
615              KM     5  10  15  20  25  30  35  40  45  50  55  60  65  70  75  80  85  90
616              KM   .48 .48 .47 .17 .14 .13 .06 .06 .06 .05 .05 .04 .01 .01 .01 .01 .01 .01
617              KM
618              KM          L=   0.531 miles, S=  236 feet/mile, Kb= .04
619              KM
620              BA   0.062
621              LG    0.08    0.26    5.70    0.18   41.20
622              UC   0.146   0.129
1                                          HEC-1 INPUT                                          PAGE 15

LINE             ID.......1.......2.......3.......4.......5.......6.......7.......8.......9......10

623              UA       0       5      16      30      65      77      84      90      94      97
624              UA     100
                 *

625              KK  539540
626              KM      Normal depth channel route from C539 to C540
627              KM      Source:  200 Scale Mapping
628              RS       4    FLOW      -1
629              RC   0.060   0.050   0.055  1872.0  0.0256
630              RX  1000.0  1007.0  1016.0  1036.0  1046.0  1080.0  1150.0  1210.0
631              RY  1750.0  1748.0  1746.0  1744.0  1744.0  1746.0  1748.0  1750.0
                 *

632              KK    206E
633              KM   Sub-Basin   206E
634              KM
635              KM      The Clark Unit Hydrograph is used for this basin.
636              KM          The HEC-1 time-area relation is used for this basin.
637              KM
638              KM      Time of Concentration for this sub-basin is based on the following:
639              KM          6-Hour Rainfall, Pattern No.  1.00
640              KM          An rainfall areal reduction factor of 1.000
641              KM
642              KM       EXCESS RAINFALL VALUES EXCEEDED IN 5-MINUTE INTERVALS
643              KM     5  10  15  20  25  30  35  40  45  50  55  60  65  70  75  80  85  90
644              KM   .42 .42 .41 .10 .06 .04 .01 .01 .01 .00 .00 .00 .00 .00 .00 .00 .00 .00
645              KM
646              KM          L=   0.343 miles, S=  175 feet/mile, Kb= .09
647              KM
648              BA   0.023
649              LG    0.23    0.35    4.30    0.40    1.70
650              UC   0.208   0.238
                 *

651              KK   C540L
652              KM      Hydrograph combine 539540 + 206E at C540 left branch
653              HC       2
                 *

654              KK    C540
655              KM      Hydrograph combine C540R + C540L at C540
656              HC       2
                 *
                 * *
                 * * C540 is the end of Hesperus Wash and the start of Balboa Wash
                 * *
                 *
```

```
 657          KK  540541
 658          KM      Normal depth channel route from C540 to C541
 659          KM      Source:  HEC-2 Cross Section: BA 1.645
 660          RS      12    FLOW      -1
 661          RC   0.065   0.035   0.065  4207.0  0.0204
 662          RX  9960.8  9968.0  9975.1  9975.7  9993.2 10018.2 10297.5 10343.9
 663          RY  1725.2  1721.8  1718.4  1716.2  1716.4  1718.4  1719.8  1730.5
              *
```



```
LINE          ID.......1.......2.......3.......4.......5.......6.......7.......8.......9......10

 664          KK    206F
 665          KM   Sub-Basin   206F
 666          KM
 667          KM      The Clark Unit Hydrograph is used for this basin.
 668          KM          The HEC-1 time-area relation is used for this basin.
 669          KM
 670          KM      Time of Concentration for this sub-basin is based on the following:
 671          KM          6-Hour Rainfall, Pattern No.  1.00
 672          KM          An rainfall areal reduction factor of 0.998
 673          KM
 674          KM       EXCESS RAINFALL VALUES EXCEEDED IN 5-MINUTE INTERVALS
 675          KM     5  10  15  20  25  30  35  40  45  50  55  60  65  70  75  80  85  90
 676          KM   .43 .42 .42 .11 .07 .06 .02 .02 .01 .00 .00 .00 .00 .00 .00 .00 .00 .00
 677          KM
 678          KM          L=   0.975 miles, S=  217 feet/mile, Kb= .08
 679          KM
 680          BA   0.157
 681          LG    0.21    0.35    4.60    0.35    5.10
 682          UC   0.333   0.308
              *

 683          KK    C541
 684          KM      Hydrograph combine 540541 + 206F at C541
 685          HC       2
              *

 686          KK  541548
 687          KM      Normal depth channel route from C541 to C548
 688          KM      Source:  HEC-2 Cross Section: BA 0.905
 689          RS       1    FLOW      -1
 690          RC   0.060   0.045   0.060  1138.0  0.0316
 691          RX  9761.7  9936.7  9955.2  9986.9  9994.7 10039.2 10065.3 10066.0
 692          RY  1647.4  1644.1  1638.1  1637.3  1636.2  1637.5  1652.9  1653.0
              *

 693          KK    206G
 694          KM   Sub-Basin   206G
 695          KM
 696          KM      The Clark Unit Hydrograph is used for this basin.
 697          KM          The HEC-1 time-area relation is used for this basin.
 698          KM
 699          KM      Time of Concentration for this sub-basin is based on the following:
 700          KM          6-Hour Rainfall, Pattern No.  1.00
 701          KM          An rainfall areal reduction factor of 0.999
 702          KM
 703          KM       EXCESS RAINFALL VALUES EXCEEDED IN 5-MINUTE INTERVALS
 704          KM     5  10  15  20  25  30  35  40  45  50  55  60  65  70  75  80  85  90
 705          KM   .45 .44 .44 .13 .10 .09 .04 .04 .03 .01 .01 .01 .00 .00 .00 .00 .00 .00
 706          KM
 707          KM          L=   0.950 miles, S=  132 feet/mile, Kb= .09
 708          KM
 709          BA   0.089
 710          LG    0.16    0.35    5.20    0.25   12.50
 711          UC   0.425   0.544
              *
```



```
LINE          ID.......1.......2.......3.......4.......5.......6.......7.......8.......9......10

 712          KK  BB523R
 713          KM      Retrieve previously diverted hydrograph at C523 in the right branch.
 714          DR   D523R
              *

 715          KK  523548
 716          KM      Normal depth channel route from C523 to C548
 717          KM      Source:  200 Scale Mapping
 718          RS      15    FLOW      -1
 719          RC   0.040   0.018   0.040  2680.0  0.0189
 720          RX  1000.0  1040.0  1090.0  1130.0  1170.0  1171.2  1181.2  1196.2
 721          RY  1646.0  1645.0  1643.8  1644.7  1644.0  1644.4  1646.0  1648.0
              *

 722          KK   C548L
 723          KM      Hydrograph combine 541548 + 206G + BB523R at C548 left branch
 724          HC       3    3.72
              *
              * *
              * * C548L is the total flow in Balboa Wash above confluence with Oxford Wash
              * *
              *

 725          KK    206H
```

```
 726          KM   Sub-Basin   206H
 727          KM
 728          KM      The Clark Unit Hydrograph is used for this basin.
 729          KM          The Urban time-area relation is used for this basin.
 730          KM
 731          KM      Time of Concentration for this sub-basin is based on the following:
 732          KM          6-Hour Rainfall, Pattern No.  1.00
 733          KM          An rainfall areal reduction factor of 0.999
 734          KM
 735          KM       EXCESS RAINFALL VALUES EXCEEDED IN 5-MINUTE INTERVALS
 736          KM     5  10  15  20  25  30  35  40  45  50  55  60  65  70  75  80  85  90
 737          KM   .47 .46 .46 .16 .13 .12 .05 .05 .05 .04 .03 .02 .01 .01 .01 .01 .01 .01
 738          KM
 739          KM          L=   0.515 miles, S=  183 feet/mile, Kb= .07
 740          KM
 741          BA   0.059
 742          LG    0.11    0.31    5.70    0.19   26.10
 743          UC   0.213   0.196
 744          UA       0       5      16      30      65      77      84      90      94      97
 745          UA     100
              *

 746          KK  542543
 747          KM      Normal depth channel route from C542 to C543
 748          KM      Source:  HEC-2 Cross Section: OX 0.931
 749          RS       1    FLOW      -1
 750          RC   0.075   0.040   0.050   686.0  0.0066
 751          RX  9846.9  9881.6  9967.5  9983.2 10010.0 10025.0 10033.8 10039.6
 752          RY  1732.3  1723.5  1724.1  1717.8  1717.0  1724.0  1728.2  1730.7
              *
```



```
LINE          ID.......1.......2.......3.......4.......5.......6.......7.......8.......9......10

 753          KK    206I
 754          KM   Sub-Basin   206I
 755          KM
 756          KM      The Clark Unit Hydrograph is used for this basin.
 757          KM          The HEC-1 time-area relation is used for this basin.
 758          KM
 759          KM      Time of Concentration for this sub-basin is based on the following:
 760          KM          6-Hour Rainfall, Pattern No.  1.00
 761          KM          An rainfall areal reduction factor of 1.000
 762          KM
 763          KM       EXCESS RAINFALL VALUES EXCEEDED IN 5-MINUTE INTERVALS
 764          KM     5  10  15  20  25  30  35  40  45  50  55  60  65  70  75  80  85  90
 765          KM   .47 .47 .47 .16 .13 .12 .06 .06 .05 .04 .04 .03 .01 .01 .01 .01 .01 .01
 766          KM
 767          KM          L=   0.232 miles, S=  286 feet/mile, Kb= .08
 768          KM
 769          BA   0.021
 770          LG    0.11    0.32    5.70    0.19   35.70
 771          UC   0.133   0.112
              *

 772          KK    C543
 773          KM      Hydrograph combine 542543 + 206I at C543
 774          HC       2
              *

 775          KK   D543L
 776          KM      Hydrograph diversion at C543.  Main flow continues in the left branch.
 777          KM      Diverted flow is in the right branch.
 778          DT   D543R
 779          DI       0      38      45      50      65      85      97     122     141     162
 780          DI     194     350     395     432     475     522     570     612
 781          DQ       0      38      45      50      65      85      97     122     141     162
 782          DQ     194     350     395     425     460     500     540     575
              *

 783          KK  543544
 784          KM      Normal depth channel route from C543 to C544
 785          KM      Source:  200 Scale Mapping & Hydrology Field Reconnaissance
 786          RS       1    FLOW      -1
 787          RC   0.040   0.018   0.040   597.0  0.0277
 788          RX  1000.0  1020.0  1045.0  1075.0  1105.0  1106.2  1146.2  1266.2
 789          RY  1720.0  1718.0  1712.0  1712.3  1712.0  1712.4  1714.0  1720.0
              *

 790          KK    206K
 791          KM   Sub-Basin   206K
 792          KM
 793          KM      The Clark Unit Hydrograph is used for this basin.
 794          KM          The HEC-1 time-area relation is used for this basin.
 795          KM
 796          KM      Time of Concentration for this sub-basin is based on the following:
 797          KM          6-Hour Rainfall, Pattern No.  1.00
 798          KM          An rainfall areal reduction factor of 0.999
```



```
LINE          ID.......1.......2.......3.......4.......5.......6.......7.......8.......9......10

 799          KM
 800          KM       EXCESS RAINFALL VALUES EXCEEDED IN 5-MINUTE INTERVALS
 801          KM     5  10  15  20  25  30  35  40  45  50  55  60  65  70  75  80  85  90
 802          KM   .45 .44 .44 .13 .10 .09 .04 .03 .03 .00 .00 .00 .00 .00 .00 .00 .00 .00
 803          KM
```

```
804          KM          L=   0.615 miles, S=  255 feet/mile, Kb= .11
805          KM
806          BA   0.056
807          LG    0.15    0.38    5.70    0.21    5.60
808          UC   0.275   0.310
             *

809          KK    C544
810          KM      Hydrograph combine 543544 + 206K at C544
811          HC       2
             *

812          KK  544545
813          KM      Normal depth channel route from C544 to C545
814          KM      Source:  200 Scale Mapping & Hydrology Field Reconnaissance
815          RS       2    FLOW      -1
816          RC   0.040   0.018   0.040   985.0  0.0234
817          RX  1000.0  1008.0  1018.0  1048.0  1078.0  1079.2  1089.2  1109.2
818          RY  1690.0  1688.0  1686.0  1686.3  1686.0  1686.4  1688.0  1689.0
             *

819          KK   D545L
820          KM      Hydrograph diversion at C545.  Main flow continues in the left branch.
821          KM      Diverted flow is in the right branch.
822          DT   D545R
823          DI       0      50     100     200     400     800    1600    3200    5000
824          DQ       0      25      50     100     200     400     800    1600    2500
             *

825          KK  545546
826          KM      Normal depth channel route from C545 to C546
827          KM      Source:  200 Scale Mapping & Hydrology Field Reconnaissance
828          RS       2    FLOW      -1
829          RC   0.040   0.018   0.040   428.0  0.0164
830          RX  1000.0  1020.0  1050.0  1080.0  1110.0  1111.2  1121.2  1151.2
831          RY  1680.0  1678.0  1676.0  1676.3  1676.0  1676.4  1678.0  1678.5
             *

832          KK    206L
833          KM   Sub-Basin   206L
834          KM
835          KM      The Clark Unit Hydrograph is used for this basin.
836          KM          The HEC-1 time-area relation is used for this basin.
837          KM
838          KM      Time of Concentration for this sub-basin is based on the following:
839          KM          6-Hour Rainfall, Pattern No.  1.00
840          KM          An rainfall areal reduction factor of 0.999
841          KM
842          KM       EXCESS RAINFALL VALUES EXCEEDED IN 5-MINUTE INTERVALS
843          KM     5  10  15  20  25  30  35  40  45  50  55  60  65  70  75  80  85  90
```



```
LINE         ID.......1.......2.......3.......4.......5.......6.......7.......8.......9......10

844          KM   .45 .45 .45 .14 .10 .09 .04 .04 .03 .01 .01 .01 .00 .00 .00 .00 .00 .00
845          KM
846          KM          L=   0.546 miles, S=  231 feet/mile, Kb= .11
847          KM
848          BA   0.060
849          LG    0.14    0.39    5.80    0.21   14.70
850          UC   0.263   0.258
             *

851          KK    C546
852          KM      Hydrograph combine 545546 + 206L at C546
853          HC       2
             *

854          KK  546547
855          KM      Normal depth channel route from C546 to C547
856          KM      Source:  200 Scale Mapping
857          RS       1    FLOW      -1
858          RC   0.040   0.018   0.040   749.0  0.0327
859          RX  1000.0  1005.0  1011.0  1013.0  1029.0  1047.0  1052.0  1057.0
860          RY  1666.0  1664.0  1662.0  1661.9  1662.4  1662.0  1664.0  1666.0
             *

861          KK  BB543R
862          KM      Retrieve previously diverted hydrograph at C543 in the right branch.
863          DR   D543R
             *

864          KK  543547
865          KM      Normal depth channel route from C543 to C547
866          KM      Source:  HEC-2 Cross Section: OX 0.638
867          RS       5    FLOW      -1
868          RC   0.075   0.040   0.050  2395.0  0.0278
869          RX  9720.9  9769.0  9970.7  9985.5 10020.0 10038.1 10097.0 10102.0
870          RY  1690.4  1681.2  1683.1  1676.2  1677.0  1687.1  1687.4  1690.0
             *

871          KK  BB545R
872          KM      Retrieve previously diverted hydrograph at C545 in the right branch.
873          DR   D545R
             *

874          KK  545547
875          KM      Normal depth channel route from C545 to C547
```

```
 876          KM      Source:  HEC-2 Cross Section: OX 0.542
 877          RS       4    FLOW      -1
 878          RC   0.075   0.040   0.050  1216.0  0.0259
 879          RX  9668.2  9778.4  9957.9  9986.0 10012.7 10043.6 10067.6 10163.4
 880          RY  1674.1  1674.1  1673.3  1662.1  1662.2  1680.4  1680.9  1681.1
              *
1                                          HEC-1 INPUT                                                    PAGE 21

LINE          ID.......1.......2.......3.......4.......5.......6.......7.......8.......9......10

 881          KK    206J
 882          KM   Sub-Basin   206J
 883          KM
 884          KM      The Clark Unit Hydrograph is used for this basin.
 885          KM          The Urban time-area relation is used for this basin.
 886          KM
 887          KM      Time of Concentration for this sub-basin is based on the following:
 888          KM          6-Hour Rainfall, Pattern No.  1.00
 889          KM          An rainfall areal reduction factor of 0.999
 890          KM
 891          KM       EXCESS RAINFALL VALUES EXCEEDED IN 5-MINUTE INTERVALS
 892          KM     5  10  15  20  25  30  35  40  45  50  55  60  65  70  75  80  85  90
 893          KM   .48 .48 .48 .17 .14 .14 .06 .06 .06 .05 .05 .05 .01 .01 .01 .01 .01 .01
 894          KM
 895          KM          L=   0.502 miles, S=  214 feet/mile, Kb= .03
 896          KM
 897          BA   0.060
 898          LG    0.08    0.25    5.70    0.18   44.60
 899          UC   0.125   0.105
 900          UA       0       5      16      30      65      77      84      90      94      97
 901          UA     100
              *

 902          KK    C547
 903          KM      Hydrograph combine 546547 + 543547 + 545547 + 206J at C547
 904          HC       4    0.26
              *

 905          KK  547548
 906          KM      Normal depth channel route from C547 to C548
 907          KM      Source:  HEC-2 Cross Section: OX 0.235
 908          RS       4    FLOW      -1
 909          RC   0.075   0.040   0.050  2165.0  0.0182
 910          RX  9910.0  9911.4  9968.5  9987.6 10017.4 10032.3 10077.4 10080.0
 911          RY  1639.0  1638.9  1637.9  1635.7  1635.8  1641.7  1642.9  1643.0
              *

 912          KK    206M
 913          KM   Sub-Basin   206M
 914          KM
 915          KM      The Clark Unit Hydrograph is used for this basin.
 916          KM          The Urban time-area relation is used for this basin.
 917          KM
 918          KM      Time of Concentration for this sub-basin is based on the following:
 919          KM          6-Hour Rainfall, Pattern No.  1.00
 920          KM          An rainfall areal reduction factor of 0.999
 921          KM
 922          KM       EXCESS RAINFALL VALUES EXCEEDED IN 5-MINUTE INTERVALS
 923          KM     5  10  15  20  25  30  35  40  45  50  55  60  65  70  75  80  85  90
 924          KM   .48 .47 .47 .17 .14 .13 .06 .06 .06 .05 .05 .04 .01 .01 .01 .01 .01 .01
 925          KM
 926          KM          L=   0.465 miles, S=  166 feet/mile, Kb= .03
 927          KM
 928          BA   0.060
1                                          HEC-1 INPUT                                                    PAGE 22

LINE          ID.......1.......2.......3.......4.......5.......6.......7.......8.......9......10

 929          LG    0.08    0.25    5.20    0.23   46.20
 930          UC   0.133   0.107
 931          UA       0       5      16      30      65      77      84      90      94      97
 932          UA     100
              *

 933          KK   C548R
 934          KM      Hydrograph combine 547548 + 206M at C548 right branch
 935          HC       2
              *
              * *
              * * C548R is the total flow in Oxford Wash above confluence with Balboa Wash
              * *
              *

 936          KK    C548
 937          KM      Hydrograph combine C548L + C548R at C548
 938          HC       2
              *
              * *
              * * C548 is the total flow in Balboa Wash below the confluence of Balboa Wash
              * * and Oxford Wash
              * *
              *

 939          KK  548549
 940          KM      Normal depth channel route from C548 to C549
 941          KM      Source:  HEC-2 Cross Section: BA0.246
 942          RS       9    FLOW      -1
```

```
 943          RC   0.070   0.080   0.070  3258.0  0.0172
 944          RX  9889.1  9912.5  9940.2  9960.0 10026.1 10046.8 10067.8 10079.3
 945          RY  1586.2  1585.7  1577.5  1573.6  1573.2  1579.5  1585.7  1586.2
              *

 946          KK    206N
 947          KM   Sub-Basin   206N
 948          KM
 949          KM      The Clark Unit Hydrograph is used for this basin.
 950          KM          The Urban time-area relation is used for this basin.
 951          KM
 952          KM      Time of Concentration for this sub-basin is based on the following:
 953          KM          6-Hour Rainfall, Pattern No.  1.00
 954          KM          An rainfall areal reduction factor of 0.998
 955          KM
 956          KM        EXCESS RAINFALL VALUES EXCEEDED IN 5-MINUTE INTERVALS
 957          KM     5  10  15  20  25  30  35  40  45  50  55  60  65  70  75  80  85  90
 958          KM   .48 .47 .47 .17 .13 .13 .06 .06 .06 .05 .04 .04 .01 .01 .01 .01 .01 .01
 959          KM
 960          KM          L=   0.767 miles, S=  120 feet/mile, Kb= .03
 961          KM
 962          BA   0.152
 963          LG    0.12    0.27    4.65    0.29   51.60
 964          UC   0.188   0.137
 965          UA       0       5      16      30      65      77      84      90      94      97
 966          UA     100
              *
1                                          HEC-1 INPUT                                          PAGE 23

LINE          ID.......1.......2.......3.......4.......5.......6.......7.......8.......9......10


 967          KK   C549L
 968          KM      Hydrograph combine 548549 + 206N at C549 left branch
 969          HC       2
              *
              * *
              * * C549L is the total flow in Balboa Wash above confluence with Ashbrook Wash
              * *
              * * End Basin 206.  Start Basin 207
              * *
              *

 970          KK   C5990
 971          KM      The following is the design outflow hydrograph from Golden Eagle Park Dam
 972          IN       1
 973          BA    7.13
 974          QI       0       0       0       0       0       0       0       0       0       0
 975          QI       0       0       0       0       1       1       1       1       1       1
 976          QI       1       1       1       1       1       1       1       1       1       1
 977          QI       1       1       2       2       2       2       2       2       2       3
 978          QI       3       3       3       4       4       4       5       5       6       6
 979          QI       7       8       8       9       9      10      10      11      11      12
 980          QI      12      13      13      14      14      15      15      16      16      17
 981          QI      17      18      18      19      19      20      21      21      22      23
 982          QI      24      25      26      26      27      28      29      30      31      32
 983          QI      33      34      35      36      37      38      39      40      41      42
 984          QI      44      45      46      47      48      49      50      52      53      54
 985          QI      55      57      58      59      61      62      64      65      67      68
 986          QI      70     153      74      76      78      80      82      84      86      88
 987          QI      90      92      94      96      98      99     101     103     104     106
 988          QI     107     109     110     112     113     114     116     117     118     120
 989          QI     121     122     123     124     126     127     128     129     130     131
 990          QI     132     133     134     135     136     137     138     139     140     140
 991          QI     141     142     143     144     145     146     146     147     148     149
 992          QI     150     150     151     152     153     153     154     155     156     157
 993          QI     158     158     159     160     161     162     163     163     164     165
 994          QI     166     167     168     170     171     173     174     176     179     181
 995          QI     183     186     190     194     199     204     211     219     155     263
 996          QI     251     273     294     317     341     358     382     410     441     468
 997          QI     487     513     543     577     614     655     678     702     730     761
 998          QI     795     822     832     843     855     869     885     903     921     942
 999          QI     952     961     970     979     988     998    1009    1019    1030    1040
1000          QI    1051    1061    1067    1073    1080    1086    1093    1099    1105    1111
1001          QI    1117    1122    1128    1133    1138    1143    1148    1152    1156    1159
1002          QI    1162    1164    1167    1169    1172    1174    1176    1178    1180    1182
1003          QI    1183    1185    1186    1187    1189    1190    1191    1192    1192    1193
1004          QI    1194    1194    1194    1195    1195    1195    1195    1195    1195    1195
1005          QI    1195    1194    1194    1194    1193    1193    1192    1192    1191    1191
1006          QI    1190    1189    1189    1188    1187    1187    1186    1185    1184    1183
1007          QI    1183    1182    1181    1180    1179    1178    1177    1176    1175    1175
1008          QI    1174    1173    1172    1171    1170    1169    1168    1167    1166    1165
1009          QI    1164    1163    1162    1161    1160    1159    1158    1157    1156    1155
1010          QI    1154    1153    1151    1150    1148    1147    1146    1144    1143    1141
1011          QI    1140    1139    1137    1136    1135    1133    1132    1130    1129    1128
1012          QI    1126    1125    1124    1122    1121    1120    1118    1117    1116    1114
1                                          HEC-1 INPUT                                          PAGE 24

LINE          ID.......1.......2.......3.......4.......5.......6.......7.......8.......9......10

1013          QI    1113    1112    1110    1109    1108    1107    1105    1104    1103    1101
1014          QI    1100    1099    1098    1096    1095    1094    1092    1091    1090    1089
1015          QI    1087    1086    1085    1084    1082    1081    1080    1079    1078    1076
1016          QI    1075    1074    1073    1071    1070    1069    1068    1067    1065    1064
1017          QI    1063    1062    1061    1059    1058    1056    1054    1052    1050    1048
1018          QI    1046    1044    1042    1040    1039    1037    1035    1033    1031    1029
1019          QI    1027    1025    1023    1022    1020    1018    1016    1014    1013    1011
1020          QI    1009    1007    1006    1004    1002    1000     999     997     995     994
```

```
1021        QI     992     990     989     987     985     984     982     981     979     977
1022        QI     976     974     972     971     969     968     966     964     963     961
1023        QI     959     958     956     954     952     951     949     947     944     939
1024        QI     934     929     924     919     915     910     905     901     896     892
1025        QI     888     883     879     875     871     866     862     858     854     850
1026        QI     846     842     838     835     831     827     823     819     804     790
1027        QI     777     766     757     748     740     733     726     720     715     710
1028        QI     705     701     697     693     689     685     681     677     674     670
1029        QI     667     663     656     650     644     639     634     630     626     622
1030        QI     618     615     611     608     604     601     597     594     590     586
1031        QI     583     579     575     572     568     564     561     557     553     550
1032        QI     546     543     539     536     533     530     527     524     521     519
1033        QI     517     514     512     510     509     507     505     503     501     499
1034        QI     497     494     492     490     487     485     483     480     478     475
1035        QI     473     470     468     465     462     457     453     450     448     445
1036        QI     442     440     437     434     432     429     426     424     421     419
1037        QI     416     413     411     408     406     403     400     397     395     392
1038        QI     389     386     384     381     378     376     373     370     368     365
1039        QI     363     360     358     356     353     351     349     347     345     343
1040        QI     340     338     336     335     333     331     329     327     325     323
1041        QI     321     319     317     314     312     310     307     305     302     300
1042        QI     298     295     293     291     289     286     284     282     280     278
1043        QI     276     274     272     270     268     266     264     262     261     259
1044        QI     257     255     253     252     250     248     246     244     242     240
1045        QI     238     236     234     232     230     228     226     223     221     219
1046        QI     217     215     213     211     209     207     205     203     201     199
1047        QI     197     195     193     191     190     189     186     184     183     182
1048        QI     179     178     177     174     173     172     170     169     167     166
1049        QI     164     163     161     160     158     157     155     154     153     152
1050        QI     151     150     148     147     146     145     144     143     142     141
1051        QI     140     139     138     137     136     135     134     133     132     131
1052        QI     130     129     129     128     127     126     126     125     124     124
1053        QI     123     122     121     121     120     119     118     117     117     116
1054        QI     115     114     114     113     112     111     110     109     108     107
1055        QI     106     105     104     103     102     101     100      99      98      97
1056        QI      97      96      95      94      93      92      91      90      89      88
1057        QI      87      86      84      83      82      80      79      77      76      75
1058        QI      73      72      70      69      68      67      65      64      63      62
1059        QI      61      60      59      58      57      56      55      54      53      52
1060        QI      52      51      50      49      49      48      47      47      46      46
1061        QI      45      45      44      44      44      43      43      42      42      41
1062        QI      41      40      40      40      39      39      38      38      37      37
1063        QI      36      36      36      35      35      35      34      34      33      33
1064        QI      33      32      32      32      31      31      31      30      30      30
1065        QI      29      29      29      28      28      27      26      25      25      24
1066        QI      23      22      21      20      19      19      18      17      16      16
1067        QI      15      14      14      13      12      12      11      11      10      10
```



```
LINE        ID.......1.......2.......3.......4.......5.......6.......7.......8.......9......10

1068        QI      10       9       9       8       8       8       7       7       7       6
1069        QI       6       6       6       5       5       5       5       4       4       4
1070        QI       4       4       4       3       3       3       3       3       3       3
1071        QI       3       2       2       2       2       2       2       2       2       2
1072        QI       2       2       1       1       1       1       1       1       1       1
1073        QI       1       1       1       1       1       1       1       1       1       1
1074        QI       1       1       1       1       1       1       1       1       0       0
1075        QI       0       0       0       0       0       0       0       0       0       0
1076        QI       0       0       0       0       0       0       0       0       0       0
1077        QI       0       0       0       0       0       0       0       0       0       0
1078        QI       0       0       0       0       0       0       0       0       0       0
1079        QI       0       0       0       0       0       0       0       0       0       0
1080        QI       0       0       0       0       0       0       0       0       0       0
1081        QI       0       0       0       0       0       0       0       0       0       0
1082        IN      15
            *
            * * End Basin 210.  Start Basin 211
            * *
            *

1083        KK  599608
1084        KM      Normal depth channel route from C599 to C608
1085        KM      Source:  HEC-2 Cross Section: AS 3.621
1086        RS       3    FLOW      -1
1087        RC   0.055   0.045   0.025  1476.0  0.0148
1088        RX  9675.4  9726.8  9929.0  9990.7 10005.9 10033.3 10061.9 10082.2
1089        RY  1691.3  1687.2  1685.5  1678.6  1678.1  1682.1  1689.8  1691.8
            *

1090        KK    211K
1091        KM   Sub-Basin   211K
1092        KM
1093        KM      The Clark Unit Hydrograph is used for this basin.
1094        KM          The HEC-1 time-area relation is used for this basin.
1095        KM
1096        KM      Time of Concentration for this sub-basin is based on the following:
1097        KM          6-Hour Rainfall, Pattern No.  1.00
1098        KM          An rainfall areal reduction factor of 0.999
1099        KM
1100        KM       EXCESS RAINFALL VALUES EXCEEDED IN 5-MINUTE INTERVALS
1101        KM     5  10  15  20  25  30  35  40  45  50  55  60  65  70  75  80  85  90
1102        KM   .46 .45 .45 .15 .11 .10 .05 .04 .04 .02 .02 .02 .00 .00 .00 .00 .00 .00
1103        KM
1104        KM          L=   0.376 miles, S=  157 feet/mile, Kb= .08
1105        KM
1106        BA   0.102
1107        LG    0.18    0.38    6.00    0.18   17.80
```

```
1108          UC   0.204   0.107
              *
1                                          HEC-1 INPUT                                                    PAGE 26

LINE          ID.......1.......2.......3.......4.......5.......6.......7.......8.......9......10

1109          KK   C608L
1110          KM      Hydrograph combine 599608 + 211K at C608 left branch
1111          HC       2
              *

1112          KK    211G
1113          KM   Sub-Basin   211G
1114          KM
1115          KM      The Clark Unit Hydrograph is used for this basin.
1116          KM          The Urban time-area relation is used for this basin.
1117          KM
1118          KM      Time of Concentration for this sub-basin is based on the following:
1119          KM          6-Hour Rainfall, Pattern No.  1.00
1120          KM          An rainfall areal reduction factor of 1.000
1121          KM
1122          KM       EXCESS RAINFALL VALUES EXCEEDED IN 5-MINUTE INTERVALS
1123          KM     5  10  15  20  25  30  35  40  45  50  55  60  65  70  75  80  85  90
1124          KM   .50 .50 .50 .19 .16 .16 .08 .08 .08 .08 .08 .08 .02 .02 .02 .02 .02 .02
1125          KM
1126          KM          L=   0.448 miles, S=  190 feet/mile, Kb= .04
1127          KM
1128          BA   0.008
1129          LG    0.06    0.25    5.70    0.18   90.00
1130          UC   0.142   0.359
1131          UA      0       5      16      30      65      77      84      90      94      97
1132          UA    100
              *

1133          KK  604606
1134          KM      Normal depth channel route from C604 to C606
1135          KM      Source:  200 Scale Mapping
1136          RS      11    FLOW      -1
1137          RC   0.040   0.018   0.040  2784.0  0.0647
1138          RX  1000.0  1040.0  1060.0  1076.0  1092.0  1093.2  1098.2  1113.2
1139          RY  1814.0  1811.0  1810.8  1811.1  1810.8  1811.2  1812.0  1816.0
              *

1140          KK    211I
1141          KM   Sub-Basin   211I
1142          KM
1143          KM      The Clark Unit Hydrograph is used for this basin.
1144          KM          The Natural time-area relation is used for this basin.
1145          KM
1146          KM      Time of Concentration for this sub-basin is based on the following:
1147          KM          6-Hour Rainfall, Pattern No.  1.00
1148          KM          An rainfall areal reduction factor of 0.999
1149          KM
1150          KM       EXCESS RAINFALL VALUES EXCEEDED IN 5-MINUTE INTERVALS
1151          KM     5  10  15  20  25  30  35  40  45  50  55  60  65  70  75  80  85  90
1152          KM   .47 .46 .46 .16 .12 .11 .05 .05 .05 .03 .03 .03 .01 .01 .01 .01 .01 .01
1153          KM
1154          KM          L=   0.626 miles, S=  257 feet/mile, Kb= .11
1155          KM
1156          BA   0.041
1                                          HEC-1 INPUT                                                    PAGE 27

LINE          ID.......1.......2.......3.......4.......5.......6.......7.......8.......9......10

1157          LG    0.13    0.39    5.70    0.20   35.00
1158          UC   0.271   0.370
1159          UA      0       3       5       8      12      20      43      75      90      96
1160          UA    100
              *

1161          KK   C606R
1162          KM      Hydrograph combine 604606 + 211I at C606 right branch
1163          HC       2
              *

1164          KK    211H
1165          KM   Sub-Basin   211H
1166          KM
1167          KM      The Clark Unit Hydrograph is used for this basin.
1168          KM          The Natural time-area relation is used for this basin.
1169          KM
1170          KM      Time of Concentration for this sub-basin is based on the following:
1171          KM          6-Hour Rainfall, Pattern No.  1.00
1172          KM          An rainfall areal reduction factor of 0.999
1173          KM
1174          KM       EXCESS RAINFALL VALUES EXCEEDED IN 5-MINUTE INTERVALS
1175          KM     5  10  15  20  25  30  35  40  45  50  55  60  65  70  75  80  85  90
1176          KM   .45 .45 .44 .14 .10 .09 .04 .04 .03 .00 .00 .00 .00 .00 .00 .00 .00 .00
1177          KM
1178          KM          L=   0.501 miles, S=  289 feet/mile, Kb= .11
1179          KM
1180          BA   0.073
1181          LG    0.15    0.40    6.00    0.18    3.40
1182          UC   0.233   0.187
1183          UA      0       3       5       8      12      20      43      75      90      96
1184          UA    100
              *
```

```
1185          KK   C605O
1186          KM      Reservoir route at C605.
1187          RS       1    ELEV  1722.5
1188          SV    0.00    0.20    0.20    0.20    0.20    0.30    0.30    0.30    0.40    0.60
1189          SV    0.70    0.90    1.00    1.20    1.40    1.60    1.90    2.80    3.40    4.10
1190          SE  1722.5  1726.8  1727.0  1727.2  1727.4  1727.6  1727.8  1728.0  1728.2  1728.4
1191          SE  1728.6  1728.8  1729.0  1729.2  1729.4  1729.6  1730.0  1730.4  1730.7  1731.0
1192          SQ       0       0       5      10      20      43      63      73      78      85
1193          SQ      91      96     101     105     109     113     122     130     136     200
              *

1194          KK    C606
1195          KM      Hydrograph combine C606R + C605O at C606
1196          HC       2
              *
```



```
LINE          ID.......1.......2.......3.......4.......5.......6.......7.......8.......9......10

1197          KK  606607
1198          KM      Normal depth channel route from C606 to C607
1199          KM      Source:  200 Scale Mapping
1200          RS       2    FLOW      -1
1201          RC   0.020   0.055   0.035  1061.0  0.0286
1202          RX  1000.0  1032.0  1082.0  1095.0  1105.0  1117.0  1123.0  1153.0
1203          RY  1704.3  1704.0  1703.5  1700.0  1700.0  1703.0  1704.0  1706.0
              *

1204          KK    211J
1205          KM   Sub-Basin   211J
1206          KM
1207          KM      The Clark Unit Hydrograph is used for this basin.
1208          KM          The HEC-1 time-area relation is used for this basin.
1209          KM
1210          KM      Time of Concentration for this sub-basin is based on the following:
1211          KM          6-Hour Rainfall, Pattern No.  1.00
1212          KM          An rainfall areal reduction factor of 1.000
1213          KM
1214          KM       EXCESS RAINFALL VALUES EXCEEDED IN 5-MINUTE INTERVALS
1215          KM     5  10  15  20  25  30  35  40  45  50  55  60  65  70  75  80  85  90
1216          KM   .47 .46 .46 .16 .12 .12 .05 .05 .05 .03 .03 .03 .01 .01 .01 .01 .01 .01
1217          KM
1218          KM          L=   0.249 miles, S=  166 feet/mile, Kb= .11
1219          KM
1220          BA   0.015
1221          LG    0.13    0.37    6.20    0.18   32.40
1222          UC   0.192   0.215
              *

1223          KK    C607
1224          KM      Hydrograph combine 606607 + 211J at C607
1225          HC       2
              *

1226          KK  607608
1227          KM      Normal depth channel route from C607 to C608
1228          KM      Source:  200 Scale Mapping
1229          RS       2    FLOW      -1
1230          RC   0.040   0.050   0.035  1008.0  0.0145
1231          RX  1000.0  1060.0  1070.0  1082.0  1083.0  1095.0  1115.0  1133.0
1232          RY  1688.0  1686.0  1684.0  1681.0  1681.0  1684.0  1685.0  1685.4
              *

1233          KK    C608
1234          KM      Hydrograph combine C608L + 607608 at C608
1235          HC       2
              *
```



```
LINE          ID.......1.......2.......3.......4.......5.......6.......7.......8.......9......10

1236          KK  608613
1237          KM      Normal depth channel route from C608 to C613
1238          KM      Source:  HEC-2 Cross Section: AS 3.421
1239          RS       2    FLOW      -1
1240          RC   0.100   0.045   0.100  1338.0  0.0202
1241          RX  9885.0  9887.9  9957.3  9986.7 10012.9 10054.7 10086.3 10122.2
1242          RY  1670.2  1670.1  1668.0  1660.0  1659.9  1661.6  1669.9  1670.8
              *
              * *
              * * Move to the top of Sunflower Wash
              * *
              *

1243          KK    211M
1244          KM   Sub-Basin   211M
1245          KM
1246          KM      The Clark Unit Hydrograph is used for this basin.
1247          KM          The Natural time-area relation is used for this basin.
1248          KM
1249          KM      Time of Concentration for this sub-basin is based on the following:
1250          KM          6-Hour Rainfall, Pattern No.  1.00
1251          KM          An rainfall areal reduction factor of 0.999
1252          KM
1253          KM       EXCESS RAINFALL VALUES EXCEEDED IN 5-MINUTE INTERVALS
```

```
1254          KM     5  10  15  20  25  30  35  40  45  50  55  60  65  70  75  80  85  90
1255          KM   .46 .46 .46 .15 .12 .11 .05 .05 .04 .03 .03 .03 .01 .01 .01 .01 .01 .01
1256          KM
1257          KM          L=   0.541 miles, S=  266 feet/mile, Kb= .11
1258          KM
1259          BA   0.081
1260          LG    0.13    0.39    5.70    0.21   30.30
1261          UC   0.246   0.199
1262          UA       0       3       5       8      12      20      43      75      90      96
1263          UA     100
              *

1264          KK  610611
1265          KM      Normal depth channel route from C610 to 1611
1266          KM      Source:  HEC-2 Cross Section: SU 0.216
1267          RS       2    FLOW      -1
1268          RC   0.050   0.045   0.050  1090.0  0.0211
1269          RX  9911.9  9948.1  9973.6  9988.6 10007.1 10027.0 10049.8 10143.7
1270          RY  1699.3  1691.7  1686.3  1680.1  1679.7  1686.6  1687.3  1698.6
              *

1271          KK    211N
1272          KM   Sub-Basin   211N
1273          KM
1274          KM      The Clark Unit Hydrograph is used for this basin.
1275          KM          The HEC-1 time-area relation is used for this basin.
1276          KM
1277          KM      Time of Concentration for this sub-basin is based on the following:
1278          KM          6-Hour Rainfall, Pattern No.  1.00
1279          KM          An rainfall areal reduction factor of 1.000
```



```
LINE          ID.......1.......2.......3.......4.......5.......6.......7.......8.......9......10

1280          KM
1281          KM       EXCESS RAINFALL VALUES EXCEEDED IN 5-MINUTE INTERVALS
1282          KM     5  10  15  20  25  30  35  40  45  50  55  60  65  70  75  80  85  90
1283          KM   .46 .45 .45 .15 .11 .10 .05 .04 .04 .02 .02 .02 .00 .00 .00 .00 .00 .00
1284          KM
1285          KM          L=   0.261 miles, S=  235 feet/mile, Kb= .12
1286          KM
1287          BA   0.020
1288          LG    0.14    0.39    5.70    0.20   20.20
1289          UC   0.188   0.181
              *

1290          KK   C611R
1291          KM      Hydrograph combine 610611 + 211N at C611 right branch
1292          HC       2
              *

1293          KK    211O
1294          KM   Sub-Basin   211O
1295          KM
1296          KM      The Clark Unit Hydrograph is used for this basin.
1297          KM          The HEC-1 time-area relation is used for this basin.
1298          KM
1299          KM      Time of Concentration for this sub-basin is based on the following:
1300          KM          6-Hour Rainfall, Pattern No.  1.00
1301          KM          An rainfall areal reduction factor of 0.999
1302          KM
1303          KM       EXCESS RAINFALL VALUES EXCEEDED IN 5-MINUTE INTERVALS
1304          KM     5  10  15  20  25  30  35  40  45  50  55  60  65  70  75  80  85  90
1305          KM   .47 .46 .46 .15 .12 .11 .05 .05 .05 .03 .03 .03 .01 .01 .01 .01 .01 .01
1306          KM
1307          KM          L=   0.371 miles, S=  257 feet/mile, Kb= .11
1308          KM
1309          BA   0.041
1310          LG    0.13    0.39    5.70    0.20   34.60
1311          UC   0.204   0.177
              *

1312          KK   C609O
1313          KM      Reservoir route at C609.
1314          RS       1    ELEV  1694.0
1315          SV    0.00    0.10    0.21    0.50    0.86    1.40    1.93    2.60    3.10    3.20
1316          SV    3.39    3.60    3.80    4.00    4.10    4.30    4.50    4.70    4.90    5.10
1317          SE  1694.0  1695.0  1696.0  1697.0  1698.0  1699.0  1700.0  1701.0  1701.6  1701.8
1318          SE  1702.0  1702.2  1702.4  1702.6  1702.8  1703.0  1703.2  1703.4  1703.6  1703.8
1319          SQ       0       6      16      33      48      59      68      75      79      85
1320          SQ     108     149     209     289     390     512     658     829    1025    1247
              *

1321          KK  609611
1322          KM      Normal depth channel route from C609 to C611
1323          KM      Source:  200 Scale Mapping
1324          RS       2    FLOW      -1
1325          RC   0.035   0.050   0.035   470.0  0.0200
1326          RX  1000.0  1025.0  1050.0  1054.0  1064.0  1068.0  1088.0  1103.0
```



```
LINE          ID.......1.......2.......3.......4.......5.......6.......7.......8.......9......10

1327          RY  1690.0  1688.0  1684.0  1682.0  1682.0  1684.0  1688.0  1690.0
              *

1328          KK   C611I
1329          KM      Hydrograph combine 609611 + C611R at C611I
```

```
1330          HC       2
              *

1331          KK   C611O
1332          KM      Reservoir route at C611.
1333          RS       1    ELEV  1668.4
1334          SV    0.00    0.41    1.10    2.49    4.34    6.64    6.72    6.81    6.89    6.97
1335          SV    7.06    7.14    7.22    7.31    7.39    7.47    7.56    7.64    7.72    7.81
1336          SE  1674.0  1676.0  1678.0  1680.0  1682.0  1684.0  1684.2  1684.4  1684.6  1684.8
1337          SE  1685.0  1685.2  1685.4  1685.6  1685.8  1686.0  1686.2  1686.4  1686.6  1686.8
1338          SQ       0       0      86     117     141     162     164     170     181     199
1339          SQ     225     262     313     378     460     558     673     807     958    1118
              *

1340          KK   D611L
1341          KM      Hydrograph diversion at C611.  Main flow continues in the left branch.
1342          KM      Diverted flow is in the right branch.
1343          DT   D611R
1344          DI       0       0      86     117     141     162     164     170     181     199
1345          DI     225     262     313     378     460     558     673     807     958    1118
1346          DQ       0       0      86     117     141     162     164     165     167     169
1347          DQ     171     173     175     176     178     180     182     183     185     187
              *

1348          KK  611612
1349          KM      Normal depth channel route from C611 to C612
1350          KM      Source:  200 Scale Mapping
1351          RS       1    FLOW      -1
1352          RC   0.040   0.018   0.040   925.0  0.0270
1353          RX  1000.0  1020.0  1023.0  1041.0  1059.0  1060.2  1071.2  1136.2
1354          RY  1666.0  1664.0  1663.5  1663.9  1663.5  1663.9  1664.0  1666.0
              *

1355          KK    211P
1356          KM   Sub-Basin   211P
1357          KM
1358          KM      The Clark Unit Hydrograph is used for this basin.
1359          KM          The Urban time-area relation is used for this basin.
1360          KM
1361          KM      Time of Concentration for this sub-basin is based on the following:
1362          KM          6-Hour Rainfall, Pattern No.  1.00
1363          KM          An rainfall areal reduction factor of 1.000
1364          KM
1365          KM       EXCESS RAINFALL VALUES EXCEEDED IN 5-MINUTE INTERVALS
1366          KM     5  10  15  20  25  30  35  40  45  50  55  60  65  70  75  80  85  90
1367          KM   .49 .49 .49 .18 .15 .15 .07 .07 .07 .07 .07 .07 .01 .01 .01 .01 .01 .01
1368          KM
1369          KM          L=   0.307 miles, S=  192 feet/mile, Kb= .03
1370          KM
1371          BA   0.033
```



```
LINE          ID.......1.......2.......3.......4.......5.......6.......7.......8.......9......10

1372          LG    0.08    0.15    7.00    0.11   44.90
1373          UC   0.100   0.077
1374          UA       0       5      16      30      65      77      84      90      94      97
1375          UA     100
              *

1376          KK    C612
1377          KM      Hydrograph combine 611612 + 211P at C612
1378          HC       2
              *
              * *
              * * NOTE: 612613 is too short to route
              * *
              *

1379          KK    C613
1380          KM      Hydrograph combine 608613 + C612 at C613
1381          HC       2
              *

1382          KK  613621
1383          KM      Normal depth channel route from C613 to C621
1384          KM      Source:  HEC-2 Cross Section: AS 3.241
1385          RS       2    FLOW      -1
1386          RC   0.100   0.045   0.100   718.0  0.0251
1387          RX  9695.4  9884.0  9985.0  9991.1 10033.8 10062.8 10097.5 10165.1
1388          RY  1655.5  1647.5  1645.8  1641.1  1640.6  1642.1  1648.7  1654.3
              *

1389          KK    211L
1390          KM   Sub-Basin   211L
1391          KM
1392          KM      The Clark Unit Hydrograph is used for this basin.
1393          KM          The Urban time-area relation is used for this basin.
1394          KM
1395          KM      Time of Concentration for this sub-basin is based on the following:
1396          KM          6-Hour Rainfall, Pattern No.  1.00
1397          KM          An rainfall areal reduction factor of 0.999
1398          KM
1399          KM       EXCESS RAINFALL VALUES EXCEEDED IN 5-MINUTE INTERVALS
1400          KM     5  10  15  20  25  30  35  40  45  50  55  60  65  70  75  80  85  90
1401          KM   .46 .46 .46 .15 .12 .11 .05 .05 .04 .03 .03 .03 .01 .01 .01 .01 .01 .01
1402          KM
1403          KM          L=   0.508 miles, S=  181 feet/mile, Kb= .04
```

```
1404          KM
1405          BA   0.096
1406          LG    0.16    0.28    4.35    0.36   37.80
1407          UC   0.158   0.106
1408          UA       0       5      16      30      65      77      84      90      94      97
1409          UA     100
              *
```



```
LINE          ID.......1.......2.......3.......4.......5.......6.......7.......8.......9......10

1410          KK   C621L
1411          KM      Hydrograph combine 613621 + 211L at C621 left branch
1412          HC       2
              *
              * *
              * * Move to the top of Arrow Wash
              * *
              *

1413          KK    211Q
1414          KM   Sub-Basin   211Q
1415          KM
1416          KM      The Clark Unit Hydrograph is used for this basin.
1417          KM          The HEC-1 time-area relation is used for this basin.
1418          KM
1419          KM      Time of Concentration for this sub-basin is based on the following:
1420          KM          6-Hour Rainfall, Pattern No.  1.00
1421          KM          An rainfall areal reduction factor of 1.000
1422          KM
1423          KM       EXCESS RAINFALL VALUES EXCEEDED IN 5-MINUTE INTERVALS
1424          KM     5  10  15  20  25  30  35  40  45  50  55  60  65  70  75  80  85  90
1425          KM   .45 .45 .45 .14 .10 .09 .04 .04 .03 .01 .01 .01 .00 .00 .00 .00 .00 .00
1426          KM
1427          KM          L=   0.255 miles, S=  295 feet/mile, Kb= .12
1428          KM
1429          BA   0.021
1430          LG    0.14    0.38    5.70    0.20    8.50
1431          UC   0.171   0.157
              *

1432          KK  616617
1433          KM      Normal depth channel route from C616 to C617
1434          KM      Source:  200 Scale Mapping
1435          RS       4    FLOW      -1
1436          RC   0.070   0.060   0.070  1131.0  0.0553
1437          RX  1000.0  1008.0  1015.0  1045.0  1050.0  1080.0  1100.0  1110.0
1438          RY  1834.0  1832.0  1830.0  1826.0  1826.0  1830.0  1834.0  1836.0
              *

1439          KK    211R
1440          KM   Sub-Basin   211R
1441          KM
1442          KM      The Clark Unit Hydrograph is used for this basin.
1443          KM          The HEC-1 time-area relation is used for this basin.
1444          KM
1445          KM      Time of Concentration for this sub-basin is based on the following:
1446          KM          6-Hour Rainfall, Pattern No.  1.00
1447          KM          An rainfall areal reduction factor of 0.999
1448          KM
1449          KM       EXCESS RAINFALL VALUES EXCEEDED IN 5-MINUTE INTERVALS
1450          KM     5  10  15  20  25  30  35  40  45  50  55  60  65  70  75  80  85  90
1451          KM   .46 .46 .45 .15 .11 .11 .05 .05 .04 .02 .02 .02 .01 .01 .01 .01 .01 .01
1452          KM
1453          KM          L=   0.572 miles, S=  271 feet/mile, Kb= .10
```



```
LINE          ID.......1.......2.......3.......4.......5.......6.......7.......8.......9......10

1454          KM
1455          BA   0.084
1456          LG    0.13    0.38    5.70    0.20   22.00
1457          UC   0.242   0.200
              *

1458          KK   C617L
1459          KM      Hydrograph combine 616617 + 211R at C617 left branch
1460          HC       2
              *

1461          KK    211U
1462          KM   Sub-Basin   211U
1463          KM
1464          KM      The Clark Unit Hydrograph is used for this basin.
1465          KM          The Urban time-area relation is used for this basin.
1466          KM
1467          KM      Time of Concentration for this sub-basin is based on the following:
1468          KM          6-Hour Rainfall, Pattern No.  1.00
1469          KM          An rainfall areal reduction factor of 1.000
1470          KM
1471          KM       EXCESS RAINFALL VALUES EXCEEDED IN 5-MINUTE INTERVALS
1472          KM     5  10  15  20  25  30  35  40  45  50  55  60  65  70  75  80  85  90
1473          KM   .49 .49 .49 .18 .15 .15 .07 .07 .07 .07 .06 .06 .02 .02 .02 .02 .02 .02
1474          KM
1475          KM          L=   0.831 miles, S=  214 feet/mile, Kb= .04
1476          KM
1477          BA   0.027
```

```
1478          LG    0.07    0.26    5.70    0.18   65.50
1479          UC   0.188   0.386
1480          UA       0       5      16      30      65      77      84      90      94      97
1481          UA     100
              *

1482          KK   D614L
1483          KM      Hydrograph diversion at C614.  Main flow continues in the left branch.
1484          KM      Diverted flow is in the right branch.
1485          DT   D614R
1486          DI       0     4.3     8.5    20.0    49.0    85.5
1487          DQ       0     2.5     5.0    13.5    35.0    60.0
              *

1488          KK    C617
1489          KM      Hydrograph combine C617L + D614L at C617
1490          HC       2
              *

1491          KK  617618
1492          KM      Normal depth channel route from C617 to C618
1493          KM      Source:  HEC-2 Cross Section: AR 0.836
1494          RS       5    FLOW      -1
1495          RC   0.070   0.060   0.070  1912.0  0.0345
1496          RX  9983.3  9987.2  9989.2  9991.1 10031.5 10053.5 10070.6 10097.7
1497          RY  1766.5  1762.3  1760.2  1758.1  1757.8  1760.8  1764.2  1770.6
              *
1                                          HEC-1 INPUT                                                PAGE 35

LINE          ID.......1.......2.......3.......4.......5.......6.......7.......8.......9......10

1498          KK    211S
1499          KM   Sub-Basin   211S
1500          KM
1501          KM      The Clark Unit Hydrograph is used for this basin.
1502          KM          The HEC-1 time-area relation is used for this basin.
1503          KM
1504          KM      Time of Concentration for this sub-basin is based on the following:
1505          KM          6-Hour Rainfall, Pattern No.  1.00
1506          KM          An rainfall areal reduction factor of 0.999
1507          KM
1508          KM       EXCESS RAINFALL VALUES EXCEEDED IN 5-MINUTE INTERVALS
1509          KM     5  10  15  20  25  30  35  40  45  50  55  60  65  70  75  80  85  90
1510          KM   .46 .46 .46 .15 .12 .11 .05 .05 .04 .03 .02 .02 .01 .01 .01 .01 .01 .01
1511          KM
1512          KM          L=   0.445 miles, S=  272 feet/mile, Kb= .10
1513          KM
1514          BA   0.050
1515          LG    0.13    0.36    5.70    0.20   26.10
1516          UC   0.213   0.190
              *

1517          KK   C618I
1518          KM      Hydrograph combine 617618 + 211S at C618I
1519          HC       2
              *

1520          KK   C618O
1521          KM      Reservoir route at C618.
1522          RS       1    ELEV  1730.6
1523          SV    0.00    0.01    0.06    0.24    0.50    0.75    1.20    1.66    2.30    2.94
1524          SV    3.20    3.30    3.40    3.60    3.80    3.90    4.10    4.30    4.50    4.65
1525          SE  1730.6  1734.0  1736.0  1738.0  1739.0  1740.0  1741.0  1742.0  1743.0  1744.0
1526          SE  1744.3  1744.4  1744.6  1744.8  1745.0  1745.2  1745.4  1745.6  1745.8  1746.0
1527          SQ       0     2.2     2.6     3.0     3.1     3.2     3.3     3.5     3.6     3.7
1528          SQ     3.7     3.8       8      21      48      88     143     212     295     390
              *

1529          KK  BB614R
1530          KM      Retrieve previously diverted hydrograph at C614 in the right branch.
1531          DR   D614R
              *

1532          KK  614615
1533          KM      Normal depth channel route from C614 to C615
1534          KM      Source:  Hydrology Field Reconnaissance
1535          RS       3    FLOW      -1
1536          RC   0.040   0.018   0.040  1114.0  0.0397
1537          RX  1000.0  1020.0  1025.0  1059.0  1091.0  1093.0  1098.0  1103.0
1538          RY  1828.0  1822.0  1821.5  1822.2  1821.8  1822.0  1824.0  1826.0
              *
1                                          HEC-1 INPUT                                                PAGE 36

LINE          ID.......1.......2.......3.......4.......5.......6.......7.......8.......9......10

1539          KK    211V
1540          KM   Sub-Basin   211V
1541          KM
1542          KM      The Clark Unit Hydrograph is used for this basin.
1543          KM          The Urban time-area relation is used for this basin.
1544          KM
1545          KM      Time of Concentration for this sub-basin is based on the following:
1546          KM          6-Hour Rainfall, Pattern No.  1.00
1547          KM          An rainfall areal reduction factor of 1.000
1548          KM
1549          KM       EXCESS RAINFALL VALUES EXCEEDED IN 5-MINUTE INTERVALS
```

```
1550          KM     5  10  15  20  25  30  35  40  45  50  55  60  65  70  75  80  85  90
1551          KM   .50 .50 .50 .19 .16 .16 .08 .08 .08 .08 .08 .08 .02 .02 .02 .02 .02 .02
1552          KM
1553          KM          L=   0.222 miles, S=  212 feet/mile, Kb= .04
1554          KM
1555          BA   0.005
1556          LG    0.06    0.25    5.80    0.18   90.00
1557          UC   0.096   0.170
1558          UA       0       5      16      30      65      77      84      90      94      97
1559          UA     100
              *

1560          KK    C615
1561          KM      Hydrograph combine 614615 + 211V at C615
1562          HC       2    0.03
              *

1563          KK   D615L
1564          KM      Hydrograph diversion at C615.  Main flow continues in the left branch.
1565          KM      Diverted flow is in the right branch.
1566          DT   D615R
1567          DI       0     1.3     2.5     5.3     8.6    14.2    23.0    36.8    55.5    77.5
1568          DQ       0       0       0     1.3     2.6     4.2     7.0    12.8    19.5    29.5
              *

1569          KK  615618
1570          KM      Normal depth channel route from C615 to C618
1571          KM      Source:  Hydrology Field Reconnaissance
1572          RS       1    FLOW      -1
1573          RC   0.040   0.018   0.040   499.0  0.1338
1574          RX  1000.0  1008.0  1009.2  1013.2  1027.2  1028.4  1036.4  1045.4
1575          RY  1800.4  1799.6  1799.2  1798.8  1798.3  1798.7  1798.9  1800.4
              *

1576          KK    C618
1577          KM      Hydrograph combine C618O + 615618 at C618
1578          HC       2    0.19
              *
```



```
LINE          ID.......1.......2.......3.......4.......5.......6.......7.......8.......9......10

1579          KK  618619
1580          KM      Normal depth channel route from C618 to C619
1581          KM      Source:  HEC-2 Cross Section: AR 0.441
1582          RS       4    FLOW      -1
1583          RC   0.070   0.060   0.070  1837.0  0.0285
1584          RX  9870.6  9928.6  9957.1  9996.9 10004.9 10022.1 10062.0 10116.4
1585          RY  1709.2  1700.9  1698.8  1690.0  1689.8  1699.6  1700.3  1711.3
              *

1586          KK    211T
1587          KM   Sub-Basin   211T
1588          KM
1589          KM      The Clark Unit Hydrograph is used for this basin.
1590          KM          The HEC-1 time-area relation is used for this basin.
1591          KM
1592          KM      Time of Concentration for this sub-basin is based on the following:
1593          KM          6-Hour Rainfall, Pattern No.  1.00
1594          KM          An rainfall areal reduction factor of 0.999
1595          KM
1596          KM       EXCESS RAINFALL VALUES EXCEEDED IN 5-MINUTE INTERVALS
1597          KM     5  10  15  20  25  30  35  40  45  50  55  60  65  70  75  80  85  90
1598          KM   .46 .46 .45 .15 .11 .11 .05 .05 .04 .02 .02 .02 .00 .00 .00 .00 .00 .00
1599          KM
1600          KM          L=   0.488 miles, S=  250 feet/mile, Kb= .10
1601          KM
1602          BA   0.066
1603          LG    0.13    0.37    5.70    0.20   21.00
1604          UC   0.229   0.191
              *

1605          KK   C619L
1606          KM      Hydrograph combine 618619 + 211T at C619 left branch
1607          HC       2
              *

1608          KK  BB615R
1609          KM      Retrieve previously diverted hydrograph at C615 in the right branch.
1610          DR   D615R
              *

1611          KK  615619
1612          KM      Normal depth channel route from C615 to C619
1613          KM      Source:  Hydrology Field Reconnaissance
1614          RS       5    FLOW      -1
1615          RC   0.045   0.024   0.025  2444.0  0.0493
1616          RX  1000.0  1009.3  1018.5  1037.0  1039.3  1053.0  1065.0  1065.0
1617          RY  1727.2  1726.5  1725.8  1724.4  1724.6  1725.8  1725.9  1725.9
              *
```



```
LINE          ID.......1.......2.......3.......4.......5.......6.......7.......8.......9......10

1618          KK   C619I
1619          KM      Hydrograph combine C619L + 615619 at C619I
```

```
1620          HC       2    0.25
              *

1621          KK   C619O
1622          KM      Reservoir route at C619.
1623          RS       1    ELEV  1675.6
1624          SV    0.00    1.72    2.98    4.70    7.00    7.08    7.17    7.26    7.34    7.43
1625          SV    7.51    7.60    7.69    7.77    7.86
1626          SE  1675.6  1686.0  1688.0  1690.0  1692.0  1692.2  1692.4  1692.6  1692.8  1693.0
1627          SE  1693.2  1693.4  1693.6  1693.8  1694.0
1628          SQ       0       4      25      72     128     155     163     172     178     187
1629          SQ     195     213     238     273     318     374     441     518     606     706
1630          SE  1675.6  1676.0  1678.0  1680.0  1682.0  1684.0  1686.0  1688.0  1690.0  1692.0
1631          SE  1692.2  1692.4  1692.6  1692.8  1693.0  1693.2  1693.4  1693.6  1693.8  1694.0
              *

1632          KK   D619R
1633          KM      Hydrograph diversion at C619.  Main flow continues in the right branch.
1634          KM      Diverted flow is in the left branch.
1635          DT   D619L
1636          DI       0       4      25      72     128     155     163     172     178     187
1637          DI     195     213     238     273     318     374     441     518     606     706
1638          DQ       0       0       0       0       0       0       0       0       0       0
1639          DQ       8      24      49      83     128     182     249     326     412     512
              *

1640          KK  619620
1641          KM                Lag route through Palisades Plaza storm drain
1642          RT       0               1
              *

1643          KK  BB619L
1644          KM      Retrieve previously diverted hydrograph at C619 in the left branch.
1645          DR   D619L
              *

1646          KK  619620
1647          KM   Normal depth channel route from C619 to C620 in Fountain Hills Blvd.
1648          KM   Source:  200 Scale Mapping. Similiar to 523548
1649          RS       1    FLOW      -1
1650          RC   0.040   0.024   0.040   800.0  0.0288
1651          RX   918.0   940.0   960.0  1000.0  1040.0  1040.1  1044.1  1088.1
1652          RY  1648.0  1645.8  1643.8  1644.7  1644.0  1644.5  1644.5  1648.0
              *

1653          KK    211W
1654          KM   Sub-Basin   211W
1655          KM
1656          KM      The Clark Unit Hydrograph is used for this basin.
1657          KM          The Urban time-area relation is used for this basin.
1658          KM
1659          KM      Time of Concentration for this sub-basin is based on the following:
```



```
LINE          ID.......1.......2.......3.......4.......5.......6.......7.......8.......9......10

1660          KM          6-Hour Rainfall, Pattern No.  1.00
1661          KM          An rainfall areal reduction factor of 1.000
1662          KM
1663          KM       EXCESS RAINFALL VALUES EXCEEDED IN 5-MINUTE INTERVALS
1664          KM     5  10  15  20  25  30  35  40  45  50  55  60  65  70  75  80  85  90
1665          KM   .49 .49 .49 .18 .15 .15 .07 .07 .07 .07 .07 .06 .02 .02 .02 .02 .02 .02
1666          KM
1667          KM          L=   0.289 miles, S=  173 feet/mile, Kb= .04
1668          KM
1669          BA   0.030
1670          LG    0.07    0.27    5.70    0.18   69.90
1671          UC   0.117   0.094
1672          UA       0       5      16      30      65      77      84      90      94      97
1673          UA     100
              *

1674          KK   C620R
1675          KM      Hydrograph combine 619620 + R619L + 211W at C620 right branch
1676          HC       3    0.28
              *

1677          KK  BB611R
1678          KM      Retrieve previously diverted hydrograph at C611 in the right branch.
1679          DR   D611R
              *

1680          KK  611620
1681          KM                Lag route through Palisades Plaza storm drain
1682          RT       0               1
              *

1683          KK    C620
1684          KM      Hydrograph combine 611620 + C620R at C620
1685          HC       2    0.42
              *

1686          KK  620621
1687          KM      Normal depth channel route from C620 to C621
1688          KM      Source:  HEC-2 Cross Section: AR 0.081
1689          RS       2    FLOW      -1
1690          RC   0.050   0.050   0.050   915.0  0.0394
1691          RX  9790.0  9790.1  9972.2  9994.8 10004.9 10029.7 10048.6 10125.0
```

```
1692          RY  1657.9  1657.5  1656.4  1646.8  1646.8  1657.8  1657.0  1657.9
              *

1693          KK    C621
1694          KM      Hydrograph combine C621L + 620621 at C621
1695          HC       2     7.93
              *
```



```
LINE          ID.......1.......2.......3.......4.......5.......6.......7.......8.......9......10


1696          KK  621622
1697          KM      Normal depth channel route from C621 to C622
1698          KM      Source:  HEC-2 Cross Section: AS 2.785
1699          RS       6    FLOW      -1
1700          RC   0.100   0.045   0.100  3830.0  0.0144
1701          RX  9827.3  9922.9  9951.0 10000.0 10002.7 10044.7 10071.6 10076.8
1702          RY  1615.2  1611.0  1604.1  1600.8  1601.5  1601.6  1611.0  1613.9
              *

1703          KK    211X
1704          KM   Sub-Basin   211X
1705          KM
1706          KM      The Clark Unit Hydrograph is used for this basin.
1707          KM          The HEC-1 time-area relation is used for this basin.
1708          KM
1709          KM      Time of Concentration for this sub-basin is based on the following:
1710          KM          6-Hour Rainfall, Pattern No.  1.00
1711          KM          An rainfall areal reduction factor of 0.997
1712          KM
1713          KM       EXCESS RAINFALL VALUES EXCEEDED IN 5-MINUTE INTERVALS
1714          KM     5  10  15  20  25  30  35  40  45  50  55  60  65  70  75  80  85  90
1715          KM   .47 .47 .46 .16 .13 .12 .06 .05 .05 .04 .04 .04 .01 .01 .01 .01 .01 .01
1716          KM
1717          KM          L=   0.929 miles, S=  111 feet/mile, Kb= .05
1718          KM
1719          BA   0.214
1720          LG    0.16    0.30    4.90    0.27   43.20
1721          UC   0.288   0.211
              *

1722          KK   C622R
1723          KM      Hydrograph combine 621622 + 211X at C622 right branch
1724          HC       2
              *
              * *
              * * Move to the top of Tulip Wash
              * *
              *

1725          KK    211A
1726          KM   Sub-Basin   211A
1727          KM
1728          KM      The Clark Unit Hydrograph is used for this basin.
1729          KM          The HEC-1 time-area relation is used for this basin.
1730          KM
1731          KM      Time of Concentration for this sub-basin is based on the following:
1732          KM          6-Hour Rainfall, Pattern No.  1.00
1733          KM          An rainfall areal reduction factor of 0.998
1734          KM
1735          KM       EXCESS RAINFALL VALUES EXCEEDED IN 5-MINUTE INTERVALS
1736          KM     5  10  15  20  25  30  35  40  45  50  55  60  65  70  75  80  85  90
1737          KM   .45 .45 .45 .14 .10 .10 .04 .04 .03 .01 .01 .01 .00 .00 .00 .00 .00 .00
1738          KM
1739          KM          L=   0.820 miles, S=  248 feet/mile, Kb= .10
```



```
LINE          ID.......1.......2.......3.......4.......5.......6.......7.......8.......9......10

1740          KM
1741          BA   0.143
1742          LG    0.14    0.38    5.70    0.21   13.80
1743          UC   0.313   0.263
              *

1744          KK   C600O
1745          KM      Reservoir route at C600.
1746          RS       1    ELEV  1754.0
1747          SV    0.00    0.14    0.62    1.52    2.95    5.06    7.98   11.80   16.61   22.67
1748          SV   30.07   38.71   40.50   40.60   41.60   42.70   43.70   44.60   45.70
1749          SE  1754.0  1756.0  1758.0  1760.0  1762.0  1764.0  1766.0  1768.0  1770.0  1772.0
1750          SE  1774.0  1776.0 1776.36  1776.4  1776.6  1776.8  1777.0  1777.2  1777.4
1751          SQ       0      55     183     320     427     513     570     620     665     709
1752          SQ     750     789     795     795     812     849     906     984    1084
              *

1753          KK  600601
1754          KM      Normal depth channel route from C600 to C601
1755          KM      Source:  HEC-2 Cross Section: TU 1.538
1756          RS       4    FLOW      -1
1757          RC   0.040   0.025   0.040  2406.0  0.0176
1758          RX  9945.6  9959.4  9968.3  9985.9 10000.0 10017.2 10038.7 10058.8
1759          RY  1734.5  1732.3  1727.9  1726.2  1725.0  1727.7  1735.2  1736.0
              *

1760          KK    211B
1761          KM   Sub-Basin   211B
```

```
1762          KM
1763          KM      The Clark Unit Hydrograph is used for this basin.
1764          KM          The HEC-1 time-area relation is used for this basin.
1765          KM
1766          KM      Time of Concentration for this sub-basin is based on the following:
1767          KM          6-Hour Rainfall, Pattern No.  1.00
1768          KM          An rainfall areal reduction factor of 0.999
1769          KM
1770          KM       EXCESS RAINFALL VALUES EXCEEDED IN 5-MINUTE INTERVALS
1771          KM     5  10  15  20  25  30  35  40  45  50  55  60  65  70  75  80  85  90
1772          KM   .45 .45 .45 .14 .11 .10 .04 .04 .03 .01 .01 .01 .00 .00 .00 .00 .00 .00
1773          KM
1774          KM          L=   0.618 miles, S=  244 feet/mile, Kb= .10
1775          KM
1776          BA   0.109
1777          LG    0.14    0.37    5.80    0.21   13.40
1778          UC   0.263   0.202
              *

1779          KK    C601
1780          KM      Hydrograph combine 600601 + 211B at C601
1781          HC       2
              *
```



```
LINE          ID.......1.......2.......3.......4.......5.......6.......7.......8.......9......10

1782          KK  601602
1783          KM      Normal depth channel route from C601 to C602
1784          KM      Source:  HEC-2 Cross Section: TU 1.102
1785          RS       3    FLOW      -1
1786          RC   0.065   0.040   0.055  1765.0  0.0146
1787          RX  9916.9  9959.1  9965.8  9980.2 10004.0 10019.5 10047.3 10094.1
1788          RY  1699.9  1699.8  1696.4  1689.8  1688.9  1695.7  1698.2  1698.4
              *

1789          KK    211C
1790          KM   Sub-Basin   211C
1791          KM
1792          KM      The Clark Unit Hydrograph is used for this basin.
1793          KM          The Urban time-area relation is used for this basin.
1794          KM
1795          KM      Time of Concentration for this sub-basin is based on the following:
1796          KM          6-Hour Rainfall, Pattern No.  1.00
1797          KM          An rainfall areal reduction factor of 0.999
1798          KM
1799          KM       EXCESS RAINFALL VALUES EXCEEDED IN 5-MINUTE INTERVALS
1800          KM     5  10  15  20  25  30  35  40  45  50  55  60  65  70  75  80  85  90
1801          KM   .48 .48 .48 .17 .14 .14 .06 .06 .06 .05 .05 .05 .01 .01 .01 .01 .01 .01
1802          KM
1803          KM          L=   0.479 miles, S=  154 feet/mile, Kb= .03
1804          KM
1805          BA   0.043
1806          LG    0.08    0.25    5.70    0.18   44.50
1807          UC   0.138   0.137
1808          UA       0       5      16      30      65      77      84      90      94      97
1809          UA     100
              *

1810          KK   C602L
1811          KM      Hydrograph combine 601602 + 211C at C602 left branch
1812          HC       2
              *

1813          KK    211D
1814          KM   Sub-Basin   211D
1815          KM
1816          KM      The Clark Unit Hydrograph is used for this basin.
1817          KM          The Urban time-area relation is used for this basin.
1818          KM
1819          KM      Time of Concentration for this sub-basin is based on the following:
1820          KM          6-Hour Rainfall, Pattern No.  1.00
1821          KM          An rainfall areal reduction factor of 0.999
1822          KM
1823          KM       EXCESS RAINFALL VALUES EXCEEDED IN 5-MINUTE INTERVALS
1824          KM     5  10  15  20  25  30  35  40  45  50  55  60  65  70  75  80  85  90
1825          KM   .44 .44 .43 .13 .09 .07 .03 .03 .02 .02 .02 .02 .01 .01 .01 .01 .01 .01
1826          KM
1827          KM          L=   0.686 miles, S=  115 feet/mile, Kb= .04
1828          KM
1829          BA   0.071
```



```
LINE          ID.......1.......2.......3.......4.......5.......6.......7.......8.......9......10

1830          LG    0.21    0.30    3.85    0.49   28.30
1831          UC   0.217   0.227
1832          UA       0       5      16      30      65      77      84      90      94      97
1833          UA     100
              *

1834          KK    C602
1835          KM      Hydrograph combine C602L + 211D at C602
1836          HC       2
              *

1837          KK  602603
```

```
1838          KM      Normal depth channel route from C602 to C603
1839          KM      Source:  HEC-2 Cross Section: LE 0.672
1840          RS       4    FLOW      -1
1841          RC   0.060   0.045   0.060  2610.0  0.0211
1842          RX  9891.9  9963.9  9986.5 10000.0 10012.7 10023.8 10085.0 10176.4
1843          RY  1653.5  1653.5  1644.4  1644.1  1645.0  1649.8  1651.7  1656.7
              *

1844          KK    211E
1845          KM   Sub-Basin   211E
1846          KM
1847          KM      The Clark Unit Hydrograph is used for this basin.
1848          KM          The Urban time-area relation is used for this basin.
1849          KM
1850          KM      Time of Concentration for this sub-basin is based on the following:
1851          KM          6-Hour Rainfall, Pattern No.  1.00
1852          KM          An rainfall areal reduction factor of 0.998
1853          KM
1854          KM       EXCESS RAINFALL VALUES EXCEEDED IN 5-MINUTE INTERVALS
1855          KM     5  10  15  20  25  30  35  40  45  50  55  60  65  70  75  80  85  90
1856          KM   .47 .47 .47 .16 .13 .13 .06 .06 .05 .04 .04 .04 .01 .01 .01 .01 .01 .01
1857          KM
1858          KM          L=   0.609 miles, S=  118 feet/mile, Kb= .03
1859          KM
1860          BA   0.156
1861          LG    0.11    0.27    5.10    0.24   42.20
1862          UC   0.171   0.101
1863          UA       0       5      16      30      65      77      84      90      94      97
1864          UA     100
              *

1865          KK    C603
1866          KM      Hydrograph combine 602603 + 211E at C603
1867          HC       2
              *

1868          KK  603622
1869          KM      Normal depth channel route from C603 to C622
1870          KM      Source:  HEC-2 Cross Section: LE 0.287
1871          RS       5    FLOW      -1
1872          RC   0.060   0.045   0.060  2745.0  0.0204
1873          RX  9883.0  9929.7  9967.3  9991.6 10042.2 10073.6 10177.6 10194.5
1874          RY  1619.4  1618.7  1611.8  1602.1  1603.3  1609.4  1610.5  1610.6
              *
```



```
LINE          ID.......1.......2.......3.......4.......5.......6.......7.......8.......9......10

1875          KK    211F
1876          KM   Sub-Basin   211F
1877          KM
1878          KM      The Clark Unit Hydrograph is used for this basin.
1879          KM          The Urban time-area relation is used for this basin.
1880          KM
1881          KM      Time of Concentration for this sub-basin is based on the following:
1882          KM          6-Hour Rainfall, Pattern No.  1.00
1883          KM          An rainfall areal reduction factor of 0.999
1884          KM
1885          KM       EXCESS RAINFALL VALUES EXCEEDED IN 5-MINUTE INTERVALS
1886          KM     5  10  15  20  25  30  35  40  45  50  55  60  65  70  75  80  85  90
1887          KM   .48 .48 .48 .17 .14 .14 .06 .06 .06 .05 .05 .05 .01 .01 .01 .01 .01 .01
1888          KM
1889          KM          L=   0.770 miles, S=  134 feet/mile, Kb= .03
1890          KM
1891          BA   0.113
1892          LG    0.08    0.25    4.30    0.36   62.70
1893          UC   0.183   0.158
1894          UA       0       5      16      30      65      77      84      90      94      97
1895          UA     100
              *

1896          KK   C622L
1897          KM      Hydrograph combine 603622 + 211F at C622 left branch
1898          HC       2
              *

1899          KK    C622
1900          KM      Hydrograph combine C622R + C622L at C622
1901          HC       2
              *

1902          KK  622549
1903          KM      Normal depth channel route from C622 to C549
1904          KM      Source:  HEC-2 Cross Section: AS 2.279
1905          RS       6    FLOW      -1
1906          RC   0.113   0.125   0.120  1697.0  0.0118
1907          RX  9847.1  9851.0  9857.5  9862.8 10052.6 10062.8 10075.6 10084.6
1908          RY  1573.5  1571.3  1567.2  1564.6  1565.1  1566.7  1573.7  1573.9
              *

1909          KK    211Y
1910          KM   Sub-Basin   211Y
1911          KM
1912          KM      The Clark Unit Hydrograph is used for this basin.
1913          KM          The HEC-1 time-area relation is used for this basin.
1914          KM
1915          KM      Time of Concentration for this sub-basin is based on the following:
```

```
1916          KM          6-Hour Rainfall, Pattern No.  1.00
1917          KM          An rainfall areal reduction factor of 0.999
1918          KM
1919          KM       EXCESS RAINFALL VALUES EXCEEDED IN 5-MINUTE INTERVALS
1920          KM     5  10  15  20  25  30  35  40  45  50  55  60  65  70  75  80  85  90
1             HEC-1 INPUT                                                                PAGE 45

LINE          ID.......1.......2.......3.......4.......5.......6.......7.......8.......9......10

1921          KM   .47 .47 .46 .16 .13 .12 .05 .05 .05 .04 .03 .02 .00 .00 .00 .00 .00 .00
1922          KM
1923          KM          L=   0.606 miles, S=  147 feet/mile, Kb= .07
1924          KM
1925          BA   0.089
1926          LG    0.13    0.30    6.60    0.14   16.80
1927          UC   0.246   0.207
              *

1928          KK   C549R
1929          KM      Hydrograph combine 622549 + 211Y at C549 right branch
1930          HC       2
              *

1931          KK    C549
1932          KM      Hydrograph combine C549L + C549R at C549
1933          HC       2
              *

1934          KK  549626
1935          KM      Normal depth channel route from C549 to C626
1936          KM      Source:  HEC-2 Cross Section: AS 1.855
1937          RS       5    FLOW      -1
1938          RC   0.113   0.125   0.120  2044.0  0.0171
1939          RX  9943.2  9963.0  9985.6  9994.1 10007.6 10029.2 10150.5 10171.3
1940          RY  1539.3  1534.5  1531.2  1528.3  1528.2  1531.7  1532.5  1537.4
              *

1941          KK    211Z
1942          KM   Sub-Basin   211Z
1943          KM
1944          KM      The Clark Unit Hydrograph is used for this basin.
1945          KM          The Urban time-area relation is used for this basin.
1946          KM
1947          KM      Time of Concentration for this sub-basin is based on the following:
1948          KM          6-Hour Rainfall, Pattern No.  1.00
1949          KM          An rainfall areal reduction factor of 0.999
1950          KM
1951          KM       EXCESS RAINFALL VALUES EXCEEDED IN 5-MINUTE INTERVALS
1952          KM     5  10  15  20  25  30  35  40  45  50  55  60  65  70  75  80  85  90
1953          KM   .46 .46 .46 .15 .12 .11 .05 .05 .04 .03 .03 .03 .01 .01 .01 .01 .01 .01
1954          KM
1955          KM          L=   0.509 miles, S=  147 feet/mile, Kb= .04
1956          KM
1957          BA   0.083
1958          LG    0.14    0.27    4.50    0.34   34.40
1959          UC   0.171   0.126
1960          UA       0       5      16      30      65      77      84      90      94      97
1961          UA     100
              *
1             HEC-1 INPUT                                                                PAGE 46

LINE          ID.......1.......2.......3.......4.......5.......6.......7.......8.......9......10

1962          KK   C626C
1963          KM      Hydrograph combine 549626 + 211Z at C626 main branch
1964          HC       2
              *

1965          KK   211AA
1966          KM   Sub-Basin  211AA
1967          KM
1968          KM      The Clark Unit Hydrograph is used for this basin.
1969          KM          The Urban time-area relation is used for this basin.
1970          KM
1971          KM      Time of Concentration for this sub-basin is based on the following:
1972          KM          6-Hour Rainfall, Pattern No.  1.00
1973          KM          An rainfall areal reduction factor of 1.000
1974          KM
1975          KM       EXCESS RAINFALL VALUES EXCEEDED IN 5-MINUTE INTERVALS
1976          KM     5  10  15  20  25  30  35  40  45  50  55  60  65  70  75  80  85  90
1977          KM   .48 .48 .48 .17 .14 .14 .07 .06 .06 .06 .05 .05 .01 .01 .01 .01 .01 .01
1978          KM
1979          KM          L=   0.480 miles, S=   85 feet/mile, Kb= .06
1980          KM
1981          BA   0.034
1982          LG    0.09    0.24    6.60    0.14   38.80
1983          UC   0.238   0.287
1984          UA       0       5      16      30      65      77      84      90      94      97
1985          UA     100
              *

1986          KK  625626
1987          KM      Normal depth channel route from C625 to C626
1988          KM      Source:  200 Scale Mapping
1989          RS       3    FLOW      -1
1990          RC   0.040   0.018   0.040  1350.0  0.0252
1991          RX  1000.0  1020.0  1021.2  1055.2  1089.2  1090.4  1100.4  1105.4
```

```
1992          RY  1527.0  1526.0  1525.6  1526.3  1525.6  1526.0  1528.0  1530.0
              *

1993          KK   211AB
1994          KM   Sub-Basin  211AB
1995          KM
1996          KM      The Clark Unit Hydrograph is used for this basin.
1997          KM          The Urban time-area relation is used for this basin.
1998          KM
1999          KM      Time of Concentration for this sub-basin is based on the following:
2000          KM          6-Hour Rainfall, Pattern No.  1.00
2001          KM          An rainfall areal reduction factor of 0.999
2002          KM
2003          KM       EXCESS RAINFALL VALUES EXCEEDED IN 5-MINUTE INTERVALS
2004          KM     5  10  15  20  25  30  35  40  45  50  55  60  65  70  75  80  85  90
2005          KM   .48 .47 .47 .17 .13 .13 .06 .06 .06 .05 .04 .04 .01 .01 .01 .01 .01 .01
2006          KM
2007          KM          L=   0.293 miles, S=  321 feet/mile, Kb= .07
2008          KM
2009          BA   0.040
```



```
LINE          ID.......1.......2.......3.......4.......5.......6.......7.......8.......9......10

2010          LG    0.11    0.26    6.80    0.13   23.10
2011          UC   0.133   0.093
2012          UA       0       5      16      30      65      77      84      90      94      97
2013          UA     100
              *

2014          KK  623624
2015          KM      Normal depth channel route from C623 to C624
2016          KM      Source:  200 Scale Mapping
2017          RS       1    FLOW      -1
2018          RC   0.040   0.018   0.040   701.0  0.0114
2019          RX  1000.0  1010.0  1011.2  1027.2  1043.2  1044.4  1059.4  1074.4
2020          RY  1534.0  1532.0  1531.6  1531.9  1531.6  1532.0  1532.5  1533.0
              *

2021          KK   211AC
2022          KM   Sub-Basin  211AC
2023          KM
2024          KM      The Clark Unit Hydrograph is used for this basin.
2025          KM          The Urban time-area relation is used for this basin.
2026          KM
2027          KM      Time of Concentration for this sub-basin is based on the following:
2028          KM          6-Hour Rainfall, Pattern No.  1.00
2029          KM          An rainfall areal reduction factor of 1.000
2030          KM
2031          KM       EXCESS RAINFALL VALUES EXCEEDED IN 5-MINUTE INTERVALS
2032          KM     5  10  15  20  25  30  35  40  45  50  55  60  65  70  75  80  85  90
2033          KM   .49 .49 .49 .19 .16 .15 .08 .08 .07 .07 .07 .07 .01 .01 .01 .01 .01 .01
2034          KM
2035          KM          L=   0.306 miles, S=   82 feet/mile, Kb= .03
2036          KM
2037          BA   0.027
2038          LG    0.08    0.15    8.40    0.07   44.80
2039          UC   0.133   0.119
2040          UA       0       5      16      30      65      77      84      90      94      97
2041          UA     100
              *

2042          KK    C624
2043          KM      Hydrograph combine 623624 + 211AC at C624
2044          HC       2
              *

2045          KK  624626
2046          KM      Normal depth channel route from C624 to C626
2047          KM      Source:  HEC-2 Cross Section: AS 1.727
2048          RS       2    FLOW      -1
2049          RC   0.080   0.060   0.080   637.0  0.0235
2050          RX  9872.9  9881.0  9893.9  9902.2  9967.6  9976.4 10076.1 10084.3
2051          RY  1526.3  1524.6  1521.7  1520.0  1520.7  1521.6  1520.7  1526.2
              *
```



```
LINE          ID.......1.......2.......3.......4.......5.......6.......7.......8.......9......10

2052          KK   211AD
2053          KM   Sub-Basin  211AD
2054          KM
2055          KM      The Clark Unit Hydrograph is used for this basin.
2056          KM          The Urban time-area relation is used for this basin.
2057          KM
2058          KM      Time of Concentration for this sub-basin is based on the following:
2059          KM          6-Hour Rainfall, Pattern No.  1.00
2060          KM          An rainfall areal reduction factor of 0.999
2061          KM
2062          KM       EXCESS RAINFALL VALUES EXCEEDED IN 5-MINUTE INTERVALS
2063          KM     5  10  15  20  25  30  35  40  45  50  55  60  65  70  75  80  85  90
2064          KM   .49 .49 .49 .18 .15 .15 .07 .07 .07 .07 .07 .07 .01 .01 .01 .01 .01 .01
2065          KM
2066          KM          L=   0.489 miles, S=  280 feet/mile, Kb= .04
2067          KM
2068          BA   0.041
2069          LG    0.08    0.16    8.00    0.08   42.40
```

```
2070          UC   0.133   0.137
2071          UA       0       5      16      30      65      77      84      90      94      97
2072          UA     100
              *

2073          KK   C626R
2074          KM      Hydrograph combine 624626 + 211AD at C626 right branch
2075          HC       2
              *

2076          KK    C626
2077          KM      Hydrograph combine C626C + 625626 at C626R
2078          HC       3
              *

2079          KK  626627
2080          KM      Normal depth channel route from C626 to C627
2081          KM      Source:  HEC-2 Cross Section: AS 1.602
2082          RS       1    FLOW      -1
2083          RC   0.080   0.060   0.080   625.0  0.0208
2084          RX  9889.8  9941.2  9963.0 10011.6 10074.8 10083.9 10191.7 10210.4
2085          RY  1517.6  1516.9  1508.1  1506.6  1508.6  1511.7  1513.1  1518.8
              *

2086          KK   211AE
2087          KM   Sub-Basin  211AE
2088          KM
2089          KM      The Clark Unit Hydrograph is used for this basin.
2090          KM          The Urban time-area relation is used for this basin.
2091          KM
2092          KM      Time of Concentration for this sub-basin is based on the following:
2093          KM          6-Hour Rainfall, Pattern No.  1.00
2094          KM          An rainfall areal reduction factor of 1.000
2095          KM
2096          KM       EXCESS RAINFALL VALUES EXCEEDED IN 5-MINUTE INTERVALS
2097          KM     5  10  15  20  25  30  35  40  45  50  55  60  65  70  75  80  85  90
```



```
LINE          ID.......1.......2.......3.......4.......5.......6.......7.......8.......9......10

2098          KM   .48 .48 .48 .17 .14 .13 .06 .06 .06 .05 .05 .05 .01 .01 .01 .01 .01 .01
2099          KM
2100          KM          L=   0.313 miles, S=  153 feet/mile, Kb= .04
2101          KM
2102          BA   0.034
2103          LG    0.12    0.24    6.40    0.15   38.20
2104          UC   0.129   0.103
2105          UA       0       5      16      30      65      77      84      90      94      97
2106          UA     100
              *

2107          KK    C627
2108          KM      Hydrograph combine 626627 + 211AE at C627
2109          HC       2
              *
              * *
              * * C627 is the total flow in Ashbrook Wash at the Study boundary
              * *
              *
2110          ZZ
```

1

```
          SCHEMATIC DIAGRAM OF STREAM NETWORK
 INPUT
 LINE      (V) ROUTING          (--->) DIVERSION OR PUMP FLOW

  NO.      (.) CONNECTOR        (<---) RETURN OF DIVERTED OR PUMPED FLOW

   45        204A
                V
                V
   66      522523
                .
                .
   73           .        204B
                .           .
                .           .
   94       C523I............
                V
                V
   97       C523O
                .
                .
  109           .-------->   D523R
  106       D523L
                .
                .
  114           .        205A
                .           .
                .           .
  135           .           .        205B
                .           .           .
                .           .           .
  156           .        C528............
                .           V
                .           V
  159           .      528530
                .           .
                .           .
```

```
166          .          .        205C
             .          .          .
             .          .          .
187          .      C530R...........
             .          .
             .          .
190          .          .        205D
             .          .          .
             .          .          .
211          .          .          .        205E
             .          .          .          .
             .          .          .          .
232          .          .        C529...........
             .          .          .
             .          .          .
235          .       C530...........
             .          V
             .          V
238          .     530531
             .          .
             .          .
245          .          .        205F
             .          .          .
             .          .          .
266          .       C531...........
             .          V
             .          V
269          .     531532
             .          .
             .          .
276          .          .        205G
             .          .          .
             .          .          .
297          .      C532L...........
             .          .
             .          .
300          .          .        205H
             .          .          .
             .          .          .
321          .       C532...........
             .          V
             .          V
324          .     532533
             .          .
             .          .
331          .          .        205I
             .          .          .
             .          .          .
352          .       C533...........
             .          V
             .          V
355          .     533534
             .          .
             .          .
362          .          .        205J
             .          .          .
             .          .          .
383          .      C534R...........
             .          .
             .          .
386          .          .        205K
             .          .          .
             .          .          .
407          .       C534...........
             .          V
             .          V
410          .     534535
             .          .
             .          .
417          .          .        205L
             .          .          .
             .          .          .
438          .       C535...........
             .          V
             .          V
441          .     535536
             .          .
             .          .
448          .          .        205M
             .          .          .
             .          .          .
467          .      C536R...........
             .          .
             .          .
470          .          .        205N
             .          .          .
             .          .          .
489          .      C536I...........
             .          V
             .          V
492          .      C536O
             .          V
             .          V
504          .     536537
             .          .
             .          .
511          .          .        206A
             .          .          .
```

```
532          .        C537............
             .           V
             .           V
535          .      537538
             .           .
             .           .
542          .           .        206B
             .           .           .
             .           .           .
563          .       C538I...........
             .           V
             .           V
566          .       C538O
             .           V
             .           V
575          .      538540
             .           .
             .           .
582          .           .        206C
             .           .           .
             .           .           .
601          .       C540R...........
             .           .
             .           .
604          .           .        206D
             .           .           V
             .           .           V
625          .           .      539540
             .           .           .
             .           .           .
632          .           .           .        206E
             .           .           .           .
             .           .           .           .
651          .           .       C540L...........
             .           .           .
             .           .           .
654          .        C540...........
             .           V
             .           V
657          .      540541
             .           .
             .           .
664          .           .        206F
             .           .           .
             .           .           .
683          .        C541...........
             .           V
             .           V
686          .      541548
             .           .
             .           .
693          .           .        206G
             .           .           .
             .           .           .
714          .           .           .           .<-------   D523R
712          .           .           .      BB523R
             .           .           .           V
             .           .           .           V
715          .           .           .      523548
             .           .           .           .
             .           .           .           .
722          .       C548L......................
             .           .
             .           .
725          .           .        206H
             .           .           V
             .           .           V
746          .           .      542543
             .           .           .
             .           .           .
753          .           .           .        206I
             .           .           .           .
             .           .           .           .
772          .           .        C543...........
             .           .           .
             .           .           .
778          .           .           .------->   D543R
775          .           .       D543L
             .           .           V
             .           .           V
783          .           .      543544
             .           .           .
             .           .           .
790          .           .           .        206K
             .           .           .           .
             .           .           .           .
809          .           .        C544...........
             .           .           V
             .           .           V
812          .           .      544545
             .           .           .
             .           .           .
822          .           .           .------->   D545R
819          .           .       D545L
             .           .           V
             .           .           V
825          .           .      545546
```

```
                .          .          .
                .          .          .
 832            .          .          .        206L
                .          .          .          .
                .          .          .          .
 851            .          .      C546............
                .          .          V
                .          .          V
 854            .          .    546547
                .          .          .
                .          .          .
 863            .          .          .          .<-------   D543R
 861            .          .          .     BB543R
                .          .          .          V
                .          .          .          V
 864            .          .          .     543547
                .          .          .          .
                .          .          .          .
 873            .          .          .          .           .<-------   D545R
 871            .          .          .          .      BB545R
                .          .          .          .           V
                .          .          .          .           V
 874            .          .          .          .      545547
                .          .          .          .           .
                .          .          .          .           .
 881            .          .          .          .           .        206J
                .          .          .          .           .          .
                .          .          .          .           .          .
 902            .          .      C547.................................
                .          .          V
                .          .          V
 905            .          .    547548
                .          .          .
                .          .          .
 912            .          .          .        206M
                .          .          .          .
                .          .          .          .
 933            .          .     C548R............
                .          .          .
                .          .          .
 936            .       C548............
                .          V
                .          V
 939            .     548549
                .          .
                .          .
 946            .          .       206N
                .          .          .
                .          .          .
 967            .      C549L............
                .          .
                .          .
 970            .          .      C599O
                .          .          V
                .          .          V
1083            .          .    599608
                .          .          .
                .          .          .
1090            .          .          .        211K
                .          .          .          .
                .          .          .          .
1109            .          .     C608L............
                .          .          .
                .          .          .
1112            .          .          .        211G
                .          .          .          V
                .          .          .          V
1133            .          .          .     604606
                .          .          .          .
                .          .          .          .
1140            .          .          .          .        211I
                .          .          .          .           .
                .          .          .          .           .
1161            .          .          .      C606R............
                .          .          .          .
                .          .          .          .
1164            .          .          .          .        211H
                .          .          .          .           V
                .          .          .          .           V
1185            .          .          .          .      C605O
                .          .          .          .           .
                .          .          .          .           .
1194            .          .          .       C606............
                .          .          .          V
                .          .          .          V
1197            .          .          .     606607
                .          .          .          .
                .          .          .          .
1204            .          .          .          .        211J
                .          .          .          .           .
                .          .          .          .           .
1223            .          .          .       C607............
                .          .          .          V
                .          .          .          V
1226            .          .          .     607608
                .          .          .          .
                .          .          .          .
1233            .          .       C608............
```

```
                 .          .          V
                 .          .          V
1236             .          .     608613
                 .          .          .
                 .          .          .
1243             .          .          .       211M
                 .          .          .          V
                 .          .          .          V
1264             .          .          .     610611
                 .          .          .          .
                 .          .          .          .
1271             .          .          .          .        211N
                 .          .          .          .           .
                 .          .          .          .           .
1290             .          .          .      C611R............
                 .          .          .          .
                 .          .          .          .
1293             .          .          .          .        211O
                 .          .          .          .           V
                 .          .          .          .           V
1312             .          .          .          .       C609O
                 .          .          .          .           V
                 .          .          .          .           V
1321             .          .          .          .     609611
                 .          .          .          .           .
                 .          .          .          .           .
1328             .          .          .      C611I............
                 .          .          .          V
                 .          .          .          V
1331             .          .          .      C611O
                 .          .          .          .
                 .          .          .          .
1343             .          .          .          .-------->   D611R
1340             .          .          .      D611L
                 .          .          .          V
                 .          .          .          V
1348             .          .          .     611612
                 .          .          .          .
                 .          .          .          .
1355             .          .          .          .        211P
                 .          .          .          .           .
                 .          .          .          .           .
1376             .          .          .       C612............
                 .          .          .          .
                 .          .          .          .
1379             .          .       C613............
                 .          .          V
                 .          .          V
1382             .          .     613621
                 .          .          .
                 .          .          .
1389             .          .          .       211L
                 .          .          .          .
                 .          .          .          .
1410             .          .      C621L............
                 .          .          .
                 .          .          .
1413             .          .          .       211Q
                 .          .          .          V
                 .          .          .          V
1432             .          .          .     616617
                 .          .          .          .
                 .          .          .          .
1439             .          .          .          .        211R
                 .          .          .          .           .
                 .          .          .          .           .
1458             .          .          .      C617L............
                 .          .          .          .
                 .          .          .          .
1461             .          .          .          .        211U
                 .          .          .          .           .
                 .          .          .          .           .
1485             .          .          .          .           .-------->   D614R
1482             .          .          .          .      D614L
                 .          .          .          .           .
                 .          .          .          .           .
1488             .          .          .       C617............
                 .          .          .          V
                 .          .          .          V
1491             .          .          .     617618
                 .          .          .          .
                 .          .          .          .
1498             .          .          .          .        211S
                 .          .          .          .           .
                 .          .          .          .           .
1517             .          .          .      C618I............
                 .          .          .          V
                 .          .          .          V
1520             .          .          .      C618O
                 .          .          .          .
                 .          .          .          .
1531             .          .          .          .           .<-------   D614R
1529             .          .          .          .      BB614R
                 .          .          .          .           V
                 .          .          .          .           V
1532             .          .          .          .     614615
                 .          .          .          .           .
                 .          .          .          .           .
```

```
1539          .         .         .         .         .       211V
              .         .         .         .         .          .
              .         .         .         .         .          .
1560          .         .         .         .      C615...........
              .         .         .         .         .
              .         .         .         .         .
1566          .         .         .         .         .-------> D615R
1563          .         .         .         .     D615L
              .         .         .         .         V
              .         .         .         .         V
1569          .         .         .         .    615618
              .         .         .         .         .
              .         .         .         .         .
1576          .         .         .      C618...........
              .         .         .         V
              .         .         .         V
1579          .         .         .    618619
              .         .         .         .
              .         .         .         .
1586          .         .         .         .      211T
              .         .         .         .         .
              .         .         .         .         .
1605          .         .         .     C619L...........
              .         .         .         .
              .         .         .         .
1610          .         .         .         .         .<------- D615R
1608          .         .         .         .    BB615R
              .         .         .         .         V
              .         .         .         .         V
1611          .         .         .         .    615619
              .         .         .         .         .
              .         .         .         .         .
1618          .         .         .     C619I...........
              .         .         .         V
              .         .         .         V
1621          .         .         .     C619O
              .         .         .         .
              .         .         .         .
1635          .         .         .         .-------> D619L
1632          .         .         .     D619R
              .         .         .         V
              .         .         .         V
1640          .         .         .    619620
              .         .         .         .
              .         .         .         .
1645          .         .         .         .         .<------- D619L
1643          .         .         .         .    BB619L
              .         .         .         .         V
              .         .         .         .         V
1646          .         .         .         .    619620
              .         .         .         .         .
              .         .         .         .         .
1653          .         .         .         .         .       211W
              .         .         .         .         .          .
              .         .         .         .         .          .
1674          .         .         .     C620R......................
              .         .         .         .
              .         .         .         .
1679          .         .         .         .         .<------- D611R
1677          .         .         .         .    BB611R
              .         .         .         .         V
              .         .         .         .         V
1680          .         .         .         .    611620
              .         .         .         .         .
              .         .         .         .         .
1683          .         .         .      C620...........
              .         .         .         V
              .         .         .         V
1686          .         .         .    620621
              .         .         .         .
              .         .         .         .
1693          .         .      C621...........
              .         .         V
              .         .         V
1696          .         .    621622
              .         .         .
              .         .         .
1703          .         .         .      211X
              .         .         .         .
              .         .         .         .
1722          .         .     C622R...........
              .         .         .
              .         .         .
1725          .         .         .      211A
              .         .         .         V
              .         .         .         V
1744          .         .         .     C600O
              .         .         .         V
              .         .         .         V
1753          .         .         .    600601
              .         .         .         .
              .         .         .         .
1760          .         .         .         .      211B
              .         .         .         .         .
              .         .         .         .         .
1779          .         .         .      C601...........
              .         .         .         V
              .         .         .         V
```

```
1782          .          .          .      601602
              .          .          .          .
              .          .          .          .
1789          .          .          .          .        211C
              .          .          .          .          .
              .          .          .          .          .
1810          .          .          .     C602L...........
              .          .          .          .
              .          .          .          .
1813          .          .          .          .        211D
              .          .          .          .          .
              .          .          .          .          .
1834          .          .          .      C602...........
              .          .          .         V
              .          .          .         V
1837          .          .          .      602603
              .          .          .          .
              .          .          .          .
1844          .          .          .          .        211E
              .          .          .          .          .
              .          .          .          .          .
1865          .          .          .      C603...........
              .          .          .         V
              .          .          .         V
1868          .          .          .      603622
              .          .          .          .
              .          .          .          .
1875          .          .          .          .        211F
              .          .          .          .          .
              .          .          .          .          .
1896          .          .          .     C622L...........
              .          .          .          .
              .          .          .          .
1899          .          .       C622...........
              .          .          V
              .          .          V
1902          .          .     622549
              .          .          .
              .          .          .
1909          .          .          .       211Y
              .          .          .          .
              .          .          .          .
1928          .          .      C549R...........
              .          .          .
              .          .          .
1931          .       C549...........
              .          V
              .          V
1934          .     549626
              .          .
              .          .
1941          .          .       211Z
              .          .          .
              .          .          .
1962          .      C626C...........
              .          .
              .          .
1965          .          .      211AA
              .          .          V
              .          .          V
1986          .          .     625626
              .          .          .
              .          .          .
1993          .          .          .      211AB
              .          .          .          V
              .          .          .          V
2014          .          .          .     623624
              .          .          .          .
              .          .          .          .
2021          .          .          .          .       211AC
              .          .          .          .          .
              .          .          .          .          .
2042          .          .          .       C624...........
              .          .          .          V
              .          .          .          V
2045          .          .          .     624626
              .          .          .          .
              .          .          .          .
2052          .          .          .          .       211AD
              .          .          .          .          .
              .          .          .          .          .
2073          .          .          .      C626R...........
              .          .          .          .
              .          .          .          .
2076          .       C626......................
              .          V
              .          V
2079          .     626627
              .          .
              .          .
2086          .          .      211AE
              .          .          .
              .          .          .
2107          .       C627...........
```

```
(***) RUNOFF ALSO COMPUTED AT THIS LOCATION
1****************************************                                    ****************************************
*                                      *                                    *                                      *
*   FLOOD HYDROGRAPH PACKAGE  (HEC-1)  *                                    *    U.S. ARMY CORPS OF ENGINEERS      *
*              MAY   1991              *                                    *    HYDROLOGIC ENGINEERING CENTER     *
*           VERSION 4.0.1E             *                                    *          609 SECOND STREET           *
*                                      *                                    *       DAVIS, CALIFORNIA 95616        *
*  RUN DATE  02/21/:0  TIME  09:29:06  *                                    *           (916) 551-1748             *
*                                      *                                    *                                      *
****************************************                                    ****************************************
```

Golden Eagle Park Dam Modifications
by Stantec: Proj. No. 28900095 — File: ALTFf-2.IH1
for FCDMC: FCD — Date:07-08-99 mcg
Revised:

Alternative F:
Addition of an auxillary spillway. This spillway will function such that the existing emergency spillway does not operate for the 100-year storm. The stage-storage relation is adjusted to reflect revised grading in the park.

The purpose of this model is to estimate peak discharges in Ashbrook Wash for evaluation of the Dam modifications impact on the floodplain.

100-year, 6-hour existing condition watershed model for Ashbrook Wash upstream of the Fort McDowell Indian Reservation boundary.
This model is a portion of the original Fountain Hills North FDS watershed model conducted by GVSCE, 1994. The title cards from that model are included for reference.

Fountain Hills North Floodplain Delineation Study
FCD 92-04 by GVSCE — File: EX100-6.IH1
Existing Condition — Date: 02-25-94 trl
100-Year 6-Hour Storm, Clark Unit Hydrograph — Revised: 09-14-94 trl

```
 26 IO          OUTPUT CONTROL VARIABLES
                      IPRNT          5  PRINT CONTROL
                      IPLOT          0  PLOT CONTROL
                      QSCAL         0.  HYDROGRAPH PLOT SCALE

    IT          HYDROGRAPH TIME DATA
                       NMIN          1  MINUTES IN COMPUTATION INTERVAL
                      IDATE      1    0  STARTING DATE
                      ITIME       0000  STARTING TIME
                         NQ       1080  NUMBER OF HYDROGRAPH ORDINATES
                     NDDATE      1    0  ENDING DATE
                     NDTIME       1759  ENDING TIME
                      ICENT         19  CENTURY MARK

                 COMPUTATION INTERVAL    0.02 HOURS
                      TOTAL TIME BASE   17.98 HOURS

         ENGLISH UNITS
              DRAINAGE AREA          SQUARE MILES
              PRECIPITATION DEPTH    INCHES
              LENGTH, ELEVATION      FEET
              FLOW                   CUBIC FEET PER SECOND
              STORAGE VOLUME         ACRE-FEET
              SURFACE AREA           ACRES
              TEMPERATURE            DEGREES FAHRENHEIT

 28 JD          INDEX STORM NO. 1
                       STRM       3.30  PRECIPITATION DEPTH
                       TRDA       0.01  TRANSPOSITION DRAINAGE AREA


 32 JD          INDEX STORM NO. 2
                       STRM       3.28  PRECIPITATION DEPTH
                       TRDA       0.50  TRANSPOSITION DRAINAGE AREA


 33 JD          INDEX STORM NO. 3
                       STRM       3.23  PRECIPITATION DEPTH
                       TRDA       2.80  TRANSPOSITION DRAINAGE AREA


 37 JD          INDEX STORM NO. 4
                       STRM       3.04  PRECIPITATION DEPTH
                       TRDA      16.00  TRANSPOSITION DRAINAGE AREA


 41 JD          INDEX STORM NO. 5
                       STRM       2.67  PRECIPITATION DEPTH
                       TRDA      90.00  TRANSPOSITION DRAINAGE AREA

        WARNING EXCESS AT PONDING LESS THAN ZERO FOR PERIOD. EXCESS SET TO ZERO
        WARNING EXCESS AT PONDING LESS THAN ZERO FOR PERIOD. EXCESS SET TO ZERO
        WARNING EXCESS AT PONDING LESS THAN ZERO FOR PERIOD. EXCESS SET TO ZERO
```

RUNOFF SUMMARY
FLOW IN CUBIC FEET PER SECOND
TIME IN HOURS, AREA IN SQUARE MILES

	OPERATION	STATION	PEAK FLOW	TIME OF PEAK	AVERAGE FLOW FOR MAXIMUM PERIOD 6-HOUR	24-HOUR	72-HOUR	BASIN AREA	MAXIMUM STAGE	TIME OF MAX STAGE
+	HYDROGRAPH AT	204A	214.	4.20	20.	7.	7.	0.11		
+	ROUTED TO	522523	201.	4.37	20.	7.	7.	0.11		
+	HYDROGRAPH AT	204B	208.	4.27	23.	8.	8.	0.13		
+	2 COMBINED AT	C523I	386.	4.33	43.	14.	14.	0.23		
+	ROUTED TO	C523O	286.	4.52	43.	14.	14.	0.23		
+	DIVERSION TO	D523R	19.	4.52	1.	0.	0.	0.23		
+	HYDROGRAPH AT	D523L	266.	4.52	42.	14.	14.	0.23		
+	HYDROGRAPH AT	205A	210.	4.22	26.	9.	9.	0.12		
+	HYDROGRAPH AT	205B	486.	4.18	47.	16.	16.	0.21		
+	2 COMBINED AT	C528	690.	4.20	73.	25.	25.	0.33		
+	ROUTED TO	528530	680.	4.23	73.	25.	25.	0.33		
+	HYDROGRAPH AT	205C	107.	4.20	13.	4.	4.	0.06		
+	2 COMBINED AT	C530R	785.	4.22	86.	29.	29.	0.39		
+	HYDROGRAPH AT	205D	665.	4.23	71.	24.	24.	0.32		
+	HYDROGRAPH AT	205E	301.	4.33	48.	16.	16.	0.22		
+	2 COMBINED AT	C529	917.	4.25	119.	40.	40.	0.54		
+	2 COMBINED AT	C530	1472.	4.23	197.	66.	66.	0.93		
+	ROUTED TO	530531	1455.	4.28	197.	66.	66.	0.93		
+	HYDROGRAPH AT	205F	325.	4.22	36.	12.	12.	0.16		
+	2 COMBINED AT	C531	1639.	4.27	228.	77.	77.	1.09		
+	ROUTED TO	531532	1619.	4.33	228.	77.	77.	1.09		
+	HYDROGRAPH AT	205G	349.	4.23	40.	13.	13.	0.19		
+	2 COMBINED AT	C532L	1791.	4.32	262.	88.	88.	1.27		
+	HYDROGRAPH AT	205H	350.	4.35	56.	19.	19.	0.26		
+	2 COMBINED AT	C532	1970.	4.33	310.	104.	104.	1.53		
+	ROUTED TO	532533	1956.	4.35	310.	104.	104.	1.53		
+	HYDROGRAPH AT	205I	559.	4.30	70.	23.	23.	0.35		
+	2 COMBINED AT	C533	2232.	4.35	367.	123.	123.	1.89		
+	ROUTED TO	533534	2189.	4.52	367.	123.	123.	1.89		
+	HYDROGRAPH AT	205J	551.	4.28	65.	22.	22.	0.37		

+	2 COMBINED AT C534R	2392.	4.50	416.	140.	140.	2.25
+	HYDROGRAPH AT 205K	266.	4.38	45.	15.	15.	0.25
+	2 COMBINED AT C534	2507.	4.52	450.	151.	151.	2.50
+	ROUTED TO 534535	2495.	4.55	450.	151.	151.	2.50
+	HYDROGRAPH AT 205L	263.	4.15	20.	7.	7.	0.12
+	2 COMBINED AT C535	2520.	4.55	465.	156.	156.	2.62
+	ROUTED TO 535536	2496.	4.68	464.	156.	156.	2.62
+	HYDROGRAPH AT 205M	335.	4.10	31.	10.	10.	0.14
+	2 COMBINED AT C536R	2516.	4.67	489.	165.	165.	2.76
+	HYDROGRAPH AT 205N	211.	4.25	29.	10.	10.	0.16
+	2 COMBINED AT C536I	2586.	4.67	510.	172.	172.	2.91
+	ROUTED TO C536O	326.	6.03	312.	172.	172.	2.91
+	ROUTED TO 536537	326.	6.08	312.	172.	172.	2.91
+	HYDROGRAPH AT 206A	408.	4.03	31.	10.	10.	0.13
+	2 COMBINED AT C537	344.	4.28	317.	181.	181.	3.04
+	ROUTED TO 537538	339.	4.33	316.	181.	181.	3.04
+	HYDROGRAPH AT 206B	304.	4.03	25.	8.	8.	0.09
+	2 COMBINED AT C538I	463.	4.08	329.	188.	188.	3.14
+	ROUTED TO C538O	434.	4.28	327.	188.	188.	3.14
+	ROUTED TO 538540	433.	4.37	327.	188.	188.	3.14
+	HYDROGRAPH AT 206C	45.	4.10	4.	1.	1.	0.02
+	2 COMBINED AT C540R	452.	4.35	329.	189.	189.	3.16
+	HYDROGRAPH AT 206D	195.	4.03	17.	6.	6.	0.06
+	ROUTED TO 539540	185.	4.10	17.	6.	6.	0.06
+	HYDROGRAPH AT 206E	45.	4.08	4.	1.	1.	0.02
+	2 COMBINED AT C540L	230.	4.10	20.	7.	7.	0.09
+	2 COMBINED AT C540	545.	4.30	341.	194.	194.	3.24
+	ROUTED TO 540541	541.	4.50	340.	194.	194.	3.24
+	HYDROGRAPH AT 206F	259.	4.17	27.	9.	9.	0.16
+	2 COMBINED AT C541	651.	4.43	357.	200.	200.	3.40
+	ROUTED TO 541548	649.	4.45	357.	200.	200.	3.40
+	HYDROGRAPH AT 206G	112.	4.27	18.	6.	6.	0.09

HYDROGRAPH AT

+	BB523R	19.	4.52	1.	0.	0.	0.23
ROUTED TO +	523548	16.	4.77	1.	0.	0.	0.23
3 COMBINED AT +	C548L	713.	4.45	369.	203.	203.	3.72
HYDROGRAPH AT +	206H	153.	4.07	14.	5.	5.	0.06
ROUTED TO +	542543	149.	4.08	14.	5.	5.	0.06
HYDROGRAPH AT +	206I	67.	4.03	5.	2.	2.	0.02
2 COMBINED AT +	C543	210.	4.07	19.	6.	6.	0.08
DIVERSION TO +	D543R	210.	4.07	19.	6.	6.	0.08
HYDROGRAPH AT +	D543L	0.	0.02	0.	0.	0.	0.08
ROUTED TO +	543544	0.	0.02	0.	0.	0.	0.08
HYDROGRAPH AT +	206K	103.	4.13	11.	4.	4.	0.06
2 COMBINED AT +	C544	102.	4.13	11.	4.	4.	0.14
ROUTED TO +	544545	102.	4.17	11.	4.	4.	0.14
DIVERSION TO +	D545R	51.	4.17	5.	2.	2.	0.14
HYDROGRAPH AT +	D545L	51.	4.17	5.	2.	2.	0.14
ROUTED TO +	545546	51.	4.18	5.	2.	2.	0.14
HYDROGRAPH AT +	206L	123.	4.12	12.	4.	4.	0.06
2 COMBINED AT +	C546	171.	4.15	18.	6.	6.	0.20
ROUTED TO +	546547	170.	4.17	18.	6.	6.	0.20
HYDROGRAPH AT +	BB543R	210.	4.07	19.	6.	6.	0.08
ROUTED TO +	543547	202.	4.15	19.	6.	6.	0.08
HYDROGRAPH AT +	BB545R	51.	4.17	5.	2.	2.	0.14
ROUTED TO +	545547	50.	4.23	5.	2.	2.	0.14
HYDROGRAPH AT +	206J	200.	4.02	16.	5.	5.	0.06
4 COMBINED AT +	C547	525.	4.10	59.	20.	20.	0.26
ROUTED TO +	547548	521.	4.17	59.	20.	20.	0.26
HYDROGRAPH AT +	206M	198.	4.02	16.	5.	5.	0.06
2 COMBINED AT +	C548R	635.	4.12	75.	25.	25.	0.32
2 COMBINED AT +	C548	1038.	4.30	421.	224.	224.	4.04
ROUTED TO +	548549	1028.	4.45	421.	224.	224.	4.04
HYDROGRAPH AT +	206N	458.	4.05	41.	14.	14.	0.15
2 COMBINED AT +	C549L	1128.	4.40	443.	235.	235.	4.19
HYDROGRAPH AT +	C599O	1195.	5.05	981.	408.	408.	7.13

+	ROUTED TO	599608	1195.	5.17	981.	408.	408.	7.13
+	HYDROGRAPH AT	211K	302.	4.05	22.	7.	7.	0.10
+	2 COMBINED AT	C608L	1199.	5.10	993.	414.	414.	7.23
+	HYDROGRAPH AT	211G	18.	4.05	3.	1.	1.	0.01
+	ROUTED TO	604606	17.	4.23	3.	1.	1.	0.01
+	HYDROGRAPH AT	211I	78.	4.17	10.	3.	3.	0.04
+	2 COMBINED AT	C606R	94.	4.18	13.	4.	4.	0.05
+	HYDROGRAPH AT	211H	181.	4.13	14.	5.	5.	0.07
+	ROUTED TO	C605O	115.	4.27	14.	5.	5.	0.07
+	2 COMBINED AT	C606	206.	4.20	26.	9.	9.	0.12
+	ROUTED TO	606607	204.	4.23	26.	9.	9.	0.12
+	HYDROGRAPH AT	211J	37.	4.08	4.	1.	1.	0.01
+	2 COMBINED AT	C607	230.	4.22	30.	10.	10.	0.14
+	ROUTED TO	607608	228.	4.25	30.	10.	10.	0.14
+	2 COMBINED AT	C608	1269.	4.55	1015.	422.	422.	7.37
+	ROUTED TO	608613	1268.	4.57	1015.	422.	422.	7.37
+	HYDROGRAPH AT	211M	203.	4.13	19.	6.	6.	0.08
+	ROUTED TO	610611	200.	4.17	19.	6.	6.	0.08
+	HYDROGRAPH AT	211N	51.	4.07	4.	1.	1.	0.02
+	2 COMBINED AT	C611R	241.	4.15	23.	8.	8.	0.10
+	HYDROGRAPH AT	211O	107.	4.07	10.	3.	3.	0.04
+	ROUTED TO	C609O	61.	4.25	10.	3.	3.	0.04
+	ROUTED TO	609611	61.	4.28	10.	3.	3.	0.04
+	2 COMBINED AT	C611I	299.	4.17	33.	11.	11.	0.14
+	ROUTED TO	C611O	151.	4.45	33.	11.	11.	0.14
+	DIVERSION TO	D611R	151.	4.45	33.	11.	11.	0.14
+	HYDROGRAPH AT	D611L	0.	0.02	0.	0.	0.	0.14
+	ROUTED TO	611612	0.	0.02	0.	0.	0.	0.14
+	HYDROGRAPH AT	211P	119.	4.00	10.	3.	3.	0.03
+	2 COMBINED AT	C612	119.	4.00	10.	3.	3.	0.17
+	2 COMBINED AT	C613	1282.	4.53	1020.	425.	425.	7.54
+	ROUTED TO	613621	1282.	4.55	1020.	425.	425.	7.54
+	HYDROGRAPH AT	211L	301.	4.03	23.	8.	8.	0.10

+	2 COMBINED AT	C621L	1326.	4.32	1033.	431.	431.	7.64
+	HYDROGRAPH AT	211Q	56.	4.05	4.	1.	1.	0.02
+	ROUTED TO	616617	55.	4.12	4.	1.	1.	0.02
+	HYDROGRAPH AT	211R	200.	4.10	19.	6.	6.	0.08
+	2 COMBINED AT	C617L	255.	4.10	23.	8.	8.	0.10
+	HYDROGRAPH AT	211U	56.	4.07	8.	3.	3.	0.03
+	DIVERSION TO	D614R	39.	4.07	5.	2.	2.	0.03
+	HYDROGRAPH AT	D614L	16.	4.07	3.	1.	1.	0.03
+	2 COMBINED AT	C617	270.	4.10	26.	9.	9.	0.13
+	ROUTED TO	617618	263.	4.18	26.	9.	9.	0.13
+	HYDROGRAPH AT	211S	125.	4.08	12.	4.	4.	0.05
+	2 COMBINED AT	C618I	370.	4.15	37.	12.	12.	0.18
+	ROUTED TO	C618O	367.	4.17	31.	12.	12.	0.18
+	HYDROGRAPH AT	BB614R	39.	4.07	5.	2.	2.	0.03
+	ROUTED TO	614615	39.	4.12	5.	2.	2.	0.03
+	HYDROGRAPH AT	211V	16.	4.02	2.	1.	1.	0.00
+	2 COMBINED AT	C615	51.	4.08	7.	2.	2.	0.03
+	DIVERSION TO	D615R	18.	4.08	2.	1.	1.	0.03
+	HYDROGRAPH AT	D615L	33.	4.08	5.	2.	2.	0.03
+	ROUTED TO	615618	33.	4.08	5.	2.	2.	0.03
+	2 COMBINED AT	C618	398.	4.17	36.	14.	14.	0.19
+	ROUTED TO	618619	389.	4.25	36.	14.	14.	0.19
+	HYDROGRAPH AT	211T	162.	4.08	15.	5.	5.	0.07
+	2 COMBINED AT	C619L	503.	4.22	50.	19.	19.	0.26
+	HYDROGRAPH AT	BB615R	18.	4.08	2.	1.	1.	0.03
+	ROUTED TO	615619	18.	4.17	2.	1.	1.	0.03
+	2 COMBINED AT	C619I	520.	4.22	52.	20.	20.	0.25
+	ROUTED TO	C619O	363.	4.40	52.	20.	20.	0.25
+	DIVERSION TO	D619L	171.	4.40	4.	1.	1.	0.25
+	HYDROGRAPH AT	D619R	192.	4.40	48.	18.	18.	0.25
+	ROUTED TO	619620	192.	4.42	48.	18.	18.	0.25
+	HYDROGRAPH AT	BB619L	171.	4.40	4.	1.	1.	0.25
	ROUTED TO							

+		619620	136.	4.45	4.	1.	1.	0.25
+	HYDROGRAPH AT	211W	105.	4.02	9.	3.	3.	0.03
+	3 COMBINED AT	C620R	335.	4.43	61.	23.	23.	0.28
+	HYDROGRAPH AT	BB611R	151.	4.45	33.	11.	11.	0.14
+	ROUTED TO	611620	151.	4.47	33.	11.	11.	0.14
+	2 COMBINED AT	C620	485.	4.43	94.	34.	34.	0.42
+	ROUTED TO	620621	482.	4.47	94.	33.	33.	0.42
+	2 COMBINED AT	C621	1633.	4.33	1103.	459.	459.	7.93
+	ROUTED TO	621622	1630.	4.48	1102.	459.	459.	7.93
+	HYDROGRAPH AT	211X	503.	4.12	55.	18.	18.	0.21
+	2 COMBINED AT	C622R	1814.	4.40	1136.	474.	474.	8.14
+	HYDROGRAPH AT	211A	283.	4.15	30.	10.	10.	0.14
+	ROUTED TO	C600O	266.	4.22	30.	10.	10.	0.14
+	ROUTED TO	600601	263.	4.28	30.	10.	10.	0.14
+	HYDROGRAPH AT	211B	249.	4.12	23.	8.	8.	0.11
+	2 COMBINED AT	C601	462.	4.18	52.	17.	17.	0.25
+	ROUTED TO	601602	458.	4.23	52.	17.	17.	0.25
+	HYDROGRAPH AT	211C	134.	4.03	12.	4.	4.	0.04
+	2 COMBINED AT	C602L	515.	4.20	64.	21.	21.	0.30
+	HYDROGRAPH AT	211D	159.	4.07	15.	5.	5.	0.07
+	2 COMBINED AT	C602	635.	4.15	78.	26.	26.	0.37
+	ROUTED TO	602603	632.	4.22	78.	26.	26.	0.37
+	HYDROGRAPH AT	211E	507.	4.03	41.	14.	14.	0.16
+	2 COMBINED AT	C603	936.	4.07	118.	40.	40.	0.52
+	ROUTED TO	603622	918.	4.15	118.	40.	40.	0.52
+	HYDROGRAPH AT	211F	332.	4.05	32.	11.	11.	0.11
+	2 COMBINED AT	C622L	1121.	4.13	149.	50.	50.	0.63
+	2 COMBINED AT	C622	2389.	4.35	1241.	516.	516.	8.78
+	ROUTED TO	622549	2379.	4.45	1240.	515.	515.	8.78
+	HYDROGRAPH AT	211Y	216.	4.10	21.	7.	7.	0.09
+	2 COMBINED AT	C549R	2449.	4.43	1253.	521.	521.	8.87
+	2 COMBINED AT	C549	3311.	4.43	1652.	725.	725.	13.06
+	ROUTED TO	549626	3296.	4.53	1651.	724.	724.	13.06

	HYDROGRAPH AT							
+		211Z	249.	4.03	20.	7.	7.	0.08
	2 COMBINED AT							
+		C626C	3326.	4.53	1659.	729.	729.	13.14
	HYDROGRAPH AT							
+		211AA	78.	4.08	9.	3.	3.	0.03
	ROUTED TO							
+		625626	76.	4.13	9.	3.	3.	0.03
	HYDROGRAPH AT							
+		211AB	135.	4.02	10.	3.	3.	0.04
	ROUTED TO							
+		623624	133.	4.03	10.	3.	3.	0.04
	HYDROGRAPH AT							
+		211AC	90.	4.02	8.	3.	3.	0.03
	2 COMBINED AT							
+		C624	223.	4.03	18.	6.	6.	0.07
	ROUTED TO							
+		624626	215.	4.07	18.	6.	6.	0.07
	HYDROGRAPH AT							
+		211AD	132.	4.03	12.	4.	4.	0.04
	2 COMBINED AT							
+		C626R	342.	4.05	30.	10.	10.	0.11
	3 COMBINED AT							
+		C626	3412.	4.52	1679.	740.	740.	13.28
	ROUTED TO							
+		626627	3410.	4.53	1679.	740.	740.	13.28
	HYDROGRAPH AT							
+		211AE	114.	4.02	9.	3.	3.	0.03
	2 COMBINED AT							
+		C627	3425.	4.53	1683.	743.	743.	13.32

*** NORMAL END OF HEC-1 ***

100-Year, Future Condition (24-Hour)

```
1*****************************************
 *                                       *
 *   FLOOD HYDROGRAPH PACKAGE  (HEC-1)   *
 *              MAY   1991               *
 *            VERSION 4.0.1E             *
 *                                       *
 *  RUN DATE  02/17/:0  TIME  14:17:39   *
 *                                       *
 *****************************************
```

```
*****************************************
*                                       *
*    U.S. ARMY CORPS OF ENGINEERS       *
*    HYDROLOGIC ENGINEERING CENTER      *
*          609 SECOND STREET            *
*       DAVIS, CALIFORNIA 95616         *
*           (916) 551-1748              *
*                                       *
*****************************************
```

```
X     X  XXXXXXX   XXXXX          X
X     X  X        X     X        XX
X     X  X        X               X
XXXXXXX  XXXX     X        XXXXX  X
X     X  X        X               X
X     X  X        X     X         X
X     X  XXXXXXX   XXXXX         XXX
```

THIS PROGRAM REPLACES ALL PREVIOUS VERSIONS OF HEC-1 KNOWN AS HEC1 (JAN 73), HEC1GS, HEC1DB, AND HEC1KW.

THE DEFINITIONS OF VARIABLES -RTIMP- AND -RTIOR- HAVE CHANGED FROM THOSE USED WITH THE 1973-STYLE INPUT STRUCTURE.
THE DEFINITION OF -AMSKK- ON RM-CARD WAS CHANGED WITH REVISIONS DATED 28 SEP 81. THIS IS THE FORTRAN77 VERSION
NEW OPTIONS: DAMBREAK OUTFLOW SUBMERGENCE , SINGLE EVENT DAMAGE CALCULATION, DSS:WRITE STAGE FREQUENCY,
DSS:READ TIME SERIES AT DESIRED CALCULATION INTERVAL LOSS RATE:GREEN AND AMPT INFILTRATION
KINEMATIC WAVE: NEW FINITE DIFFERENCE ALGORITHM

```
1                                    HEC-1 INPUT                                    PAGE  1

      LINE          ID.......1.......2.......3.......4.......5.......6.......7.......8.......9......10

        1           ID   Golden Eagle Park Dam Modifications
        2           ID        by Stantec: Proj. No. 28900095                    File: ALTFf-3.IH1
        3           ID        for FCDMC:  FCD                                   Date:07-08-99     mcg
        4           ID                                                        Revised:
        5           ID
        6           ID   Alternative F:
        7           ID        Addition of an auxillary spillway.  This spillway will function such
        8           ID        that the existing emergency spillway does not operate for the 100-year
        9           ID        storm.  The stage-storage relation is adjusted to reflect revised
       10           ID        grading in the park.
       11           ID
       12           ID        The purpose of this model is to estimate peak discharges in Ashbrook
       13           ID        Wash for evaluation of the Dam modifications impact on the floodplain.
       14           ID
       15           ID   100-year, 24-hour future condition watershed model for Ashbrook Wash upstream
       16           ID   of the Fort McDowell Indian Reservation boundary.
       17           ID        This model is a portion of the original Fountain Hills North FDS
       18           ID        watershed model conducted by GVSCE, 1994.  The title cards from that
       19           ID        model are included for reference.
       20           ID
       21           ID   Fountain Hills North Floodplain Delineation Study
       22           ID        FCD 92-04        by GVSCE                        File:  FU100-24.IH1
       23           ID    Future Condition Model                               Date:    07-21-94   dtp
       24           ID    100-Year 24-Hour Storm, Clark Unit Hydrograph     Revised:    10-31-94   dtp
                    *DIAGRAM
       25           IT       1                    1800
       26           IO       5
       27           IN      15
                    *
                    * Point precipitation values are are based on Hydro-40 DARF.
                    *   0.01    5.00   10.00   50.00   80.00  100.00  200.00
                    *  1.000   0.980   0.949   0.883   0.861   0.850   0.819
                    *
       28           JD    4.20    0.01
                    * The following PC records are a 24-hour SCS Type II rainfall distribution.
       29           PC   0.000   0.002   0.005   0.008   0.011   0.013   0.016   0.019   0.022   0.025
       30           PC   0.028   0.032   0.035   0.038   0.041   0.044   0.048   0.053   0.056   0.060
       31           PC   0.063   0.067   0.071   0.075   0.080   0.084   0.089   0.093   0.098   0.103
       32           PC   0.109   0.114   0.120   0.127   0.133   0.140   0.147   0.155   0.163   0.172
       33           PC   0.181   0.192   0.204   0.220   0.235   0.259   0.283   0.473   0.663   0.699
       34           PC   0.735   0.754   0.772   0.785   0.799   0.810   0.820   0.829   0.838   0.846
       35           PC   0.854   0.861   0.868   0.874   0.880   0.885   0.891   0.900   0.902   0.910
       36           PC   0.912   0.920   0.921   0.926   0.929   0.930   0.937   0.941   0.945   0.950
       37           PC   0.952   0.957   0.959   0.962   0.965   0.970   0.972   0.973   0.978   0.981
       38           PC   0.984   0.987   0.989   0.992   0.995   0.998   1.000
       39           JD    4.12    5.00
       40           JD    3.99   10.00
       41           JD    3.71   50.00
                    *
1                                    HEC-1 INPUT                                    PAGE  2

      LINE          ID.......1.......2.......3.......4.......5.......6.......7.......8.......9......10

       42           KK    204A
       43           KM   Sub-Basin   204A
       44           KM
```

```
 45          KM      The Clark Unit Hydrograph is used for this basin.
 46          KM          The Urban time-area relation is used for this basin.
 47          KM
 48          KM      Time of Concentration for this sub-basin is based on the following:
 49          KM          An rainfall areal reduction factor of 1.000
 50          KM
 51          KM       EXCESS RAINFALL VALUES EXCEEDED IN 5-MINUTE INTERVALS
 52          KM     5  10  15  20  25  30  35  40  45  50  55  60  65  70  75  80  85  90
 53          KM   .27 .27 .27 .27 .27 .27 .03 .03 .03 .03 .03 .03 .01 .01 .01 .01 .01 .01
 54          KM
 55          KM          L=   0.687 miles, S=  175 feet/mile, Kb= .03
 56          KM
 57          BA   0.108
 58          LG    0.09    0.25    5.80    0.18   25.00
 59          UC   0.196   0.160
 60          UA       0       5      16      30      65      77      84      90      94      97
 61          UA     100
             *

 62          KK  522523
 63          KM      Normal depth channel route from C522 to C523
 64          KM      Source:  200 Scale Mapping
 65          RS       9    FLOW      -1
 66          RC   0.060   0.050   0.060  3275.0  0.0197
 67          RX  1000.0  1020.0  1035.0  1065.0  1080.0  1120.0  1160.0  1185.0
 68          RY  1678.0  1676.0  1674.0  1672.0  1672.0  1674.0  1676.0  1678.0
             *

 69          KK    204B
 70          KM   Sub-Basin   204B
 71          KM
 72          KM      The Clark Unit Hydrograph is used for this basin.
 73          KM          The Urban time-area relation is used for this basin.
 74          KM
 75          KM      Time of Concentration for this sub-basin is based on the following:
 76          KM          An rainfall areal reduction factor of 1.000
 77          KM
 78          KM       EXCESS RAINFALL VALUES EXCEEDED IN 5-MINUTE INTERVALS
 79          KM     5  10  15  20  25  30  35  40  45  50  55  60  65  70  75  80  85  90
 80          KM   .27 .27 .27 .27 .27 .27 .03 .03 .03 .03 .03 .03 .01 .01 .01 .01 .01 .01
 81          KM
 82          KM          L=   0.775 miles, S=  128 feet/mile, Kb= .03
 83          KM
 84          BA   0.126
 85          LG    0.09    0.25    5.80    0.18   26.66
 86          UC   0.229   0.192
 87          UA       0       5      16      30      65      77      84      90      94      97
 88          UA     100
             *
```



```
LINE         ID.......1.......2.......3.......4.......5.......6.......7.......8.......9......10

 89          KK   C523I
 90          KM      Hydrograph combine 522523 + 204B at C523I
 91          HC       2
             *

 92          KK   C523O
 93          KM      Reservoir route at C523.
 94          RS       1    ELEV  1650.3
 95          SV    0.00    0.01    0.12    0.71    2.23    2.50    2.80    3.10    3.20    3.40
 96          SV    3.70    4.00    4.30    4.60    4.90    5.20    5.50
 97          SE  1650.3  1652.0  1654.0  1656.0  1658.0  1658.2  1658.4  1658.6  1658.7  1658.8
 98          SE  1659.0  1659.2  1659.4  1659.6  1659.8  1660.0  1660.2
 99          SQ       0      22      78     144     209     214     220     224     226     232
100          SQ     239     249     288     384     529     726     960
             *

101          KK   D523L
102          KM      Hydrograph diversion at C523.  Main flow continues in the left branch.
103          KM      Diverted flow is in the right branch.
104          DT   D523R
105          DI       0      22      78     144     209     214     220     224     226     232
106          DI     239     249     288     384     529     726     960
107          DQ       0       0       0       0       0       0       0       0       0       3
108          DQ       5      10      20      37      61      96     139
             *

109          KK    205A
110          KM   Sub-Basin   205A
111          KM
112          KM      The Clark Unit Hydrograph is used for this basin.
113          KM          The Natural time-area relation is used for this basin.
114          KM
115          KM      Time of Concentration for this sub-basin is based on the following:
116          KM          An rainfall areal reduction factor of 1.000
117          KM
118          KM       EXCESS RAINFALL VALUES EXCEEDED IN 5-MINUTE INTERVALS
119          KM     5  10  15  20  25  30  35  40  45  50  55  60  65  70  75  80  85  90
120          KM   .25 .25 .25 .25 .24 .24 .02 .02 .02 .02 .02 .02 .01 .01 .01 .01 .01 .01
121          KM
122          KM          L=   0.870 miles, S=  378 feet/mile, Kb= .14
123          KM
```

```
 124          BA   0.118
 125          LG    0.25    0.35    4.35    0.40   35.00
 126          UC   0.400   0.406
 127          UA       0       3       5       8      12      20      43      75      90      96
 128          UA     100
              *

 129          KK    205B
 130          KM   Sub-Basin   205B
 131          KM
 132          KM      The Clark Unit Hydrograph is used for this basin.
 133          KM          The Natural time-area relation is used for this basin.
 134          KM
1                                          HEC-1 INPUT                                          PAGE  4

LINE          ID.......1.......2.......3.......4.......5.......6.......7.......8.......9......10

 135          KM      Time of Concentration for this sub-basin is based on the following:
 136          KM          An rainfall areal reduction factor of 1.000
 137          KM
 138          KM       EXCESS RAINFALL VALUES EXCEEDED IN 5-MINUTE INTERVALS
 139          KM     5  10  15  20  25  30  35  40  45  50  55  60  65  70  75  80  85  90
 140          KM   .25 .25 .25 .25 .24 .24 .02 .02 .02 .02 .02 .02 .01 .01 .01 .01 .01 .01
 141          KM
 142          KM          L=   0.759 miles, S=  129 feet/mile, Kb= .14
 143          KM
 144          BA   0.211
 145          LG    0.25    0.35    4.35    0.40   35.00
 146          UC   0.538   0.361
 147          UA       0       3       5       8      12      20      43      75      90      96
 148          UA     100
              *

 149          KK    C528
 150          KM      Hydrograph combine 205A + 205B at C528
 151          HC       2
              *

 152          KK  528530
 153          KM      Normal depth channel route from C528 to C530
 154          KM      Source:  Hydrology Field Reconnaissance
 155          RS       3    FLOW      -1
 156          RC   0.060   0.043   0.060  2594.0  0.0709
 157          RX  1000.0  1018.0  1031.0  1042.0  1052.0  1066.0  1093.0  1107.0
 158          RY    96.3    92.2    89.9    85.9    85.7    91.5    91.2    96.3
              *

 159          KK    205C
 160          KM   Sub-Basin   205C
 161          KM
 162          KM      The Clark Unit Hydrograph is used for this basin.
 163          KM          The Natural time-area relation is used for this basin.
 164          KM
 165          KM      Time of Concentration for this sub-basin is based on the following:
 166          KM          An rainfall areal reduction factor of 1.000
 167          KM
 168          KM       EXCESS RAINFALL VALUES EXCEEDED IN 5-MINUTE INTERVALS
 169          KM     5  10  15  20  25  30  35  40  45  50  55  60  65  70  75  80  85  90
 170          KM   .25 .25 .24 .24 .24 .24 .02 .02 .02 .02 .02 .02 .01 .01 .01 .01 .01 .01
 171          KM
 172          KM          L=   0.618 miles, S=  331 feet/mile, Kb= .15
 173          KM
 174          BA   0.059
 175          LG    0.25    0.35    4.35    0.41   35.00
 176          UC   0.367   0.416
 177          UA       0       3       5       8      12      20      43      75      90      96
 178          UA     100
              *
1                                          HEC-1 INPUT                                          PAGE  5

LINE          ID.......1.......2.......3.......4.......5.......6.......7.......8.......9......10

 179          KK   C530R
 180          KM      Hydrograph combine 528530 + 205C at C530 right branch
 181          HC       2
              *

 182          KK    205D
 183          KM   Sub-Basin   205D
 184          KM
 185          KM      The Clark Unit Hydrograph is used for this basin.
 186          KM          The Natural time-area relation is used for this basin.
 187          KM
 188          KM      Time of Concentration for this sub-basin is based on the following:
 189          KM          An rainfall areal reduction factor of 1.000
 190          KM
 191          KM       EXCESS RAINFALL VALUES EXCEEDED IN 5-MINUTE INTERVALS
 192          KM     5  10  15  20  25  30  35  40  45  50  55  60  65  70  75  80  85  90
 193          KM   .25 .25 .25 .25 .24 .24 .02 .02 .02 .02 .02 .02 .01 .01 .01 .01 .01 .01
 194          KM
 195          KM          L=   1.020 miles, S=  361 feet/mile, Kb= .13
 196          KM
 197          BA   0.319
 198          LG    0.25    0.35    4.35    0.40   35.00
```

```
 199          UC   0.425   0.279
 200          UA       0       3       5       8      12      20      43      75      90      96
 201          UA     100
              *

 202          KK    205E
 203          KM   Sub-Basin   205E
 204          KM
 205          KM      The Clark Unit Hydrograph is used for this basin.
 206          KM          The Natural time-area relation is used for this basin.
 207          KM
 208          KM      Time of Concentration for this sub-basin is based on the following:
 209          KM          An rainfall areal reduction factor of 1.000
 210          KM
 211          KM       EXCESS RAINFALL VALUES EXCEEDED IN 5-MINUTE INTERVALS
 212          KM     5  10  15  20  25  30  35  40  45  50  55  60  65  70  75  80  85  90
 213          KM   .25 .25 .25 .25 .24 .24 .02 .02 .02 .02 .02 .02 .01 .01 .01 .01 .01 .01
 214          KM
 215          KM          L=   1.357 miles, S=  358 feet/mile, Kb= .14
 216          KM
 217          BA   0.218
 218          LG    0.25    0.35    4.35    0.40   35.00
 219          UC   0.517   0.541
 220          UA       0       3       5       8      12      20      43      75      90      96
 221          UA     100
              *
1                                          HEC-1 INPUT                                          PAGE  6

LINE          ID.......1.......2.......3.......4.......5.......6.......7.......8.......9......10


 222          KK    C529
 223          KM      Hydrograph combine 205D + 205E at C529
 224          HC       2
              *
              * *
              * * NOTE:  529530 too short to route
              * *
              *

 225          KK    C530
 226          KM      Hydrograph combine C529 + C530R at C530
 227          HC       2
              *

 228          KK  530531
 229          KM      Normal depth channel route from C530 to C531
 230          KM      Source:  Hydrology Field Reconnaissance
 231          RS       3    FLOW      -1
 232          RC   0.060   0.059   0.060  2426.0  0.0404
 233          RX  1000.0  1035.0  1050.0  1060.0  1075.0  1081.0  1088.0  1094.0
 234          RY    95.9    86.5    86.2    83.1    84.0    90.2    95.6    99.3
              *

 235          KK    205F
 236          KM   Sub-Basin   205F
 237          KM
 238          KM      The Clark Unit Hydrograph is used for this basin.
 239          KM          The Natural time-area relation is used for this basin.
 240          KM
 241          KM      Time of Concentration for this sub-basin is based on the following:
 242          KM          An rainfall areal reduction factor of 1.000
 243          KM
 244          KM       EXCESS RAINFALL VALUES EXCEEDED IN 5-MINUTE INTERVALS
 245          KM     5  10  15  20  25  30  35  40  45  50  55  60  65  70  75  80  85  90
 246          KM   .25 .25 .24 .24 .24 .24 .02 .02 .02 .02 .02 .02 .01 .01 .01 .01 .01 .01
 247          KM
 248          KM          L=   0.786 miles, S=  326 feet/mile, Kb= .14
 249          KM
 250          BA   0.161
 251          LG    0.25    0.35    4.35    0.41   35.00
 252          UC   0.400   0.312
 253          UA       0       3       5       8      12      20      43      75      90      96
 254          UA     100
              *

 255          KK    C531
 256          KM      Hydrograph combine 530531 + 205F at C531
 257          HC       2
              *
1                                          HEC-1 INPUT                                          PAGE  7

LINE          ID.......1.......2.......3.......4.......5.......6.......7.......8.......9......10


 258          KK  531532
 259          KM      Normal depth channel route from C531 to C532
 260          KM      Source:  Hydrology Field Reconnaissance
 261          RS       4    FLOW      -1
 262          RC   0.060   0.065   0.060  3391.0  0.0463
 263          RX  1000.0  1012.0  1022.0  1032.0  1050.0  1056.0  1068.0  1092.0
 264          RY    98.8    93.8    89.1    86.4    86.5    89.1    91.0    97.6
              *

 265          KK    205G
```

```
266          KM   Sub-Basin   205G
267          KM
268          KM      The Clark Unit Hydrograph is used for this basin.
269          KM          The Natural time-area relation is used for this basin.
270          KM
271          KM      Time of Concentration for this sub-basin is based on the following:
272          KM          An rainfall areal reduction factor of 1.000
273          KM
274          KM       EXCESS RAINFALL VALUES EXCEEDED IN 5-MINUTE INTERVALS
275          KM     5  10  15  20  25  30  35  40  45  50  55  60  65  70  75  80  85  90
276          KM   .25 .25 .24 .24 .24 .24 .02 .02 .02 .02 .02 .02 .01 .01 .01 .01 .01 .01
277          KM
278          KM          L=   0.924 miles, S=  338 feet/mile, Kb= .13
279          KM
280          BA   0.185
281          LG    0.24    0.35    4.50    0.40   31.23
282          UC   0.417   0.343
283          UA       0       3       5       8      12      20      43      75      90      96
284          UA     100
             *

285          KK   C532L
286          KM      Hydrograph combine 531532 + 205G at C532 left branch
287          HC       2
             *

288          KK    205H
289          KM   Sub-Basin   205H
290          KM
291          KM      The Clark Unit Hydrograph is used for this basin.
292          KM          The Natural time-area relation is used for this basin.
293          KM
294          KM      Time of Concentration for this sub-basin is based on the following:
295          KM          An rainfall areal reduction factor of 1.000
296          KM
297          KM       EXCESS RAINFALL VALUES EXCEEDED IN 5-MINUTE INTERVALS
298          KM     5  10  15  20  25  30  35  40  45  50  55  60  65  70  75  80  85  90
299          KM   .25 .25 .24 .24 .24 .24 .02 .02 .02 .02 .02 .02 .01 .01 .01 .01 .01 .01
300          KM
301          KM          L=   1.464 miles, S=  325 feet/mile, Kb= .13
302          KM
303          BA   0.261
304          LG    0.24    0.35    4.50    0.39   31.55
305          UC   0.542   0.547
```



```
LINE         ID.......1.......2.......3.......4.......5.......6.......7.......8.......9......10

306          UA       0       3       5       8      12      20      43      75      90      96
307          UA     100
             *

308          KK    C532
309          KM      Hydrograph combine C532L + 205H at C532
310          HC       2
             *

311          KK  532533
312          KM      Normal depth channel route from C532 to C533
313          KM      Source:  Hydrology Field Reconnaissance
314          RS       2    FLOW      -1
315          RC   0.060   0.045   0.060  1555.0  0.0283
316          RX  1000.0  1020.0  1030.0  1048.0  1065.0  1077.0  1092.0  1119.0
317          RY    98.0    89.4    88.1    85.6    85.9    92.2    93.8    97.0
             *

318          KK    205I
319          KM   Sub-Basin   205I
320          KM
321          KM      The Clark Unit Hydrograph is used for this basin.
322          KM          The Natural time-area relation is used for this basin.
323          KM
324          KM      Time of Concentration for this sub-basin is based on the following:
325          KM          An rainfall areal reduction factor of 1.000
326          KM
327          KM       EXCESS RAINFALL VALUES EXCEEDED IN 5-MINUTE INTERVALS
328          KM     5  10  15  20  25  30  35  40  45  50  55  60  65  70  75  80  85  90
329          KM   .25 .25 .24 .24 .24 .24 .01 .01 .01 .01 .01 .01 .01 .01 .01 .01 .01 .01
330          KM
331          KM          L=   1.487 miles, S=  326 feet/mile, Kb= .11
332          KM
333          BA   0.354
334          LG    0.20    0.37    5.20    0.28   15.18
335          UC   0.488   0.414
336          UA       0       3       5       8      12      20      43      75      90      96
337          UA     100
             *

338          KK    C533
339          KM      Hydrograph combine 532533 + 205I at C533
340          HC       2
             *

341          KK  533534
342          KM      Normal depth channel route from C533 to C534
```

```
 343          KM      Source:  Hydrology Field Reconnaissance
 344          RS      10    FLOW      -1
 345          RC   0.060   0.046   0.060  7145.0  0.0241
 346          RX  1000.0  1010.0  1060.0  1073.0  1160.0  1181.0  1223.0  1237.0
 347          RY    97.8    93.7    94.7    90.8    89.9    92.4    94.0    96.8
              *
1                                        HEC-1 INPUT                                                    PAGE  9

LINE          ID.......1.......2.......3.......4.......5.......6.......7.......8.......9......10


 348          KK    205J
 349          KM   Sub-Basin   205J
 350          KM
 351          KM      The Clark Unit Hydrograph is used for this basin.
 352          KM          The Natural time-area relation is used for this basin.
 353          KM
 354          KM      Time of Concentration for this sub-basin is based on the following:
 355          KM          An rainfall areal reduction factor of 1.000
 356          KM
 357          KM       EXCESS RAINFALL VALUES EXCEEDED IN 5-MINUTE INTERVALS
 358          KM     5  10  15  20  25  30  35  40  45  50  55  60  65  70  75  80  85  90
 359          KM   .24 .24 .24 .24 .23 .23 .00 .00 .00 .00 .00 .00 .00 .00 .00 .00 .00 .00
 360          KM
 361          KM          L=   1.633 miles, S=  243 feet/mile, Kb= .08
 362          KM
 363          BA   0.369
 364          LG    0.21    0.35    4.90    0.30    3.48
 365          UC   0.479   0.427
 366          UA       0       3       5       8      12      20      43      75      90      96
 367          UA     100
              *

 368          KK   C534R
 369          KM      Hydrograph combine 533534 + 205J at C534 right branch
 370          HC       2
              *

 371          KK    205K
 372          KM   Sub-Basin   205K
 373          KM
 374          KM      The Clark Unit Hydrograph is used for this basin.
 375          KM          The Natural time-area relation is used for this basin.
 376          KM
 377          KM      Time of Concentration for this sub-basin is based on the following:
 378          KM          An rainfall areal reduction factor of 1.000
 379          KM
 380          KM       EXCESS RAINFALL VALUES EXCEEDED IN 5-MINUTE INTERVALS
 381          KM     5  10  15  20  25  30  35  40  45  50  55  60  65  70  75  80  85  90
 382          KM   .25 .25 .25 .24 .24 .24 .01 .01 .01 .01 .00 .00 .00 .00 .00 .00 .00 .00
 383          KM
 384          KM          L=   1.772 miles, S=  249 feet/mile, Kb= .10
 385          KM
 386          BA   0.245
 387          LG    0.16    0.38    5.60    0.22    1.54
 388          UC   0.579   0.710
 389          UA       0       3       5       8      12      20      43      75      90      96
 390          UA     100
              *
1                                        HEC-1 INPUT                                                    PAGE 10

LINE          ID.......1.......2.......3.......4.......5.......6.......7.......8.......9......10


 391          KK    C534
 392          KM      Hydrograph combine C534R + 205K at C534
 393          HC       2
              *

 394          KK  534535
 395          KM      Normal depth channel route from C534 to C535
 396          KM      Source:  Hydrology Field Reconnaissance
 397          RS       4    FLOW      -1
 398          RC   0.065   0.046   0.065  2037.0  0.0221
 399          RX  1000.0  1010.0  1016.0  1075.0  1150.0  1162.0  1174.0  1182.0
 400          RY    97.1    93.4    91.6    89.6    86.9    90.8    92.2    92.3
              *

 401          KK    205L
 402          KM   Sub-Basin   205L
 403          KM
 404          KM      The Clark Unit Hydrograph is used for this basin.
 405          KM          The Natural time-area relation is used for this basin.
 406          KM
 407          KM      Time of Concentration for this sub-basin is based on the following:
 408          KM          An rainfall areal reduction factor of 1.000
 409          KM
 410          KM       EXCESS RAINFALL VALUES EXCEEDED IN 5-MINUTE INTERVALS
 411          KM     5  10  15  20  25  30  35  40  45  50  55  60  65  70  75  80  85  90
 412          KM   .24 .24 .23 .23 .23 .23 .00 .00 .00 .00 .00 .00 .00 .00 .00 .00 .00 .00
 413          KM
 414          KM          L=   0.701 miles, S=  284 feet/mile, Kb= .09
 415          KM
 416          BA   0.118
 417          LG    0.19    0.36    5.00    0.29    0.00
```

```
418          UC   0.317   0.263
419          UA       0       3       5       8      12      20      43      75      90      96
420          UA     100
             *

421          KK    C535
422          KM      Hydrograph combine 534535 + 205L at C535
423          HC       2
             *

424          KK  535536
425          KM      Normal depth channel route from C535 to C536
426          KM      Source:  HEC-2 Cross Section: HE 3.275
427          RS       8    FLOW      -1
428          RC   0.075   0.050   0.075  2975.0  0.0236
429          RX  9852.8  9871.5  9957.7 10000.0 10015.6 10052.4 10142.4 10183.6
430          RY  1911.6  1904.3  1906.9  1900.8  1900.8  1905.4  1905.2  1912.6
             *
```



```
LINE         ID.......1.......2.......3.......4.......5.......6.......7.......8.......9......10

431          KK    205M
432          KM   Sub-Basin   205M
433          KM
434          KM      The Clark Unit Hydrograph is used for this basin.
435          KM          The Urban time-area relation is used for this basin.
436          KM
437          KM      Time of Concentration for this sub-basin is based on the following:
438          KM          An rainfall areal reduction factor of 1.000
439          KM
440          KM       EXCESS RAINFALL VALUES EXCEEDED IN 5-MINUTE INTERVALS
441          KM     5  10  15  20  25  30  35  40  45  50  55  60  65  70  75  80  85  90
442          KM   .27 .26 .26 .26 .26 .26 .02 .02 .02 .02 .02 .02 .01 .01 .01 .01 .01 .01
443          KM
444          KM          L=   0.839 miles, S=  230 feet/mile, Kb= .05
445          KM
446          BA   0.139
447          LG    0.15    0.31    5.40    0.22   22.35
448          UC   0.263   0.225
449          UA       0       5      16      30      65      77      84      90      94      97
450          UA     100
             *

451          KK   C536R
452          KM      Hydrograph combine 535536 + 205M at C536 right branch
453          HC       2
             *

454          KK    205N
455          KM   Sub-Basin   205N
456          KM
457          KM      The Clark Unit Hydrograph is used for this basin.
458          KM          The HEC-1 time-area relation is used for this basin.
459          KM
460          KM      Time of Concentration for this sub-basin is based on the following:
461          KM          An rainfall areal reduction factor of 1.000
462          KM
463          KM       EXCESS RAINFALL VALUES EXCEEDED IN 5-MINUTE INTERVALS
464          KM     5  10  15  20  25  30  35  40  45  50  55  60  65  70  75  80  85  90
465          KM   .25 .25 .25 .25 .24 .24 .01 .01 .01 .01 .01 .00 .00 .00 .00 .00 .00 .00
466          KM
467          KM          L=   1.183 miles, S=  245 feet/mile, Kb= .10
468          KM
469          BA   0.156
470          LG    0.15    0.39    5.70    0.21    0.80
471          UC   0.450   0.503
             *

472          KK   C536I
473          KM      Hydrograph combine C536R + 205N at C536I
474          HC       2
             *
             * *
             * * C536I is the total flow in Hesperus Wash upstream of Dam 36
             * *
             *
```



```
LINE         ID.......1.......2.......3.......4.......5.......6.......7.......8.......9......10

475          KK   C536O
476          KM      Reservoir route at C536 (Dam 36).
477          RS       1    ELEV  1852.1
478          SV    0.00   14.41   35.94   67.64  108.61  158.07  218.14  276.00  280.00  289.00
479          SV  298.02  308.00  317.00  327.00  337.00  346.95  358.00  374.00
480          SE  1852.1  1866.0  1870.0  1874.0  1878.0  1882.0  1886.0  1889.0  1889.2  1889.6
481          SE  1890.0  1890.4  1890.8  1891.2  1891.6  1892.0  1892.4  1893.0
482          SQ       0     108     168     211     245     276     301     320     338     347
483          SQ     356     459     679     995    1408    1905    2477    3119    3826    5009
484          SE  1852.1  1858.0  1862.0  1866.0  1870.0  1874.0  1878.0  1882.0  1886.0  1889.0
485          SE  1889.2  1889.6  1890.0  1890.4  1890.8  1891.2  1891.6  1892.0  1892.4  1893.0
486          RL                    0.17
```

```
                 *
                 * *
                 * * End Basin 205.  Start Basin 206
                 * *
                 *

 487             KK  536537
 488             KM      Normal depth channel route from C536 to C537
 489             KM      Source:  HEC-2 Cross Section: HE 2.729
 490             RS       3    FLOW      -1
 491             RC   0.075   0.050   0.075  1480.0  0.0209
 492             RX  9900.0  9912.0  9947.3  9979.3 10025.0 10044.5 10051.0 10060.0
 493             RY  1846.5  1845.4  1843.1  1834.3  1833.6  1840.5  1843.3  1843.5
                 *

 494             KK    206A
 495             KM   Sub-Basin   206A
 496             KM
 497             KM      The Clark Unit Hydrograph is used for this basin.
 498             KM          The Urban time-area relation is used for this basin.
 499             KM
 500             KM      Time of Concentration for this sub-basin is based on the following:
 501             KM          An rainfall areal reduction factor of 1.000
 502             KM
 503             KM       EXCESS RAINFALL VALUES EXCEEDED IN 5-MINUTE INTERVALS
 504             KM     5  10  15  20  25  30  35  40  45  50  55  60  65  70  75  80  85  90
 505             KM   .27 .27 .27 .27 .27 .26 .03 .02 .02 .02 .02 .02 .01 .01 .01 .01 .01 .01
 506             KM
 507             KM          L=   0.631 miles, S=  256 feet/mile, Kb= .04
 508             KM
 509             BA   0.128
 510             LG    0.12    0.28    5.30    0.23   33.34
 511             UC   0.196   0.135
 512             UA       0       5      16      30      65      77      84      90      94      97
 513             UA     100
                 *
1                                          HEC-1 INPUT                                          PAGE 13

LINE             ID.......1.......2.......3.......4.......5.......6.......7.......8.......9......10

 514             KK    C537
 515             KM      Hydrograph combine 536537 + 206A at C537
 516             HC       2
                 *

 517             KK  537538
 518             KM      Normal depth channel route from C537 to C538
 519             KM      Source:  HEC-2 Cross Section: HE 2.493
 520             RS       3    FLOW      -1
 521             RC   0.075   0.050   0.075  2155.0  0.0210
 522             RX  9946.0  9957.6  9984.8  9994.8 10000.0 10036.5 10070.1 10107.3
 523             RY  1817.0  1815.2  1807.4  1803.2  1803.2  1805.5  1814.3  1815.4
                 *

 524             KK    206B
 525             KM   Sub-Basin   206B
 526             KM
 527             KM      The Clark Unit Hydrograph is used for this basin.
 528             KM          The Urban time-area relation is used for this basin.
 529             KM
 530             KM      Time of Concentration for this sub-basin is based on the following:
 531             KM          An rainfall areal reduction factor of 1.000
 532             KM
 533             KM       EXCESS RAINFALL VALUES EXCEEDED IN 5-MINUTE INTERVALS
 534             KM     5  10  15  20  25  30  35  40  45  50  55  60  65  70  75  80  85  90
 535             KM   .28 .27 .27 .27 .27 .27 .03 .03 .03 .03 .03 .03 .01 .01 .01 .01 .01 .01
 536             KM
 537             KM          L=   0.570 miles, S=  139 feet/mile, Kb= .03
 538             KM
 539             BA   0.095
 540             LG    0.10    0.26    5.20    0.23   41.42
 541             UC   0.192   0.144
 542             UA       0       5      16      30      65      77      84      90      94      97
 543             UA     100
                 *

 544             KK   C538I
 545             KM      Hydrograph combine 537538 + 206B at C538I
 546             HC       2
                 *

 547             KK   C538O
 548             KM      Reservoir route at C538.
 549             RS       1    ELEV  1778.2
 550             SV    0.00    0.10    0.57    1.69    2.60    2.70    2.90    3.00    3.20    3.38
 551             SV    3.60    3.90    4.10    4.30    4.60    5.10    5.60    6.10    7.10    8.10
 552             SE  1778.2  1782.0  1784.0  1786.0  1787.1  1787.2  1787.4  1787.6  1787.8  1788.0
 553             SE  1788.2  1788.4  1788.6  1788.8  1789.0  1789.4  1789.8  1790.2  1790.8  1791.4
 554             SQ       0      82     133     185     207     208     212     218     226     235
 555             SQ     249     265     286     310     338     400     482     611     942    1439
                 *
1                                          HEC-1 INPUT                                          PAGE 14

LINE             ID.......1.......2.......3.......4.......5.......6.......7.......8.......9......10
```

```
556          KK  538540
557          KM      Normal depth channel route from C538 to C540
558          KM      Source:  HEC-2 Cross Section: HE 1.990
559          RS       6    FLOW      -1
560          RC   0.075   0.050   0.075  2176.0  0.0210
561          RX  9907.7  9931.8  9978.4 10000.0 10041.1 10056.9 10143.7 10164.9
562          RY  1767.5  1754.9  1755.2  1753.2  1753.1  1755.1  1757.3  1769.4
             *

563          KK    206C
564          KM   Sub-Basin   206C
565          KM
566          KM      The Clark Unit Hydrograph is used for this basin.
567          KM          The Urban time-area relation is used for this basin.
568          KM
569          KM      Time of Concentration for this sub-basin is based on the following:
570          KM          An rainfall areal reduction factor of 1.000
571          KM
572          KM       EXCESS RAINFALL VALUES EXCEEDED IN 5-MINUTE INTERVALS
573          KM     5  10  15  20  25  30  35  40  45  50  55  60  65  70  75  80  85  90
574          KM   .26 .26 .26 .25 .25 .25 .01 .01 .01 .01 .01 .01 .01 .01 .01 .01 .01 .01
575          KM
576          KM          L=   0.427 miles, S=  138 feet/mile, Kb= .04
577          KM
578          BA   0.024
579          LG    0.11    0.26    4.35    0.36   28.55
580          UC   0.196   0.258
581          UA       0       5      16      30      65      77      84      90      94      97
582          UA     100
             *

583          KK   C540R
584          KM      Hydrograph combine 538540 + 206C at C540 right branch
585          HC       2
             *

586          KK    206D
587          KM   Sub-Basin   206D
588          KM
589          KM      The Clark Unit Hydrograph is used for this basin.
590          KM          The Urban time-area relation is used for this basin.
591          KM
592          KM      Time of Concentration for this sub-basin is based on the following:
593          KM          An rainfall areal reduction factor of 1.000
594          KM
595          KM       EXCESS RAINFALL VALUES EXCEEDED IN 5-MINUTE INTERVALS
596          KM     5  10  15  20  25  30  35  40  45  50  55  60  65  70  75  80  85  90
597          KM   .28 .28 .28 .28 .28 .28 .03 .03 .03 .03 .03 .03 .01 .01 .01 .01 .01 .01
598          KM
599          KM          L=   0.531 miles, S=  236 feet/mile, Kb= .03
600          KM
601          BA   0.062
602          LG    0.08    0.25    5.70    0.18   43.01
603          UC   0.154   0.137
```



```
LINE         ID.......1.......2.......3.......4.......5.......6.......7.......8.......9......10

604          UA       0       5      16      30      65      77      84      90      94      97
605          UA     100
             *

606          KK  539540
607          KM      Normal depth channel route from C539 to C540
608          KM      Source:  200 Scale Mapping
609          RS       4    FLOW      -1
610          RC   0.060   0.050   0.055  1872.0  0.0256
611          RX  1000.0  1007.0  1016.0  1036.0  1046.0  1080.0  1150.0  1210.0
612          RY  1750.0  1748.0  1746.0  1744.0  1744.0  1746.0  1748.0  1750.0
             *

613          KK    206E
614          KM   Sub-Basin   206E
615          KM
616          KM      The Clark Unit Hydrograph is used for this basin.
617          KM          The Urban time-area relation is used for this basin.
618          KM
619          KM      Time of Concentration for this sub-basin is based on the following:
620          KM          An rainfall areal reduction factor of 1.000
621          KM
622          KM       EXCESS RAINFALL VALUES EXCEEDED IN 5-MINUTE INTERVALS
623          KM     5  10  15  20  25  30  35  40  45  50  55  60  65  70  75  80  85  90
624          KM   .26 .26 .26 .25 .25 .25 .01 .01 .01 .01 .01 .01 .01 .01 .01 .01 .01 .01
625          KM
626          KM          L=   0.343 miles, S=  175 feet/mile, Kb= .03
627          KM
628          BA   0.023
629          LG    0.09    0.25    4.30    0.36   25.75
630          UC   0.142   0.155
631          UA       0       5      16      30      65      77      84      90      94      97
632          UA     100
             *
```

```
 633          KK   C540L
 634          KM      Hydrograph combine 539540 + 206E at C540 left branch
 635          HC       2
              *

 636          KK    C540
 637          KM      Hydrograph combine C540R + C540L at C540
 638          HC       2
              *
              * *
              * * C540 is the end of Hesperus Wash and the start of Balboa Wash
              * *
              *

 639          KK  540541
 640          KM      Normal depth channel route from C540 to C541
 641          KM      Source:  HEC-2 Cross Section: BA 1.645
 642          RS      12    FLOW      -1
 643          RC   0.065   0.035   0.065  4207.0  0.0204
 644          RX  9960.8  9968.0  9975.1  9975.7  9993.2 10018.2 10297.5 10343.9
1                                          HEC-1 INPUT                                                    PAGE 16

LINE          ID.......1.......2.......3.......4.......5.......6.......7.......8.......9......10

 645          RY  1725.2  1721.8  1718.4  1716.2  1716.4  1718.4  1719.8  1730.5
              *

 646          KK    206F
 647          KM   Sub-Basin   206F
 648          KM
 649          KM      The Clark Unit Hydrograph is used for this basin.
 650          KM          The Urban time-area relation is used for this basin.
 651          KM
 652          KM      Time of Concentration for this sub-basin is based on the following:
 653          KM          An rainfall areal reduction factor of 1.000
 654          KM
 655          KM       EXCESS RAINFALL VALUES EXCEEDED IN 5-MINUTE INTERVALS
 656          KM     5  10  15  20  25  30  35  40  45  50  55  60  65  70  75  80  85  90
 657          KM   .26 .26 .26 .26 .26 .26 .02 .02 .02 .02 .02 .02 .01 .01 .01 .01 .01 .01
 658          KM
 659          KM          L=   0.975 miles, S=  217 feet/mile, Kb= .03
 660          KM
 661          BA   0.157
 662          LG    0.09    0.25    4.60    0.30   24.97
 663          UC   0.221   0.195
 664          UA       0       5      16      30      65      77      84      90      94      97
 665          UA     100
              *

 666          KK    C541
 667          KM      Hydrograph combine 540541 + 206F at C541
 668          HC       2
              *

 669          KK  541548
 670          KM      Normal depth channel route from C541 to C548
 671          KM      Source:  HEC-2 Cross Section: BA 0.905
 672          RS       2    FLOW      -1
 673          RC   0.060   0.045   0.060  1138.0  0.0316
 674          RX  9761.7  9936.7  9955.2  9986.9  9994.7 10039.2 10065.3 10066.0
 675          RY  1647.4  1644.1  1638.1  1637.3  1636.2  1637.5  1652.9  1653.0
              *

 676          KK    206G
 677          KM   Sub-Basin   206G
 678          KM
 679          KM      The Clark Unit Hydrograph is used for this basin.
 680          KM          The Urban time-area relation is used for this basin.
 681          KM
 682          KM      Time of Concentration for this sub-basin is based on the following:
 683          KM          An rainfall areal reduction factor of 1.000
 684          KM
 685          KM       EXCESS RAINFALL VALUES EXCEEDED IN 5-MINUTE INTERVALS
 686          KM     5  10  15  20  25  30  35  40  45  50  55  60  65  70  75  80  85  90
 687          KM   .27 .27 .27 .27 .27 .26 .03 .02 .02 .02 .02 .02 .01 .01 .01 .01 .01 .01
 688          KM
 689          KM          L=   0.950 miles, S=  132 feet/mile, Kb= .03
 690          KM
 691          BA   0.089
1                                          HEC-1 INPUT                                                    PAGE 17

LINE          ID.......1.......2.......3.......4.......5.......6.......7.......8.......9......10

 692          LG    0.11    0.26    5.20    0.23   29.86
 693          UC   0.254   0.307
 694          UA       0       5      16      30      65      77      84      90      94      97
 695          UA     100
              *

 696          KK  BB523R
 697          KM      Retrieve previously diverted hydrograph at C523 in the right branch.
 698          DR   D523R
              *

 699          KK  523548
```

```
700          KM      Normal depth channel route from C523 to C548
701          KM      Source:  200 Scale Mapping
702          RS      15    FLOW      -1
703          RC   0.040   0.018   0.040  2680.0  0.0189
704          RX  1000.0  1040.0  1090.0  1130.0  1170.0  1171.2  1181.2  1196.2
705          RY  1646.0  1645.0  1643.8  1644.7  1644.0  1644.4  1646.0  1648.0
             *

706          KK   C548L
707          KM      Hydrograph combine 541548 + 206G + BB523R at C548 left branch
708          HC       3    3.72
             *
             * *
             * * C548L is the total flow in Balboa Wash above confluence with Oxford Wash
             * *
             *

709          KK    206H
710          KM   Sub-Basin   206H
711          KM
712          KM      The Clark Unit Hydrograph is used for this basin.
713          KM          The Urban time-area relation is used for this basin.
714          KM
715          KM      Time of Concentration for this sub-basin is based on the following:
716          KM          An rainfall areal reduction factor of 1.000
717          KM
718          KM       EXCESS RAINFALL VALUES EXCEEDED IN 5-MINUTE INTERVALS
719          KM     5  10  15  20  25  30  35  40  45  50  55  60  65  70  75  80  85  90
720          KM   .28 .28 .27 .27 .27 .27 .03 .03 .03 .03 .03 .03 .01 .01 .01 .01 .01 .01
721          KM
722          KM          L=   0.515 miles, S=  183 feet/mile, Kb= .03
723          KM
724          BA   0.059
725          LG    0.08    0.25    5.70    0.18   36.29
726          UC   0.167   0.150
727          UA       0       5      16      30      65      77      84      90      94      97
728          UA     100
             *
```



```
LINE         ID.......1.......2.......3.......4.......5.......6.......7.......8.......9......10

729          KK  542543
730          KM      Normal depth channel route from C542 to C543
731          KM      Source:  HEC-2 Cross Section: OX 0.931
732          RS       2    FLOW      -1
733          RC   0.075   0.040   0.050   686.0  0.0066
734          RX  9846.9  9881.6  9967.5  9983.2 10010.0 10025.0 10033.8 10039.6
735          RY  1732.3  1723.5  1724.1  1717.8  1717.0  1724.0  1728.2  1730.7
             *

736          KK    206I
737          KM   Sub-Basin   206I
738          KM
739          KM      The Clark Unit Hydrograph is used for this basin.
740          KM          The Urban time-area relation is used for this basin.
741          KM
742          KM      Time of Concentration for this sub-basin is based on the following:
743          KM          An rainfall areal reduction factor of 1.000
744          KM
745          KM       EXCESS RAINFALL VALUES EXCEEDED IN 5-MINUTE INTERVALS
746          KM     5  10  15  20  25  30  35  40  45  50  55  60  65  70  75  80  85  90
747          KM   .28 .28 .27 .27 .27 .27 .03 .03 .03 .03 .03 .03 .01 .01 .01 .01 .01 .01
748          KM
749          KM          L=   0.232 miles, S=  286 feet/mile, Kb= .03
750          KM
751          BA   0.021
752          LG    0.08    0.25    5.70    0.18   34.78
753          UC   0.096   0.077
754          UA       0       5      16      30      65      77      84      90      94      97
755          UA     100
             *

756          KK    C543
757          KM      Hydrograph combine 542543 + 206I at C543
758          HC       2
             *

759          KK   D543L
760          KM      Hydrograph diversion at C543.  Main flow continues in the left branch.
761          KM      Diverted flow is in the right branch.
762          DT   D543R
763          DI       0      38      45      50      65      85      97     122     141     162
764          DI     194     350     395     432     475     522     570     612
765          DQ       0      38      45      50      65      85      97     122     141     162
766          DQ     194     350     395     425     460     500     540     575
             *

767          KK  543544
768          KM      Normal depth channel route from C543 to C544
769          KM      Source:  200 Scale Mapping & Hydrology Field Reconnaissance
770          RS       1    FLOW      -1
771          RC   0.040   0.018   0.040   597.0  0.0277
772          RX  1000.0  1020.0  1045.0  1075.0  1105.0  1106.2  1146.2  1266.2
```

```
 773          RY  1720.0  1718.0  1712.0  1712.3  1712.0  1712.4  1714.0  1720.0
              *
1                                          HEC-1 INPUT                                                    PAGE 19

LINE          ID.......1.......2.......3.......4.......5.......6.......7.......8.......9......10

 774          KK    206K
 775          KM   Sub-Basin   206K
 776          KM
 777          KM      The Clark Unit Hydrograph is used for this basin.
 778          KM          The Urban time-area relation is used for this basin.
 779          KM
 780          KM      Time of Concentration for this sub-basin is based on the following:
 781          KM          An rainfall areal reduction factor of 1.000
 782          KM
 783          KM       EXCESS RAINFALL VALUES EXCEEDED IN 5-MINUTE INTERVALS
 784          KM     5  10  15  20  25  30  35  40  45  50  55  60  65  70  75  80  85  90
 785          KM   .27 .27 .27 .27 .27 .27 .03 .03 .03 .03 .03 .03 .01 .01 .01 .01 .01 .01
 786          KM
 787          KM          L=   0.615 miles, S=  255 feet/mile, Kb= .03
 788          KM
 789          BA   0.056
 790          LG    0.09    0.25    5.70    0.18   25.80
 791          UC   0.167   0.178
 792          UA       0       5      16      30      65      77      84      90      94      97
 793          UA     100
              *

 794          KK    C544
 795          KM      Hydrograph combine 543544 + 206K at C544
 796          HC       2
              *

 797          KK  544545
 798          KM      Normal depth channel route from C544 to C545
 799          KM      Source:  200 Scale Mapping & Hydrology Field Reconnaissance
 800          RS       2    FLOW      -1
 801          RC   0.040   0.018   0.040   985.0  0.0234
 802          RX  1000.0  1008.0  1018.0  1048.0  1078.0  1079.2  1089.2  1109.2
 803          RY  1690.0  1688.0  1686.0  1686.3  1686.0  1686.4  1688.0  1689.0
              *

 804          KK   D545L
 805          KM      Hydrograph diversion at C545.  Main flow continues in the left branch.
 806          KM      Diverted flow is in the right branch.
 807          DT   D545R
 808          DI       0      50     100     200     400     800    1600    3200    5000
 809          DQ       0      25      50     100     200     400     800    1600    2500
              *

 810          KK  545546
 811          KM      Normal depth channel route from C545 to C546
 812          KM      Source:  200 Scale Mapping & Hydrology Field Reconnaissance
 813          RS       1    FLOW      -1
 814          RC   0.040   0.018   0.040   428.0  0.0164
 815          RX  1000.0  1020.0  1050.0  1080.0  1110.0  1111.2  1121.2  1151.2
 816          RY  1680.0  1678.0  1676.0  1676.3  1676.0  1676.4  1678.0  1678.5
              *
1                                          HEC-1 INPUT                                                    PAGE 20

LINE          ID.......1.......2.......3.......4.......5.......6.......7.......8.......9......10

 817          KK    206L
 818          KM   Sub-Basin   206L
 819          KM
 820          KM      The Clark Unit Hydrograph is used for this basin.
 821          KM          The Urban time-area relation is used for this basin.
 822          KM
 823          KM      Time of Concentration for this sub-basin is based on the following:
 824          KM          An rainfall areal reduction factor of 1.000
 825          KM
 826          KM       EXCESS RAINFALL VALUES EXCEEDED IN 5-MINUTE INTERVALS
 827          KM     5  10  15  20  25  30  35  40  45  50  55  60  65  70  75  80  85  90
 828          KM   .27 .27 .27 .27 .27 .27 .03 .03 .03 .03 .03 .03 .01 .01 .01 .01 .01 .01
 829          KM
 830          KM          L=   0.546 miles, S=  231 feet/mile, Kb= .03
 831          KM
 832          BA   0.060
 833          LG    0.09    0.25    5.80    0.18   25.01
 834          UC   0.158   0.147
 835          UA       0       5      16      30      65      77      84      90      94      97
 836          UA     100
              *

 837          KK    C546
 838          KM      Hydrograph combine 545546 + 206L at C546
 839          HC       2
              *

 840          KK  546547
 841          KM      Normal depth channel route from C546 to C547
 842          KM      Source:  200 Scale Mapping
 843          RS       1    FLOW      -1
```

```
 844          RC   0.040   0.018   0.040   749.0  0.0327
 845          RX  1000.0  1005.0  1011.0  1013.0  1029.0  1047.0  1052.0  1057.0
 846          RY  1666.0  1664.0  1662.0  1661.9  1662.4  1662.0  1664.0  1666.0
              *

 847          KK  BB543R
 848          KM      Retrieve previously diverted hydrograph at C543 in the right branch.
 849          DR   D543R
              *

 850          KK  543547
 851          KM      Normal depth channel route from C543 to C547
 852          KM      Source:  HEC-2 Cross Section: OX 0.638
 853          RS       4    FLOW      -1
 854          RC   0.075   0.040   0.050  2395.0  0.0278
 855          RX  9720.9  9769.0  9970.7  9985.5 10020.0 10038.1 10097.0 10102.0
 856          RY  1690.4  1681.2  1683.1  1676.2  1677.0  1687.1  1687.4  1690.0
              *
1                                          HEC-1 INPUT                                                    PAGE 21

LINE          ID.......1.......2.......3.......4.......5.......6.......7.......8.......9......10

 857          KK  BB545R
 858          KM      Retrieve previously diverted hydrograph at C545 in the right branch.
 859          DR   D545R
              *

 860          KK  545547
 861          KM      Normal depth channel route from C545 to C547
 862          KM      Source:  HEC-2 Cross Section: OX 0.542
 863          RS       3    FLOW      -1
 864          RC   0.075   0.040   0.050  1216.0  0.0259
 865          RX  9668.2  9778.4  9957.9  9986.0 10012.7 10043.6 10067.6 10163.4
 866          RY  1674.1  1674.1  1673.3  1662.1  1662.2  1680.4  1680.9  1681.1
              *

 867          KK    206J
 868          KM   Sub-Basin   206J
 869          KM
 870          KM      The Clark Unit Hydrograph is used for this basin.
 871          KM          The Urban time-area relation is used for this basin.
 872          KM
 873          KM      Time of Concentration for this sub-basin is based on the following:
 874          KM          An rainfall areal reduction factor of 1.000
 875          KM
 876          KM       EXCESS RAINFALL VALUES EXCEEDED IN 5-MINUTE INTERVALS
 877          KM     5  10  15  20  25  30  35  40  45  50  55  60  65  70  75  80  85  90
 878          KM   .28 .28 .28 .28 .28 .28 .03 .03 .03 .03 .03 .03 .01 .01 .01 .01 .01 .01
 879          KM
 880          KM          L=   0.502 miles, S=  214 feet/mile, Kb= .03
 881          KM
 882          BA   0.060
 883          LG    0.08    0.25    5.70    0.18   44.51
 884          UC   0.154   0.133
 885          UA       0       5      16      30      65      77      84      90      94      97
 886          UA     100
              *

 887          KK    C547
 888          KM      Hydrograph combine 546547 + 543547 + 545547 + 206J at C547
 889          HC       4    0.26
              *

 890          KK  547548
 891          KM      Normal depth channel route from C547 to C548
 892          KM      Source:  HEC-2 Cross Section: OX 0.235
 893          RS       3    FLOW      -1
 894          RC   0.075   0.040   0.050  2165.0  0.0182
 895          RX  9910.0  9911.4  9968.5  9987.6 10017.4 10032.3 10077.4 10080.0
 896          RY  1639.0  1638.9  1637.9  1635.7  1635.8  1641.7  1642.9  1643.0
              *
1                                          HEC-1 INPUT                                                    PAGE 22

LINE          ID.......1.......2.......3.......4.......5.......6.......7.......8.......9......10

 897          KK    206M
 898          KM   Sub-Basin   206M
 899          KM
 900          KM      The Clark Unit Hydrograph is used for this basin.
 901          KM          The Urban time-area relation is used for this basin.
 902          KM
 903          KM      Time of Concentration for this sub-basin is based on the following:
 904          KM          An rainfall areal reduction factor of 1.000
 905          KM
 906          KM       EXCESS RAINFALL VALUES EXCEEDED IN 5-MINUTE INTERVALS
 907          KM     5  10  15  20  25  30  35  40  45  50  55  60  65  70  75  80  85  90
 908          KM   .28 .28 .27 .27 .27 .27 .03 .03 .03 .03 .03 .03 .02 .02 .02 .02 .02 .02
 909          KM
 910          KM          L=   0.465 miles, S=  166 feet/mile, Kb= .03
 911          KM
 912          BA   0.060
 913          LG    0.08    0.25    5.20    0.23   46.18
 914          UC   0.163   0.133
```

```
 915          UA       0       5      16      30      65      77      84      90      94      97
 916          UA     100
              *

 917          KK   C548R
 918          KM      Hydrograph combine 547548 + 206M at C548 right branch
 919          HC       2
              *
              * *
              * * C548R is the total flow in Oxford Wash above confluence with Balboa Wash
              * *
              *

 920          KK    C548
 921          KM      Hydrograph combine C548L + C548R at C548
 922          HC       2
              *
              * *
              * * C548 is the total flow in Balboa Wash below the confluence of Balboa Wash
              * * and Oxford Wash
              * *
              *

 923          KK  548549
 924          KM      Normal depth channel route from C548 to C549
 925          KM      Source:  HEC-2 Cross Section: BA0.246
 926          RS       9    FLOW      -1
 927          RC   0.070   0.080   0.070  3258.0  0.0172
 928          RX  9889.1  9912.5  9940.2  9960.0 10026.1 10046.8 10067.8 10079.3
 929          RY  1586.2  1585.7  1577.5  1573.6  1573.2  1579.5  1585.7  1586.2
              *
1                                          HEC-1 INPUT                                          PAGE 23

LINE          ID.......1.......2.......3.......4.......5.......6.......7.......8.......9......10

 930          KK    206N
 931          KM   Sub-Basin   206N
 932          KM
 933          KM      The Clark Unit Hydrograph is used for this basin.
 934          KM          The Urban time-area relation is used for this basin.
 935          KM
 936          KM      Time of Concentration for this sub-basin is based on the following:
 937          KM          An rainfall areal reduction factor of 1.000
 938          KM
 939          KM       EXCESS RAINFALL VALUES EXCEEDED IN 5-MINUTE INTERVALS
 940          KM     5  10  15  20  25  30  35  40  45  50  55  60  65  70  75  80  85  90
 941          KM   .28 .27 .27 .27 .27 .27 .03 .03 .03 .03 .03 .03 .02 .02 .02 .02 .02 .02
 942          KM
 943          KM          L=   0.767 miles, S=  120 feet/mile, Kb= .03
 944          KM
 945          BA   0.152
 946          LG    0.11    0.27    4.65    0.29   52.66
 947          UC   0.233   0.174
 948          UA       0       5      16      30      65      77      84      90      94      97
 949          UA     100
              *

 950          KK   C549L
 951          KM      Hydrograph combine 548549 + 206N at C549 left branch
 952          HC       2
              *
              * *
              * * C549L is the total flow in Balboa Wash above confluence with Ashbrook Wash
              * *
              * * End Basin 206.  Start Basin 207
              * *
              *

 953          KK   C599O
 954          KM      The following is the design outflow hydrograph from Golden Eagle Park Dam
 955          IN       1
 956          BA    7.13
 957          QI       0       0       0       0       0       0       0       0       1       1
 958          QI       1       1       1       1       1       1       1       1       1       1
 959          QI       2       2       2       2       2       2       2       3       3       3
 960          QI       3       3       4       4       4       4       5       5       5       5
 961          QI       6       6       6       7       7       8       9       9      10      10
 962          QI      10      11      11      12      12      12      13      13      14      14
 963          QI      14      15      15      16      16      16      17      17      17      18
 964          QI      18      18      19      19      20      20      20      21      21      22
 965          QI      22      23      24      24      25      25      26      26      27      27
 966          QI      28      28      29      29      30      30      31      31      32      32
 967          QI      32      33      34      34      35      35      36      36      37      37
 968          QI      38      38      39      40      40      41      41      42      43      43
 969          QI      44      45      45      46      46      47      48      48      49      49
 970          QI      50      51      51      52      52      53      54      55      55      56
 971          QI      57      58      59      59      60      61      61      62      62      63
 972          QI      63      63      64      64      65      65      66      66      67      67
 973          QI      67      68      68      69      69      69      70      70      71      71
1                                          HEC-1 INPUT                                          PAGE 24

LINE          ID.......1.......2.......3.......4.......5.......6.......7.......8.......9......10

 974          QI      71      72      72      72      72      73      73      73      74      74
```

975	QI	74	75	75	75	76	76	76	76	77	77
976	QI	77	77	78	78	78	78	79	79	79	79
977	QI	79	80	80	80	80	80	80	80	81	81
978	QI	81	81	81	81	82	82	82	82	82	82
979	QI	82	82	152	83	83	83	83	83	83	84
980	QI	84	84	84	84	84	85	85	85	85	85
981	QI	85	86	86	86	86	86	87	87	87	87
982	QI	88	88	88	88	88	89	89	89	89	90
983	QI	90	90	90	90	90	90	91	91	91	91
984	QI	91	91	92	92	92	92	92	92	93	93
985	QI	93	93	93	93	93	93	94	94	94	94
986	QI	94	94	94	94	94	94	94	94	94	94
987	QI	95	95	95	95	95	95	95	96	96	96
988	QI	96	96	97	97	97	97	97	98	98	98
989	QI	98	98	98	99	99	99	99	99	99	100
990	QI	100	100	100	100	101	101	101	101	101	101
991	QI	101	102	102	102	102	102	102	102	103	103
992	QI	103	103	103	103	103	104	104	104	104	104
993	QI	104	104	104	105	105	105	105	105	105	105
994	QI	105	105	106	106	106	106	106	106	106	107
995	QI	107	107	107	107	108	108	108	108	108	109
996	QI	109	109	109	109	110	110	110	110	110	110
997	QI	110	111	111	111	111	111	111	112	112	112
998	QI	112	113	113	113	113	114	114	114	114	114
999	QI	115	115	115	115	115	116	116	116	116	117
1000	QI	117	117	117	117	118	118	118	118	119	119
1001	QI	119	120	120	120	121	121	121	121	122	122
1002	QI	122	123	123	123	124	124	124	124	125	125
1003	QI	125	125	126	126	126	126	127	127	127	128
1004	QI	128	128	129	129	129	129	130	130	130	131
1005	QI	131	131	131	132	132	132	133	133	133	134
1006	QI	134	134	135	135	136	136	136	137	137	137
1007	QI	138	138	139	139	139	140	140	141	141	142
1008	QI	142	142	143	143	144	144	145	145	146	146
1009	QI	147	147	148	148	149	149	149	150	150	151
1010	QI	151	151	152	152	153	153	154	154	155	155
1011	QI	156	156	156	157	158	158	159	159	160	160
1012	QI	161	161	162	163	163	164	164	165	165	166
1013	QI	166	167	168	168	169	169	170	170	171	172
1014	QI	172	173	173	174	175	175	176	176	177	178
1015	QI	178	179	180	180	181	181	182	183	183	184
1016	QI	184	185	186	186	187	188	188	189	190	190
1017	QI	191	192	192	193	194	194	195	196	197	198
1018	QI	198	199	200	201	202	202	203	204	205	206
1019	QI	207	207	208	209	210	211	212	213	214	215
1020	QI	216	217	218	219	220	152	246	219	226	226
1021	QI	228	229	230	232	233	234	236	237	238	240
1022	QI	241	242	244	245	246	248	249	251	252	254
1023	QI	255	256	258	260	261	264	266	268	270	273
1024	QI	275	278	280	282	285	287	289	292	295	297
1025	QI	300	304	307	310	315	318	321	326	329	332
1026	QI	336	341	347	360	385	424	467	497	539	589
1027	QI	646	681	714	754	801	826	840	857	877	898
1028	QI	922	946	956	968	981	996	1012	1028	1046	1060

LINE	ID.....1	2	3	4	5	6	7	8	9	10
1029	QI 1071	1083	1094	1106	1118	1129	1141	1153	1161	1169
1030	QI 1177	1184	1192	1199	1205	1212	1218	1224	1229	1235
1031	QI 1240	1243	1246	1249	1251	1253	1255	1256	1258	1259
1032	QI 1260	1262	1263	1264	1264	1265	1266	1266	1267	1267
1033	QI 1267	1267	1267	1267	1267	1267	1267	1267	1266	1266
1034	QI 1266	1265	1265	1264	1264	1263	1263	1262	1262	1261
1035	QI 1261	1261	1260	1260	1259	1259	1258	1258	1257	1257
1036	QI 1256	1256	1255	1254	1254	1253	1253	1252	1251	1251
1037	QI 1250	1249	1248	1248	1247	1246	1245	1245	1244	1243
1038	QI 1242	1241	1240	1239	1238	1237	1236	1235	1234	1233
1039	QI 1232	1230	1229	1228	1227	1226	1225	1224	1223	1222
1040	QI 1220	1219	1218	1217	1216	1215	1214	1213	1211	1210
1041	QI 1209	1208	1207	1206	1205	1204	1203	1202	1200	1199
1042	QI 1198	1197	1196	1195	1194	1193	1192	1191	1190	1189
1043	QI 1188	1187	1185	1184	1183	1182	1181	1180	1179	1178
1044	QI 1177	1176	1175	1174	1173	1172	1171	1170	1169	1168
1045	QI 1167	1166	1165	1164	1163	1162	1161	1160	1159	1158
1046	QI 1157	1156	1155	1154	1153	1151	1150	1149	1147	1146
1047	QI 1145	1143	1142	1140	1139	1138	1136	1135	1134	1132
1048	QI 1131	1130	1128	1127	1126	1125	1123	1122	1121	1119
1049	QI 1118	1117	1116	1114	1113	1112	1111	1109	1108	1107
1050	QI 1106	1105	1103	1102	1101	1100	1098	1097	1096	1095
1051	QI 1094	1092	1091	1090	1089	1088	1087	1085	1084	1083
1052	QI 1082	1081	1080	1079	1077	1076	1075	1074	1073	1072
1053	QI 1071	1069	1068	1067	1066	1065	1064	1063	1062	1061
1054	QI 1059	1058	1057	1056	1054	1052	1051	1049	1047	1045
1055	QI 1043	1041	1040	1038	1036	1034	1033	1031	1029	1027
1056	QI 1026	1024	1022	1021	1019	1017	1015	1014	1012	1011
1057	QI 1009	1007	1006	1004	1002	1001	999	998	996	995
1058	QI 993	992	990	989	987	985	984	982	981	979
1059	QI 978	976	975	973	972	970	969	967	966	964
1060	QI 962	961	959	958	956	954	953	951	949	947
1061	QI 946	943	938	933	928	923	918	914	909	904
1062	QI 899	894	889	885	880	875	871	866	862	857
1063	QI 853	848	844	840	835	831	827	823	818	802
1064	QI 786	772	760	748	738	729	721	713	706	700
1065	QI 694	688	683	678	673	668	664	660	651	644

```
1066        QI     639     634     631     627     625     622     619     617     615     613
1067        QI     611     609     607     605     604     602     600     599     597     596
1068        QI     594     593     591     590     588     587     585     584     582     581
1069        QI     579     577     576     574     572     570     569     567     565     563
1070        QI     562     560     558     557     555     554     552     551     549     548
1071        QI     546     545     543     542     540     539     537     536     534     533
1072        QI     532     530     529     528     527     526     525     524     523     522
1073        QI     521     520     519     517     516     515     514     513     512     511
1074        QI     509     508     507     506     505     503     502     501     500     498
1075        QI     497     496     495     493     492     491     490     488     487     486
1076        QI     485     483     482     481     480     478     477     476     475     474
1077        QI     473     472     471     469     468     467     466     465     464     463
1078        QI     462     461     460     459     457     456     455     454     453     452
1079        QI     451     450     448     447     445     444     442     441     439     437
1080        QI     435     433     432     430     428     425     423     421     418     416
1081        QI     414     411     409     406     404     401     398     396     393     391
1082        QI     388     386     384     381     379     376     374     372     369     367
1083        QI     365     362     360     358     356     354     352     350     348     346
```



```
LINE        ID.......1.......2.......3.......4.......5.......6.......7.......8.......9......10

1084        QI     344     341     338     336     334     332     329     327     325     323
1085        QI     320     318     316     313     311     308     306     304     302     299
1086        QI     297     295     293     291     289     287     285     283     281     279
1087        QI     277     275     273     271     269     267     265     263     261     260
1088        QI     258     256     255     253     252     250     249     247     246     244
1089        QI     243     241     240     238     237     235     234     232     231     229
1090        QI     228     227     225     224     223     222     220     219     218     217
1091        QI     216     215     214     212     211     210     209     208     206     205
1092        QI     204     203     202     200     199     198     197     195     194     193
1093        QI     192     191     190     189     187     186     185     184     183     182
1094        QI     181     180     179     178     177     176     175     174     173     172
1095        QI     171     170     169     168     167     166     165     164     164     163
1096        QI     162     161     160     160     159     158     157     157     156     155
1097        QI     155     154     154     153     153     152     152     151     150     150
1098        QI     149     149     148     147     147     146     146     145     145     144
1099        QI     144     143     143     143     142     142     141     141     140     140
1100        QI     139     139     138     138     137     137     136     136     135     134
1101        QI     134     133     133     132     132     131     130     130     129     128
1102        QI     128     127     126     126     125     124     124     123     122     122
1103        QI     121     120     119     118     117     116     115     114     113     112
1104        QI     111     109     108     107     106     105     104     103     101     100
1105        QI      99      98      97      96      95      94      92      91      90      88
1106        QI      87      86      85      83      82      81      80      79      77      76
1107        QI      75      74      73      72      71      70      69      69      68      67
1108        QI      66      65      64      63      62      62      61      60      59      58
1109        QI      58      57      56      55      54      54      53      52      51      51
1110        QI      50      49      48      48      47      46      46      45      44      43
1111        QI      43      42      41      41      40      39      39      38      37      37
1112        QI      36      35      35      34      33      33      32      32      31      30
1113        QI      30      30      29      29      28      28      28      27      27      26
1114        QI      26      26      25      25      24      24      23      23      23      22
1115        QI      22      21      21      20      20      19      19      19      18      18
1116        QI      17      17      17      16      16      15      15      15      14      14
1117        QI      14      13      13      13      12      12      12      11      11      11
1118        QI      11      10      10      10      10       9       9       9       9       8
1119        QI       8       8       8       8       7       7       7       7       7       6
1120        QI       6       6       6       6       5       5       5       5       5       5
1121        QI       5       4       4       4       4       4       4       4       4       4
1122        QI       3       3       3       3       3       3       3       3       3       3
1123        QI       3       2       2       2       2       2       2       2       2       2
1124        QI       2       2       2       2       2       2       2       2       1       1
1125        QI       1       1       1       1       1       1       1       1       1       1
1126        QI       1       1       1       1       1       1       1       1       1       1
1127        QI       1       1       1       1       1       1       1       1       1       1
1128        QI       1       1       1       1       1       0       0       0       0       0
1129        QI       0       0       0       0       0       0       0       0       0       0
1130        QI       0       0       0       0       0       0       0       0       0       0
1131        QI       0       0       0       0       0       0       0       0       0       0
1132        QI       0       0       0       0       0       0       0       0       0       0
1133        QI       0       0       0       0       0       0       0       0       0       0
1134        QI       0       0       0       0       0       0       0       0       0       0
1135        QI       0       0       0       0       0       0       0       0       0       0
1136        QI       0       0       0       0       0       0       0       0       0       0
1137        IN      15
            *
            * * End Basin 210.  Start Basin 211
            * *
            *
```



```
LINE        ID.......1.......2.......3.......4.......5.......6.......7.......8.......9......10


1138        KK  599608
1139        KM      Normal depth channel route from C599 to C608
1140        KM      Source:  HEC-2 Cross Section: AS 3.621
1141        RS       2    FLOW      -1
1142        RC   0.055   0.045   0.025  1476.0  0.0148
1143        RX  9675.4  9726.8  9929.0  9990.7 10005.9 10033.3 10061.9 10082.2
1144        RY  1691.3  1687.2  1685.5  1678.6  1678.1  1682.1  1689.8  1691.8
            *

1145        KK    211K
```

```
1146          KM   Sub-Basin   211K
1147          KM
1148          KM      The Clark Unit Hydrograph is used for this basin.
1149          KM          The Urban time-area relation is used for this basin.
1150          KM
1151          KM      Time of Concentration for this sub-basin is based on the following:
1152          KM          An rainfall areal reduction factor of 1.000
1153          KM
1154          KM       EXCESS RAINFALL VALUES EXCEEDED IN 5-MINUTE INTERVALS
1155          KM     5  10  15  20  25  30  35  40  45  50  55  60  65  70  75  80  85  90
1156          KM   .28 .28 .27 .27 .27 .27 .03 .03 .03 .03 .03 .03 .01 .01 .01 .01 .01 .01
1157          KM
1158          KM          L=   0.376 miles, S=  157 feet/mile, Kb= .03
1159          KM
1160          BA   0.102
1161          LG    0.13    0.27    6.00    0.16   31.48
1162          UC   0.150   0.076
1163          UA       0       5      16      30      65      77      84      90      94      97
1164          UA     100
              *

1165          KK   C608L
1166          KM      Hydrograph combine 599608 + 211K at C608 left branch
1167          HC       2
              *

1168          KK    211G
1169          KM   Sub-Basin   211G
1170          KM
1171          KM      The Clark Unit Hydrograph is used for this basin.
1172          KM          The Urban time-area relation is used for this basin.
1173          KM
1174          KM      Time of Concentration for this sub-basin is based on the following:
1175          KM          An rainfall areal reduction factor of 1.000
1176          KM
1177          KM       EXCESS RAINFALL VALUES EXCEEDED IN 5-MINUTE INTERVALS
1178          KM     5  10  15  20  25  30  35  40  45  50  55  60  65  70  75  80  85  90
1179          KM   .30 .30 .29 .29 .29 .29 .05 .05 .05 .05 .05 .05 .03 .03 .03 .03 .03 .03
1180          KM
1181          KM          L=   0.448 miles, S=  190 feet/mile, Kb= .04
1182          KM
1183          BA   0.008
1184          LG    0.06    0.25    5.70    0.18   90.00
1185          UC   0.175   0.454
```



```
LINE          ID.......1.......2.......3.......4.......5.......6.......7.......8.......9.......10

1186          UA       0       5      16      30      65      77      84      90      94      97
1187          UA     100
              *

1188          KK  604606
1189          KM      Normal depth channel route from C604 to C606
1190          KM      Source:  200 Scale Mapping
1191          RS      11    FLOW      -1
1192          RC   0.040   0.018   0.040  2784.0  0.0647
1193          RX  1000.0  1040.0  1060.0  1076.0  1092.0  1093.2  1098.2  1113.2
1194          RY  1814.0  1811.0  1810.8  1811.1  1810.8  1811.2  1812.0  1816.0
              *

1195          KK    211I
1196          KM   Sub-Basin   211I
1197          KM
1198          KM      The Clark Unit Hydrograph is used for this basin.
1199          KM          The Urban time-area relation is used for this basin.
1200          KM
1201          KM      Time of Concentration for this sub-basin is based on the following:
1202          KM          An rainfall areal reduction factor of 1.000
1203          KM
1204          KM       EXCESS RAINFALL VALUES EXCEEDED IN 5-MINUTE INTERVALS
1205          KM     5  10  15  20  25  30  35  40  45  50  55  60  65  70  75  80  85  90
1206          KM   .28 .28 .28 .28 .28 .28 .03 .03 .03 .03 .03 .03 .02 .02 .02 .02 .02 .02
1207          KM
1208          KM          L=   0.626 miles, S=  257 feet/mile, Kb= .03
1209          KM
1210          BA   0.041
1211          LG    0.08    0.25    5.70    0.18   45.00
1212          UC   0.163   0.210
1213          UA       0       5      16      30      65      77      84      90      94      97
1214          UA     100
              *

1215          KK   C606R
1216          KM      Hydrograph combine 604606 + 211I at C606 right branch
1217          HC       2
              *

1218          KK    211H
1219          KM   Sub-Basin   211H
1220          KM
1221          KM      The Clark Unit Hydrograph is used for this basin.
1222          KM          The Urban time-area relation is used for this basin.
1223          KM
1224          KM      Time of Concentration for this sub-basin is based on the following:
```

```
1225          KM          An rainfall areal reduction factor of 1.000
1226          KM
1227          KM       EXCESS RAINFALL VALUES EXCEEDED IN 5-MINUTE INTERVALS
1228          KM     5  10  15  20  25  30  35  40  45  50  55  60  65  70  75  80  85  90
1229          KM   .27 .27 .27 .27 .27 .27 .03 .03 .03 .03 .03 .03 .01 .01 .01 .01 .01 .01
1230          KM
1231          KM          L=   0.501 miles, S=  289 feet/mile, Kb= .03
1232          KM
1                                          HEC-1 INPUT                                          PAGE 29

LINE          ID.......1.......2.......3.......4.......5.......6.......7.......8.......9......10

1233          BA   0.073
1234          LG    0.09    0.25    6.00    0.16   17.93
1235          UC   0.142   0.108
1236          UA       0       5      16      30      65      77      84      90      94      97
1237          UA     100
              *

1238          KK   C605O
1239          KM      Reservoir route at C605.
1240          RS       1    ELEV  1722.5
1241          SV    0.00    0.20    0.20    0.20    0.20    0.30    0.30    0.30    0.40    0.60
1242          SV    0.70    0.90    1.00    1.20    1.40    1.60    1.90    2.80    3.40    4.10
1243          SE  1722.5  1726.8  1727.0  1727.2  1727.4  1727.6  1727.8  1728.0  1728.2  1728.4
1244          SE  1728.6  1728.8  1729.0  1729.2  1729.4  1729.6  1730.0  1730.4  1730.7  1731.0
1245          SQ       0       0       5      10      20      43      63      73      78      85
1246          SQ      91      96     101     105     109     113     122     130     136     200
              *

1247          KK    C606
1248          KM      Hydrograph combine C606R + C605O at C606
1249          HC       2
              *

1250          KK  606607
1251          KM      Normal depth channel route from C606 to C607
1252          KM      Source:  200 Scale Mapping
1253          RS       2    FLOW      -1
1254          RC   0.020   0.055   0.035  1061.0  0.0286
1255          RX  1000.0  1032.0  1082.0  1095.0  1105.0  1117.0  1123.0  1153.0
1256          RY  1704.3  1704.0  1703.5  1700.0  1700.0  1703.0  1704.0  1706.0
              *

1257          KK    211J
1258          KM   Sub-Basin   211J
1259          KM
1260          KM      The Clark Unit Hydrograph is used for this basin.
1261          KM          The Urban time-area relation is used for this basin.
1262          KM
1263          KM      Time of Concentration for this sub-basin is based on the following:
1264          KM          An rainfall areal reduction factor of 1.000
1265          KM
1266          KM       EXCESS RAINFALL VALUES EXCEEDED IN 5-MINUTE INTERVALS
1267          KM     5  10  15  20  25  30  35  40  45  50  55  60  65  70  75  80  85  90
1268          KM   .28 .28 .28 .28 .28 .28 .03 .03 .03 .03 .03 .03 .01 .01 .01 .01 .01 .01
1269          KM
1270          KM          L=   0.249 miles, S=  166 feet/mile, Kb= .03
1271          KM
1272          BA   0.015
1273          LG    0.08    0.23    6.20    0.16   39.19
1274          UC   0.117   0.124
1275          UA       0       5      16      30      65      77      84      90      94      97
1276          UA     100
              *
1                                          HEC-1 INPUT                                          PAGE 30

LINE          ID.......1.......2.......3.......4.......5.......6.......7.......8.......9......10

1277          KK    C607
1278          KM      Hydrograph combine 606607 + 211J at C607
1279          HC       2
              *

1280          KK  607608
1281          KM      Normal depth channel route from C607 to C608
1282          KM      Source:  200 Scale Mapping
1283          RS       2    FLOW      -1
1284          RC   0.040   0.050   0.035  1008.0  0.0145
1285          RX  1000.0  1060.0  1070.0  1082.0  1083.0  1095.0  1115.0  1133.0
1286          RY  1688.0  1686.0  1684.0  1681.0  1681.0  1684.0  1685.0  1685.4
              *

1287          KK    C608
1288          KM      Hydrograph combine C608L + 607608 at C608
1289          HC       2
              *

1290          KK  608613
1291          KM      Normal depth channel route from C608 to C613
1292          KM      Source:  HEC-2 Cross Section: AS 3.421
1293          RS       2    FLOW      -1
1294          RC   0.100   0.045   0.100  1338.0  0.0202
1295          RX  9885.0  9887.9  9957.3  9986.7 10012.9 10054.7 10086.3 10122.2
```

```
1296        RY  1670.2  1670.1  1668.0  1660.0  1659.9  1661.6  1669.9  1670.8
            *
            * *
            * * Move to the top of Sunflower Wash
            * *
            *

1297        KK    211M
1298        KM   Sub-Basin   211M
1299        KM
1300        KM      The Clark Unit Hydrograph is used for this basin.
1301        KM          The Urban time-area relation is used for this basin.
1302        KM
1303        KM      Time of Concentration for this sub-basin is based on the following:
1304        KM          An rainfall areal reduction factor of 1.000
1305        KM
1306        KM       EXCESS RAINFALL VALUES EXCEEDED IN 5-MINUTE INTERVALS
1307        KM     5  10  15  20  25  30  35  40  45  50  55  60  65  70  75  80  85  90
1308        KM   .28 .28 .28 .28 .28 .28 .04 .04 .04 .04 .04 .03 .02 .02 .02 .02 .02 .02
1309        KM
1310        KM          L=   0.541 miles, S=  266 feet/mile, Kb= .03
1311        KM
1312        BA   0.081
1313        LG    0.07    0.25    5.70    0.18   50.05
1314        UC   0.150   0.115
1315        UA       0       5      16      30      65      77      84      90      94      97
1316        UA     100
            *
```



```
LINE        ID.......1.......2.......3.......4.......5.......6.......7.......8.......9......10

1317        KK  610611
1318        KM      Normal depth channel route from C610 to 1611
1319        KM      Source:  HEC-2 Cross Section: SU 0.216
1320        RS       2    FLOW      -1
1321        RC   0.050   0.045   0.050  1090.0  0.0211
1322        RX  9911.9  9948.1  9973.6  9988.6 10007.1 10027.0 10049.8 10143.7
1323        RY  1699.3  1691.7  1686.3  1680.1  1679.7  1686.6  1687.3  1698.6
            *

1324        KK    211N
1325        KM   Sub-Basin   211N
1326        KM
1327        KM      The Clark Unit Hydrograph is used for this basin.
1328        KM          The Urban time-area relation is used for this basin.
1329        KM
1330        KM      Time of Concentration for this sub-basin is based on the following:
1331        KM          An rainfall areal reduction factor of 1.000
1332        KM
1333        KM       EXCESS RAINFALL VALUES EXCEEDED IN 5-MINUTE INTERVALS
1334        KM     5  10  15  20  25  30  35  40  45  50  55  60  65  70  75  80  85  90
1335        KM   .28 .28 .28 .28 .28 .28 .04 .04 .04 .04 .04 .04 .02 .02 .02 .02 .02 .02
1336        KM
1337        KM          L=   0.261 miles, S=  235 feet/mile, Kb= .03
1338        KM
1339        BA   0.020
1340        LG    0.07    0.25    5.70    0.18   56.58
1341        UC   0.108   0.099
1342        UA       0       5      16      30      65      77      84      90      94      97
1343        UA     100
            *

1344        KK   C611R
1345        KM      Hydrograph combine 610611 + 211N at C611 right branch
1346        HC       2
            *

1347        KK    211O
1348        KM   Sub-Basin   211O
1349        KM
1350        KM      The Clark Unit Hydrograph is used for this basin.
1351        KM          The Urban time-area relation is used for this basin.
1352        KM
1353        KM      Time of Concentration for this sub-basin is based on the following:
1354        KM          An rainfall areal reduction factor of 1.000
1355        KM
1356        KM       EXCESS RAINFALL VALUES EXCEEDED IN 5-MINUTE INTERVALS
1357        KM     5  10  15  20  25  30  35  40  45  50  55  60  65  70  75  80  85  90
1358        KM   .28 .28 .28 .28 .28 .28 .03 .03 .03 .03 .03 .03 .02 .02 .02 .02 .02 .02
1359        KM
1360        KM          L=   0.371 miles, S=  257 feet/mile, Kb= .03
1361        KM
1362        BA   0.041
1363        LG    0.08    0.25    5.70    0.18   45.31
1364        UC   0.125   0.103
```



```
LINE        ID.......1.......2.......3.......4.......5.......6.......7.......8.......9......10

1365        UA       0       5      16      30      65      77      84      90      94      97
1366        UA     100
            *
```

```
1367          KK   C609O
1368          KM      Reservoir route at C609.
1369          RS       1    ELEV  1694.0
1370          SV    0.00    0.10    0.21    0.50    0.86    1.40    1.93    2.60    3.10    3.20
1371          SV    3.39    3.60    3.80    4.00    4.10    4.30    4.50    4.70    4.90    5.10
1372          SE  1694.0  1695.0  1696.0  1697.0  1698.0  1699.0  1700.0  1701.0  1701.6  1701.8
1373          SE  1702.0  1702.2  1702.4  1702.6  1702.8  1703.0  1703.2  1703.4  1703.6  1703.8
1374          SQ       0       6      16      33      48      59      68      75      79      85
1375          SQ     108     149     209     289     390     512     658     829    1025    1247
              *

1376          KK  609611
1377          KM      Normal depth channel route from C609 to C611
1378          KM      Source:  200 Scale Mapping
1379          RS       2    FLOW      -1
1380          RC   0.035   0.050   0.035   470.0  0.0200
1381          RX  1000.0  1025.0  1050.0  1054.0  1064.0  1068.0  1088.0  1103.0
1382          RY  1690.0  1688.0  1684.0  1682.0  1682.0  1684.0  1688.0  1690.0
              *

1383          KK   C611I
1384          KM      Hydrograph combine 609611 + C611R at C611I
1385          HC       2
              *

1386          KK   C611O
1387          KM      Reservoir route at C611.
1388          RS       1    ELEV  1668.4
1389          SV    0.00    0.41    1.10    2.49    4.34    6.64    6.72    6.81    6.89    6.97
1390          SV    7.06    7.14    7.22    7.31    7.39    7.47    7.56    7.64    7.72    7.81
1391          SE  1674.0  1676.0  1678.0  1680.0  1682.0  1684.0  1684.2  1684.4  1684.6  1684.8
1392          SE  1685.0  1685.2  1685.4  1685.6  1685.8  1686.0  1686.2  1686.4  1686.6  1686.8
1393          SQ       0       0      86     117     141     162     164     170     181     199
1394          SQ     225     262     313     378     460     558     673     807     958    1118
              *

1395          KK   D611L
1396          KM      Hydrograph diversion at C611.  Main flow continues in the left branch.
1397          KM      Diverted flow is in the right branch.
1398          DT   D611R
1399          DI       0       0      86     117     141     162     164     170     181     199
1400          DI     225     262     313     378     460     558     673     807     958    1118
1401          DQ       0       0      86     117     141     162     164     165     167     169
1402          DQ     171     173     175     176     178     180     182     183     185     187
              *
```



```
LINE          ID.......1.......2.......3.......4.......5.......6.......7.......8.......9......10

1403          KK  611612
1404          KM      Normal depth channel route from C611 to C612
1405          KM      Source:  200 Scale Mapping
1406          RS       1    FLOW      -1
1407          RC   0.040   0.018   0.040   925.0  0.0270
1408          RX  1000.0  1020.0  1023.0  1041.0  1059.0  1060.2  1071.2  1136.2
1409          RY  1666.0  1664.0  1663.5  1663.9  1663.5  1663.9  1664.0  1666.0
              *

1410          KK    211P
1411          KM   Sub-Basin   211P
1412          KM
1413          KM      The Clark Unit Hydrograph is used for this basin.
1414          KM          The Urban time-area relation is used for this basin.
1415          KM
1416          KM      Time of Concentration for this sub-basin is based on the following:
1417          KM          An rainfall areal reduction factor of 1.000
1418          KM
1419          KM       EXCESS RAINFALL VALUES EXCEEDED IN 5-MINUTE INTERVALS
1420          KM     5  10  15  20  25  30  35  40  45  50  55  60  65  70  75  80  85  90
1421          KM   .29 .29 .28 .28 .28 .28 .04 .04 .04 .04 .04 .04 .02 .02 .02 .02 .02 .02
1422          KM
1423          KM          L=   0.307 miles, S=  192 feet/mile, Kb= .03
1424          KM
1425          BA   0.033
1426          LG    0.08    0.15    7.00    0.11   45.00
1427          UC   0.125   0.099
1428          UA       0       5      16      30      65      77      84      90      94      97
1429          UA     100
              *

1430          KK    C612
1431          KM      Hydrograph combine 611612 + 211P at C612
1432          HC       2
              *
              * *
              * * NOTE: 612613 is too short to route
              * *
              *

1433          KK    C613
1434          KM      Hydrograph combine 608613 + C612 at C613
1435          HC       2
              *
```

```
1436          KK  613621
1437          KM      Normal depth channel route from C613 to C621
1438          KM      Source:  HEC-2 Cross Section: AS 3.241
1439          RS       1    FLOW      -1
1440          RC   0.100   0.045   0.100   718.0  0.0251
1441          RX  9695.4  9884.0  9985.0  9991.1 10033.8 10062.8 10097.5 10165.1
1442          RY  1655.5  1647.5  1645.8  1641.1  1640.6  1642.1  1648.7  1654.3
              *
```



```
LINE          ID.......1.......2.......3.......4.......5.......6.......7.......8.......9......10

1443          KK    211L
1444          KM   Sub-Basin   211L
1445          KM
1446          KM      The Clark Unit Hydrograph is used for this basin.
1447          KM          The Urban time-area relation is used for this basin.
1448          KM
1449          KM      Time of Concentration for this sub-basin is based on the following:
1450          KM          An rainfall areal reduction factor of 1.000
1451          KM
1452          KM       EXCESS RAINFALL VALUES EXCEEDED IN 5-MINUTE INTERVALS
1453          KM     5  10  15  20  25  30  35  40  45  50  55  60  65  70  75  80  85  90
1454          KM   .27 .26 .26 .26 .26 .26 .02 .02 .02 .02 .02 .02 .01 .01 .01 .01 .01 .01
1455          KM
1456          KM          L=   0.508 miles, S=  181 feet/mile, Kb= .03
1457          KM
1458          BA   0.096
1459          LG    0.11    0.26    4.35    0.36   42.40
1460          UC   0.167   0.112
1461          UA       0       5      16      30      65      77      84      90      94      97
1462          UA     100
              *

1463          KK   C621L
1464          KM      Hydrograph combine 613621 + 211L at C621 left branch
1465          HC       2
              *
              * *
              * * Move to the top of Arrow Wash
              * *
              *

1466          KK    211Q
1467          KM   Sub-Basin   211Q
1468          KM
1469          KM      The Clark Unit Hydrograph is used for this basin.
1470          KM          The Urban time-area relation is used for this basin.
1471          KM
1472          KM      Time of Concentration for this sub-basin is based on the following:
1473          KM          An rainfall areal reduction factor of 1.000
1474          KM
1475          KM       EXCESS RAINFALL VALUES EXCEEDED IN 5-MINUTE INTERVALS
1476          KM     5  10  15  20  25  30  35  40  45  50  55  60  65  70  75  80  85  90
1477          KM   .28 .28 .27 .27 .27 .27 .03 .03 .03 .03 .03 .03 .01 .01 .01 .01 .01 .01
1478          KM
1479          KM          L=   0.255 miles, S=  295 feet/mile, Kb= .03
1480          KM
1481          BA   0.021
1482          LG    0.08    0.25    5.70    0.18   30.04
1483          UC   0.100   0.087
1484          UA       0       5      16      30      65      77      84      90      94      97
1485          UA     100
              *
```



```
LINE          ID.......1.......2.......3.......4.......5.......6.......7.......8.......9......10

1486          KK  616617
1487          KM      Normal depth channel route from C616 to C617
1488          KM      Source:  200 Scale Mapping
1489          RS       1    FLOW      -1
1490          RC   0.070   0.060   0.070  1131.0  0.0553
1491          RX  1000.0  1008.0  1015.0  1045.0  1050.0  1080.0  1100.0  1110.0
1492          RY  1834.0  1832.0  1830.0  1826.0  1826.0  1830.0  1834.0  1836.0
              *

1493          KK    211R
1494          KM   Sub-Basin   211R
1495          KM
1496          KM      The Clark Unit Hydrograph is used for this basin.
1497          KM          The Urban time-area relation is used for this basin.
1498          KM
1499          KM      Time of Concentration for this sub-basin is based on the following:
1500          KM          An rainfall areal reduction factor of 1.000
1501          KM
1502          KM       EXCESS RAINFALL VALUES EXCEEDED IN 5-MINUTE INTERVALS
1503          KM     5  10  15  20  25  30  35  40  45  50  55  60  65  70  75  80  85  90
1504          KM   .28 .28 .27 .27 .27 .27 .03 .03 .03 .03 .03 .03 .01 .01 .01 .01 .01 .01
1505          KM
1506          KM          L=   0.572 miles, S=  271 feet/mile, Kb= .03
1507          KM
1508          BA   0.084
```

```
1509          LG    0.08    0.25    5.70    0.18   37.77
1510          UC   0.154   0.122
1511          UA       0       5      16      30      65      77      84      90      94      97
1512          UA     100
              *

1513          KK   C617L
1514          KM      Hydrograph combine 616617 + 211R at C617 left branch
1515          HC       2
              *

1516          KK    211U
1517          KM   Sub-Basin   211U
1518          KM
1519          KM      The Clark Unit Hydrograph is used for this basin.
1520          KM          The Urban time-area relation is used for this basin.
1521          KM
1522          KM      Time of Concentration for this sub-basin is based on the following:
1523          KM          An rainfall areal reduction factor of 1.000
1524          KM
1525          KM       EXCESS RAINFALL VALUES EXCEEDED IN 5-MINUTE INTERVALS
1526          KM     5  10  15  20  25  30  35  40  45  50  55  60  65  70  75  80  85  90
1527          KM   .29 .29 .28 .28 .28 .28 .04 .04 .04 .04 .04 .04 .02 .02 .02 .02 .02 .02
1528          KM
1529          KM          L=   0.831 miles, S=  214 feet/mile, Kb= .03
1530          KM
1531          BA   0.027
1532          LG    0.07    0.25    5.70    0.18   65.99
1533          UC   0.200   0.415
```



```
LINE          ID.......1.......2.......3.......4.......5.......6.......7.......8.......9......10

1534          UA       0       5      16      30      65      77      84      90      94      97
1535          UA     100
              *

1536          KK   D614L
1537          KM      Hydrograph diversion at C614.  Main flow continues in the left branch.
1538          KM      Diverted flow is in the right branch.
1539          DT   D614R
1540          DI       0     4.3     8.5    20.0    49.0    85.5
1541          DQ       0     2.5     5.0    13.5    35.0    60.0
              *

1542          KK    C617
1543          KM      Hydrograph combine C617L + D614L at C617
1544          HC       2
              *

1545          KK  617618
1546          KM      Normal depth channel route from C617 to C618
1547          KM      Source:  HEC-2 Cross Section: AR 0.836
1548          RS       3    FLOW      -1
1549          RC   0.070   0.060   0.070  1912.0  0.0345
1550          RX  9983.3  9987.2  9989.2  9991.1 10031.5 10053.5 10070.6 10097.7
1551          RY  1766.5  1762.3  1760.2  1758.1  1757.8  1760.8  1764.2  1770.6
              *

1552          KK    211S
1553          KM   Sub-Basin   211S
1554          KM
1555          KM      The Clark Unit Hydrograph is used for this basin.
1556          KM          The Urban time-area relation is used for this basin.
1557          KM
1558          KM      Time of Concentration for this sub-basin is based on the following:
1559          KM          An rainfall areal reduction factor of 1.000
1560          KM
1561          KM       EXCESS RAINFALL VALUES EXCEEDED IN 5-MINUTE INTERVALS
1562          KM     5  10  15  20  25  30  35  40  45  50  55  60  65  70  75  80  85  90
1563          KM   .27 .27 .27 .27 .27 .27 .03 .03 .03 .03 .02 .02 .01 .01 .01 .01 .01 .01
1564          KM
1565          KM          L=   0.445 miles, S=  272 feet/mile, Kb= .07
1566          KM
1567          BA   0.050
1568          LG    0.11    0.31    5.70    0.19   30.06
1569          UC   0.213   0.190
1570          UA       0       5      16      30      65      77      84      90      94      97
1571          UA     100
              *

1572          KK   C618I
1573          KM      Hydrograph combine 617618 + 211S at C618I
1574          HC       2
              *
```



```
LINE          ID.......1.......2.......3.......4.......5.......6.......7.......8.......9......10

1575          KK   C618O
1576          KM      Reservoir route at C618.
1577          RS       1    ELEV  1730.6
1578          SV    0.00    0.01    0.06    0.24    0.50    0.75    1.20    1.66    2.30    2.94
1579          SV    3.20    3.30    3.40    3.60    3.80    3.90    4.10    4.30    4.50    4.65
```

```
1580          SE  1730.6  1734.0  1736.0  1738.0  1739.0  1740.0  1741.0  1742.0  1743.0  1744.0
1581          SE  1744.3  1744.4  1744.6  1744.8  1745.0  1745.2  1745.4  1745.6  1745.8  1746.0
1582          SQ       0     2.2     2.6     3.0     3.1     3.2     3.3     3.5     3.6     3.7
1583          SQ     3.7     3.8       8      21      48      88     143     212     295     390
              *

1584          KK  BB614R
1585          KM      Retrieve previously diverted hydrograph at C614 in the right branch.
1586          DR   D614R
              *

1587          KK  614615
1588          KM      Normal depth channel route from C614 to C615
1589          KM      Source:  Hydrology Field Reconnaissance
1590          RS       2    FLOW      -1
1591          RC   0.040   0.018   0.040  1114.0  0.0397
1592          RX  1000.0  1020.0  1025.0  1059.0  1091.0  1093.0  1098.0  1103.0
1593          RY  1828.0  1822.0  1821.5  1822.2  1821.8  1822.0  1824.0  1826.0
              *

1594          KK    211V
1595          KM   Sub-Basin   211V
1596          KM
1597          KM      The Clark Unit Hydrograph is used for this basin.
1598          KM          The Urban time-area relation is used for this basin.
1599          KM
1600          KM      Time of Concentration for this sub-basin is based on the following:
1601          KM          An rainfall areal reduction factor of 1.000
1602          KM
1603          KM       EXCESS RAINFALL VALUES EXCEEDED IN 5-MINUTE INTERVALS
1604          KM     5  10  15  20  25  30  35  40  45  50  55  60  65  70  75  80  85  90
1605          KM   .30 .30 .29 .29 .29 .29 .05 .05 .05 .05 .05 .05 .03 .03 .03 .03 .03 .03
1606          KM
1607          KM          L=   0.222 miles, S=  212 feet/mile, Kb= .04
1608          KM
1609          BA   0.005
1610          LG    0.06    0.25    5.80    0.18   90.00
1611          UC   0.117   0.212
1612          UA       0       5      16      30      65      77      84      90      94      97
1613          UA     100
              *

1614          KK    C615
1615          KM      Hydrograph combine 614615 + 211V at C615
1616          HC       2    0.03
              *
```



```
LINE          ID.......1.......2.......3.......4.......5.......6.......7.......8.......9......10

1617          KK   D615L
1618          KM      Hydrograph diversion at C615.  Main flow continues in the left branch.
1619          KM      Diverted flow is in the right branch.
1620          DT   D615R
1621          DI       0     1.3     2.5     5.3     8.6    14.2    23.0    36.8    55.5    77.5
1622          DQ       0       0       0     1.3     2.6     4.2     7.0    12.8    19.5    29.5
              *

1623          KK  615618
1624          KM      Normal depth channel route from C615 to C618
1625          KM      Source:  Hydrology Field Reconnaissance
1626          RS       1    FLOW      -1
1627          RC   0.040   0.018   0.040   499.0  0.1338
1628          RX  1000.0  1008.0  1009.2  1013.2  1027.2  1028.4  1036.4  1045.4
1629          RY  1800.4  1799.6  1799.2  1798.8  1798.3  1798.7  1798.9  1800.4
              *

1630          KK    C618
1631          KM      Hydrograph combine C618O + 615618 at C618
1632          HC       2    0.19
              *

1633          KK  618619
1634          KM      Normal depth channel route from C618 to C619
1635          KM      Source:  HEC-2 Cross Section: AR 0.441
1636          RS       4    FLOW      -1
1637          RC   0.070   0.060   0.070  1837.0  0.0285
1638          RX  9870.6  9928.6  9957.1  9996.9 10004.9 10022.1 10062.0 10116.4
1639          RY  1709.2  1700.9  1698.8  1690.0  1689.8  1699.6  1700.3  1711.3
              *

1640          KK    211T
1641          KM   Sub-Basin   211T
1642          KM
1643          KM      The Clark Unit Hydrograph is used for this basin.
1644          KM          The Urban time-area relation is used for this basin.
1645          KM
1646          KM      Time of Concentration for this sub-basin is based on the following:
1647          KM          An rainfall areal reduction factor of 1.000
1648          KM
1649          KM       EXCESS RAINFALL VALUES EXCEEDED IN 5-MINUTE INTERVALS
1650          KM     5  10  15  20  25  30  35  40  45  50  55  60  65  70  75  80  85  90
1651          KM   .29 .29 .28 .28 .28 .28 .04 .04 .04 .04 .04 .04 .02 .02 .02 .02 .02 .02
1652          KM
```

```
1653          KM          L=   0.488 miles, S=  250 feet/mile, Kb= .03
1654          KM
1655          BA   0.066
1656          LG    0.07    0.25    5.70    0.18   64.25
1657          UC   0.146   0.115
1658          UA       0       5      16      30      65      77      84      90      94      97
1659          UA     100
              *
```



```
LINE          ID.......1.......2.......3.......4.......5.......6.......7.......8.......9......10

1660          KK   C619L
1661          KM      Hydrograph combine 618619 + 211T at C619 left branch
1662          HC       2
              *

1663          KK  BB615R
1664          KM      Retrieve previously diverted hydrograph at C615 in the right branch.
1665          DR   D615R
              *

1666          KK  615619
1667          KM      Normal depth channel route from C615 to C619
1668          KM      Source:  Hydrology Field Reconnaissance
1669          RS       6    FLOW      -1
1670          RC   0.045   0.024   0.025  2444.0  0.0493
1671          RX  1000.0  1009.3  1018.5  1037.0  1039.3  1053.0  1065.0  1065.0
1672          RY  1727.2  1726.5  1725.8  1724.4  1724.6  1725.8  1725.9  1725.9
              *

1673          KK   C619I
1674          KM      Hydrograph combine C619L + 615619 at C619I
1675          HC       2    0.25
              *

1676          KK   C619O
1677          KM      Reservoir route at C619.
1678          RS       1    ELEV  1675.6
1679          SV    0.00    1.72    2.98    4.70    7.00    7.08    7.17    7.26    7.34    7.43
1680          SV    7.51    7.60    7.69    7.77    7.86
1681          SE  1675.6  1686.0  1688.0  1690.0  1692.0  1692.2  1692.4  1692.6  1692.8  1693.0
1682          SE  1693.2  1693.4  1693.6  1693.8  1694.0
1683          SQ       0       4      25      72     128     155     163     172     178     187
1684          SQ     195     213     238     273     318     374     441     518     606     706
1685          SE  1675.6  1676.0  1678.0  1680.0  1682.0  1684.0  1686.0  1688.0  1690.0  1692.0
1686          SE  1692.2  1692.4  1692.6  1692.8  1693.0  1693.2  1693.4  1693.6  1693.8  1694.0
              *

1687          KK   D619R
1688          KM      Hydrograph diversion at C619.  Main flow continues in the right branch.
1689          KM      Diverted flow is in the left branch.
1690          DT   D619L
1691          DI       0       4      25      72     128     155     163     172     178     187
1692          DI     195     213     238     273     318     374     441     518     606     706
1693          DQ       0       0       0       0       0       0       0       0       0       0
1694          DQ       8      24      49      83     128     182     249     326     412     512
              *

1695          KK  619620
1696          KM                Lag route through Palisades Plaza storm drain
1697          RT       0              1
              *
```



```
LINE          ID.......1.......2.......3.......4.......5.......6.......7.......8.......9......10

1698          KK  BB619L
1699          KM      Retrieve previously diverted hydrograph at C619 in the left branch.
1700          DR   D619L
              *

1701          KK  619620
1702          KM   Normal depth channel route from C619 to C620 in Fountain Hills Blvd.
1703          KM   Source:  200 Scale Mapping. Similiar to 523548
1704          RS       1    FLOW      -1
1705          RC   0.040   0.024   0.040   800.0  0.0288
1706          RX   918.0   940.0   960.0  1000.0  1040.0  1040.1  1044.1  1088.1
1707          RY  1648.0  1645.8  1643.8  1644.7  1644.0  1644.5  1644.5  1648.0
              *

1708          KK    211W
1709          KM   Sub-Basin   211W
1710          KM
1711          KM      The Clark Unit Hydrograph is used for this basin.
1712          KM          The Urban time-area relation is used for this basin.
1713          KM
1714          KM      Time of Concentration for this sub-basin is based on the following:
1715          KM          An rainfall areal reduction factor of 1.000
1716          KM
1717          KM       EXCESS RAINFALL VALUES EXCEEDED IN 5-MINUTE INTERVALS
1718          KM     5  10  15  20  25  30  35  40  45  50  55  60  65  70  75  80  85  90
1719          KM   .29 .29 .29 .29 .29 .29 .04 .04 .04 .04 .04 .04 .02 .02 .02 .02 .02 .02
```

```
1720          KM
1721          KM          L=   0.289 miles, S=  173 feet/mile, Kb= .03
1722          KM
1723          BA   0.030
1724          LG    0.06    0.25    5.70    0.18   73.65
1725          UC   0.125   0.101
1726          UA       0       5      16      30      65      77      84      90      94      97
1727          UA     100
              *

1728          KK   C620R
1729          KM      Hydrograph combine 619620 + R619L + 211W at C620 right branch
1730          HC       3    0.28
              *

1731          KK  BB611R
1732          KM      Retrieve previously diverted hydrograph at C611 in the right branch.
1733          DR   D611R
              *

1734          KK  611620
1735          KM                 Lag route through Palisades Plaza storm drain
1736          RT       0               1
              *
```



```
LINE          ID.......1.......2.......3.......4.......5.......6.......7.......8.......9......10

1737          KK    C620
1738          KM      Hydrograph combine 611620 + C620R at C620
1739          HC       2    0.42
              *

1740          KK  620621
1741          KM      Normal depth channel route from C620 to C621
1742          KM      Source:  HEC-2 Cross Section: AR 0.081
1743          RS       2    FLOW      -1
1744          RC   0.050   0.050   0.050   915.0  0.0394
1745          RX  9790.0  9790.1  9972.2  9994.8 10004.9 10029.7 10048.6 10125.0
1746          RY  1657.9  1657.5  1656.4  1646.8  1646.8  1657.8  1657.0  1657.9
              *

1747          KK    C621
1748          KM      Hydrograph combine C621L + 620621 at C621
1749          HC       2    7.93
              *

1750          KK  621622
1751          KM      Normal depth channel route from C621 to C622
1752          KM      Source:  HEC-2 Cross Section: AS 2.785
1753          RS       6    FLOW      -1
1754          RC   0.100   0.045   0.100  3830.0  0.0144
1755          RX  9827.3  9922.9  9951.0 10000.0 10002.7 10044.7 10071.6 10076.8
1756          RY  1615.2  1611.0  1604.1  1600.8  1601.5  1601.6  1611.0  1613.9
              *

1757          KK    211X
1758          KM   Sub-Basin   211X
1759          KM
1760          KM      The Clark Unit Hydrograph is used for this basin.
1761          KM          The Urban time-area relation is used for this basin.
1762          KM
1763          KM      Time of Concentration for this sub-basin is based on the following:
1764          KM          An rainfall areal reduction factor of 1.000
1765          KM
1766          KM       EXCESS RAINFALL VALUES EXCEEDED IN 5-MINUTE INTERVALS
1767          KM     5  10  15  20  25  30  35  40  45  50  55  60  65  70  75  80  85  90
1768          KM   .28 .28 .28 .28 .28 .27 .03 .03 .03 .03 .03 .03 .02 .02 .02 .02 .02 .02
1769          KM
1770          KM          L=   0.929 miles, S=  111 feet/mile, Kb= .03
1771          KM
1772          BA   0.214
1773          LG    0.10    0.26    4.90    0.26   56.64
1774          UC   0.263   0.190
1775          UA       0       5      16      30      65      77      84      90      94      97
1776          UA     100
              *
```



```
LINE          ID.......1.......2.......3.......4.......5.......6.......7.......8.......9......10

1777          KK   C622R
1778          KM      Hydrograph combine 621622 + 211X at C622 right branch
1779          HC       2
              *
              * *
              * * Move to the top of Tulip Wash
              * *
              *

1780          KK    211A
1781          KM   Sub-Basin   211A
1782          KM
```

```
1783          KM      The Clark Unit Hydrograph is used for this basin.
1784          KM          The Urban time-area relation is used for this basin.
1785          KM
1786          KM      Time of Concentration for this sub-basin is based on the following:
1787          KM          An rainfall areal reduction factor of 1.000
1788          KM
1789          KM       EXCESS RAINFALL VALUES EXCEEDED IN 5-MINUTE INTERVALS
1790          KM     5  10  15  20  25  30  35  40  45  50  55  60  65  70  75  80  85  90
1791          KM   .27 .27 .27 .27 .27 .27 .03 .03 .03 .03 .03 .03 .01 .01 .01 .01 .01 .01
1792          KM
1793          KM          L=   0.820 miles, S=  248 feet/mile, Kb= .03
1794          KM
1795          BA   0.143
1796          LG    0.09    0.25    5.70    0.18   23.09
1797          UC   0.192   0.153
1798          UA       0       5      16      30      65      77      84      90      94      97
1799          UA     100
              *

1800          KK   C600O
1801          KM      Reservoir route at C600.
1802          RS       1    ELEV  1754.0
1803          SV    0.00    0.14    0.62    1.52    2.95    5.06    7.98   11.80   16.61   22.67
1804          SV   30.07   38.71   40.50   40.60   41.60   42.70   43.70   44.60   45.70
1805          SE  1754.0  1756.0  1758.0  1760.0  1762.0  1764.0  1766.0  1768.0  1770.0  1772.0
1806          SE  1774.0  1776.0 1776.36  1776.4  1776.6  1776.8  1777.0  1777.2  1777.4
1807          SQ       0      55     183     320     427     513     570     620     665     709
1808          SQ     750     789     795     795     812     849     906     984    1084
              *

1809          KK  600601
1810          KM      Normal depth channel route from C600 to C601
1811          KM      Source:  HEC-2 Cross Section: TU 1.538
1812          RS       3    FLOW      -1
1813          RC   0.040   0.025   0.040  2406.0  0.0176
1814          RX  9945.6  9959.4  9968.3  9985.9 10000.0 10017.2 10038.7 10058.8
1815          RY  1734.5  1732.3  1727.9  1726.2  1725.0  1727.7  1735.2  1736.0
              *
```



```
LINE          ID.......1.......2.......3.......4.......5.......6.......7.......8.......9......10

1816          KK    211B
1817          KM   Sub-Basin   211B
1818          KM
1819          KM      The Clark Unit Hydrograph is used for this basin.
1820          KM          The Urban time-area relation is used for this basin.
1821          KM
1822          KM      Time of Concentration for this sub-basin is based on the following:
1823          KM          An rainfall areal reduction factor of 1.000
1824          KM
1825          KM       EXCESS RAINFALL VALUES EXCEEDED IN 5-MINUTE INTERVALS
1826          KM     5  10  15  20  25  30  35  40  45  50  55  60  65  70  75  80  85  90
1827          KM   .27 .27 .27 .27 .27 .27 .03 .03 .03 .03 .03 .03 .01 .01 .01 .01 .01 .01
1828          KM
1829          KM          L=   0.618 miles, S=  244 feet/mile, Kb= .03
1830          KM
1831          BA   0.109
1832          LG    0.09    0.25    5.80    0.18   20.22
1833          UC   0.167   0.122
1834          UA       0       5      16      30      65      77      84      90      94      97
1835          UA     100
              *

1836          KK    C601
1837          KM      Hydrograph combine 600601 + 211B at C601
1838          HC       2
              *

1839          KK  601602
1840          KM      Normal depth channel route from C601 to C602
1841          KM      Source:  HEC-2 Cross Section: TU 1.102
1842          RS       3    FLOW      -1
1843          RC   0.065   0.040   0.055  1765.0  0.0146
1844          RX  9916.9  9959.1  9965.8  9980.2 10004.0 10019.5 10047.3 10094.1
1845          RY  1699.9  1699.8  1696.4  1689.8  1688.9  1695.7  1698.2  1698.4
              *

1846          KK    211C
1847          KM   Sub-Basin   211C
1848          KM
1849          KM      The Clark Unit Hydrograph is used for this basin.
1850          KM          The Urban time-area relation is used for this basin.
1851          KM
1852          KM      Time of Concentration for this sub-basin is based on the following:
1853          KM          An rainfall areal reduction factor of 1.000
1854          KM
1855          KM       EXCESS RAINFALL VALUES EXCEEDED IN 5-MINUTE INTERVALS
1856          KM     5  10  15  20  25  30  35  40  45  50  55  60  65  70  75  80  85  90
1857          KM   .28 .28 .28 .28 .28 .28 .03 .03 .03 .03 .03 .03 .01 .01 .01 .01 .01 .01
1858          KM
1859          KM          L=   0.479 miles, S=  154 feet/mile, Kb= .03
1860          KM
1861          BA   0.043
```

```
1862          LG    0.08    0.25    5.70    0.18   44.48
1863          UC   0.167   0.169
1                                        HEC-1 INPUT                                                    PAGE 44

LINE          ID.......1.......2.......3.......4.......5.......6.......7.......8.......9......10

1864          UA       0       5      16      30      65      77      84      90      94      97
1865          UA     100
              *

1866          KK   C602L
1867          KM      Hydrograph combine 601602 + 211C at C602 left branch
1868          HC       2
              *

1869          KK    211D
1870          KM   Sub-Basin   211D
1871          KM
1872          KM      The Clark Unit Hydrograph is used for this basin.
1873          KM          The Urban time-area relation is used for this basin.
1874          KM
1875          KM      Time of Concentration for this sub-basin is based on the following:
1876          KM          An rainfall areal reduction factor of 1.000
1877          KM
1878          KM       EXCESS RAINFALL VALUES EXCEEDED IN 5-MINUTE INTERVALS
1879          KM     5  10  15  20  25  30  35  40  45  50  55  60  65  70  75  80  85  90
1880          KM   .26 .26 .25 .25 .25 .25 .02 .02 .02 .02 .02 .02 .01 .01 .01 .01 .01 .01
1881          KM
1882          KM          L=   0.686 miles, S=  115 feet/mile, Kb= .03
1883          KM

1884          BA   0.071
1885          LG    0.08    0.25    3.85    0.46   37.42
1886          UC   0.229   0.242
1887          UA       0       5      16      30      65      77      84      90      94      97
1888          UA     100
              *

1889          KK    C602
1890          KM      Hydrograph combine C602L + 211D at C602
1891          HC       2
              *

1892          KK  602603
1893          KM      Normal depth channel route from C602 to C603
1894          KM      Source:  HEC-2 Cross Section: LE 0.672
1895          RS       3    FLOW      -1
1896          RC   0.060   0.045   0.060  2610.0  0.0211
1897          RX  9891.9  9963.9  9986.5 10000.0 10012.7 10023.8 10085.0 10176.4
1898          RY  1653.5  1653.5  1644.4  1644.1  1645.0  1649.8  1651.7  1656.7
              *

1899          KK    211E
1900          KM   Sub-Basin   211E
1901          KM
1902          KM      The Clark Unit Hydrograph is used for this basin.
1903          KM          The Urban time-area relation is used for this basin.
1904          KM
1905          KM      Time of Concentration for this sub-basin is based on the following:
1906          KM          An rainfall areal reduction factor of 1.000
1907          KM
1908          KM       EXCESS RAINFALL VALUES EXCEEDED IN 5-MINUTE INTERVALS
1                                        HEC-1 INPUT                                                    PAGE 45

LINE          ID.......1.......2.......3.......4.......5.......6.......7.......8.......9......10

1909          KM     5  10  15  20  25  30  35  40  45  50  55  60  65  70  75  80  85  90
1910          KM   .28 .27 .27 .27 .27 .27 .03 .03 .03 .03 .03 .03 .01 .01 .01 .01 .01 .01
1911          KM
1912          KM          L=   0.609 miles, S=  118 feet/mile, Kb= .03
1913          KM
1914          BA   0.156
1915          LG    0.08    0.25    5.10    0.24   42.21
1916          UC   0.208   0.126
1917          UA       0       5      16      30      65      77      84      90      94      97
1918          UA     100
              *

1919          KK    C603
1920          KM      Hydrograph combine 602603 + 211E at C603
1921          HC       2
              *

1922          KK  603622
1923          KM      Normal depth channel route from C603 to C622
1924          KM      Source:  HEC-2 Cross Section: LE 0.287
1925          RS       4    FLOW      -1
1926          RC   0.060   0.045   0.060  2745.0  0.0204
1927          RX  9883.0  9929.7  9967.3  9991.6 10042.2 10073.6 10177.6 10194.5
1928          RY  1619.4  1618.7  1611.8  1602.1  1603.3  1609.4  1610.5  1610.6
              *

1929          KK    211F
1930          KM   Sub-Basin   211F
1931          KM
```

```
1932          KM      The Clark Unit Hydrograph is used for this basin.
1933          KM          The Urban time-area relation is used for this basin.
1934          KM
1935          KM      Time of Concentration for this sub-basin is based on the following:
1936          KM          An rainfall areal reduction factor of 1.000
1937          KM
1938          KM       EXCESS RAINFALL VALUES EXCEEDED IN 5-MINUTE INTERVALS
1939          KM     5  10  15  20  25  30  35  40  45  50  55  60  65  70  75  80  85  90
1940          KM   .28 .28 .27 .27 .27 .27 .03 .03 .03 .03 .03 .03 .02 .02 .02 .02 .02 .02
1941          KM
1942          KM          L=   0.770 miles, S=  134 feet/mile, Kb= .03
1943          KM
1944          BA   0.113
1945          LG    0.08    0.25    4.30    0.36   62.81
1946          UC   0.225   0.199
1947          UA       0       5      16      30      65      77      84      90      94      97
1948          UA     100
              *

1949          KK   C622L
1950          KM      Hydrograph combine 603622 + 211F at C622 left branch
1951          HC       2
              *
```



```
LINE          ID.......1.......2.......3.......4.......5.......6.......7.......8.......9......10

1952          KK    C622
1953          KM      Hydrograph combine C622R + C622L at C622
1954          HC       2
              *

1955          KK  622549
1956          KM      Normal depth channel route from C622 to C549
1957          KM      Source:  HEC-2 Cross Section: AS 2.279
1958          RS       5    FLOW      -1
1959          RC   0.113   0.125   0.120  1697.0  0.0118
1960          RX  9847.1  9851.0  9857.5  9862.8 10052.6 10062.8 10075.6 10084.6
1961          RY  1573.5  1571.3  1567.2  1564.6  1565.1  1566.7  1573.7  1573.9
              *

1962          KK    211Y
1963          KM   Sub-Basin   211Y
1964          KM
1965          KM      The Clark Unit Hydrograph is used for this basin.
1966          KM          The Urban time-area relation is used for this basin.
1967          KM
1968          KM      Time of Concentration for this sub-basin is based on the following:
1969          KM          An rainfall areal reduction factor of 1.000
1970          KM
1971          KM       EXCESS RAINFALL VALUES EXCEEDED IN 5-MINUTE INTERVALS
1972          KM     5  10  15  20  25  30  35  40  45  50  55  60  65  70  75  80  85  90
1973          KM   .29 .29 .28 .28 .28 .28 .04 .04 .04 .04 .04 .04 .02 .02 .02 .02 .02 .02
1974          KM
1975          KM          L=   0.606 miles, S=  147 feet/mile, Kb= .04
1976          KM
1977          BA   0.089
1978          LG    0.09    0.21    6.60    0.13   50.06
1979          UC   0.221   0.184
1980          UA       0       5      16      30      65      77      84      90      94      97
1981          UA     100
              *

1982          KK   C549R
1983          KM      Hydrograph combine 622549 + 211Y at C549 right branch
1984          HC       2
              *

1985          KK    C549
1986          KM      Hydrograph combine C549L + C549R at C549
1987          HC       2
              *

1988          KK  549626
1989          KM      Normal depth channel route from C549 to C626
1990          KM      Source:  HEC-2 Cross Section: AS 1.855
1991          RS       5    FLOW      -1
1992          RC   0.113   0.125   0.120  2044.0  0.0171
1993          RX  9943.2  9963.0  9985.6  9994.1 10007.6 10029.2 10150.5 10171.3
1994          RY  1539.3  1534.5  1531.2  1528.3  1528.2  1531.7  1532.5  1537.4
              *
```



```
LINE          ID.......1.......2.......3.......4.......5.......6.......7.......8.......9......10

1995          KK    211Z
1996          KM   Sub-Basin   211Z
1997          KM
1998          KM      The Clark Unit Hydrograph is used for this basin.
1999          KM          The Urban time-area relation is used for this basin.
2000          KM
2001          KM      Time of Concentration for this sub-basin is based on the following:
2002          KM          An rainfall areal reduction factor of 1.000
```

```
2003          KM
2004          KM       EXCESS RAINFALL VALUES EXCEEDED IN 5-MINUTE INTERVALS
2005          KM     5  10  15  20  25  30  35  40  45  50  55  60  65  70  75  80  85  90
2006          KM   .26 .26 .26 .26 .26 .26 .02 .02 .02 .02 .02 .02 .01 .01 .01 .01 .01 .01
2007          KM
2008          KM          L=   0.509 miles, S=  147 feet/mile, Kb= .04
2009          KM
2010          BA   0.083
2011          LG    0.14    0.27    4.50    0.34   34.43
2012          UC   0.208   0.157
2013          UA       0       5      16      30      65      77      84      90      94      97
2014          UA     100
              *

2015          KK   C626C
2016          KM     Hydrograph combine 549626 + 211Z at C626 main branch
2017          HC       2
              *

2018          KK   211AA
2019          KM   Sub-Basin  211AA
2020          KM
2021          KM     The Clark Unit Hydrograph is used for this basin.
2022          KM         The Urban time-area relation is used for this basin.
2023          KM
2024          KM     Time of Concentration for this sub-basin is based on the following:
2025          KM         An rainfall areal reduction factor of 1.000
2026          KM
2027          KM       EXCESS RAINFALL VALUES EXCEEDED IN 5-MINUTE INTERVALS
2028          KM     5  10  15  20  25  30  35  40  45  50  55  60  65  70  75  80  85  90
2029          KM   .29 .28 .28 .28 .28 .28 .04 .04 .04 .04 .04 .04 .02 .02 .02 .02 .02 .02
2030          KM
2031          KM          L=   0.480 miles, S=   85 feet/mile, Kb= .03
2032          KM
2033          BA   0.034
2034          LG    0.08    0.19    6.60    0.13   39.38
2035          UC   0.200   0.237
2036          UA       0       5      16      30      65      77      84      90      94      97
2037          UA     100
              *
```



```
LINE          ID.......1.......2.......3.......4.......5.......6.......7.......8.......9......10

2038          KK  625626
2039          KM     Normal depth channel route from C625 to C626
2040          KM     Source:  200 Scale Mapping
2041          RS       3    FLOW      -1
2042          RC   0.040   0.018   0.040  1350.0  0.0252
2043          RX  1000.0  1020.0  1021.2  1055.2  1089.2  1090.4  1100.4  1105.4
2044          RY  1527.0  1526.0  1525.6  1526.3  1525.6  1526.0  1528.0  1530.0
              *

2045          KK   211AB
2046          KM   Sub-Basin  211AB
2047          KM
2048          KM     The Clark Unit Hydrograph is used for this basin.
2049          KM         The Urban time-area relation is used for this basin.
2050          KM
2051          KM     Time of Concentration for this sub-basin is based on the following:
2052          KM         An rainfall areal reduction factor of 1.000
2053          KM
2054          KM       EXCESS RAINFALL VALUES EXCEEDED IN 5-MINUTE INTERVALS
2055          KM     5  10  15  20  25  30  35  40  45  50  55  60  65  70  75  80  85  90
2056          KM   .29 .29 .29 .29 .29 .29 .04 .04 .04 .04 .04 .04 .02 .02 .02 .02 .02 .02
2057          KM
2058          KM          L=   0.293 miles, S=  321 feet/mile, Kb= .03
2059          KM
2060          BA   0.040
2061          LG    0.07    0.17    6.80    0.12   54.72
2062          UC   0.104   0.071
2063          UA       0       5      16      30      65      77      84      90      94      97
2064          UA     100
              *

2065          KK  623624
2066          KM     Normal depth channel route from C623 to C624
2067          KM     Source:  200 Scale Mapping
2068          RS       1    FLOW      -1
2069          RC   0.040   0.018   0.040   701.0  0.0114
2070          RX  1000.0  1010.0  1011.2  1027.2  1043.2  1044.4  1059.4  1074.4
2071          RY  1534.0  1532.0  1531.6  1531.9  1531.6  1532.0  1532.5  1533.0
              *

2072          KK   211AC
2073          KM   Sub-Basin  211AC
2074          KM
2075          KM     The Clark Unit Hydrograph is used for this basin.
2076          KM         The Urban time-area relation is used for this basin.
2077          KM
2078          KM     Time of Concentration for this sub-basin is based on the following:
2079          KM         An rainfall areal reduction factor of 1.000
2080          KM
2081          KM       EXCESS RAINFALL VALUES EXCEEDED IN 5-MINUTE INTERVALS
```

```
2082          KM     5  10  15  20  25  30  35  40  45  50  55  60  65  70  75  80  85  90
2083          KM   .29 .29 .29 .29 .29 .29 .04 .04 .04 .04 .04 .04 .03 .03 .03 .03 .03 .03
2084          KM
2085          KM          L=   0.306 miles, S=   82 feet/mile, Kb= .03
```



```
LINE          ID.......1.......2.......3.......4.......5.......6.......7.......8.......9......10

2086          KM
2087          BA   0.027
2088          LG    0.08    0.15    8.40    0.07   44.76
2089          UC   0.163   0.148
2090          UA       0       5      16      30      65      77      84      90      94      97
2091          UA     100
              *

2092          KK    C624
2093          KM      Hydrograph combine 623624 + 211AC at C624
2094          HC       2
              *

2095          KK  624626
2096          KM      Normal depth channel route from C624 to C626
2097          KM      Source:  HEC-2 Cross Section: AS 1.727
2098          RS       2    FLOW      -1
2099          RC   0.080   0.060   0.080   637.0  0.0235
2100          RX  9872.9  9881.0  9893.9  9902.2  9967.6  9976.4 10076.1 10084.3
2101          RY  1526.3  1524.6  1521.7  1520.0  1520.7  1521.6  1520.7  1526.2
              *

2102          KK   211AD
2103          KM   Sub-Basin  211AD
2104          KM
2105          KM      The Clark Unit Hydrograph is used for this basin.
2106          KM          The Urban time-area relation is used for this basin.
2107          KM
2108          KM      Time of Concentration for this sub-basin is based on the following:
2109          KM          An rainfall areal reduction factor of 1.000
2110          KM
2111          KM       EXCESS RAINFALL VALUES EXCEEDED IN 5-MINUTE INTERVALS
2112          KM     5  10  15  20  25  30  35  40  45  50  55  60  65  70  75  80  85  90
2113          KM   .29 .29 .29 .29 .29 .29 .04 .04 .04 .04 .04 .04 .03 .03 .03 .03 .03 .03
2114          KM
2115          KM          L=   0.489 miles, S=  280 feet/mile, Kb= .03
2116          KM
2117          BA   0.041
2118          LG    0.08    0.15    8.00    0.08   46.16
2119          UC   0.138   0.142
2120          UA       0       5      16      30      65      77      84      90      94      97
2121          UA     100
              *

2122          KK   C626R
2123          KM      Hydrograph combine 624626 + 211AD at C626 right branch
2124          HC       2
              *

2125          KK    C626
2126          KM      Hydrograph combine C626C + 625626 at C626R
2127          HC       3
              *
```



```
LINE          ID.......1.......2.......3.......4.......5.......6.......7.......8.......9......10

2128          KK  626627
2129          KM      Normal depth channel route from C626 to C627
2130          KM      Source:  HEC-2 Cross Section: AS 1.602
2131          RS       1    FLOW      -1
2132          RC   0.080   0.060   0.080   625.0  0.0208
2133          RX  9889.8  9941.2  9963.0 10011.6 10074.8 10083.9 10191.7 10210.4
2134          RY  1517.6  1516.9  1508.1  1506.6  1508.6  1511.7  1513.1  1518.8
              *

2135          KK   211AE
2136          KM   Sub-Basin  211AE
2137          KM
2138          KM      The Clark Unit Hydrograph is used for this basin.
2139          KM          The Urban time-area relation is used for this basin.
2140          KM
2141          KM      Time of Concentration for this sub-basin is based on the following:
2142          KM          An rainfall areal reduction factor of 1.000
2143          KM
2144          KM       EXCESS RAINFALL VALUES EXCEEDED IN 5-MINUTE INTERVALS
2145          KM     5  10  15  20  25  30  35  40  45  50  55  60  65  70  75  80  85  90
2146          KM   .28 .28 .28 .28 .28 .28 .03 .03 .03 .03 .03 .03 .01 .01 .01 .01 .01 .01
2147          KM
2148          KM          L=   0.313 miles, S=  153 feet/mile, Kb= .04
2149          KM
2150          BA   0.034
2151          LG    0.12    0.24    6.40    0.15   38.15
2152          UC   0.158   0.129
2153          UA       0       5      16      30      65      77      84      90      94      97
2154          UA     100
```

```
                    *
2155                KK    C627
2156                KM      Hydrograph combine 626627 + 211AE at C627
2157                HC       2
                    *
                    * *
                    * * C627 is the total flow in Ashbrook Wash at the Study boundary
                    * *
                    *
2158                ZZ
1
                SCHEMATIC DIAGRAM OF STREAM NETWORK
 INPUT
 LINE      (V) ROUTING          (--->) DIVERSION OR PUMP FLOW

 NO.       (.) CONNECTOR        (<---) RETURN OF DIVERTED OR PUMPED FLOW

  42         204A
                V
                V
  62       522523
                .
                .
  69            .        204B
                .           .
                .           .
  89        C523I............
                V
                V
  92        C523O
                .
                .
 104            .-------->   D523R
 101        D523L
                .
                .
 109            .        205A
                .           .
                .           .
 129            .           .        205B
                .           .           .
                .           .           .
 149            .        C528............
                .           V
                .           V
 152            .      528530
                .           .
                .           .
 159            .           .        205C
                .           .           .
                .           .           .
 179            .       C530R............
                .           .
                .           .
 182            .           .        205D
                .           .           .
                .           .           .
 202            .           .           .        205E
                .           .           .           .
                .           .           .           .
 222            .           .        C529............
                .           .           .
                .           .           .
 225            .        C530............
                .           V
                .           V
 228            .      530531
                .           .
                .           .
 235            .           .        205F
                .           .           .
                .           .           .
 255            .        C531............
                .           V
                .           V
 258            .      531532
                .           .
                .           .
 265            .           .        205G
                .           .           .
                .           .           .
 285            .       C532L............
                .           .
                .           .
 288            .           .        205H
                .           .           .
                .           .           .
 308            .        C532............
                .           V
                .           V
 311            .      532533
                .           .
                .           .
 318            .           .        205I
```

```
                .          .          .
                .          .          .
338             .       C533...........
                .          V
                .          V
341             .     533534
                .          .
                .          .
348             .          .       205J
                .          .          .
                .          .          .
368             .      C534R...........
                .          .
                .          .
371             .          .       205K
                .          .          .
                .          .          .
391             .       C534...........
                .          V
                .          V
394             .     534535
                .          .
                .          .
401             .          .       205L
                .          .          .
                .          .          .
421             .       C535...........
                .          V
                .          V
424             .     535536
                .          .
                .          .
431             .          .       205M
                .          .          .
                .          .          .
451             .      C536R...........
                .          .
                .          .
454             .          .       205N
                .          .          .
                .          .          .
472             .      C536I...........
                .          V
                .          V
475             .      C536O
                .          V
                .          V
487             .     536537
                .          .
                .          .
494             .          .       206A
                .          .          .
                .          .          .
514             .       C537...........
                .          V
                .          V
517             .     537538
                .          .
                .          .
524             .          .       206B
                .          .          .
                .          .          .
544             .      C538I...........
                .          V
                .          V
547             .      C538O
                .          V
                .          V
556             .     538540
                .          .
                .          .
563             .          .       206C
                .          .          .
                .          .          .
583             .      C540R...........
                .          .
                .          .
586             .          .       206D
                .          .          V
                .          .          V
606             .          .     539540
                .          .          .
                .          .          .
613             .          .          .       206E
                .          .          .          .
                .          .          .          .
633             .          .      C540L...........
                .          .          .
                .          .          .
636             .       C540...........
                .          V
                .          V
639             .     540541
                .          .
                .          .
```

```
646          .           .        206F
             .           .           .
             .           .           .
666          .        C541............
             .           V
             .           V
669          .      541548
             .           .
             .           .
676          .           .        206G
             .           .           .
             .           .           .
698          .           .           .           .<-------   D523R
696          .           .           .      BB523R
             .           .           .           V
             .           .           .           V
699          .           .           .      523548
             .           .           .           .
             .           .           .           .
706          .       C548L........................
             .           .
             .           .
709          .           .        206H
             .           .           V
             .           .           V
729          .           .      542543
             .           .           .
             .           .           .
736          .           .           .        206I
             .           .           .           .
             .           .           .           .
756          .           .        C543............
             .           .           .
             .           .           .
762          .           .           .-------->   D543R
759          .           .       D543L
             .           .           V
             .           .           V
767          .           .      543544
             .           .           .
             .           .           .
774          .           .           .        206K
             .           .           .           .
             .           .           .           .
794          .           .        C544............
             .           .           V
             .           .           V
797          .           .      544545
             .           .           .
             .           .           .
807          .           .           .-------->   D545R
804          .           .       D545L
             .           .           V
             .           .           V
810          .           .      545546
             .           .           .
             .           .           .
817          .           .           .        206L
             .           .           .           .
             .           .           .           .
837          .           .        C546............
             .           .           V
             .           .           V
840          .           .      546547
             .           .           .
             .           .           .
849          .           .           .           .<-------   D543R
847          .           .           .      BB543R
             .           .           .           V
             .           .           .           V
850          .           .           .      543547
             .           .           .           .
             .           .           .           .
859          .           .           .           .           .<-------   D545R
857          .           .           .           .      BB545R
             .           .           .           .           V
             .           .           .           .           V
860          .           .           .           .      545547
             .           .           .           .           .
             .           .           .           .           .
867          .           .           .           .           .        206J
             .           .           .           .           .           .
             .           .           .           .           .           .
887          .           .        C547.................................
             .           .           V
             .           .           V
890          .           .      547548
             .           .           .
             .           .           .
897          .           .           .        206M
             .           .           .           .
             .           .           .           .
917          .           .       C548R............
             .           .           .
             .           .           .
```

```
 920          .        C548............
              .           V
              .           V
 923          .      548549
              .           .
              .           .
 930          .           .        206N
              .           .           .
              .           .           .
 950          .       C549L............
              .           .
              .           .
 953          .           .       C599O
              .           .           V
              .           .           V
1138          .           .      599608
              .           .           .
              .           .           .
1145          .           .           .        211K
              .           .           .           .
              .           .           .           .
1165          .           .       C608L............
              .           .           .
              .           .           .
1168          .           .           .        211G
              .           .           .           V
              .           .           .           V
1188          .           .           .      604606
              .           .           .           .
              .           .           .           .
1195          .           .           .           .        211I
              .           .           .           .           .
              .           .           .           .           .
1215          .           .           .       C606R............
              .           .           .           .
              .           .           .           .
1218          .           .           .           .        211H
              .           .           .           .           V
              .           .           .           .           V
1238          .           .           .           .       C605O
              .           .           .           .           .
              .           .           .           .           .
1247          .           .           .        C606............
              .           .           .           V
              .           .           .           V
1250          .           .           .      606607
              .           .           .           .
              .           .           .           .
1257          .           .           .           .        211J
              .           .           .           .           .
              .           .           .           .           .
1277          .           .           .        C607............
              .           .           .           V
              .           .           .           V
1280          .           .           .      607608
              .           .           .           .
              .           .           .           .
1287          .           .        C608............
              .           .           V
              .           .           V
1290          .           .      608613
              .           .           .
              .           .           .
1297          .           .           .        211M
              .           .           .           V
              .           .           .           V
1317          .           .           .      610611
              .           .           .           .
              .           .           .           .
1324          .           .           .           .        211N
              .           .           .           .           .
              .           .           .           .           .
1344          .           .           .       C611R............
              .           .           .           .
              .           .           .           .
1347          .           .           .           .        211O
              .           .           .           .           V
              .           .           .           .           V
1367          .           .           .           .       C609O
              .           .           .           .           V
              .           .           .           .           V
1376          .           .           .           .      609611
              .           .           .           .           .
              .           .           .           .           .
1383          .           .           .       C611I............
              .           .           .           V
              .           .           .           V
1386          .           .           .       C611O
              .           .           .           .
              .           .           .           .
1398          .           .           .           .-------->   D611R
1395          .           .           .       D611L
              .           .           .           V
              .           .           .           V
1403          .           .           .      611612
```

```
                 .         .         .         .
                 .         .         .         .
1410             .         .         .         .       211P
                 .         .         .         .         .
                 .         .         .         .         .
1430             .         .         .       C612............
                 .         .         .         .
                 .         .         .         .
1433             .         .       C613............
                 .         .         V
                 .         .         V
1436             .         .     613621
                 .         .         .
                 .         .         .
1443             .         .         .       211L
                 .         .         .         .
                 .         .         .         .
1463             .         .      C621L............
                 .         .         .
                 .         .         .
1466             .         .         .       211Q
                 .         .         .         V
                 .         .         .         V
1486             .         .         .     616617
                 .         .         .         .
                 .         .         .         .
1493             .         .         .         .       211R
                 .         .         .         .         .
                 .         .         .         .         .
1513             .         .         .      C617L............
                 .         .         .         .
                 .         .         .         .
1516             .         .         .         .       211U
                 .         .         .         .         .
                 .         .         .         .         .
1539             .         .         .         .         .-------> D614R
1536             .         .         .         .      D614L
                 .         .         .         .         .
                 .         .         .         .         .
1542             .         .         .       C617............
                 .         .         .         V
                 .         .         .         V
1545             .         .         .     617618
                 .         .         .         .
                 .         .         .         .
1552             .         .         .         .       211S
                 .         .         .         .         .
                 .         .         .         .         .
1572             .         .         .      C618I............
                 .         .         .         V
                 .         .         .         V
1575             .         .         .      C618O
                 .         .         .         .
                 .         .         .         .
1586             .         .         .         .         .<------- D614R
1584             .         .         .         .     BB614R
                 .         .         .         .         V
                 .         .         .         .         V
1587             .         .         .         .     614615
                 .         .         .         .         .
                 .         .         .         .         .
1594             .         .         .         .         .       211V
                 .         .         .         .         .         .
                 .         .         .         .         .         .
1614             .         .         .         .       C615............
                 .         .         .         .         .
                 .         .         .         .         .
1620             .         .         .         .         .-------> D615R
1617             .         .         .         .      D615L
                 .         .         .         .         V
                 .         .         .         .         V
1623             .         .         .         .     615618
                 .         .         .         .         .
                 .         .         .         .         .
1630             .         .         .       C618............
                 .         .         .         V
                 .         .         .         V
1633             .         .         .     618619
                 .         .         .         .
                 .         .         .         .
1640             .         .         .         .       211T
                 .         .         .         .         .
                 .         .         .         .         .
1660             .         .         .      C619L............
                 .         .         .         .
                 .         .         .         .
1665             .         .         .         .         .<------- D615R
1663             .         .         .         .     BB615R
                 .         .         .         .         V
                 .         .         .         .         V
1666             .         .         .         .     615619
                 .         .         .         .         .
                 .         .         .         .         .
1673             .         .         .      C619I............
                 .         .         .         V
```

```
                 .         .         .         V
1676             .         .         .     C619O
                 .         .         .         .
                 .         .         .         .
1690             .         .         .         .-------->   D619L
1687             .         .         .     D619R
                 .         .         .         V
                 .         .         .         V
1695             .         .         .    619620
                 .         .         .         .
                 .         .         .         .
1700             .         .         .         .           .<-------   D619L
1698             .         .         .         .      BB619L
                 .         .         .         .           V
                 .         .         .         .           V
1701             .         .         .         .      619620
                 .         .         .         .           .
                 .         .         .         .           .
1708             .         .         .         .           .        211W
                 .         .         .         .           .           .
                 .         .         .         .           .           .
1728             .         .         .     C620R.......................
                 .         .         .         .
                 .         .         .         .
1733             .         .         .         .           .<-------   D611R
1731             .         .         .         .      BB611R
                 .         .         .         .           V
                 .         .         .         .           V
1734             .         .         .         .      611620
                 .         .         .         .           .
                 .         .         .         .           .
1737             .         .         .       C620...........
                 .         .         .         V
                 .         .         .         V
1740             .         .         .    620621
                 .         .         .         .
                 .         .         .         .
1747             .         .       C621...........
                 .         .         V
                 .         .         V
1750             .         .    621622
                 .         .         .
                 .         .         .
1757             .         .         .       211X
                 .         .         .         .
                 .         .         .         .
1777             .         .     C622R...........
                 .         .         .
                 .         .         .
1780             .         .         .       211A
                 .         .         .         V
                 .         .         .         V
1800             .         .         .     C600O
                 .         .         .         V
                 .         .         .         V
1809             .         .         .    600601
                 .         .         .         .
                 .         .         .         .
1816             .         .         .         .        211B
                 .         .         .         .           .
                 .         .         .         .           .
1836             .         .         .       C601...........
                 .         .         .         V
                 .         .         .         V
1839             .         .         .    601602
                 .         .         .         .
                 .         .         .         .
1846             .         .         .         .        211C
                 .         .         .         .           .
                 .         .         .         .           .
1866             .         .         .     C602L...........
                 .         .         .         .
                 .         .         .         .
1869             .         .         .         .        211D
                 .         .         .         .           .
                 .         .         .         .           .
1889             .         .         .       C602...........
                 .         .         .         V
                 .         .         .         V
1892             .         .         .    602603
                 .         .         .         .
                 .         .         .         .
1899             .         .         .         .        211E
                 .         .         .         .           .
                 .         .         .         .           .
1919             .         .         .       C603...........
                 .         .         .         V
                 .         .         .         V
1922             .         .         .    603622
                 .         .         .         .
                 .         .         .         .
1929             .         .         .         .        211F
                 .         .         .         .           .
                 .         .         .         .           .
1949             .         .         .     C622L...........
```

```
                .          .          .          .
                .          .          .          .
 1952           .          .       C622...........
                .          .          V
                .          .          V
 1955           .          .     622549
                .          .          .
                .          .          .
 1962           .          .          .       211Y
                .          .          .          .
                .          .          .          .
 1982           .          .      C549R...........
                .          .          .
                .          .          .
 1985           .       C549...........
                .          V
                .          V
 1988           .     549626
                .          .
                .          .
 1995           .          .       211Z
                .          .          .
                .          .          .
 2015           .      C626C...........
                .          .
                .          .
 2018           .          .      211AA
                .          .          V
                .          .          V
 2038           .          .     625626
                .          .          .
                .          .          .
 2045           .          .          .      211AB
                .          .          .          V
                .          .          .          V
 2065           .          .          .     623624
                .          .          .          .
                .          .          .          .
 2072           .          .          .          .       211AC
                .          .          .          .          .
                .          .          .          .          .
 2092           .          .          .       C624...........
                .          .          .          V
                .          .          .          V
 2095           .          .          .     624626
                .          .          .          .
                .          .          .          .
 2102           .          .          .          .       211AD
                .          .          .          .          .
                .          .          .          .          .
 2122           .          .          .      C626R...........
                .          .          .          .
                .          .          .          .
 2125           .       C626........................
                .          V
                .          V
 2128           .     626627
                .          .
                .          .
 2135           .          .      211AE
                .          .          .
                .          .          .
 2155           .       C627...........
```

(***) RUNOFF ALSO COMPUTED AT THIS LOCATION

```
1****************************************
*                                      *
*   FLOOD HYDROGRAPH PACKAGE  (HEC-1)  *
*              MAY   1991              *
*           VERSION 4.0.1E             *
*                                      *
*  RUN DATE  02/17/:0  TIME  14:17:39  *
*                                      *
****************************************
```

```
****************************************
*                                      *
*    U.S. ARMY CORPS OF ENGINEERS      *
*    HYDROLOGIC ENGINEERING CENTER     *
*          609 SECOND STREET           *
*       DAVIS, CALIFORNIA 95616        *
*           (916) 551-1748             *
*                                      *
****************************************
```

Golden Eagle Park Dam Modifications
by Stantec: Proj. No. 28900095
for FCDMC: FCD

File: ALTFf-3.IH1
Date:07-08-99 mcg
Revised:

Alternative F:
Addition of an auxillary spillway. This spillway will function such that the existing emergency spillway does not operate for the 100-year storm. The stage-storage relation is adjusted to reflect revised grading in the park.

The purpose of this model is to estimate peak discharges in Ashbrook Wash for evaluation of the Dam modifications impact on the floodplain.

100-year, 24-hour future condition watershed model for Ashbrook Wash upstream of the Fort McDowell Indian Reservation boundary.

This model is a portion of the original Fountain Hills North FDS watershed model conducted by GVSCE, 1994. The title cards from that model are included for reference.

```
                    Fountain Hills North Floodplain Delineation Study
                        FCD 92-04       by GVSCE                          File:  FU100-24.IH1
                     Future Condition Model                               Date:    07-21-94   dtp
                     100-Year 24-Hour Storm, Clark Unit Hydrograph     Revised:    10-31-94   dtp

 26 IO          OUTPUT CONTROL VARIABLES
                      IPRNT          5  PRINT CONTROL
                      IPLOT          0  PLOT CONTROL
                      QSCAL         0.  HYDROGRAPH PLOT SCALE

    IT          HYDROGRAPH TIME DATA
                       NMIN          1  MINUTES IN COMPUTATION INTERVAL
                      IDATE     1    0  STARTING DATE
                      ITIME       0000  STARTING TIME
                         NQ       1800  NUMBER OF HYDROGRAPH ORDINATES
                     NDDATE     2    0  ENDING DATE
                     NDTIME       0559  ENDING TIME
                      ICENT         19  CENTURY MARK

                 COMPUTATION INTERVAL    0.02 HOURS
                      TOTAL TIME BASE   29.98 HOURS

          ENGLISH UNITS
               DRAINAGE AREA          SQUARE MILES
               PRECIPITATION DEPTH    INCHES
               LENGTH, ELEVATION      FEET
               FLOW                   CUBIC FEET PER SECOND
               STORAGE VOLUME         ACRE-FEET
               SURFACE AREA           ACRES
               TEMPERATURE            DEGREES FAHRENHEIT

 28 JD          INDEX STORM NO. 1
                       STRM       4.20  PRECIPITATION DEPTH
                       TRDA       0.01  TRANSPOSITION DRAINAGE AREA


 39 JD          INDEX STORM NO. 2
                       STRM       4.12  PRECIPITATION DEPTH
                       TRDA       5.00  TRANSPOSITION DRAINAGE AREA


 40 JD          INDEX STORM NO. 3
                       STRM       3.99  PRECIPITATION DEPTH
                       TRDA      10.00  TRANSPOSITION DRAINAGE AREA


 41 JD          INDEX STORM NO. 4
                       STRM       3.71  PRECIPITATION DEPTH
                       TRDA      50.00  TRANSPOSITION DRAINAGE AREA

WARNING EXCESS AT PONDING LESS THAN ZERO FOR PERIOD. EXCESS SET TO ZERO
         WARNING EXCESS AT PONDING LESS THAN ZERO FOR PERIOD. EXCESS SET TO ZERO


1
                                                  RUNOFF SUMMARY
                                              FLOW IN CUBIC FEET PER SECOND
                                           TIME IN HOURS,  AREA IN SQUARE MILES

                                     PEAK   TIME OF     AVERAGE FLOW FOR MAXIMUM PERIOD      BASIN     MAXIMUM     TIME OF
         OPERATION        STATION    FLOW    PEAK                                           AREA      STAGE     MAX STAGE
+                                                        6-HOUR     24-HOUR     72-HOUR

         HYDROGRAPH AT
+                          204A      187.   12.02         22.          6.          5.       0.11

         ROUTED TO
+                         522523     181.   12.17         22.          6.          5.       0.11

         HYDROGRAPH AT
+                          204B      209.   12.03         25.          7.          6.       0.13

         2 COMBINED AT
+                          C523I     370.   12.07         47.         14.         11.       0.23

         ROUTED TO
+                          C523O     280.   12.25         47.         14.         11.       0.23

         DIVERSION TO
+                          D523R      18.   12.25          1.          0.          0.       0.23

         HYDROGRAPH AT
+                          D523L     262.   12.25         46.         13.         11.       0.23

         HYDROGRAPH AT
+                          205A      130.   12.23         22.          7.          6.       0.12

         HYDROGRAPH AT
+                          205B      237.   12.30         40.         12.         10.       0.21

         2 COMBINED AT
```

+		C528	361.	12.27	62.	19.	15.	0.33
+	ROUTED TO	528530	360.	12.32	62.	19.	15.	0.33
+	HYDROGRAPH AT	205C	65.	12.22	11.	3.	3.	0.06
+	2 COMBINED AT	C530R	417.	12.30	73.	23.	18.	0.39
+	HYDROGRAPH AT	205D	405.	12.22	60.	19.	15.	0.32
+	HYDROGRAPH AT	205E	203.	12.32	41.	13.	10.	0.22
+	2 COMBINED AT	C529	596.	12.25	100.	31.	25.	0.54
+	2 COMBINED AT	C530	1005.	12.27	173.	54.	43.	0.93
+	ROUTED TO	530531	996.	12.32	173.	54.	43.	0.93
+	HYDROGRAPH AT	205F	197.	12.22	30.	9.	8.	0.16
+	2 COMBINED AT	C531	1172.	12.30	202.	63.	50.	1.09
+	ROUTED TO	531532	1162.	12.37	202.	63.	50.	1.09
+	HYDROGRAPH AT	205G	214.	12.23	33.	10.	8.	0.19
+	2 COMBINED AT	C532L	1344.	12.33	235.	73.	59.	1.27
+	HYDROGRAPH AT	205H	237.	12.33	47.	14.	12.	0.26
+	2 COMBINED AT	C532	1578.	12.33	282.	87.	70.	1.53
+	ROUTED TO	532533	1575.	12.37	282.	87.	70.	1.53
+	HYDROGRAPH AT	205I	367.	12.28	56.	16.	13.	0.35
+	2 COMBINED AT	C533	1920.	12.33	337.	103.	82.	1.89
+	ROUTED TO	533534	1889.	12.50	337.	103.	82.	1.89
+	HYDROGRAPH AT	205J	361.	12.28	50.	13.	10.	0.37
+	2 COMBINED AT	C534R	2142.	12.48	386.	115.	93.	2.25
+	HYDROGRAPH AT	205K	183.	12.37	35.	9.	7.	0.25
+	2 COMBINED AT	C534	2310.	12.47	420.	124.	100.	2.50
+	ROUTED TO	534535	2300.	12.53	420.	124.	100.	2.50
+	HYDROGRAPH AT	205L	147.	12.17	15.	4.	3.	0.12
+	2 COMBINED AT	C535	2346.	12.52	435.	128.	103.	2.62
+	ROUTED TO	535536	2320.	12.65	435.	128.	103.	2.62
+	HYDROGRAPH AT	205M	210.	12.05	26.	7.	6.	0.14
+	2 COMBINED AT	C536R	2354.	12.65	460.	135.	108.	2.76
+	HYDROGRAPH AT	205N	141.	12.22	22.	6.	4.	0.16
+	2 COMBINED AT	C536I	2430.	12.63	482.	140.	113.	2.91

+	ROUTED TO C536O	321.	14.07	307.	140.	113.	2.91
+	ROUTED TO 536537	321.	14.12	307.	140.	113.	2.91
+	HYDROGRAPH AT 206A	224.	12.02	26.	8.	6.	0.13
+	2 COMBINED AT C537	358.	12.07	313.	148.	119.	3.04
+	ROUTED TO 537538	351.	12.12	313.	148.	119.	3.04
+	HYDROGRAPH AT 206B	169.	12.02	21.	6.	5.	0.09
+	2 COMBINED AT C538I	499.	12.07	327.	154.	124.	3.14
+	ROUTED TO C538O	456.	12.15	324.	154.	124.	3.14
+	ROUTED TO 538540	448.	12.25	324.	154.	124.	3.14
+	HYDROGRAPH AT 206C	35.	12.05	4.	1.	1.	0.02
+	2 COMBINED AT C540R	468.	12.25	326.	155.	125.	3.16
+	HYDROGRAPH AT 206D	114.	12.02	14.	4.	4.	0.06
+	ROUTED TO 539540	111.	12.08	14.	4.	4.	0.06
+	HYDROGRAPH AT 206E	38.	12.02	4.	1.	1.	0.02
+	2 COMBINED AT C540L	147.	12.03	18.	6.	5.	0.09
+	2 COMBINED AT C540	561.	12.20	339.	161.	130.	3.24
+	ROUTED TO 540541	548.	12.40	339.	161.	130.	3.24
+	HYDROGRAPH AT 206F	247.	12.03	29.	9.	7.	0.16
+	2 COMBINED AT C541	633.	12.22	358.	169.	136.	3.40
+	ROUTED TO 541548	632.	12.25	358.	169.	136.	3.40
+	HYDROGRAPH AT 206G	125.	12.07	18.	5.	4.	0.09
+	HYDROGRAPH AT BB523R	18.	12.25	1.	0.	0.	0.23
+	ROUTED TO 523548	15.	12.50	1.	0.	0.	0.23
+	3 COMBINED AT C548L	726.	12.12	374.	174.	141.	3.72
+	HYDROGRAPH AT 206H	106.	12.02	13.	4.	3.	0.06
+	ROUTED TO 542543	105.	12.05	13.	4.	3.	0.06
+	HYDROGRAPH AT 206I	40.	12.00	5.	1.	1.	0.02
+	2 COMBINED AT C543	143.	12.02	17.	5.	4.	0.08
+	DIVERSION TO D543R	143.	12.02	17.	5.	4.	0.08
+	HYDROGRAPH AT D543L	0.	0.02	0.	0.	0.	0.08
+	ROUTED TO 543544	0.	0.02	0.	0.	0.	0.08
+	HYDROGRAPH AT 206K	96.	12.02	11.	3.	3.	0.06

	2 COMBINED AT							
+		C544	96.	12.02	11.	3.	3.	0.14
	ROUTED TO							
+		544545	95.	12.05	11.	3.	3.	0.14
	DIVERSION TO							
+		D545R	48.	12.05	6.	2.	1.	0.14
	HYDROGRAPH AT							
+		D545L	48.	12.05	6.	2.	1.	0.14
	ROUTED TO							
+		545546	47.	12.07	6.	2.	1.	0.14
	HYDROGRAPH AT							
+		206L	106.	12.02	12.	3.	3.	0.06
	2 COMBINED AT							
+		C546	152.	12.02	18.	5.	4.	0.20
	ROUTED TO							
+		546547	152.	12.03	18.	5.	4.	0.20
	HYDROGRAPH AT							
+		BB543R	143.	12.02	17.	5.	4.	0.08
	ROUTED TO							
+		543547	140.	12.08	17.	5.	4.	0.08
	HYDROGRAPH AT							
+		BB545R	48.	12.05	6.	2.	1.	0.14
	ROUTED TO							
+		545547	47.	12.10	6.	2.	1.	0.14
	HYDROGRAPH AT							
+		206J	111.	12.02	14.	4.	3.	0.06
	4 COMBINED AT							
+		C547	443.	12.03	54.	16.	13.	0.26
	ROUTED TO							
+		547548	436.	12.08	54.	16.	13.	0.26
	HYDROGRAPH AT							
+		206M	109.	12.02	14.	4.	3.	0.06
	2 COMBINED AT							
+		C548R	535.	12.05	68.	21.	16.	0.32
	2 COMBINED AT							
+		C548	1241.	12.08	436.	194.	157.	4.04
	ROUTED TO							
+		548549	1216.	12.23	435.	194.	157.	4.04
	HYDROGRAPH AT							
+		206N	260.	12.03	35.	11.	9.	0.15
	2 COMBINED AT							
+		C549L	1370.	12.20	462.	205.	166.	4.19
	HYDROGRAPH AT							
+		C599O	1267.	12.63	1118.	443.	356.	7.13
	ROUTED TO							
+		599608	1267.	12.78	1118.	443.	356.	7.13
	HYDROGRAPH AT							
+		211K	191.	12.00	21.	6.	5.	0.10
	2 COMBINED AT							
+		C608L	1282.	12.55	1133.	449.	361.	7.23
	HYDROGRAPH AT							
+		211G	11.	12.05	2.	1.	1.	0.01
	ROUTED TO							
+		604606	11.	12.23	2.	1.	1.	0.01
	HYDROGRAPH AT							
+		211I	70.	12.03	9.	3.	2.	0.04
	2 COMBINED AT							
+		C606R	78.	12.03	12.	4.	3.	0.05
	HYDROGRAPH AT							
+		211H	133.	12.00	14.	4.	3.	0.07
	ROUTED TO							
+		C605O	107.	12.08	14.	4.	3.	0.07
	2 COMBINED AT							

+	C606	184.	12.05	26.	8.	6.	0.12
+ ROUTED TO	606607	182.	12.08	26.	8.	6.	0.12
+ HYDROGRAPH AT	211J	28.	12.00	3.	1.	1.	0.01
+ 2 COMBINED AT	C607	207.	12.05	29.	9.	7.	0.14
+ ROUTED TO	607608	206.	12.08	29.	9.	7.	0.14
+ 2 COMBINED AT	C608	1445.	12.05	1160.	457.	368.	7.37
+ ROUTED TO	608613	1441.	12.08	1160.	457.	368.	7.37
+ HYDROGRAPH AT	211M	152.	12.00	19.	6.	5.	0.08
+ ROUTED TO	610611	152.	12.03	19.	6.	5.	0.08
+ HYDROGRAPH AT	211N	39.	12.00	5.	2.	1.	0.02
+ 2 COMBINED AT	C611R	190.	12.02	24.	8.	6.	0.10
+ HYDROGRAPH AT	211O	78.	12.00	10.	3.	2.	0.04
+ ROUTED TO	C609O	56.	12.08	9.	3.	2.	0.04
+ ROUTED TO	609611	56.	12.12	9.	3.	2.	0.04
+ 2 COMBINED AT	C611I	242.	12.02	34.	11.	9.	0.14
+ ROUTED TO	C611O	143.	12.20	34.	11.	8.	0.14
+ DIVERSION TO	D611R	143.	12.20	34.	11.	8.	0.14
+ HYDROGRAPH AT	D611L	0.	0.02	0.	0.	0.	0.14
+ ROUTED TO	611612	0.	0.02	0.	0.	0.	0.14
+ HYDROGRAPH AT	211P	65.	12.00	8.	3.	2.	0.03
+ 2 COMBINED AT	C612	64.	12.00	8.	3.	2.	0.17
+ 2 COMBINED AT	C613	1489.	12.07	1166.	459.	370.	7.54
+ ROUTED TO	613621	1487.	12.08	1166.	459.	370.	7.54
+ HYDROGRAPH AT	211L	169.	12.02	20.	6.	5.	0.10
+ 2 COMBINED AT	C621L	1631.	12.07	1181.	465.	375.	7.64
+ HYDROGRAPH AT	211Q	39.	12.00	4.	1.	1.	0.02
+ ROUTED TO	616617	39.	12.02	4.	1.	1.	0.02
+ HYDROGRAPH AT	211R	155.	12.02	18.	6.	5.	0.08
+ 2 COMBINED AT	C617L	193.	12.02	23.	7.	6.	0.10
+ HYDROGRAPH AT	211U	37.	12.07	7.	2.	2.	0.03
+ DIVERSION TO	D614R	26.	12.07	5.	1.	1.	0.03
+ HYDROGRAPH AT	D614L	11.	12.07	2.	1.	1.	0.03

+	2 COMBINED AT	C617	204.	12.02	25.	8.	6.	0.13
+	ROUTED TO	617618	200.	12.07	25.	8.	6.	0.13
+	HYDROGRAPH AT	211S	83.	12.03	10.	3.	2.	0.05
+	2 COMBINED AT	C618I	282.	12.05	35.	11.	9.	0.18
+	ROUTED TO	C618O	280.	12.07	30.	10.	8.	0.18
+	HYDROGRAPH AT	BB614R	26.	12.07	5.	1.	1.	0.03
+	ROUTED TO	614615	26.	12.10	5.	1.	1.	0.03
+	HYDROGRAPH AT	211V	9.	12.02	2.	1.	0.	0.00
+	2 COMBINED AT	C615	34.	12.07	6.	2.	2.	0.03
+	DIVERSION TO	D615R	12.	12.07	2.	0.	0.	0.03
+	HYDROGRAPH AT	D615L	22.	12.07	5.	2.	1.	0.03
+	ROUTED TO	615618	22.	12.07	5.	2.	1.	0.03
+	2 COMBINED AT	C618	302.	12.07	34.	11.	10.	0.19
+	ROUTED TO	618619	299.	12.13	34.	11.	10.	0.19
+	HYDROGRAPH AT	211T	127.	12.00	17.	6.	5.	0.07
+	2 COMBINED AT	C619L	399.	12.07	51.	17.	14.	0.26
+	HYDROGRAPH AT	BB615R	12.	12.07	2.	0.	0.	0.03
+	ROUTED TO	615619	11.	12.17	2.	0.	0.	0.03
+	2 COMBINED AT	C619I	408.	12.07	52.	17.	14.	0.25
+	ROUTED TO	C619O	185.	12.40	52.	17.	14.	0.25
+	DIVERSION TO	D619L	0.	0.02	0.	0.	0.	0.25
+	HYDROGRAPH AT	D619R	185.	12.40	52.	17.	14.	0.25
+	ROUTED TO	619620	185.	12.42	52.	17.	14.	0.25
+	HYDROGRAPH AT	BB619L	0.	0.02	0.	0.	0.	0.25
+	ROUTED TO	619620	0.	0.02	0.	0.	0.	0.25
+	HYDROGRAPH AT	211W	59.	12.00	8.	3.	2.	0.03
+	3 COMBINED AT	C620R	223.	12.03	60.	20.	17.	0.28
+	HYDROGRAPH AT	BB611R	143.	12.20	34.	11.	8.	0.14
+	ROUTED TO	611620	143.	12.22	34.	11.	8.	0.14
+	2 COMBINED AT	C620	355.	12.05	94.	30.	25.	0.42
+	ROUTED TO	620621	354.	12.08	94.	30.	25.	0.42
+	2 COMBINED AT	C621	1979.	12.07	1267.	495.	399.	7.93

+	ROUTED TO	621622	1957.	12.15	1266.	495.	399.	7.93
+	HYDROGRAPH AT	211X	362.	12.05	52.	17.	14.	0.21
+	2 COMBINED AT	C622R	2255.	12.12	1306.	511.	412.	8.14
+	HYDROGRAPH AT	211A	249.	12.02	28.	8.	6.	0.14
+	ROUTED TO	C600O	241.	12.07	28.	8.	6.	0.14
+	ROUTED TO	600601	238.	12.12	28.	8.	6.	0.14
+	HYDROGRAPH AT	211B	195.	12.02	21.	6.	5.	0.11
+	2 COMBINED AT	C601	419.	12.03	49.	14.	11.	0.25
+	ROUTED TO	601602	415.	12.08	49.	14.	11.	0.25
+	HYDROGRAPH AT	211C	77.	12.02	10.	3.	2.	0.04
+	2 COMBINED AT	C602L	487.	12.07	59.	17.	14.	0.30
+	HYDROGRAPH AT	211D	103.	12.05	14.	4.	4.	0.07
+	2 COMBINED AT	C602	589.	12.07	73.	21.	17.	0.37
+	ROUTED TO	602603	581.	12.12	73.	21.	17.	0.37
+	HYDROGRAPH AT	211E	281.	12.02	34.	11.	9.	0.16
+	2 COMBINED AT	C603	833.	12.07	107.	32.	26.	0.52
+	ROUTED TO	603622	816.	12.13	107.	32.	26.	0.52
+	HYDROGRAPH AT	211F	190.	12.03	28.	9.	7.	0.11
+	2 COMBINED AT	C622L	979.	12.12	134.	41.	33.	0.63
+	2 COMBINED AT	C622	3192.	12.12	1427.	550.	444.	8.78
+	ROUTED TO	622549	3153.	12.20	1425.	550.	443.	8.78
+	HYDROGRAPH AT	211Y	158.	12.03	22.	7.	6.	0.09
+	2 COMBINED AT	C549R	3250.	12.20	1441.	556.	449.	8.87
+	2 COMBINED AT	C549	4504.	12.20	1879.	747.	604.	13.06
+	ROUTED TO	549626	4459.	12.28	1877.	747.	603.	13.06
+	HYDROGRAPH AT	211Z	137.	12.02	16.	5.	4.	0.08
+	2 COMBINED AT	C626C	4503.	12.28	1886.	752.	607.	13.14
+	HYDROGRAPH AT	211AA	57.	12.03	8.	2.	2.	0.03
+	ROUTED TO	625626	56.	12.08	8.	2.	2.	0.03
+	HYDROGRAPH AT	211AB	79.	12.00	10.	3.	3.	0.04
+	ROUTED TO	623624	79.	12.00	10.	3.	3.	0.04
	HYDROGRAPH AT							

+		211AC	51.	12.02	7.	2.	2.	0.03
+	2 COMBINED AT	C624	130.	12.00	17.	5.	4.	0.07
+	ROUTED TO	624626	129.	12.03	17.	5.	4.	0.07
+	HYDROGRAPH AT	211AD	78.	12.02	11.	3.	3.	0.04
+	2 COMBINED AT	C626R	207.	12.02	28.	9.	7.	0.11
+	3 COMBINED AT	C626	4609.	12.27	1908.	762.	615.	13.28
+	ROUTED TO	626627	4604.	12.28	1908.	762.	615.	13.28
+	HYDROGRAPH AT	211AE	63.	12.02	8.	2.	2.	0.03
+	2 COMBINED AT	C627	4621.	12.28	1912.	764.	617.	13.32

*** NORMAL END OF HEC-1 ***

100-Year, Future Condition (6-Hour)

```
1****************************************                                    ****************************************
*                                      *                                    *                                      *
*   FLOOD HYDROGRAPH PACKAGE  (HEC-1)  *                                    *   U.S. ARMY CORPS OF ENGINEERS       *
*             MAY   1991               *                                    *   HYDROLOGIC ENGINEERING CENTER      *
*           VERSION 4.0.1E             *                                    *         609 SECOND STREET            *
*                                      *                                    *      DAVIS, CALIFORNIA 95616         *
*  RUN DATE  02/18/:0  TIME  07:18:41  *                                    *          (916) 551-1748              *
*                                      *                                    *                                      *
****************************************                                    ****************************************
```

```
X     X  XXXXXXX   XXXXX          X
X     X  X        X     X        XX
X     X  X        X               X
XXXXXXX  XXXX     X        XXXXX  X
X     X  X        X               X
X     X  X        X     X         X
X     X  XXXXXXX   XXXXX         XXX
```

THIS PROGRAM REPLACES ALL PREVIOUS VERSIONS OF HEC-1 KNOWN AS HEC1 (JAN 73), HEC1GS, HEC1DB, AND HEC1KW.

THE DEFINITIONS OF VARIABLES -RTIMP- AND -RTIOR- HAVE CHANGED FROM THOSE USED WITH THE 1973-STYLE INPUT STRUCTURE.
THE DEFINITION OF -AMSKK- ON RM-CARD WAS CHANGED WITH REVISIONS DATED 28 SEP 81. THIS IS THE FORTRAN77 VERSION
NEW OPTIONS: DAMBREAK OUTFLOW SUBMERGENCE , SINGLE EVENT DAMAGE CALCULATION, DSS:WRITE STAGE FREQUENCY,
DSS:READ TIME SERIES AT DESIRED CALCULATION INTERVAL LOSS RATE:GREEN AND AMPT INFILTRATION
KINEMATIC WAVE: NEW FINITE DIFFERENCE ALGORITHM


```
LINE          ID.......1.......2.......3.......4.......5.......6.......7.......8.......9......10

  1           ID   Golden Eagle Park Dam Modifications
  2           ID        by Stantec: Proj. No. 28900095                 File: ALTFf-4.IH1
  3           ID        for FCDMC:  FCD                                Date:07-08-99     mcg
  4           ID                                                     Revised:
  5           ID
  6           ID   Alternative F:
  7           ID        Addition of an auxillary spillway.  This spillway will function such
  8           ID        that the existing emergency spillway does not operate for the 100-year
  9           ID        storm.  The stage-storage relation is adjusted to reflect revised
 10           ID        grading in the park.
 11           ID
 12           ID        The purpose of this model is to estimate peak discharges in Ashbrook
 13           ID        Wash for evaluation of the Dam modifications impact on the floodplain.
 14           ID
 15           ID   100-year, 6-hour future condition watershed model for Ashbrook Wash upstream
 16           ID   of the Fort McDowell Indian Reservation boundary.
 17           ID        This model is a portion of the original Fountain Hills North FDS
 18           ID        watershed model conducted by GVSCE, 1994.  The title cards from that
 19           ID        model are included for reference.
 20           ID
 21           ID   Fountain Hills North Floodplain Delineation Study
 22           ID        FCD 92-04       by GVSCE                        File:  FU100-6.IH1
 23           ID    Future Condition Model                              Date:    07-19-94   dtp
 24           ID     100-Year 6-Hour Storm, Clark Unit Hydrograph     Revised:    10-31-94   dtp
              *
 25           IT       1                    1080
 26           IO       5
 27           IN      15
              *DIAGRAM
              *
 28           JD    3.30    0.01
 29           PC   0.000   0.008   0.016   0.025   0.033   0.041   0.050   0.058   0.066   0.074
 30           PC   0.087   0.099   0.118   0.138   0.216   0.377   0.834   0.911   0.931   0.950
 31           PC   0.962   0.972   0.983   0.991   1.000
 32           JD    3.28    0.50
 33           JD    3.23    2.80
 34           PC   0.000   0.009   0.016   0.025   0.034   0.042   0.051   0.059   0.067   0.076
 35           PC   0.087   0.100   0.120   0.163   0.252   0.451   0.694   0.837   0.900   0.938
 36           PC   0.950   0.963   0.975   0.988   1.000
 37           JD    3.04    16.0
 38           PC   0.000   0.015   0.020   0.030   0.048   0.063   0.076   0.090   0.105   0.119
 39           PC   0.135   0.152   0.175   0.222   0.304   0.472   0.670   0.796   0.868   0.912
 40           PC   0.946   0.960   0.973   0.987   1.000
 41           JD    2.67    90.0
 42           PC   0.000   0.021   0.035   0.051   0.071   0.087   0.105   0.125   0.143   0.160
 43           PC   0.179   0.201   0.232   0.281   0.364   0.500   0.658   0.773   0.841   0.888
 44           PC   0.927   0.945   0.964   0.982   1.000
              *

 45           KK    204A
 46           KM   Sub-Basin   204A
 47           KM
 48           KM      The Clark Unit Hydrograph is used for this basin.
 49           KM          The Urban time-area relation is used for this basin.
 50           KM
```

```
LINE          ID.......1.......2.......3.......4.......5.......6.......7.......8.......9......10

  51          KM      Time of Concentration for this sub-basin is based on the following:
  52          KM          6-Hour Rainfall, Pattern No.  1.00
  53          KM          An rainfall areal reduction factor of 0.999
  54          KM
  55          KM       EXCESS RAINFALL VALUES EXCEEDED IN 5-MINUTE INTERVALS
  56          KM     5  10  15  20  25  30  35  40  45  50  55  60  65  70  75  80  85  90
  57          KM   .47 .47 .47 .16 .13 .13 .06 .06 .05 .04 .04 .03 .01 .01 .01 .01 .01 .01
  58          KM
  59          KM          L=   0.687 miles, S=  175 feet/mile, Kb= .03
  60          KM
  61          BA   0.108
  62          LG    0.09    0.25    5.80    0.18   25.00
  63          UC   0.158   0.126
  64          UA       0       5      16      30      65      77      84      90      94      97
  65          UA     100
              *

  66          KK  522523
  67          KM      Normal depth channel route from C522 to C523
  68          KM      Source:  200 Scale Mapping
  69          RS       9    FLOW      -1
  70          RC   0.060   0.050   0.060  3275.0  0.0197
  71          RX  1000.0  1020.0  1035.0  1065.0  1080.0  1120.0  1160.0  1185.0
  72          RY  1678.0  1676.0  1674.0  1672.0  1672.0  1674.0  1676.0  1678.0
              *

  73          KK    204B
  74          KM   Sub-Basin   204B
  75          KM
  76          KM      The Clark Unit Hydrograph is used for this basin.
  77          KM          The Urban time-area relation is used for this basin.
  78          KM
  79          KM      Time of Concentration for this sub-basin is based on the following:
  80          KM          6-Hour Rainfall, Pattern No.  1.00
  81          KM          An rainfall areal reduction factor of 0.998
  82          KM
  83          KM       EXCESS RAINFALL VALUES EXCEEDED IN 5-MINUTE INTERVALS
  84          KM     5  10  15  20  25  30  35  40  45  50  55  60  65  70  75  80  85  90
  85          KM   .47 .47 .47 .16 .13 .13 .06 .06 .05 .04 .04 .03 .01 .01 .01 .01 .01 .01
  86          KM
  87          KM          L=   0.775 miles, S=  128 feet/mile, Kb= .03
  88          KM
  89          BA   0.126
  90          LG    0.09    0.25    5.80    0.18   26.66
  91          UC   0.188   0.153
  92          UA       0       5      16      30      65      77      84      90      94      97
  93          UA     100
              *

  94          KK   C523I
  95          KM      Hydrograph combine 522523 + 204B at C523I
  96          HC       2
              *
```



```
LINE          ID.......1.......2.......3.......4.......5.......6.......7.......8.......9......10

  97          KK   C523O
  98          KM      Reservoir route at C523.
  99          RS       1    ELEV  1650.3
 100          SV    0.00    0.01    0.12    0.71    2.23    2.50    2.80    3.10    3.20    3.40
 101          SV    3.70    4.00    4.30    4.60    4.90    5.20    5.50
 102          SE  1650.3  1652.0  1654.0  1656.0  1658.0  1658.2  1658.4  1658.6  1658.7  1658.8
 103          SE  1659.0  1659.2  1659.4  1659.6  1659.8  1660.0  1660.2
 104          SQ       0      22      78     144     209     214     220     224     226     232
 105          SQ     239     249     288     384     529     726     960
              *

 106          KK   D523L
 107          KM      Hydrograph diversion at C523.  Main flow continues in the left branch.
 108          KM      Diverted flow is in the right branch.
 109          DT   D523R
 110          DI       0      22      78     144     209     214     220     224     226     232
 111          DI     239     249     288     384     529     726     960
 112          DQ       0       0       0       0       0       0       0       0       0       3
 113          DQ       5      10      20      37      61      96     139
              *

 114          KK    205A
 115          KM   Sub-Basin   205A
 116          KM
 117          KM      The Clark Unit Hydrograph is used for this basin.
 118          KM          The Natural time-area relation is used for this basin.
 119          KM
 120          KM      Time of Concentration for this sub-basin is based on the following:
 121          KM          6-Hour Rainfall, Pattern No.  1.00
 122          KM          An rainfall areal reduction factor of 0.998
 123          KM
 124          KM       EXCESS RAINFALL VALUES EXCEEDED IN 5-MINUTE INTERVALS
 125          KM     5  10  15  20  25  30  35  40  45  50  55  60  65  70  75  80  85  90
 126          KM   .45 .44 .44 .13 .09 .08 .04 .04 .03 .03 .03 .03 .01 .01 .01 .01 .01 .01
 127          KM
```

```
128          KM          L=   0.870 miles, S=  378 feet/mile, Kb= .14
129          KM
130          BA   0.118
131          LG    0.25    0.35    4.35    0.40   35.00
132          UC   0.350   0.350
133          UA       0       3       5       8      12      20      43      75      90      96
134          UA     100
             *

135          KK    205B
136          KM   Sub-Basin   205B
137          KM
138          KM      The Clark Unit Hydrograph is used for this basin.
139          KM          The Natural time-area relation is used for this basin.
140          KM
141          KM      Time of Concentration for this sub-basin is based on the following:
142          KM          6-Hour Rainfall, Pattern No.  1.00
143          KM          An rainfall areal reduction factor of 0.997
144          KM
```



```
LINE         ID.......1.......2.......3.......4.......5.......6.......7.......8.......9......10

145          KM       EXCESS RAINFALL VALUES EXCEEDED IN 5-MINUTE INTERVALS
146          KM     5  10  15  20  25  30  35  40  45  50  55  60  65  70  75  80  85  90
147          KM   .45 .44 .44 .13 .09 .08 .04 .04 .03 .03 .03 .03 .01 .01 .01 .01 .01 .01
148          KM
149          KM          L=   0.759 miles, S=  129 feet/mile, Kb= .14
150          KM
151          BA   0.211
152          LG    0.25    0.35    4.35    0.40   35.00
153          UC   0.508   0.340
154          UA       0       3       5       8      12      20      43      75      90      96
155          UA     100
             *

156          KK    C528
157          KM      Hydrograph combine 205A + 205B at C528
158          HC       2
             *

159          KK  528530
160          KM      Normal depth channel route from C528 to C530
161          KM      Source:  Hydrology Field Reconnaissance
162          RS       3    FLOW      -1
163          RC   0.060   0.043   0.060  2594.0  0.0709
164          RX  1000.0  1018.0  1031.0  1042.0  1052.0  1066.0  1093.0  1107.0
165          RY    96.3    92.2    89.9    85.9    85.7    91.5    91.2    96.3
             *

166          KK    205C
167          KM   Sub-Basin   205C
168          KM
169          KM      The Clark Unit Hydrograph is used for this basin.
170          KM          The Natural time-area relation is used for this basin.
171          KM
172          KM      Time of Concentration for this sub-basin is based on the following:
173          KM          6-Hour Rainfall, Pattern No.  1.00
174          KM          An rainfall areal reduction factor of 0.999
175          KM
176          KM       EXCESS RAINFALL VALUES EXCEEDED IN 5-MINUTE INTERVALS
177          KM     5  10  15  20  25  30  35  40  45  50  55  60  65  70  75  80  85  90
178          KM   .45 .44 .44 .13 .09 .08 .04 .04 .03 .03 .03 .03 .01 .01 .01 .01 .01 .01
179          KM
180          KM          L=   0.618 miles, S=  331 feet/mile, Kb= .15
181          KM
182          BA   0.059
183          LG    0.25    0.35    4.35    0.41   35.00
184          UC   0.308   0.343
185          UA       0       3       5       8      12      20      43      75      90      96
186          UA     100
             *
```



```
LINE         ID.......1.......2.......3.......4.......5.......6.......7.......8.......9......10

187          KK   C530R
188          KM      Hydrograph combine 528530 + 205C at C530 right branch
189          HC       2
             *

190          KK    205D
191          KM   Sub-Basin   205D
192          KM
193          KM      The Clark Unit Hydrograph is used for this basin.
194          KM          The Natural time-area relation is used for this basin.
195          KM
196          KM      Time of Concentration for this sub-basin is based on the following:
197          KM          6-Hour Rainfall, Pattern No.  1.00
198          KM          An rainfall areal reduction factor of 0.996
199          KM
200          KM       EXCESS RAINFALL VALUES EXCEEDED IN 5-MINUTE INTERVALS
201          KM     5  10  15  20  25  30  35  40  45  50  55  60  65  70  75  80  85  90
202          KM   .45 .44 .44 .13 .09 .08 .04 .04 .03 .03 .03 .03 .01 .01 .01 .01 .01 .01
```

```
 203          KM
 204          KM          L=   1.020 miles, S=  361 feet/mile, Kb= .13
 205          KM
 206          BA   0.319
 207          LG    0.25    0.35    4.35    0.40   35.00
 208          UC   0.379   0.246
 209          UA      0       3       5       8      12      20      43      75      90      96
 210          UA    100
              *

 211          KK    205E
 212          KM   Sub-Basin   205E
 213          KM
 214          KM      The Clark Unit Hydrograph is used for this basin.
 215          KM          The Natural time-area relation is used for this basin.
 216          KM
 217          KM      Time of Concentration for this sub-basin is based on the following:
 218          KM          6-Hour Rainfall, Pattern No.  1.00
 219          KM          An rainfall areal reduction factor of 0.997
 220          KM
 221          KM       EXCESS RAINFALL VALUES EXCEEDED IN 5-MINUTE INTERVALS
 222          KM     5  10  15  20  25  30  35  40  45  50  55  60  65  70  75  80  85  90
 223          KM   .45 .44 .44 .13 .09 .08 .04 .04 .03 .03 .03 .03 .01 .01 .01 .01 .01 .01
 224          KM
 225          KM          L=   1.357 miles, S=  358 feet/mile, Kb= .14
 226          KM
 227          BA   0.218
 228          LG    0.25    0.35    4.35    0.40   35.00
 229          UC   0.488   0.508
 230          UA      0       3       5       8      12      20      43      75      90      96
 231          UA    100
              *
```



```
LINE          ID.......1.......2.......3.......4.......5.......6.......7.......8.......9......10

 232          KK    C529
 233          KM      Hydrograph combine 205D + 205E at C529
 234          HC       2
              *
              * *
              * * NOTE:  529530 too short to route
              * *
              *

 235          KK    C530
 236          KM      Hydrograph combine C529 + C530R at C530
 237          HC       2
              *

 238          KK  530531
 239          KM      Normal depth channel route from C530 to C531
 240          KM      Source:  Hydrology Field Reconnaissance
 241          RS       3    FLOW      -1
 242          RC   0.060   0.059   0.060  2426.0  0.0404
 243          RX  1000.0  1035.0  1050.0  1060.0  1075.0  1081.0  1088.0  1094.0
 244          RY    95.9    86.5    86.2    83.1    84.0    90.2    95.6    99.3
              *

 245          KK    205F
 246          KM   Sub-Basin   205F
 247          KM
 248          KM      The Clark Unit Hydrograph is used for this basin.
 249          KM          The Natural time-area relation is used for this basin.
 250          KM
 251          KM      Time of Concentration for this sub-basin is based on the following:
 252          KM          6-Hour Rainfall, Pattern No.  1.00
 253          KM          An rainfall areal reduction factor of 0.998
 254          KM
 255          KM       EXCESS RAINFALL VALUES EXCEEDED IN 5-MINUTE INTERVALS
 256          KM     5  10  15  20  25  30  35  40  45  50  55  60  65  70  75  80  85  90
 257          KM   .45 .44 .44 .13 .09 .08 .04 .04 .03 .03 .03 .03 .01 .01 .01 .01 .01 .01
 258          KM
 259          KM          L=   0.786 miles, S=  326 feet/mile, Kb= .14
 260          KM
 261          BA   0.161
 262          LG    0.25    0.35    4.35    0.41   35.00
 263          UC   0.350   0.269
 264          UA      0       3       5       8      12      20      43      75      90      96
 265          UA    100
              *

 266          KK    C531
 267          KM      Hydrograph combine 530531 + 205F at C531
 268          HC       2
              *
```



```
LINE          ID.......1.......2.......3.......4.......5.......6.......7.......8.......9......10

 269          KK  531532
 270          KM      Normal depth channel route from C531 to C532
 271          KM      Source:  Hydrology Field Reconnaissance
```

```
272          RS       4    FLOW      -1
273          RC   0.060   0.065   0.060  3391.0  0.0463
274          RX  1000.0  1012.0  1022.0  1032.0  1050.0  1056.0  1068.0  1092.0
275          RY    98.8    93.8    89.1    86.4    86.5    89.1    91.0    97.6
             *

276          KK    205G
277          KM   Sub-Basin   205G
278          KM
279          KM      The Clark Unit Hydrograph is used for this basin.
280          KM          The Natural time-area relation is used for this basin.
281          KM
282          KM      Time of Concentration for this sub-basin is based on the following:
283          KM          6-Hour Rainfall, Pattern No.  1.00
284          KM          An rainfall areal reduction factor of 0.998
285          KM
286          KM       EXCESS RAINFALL VALUES EXCEEDED IN 5-MINUTE INTERVALS
287          KM     5  10  15  20  25  30  35  40  45  50  55  60  65  70  75  80  85  90
288          KM   .45 .44 .44 .13 .09 .07 .03 .03 .03 .03 .03 .03 .01 .01 .01 .01 .01 .01
289          KM
290          KM          L=   0.924 miles, S=  338 feet/mile, Kb= .13
291          KM
292          BA   0.185
293          LG    0.24    0.35    4.50    0.40   31.23
294          UC   0.367   0.298
295          UA       0       3       5       8      12      20      43      75      90      96
296          UA     100
             *

297          KK   C532L
298          KM      Hydrograph combine 531532 + 205G at C532 left branch
299          HC       2
             *

300          KK    205H
301          KM   Sub-Basin   205H
302          KM
303          KM      The Clark Unit Hydrograph is used for this basin.
304          KM          The Natural time-area relation is used for this basin.
305          KM
306          KM      Time of Concentration for this sub-basin is based on the following:
307          KM          6-Hour Rainfall, Pattern No.  1.00
308          KM          An rainfall areal reduction factor of 0.997
309          KM
310          KM       EXCESS RAINFALL VALUES EXCEEDED IN 5-MINUTE INTERVALS
311          KM     5  10  15  20  25  30  35  40  45  50  55  60  65  70  75  80  85  90
312          KM   .45 .44 .44 .13 .09 .08 .04 .03 .03 .03 .03 .03 .01 .01 .01 .01 .01 .01
313          KM
314          KM          L=   1.464 miles, S=  325 feet/mile, Kb= .13
315          KM
316          BA   0.261
```



```
LINE         ID.......1.......2.......3.......4.......5.......6.......7.......8.......9......10

317          LG    0.24    0.35    4.50    0.39   31.55
318          UC   0.513   0.514
319          UA       0       3       5       8      12      20      43      75      90      96
320          UA     100
             *

321          KK    C532
322          KM      Hydrograph combine C532L + 205H at C532
323          HC       2
             *

324          KK  532533
325          KM      Normal depth channel route from C532 to C533
326          KM      Source:  Hydrology Field Reconnaissance
327          RS       2    FLOW      -1
328          RC   0.060   0.045   0.060  1555.0  0.0283
329          RX  1000.0  1020.0  1030.0  1048.0  1065.0  1077.0  1092.0  1119.0
330          RY    98.0    89.4    88.1    85.6    85.9    92.2    93.8    97.0
             *

331          KK    205I
332          KM   Sub-Basin   205I
333          KM
334          KM      The Clark Unit Hydrograph is used for this basin.
335          KM          The Natural time-area relation is used for this basin.
336          KM
337          KM      Time of Concentration for this sub-basin is based on the following:
338          KM          6-Hour Rainfall, Pattern No.  1.00
339          KM          An rainfall areal reduction factor of 0.995
340          KM
341          KM       EXCESS RAINFALL VALUES EXCEEDED IN 5-MINUTE INTERVALS
342          KM     5  10  15  20  25  30  35  40  45  50  55  60  65  70  75  80  85  90
343          KM   .44 .44 .43 .13 .09 .08 .03 .03 .03 .01 .01 .01 .00 .00 .00 .00 .00 .00
344          KM
345          KM          L=   1.487 miles, S=  326 feet/mile, Kb= .11
346          KM
347          BA   0.354
348          LG    0.20    0.37    5.20    0.28   15.18
349          UC   0.458   0.386
350          UA       0       3       5       8      12      20      43      75      90      96
```

```
351          UA     100
             *

352          KK    C533
353          KM      Hydrograph combine 532533 + 205I at C533
354          HC       2
             *

355          KK  533534
356          KM      Normal depth channel route from C533 to C534
357          KM      Source:  Hydrology Field Reconnaissance
358          RS      10    FLOW      -1
359          RC   0.060   0.046   0.060  7145.0  0.0241
360          RX  1000.0  1010.0  1060.0  1073.0  1160.0  1181.0  1223.0  1237.0
361          RY    97.8    93.7    94.7    90.8    89.9    92.4    94.0    96.8
             *
```



```
LINE         ID.......1.......2.......3.......4.......5.......6.......7.......8.......9......10

362          KK    205J
363          KM   Sub-Basin   205J
364          KM
365          KM      The Clark Unit Hydrograph is used for this basin.
366          KM          The Natural time-area relation is used for this basin.
367          KM
368          KM      Time of Concentration for this sub-basin is based on the following:
369          KM          6-Hour Rainfall, Pattern No.  1.00
370          KM          An rainfall areal reduction factor of 0.995
371          KM
372          KM       EXCESS RAINFALL VALUES EXCEEDED IN 5-MINUTE INTERVALS
373          KM     5  10  15  20  25  30  35  40  45  50  55  60  65  70  75  80  85  90
374          KM   .44 .43 .42 .12 .08 .06 .03 .02 .02 .00 .00 .00 .00 .00 .00 .00 .00 .00
375          KM
376          KM          L=   1.633 miles, S=  243 feet/mile, Kb= .08
377          KM
378          BA   0.369
379          LG    0.21    0.35    4.90    0.30    3.48
380          UC   0.450   0.398
381          UA       0       3       5       8      12      20      43      75      90      96
382          UA     100
             *

383          KK   C534R
384          KM     Hydrograph combine 533534 + 205J at C534 right branch
385          HC       2
             *

386          KK    205K
387          KM   Sub-Basin   205K
388          KM
389          KM      The Clark Unit Hydrograph is used for this basin.
390          KM          The Natural time-area relation is used for this basin.
391          KM
392          KM      Time of Concentration for this sub-basin is based on the following:
393          KM          6-Hour Rainfall, Pattern No.  1.00
394          KM          An rainfall areal reduction factor of 0.997
395          KM
396          KM       EXCESS RAINFALL VALUES EXCEEDED IN 5-MINUTE INTERVALS
397          KM     5  10  15  20  25  30  35  40  45  50  55  60  65  70  75  80  85  90
398          KM   .44 .44 .43 .13 .09 .08 .03 .03 .03 .00 .00 .00 .00 .00 .00 .00 .00 .00
399          KM
400          KM          L=   1.772 miles, S=  249 feet/mile, Kb= .10
401          KM
402          BA   0.245
403          LG    0.16    0.38    5.60    0.22    1.54
404          UC   0.546   0.665
405          UA       0       3       5       8      12      20      43      75      90      96
406          UA     100
             *
```



```
LINE         ID.......1.......2.......3.......4.......5.......6.......7.......8.......9......10

407          KK    C534
408          KM     Hydrograph combine C534R + 205K at C534
409          HC       2
             *

410          KK  534535
411          KM     Normal depth channel route from C534 to C535
412          KM     Source:  Hydrology Field Reconnaissance
413          RS      3    FLOW      -1
414          RC   0.065   0.046   0.065  2037.0  0.0221
415          RX  1000.0  1010.0  1016.0  1075.0  1150.0  1162.0  1174.0  1182.0
416          RY    97.1    93.4    91.6    89.6    86.9    90.8    92.2    92.3
             *

417          KK    205L
418          KM   Sub-Basin   205L
419          KM
420          KM      The Clark Unit Hydrograph is used for this basin.
421          KM          The Natural time-area relation is used for this basin.
```

```
422          KM
423          KM      Time of Concentration for this sub-basin is based on the following:
424          KM          6-Hour Rainfall, Pattern No.  1.00
425          KM          An rainfall areal reduction factor of 0.998
426          KM
427          KM       EXCESS RAINFALL VALUES EXCEEDED IN 5-MINUTE INTERVALS
428          KM     5  10  15  20  25  30  35  40  45  50  55  60  65  70  75  80  85  90
429          KM   .44 .43 .42 .12 .08 .06 .02 .02 .02 .00 .00 .00 .00 .00 .00 .00 .00 .00
430          KM
431          KM          L=   0.701 miles, S=  284 feet/mile, Kb= .09
432          KM
433          BA   0.118
434          LG    0.19    0.36    5.00    0.29    0.00
435          UC   0.254   0.206
436          UA       0       3       5       8      12      20      43      75      90      96
437          UA     100
             *

438          KK    C535
439          KM      Hydrograph combine 534535 + 205L at C535
440          HC       2
             *

441          KK  535536
442          KM      Normal depth channel route from C535 to C536
443          KM      Source:  HEC-2 Cross Section: HE 3.275
444          RS       8    FLOW      -1
445          RC   0.075   0.050   0.075  2975.0  0.0236
446          RX  9852.8  9871.5  9957.7 10000.0 10015.6 10052.4 10142.4 10183.6
447          RY  1911.6  1904.3  1906.9  1900.8  1900.8  1905.4  1905.2  1912.6
             *
```



```
LINE         ID.......1.......2.......3.......4.......5.......6.......7.......8.......9......10

448          KK    205M
449          KM   Sub-Basin   205M
450          KM
451          KM      The Clark Unit Hydrograph is used for this basin.
452          KM          The Urban time-area relation is used for this basin.
453          KM
454          KM      Time of Concentration for this sub-basin is based on the following:
455          KM          6-Hour Rainfall, Pattern No.  1.00
456          KM          An rainfall areal reduction factor of 0.998
457          KM
458          KM       EXCESS RAINFALL VALUES EXCEEDED IN 5-MINUTE INTERVALS
459          KM     5  10  15  20  25  30  35  40  45  50  55  60  65  70  75  80  85  90
460          KM   .46 .46 .46 .15 .12 .11 .05 .05 .04 .02 .02 .02 .01 .01 .01 .01 .01 .01
461          KM
462          KM          L=   0.839 miles, S=  230 feet/mile, Kb= .05
463          KM
464          BA   0.139
465          LG    0.15    0.31    5.40    0.22   22.35
466          UC   0.213   0.178
467          UA       0       5      16      30      65      77      84      90      94      97
468          UA     100
             *

469          KK   C536R
470          KM      Hydrograph combine 535536 + 205M at C536 right branch
471          HC       2
             *

472          KK    205N
473          KM   Sub-Basin   205N
474          KM
475          KM      The Clark Unit Hydrograph is used for this basin.
476          KM          The HEC-1 time-area relation is used for this basin.
477          KM
478          KM      Time of Concentration for this sub-basin is based on the following:
479          KM          6-Hour Rainfall, Pattern No.  1.00
480          KM          An rainfall areal reduction factor of 0.998
481          KM
482          KM       EXCESS RAINFALL VALUES EXCEEDED IN 5-MINUTE INTERVALS
483          KM     5  10  15  20  25  30  35  40  45  50  55  60  65  70  75  80  85  90
484          KM   .45 .44 .44 .13 .09 .08 .03 .03 .03 .00 .00 .00 .00 .00 .00 .00 .00 .00
485          KM
486          KM          L=   1.183 miles, S=  245 feet/mile, Kb= .10
487          KM
488          BA   0.156
489          LG    0.15    0.39    5.70    0.21    0.80
490          UC   0.413   0.457
             *
```



```
LINE         ID.......1.......2.......3.......4.......5.......6.......7.......8.......9......10

491          KK   C536I
492          KM      Hydrograph combine C536R + 205N at C536I
493          HC       2
             *
             * *
             * * C536I is the total flow in Hesperus Wash upstream of Dam 36
```

```
            * *
            *

494         KK   C536O
495         KM      Reservoir route at C536 (Dam 36).
496         RS       1    ELEV  1852.1
497         SV    0.00   14.41   35.94   67.64  108.61  158.07  218.14  276.00  280.00  289.00
498         SV  298.02  308.00  317.00  327.00  337.00  346.95  358.00  374.00
499         SE  1852.1  1866.0  1870.0  1874.0  1878.0  1882.0  1886.0  1889.0  1889.2  1889.6
500         SE  1890.0  1890.4  1890.8  1891.2  1891.6  1892.0  1892.4  1893.0
501         SQ       0     108     168     211     245     276     301     320     338     347
502         SQ     356     459     679     995    1408    1905    2477    3119    3826    5009
503         SE  1852.1  1858.0  1862.0  1866.0  1870.0  1874.0  1878.0  1882.0  1886.0  1889.0
504         SE  1889.2  1889.6  1890.0  1890.4  1890.8  1891.2  1891.6  1892.0  1892.4  1893.0
505         RL                    0.17
            *
            * *
            * * End Basin 205.  Start Basin 206
            * *
            *

506         KK  536537
507         KM      Normal depth channel route from C536 to C537
508         KM      Source:  HEC-2 Cross Section: HE 2.729
509         RS       3    FLOW      -1
510         RC   0.075   0.050   0.075  1480.0  0.0209
511         RX  9900.0  9912.0  9947.3  9979.3 10025.0 10044.5 10051.0 10060.0
512         RY  1846.5  1845.4  1843.1  1834.3  1833.6  1840.5  1843.3  1843.5
            *

513         KK    206A
514         KM   Sub-Basin   206A
515         KM
516         KM      The Clark Unit Hydrograph is used for this basin.
517         KM          The Urban time-area relation is used for this basin.
518         KM
519         KM      Time of Concentration for this sub-basin is based on the following:
520         KM          6-Hour Rainfall, Pattern No.  1.00
521         KM          An rainfall areal reduction factor of 0.998
522         KM
523         KM       EXCESS RAINFALL VALUES EXCEEDED IN 5-MINUTE INTERVALS
524         KM     5  10  15  20  25  30  35  40  45  50  55  60  65  70  75  80  85  90
525         KM   .47 .47 .46 .16 .13 .12 .05 .05 .05 .04 .03 .03 .01 .01 .01 .01 .01 .01
526         KM
527         KM          L=   0.631 miles, S=  256 feet/mile, Kb= .04
528         KM
529         BA   0.128
530         LG    0.12    0.28    5.30    0.23   33.34
```



```
LINE        ID.......1.......2.......3.......4.......5.......6.......7.......8.......9......10

531         UC   0.158   0.107
532         UA       0       5      16      30      65      77      84      90      94      97
533         UA     100
            *

534         KK    C537
535         KM      Hydrograph combine 536537 + 206A at C537
536         HC       2
            *

537         KK  537538
538         KM      Normal depth channel route from C537 to C538
539         KM      Source:  HEC-2 Cross Section: HE 2.493
540         RS       4    FLOW      -1
541         RC   0.075   0.050   0.075  2155.0  0.0210
542         RX  9946.0  9957.6  9984.8  9994.8 10000.0 10036.5 10070.1 10107.3
543         RY  1817.0  1815.2  1807.4  1803.2  1803.2  1805.5  1814.3  1815.4
            *

544         KK    206B
545         KM   Sub-Basin   206B
546         KM
547         KM      The Clark Unit Hydrograph is used for this basin.
548         KM          The Urban time-area relation is used for this basin.
549         KM
550         KM      Time of Concentration for this sub-basin is based on the following:
551         KM          6-Hour Rainfall, Pattern No.  1.00
552         KM          An rainfall areal reduction factor of 0.999
553         KM
554         KM       EXCESS RAINFALL VALUES EXCEEDED IN 5-MINUTE INTERVALS
555         KM     5  10  15  20  25  30  35  40  45  50  55  60  65  70  75  80  85  90
556         KM   .48 .47 .47 .17 .13 .13 .06 .06 .05 .05 .04 .04 .01 .01 .01 .01 .01 .01
557         KM
558         KM          L=   0.570 miles, S=  139 feet/mile, Kb= .03
559         KM
560         BA   0.095
561         LG    0.10    0.26    5.20    0.23   41.42
562         UC   0.154   0.113
563         UA       0       5      16      30      65      77      84      90      94      97
564         UA     100
            *

565         KK   C538I
```

```
566          KM      Hydrograph combine 537538 + 206B at C538I
567          HC       2
             *

568          KK   C538O
569          KM      Reservoir route at C538.
570          RS       1    ELEV  1778.2
571          SV    0.00    0.10    0.57    1.69    2.60    2.70    2.90    3.00    3.20    3.38
572          SV    3.60    3.90    4.10    4.30    4.60    5.10    5.60    6.10    7.10    8.10
573          SE  1778.2  1782.0  1784.0  1786.0  1787.1  1787.2  1787.4  1787.6  1787.8  1788.0
574          SE  1788.2  1788.4  1788.6  1788.8  1789.0  1789.4  1789.8  1790.2  1790.8  1791.4
575          SQ       0      82     133     185     207     208     212     218     226     235
1                                          HEC-1 INPUT                                          PAGE 14

LINE         ID.......1.......2.......3.......4.......5.......6.......7.......8.......9......10

576          SQ     249     265     286     310     338     400     482     611     942    1439
             *

577          KK  538540
578          KM      Normal depth channel route from C538 to C540
579          KM      Source:  HEC-2 Cross Section: HE 1.990
580          RS       7    FLOW      -1
581          RC   0.075   0.050   0.075  2176.0  0.0210
582          RX  9907.7  9931.8  9978.4 10000.0 10041.1 10056.9 10143.7 10164.9
583          RY  1767.5  1754.9  1755.2  1753.2  1753.1  1755.1  1757.3  1769.4
             *

584          KK    206C
585          KM   Sub-Basin   206C
586          KM
587          KM      The Clark Unit Hydrograph is used for this basin.
588          KM          The Urban time-area relation is used for this basin.
589          KM
590          KM      Time of Concentration for this sub-basin is based on the following:
591          KM          6-Hour Rainfall, Pattern No.  1.00
592          KM          An rainfall areal reduction factor of 1.000
593          KM
594          KM       EXCESS RAINFALL VALUES EXCEEDED IN 5-MINUTE INTERVALS
595          KM     5  10  15  20  25  30  35  40  45  50  55  60  65  70  75  80  85  90
596          KM   .46 .45 .45 .15 .11 .11 .04 .04 .04 .02 .02 .02 .01 .01 .01 .01 .01 .01
597          KM
598          KM          L=   0.427 miles, S=  138 feet/mile, Kb= .04
599          KM
600          BA   0.024
601          LG    0.11    0.26    4.35    0.36   28.55
602          UC   0.158   0.204
603          UA       0       5      16      30      65      77      84      90      94      97
604          UA     100
             *

605          KK   C540R
606          KM      Hydrograph combine 538540 + 206C at C540 right branch
607          HC       2
             *

608          KK    206D
609          KM   Sub-Basin   206D
610          KM
611          KM      The Clark Unit Hydrograph is used for this basin.
612          KM          The Urban time-area relation is used for this basin.
613          KM
614          KM      Time of Concentration for this sub-basin is based on the following:
615          KM          6-Hour Rainfall, Pattern No.  1.00
616          KM          An rainfall areal reduction factor of 0.999
617          KM
618          KM       EXCESS RAINFALL VALUES EXCEEDED IN 5-MINUTE INTERVALS
619          KM     5  10  15  20  25  30  35  40  45  50  55  60  65  70  75  80  85  90
620          KM   .48 .48 .48 .17 .14 .14 .06 .06 .06 .05 .05 .05 .01 .01 .01 .01 .01 .01
621          KM
622          KM          L=   0.531 miles, S=  236 feet/mile, Kb= .03
1                                          HEC-1 INPUT                                          PAGE 15

LINE         ID.......1.......2.......3.......4.......5.......6.......7.......8.......9......10

623          KM
624          BA   0.062
625          LG    0.08    0.25    5.70    0.18   43.01
626          UC   0.125   0.109
627          UA       0       5      16      30      65      77      84      90      94      97
628          UA     100
             *

629          KK  539540
630          KM      Normal depth channel route from C539 to C540
631          KM      Source:  200 Scale Mapping
632          RS       5    FLOW      -1
633          RC   0.060   0.050   0.055  1872.0  0.0256
634          RX  1000.0  1007.0  1016.0  1036.0  1046.0  1080.0  1150.0  1210.0
635          RY  1750.0  1748.0  1746.0  1744.0  1744.0  1746.0  1748.0  1750.0
             *

636          KK    206E
637          KM   Sub-Basin   206E
638          KM
```

```
639          KM      The Clark Unit Hydrograph is used for this basin.
640          KM          The Urban time-area relation is used for this basin.
641          KM
642          KM      Time of Concentration for this sub-basin is based on the following:
643          KM          6-Hour Rainfall, Pattern No.  1.00
644          KM          An rainfall areal reduction factor of 1.000
645          KM
646          KM       EXCESS RAINFALL VALUES EXCEEDED IN 5-MINUTE INTERVALS
647          KM     5  10  15  20  25  30  35  40  45  50  55  60  65  70  75  80  85  90
648          KM   .46 .45 .45 .15 .11 .11 .04 .04 .04 .02 .02 .02 .01 .01 .01 .01 .01 .01
649          KM
650          KM          L=   0.343 miles, S=  175 feet/mile, Kb= .03
651          KM
652          BA   0.023
653          LG    0.09    0.25    4.30    0.36   25.75
654          UC   0.113   0.120
655          UA       0       5      16      30      65      77      84      90      94      97
656          UA     100
             *

657          KK   C540L
658          KM      Hydrograph combine 539540 + 206E at C540 left branch
659          HC       2
             *

660          KK    C540
661          KM      Hydrograph combine C540R + C540L at C540
662          HC       2
             *
             * *
             * * C540 is the end of Hesperus Wash and the start of Balboa Wash
             * *
             *
```



```
LINE         ID.......1.......2.......3.......4.......5.......6.......7.......8.......9......10

663          KK  540541
664          KM      Normal depth channel route from C540 to C541
665          KM      Source:  HEC-2 Cross Section: BA 1.645
666          RS      12    FLOW      -1
667          RC   0.065   0.035   0.065  4207.0  0.0204
668          RX  9960.8  9968.0  9975.1  9975.7  9993.2 10018.2 10297.5 10343.9
669          RY  1725.2  1721.8  1718.4  1716.2  1716.4  1718.4  1719.8  1730.5
             *

670          KK    206F
671          KM   Sub-Basin   206F
672          KM
673          KM      The Clark Unit Hydrograph is used for this basin.
674          KM          The Urban time-area relation is used for this basin.
675          KM
676          KM      Time of Concentration for this sub-basin is based on the following:
677          KM          6-Hour Rainfall, Pattern No.  1.00
678          KM          An rainfall areal reduction factor of 0.998
679          KM
680          KM       EXCESS RAINFALL VALUES EXCEEDED IN 5-MINUTE INTERVALS
681          KM     5  10  15  20  25  30  35  40  45  50  55  60  65  70  75  80  85  90
682          KM   .46 .46 .46 .15 .12 .11 .05 .05 .04 .03 .02 .02 .01 .01 .01 .01 .01 .01
683          KM
684          KM          L=   0.975 miles, S=  217 feet/mile, Kb= .03
685          KM
686          BA   0.157
687          LG    0.09    0.25    4.60    0.30   24.97
688          UC   0.179   0.154
689          UA       0       5      16      30      65      77      84      90      94      97
690          UA     100
             *

691          KK    C541
692          KM      Hydrograph combine 540541 + 206F at C541
693          HC       2
             *

694          KK  541548
695          KM      Normal depth channel route from C541 to C548
696          KM      Source:  HEC-2 Cross Section: BA 0.905
697          RS       3    FLOW      -1
698          RC   0.060   0.045   0.060  1138.0  0.0316
699          RX  9761.7  9936.7  9955.2  9986.9  9994.7 10039.2 10065.3 10066.0
700          RY  1647.4  1644.1  1638.1  1637.3  1636.2  1637.5  1652.9  1653.0
             *

701          KK    206G
702          KM   Sub-Basin   206G
703          KM
704          KM      The Clark Unit Hydrograph is used for this basin.
705          KM          The Urban time-area relation is used for this basin.
706          KM
707          KM      Time of Concentration for this sub-basin is based on the following:
708          KM          6-Hour Rainfall, Pattern No.  1.00
```



```
LINE         ID.......1.......2.......3.......4.......5.......6.......7.......8.......9......10
```

```
709          KM          An rainfall areal reduction factor of 0.999
710          KM
711          KM       EXCESS RAINFALL VALUES EXCEEDED IN 5-MINUTE INTERVALS
712          KM     5  10  15  20  25  30  35  40  45  50  55  60  65  70  75  80  85  90
713          KM   .47 .47 .46 .16 .13 .12 .05 .05 .05 .04 .03 .03 .01 .01 .01 .01 .01 .01
714          KM
715          KM          L=   0.950 miles, S=  132 feet/mile, Kb= .03
716          KM
717          BA   0.089
718          LG    0.11    0.26    5.20    0.23   29.86
719          UC   0.204   0.241
720          UA       0       5      16      30      65      77      84      90      94      97
721          UA     100
             *

722          KK  BB523R
723          KM      Retrieve previously diverted hydrograph at C523 in the right branch.
724          DR   D523R
             *

725          KK  523548
726          KM      Normal depth channel route from C523 to C548
727          KM      Source:  200 Scale Mapping
728          RS      11    FLOW      -1
729          RC   0.040   0.018   0.040  2680.0  0.0189
730          RX  1000.0  1040.0  1090.0  1130.0  1170.0  1171.2  1181.2  1196.2
731          RY  1646.0  1645.0  1643.8  1644.7  1644.0  1644.4  1646.0  1648.0
             *

732          KK   C548L
733          KM      Hydrograph combine 541548 + 206G + BB523R at C548 left branch
734          HC       3    3.72
             *
             * *
             * * C548L is the total flow in Balboa Wash above confluence with Oxford Wash
             * *
             *

735          KK    206H
736          KM   Sub-Basin   206H
737          KM
738          KM      The Clark Unit Hydrograph is used for this basin.
739          KM          The Urban time-area relation is used for this basin.
740          KM
741          KM      Time of Concentration for this sub-basin is based on the following:
742          KM          6-Hour Rainfall, Pattern No.  1.00
743          KM          An rainfall areal reduction factor of 0.999
744          KM
745          KM       EXCESS RAINFALL VALUES EXCEEDED IN 5-MINUTE INTERVALS
746          KM     5  10  15  20  25  30  35  40  45  50  55  60  65  70  75  80  85  90
747          KM   .48 .47 .47 .17 .14 .13 .06 .06 .06 .05 .05 .04 .01 .01 .01 .01 .01 .01
748          KM
749          KM          L=   0.515 miles, S=  183 feet/mile, Kb= .03
750          KM
751          BA   0.059
```



```
LINE         ID.......1.......2.......3.......4.......5.......6.......7.......8.......9......10

752          LG    0.08    0.25    5.70    0.18   36.29
753          UC   0.138   0.121
754          UA       0       5      16      30      65      77      84      90      94      97
755          UA     100
             *

756          KK  542543
757          KM      Normal depth channel route from C542 to C543
758          KM      Source:  HEC-2 Cross Section: OX 0.931
759          RS       1    FLOW      -1
760          RC   0.075   0.040   0.050   686.0  0.0066
761          RX  9846.9  9881.6  9967.5  9983.2 10010.0 10025.0 10033.8 10039.6
762          RY  1732.3  1723.5  1724.1  1717.8  1717.0  1724.0  1728.2  1730.7
             *

763          KK    206I
764          KM   Sub-Basin   206I
765          KM
766          KM      The Clark Unit Hydrograph is used for this basin.
767          KM          The Urban time-area relation is used for this basin.
768          KM
769          KM      Time of Concentration for this sub-basin is based on the following:
770          KM          6-Hour Rainfall, Pattern No.  1.00
771          KM          An rainfall areal reduction factor of 1.000
772          KM
773          KM       EXCESS RAINFALL VALUES EXCEEDED IN 5-MINUTE INTERVALS
774          KM     5  10  15  20  25  30  35  40  45  50  55  60  65  70  75  80  85  90
775          KM   .48 .47 .47 .17 .14 .13 .06 .06 .06 .05 .05 .04 .01 .01 .01 .01 .01 .01
776          KM
777          KM          L=   0.232 miles, S=  286 feet/mile, Kb= .03
778          KM
779          BA   0.021
780          LG    0.08    0.25    5.70    0.18   34.78
781          UC   0.083   0.066
782          UA       0       5      16      30      65      77      84      90      94      97
```

```
783          UA     100
             *

784          KK    C543
785          KM      Hydrograph combine 542543 + 206I at C543
786          HC       2
             *

787          KK   D543L
788          KM      Hydrograph diversion at C543.  Main flow continues in the left branch.
789          KM      Diverted flow is in the right branch.
790          DT   D543R
791          DI       0      38      45      50      65      85      97     122     141     162
792          DI     194     350     395     432     475     522     570     612
793          DQ       0      38      45      50      65      85      97     122     141     162
794          DQ     194     350     395     425     460     500     540     575
             *
```



```
LINE         ID.......1.......2.......3.......4.......5.......6.......7.......8.......9......10

795          KK  543544
796          KM      Normal depth channel route from C543 to C544
797          KM      Source:  200 Scale Mapping & Hydrology Field Reconnaissance
798          RS       1    FLOW      -1
799          RC   0.040   0.018   0.040   597.0  0.0277
800          RX  1000.0  1020.0  1045.0  1075.0  1105.0  1106.2  1146.2  1266.2
801          RY  1720.0  1718.0  1712.0  1712.3  1712.0  1712.4  1714.0  1720.0
             *

802          KK    206K
803          KM   Sub-Basin   206K
804          KM
805          KM      The Clark Unit Hydrograph is used for this basin.
806          KM          The Urban time-area relation is used for this basin.
807          KM
808          KM      Time of Concentration for this sub-basin is based on the following:
809          KM          6-Hour Rainfall, Pattern No.  1.00
810          KM          An rainfall areal reduction factor of 0.999
811          KM
812          KM       EXCESS RAINFALL VALUES EXCEEDED IN 5-MINUTE INTERVALS
813          KM     5  10  15  20  25  30  35  40  45  50  55  60  65  70  75  80  85  90
814          KM   .47 .47 .47 .16 .13 .13 .06 .06 .05 .04 .04 .03 .01 .01 .01 .01 .01 .01
815          KM
816          KM          L=   0.615 miles, S=  255 feet/mile, Kb= .03
817          KM
818          BA   0.056
819          LG    0.09    0.25    5.70    0.18   25.80
820          UC   0.133   0.139
821          UA       0       5      16      30      65      77      84      90      94      97
822          UA     100
             *

823          KK    C544
824          KM      Hydrograph combine 543544 + 206K at C544
825          HC       2
             *

826          KK  544545
827          KM      Normal depth channel route from C544 to C545
828          KM      Source:  200 Scale Mapping & Hydrology Field Reconnaissance
829          RS       1    FLOW      -1
830          RC   0.040   0.018   0.040   985.0  0.0234
831          RX  1000.0  1008.0  1018.0  1048.0  1078.0  1079.2  1089.2  1109.2
832          RY  1690.0  1688.0  1686.0  1686.3  1686.0  1686.4  1688.0  1689.0
             *

833          KK   D545L
834          KM      Hydrograph diversion at C545.  Main flow continues in the left branch.
835          KM      Diverted flow is in the right branch.
836          DT   D545R
837          DI       0      50     100     200     400     800    1600    3200    5000
838          DQ       0      25      50     100     200     400     800    1600    2500
             *
```



```
LINE         ID.......1.......2.......3.......4.......5.......6.......7.......8.......9......10

839          KK  545546
840          KM      Normal depth channel route from C545 to C546
841          KM      Source:  200 Scale Mapping & Hydrology Field Reconnaissance
842          RS       1    FLOW      -1
843          RC   0.040   0.018   0.040   428.0  0.0164
844          RX  1000.0  1020.0  1050.0  1080.0  1110.0  1111.2  1121.2  1151.2
845          RY  1680.0  1678.0  1676.0  1676.3  1676.0  1676.4  1678.0  1678.5
             *

846          KK    206L
847          KM   Sub-Basin   206L
848          KM
849          KM      The Clark Unit Hydrograph is used for this basin.
850          KM          The Urban time-area relation is used for this basin.
851          KM
```

```
852          KM      Time of Concentration for this sub-basin is based on the following:
853          KM          6-Hour Rainfall, Pattern No.  1.00
854          KM          An rainfall areal reduction factor of 0.999
855          KM
856          KM       EXCESS RAINFALL VALUES EXCEEDED IN 5-MINUTE INTERVALS
857          KM     5  10  15  20  25  30  35  40  45  50  55  60  65  70  75  80  85  90
858          KM   .47 .47 .47 .16 .13 .13 .06 .06 .05 .04 .04 .03 .01 .01 .01 .01 .01 .01
859          KM
860          KM          L=   0.546 miles, S=  231 feet/mile, Kb= .03
861          KM
862          BA   0.060
863          LG    0.09    0.25    5.80    0.18   25.01
864          UC   0.129   0.117
865          UA       0       5      16      30      65      77      84      90      94      97
866          UA     100
             *

867          KK    C546
868          KM      Hydrograph combine 545546 + 206L at C546
869          HC       2
             *

870          KK  546547
871          KM      Normal depth channel route from C546 to C547
872          KM      Source:  200 Scale Mapping
873          RS       1    FLOW      -1
874          RC   0.040   0.018   0.040   749.0  0.0327
875          RX  1000.0  1005.0  1011.0  1013.0  1029.0  1047.0  1052.0  1057.0
876          RY  1666.0  1664.0  1662.0  1661.9  1662.4  1662.0  1664.0  1666.0
             *

877          KK  BB543R
878          KM      Retrieve previously diverted hydrograph at C543 in the right branch.
879          DR   D543R
             *
```



```
LINE         ID.......1.......2.......3.......4.......5.......6.......7.......8.......9......10

880          KK  543547
881          KM      Normal depth channel route from C543 to C547
882          KM      Source:  HEC-2 Cross Section: OX 0.638
883          RS       5    FLOW      -1
884          RC   0.075   0.040   0.050  2395.0  0.0278
885          RX  9720.9  9769.0  9970.7  9985.5 10020.0 10038.1 10097.0 10102.0
886          RY  1690.4  1681.2  1683.1  1676.2  1677.0  1687.1  1687.4  1690.0
             *

887          KK  BB545R
888          KM      Retrieve previously diverted hydrograph at C545 in the right branch.
889          DR   D545R
             *

890          KK  545547
891          KM      Normal depth channel route from C545 to C547
892          KM      Source:  HEC-2 Cross Section: OX 0.542
893          RS       3    FLOW      -1
894          RC   0.075   0.040   0.050  1216.0  0.0259
895          RX  9668.2  9778.4  9957.9  9986.0 10012.7 10043.6 10067.6 10163.4
896          RY  1674.1  1674.1  1673.3  1662.1  1662.2  1680.4  1680.9  1681.1
             *

897          KK    206J
898          KM   Sub-Basin   206J
899          KM
900          KM      The Clark Unit Hydrograph is used for this basin.
901          KM          The Urban time-area relation is used for this basin.
902          KM
903          KM      Time of Concentration for this sub-basin is based on the following:
904          KM          6-Hour Rainfall, Pattern No.  1.00
905          KM          An rainfall areal reduction factor of 0.999
906          KM
907          KM       EXCESS RAINFALL VALUES EXCEEDED IN 5-MINUTE INTERVALS
908          KM     5  10  15  20  25  30  35  40  45  50  55  60  65  70  75  80  85  90
909          KM   .48 .48 .48 .17 .14 .14 .06 .06 .06 .05 .05 .05 .01 .01 .01 .01 .01 .01
910          KM
911          KM          L=   0.502 miles, S=  214 feet/mile, Kb= .03
912          KM
913          BA   0.060
914          LG    0.08    0.25    5.70    0.18   44.51
915          UC   0.125   0.105
916          UA       0       5      16      30      65      77      84      90      94      97
917          UA     100
             *

918          KK    C547
919          KM      Hydrograph combine 546547 + 543547 + 545547 + 206J at C547
920          HC       4    0.26
             *
```



```
LINE         ID.......1.......2.......3.......4.......5.......6.......7.......8.......9......10
```

```
921          KK  547548
922          KM      Normal depth channel route from C547 to C548
923          KM      Source:  HEC-2 Cross Section: OX 0.235
924          RS       3    FLOW      -1
925          RC   0.075   0.040   0.050  2165.0  0.0182
926          RX  9910.0  9911.4  9968.5  9987.6 10017.4 10032.3 10077.4 10080.0
927          RY  1639.0  1638.9  1637.9  1635.7  1635.8  1641.7  1642.9  1643.0
             *

928          KK    206M
929          KM   Sub-Basin   206M
930          KM
931          KM      The Clark Unit Hydrograph is used for this basin.
932          KM          The Urban time-area relation is used for this basin.
933          KM
934          KM      Time of Concentration for this sub-basin is based on the following:
935          KM          6-Hour Rainfall, Pattern No.  1.00
936          KM          An rainfall areal reduction factor of 0.999
937          KM
938          KM       EXCESS RAINFALL VALUES EXCEEDED IN 5-MINUTE INTERVALS
939          KM     5  10  15  20  25  30  35  40  45  50  55  60  65  70  75  80  85  90
940          KM   .48 .47 .47 .17 .14 .13 .06 .06 .06 .05 .05 .04 .01 .01 .01 .01 .01 .01
941          KM
942          KM          L=   0.465 miles, S=  166 feet/mile, Kb= .03
943          KM
944          BA   0.060
945          LG    0.08    0.25    5.20    0.23   46.18
946          UC   0.133   0.107
947          UA      0       5      16      30      65      77      84      90      94      97
948          UA    100
             *

949          KK   C548R
950          KM      Hydrograph combine 547548 + 206M at C548 right branch
951          HC       2
             *
             * *
             * * C548R is the total flow in Oxford Wash above confluence with Balboa Wash
             * *
             *

952          KK    C548
953          KM      Hydrograph combine C548L + C548R at C548
954          HC       2
             *
             * *
             * * C548 is the total flow in Balboa Wash below the confluence of Balboa Wash
             * * and Oxford Wash
             * *
             *
```



```
LINE         ID.......1.......2.......3.......4.......5.......6.......7.......8.......9......10

955          KK  548549
956          KM      Normal depth channel route from C548 to C549
957          KM      Source:  HEC-2 Cross Section: BA0.246
958          RS       9    FLOW      -1
959          RC   0.070   0.080   0.070  3258.0  0.0172
960          RX  9889.1  9912.5  9940.2  9960.0 10026.1 10046.8 10067.8 10079.3
961          RY  1586.2  1585.7  1577.5  1573.6  1573.2  1579.5  1585.7  1586.2
             *

962          KK    206N
963          KM   Sub-Basin   206N
964          KM
965          KM      The Clark Unit Hydrograph is used for this basin.
966          KM          The Urban time-area relation is used for this basin.
967          KM
968          KM      Time of Concentration for this sub-basin is based on the following:
969          KM          6-Hour Rainfall, Pattern No.  1.00
970          KM          An rainfall areal reduction factor of 0.998
971          KM
972          KM       EXCESS RAINFALL VALUES EXCEEDED IN 5-MINUTE INTERVALS
973          KM     5  10  15  20  25  30  35  40  45  50  55  60  65  70  75  80  85  90
974          KM   .48 .47 .47 .17 .14 .13 .06 .06 .06 .05 .05 .05 .01 .01 .01 .01 .01 .01
975          KM
976          KM          L=   0.767 miles, S=  120 feet/mile, Kb= .03
977          KM
978          BA   0.152
979          LG    0.11    0.27    4.65    0.29   52.66
980          UC   0.188   0.137
981          UA      0       5      16      30      65      77      84      90      94      97
982          UA    100
             *

983          KK   C549L
984          KM      Hydrograph combine 548549 + 206N at C549 left branch
985          HC       2
             *
             * *
             * * C549L is the total flow in Balboa Wash above confluence with Ashbrook Wash
             * *
             * * End Basin 206.  Start Basin 207
```

```
                 * *
                 *
 986             KK   C5990
 987             KM      The following is the design outflow hydrograph from Golden Eagle Park Dam
 988             IN       1
 989             BA    7.13
 990             QI       0       0       0       1       1       2       2       3       3       4
 991             QI       4       4       5       5       6       6       6       7       7       7
 992             QI       7       7       8       8       9      10      11      11      12      13
 993             QI      14      15      16      17      18      19      20      22      23      24
 994             QI      24      25      26      27      28      29      30      31      31      33
 995             QI      34      35      36      38      39      40      41      43      44      46
 996             QI      47      48      50      51      52      54      55      56      58      59
1                                          HEC-1 INPUT                                          PAGE 24

LINE             ID.......1.......2.......3.......4.......5.......6.......7.......8.......9......10

 997             QI      60      62      63      65      66      68      70      71      73      75
 998             QI      76      78      80      82      84      86      88      91      93      96
 999             QI      98     101     104     106     109     111     114     117     120     122
1000             QI     125     127     130     132     135     137     139     141     144     146
1001             QI     148     150     152     153     156     158     161     163     165     167
1002             QI     169     171     172     173     176     178     180     182     183     184
1003             QI     187     189     190     191     193     194     197     198     199     201
1004             QI     202     204     205     206     208     209     210     211     212     213
1005             QI     214     215     216     217     218     219     220     221     222     223
1006             QI     224     225     226     227     228     229     230     231     232     233
1007             QI     234     235     236     238     239     240     241     242     243     245
1008             QI     246     247     248     250     252     255     258     261     264     267
1009             QI     270     273     276     279     283     286     290     296     304     315
1010             QI     329     344     354     368     384     401     418     435     454     466
1011             QI     477     492     510     533     563     601     645     675     702     733
1012             QI     768     806     825     836     848     862     878     895     914     935
1013             QI     949     958     968     979     991    1004    1017    1032    1046    1059
1014             QI    1069    1078    1088    1098    1108    1119    1129    1139    1149    1158
1015             QI    1165    1172    1179    1186    1192    1199    1206    1212    1218    1224
1016             QI    1230    1235    1240    1244    1248    1251    1255    1258    1260    1263
1017             QI    1265    1268    1270    1272    1274    1276    1278    1280    1282    1284
1018             QI    1285    1287    1289    1291    1293    1295    1296    1298    1300    1302
1019             QI    1304    1306    1308    1310    1312    1314    1316    1317    1319    1320
1020             QI    1321    1322    1324    1325    1325    1326    1327    1327    1328    1328
1021             QI    1329    1329    1329    1329    1329    1329    1329    1329    1329    1329
1022             QI    1329    1328    1328    1328    1327    1327    1326    1326    1325    1324
1023             QI    1324    1323    1322    1321    1320    1319    1318    1317    1316    1315
1024             QI    1314    1313    1312    1310    1309    1308    1307    1306    1305    1304
1025             QI    1302    1301    1300    1299    1298    1296    1295    1294    1293    1292
1026             QI    1290    1289    1288    1287    1286    1284    1283    1282    1281    1280
1027             QI    1279    1277    1276    1275    1274    1273    1271    1270    1269    1268
1028             QI    1267    1266    1264    1263    1262    1261    1260    1258    1257    1256
1029             QI    1255    1254    1253    1251    1250    1249    1248    1247    1245    1244
1030             QI    1243    1242    1241    1239    1238    1236    1234    1233    1231    1230
1031             QI    1228    1227    1225    1224    1222    1221    1219    1218    1216    1215
1032             QI    1213    1212    1210    1209    1207    1206    1205    1203    1202    1200
1033             QI    1199    1197    1196    1194    1193    1192    1190    1189    1187    1186
1034             QI    1185    1183    1182    1180    1179    1178    1176    1175    1174    1172
1035             QI    1171    1169    1168    1167    1165    1164    1163    1161    1160    1159
1036             QI    1157    1156    1155    1153    1152    1150    1148    1146    1144    1142
1037             QI    1141    1139    1137    1135    1133    1132    1130    1128    1126    1124
1038             QI    1123    1121    1119    1117    1116    1114    1112    1110    1109    1107
1039             QI    1105    1103    1102    1100    1098    1097    1095    1093    1091    1090
1040             QI    1088    1086    1085    1083    1081    1080    1078    1076    1075    1073
1041             QI    1071    1070    1068    1066    1065    1063    1061    1060    1058    1056
1042             QI    1054    1051    1048    1045    1043    1040    1037    1034    1031    1029
1043             QI    1026    1023    1020    1017    1015    1012    1009    1006    1003    1000
1044             QI     997     995     992     989     986     983     980     977     974     971
1045             QI     967     964     961     958     955     952     949     945     939     930
1046             QI     922     913     905     897     889     881     874     866     858     851
1047             QI     844     837     830     823     810     783     759     739     721     705
1048             QI     691     678     667     654     635     621     611     604     598     593
1049             QI     589     586     583     580     578     576     573     571     569     567
1050             QI     564     562     560     558     555     553     551     549     547     545
1051             QI     542     540     538     536     534     531     529     527     525     522
1                                          HEC-1 INPUT                                          PAGE 25

LINE             ID.......1.......2.......3.......4.......5.......6.......7.......8.......9......10

1052             QI     520     518     516     514     512     509     507     506     504     502
1053             QI     500     498     496     494     492     491     489     487     485     484
1054             QI     482     480     478     477     475     473     472     470     469     467
1055             QI     466     464     463     461     460     457     455     454     452     451
1056             QI     449     448     447     445     444     443     441     440     439     437
1057             QI     436     435     433     432     430     429     427     426     424     423
1058             QI     421     419     416     414     411     408     405     402     399     396
1059             QI     393     390     387     384     381     378     375     371     368     365
1060             QI     362     360     357     354     351     348     346     343     339     336
1061             QI     333     331     328     325     323     320     317     314     312     309
1062             QI     306     303     299     296     293     290     287     284     281     278
1063             QI     275     272     269     266     264     261     258     256     253     251
1064             QI     249     246     244     242     240     238     236     234     232     230
1065             QI     228     226     224     221     219     217     215     213     211     209
1066             QI     207     205     203     201     199     197     195     193     192     191
1067             QI     188     187     186     184     183     181     180     178     177     175
1068             QI     174     173     171     170     169     167     166     164     163     162
1069             QI     160     159     158     156     155     154     153     152     150     149
```

```
1070        QI     148     147     146     145     144     143     141     140     139     138
1071        QI     137     136     135     134     133     132     131     130     129     128
1072        QI     127     126     125     125     124     123     122     122     121     120
1073        QI     119     119     118     117     116     115     115     114     113     112
1074        QI     111     110     109     108     107     107     106     105     104     103
1075        QI     102     101     100      99      98      97      96      96      95      94
1076        QI      93      92      91      90      89      88      87      86      85      83
1077        QI      82      81      79      78      76      75      73      72      71      69
1078        QI      68      67      66      64      63      62      61      60      59      58
1079        QI      57      56      55      54      54      53      52      51      50      50
1080        QI      49      48      47      47      46      46      46      45      45      44
1081        QI      44      43      43      42      42      41      41      40      40      39
1082        QI      39      38      38      37      37      37      36      36      35      35
1083        QI      35      34      34      34      33      33      32      32      32      31
1084        QI      31      31      30      30      30      29      29      28      28      27
1085        QI      27      26      25      24      23      23      22      21      20      19
1086        QI      18      18      17      16      15      15      14      14      13      12
1087        QI      12      11      11      10      10       9       9       9       8       8
1088        QI       8       7       7       7       6       6       6       6       5       5
1089        QI       5       5       4       4       4       4       4       4       3       3
1090        QI       3       3       3       3       3       3       2       2       2       2
1091        QI       2       2       2       2       2       2       2       1       1       1
1092        QI       1       1       1       1       1       1       1       1       1       1
1093        QI       1       1       1       1       1       1       1       1       1       1
1094        QI       1       1       1       0       0       0       0       0       0       0
1095        QI       0       0       0       0       0       0       0       0       0       0
1096        QI       0       0       0       0       0       0       0       0       0       0
1097        QI       0       0       0       0       0       0       0       0       0       0

1098        IN      15
            *
            * * End Basin 210.  Start Basin 211
            * *
            *
```



```
LINE        ID.......1.......2.......3.......4.......5.......6.......7.......8.......9......10

1099        KK  599608
1100        KM      Normal depth channel route from C599 to C608
1101        KM      Source:  HEC-2 Cross Section: AS 3.621
1102        RS       2    FLOW      -1
1103        RC   0.055   0.045   0.025  1476.0  0.0148
1104        RX  9675.4  9726.8  9929.0  9990.7 10005.9 10033.3 10061.9 10082.2
1105        RY  1691.3  1687.2  1685.5  1678.6  1678.1  1682.1  1689.8  1691.8
            *

1106        KK    211K
1107        KM   Sub-Basin   211K
1108        KM
1109        KM      The Clark Unit Hydrograph is used for this basin.
1110        KM          The Urban time-area relation is used for this basin.
1111        KM
1112        KM      Time of Concentration for this sub-basin is based on the following:
1113        KM          6-Hour Rainfall, Pattern No.  1.00
1114        KM          An rainfall areal reduction factor of 0.999
1115        KM
1116        KM       EXCESS RAINFALL VALUES EXCEEDED IN 5-MINUTE INTERVALS
1117        KM     5  10  15  20  25  30  35  40  45  50  55  60  65  70  75  80  85  90
1118        KM   .48 .47 .47 .17 .13 .13 .06 .06 .06 .05 .04 .03 .01 .01 .01 .01 .01 .01
1119        KM
1120        KM          L=   0.376 miles, S=  157 feet/mile, Kb= .03
1121        KM
1122        BA   0.102
1123        LG    0.13    0.27    6.00    0.16   31.48
1124        UC   0.121   0.060
1125        UA       0       5      16      30      65      77      84      90      94      97
1126        UA     100
            *

1127        KK   C608L
1128        KM      Hydrograph combine 599608 + 211K at C608 left branch
1129        HC       2
            *

1130        KK    211G
1131        KM   Sub-Basin   211G
1132        KM
1133        KM      The Clark Unit Hydrograph is used for this basin.
1134        KM          The Urban time-area relation is used for this basin.
1135        KM
1136        KM      Time of Concentration for this sub-basin is based on the following:
1137        KM          6-Hour Rainfall, Pattern No.  1.00
1138        KM          An rainfall areal reduction factor of 1.000
1139        KM
1140        KM       EXCESS RAINFALL VALUES EXCEEDED IN 5-MINUTE INTERVALS
1141        KM     5  10  15  20  25  30  35  40  45  50  55  60  65  70  75  80  85  90
1142        KM   .50 .50 .50 .19 .16 .16 .08 .08 .08 .08 .08 .08 .02 .02 .02 .02 .02 .02
1143        KM
1144        KM          L=   0.448 miles, S=  190 feet/mile, Kb= .04
1145        KM
1146        BA   0.008
```

```
LINE          ID.......1.......2.......3.......4.......5.......6.......7.......8.......9......10

1147          LG    0.06    0.25    5.70    0.18   90.00
1148          UC   0.142   0.359
1149          UA       0       5      16      30      65      77      84      90      94      97
1150          UA     100
              *

1151          KK  604606
1152          KM      Normal depth channel route from C604 to C606
1153          KM      Source:  200 Scale Mapping
1154          RS      11    FLOW      -1
1155          RC   0.040   0.018   0.040  2784.0  0.0647
1156          RX  1000.0  1040.0  1060.0  1076.0  1092.0  1093.2  1098.2  1113.2
1157          RY  1814.0  1811.0  1810.8  1811.1  1810.8  1811.2  1812.0  1816.0
              *

1158          KK    211I
1159          KM   Sub-Basin   211I
1160          KM
1161          KM      The Clark Unit Hydrograph is used for this basin.
1162          KM          The Urban time-area relation is used for this basin.
1163          KM
1164          KM      Time of Concentration for this sub-basin is based on the following:
1165          KM          6-Hour Rainfall, Pattern No.  1.00
1166          KM          An rainfall areal reduction factor of 0.999
1167          KM
1168          KM       EXCESS RAINFALL VALUES EXCEEDED IN 5-MINUTE INTERVALS
1169          KM     5  10  15  20  25  30  35  40  45  50  55  60  65  70  75  80  85  90
1170          KM   .48 .48 .48 .17 .14 .14 .06 .06 .06 .06 .05 .05 .01 .01 .01 .01 .01 .01
1171          KM
1172          KM          L=   0.626 miles, S=  257 feet/mile, Kb= .03
1173          KM
1174          BA   0.041
1175          LG    0.08    0.25    5.70    0.18   45.00
1176          UC   0.133   0.168
1177          UA       0       5      16      30      65      77      84      90      94      97
1178          UA     100
              *

1179          KK   C606R
1180          KM      Hydrograph combine 604606 + 211I at C606 right branch
1181          HC       2
              *

1182          KK    211H
1183          KM   Sub-Basin   211H
1184          KM
1185          KM      The Clark Unit Hydrograph is used for this basin.
1186          KM          The Urban time-area relation is used for this basin.
1187          KM
1188          KM      Time of Concentration for this sub-basin is based on the following:
1189          KM          6-Hour Rainfall, Pattern No.  1.00
1190          KM          An rainfall areal reduction factor of 0.999
1191          KM
1192          KM       EXCESS RAINFALL VALUES EXCEEDED IN 5-MINUTE INTERVALS
1193          KM     5  10  15  20  25  30  35  40  45  50  55  60  65  70  75  80  85  90
```



```
LINE          ID.......1.......2.......3.......4.......5.......6.......7.......8.......9......10

1194          KM   .47 .47 .47 .16 .13 .12 .06 .06 .05 .04 .04 .03 .00 .00 .00 .00 .00 .00
1195          KM
1196          KM          L=   0.501 miles, S=  289 feet/mile, Kb= .03
1197          KM
1198          BA   0.073
1199          LG    0.09    0.25    6.00    0.16   17.93
1200          UC   0.117   0.087
1201          UA       0       5      16      30      65      77      84      90      94      97
1202          UA     100
              *

1203          KK   C605O
1204          KM      Reservoir route at C605.
1205          RS       1    ELEV  1722.5
1206          SV    0.00    0.20    0.20    0.20    0.20    0.30    0.30    0.30    0.40    0.60
1207          SV    0.70    0.90    1.00    1.20    1.40    1.60    1.90    2.80    3.40    4.10
1208          SE  1722.5  1726.8  1727.0  1727.2  1727.4  1727.6  1727.8  1728.0  1728.2  1728.4
1209          SE  1728.6  1728.8  1729.0  1729.2  1729.4  1729.6  1730.0  1730.4  1730.7  1731.0
1210          SQ       0       0       5      10      20      43      63      73      78      85
1211          SQ      91      96     101     105     109     113     122     130     136     200
              *

1212          KK    C606
1213          KM      Hydrograph combine C606R + C605O at C606
1214          HC       2
              *

1215          KK  606607
1216          KM      Normal depth channel route from C606 to C607
1217          KM      Source:  200 Scale Mapping
1218          RS       2    FLOW      -1
1219          RC   0.020   0.055   0.035  1061.0  0.0286
1220          RX  1000.0  1032.0  1082.0  1095.0  1105.0  1117.0  1123.0  1153.0
1221          RY  1704.3  1704.0  1703.5  1700.0  1700.0  1703.0  1704.0  1706.0
```

```
                *
1222            KK    211J
1223            KM   Sub-Basin    211J
1224            KM
1225            KM      The Clark Unit Hydrograph is used for this basin.
1226            KM          The Urban time-area relation is used for this basin.
1227            KM
1228            KM      Time of Concentration for this sub-basin is based on the following:
1229            KM          6-Hour Rainfall, Pattern No.  1.00
1230            KM          An rainfall areal reduction factor of 1.000
1231            KM
1232            KM       EXCESS RAINFALL VALUES EXCEEDED IN 5-MINUTE INTERVALS
1233            KM     5  10  15  20  25  30  35  40  45  50  55  60  65  70  75  80  85  90
1234            KM   .48 .48 .48 .17 .14 .14 .06 .06 .06 .05 .05 .05 .01 .01 .01 .01 .01 .01
1235            KM
1236            KM          L=   0.249 miles, S=  166 feet/mile, Kb= .03
1237            KM
1238            BA   0.015
1239            LG    0.08    0.23    6.20    0.16   39.19
1240            UC   0.096   0.099
1                                          HEC-1 INPUT                                          PAGE 29

LINE            ID.......1.......2.......3.......4.......5.......6.......7.......8.......9......10

1241            UA       0       5      16      30      65      77      84      90      94      97
1242            UA     100
                *

1243            KK    C607
1244            KM      Hydrograph combine 606607 + 211J at C607
1245            HC       2
                *

1246            KK  607608
1247            KM      Normal depth channel route from C607 to C608
1248            KM      Source:  200 Scale Mapping
1249            RS       2    FLOW      -1
1250            RC   0.040   0.050   0.035  1008.0  0.0145
1251            RX  1000.0  1060.0  1070.0  1082.0  1083.0  1095.0  1115.0  1133.0
1252            RY  1688.0  1686.0  1684.0  1681.0  1681.0  1684.0  1685.0  1685.4
                *

1253            KK    C608
1254            KM      Hydrograph combine C608L + 607608 at C608
1255            HC       2
                *

1256            KK  608613
1257            KM      Normal depth channel route from C608 to C613
1258            KM      Source:  HEC-2 Cross Section: AS 3.421
1259            RS       2    FLOW      -1
1260            RC   0.100   0.045   0.100  1338.0  0.0202
1261            RX  9885.0  9887.9  9957.3  9986.7 10012.9 10054.7 10086.3 10122.2
1262            RY  1670.2  1670.1  1668.0  1660.0  1659.9  1661.6  1669.9  1670.8
                *
                * *
                * * Move to the top of Sunflower Wash
                * *
                *

1263            KK    211M
1264            KM   Sub-Basin    211M
1265            KM
1266            KM      The Clark Unit Hydrograph is used for this basin.
1267            KM          The Urban time-area relation is used for this basin.
1268            KM
1269            KM      Time of Concentration for this sub-basin is based on the following:
1270            KM          6-Hour Rainfall, Pattern No.  1.00
1271            KM          An rainfall areal reduction factor of 0.999
1272            KM
1273            KM       EXCESS RAINFALL VALUES EXCEEDED IN 5-MINUTE INTERVALS
1274            KM     5  10  15  20  25  30  35  40  45  50  55  60  65  70  75  80  85  90
1275            KM   .48 .48 .48 .17 .14 .14 .07 .07 .06 .06 .06 .05 .01 .01 .01 .01 .01 .01
1276            KM
1277            KM          L=   0.541 miles, S=  266 feet/mile, Kb= .03
1278            KM
1279            BA   0.081
1280            LG    0.07    0.25    5.70    0.18   50.05
1281            UC   0.125   0.094
1                                          HEC-1 INPUT                                          PAGE 30

LINE            ID.......1.......2.......3.......4.......5.......6.......7.......8.......9......10

1282            UA       0       5      16      30      65      77      84      90      94      97
1283            UA     100
                *

1284            KK  610611
1285            KM      Normal depth channel route from C610 to 1611
1286            KM      Source:  HEC-2 Cross Section: SU 0.216
1287            RS       2    FLOW      -1
1288            RC   0.050   0.045   0.050  1090.0  0.0211
1289            RX  9911.9  9948.1  9973.6  9988.6 10007.1 10027.0 10049.8 10143.7
1290            RY  1699.3  1691.7  1686.3  1680.1  1679.7  1686.6  1687.3  1698.6
```

```
                *
1291            KK    211N
1292            KM   Sub-Basin   211N
1293            KM
1294            KM      The Clark Unit Hydrograph is used for this basin.
1295            KM          The Urban time-area relation is used for this basin.
1296            KM
1297            KM      Time of Concentration for this sub-basin is based on the following:
1298            KM          6-Hour Rainfall, Pattern No.  1.00
1299            KM          An rainfall areal reduction factor of 1.000
1300            KM
1301            KM       EXCESS RAINFALL VALUES EXCEEDED IN 5-MINUTE INTERVALS
1302            KM     5  10  15  20  25  30  35  40  45  50  55  60  65  70  75  80  85  90
1303            KM   .49 .48 .48 .18 .15 .14 .07 .07 .07 .06 .06 .06 .01 .01 .01 .01 .01 .01
1304            KM
1305            KM          L=   0.261 miles, S=  235 feet/mile, Kb= .03
1306            KM
1307            BA   0.020
1308            LG    0.07    0.25    5.70    0.18   56.58
1309            UC   0.088   0.078
1310            UA      0       5      16      30      65      77      84      90      94      97
1311            UA    100
                *

1312            KK   C611R
1313            KM      Hydrograph combine 610611 + 211N at C611 right branch
1314            HC       2
                *

1315            KK    211O
1316            KM   Sub-Basin   211O
1317            KM
1318            KM      The Clark Unit Hydrograph is used for this basin.
1319            KM          The Urban time-area relation is used for this basin.
1320            KM
1321            KM      Time of Concentration for this sub-basin is based on the following:
1322            KM          6-Hour Rainfall, Pattern No.  1.00
1323            KM          An rainfall areal reduction factor of 0.999
1324            KM
1325            KM       EXCESS RAINFALL VALUES EXCEEDED IN 5-MINUTE INTERVALS
1326            KM     5  10  15  20  25  30  35  40  45  50  55  60  65  70  75  80  85  90
1327            KM   .48 .48 .48 .17 .14 .14 .06 .06 .06 .06 .05 .05 .01 .01 .01 .01 .01 .01
1328            KM
```



```
LINE            ID.......1.......2.......3.......4.......5.......6.......7.......8.......9......10

1329            KM          L=   0.371 miles, S=  257 feet/mile, Kb= .03
1330            KM
1331            BA   0.041
1332            LG    0.08    0.25    5.70    0.18   45.31
1333            UC   0.104   0.084
1334            UA      0       5      16      30      65      77      84      90      94      97
1335            UA    100
                *

1336            KK   C609O
1337            KM      Reservoir route at C609.
1338            RS       1    ELEV  1694.0
1339            SV    0.00    0.10    0.21    0.50    0.86    1.40    1.93    2.60    3.10    3.20
1340            SV    3.39    3.60    3.80    4.00    4.10    4.30    4.50    4.70    4.90    5.10
1341            SE  1694.0  1695.0  1696.0  1697.0  1698.0  1699.0  1700.0  1701.0  1701.6  1701.8
1342            SE  1702.0  1702.2  1702.4  1702.6  1702.8  1703.0  1703.2  1703.4  1703.6  1703.8
1343            SQ       0       6      16      33      48      59      68      75      79      85
1344            SQ     108     149     209     289     390     512     658     829    1025    1247
                *

1345            KK  609611
1346            KM      Normal depth channel route from C609 to C611
1347            KM      Source:  200 Scale Mapping
1348            RS       2    FLOW      -1
1349            RC   0.035   0.050   0.035   470.0  0.0200
1350            RX  1000.0  1025.0  1050.0  1054.0  1064.0  1068.0  1088.0  1103.0
1351            RY  1690.0  1688.0  1684.0  1682.0  1682.0  1684.0  1688.0  1690.0
                *

1352            KK   C611I
1353            KM      Hydrograph combine 609611 + C611R at C611I
1354            HC       2
                *

1355            KK   C611O
1356            KM      Reservoir route at C611.
1357            RS       1    ELEV  1668.4
1358            SV    0.00    0.41    1.10    2.49    4.34    6.64    6.72    6.81    6.89    6.97
1359            SV    7.06    7.14    7.22    7.31    7.39    7.47    7.56    7.64    7.72    7.81
1360            SE  1674.0  1676.0  1678.0  1680.0  1682.0  1684.0  1684.2  1684.4  1684.6  1684.8
1361            SE  1685.0  1685.2  1685.4  1685.6  1685.8  1686.0  1686.2  1686.4  1686.6  1686.8
1362            SQ       0       0      86     117     141     162     164     170     181     199
1363            SQ     225     262     313     378     460     558     673     807     958    1118
                *

1364            KK   D611L
1365            KM      Hydrograph diversion at C611.  Main flow continues in the left branch.
```

```
1366        KM      Diverted flow is in the right branch.
1367        DT   D611R
1368        DI       0       0      86     117     141     162     164     170     181     199
1369        DI     225     262     313     378     460     558     673     807     958    1118
1370        DQ       0       0      86     117     141     162     164     165     167     169
1371        DQ     171     173     175     176     178     180     182     183     185     187
            *
```



```
LINE        ID.......1.......2.......3.......4.......5.......6.......7.......8.......9......10

1372        KK  611612
1373        KM      Normal depth channel route from C611 to C612
1374        KM      Source:  200 Scale Mapping
1375        RS       4    FLOW      -1
1376        RC   0.040   0.018   0.040   925.0  0.0270
1377        RX  1000.0  1020.0  1023.0  1041.0  1059.0  1060.2  1071.2  1136.2
1378        RY  1666.0  1664.0  1663.5  1663.9  1663.5  1663.9  1664.0  1666.0
            *

1379        KK    211P
1380        KM   Sub-Basin   211P
1381        KM
1382        KM      The Clark Unit Hydrograph is used for this basin.
1383        KM          The Urban time-area relation is used for this basin.
1384        KM
1385        KM      Time of Concentration for this sub-basin is based on the following:
1386        KM          6-Hour Rainfall, Pattern No.  1.00
1387        KM          An rainfall areal reduction factor of 1.000
1388        KM
1389        KM       EXCESS RAINFALL VALUES EXCEEDED IN 5-MINUTE INTERVALS
1390        KM     5  10  15  20  25  30  35  40  45  50  55  60  65  70  75  80  85  90
1391        KM   .49 .49 .49 .18 .15 .15 .07 .07 .07 .07 .07 .07 .01 .01 .01 .01 .01 .01
1392        KM
1393        KM          L=   0.307 miles, S=  192 feet/mile, Kb= .03
1394        KM
1395        BA   0.033
1396        LG    0.08    0.15    7.00    0.11   45.00
1397        UC   0.100   0.077
1398        UA       0       5      16      30      65      77      84      90      94      97
1399        UA     100
            *

1400        KK    C612
1401        KM      Hydrograph combine 611612 + 211P at C612
1402        HC       2
            *
            * *
            * * NOTE: 612613 is too short to route
            * *
            *

1403        KK    C613
1404        KM      Hydrograph combine 608613 + C612 at C613
1405        HC       2
            *

1406        KK  613621
1407        KM      Normal depth channel route from C613 to C621
1408        KM      Source:  HEC-2 Cross Section: AS 3.241
1409        RS       1    FLOW      -1
1410        RC   0.100   0.045   0.100   718.0  0.0251
1411        RX  9695.4  9884.0  9985.0  9991.1 10033.8 10062.8 10097.5 10165.1
1412        RY  1655.5  1647.5  1645.8  1641.1  1640.6  1642.1  1648.7  1654.3
            *
```



```
LINE        ID.......1.......2.......3.......4.......5.......6.......7.......8.......9......10

1413        KK    211L
1414        KM   Sub-Basin   211L
1415        KM
1416        KM      The Clark Unit Hydrograph is used for this basin.
1417        KM          The Urban time-area relation is used for this basin.
1418        KM
1419        KM      Time of Concentration for this sub-basin is based on the following:
1420        KM          6-Hour Rainfall, Pattern No.  1.00
1421        KM          An rainfall areal reduction factor of 0.999
1422        KM
1423        KM       EXCESS RAINFALL VALUES EXCEEDED IN 5-MINUTE INTERVALS
1424        KM     5  10  15  20  25  30  35  40  45  50  55  60  65  70  75  80  85  90
1425        KM   .47 .46 .46 .16 .12 .12 .05 .05 .05 .04 .04 .04 .01 .01 .01 .01 .01 .01
1426        KM
1427        KM          L=   0.508 miles, S=  181 feet/mile, Kb= .03
1428        KM
1429        BA   0.096
1430        LG    0.11    0.26    4.35    0.36   42.40
1431        UC   0.138   0.091
1432        UA       0       5      16      30      65      77      84      90      94      97
1433        UA     100
            *

1434        KK   C621L
```

```
1435          KM      Hydrograph combine 613621 + 211L at C621 left branch
1436          HC       2
              *
              * *
              * * Move to the top of Arrow Wash
              * *
              *

1437          KK    211Q
1438          KM   Sub-Basin   211Q
1439          KM
1440          KM      The Clark Unit Hydrograph is used for this basin.
1441          KM          The Urban time-area relation is used for this basin.
1442          KM
1443          KM      Time of Concentration for this sub-basin is based on the following:
1444          KM          6-Hour Rainfall, Pattern No.  1.00
1445          KM          An rainfall areal reduction factor of 1.000
1446          KM
1447          KM       EXCESS RAINFALL VALUES EXCEEDED IN 5-MINUTE INTERVALS
1448          KM     5  10  15  20  25  30  35  40  45  50  55  60  65  70  75  80  85  90
1449          KM   .48 .47 .47 .17 .13 .13 .06 .06 .05 .05 .04 .04 .01 .01 .01 .01 .01 .01
1450          KM
1451          KM          L=   0.255 miles, S=  295 feet/mile, Kb= .03
1452          KM
1453          BA   0.021
1454          LG    0.08     0.25    5.70     0.18    30.04
1455          UC   0.083    0.071
1456          UA       0        5       16       30       65       77       84       90       94       97
1457          UA     100
              *
```



```
LINE          ID.......1.......2.......3.......4.......5.......6.......7.......8.......9......10

1458          KK  616617
1459          KM      Normal depth channel route from C616 to C617
1460          KM      Source:  200 Scale Mapping
1461          RS       2    FLOW      -1
1462          RC   0.070   0.060   0.070  1131.0  0.0553
1463          RX  1000.0  1008.0  1015.0  1045.0  1050.0  1080.0  1100.0  1110.0
1464          RY  1834.0  1832.0  1830.0  1826.0  1826.0  1830.0  1834.0  1836.0
              *

1465          KK    211R
1466          KM   Sub-Basin   211R
1467          KM
1468          KM      The Clark Unit Hydrograph is used for this basin.
1469          KM          The Urban time-area relation is used for this basin.
1470          KM
1471          KM      Time of Concentration for this sub-basin is based on the following:
1472          KM          6-Hour Rainfall, Pattern No.  1.00
1473          KM          An rainfall areal reduction factor of 0.999
1474          KM
1475          KM       EXCESS RAINFALL VALUES EXCEEDED IN 5-MINUTE INTERVALS
1476          KM     5  10  15  20  25  30  35  40  45  50  55  60  65  70  75  80  85  90
1477          KM   .48 .47 .47 .17 .14 .13 .06 .06 .06 .05 .05 .04 .01 .01 .01 .01 .01 .01
1478          KM
1479          KM          L=   0.572 miles, S=  271 feet/mile, Kb= .03
1480          KM
1481          BA   0.084
1482          LG    0.08     0.25    5.70     0.18    37.77
1483          UC   0.125    0.096
1484          UA       0        5       16       30       65       77       84       90       94       97
1485          UA     100
              *

1486          KK   C617L
1487          KM      Hydrograph combine 616617 + 211R at C617 left branch
1488          HC       2
              *

1489          KK    211U
1490          KM   Sub-Basin   211U
1491          KM
1492          KM      The Clark Unit Hydrograph is used for this basin.
1493          KM          The Urban time-area relation is used for this basin.
1494          KM
1495          KM      Time of Concentration for this sub-basin is based on the following:
1496          KM          6-Hour Rainfall, Pattern No.  1.00
1497          KM          An rainfall areal reduction factor of 1.000
1498          KM
1499          KM       EXCESS RAINFALL VALUES EXCEEDED IN 5-MINUTE INTERVALS
1500          KM     5  10  15  20  25  30  35  40  45  50  55  60  65  70  75  80  85  90
1501          KM   .49 .49 .49 .18 .15 .15 .07 .07 .07 .07 .07 .06 .02 .02 .02 .02 .02 .02
1502          KM
1503          KM          L=   0.831 miles, S=  214 feet/mile, Kb= .03
1504          KM
1505          BA   0.027
```



```
LINE          ID.......1.......2.......3.......4.......5.......6.......7.......8.......9......10

1506          LG    0.07     0.25    5.70     0.18    65.99
1507          UC   0.163    0.330
```

```
1508          UA       0       5      16      30      65      77      84      90      94      97
1509          UA     100
              *

1510          KK   D614L
1511          KM      Hydrograph diversion at C614.  Main flow continues in the left branch.
1512          KM      Diverted flow is in the right branch.
1513          DT   D614R
1514          DI       0     4.3     8.5    20.0    49.0    85.5
1515          DQ       0     2.5     5.0    13.5    35.0    60.0
              *

1516          KK    C617
1517          KM      Hydrograph combine C617L + D614L at C617
1518          HC       2
              *

1519          KK  617618
1520          KM      Normal depth channel route from C617 to C618
1521          KM      Source:  HEC-2 Cross Section: AR 0.836
1522          RS       3    FLOW      -1
1523          RC   0.070   0.060   0.070  1912.0  0.0345
1524          RX  9983.3  9987.2  9989.2  9991.1 10031.5 10053.5 10070.6 10097.7
1525          RY  1766.5  1762.3  1760.2  1758.1  1757.8  1760.8  1764.2  1770.6
              *

1526          KK    211S
1527          KM   Sub-Basin   211S
1528          KM
1529          KM      The Clark Unit Hydrograph is used for this basin.
1530          KM          The Urban time-area relation is used for this basin.
1531          KM
1532          KM      Time of Concentration for this sub-basin is based on the following:
1533          KM          6-Hour Rainfall, Pattern No.  1.00
1534          KM          An rainfall areal reduction factor of 0.999
1535          KM
1536          KM       EXCESS RAINFALL VALUES EXCEEDED IN 5-MINUTE INTERVALS
1537          KM     5  10  15  20  25  30  35  40  45  50  55  60  65  70  75  80  85  90
1538          KM   .47 .47 .46 .16 .13 .12 .06 .05 .05 .04 .03 .03 .01 .01 .01 .01 .01 .01
1539          KM
1540          KM          L=   0.445 miles, S=  272 feet/mile, Kb= .07
1541          KM
1542          BA   0.050
1543          LG    0.11    0.31    5.70    0.19   30.06
1544          UC   0.175   0.154
1545          UA       0       5      16      30      65      77      84      90      94      97
1546          UA     100
              *
```



```
LINE          ID.......1.......2.......3.......4.......5.......6.......7.......8.......9......10

1547          KK   C618I
1548          KM      Hydrograph combine 617618 + 211S at C618I
1549          HC       2
              *

1550          KK   C618O
1551          KM      Reservoir route at C618.
1552          RS       1    ELEV  1730.6
1553          SV    0.00    0.06    0.24    0.50    0.75    1.20    1.66    2.30    2.94    3.20
1554          SV    3.30    3.40    3.60    3.80    3.90    4.10    4.30    4.50    4.65     5.0
1555          SE  1730.6  1736.0  1738.0  1739.0  1740.0  1741.0  1742.0  1743.0  1744.0  1744.3
1556          SE  1744.4  1744.6  1744.8  1745.0  1745.2  1745.4  1745.6  1745.8  1746.0  1746.2
1557          SQ       0     2.6     3.0     3.1     3.2     3.3     3.5     3.6     3.7     3.7
1558          SQ     3.8       8      21      48      88     143     212     295     390     499
              *

1559          KK  BB614R
1560          KM      Retrieve previously diverted hydrograph at C614 in the right branch.
1561          DR   D614R
              *

1562          KK  614615
1563          KM      Normal depth channel route from C614 to C615
1564          KM      Source:  Hydrology Field Reconnaissance
1565          RS       3    FLOW      -1
1566          RC   0.040   0.018   0.040  1114.0  0.0397
1567          RX  1000.0  1020.0  1025.0  1059.0  1091.0  1093.0  1098.0  1103.0
1568          RY  1828.0  1822.0  1821.5  1822.2  1821.8  1822.0  1824.0  1826.0
              *

1569          KK    211V
1570          KM   Sub-Basin   211V
1571          KM
1572          KM      The Clark Unit Hydrograph is used for this basin.
1573          KM          The Urban time-area relation is used for this basin.
1574          KM
1575          KM      Time of Concentration for this sub-basin is based on the following:
1576          KM          6-Hour Rainfall, Pattern No.  1.00
1577          KM          An rainfall areal reduction factor of 1.000
1578          KM
1579          KM       EXCESS RAINFALL VALUES EXCEEDED IN 5-MINUTE INTERVALS
1580          KM     5  10  15  20  25  30  35  40  45  50  55  60  65  70  75  80  85  90
```

```
1581        KM   .50 .50 .50 .19 .16 .16 .08 .08 .08 .08 .08 .08 .02 .02 .02 .02 .02 .02
1582        KM
1583        KM         L=   0.222 miles, S=  212 feet/mile, Kb= .04
1584        KM
1585        BA   0.005
1586        LG    0.06    0.25    5.80    0.18   90.00
1587        UC   0.096   0.170
1588        UA       0       5      16      30      65      77      84      90      94      97
1589        UA     100
            *
```



```
LINE        ID.......1.......2.......3.......4.......5.......6.......7.......8.......9......10

1590        KK    C615
1591        KM      Hydrograph combine 614615 + 211V at C615
1592        HC       2    0.03
            *

1593        KK   D615L
1594        KM      Hydrograph diversion at C615.  Main flow continues in the left branch.
1595        KM      Diverted flow is in the right branch.
1596        DT   D615R
1597        DI       0     1.3     2.5     5.3     8.6    14.2    23.0    36.8    55.5    77.5
1598        DQ       0       0       0     1.3     2.6     4.2     7.0    12.8    19.5    29.5
            *

1599        KK  615618
1600        KM      Normal depth channel route from C615 to C618
1601        KM      Source:  Hydrology Field Reconnaissance
1602        RS       1    FLOW      -1
1603        RC   0.040   0.018   0.040   499.0  0.1338
1604        RX  1000.0  1008.0  1009.2  1013.2  1027.2  1028.4  1036.4  1045.4
1605        RY  1800.4  1799.6  1799.2  1798.8  1798.3  1798.7  1798.9  1800.4
            *

1606        KK    C618
1607        KM      Hydrograph combine C618O + 615618 at C618
1608        HC       2    0.19
            *

1609        KK  618619
1610        KM      Normal depth channel route from C618 to C619
1611        KM      Source:  HEC-2 Cross Section: AR 0.441
1612        RS       3    FLOW      -1
1613        RC   0.070   0.060   0.070  1837.0  0.0285
1614        RX  9870.6  9928.6  9957.1  9996.9 10004.9 10022.1 10062.0 10116.4
1615        RY  1709.2  1700.9  1698.8  1690.0  1689.8  1699.6  1700.3  1711.3
            *

1616        KK    211T
1617        KM   Sub-Basin   211T
1618        KM
1619        KM      The Clark Unit Hydrograph is used for this basin.
1620        KM          The Urban time-area relation is used for this basin.
1621        KM
1622        KM      Time of Concentration for this sub-basin is based on the following:
1623        KM          6-Hour Rainfall, Pattern No.  1.00
1624        KM          An rainfall areal reduction factor of 0.999
1625        KM
1626        KM       EXCESS RAINFALL VALUES EXCEEDED IN 5-MINUTE INTERVALS
1627        KM     5  10  15  20  25  30  35  40  45  50  55  60  65  70  75  80  85  90
1628        KM   .49 .49 .49 .18 .15 .15 .07 .07 .07 .07 .06 .06 .01 .01 .01 .01 .01 .01
1629        KM
1630        KM          L=   0.488 miles, S=  250 feet/mile, Kb= .03
1631        KM
1632        BA   0.066
1633        LG    0.07    0.25    5.70    0.18   64.25
```



```
LINE        ID.......1.......2.......3.......4.......5.......6.......7.......8.......9......10

1634        UC   0.117   0.090
1635        UA       0       5      16      30      65      77      84      90      94      97
1636        UA     100
            *

1637        KK   C619L
1638        KM      Hydrograph combine 618619 + 211T at C619 left branch
1639        HC       2
            *

1640        KK  BB615R
1641        KM      Retrieve previously diverted hydrograph at C615 in the right branch.
1642        DR   D615R
            *

1643        KK  615619
1644        KM      Normal depth channel route from C615 to C619
1645        KM      Source:  Hydrology Field Reconnaissance
1646        RS       6    FLOW      -1
1647        RC   0.045   0.024   0.025  2444.0  0.0493
1648        RX  1000.0  1009.3  1018.5  1037.0  1039.3  1053.0  1065.0  1065.0
1649        RY  1727.2  1726.5  1725.8  1724.4  1724.6  1725.8  1725.9  1725.9
```

```
                *

1650            KK   C619I
1651            KM      Hydrograph combine C619L + 615619 at C619I
1652            HC       2    0.25
                *

1653            KK   C619O
1654            KM      Reservoir route at C619.
1655            RS       1    ELEV  1675.6
1656            SV    0.00    1.72    2.98    4.70    7.00    7.08    7.17    7.26    7.34    7.43
1657            SV    7.51    7.60    7.69    7.77    7.86
1658            SE  1675.6  1686.0  1688.0  1690.0  1692.0  1692.2  1692.4  1692.6  1692.8  1693.0
1659            SE  1693.2  1693.4  1693.6  1693.8  1694.0
1660            SQ       0       4      25      72     128     155     163     172     178     187
1661            SQ     195     213     238     273     318     374     441     518     606     706
1662            SE  1675.6  1676.0  1678.0  1680.0  1682.0  1684.0  1686.0  1688.0  1690.0  1692.0
1663            SE  1692.2  1692.4  1692.6  1692.8  1693.0  1693.2  1693.4  1693.6  1693.8  1694.0
                *

1664            KK   D619R
1665            KM      Hydrograph diversion at C619.  Main flow continues in the right branch.
1666            KM      Diverted flow is in the left branch.
1667            DT   D619L
1668            DI       0       4      25      72     128     155     163     172     178     187
1669            DI     195     213     238     273     318     374     441     518     606     706
1670            DQ       0       0       0       0       0       0       0       0       0       0
1671            DQ       8      24      49      83     128     182     249     326     412     512
                *
1                                          HEC-1 INPUT                                          PAGE 39

LINE            ID.......1.......2.......3.......4.......5.......6.......7.......8.......9......10


1672            KK  619620
1673            KM                  Lag route through Palisades Plaza storm drain
1674            RT       0                1
                *

1675            KK  BB619L
1676            KM      Retrieve previously diverted hydrograph at C619 in the left branch.
1677            DR   D619L
                *

1678            KK  619620
1679            KM   Normal depth channel route from C619 to C620 in Fountain Hills Blvd.
1680            KM   Source:  200 Scale Mapping. Similiar to 523548
1681            RS       1    FLOW      -1
1682            RC   0.040   0.024   0.040   800.0  0.0288
1683            RX   918.0   940.0   960.0  1000.0  1040.0  1040.1  1044.1  1088.1
1684            RY  1648.0  1645.8  1643.8  1644.7  1644.0  1644.5  1644.5  1648.0
                *

1685            KK    211W
1686            KM   Sub-Basin   211W
1687            KM
1688            KM      The Clark Unit Hydrograph is used for this basin.
1689            KM          The Urban time-area relation is used for this basin.
1690            KM
1691            KM      Time of Concentration for this sub-basin is based on the following:
1692            KM          6-Hour Rainfall, Pattern No.  1.00
1693            KM          An rainfall areal reduction factor of 1.000
1694            KM
1695            KM       EXCESS RAINFALL VALUES EXCEEDED IN 5-MINUTE INTERVALS
1696            KM     5  10  15  20  25  30  35  40  45  50  55  60  65  70  75  80  85  90
1697            KM   .49 .49 .49 .19 .16 .15 .08 .08 .07 .07 .07 .07 .02 .02 .02 .02 .02 .02
1698            KM
1699            KM          L=   0.289 miles, S=  173 feet/mile, Kb= .03
1700            KM
1701            BA   0.030
1702            LG    0.06    0.25    5.70    0.18   73.65
1703            UC   0.100   0.079
1704            UA       0       5      16      30      65      77      84      90      94      97
1705            UA     100
                *

1706            KK   C620R
1707            KM      Hydrograph combine 619620 + R619L + 211W at C620 right branch
1708            HC       3    0.28
                *

1709            KK  BB611R
1710            KM      Retrieve previously diverted hydrograph at C611 in the right branch.
1711            DR   D611R
                *
1                                          HEC-1 INPUT                                          PAGE 40

LINE            ID.......1.......2.......3.......4.......5.......6.......7.......8.......9......10


1712            KK  611620
1713            KM                  Lag route through Palisades Plaza storm drain
1714            RT       0                1
                *
```

```
1715        KK    C620
1716        KM      Hydrograph combine 611620 + C620R at C620
1717        HC       2    0.42
            *

1718        KK  620621
1719        KM      Normal depth channel route from C620 to C621
1720        KM      Source:  HEC-2 Cross Section: AR 0.081
1721        RS       1    FLOW      -1
1722        RC   0.050   0.050   0.050   915.0  0.0394
1723        RX  9790.0  9790.1  9972.2  9994.8 10004.9 10029.7 10048.6 10125.0
1724        RY  1657.9  1657.5  1656.4  1646.8  1646.8  1657.8  1657.0  1657.9
            *

1725        KK    C621
1726        KM      Hydrograph combine C621L + 620621 at C621
1727        HC       2    7.93
            *

1728        KK  621622
1729        KM      Normal depth channel route from C621 to C622
1730        KM      Source:  HEC-2 Cross Section: AS 2.785
1731        RS       6    FLOW      -1
1732        RC   0.100   0.045   0.100  3830.0  0.0144
1733        RX  9827.3  9922.9  9951.0 10000.0 10002.7 10044.7 10071.6 10076.8
1734        RY  1615.2  1611.0  1604.1  1600.8  1601.5  1601.6  1611.0  1613.9
            *

1735        KK    211X
1736        KM   Sub-Basin   211X
1737        KM
1738        KM      The Clark Unit Hydrograph is used for this basin.
1739        KM          The Urban time-area relation is used for this basin.
1740        KM
1741        KM      Time of Concentration for this sub-basin is based on the following:
1742        KM          6-Hour Rainfall, Pattern No.  1.00
1743        KM          An rainfall areal reduction factor of 0.997
1744        KM
1745        KM       EXCESS RAINFALL VALUES EXCEEDED IN 5-MINUTE INTERVALS
1746        KM     5  10  15  20  25  30  35  40  45  50  55  60  65  70  75  80  85  90
1747        KM   .48 .48 .48 .17 .14 .14 .06 .06 .06 .05 .05 .05 .01 .01 .01 .01 .01 .01
1748        KM
1749        KM          L=   0.929 miles, S=  111 feet/mile, Kb= .03
1750        KM
1751        BA   0.214
1752        LG    0.10    0.26    4.90    0.26   56.64
1753        UC   0.213   0.151
1754        UA       0       5      16      30      65      77      84      90      94      97
1755        UA     100
            *
1                                        HEC-1 INPUT                                          PAGE 41

LINE        ID.......1.......2.......3.......4.......5.......6.......7.......8.......9......10

1756        KK   C622R
1757        KM      Hydrograph combine 621622 + 211X at C622 right branch
1758        HC       2
            *
            * *
            * * Move to the top of Tulip Wash
            * *
            *

1759        KK    211A
1760        KM   Sub-Basin   211A
1761        KM
1762        KM      The Clark Unit Hydrograph is used for this basin.
1763        KM          The Urban time-area relation is used for this basin.
1764        KM
1765        KM      Time of Concentration for this sub-basin is based on the following:
1766        KM          6-Hour Rainfall, Pattern No.  1.00
1767        KM          An rainfall areal reduction factor of 0.998
1768        KM
1769        KM       EXCESS RAINFALL VALUES EXCEEDED IN 5-MINUTE INTERVALS
1770        KM     5  10  15  20  25  30  35  40  45  50  55  60  65  70  75  80  85  90
1771        KM   .47 .47 .47 .16 .13 .12 .06 .06 .05 .04 .04 .03 .01 .01 .01 .01 .01 .01
1772        KM
1773        KM          L=   0.820 miles, S=  248 feet/mile, Kb= .03
1774        KM
1775        BA   0.143
1776        LG    0.09    0.25    5.70    0.18   23.09
1777        UC   0.158   0.124
1778        UA       0       5      16      30      65      77      84      90      94      97
1779        UA     100
            *

1780        KK   C600O
1781        KM     Reservoir route at C600.
1782        RS       1    ELEV  1754.0
1783        SV    0.00    0.14    0.62    1.52    2.95    5.06    7.98   11.80   16.61   22.67
1784        SV   30.07   38.71   40.50   40.60   41.60   42.70   43.70   44.60   45.70
1785        SE  1754.0  1756.0  1758.0  1760.0  1762.0  1764.0  1766.0  1768.0  1770.0  1772.0
1786        SE  1774.0  1776.0 1776.36  1776.4  1776.6  1776.8  1777.0  1777.2  1777.4
1787        SQ       0      55     183     320     427     513     570     620     665     709
```

```
1788          SQ     750     789     795     795     812     849     906     984    1084
              *

1789          KK  600601
1790          KM      Normal depth channel route from C600 to C601
1791          KM      Source:  HEC-2 Cross Section: TU 1.538
1792          RS       3    FLOW      -1
1793          RC   0.040   0.025   0.040  2406.0  0.0176
1794          RX  9945.6  9959.4  9968.3  9985.9 10000.0 10017.2 10038.7 10058.8
1795          RY  1734.5  1732.3  1727.9  1726.2  1725.0  1727.7  1735.2  1736.0
              *
```



```
LINE          ID.......1.......2.......3.......4.......5.......6.......7.......8.......9......10

1796          KK    211B
1797          KM   Sub-Basin   211B
1798          KM
1799          KM      The Clark Unit Hydrograph is used for this basin.
1800          KM          The Urban time-area relation is used for this basin.
1801          KM
1802          KM      Time of Concentration for this sub-basin is based on the following:
1803          KM          6-Hour Rainfall, Pattern No.  1.00
1804          KM          An rainfall areal reduction factor of 0.999
1805          KM
1806          KM       EXCESS RAINFALL VALUES EXCEEDED IN 5-MINUTE INTERVALS
1807          KM     5  10  15  20  25  30  35  40  45  50  55  60  65  70  75  80  85  90
1808          KM   .47 .47 .46 .16 .13 .12 .05 .05 .05 .04 .04 .03 .00 .00 .00 .00 .00 .00
1809          KM
1810          KM          L=   0.618 miles, S=  244 feet/mile, Kb= .03
1811          KM
1812          BA   0.109
1813          LG    0.09    0.25    5.80    0.18   20.22
1814          UC   0.138   0.099
1815          UA       0       5      16      30      65      77      84      90      94      97
1816          UA     100
              *

1817          KK    C601
1818          KM      Hydrograph combine 600601 + 211B at C601
1819          HC       2
              *

1820          KK  601602
1821          KM      Normal depth channel route from C601 to C602
1822          KM      Source:  HEC-2 Cross Section: TU 1.102
1823          RS       3    FLOW      -1
1824          RC   0.065   0.040   0.055  1765.0  0.0146
1825          RX  9916.9  9959.1  9965.8  9980.2 10004.0 10019.5 10047.3 10094.1
1826          RY  1699.9  1699.8  1696.4  1689.8  1688.9  1695.7  1698.2  1698.4
              *

1827          KK    211C
1828          KM   Sub-Basin   211C
1829          KM
1830          KM      The Clark Unit Hydrograph is used for this basin.
1831          KM          The Urban time-area relation is used for this basin.
1832          KM
1833          KM      Time of Concentration for this sub-basin is based on the following:
1834          KM          6-Hour Rainfall, Pattern No.  1.00
1835          KM          An rainfall areal reduction factor of 0.999
1836          KM
1837          KM       EXCESS RAINFALL VALUES EXCEEDED IN 5-MINUTE INTERVALS
1838          KM     5  10  15  20  25  30  35  40  45  50  55  60  65  70  75  80  85  90
1839          KM   .48 .48 .48 .17 .14 .14 .06 .06 .06 .05 .05 .05 .01 .01 .01 .01 .01 .01
1840          KM
1841          KM          L=   0.479 miles, S=  154 feet/mile, Kb= .03
1842          KM
1843          BA   0.043
```



```
LINE          ID.......1.......2.......3.......4.......5.......6.......7.......8.......9......10

1844          LG    0.08    0.25    5.70    0.18   44.48
1845          UC   0.138   0.137
1846          UA       0       5      16      30      65      77      84      90      94      97
1847          UA     100
              *

1848          KK   C602L
1849          KM      Hydrograph combine 601602 + 211C at C602 left branch
1850          HC       2
              *

1851          KK    211D
1852          KM   Sub-Basin   211D
1853          KM
1854          KM      The Clark Unit Hydrograph is used for this basin.
1855          KM          The Urban time-area relation is used for this basin.
1856          KM
1857          KM      Time of Concentration for this sub-basin is based on the following:
1858          KM          6-Hour Rainfall, Pattern No.  1.00
1859          KM          An rainfall areal reduction factor of 0.999
1860          KM
```

```
1861        KM       EXCESS RAINFALL VALUES EXCEEDED IN 5-MINUTE INTERVALS
1862        KM     5  10  15  20  25  30  35  40  45  50  55  60  65  70  75  80  85  90
1863        KM   .46 .45 .45 .15 .11 .11 .04 .04 .04 .03 .03 .03 .01 .01 .01 .01 .01 .01
1864        KM
1865        KM          L=   0.686 miles, S=  115 feet/mile, Kb= .03
1866        KM
1867        BA   0.071
1868        LG    0.08    0.25    3.85    0.46   37.42
1869        UC   0.183   0.189
1870        UA       0       5      16      30      65      77      84      90      94      97
1871        UA     100
            *

1872        KK    C602
1873        KM      Hydrograph combine C602L + 211D at C602
1874        HC       2
            *

1875        KK  602603
1876        KM      Normal depth channel route from C602 to C603
1877        KM      Source:  HEC-2 Cross Section: LE 0.672
1878        RS       3    FLOW      -1
1879        RC   0.060   0.045   0.060  2610.0  0.0211
1880        RX  9891.9  9963.9  9986.5 10000.0 10012.7 10023.8 10085.0 10176.4
1881        RY  1653.5  1653.5  1644.4  1644.1  1645.0  1649.8  1651.7  1656.7
            *

1882        KK    211E
1883        KM   Sub-Basin   211E
1884        KM
1885        KM      The Clark Unit Hydrograph is used for this basin.
1886        KM          The Urban time-area relation is used for this basin.
1887        KM
1888        KM      Time of Concentration for this sub-basin is based on the following:
```



```
LINE        ID.......1.......2.......3.......4.......5.......6.......7.......8.......9......10

1889        KM          6-Hour Rainfall, Pattern No.  1.00
1890        KM          An rainfall areal reduction factor of 0.998
1891        KM
1892        KM       EXCESS RAINFALL VALUES EXCEEDED IN 5-MINUTE INTERVALS
1893        KM     5  10  15  20  25  30  35  40  45  50  55  60  65  70  75  80  85  90
1894        KM   .48 .47 .47 .17 .13 .13 .06 .06 .06 .05 .04 .04 .01 .01 .01 .01 .01 .01
1895        KM
1896        KM          L=   0.609 miles, S=  118 feet/mile, Kb= .03
1897        KM
1898        BA   0.156
1899        LG    0.08    0.25    5.10    0.24   42.21
1900        UC   0.171   0.101
1901        UA       0       5      16      30      65      77      84      90      94      97
1902        UA     100
            *

1903        KK    C603
1904        KM      Hydrograph combine 602603 + 211E at C603
1905        HC       2
            *

1906        KK  603622
1907        KM      Normal depth channel route from C603 to C622
1908        KM      Source:  HEC-2 Cross Section: LE 0.287
1909        RS       4    FLOW      -1
1910        RC   0.060   0.045   0.060  2745.0  0.0204
1911        RX  9883.0  9929.7  9967.3  9991.6 10042.2 10073.6 10177.6 10194.5
1912        RY  1619.4  1618.7  1611.8  1602.1  1603.3  1609.4  1610.5  1610.6
            *

1913        KK    211F
1914        KM   Sub-Basin   211F
1915        KM
1916        KM      The Clark Unit Hydrograph is used for this basin.
1917        KM          The Urban time-area relation is used for this basin.
1918        KM
1919        KM      Time of Concentration for this sub-basin is based on the following:
1920        KM          6-Hour Rainfall, Pattern No.  1.00
1921        KM          An rainfall areal reduction factor of 0.999
1922        KM
1923        KM       EXCESS RAINFALL VALUES EXCEEDED IN 5-MINUTE INTERVALS
1924        KM     5  10  15  20  25  30  35  40  45  50  55  60  65  70  75  80  85  90
1925        KM   .48 .48 .48 .17 .14 .14 .06 .06 .06 .05 .05 .05 .01 .01 .01 .01 .01 .01
1926        KM
1927        KM          L=   0.770 miles, S=  134 feet/mile, Kb= .03
1928        KM
1929        BA   0.113
1930        LG    0.08    0.25    4.30    0.36   62.81
1931        UC   0.183   0.158
1932        UA       0       5      16      30      65      77      84      90      94      97
1933        UA     100
            *
```



```
LINE        ID.......1.......2.......3.......4.......5.......6.......7.......8.......9......10
```

```
1934          KK   C622L
1935          KM      Hydrograph combine 603622 + 211F at C622 left branch
1936          HC       2
              *

1937          KK    C622
1938          KM      Hydrograph combine C622R + C622L at C622
1939          HC       2
              *

1940          KK  622549
1941          KM      Normal depth channel route from C622 to C549
1942          KM      Source:  HEC-2 Cross Section: AS 2.279
1943          RS       5    FLOW      -1
1944          RC   0.113   0.125   0.120  1697.0  0.0118
1945          RX  9847.1  9851.0  9857.5  9862.8 10052.6 10062.8 10075.6 10084.6
1946          RY  1573.5  1571.3  1567.2  1564.6  1565.1  1566.7  1573.7  1573.9
              *

1947          KK    211Y
1948          KM   Sub-Basin   211Y
1949          KM
1950          KM      The Clark Unit Hydrograph is used for this basin.
1951          KM          The Urban time-area relation is used for this basin.
1952          KM
1953          KM      Time of Concentration for this sub-basin is based on the following:
1954          KM          6-Hour Rainfall, Pattern No.  1.00
1955          KM          An rainfall areal reduction factor of 0.999
1956          KM
1957          KM       EXCESS RAINFALL VALUES EXCEEDED IN 5-MINUTE INTERVALS
1958          KM     5  10  15  20  25  30  35  40  45  50  55  60  65  70  75  80  85  90
1959          KM   .49 .48 .48 .18 .15 .14 .07 .07 .07 .06 .06 .06 .01 .01 .01 .01 .01 .01
1960          KM
1961          KM          L=   0.606 miles, S=  147 feet/mile, Kb= .04
1962          KM
1963          BA   0.089
1964          LG    0.09    0.21    6.60    0.13   50.06
1965          UC   0.183   0.149
1966          UA       0       5      16      30      65      77      84      90      94      97
1967          UA     100
              *

1968          KK   C549R
1969          KM      Hydrograph combine 622549 + 211Y at C549 right branch
1970          HC       2
              *

1971          KK    C549
1972          KM      Hydrograph combine C549L + C549R at C549
1973          HC       2
              *
```



```
LINE          ID.......1.......2.......3.......4.......5.......6.......7.......8.......9......10

1974          KK  549626
1975          KM      Normal depth channel route from C549 to C626
1976          KM      Source:  HEC-2 Cross Section: AS 1.855
1977          RS       6    FLOW      -1
1978          RC   0.113   0.125   0.120  2044.0  0.0171
1979          RX  9943.2  9963.0  9985.6  9994.1 10007.6 10029.2 10150.5 10171.3
1980          RY  1539.3  1534.5  1531.2  1528.3  1528.2  1531.7  1532.5  1537.4
              *

1981          KK    211Z
1982          KM   Sub-Basin   211Z
1983          KM
1984          KM      The Clark Unit Hydrograph is used for this basin.
1985          KM          The Urban time-area relation is used for this basin.
1986          KM
1987          KM      Time of Concentration for this sub-basin is based on the following:
1988          KM          6-Hour Rainfall, Pattern No.  1.00
1989          KM          An rainfall areal reduction factor of 0.999
1990          KM
1991          KM       EXCESS RAINFALL VALUES EXCEEDED IN 5-MINUTE INTERVALS
1992          KM     5  10  15  20  25  30  35  40  45  50  55  60  65  70  75  80  85  90
1993          KM   .46 .46 .46 .15 .12 .11 .05 .05 .04 .03 .03 .03 .01 .01 .01 .01 .01 .01
1994          KM
1995          KM          L=   0.509 miles, S=  147 feet/mile, Kb= .04
1996          KM
1997          BA   0.083
1998          LG    0.14    0.27    4.50    0.34   34.43
1999          UC   0.171   0.126
2000          UA       0       5      16      30      65      77      84      90      94      97
2001          UA     100
              *

2002          KK   C626C
2003          KM      Hydrograph combine 549626 + 211Z at C626 main branch
2004          HC       2
              *

2005          KK   211AA
2006          KM   Sub-Basin  211AA
```

```
2007          KM
2008          KM      The Clark Unit Hydrograph is used for this basin.
2009          KM          The Urban time-area relation is used for this basin.
2010          KM
2011          KM      Time of Concentration for this sub-basin is based on the following:
2012          KM          6-Hour Rainfall, Pattern No.  1.00
2013          KM          An rainfall areal reduction factor of 1.000
2014          KM
2015          KM       EXCESS RAINFALL VALUES EXCEEDED IN 5-MINUTE INTERVALS
2016          KM     5  10  15  20  25  30  35  40  45  50  55  60  65  70  75  80  85  90
2017          KM   .49 .48 .48 .18 .15 .14 .07 .07 .06 .06 .06 .06 .01 .01 .01 .01 .01 .01
2018          KM
2019          KM          L=   0.480 miles, S=   85 feet/mile, Kb= .03
2020          KM
2021          BA   0.034
```



```
LINE          ID.......1.......2.......3.......4.......5.......6.......7.......8.......9......10

2022          LG    0.08    0.19    6.60    0.13   39.38
2023          UC   0.167   0.193
2024          UA       0       5      16      30      65      77      84      90      94      97
2025          UA     100
              *

2026          KK  625626
2027          KM      Normal depth channel route from C625 to C626
2028          KM      Source:  200 Scale Mapping
2029          RS       2    FLOW      -1
2030          RC   0.040   0.018   0.040  1350.0  0.0252
2031          RX  1000.0  1020.0  1021.2  1055.2  1089.2  1090.4  1100.4  1105.4
2032          RY  1527.0  1526.0  1525.6  1526.3  1525.6  1526.0  1528.0  1530.0
              *

2033          KK   211AB
2034          KM   Sub-Basin  211AB
2035          KM
2036          KM      The Clark Unit Hydrograph is used for this basin.
2037          KM          The Urban time-area relation is used for this basin.
2038          KM
2039          KM      Time of Concentration for this sub-basin is based on the following:
2040          KM          6-Hour Rainfall, Pattern No.  1.00
2041          KM          An rainfall areal reduction factor of 0.999
2042          KM
2043          KM       EXCESS RAINFALL VALUES EXCEEDED IN 5-MINUTE INTERVALS
2044          KM     5  10  15  20  25  30  35  40  45  50  55  60  65  70  75  80  85  90
2045          KM   .49 .49 .49 .18 .15 .15 .07 .07 .07 .07 .07 .07 .01 .01 .01 .01 .01 .01
2046          KM
2047          KM          L=   0.293 miles, S=  321 feet/mile, Kb= .03
2048          KM
2049          BA   0.040
2050          LG    0.07    0.17    6.80    0.12   54.72
2051          UC   0.083   0.055
2052          UA       0       5      16      30      65      77      84      90      94      97
2053          UA     100
              *

2054          KK  623624
2055          KM      Normal depth channel route from C623 to C624
2056          KM      Source:  200 Scale Mapping
2057          RS       1    FLOW      -1
2058          RC   0.040   0.018   0.040   701.0  0.0114
2059          RX  1000.0  1010.0  1011.2  1027.2  1043.2  1044.4  1059.4  1074.4
2060          RY  1534.0  1532.0  1531.6  1531.9  1531.6  1532.0  1532.5  1533.0
              *

2061          KK   211AC
2062          KM   Sub-Basin  211AC
2063          KM
2064          KM      The Clark Unit Hydrograph is used for this basin.
2065          KM          The Urban time-area relation is used for this basin.
2066          KM
2067          KM      Time of Concentration for this sub-basin is based on the following:
2068          KM          6-Hour Rainfall, Pattern No.  1.00
```



```
LINE          ID.......1.......2.......3.......4.......5.......6.......7.......8.......9......10

2069          KM          An rainfall areal reduction factor of 1.000
2070          KM
2071          KM       EXCESS RAINFALL VALUES EXCEEDED IN 5-MINUTE INTERVALS
2072          KM     5  10  15  20  25  30  35  40  45  50  55  60  65  70  75  80  85  90
2073          KM   .49 .49 .49 .19 .16 .15 .08 .08 .07 .07 .07 .07 .01 .01 .01 .01 .01 .01
2074          KM
2075          KM          L=   0.306 miles, S=   82 feet/mile, Kb= .03
2076          KM
2077          BA   0.027
2078          LG    0.08    0.15    8.40    0.07   44.76
2079          UC   0.133   0.119
2080          UA       0       5      16      30      65      77      84      90      94      97
2081          UA     100
              *

2082          KK    C624
2083          KM      Hydrograph combine 623624 + 211AC at C624
```

```
2084          HC       2
              *

2085          KK  624626
2086          KM      Normal depth channel route from C624 to C626
2087          KM      Source:  HEC-2 Cross Section: AS 1.727
2088          RS       2    FLOW      -1
2089          RC   0.080   0.060   0.080   637.0  0.0235
2090          RX  9872.9  9881.0  9893.9  9902.2  9967.6  9976.4 10076.1 10084.3
2091          RY  1526.3  1524.6  1521.7  1520.0  1520.7  1521.6  1520.7  1526.2
              *

2092          KK   211AD
2093          KM   Sub-Basin  211AD
2094          KM
2095          KM      The Clark Unit Hydrograph is used for this basin.
2096          KM          The Urban time-area relation is used for this basin.
2097          KM
2098          KM      Time of Concentration for this sub-basin is based on the following:
2099          KM          6-Hour Rainfall, Pattern No.  1.00
2100          KM          An rainfall areal reduction factor of 0.999
2101          KM
2102          KM       EXCESS RAINFALL VALUES EXCEEDED IN 5-MINUTE INTERVALS
2103          KM     5  10  15  20  25  30  35  40  45  50  55  60  65  70  75  80  85  90
2104          KM   .49 .49 .49 .19 .16 .15 .08 .08 .07 .07 .07 .07 .01 .01 .01 .01 .01 .01
2105          KM
2106          KM          L=   0.489 miles, S=  280 feet/mile, Kb= .03
2107          KM
2108          BA   0.041
2109          LG    0.08    0.15    8.00    0.08   46.16
2110          UC   0.113   0.114
2111          UA       0       5      16      30      65      77      84      90      94      97
2112          UA     100
              *
```



```
LINE          ID.......1.......2.......3.......4.......5.......6.......7.......8.......9......10

2113          KK   C626R
2114          KM      Hydrograph combine 624626 + 211AD at C626 right branch
2115          HC       2
              *

2116          KK    C626
2117          KM      Hydrograph combine C626C + 625626 at C626R
2118          HC       3
              *

2119          KK  626627
2120          KM      Normal depth channel route from C626 to C627
2121          KM      Source:  HEC-2 Cross Section: AS 1.602
2122          RS       1    FLOW      -1
2123          RC   0.080   0.060   0.080   625.0  0.0208
2124          RX  9889.8  9941.2  9963.0 10011.6 10074.8 10083.9 10191.7 10210.4
2125          RY  1517.6  1516.9  1508.1  1506.6  1508.6  1511.7  1513.1  1518.8
              *

2126          KK   211AE
2127          KM   Sub-Basin  211AE
2128          KM
2129          KM      The Clark Unit Hydrograph is used for this basin.
2130          KM          The Urban time-area relation is used for this basin.
2131          KM
2132          KM      Time of Concentration for this sub-basin is based on the following:
2133          KM          6-Hour Rainfall, Pattern No.  1.00
2134          KM          An rainfall areal reduction factor of 1.000
2135          KM
2136          KM       EXCESS RAINFALL VALUES EXCEEDED IN 5-MINUTE INTERVALS
2137          KM     5  10  15  20  25  30  35  40  45  50  55  60  65  70  75  80  85  90
2138          KM   .48 .48 .48 .17 .14 .13 .06 .06 .06 .05 .05 .05 .01 .01 .01 .01 .01 .01
2139          KM
2140          KM          L=   0.313 miles, S=  153 feet/mile, Kb= .04
2141          KM
2142          BA   0.034
2143          LG    0.12    0.24    6.40    0.15   38.15
2144          UC   0.129   0.103
2145          UA       0       5      16      30      65      77      84      90      94      97
2146          UA     100
              *

2147          KK    C627
2148          KM      Hydrograph combine 626627 + 211AE at C627
2149          HC       2
              *
              * *
              * * C627 is the total flow in Ashbrook Wash at the Study boundary
              * *
              *
2150          ZZ
```

1

SCHEMATIC DIAGRAM OF STREAM NETWORK

```
INPUT
 LINE      (V) ROUTING          (--->) DIVERSION OR PUMP FLOW

  NO.      (.) CONNECTOR        (<---) RETURN OF DIVERTED OR PUMPED FLOW

   45        204A
                V
                V
   66      522523
                .
                .
   73           .        204B
                .           .
                .           .
   94       C523I............
                V
                V
   97       C523O
                .
                .
  109           .-------->   D523R
  106       D523L
                .
                .
  114           .        205A
                .           .
                .           .
  135           .           .        205B
                .           .           .
                .           .           .
  156           .        C528............
                .           V
                .           V
  159           .      528530
                .           .
                .           .
  166           .           .        205C
                .           .           .
                .           .           .
  187           .       C530R............
                .           .
                .           .
  190           .           .        205D
                .           .           .
                .           .           .
  211           .           .           .        205E
                .           .           .           .
                .           .           .           .
  232           .           .        C529............
                .           .           .
                .           .           .
  235           .        C530............
                .           V
                .           V
  238           .      530531
                .           .
                .           .
  245           .           .        205F
                .           .           .
                .           .           .
  266           .        C531............
                .           V
                .           V
  269           .      531532
                .           .
                .           .
  276           .           .        205G
                .           .           .
                .           .           .
  297           .       C532L............
                .           .
                .           .
  300           .           .        205H
                .           .           .
                .           .           .
  321           .        C532............
                .           V
                .           V
  324           .      532533
                .           .
                .           .
  331           .           .        205I
                .           .           .
                .           .           .
  352           .        C533............
                .           V
                .           V
  355           .      533534
                .           .
                .           .
  362           .           .        205J
                .           .           .
                .           .           .
```

```
383          .      C534R............
             .          .
             .          .
386          .          .        205K
             .          .          .
             .          .          .
407          .      C534............
             .          V
             .          V
410          .    534535
             .          .
             .          .
417          .          .        205L
             .          .          .
             .          .          .
438          .      C535............
             .          V
             .          V
441          .    535536
             .          .
             .          .
448          .          .        205M
             .          .          .
             .          .          .
469          .      C536R............
             .          .
             .          .
472          .          .        205N
             .          .          .
             .          .          .
491          .      C536I............
             .          V
             .          V
494          .      C536O
             .          V
             .          V
506          .    536537
             .          .
             .          .
513          .          .        206A
             .          .          .
             .          .          .
534          .      C537............
             .          V
             .          V
537          .    537538
             .          .
             .          .
544          .          .        206B
             .          .          .
             .          .          .
565          .      C538I............
             .          V
             .          V
568          .      C538O
             .          V
             .          V
577          .    538540
             .          .
             .          .
584          .          .        206C
             .          .          .
             .          .          .
605          .      C540R............
             .          .
             .          .
608          .          .        206D
             .          .          V
             .          .          V
629          .          .      539540
             .          .          .
             .          .          .
636          .          .          .        206E
             .          .          .          .
             .          .          .          .
657          .          .     C540L............
             .          .          .
             .          .          .
660          .      C540............
             .          V
             .          V
663          .    540541
             .          .
             .          .
670          .          .        206F
             .          .          .
             .          .          .
691          .      C541............
             .          V
             .          V
694          .    541548
             .          .
             .          .
701          .          .        206G
             .          .          .
```

```
724                                  .<-------   D523R
722                            BB523R
                                    V
                                    V
725                            523548
                                    .
                                    .
732                C548L.......................
                      .
                      .
735                      206H
                            V
                            V
756                    542543
                            .
                            .
763                            .       206I
                            .           .
                            .           .
784                      C543............
                            .
                            .
790                         .------->   D543R
787                     D543L
                            V
                            V
795                    543544
                            .
                            .
802                         .       206K
                            .           .
                            .           .
823                      C544............
                            V
                            V
826                    544545
                            .
                            .
836                         .------->   D545R
833                     D545L
                            V
                            V
839                    545546
                            .
                            .
846                         .       206L
                            .           .
                            .           .
867                      C546............
                            V
                            V
870                    546547
                            .
                            .
879                         .<-------   D543R
877                            BB543R
                                    V
                                    V
880                            543547
                                    .
                                    .
889                                 .           .<-------   D545R
887                                 .      BB545R
                                    .           V
                                    .           V
890                                 .      545547
                                    .           .
                                    .           .
897                                 .           .       206J
                                    .           .           .
                                    .           .           .
918                      C547.................................
                            V
                            V
921                    547548
                            .
                            .
928                         .       206M
                            .           .
                            .           .
949                      C548R...........
                            .
                            .
952                  C548............
                        V
                        V
955                548549
                        .
                        .
962                     .       206N
                        .           .
                        .           .
983                  C549L...........
                        .
```

```
 986          .          .      C599O
              .          .          V
              .          .          V
1099          .          .     599608
              .          .          .
              .          .          .
1106          .          .          .        211K
              .          .          .           .
              .          .          .           .
1127          .          .      C608L...........
              .          .          .
              .          .          .
1130          .          .          .        211G
              .          .          .           V
              .          .          .           V
1151          .          .          .      604606
              .          .          .           .
              .          .          .           .
1158          .          .          .           .        211I
              .          .          .           .           .
              .          .          .           .           .
1179          .          .          .      C606R...........
              .          .          .           .
              .          .          .           .
1182          .          .          .           .        211H
              .          .          .           .           V
              .          .          .           .           V
1203          .          .          .           .       C605O
              .          .          .           .           .
              .          .          .           .           .
1212          .          .          .        C606...........
              .          .          .           V
              .          .          .           V
1215          .          .          .      606607
              .          .          .           .
              .          .          .           .
1222          .          .          .           .        211J
              .          .          .           .           .
              .          .          .           .           .
1243          .          .          .        C607...........
              .          .          .           V
              .          .          .           V
1246          .          .          .      607608
              .          .          .           .
              .          .          .           .
1253          .          .       C608...........
              .          .          V
              .          .          V
1256          .          .     608613
              .          .          .
              .          .          .
1263          .          .          .        211M
              .          .          .           V
              .          .          .           V
1284          .          .          .      610611
              .          .          .           .
              .          .          .           .
1291          .          .          .           .        211N
              .          .          .           .           .
              .          .          .           .           .
1312          .          .          .      C611R...........
              .          .          .           .
              .          .          .           .
1315          .          .          .           .        211O
              .          .          .           .           V
              .          .          .           .           V
1336          .          .          .           .       C609O
              .          .          .           .           V
              .          .          .           .           V
1345          .          .          .           .     609611
              .          .          .           .           .
              .          .          .           .           .
1352          .          .          .      C611I...........
              .          .          .           V
              .          .          .           V
1355          .          .          .      C611O
              .          .          .           .
              .          .          .           .
1367          .          .          .           .-------> D611R
1364          .          .          .      D611L
              .          .          .           V
              .          .          .           V
1372          .          .          .      611612
              .          .          .           .
              .          .          .           .
1379          .          .          .           .        211P
              .          .          .           .           .
              .          .          .           .           .
1400          .          .          .        C612...........
              .          .          .           .
              .          .          .           .
1403          .          .       C613...........
              .          .          V
              .          .          V
```

```
1406                    613621
                          .
1413                        211L
                            .
                            .
1434                  C621L............
                          .
                          .
1437                        211Q
                              V
                              V
1458                      616617
                            .
                            .
1465                            211R
                                .
                                .
1486                        C617L............
                            .
                            .
1489                            211U
                                .
                                .
1513                            .-------->   D614R
1510                        D614L
                                .
                                .
1516                        C617............
                              V
                              V
1519                      617618
                            .
                            .
1526                            211S
                                .
                                .
1547                        C618I............
                              V
                              V
1550                        C618O
                            .
                            .
1561                            .<--------   D614R
1559                        BB614R
                                V
                                V
1562                      614615
                            .
                            .
1569                            .        211V
                                .          .
                                .          .
1590                            C615............
                                .
                                .
1596                            .-------->   D615R
1593                        D615L
                                V
                                V
1599                      615618
                            .
                            .
1606                        C618............
                              V
                              V
1609                      618619
                            .
                            .
1616                            211T
                                .
                                .
1637                        C619L............
                            .
                            .
1642                            .<--------   D615R
1640                        BB615R
                                V
                                V
1643                      615619
                            .
                            .
1650                        C619I............
                              V
                              V
1653                        C619O
                            .
                            .
1667                        .-------->   D619L
1664                        D619R
                              V
                              V
1672                      619620
                            .
                            .
```

```
1677                                                  .<-------   D619L
1675                                          BB619L
                                                  V
                                                  V
1678                                          619620
                                                  .
                                                  .
1685                                                  .        211W
                                                  .           .
                                                  .           .
1706                                      C620R.......................
                                              .
                                              .
1711                                                  .<-------   D611R
1709                                          BB611R
                                                  V
                                                  V
1712                                          611620
                                                  .
                                                  .
1715                                       C620............
                                              V
                                              V
1718                                      620621
                                              .
                                              .
1725                                 C621............
                                        V
                                        V
1728                                 621622
                                              .
                                              .
1735                                       211X
                                              .
                                              .
1756                                 C622R...........
                                              .
                                              .
1759                                       211A
                                              V
                                              V
1780                                      C600O
                                              V
                                              V
1789                                      600601
                                              .
                                              .
1796                                                      211B
                                              .           .
                                              .           .
1817                                       C601............
                                              V
                                              V
1820                                      601602
                                              .
                                              .
1827                                                      211C
                                              .           .
                                              .           .
1848                                      C602L...........
                                              .
                                              .
1851                                                      211D
                                              .           .
                                              .           .
1872                                       C602............
                                              V
                                              V
1875                                      602603
                                              .
                                              .
1882                                                      211E
                                              .           .
                                              .           .
1903                                       C603............
                                              V
                                              V
1906                                      603622
                                              .
                                              .
1913                                                      211F
                                              .           .
                                              .           .
1934                                      C622L...........
                                              .
                                              .
1937                                 C622............
                                        V
                                        V
1940                                 622549
                                              .
                                              .
1947                                       211Y
                                              .
                                              .
```

```
1968          .           .       C549R............
              .           .           .
              .           .           .
1971          .       C549............
              .           V
              .           V
1974          .     549626
              .           .
              .           .
1981          .           .       211Z
              .           .           .
              .           .           .
2002          .     C626C............
              .           .
              .           .
2005          .           .      211AA
              .           .          V
              .           .          V
2026          .           .     625626
              .           .           .
              .           .           .
2033          .           .           .      211AB
              .           .           .          V
              .           .           .          V
2054          .           .           .     623624
              .           .           .           .
              .           .           .           .
2061          .           .           .           .       211AC
              .           .           .           .           .
              .           .           .           .           .
2082          .           .           .       C624............
              .           .           .           V
              .           .           .           V
2085          .           .           .     624626
              .           .           .           .
              .           .           .           .
2092          .           .           .           .       211AD
              .           .           .           .           .
              .           .           .           .           .
2113          .           .           .      C626R............
              .           .           .           .
              .           .           .           .
2116          .       C626........................
              .           V
              .           V
2119          .     626627
              .           .
              .           .
2126          .           .       211AE
              .           .           .
              .           .           .
2147          .       C627............
```

(***) RUNOFF ALSO COMPUTED AT THIS LOCATION

```
1*****************************************
*                                       *
*   FLOOD HYDROGRAPH PACKAGE  (HEC-1)   *
*              MAY   1991               *
*           VERSION 4.0.1E              *
*                                       *
*  RUN DATE  02/18/:0  TIME  07:18:41   *
*                                       *
*****************************************
```

```
*****************************************
*                                       *
*   U.S. ARMY CORPS OF ENGINEERS        *
*   HYDROLOGIC ENGINEERING CENTER       *
*         609 SECOND STREET             *
*      DAVIS, CALIFORNIA 95616          *
*          (916) 551-1748               *
*                                       *
*****************************************
```

Golden Eagle Park Dam Modifications
by Stantec: Proj. No. 28900095
for FCDMC: FCD

File: ALTFf-4.IH1
Date:07-08-99 mcg
Revised:

Alternative F:
Addition of an auxillary spillway. This spillway will function such that the existing emergency spillway does not operate for the 100-year storm. The stage-storage relation is adjusted to reflect revised grading in the park.

The purpose of this model is to estimate peak discharges in Ashbrook Wash for evaluation of the Dam modifications impact on the floodplain.

100-year, 6-hour future condition watershed model for Ashbrook Wash upstream of the Fort McDowell Indian Reservation boundary.
This model is a portion of the original Fountain Hills North FDS watershed model conducted by GVSCE, 1994. The title cards from that model are included for reference.

Fountain Hills North Floodplain Delineation Study
FCD 92-04 by GVSCE
Future Condition Model
100-Year 6-Hour Storm, Clark Unit Hydrograph

File: FU100-6.IH1
Date: 07-19-94 dtp
Revised: 10-31-94 dtp

```
 26 IO          OUTPUT CONTROL VARIABLES
                     IPRNT          5  PRINT CONTROL
```

```
                    IPLOT          0  PLOT CONTROL
                    QSCAL         0.  HYDROGRAPH PLOT SCALE

   IT          HYDROGRAPH TIME DATA
                     NMIN          1  MINUTES IN COMPUTATION INTERVAL
                    IDATE      1    0  STARTING DATE
                    ITIME       0000  STARTING TIME
                       NQ       1080  NUMBER OF HYDROGRAPH ORDINATES
                   NDDATE      1    0  ENDING DATE
                   NDTIME       1759  ENDING TIME
                    ICENT         19  CENTURY MARK

                COMPUTATION INTERVAL    0.02 HOURS
                     TOTAL TIME BASE   17.98 HOURS

         ENGLISH UNITS
              DRAINAGE AREA          SQUARE MILES
              PRECIPITATION DEPTH    INCHES
              LENGTH, ELEVATION      FEET
              FLOW                   CUBIC FEET PER SECOND
              STORAGE VOLUME         ACRE-FEET
              SURFACE AREA           ACRES
              TEMPERATURE            DEGREES FAHRENHEIT

  28 JD          INDEX STORM NO. 1
                       STRM       3.30  PRECIPITATION DEPTH
                       TRDA       0.01  TRANSPOSITION DRAINAGE AREA


  32 JD          INDEX STORM NO. 2
                       STRM       3.28  PRECIPITATION DEPTH
                       TRDA       0.50  TRANSPOSITION DRAINAGE AREA


  33 JD          INDEX STORM NO. 3
                       STRM       3.23  PRECIPITATION DEPTH
                       TRDA       2.80  TRANSPOSITION DRAINAGE AREA


  37 JD          INDEX STORM NO. 4
                       STRM       3.04  PRECIPITATION DEPTH
                       TRDA      16.00  TRANSPOSITION DRAINAGE AREA


  41 JD          INDEX STORM NO. 5
                       STRM       2.67  PRECIPITATION DEPTH
                       TRDA      90.00  TRANSPOSITION DRAINAGE AREA

WARNING EXCESS AT PONDING LESS THAN ZERO FOR PERIOD. EXCESS SET TO ZERO

1
                                    RUNOFF SUMMARY
                              FLOW IN CUBIC FEET PER SECOND
                            TIME IN HOURS,  AREA IN SQUARE MILES
```

	OPERATION	STATION	PEAK FLOW	TIME OF PEAK	AVERAGE FLOW FOR MAXIMUM PERIOD 6-HOUR	24-HOUR	72-HOUR	BASIN AREA	MAXIMUM STAGE	TIME OF MAX STAGE
+	HYDROGRAPH AT	204A	334.	4.03	26.	9.	9.	0.11		
+	ROUTED TO	522523	309.	4.18	26.	9.	9.	0.11		
+	HYDROGRAPH AT	204B	365.	4.05	31.	10.	10.	0.13		
+	2 COMBINED AT	C523I	586.	4.08	57.	19.	19.	0.23		
+	ROUTED TO	C523O	570.	4.15	57.	19.	19.	0.23		
+	DIVERSION TO	D523R	68.	4.15	3.	1.	1.	0.23		
+	HYDROGRAPH AT	D523L	502.	4.15	54.	18.	18.	0.23		
+	HYDROGRAPH AT	205A	210.	4.22	26.	9.	9.	0.12		
+	HYDROGRAPH AT	205B	362.	4.32	47.	16.	16.	0.21		
+	2 COMBINED AT	C528	548.	4.28	73.	25.	25.	0.33		
+	ROUTED TO	528530	545.	4.33	73.	25.	25.	0.33		
+	HYDROGRAPH AT	205C	107.	4.20	13.	4.	4.	0.06		

+	DIVERSION TO	D545R	84.	4.05	7.	2.	2.	0.14
+	HYDROGRAPH AT	D545L	84.	4.05	7.	2.	2.	0.14
+	ROUTED TO	545546	83.	4.07	7.	2.	2.	0.14
+	HYDROGRAPH AT	206L	191.	4.02	15.	5.	5.	0.06
+	2 COMBINED AT	C546	271.	4.03	22.	7.	7.	0.20
+	ROUTED TO	546547	269.	4.03	22.	7.	7.	0.20
+	HYDROGRAPH AT	BB543R	252.	4.02	21.	7.	7.	0.08
+	ROUTED TO	543547	241.	4.10	21.	7.	7.	0.08
+	HYDROGRAPH AT	BB545R	84.	4.05	7.	2.	2.	0.14
+	ROUTED TO	545547	81.	4.10	7.	2.	2.	0.14
+	HYDROGRAPH AT	206J	200.	4.02	16.	5.	5.	0.06
+	4 COMBINED AT	C547	758.	4.05	66.	22.	22.	0.26
+	ROUTED TO	547548	732.	4.10	66.	22.	22.	0.26
+	HYDROGRAPH AT	206M	198.	4.02	16.	5.	5.	0.06
+	2 COMBINED AT	C548R	883.	4.08	82.	27.	27.	0.32
+	2 COMBINED AT	C548	1172.	4.10	440.	233.	233.	4.04
+	ROUTED TO	548549	1160.	4.25	440.	233.	233.	4.04
+	HYDROGRAPH AT	206N	459.	4.05	42.	14.	14.	0.15
+	2 COMBINED AT	C549L	1331.	4.23	466.	245.	245.	4.19
+	HYDROGRAPH AT	C599O	1329.	5.17	1160.	508.	508.	7.13
+	ROUTED TO	599608	1329.	5.33	1160.	508.	508.	7.13
+	HYDROGRAPH AT	211K	363.	4.00	26.	9.	9.	0.10
+	2 COMBINED AT	C608L	1333.	5.27	1177.	515.	515.	7.23
+	HYDROGRAPH AT	211G	18.	4.05	3.	1.	1.	0.01
+	ROUTED TO	604606	17.	4.23	3.	1.	1.	0.01
+	HYDROGRAPH AT	211I	121.	4.03	11.	4.	4.	0.04
+	2 COMBINED AT	C606R	131.	4.03	14.	5.	5.	0.05
+	HYDROGRAPH AT	211H	247.	4.02	17.	6.	6.	0.07
+	ROUTED TO	C605O	129.	4.12	17.	6.	6.	0.07
+	2 COMBINED AT	C606	256.	4.05	31.	10.	10.	0.12
+	ROUTED TO	606607	253.	4.08	31.	10.	10.	0.12
+	HYDROGRAPH AT	211J	51.	4.02	4.	1.	1.	0.01

+	2 COMBINED AT	C607	295.	4.05	35.	12.	12.	0.14
+	ROUTED TO	607608	290.	4.08	35.	12.	12.	0.14
+	2 COMBINED AT	C608	1445.	4.28	1204.	526.	526.	7.37
+	ROUTED TO	608613	1443.	4.32	1204.	526.	526.	7.37
+	HYDROGRAPH AT	211M	278.	4.02	23.	8.	8.	0.08
+	ROUTED TO	610611	272.	4.05	23.	8.	8.	0.08
+	HYDROGRAPH AT	211N	72.	4.00	6.	2.	2.	0.02
+	2 COMBINED AT	C611R	338.	4.03	29.	10.	10.	0.10
+	HYDROGRAPH AT	211O	143.	4.02	11.	4.	4.	0.04
+	ROUTED TO	C609O	69.	4.12	11.	4.	4.	0.04
+	ROUTED TO	609611	69.	4.15	11.	4.	4.	0.04
+	2 COMBINED AT	C611I	402.	4.03	40.	13.	13.	0.14
+	ROUTED TO	C611O	201.	4.20	39.	13.	13.	0.14
+	DIVERSION TO	D611R	169.	4.20	38.	13.	13.	0.14
+	HYDROGRAPH AT	D611L	32.	4.20	1.	0.	0.	0.14
+	ROUTED TO	611612	27.	4.27	1.	0.	0.	0.14
+	HYDROGRAPH AT	211P	119.	4.00	10.	3.	3.	0.03
+	2 COMBINED AT	C612	119.	4.00	10.	3.	3.	0.17
+	2 COMBINED AT	C613	1472.	4.30	1210.	529.	529.	7.54
+	ROUTED TO	613621	1471.	4.32	1210.	529.	529.	7.54
+	HYDROGRAPH AT	211L	317.	4.02	24.	8.	8.	0.10
+	2 COMBINED AT	C621L	1552.	4.08	1226.	535.	535.	7.64
+	HYDROGRAPH AT	211Q	74.	4.00	5.	2.	2.	0.02
+	ROUTED TO	616617	72.	4.03	5.	2.	2.	0.02
+	HYDROGRAPH AT	211R	283.	4.02	22.	7.	7.	0.08
+	2 COMBINED AT	C617L	355.	4.02	27.	9.	9.	0.10
+	HYDROGRAPH AT	211U	61.	4.05	8.	3.	3.	0.03
+	DIVERSION TO	D614R	43.	4.05	5.	2.	2.	0.03
+	HYDROGRAPH AT	D614L	18.	4.05	3.	1.	1.	0.03
+	2 COMBINED AT	C617	372.	4.02	30.	10.	10.	0.13
+	ROUTED TO	617618	359.	4.07	30.	10.	10.	0.13

+	HYDROGRAPH AT	211S	144.	4.05	12.	4.	4.	0.05
+	2 COMBINED AT	C618I	499.	4.07	42.	14.	14.	0.18
+	ROUTED TO	C618O	482.	4.08	36.	14.	14.	0.18
+	HYDROGRAPH AT	BB614R	43.	4.05	5.	2.	2.	0.03
+	ROUTED TO	614615	43.	4.10	5.	2.	2.	0.03
+	HYDROGRAPH AT	211V	16.	4.02	2.	1.	1.	0.00
+	2 COMBINED AT	C615	55.	4.07	7.	2.	2.	0.03
+	DIVERSION TO	D615R	19.	4.07	2.	1.	1.	0.03
+	HYDROGRAPH AT	D615L	36.	4.07	5.	2.	2.	0.03
+	ROUTED TO	615618	36.	4.08	5.	2.	2.	0.03
+	2 COMBINED AT	C618	518.	4.08	41.	16.	16.	0.19
+	ROUTED TO	618619	507.	4.13	41.	16.	16.	0.19
+	HYDROGRAPH AT	211T	231.	4.02	20.	7.	7.	0.07
+	2 COMBINED AT	C619L	637.	4.08	60.	22.	22.	0.26
+	HYDROGRAPH AT	BB615R	19.	4.07	2.	1.	1.	0.03
+	ROUTED TO	615619	19.	4.17	2.	1.	1.	0.03
+	2 COMBINED AT	C619I	655.	4.10	62.	23.	23.	0.25
+	ROUTED TO	C619O	596.	4.18	62.	23.	23.	0.25
+	DIVERSION TO	D619L	402.	4.18	12.	4.	4.	0.25
+	HYDROGRAPH AT	D619R	194.	4.18	51.	19.	19.	0.25
+	ROUTED TO	619620	194.	4.20	51.	19.	19.	0.25
+	HYDROGRAPH AT	BB619L	402.	4.18	12.	4.	4.	0.25
+	ROUTED TO	619620	353.	4.22	12.	4.	4.	0.25
+	HYDROGRAPH AT	211W	108.	4.00	9.	3.	3.	0.03
+	3 COMBINED AT	C620R	573.	4.22	72.	26.	26.	0.28
+	HYDROGRAPH AT	BB611R	169.	4.20	38.	13.	13.	0.14
+	ROUTED TO	611620	169.	4.22	38.	13.	13.	0.14
+	2 COMBINED AT	C620	741.	4.22	110.	39.	39.	0.42
+	ROUTED TO	620621	723.	4.23	110.	39.	39.	0.42
+	2 COMBINED AT	C621	1891.	4.28	1313.	570.	570.	7.93
+	ROUTED TO	621622	1886.	4.37	1312.	570.	570.	7.93
+	HYDROGRAPH AT	211X	629.	4.05	60.	20.	20.	0.21

+	2 COMBINED AT						
		C622R	2131.	4.17	1352.	588.	588.	8.14
+	HYDROGRAPH AT						
		211A	444.	4.03	35.	12.	12.	0.14
+	ROUTED TO						
		C600O	373.	4.10	35.	12.	12.	0.14
+	ROUTED TO						
		600601	366.	4.15	35.	12.	12.	0.14
+	HYDROGRAPH AT						
		211B	357.	4.02	26.	9.	9.	0.11
+	2 COMBINED AT						
		C601	663.	4.03	60.	20.	20.	0.25
+	ROUTED TO						
		601602	651.	4.08	60.	20.	20.	0.25
+	HYDROGRAPH AT						
		211C	134.	4.03	12.	4.	4.	0.04
+	2 COMBINED AT						
		C602L	769.	4.07	72.	24.	24.	0.30
+	HYDROGRAPH AT						
		211D	184.	4.05	17.	6.	6.	0.07
+	2 COMBINED AT						
		C602	950.	4.07	89.	30.	30.	0.37
+	ROUTED TO						
		602603	923.	4.12	89.	30.	30.	0.37
+	HYDROGRAPH AT						
		211E	509.	4.03	41.	14.	14.	0.16
+	2 COMBINED AT						
		C603	1313.	4.07	129.	43.	43.	0.52
+	ROUTED TO						
		603622	1284.	4.13	129.	43.	43.	0.52
+	HYDROGRAPH AT						
		211F	332.	4.05	33.	11.	11.	0.11
+	2 COMBINED AT						
		C622L	1474.	4.12	160.	54.	54.	0.63
+	2 COMBINED AT						
		C622	2916.	4.15	1472.	633.	633.	8.78
+	ROUTED TO						
		622549	2898.	4.25	1471.	633.	633.	8.78
+	HYDROGRAPH AT						
		211Y	271.	4.05	26.	9.	9.	0.09
+	2 COMBINED AT						
		C549R	2995.	4.25	1487.	641.	641.	8.87
+	2 COMBINED AT						
		C549	4013.	4.25	1908.	854.	854.	13.06
+	ROUTED TO						
		549626	3996.	4.33	1906.	854.	854.	13.06
+	HYDROGRAPH AT						
		211Z	249.	4.03	20.	7.	7.	0.08
+	2 COMBINED AT						
		C626C	4053.	4.33	1916.	859.	859.	13.14
+	HYDROGRAPH AT						
		211AA	96.	4.05	9.	3.	3.	0.03
+	ROUTED TO						
		625626	92.	4.08	9.	3.	3.	0.03
+	HYDROGRAPH AT						
		211AB	149.	4.00	12.	4.	4.	0.04
+	ROUTED TO						
		623624	148.	4.02	12.	4.	4.	0.04
+	HYDROGRAPH AT						
		211AC	90.	4.02	8.	3.	3.	0.03
+	2 COMBINED AT						
		C624	238.	4.02	20.	7.	7.	0.07
	ROUTED TO						

+		624626	231.	4.05	20.	7.	7.	0.07
+	HYDROGRAPH AT	211AD	139.	4.02	12.	4.	4.	0.04
+	2 COMBINED AT	C626R	367.	4.03	32.	11.	11.	0.11
+	3 COMBINED AT	C626	4183.	4.32	1939.	870.	870.	13.28
+	ROUTED TO	626627	4181.	4.33	1938.	870.	870.	13.28
+	HYDROGRAPH AT	211AE	114.	4.02	9.	3.	3.	0.03
+	2 COMBINED AT	C627	4205.	4.33	1943.	873.	873.	13.32

*** NORMAL END OF HEC-1 ***

10-Year, Future Condition (6-Hour)

```
1*************************************                                    *************************************
 *                                   *                                    *                                   *
 *   FLOOD HYDROGRAPH PACKAGE  (HEC-1)   *                                *   U.S. ARMY CORPS OF ENGINEERS    *
 *              MAY   1991           *                                    *   HYDROLOGIC ENGINEERING CENTER   *
 *           VERSION 4.0.1E          *                                    *         609 SECOND STREET         *
 *                                   *                                    *      DAVIS, CALIFORNIA 95616      *
 *  RUN DATE  02/18/:0  TIME  07:21:35  *                                 *          (916) 551-1748           *
 *                                   *                                    *                                   *
 *************************************                                    *************************************
```

```
X     X  XXXXXXX   XXXXX          X
X     X  X       X     X        XX
X     X  X       X               X
XXXXXXX  XXXX    X        XXXXX  X
X     X  X       X               X
X     X  X       X     X         X
X     X  XXXXXXX   XXXXX        XXX
```

THIS PROGRAM REPLACES ALL PREVIOUS VERSIONS OF HEC-1 KNOWN AS HEC1 (JAN 73), HEC1GS, HEC1DB, AND HEC1KW.

THE DEFINITIONS OF VARIABLES -RTIMP- AND -RTIOR- HAVE CHANGED FROM THOSE USED WITH THE 1973-STYLE INPUT STRUCTURE.
THE DEFINITION OF -AMSKK- ON RM-CARD WAS CHANGED WITH REVISIONS DATED 28 SEP 81. THIS IS THE FORTRAN77 VERSION
NEW OPTIONS: DAMBREAK OUTFLOW SUBMERGENCE , SINGLE EVENT DAMAGE CALCULATION, DSS:WRITE STAGE FREQUENCY,
DSS:READ TIME SERIES AT DESIRED CALCULATION INTERVAL LOSS RATE:GREEN AND AMPT INFILTRATION
KINEMATIC WAVE: NEW FINITE DIFFERENCE ALGORITHM


```
LINE          ID.......1.......2.......3.......4.......5.......6.......7.......8.......9......10

  1           ID   Golden Eagle Park Dam Modifications
  2           ID        by Stantec: Proj. No. 28900095                    File: ALTFf-6.IH1
  3           ID        for FCDMC:  FCD                                   Date:07-08-99     mcg
  4           ID                                                        Revised:
  5           ID
  6           ID   Alternative F:
  7           ID        Addition of an auxillary spillway.  This spillway will function such
  8           ID        that the existing emergency spillway does not operate for the 100-year
  9           ID        storm.  The stage-storage relation is adjusted to reflect revised
 10           ID        grading in the park.
 11           ID
 12           ID        The purpose of this model is to estimate peak discharges in Ashbrook
 13           ID        Wash for evaluation of the Dam modifications impact on the floodplain.
 14           ID
 15           ID   10-year, 6-hour future condition watershed model for Ashbrook Wash upstream
 16           ID   of the Fort McDowell Indian Reservation boundary.
 17           ID        This model is a portion of the original Fountain Hills North FDS
 18           ID        watershed model conducted by GVSCE, 1994.  The title cards from that
 19           ID        model are included for reference.
 20           ID
 21           ID   Fountain Hills North Floodplain Delineation Study
 22           ID        FCD 92-04       by GVSCE                          File:   FU10-6.IH1
 23           ID   Future Condition Model                                 Date:    07-21-94   dtp
 24           ID      10-Year 6-Hour Storm, Clark Unit Hydrograph      Revised:    10-31-94   dtp
              *DIAGRAM
 25           IT       1                    1080
 26           IO       5
 27           IN      15
              *
 28           JD    2.20    0.01
 29           PC   0.000   0.008   0.016   0.025   0.033   0.041   0.050   0.058   0.066   0.074
 30           PC   0.087   0.099   0.118   0.138   0.216   0.377   0.834   0.911   0.931   0.950
 31           PC   0.962   0.972   0.983   0.991   1.000
 32           JD    2.19    0.50
 33           JD    2.16    2.80
 34           PC   0.000   0.009   0.016   0.025   0.034   0.042   0.051   0.059   0.067   0.076
 35           PC   0.087   0.100   0.120   0.163   0.252   0.451   0.694   0.837   0.900   0.938
 36           PC   0.950   0.963   0.975   0.988   1.000
 37           JD    2.03    16.0
 38           PC   0.000   0.015   0.020   0.030   0.048   0.063   0.076   0.090   0.105   0.119
 39           PC   0.135   0.152   0.175   0.222   0.304   0.472   0.670   0.796   0.868   0.912
 40           PC   0.946   0.960   0.973   0.987   1.000
 41           JD    1.78    90.0
 42           PC   0.000   0.021   0.035   0.051   0.071   0.087   0.105   0.125   0.143   0.160
 43           PC   0.179   0.201   0.232   0.281   0.364   0.500   0.658   0.773   0.841   0.888
 44           PC   0.927   0.945   0.964   0.982   1.000
              *

 45           KK    204A
 46           KM   Sub-Basin   204A
 47           KM
 48           KM      The Clark Unit Hydrograph is used for this basin.
 49           KM          The Urban time-area relation is used for this basin.
 50           KM
 51           KM      Time of Concentration for this sub-basin is based on the following:
```

```
LINE          ID.......1.......2.......3.......4.......5.......6.......7.......8.......9......10

  52          KM          6-Hour Rainfall, Pattern No.  1.00
  53          KM          An rainfall areal reduction factor of 0.999
  54          KM
  55          KM       EXCESS RAINFALL VALUES EXCEEDED IN 5-MINUTE INTERVALS
  56          KM     5  10  15  20  25  30  35  40  45  50  55  60  65  70  75  80  85  90
  57          KM   .30 .30 .29 .09 .07 .06 .03 .02 .02 .01 .01 .01 .00 .00 .00 .00 .00 .00
  58          KM
  59          KM          L=   0.687 miles, S=  175 feet/mile, Kb= .03
  60          KM
  61          BA   0.108
  62          LG    0.09    0.25    5.80    0.18   25.00
  63          UC   0.188   0.152
  64          UA       0       5      16      30      65      77      84      90      94      97
  65          UA     100
              *

  66          KK  522523
  67          KM      Normal depth channel route from C522 to C523
  68          KM      Source:  200 Scale Mapping
  69          RS      10    FLOW      -1
  70          RC   0.060   0.050   0.060  3275.0  0.0197
  71          RX  1000.0  1020.0  1035.0  1065.0  1080.0  1120.0  1160.0  1185.0
  72          RY  1678.0  1676.0  1674.0  1672.0  1672.0  1674.0  1676.0  1678.0
              *

  73          KK    204B
  74          KM   Sub-Basin   204B
  75          KM
  76          KM      The Clark Unit Hydrograph is used for this basin.
  77          KM          The Urban time-area relation is used for this basin.
  78          KM
  79          KM      Time of Concentration for this sub-basin is based on the following:
  80          KM          6-Hour Rainfall, Pattern No.  1.00
  81          KM          An rainfall areal reduction factor of 0.998
  82          KM
  83          KM       EXCESS RAINFALL VALUES EXCEEDED IN 5-MINUTE INTERVALS
  84          KM     5  10  15  20  25  30  35  40  45  50  55  60  65  70  75  80  85  90
  85          KM   .30 .30 .30 .09 .07 .06 .03 .03 .02 .02 .02 .02 .00 .00 .00 .00 .00 .00
  86          KM
  87          KM          L=   0.775 miles, S=  128 feet/mile, Kb= .03
  88          KM
  89          BA   0.126
  90          LG    0.09    0.25    5.80    0.18   26.66
  91          UC   0.221   0.184
  92          UA       0       5      16      30      65      77      84      90      94      97
  93          UA     100
              *

  94          KK   C523I
  95          KM      Hydrograph combine 522523 + 204B at C523I
  96          HC       2
              *
```



```
LINE          ID.......1.......2.......3.......4.......5.......6.......7.......8.......9......10

  97          KK   C523O
  98          KM      Reservoir route at C523.
  99          RS       1    ELEV  1650.3
 100          SV    0.00    0.01    0.12    0.71    2.23    2.50    2.80    3.10    3.20    3.40
 101          SV    3.70    4.00    4.30    4.60    4.90    5.20    5.50
 102          SE  1650.3  1652.0  1654.0  1656.0  1658.0  1658.2  1658.4  1658.6  1658.7  1658.8
 103          SE  1659.0  1659.2  1659.4  1659.6  1659.8  1660.0  1660.2
 104          SQ       0      22      78     144     209     214     220     224     226     232
 105          SQ     239     249     288     384     529     726     960
              *

 106          KK   D523L
 107          KM      Hydrograph diversion at C523.  Main flow continues in the left branch.
 108          KM      Diverted flow is in the right branch.
 109          DT   D523R
 110          DI       0      22      78     144     209     214     220     224     226     232
 111          DI     239     249     288     384     529     726     960
 112          DQ       0       0       0       0       0       0       0       0       0       3
 113          DQ       5      10      20      37      61      96     139
              *

 114          KK    205A
 115          KM   Sub-Basin   205A
 116          KM
 117          KM      The Clark Unit Hydrograph is used for this basin.
 118          KM          The Natural time-area relation is used for this basin.
 119          KM
 120          KM      Time of Concentration for this sub-basin is based on the following:
 121          KM          6-Hour Rainfall, Pattern No.  1.00
 122          KM          An rainfall areal reduction factor of 0.998
 123          KM
 124          KM       EXCESS RAINFALL VALUES EXCEEDED IN 5-MINUTE INTERVALS
 125          KM     5  10  15  20  25  30  35  40  45  50  55  60  65  70  75  80  85  90
 126          KM   .27 .27 .26 .05 .04 .04 .02 .02 .02 .02 .02 .02 .01 .01 .01 .01 .01 .01
 127          KM
 128          KM          L=   0.870 miles, S=  378 feet/mile, Kb= .14
```

```
 129          KM
 130          BA   0.118
 131          LG    0.25    0.35    4.35    0.40   35.00
 132          UC   0.471   0.486
 133          UA      0       3       5       8      12      20      43      75      90      96
 134          UA    100
              *

 135          KK    205B
 136          KM   Sub-Basin   205B
 137          KM
 138          KM      The Clark Unit Hydrograph is used for this basin.
 139          KM          The Natural time-area relation is used for this basin.
 140          KM
 141          KM      Time of Concentration for this sub-basin is based on the following:
 142          KM          6-Hour Rainfall, Pattern No.  1.00
 143          KM          An rainfall areal reduction factor of 0.997
 144          KM
1                                          HEC-1 INPUT                                          PAGE  4

LINE          ID.......1.......2.......3.......4.......5.......6.......7.......8.......9......10

 145          KM       EXCESS RAINFALL VALUES EXCEEDED IN 5-MINUTE INTERVALS
 146          KM     5  10  15  20  25  30  35  40  45  50  55  60  65  70  75  80  85  90
 147          KM   .27 .27 .26 .05 .04 .04 .02 .02 .02 .02 .02 .02 .01 .01 .01 .01 .01 .01
 148          KM
 149          KM          L=   0.759 miles, S=  129 feet/mile, Kb= .14
 150          KM
 151          BA   0.211
 152          LG    0.25    0.35    4.35    0.40   35.00
 153          UC   0.696   0.481
 154          UA      0       3       5       8      12      20      43      75      90      96
 155          UA    100
              *

 156          KK    C528
 157          KM      Hydrograph combine 205A + 205B at C528
 158          HC       2
              *

 159          KK  528530
 160          KM      Normal depth channel route from C528 to C530
 161          KM      Source:  Hydrology Field Reconnaissance
 162          RS       3    FLOW      -1
 163          RC   0.060   0.043   0.060  2594.0  0.0709
 164          RX  1000.0  1018.0  1031.0  1042.0  1052.0  1066.0  1093.0  1107.0
 165          RY    96.3    92.2    89.9    85.9    85.7    91.5    91.2    96.3
              *

 166          KK    205C
 167          KM   Sub-Basin   205C
 168          KM
 169          KM      The Clark Unit Hydrograph is used for this basin.
 170          KM          The Natural time-area relation is used for this basin.
 171          KM
 172          KM      Time of Concentration for this sub-basin is based on the following:
 173          KM          6-Hour Rainfall, Pattern No.  1.00
 174          KM          An rainfall areal reduction factor of 0.999
 175          KM
 176          KM       EXCESS RAINFALL VALUES EXCEEDED IN 5-MINUTE INTERVALS
 177          KM     5  10  15  20  25  30  35  40  45  50  55  60  65  70  75  80  85  90
 178          KM   .27 .27 .26 .05 .04 .04 .02 .02 .02 .02 .02 .02 .01 .01 .01 .01 .01 .01
 179          KM
 180          KM          L=   0.618 miles, S=  331 feet/mile, Kb= .15
 181          KM
 182          BA   0.059
 183          LG    0.25    0.35    4.35    0.41   35.00
 184          UC   0.417   0.479
 185          UA      0       3       5       8      12      20      43      75      90      96
 186          UA    100
              *
1                                          HEC-1 INPUT                                          PAGE  5

LINE          ID.......1.......2.......3.......4.......5.......6.......7.......8.......9......10

 187          KK   C530R
 188          KM      Hydrograph combine 528530 + 205C at C530 right branch
 189          HC       2
              *

 190          KK    205D
 191          KM   Sub-Basin   205D
 192          KM
 193          KM      The Clark Unit Hydrograph is used for this basin.
 194          KM          The Natural time-area relation is used for this basin.
 195          KM
 196          KM      Time of Concentration for this sub-basin is based on the following:
 197          KM          6-Hour Rainfall, Pattern No.  1.00
 198          KM          An rainfall areal reduction factor of 0.996
 199          KM
 200          KM       EXCESS RAINFALL VALUES EXCEEDED IN 5-MINUTE INTERVALS
 201          KM     5  10  15  20  25  30  35  40  45  50  55  60  65  70  75  80  85  90
 202          KM   .27 .27 .26 .05 .04 .04 .02 .02 .02 .02 .02 .02 .01 .01 .01 .01 .01 .01
 203          KM
```

```
 204          KM          L=   1.020 miles, S=  361 feet/mile, Kb= .13
 205          KM
 206          BA   0.319
 207          LG    0.25    0.35    4.35    0.40   35.00
 208          UC   0.513   0.343
 209          UA      0       3       5       8      12      20      43      75      90      96
 210          UA    100
              *

 211          KK    205E
 212          KM   Sub-Basin   205E
 213          KM
 214          KM      The Clark Unit Hydrograph is used for this basin.
 215          KM          The Natural time-area relation is used for this basin.
 216          KM
 217          KM      Time of Concentration for this sub-basin is based on the following:
 218          KM          6-Hour Rainfall, Pattern No.  1.00
 219          KM          An rainfall areal reduction factor of 0.997
 220          KM
 221          KM       EXCESS RAINFALL VALUES EXCEEDED IN 5-MINUTE INTERVALS
 222          KM     5  10  15  20  25  30  35  40  45  50  55  60  65  70  75  80  85  90
 223          KM   .27 .27 .26 .05 .04 .04 .02 .02 .02 .02 .02 .02 .01 .01 .01 .01 .01 .01
 224          KM
 225          KM          L=   1.357 miles, S=  358 feet/mile, Kb= .14
 226          KM
 227          BA   0.218
 228          LG    0.25    0.35    4.35    0.40   35.00
 229          UC   0.671   0.723
 230          UA      0       3       5       8      12      20      43      75      90      96
 231          UA    100
              *
```



```
LINE          ID.......1.......2.......3.......4.......5.......6.......7.......8.......9......10

 232          KK    C529
 233          KM      Hydrograph combine 205D + 205E at C529
 234          HC       2
              *
              * *
              * * NOTE:  529530 too short to route
              * *
              *

 235          KK    C530
 236          KM      Hydrograph combine C529 + C530R at C530
 237          HC       2
              *

 238          KK  530531
 239          KM      Normal depth channel route from C530 to C531
 240          KM      Source:  Hydrology Field Reconnaissance
 241          RS       3    FLOW      -1
 242          RC   0.060   0.059   0.060  2426.0  0.0404
 243          RX  1000.0  1035.0  1050.0  1060.0  1075.0  1081.0  1088.0  1094.0
 244          RY    95.9    86.5    86.2    83.1    84.0    90.2    95.6    99.3
              *

 245          KK    205F
 246          KM   Sub-Basin   205F
 247          KM
 248          KM      The Clark Unit Hydrograph is used for this basin.
 249          KM          The Natural time-area relation is used for this basin.
 250          KM
 251          KM      Time of Concentration for this sub-basin is based on the following:
 252          KM          6-Hour Rainfall, Pattern No.  1.00
 253          KM          An rainfall areal reduction factor of 0.998
 254          KM
 255          KM       EXCESS RAINFALL VALUES EXCEEDED IN 5-MINUTE INTERVALS
 256          KM     5  10  15  20  25  30  35  40  45  50  55  60  65  70  75  80  85  90
 257          KM   .27 .27 .26 .05 .04 .04 .02 .02 .02 .02 .02 .02 .01 .01 .01 .01 .01 .01
 258          KM
 259          KM          L=   0.786 miles, S=  326 feet/mile, Kb= .14
 260          KM
 261          BA   0.161
 262          LG    0.25    0.35    4.35    0.41   35.00
 263          UC   0.471   0.374
 264          UA      0       3       5       8      12      20      43      75      90      96
 265          UA    100
              *

 266          KK    C531
 267          KM      Hydrograph combine 530531 + 205F at C531
 268          HC       2
              *
```



```
LINE          ID.......1.......2.......3.......4.......5.......6.......7.......8.......9......10

 269          KK  531532
 270          KM      Normal depth channel route from C531 to C532
 271          KM      Source:  Hydrology Field Reconnaissance
 272          RS       5    FLOW      -1
```

```
273          RC   0.060   0.065   0.060  3391.0  0.0463
274          RX  1000.0  1012.0  1022.0  1032.0  1050.0  1056.0  1068.0  1092.0
275          RY    98.8    93.8    89.1    86.4    86.5    89.1    91.0    97.6
             *

276          KK    205G
277          KM   Sub-Basin   205G
278          KM
279          KM      The Clark Unit Hydrograph is used for this basin.
280          KM          The Natural time-area relation is used for this basin.
281          KM
282          KM      Time of Concentration for this sub-basin is based on the following:
283          KM          6-Hour Rainfall, Pattern No.  1.00
284          KM          An rainfall areal reduction factor of 0.998
285          KM
286          KM       EXCESS RAINFALL VALUES EXCEEDED IN 5-MINUTE INTERVALS
287          KM     5  10  15  20  25  30  35  40  45  50  55  60  65  70  75  80  85  90
288          KM   .27 .26 .25 .04 .03 .03 .02 .02 .02 .02 .02 .02 .00 .00 .00 .00 .00 .00
289          KM
290          KM          L=   0.924 miles, S=  338 feet/mile, Kb= .13
291          KM
292          BA   0.185
293          LG    0.24    0.35    4.50    0.40   31.23
294          UC   0.500   0.420
295          UA       0       3       5       8      12      20      43      75      90      96
296          UA     100
             *

297          KK   C532L
298          KM      Hydrograph combine 531532 + 205G at C532 left branch
299          HC       2
             *

300          KK    205H
301          KM   Sub-Basin   205H
302          KM
303          KM      The Clark Unit Hydrograph is used for this basin.
304          KM          The Natural time-area relation is used for this basin.
305          KM
306          KM      Time of Concentration for this sub-basin is based on the following:
307          KM          6-Hour Rainfall, Pattern No.  1.00
308          KM          An rainfall areal reduction factor of 0.997
309          KM
310          KM       EXCESS RAINFALL VALUES EXCEEDED IN 5-MINUTE INTERVALS
311          KM     5  10  15  20  25  30  35  40  45  50  55  60  65  70  75  80  85  90
312          KM   .27 .26 .26 .04 .04 .03 .02 .02 .02 .02 .02 .02 .00 .00 .00 .00 .00 .00
313          KM
314          KM          L=   1.464 miles, S=  325 feet/mile, Kb= .13
315          KM
316          BA   0.261
```



```
LINE         ID.......1.......2.......3.......4.......5.......6.......7.......8.......9......10

317          LG    0.24    0.35    4.50    0.39   31.55
318          UC   0.713   0.742
319          UA       0       3       5       8      12      20      43      75      90      96
320          UA     100
             *

321          KK    C532
322          KM      Hydrograph combine C532L + 205H at C532
323          HC       2
             *

324          KK  532533
325          KM      Normal depth channel route from C532 to C533
326          KM      Source:  Hydrology Field Reconnaissance
327          RS       2    FLOW      -1
328          RC   0.060   0.045   0.060  1555.0  0.0283
329          RX  1000.0  1020.0  1030.0  1048.0  1065.0  1077.0  1092.0  1119.0
330          RY    98.0    89.4    88.1    85.6    85.9    92.2    93.8    97.0
             *

331          KK    205I
332          KM   Sub-Basin   205I
333          KM
334          KM      The Clark Unit Hydrograph is used for this basin.
335          KM          The Natural time-area relation is used for this basin.
336          KM
337          KM      Time of Concentration for this sub-basin is based on the following:
338          KM          6-Hour Rainfall, Pattern No.  1.00
339          KM          An rainfall areal reduction factor of 0.995
340          KM
341          KM       EXCESS RAINFALL VALUES EXCEEDED IN 5-MINUTE INTERVALS
342          KM     5  10  15  20  25  30  35  40  45  50  55  60  65  70  75  80  85  90
343          KM   .27 .26 .25 .04 .02 .02 .01 .01 .01 .01 .01 .01 .00 .00 .00 .00 .00 .00
344          KM
345          KM          L=   1.487 miles, S=  326 feet/mile, Kb= .11
346          KM
347          BA   0.354
348          LG    0.20    0.37    5.20    0.28   15.18
349          UC   0.658   0.578
350          UA       0       3       5       8      12      20      43      75      90      96
351          UA     100
```

```
                *

 352            KK    C533
 353            KM      Hydrograph combine 532533 + 205I at C533
 354            HC       2
                *

 355            KK  533534
 356            KM      Normal depth channel route from C533 to C534
 357            KM      Source:  Hydrology Field Reconnaissance
 358            RS      13    FLOW      -1
 359            RC   0.060   0.046   0.060  7145.0  0.0241
 360            RX  1000.0  1010.0  1060.0  1073.0  1160.0  1181.0  1223.0  1237.0
 361            RY    97.8    93.7    94.7    90.8    89.9    92.4    94.0    96.8
                *
1                                          HEC-1 INPUT                                                    PAGE  9

LINE            ID.......1.......2.......3.......4.......5.......6.......7.......8.......9......10


 362            KK    205J
 363            KM   Sub-Basin   205J
 364            KM
 365            KM      The Clark Unit Hydrograph is used for this basin.
 366            KM          The Natural time-area relation is used for this basin.
 367            KM
 368            KM      Time of Concentration for this sub-basin is based on the following:
 369            KM          6-Hour Rainfall, Pattern No.  1.00
 370            KM          An rainfall areal reduction factor of 0.995
 371            KM
 372            KM       EXCESS RAINFALL VALUES EXCEEDED IN 5-MINUTE INTERVALS
 373            KM     5  10  15  20  25  30  35  40  45  50  55  60  65  70  75  80  85  90
 374            KM   .26 .25 .24 .03 .00 .00 .00 .00 .00 .00 .00 .00 .00 .00 .00 .00 .00 .00
 375            KM
 376            KM          L=   1.633 miles, S=  243 feet/mile, Kb= .08
 377            KM
 378            BA   0.369
 379            LG    0.21    0.35    4.90    0.30    3.48
 380            UC   0.667   0.616
 381            UA       0       3       5       8      12      20      43      75      90      96
 382            UA     100
                *

 383            KK   C534R
 384            KM      Hydrograph combine 533534 + 205J at C534 right branch
 385            HC       2
                *

 386            KK    205K
 387            KM   Sub-Basin   205K
 388            KM
 389            KM      The Clark Unit Hydrograph is used for this basin.
 390            KM          The Natural time-area relation is used for this basin.
 391            KM
 392            KM      Time of Concentration for this sub-basin is based on the following:
 393            KM          6-Hour Rainfall, Pattern No.  1.00
 394            KM          An rainfall areal reduction factor of 0.997
 395            KM
 396            KM       EXCESS RAINFALL VALUES EXCEEDED IN 5-MINUTE INTERVALS
 397            KM     5  10  15  20  25  30  35  40  45  50  55  60  65  70  75  80  85  90
 398            KM   .27 .26 .26 .05 .01 .00 .00 .00 .00 .00 .00 .00 .00 .00 .00 .00 .00 .00
 399            KM
 400            KM          L=   1.772 miles, S=  249 feet/mile, Kb= .10
 401            KM
 402            BA   0.245
 403            LG    0.16    0.38    5.60    0.22    1.54
 404            UC   0.817   1.040
 405            UA       0       3       5       8      12      20      43      75      90      96
 406            UA     100
                *
1                                          HEC-1 INPUT                                                    PAGE 10

LINE            ID.......1.......2.......3.......4.......5.......6.......7.......8.......9......10


 407            KK    C534
 408            KM      Hydrograph combine C534R + 205K at C534
 409            HC       2
                *

 410            KK  534535
 411            KM      Normal depth channel route from C534 to C535
 412            KM      Source:  Hydrology Field Reconnaissance
 413            RS       4    FLOW      -1
 414            RC   0.065   0.046   0.065  2037.0  0.0221
 415            RX  1000.0  1010.0  1016.0  1075.0  1150.0  1162.0  1174.0  1182.0
 416            RY    97.1    93.4    91.6    89.6    86.9    90.8    92.2    92.3
                *

 417            KK    205L
 418            KM   Sub-Basin   205L
 419            KM
 420            KM      The Clark Unit Hydrograph is used for this basin.
 421            KM          The Natural time-area relation is used for this basin.
 422            KM
```

```
423          KM      Time of Concentration for this sub-basin is based on the following:
424          KM          6-Hour Rainfall, Pattern No.  1.00
425          KM          An rainfall areal reduction factor of 0.998
426          KM
427          KM       EXCESS RAINFALL VALUES EXCEEDED IN 5-MINUTE INTERVALS
428          KM     5  10  15  20  25  30  35  40  45  50  55  60  65  70  75  80  85  90
429          KM   .26 .25 .24 .03 .00 .00 .00 .00 .00 .00 .00 .00 .00 .00 .00 .00 .00 .00
430          KM
431          KM          L=   0.701 miles, S=  284 feet/mile, Kb= .09
432          KM
433          BA   0.118
434          LG    0.19    0.36    5.00    0.29    0.00
435          UC   0.346   0.290
436          UA       0       3       5       8      12      20      43      75      90      96
437          UA     100
             *

438          KK    C535
439          KM      Hydrograph combine 534535 + 205L at C535
440          HC       2
             *

441          KK  535536
442          KM      Normal depth channel route from C535 to C536
443          KM      Source:  HEC-2 Cross Section: HE 3.275
444          RS       5    FLOW      -1
445          RC   0.075   0.050   0.075  2975.0  0.0236
446          RX  9852.8  9871.5  9957.7 10000.0 10015.6 10052.4 10142.4 10183.6
447          RY  1911.6  1904.3  1906.9  1900.8  1900.8  1905.4  1905.2  1912.6
             *
```



```
LINE         ID.......1.......2.......3.......4.......5.......6.......7.......8.......9......10

448          KK    205M
449          KM   Sub-Basin   205M
450          KM
451          KM      The Clark Unit Hydrograph is used for this basin.
452          KM          The Urban time-area relation is used for this basin.
453          KM
454          KM      Time of Concentration for this sub-basin is based on the following:
455          KM          6-Hour Rainfall, Pattern No.  1.00
456          KM          An rainfall areal reduction factor of 0.998
457          KM
458          KM       EXCESS RAINFALL VALUES EXCEEDED IN 5-MINUTE INTERVALS
459          KM     5  10  15  20  25  30  35  40  45  50  55  60  65  70  75  80  85  90
460          KM   .29 .28 .28 .07 .05 .03 .02 .01 .01 .01 .01 .01 .00 .00 .00 .00 .00 .00
461          KM
462          KM          L=   0.839 miles, S=  230 feet/mile, Kb= .05
463          KM
464          BA   0.139
465          LG    0.15    0.31    5.40    0.22   22.35
466          UC   0.258   0.221
467          UA       0       5      16      30      65      77      84      90      94      97
468          UA     100
             *

469          KK   C536R
470          KM      Hydrograph combine 535536 + 205M at C536 right branch
471          HC       2
             *

472          KK    205N
473          KM   Sub-Basin   205N
474          KM
475          KM      The Clark Unit Hydrograph is used for this basin.
476          KM          The HEC-1 time-area relation is used for this basin.
477          KM
478          KM      Time of Concentration for this sub-basin is based on the following:
479          KM          6-Hour Rainfall, Pattern No.  1.00
480          KM          An rainfall areal reduction factor of 0.998
481          KM
482          KM       EXCESS RAINFALL VALUES EXCEEDED IN 5-MINUTE INTERVALS
483          KM     5  10  15  20  25  30  35  40  45  50  55  60  65  70  75  80  85  90
484          KM   .27 .26 .26 .05 .01 .00 .00 .00 .00 .00 .00 .00 .00 .00 .00 .00 .00 .00
485          KM
486          KM          L=   1.183 miles, S=  245 feet/mile, Kb= .10
487          KM
488          BA   0.156
489          LG    0.15    0.39    5.70    0.21    0.80
490          UC   0.592   0.681
             *
```



```
LINE         ID.......1.......2.......3.......4.......5.......6.......7.......8.......9......10

491          KK   C536I
492          KM      Hydrograph combine C536R + 205N at C536I
493          HC       2
             *
             * *
             * * C536I is the total flow in Hesperus Wash upstream of Dam 36
             * *
```

```
                *
494             KK   C536O
495             KM      Reservoir route at C536 (Dam 36).
496             RS       1    ELEV  1852.1
497             SV    0.00   14.41   35.94   67.64  108.61  158.07  218.14  276.00  280.00  289.00
498             SV  298.02  308.00  317.00  327.00  337.00  346.95  358.00  374.00
499             SE  1852.1  1866.0  1870.0  1874.0  1878.0  1882.0  1886.0  1889.0  1889.2  1889.6
500             SE  1890.0  1890.4  1890.8  1891.2  1891.6  1892.0  1892.4  1893.0
501             SQ       0     108     168     211     245     276     301     320     338     347
502             SQ     356     459     679     995    1408    1905    2477    3119    3826    5009
503             SE  1852.1  1858.0  1862.0  1866.0  1870.0  1874.0  1878.0  1882.0  1886.0  1889.0
504             SE  1889.2  1889.6  1890.0  1890.4  1890.8  1891.2  1891.6  1892.0  1892.4  1893.0
505             RL                    0.17
                *
                * *
                * * End Basin 205.  Start Basin 206
                * *
                *

506             KK  536537
507             KM      Normal depth channel route from C536 to C537
508             KM      Source:  HEC-2 Cross Section: HE 2.729
509             RS       3    FLOW      -1
510             RC   0.075   0.050   0.075  1480.0  0.0209
511             RX  9900.0  9912.0  9947.3  9979.3 10025.0 10044.5 10051.0 10060.0
512             RY  1846.5  1845.4  1843.1  1834.3  1833.6  1840.5  1843.3  1843.5
                *

513             KK    206A
514             KM   Sub-Basin   206A
515             KM
516             KM      The Clark Unit Hydrograph is used for this basin.
517             KM          The Urban time-area relation is used for this basin.
518             KM
519             KM      Time of Concentration for this sub-basin is based on the following:
520             KM          6-Hour Rainfall, Pattern No.  1.00
521             KM          An rainfall areal reduction factor of 0.998
522             KM
523             KM       EXCESS RAINFALL VALUES EXCEEDED IN 5-MINUTE INTERVALS
524             KM     5  10  15  20  25  30  35  40  45  50  55  60  65  70  75  80  85  90
525             KM   .30 .29 .29 .08 .06 .05 .02 .02 .02 .02 .02 .02 .01 .01 .01 .01 .01 .01
526             KM
527             KM          L=   0.631 miles, S=  256 feet/mile, Kb= .04
528             KM
529             BA   0.128
530             LG    0.12    0.28    5.30    0.23   33.34
1                                          HEC-1 INPUT                                                    PAGE 13

LINE            ID.......1.......2.......3.......4.......5.......6.......7.......8.......9......10

531             UC   0.188   0.129
532             UA       0       5      16      30      65      77      84      90      94      97
533             UA     100
                *

534             KK    C537
535             KM      Hydrograph combine 536537 + 206A at C537
536             HC       2
                *

537             KK  537538
538             KM      Normal depth channel route from C537 to C538
539             KM      Source:  HEC-2 Cross Section: HE 2.493
540             RS       4    FLOW      -1
541             RC   0.075   0.050   0.075  2155.0  0.0210
542             RX  9946.0  9957.6  9984.8  9994.8 10000.0 10036.5 10070.1 10107.3
543             RY  1817.0  1815.2  1807.4  1803.2  1803.2  1805.5  1814.3  1815.4
                *

544             KK    206B
545             KM   Sub-Basin   206B
546             KM
547             KM      The Clark Unit Hydrograph is used for this basin.
548             KM          The Urban time-area relation is used for this basin.
549             KM
550             KM      Time of Concentration for this sub-basin is based on the following:
551             KM          6-Hour Rainfall, Pattern No.  1.00
552             KM          An rainfall areal reduction factor of 0.999
553             KM
554             KM       EXCESS RAINFALL VALUES EXCEEDED IN 5-MINUTE INTERVALS
555             KM     5  10  15  20  25  30  35  40  45  50  55  60  65  70  75  80  85  90
556             KM   .30 .30 .30 .09 .07 .06 .03 .03 .02 .02 .02 .02 .01 .01 .01 .01 .01 .01
557             KM
558             KM          L=   0.570 miles, S=  139 feet/mile, Kb= .03
559             KM
560             BA   0.095
561             LG    0.10    0.26    5.20    0.23   41.42
562             UC   0.183   0.137
563             UA       0       5      16      30      65      77      84      90      94      97
564             UA     100
                *

565             KK   C538I
566             KM      Hydrograph combine 537538 + 206B at C538I
```

```
 567          HC       2
              *

 568          KK   C538O
 569          KM      Reservoir route at C538.
 570          RS       1    ELEV  1778.2
 571          SV    0.00    0.10    0.57    1.69    2.60    2.70    2.90    3.00    3.20    3.38
 572          SV    3.60    3.90    4.10    4.30    4.60    5.10    5.60    6.10    7.10    8.10
 573          SE  1778.2  1782.0  1784.0  1786.0  1787.1  1787.2  1787.4  1787.6  1787.8  1788.0
 574          SE  1788.2  1788.4  1788.6  1788.8  1789.0  1789.4  1789.8  1790.2  1790.8  1791.4
 575          SQ       0      82     133     185     207     208     212     218     226     235
1                                          HEC-1 INPUT                                                PAGE 14

LINE          ID.......1.......2.......3.......4.......5.......6.......7.......8.......9......10

 576          SQ     249     265     286     310     338     400     482     611     942    1439
              *

 577          KK  538540
 578          KM      Normal depth channel route from C538 to C540
 579          KM      Source:  HEC-2 Cross Section: HE 1.990
 580          RS       6    FLOW      -1
 581          RC   0.075   0.050   0.075  2176.0  0.0210
 582          RX  9907.7  9931.8  9978.4 10000.0 10041.1 10056.9 10143.7 10164.9
 583          RY  1767.5  1754.9  1755.2  1753.2  1753.1  1755.1  1757.3  1769.4
              *

 584          KK    206C
 585          KM   Sub-Basin   206C
 586          KM
 587          KM      The Clark Unit Hydrograph is used for this basin.
 588          KM          The Urban time-area relation is used for this basin.
 589          KM
 590          KM      Time of Concentration for this sub-basin is based on the following:
 591          KM          6-Hour Rainfall, Pattern No.  1.00
 592          KM          An rainfall areal reduction factor of 1.000
 593          KM
 594          KM       EXCESS RAINFALL VALUES EXCEEDED IN 5-MINUTE INTERVALS
 595          KM     5  10  15  20  25  30  35  40  45  50  55  60  65  70  75  80  85  90
 596          KM   .29 .28 .28 .07 .04 .03 .02 .02 .02 .02 .02 .02 .00 .00 .00 .00 .00 .00
 597          KM
 598          KM          L=   0.427 miles, S=  138 feet/mile, Kb= .04
 599          KM
 600          BA   0.024
 601          LG    0.11    0.26    4.35    0.36   28.55
 602          UC   0.192   0.252
 603          UA       0       5      16      30      65      77      84      90      94      97
 604          UA     100
              *

 605          KK   C540R
 606          KM      Hydrograph combine 538540 + 206C at C540 right branch
 607          HC       2
              *

 608          KK    206D
 609          KM   Sub-Basin   206D
 610          KM
 611          KM      The Clark Unit Hydrograph is used for this basin.
 612          KM          The Urban time-area relation is used for this basin.
 613          KM
 614          KM      Time of Concentration for this sub-basin is based on the following:
 615          KM          6-Hour Rainfall, Pattern No.  1.00
 616          KM          An rainfall areal reduction factor of 0.999
 617          KM
 618          KM       EXCESS RAINFALL VALUES EXCEEDED IN 5-MINUTE INTERVALS
 619          KM     5  10  15  20  25  30  35  40  45  50  55  60  65  70  75  80  85  90
 620          KM   .31 .31 .31 .10 .08 .07 .03 .03 .03 .02 .02 .02 .01 .01 .01 .01 .01 .01
 621          KM
 622          KM          L=   0.531 miles, S=  236 feet/mile, Kb= .03
1                                          HEC-1 INPUT                                                PAGE 15

LINE          ID.......1.......2.......3.......4.......5.......6.......7.......8.......9......10

 623          KM
 624          BA   0.062
 625          LG    0.08    0.25    5.70    0.18   43.01
 626          UC   0.150   0.133
 627          UA       0       5      16      30      65      77      84      90      94      97
 628          UA     100
              *

 629          KK  539540
 630          KM      Normal depth channel route from C539 to C540
 631          KM      Source:  200 Scale Mapping
 632          RS       5    FLOW      -1
 633          RC   0.060   0.050   0.055  1872.0  0.0256
 634          RX  1000.0  1007.0  1016.0  1036.0  1046.0  1080.0  1150.0  1210.0
 635          RY  1750.0  1748.0  1746.0  1744.0  1744.0  1746.0  1748.0  1750.0
              *

 636          KK    206E
 637          KM   Sub-Basin   206E
 638          KM
 639          KM      The Clark Unit Hydrograph is used for this basin.
```

```
640          KM          The Urban time-area relation is used for this basin.
641          KM
642          KM      Time of Concentration for this sub-basin is based on the following:
643          KM          6-Hour Rainfall, Pattern No.  1.00
644          KM          An rainfall areal reduction factor of 1.000
645          KM
646          KM       EXCESS RAINFALL VALUES EXCEEDED IN 5-MINUTE INTERVALS
647          KM     5  10  15  20  25  30  35  40  45  50  55  60  65  70  75  80  85  90
648          KM   .29 .28 .28 .07 .04 .03 .01 .01 .01 .01 .01 .01 .00 .00 .00 .00 .00 .00
649          KM
650          KM          L=   0.343 miles, S=  175 feet/mile, Kb= .03
651          KM
652          BA   0.023
653          LG    0.09    0.25    4.30    0.36   25.75
654          UC   0.138   0.150
655          UA       0       5      16      30      65      77      84      90      94      97
656          UA     100
             *

657          KK   C540L
658          KM      Hydrograph combine 539540 + 206E at C540 left branch
659          HC       2
             *

660          KK    C540
661          KM      Hydrograph combine C540R + C540L at C540
662          HC       2
             *
             * *
             * * C540 is the end of Hesperus Wash and the start of Balboa Wash
             * *
             *
```



```
LINE         ID.......1.......2.......3.......4.......5.......6.......7.......8.......9......10

663          KK  540541
664          KM      Normal depth channel route from C540 to C541
665          KM      Source:  HEC-2 Cross Section: BA 1.645
666          RS       7    FLOW      -1
667          RC   0.065   0.035   0.065  4207.0  0.0204
668          RX  9960.8  9968.0  9975.1  9975.7  9993.2 10018.2 10297.5 10343.9
669          RY  1725.2  1721.8  1718.4  1716.2  1716.4  1718.4  1719.8  1730.5
             *

670          KK    206F
671          KM   Sub-Basin   206F
672          KM
673          KM      The Clark Unit Hydrograph is used for this basin.
674          KM          The Urban time-area relation is used for this basin.
675          KM
676          KM      Time of Concentration for this sub-basin is based on the following:
677          KM          6-Hour Rainfall, Pattern No.  1.00
678          KM          An rainfall areal reduction factor of 0.998
679          KM
680          KM       EXCESS RAINFALL VALUES EXCEEDED IN 5-MINUTE INTERVALS
681          KM     5  10  15  20  25  30  35  40  45  50  55  60  65  70  75  80  85  90
682          KM   .29 .29 .28 .08 .05 .04 .02 .01 .01 .01 .01 .01 .00 .00 .00 .00 .00 .00
683          KM
684          KM          L=   0.975 miles, S=  217 feet/mile, Kb= .03
685          KM
686          BA   0.157
687          LG    0.09    0.25    4.60    0.30   24.97
688          UC   0.213   0.187
689          UA       0       5      16      30      65      77      84      90      94      97
690          UA     100
             *

691          KK    C541
692          KM      Hydrograph combine 540541 + 206F at C541
693          HC       2
             *

694          KK  541548
695          KM      Normal depth channel route from C541 to C548
696          KM      Source:  HEC-2 Cross Section: BA 0.905
697          RS       2    FLOW      -1
698          RC   0.060   0.045   0.060  1138.0  0.0316
699          RX  9761.7  9936.7  9955.2  9986.9  9994.7 10039.2 10065.3 10066.0
700          RY  1647.4  1644.1  1638.1  1637.3  1636.2  1637.5  1652.9  1653.0
             *

701          KK    206G
702          KM   Sub-Basin   206G
703          KM
704          KM      The Clark Unit Hydrograph is used for this basin.
705          KM          The Urban time-area relation is used for this basin.
706          KM
707          KM      Time of Concentration for this sub-basin is based on the following:
708          KM          6-Hour Rainfall, Pattern No.  1.00
```



```
LINE         ID.......1.......2.......3.......4.......5.......6.......7.......8.......9......10
```

```
709          KM          An rainfall areal reduction factor of 0.999
710          KM
711          KM       EXCESS RAINFALL VALUES EXCEEDED IN 5-MINUTE INTERVALS
712          KM     5  10  15  20  25  30  35  40  45  50  55  60  65  70  75  80  85  90
713          KM   .30 .29 .29 .09 .06 .05 .02 .02 .02 .02 .02 .02 .00 .00 .00 .00 .00 .00
714          KM
715          KM          L=   0.950 miles, S=  132 feet/mile, Kb= .03
716          KM
717          BA   0.089
718          LG    0.11    0.26    5.20    0.23   29.86
719          UC   0.246   0.296
720          UA       0       5      16      30      65      77      84      90      94      97
721          UA     100
             *

722          KK  BB523R
723          KM      Retrieve previously diverted hydrograph at C523 in the right branch.
724          DR   D523R
             *

725          KK  523548
726          KM      Normal depth channel route from C523 to C548
727          KM      Source:  200 Scale Mapping
728          RS      23    FLOW      -1
729          RC   0.040   0.018   0.040  2680.0  0.0189
730          RX  1000.0  1040.0  1090.0  1130.0  1170.0  1171.2  1181.2  1196.2
731          RY  1646.0  1645.0  1643.8  1644.7  1644.0  1644.4  1646.0  1648.0
             *

732          KK   C548L
733          KM      Hydrograph combine 541548 + 206G + BB523R at C548 left branch
734          HC       3    3.72
             *
             * *
             * * C548L is the total flow in Balboa Wash above confluence with Oxford Wash
             * *
             *

735          KK    206H
736          KM   Sub-Basin   206H
737          KM
738          KM      The Clark Unit Hydrograph is used for this basin.
739          KM          The Urban time-area relation is used for this basin.
740          KM
741          KM      Time of Concentration for this sub-basin is based on the following:
742          KM          6-Hour Rainfall, Pattern No.  1.00
743          KM          An rainfall areal reduction factor of 0.999
744          KM
745          KM       EXCESS RAINFALL VALUES EXCEEDED IN 5-MINUTE INTERVALS
746          KM     5  10  15  20  25  30  35  40  45  50  55  60  65  70  75  80  85  90
747          KM   .31 .30 .30 .10 .07 .07 .03 .03 .03 .02 .02 .02 .01 .01 .01 .01 .01 .01
748          KM
749          KM          L=   0.515 miles, S=  183 feet/mile, Kb= .03
750          KM
751          BA   0.059
```



```
LINE         ID.......1.......2.......3.......4.......5.......6.......7.......8.......9......10

752          LG    0.08    0.25    5.70    0.18   36.29
753          UC   0.158   0.141
754          UA       0       5      16      30      65      77      84      90      94      97
755          UA     100
             *

756          KK  542543
757          KM      Normal depth channel route from C542 to C543
758          KM      Source:  HEC-2 Cross Section: OX 0.931
759          RS       2    FLOW      -1
760          RC   0.075   0.040   0.050   686.0  0.0066
761          RX  9846.9  9881.6  9967.5  9983.2 10010.0 10025.0 10033.8 10039.6
762          RY  1732.3  1723.5  1724.1  1717.8  1717.0  1724.0  1728.2  1730.7
             *

763          KK    206I
764          KM   Sub-Basin   206I
765          KM
766          KM      The Clark Unit Hydrograph is used for this basin.
767          KM          The Urban time-area relation is used for this basin.
768          KM
769          KM      Time of Concentration for this sub-basin is based on the following:
770          KM          6-Hour Rainfall, Pattern No.  1.00
771          KM          An rainfall areal reduction factor of 1.000
772          KM
773          KM       EXCESS RAINFALL VALUES EXCEEDED IN 5-MINUTE INTERVALS
774          KM     5  10  15  20  25  30  35  40  45  50  55  60  65  70  75  80  85  90
775          KM   .31 .30 .30 .10 .07 .07 .03 .03 .03 .02 .02 .02 .01 .01 .01 .01 .01 .01
776          KM
777          KM          L=   0.232 miles, S=  286 feet/mile, Kb= .03
778          KM
779          BA   0.021
780          LG    0.08    0.25    5.70    0.18   34.78
781          UC   0.092   0.074
782          UA       0       5      16      30      65      77      84      90      94      97
783          UA     100
```

```
                *
 784            KK    C543
 785            KM      Hydrograph combine 542543 + 206I at C543
 786            HC       2
                *

 787            KK   D543L
 788            KM      Hydrograph diversion at C543.  Main flow continues in the left branch.
 789            KM      Diverted flow is in the right branch.
 790            DT   D543R
 791            DI       0      38      45      50      65      85      97     122     141     162
 792            DI     194     350     395     432     475     522     570     612
 793            DQ       0      38      45      50      65      85      97     122     141     162
 794            DQ     194     350     395     425     460     500     540     575
                *
1                                          HEC-1 INPUT                                          PAGE 19

LINE            ID.......1.......2.......3.......4.......5.......6.......7.......8.......9......10

 795            KK  543544
 796            KM      Normal depth channel route from C543 to C544
 797            KM      Source:  200 Scale Mapping & Hydrology Field Reconnaissance
 798            RS       1    FLOW      -1
 799            RC   0.040   0.018   0.040   597.0  0.0277
 800            RX  1000.0  1020.0  1045.0  1075.0  1105.0  1106.2  1146.2  1266.2
 801            RY  1720.0  1718.0  1712.0  1712.3  1712.0  1712.4  1714.0  1720.0
                *

 802            KK    206K
 803            KM   Sub-Basin   206K
 804            KM
 805            KM      The Clark Unit Hydrograph is used for this basin.
 806            KM          The Urban time-area relation is used for this basin.
 807            KM
 808            KM      Time of Concentration for this sub-basin is based on the following:
 809            KM          6-Hour Rainfall, Pattern No.  1.00
 810            KM          An rainfall areal reduction factor of 0.999
 811            KM
 812            KM       EXCESS RAINFALL VALUES EXCEEDED IN 5-MINUTE INTERVALS
 813            KM     5  10  15  20  25  30  35  40  45  50  55  60  65  70  75  80  85  90
 814            KM   .30 .30 .30 .09 .07 .06 .03 .03 .02 .01 .01 .01 .00 .00 .00 .00 .00 .00
 815            KM
 816            KM          L=   0.615 miles, S=  255 feet/mile, Kb= .03
 817            KM
 818            BA   0.056
 819            LG    0.09    0.25    5.70    0.18   25.80
 820            UC   0.158   0.168
 821            UA       0       5      16      30      65      77      84      90      94      97
 822            UA     100
                *

 823            KK    C544
 824            KM      Hydrograph combine 543544 + 206K at C544
 825            HC       2
                *

 826            KK  544545
 827            KM      Normal depth channel route from C544 to C545
 828            KM      Source:  200 Scale Mapping & Hydrology Field Reconnaissance
 829            RS       2    FLOW      -1
 830            RC   0.040   0.018   0.040   985.0  0.0234
 831            RX  1000.0  1008.0  1018.0  1048.0  1078.0  1079.2  1089.2  1109.2
 832            RY  1690.0  1688.0  1686.0  1686.3  1686.0  1686.4  1688.0  1689.0
                *

 833            KK   D545L
 834            KM      Hydrograph diversion at C545.  Main flow continues in the left branch.
 835            KM      Diverted flow is in the right branch.
 836            DT   D545R
 837            DI       0      50     100     200     400     800    1600    3200    5000
 838            DQ       0      25      50     100     200     400     800    1600    2500
                *
1                                          HEC-1 INPUT                                          PAGE 20

LINE            ID.......1.......2.......3.......4.......5.......6.......7.......8.......9......10

 839            KK  545546
 840            KM      Normal depth channel route from C545 to C546
 841            KM      Source:  200 Scale Mapping & Hydrology Field Reconnaissance
 842            RS       1    FLOW      -1
 843            RC   0.040   0.018   0.040   428.0  0.0164
 844            RX  1000.0  1020.0  1050.0  1080.0  1110.0  1111.2  1121.2  1151.2
 845            RY  1680.0  1678.0  1676.0  1676.3  1676.0  1676.4  1678.0  1678.5
                *

 846            KK    206L
 847            KM   Sub-Basin   206L
 848            KM
 849            KM      The Clark Unit Hydrograph is used for this basin.
 850            KM          The Urban time-area relation is used for this basin.
 851            KM
 852            KM      Time of Concentration for this sub-basin is based on the following:
```

```
853          KM          6-Hour Rainfall, Pattern No.  1.00
854          KM          An rainfall areal reduction factor of 0.999
855          KM
856          KM       EXCESS RAINFALL VALUES EXCEEDED IN 5-MINUTE INTERVALS
857          KM     5  10  15  20  25  30  35  40  45  50  55  60  65  70  75  80  85  90
858          KM   .30 .30 .30 .09 .07 .06 .03 .02 .02 .01 .01 .01 .00 .00 .00 .00 .00 .00
859          KM
860          KM          L=   0.546 miles, S=  231 feet/mile, Kb= .03
861          KM
862          BA   0.060
863          LG    0.09    0.25    5.80    0.18   25.01
864          UC   0.154   0.143
865          UA       0       5      16      30      65      77      84      90      94      97
866          UA     100
             *

867          KK    C546
868          KM      Hydrograph combine 545546 + 206L at C546
869          HC       2
             *

870          KK  546547
871          KM      Normal depth channel route from C546 to C547
872          KM      Source:  200 Scale Mapping
873          RS       1    FLOW      -1
874          RC   0.040   0.018   0.040   749.0  0.0327
875          RX  1000.0  1005.0  1011.0  1013.0  1029.0  1047.0  1052.0  1057.0
876          RY  1666.0  1664.0  1662.0  1661.9  1662.4  1662.0  1664.0  1666.0
             *

877          KK  BB543R
878          KM      Retrieve previously diverted hydrograph at C543 in the right branch.
879          DR   D543R
             *
```



```
LINE         ID.......1.......2.......3.......4.......5.......6.......7.......8.......9......10

880          KK  543547
881          KM      Normal depth channel route from C543 to C547
882          KM      Source:  HEC-2 Cross Section: OX 0.638
883          RS       5    FLOW      -1
884          RC   0.075   0.040   0.050  2395.0  0.0278
885          RX  9720.9  9769.0  9970.7  9985.5 10020.0 10038.1 10097.0 10102.0
886          RY  1690.4  1681.2  1683.1  1676.2  1677.0  1687.1  1687.4  1690.0
             *

887          KK  BB545R
888          KM      Retrieve previously diverted hydrograph at C545 in the right branch.
889          DR   D545R
             *

890          KK  545547
891          KM      Normal depth channel route from C545 to C547
892          KM      Source:  HEC-2 Cross Section: OX 0.542
893          RS       4    FLOW      -1
894          RC   0.075   0.040   0.050  1216.0  0.0259
895          RX  9668.2  9778.4  9957.9  9986.0 10012.7 10043.6 10067.6 10163.4
896          RY  1674.1  1674.1  1673.3  1662.1  1662.2  1680.4  1680.9  1681.1
             *

897          KK    206J
898          KM   Sub-Basin   206J
899          KM
900          KM      The Clark Unit Hydrograph is used for this basin.
901          KM          The Urban time-area relation is used for this basin.
902          KM
903          KM      Time of Concentration for this sub-basin is based on the following:
904          KM          6-Hour Rainfall, Pattern No.  1.00
905          KM          An rainfall areal reduction factor of 0.999
906          KM
907          KM       EXCESS RAINFALL VALUES EXCEEDED IN 5-MINUTE INTERVALS
908          KM     5  10  15  20  25  30  35  40  45  50  55  60  65  70  75  80  85  90
909          KM   .31 .31 .31 .10 .08 .07 .03 .03 .03 .03 .03 .03 .01 .01 .01 .01 .01 .01
910          KM
911          KM          L=   0.502 miles, S=  214 feet/mile, Kb= .03
912          KM
913          BA   0.060
914          LG    0.08    0.25    5.70    0.18   44.51
915          UC   0.150   0.129
916          UA       0       5      16      30      65      77      84      90      94      97
917          UA     100
             *

918          KK    C547
919          KM      Hydrograph combine 546547 + 543547 + 545547 + 206J at C547
920          HC       4    0.26
             *
```



```
LINE         ID.......1.......2.......3.......4.......5.......6.......7.......8.......9......10

921          KK  547548
```

```
922          KM      Normal depth channel route from C547 to C548
923          KM      Source:  HEC-2 Cross Section: OX 0.235
924          RS       4    FLOW      -1
925          RC   0.075   0.040   0.050  2165.0  0.0182
926          RX  9910.0  9911.4  9968.5  9987.6 10017.4 10032.3 10077.4 10080.0
927          RY  1639.0  1638.9  1637.9  1635.7  1635.8  1641.7  1642.9  1643.0
             *

928          KK    206M
929          KM   Sub-Basin   206M
930          KM
931          KM      The Clark Unit Hydrograph is used for this basin.
932          KM          The Urban time-area relation is used for this basin.
933          KM
934          KM      Time of Concentration for this sub-basin is based on the following:
935          KM          6-Hour Rainfall, Pattern No.  1.00
936          KM          An rainfall areal reduction factor of 0.999
937          KM
938          KM       EXCESS RAINFALL VALUES EXCEEDED IN 5-MINUTE INTERVALS
939          KM     5  10  15  20  25  30  35  40  45  50  55  60  65  70  75  80  85  90
940          KM   .31 .30 .30 .10 .07 .07 .03 .03 .03 .03 .03 .03 .01 .01 .01 .01 .01 .01
941          KM
942          KM          L=   0.465 miles, S=  166 feet/mile, Kb= .03
943          KM
944          BA   0.060
945          LG    0.08    0.25    5.20    0.23   46.18
946          UC   0.158   0.129
947          UA       0       5      16      30      65      77      84      90      94      97
948          UA     100
             *

949          KK   C548R
950          KM      Hydrograph combine 547548 + 206M at C548 right branch
951          HC       2
             *
             * *
             * * C548R is the total flow in Oxford Wash above confluence with Balboa Wash
             * *
             *

952          KK    C548
953          KM      Hydrograph combine C548L + C548R at C548
954          HC       2
             *
             * *
             * * C548 is the total flow in Balboa Wash below the confluence of Balboa Wash
             * * and Oxford Wash
             * *
             *
```



```
LINE         ID.......1.......2.......3.......4.......5.......6.......7.......8.......9......10

955          KK  548549
956          KM      Normal depth channel route from C548 to C549
957          KM      Source:  HEC-2 Cross Section: BA0.246
958          RS       9    FLOW      -1
959          RC   0.070   0.080   0.070  3258.0  0.0172
960          RX  9889.1  9912.5  9940.2  9960.0 10026.1 10046.8 10067.8 10079.3
961          RY  1586.2  1585.7  1577.5  1573.6  1573.2  1579.5  1585.7  1586.2
             *

962          KK    206N
963          KM   Sub-Basin   206N
964          KM
965          KM      The Clark Unit Hydrograph is used for this basin.
966          KM          The Urban time-area relation is used for this basin.
967          KM
968          KM      Time of Concentration for this sub-basin is based on the following:
969          KM          6-Hour Rainfall, Pattern No.  1.00
970          KM          An rainfall areal reduction factor of 0.998
971          KM
972          KM       EXCESS RAINFALL VALUES EXCEEDED IN 5-MINUTE INTERVALS
973          KM     5  10  15  20  25  30  35  40  45  50  55  60  65  70  75  80  85  90
974          KM   .31 .30 .30 .10 .07 .06 .03 .03 .03 .03 .03 .03 .01 .01 .01 .01 .01 .01
975          KM
976          KM          L=   0.767 miles, S=  120 feet/mile, Kb= .03
977          KM
978          BA   0.152
979          LG    0.11    0.27    4.65    0.29   52.66
980          UC   0.225   0.167
981          UA       0       5      16      30      65      77      84      90      94      97
982          UA     100
             *

983          KK   C549L
984          KM      Hydrograph combine 548549 + 206N at C549 left branch
985          HC       2
             *
             * *
             * * C549L is the total flow in Balboa Wash above confluence with Ashbrook Wash
             * *
             * * End Basin 206.  Start Basin 207
             * *
```

```
                *
 986            KK   C5990
 987            KM      The following is the design outflow hydrograph from Golden Eagle Park Dam
 988            IN       1
 989            BA    7.13
 990            QI       0       0       0       0       0       1       1       1       2       2
 991            QI       2       3       3       3       3       4       4       4       4       4
 992            QI       4       5       5       5       5       5       5       6       6       7
 993            QI       7       8       9       9      10      11      12      13      13      14
 994            QI      15      15      16      17      17      18      18      19      20      20
 995            QI      21      21      22      23      23      24      25      25      26      27
 996            QI      28      29      30      30      31      32      33      34      35      36
1                                          HEC-1 INPUT                                          PAGE 24

LINE            ID.......1.......2.......3.......4.......5.......6.......7.......8.......9......10

 997            QI      37      38      39      40      41      42      43      44      45      47
 998            QI      48      49      50      51      52      53      54      55      56      57
 999            QI      58      59      60      61      62      63      64      65      66      67
1000            QI      68      70      71      72      74      75      77      79      81      82
1001            QI      84      86      87      89      91      92      94      96      97      99
1002            QI     100     102     103     105     106     107     109     110     111     113
1003            QI     114     115     117     118     119     120     121     123     124     125
1004            QI     126     127     128     130     131     132     133     134     135     136
1005            QI     137     138     139     139     140     141     142     143     144     145
1006            QI     145     146     147     148     149     149     150     151     152     153
1007            QI     154     154     155     156     157     158     159     160     161     161
1008            QI     162     163     164     165     167     168     169     171     172     175
1009            QI     176     177     180     182     183     184     187     189     191     194
1010            QI     198     202     206     210     215     220     224     228     234     240
1011            QI     246     253     262     275     292     313     336     353     375     401
1012            QI     428     456     472     491     513     538     566     598     632     664
1013            QI     682     704     729     756     785     815     825     834     843     854
1014            QI     866     879     894     909     925     942     949     956     963     970
1015            QI     977     984     991     998    1005    1012    1019    1026    1033    1039
1016            QI    1046    1052    1057    1060    1063    1066    1069    1072    1074    1076
1017            QI    1078    1080    1082    1084    1085    1086    1087    1088    1089    1090
1018            QI    1090    1091    1091    1091    1091    1091    1090    1090    1089    1089
1019            QI    1088    1087    1087    1086    1085    1084    1083    1082    1081    1080
1020            QI    1079    1078    1077    1076    1075    1074    1073    1071    1070    1069
1021            QI    1068    1067    1065    1064    1063    1062    1060    1059    1058    1057
1022            QI    1055    1053    1051    1049    1047    1045    1042    1040    1038    1036
1023            QI    1034    1032    1030    1028    1026    1024    1023    1021    1019    1017
1024            QI    1015    1013    1011    1009    1008    1006    1004    1002    1000     999
1025            QI     997     995     993     992     990     988     987     985     983     982
1026            QI     980     978     977     975     974     972     970     969     967     966
1027            QI     964     963     961     960     958     956     955     953     952     950
1028            QI     949     947     946     944     941     937     933     929     925     922
1029            QI     918     915     911     908     904     901     898     895     891     888
1030            QI     885     882     879     876     873     869     866     863     860     857
1031            QI     854     851     848     845     841     838     835     832     829     826
1032            QI     823     820     812     799     788     778     770     762     755     748
1033            QI     742     737     732     727     723     718     714     710     706     702
1034            QI     698     694     690     686     682     678     673     669     665     661
1035            QI     652     643     637     631     625     621     616     612     608     604
1036            QI     600     597     594     591     588     585     582     579     576     572
1037            QI     569     566     563     559     556     553     550     546     543     539
1038            QI     536     532     529     525     521     518     514     511     507     504
1039            QI     501     498     495     492     490     488     485     483     481     479
1040            QI     477     475     472     470     468     466     464     462     460     456
1041            QI     453     450     447     444     441     438     435     432     428     425
1042            QI     422     419     416     413     409     406     403     400     397     394
1043            QI     391     388     385     382     380     377     374     372     369     367
1044            QI     364     362     359     357     354     352     350     347     344     342
1045            QI     338     335     332     329     327     324     321     318     315     312
1046            QI     308     305     302     299     296     293     289     286     283     280
1047            QI     277     274     271     268     265     263     260     257     254     251
1048            QI     249     246     243     241     238     235     233     231     228     226
1049            QI     223     220     218     215     213     211     208     206     203     201
1050            QI     199     196     194     192     190     187     185     183     181     179
1051            QI     176     174     172     170     168     166     164     163     162     159
1                                          HEC-1 INPUT                                          PAGE 25

LINE            ID.......1.......2.......3.......4.......5.......6.......7.......8.......9......10

1052            QI     157     155     154     153     150     148     147     145     143     141
1053            QI     139     138     136     134     133     131     129     128     126     125
1054            QI     123     121     120     118     117     116     114     113     112     110
1055            QI     109     108     107     106     104     103     102     101     100      99
1056            QI      98      96      95      93      92      90      89      87      85      84
1057            QI      82      80      79      77      76      74      73      71      70      69
1058            QI      68      67      66      65      64      63      61      60      59      58
1059            QI      57      56      55      54      54      53      52      51      50      49
1060            QI      49      48      47      46      46      45      44      44      43      42
1061            QI      42      41      41      40      39      39      38      38      37      37
1062            QI      36      36      35      35      34      33      32      32      31      30
1063            QI      29      28      27      26      25      24      23      22      21      20
1064            QI      19      19      18      17      17      16      15      15      14      13
1065            QI      13      12      12      11      11      11      10      10       9       9
1066            QI       9       8       8       8       8       7       7       7       7       6
1067            QI       6       6       6       5       5       5       5       5       5       4
1068            QI       4       4       4       4       4       4       3       3       3       3
1069            QI       3       3       3       3       3       2       2       2       2       2
1070            QI       2       2       2       2       2       2       2       2       2       2
```

```
1071        QI      1       1       1       1       1       1       1       1       1       1
1072        QI      1       1       1       1       1       1       1       1       1       1
1073        QI      1       1       1       1       1       1       1       1       1       1
1074        QI      1       1       1       1       1       0       0       0       0       0
1075        QI      0       0       0       0       0       0       0       0       0       0
1076        QI      0       0       0       0       0       0       0       0       0       0
1077        QI      0       0       0       0       0       0       0       0       0       0
1078        QI      0       0       0       0       0       0       0       0       0       0
1079        QI      0       0       0       0       0       0       0       0       0       0
1080        QI      0       0       0       0       0       0       0       0       0       0
1081        QI      0       0       0       0       0       0       0       0       0       0
1082        QI      0       0       0       0       0       0       0       0       0       0
1083        QI      0       0       0       0       0       0       0       0       0       0
1084        QI      0       0       0       0       0       0       0       0       0       0
1085        QI      0       0       0       0       0       0       0       0       0       0
1086        QI      0       0       0       0       0       0       0       0       0       0
1087        QI      0       0       0       0       0       0       0       0       0       0
1088        QI      0       0       0       0       0       0       0       0       0       0
1089        QI      0       0       0       0       0       0       0       0       0       0
1090        QI      0       0       0       0       0       0       0       0       0       0
1091        QI      0       0       0       0       0       0       0       0       0       0
1092        QI      0       0       0       0       0       0       0       0       0       0
1093        QI      0       0       0       0       0       0       0       0       0       0
1094        QI      0       0       0       0       0       0       0       0       0       0
1095        QI      0       0       0       0       0       0       0       0       0       0
1096        QI      0       0       0       0       0       0       0       0       0       0
1097        QI      0       0       0       0       0       0       0       0       0       0
1098        IN     15
            *
            * * End Basin 210.  Start Basin 211
            * *
            *
```



```
LINE        ID.......1.......2.......3.......4.......5.......6.......7.......8.......9......10

1099        KK  599608
1100        KM      Normal depth channel route from C599 to C608
1101        KM      Source:  HEC-2 Cross Section: AS 3.621
1102        RS       4    FLOW      -1
1103        RC   0.055   0.045   0.025  1476.0  0.0148
1104        RX  9675.4  9726.8  9929.0  9990.7 10005.9 10033.3 10061.9 10082.2
1105        RY  1691.3  1687.2  1685.5  1678.6  1678.1  1682.1  1689.8  1691.8
            *

1106        KK    211K
1107        KM   Sub-Basin   211K
1108        KM
1109        KM      The Clark Unit Hydrograph is used for this basin.
1110        KM          The Urban time-area relation is used for this basin.
1111        KM
1112        KM      Time of Concentration for this sub-basin is based on the following:
1113        KM          6-Hour Rainfall, Pattern No.  1.00
1114        KM          An rainfall areal reduction factor of 0.999
1115        KM
1116        KM       EXCESS RAINFALL VALUES EXCEEDED IN 5-MINUTE INTERVALS
1117        KM     5  10  15  20  25  30  35  40  45  50  55  60  65  70  75  80  85  90
1118        KM   .30 .30 .30 .09 .07 .06 .03 .03 .02 .02 .02 .02 .00 .00 .00 .00 .00 .00
1119        KM
1120        KM          L=   0.376 miles, S=  157 feet/mile, Kb= .03
1121        KM
1122        BA   0.102
1123        LG    0.13    0.27    6.00    0.16   31.48
1124        UC   0.146   0.073
1125        UA       0       5      16      30      65      77      84      90      94      97
1126        UA     100
            *

1127        KK   C608L
1128        KM      Hydrograph combine 599608 + 211K at C608 left branch
1129        HC       2
            *

1130        KK    211G
1131        KM   Sub-Basin   211G
1132        KM
1133        KM      The Clark Unit Hydrograph is used for this basin.
1134        KM          The Urban time-area relation is used for this basin.
1135        KM
1136        KM      Time of Concentration for this sub-basin is based on the following:
1137        KM          6-Hour Rainfall, Pattern No.  1.00
1138        KM          An rainfall areal reduction factor of 1.000
1139        KM
1140        KM       EXCESS RAINFALL VALUES EXCEEDED IN 5-MINUTE INTERVALS
1141        KM     5  10  15  20  25  30  35  40  45  50  55  60  65  70  75  80  85  90
1142        KM   .33 .33 .33 .13 .11 .10 .05 .05 .05 .05 .05 .05 .01 .01 .01 .01 .01 .01
1143        KM
1144        KM          L=   0.448 miles, S=  190 feet/mile, Kb= .04
1145        KM
1146        BA   0.008
```



```
LINE        ID.......1.......2.......3.......4.......5.......6.......7.......8.......9......10
```

```
1147          LG    0.06    0.25    5.70    0.18   90.00
1148          UC   0.167   0.430
1149          UA       0       5      16      30      65      77      84      90      94      97
1150          UA     100
              *

1151          KK  604606
1152          KM      Normal depth channel route from C604 to C606
1153          KM      Source:  200 Scale Mapping
1154          RS      11    FLOW      -1
1155          RC   0.040   0.018   0.040  2784.0  0.0647
1156          RX  1000.0  1040.0  1060.0  1076.0  1092.0  1093.2  1098.2  1113.2
1157          RY  1814.0  1811.0  1810.8  1811.1  1810.8  1811.2  1812.0  1816.0
              *

1158          KK    211I
1159          KM   Sub-Basin   211I
1160          KM
1161          KM      The Clark Unit Hydrograph is used for this basin.
1162          KM          The Urban time-area relation is used for this basin.
1163          KM
1164          KM      Time of Concentration for this sub-basin is based on the following:
1165          KM          6-Hour Rainfall, Pattern No.  1.00
1166          KM          An rainfall areal reduction factor of 0.999
1167          KM
1168          KM       EXCESS RAINFALL VALUES EXCEEDED IN 5-MINUTE INTERVALS
1169          KM     5  10  15  20  25  30  35  40  45  50  55  60  65  70  75  80  85  90
1170          KM   .31 .31 .31 .10 .08 .07 .03 .03 .03 .03 .03 .03 .01 .01 .01 .01 .01 .01
1171          KM
1172          KM          L=   0.626 miles, S=  257 feet/mile, Kb= .03
1173          KM
1174          BA   0.041
1175          LG    0.08    0.25    5.70    0.18   45.00
1176          UC   0.158   0.204
1177          UA       0       5      16      30      65      77      84      90      94      97
1178          UA     100
              *

1179          KK   C606R
1180          KM      Hydrograph combine 604606 + 211I at C606 right branch
1181          HC       2
              *

1182          KK    211H
1183          KM   Sub-Basin   211H
1184          KM
1185          KM      The Clark Unit Hydrograph is used for this basin.
1186          KM          The Urban time-area relation is used for this basin.
1187          KM
1188          KM      Time of Concentration for this sub-basin is based on the following:
1189          KM          6-Hour Rainfall, Pattern No.  1.00
1190          KM          An rainfall areal reduction factor of 0.999
1191          KM
1192          KM       EXCESS RAINFALL VALUES EXCEEDED IN 5-MINUTE INTERVALS
1193          KM     5  10  15  20  25  30  35  40  45  50  55  60  65  70  75  80  85  90
```



```
LINE          ID.......1.......2.......3.......4.......5.......6.......7.......8.......9......10

1194          KM   .30 .30 .29 .09 .07 .06 .03 .02 .02 .01 .01 .01 .00 .00 .00 .00 .00 .00
1195          KM
1196          KM          L=   0.501 miles, S=  289 feet/mile, Kb= .03
1197          KM
1198          BA   0.073
1199          LG    0.09    0.25    6.00    0.16   17.93
1200          UC   0.138   0.104
1201          UA       0       5      16      30      65      77      84      90      94      97
1202          UA     100
              *

1203          KK   C605O
1204          KM      Reservoir route at C605.
1205          RS       1    ELEV  1722.5
1206          SV    0.00    0.20    0.20    0.20    0.20    0.30    0.30    0.30    0.40    0.60
1207          SV    0.70    0.90    1.00    1.20    1.40    1.60    1.90    2.80    3.40    4.10
1208          SE  1722.5  1726.8  1727.0  1727.2  1727.4  1727.6  1727.8  1728.0  1728.2  1728.4
1209          SE  1728.6  1728.8  1729.0  1729.2  1729.4  1729.6  1730.0  1730.4  1730.7  1731.0
1210          SQ       0       0       5      10      20      43      63      73      78      85
1211          SQ      91      96     101     105     109     113     122     130     136     200
              *

1212          KK    C606
1213          KM      Hydrograph combine C606R + C605O at C606
1214          HC       2
              *

1215          KK  606607
1216          KM      Normal depth channel route from C606 to C607
1217          KM      Source:  200 Scale Mapping
1218          RS       2    FLOW      -1
1219          RC   0.020   0.055   0.035  1061.0  0.0286
1220          RX  1000.0  1032.0  1082.0  1095.0  1105.0  1117.0  1123.0  1153.0
1221          RY  1704.3  1704.0  1703.5  1700.0  1700.0  1703.0  1704.0  1706.0
              *
```

```
1222          KK    211J
1223          KM   Sub-Basin   211J
1224          KM
1225          KM      The Clark Unit Hydrograph is used for this basin.
1226          KM          The Urban time-area relation is used for this basin.
1227          KM
1228          KM      Time of Concentration for this sub-basin is based on the following:
1229          KM          6-Hour Rainfall, Pattern No.  1.00
1230          KM          An rainfall areal reduction factor of 1.000
1231          KM
1232          KM       EXCESS RAINFALL VALUES EXCEEDED IN 5-MINUTE INTERVALS
1233          KM     5  10  15  20  25  30  35  40  45  50  55  60  65  70  75  80  85  90
1234          KM   .31 .31 .31 .10 .08 .07 .03 .03 .03 .02 .02 .02 .01 .01 .01 .01 .01 .01
1235          KM
1236          KM          L=   0.249 miles, S=  166 feet/mile, Kb= .03
1237          KM
1238          BA   0.015
1239          LG    0.08    0.23    6.20    0.16   39.19
1240          UC   0.113   0.119
```



```
LINE          ID.......1.......2.......3.......4.......5.......6.......7.......8.......9......10

1241          UA       0       5      16      30      65      77      84      90      94      97
1242          UA     100
              *

1243          KK    C607
1244          KM      Hydrograph combine 606607 + 211J at C607
1245          HC       2
              *

1246          KK  607608
1247          KM      Normal depth channel route from C607 to C608
1248          KM      Source:  200 Scale Mapping
1249          RS       2    FLOW      -1
1250          RC   0.040   0.050   0.035  1008.0  0.0145
1251          RX  1000.0  1060.0  1070.0  1082.0  1083.0  1095.0  1115.0  1133.0
1252          RY  1688.0  1686.0  1684.0  1681.0  1681.0  1684.0  1685.0  1685.4
              *

1253          KK    C608
1254          KM      Hydrograph combine C608L + 607608 at C608
1255          HC       2
              *

1256          KK  608613
1257          KM      Normal depth channel route from C608 to C613
1258          KM      Source:  HEC-2 Cross Section: AS 3.421
1259          RS       3    FLOW      -1
1260          RC   0.100   0.045   0.100  1338.0  0.0202
1261          RX  9885.0  9887.9  9957.3  9986.7 10012.9 10054.7 10086.3 10122.2
1262          RY  1670.2  1670.1  1668.0  1660.0  1659.9  1661.6  1669.9  1670.8
              *
              * *
              * * Move to the top of Sunflower Wash
              * *
              *

1263          KK    211M
1264          KM   Sub-Basin   211M
1265          KM
1266          KM      The Clark Unit Hydrograph is used for this basin.
1267          KM          The Urban time-area relation is used for this basin.
1268          KM
1269          KM      Time of Concentration for this sub-basin is based on the following:
1270          KM          6-Hour Rainfall, Pattern No.  1.00
1271          KM          An rainfall areal reduction factor of 0.999
1272          KM
1273          KM       EXCESS RAINFALL VALUES EXCEEDED IN 5-MINUTE INTERVALS
1274          KM     5  10  15  20  25  30  35  40  45  50  55  60  65  70  75  80  85  90
1275          KM   .31 .31 .31 .10 .08 .08 .04 .04 .03 .03 .03 .03 .01 .01 .01 .01 .01 .01
1276          KM
1277          KM          L=   0.541 miles, S=  266 feet/mile, Kb= .03
1278          KM
1279          BA   0.081
1280          LG    0.07    0.25    5.70    0.18   50.05
1281          UC   0.146   0.112
```



```
LINE          ID.......1.......2.......3.......4.......5.......6.......7.......8.......9......10

1282          UA       0       5      16      30      65      77      84      90      94      97
1283          UA     100
              *

1284          KK  610611
1285          KM      Normal depth channel route from C610 to 1611
1286          KM      Source:  HEC-2 Cross Section: SU 0.216
1287          RS       1    FLOW      -1
1288          RC   0.050   0.045   0.050  1090.0  0.0211
1289          RX  9911.9  9948.1  9973.6  9988.6 10007.1 10027.0 10049.8 10143.7
1290          RY  1699.3  1691.7  1686.3  1680.1  1679.7  1686.6  1687.3  1698.6
              *
```

```
1291          KK    211N
1292          KM   Sub-Basin   211N
1293          KM
1294          KM      The Clark Unit Hydrograph is used for this basin.
1295          KM          The Urban time-area relation is used for this basin.
1296          KM
1297          KM      Time of Concentration for this sub-basin is based on the following:
1298          KM          6-Hour Rainfall, Pattern No.  1.00
1299          KM          An rainfall areal reduction factor of 1.000
1300          KM
1301          KM        EXCESS RAINFALL VALUES EXCEEDED IN 5-MINUTE INTERVALS
1302          KM     5  10  15  20  25  30  35  40  45  50  55  60  65  70  75  80  85  90
1303          KM   .32 .31 .31 .11 .09 .08 .04 .04 .04 .03 .03 .03 .01 .01 .01 .01 .01 .01
1304          KM
1305          KM          L=   0.261 miles, S=  235 feet/mile, Kb= .03
1306          KM
1307          BA   0.020
1308          LG    0.07    0.25    5.70    0.18   56.58
1309          UC   0.104   0.094
1310          UA       0       5      16      30      65      77      84      90      94      97
1311          UA     100
              *

1312          KK   C611R
1313          KM      Hydrograph combine 610611 + 211N at C611 right branch
1314          HC       2
              *

1315          KK    211O
1316          KM   Sub-Basin   211O
1317          KM
1318          KM      The Clark Unit Hydrograph is used for this basin.
1319          KM          The Urban time-area relation is used for this basin.
1320          KM
1321          KM      Time of Concentration for this sub-basin is based on the following:
1322          KM          6-Hour Rainfall, Pattern No.  1.00
1323          KM          An rainfall areal reduction factor of 0.999
1324          KM
1325          KM        EXCESS RAINFALL VALUES EXCEEDED IN 5-MINUTE INTERVALS
1326          KM     5  10  15  20  25  30  35  40  45  50  55  60  65  70  75  80  85  90
1327          KM   .31 .31 .31 .10 .08 .07 .03 .03 .03 .03 .03 .03 .01 .01 .01 .01 .01 .01
1328          KM
```



```
LINE          ID.......1.......2.......3.......4.......5.......6.......7.......8.......9......10

1329          KM          L=   0.371 miles, S=  257 feet/mile, Kb= .03
1330          KM
1331          BA   0.041
1332          LG    0.08    0.25    5.70    0.18   45.31
1333          UC   0.121   0.099
1334          UA       0       5      16      30      65      77      84      90      94      97
1335          UA     100
              *

1336          KK   C609O
1337          KM      Reservoir route at C609.
1338          RS       1    ELEV  1694.0
1339          SV    0.00    0.10    0.21    0.50    0.86    1.40    1.93    2.60    3.10    3.20
1340          SV    3.39    3.60    3.80    4.00    4.10    4.30    4.50    4.70    4.90    5.10
1341          SE  1694.0  1695.0  1696.0  1697.0  1698.0  1699.0  1700.0  1701.0  1701.6  1701.8
1342          SE  1702.0  1702.2  1702.4  1702.6  1702.8  1703.0  1703.2  1703.4  1703.6  1703.8
1343          SQ       0       6      16      33      48      59      68      75      79      85
1344          SQ     108     149     209     289     390     512     658     829    1025    1247
              *

1345          KK  609611
1346          KM      Normal depth channel route from C609 to C611
1347          KM      Source:  200 Scale Mapping
1348          RS       1    FLOW      -1
1349          RC   0.035   0.050   0.035   470.0  0.0200
1350          RX  1000.0  1025.0  1050.0  1054.0  1064.0  1068.0  1088.0  1103.0
1351          RY  1690.0  1688.0  1684.0  1682.0  1682.0  1684.0  1688.0  1690.0
              *

1352          KK   C611I
1353          KM      Hydrograph combine 609611 + C611R at C611I
1354          HC       2
              *

1355          KK   C611O
1356          KM      Reservoir route at C611.
1357          RS       1    ELEV  1668.4
1358          SV    0.00    0.41    1.10    2.49    4.34    6.64    6.72    6.81    6.89    6.97
1359          SV    7.06    7.14    7.22    7.31    7.39    7.47    7.56    7.64    7.72    7.81
1360          SE  1674.0  1676.0  1678.0  1680.0  1682.0  1684.0  1684.2  1684.4  1684.6  1684.8
1361          SE  1685.0  1685.2  1685.4  1685.6  1685.8  1686.0  1686.2  1686.4  1686.6  1686.8
1362          SQ       0       0      86     117     141     162     164     170     181     199
1363          SQ     225     262     313     378     460     558     673     807     958    1118
              *

1364          KK   D611L
1365          KM      Hydrograph diversion at C611.  Main flow continues in the left branch.
1366          KM      Diverted flow is in the right branch.
1367          DT   D611R
```

```
1368          DI       0       0      86     117     141     162     164     170     181     199
1369          DI     225     262     313     378     460     558     673     807     958    1118
1370          DQ       0       0      86     117     141     162     164     165     167     169
1371          DQ     171     173     175     176     178     180     182     183     185     187
              *
```



```
LINE          ID.......1.......2.......3.......4.......5.......6.......7.......8.......9......10

1372          KK  611612
1373          KM      Normal depth channel route from C611 to C612
1374          KM      Source:  200 Scale Mapping
1375          RS       1    FLOW      -1
1376          RC   0.040   0.018   0.040   925.0  0.0270
1377          RX  1000.0  1020.0  1023.0  1041.0  1059.0  1060.2  1071.2  1136.2
1378          RY  1666.0  1664.0  1663.5  1663.9  1663.5  1663.9  1664.0  1666.0
              *

1379          KK    211P
1380          KM   Sub-Basin   211P
1381          KM
1382          KM      The Clark Unit Hydrograph is used for this basin.
1383          KM          The Urban time-area relation is used for this basin.
1384          KM
1385          KM      Time of Concentration for this sub-basin is based on the following:
1386          KM          6-Hour Rainfall, Pattern No.  1.00
1387          KM          An rainfall areal reduction factor of 1.000
1388          KM
1389          KM       EXCESS RAINFALL VALUES EXCEEDED IN 5-MINUTE INTERVALS
1390          KM     5  10  15  20  25  30  35  40  45  50  55  60  65  70  75  80  85  90
1391          KM   .32 .32 .32 .11 .09 .09 .04 .04 .04 .04 .03 .03 .01 .01 .01 .01 .01 .01
1392          KM
1393          KM          L=   0.307 miles, S=  192 feet/mile, Kb= .03
1394          KM
1395          BA   0.033
1396          LG    0.08    0.15    7.00    0.11   45.00
1397          UC   0.121   0.096
1398          UA       0       5      16      30      65      77      84      90      94      97
1399          UA     100
              *

1400          KK    C612
1401          KM      Hydrograph combine 611612 + 211P at C612
1402          HC       2
              *
              * *
              * * NOTE: 612613 is too short to route
              * *
              *

1403          KK    C613
1404          KM      Hydrograph combine 608613 + C612 at C613
1405          HC       2
              *

1406          KK  613621
1407          KM      Normal depth channel route from C613 to C621
1408          KM      Source:  HEC-2 Cross Section: AS 3.241
1409          RS       1    FLOW      -1
1410          RC   0.100   0.045   0.100   718.0  0.0251
1411          RX  9695.4  9884.0  9985.0  9991.1 10033.8 10062.8 10097.5 10165.1
1412          RY  1655.5  1647.5  1645.8  1641.1  1640.6  1642.1  1648.7  1654.3
              *
```



```
LINE          ID.......1.......2.......3.......4.......5.......6.......7.......8.......9......10

1413          KK    211L
1414          KM   Sub-Basin   211L
1415          KM
1416          KM      The Clark Unit Hydrograph is used for this basin.
1417          KM          The Urban time-area relation is used for this basin.
1418          KM
1419          KM      Time of Concentration for this sub-basin is based on the following:
1420          KM          6-Hour Rainfall, Pattern No.  1.00
1421          KM          An rainfall areal reduction factor of 0.999
1422          KM
1423          KM       EXCESS RAINFALL VALUES EXCEEDED IN 5-MINUTE INTERVALS
1424          KM     5  10  15  20  25  30  35  40  45  50  55  60  65  70  75  80  85  90
1425          KM   .30 .29 .29 .08 .06 .05 .02 .02 .02 .02 .02 .02 .01 .01 .01 .01 .01 .01
1426          KM
1427          KM          L=   0.508 miles, S=  181 feet/mile, Kb= .03
1428          KM
1429          BA   0.096
1430          LG    0.11    0.26    4.35    0.36   42.40
1431          UC   0.163   0.109
1432          UA       0       5      16      30      65      77      84      90      94      97
1433          UA     100
              *

1434          KK   C621L
1435          KM      Hydrograph combine 613621 + 211L at C621 left branch
1436          HC       2
```

```
                 *
                 * *
                 * * Move to the top of Arrow Wash
                 * *
                 *

1437             KK    211Q
1438             KM   Sub-Basin   211Q
1439             KM
1440             KM      The Clark Unit Hydrograph is used for this basin.
1441             KM          The Urban time-area relation is used for this basin.
1442             KM
1443             KM      Time of Concentration for this sub-basin is based on the following:
1444             KM          6-Hour Rainfall, Pattern No.  1.00
1445             KM          An rainfall areal reduction factor of 1.000
1446             KM
1447             KM       EXCESS RAINFALL VALUES EXCEEDED IN 5-MINUTE INTERVALS
1448             KM     5  10  15  20  25  30  35  40  45  50  55  60  65  70  75  80  85  90
1449             KM   .30 .30 .30 .09 .07 .06 .03 .03 .02 .02 .02 .02 .00 .00 .00 .00 .00 .00
1450             KM
1451             KM          L=   0.255 miles, S=  295 feet/mile, Kb= .03
1452             KM
1453             BA   0.021
1454             LG    0.08    0.25    5.70    0.18   30.04
1455             UC   0.096   0.083
1456             UA       0       5      16      30      65      77      84      90      94      97
1457             UA     100
                 *
1                                          HEC-1 INPUT                                          PAGE 34

LINE             ID.......1.......2.......3.......4.......5.......6.......7.......8.......9......10


1458             KK  616617
1459             KM      Normal depth channel route from C616 to C617
1460             KM      Source:  200 Scale Mapping
1461             RS       2    FLOW      -1
1462             RC   0.070   0.060   0.070  1131.0  0.0553
1463             RX  1000.0  1008.0  1015.0  1045.0  1050.0  1080.0  1100.0  1110.0
1464             RY  1834.0  1832.0  1830.0  1826.0  1826.0  1830.0  1834.0  1836.0
                 *

1465             KK    211R
1466             KM   Sub-Basin   211R
1467             KM
1468             KM      The Clark Unit Hydrograph is used for this basin.
1469             KM          The Urban time-area relation is used for this basin.
1470             KM
1471             KM      Time of Concentration for this sub-basin is based on the following:
1472             KM          6-Hour Rainfall, Pattern No.  1.00
1473             KM          An rainfall areal reduction factor of 0.999
1474             KM
1475             KM       EXCESS RAINFALL VALUES EXCEEDED IN 5-MINUTE INTERVALS
1476             KM     5  10  15  20  25  30  35  40  45  50  55  60  65  70  75  80  85  90
1477             KM   .31 .30 .30 .10 .08 .07 .03 .03 .03 .02 .02 .02 .01 .01 .01 .01 .01 .01
1478             KM
1479             KM          L=   0.572 miles, S=  271 feet/mile, Kb= .03
1480             KM
1481             BA   0.084
1482             LG    0.08    0.25    5.70    0.18   37.77
1483             UC   0.150   0.118
1484             UA       0       5      16      30      65      77      84      90      94      97
1485             UA     100
                 *

1486             KK   C617L
1487             KM      Hydrograph combine 616617 + 211R at C617 left branch
1488             HC       2
                 *

1489             KK    211U
1490             KM   Sub-Basin   211U
1491             KM
1492             KM      The Clark Unit Hydrograph is used for this basin.
1493             KM          The Urban time-area relation is used for this basin.
1494             KM
1495             KM      Time of Concentration for this sub-basin is based on the following:
1496             KM          6-Hour Rainfall, Pattern No.  1.00
1497             KM          An rainfall areal reduction factor of 1.000
1498             KM
1499             KM       EXCESS RAINFALL VALUES EXCEEDED IN 5-MINUTE INTERVALS
1500             KM     5  10  15  20  25  30  35  40  45  50  55  60  65  70  75  80  85  90
1501             KM   .32 .32 .32 .11 .09 .09 .04 .04 .04 .04 .04 .04 .01 .01 .01 .01 .01 .01
1502             KM
1503             KM          L=   0.831 miles, S=  214 feet/mile, Kb= .03
1504             KM
1505             BA   0.027
1                                          HEC-1 INPUT                                          PAGE 35

LINE             ID.......1.......2.......3.......4.......5.......6.......7.......8.......9......10

1506             LG    0.07    0.25    5.70    0.18   65.99
1507             UC   0.192   0.396
1508             UA       0       5      16      30      65      77      84      90      94      97
1509             UA     100
```

```
                *

1510            KK   D614L
1511            KM      Hydrograph diversion at C614.  Main flow continues in the left branch.
1512            KM      Diverted flow is in the right branch.
1513            DT   D614R
1514            DI       0     4.3     8.5    20.0    49.0    85.5
1515            DQ       0     2.5     5.0    13.5    35.0    60.0
                *

1516            KK    C617
1517            KM      Hydrograph combine C617L + D614L at C617
1518            HC       2
                *

1519            KK  617618
1520            KM      Normal depth channel route from C617 to C618
1521            KM      Source:  HEC-2 Cross Section: AR 0.836
1522            RS       4    FLOW      -1
1523            RC   0.070   0.060   0.070  1912.0  0.0345
1524            RX  9983.3  9987.2  9989.2  9991.1 10031.5 10053.5 10070.6 10097.7
1525            RY  1766.5  1762.3  1760.2  1758.1  1757.8  1760.8  1764.2  1770.6
                *

1526            KK    211S
1527            KM   Sub-Basin   211S
1528            KM
1529            KM      The Clark Unit Hydrograph is used for this basin.
1530            KM          The Urban time-area relation is used for this basin.
1531            KM
1532            KM      Time of Concentration for this sub-basin is based on the following:
1533            KM          6-Hour Rainfall, Pattern No.  1.00
1534            KM          An rainfall areal reduction factor of 0.999
1535            KM
1536            KM       EXCESS RAINFALL VALUES EXCEEDED IN 5-MINUTE INTERVALS
1537            KM     5  10  15  20  25  30  35  40  45  50  55  60  65  70  75  80  85  90
1538            KM   .30 .29 .29 .09 .06 .05 .02 .02 .02 .02 .02 .02 .00 .00 .00 .00 .00 .00
1539            KM
1540            KM          L=   0.445 miles, S=  272 feet/mile, Kb= .07
1541            KM
1542            BA   0.050
1543            LG    0.11    0.31    5.70    0.19   30.06
1544            UC   0.208   0.186
1545            UA       0       5      16      30      65      77      84      90      94      97
1546            UA     100
                *
```



```
LINE            ID.......1.......2.......3.......4.......5.......6.......7.......8.......9......10

1547            KK   C618I
1548            KM      Hydrograph combine 617618 + 211S at C618I
1549            HC       2
                *

1550            KK   C618O
1551            KM      Reservoir route at C618.
1552            RS       1    ELEV  1730.6
1553            SV    0.00    0.01    0.06    0.24    0.50    0.75    1.20    1.66    2.30    2.94
1554            SV    3.20    3.30    3.40    3.60    3.80    3.90    4.10    4.30    4.50    4.65
1555            SE  1730.6  1734.0  1736.0  1738.0  1739.0  1740.0  1741.0  1742.0  1743.0  1744.0
1556            SE  1744.3  1744.4  1744.6  1744.8  1745.0  1745.2  1745.4  1745.6  1745.8  1746.0
1557            SQ       0     2.2     2.6     3.0     3.1     3.2     3.3     3.5     3.6     3.7
1558            SQ     3.7     3.8       8      21      48      88     143     212     295     390
                *

1559            KK  BB614R
1560            KM      Retrieve previously diverted hydrograph at C614 in the right branch.
1561            DR   D614R
                *

1562            KK  614615
1563            KM      Normal depth channel route from C614 to C615
1564            KM      Source:  Hydrology Field Reconnaissance
1565            RS       3    FLOW      -1
1566            RC   0.040   0.018   0.040  1114.0  0.0397
1567            RX  1000.0  1020.0  1025.0  1059.0  1091.0  1093.0  1098.0  1103.0
1568            RY  1828.0  1822.0  1821.5  1822.2  1821.8  1822.0  1824.0  1826.0
                *

1569            KK    211V
1570            KM   Sub-Basin   211V
1571            KM
1572            KM      The Clark Unit Hydrograph is used for this basin.
1573            KM          The Urban time-area relation is used for this basin.
1574            KM
1575            KM      Time of Concentration for this sub-basin is based on the following:
1576            KM          6-Hour Rainfall, Pattern No.  1.00
1577            KM          An rainfall areal reduction factor of 1.000
1578            KM
1579            KM       EXCESS RAINFALL VALUES EXCEEDED IN 5-MINUTE INTERVALS
1580            KM     5  10  15  20  25  30  35  40  45  50  55  60  65  70  75  80  85  90
1581            KM   .33 .33 .33 .13 .11 .10 .05 .05 .05 .05 .05 .05 .01 .01 .01 .01 .01 .01
1582            KM
```

```
1583        KM          L=   0.222 miles, S=  212 feet/mile, Kb= .04
1584        KM
1585        BA   0.005
1586        LG    0.06    0.25    5.80    0.18   90.00
1587        UC   0.113   0.204
1588        UA      0       5      16      30      65      77      84      90      94      97
1589        UA    100
            *
```



```
LINE        ID.......1.......2.......3.......4.......5.......6.......7.......8.......9......10

1590        KK    C615
1591        KM      Hydrograph combine 614615 + 211V at C615
1592        HC       2    0.03
            *

1593        KK   D615L
1594        KM      Hydrograph diversion at C615.  Main flow continues in the left branch.
1595        KM      Diverted flow is in the right branch.
1596        DT   D615R
1597        DI       0     1.3     2.5     5.3     8.6    14.2    23.0    36.8    55.5    77.5
1598        DQ       0       0       0     1.3     2.6     4.2     7.0    12.8    19.5    29.5
            *

1599        KK  615618
1600        KM      Normal depth channel route from C615 to C618
1601        KM      Source:  Hydrology Field Reconnaissance
1602        RS       1    FLOW      -1
1603        RC   0.040   0.018   0.040   499.0  0.1338
1604        RX  1000.0  1008.0  1009.2  1013.2  1027.2  1028.4  1036.4  1045.4
1605        RY  1800.4  1799.6  1799.2  1798.8  1798.3  1798.7  1798.9  1800.4
            *

1606        KK    C618
1607        KM      Hydrograph combine C618O + 615618 at C618
1608        HC       2    0.19
            *

1609        KK  618619
1610        KM      Normal depth channel route from C618 to C619
1611        KM      Source:  HEC-2 Cross Section: AR 0.441
1612        RS       5    FLOW      -1
1613        RC   0.070   0.060   0.070  1837.0  0.0285
1614        RX  9870.6  9928.6  9957.1  9996.9 10004.9 10022.1 10062.0 10116.4
1615        RY  1709.2  1700.9  1698.8  1690.0  1689.8  1699.6  1700.3  1711.3
            *

1616        KK    211T
1617        KM   Sub-Basin   211T
1618        KM
1619        KM      The Clark Unit Hydrograph is used for this basin.
1620        KM          The Urban time-area relation is used for this basin.
1621        KM
1622        KM      Time of Concentration for this sub-basin is based on the following:
1623        KM          6-Hour Rainfall, Pattern No.  1.00
1624        KM          An rainfall areal reduction factor of 0.999
1625        KM
1626        KM       EXCESS RAINFALL VALUES EXCEEDED IN 5-MINUTE INTERVALS
1627        KM     5  10  15  20  25  30  35  40  45  50  55  60  65  70  75  80  85  90
1628        KM   .32 .32 .32 .11 .09 .09 .04 .04 .04 .04 .04 .04 .01 .01 .01 .01 .01 .01
1629        KM
1630        KM          L=   0.488 miles, S=  250 feet/mile, Kb= .03
1631        KM
1632        BA   0.066
1633        LG    0.07    0.25    5.70    0.18   64.25
```



```
LINE        ID.......1.......2.......3.......4.......5.......6.......7.......8.......9......10

1634        UC   0.138   0.108
1635        UA      0       5      16      30      65      77      84      90      94      97
1636        UA    100
            *

1637        KK   C619L
1638        KM      Hydrograph combine 618619 + 211T at C619 left branch
1639        HC       2
            *

1640        KK  BB615R
1641        KM      Retrieve previously diverted hydrograph at C615 in the right branch.
1642        DR   D615R
            *

1643        KK  615619
1644        KM      Normal depth channel route from C615 to C619
1645        KM      Source:  Hydrology Field Reconnaissance
1646        RS       8    FLOW      -1
1647        RC   0.045   0.024   0.025  2444.0  0.0493
1648        RX  1000.0  1009.3  1018.5  1037.0  1039.3  1053.0  1065.0  1065.0
1649        RY  1727.2  1726.5  1725.8  1724.4  1724.6  1725.8  1725.9  1725.9
            *
```

```
1650          KK   C619I
1651          KM      Hydrograph combine C619L + 615619 at C619I
1652          HC       2    0.25
              *

1653          KK   C619O
1654          KM      Reservoir route at C619.
1655          RS       1    ELEV  1675.6
1656          SV    0.00    1.72    2.98    4.70    7.00    7.08    7.17    7.26    7.34    7.43
1657          SV    7.51    7.60    7.69    7.77    7.86
1658          SE  1675.6  1686.0  1688.0  1690.0  1692.0  1692.2  1692.4  1692.6  1692.8  1693.0
1659          SE  1693.2  1693.4  1693.6  1693.8  1694.0
1660          SQ       0       4      25      72     128     155     163     172     178     187
1661          SQ     195     213     238     273     318     374     441     518     606     706
1662          SE  1675.6  1676.0  1678.0  1680.0  1682.0  1684.0  1686.0  1688.0  1690.0  1692.0
1663          SE  1692.2  1692.4  1692.6  1692.8  1693.0  1693.2  1693.4  1693.6  1693.8  1694.0
              *

1664          KK   D619R
1665          KM      Hydrograph diversion at C619.  Main flow continues in the right branch.
1666          KM      Diverted flow is in the left branch.
1667          DT   D619L
1668          DI       0       4      25      72     128     155     163     172     178     187
1669          DI     195     213     238     273     318     374     441     518     606     706
1670          DQ       0       0       0       0       0       0       0       0       0       0
1671          DQ       8      24      49      83     128     182     249     326     412     512
              *
```



```
LINE          ID.......1.......2.......3.......4.......5.......6.......7.......8.......9......10

1672          KK  619620
1673          KM                Lag route through Palisades Plaza storm drain
1674          RT       0              1
              *

1675          KK  BB619L
1676          KM      Retrieve previously diverted hydrograph at C619 in the left branch.
1677          DR   D619L
              *

1678          KK  619620
1679          KM   Normal depth channel route from C619 to C620 in Fountain Hills Blvd.
1680          KM   Source:  200 Scale Mapping. Similiar to 523548
1681          RS       1    FLOW      -1
1682          RC   0.040   0.024   0.040   800.0  0.0288
1683          RX   918.0   940.0   960.0  1000.0  1040.0  1040.1  1044.1  1088.1
1684          RY  1648.0  1645.8  1643.8  1644.7  1644.0  1644.5  1644.5  1648.0
              *

1685          KK    211W
1686          KM   Sub-Basin   211W
1687          KM
1688          KM      The Clark Unit Hydrograph is used for this basin.
1689          KM          The Urban time-area relation is used for this basin.
1690          KM
1691          KM      Time of Concentration for this sub-basin is based on the following:
1692          KM          6-Hour Rainfall, Pattern No.  1.00
1693          KM          An rainfall areal reduction factor of 1.000
1694          KM
1695          KM       EXCESS RAINFALL VALUES EXCEEDED IN 5-MINUTE INTERVALS
1696          KM     5  10  15  20  25  30  35  40  45  50  55  60  65  70  75  80  85  90
1697          KM   .32 .32 .32 .12 .10 .09 .05 .05 .04 .04 .04 .04 .01 .01 .01 .01 .01 .01
1698          KM
1699          KM          L=   0.289 miles, S=  173 feet/mile, Kb= .03
1700          KM
1701          BA   0.030
1702          LG    0.06    0.25    5.70    0.18   73.65
1703          UC   0.121   0.097
1704          UA       0       5      16      30      65      77      84      90      94      97
1705          UA     100
              *

1706          KK   C620R
1707          KM      Hydrograph combine 619620 + R619L + 211W at C620 right branch
1708          HC       3    0.28
              *

1709          KK  BB611R
1710          KM      Retrieve previously diverted hydrograph at C611 in the right branch.
1711          DR   D611R
              *
```



```
LINE          ID.......1.......2.......3.......4.......5.......6.......7.......8.......9......10

1712          KK  611620
1713          KM                Lag route through Palisades Plaza storm drain
1714          RT       0              1
              *

1715          KK    C620
1716          KM      Hydrograph combine 611620 + C620R at C620
```

```
1717          HC       2    0.42
              *

1718          KK  620621
1719          KM      Normal depth channel route from C620 to C621
1720          KM      Source:  HEC-2 Cross Section: AR 0.081
1721          RS       1    FLOW      -1
1722          RC   0.050   0.050   0.050   915.0  0.0394
1723          RX  9790.0  9790.1  9972.2  9994.8 10004.9 10029.7 10048.6 10125.0
1724          RY  1657.9  1657.5  1656.4  1646.8  1646.8  1657.8  1657.0  1657.9
              *

1725          KK    C621
1726          KM      Hydrograph combine C621L + 620621 at C621
1727          HC       2    7.93
              *

1728          KK  621622
1729          KM      Normal depth channel route from C621 to C622
1730          KM      Source:  HEC-2 Cross Section: AS 2.785
1731          RS       6    FLOW      -1
1732          RC   0.100   0.045   0.100  3830.0  0.0144
1733          RX  9827.3  9922.9  9951.0 10000.0 10002.7 10044.7 10071.6 10076.8
1734          RY  1615.2  1611.0  1604.1  1600.8  1601.5  1601.6  1611.0  1613.9
              *

1735          KK    211X
1736          KM   Sub-Basin   211X
1737          KM
1738          KM      The Clark Unit Hydrograph is used for this basin.
1739          KM          The Urban time-area relation is used for this basin.
1740          KM
1741          KM      Time of Concentration for this sub-basin is based on the following:
1742          KM          6-Hour Rainfall, Pattern No.  1.00
1743          KM          An rainfall areal reduction factor of 0.997
1744          KM
1745          KM       EXCESS RAINFALL VALUES EXCEEDED IN 5-MINUTE INTERVALS
1746          KM     5  10  15  20  25  30  35  40  45  50  55  60  65  70  75  80  85  90
1747          KM   .31 .31 .31 .10 .08 .07 .03 .03 .03 .03 .03 .03 .01 .01 .01 .01 .01 .01
1748          KM
1749          KM          L=   0.929 miles, S=  111 feet/mile, Kb= .03
1750          KM
1751          BA   0.214
1752          LG    0.10    0.26    4.90    0.26   56.64
1753          UC   0.250   0.180
1754          UA       0       5      16      30      65      77      84      90      94      97
1755          UA     100
              *
```



```
LINE          ID.......1.......2.......3.......4.......5.......6.......7.......8.......9......10

1756          KK   C622R
1757          KM      Hydrograph combine 621622 + 211X at C622 right branch
1758          HC       2
              *
              * *
              * * Move to the top of Tulip Wash
              * *
              *

1759          KK    211A
1760          KM   Sub-Basin   211A
1761          KM
1762          KM      The Clark Unit Hydrograph is used for this basin.
1763          KM          The Urban time-area relation is used for this basin.
1764          KM
1765          KM      Time of Concentration for this sub-basin is based on the following:
1766          KM          6-Hour Rainfall, Pattern No.  1.00
1767          KM          An rainfall areal reduction factor of 0.998
1768          KM
1769          KM       EXCESS RAINFALL VALUES EXCEEDED IN 5-MINUTE INTERVALS
1770          KM     5  10  15  20  25  30  35  40  45  50  55  60  65  70  75  80  85  90
1771          KM   .30 .30 .29 .09 .07 .06 .03 .02 .02 .01 .01 .01 .00 .00 .00 .00 .00 .00
1772          KM
1773          KM          L=   0.820 miles, S=  248 feet/mile, Kb= .03
1774          KM
1775          BA   0.143
1776          LG    0.09    0.25    5.70    0.18   23.09
1777          UC   0.188   0.149
1778          UA       0       5      16      30      65      77      84      90      94      97
1779          UA     100
              *

1780          KK   C600O
1781          KM      Reservoir route at C600.
1782          RS       1    ELEV  1754.0
1783          SV    0.00    0.14    0.62    1.52    2.95    5.06    7.98   11.80   16.61   22.67
1784          SV   30.07   38.71   40.50   40.60   41.60   42.70   43.70   44.60   45.70
1785          SE  1754.0  1756.0  1758.0  1760.0  1762.0  1764.0  1766.0  1768.0  1770.0  1772.0
1786          SE  1774.0  1776.0 1776.36  1776.4  1776.6  1776.8  1777.0  1777.2  1777.4
1787          SQ       0      55     183     320     427     513     570     620     665     709
1788          SQ     750     789     795     795     812     849     906     984    1084
              *
```

```
1789          KK  600601
1790          KM      Normal depth channel route from C600 to C601
1791          KM      Source:  HEC-2 Cross Section: TU 1.538
1792          RS       3    FLOW      -1
1793          RC   0.040   0.025   0.040  2406.0  0.0176
1794          RX  9945.6  9959.4  9968.3  9985.9 10000.0 10017.2 10038.7 10058.8
1795          RY  1734.5  1732.3  1727.9  1726.2  1725.0  1727.7  1735.2  1736.0
              *
```



```
LINE          ID.......1.......2.......3.......4.......5.......6.......7.......8.......9......10

1796          KK    211B
1797          KM   Sub-Basin   211B
1798          KM
1799          KM      The Clark Unit Hydrograph is used for this basin.
1800          KM          The Urban time-area relation is used for this basin.
1801          KM
1802          KM      Time of Concentration for this sub-basin is based on the following:
1803          KM          6-Hour Rainfall, Pattern No.  1.00
1804          KM          An rainfall areal reduction factor of 0.999
1805          KM
1806          KM       EXCESS RAINFALL VALUES EXCEEDED IN 5-MINUTE INTERVALS
1807          KM     5  10  15  20  25  30  35  40  45  50  55  60  65  70  75  80  85  90
1808          KM   .30 .29 .29 .09 .06 .06 .02 .02 .02 .01 .01 .01 .00 .00 .00 .00 .00 .00
1809          KM
1810          KM          L=   0.618 miles, S=  244 feet/mile, Kb= .03
1811          KM
1812          BA   0.109
1813          LG    0.09    0.25    5.80    0.18   20.22
1814          UC   0.163   0.119
1815          UA       0       5      16      30      65      77      84      90      94      97
1816          UA     100
              *

1817          KK    C601
1818          KM      Hydrograph combine 600601 + 211B at C601
1819          HC       2
              *

1820          KK  601602
1821          KM      Normal depth channel route from C601 to C602
1822          KM      Source:  HEC-2 Cross Section: TU 1.102
1823          RS       3    FLOW      -1
1824          RC   0.065   0.040   0.055  1765.0  0.0146
1825          RX  9916.9  9959.1  9965.8  9980.2 10004.0 10019.5 10047.3 10094.1
1826          RY  1699.9  1699.8  1696.4  1689.8  1688.9  1695.7  1698.2  1698.4
              *

1827          KK    211C
1828          KM   Sub-Basin   211C
1829          KM
1830          KM      The Clark Unit Hydrograph is used for this basin.
1831          KM          The Urban time-area relation is used for this basin.
1832          KM
1833          KM      Time of Concentration for this sub-basin is based on the following:
1834          KM          6-Hour Rainfall, Pattern No.  1.00
1835          KM          An rainfall areal reduction factor of 0.999
1836          KM
1837          KM       EXCESS RAINFALL VALUES EXCEEDED IN 5-MINUTE INTERVALS
1838          KM     5  10  15  20  25  30  35  40  45  50  55  60  65  70  75  80  85  90
1839          KM   .31 .31 .31 .10 .08 .07 .03 .03 .03 .03 .03 .03 .01 .01 .01 .01 .01 .01
1840          KM
1841          KM          L=   0.479 miles, S=  154 feet/mile, Kb= .03
1842          KM
1843          BA   0.043
```



```
LINE          ID.......1.......2.......3.......4.......5.......6.......7.......8.......9......10

1844          LG    0.08    0.25    5.70    0.18   44.48
1845          UC   0.163   0.165
1846          UA       0       5      16      30      65      77      84      90      94      97
1847          UA     100
              *

1848          KK   C602L
1849          KM      Hydrograph combine 601602 + 211C at C602 left branch
1850          HC       2
              *

1851          KK    211D
1852          KM   Sub-Basin   211D
1853          KM
1854          KM      The Clark Unit Hydrograph is used for this basin.
1855          KM          The Urban time-area relation is used for this basin.
1856          KM
1857          KM      Time of Concentration for this sub-basin is based on the following:
1858          KM          6-Hour Rainfall, Pattern No.  1.00
1859          KM          An rainfall areal reduction factor of 0.999
1860          KM
1861          KM       EXCESS RAINFALL VALUES EXCEEDED IN 5-MINUTE INTERVALS
1862          KM     5  10  15  20  25  30  35  40  45  50  55  60  65  70  75  80  85  90
```

```
1863          KM   .29 .28 .28 .07 .05 .04 .02 .02 .02 .02 .02 .02 .01 .01 .01 .01 .01 .01
1864          KM
1865          KM          L=   0.686 miles, S=  115 feet/mile, Kb= .03
1866          KM
1867          BA   0.071
1868          LG    0.08    0.25    3.85    0.46   37.42
1869          UC   0.221   0.232
1870          UA       0       5      16      30      65      77      84      90      94      97
1871          UA     100
              *

1872          KK    C602
1873          KM      Hydrograph combine C602L + 211D at C602
1874          HC       2
              *

1875          KK  602603
1876          KM      Normal depth channel route from C602 to C603
1877          KM      Source:  HEC-2 Cross Section: LE 0.672
1878          RS       4    FLOW      -1
1879          RC   0.060   0.045   0.060  2610.0  0.0211
1880          RX  9891.9  9963.9  9986.5 10000.0 10012.7 10023.8 10085.0 10176.4
1881          RY  1653.5  1653.5  1644.4  1644.1  1645.0  1649.8  1651.7  1656.7
              *

1882          KK    211E
1883          KM   Sub-Basin   211E
1884          KM
1885          KM      The Clark Unit Hydrograph is used for this basin.
1886          KM          The Urban time-area relation is used for this basin.
1887          KM
1888          KM      Time of Concentration for this sub-basin is based on the following:
```



```
LINE          ID.......1.......2.......3.......4.......5.......6.......7.......8.......9......10

1889          KM          6-Hour Rainfall, Pattern No.  1.00
1890          KM          An rainfall areal reduction factor of 0.998
1891          KM
1892          KM       EXCESS RAINFALL VALUES EXCEEDED IN 5-MINUTE INTERVALS
1893          KM     5  10  15  20  25  30  35  40  45  50  55  60  65  70  75  80  85  90
1894          KM   .30 .30 .30 .09 .07 .06 .03 .03 .02 .02 .02 .02 .01 .01 .01 .01 .01 .01
1895          KM
1896          KM          L=   0.609 miles, S=  118 feet/mile, Kb= .03
1897          KM
1898          BA   0.156
1899          LG    0.08    0.25    5.10    0.24   42.21
1900          UC   0.200   0.120
1901          UA       0       5      16      30      65      77      84      90      94      97
1902          UA     100
              *

1903          KK    C603
1904          KM      Hydrograph combine 602603 + 211E at C603
1905          HC       2
              *

1906          KK  603622
1907          KM      Normal depth channel route from C603 to C622
1908          KM      Source:  HEC-2 Cross Section: LE 0.287
1909          RS       5    FLOW      -1
1910          RC   0.060   0.045   0.060  2745.0  0.0204
1911          RX  9883.0  9929.7  9967.3  9991.6 10042.2 10073.6 10177.6 10194.5
1912          RY  1619.4  1618.7  1611.8  1602.1  1603.3  1609.4  1610.5  1610.6
              *

1913          KK    211F
1914          KM   Sub-Basin   211F
1915          KM
1916          KM      The Clark Unit Hydrograph is used for this basin.
1917          KM          The Urban time-area relation is used for this basin.
1918          KM
1919          KM      Time of Concentration for this sub-basin is based on the following:
1920          KM          6-Hour Rainfall, Pattern No.  1.00
1921          KM          An rainfall areal reduction factor of 0.999
1922          KM
1923          KM       EXCESS RAINFALL VALUES EXCEEDED IN 5-MINUTE INTERVALS
1924          KM     5  10  15  20  25  30  35  40  45  50  55  60  65  70  75  80  85  90
1925          KM   .31 .31 .31 .10 .08 .07 .04 .04 .04 .04 .04 .03 .01 .01 .01 .01 .01 .01
1926          KM
1927          KM          L=   0.770 miles, S=  134 feet/mile, Kb= .03
1928          KM
1929          BA   0.113
1930          LG    0.08    0.25    4.30    0.36   62.81
1931          UC   0.217   0.191
1932          UA       0       5      16      30      65      77      84      90      94      97
1933          UA     100
              *
```



```
LINE          ID.......1.......2.......3.......4.......5.......6.......7.......8.......9......10

1934          KK   C622L
1935          KM      Hydrograph combine 603622 + 211F at C622 left branch
```

```
1936          HC       2
              *

1937          KK    C622
1938          KM      Hydrograph combine C622R + C622L at C622
1939          HC       2
              *

1940          KK  622549
1941          KM      Normal depth channel route from C622 to C549
1942          KM      Source:  HEC-2 Cross Section: AS 2.279
1943          RS       7    FLOW      -1
1944          RC   0.113   0.125   0.120  1697.0  0.0118
1945          RX  9847.1  9851.0  9857.5  9862.8 10052.6 10062.8 10075.6 10084.6
1946          RY  1573.5  1571.3  1567.2  1564.6  1565.1  1566.7  1573.7  1573.9
              *

1947          KK    211Y
1948          KM   Sub-Basin   211Y
1949          KM
1950          KM      The Clark Unit Hydrograph is used for this basin.
1951          KM          The Urban time-area relation is used for this basin.
1952          KM
1953          KM      Time of Concentration for this sub-basin is based on the following:
1954          KM          6-Hour Rainfall, Pattern No.  1.00
1955          KM          An rainfall areal reduction factor of 0.999
1956          KM
1957          KM       EXCESS RAINFALL VALUES EXCEEDED IN 5-MINUTE INTERVALS
1958          KM     5  10  15  20  25  30  35  40  45  50  55  60  65  70  75  80  85  90
1959          KM   .32 .32 .31 .11 .09 .09 .04 .04 .04 .03 .03 .03 .01 .01 .01 .01 .01 .01
1960          KM
1961          KM          L=   0.606 miles, S=  147 feet/mile, Kb= .04
1962          KM
1963          BA   0.089
1964          LG    0.09    0.21    6.60    0.13   50.06
1965          UC   0.213   0.176
1966          UA       0       5      16      30      65      77      84      90      94      97
1967          UA     100
              *

1968          KK   C549R
1969          KM      Hydrograph combine 622549 + 211Y at C549 right branch
1970          HC       2
              *

1971          KK    C549
1972          KM      Hydrograph combine C549L + C549R at C549
1973          HC       2
              *
```



```
LINE          ID.......1.......2.......3.......4.......5.......6.......7.......8.......9......10

1974          KK  549626
1975          KM      Normal depth channel route from C549 to C626
1976          KM      Source:  HEC-2 Cross Section: AS 1.855
1977          RS       7    FLOW      -1
1978          RC   0.113   0.125   0.120  2044.0  0.0171
1979          RX  9943.2  9963.0  9985.6  9994.1 10007.6 10029.2 10150.5 10171.3
1980          RY  1539.3  1534.5  1531.2  1528.3  1528.2  1531.7  1532.5  1537.4
              *

1981          KK    211Z
1982          KM   Sub-Basin   211Z
1983          KM
1984          KM      The Clark Unit Hydrograph is used for this basin.
1985          KM          The Urban time-area relation is used for this basin.
1986          KM
1987          KM      Time of Concentration for this sub-basin is based on the following:
1988          KM          6-Hour Rainfall, Pattern No.  1.00
1989          KM          An rainfall areal reduction factor of 0.999
1990          KM
1991          KM       EXCESS RAINFALL VALUES EXCEEDED IN 5-MINUTE INTERVALS
1992          KM     5  10  15  20  25  30  35  40  45  50  55  60  65  70  75  80  85  90
1993          KM   .29 .29 .28 .07 .05 .04 .02 .02 .02 .02 .02 .02 .01 .01 .01 .01 .01 .01
1994          KM
1995          KM          L=   0.509 miles, S=  147 feet/mile, Kb= .04
1996          KM
1997          BA   0.083
1998          LG    0.14    0.27    4.50    0.34   34.43
1999          UC   0.204   0.153
2000          UA       0       5      16      30      65      77      84      90      94      97
2001          UA     100
              *

2002          KK   C626C
2003          KM      Hydrograph combine 549626 + 211Z at C626 main branch
2004          HC       2
              *

2005          KK   211AA
2006          KM   Sub-Basin  211AA
2007          KM
2008          KM      The Clark Unit Hydrograph is used for this basin.
```

```
2009        KM          The Urban time-area relation is used for this basin.
2010        KM
2011        KM      Time of Concentration for this sub-basin is based on the following:
2012        KM          6-Hour Rainfall, Pattern No.  1.00
2013        KM          An rainfall areal reduction factor of 1.000
2014        KM
2015        KM       EXCESS RAINFALL VALUES EXCEEDED IN 5-MINUTE INTERVALS
2016        KM     5  10  15  20  25  30  35  40  45  50  55  60  65  70  75  80  85  90
2017        KM   .32 .31 .31 .11 .09 .08 .04 .04 .04 .03 .02 .02 .01 .01 .01 .01 .01 .01
2018        KM
2019        KM          L=   0.480 miles, S=   85 feet/mile, Kb= .03
2020        KM
2021        BA   0.034
```



```
LINE        ID.......1.......2.......3.......4.......5.......6.......7.......8.......9......10

2022        LG    0.08    0.19    6.60    0.13   39.38
2023        UC   0.196   0.231
2024        UA       0       5      16      30      65      77      84      90      94      97
2025        UA     100
            *

2026        KK  625626
2027        KM      Normal depth channel route from C625 to C626
2028        KM      Source:  200 Scale Mapping
2029        RS       3    FLOW      -1
2030        RC   0.040   0.018   0.040  1350.0  0.0252
2031        RX  1000.0  1020.0  1021.2  1055.2  1089.2  1090.4  1100.4  1105.4
2032        RY  1527.0  1526.0  1525.6  1526.3  1525.6  1526.0  1528.0  1530.0
            *

2033        KK   211AB
2034        KM   Sub-Basin  211AB
2035        KM
2036        KM      The Clark Unit Hydrograph is used for this basin.
2037        KM          The Urban time-area relation is used for this basin.
2038        KM
2039        KM      Time of Concentration for this sub-basin is based on the following:
2040        KM          6-Hour Rainfall, Pattern No.  1.00
2041        KM          An rainfall areal reduction factor of 0.999
2042        KM
2043        KM       EXCESS RAINFALL VALUES EXCEEDED IN 5-MINUTE INTERVALS
2044        KM     5  10  15  20  25  30  35  40  45  50  55  60  65  70  75  80  85  90
2045        KM   .32 .32 .32 .12 .10 .09 .04 .04 .04 .04 .04 .03 .01 .01 .01 .01 .01 .01
2046        KM
2047        KM          L=   0.293 miles, S=  321 feet/mile, Kb= .03
2048        KM
2049        BA   0.040
2050        LG    0.07    0.17    6.80    0.12   54.72
2051        UC   0.100   0.068
2052        UA       0       5      16      30      65      77      84      90      94      97
2053        UA     100
            *

2054        KK  623624
2055        KM      Normal depth channel route from C623 to C624
2056        KM      Source:  200 Scale Mapping
2057        RS       1    FLOW      -1
2058        RC   0.040   0.018   0.040   701.0  0.0114
2059        RX  1000.0  1010.0  1011.2  1027.2  1043.2  1044.4  1059.4  1074.4
2060        RY  1534.0  1532.0  1531.6  1531.9  1531.6  1532.0  1532.5  1533.0
            *

2061        KK   211AC
2062        KM   Sub-Basin  211AC
2063        KM
2064        KM      The Clark Unit Hydrograph is used for this basin.
2065        KM          The Urban time-area relation is used for this basin.
2066        KM
2067        KM      Time of Concentration for this sub-basin is based on the following:
2068        KM          6-Hour Rainfall, Pattern No.  1.00
```



```
LINE        ID.......1.......2.......3.......4.......5.......6.......7.......8.......9......10

2069        KM          An rainfall areal reduction factor of 1.000
2070        KM
2071        KM       EXCESS RAINFALL VALUES EXCEEDED IN 5-MINUTE INTERVALS
2072        KM     5  10  15  20  25  30  35  40  45  50  55  60  65  70  75  80  85  90
2073        KM   .32 .32 .32 .12 .10 .09 .05 .05 .04 .04 .04 .04 .01 .01 .01 .01 .01 .01
2074        KM
2075        KM          L=   0.306 miles, S=   82 feet/mile, Kb= .03
2076        KM
2077        BA   0.027
2078        LG    0.08    0.15    8.40    0.07   44.76
2079        UC   0.154   0.140
2080        UA       0       5      16      30      65      77      84      90      94      97
2081        UA     100
            *

2082        KK    C624
2083        KM      Hydrograph combine 623624 + 211AC at C624
2084        HC       2
            *
```

```
2085          KK  624626
2086          KM      Normal depth channel route from C624 to C626
2087          KM      Source:  HEC-2 Cross Section: AS 1.727
2088          RS       3    FLOW      -1
2089          RC   0.080   0.060   0.080   637.0  0.0235
2090          RX  9872.9  9881.0  9893.9  9902.2  9967.6  9976.4 10076.1 10084.3
2091          RY  1526.3  1524.6  1521.7  1520.0  1520.7  1521.6  1520.7  1526.2
              *

2092          KK   211AD
2093          KM   Sub-Basin  211AD
2094          KM
2095          KM      The Clark Unit Hydrograph is used for this basin.
2096          KM          The Urban time-area relation is used for this basin.
2097          KM
2098          KM      Time of Concentration for this sub-basin is based on the following:
2099          KM          6-Hour Rainfall, Pattern No.  1.00
2100          KM          An rainfall areal reduction factor of 0.999
2101          KM
2102          KM       EXCESS RAINFALL VALUES EXCEEDED IN 5-MINUTE INTERVALS
2103          KM     5  10  15  20  25  30  35  40  45  50  55  60  65  70  75  80  85  90
2104          KM   .32 .32 .32 .12 .10 .09 .05 .05 .04 .04 .04 .04 .01 .01 .01 .01 .01 .01
2105          KM
2106          KM          L=   0.489 miles, S=  280 feet/mile, Kb= .03
2107          KM
2108          BA   0.041
2109          LG    0.08    0.15    8.00    0.08   46.16
2110          UC   0.133   0.137
2111          UA       0       5      16      30      65      77      84      90      94      97
2112          UA     100
              *
```



```
LINE          ID.......1.......2.......3.......4.......5.......6.......7.......8.......9......10

2113          KK   C626R
2114          KM      Hydrograph combine 624626 + 211AD at C626 right branch
2115          HC       2
              *

2116          KK    C626
2117          KM      Hydrograph combine C626C + 625626 at C626R
2118          HC       3
              *

2119          KK  626627
2120          KM      Normal depth channel route from C626 to C627
2121          KM      Source:  HEC-2 Cross Section: AS 1.602
2122          RS       2    FLOW      -1
2123          RC   0.080   0.060   0.080   625.0  0.0208
2124          RX  9889.8  9941.2  9963.0 10011.6 10074.8 10083.9 10191.7 10210.4
2125          RY  1517.6  1516.9  1508.1  1506.6  1508.6  1511.7  1513.1  1518.8
              *

2126          KK   211AE
2127          KM   Sub-Basin  211AE
2128          KM
2129          KM      The Clark Unit Hydrograph is used for this basin.
2130          KM          The Urban time-area relation is used for this basin.
2131          KM
2132          KM      Time of Concentration for this sub-basin is based on the following:
2133          KM          6-Hour Rainfall, Pattern No.  1.00
2134          KM          An rainfall areal reduction factor of 1.000
2135          KM
2136          KM       EXCESS RAINFALL VALUES EXCEEDED IN 5-MINUTE INTERVALS
2137          KM     5  10  15  20  25  30  35  40  45  50  55  60  65  70  75  80  85  90
2138          KM   .31 .31 .30 .10 .08 .07 .03 .03 .03 .02 .02 .02 .01 .01 .01 .01 .01 .01
2139          KM
2140          KM          L=   0.313 miles, S=  153 feet/mile, Kb= .04
2141          KM
2142          BA   0.034
2143          LG    0.12    0.24    6.40    0.15   38.15
2144          UC   0.154   0.125
2145          UA       0       5      16      30      65      77      84      90      94      97
2146          UA     100
              *

2147          KK    C627
2148          KM      Hydrograph combine 626627 + 211AE at C627
2149          HC       2
              *
              * *
              * * C627 is the total flow in Ashbrook Wash at the Study boundary
              * *
              *
2150          ZZ
```

1

SCHEMATIC DIAGRAM OF STREAM NETWORK

```
INPUT
 LINE      (V) ROUTING          (--->) DIVERSION OR PUMP FLOW

  NO.      (.) CONNECTOR        (<---) RETURN OF DIVERTED OR PUMPED FLOW

   45        204A
                V
                V
   66      522523
                .
                .
   73           .        204B
                .           .
                .           .
   94       C523I............
                V
                V
   97       C523O
                .
                .
  109           .-------->   D523R
  106       D523L
                .
                .
  114           .        205A
                .           .
                .           .
  135           .           .        205B
                .           .           .
                .           .           .
  156           .        C528............
                .           V
                .           V
  159           .      528530
                .           .
                .           .
  166           .           .        205C
                .           .           .
                .           .           .
  187           .       C530R...........
                .           .
                .           .
  190           .           .        205D
                .           .           .
                .           .           .
  211           .           .           .        205E
                .           .           .           .
                .           .           .           .
  232           .           .        C529............
                .           .           .
                .           .           .
  235           .        C530............
                .           V
                .           V
  238           .      530531
                .           .
                .           .
  245           .           .        205F
                .           .           .
                .           .           .
  266           .        C531............
                .           V
                .           V
  269           .      531532
                .           .
                .           .
  276           .           .        205G
                .           .           .
                .           .           .
  297           .       C532L...........
                .           .
                .           .
  300           .           .        205H
                .           .           .
                .           .           .
  321           .        C532............
                .           V
                .           V
  324           .      532533
                .           .
                .           .
  331           .           .        205I
                .           .           .
                .           .           .
  352           .        C533............
                .           V
                .           V
  355           .      533534
                .           .
                .           .
  362           .           .        205J
                .           .           .
                .           .           .
```

```
383          .       C534R............
             .           .
             .           .
386          .           .        205K
             .           .           .
             .           .           .
407          .        C534............
             .           V
             .           V
410          .      534535
             .           .
             .           .
417          .           .        205L
             .           .           .
             .           .           .
438          .        C535............
             .           V
             .           V
441          .      535536
             .           .
             .           .
448          .           .        205M
             .           .           .
             .           .           .
469          .       C536R............
             .           .
             .           .
472          .           .        205N
             .           .           .
             .           .           .
491          .       C536I............
             .           V
             .           V
494          .       C536O
             .           V
             .           V
506          .      536537
             .           .
             .           .
513          .           .        206A
             .           .           .
             .           .           .
534          .        C537............
             .           V
             .           V
537          .      537538
             .           .
             .           .
544          .           .        206B
             .           .           .
             .           .           .
565          .       C538I............
             .           V
             .           V
568          .       C538O
             .           V
             .           V
577          .      538540
             .           .
             .           .
584          .           .        206C
             .           .           .
             .           .           .
605          .       C540R............
             .           .
             .           .
608          .           .        206D
             .           .           V
             .           .           V
629          .           .      539540
             .           .           .
             .           .           .
636          .           .           .        206E
             .           .           .           .
             .           .           .           .
657          .           .      C540L............
             .           .           .
             .           .           .
660          .        C540............
             .           V
             .           V
663          .      540541
             .           .
             .           .
670          .           .        206F
             .           .           .
             .           .           .
691          .        C541............
             .           V
             .           V
694          .      541548
             .           .
             .           .
701          .           .        206G
             .           .           .
```

```
724                                   .<-------   D523R
722                            BB523R
                                    V
                                    V
725                            523548
                                    .
                                    .
732          C548L......................
735                   206H
                        V
                        V
756                542543
                        .
                        .
763                             206I
                                    .
                                    .
784                   C543............
                        .
                        .
790                     .------->   D543R
787                 D543L
                        V
                        V
795                543544
                        .
                        .
802                             206K
                                    .
                                    .
823                   C544............
                        V
                        V
826                544545
                        .
                        .
836                     .------->   D545R
833                 D545L
                        V
                        V
839                545546
                        .
                        .
846                             206L
                                    .
                                    .
867                   C546............
                        V
                        V
870                546547
                        .
                        .
879                                 .<-------   D543R
877                            BB543R
                                    V
                                    V
880                            543547
                                    .
                                    .
889                                                 .<-------   D545R
887                                         BB545R
                                                 V
                                                 V
890                                         545547
                                                 .
                                                 .
897                                                         206J
                                                             .
                                                             .
918                   C547.................................
                        V
                        V
921                547548
                        .
                        .
928                             206M
                                    .
                                    .
949                   C548R...........
                        .
                        .
952          C548............
               V
               V
955          548549
               .
               .
962                   206N
                        .
                        .
983          C549L...........
               .
```

```
 986          .            .       C599O
              .            .           V
              .            .           V
1099          .            .      599608
              .            .           .
              .            .           .
1106          .            .           .        211K
              .            .           .           .
              .            .           .           .
1127          .            .       C608L............
              .            .           .
              .            .           .
1130          .            .           .        211G
              .            .           .           V
              .            .           .           V
1151          .            .           .      604606
              .            .           .           .
              .            .           .           .
1158          .            .           .           .        211I
              .            .           .           .           .
              .            .           .           .           .
1179          .            .           .       C606R............
              .            .           .           .
              .            .           .           .
1182          .            .           .           .        211H
              .            .           .           .           V
              .            .           .           .           V
1203          .            .           .           .       C605O
              .            .           .           .           .
              .            .           .           .           .
1212          .            .           .        C606............
              .            .           .           V
              .            .           .           V
1215          .            .           .      606607
              .            .           .           .
              .            .           .           .
1222          .            .           .           .        211J
              .            .           .           .           .
              .            .           .           .           .
1243          .            .           .        C607............
              .            .           .           V
              .            .           .           V
1246          .            .           .      607608
              .            .           .           .
              .            .           .           .
1253          .            .        C608............
              .            .           V
              .            .           V
1256          .            .      608613
              .            .           .
              .            .           .
1263          .            .           .        211M
              .            .           .           V
              .            .           .           V
1284          .            .           .      610611
              .            .           .           .
              .            .           .           .
1291          .            .           .           .        211N
              .            .           .           .           .
              .            .           .           .           .
1312          .            .           .       C611R............
              .            .           .           .
              .            .           .           .
1315          .            .           .           .        211O
              .            .           .           .           V
              .            .           .           .           V
1336          .            .           .           .       C609O
              .            .           .           .           V
              .            .           .           .           V
1345          .            .           .           .      609611
              .            .           .           .           .
              .            .           .           .           .
1352          .            .           .       C611I............
              .            .           .           V
              .            .           .           V
1355          .            .           .       C611O
              .            .           .           .
              .            .           .           .
1367          .            .           .           .-------->   D611R
1364          .            .           .       D611L
              .            .           .           V
              .            .           .           V
1372          .            .           .      611612
              .            .           .           .
              .            .           .           .
1379          .            .           .           .        211P
              .            .           .           .           .
              .            .           .           .           .
1400          .            .           .        C612............
              .            .           .           .
              .            .           .           .
1403          .            .        C613............
              .            .           V
              .            .           V
```

```
1406                613621
                       .
1413                   .        211L
                       .          .
1434                C621L...........
                       .
1437                   .        211Q
                       .          V
                       .          V
1458                   .      616617
                       .          .
1465                   .          .        211R
                       .          .          .
1486                   .      C617L...........
                       .          .
1489                   .          .        211U
                       .          .          .
1513                   .          .          .-------> D614R
1510                   .          .      D614L
                       .          .          .
1516                   .       C617...........
                       .          V
                       .          V
1519                   .      617618
                       .          .
1526                   .          .        211S
                       .          .          .
1547                   .      C618I...........
                       .          V
                       .          V
1550                   .      C618O
                       .          .
1561                   .          .          .<------- D614R
1559                   .          .     BB614R
                       .          .          V
                       .          .          V
1562                   .          .     614615
                       .          .          .
1569                   .          .          .        211V
                       .          .          .          .
1590                   .          .       C615...........
                       .          .          .
1596                   .          .          .-------> D615R
1593                   .          .      D615L
                       .          .          V
                       .          .          V
1599                   .          .     615618
                       .          .          .
1606                   .       C618...........
                       .          V
                       .          V
1609                   .      618619
                       .          .
1616                   .          .        211T
                       .          .          .
1637                   .      C619L...........
                       .          .
1642                   .          .          .<------- D615R
1640                   .          .     BB615R
                       .          .          V
                       .          .          V
1643                   .          .     615619
                       .          .          .
1650                   .      C619I...........
                       .          V
                       .          V
1653                   .      C619O
                       .          .
1667                   .          .-------> D619L
1664                   .      D619R
                       .          V
                       .          V
1672                   .      619620
                       .          .
```

```
1677                                                  .<-------   D619L
1675                                          BB619L
                                                  V
                                                  V
1678                                          619620
                                                  .
                                                  .
1685                                                  .        211W
                                                  .           .
                                                  .           .
1706                                  C620R.......................
                                          .
                                          .
1711                                                  .<-------   D611R
1709                                          BB611R
                                                  V
                                                  V
1712                                          611620
                                                  .
                                                  .
1715                                      C620............
                                              V
                                              V
1718                                      620621
                                              .
                                              .
1725                                  C621............
                                          V
                                          V
1728                                  621622
                                              .
                                              .
1735                                      211X
                                              .
                                              .
1756                                  C622R............
                                              .
                                              .
1759                                      211A
                                              V
                                              V
1780                                      C600O
                                              V
                                              V
1789                                      600601
                                              .
                                              .
1796                                                  .        211B
                                                  .           .
                                                  .           .
1817                                      C601............
                                              V
                                              V
1820                                      601602
                                              .
                                              .
1827                                                  .        211C
                                                  .           .
                                                  .           .
1848                                      C602L............
                                              .
                                              .
1851                                                  .        211D
                                                  .           .
                                                  .           .
1872                                      C602............
                                              V
                                              V
1875                                      602603
                                              .
                                              .
1882                                                  .        211E
                                                  .           .
                                                  .           .
1903                                      C603............
                                              V
                                              V
1906                                      603622
                                              .
                                              .
1913                                                  .        211F
                                                  .           .
                                                  .           .
1934                                      C622L............
                                              .
                                              .
1937                                  C622............
                                          V
                                          V
1940                                  622549
                                              .
                                              .
1947                                      211Y
                                              .
                                              .
```

```
1968          .           .       C549R............
              .           .           .
              .           .           .
1971          .       C549............
              .          V
              .          V
1974          .     549626
              .           .
              .           .
1981          .           .        211Z
              .           .           .
              .           .           .
2002          .      C626C............
              .           .
              .           .
2005          .           .      211AA
              .           .          V
              .           .          V
2026          .           .     625626
              .           .           .
              .           .           .
2033          .           .           .      211AB
              .           .           .          V
              .           .           .          V
2054          .           .           .     623624
              .           .           .           .
              .           .           .           .
2061          .           .           .           .       211AC
              .           .           .           .           .
              .           .           .           .           .
2082          .           .           .       C624............
              .           .           .          V
              .           .           .          V
2085          .           .           .     624626
              .           .           .           .
              .           .           .           .
2092          .           .           .           .       211AD
              .           .           .           .           .
              .           .           .           .           .
2113          .           .           .      C626R............
              .           .           .           .
              .           .           .           .
2116          .       C626........................
              .          V
              .          V
2119          .     626627
              .           .
              .           .
2126          .           .        211AE
              .           .           .
              .           .           .
2147          .       C627............
```

(***) RUNOFF ALSO COMPUTED AT THIS LOCATION

```
1****************************************
*                                      *
*   FLOOD HYDROGRAPH PACKAGE  (HEC-1)  *
*              MAY   1991              *
*           VERSION 4.0.1E             *
*                                      *
*  RUN DATE  02/18/:0  TIME  07:21:35  *
*                                      *
****************************************
```

```
****************************************
*                                      *
*   U.S. ARMY CORPS OF ENGINEERS       *
*   HYDROLOGIC ENGINEERING CENTER      *
*         609 SECOND STREET            *
*      DAVIS, CALIFORNIA 95616         *
*          (916) 551-1748              *
*                                      *
****************************************
```

Golden Eagle Park Dam Modifications
by Stantec: Proj. No. 28900095
for FCDMC: FCD

File: ALTFf-6.IH1
Date:07-08-99 mcg
Revised:

Alternative F:
Addition of an auxillary spillway. This spillway will function such that the existing emergency spillway does not operate for the 100-year storm. The stage-storage relation is adjusted to reflect revised grading in the park.

The purpose of this model is to estimate peak discharges in Ashbrook Wash for evaluation of the Dam modifications impact on the floodplain.

10-year, 6-hour future condition watershed model for Ashbrook Wash upstream of the Fort McDowell Indian Reservation boundary.
This model is a portion of the original Fountain Hills North FDS watershed model conducted by GVSCE, 1994. The title cards from that model are included for reference.

Fountain Hills North Floodplain Delineation Study
FCD 92-04 by GVSCE
Future Condition Model
10-Year 6-Hour Storm, Clark Unit Hydrograph

File: FU10-6.IH1
Date: 07-21-94 dtp
Revised: 10-31-94 dtp

```
 26 IO          OUTPUT CONTROL VARIABLES
                     IPRNT          5  PRINT CONTROL
```

```
                    IPLOT          0  PLOT CONTROL
                    QSCAL         0.  HYDROGRAPH PLOT SCALE

   IT          HYDROGRAPH TIME DATA
                     NMIN          1  MINUTES IN COMPUTATION INTERVAL
                    IDATE      1    0  STARTING DATE
                    ITIME       0000  STARTING TIME
                       NQ       1080  NUMBER OF HYDROGRAPH ORDINATES
                   NDDATE      1    0  ENDING DATE
                   NDTIME       1759  ENDING TIME
                    ICENT         19  CENTURY MARK

                 COMPUTATION INTERVAL    0.02 HOURS
                      TOTAL TIME BASE   17.98 HOURS

        ENGLISH UNITS
             DRAINAGE AREA          SQUARE MILES
             PRECIPITATION DEPTH    INCHES
             LENGTH, ELEVATION      FEET
             FLOW                   CUBIC FEET PER SECOND
             STORAGE VOLUME         ACRE-FEET
             SURFACE AREA           ACRES
             TEMPERATURE            DEGREES FAHRENHEIT

 28 JD         INDEX STORM NO. 1
                     STRM       2.20  PRECIPITATION DEPTH
                     TRDA       0.01  TRANSPOSITION DRAINAGE AREA


 32 JD         INDEX STORM NO. 2
                     STRM       2.19  PRECIPITATION DEPTH
                     TRDA       0.50  TRANSPOSITION DRAINAGE AREA


 33 JD         INDEX STORM NO. 3
                     STRM       2.16  PRECIPITATION DEPTH
                     TRDA       2.80  TRANSPOSITION DRAINAGE AREA


 37 JD         INDEX STORM NO. 4
                     STRM       2.03  PRECIPITATION DEPTH
                     TRDA      16.00  TRANSPOSITION DRAINAGE AREA


 41 JD         INDEX STORM NO. 5
                     STRM       1.78  PRECIPITATION DEPTH
                     TRDA      90.00  TRANSPOSITION DRAINAGE AREA

        WARNING EXCESS AT PONDING LESS THAN ZERO FOR PERIOD. EXCESS SET TO ZERO
        WARNING EXCESS AT PONDING LESS THAN ZERO FOR PERIOD. EXCESS SET TO ZERO

1
                                          RUNOFF SUMMARY
                                   FLOW IN CUBIC FEET PER SECOND
                                TIME IN HOURS,  AREA IN SQUARE MILES

                                     PEAK   TIME OF    AVERAGE FLOW FOR MAXIMUM PERIOD      BASIN     MAXIMUM     TIME OF
        OPERATION        STATION     FLOW    PEAK                                          AREA      STAGE     MAX STAGE
+                                                       6-HOUR     24-HOUR     72-HOUR

        HYDROGRAPH AT
+                          204A      196.   4.05         16.         5.          5.       0.11
        ROUTED TO
+                        522523      178.   4.22         16.         5.          5.       0.11
        HYDROGRAPH AT
+                          204B      211.   4.07         18.         6.          6.       0.13
        2 COMBINED AT
+                         C523I      322.   4.15         34.        11.         11.       0.23
        ROUTED TO
+                         C523O      227.   4.33         34.        11.         11.       0.23
        DIVERSION TO
+                         D523R        0.   4.33          0.         0.          0.       0.23
        HYDROGRAPH AT
+                         D523L      226.   4.33         34.        11.         11.       0.23
        HYDROGRAPH AT
+                          205A       97.   4.32         15.         5.          5.       0.12
        HYDROGRAPH AT
+                          205B      164.   4.47         27.         9.          9.       0.21
        2 COMBINED AT
+                           C528      247.   4.43         42.        14.         14.       0.33
        ROUTED TO
+                        528530      246.   4.48         42.        14.         14.       0.33
        HYDROGRAPH AT
```

+	205C	50.	4.28	8.	3.	3.	0.06
+ 2 COMBINED AT	C530R	284.	4.47	50.	17.	17.	0.39
+ HYDROGRAPH AT	205D	315.	4.33	41.	14.	14.	0.32
+ HYDROGRAPH AT	205E	133.	4.48	28.	9.	9.	0.22
+ 2 COMBINED AT	C529	418.	4.37	68.	23.	23.	0.54
+ 2 COMBINED AT	C530	596.	4.42	110.	37.	37.	0.93
+ ROUTED TO	530531	592.	4.47	110.	37.	37.	0.93
+ HYDROGRAPH AT	205F	153.	4.30	21.	7.	7.	0.16
+ 2 COMBINED AT	C531	669.	4.45	127.	43.	43.	1.09
+ ROUTED TO	531532	663.	4.53	127.	43.	43.	1.09
+ HYDROGRAPH AT	205G	160.	4.33	23.	8.	8.	0.19
+ 2 COMBINED AT	C532L	735.	4.52	144.	49.	49.	1.27
+ HYDROGRAPH AT	205H	151.	4.50	32.	11.	11.	0.26
+ 2 COMBINED AT	C532	808.	4.52	168.	57.	57.	1.53
+ ROUTED TO	532533	806.	4.55	168.	57.	57.	1.53
+ HYDROGRAPH AT	205I	226.	4.45	37.	12.	12.	0.35
+ 2 COMBINED AT	C533	907.	4.55	193.	66.	66.	1.89
+ ROUTED TO	533534	892.	4.77	193.	66.	66.	1.89
+ HYDROGRAPH AT	205J	204.	4.47	32.	11.	11.	0.37
+ 2 COMBINED AT	C534R	946.	4.75	211.	72.	72.	2.25
+ HYDROGRAPH AT	205K	95.	4.60	22.	7.	7.	0.25
+ 2 COMBINED AT	C534	978.	4.77	224.	76.	76.	2.50
+ ROUTED TO	534535	974.	4.83	224.	76.	76.	2.50
+ HYDROGRAPH AT	205L	117.	4.22	10.	3.	3.	0.12
+ 2 COMBINED AT	C535	972.	4.83	229.	78.	78.	2.62
+ ROUTED TO	535536	968.	4.92	229.	78.	78.	2.62
+ HYDROGRAPH AT	205M	197.	4.08	18.	6.	6.	0.14
+ 2 COMBINED AT	C536R	967.	4.92	241.	82.	82.	2.76
+ HYDROGRAPH AT	205N	80.	4.40	14.	5.	5.	0.16
+ 2 COMBINED AT	C536I	983.	4.92	249.	85.	85.	2.91
+ ROUTED TO	C536O	271.	6.20	233.	85.	85.	2.91
+ ROUTED TO	536537	271.	6.25	232.	85.	85.	2.91

+	HYDROGRAPH AT	206A	240.	4.05	19.	6.	6.	0.13
+	2 COMBINED AT	C537	273.	6.05	237.	90.	90.	3.04
+	ROUTED TO	537538	273.	6.12	236.	90.	90.	3.04
+	HYDROGRAPH AT	206B	181.	4.05	15.	5.	5.	0.09
+	2 COMBINED AT	C538I	275.	6.05	243.	94.	94.	3.14
+	ROUTED TO	C538O	273.	6.15	240.	94.	94.	3.14
+	ROUTED TO	538540	273.	6.25	240.	94.	94.	3.14
+	HYDROGRAPH AT	206C	33.	4.07	3.	1.	1.	0.02
+	2 COMBINED AT	C540R	274.	6.25	241.	95.	95.	3.16
+	HYDROGRAPH AT	206D	124.	4.03	10.	3.	3.	0.06
+	ROUTED TO	539540	117.	4.12	10.	3.	3.	0.06
+	HYDROGRAPH AT	206E	40.	4.03	3.	1.	1.	0.02
+	2 COMBINED AT	C540L	147.	4.10	13.	4.	4.	0.09
+	2 COMBINED AT	C540	275.	6.23	247.	98.	98.	3.24
+	ROUTED TO	540541	275.	6.35	247.	98.	98.	3.24
+	HYDROGRAPH AT	206F	247.	4.07	21.	7.	7.	0.16
+	2 COMBINED AT	C541	357.	4.30	256.	103.	103.	3.40
+	ROUTED TO	541548	355.	4.33	256.	103.	103.	3.40
+	HYDROGRAPH AT	206G	116.	4.08	13.	4.	4.	0.09
+	HYDROGRAPH AT	BB523R	0.	4.33	0.	0.	0.	0.23
+	ROUTED TO	523548	0.	4.72	0.	0.	0.	0.23
+	3 COMBINED AT	C548L	406.	4.32	262.	106.	106.	3.72
+	HYDROGRAPH AT	206H	114.	4.03	9.	3.	3.	0.06
+	ROUTED TO	542543	110.	4.07	9.	3.	3.	0.06
+	HYDROGRAPH AT	206I	47.	4.00	3.	1.	1.	0.02
+	2 COMBINED AT	C543	150.	4.03	13.	4.	4.	0.08
+	DIVERSION TO	D543R	150.	4.03	13.	4.	4.	0.08
+	HYDROGRAPH AT	D543L	0.	0.02	0.	0.	0.	0.08
+	ROUTED TO	543544	0.	0.02	0.	0.	0.	0.08
+	HYDROGRAPH AT	206K	100.	4.03	8.	3.	3.	0.06
+	2 COMBINED AT	C544	100.	4.03	8.	3.	3.	0.14
+	ROUTED TO	544545	98.	4.07	8.	3.	3.	0.14

+	DIVERSION TO						
		D545R	49.	4.07	4.	1.	1.	0.14
+	HYDROGRAPH AT						
		D545L	49.	4.07	4.	1.	1.	0.14
+	ROUTED TO						
		545546	48.	4.08	4.	1.	1.	0.14
+	HYDROGRAPH AT						
		206L	113.	4.03	9.	3.	3.	0.06
+	2 COMBINED AT						
		C546	157.	4.05	13.	4.	4.	0.20
+	ROUTED TO						
		546547	156.	4.07	13.	4.	4.	0.20
+	HYDROGRAPH AT						
		BB543R	150.	4.03	13.	4.	4.	0.08
+	ROUTED TO						
		543547	143.	4.12	13.	4.	4.	0.08
+	HYDROGRAPH AT						
		BB545R	49.	4.07	4.	1.	1.	0.14
+	ROUTED TO						
		545547	47.	4.13	4.	1.	1.	0.14
+	HYDROGRAPH AT						
		206J	121.	4.03	10.	3.	3.	0.06
+	4 COMBINED AT						
		C547	446.	4.07	39.	13.	13.	0.26
+	ROUTED TO						
		547548	433.	4.13	39.	13.	13.	0.26
+	HYDROGRAPH AT						
		206M	119.	4.03	10.	3.	3.	0.06
+	2 COMBINED AT						
		C548R	518.	4.12	49.	16.	16.	0.32
+	2 COMBINED AT						
		C548	646.	4.23	296.	119.	119.	4.04
+	ROUTED TO						
		548549	641.	4.38	295.	119.	119.	4.04
+	HYDROGRAPH AT						
		206N	269.	4.07	26.	9.	9.	0.15
+	2 COMBINED AT						
		C549L	730.	4.32	308.	126.	126.	4.19
+	HYDROGRAPH AT						
		C599O	1091.	4.68	756.	288.	288.	7.13
+	ROUTED TO						
		599608	1091.	4.77	756.	288.	288.	7.13
+	HYDROGRAPH AT						
		211K	225.	4.02	15.	5.	5.	0.10
+	2 COMBINED AT						
		C608L	1099.	4.73	766.	292.	292.	7.23
+	HYDROGRAPH AT						
		211G	11.	4.07	2.	1.	1.	0.01
+	ROUTED TO						
		604606	10.	4.25	2.	1.	1.	0.01
+	HYDROGRAPH AT						
		211I	71.	4.05	7.	2.	2.	0.04
+	2 COMBINED AT						
		C606R	77.	4.05	9.	3.	3.	0.05
+	HYDROGRAPH AT						
		211H	150.	4.02	10.	3.	3.	0.07
+	ROUTED TO						
		C605O	103.	4.10	10.	3.	3.	0.07
+	2 COMBINED AT						
		C606	178.	4.07	18.	6.	6.	0.12
+	ROUTED TO						
		606607	175.	4.10	18.	6.	6.	0.12
	HYDROGRAPH AT						

+	211J	31.	4.02	2.	1.	1.	0.01
+ 2 COMBINED AT	C607	199.	4.08	21.	7.	7.	0.14
+ ROUTED TO	607608	197.	4.12	21.	7.	7.	0.14
+ 2 COMBINED AT	C608	1159.	4.40	782.	298.	298.	7.37
+ ROUTED TO	608613	1159.	4.43	782.	298.	298.	7.37
+ HYDROGRAPH AT	211M	171.	4.03	14.	5.	5.	0.08
+ ROUTED TO	610611	166.	4.05	14.	5.	5.	0.08
+ HYDROGRAPH AT	211N	45.	4.02	4.	1.	1.	0.02
+ 2 COMBINED AT	C611R	208.	4.03	18.	6.	6.	0.10
+ HYDROGRAPH AT	211O	89.	4.02	7.	2.	2.	0.04
+ ROUTED TO	C609O	53.	4.12	7.	2.	2.	0.04
+ ROUTED TO	609611	52.	4.13	7.	2.	2.	0.04
+ 2 COMBINED AT	C611I	255.	4.05	25.	8.	8.	0.14
+ ROUTED TO	C611O	133.	4.23	24.	8.	8.	0.14
+ DIVERSION TO	D611R	133.	4.23	24.	8.	8.	0.14
+ HYDROGRAPH AT	D611L	0.	0.02	0.	0.	0.	0.14
+ ROUTED TO	611612	0.	0.02	0.	0.	0.	0.14
+ HYDROGRAPH AT	211P	75.	4.02	6.	2.	2.	0.03
+ 2 COMBINED AT	C612	75.	4.02	6.	2.	2.	0.17
+ 2 COMBINED AT	C613	1172.	4.35	786.	299.	299.	7.54
+ ROUTED TO	613621	1172.	4.37	786.	299.	299.	7.54
+ HYDROGRAPH AT	211L	189.	4.03	15.	5.	5.	0.10
+ 2 COMBINED AT	C621L	1211.	4.32	795.	303.	303.	7.64
+ HYDROGRAPH AT	211Q	46.	4.02	3.	1.	1.	0.02
+ ROUTED TO	616617	44.	4.05	3.	1.	1.	0.02
+ HYDROGRAPH AT	211R	171.	4.03	13.	4.	4.	0.08
+ 2 COMBINED AT	C617L	215.	4.03	17.	6.	6.	0.10
+ HYDROGRAPH AT	211U	35.	4.07	5.	2.	2.	0.03
+ DIVERSION TO	D614R	25.	4.07	3.	1.	1.	0.03
+ HYDROGRAPH AT	D614L	10.	4.07	2.	1.	1.	0.03
+ 2 COMBINED AT	C617	225.	4.03	18.	6.	6.	0.13
+ ROUTED TO	617618	214.	4.10	18.	6.	6.	0.13

+	HYDROGRAPH AT	211S	82.	4.07	7.	2.	2.	0.05
+	2 COMBINED AT	C618I	291.	4.08	26.	9.	9.	0.18
+	ROUTED TO	C618O	273.	4.13	20.	9.	9.	0.18
+	HYDROGRAPH AT	BB614R	25.	4.07	3.	1.	1.	0.03
+	ROUTED TO	614615	24.	4.12	3.	1.	1.	0.03
+	HYDROGRAPH AT	211V	10.	4.03	1.	0.	0.	0.00
+	2 COMBINED AT	C615	32.	4.08	4.	2.	2.	0.03
+	DIVERSION TO	D615R	11.	4.08	1.	0.	0.	0.03
+	HYDROGRAPH AT	D615L	21.	4.08	3.	1.	1.	0.03
+	ROUTED TO	615618	21.	4.10	3.	1.	1.	0.03
+	2 COMBINED AT	C618	294.	4.13	23.	10.	10.	0.19
+	ROUTED TO	618619	283.	4.22	23.	10.	10.	0.19
+	HYDROGRAPH AT	211T	145.	4.02	13.	4.	4.	0.07
+	2 COMBINED AT	C619L	338.	4.20	35.	14.	14.	0.26
+	HYDROGRAPH AT	BB615R	11.	4.08	1.	0.	0.	0.03
+	ROUTED TO	615619	11.	4.20	1.	0.	0.	0.03
+	2 COMBINED AT	C619I	349.	4.20	36.	14.	14.	0.25
+	ROUTED TO	C619O	175.	4.40	36.	14.	14.	0.25
+	DIVERSION TO	D619L	0.	0.02	0.	0.	0.	0.25
+	HYDROGRAPH AT	D619R	175.	4.40	36.	14.	14.	0.25
+	ROUTED TO	619620	175.	4.42	36.	14.	14.	0.25
+	HYDROGRAPH AT	BB619L	0.	0.02	0.	0.	0.	0.25
+	ROUTED TO	619620	0.	0.02	0.	0.	0.	0.25
+	HYDROGRAPH AT	211W	69.	4.02	6.	2.	2.	0.03
+	3 COMBINED AT	C620R	201.	4.03	42.	16.	16.	0.28
+	HYDROGRAPH AT	BB611R	133.	4.23	24.	8.	8.	0.14
+	ROUTED TO	611620	133.	4.25	24.	8.	8.	0.14
+	2 COMBINED AT	C620	321.	4.27	66.	24.	24.	0.42
+	ROUTED TO	620621	321.	4.28	66.	24.	24.	0.42
+	2 COMBINED AT	C621	1456.	4.37	846.	324.	324.	7.93
+	ROUTED TO	621622	1452.	4.48	846.	324.	324.	7.93
+	HYDROGRAPH AT	211X	372.	4.07	38.	13.	13.	0.21

+	2 COMBINED AT	C622R	1549.	4.40	871.	335.	335.	8.14
+	HYDROGRAPH AT	211A	260.	4.05	20.	7.	7.	0.14
+	ROUTED TO	C600O	236.	4.10	20.	7.	7.	0.14
+	ROUTED TO	600601	231.	4.15	20.	7.	7.	0.14
+	HYDROGRAPH AT	211B	213.	4.03	15.	5.	5.	0.11
+	2 COMBINED AT	C601	396.	4.07	35.	12.	12.	0.25
+	ROUTED TO	601602	388.	4.12	35.	12.	12.	0.25
+	HYDROGRAPH AT	211C	80.	4.05	7.	2.	2.	0.04
+	2 COMBINED AT	C602L	455.	4.10	42.	14.	14.	0.30
+	HYDROGRAPH AT	211D	100.	4.07	10.	3.	3.	0.07
+	2 COMBINED AT	C602	552.	4.10	52.	18.	18.	0.37
+	ROUTED TO	602603	538.	4.17	52.	18.	18.	0.37
+	HYDROGRAPH AT	211E	306.	4.05	25.	8.	8.	0.16
+	2 COMBINED AT	C603	742.	4.12	77.	26.	26.	0.52
+	ROUTED TO	603622	728.	4.20	77.	26.	26.	0.52
+	HYDROGRAPH AT	211F	196.	4.07	20.	7.	7.	0.11
+	2 COMBINED AT	C622L	829.	4.17	96.	32.	32.	0.63
+	2 COMBINED AT	C622	1958.	4.28	941.	361.	361.	8.78
+	ROUTED TO	622549	1954.	4.38	940.	361.	361.	8.78
+	HYDROGRAPH AT	211Y	164.	4.07	16.	5.	5.	0.09
+	2 COMBINED AT	C549R	2004.	4.37	951.	365.	365.	8.87
+	2 COMBINED AT	C549	2530.	4.37	1219.	471.	471.	13.06
+	ROUTED TO	549626	2521.	4.47	1218.	470.	470.	13.06
+	HYDROGRAPH AT	211Z	141.	4.05	12.	4.	4.	0.08
+	2 COMBINED AT	C626C	2540.	4.47	1223.	473.	473.	13.14
+	HYDROGRAPH AT	211AA	56.	4.07	6.	2.	2.	0.03
+	ROUTED TO	625626	54.	4.12	6.	2.	2.	0.03
+	HYDROGRAPH AT	211AB	96.	4.00	8.	3.	3.	0.04
+	ROUTED TO	623624	95.	4.02	8.	3.	3.	0.04
+	HYDROGRAPH AT	211AC	56.	4.03	5.	2.	2.	0.03
+	2 COMBINED AT	C624	151.	4.02	13.	4.	4.	0.07
	ROUTED TO							

```
+                    624626     147.   4.07        13.        4.        4.      0.07
         HYDROGRAPH AT
+                     211AD      86.   4.03         8.        3.        3.      0.04
         2 COMBINED AT
+                     C626R     231.   4.05        20.        7.        7.      0.11
         3 COMBINED AT
+                      C626    2604.   4.45      1238.      480.      480.     13.28
         ROUTED TO
+                    626627    2604.   4.47      1238.      480.      480.     13.28
         HYDROGRAPH AT
+                     211AE      69.   4.03         6.        2.        2.      0.03
         2 COMBINED AT
+                      C627    2613.   4.47      1240.      482.      482.     13.32

*** NORMAL END OF HEC-1 ***
```

APPENDIX C

FLOOD ROUTING MODELS (HEC-1)

IDF1

IDF2

10-YEAR, FUTURE CONDITION (6-HOUR)

100-YEAR, FUTURE CONDITION (6-HOUR)

```
1*************************************                                    *************************************
*                                   *                                    *                                   *
*   FLOOD HYDROGRAPH PACKAGE  (HEC-1)  *                                    *    U.S. ARMY CORPS OF ENGINEERS   *
*              MAY   1991           *                                    *    HYDROLOGIC ENGINEERING CENTER  *
*           VERSION 4.0.1E          *                                    *          609 SECOND STREET        *
*                                   *                                    *       DAVIS, CALIFORNIA 95616     *
*  RUN DATE  02/17/:0  TIME  08:03:58 *                                    *           (916) 551-1748          *
*                                   *                                    *                                   *
*************************************                                    *************************************
```

```
X     X  XXXXXXX   XXXXX          X
X     X  X        X     X        XX
X     X  X        X               X
XXXXXXX  XXXX     X        XXXXX  X
X     X  X        X               X
X     X  X        X     X         X
X     X  XXXXXXX   XXXXX         XXX
```

THIS PROGRAM REPLACES ALL PREVIOUS VERSIONS OF HEC-1 KNOWN AS HEC1 (JAN 73), HEC1GS, HEC1DB, AND HEC1KW.

THE DEFINITIONS OF VARIABLES -RTIMP- AND -RTIOR- HAVE CHANGED FROM THOSE USED WITH THE 1973-STYLE INPUT STRUCTURE.
THE DEFINITION OF -AMSKK- ON RM-CARD WAS CHANGED WITH REVISIONS DATED 28 SEP 81. THIS IS THE FORTRAN77 VERSION
NEW OPTIONS: DAMBREAK OUTFLOW SUBMERGENCE , SINGLE EVENT DAMAGE CALCULATION, DSS:WRITE STAGE FREQUENCY,
DSS:READ TIME SERIES AT DESIRED CALCULATION INTERVAL LOSS RATE:GREEN AND AMPT INFILTRATION
KINEMATIC WAVE: NEW FINITE DIFFERENCE ALGORITHM

```
1                                          HEC-1 INPUT                                                    PAGE  1

      LINE          ID.......1.......2.......3.......4.......5.......6.......7.......8.......9......10

        1           ID   ACCOUNTS FOR TRASH RACK LOSSES AT THE PRINCIPAL INLET - NO CLOGGING
        2           ID
        3           ID       FILENAME:IDF1-A.IH2, RJS 11-99
        4           ID       ALTERNATIVE "G" FOR IDF1 - WITH A BREACH OF NORTH HEIGHTS DAM
        5           ID
        6           ID       DATE:4-12-99
        7           ID       Golden Eagle Park Dam (FCD 97-44)
        8           ID       IDF1 Model for the Computation of IDF for Golden Eagle Park Dam
        9           ID       ***************************************************************
       10           ID       Analytical Considerations:
       11           ID           Includes Breach of North Heights Dam
       12           ID           Single Basin Model
       13           ID           This model considers areal reduction method.
       14           ID       ***************************************************************
       15           ID
       16           ID      FILE:  IDF1.DAT
       17           ID      DATE: OCTOBER 1998 (by FCDMC)
       18           ID      Modified by Stantec - February 1999
       19           ID
       20           ID     THIS MODEL WAS ALTERED BY FCDMC FROM THE ORIGINAL MODEL- GEPD-PMF.DAT
       21           ID     FROM THE GOLDEN EAGLE PARK DAM FEASIBILITY STUDY DONE BY GEORGE V.
       22           ID     SABOL CONSULTING ENGINEERS, INC. (GVSCE), JULY 1997
       23           ID
       24           ID    THE MODEL HAS THE FOLLOWING ADJUSTMENTS (BY FCDMC):FROM THE ORIGINAL
       25           ID     1.)  THE SINGLE BASIN FOR THE NORTH HEIGHTS DAM WATERSHED HAS BEEN
       26           ID          REMOVED.  IN ITS PLACE ARE QI CARDS TAKEN FROM THE DAM BREACH
       27           ID          HEC-1 FOR NORTH HEIGHTS DAM (GVSCE, JANUARY 1996).
       28           ID     2.)  BEFORE EACH WATERSHED IS ROUTED THROUGH ITS RESPECTIVE DAM,
       29           ID          HALF OF THE FLOW IS DIVERTED OUT TO REFLECT THE HALF PMF EVENT.
       30           ID          THE SAME WAS ALSO DONE ON THE WATERSHED (BASIN S210) BETWEEN THE THREE
       31           ID          UPPER DAMS AND GEPD.THE BREACH HYDROGRAPH ALREADY IS HALF PMF.
       32           ID     3.)  THE RATING CURVES FOR ASPEN AND SUNRIDGE CANYON DAMS WERE ALTERED
       33           ID          THE NEW RATING CURVES WERE DEVELOPED USING THE EQUATION Q=CLH3/2.
       34           ID          THE RATING CURVES WERE ALTERED TO MAKE THE SPILLWAY LENGTH LONG
       35           ID          ENOUGH TO PASS THE HALF PMF THROUGH THE DAM WITH THE REQUIRED
       36           ID          THREE FEET OF FREEBOARD.
       37           ID          C = 2.6
       38           ID     4.)  IN THIS MODEL THE PRINCIPLE SPILLWAYS OF ASPEN AND SUNRIDGE CANYON DAM
       39           ID          ARE UNCLOGGED.
       40           ID     5.)  THE INITIAL WATER SURFACE ELEVATION FOR EACH OF THE DAMS WAS
       41           ID          SET TO THE WSEL OF THE 100 YEAR EVENT
       42           ID     NOTE:MODIFICATIONS BY STANTEC ARE EDITORIAL ONLY.  THE ORIGINAL GVSCE MODEL
       43           ID          AND REVISIONS BY FCDMC ARE ACCEPTED.  THE ROUTING (BY FCDMC) OF THE
       44           ID          IDF1 HYDROGRAPH THROUGH THE EXISTING GEP DAM IS DELETED.
                    *DIAGRAM
       45           IT       5 02JUN98             210
       46           IO       4
       47           IN      15
                    *
                    *
                    * IDF1 INFLOW HYDROGRAPH - DAM BREAK AT GOLDEN HEIGHTS DAM
                    *
1                                          HEC-1 INPUT                                                    PAGE  2

      LINE          ID.......1.......2.......3.......4.......5.......6.......7.......8.......9......10
```

```
48          KK    IDF1
49          KM    INFLOW FROM DAM BREACH OF NORTHERN HEIGHTS DAM AND WATERSHED
50          KM    THIS HYDROGRAPH WAS TABULATED BY THE HEC1 MODEL
51          KM    FOR GOLDEN EAGLE PARK DAM - IDF1.DAT (FCDMC REVISED FROM GEPD-PMF.DAT BY
52          KM    GVSCE, 7-97).
53          IN       5
54          KO       1
55          BA    7.13
56          QI    4065    3647    2908    2362    1960    1676    1467    1321    1208    1118
57          QI    1050     991     941     901     879     865     855     853     859     873
58          QI     894     919     946     972    1005    1826    4826    9464   14562   25783
59          QI   40111   37985   27674   22673   19451   16481   13950   11905   10317    8927
60          QI    7849    6892    6081    5400    4842    4440    4128    3862    3626    3408
61          QI    3165    2905    2683    2469    2280    2132    2000    1896    1806    1734
62          QI    1670    1607    1530    1447    1380    1320    1264    1211    1161    1113
63          QI    1067    1025     984     945     909     873     841     815     796     778
64          QI     762     747     732     717     703     689     677     664     653     642
65          QI     631     619     608     597     586     573     560     546     532     515
66          QI     496     475     442     404     373     349     329     312     299     288
67          QI     281     275     270     265     260     255     250     246     242     238
68          QI     235     231     228     225     222     219     216     214     211     208
69          QI     206     204     201     199     197     195     193     191     189     186
70          QI     183     179     175     172     168     165     161     158     155     152
71          QI     149     146     143     140     137     134     131     129     126     124
72          QI     121     119     116     114     112     109     107     104      99      92
73          QI      84      79      74      68      63      58      53      48      44      40
74          QI      36      33      30      27      25      22      20      19      17      15
75          QI      14      13      12      11      10       9       8       8       7       6
76          QI       6       5       5       5       4       4       4       3       3       0

77          KK   C5990
78          KO       1
79          KM      Reservoir route at C599 (Dam 4 - GEPD). New Stage-Storage Curve 3/4/99
80          RS       1    ELEV  1694.7
81          SV    0.00    0.02    0.08    0.24    0.93    2.29    7.17   18.89   36.08   58.41
82          SV   86.41   99.21  105.97  112.96  120.18   127.6  146.86  154.86  158.92  378.27
83          SE  1695.0    1698    1699    1700    1702    1704    1706    1708    1710    1712
84          SE    1714  1714.8  1715.2  1715.6    1716  1716.4  1717.4  1717.8    1718    1728
85          SQ       0      72     213     414     613     752     889     983    1076    1168
86          SQ    1248    1267    1280    3437   10412   18426   22080   27980   36581   48765
87          SE  1695.0  1696.0  1698.0  1700.0  1702.0  1704.0  1706.0  1708.0  1710.0  1712.0
88          SE  1714.0  1714.5 1714.86    1716    1719  1721.5  1722.5    1724    1726    1728
89          RL                   0.97
            *
            * * End Basin 210.  Start Basin 211
90          ZZ
1
                SCHEMATIC DIAGRAM OF STREAM NETWORK
 INPUT
  LINE      (V) ROUTING          (--->) DIVERSION OR PUMP FLOW

   NO.      (.) CONNECTOR        (<---) RETURN OF DIVERTED OR PUMPED FLOW

   48         IDF1
                 V
                 V
   77        C5990

 (***) RUNOFF ALSO COMPUTED AT THIS LOCATION
1****************************************
*                                      *
*   FLOOD HYDROGRAPH PACKAGE  (HEC-1)  *
*              MAY   1991              *
*            VERSION 4.0.1E            *
*                                      *
*  RUN DATE  02/17/:0  TIME  08:03:58  *
*                                      *
****************************************
```

```
****************************************
*                                      *
*    U.S. ARMY CORPS OF ENGINEERS      *
*    HYDROLOGIC ENGINEERING CENTER     *
*          609 SECOND STREET           *
*       DAVIS, CALIFORNIA 95616        *
*          (916) 551-1748              *
*                                      *
****************************************
```

ACCOUNTS FOR TRASH RACK LOSSES AT THE PRINCIPAL INLET - NO CLOGGING

FILENAME:IDF1-A.IH2, RJS 11-99
ALTERNATIVE "G" FOR IDF1 - WITH A BREACH OF NORTH HEIGHTS DAM

DATE:4-12-99
Golden Eagle Park Dam (FCD 97-44)
IDF1 Model for the Computation of IDF for Golden Eagle Park Dam
****
Analytical Considerations:
Includes Breach of North Heights Dam
Single Basin Model
This model considers areal reduction method.
****

FILE: IDF1.DAT
DATE: OCTOBER 1998 (by FCDMC)
Modified by Stantec - February 1999

THIS MODEL WAS ALTERED BY FCDMC FROM THE ORIGINAL MODEL- GEPD-PMF.DAT
FROM THE GOLDEN EAGLE PARK DAM FEASIBILITY STUDY DONE BY GEORGE V.
SABOL CONSULTING ENGINEERS, INC. (GVSCE), JULY 1997

```
                    THE MODEL HAS THE FOLLOWING ADJUSTMENTS (BY FCDMC):FROM THE ORIGINAL
                     1.)  THE SINGLE BASIN FOR THE NORTH HEIGHTS DAM WATERSHED HAS BEEN
                          REMOVED.  IN ITS PLACE ARE QI CARDS TAKEN FROM THE DAM BREACH
                          HEC-1 FOR NORTH HEIGHTS DAM (GVSCE, JANUARY 1996).
                     2.)  BEFORE EACH WATERSHED IS ROUTED THROUGH ITS RESPECTIVE DAM,
                          HALF OF THE FLOW IS DIVERTED OUT TO REFLECT THE HALF PMF EVENT.
                          THE SAME WAS ALSO DONE ON THE WATERSHED (BASIN S210) BETWEEN THE THREE
                          UPPER DAMS AND GEPD.THE BREACH HYDROGRAPH ALREADY IS HALF PMF.
                     3.)  THE RATING CURVES FOR ASPEN AND SUNRIDGE CANYON DAMS WERE ALTERED
                          THE NEW RATING CURVES WERE DEVELOPED USING THE EQUATION Q=CLH3/2.
                          THE RATING CURVES WERE ALTERED TO MAKE THE SPILLWAY LENGTH LONG
                          ENOUGH TO PASS THE HALF PMF THROUGH THE DAM WITH THE REQUIRED
                          THREE FEET OF FREEBOARD.
                          C = 2.6
                     4.)  IN THIS MODEL THE PRINCIPLE SPILLWAYS OF ASPEN AND SUNRIDGE CANYON DAM
                          ARE UNCLOGGED.
                     5.)  THE INITIAL WATER SURFACE ELEVATION FOR EACH OF THE DAMS WAS
                          SET TO THE WSEL OF THE 100 YEAR EVENT
                    NOTE:MODIFICATIONS BY STANTEC ARE EDITORIAL ONLY.  THE ORIGINAL GVSCE MODEL
                          AND REVISIONS BY FCDMC ARE ACCEPTED.  THE ROUTING (BY FCDMC) OF THE
                          IDF1 HYDROGRAPH THROUGH THE EXISTING GEP DAM IS DELETED.

 46 IO          OUTPUT CONTROL VARIABLES
                      IPRNT          4  PRINT CONTROL
                      IPLOT          0  PLOT CONTROL
                      QSCAL         0.  HYDROGRAPH PLOT SCALE

    IT          HYDROGRAPH TIME DATA
                       NMIN          5  MINUTES IN COMPUTATION INTERVAL
                      IDATE     2JUN98  STARTING DATE
                      ITIME       0000  STARTING TIME
                         NQ        210  NUMBER OF HYDROGRAPH ORDINATES
                     NDDATE     2JUN98  ENDING DATE
                     NDTIME       1725  ENDING TIME
                      ICENT         19  CENTURY MARK

                 COMPUTATION INTERVAL    0.08 HOURS
                      TOTAL TIME BASE   17.42 HOURS

          ENGLISH UNITS
               DRAINAGE AREA          SQUARE MILES
               PRECIPITATION DEPTH    INCHES
               LENGTH, ELEVATION      FEET
               FLOW                   CUBIC FEET PER SECOND
               STORAGE VOLUME         ACRE-FEET
               SURFACE AREA           ACRES
               TEMPERATURE            DEGREES FAHRENHEIT


*** *** *** *** *** *** *** *** *** *** *** *** *** *** *** *** *** *** *** *** *** *** *** *** *** *** *** *** *** *** *** *** *** *** ***


            **************
            *            *
 48 KK      *      IDF1  *
            *            *
            **************
                        INFLOW FROM DAM BREACH OF NORTHERN HEIGHTS DAM AND WATERSHED
                        THIS HYDROGRAPH WAS TABULATED BY THE HEC1 MODEL
                        FOR GOLDEN EAGLE PARK DAM - IDF1.DAT (FCDMC REVISED FROM GEPD-PMF.DAT BY
                        GVSCE, 7-97).

 54 KO          OUTPUT CONTROL VARIABLES
                      IPRNT          1  PRINT CONTROL
                      IPLOT          0  PLOT CONTROL
                      QSCAL         0.  HYDROGRAPH PLOT SCALE

 53 IN          TIME DATA FOR INPUT TIME SERIES
                      JXMIN          5  TIME INTERVAL IN MINUTES
                     JXDATE     2JUN98  STARTING DATE
                     JXTIME          0  STARTING TIME

               SUBBASIN RUNOFF DATA

 55 BA          SUBBASIN CHARACTERISTICS
                      TAREA       7.13  SUBBASIN AREA
```

***

HYDROGRAPH AT STATION IDF1

DA MON HRMN	ORD	FLOW	DA MON HRMN	ORD	FLOW	DA MON HRMN	ORD	FLOW	DA MON HRMN	ORD	FLOW
2 JUN 0000	1	4065.	2 JUN 0425	54	2469.	2 JUN 0850	107	329.	2 JUN 1315	160	124.
2 JUN 0005	2	3647.	2 JUN 0430	55	2280.	2 JUN 0855	108	312.	2 JUN 1320	161	121.
2 JUN 0010	3	2908.	2 JUN 0435	56	2132.	2 JUN 0900	109	299.	2 JUN 1325	162	119.
2 JUN 0015	4	2362.	2 JUN 0440	57	2000.	2 JUN 0905	110	288.	2 JUN 1330	163	116.
2 JUN 0020	5	1960.	2 JUN 0445	58	1896.	2 JUN 0910	111	281.	2 JUN 1335	164	114.
2 JUN 0025	6	1676.	2 JUN 0450	59	1806.	2 JUN 0915	112	275.	2 JUN 1340	165	112.
2 JUN 0030	7	1467.	2 JUN 0455	60	1734.	2 JUN 0920	113	270.	2 JUN 1345	166	109.
2 JUN 0035	8	1321.	2 JUN 0500	61	1670.	2 JUN 0925	114	265.	2 JUN 1350	167	107.
2 JUN 0040	9	1208.	2 JUN 0505	62	1607.	2 JUN 0930	115	260.	2 JUN 1355	168	104.
2 JUN 0045	10	1118.	2 JUN 0510	63	1530.	2 JUN 0935	116	255.	2 JUN 1400	169	99.
2 JUN 0050	11	1050.	2 JUN 0515	64	1447.	2 JUN 0940	117	250.	2 JUN 1405	170	92.
2 JUN 0055	12	991.	2 JUN 0520	65	1380.	2 JUN 0945	118	246.	2 JUN 1410	171	84.
2 JUN 0100	13	941.	2 JUN 0525	66	1320.	2 JUN 0950	119	242.	2 JUN 1415	172	79.
2 JUN 0105	14	901.	2 JUN 0530	67	1264.	2 JUN 0955	120	238.	2 JUN 1420	173	74.
2 JUN 0110	15	879.	2 JUN 0535	68	1211.	2 JUN 1000	121	235.	2 JUN 1425	174	68.
2 JUN 0115	16	865.	2 JUN 0540	69	1161.	2 JUN 1005	122	231.	2 JUN 1430	175	63.
2 JUN 0120	17	855.	2 JUN 0545	70	1113.	2 JUN 1010	123	228.	2 JUN 1435	176	58.
2 JUN 0125	18	853.	2 JUN 0550	71	1067.	2 JUN 1015	124	225.	2 JUN 1440	177	53.
2 JUN 0130	19	859.	2 JUN 0555	72	1025.	2 JUN 1020	125	222.	2 JUN 1445	178	48.
2 JUN 0135	20	873.	2 JUN 0600	73	984.	2 JUN 1025	126	219.	2 JUN 1450	179	44.
2 JUN 0140	21	894.	2 JUN 0605	74	945.	2 JUN 1030	127	216.	2 JUN 1455	180	40.
2 JUN 0145	22	919.	2 JUN 0610	75	909.	2 JUN 1035	128	214.	2 JUN 1500	181	36.
2 JUN 0150	23	946.	2 JUN 0615	76	873.	2 JUN 1040	129	211.	2 JUN 1505	182	33.
2 JUN 0155	24	972.	2 JUN 0620	77	841.	2 JUN 1045	130	208.	2 JUN 1510	183	30.
2 JUN 0200	25	1005.	2 JUN 0625	78	815.	2 JUN 1050	131	206.	2 JUN 1515	184	27.
2 JUN 0205	26	1826.	2 JUN 0630	79	796.	2 JUN 1055	132	204.	2 JUN 1520	185	25.
2 JUN 0210	27	4826.	2 JUN 0635	80	778.	2 JUN 1100	133	201.	2 JUN 1525	186	22.
2 JUN 0215	28	9464.	2 JUN 0640	81	762.	2 JUN 1105	134	199.	2 JUN 1530	187	20.
2 JUN 0220	29	14562.	2 JUN 0645	82	747.	2 JUN 1110	135	197.	2 JUN 1535	188	19.
2 JUN 0225	30	25783.	2 JUN 0650	83	732.	2 JUN 1115	136	195.	2 JUN 1540	189	17.
2 JUN 0230	31	40111.	2 JUN 0655	84	717.	2 JUN 1120	137	193.	2 JUN 1545	190	15.
2 JUN 0235	32	37985.	2 JUN 0700	85	703.	2 JUN 1125	138	191.	2 JUN 1550	191	14.
2 JUN 0240	33	27674.	2 JUN 0705	86	689.	2 JUN 1130	139	189.	2 JUN 1555	192	13.
2 JUN 0245	34	22673.	2 JUN 0710	87	677.	2 JUN 1135	140	186.	2 JUN 1600	193	12.
2 JUN 0250	35	19451.	2 JUN 0715	88	664.	2 JUN 1140	141	183.	2 JUN 1605	194	11.
2 JUN 0255	36	16481.	2 JUN 0720	89	653.	2 JUN 1145	142	179.	2 JUN 1610	195	10.
2 JUN 0300	37	13950.	2 JUN 0725	90	642.	2 JUN 1150	143	175.	2 JUN 1615	196	9.
2 JUN 0305	38	11905.	2 JUN 0730	91	631.	2 JUN 1155	144	172.	2 JUN 1620	197	8.
2 JUN 0310	39	10317.	2 JUN 0735	92	619.	2 JUN 1200	145	168.	2 JUN 1625	198	8.
2 JUN 0315	40	8927.	2 JUN 0740	93	608.	2 JUN 1205	146	165.	2 JUN 1630	199	7.
2 JUN 0320	41	7849.	2 JUN 0745	94	597.	2 JUN 1210	147	161.	2 JUN 1635	200	6.
2 JUN 0325	42	6892.	2 JUN 0750	95	586.	2 JUN 1215	148	158.	2 JUN 1640	201	6.
2 JUN 0330	43	6081.	2 JUN 0755	96	573.	2 JUN 1220	149	155.	2 JUN 1645	202	5.
2 JUN 0335	44	5400.	2 JUN 0800	97	560.	2 JUN 1225	150	152.	2 JUN 1650	203	5.
2 JUN 0340	45	4842.	2 JUN 0805	98	546.	2 JUN 1230	151	149.	2 JUN 1655	204	5.
2 JUN 0345	46	4440.	2 JUN 0810	99	532.	2 JUN 1235	152	146.	2 JUN 1700	205	4.
2 JUN 0350	47	4128.	2 JUN 0815	100	515.	2 JUN 1240	153	143.	2 JUN 1705	206	4.
2 JUN 0355	48	3862.	2 JUN 0820	101	496.	2 JUN 1245	154	140.	2 JUN 1710	207	4.
2 JUN 0400	49	3626.	2 JUN 0825	102	475.	2 JUN 1250	155	137.	2 JUN 1715	208	3.
2 JUN 0405	50	3408.	2 JUN 0830	103	442.	2 JUN 1255	156	134.	2 JUN 1720	209	3.
2 JUN 0410	51	3165.	2 JUN 0835	104	404.	2 JUN 1300	157	131.	2 JUN 1725	210	3.
2 JUN 0415	52	2905.	2 JUN 0840	105	373.	2 JUN 1305	158	129.			
2 JUN 0420	53	2683.	2 JUN 0845	106	349.	2 JUN 1310	159	126.			

PEAK FLOW (CFS)	TIME (HR)	MAXIMUM AVERAGE FLOW	6-HR	24-HR	72-HR	17.42-HR
+ 40111.	2.50	(CFS)	5407.	2029.	2029.	2029.
		(INCHES)	7.051	7.682	7.682	7.682
		(AC-FT)	2681.	2921.	2921.	2921.

CUMULATIVE AREA = 7.13 SQ MI

*** ***

```
              **************
              *            *
  77 KK       *     C5990  *
              *            *
              **************

  78 KO          OUTPUT CONTROL VARIABLES
                       IPRNT          1  PRINT CONTROL
                       IPLOT          0  PLOT CONTROL
                       QSCAL         0.  HYDROGRAPH PLOT SCALE
                              Reservoir route at C599 (Dam 4 - GEPD). New Stage-Storage Curve 3/4/99

                 HYDROGRAPH ROUTING DATA
```

```
89 RL          ROUTING LOSSES
                    QLOSS        0.00  INITIAL LOSS
                    CLOSS        0.00  ADDITIONAL FRACTION LOST
                   PERCRT        0.97  CHANNEL PERCOLATION RATE
                   ELVINV        0.00  INVERT ELEVATION

80 RS          STORAGE ROUTING
                    NSTPS           1  NUMBER OF SUBREACHES
                     ITYP        ELEV  TYPE OF INITIAL CONDITION
                   RSVRIC     1694.70  INITIAL CONDITION
                        X        0.00 WORKING R AND D COEFFICIENT

81 SV            STORAGE         0.0       0.0       0.1       0.2       0.9       2.3       7.2      18.9      36.1      58.4
                                86.4      99.2     106.0     113.0     120.2     127.6     146.9     154.9     158.9     378.3

83 SE          ELEVATION     1695.00   1698.00   1699.00   1700.00   1702.00   1704.00   1706.00   1708.00   1710.00   1712.00
                             1714.00   1714.80   1715.20   1715.60   1716.00   1716.40   1717.40   1717.80   1718.00   1728.00

85 SQ          DISCHARGE          0.       72.      213.      414.      613.      752.      889.      983.     1076.     1168.
                                1248.     1267.     1280.     3437.    10412.    18426.    22080.    27980.    36581.    48765.

87 SE          ELEVATION     1695.00   1696.00   1698.00   1700.00   1702.00   1704.00   1706.00   1708.00   1710.00   1712.00
                             1714.00   1714.50   1714.86   1716.00   1719.00   1721.50   1722.50   1724.00   1726.00   1728.00
```

***

COMPUTED STORAGE-OUTFLOW-ELEVATION DATA

STORAGE	0.00	0.01	0.02	0.08	0.24	0.93	2.29	7.17	18.89	36.08
OUTFLOW	0.00	72.00	213.00	313.50	414.00	613.00	752.00	889.00	983.00	1076.00
ELEVATION	1695.00	1696.00	1698.00	1699.00	1700.00	1702.00	1704.00	1706.00	1708.00	1710.00
STORAGE	58.41	86.41	94.41	99.21	100.22	105.97	112.96	120.18	127.60	146.86
OUTFLOW	1168.00	1248.00	1267.00	1277.84	1280.00	1923.24	2680.12	3437.00	4367.06	6692.06
ELEVATION	1712.00	1714.00	1714.50	1714.80	1714.86	1715.20	1715.60	1716.00	1716.40	1717.40
STORAGE	154.86	158.92	180.85	235.69	257.63	290.53	334.40	378.27		
OUTFLOW	7622.11	8087.00	10412.00	18426.00	22080.00	27980.00	36581.00	48765.00		
ELEVATION	1717.80	1718.00	1719.00	1721.50	1722.50	1724.00	1726.00	1728.00		

*** WARNING *** MODIFIED PULS ROUTING MAY BE NUMERICALLY UNSTABLE FOR OUTFLOWS BETWEEN 0. TO 414.
THE ROUTED HYDROGRAPH SHOULD BE EXAMINED FOR OSCILLATIONS OR OUTFLOWS GREATER THAN PEAK INFLOWS.
THIS CAN BE CORRECTED BY DECREASING THE TIME INTERVAL OR INCREASING STORAGE (USE A LONGER REACH.)

****

HYDROGRAPH AT STATION C5990

****

DA	MON	HRMN	ORD	OUTFLOW	STORAGE	STAGE	*	DA	MON	HRMN	ORD	OUTFLOW	STORAGE	STAGE	*	DA	MON	HRMN	ORD	OUTFLOW	STORAGE	STAGE
2	JUN	0000	1	0.	0.0	1695.0	*	2	JUN	0550	71	1274.	97.4	1714.7	*	2	JUN	1140	141	183.	0.0	1697.6
2	JUN	0005	2	1006.	23.1	1708.5	*	2	JUN	0555	72	1270.	95.8	1714.6	*	2	JUN	1145	142	179.	0.0	1697.5
2	JUN	0010	3	1086.	38.5	1710.2	*	2	JUN	0600	73	1266.	94.0	1714.5	*	2	JUN	1150	143	175.	0.0	1697.5
2	JUN	0015	4	1129.	49.0	1711.2	*	2	JUN	0605	74	1261.	91.9	1714.3	*	2	JUN	1155	144	172.	0.0	1697.4
2	JUN	0020	5	1158.	56.0	1711.8	*	2	JUN	0610	75	1256.	89.6	1714.2	*	2	JUN	1200	145	168.	0.0	1697.4
2	JUN	0025	6	1174.	60.5	1712.1	*	2	JUN	0615	76	1250.	87.2	1714.0	*	2	JUN	1205	146	165.	0.0	1697.3
2	JUN	0030	7	1182.	63.2	1712.3	*	2	JUN	0620	77	1242.	84.5	1713.9	*	2	JUN	1210	147	161.	0.0	1697.3
2	JUN	0035	8	1186.	64.6	1712.4	*	2	JUN	0625	78	1234.	81.6	1713.7	*	2	JUN	1215	148	158.	0.0	1697.2
2	JUN	0040	9	1187.	65.2	1712.5	*	2	JUN	0630	79	1226.	78.7	1713.5	*	2	JUN	1220	149	155.	0.0	1697.2
2	JUN	0045	10	1187.	65.0	1712.5	*	2	JUN	0635	80	1217.	75.7	1713.2	*	2	JUN	1225	150	152.	0.0	1697.1
2	JUN	0050	11	1185.	64.3	1712.4	*	2	JUN	0640	81	1209.	72.7	1713.0	*	2	JUN	1230	151	149.	0.0	1697.1
2	JUN	0055	12	1182.	63.2	1712.3	*	2	JUN	0645	82	1200.	69.6	1712.8	*	2	JUN	1235	152	146.	0.0	1697.0
2	JUN	0100	13	1177.	61.7	1712.2	*	2	JUN	0650	83	1191.	66.4	1712.6	*	2	JUN	1240	153	143.	0.0	1697.0
2	JUN	0105	14	1172.	60.0	1712.1	*	2	JUN	0655	84	1182.	63.3	1712.3	*	2	JUN	1245	154	140.	0.0	1697.0
2	JUN	0110	15	1166.	58.0	1712.0	*	2	JUN	0700	85	1173.	60.0	1712.1	*	2	JUN	1250	155	137.	0.0	1696.9
2	JUN	0115	16	1158.	56.0	1711.8	*	2	JUN	0705	86	1161.	56.8	1711.9	*	2	JUN	1255	156	134.	0.0	1696.9
2	JUN	0120	17	1150.	54.0	1711.6	*	2	JUN	0710	87	1148.	53.5	1711.6	*	2	JUN	1300	157	131.	0.0	1696.8
2	JUN	0125	18	1142.	52.0	1711.4	*	2	JUN	0715	88	1135.	50.3	1711.3	*	2	JUN	1305	158	129.	0.0	1696.8
2	JUN	0130	19	1134.	50.1	1711.3	*	2	JUN	0720	89	1121.	47.1	1711.0	*	2	JUN	1310	159	126.	0.0	1696.8
2	JUN	0135	20	1126.	48.3	1711.1	*	2	JUN	0725	90	1108.	43.9	1710.7	*	2	JUN	1315	160	124.	0.0	1696.7
2	JUN	0140	21	1119.	46.6	1710.9	*	2	JUN	0730	91	1095.	40.7	1710.4	*	2	JUN	1320	161	121.	0.0	1696.7
2	JUN	0145	22	1113.	45.2	1710.8	*	2	JUN	0735	92	1082.	37.5	1710.1	*	2	JUN	1325	162	119.	0.0	1696.7
2	JUN	0150	23	1108.	43.9	1710.7	*	2	JUN	0740	93	1066.	34.3	1709.8	*	2	JUN	1330	163	116.	0.0	1696.6
2	JUN	0155	24	1104.	42.9	1710.6	*	2	JUN	0745	94	1049.	31.2	1709.4	*	2	JUN	1335	164	114.	0.0	1696.6
2	JUN	0200	25	1101.	42.1	1710.5	*	2	JUN	0750	95	1033.	28.1	1709.1	*	2	JUN	1340	165	112.	0.0	1696.6
2	JUN	0205	26	1110.	44.3	1710.7	*	2	JUN	0755	96	1016.	25.0	1708.7	*	2	JUN	1345	166	109.	0.0	1696.5
2	JUN	0210	27	1171.	59.3	1712.1	*	2	JUN	0800	97	1000.	22.0	1708.4	*	2	JUN	1350	167	107.	0.0	1696.5
2	JUN	0215	28	1280.	100.1	1714.9	*	2	JUN	0805	98	983.	18.9	1708.0	*	2	JUN	1355	168	104.	0.0	1696.5
2	JUN	0220	29	7399.	152.9	1717.7	*	2	JUN	0810	99	959.	16.0	1707.5	*	2	JUN	1400	169	99.	0.0	1696.4
2	JUN	0225	30	15242.	213.9	1720.5	*	2	JUN	0815	100	936.	13.0	1707.0	*	2	JUN	1405	170	92.	0.0	1696.3
2	JUN	0230	31	28149.	291.4	1724.0	*	2	JUN	0820	101	913.	10.2	1706.5	*	2	JUN	1410	171	84.	0.0	1696.2
2	JUN	0235	32	37009.	335.9	1726.1	*	2	JUN	0825	102	890.	7.3	1706.0	*	2	JUN	1415	172	79.	0.0	1696.1
2	JUN	0240	33	33565.	319.0	1725.3	*	2	JUN	0830	103	816.	4.6	1704.9	*	2	JUN	1420	173	74.	0.0	1696.0
2	JUN	0245	34	26863.	284.3	1723.7	*	2	JUN	0835	104	736.	2.1	1703.8	*	2	JUN	1425	174	68.	0.0	1695.9
2	JUN	0250	35	22434.	259.6	1722.6	*	2	JUN	0840	105	503.	0.5	1700.9	*	2	JUN	1430	175	63.	0.0	1695.9
2	JUN	0255	36	19160.	240.1	1721.7	*	2	JUN	0845	106	342.	0.1	1699.3	*	2	JUN	1435	176	58.	0.0	1695.8
2	JUN	0300	37	16459.	222.2	1720.9	*	2	JUN	0850	107	338.	0.1	1699.2	*	2	JUN	1440	177	53.	0.0	1695.7
2	JUN	0305	38	14094.	206.1	1720.1	*	2	JUN	0855	108	314.	0.1	1699.0	*	2	JUN	1445	178	48.	0.0	1695.7
2	JUN	0310	39	12097.	192.4	1719.5	*	2	JUN	0900	109	300.	0.1	1698.9	*	2	JUN	1450	179	44.	0.0	1695.6
2	JUN	0315	40	10440.	181.0	1719.0	*	2	JUN	0905	110	289.	0.1	1698.8	*	2	JUN	1455	180	40.	0.0	1695.6
2	JUN	0320	41	9337.	170.7	1718.5	*	2	JUN	0910	111	281.	0.1	1698.7	*	2	JUN	1500	181	36.	0.0	1695.5
2	JUN	0325	42	8285.	160.8	1718.1	*	2	JUN	0915	112	276.	0.1	1698.6	*	2	JUN	1505	182	33.	0.0	1695.5

2	JUN	0330	43	7276.	151.9	1717.7	*	2	JUN	0920	113	270.	0.1	1698.6	*	2 JUN 1510	183	30.	0.0	1695.4
2	JUN	0335	44	6390.	144.4	1717.3	*	2	JUN	0925	114	266.	0.1	1698.5	*	2 JUN 1515	184	27.	0.0	1695.4
2	JUN	0340	45	5645.	138.2	1716.9	*	2	JUN	0930	115	260.	0.0	1698.5	*	2 JUN 1520	185	25.	0.0	1695.3
2	JUN	0345	46	5055.	133.3	1716.7	*	2	JUN	0935	116	256.	0.0	1698.4	*	2 JUN 1525	186	22.	0.0	1695.3
2	JUN	0350	47	4602.	129.5	1716.5	*	2	JUN	0940	117	250.	0.0	1698.4	*	2 JUN 1530	187	20.	0.0	1695.3
2	JUN	0355	48	4242.	126.6	1716.3	*	2	JUN	0945	118	246.	0.0	1698.3	*	2 JUN 1535	188	19.	0.0	1695.3
2	JUN	0400	49	3942.	124.2	1716.2	*	2	JUN	0950	119	242.	0.0	1698.3	*	2 JUN 1540	189	17.	0.0	1695.2
2	JUN	0405	50	3686.	122.2	1716.1	*	2	JUN	0955	120	238.	0.0	1698.3	*	2 JUN 1545	190	15.	0.0	1695.2
2	JUN	0410	51	3445.	120.2	1716.0	*	2	JUN	1000	121	235.	0.0	1698.2	*	2 JUN 1550	191	14.	0.0	1695.2
2	JUN	0415	52	3226.	118.2	1715.9	*	2	JUN	1005	122	231.	0.0	1698.2	*	2 JUN 1555	192	13.	0.0	1695.2
2	JUN	0420	53	2997.	116.0	1715.8	*	2	JUN	1010	123	228.	0.0	1698.2	*	2 JUN 1600	193	12.	0.0	1695.2
2	JUN	0425	54	2774.	113.9	1715.6	*	2	JUN	1015	124	225.	0.0	1698.1	*	2 JUN 1605	194	11.	0.0	1695.2
2	JUN	0430	55	2559.	111.8	1715.5	*	2	JUN	1020	125	222.	0.0	1698.1	*	2 JUN 1610	195	10.	0.0	1695.1
2	JUN	0435	56	2367.	110.1	1715.4	*	2	JUN	1025	126	219.	0.0	1698.1	*	2 JUN 1615	196	9.	0.0	1695.1
2	JUN	0440	57	2204.	108.6	1715.3	*	2	JUN	1030	127	216.	0.0	1698.0	*	2 JUN 1620	197	8.	0.0	1695.1
2	JUN	0445	58	2065.	107.3	1715.3	*	2	JUN	1035	128	214.	0.0	1698.0	*	2 JUN 1625	198	8.	0.0	1695.1
2	JUN	0450	59	1949.	106.2	1715.2	*	2	JUN	1040	129	211.	0.0	1698.0	*	2 JUN 1630	199	7.	0.0	1695.1
2	JUN	0455	60	1850.	105.3	1715.2	*	2	JUN	1045	130	208.	0.0	1697.9	*	2 JUN 1635	200	6.	0.0	1695.1
2	JUN	0500	61	1768.	104.6	1715.1	*	2	JUN	1050	131	206.	0.0	1697.9	*	2 JUN 1640	201	6.	0.0	1695.1
2	JUN	0505	62	1696.	103.9	1715.1	*	2	JUN	1055	132	204.	0.0	1697.9	*	2 JUN 1645	202	5.	0.0	1695.1
2	JUN	0510	63	1625.	103.3	1715.0	*	2	JUN	1100	133	201.	0.0	1697.8	*	2 JUN 1650	203	5.	0.0	1695.1
2	JUN	0515	64	1549.	102.6	1715.0	*	2	JUN	1105	134	199.	0.0	1697.8	*	2 JUN 1655	204	5.	0.0	1695.1
2	JUN	0520	65	1474.	102.0	1715.0	*	2	JUN	1110	135	197.	0.0	1697.8	*	2 JUN 1700	205	4.	0.0	1695.1
2	JUN	0525	66	1405.	101.3	1714.9	*	2	JUN	1115	136	195.	0.0	1697.7	*	2 JUN 1705	206	4.	0.0	1695.1
2	JUN	0530	67	1342.	100.8	1714.9	*	2	JUN	1120	137	193.	0.0	1697.7	*	2 JUN 1710	207	4.	0.0	1695.1
2	JUN	0535	68	1284.	100.3	1714.9	*	2	JUN	1125	138	191.	0.0	1697.7	*	2 JUN 1715	208	3.	0.0	1695.0
2	JUN	0540	69	1279.	99.6	1714.8	*	2	JUN	1130	139	189.	0.0	1697.7	*	2 JUN 1720	209	3.	0.0	1695.0
2	JUN	0545	70	1276.	98.6	1714.8	*	2	JUN	1135	140	186.	0.0	1697.6	*	2 JUN 1725	210	3.	0.0	1695.0
							*								*					

****

PEAK FLOW	TIME		MAXIMUM AVERAGE FLOW			
			6-HR	24-HR	72-HR	17.42-HR
+ (CFS)	(HR)					
		(CFS)				
+ 37009.	2.58		5238.	2029.	2029.	2029.
		(INCHES)	6.830	7.682	7.682	7.682
		(AC-FT)	2597.	2921.	2921.	2921.

PEAK STORAGE	TIME	MAXIMUM AVERAGE STORAGE			
		6-HR	24-HR	72-HR	17.42-HR
+ (AC-FT)	(HR)				
336.	2.58	117.	46.	46.	46.

PEAK STAGE	TIME	MAXIMUM AVERAGE STAGE			
		6-HR	24-HR	72-HR	17.42-HR
+ (FEET)	(HR)				
1726.07	2.58	1715.45	1705.16	1705.16	1705.16

CUMULATIVE AREA = 7.13 SQ MI

1

RUNOFF SUMMARY
FLOW IN CUBIC FEET PER SECOND
TIME IN HOURS, AREA IN SQUARE MILES

	OPERATION	STATION	PEAK FLOW	TIME OF PEAK	AVERAGE FLOW FOR MAXIMUM PERIOD 6-HOUR	24-HOUR	72-HOUR	BASIN AREA	MAXIMUM STAGE	TIME OF MAX STAGE
+	HYDROGRAPH AT	IDF1	40111.	2.50	5407.	2029.	2029.	7.13		
+	ROUTED TO	C5990	37009.	2.58	5238.	2029.	2029.	7.13		
+									1726.07	2.58

*** NORMAL END OF HEC-1 ***

```
1****************************************                                    ****************************************
 *                                      *                                    *                                      *
 *   FLOOD HYDROGRAPH PACKAGE  (HEC-1)  *                                    *   U.S. ARMY CORPS OF ENGINEERS       *
 *              MAY   1991              *                                    *   HYDROLOGIC ENGINEERING CENTER      *
 *            VERSION 4.0.1E            *                                    *          609 SECOND STREET           *
 *                                      *                                    *       DAVIS, CALIFORNIA 95616        *
 *  RUN DATE  02/17/:0  TIME  08:04:10  *                                    *          (916) 551-1748              *
 *                                      *                                    *                                      *
 ****************************************                                    ****************************************

                                        X     X  XXXXXXX   XXXXX           X
                                        X     X  X        X     X         XX
                                        X     X  X        X                X
                                        XXXXXXX  XXXX     X        XXXXX   X
                                        X     X  X        X                X
                                        X     X  X        X     X          X
                                        X     X  XXXXXXX   XXXXX         XXX
```

THIS PROGRAM REPLACES ALL PREVIOUS VERSIONS OF HEC-1 KNOWN AS HEC1 (JAN 73), HEC1GS, HEC1DB, AND HEC1KW.

THE DEFINITIONS OF VARIABLES -RTIMP- AND -RTIOR- HAVE CHANGED FROM THOSE USED WITH THE 1973-STYLE INPUT STRUCTURE.
THE DEFINITION OF -AMSKK- ON RM-CARD WAS CHANGED WITH REVISIONS DATED 28 SEP 81. THIS IS THE FORTRAN77 VERSION
NEW OPTIONS: DAMBREAK OUTFLOW SUBMERGENCE , SINGLE EVENT DAMAGE CALCULATION, DSS:WRITE STAGE FREQUENCY,
DSS:READ TIME SERIES AT DESIRED CALCULATION INTERVAL LOSS RATE:GREEN AND AMPT INFILTRATION
KINEMATIC WAVE: NEW FINITE DIFFERENCE ALGORITHM


```
LINE          ID.......1.......2.......3.......4.......5.......6.......7.......8.......9......10

  1           ID   ACCOUNTS FOR TRASH RACK LOSSES AT THE PRINCIPAL INLET - NO CLOGGING
  2           ID
  3           ID       FILENAME:IDF2-A.IH2  RJS 11-99
  4           ID       ALTERNATIVE "G" FOR IDF2 - NO BREACH OF NORTH HEIGHTS DAM
  5           ID
  6           ID       GOLDEN EAGLE PARK DAM (FCD 97-44)
  7           ID       IDF2 Model for the Computation of IDF for Golden Eagle Park Dam
  8           ID       ***************************************************************
  9           ID       Analytical Considerations:
 10           ID           Without Upstream Dam Breach
 11           ID       ***************************************************************
 12           ID
 13           ID
 14           ID    THIS MODEL WAS DERIVED FROM THE ORIGINAL MODEL- IDF2.DAT (10-98)FCDMC WHICH
 15           ID    WAS BASED ON THE MODEL GEPD-PMF.DAT FOR THE GOLDEN EAGLE PARK DAM
 16           ID    FEASIBILITY STUDY DONE BY GEORGE V.
 17           ID    SABOL CONSULTING ENGINEERS, INC. (GVSCE), JULY 1997
 18           ID
 19           ID       THIS MODEL HAS UNDERGONE THE FOLLOWING ADJUSTMENTS (BY FCDMC):
 20           ID          1.)  NORTH HEIGHTS DAM IN THIS MODEL DOES NOT BREACH
 21           ID          2.)  BEFORE THE FLOW FROM EACH WATERSHED IS ROUTED THROUGH THEIR
 22           ID               RESPECTIVE DAMS,  HALF THE FLOW IS DIVERTED OUT TO REFLECT
 23           ID               THE HALF PMF EVENT.
 24           ID               THE FLOWS FROM BETWEEN THE UPPER DAMS AND GEPD HAS ALSO BEEN
 25           ID               HALVED
 26           ID          3.)  THE RATING CURVES FOR THE DAMS WERE ALTERED USING THE
 27           ID               EQUATION Q=CLH3/2 TO INCREASE THE LENGTH OF THE SPILLWAY
 28           ID               SO THAT THE HALF PMF WILL PASS THROUGH THE SPILLWAY WITH
 29           ID               THE REQUIRED THREE FEET OF FREEBOARD
 30           ID               C = 2.6
 31           ID          4.)  THE PRINCIPLE SPILLWAYS WERE MODELED AS UNCLOGGED
 32           ID          5.)  THE INITIAL WATER SURFACE ELEVATION WAS SET TO THE
 33           ID               HEIGHT OF THE 100 YEAR EVENT WSEL
 34           ID          NOTE:MODIFICATIONS BY STANTEC ARE EDITORIAL ONLY. THE ORIGINAL GVSCE
 35           ID               MODEL AND REVISIONS BY FCDMC ARE ACCEPTED. THE ROUTING (BY FCDMC)
 36           ID               OF THE IDF2 HYDROGRAPH THROUGH THE EXISTING GEP DAM IS DELETED.
              *DIAGRAM
 37           IT       5 02JUN98             200
 38           IO       4
 39           IN      15
              *
              * IDF2 INFLOW HYDROGRAPH - NO BREACH AT GOLDEN HEIGHTS DAM
              *

 40           KK    IDF2
 41           KO       1                                22
 42           KM    INFLOW FROM NORTH HEIGHTS DAM AND WATERSHED
 43           KM    THIS HYDROGRAPH WAS TABULATED BY THE HEC1 MODEL
 44           KM    FOR GOLDEN EAGLE PARK DAM - IDF2.DAT (FCDMC REVISED FROM GEPD-PMF.DAT BY
 45           KM    GVSCE, 7-97).
 46           IN       5
 47           BA    7.13
 48           QI    6249    5380    3895    2851    2194    1815    1578    1428    1322    1242
 49           QI    1181    1131    1091    1061    1047    1038    1030    1027    1028    1032
 50           QI    1041    1050    1059    1067    1074    1849    4636    9374   16212   23350
```

```
LINE          ID.......1.......2.......3.......4.......5.......6.......7.......8.......9......10

  51          QI   25850   26516   24925   21640   18324   15492   13277   11364    9872    8548
  52          QI    7506    6569    5744    5066    4538    4163    3877    3630    3416    3218
  53          QI    2987    2721    2477    2242    2051    1908    1797    1714    1649    1597
  54          QI    1551    1504    1443    1376    1324    1280    1241    1206    1174    1144
  55          QI    1116    1089    1064    1039    1013     986     963     948     939     933
  56          QI     927     922     918     913     908     903     899     894     889     883
  57          QI     876     868     860     852     844     834     823     811     797     782
  58          QI     764     743     710     672     641     616     595     578     563     551
  59          QI     543     535     527     519     511     504     497     489     483     476
  60          QI     469     463     457     451     445     439     432     425     417     409
  61          QI     401     393     386     378     370     355     331     304     280     258
  62          QI     240     224     210     198     188     180     173     167     163     158
  63          QI     154     150     146     142     139     136     133     130     127     124
  64          QI     121     119     116     114     111     109     106     104      98      91
  65          QI      83      78      73      67      62      57      52      47      43      39
  66          QI      35      32      29      26      24      21      19      18      16      14
  67          QI      13      12      11      10       9       8       7       7       6       0
  68          QI    5380    2851    1815    1428 1242.45 1131.41 1060.59 1038.05 1027.34 1032.14
  69          QI  1049.9  1066.9 1849.29 9374.0523349.6226516.0521639.9515491.9311364.07 8547.55
  70          QI  6568.7  5065.6  4162.7  3629.6  3217.9  2720.9  2242.4  1908.2  1714.3  1597.2
  71          QI  1504.1  1375.7  1279.9  1206.0  1143.7  1089.3  1039.3     986   948.1   932.9
  72          QI   922.5   912.9   903.4     894   882.6   868.2   852.4   834.3   810.6   781.9
  73          QI   743.3   672.1   615.7   577.7   551.3   535.1   519.2   503.9   489.4   475.8
  74          QI   463.0   450.9   438.6   424.5   409.1   393.4     378   354.8   304.5   257.6
  75          QI   223.6   198.2   179.9   167.3   158.1   149.9   142.5   135.8   129.6   123.9
  76          QI   118.5   113.5   108.8   103.7    90.8    77.7    67.3    56.6      47    38.8
  77          QI    31.9    26.2    21.5    17.6    14.5    11.9     9.7       8     6.5     5.4
              *

  78          KK   C5990
  79          KO       1                                  21
  80          KM      Reservoir route at C599 (Dam 4 - GEPD). New Stage-Storage Curve 3/4/99
  81          RS       1    ELEV  1694.7
  82          SV    0.00    0.02    0.08    0.24    0.93    2.29    7.17   18.89   36.08   58.41
  83          SV   86.41   99.21  105.97  112.96  120.18   127.6  146.86  154.86  158.92  378.27
  84          SE  1695.0    1698    1699    1700    1702    1704    1706    1708    1710    1712
  85          SE    1714  1714.8  1715.2  1715.6    1716  1716.4  1717.4  1717.8    1718    1728
  86          SQ       0      72     213     414     613     752     889     983    1076    1168
  87          SQ    1248    1267    1280    3437   10412   18426   22080   27980   36581   48765
  88          SE  1695.0  1696.0  1698.0  1700.0  1702.0  1704.0  1706.0  1708.0  1710.0  1712.0
  89          SE  1714.0  1714.5  1714.9    1716    1719  1721.5  1722.5    1724    1726    1728
  90          RL                   0.97
              *
              * * End Basin 210.  Start Basin 211
  91          ZZ
1
                SCHEMATIC DIAGRAM OF STREAM NETWORK
 INPUT
  LINE      (V) ROUTING          (--->) DIVERSION OR PUMP FLOW

   NO.      (.) CONNECTOR        (<---) RETURN OF DIVERTED OR PUMPED FLOW

   40         IDF2
                V
                V
   78        C5990

 (***) RUNOFF ALSO COMPUTED AT THIS LOCATION
1*****************************************
*                                       *
*   FLOOD HYDROGRAPH PACKAGE  (HEC-1)   *
*              MAY   1991               *
*            VERSION 4.0.1E             *
*                                       *
*  RUN DATE  02/17/:0  TIME  08:04:10   *
*                                       *
*****************************************
```

```
*****************************************
*                                       *
*    U.S. ARMY CORPS OF ENGINEERS       *
*    HYDROLOGIC ENGINEERING CENTER      *
*          609 SECOND STREET            *
*       DAVIS, CALIFORNIA 95616         *
*           (916) 551-1748              *
*                                       *
*****************************************
```

ACCOUNTS FOR TRASH RACK LOSSES AT THE PRINCIPAL INLET - NO CLOGGING

FILENAME:IDF2-A.IH2 RJS 11-99
ALTERNATIVE "G" FOR IDF2 - NO BREACH OF NORTH HEIGHTS DAM

GOLDEN EAGLE PARK DAM (FCD 97-44)
IDF2 Model for the Computation of IDF for Golden Eagle Park Dam
****
Analytical Considerations:
Without Upstream Dam Breach
****

THIS MODEL WAS DERIVED FROM THE ORIGINAL MODEL- IDF2.DAT (10-98)FCDMC WHICH WAS BASED ON THE MODEL GEPD-PMF.DAT FOR THE GOLDEN EAGLE PARK DAM FEASIBILITY STUDY DONE BY GEORGE V.
SABOL CONSULTING ENGINEERS, INC. (GVSCE), JULY 1997

THIS MODEL HAS UNDERGONE THE FOLLOWING ADJUSTMENTS (BY FCDMC):
1.) NORTH HEIGHTS DAM IN THIS MODEL DOES NOT BREACH
2.) BEFORE THE FLOW FROM EACH WATERSHED IS ROUTED THROUGH THEIR

```
                                    RESPECTIVE DAMS,  HALF THE FLOW IS DIVERTED OUT TO REFLECT
                                    THE HALF PMF EVENT.
                                    THE FLOWS FROM BETWEEN THE UPPER DAMS AND GEPD HAS ALSO BEEN
                                    HALVED
                                3.) THE RATING CURVES FOR THE DAMS WERE ALTERED USING THE
                                    EQUATION Q=CLH3/2 TO INCREASE THE LENGTH OF THE SPILLWAY
                                    SO THAT THE HALF PMF WILL PASS THROUGH THE SPILLWAY WITH
                                    THE REQUIRED THREE FEET OF FREEBOARD
                                    C = 2.6
                                4.) THE PRINCIPLE SPILLWAYS WERE MODELED AS UNCLOGGED
                                5.) THE INITIAL WATER SURFACE ELEVATION WAS SET TO THE
                                    HEIGHT OF THE 100 YEAR EVENT WSEL
                               NOTE:MODIFICATIONS BY STANTEC ARE EDITORIAL ONLY. THE ORIGINAL GVSCE
                                    MODEL AND REVISIONS BY FCDMC ARE ACCEPTED. THE ROUTING (BY FCDMC)
                                    OF THE IDF2 HYDROGRAPH THROUGH THE EXISTING GEP DAM IS DELETED.

 38 IO          OUTPUT CONTROL VARIABLES
                      IPRNT           4  PRINT CONTROL
                      IPLOT           0  PLOT CONTROL
                      QSCAL          0.  HYDROGRAPH PLOT SCALE

    IT          HYDROGRAPH TIME DATA
                       NMIN           5  MINUTES IN COMPUTATION INTERVAL
                      IDATE      2JUN98  STARTING DATE
                      ITIME        0000  STARTING TIME
                         NQ         200  NUMBER OF HYDROGRAPH ORDINATES
                     NDDATE      2JUN98  ENDING DATE
                     NDTIME        1635  ENDING TIME
                      ICENT          19  CENTURY MARK

                 COMPUTATION INTERVAL    0.08 HOURS
                      TOTAL TIME BASE   16.58 HOURS

         ENGLISH UNITS
              DRAINAGE AREA          SQUARE MILES
              PRECIPITATION DEPTH    INCHES
              LENGTH, ELEVATION      FEET
              FLOW                   CUBIC FEET PER SECOND
              STORAGE VOLUME         ACRE-FEET
              SURFACE AREA           ACRES
              TEMPERATURE            DEGREES FAHRENHEIT


*** *** *** *** *** *** *** *** *** *** *** *** *** *** *** *** *** *** *** *** *** *** *** *** *** *** *** *** *** *** *** *** *** *** ***


           **************
           *            *
 40 KK     *      IDF2  *
           *            *
           **************

 41 KO          OUTPUT CONTROL VARIABLES
                      IPRNT           1  PRINT CONTROL
                      IPLOT           0  PLOT CONTROL
                      QSCAL          0.  HYDROGRAPH PLOT SCALE
                      IPNCH           0  PUNCH COMPUTED HYDROGRAPH
                       IOUT          22  SAVE HYDROGRAPH ON THIS UNIT
                      ISAV1           1  FIRST ORDINATE PUNCHED OR SAVED
                      ISAV2         200  LAST ORDINATE PUNCHED OR SAVED
                     TIMINT       0.083  TIME INTERVAL IN HOURS

                          INFLOW FROM NORTH HEIGHTS DAM AND WATERSHED
                          THIS HYDROGRAPH WAS TABULATED BY THE HEC1 MODEL
                          FOR GOLDEN EAGLE PARK DAM - IDF2.DAT (FCDMC REVISED FROM GEPD-PMF.DAT BY
                          GVSCE, 7-97).

 46 IN          TIME DATA FOR INPUT TIME SERIES
                       JXMIN           5  TIME INTERVAL IN MINUTES
                      JXDATE      2JUN98  STARTING DATE
                      JXTIME           0  STARTING TIME

              SUBBASIN RUNOFF DATA

 47 BA          SUBBASIN CHARACTERISTICS
                       TAREA        7.13  SUBBASIN AREA
```

***

HYDROGRAPH AT STATION IDF2

DA MON HRMN	ORD	FLOW	DA MON HRMN	ORD	FLOW	DA MON HRMN	ORD	FLOW	DA MON HRMN	ORD	FLOW
2 JUN 0000	1	6249.	2 JUN 0410	51	2987.	2 JUN 0820	101	764.	2 JUN 1230	151	154.
2 JUN 0005	2	5380.	2 JUN 0415	52	2721.	2 JUN 0825	102	743.	2 JUN 1235	152	150.
2 JUN 0010	3	3895.	2 JUN 0420	53	2477.	2 JUN 0830	103	710.	2 JUN 1240	153	146.
2 JUN 0015	4	2851.	2 JUN 0425	54	2242.	2 JUN 0835	104	672.	2 JUN 1245	154	142.
2 JUN 0020	5	2194.	2 JUN 0430	55	2051.	2 JUN 0840	105	641.	2 JUN 1250	155	139.
2 JUN 0025	6	1815.	2 JUN 0435	56	1908.	2 JUN 0845	106	616.	2 JUN 1255	156	136.
2 JUN 0030	7	1578.	2 JUN 0440	57	1797.	2 JUN 0850	107	595.	2 JUN 1300	157	133.
2 JUN 0035	8	1428.	2 JUN 0445	58	1714.	2 JUN 0855	108	578.	2 JUN 1305	158	130.
2 JUN 0040	9	1322.	2 JUN 0450	59	1649.	2 JUN 0900	109	563.	2 JUN 1310	159	127.
2 JUN 0045	10	1242.	2 JUN 0455	60	1597.	2 JUN 0905	110	551.	2 JUN 1315	160	124.
2 JUN 0050	11	1181.	2 JUN 0500	61	1551.	2 JUN 0910	111	543.	2 JUN 1320	161	121.
2 JUN 0055	12	1131.	2 JUN 0505	62	1504.	2 JUN 0915	112	535.	2 JUN 1325	162	119.
2 JUN 0100	13	1091.	2 JUN 0510	63	1443.	2 JUN 0920	113	527.	2 JUN 1330	163	116.
2 JUN 0105	14	1061.	2 JUN 0515	64	1376.	2 JUN 0925	114	519.	2 JUN 1335	164	114.
2 JUN 0110	15	1047.	2 JUN 0520	65	1324.	2 JUN 0930	115	511.	2 JUN 1340	165	111.
2 JUN 0115	16	1038.	2 JUN 0525	66	1280.	2 JUN 0935	116	504.	2 JUN 1345	166	109.
2 JUN 0120	17	1030.	2 JUN 0530	67	1241.	2 JUN 0940	117	497.	2 JUN 1350	167	106.
2 JUN 0125	18	1027.	2 JUN 0535	68	1206.	2 JUN 0945	118	489.	2 JUN 1355	168	104.
2 JUN 0130	19	1028.	2 JUN 0540	69	1174.	2 JUN 0950	119	483.	2 JUN 1400	169	98.
2 JUN 0135	20	1032.	2 JUN 0545	70	1144.	2 JUN 0955	120	476.	2 JUN 1405	170	91.
2 JUN 0140	21	1041.	2 JUN 0550	71	1116.	2 JUN 1000	121	469.	2 JUN 1410	171	83.
2 JUN 0145	22	1050.	2 JUN 0555	72	1089.	2 JUN 1005	122	463.	2 JUN 1415	172	78.
2 JUN 0150	23	1059.	2 JUN 0600	73	1064.	2 JUN 1010	123	457.	2 JUN 1420	173	73.
2 JUN 0155	24	1067.	2 JUN 0605	74	1039.	2 JUN 1015	124	451.	2 JUN 1425	174	67.
2 JUN 0200	25	1074.	2 JUN 0610	75	1013.	2 JUN 1020	125	445.	2 JUN 1430	175	62.
2 JUN 0205	26	1849.	2 JUN 0615	76	986.	2 JUN 1025	126	439.	2 JUN 1435	176	57.
2 JUN 0210	27	4636.	2 JUN 0620	77	963.	2 JUN 1030	127	432.	2 JUN 1440	177	52.
2 JUN 0215	28	9374.	2 JUN 0625	78	948.	2 JUN 1035	128	425.	2 JUN 1445	178	47.
2 JUN 0220	29	16212.	2 JUN 0630	79	939.	2 JUN 1040	129	417.	2 JUN 1450	179	43.
2 JUN 0225	30	23350.	2 JUN 0635	80	933.	2 JUN 1045	130	409.	2 JUN 1455	180	39.
2 JUN 0230	31	25850.	2 JUN 0640	81	927.	2 JUN 1050	131	401.	2 JUN 1500	181	35.
2 JUN 0235	32	26516.	2 JUN 0645	82	922.	2 JUN 1055	132	393.	2 JUN 1505	182	32.
2 JUN 0240	33	24925.	2 JUN 0650	83	918.	2 JUN 1100	133	386.	2 JUN 1510	183	29.
2 JUN 0245	34	21640.	2 JUN 0655	84	913.	2 JUN 1105	134	378.	2 JUN 1515	184	26.
2 JUN 0250	35	18324.	2 JUN 0700	85	908.	2 JUN 1110	135	370.	2 JUN 1520	185	24.
2 JUN 0255	36	15492.	2 JUN 0705	86	903.	2 JUN 1115	136	355.	2 JUN 1525	186	21.
2 JUN 0300	37	13277.	2 JUN 0710	87	899.	2 JUN 1120	137	331.	2 JUN 1530	187	19.
2 JUN 0305	38	11364.	2 JUN 0715	88	894.	2 JUN 1125	138	304.	2 JUN 1535	188	18.
2 JUN 0310	39	9872.	2 JUN 0720	89	889.	2 JUN 1130	139	280.	2 JUN 1540	189	16.
2 JUN 0315	40	8548.	2 JUN 0725	90	883.	2 JUN 1135	140	258.	2 JUN 1545	190	14.
2 JUN 0320	41	7506.	2 JUN 0730	91	876.	2 JUN 1140	141	240.	2 JUN 1550	191	13.
2 JUN 0325	42	6569.	2 JUN 0735	92	868.	2 JUN 1145	142	224.	2 JUN 1555	192	12.
2 JUN 0330	43	5744.	2 JUN 0740	93	860.	2 JUN 1150	143	210.	2 JUN 1600	193	11.
2 JUN 0335	44	5066.	2 JUN 0745	94	852.	2 JUN 1155	144	198.	2 JUN 1605	194	10.
2 JUN 0340	45	4538.	2 JUN 0750	95	844.	2 JUN 1200	145	188.	2 JUN 1610	195	9.
2 JUN 0345	46	4163.	2 JUN 0755	96	834.	2 JUN 1205	146	180.	2 JUN 1615	196	8.
2 JUN 0350	47	3877.	2 JUN 0800	97	823.	2 JUN 1210	147	173.	2 JUN 1620	197	7.
2 JUN 0355	48	3630.	2 JUN 0805	98	811.	2 JUN 1215	148	167.	2 JUN 1625	198	7.
2 JUN 0400	49	3416.	2 JUN 0810	99	797.	2 JUN 1220	149	163.	2 JUN 1630	199	6.
2 JUN 0405	50	3218.	2 JUN 0815	100	782.	2 JUN 1225	150	158.	2 JUN 1635	200	0.

PEAK FLOW (CFS)	TIME (HR)		MAXIMUM AVERAGE FLOW 6-HR	24-HR	72-HR	16.58-HR
+ 26516.	2.58	(CFS)	4956.	2042.	2042.	2042.
		(INCHES)	6.463	7.358	7.358	7.358
		(AC-FT)	2458.	2798.	2798.	2798.

CUMULATIVE AREA = 7.13 SQ MI

*** ***

```
            **************
            *            *
 78 KK      *     C5990  *
            *            *
            **************
```

```
 79 KO          OUTPUT CONTROL VARIABLES
                      IPRNT          1  PRINT CONTROL
                      IPLOT          0  PLOT CONTROL
                      QSCAL         0.  HYDROGRAPH PLOT SCALE
                      IPNCH          0  PUNCH COMPUTED HYDROGRAPH
                       IOUT         21  SAVE HYDROGRAPH ON THIS UNIT
                      ISAV1          1  FIRST ORDINATE PUNCHED OR SAVED
                      ISAV2        200  LAST ORDINATE PUNCHED OR SAVED
                     TIMINT      0.083  TIME INTERVAL IN HOURS
```

Reservoir route at C599 (Dam 4 - GEPD). New Stage-Storage Curve 3/4/99

HYDROGRAPH ROUTING DATA

90 RL	ROUTING LOSSES		
	QLOSS	0.00	INITIAL LOSS
	CLOSS	0.00	ADDITIONAL FRACTION LOST
	PERCRT	0.97	CHANNEL PERCOLATION RATE
	ELVINV	0.00	INVERT ELEVATION
81 RS	STORAGE ROUTING		
	NSTPS	1	NUMBER OF SUBREACHES
	ITYP	ELEV	TYPE OF INITIAL CONDITION
	RSVRIC	1694.70	INITIAL CONDITION
	X	0.00	WORKING R AND D COEFFICIENT

82 SV	STORAGE	0.0	0.0	0.1	0.2	0.9	2.3	7.2	18.9	36.1	58.4
		86.4	99.2	106.0	113.0	120.2	127.6	146.9	154.9	158.9	378.3
84 SE	ELEVATION	1695.00	1698.00	1699.00	1700.00	1702.00	1704.00	1706.00	1708.00	1710.00	1712.00
		1714.00	1714.80	1715.20	1715.60	1716.00	1716.40	1717.40	1717.80	1718.00	1728.00
86 SQ	DISCHARGE	0.	72.	213.	414.	613.	752.	889.	983.	1076.	1168.
		1248.	1267.	1280.	3437.	10412.	18426.	22080.	27980.	36581.	48765.
88 SE	ELEVATION	1695.00	1696.00	1698.00	1700.00	1702.00	1704.00	1706.00	1708.00	1710.00	1712.00
		1714.00	1714.50	1714.90	1716.00	1719.00	1721.50	1722.50	1724.00	1726.00	1728.00

***

COMPUTED STORAGE-OUTFLOW-ELEVATION DATA

STORAGE	0.00	0.01	0.02	0.08	0.24	0.93	2.29	7.17	18.89	36.08
OUTFLOW	0.00	72.00	213.00	313.50	414.00	613.00	752.00	889.00	983.00	1076.00
ELEVATION	1695.00	1696.00	1698.00	1699.00	1700.00	1702.00	1704.00	1706.00	1708.00	1710.00
STORAGE	58.41	86.41	94.41	99.21	100.90	105.97	112.96	120.18	127.60	146.86
OUTFLOW	1168.00	1248.00	1267.00	1276.75	1280.00	1868.14	2652.57	3437.00	4367.06	6692.06
ELEVATION	1712.00	1714.00	1714.50	1714.80	1714.90	1715.20	1715.60	1716.00	1716.40	1717.40
STORAGE	154.86	158.92	180.85	235.69	257.63	290.53	334.40	378.27		
OUTFLOW	7622.11	8087.00	10412.00	18426.00	22080.00	27980.00	36581.00	48765.00		
ELEVATION	1717.80	1718.00	1719.00	1721.50	1722.50	1724.00	1726.00	1728.00		

*** WARNING *** MODIFIED PULS ROUTING MAY BE NUMERICALLY UNSTABLE FOR OUTFLOWS BETWEEN 0. TO 414.
THE ROUTED HYDROGRAPH SHOULD BE EXAMINED FOR OSCILLATIONS OR OUTFLOWS GREATER THAN PEAK INFLOWS.
THIS CAN BE CORRECTED BY DECREASING THE TIME INTERVAL OR INCREASING STORAGE (USE A LONGER REACH.)

****

HYDROGRAPH AT STATION C599O

DA	MON	HRMN	ORD	OUTFLOW	STORAGE	STAGE	DA	MON	HRMN	ORD	OUTFLOW	STORAGE	STAGE	DA	MON	HRMN	ORD	OUTFLOW	STORAGE	STAGE
2	JUN	0000	1	0.	0.0	1695.0	2	JUN	0535	68	1279.	100.6	1714.9	2	JUN	1110	135	372.	0.2	1699.6
2	JUN	0005	2	1077.	36.3	1710.0	2	JUN	0540	69	1278.	100.0	1714.8	2	JUN	1115	136	359.	0.2	1699.5
2	JUN	0010	3	1174.	60.5	1712.2	2	JUN	0545	70	1277.	99.2	1714.8	2	JUN	1120	137	337.	0.1	1699.2
2	JUN	0015	4	1217.	75.5	1713.2	2	JUN	0550	71	1275.	98.2	1714.7	2	JUN	1125	138	310.	0.1	1699.0
2	JUN	0020	5	1242.	84.4	1713.9	2	JUN	0555	72	1272.	97.0	1714.7	2	JUN	1130	139	280.	0.1	1698.7
2	JUN	0025	6	1256.	89.6	1714.2	2	JUN	0600	73	1269.	95.6	1714.6	2	JUN	1135	140	261.	0.0	1698.5
2	JUN	0030	7	1263.	92.6	1714.4	2	JUN	0605	74	1266.	94.2	1714.5	2	JUN	1140	141	240.	0.0	1698.3
2	JUN	0035	8	1267.	94.3	1714.5	2	JUN	0610	75	1262.	92.5	1714.4	2	JUN	1145	142	226.	0.0	1698.1
2	JUN	0040	9	1268.	95.0	1714.5	2	JUN	0615	76	1258.	90.7	1714.3	2	JUN	1150	143	210.	0.0	1698.0
2	JUN	0045	10	1268.	95.1	1714.5	2	JUN	0620	77	1254.	88.8	1714.1	2	JUN	1155	144	198.	0.0	1697.8
2	JUN	0050	11	1268.	94.7	1714.5	2	JUN	0625	78	1249.	86.7	1714.0	2	JUN	1200	145	188.	0.0	1697.6
2	JUN	0055	12	1266.	94.0	1714.5	2	JUN	0630	79	1243.	84.7	1713.9	2	JUN	1205	146	180.	0.0	1697.5
2	JUN	0100	13	1263.	92.9	1714.4	2	JUN	0635	80	1237.	82.6	1713.7	2	JUN	1210	147	173.	0.0	1697.4
2	JUN	0105	14	1260.	91.6	1714.3	2	JUN	0640	81	1231.	80.5	1713.6	2	JUN	1215	148	167.	0.0	1697.3
2	JUN	0110	15	1257.	90.2	1714.2	2	JUN	0645	82	1225.	78.4	1713.4	2	JUN	1220	149	163.	0.0	1697.3
2	JUN	0115	16	1254.	88.7	1714.1	2	JUN	0650	83	1219.	76.3	1713.3	2	JUN	1225	150	158.	0.0	1697.2
2	JUN	0120	17	1250.	87.2	1714.1	2	JUN	0655	84	1213.	74.2	1713.1	2	JUN	1230	151	154.	0.0	1697.2
2	JUN	0125	18	1246.	85.7	1714.0	2	JUN	0700	85	1207.	72.2	1713.0	2	JUN	1235	152	150.	0.0	1697.1
2	JUN	0130	19	1242.	84.2	1713.8	2	JUN	0705	86	1201.	70.1	1712.8	2	JUN	1240	153	146.	0.0	1697.0
2	JUN	0135	20	1238.	82.8	1713.7	2	JUN	0710	87	1196.	68.1	1712.7	2	JUN	1245	154	142.	0.0	1697.0
2	JUN	0140	21	1234.	81.4	1713.6	2	JUN	0715	88	1190.	66.0	1712.5	2	JUN	1250	155	139.	0.0	1697.0
2	JUN	0145	22	1230.	80.1	1713.6	2	JUN	0720	89	1184.	64.0	1712.4	2	JUN	1255	156	136.	0.0	1696.9
2	JUN	0150	23	1227.	78.9	1713.5	2	JUN	0725	90	1178.	62.0	1712.3	2	JUN	1300	157	133.	0.0	1696.9
2	JUN	0155	24	1223.	77.8	1713.4	2	JUN	0730	91	1172.	59.9	1712.1	2	JUN	1305	158	130.	0.0	1696.8
2	JUN	0200	25	1220.	76.8	1713.3	2	JUN	0735	92	1166.	57.9	1712.0	2	JUN	1310	159	127.	0.0	1696.8
2	JUN	0205	26	1225.	78.4	1713.4	2	JUN	0740	93	1157.	55.8	1711.8	2	JUN	1315	160	124.	0.0	1696.7
2	JUN	0210	27	1262.	92.2	1714.4	2	JUN	0745	94	1149.	53.8	1711.6	2	JUN	1320	161	121.	0.0	1696.7
2	JUN	0215	28	3794.	123.0	1716.2	2	JUN	0750	95	1140.	51.7	1711.4	2	JUN	1325	162	119.	0.0	1696.7
2	JUN	0220	29	8965.	167.2	1718.4	2	JUN	0755	96	1132.	49.7	1711.2	2	JUN	1330	163	116.	0.0	1696.6
2	JUN	0225	30	15842.	218.0	1720.7	2	JUN	0800	97	1124.	47.6	1711.0	2	JUN	1335	164	114.	0.0	1696.6
2	JUN	0230	31	21997.	257.1	1722.5	2	JUN	0805	98	1115.	45.5	1710.8	2	JUN	1340	165	111.	0.0	1696.6
2	JUN	0235	32	25189.	275.0	1723.3	2	JUN	0810	99	1106.	43.4	1710.7	2	JUN	1345	166	109.	0.0	1696.5
2	JUN	0240	33	25595.	277.2	1723.4	2	JUN	0815	100	1097.	41.3	1710.5	2	JUN	1350	167	106.	0.0	1696.5
2	JUN	0245	34	23829.	267.4	1722.9	2	JUN	0820	101	1088.	39.1	1710.3	2	JUN	1355	168	104.	0.0	1696.5
2	JUN	0250	35	20945.	250.8	1722.2	2	JUN	0825	102	1079.	36.8	1710.1	2	JUN	1400	169	98.	0.0	1696.4
2	JUN	0255	36	18036.	233.0	1721.4	2	JUN	0830	103	1067.	34.4	1709.8	2	JUN	1405	170	91.	0.0	1696.3
2	JUN	0300	37	15591.	216.3	1720.6	2	JUN	0835	104	1053.	31.9	1709.5	2	JUN	1410	171	83.	0.0	1696.2
2	JUN	0305	38	13401.	201.3	1719.9	2	JUN	0840	105	1039.	29.2	1709.2	2	JUN	1415	172	78.	0.0	1696.1
2	JUN	0310	39	11538.	188.6	1719.4	2	JUN	0845	106	1024.	26.4	1708.9	2	JUN	1420	173	73.	0.0	1696.0

2	JUN	0315	40	10066.	177.6	1718.9	*	2	JUN	0850	107	1008.	23.6	1708.5	*	2 JUN 1425 174	67.	0.0	1695.9
2	JUN	0320	41	8976.	167.3	1718.4	*	2	JUN	0855	108	993.	20.7	1708.2	*	2 JUN 1430 175	62.	0.0	1695.9
2	JUN	0325	42	7931.	157.6	1717.9	*	2	JUN	0900	109	975.	17.9	1707.8	*	2 JUN 1435 176	57.	0.0	1695.8
2	JUN	0330	43	6920.	148.8	1717.5	*	2	JUN	0905	110	952.	15.1	1707.4	*	2 JUN 1440 177	52.	0.0	1695.7
2	JUN	0335	44	6036.	141.4	1717.1	*	2	JUN	0910	111	931.	12.4	1706.9	*	2 JUN 1445 178	47.	0.0	1695.7
2	JUN	0340	45	5311.	135.4	1716.8	*	2	JUN	0915	112	910.	9.7	1706.4	*	2 JUN 1450 179	43.	0.0	1695.6
2	JUN	0345	46	4747.	130.7	1716.6	*	2	JUN	0920	113	889.	7.2	1706.0	*	2 JUN 1455 180	39.	0.0	1695.5
2	JUN	0350	47	4319.	127.2	1716.4	*	2	JUN	0925	114	825.	4.9	1705.1	*	2 JUN 1500 181	35.	0.0	1695.5
2	JUN	0355	48	3978.	124.5	1716.2	*	2	JUN	0930	115	771.	3.0	1704.3	*	2 JUN 1505 182	32.	0.0	1695.4
2	JUN	0400	49	3704.	122.3	1716.1	*	2	JUN	0935	116	670.	1.5	1702.8	*	2 JUN 1510 183	29.	0.0	1695.4
2	JUN	0405	50	3470.	120.4	1716.0	*	2	JUN	0940	117	553.	0.7	1701.4	*	2 JUN 1515 184	26.	0.0	1695.4
2	JUN	0410	51	3267.	118.6	1715.9	*	2	JUN	0945	118	493.	0.5	1700.8	*	2 JUN 1520 185	24.	0.0	1695.3
2	JUN	0415	52	3042.	116.5	1715.8	*	2	JUN	0950	119	486.	0.5	1700.7	*	2 JUN 1525 186	21.	0.0	1695.3
2	JUN	0420	53	2801.	114.3	1715.7	*	2	JUN	0955	120	480.	0.5	1700.7	*	2 JUN 1530 187	19.	0.0	1695.3
2	JUN	0425	54	2558.	112.1	1715.6	*	2	JUN	1000	121	473.	0.4	1700.6	*	2 JUN 1535 188	18.	0.0	1695.2
2	JUN	0430	55	2329.	110.1	1715.4	*	2	JUN	1005	122	466.	0.4	1700.5	*	2 JUN 1540 189	16.	0.0	1695.2
2	JUN	0435	56	2134.	108.3	1715.3	*	2	JUN	1010	123	460.	0.4	1700.5	*	2 JUN 1545 190	14.	0.0	1695.2
2	JUN	0440	57	1977.	106.9	1715.3	*	2	JUN	1015	124	454.	0.4	1700.4	*	2 JUN 1550 191	13.	0.0	1695.2
2	JUN	0445	58	1853.	105.8	1715.2	*	2	JUN	1020	125	448.	0.4	1700.3	*	2 JUN 1555 192	12.	0.0	1695.2
2	JUN	0450	59	1755.	105.0	1715.1	*	2	JUN	1025	126	442.	0.3	1700.3	*	2 JUN 1600 193	11.	0.0	1695.2
2	JUN	0455	60	1680.	104.3	1715.1	*	2	JUN	1030	127	436.	0.3	1700.2	*	2 JUN 1605 194	10.	0.0	1695.1
2	JUN	0500	61	1619.	103.8	1715.1	*	2	JUN	1035	128	429.	0.3	1700.1	*	2 JUN 1610 195	9.	0.0	1695.1
2	JUN	0505	62	1567.	103.4	1715.0	*	2	JUN	1040	129	421.	0.3	1700.1	*	2 JUN 1615 196	8.	0.0	1695.1
2	JUN	0510	63	1514.	102.9	1715.0	*	2	JUN	1045	130	413.	0.2	1700.0	*	2 JUN 1620 197	7.	0.0	1695.1
2	JUN	0515	64	1454.	102.4	1715.0	*	2	JUN	1050	131	402.	0.2	1699.9	*	2 JUN 1625 198	7.	0.0	1695.1
2	JUN	0520	65	1395.	101.9	1715.0	*	2	JUN	1055	132	395.	0.2	1699.8	*	2 JUN 1630 199	6.	0.0	1695.1
2	JUN	0525	66	1342.	101.4	1714.9	*	2	JUN	1100	133	387.	0.2	1699.7	*	2 JUN 1635 200	0.	0.0	1695.0
2	JUN	0530	67	1295.	101.0	1714.9	*	2	JUN	1105	134	380.	0.2	1699.7	*				
							*								*				

****

PEAK FLOW	TIME		MAXIMUM AVERAGE FLOW			
			6-HR	24-HR	72-HR	16.58-HR
+ (CFS)	(HR)					
		(CFS)				
+ 25595.	2.67		4777.	2042.	2042.	2042.
		(INCHES)	6.229	7.358	7.358	7.358
		(AC-FT)	2369.	2798.	2798.	2798.

PEAK STORAGE	TIME	MAXIMUM AVERAGE STORAGE			
		6-HR	24-HR	72-HR	16.58-HR
+ (AC-FT)	(HR)				
277.	2.67	124.	55.	55.	55.

PEAK STAGE	TIME	MAXIMUM AVERAGE STAGE			
		6-HR	24-HR	72-HR	16.58-HR
+ (FEET)	(HR)				
1723.39	2.67	1716.01	1706.94	1706.94	1706.94

CUMULATIVE AREA = 7.13 SQ MI

1

RUNOFF SUMMARY
FLOW IN CUBIC FEET PER SECOND
TIME IN HOURS, AREA IN SQUARE MILES

	OPERATION	STATION	PEAK FLOW	TIME OF PEAK	AVERAGE FLOW FOR MAXIMUM PERIOD 6-HOUR	24-HOUR	72-HOUR	BASIN AREA	MAXIMUM STAGE	TIME OF MAX STAGE
+	HYDROGRAPH AT	IDF2	26516.	2.58	4956.	2042.	2042.	7.13		
+	ROUTED TO	C5990	25595.	2.67	4777.	2042.	2042.	7.13		
+									1723.39	2.67

*** NORMAL END OF HEC-1 ***

10-Year, Future Condition (6-Hour)

```
1*****************************************                    *****************************************
 *                                       *                    *                                       *
 *   FLOOD HYDROGRAPH PACKAGE  (HEC-1)   *                    *    U.S. ARMY CORPS OF ENGINEERS       *
 *             MAY   1991                *                    *    HYDROLOGIC ENGINEERING CENTER      *
 *           VERSION 4.0.1E              *                    *          609 SECOND STREET            *
 *                                       *                    *       DAVIS, CALIFORNIA 95616         *
 *  RUN DATE  02/16/:0  TIME  17:42:15   *                    *          (916) 551-1748               *
 *                                       *                    *                                       *
 *****************************************                    *****************************************

                                    X     X  XXXXXXX   XXXXX          X
                                    X     X  X        X     X        XX
                                    X     X  X        X              X
                                    XXXXXXX  XXXX     X        XXXXX X
                                    X     X  X        X              X
                                    X     X  X        X     X        X
                                    X     X  XXXXXXX   XXXXX        XXX

THIS PROGRAM REPLACES ALL PREVIOUS VERSIONS OF HEC-1 KNOWN AS HEC1 (JAN 73), HEC1GS, HEC1DB, AND HEC1KW.

THE DEFINITIONS OF VARIABLES -RTIMP- AND -RTIOR- HAVE CHANGED FROM THOSE USED WITH THE 1973-STYLE INPUT STRUCTURE.
THE DEFINITION OF -AMSKK- ON RM-CARD WAS CHANGED WITH REVISIONS DATED 28 SEP 81. THIS IS THE FORTRAN77 VERSION
NEW OPTIONS: DAMBREAK OUTFLOW SUBMERGENCE , SINGLE EVENT DAMAGE CALCULATION, DSS:WRITE STAGE FREQUENCY,
DSS:READ TIME SERIES AT DESIRED CALCULATION INTERVAL   LOSS RATE:GREEN AND AMPT INFILTRATION
KINEMATIC WAVE: NEW FINITE DIFFERENCE ALGORITHM

1                                          HEC-1 INPUT                                                PAGE  1

LINE          ID.......1.......2.......3.......4.......5.......6.......7.......8.......9......10

  1           ID   ACCOUNTS FOR TRASH RACK LOSSES AT THE PRINCIPAL INLET - NO CLOGG
  2           ID
  3           ID   Golden Eagle Park Dam Modifications
  4           ID        by Stantec: Proj. No. 28900095                    File:10_6-A.IH1
  5           ID        for FCDMC:  FCD                                   Date:08-10-99     RJS
  6           ID                                                        Revised:11-99
  7           ID
  8           ID   Alternative F:
  9           ID        The stage-storage relation is adjusted to
 10           ID        reflect revised grading in the park.
 11           ID        Enlarge emergency spillway
 12           ID        Add auxilary
 13           ID
 14           ID   10-year, 6-hour future condition watershed model for Ashbrook Wash upstream
 15           ID   of the Fort McDowell Indian Reservation boundary.
 16           ID        This model is a portion of the original Fountain Hills North FDS
 17           ID        watershed model conducted by GVSCE, 1994.  The title cards from that
 18           ID        model are included for reference.
 19           ID
 20           ID   Fountain Hills North Floodplain Delineation Study
 21           ID        FCD 92-04       by GVSCE                        File:   FU10-6.IH1
 22           ID   Future Condition Model                               Date:    07-21-94   dtp
 23           ID      10-Year 6-Hour Storm, Clark Unit Hydrograph     Revised:   10-31-94   dtp
              *
 24           IT       1                    1080
 25           IO       5
 26           IN      15

 27           KK   C599I
 28           KM   INFLOW HYDROGRAPH FROM ENTIRE WATERSHED TO GEPD
 29           IN       1
 30           KO       1                              21
 31           BA    7.13
              *
              * *
              * * C599I is the total flow in Ashbrook Wash upstream of DAM 4
              * *
 32           QI       0       0       0       0       0       1       1       1       2       2
 33           QI       2       3       3       3       3       4       4       4       4       4
 34           QI       4       5       5       5       5       5       5       6       6       7
 35           QI       7       8       9       9      10      11      12      13      13      14
 36           QI      15      15      16      17      17      18      18      19      20      20
 37           QI      21      21      22      23      23      24      25      25      26      27
 38           QI      28      29      30      30      31      32      33      34      35      36
 39           QI      37      38      39      40      41      42      43      44      45      47
 40           QI      48      49      50      51      52      53      54      55      56      57
 41           QI      58      59      60      61      62      63      64      65      66      67
 42           QI      68      70      71      72      74      75      77      79      81      82
 43           QI      84      86      87      89      91      92      94      96      97      99
 44           QI     100     102     103     105     106     107     109     110     111     113
 45           QI     114     115     117     118     119     120     121     123     124     125
 46           QI     126     127     128     130     131     132     133     134     135     136
 47           QI     137     138     139     139     140     141     142     143     144     145
 48           QI     145     146     147     148     149     149     150     151     152     153
 49           QI     154     154     155     156     157     158     159     160     161     161
 50           QI     162     163     164     165     167     168     170     171     173     175
 51           QI     176     178     180     182     183     185     187     189     192     195
```

52	QI	199	203	207	211	216	221	225	230	236	242
53	QI	248	256	266	280	299	321	345	371	399	427
54	QI	455	484	513	542	573	605	641	680	722	766
55	QI	809	851	891	931	971	1012	1052	1093	1134	1177
56	QI	1221	1264	1307	1349	1386	1418	1444	1466	1484	1498
57	QI	1510	1520	1529	1537	1543	1547	1549	1549	1544	1535
58	QI	1521	1505	1487	1467	1447	1427	1408	1389	1371	1353
59	QI	1336	1318	1301	1283	1264	1245	1225	1205	1184	1163
60	QI	1143	1123	1103	1085	1069	1055	1042	1031	1021	1011
61	QI	1002	994	987	980	973	967	962	956	952	947
62	QI	943	939	936	932	929	926	923	920	917	915
63	QI	912	910	907	905	903	902	900	899	897	895
64	QI	894	892	891	890	889	888	886	885	884	883
65	QI	882	881	880	879	878	877	876	875	874	873
66	QI	872	871	870	870	869	868	867	866	866	865
67	QI	864	863	863	862	861	860	860	859	858	858
68	QI	857	856	855	854	854	852	851	850	849	848
69	QI	847	845	844	843	842	840	839	838	836	835
70	QI	833	832	831	829	827	826	824	823	821	819
71	QI	818	816	814	813	811	809	807	804	802	799
72	QI	797	794	791	788	785	782	779	776	773	770
73	QI	766	763	760	757	754	751	748	745	741	738
74	QI	735	732	729	726	723	721	718	716	713	710
75	QI	707	704	701	698	695	692	689	685	681	677
76	QI	673	669	665	660	656	651	647	642	638	634
77	QI	629	625	621	617	613	609	605	601	598	595
78	QI	591	589	586	583	580	577	574	571	568	564
79	QI	561	558	554	551	548	545	541	538	534	531
80	QI	527	523	520	516	512	509	505	502	499	496
81	QI	493	491	488	486	484	482	480	478	476	474
82	QI	471	469	467	465	463	461	459	457	455	452
83	QI	450	447	444	441	438	435	432	428	425	422
84	QI	419	416	413	409	406	403	400	397	394	391
85	QI	388	385	382	380	377	374	372	369	367	364
86	QI	362	359	357	354	352	350	347	344	342	339
87	QI	337	334	331	328	326	323	320	317	314	310
88	QI	307	304	301	298	295	291	288	285	282	279
89	QI	276	273	270	267	264	262	259	256	253	250
90	QI	248	245	242	240	237	234	232	230	227	225
91	QI	222	220	217	215	213	210	208	205	203	201
92	QI	198	196	194	192	189	187	185	183	181	178
93	QI	176	174	172	170	168	166	164	163	161	159
94	QI	157	155	154	152	150	148	147	145	143	141
95	QI	139	138	136	134	133	131	129	128	126	125
96	QI	123	121	120	118	117	116	114	113	112	110
97	QI	109	108	107	106	104	103	102	101	100	99
98	QI	98	96	95	93	92	90	89	87	85	84
99	QI	82	80	79	77	76	74	73	71	70	69
100	QI	68	67	66	65	64	63	61	60	59	58
101	QI	57	56	55	54	54	53	52	51	50	49
102	QI	49	48	47	46	46	45	44	44	43	42
103	QI	42	41	41	40	39	39	38	38	37	37
104	QI	36	36	35	35	34	33	32	32	31	30
105	QI	29	28	27	26	25	24	23	22	21	20
106	QI	19	19	18	17	17	16	15	15	14	13
107	QI	13	12	12	11	11	11	10	10	9	9
108	QI	9	8	8	8	8	7	7	7	7	6
109	QI	6	6	6	5	5	5	5	5	5	4
110	QI	4	4	4	4	4	4	3	3	3	3
111	QI	3	3	3	3	3	2	2	2	2	2
112	QI	2	2	2	2	2	2	2	2	2	2
113	QI	1	1	1	1	1	1	1	1	1	1
114	QI	1	1	1	1	1	1	1	1	1	1
115	QI	1	1	1	1	1	1	1	1	1	1
116	QI	1	1	1	1	1	0	0	0	0	0
117	QI	0	0	0	0	0	0	0	0	0	0
118	QI	0	0	0	0	0	0	0	0	0	0
119	QI	0	0	0	0	0	0	0	0	0	0
120	QI	0	0	0	0	0	0	0	0	0	0
121	QI	0	0	0	0	0	0	0	0	0	0
122	QI	0	0	0	0	0	0	0	0	0	0
123	QI	0	0	0	0	0	0	0	0	0	0
124	QI	0	0	0	0	0	0	0	0	0	0
125	QI	0	0	0	0	0	0	0	0	0	0
126	QI	0	0	0	0	0	0	0	0	0	0
127	QI	0	0	0	0	0	0	0	0	0	0
128	QI	0	0	0	0	0	0	0	0	0	0
129	QI	0	0	0	0	0	0	0	0	0	0
130	QI	0	0	0	0	0	0	0	0	0	0
131	QI	0	0	0	0	0	0	0	0	0	0
132	QI	0	0	0	0	0	0	0	0	0	0
133	QI	0	0	0	0	0	0	0	0	0	0
134	QI	0	0	0	0	0	0	0	0	0	0
135	QI	0	0	0	0	0	0	0	0	0	0
136	QI	0	0	0	0	0	0	0	0	0	0
137	QI	0	0	0	0	0	0	0	0	0	0
138	QI	0	0	0	0	0	0	0	0	0	0
139	QI	0	0	0	0	0	0	0	0	0	0
	*										
	*										
	*										
140	KK	C5990									
141	KO	1									
142	KM	Reservoir route at C599 (Dam 4).									

```
          143          RS       1    ELEV  1694.7
          144          SV    0.00    0.00    0.02    0.08    0.24    0.93    2.29    7.17   18.89   36.08
          145          SV   58.41   86.41   99.21  105.97  112.96  120.18  127.60  146.86  154.86  158.92
          146          SE  1694.9  1697.0  1698.0  1699.0  1700.0  1702.0  1704.0  1706.0  1708.0  1710.0
          147          SE  1712.0  1714.0  1714.8  1715.2  1715.6  1716.0  1716.4  1717.4  1717.8  1718.0
          148          SQ       0      72     213     414     613     752     889     983    1076    1168
          149          SQ    1201    1248    1267    1280    2080    6496   10412   15018   18426   20223
          150          SE  1694.9  1696.0  1698.0  1700.0  1702.0  1704.0  1706.0  1708.0  1710.0  1712.0
          151          SE  1712.8 1714.00 1714.50 1714.90 1715.00  1717.5  1719.0  1720.5  1721.5  1722.0
          152          RL                   0.97
                       *
                       * * End Basin 210.  Start Basin 211
                       * *
1                                                HEC-1 INPUT                                          PAGE  4

         LINE          ID.......1.......2.......3.......4.......5.......6.......7.......8.......9......10

          153          ZZ
1****************************************                                                 ****************************************
*                                      *                                                 *                                      *
*   FLOOD HYDROGRAPH PACKAGE  (HEC-1)  *                                                 *    U.S. ARMY CORPS OF ENGINEERS      *
*              MAY  1991               *                                                 *    HYDROLOGIC ENGINEERING CENTER     *
*           VERSION 4.0.1E             *                                                 *          609 SECOND STREET           *
*                                      *                                                 *       DAVIS, CALIFORNIA 95616        *
*  RUN DATE  02/16/:0  TIME  17:42:15  *                                                 *           (916) 551-1748             *
*                                      *                                                 *                                      *
****************************************                                                 ****************************************
```

ACCOUNTS FOR TRASH RACK LOSSES AT THE PRINCIPAL INLET - NO CLOGG

Golden Eagle Park Dam Modifications
by Stantec: Proj. No. 28900095 File:10_6-A.IH1
for FCDMC: FCD Date:08-10-99 RJS
Revised:11-99

Alternative F:
The stage-storage relation is adjusted to
reflect revised grading in the park.
Enlarge emergency spillway
Add auxilary

10-year, 6-hour future condition watershed model for Ashbrook Wash upstream
of the Fort McDowell Indian Reservation boundary.
This model is a portion of the original Fountain Hills North FDS
watershed model conducted by GVSCE, 1994. The title cards from that
model are included for reference.

Fountain Hills North Floodplain Delineation Study
FCD 92-04 by GVSCE File: FU10-6.IH1
Future Condition Model Date: 07-21-94 dtp
10-Year 6-Hour Storm, Clark Unit Hydrograph Revised: 10-31-94 dtp

```
  25 IO          OUTPUT CONTROL VARIABLES
                       IPRNT          5  PRINT CONTROL
                       IPLOT          0  PLOT CONTROL
                       QSCAL         0.  HYDROGRAPH PLOT SCALE

     IT          HYDROGRAPH TIME DATA
                        NMIN          1  MINUTES IN COMPUTATION INTERVAL
                       IDATE      1    0  STARTING DATE
                       ITIME       0000  STARTING TIME
                          NQ       1080  NUMBER OF HYDROGRAPH ORDINATES
                      NDDATE      1    0  ENDING DATE
                      NDTIME       1759  ENDING TIME
                       ICENT         19  CENTURY MARK

                 COMPUTATION INTERVAL    0.02 HOURS
                      TOTAL TIME BASE   17.98 HOURS

          ENGLISH UNITS
               DRAINAGE AREA          SQUARE MILES
               PRECIPITATION DEPTH    INCHES
               LENGTH, ELEVATION      FEET
               FLOW                   CUBIC FEET PER SECOND
               STORAGE VOLUME         ACRE-FEET
               SURFACE AREA           ACRES
               TEMPERATURE            DEGREES FAHRENHEIT


*** *** *** *** *** *** *** *** *** *** *** *** *** *** *** *** *** *** *** *** *** *** *** *** *** *** *** *** *** *** *** *** ***


            **************
            *            *
  27 KK     *    C599I   *
            *            *
            **************

  30 KO          OUTPUT CONTROL VARIABLES
                       IPRNT          1  PRINT CONTROL
```

```
                    IPLOT          0  PLOT CONTROL
                    QSCAL         0.  HYDROGRAPH PLOT SCALE
                    IPNCH          0  PUNCH COMPUTED HYDROGRAPH
                     IOUT         21  SAVE HYDROGRAPH ON THIS UNIT
                    ISAV1          1  FIRST ORDINATE PUNCHED OR SAVED
                    ISAV2       1080  LAST ORDINATE PUNCHED OR SAVED
                   TIMINT      0.017  TIME INTERVAL IN HOURS

29 IN          TIME DATA FOR INPUT TIME SERIES
                     JXMIN          1  TIME INTERVAL IN MINUTES
                    JXDATE      1   0  STARTING DATE
                    JXTIME          0  STARTING TIME

             SUBBASIN RUNOFF DATA

31 BA          SUBBASIN CHARACTERISTICS
                     TAREA       7.13  SUBBASIN AREA
```

***

****

HYDROGRAPH AT STATION C599I

****

DA	MON	HRMN	ORD	FLOW	DA	MON	HRMN	ORD	FLOW	DA	MON	HRMN	ORD	FLOW	DA	MON	HRMN	ORD	FLOW
1		0000	1	0.	1		0430	271	1336.	1		0900	541	362.	1		1330	811	1.
1		0001	2	0.	1		0431	272	1318.	1		0901	542	359.	1		1331	812	1.
1		0002	3	0.	1		0432	273	1301.	1		0902	543	357.	1		1332	813	1.
1		0003	4	0.	1		0433	274	1283.	1		0903	544	354.	1		1333	814	1.
1		0004	5	0.	1		0434	275	1264.	1		0904	545	352.	1		1334	815	1.
1		0005	6	1.	1		0435	276	1245.	1		0905	546	350.	1		1335	816	1.
1		0006	7	1.	1		0436	277	1225.	1		0906	547	347.	1		1336	817	1.
1		0007	8	1.	1		0437	278	1205.	1		0907	548	344.	1		1337	818	1.
1		0008	9	2.	1		0438	279	1184.	1		0908	549	342.	1		1338	819	1.
1		0009	10	2.	1		0439	280	1163.	1		0909	550	339.	1		1339	820	1.
1		0010	11	2.	1		0440	281	1143.	1		0910	551	337.	1		1340	821	1.
1		0011	12	3.	1		0441	282	1123.	1		0911	552	334.	1		1341	822	1.
1		0012	13	3.	1		0442	283	1103.	1		0912	553	331.	1		1342	823	1.
1		0013	14	3.	1		0443	284	1085.	1		0913	554	328.	1		1343	824	1.
1		0014	15	3.	1		0444	285	1069.	1		0914	555	326.	1		1344	825	1.
1		0015	16	4.	1		0445	286	1055.	1		0915	556	323.	1		1345	826	1.
1		0016	17	4.	1		0446	287	1042.	1		0916	557	320.	1		1346	827	1.
1		0017	18	4.	1		0447	288	1031.	1		0917	558	317.	1		1347	828	1.
1		0018	19	4.	1		0448	289	1021.	1		0918	559	314.	1		1348	829	1.
1		0019	20	4.	1		0449	290	1011.	1		0919	560	310.	1		1349	830	1.
1		0020	21	4.	1		0450	291	1002.	1		0920	561	307.	1		1350	831	1.
1		0021	22	5.	1		0451	292	994.	1		0921	562	304.	1		1351	832	1.
1		0022	23	5.	1		0452	293	987.	1		0922	563	301.	1		1352	833	1.
1		0023	24	5.	1		0453	294	980.	1		0923	564	298.	1		1353	834	1.
1		0024	25	5.	1		0454	295	973.	1		0924	565	295.	1		1354	835	1.
1		0025	26	5.	1		0455	296	967.	1		0925	566	291.	1		1355	836	1.
1		0026	27	5.	1		0456	297	962.	1		0926	567	288.	1		1356	837	1.
1		0027	28	6.	1		0457	298	956.	1		0927	568	285.	1		1357	838	1.
1		0028	29	6.	1		0458	299	952.	1		0928	569	282.	1		1358	839	1.
1		0029	30	7.	1		0459	300	947.	1		0929	570	279.	1		1359	840	1.
1		0030	31	7.	1		0500	301	943.	1		0930	571	276.	1		1400	841	1.
1		0031	32	8.	1		0501	302	939.	1		0931	572	273.	1		1401	842	1.
1		0032	33	9.	1		0502	303	936.	1		0932	573	270.	1		1402	843	1.
1		0033	34	9.	1		0503	304	932.	1		0933	574	267.	1		1403	844	1.
1		0034	35	10.	1		0504	305	929.	1		0934	575	264.	1		1404	845	1.
1		0035	36	11.	1		0505	306	926.	1		0935	576	262.	1		1405	846	0.
1		0036	37	12.	1		0506	307	923.	1		0936	577	259.	1		1406	847	0.
1		0037	38	13.	1		0507	308	920.	1		0937	578	256.	1		1407	848	0.
1		0038	39	13.	1		0508	309	917.	1		0938	579	253.	1		1408	849	0.
1		0039	40	14.	1		0509	310	915.	1		0939	580	250.	1		1409	850	0.
1		0040	41	15.	1		0510	311	912.	1		0940	581	248.	1		1410	851	0.
1		0041	42	15.	1		0511	312	910.	1		0941	582	245.	1		1411	852	0.
1		0042	43	16.	1		0512	313	907.	1		0942	583	242.	1		1412	853	0.
1		0043	44	17.	1		0513	314	905.	1		0943	584	240.	1		1413	854	0.
1		0044	45	17.	1		0514	315	903.	1		0944	585	237.	1		1414	855	0.
1		0045	46	18.	1		0515	316	902.	1		0945	586	234.	1		1415	856	0.
1		0046	47	18.	1		0516	317	900.	1		0946	587	232.	1		1416	857	0.
1		0047	48	19.	1		0517	318	899.	1		0947	588	230.	1		1417	858	0.
1		0048	49	20.	1		0518	319	897.	1		0948	589	227.	1		1418	859	0.
1		0049	50	20.	1		0519	320	895.	1		0949	590	225.	1		1419	860	0.
1		0050	51	21.	1		0520	321	894.	1		0950	591	222.	1		1420	861	0.
1		0051	52	21.	1		0521	322	892.	1		0951	592	220.	1		1421	862	0.
1		0052	53	22.	1		0522	323	891.	1		0952	593	217.	1		1422	863	0.
1		0053	54	23.	1		0523	324	890.	1		0953	594	215.	1		1423	864	0.
1		0054	55	23.	1		0524	325	889.	1		0954	595	213.	1		1424	865	0.
1		0055	56	24.	1		0525	326	888.	1		0955	596	210.	1		1425	866	0.
1		0056	57	25.	1		0526	327	886.	1		0956	597	208.	1		1426	867	0.
1		0057	58	25.	1		0527	328	885.	1		0957	598	205.	1		1427	868	0.
1		0058	59	26.	1		0528	329	884.	1		0958	599	203.	1		1428	869	0.
1		0059	60	27.	1		0529	330	883.	1		0959	600	201.	1		1429	870	0.
1		0100	61	28.	1		0530	331	882.	1		1000	601	198.	1		1430	871	0.
1		0101	62	29.	1		0531	332	881.	1		1001	602	196.	1		1431	872	0.
1		0102	63	30.	1		0532	333	880.	1		1002	603	194.	1		1432	873	0.
1		0103	64	30.	1		0533	334	879.	1		1003	604	192.	1		1433	874	0.
1		0104	65	31.	1		0534	335	878.	1		1004	605	189.	1		1434	875	0.
1		0105	66	32.	1		0535	336	877.	1		1005	606	187.	1		1435	876	0.

1	0106	67	33.	*	1	0536	337	876.	*	1	1006	607	185.	*	1	1436	877	0.
1	0107	68	34.	*	1	0537	338	875.	*	1	1007	608	183.	*	1	1437	878	0.
1	0108	69	35.	*	1	0538	339	874.	*	1	1008	609	181.	*	1	1438	879	0.
1	0109	70	36.	*	1	0539	340	873.	*	1	1009	610	178.	*	1	1439	880	0.
1	0110	71	37.	*	1	0540	341	872.	*	1	1010	611	176.	*	1	1440	881	0.
1	0111	72	38.	*	1	0541	342	871.	*	1	1011	612	174.	*	1	1441	882	0.
1	0112	73	39.	*	1	0542	343	870.	*	1	1012	613	172.	*	1	1442	883	0.
1	0113	74	40.	*	1	0543	344	870.	*	1	1013	614	170.	*	1	1443	884	0.
1	0114	75	41.	*	1	0544	345	869.	*	1	1014	615	168.	*	1	1444	885	0.
1	0115	76	42.	*	1	0545	346	868.	*	1	1015	616	166.	*	1	1445	886	0.
1	0116	77	43.	*	1	0546	347	867.	*	1	1016	617	164.	*	1	1446	887	0.
1	0117	78	44.	*	1	0547	348	866.	*	1	1017	618	163.	*	1	1447	888	0.
1	0118	79	45.	*	1	0548	349	866.	*	1	1018	619	161.	*	1	1448	889	0.
1	0119	80	47.	*	1	0549	350	865.	*	1	1019	620	159.	*	1	1449	890	0.
1	0120	81	48.	*	1	0550	351	864.	*	1	1020	621	157.	*	1	1450	891	0.
1	0121	82	49.	*	1	0551	352	863.	*	1	1021	622	155.	*	1	1451	892	0.
1	0122	83	50.	*	1	0552	353	863.	*	1	1022	623	154.	*	1	1452	893	0.
1	0123	84	51.	*	1	0553	354	862.	*	1	1023	624	152.	*	1	1453	894	0.
1	0124	85	52.	*	1	0554	355	861.	*	1	1024	625	150.	*	1	1454	895	0.
1	0125	86	53.	*	1	0555	356	860.	*	1	1025	626	148.	*	1	1455	896	0.
1	0126	87	54.	*	1	0556	357	860.	*	1	1026	627	147.	*	1	1456	897	0.
1	0127	88	55.	*	1	0557	358	859.	*	1	1027	628	145.	*	1	1457	898	0.
1	0128	89	56.	*	1	0558	359	858.	*	1	1028	629	143.	*	1	1458	899	0.
1	0129	90	57.	*	1	0559	360	858.	*	1	1029	630	141.	*	1	1459	900	0.
1	0130	91	58.	*	1	0600	361	857.	*	1	1030	631	139.	*	1	1500	901	0.
1	0131	92	59.	*	1	0601	362	856.	*	1	1031	632	138.	*	1	1501	902	0.
1	0132	93	60.	*	1	0602	363	855.	*	1	1032	633	136.	*	1	1502	903	0.
1	0133	94	61.	*	1	0603	364	854.	*	1	1033	634	134.	*	1	1503	904	0.
1	0134	95	62.	*	1	0604	365	854.	*	1	1034	635	133.	*	1	1504	905	0.
1	0135	96	63.	*	1	0605	366	852.	*	1	1035	636	131.	*	1	1505	906	0.
1	0136	97	64.	*	1	0606	367	851.	*	1	1036	637	129.	*	1	1506	907	0.
1	0137	98	65.	*	1	0607	368	850.	*	1	1037	638	128.	*	1	1507	908	0.
1	0138	99	66.	*	1	0608	369	849.	*	1	1038	639	126.	*	1	1508	909	0.
1	0139	100	67.	*	1	0609	370	848.	*	1	1039	640	125.	*	1	1509	910	0.
1	0140	101	68.	*	1	0610	371	847.	*	1	1040	641	123.	*	1	1510	911	0.
1	0141	102	70.	*	1	0611	372	845.	*	1	1041	642	121.	*	1	1511	912	0.
1	0142	103	71.	*	1	0612	373	844.	*	1	1042	643	120.	*	1	1512	913	0.
1	0143	104	72.	*	1	0613	374	843.	*	1	1043	644	118.	*	1	1513	914	0.
1	0144	105	74.	*	1	0614	375	842.	*	1	1044	645	117.	*	1	1514	915	0.
1	0145	106	75.	*	1	0615	376	840.	*	1	1045	646	116.	*	1	1515	916	0.
1	0146	107	77.	*	1	0616	377	839.	*	1	1046	647	114.	*	1	1516	917	0.
1	0147	108	79.	*	1	0617	378	838.	*	1	1047	648	113.	*	1	1517	918	0.
1	0148	109	81.	*	1	0618	379	836.	*	1	1048	649	112.	*	1	1518	919	0.
1	0149	110	82.	*	1	0619	380	835.	*	1	1049	650	110.	*	1	1519	920	0.
1	0150	111	84.	*	1	0620	381	833.	*	1	1050	651	109.	*	1	1520	921	0.
1	0151	112	86.	*	1	0621	382	832.	*	1	1051	652	108.	*	1	1521	922	0.
1	0152	113	87.	*	1	0622	383	831.	*	1	1052	653	107.	*	1	1522	923	0.
1	0153	114	89.	*	1	0623	384	829.	*	1	1053	654	106.	*	1	1523	924	0.
1	0154	115	91.	*	1	0624	385	827.	*	1	1054	655	104.	*	1	1524	925	0.
1	0155	116	92.	*	1	0625	386	826.	*	1	1055	656	103.	*	1	1525	926	0.
1	0156	117	94.	*	1	0626	387	824.	*	1	1056	657	102.	*	1	1526	927	0.
1	0157	118	96.	*	1	0627	388	823.	*	1	1057	658	101.	*	1	1527	928	0.
1	0158	119	97.	*	1	0628	389	821.	*	1	1058	659	100.	*	1	1528	929	0.
1	0159	120	99.	*	1	0629	390	819.	*	1	1059	660	99.	*	1	1529	930	0.
1	0200	121	100.	*	1	0630	391	818.	*	1	1100	661	98.	*	1	1530	931	0.
1	0201	122	102.	*	1	0631	392	816.	*	1	1101	662	96.	*	1	1531	932	0.
1	0202	123	103.	*	1	0632	393	814.	*	1	1102	663	95.	*	1	1532	933	0.
1	0203	124	105.	*	1	0633	394	813.	*	1	1103	664	93.	*	1	1533	934	0.
1	0204	125	106.	*	1	0634	395	811.	*	1	1104	665	92.	*	1	1534	935	0.
1	0205	126	107.	*	1	0635	396	809.	*	1	1105	666	90.	*	1	1535	936	0.
1	0206	127	109.	*	1	0636	397	807.	*	1	1106	667	89.	*	1	1536	937	0.
1	0207	128	110.	*	1	0637	398	804.	*	1	1107	668	87.	*	1	1537	938	0.
1	0208	129	111.	*	1	0638	399	802.	*	1	1108	669	85.	*	1	1538	939	0.
1	0209	130	113.	*	1	0639	400	799.	*	1	1109	670	84.	*	1	1539	940	0.
1	0210	131	114.	*	1	0640	401	797.	*	1	1110	671	82.	*	1	1540	941	0.
1	0211	132	115.	*	1	0641	402	794.	*	1	1111	672	80.	*	1	1541	942	0.
1	0212	133	117.	*	1	0642	403	791.	*	1	1112	673	79.	*	1	1542	943	0.
1	0213	134	118.	*	1	0643	404	788.	*	1	1113	674	77.	*	1	1543	944	0.
1	0214	135	119.	*	1	0644	405	785.	*	1	1114	675	76.	*	1	1544	945	0.
1	0215	136	120.	*	1	0645	406	782.	*	1	1115	676	74.	*	1	1545	946	0.
1	0216	137	121.	*	1	0646	407	779.	*	1	1116	677	73.	*	1	1546	947	0.
1	0217	138	123.	*	1	0647	408	776.	*	1	1117	678	71.	*	1	1547	948	0.
1	0218	139	124.	*	1	0648	409	773.	*	1	1118	679	70.	*	1	1548	949	0.
1	0219	140	125.	*	1	0649	410	770.	*	1	1119	680	69.	*	1	1549	950	0.
1	0220	141	126.	*	1	0650	411	766.	*	1	1120	681	68.	*	1	1550	951	0.
1	0221	142	127.	*	1	0651	412	763.	*	1	1121	682	67.	*	1	1551	952	0.
1	0222	143	128.	*	1	0652	413	760.	*	1	1122	683	66.	*	1	1552	953	0.
1	0223	144	130.	*	1	0653	414	757.	*	1	1123	684	65.	*	1	1553	954	0.
1	0224	145	131.	*	1	0654	415	754.	*	1	1124	685	64.	*	1	1554	955	0.
1	0225	146	132.	*	1	0655	416	751.	*	1	1125	686	63.	*	1	1555	956	0.
1	0226	147	133.	*	1	0656	417	748.	*	1	1126	687	61.	*	1	1556	957	0.
1	0227	148	134.	*	1	0657	418	745.	*	1	1127	688	60.	*	1	1557	958	0.
1	0228	149	135.	*	1	0658	419	741.	*	1	1128	689	59.	*	1	1558	959	0.
1	0229	150	136.	*	1	0659	420	738.	*	1	1129	690	58.	*	1	1559	960	0.
1	0230	151	137.	*	1	0700	421	735.	*	1	1130	691	57.	*	1	1600	961	0.
1	0231	152	138.	*	1	0701	422	732.	*	1	1131	692	56.	*	1	1601	962	0.
1	0232	153	139.	*	1	0702	423	729.	*	1	1132	693	55.	*	1	1602	963	0.
1	0233	154	139.	*	1	0703	424	726.	*	1	1133	694	54.	*	1	1603	964	0.
1	0234	155	140.	*	1	0704	425	723.	*	1	1134	695	54.	*	1	1604	965	0.
1	0235	156	141.	*	1	0705	426	721.	*	1	1135	696	53.	*	1	1605	966	0.
1	0236	157	142.	*	1	0706	427	718.	*	1	1136	697	52.	*	1	1606	967	0.
1	0237	158	143.	*	1	0707	428	716.	*	1	1137	698	51.	*	1	1607	968	0.
1	0238	159	144.	*	1	0708	429	713.	*	1	1138	699	50.	*	1	1608	969	0.
1	0239	160	145.	*	1	0709	430	710.	*	1	1139	700	49.	*	1	1609	970	0.
1	0240	161	145.	*	1	0710	431	707.	*	1	1140	701	49.	*	1	1610	971	0.

1	0241	162	146.	*	1	0711	432	704.	*	1	1141	702	48.	*	1	1611	972	0.
1	0242	163	147.	*	1	0712	433	701.	*	1	1142	703	47.	*	1	1612	973	0.
1	0243	164	148.	*	1	0713	434	698.	*	1	1143	704	46.	*	1	1613	974	0.
1	0244	165	149.	*	1	0714	435	695.	*	1	1144	705	46.	*	1	1614	975	0.
1	0245	166	149.	*	1	0715	436	692.	*	1	1145	706	45.	*	1	1615	976	0.
1	0246	167	150.	*	1	0716	437	689.	*	1	1146	707	44.	*	1	1616	977	0.
1	0247	168	151.	*	1	0717	438	685.	*	1	1147	708	44.	*	1	1617	978	0.
1	0248	169	152.	*	1	0718	439	681.	*	1	1148	709	43.	*	1	1618	979	0.
1	0249	170	153.	*	1	0719	440	677.	*	1	1149	710	42.	*	1	1619	980	0.
1	0250	171	154.	*	1	0720	441	673.	*	1	1150	711	42.	*	1	1620	981	0.
1	0251	172	154.	*	1	0721	442	669.	*	1	1151	712	41.	*	1	1621	982	0.
1	0252	173	155.	*	1	0722	443	665.	*	1	1152	713	41.	*	1	1622	983	0.
1	0253	174	156.	*	1	0723	444	660.	*	1	1153	714	40.	*	1	1623	984	0.
1	0254	175	157.	*	1	0724	445	656.	*	1	1154	715	39.	*	1	1624	985	0.
1	0255	176	158.	*	1	0725	446	651.	*	1	1155	716	39.	*	1	1625	986	0.
1	0256	177	159.	*	1	0726	447	647.	*	1	1156	717	38.	*	1	1626	987	0.
1	0257	178	160.	*	1	0727	448	642.	*	1	1157	718	38.	*	1	1627	988	0.
1	0258	179	161.	*	1	0728	449	638.	*	1	1158	719	37.	*	1	1628	989	0.
1	0259	180	161.	*	1	0729	450	634.	*	1	1159	720	37.	*	1	1629	990	0.
1	0300	181	162.	*	1	0730	451	629.	*	1	1200	721	36.	*	1	1630	991	0.
1	0301	182	163.	*	1	0731	452	625.	*	1	1201	722	36.	*	1	1631	992	0.
1	0302	183	164.	*	1	0732	453	621.	*	1	1202	723	35.	*	1	1632	993	0.
1	0303	184	165.	*	1	0733	454	617.	*	1	1203	724	35.	*	1	1633	994	0.
1	0304	185	167.	*	1	0734	455	613.	*	1	1204	725	34.	*	1	1634	995	0.
1	0305	186	168.	*	1	0735	456	609.	*	1	1205	726	33.	*	1	1635	996	0.
1	0306	187	170.	*	1	0736	457	605.	*	1	1206	727	32.	*	1	1636	997	0.
1	0307	188	171.	*	1	0737	458	601.	*	1	1207	728	32.	*	1	1637	998	0.
1	0308	189	173.	*	1	0738	459	598.	*	1	1208	729	31.	*	1	1638	999	0.
1	0309	190	175.	*	1	0739	460	595.	*	1	1209	730	30.	*	1	1639	1000	0.
1	0310	191	176.	*	1	0740	461	591.	*	1	1210	731	29.	*	1	1640	1001	0.
1	0311	192	178.	*	1	0741	462	589.	*	1	1211	732	28.	*	1	1641	1002	0.
1	0312	193	180.	*	1	0742	463	586.	*	1	1212	733	27.	*	1	1642	1003	0.
1	0313	194	182.	*	1	0743	464	583.	*	1	1213	734	26.	*	1	1643	1004	0.
1	0314	195	183.	*	1	0744	465	580.	*	1	1214	735	25.	*	1	1644	1005	0.
1	0315	196	185.	*	1	0745	466	577.	*	1	1215	736	24.	*	1	1645	1006	0.
1	0316	197	187.	*	1	0746	467	574.	*	1	1216	737	23.	*	1	1646	1007	0.
1	0317	198	189.	*	1	0747	468	571.	*	1	1217	738	22.	*	1	1647	1008	0.
1	0318	199	192.	*	1	0748	469	568.	*	1	1218	739	21.	*	1	1648	1009	0.
1	0319	200	195.	*	1	0749	470	564.	*	1	1219	740	20.	*	1	1649	1010	0.
1	0320	201	199.	*	1	0750	471	561.	*	1	1220	741	19.	*	1	1650	1011	0.
1	0321	202	203.	*	1	0751	472	558.	*	1	1221	742	19.	*	1	1651	1012	0.
1	0322	203	207.	*	1	0752	473	554.	*	1	1222	743	18.	*	1	1652	1013	0.
1	0323	204	211.	*	1	0753	474	551.	*	1	1223	744	17.	*	1	1653	1014	0.
1	0324	205	216.	*	1	0754	475	548.	*	1	1224	745	17.	*	1	1654	1015	0.
1	0325	206	221.	*	1	0755	476	545.	*	1	1225	746	16.	*	1	1655	1016	0.
1	0326	207	225.	*	1	0756	477	541.	*	1	1226	747	15.	*	1	1656	1017	0.
1	0327	208	230.	*	1	0757	478	538.	*	1	1227	748	15.	*	1	1657	1018	0.
1	0328	209	236.	*	1	0758	479	534.	*	1	1228	749	14.	*	1	1658	1019	0.
1	0329	210	242.	*	1	0759	480	531.	*	1	1229	750	13.	*	1	1659	1020	0.
1	0330	211	248.	*	1	0800	481	527.	*	1	1230	751	13.	*	1	1700	1021	0.
1	0331	212	256.	*	1	0801	482	523.	*	1	1231	752	12.	*	1	1701	1022	0.
1	0332	213	266.	*	1	0802	483	520.	*	1	1232	753	12.	*	1	1702	1023	0.
1	0333	214	280.	*	1	0803	484	516.	*	1	1233	754	11.	*	1	1703	1024	0.
1	0334	215	299.	*	1	0804	485	512.	*	1	1234	755	11.	*	1	1704	1025	0.
1	0335	216	321.	*	1	0805	486	509.	*	1	1235	756	11.	*	1	1705	1026	0.
1	0336	217	345.	*	1	0806	487	505.	*	1	1236	757	10.	*	1	1706	1027	0.
1	0337	218	371.	*	1	0807	488	502.	*	1	1237	758	10.	*	1	1707	1028	0.
1	0338	219	399.	*	1	0808	489	499.	*	1	1238	759	9.	*	1	1708	1029	0.
1	0339	220	427.	*	1	0809	490	496.	*	1	1239	760	9.	*	1	1709	1030	0.
1	0340	221	455.	*	1	0810	491	493.	*	1	1240	761	9.	*	1	1710	1031	0.
1	0341	222	484.	*	1	0811	492	491.	*	1	1241	762	8.	*	1	1711	1032	0.
1	0342	223	513.	*	1	0812	493	488.	*	1	1242	763	8.	*	1	1712	1033	0.
1	0343	224	542.	*	1	0813	494	486.	*	1	1243	764	8.	*	1	1713	1034	0.
1	0344	225	573.	*	1	0814	495	484.	*	1	1244	765	8.	*	1	1714	1035	0.
1	0345	226	605.	*	1	0815	496	482.	*	1	1245	766	7.	*	1	1715	1036	0.
1	0346	227	641.	*	1	0816	497	480.	*	1	1246	767	7.	*	1	1716	1037	0.
1	0347	228	680.	*	1	0817	498	478.	*	1	1247	768	7.	*	1	1717	1038	0.
1	0348	229	722.	*	1	0818	499	476.	*	1	1248	769	7.	*	1	1718	1039	0.
1	0349	230	766.	*	1	0819	500	474.	*	1	1249	770	6.	*	1	1719	1040	0.
1	0350	231	809.	*	1	0820	501	471.	*	1	1250	771	6.	*	1	1720	1041	0.
1	0351	232	851.	*	1	0821	502	469.	*	1	1251	772	6.	*	1	1721	1042	0.
1	0352	233	891.	*	1	0822	503	467.	*	1	1252	773	6.	*	1	1722	1043	0.
1	0353	234	931.	*	1	0823	504	465.	*	1	1253	774	5.	*	1	1723	1044	0.
1	0354	235	971.	*	1	0824	505	463.	*	1	1254	775	5.	*	1	1724	1045	0.
1	0355	236	1012.	*	1	0825	506	461.	*	1	1255	776	5.	*	1	1725	1046	0.
1	0356	237	1052.	*	1	0826	507	459.	*	1	1256	777	5.	*	1	1726	1047	0.
1	0357	238	1093.	*	1	0827	508	457.	*	1	1257	778	5.	*	1	1727	1048	0.
1	0358	239	1134.	*	1	0828	509	455.	*	1	1258	779	5.	*	1	1728	1049	0.
1	0359	240	1177.	*	1	0829	510	452.	*	1	1259	780	4.	*	1	1729	1050	0.
1	0400	241	1221.	*	1	0830	511	450.	*	1	1300	781	4.	*	1	1730	1051	0.
1	0401	242	1264.	*	1	0831	512	447.	*	1	1301	782	4.	*	1	1731	1052	0.
1	0402	243	1307.	*	1	0832	513	444.	*	1	1302	783	4.	*	1	1732	1053	0.
1	0403	244	1349.	*	1	0833	514	441.	*	1	1303	784	4.	*	1	1733	1054	0.
1	0404	245	1386.	*	1	0834	515	438.	*	1	1304	785	4.	*	1	1734	1055	0.
1	0405	246	1418.	*	1	0835	516	435.	*	1	1305	786	4.	*	1	1735	1056	0.
1	0406	247	1444.	*	1	0836	517	432.	*	1	1306	787	3.	*	1	1736	1057	0.
1	0407	248	1466.	*	1	0837	518	428.	*	1	1307	788	3.	*	1	1737	1058	0.
1	0408	249	1484.	*	1	0838	519	425.	*	1	1308	789	3.	*	1	1738	1059	0.
1	0409	250	1498.	*	1	0839	520	422.	*	1	1309	790	3.	*	1	1739	1060	0.
1	0410	251	1510.	*	1	0840	521	419.	*	1	1310	791	3.	*	1	1740	1061	0.
1	0411	252	1520.	*	1	0841	522	416.	*	1	1311	792	3.	*	1	1741	1062	0.
1	0412	253	1529.	*	1	0842	523	413.	*	1	1312	793	3.	*	1	1742	1063	0.
1	0413	254	1537.	*	1	0843	524	409.	*	1	1313	794	3.	*	1	1743	1064	0.
1	0414	255	1543.	*	1	0844	525	406.	*	1	1314	795	3.	*	1	1744	1065	0.
1	0415	256	1547.	*	1	0845	526	403.	*	1	1315	796	2.	*	1	1745	1066	0.

```
   1    0416  257    1549.  *   1    0846  527    400.  *   1    1316  797      2.  *   1    1746 1067      0.
   1    0417  258    1549.  *   1    0847  528    397.  *   1    1317  798      2.  *   1    1747 1068      0.
   1    0418  259    1544.  *   1    0848  529    394.  *   1    1318  799      2.  *   1    1748 1069      0.
   1    0419  260    1535.  *   1    0849  530    391.  *   1    1319  800      2.  *   1    1749 1070      0.
   1    0420  261    1521.  *   1    0850  531    388.  *   1    1320  801      2.  *   1    1750 1071      0.
   1    0421  262    1505.  *   1    0851  532    385.  *   1    1321  802      2.  *   1    1751 1072      0.
   1    0422  263    1487.  *   1    0852  533    382.  *   1    1322  803      2.  *   1    1752 1073      0.
   1    0423  264    1467.  *   1    0853  534    380.  *   1    1323  804      2.  *   1    1753 1074      0.
   1    0424  265    1447.  *   1    0854  535    377.  *   1    1324  805      2.  *   1    1754 1075      0.
   1    0425  266    1427.  *   1    0855  536    374.  *   1    1325  806      2.  *   1    1755 1076      0.
   1    0426  267    1408.  *   1    0856  537    372.  *   1    1326  807      2.  *   1    1756 1077      0.
   1    0427  268    1389.  *   1    0857  538    369.  *   1    1327  808      2.  *   1    1757 1078      0.
   1    0428  269    1371.  *   1    0858  539    367.  *   1    1328  809      2.  *   1    1758 1079      0.
   1    0429  270    1353.  *   1    0859  540    364.  *   1    1329  810      2.  *   1    1759 1080      0.
                            *                           *                                   *
*****************************************************************************************************************

 PEAK FLOW     TIME                          MAXIMUM AVERAGE FLOW
                                   6-HR       24-HR       72-HR     17.98-HR
+  (CFS)       (HR)
                          (CFS)
+   1549.      4.27                 756.        288.        288.        288.
                         (INCHES)  0.985       1.124       1.124       1.124
                          (AC-FT)  375.        427.        427.        427.

                         CUMULATIVE AREA =    7.13 SQ MI


*** *** *** *** *** *** *** *** *** *** *** *** *** *** *** *** *** *** *** *** *** *** *** *** *** *** *** *** *** *** *** *** ***


            **************
            *            *
 140 KK     *     C5990  *
            *            *
            **************

 141 KO          OUTPUT CONTROL VARIABLES
                      IPRNT          1  PRINT CONTROL
                      IPLOT          0  PLOT CONTROL
                      QSCAL         0.  HYDROGRAPH PLOT SCALE
                            Reservoir route at C599 (Dam 4).

               HYDROGRAPH ROUTING DATA

 152 RL          ROUTING LOSSES
                      QLOSS       0.00  INITIAL LOSS
                      CLOSS       0.00  ADDITIONAL FRACTION LOST
                     PERCRT       0.97  CHANNEL PERCOLATION RATE
                     ELVINV       0.00  INVERT ELEVATION

 143 RS          STORAGE ROUTING
                      NSTPS          1  NUMBER OF SUBREACHES
                       ITYP       ELEV  TYPE OF INITIAL CONDITION
                     RSVRIC    1694.70  INITIAL CONDITION
                          X       0.00 WORKING R AND D COEFFICIENT

 144 SV            STORAGE        0.0       0.0       0.0       0.1       0.2       0.9       2.3       7.2      18.9      36.1
                                 58.4      86.4      99.2     106.0     113.0     120.2     127.6     146.9     154.9     158.9

 146 SE          ELEVATION    1694.90   1697.00   1698.00   1699.00   1700.00   1702.00   1704.00   1706.00   1708.00   1710.00
                              1712.00   1714.00   1714.80   1715.20   1715.60   1716.00   1716.40   1717.40   1717.80   1718.00

 148 SQ          DISCHARGE        0.       72.      213.      414.      613.      752.      889.      983.     1076.     1168.
                                 1201.     1248.     1267.     1280.     2080.     6496.    10412.    15018.    18426.    20223.

 150 SE          ELEVATION    1694.90   1696.00   1698.00   1700.00   1702.00   1704.00   1706.00   1708.00   1710.00   1712.00
                              1712.80   1714.00   1714.50   1714.90   1715.00   1717.50   1719.00   1720.50   1721.50   1722.00

                                                          ***

                                        COMPUTED STORAGE-OUTFLOW-ELEVATION DATA

            STORAGE       0.00      0.00      0.00      0.02      0.08      0.24      0.93      2.29      7.17     18.89
            OUTFLOW       0.00     72.00    142.50    213.00    313.50    414.00    613.00    752.00    889.00    983.00
          ELEVATION    1694.90   1696.00   1697.00   1698.00   1699.00   1700.00   1702.00   1704.00   1706.00   1708.00

            STORAGE      36.08     58.41     69.61     86.41     94.41     99.21    100.90    102.59    105.97    112.96
            OUTFLOW    1076.00   1168.00   1201.00   1248.00   1267.00   1276.75   1280.00   2080.00   2433.19   3139.80
          ELEVATION    1710.00   1712.00   1712.80   1714.00   1714.50   1714.80   1714.90   1715.00   1715.20   1715.60

            STORAGE     120.18    127.60    146.86    148.86    154.86    158.92    179.22    209.68    229.99    240.14
            OUTFLOW    3846.40   4553.00   6319.40   6496.00   7279.33   7801.33  10412.00  15018.00  18426.00  20223.00
          ELEVATION    1716.00   1716.40   1717.40   1717.50   1717.80   1718.00   1719.00   1720.50   1721.50   1722.00


*** WARNING *** MODIFIED PULS ROUTING MAY BE NUMERICALLY UNSTABLE FOR OUTFLOWS BETWEEN      143. TO      314.
                THE ROUTED HYDROGRAPH SHOULD BE EXAMINED FOR OSCILLATIONS OR OUTFLOWS GREATER THAN PEAK INFLOWS.
                THIS CAN BE CORRECTED BY DECREASING THE TIME INTERVAL OR INCREASING STORAGE (USE A LONGER REACH.)

*****************************************************************************************************************

                                        HYDROGRAPH AT STATION    C5990
```

DA	MON	HRMN	ORD	OUTFLOW	STORAGE	STAGE	DA	MON	HRMN	ORD	OUTFLOW	STORAGE	STAGE	DA	MON	HRMN	ORD	OUTFLOW	STORAGE	STAGE
1		0000	1	0.	0.0	1696.0	1		0600	361	977.	18.2	1707.9	1		1200	721	36.	0.0	1695.4
1		0001	2	0.	0.0	1696.0	1		0601	362	976.	18.0	1707.8	1		1201	722	36.	0.0	1695.4
1		0002	3	0.	0.0	1696.0	1		0602	363	975.	17.8	1707.8	1		1202	723	35.	0.0	1695.4
1		0003	4	0.	0.0	1696.0	1		0603	364	973.	17.7	1707.8	1		1203	724	35.	0.0	1695.4
1		0004	5	0.	0.0	1696.0	1		0604	365	972.	17.5	1707.8	1		1204	725	34.	0.0	1695.4
1		0005	6	1.	0.0	1696.0	1		0605	366	971.	17.4	1707.7	1		1205	726	33.	0.0	1695.4
1		0006	7	1.	0.0	1696.0	1		0606	367	969.	17.2	1707.7	1		1206	727	32.	0.0	1695.4
1		0007	8	1.	0.0	1696.0	1		0607	368	968.	17.0	1707.7	1		1207	728	32.	0.0	1695.4
1		0008	9	2.	0.0	1696.0	1		0608	369	967.	16.9	1707.7	1		1208	729	31.	0.0	1695.4
1		0009	10	2.	0.0	1696.0	1		0609	370	965.	16.7	1707.6	1		1209	730	30.	0.0	1695.4
1		0010	11	2.	0.0	1696.0	1		0610	371	964.	16.5	1707.6	1		1210	731	29.	0.0	1695.3
1		0011	12	3.	0.0	1696.0	1		0611	372	963.	16.4	1707.6	1		1211	732	28.	0.0	1695.3
1		0012	13	3.	0.0	1696.0	1		0612	373	962.	16.2	1707.5	1		1212	733	27.	0.0	1695.3
1		0013	14	3.	0.0	1696.0	1		0613	374	960.	16.1	1707.5	1		1213	734	26.	0.0	1695.3
1		0014	15	3.	0.0	1696.0	1		0614	375	959.	15.9	1707.5	1		1214	735	25.	0.0	1695.3
1		0015	16	4.	0.0	1696.1	1		0615	376	958.	15.7	1707.5	1		1215	736	24.	0.0	1695.3
1		0016	17	4.	0.0	1696.1	1		0616	377	956.	15.6	1707.4	1		1216	737	23.	0.0	1695.3
1		0017	18	4.	0.0	1696.1	1		0617	378	955.	15.4	1707.4	1		1217	738	22.	0.0	1695.2
1		0018	19	4.	0.0	1696.1	1		0618	379	954.	15.2	1707.4	1		1218	739	21.	0.0	1695.2
1		0019	20	4.	0.0	1696.1	1		0619	380	952.	15.1	1707.4	1		1219	740	20.	0.0	1695.2
1		0020	21	4.	0.0	1696.1	1		0620	381	951.	14.9	1707.3	1		1220	741	19.	0.0	1695.2
1		0021	22	5.	0.0	1696.1	1		0621	382	950.	14.8	1707.3	1		1221	742	19.	0.0	1695.2
1		0022	23	5.	0.0	1696.1	1		0622	383	949.	14.6	1707.3	1		1222	743	18.	0.0	1695.2
1		0023	24	5.	0.0	1696.1	1		0623	384	947.	14.4	1707.2	1		1223	744	17.	0.0	1695.2
1		0024	25	5.	0.0	1696.1	1		0624	385	946.	14.3	1707.2	1		1224	745	17.	0.0	1695.2
1		0025	26	5.	0.0	1696.1	1		0625	386	945.	14.1	1707.2	1		1225	746	16.	0.0	1695.1
1		0026	27	5.	0.0	1696.1	1		0626	387	943.	13.9	1707.2	1		1226	747	15.	0.0	1695.1
1		0027	28	6.	0.0	1696.1	1		0627	388	942.	13.8	1707.1	1		1227	748	15.	0.0	1695.1
1		0028	29	6.	0.0	1696.1	1		0628	389	941.	13.6	1707.1	1		1228	749	14.	0.0	1695.1
1		0029	30	7.	0.0	1696.1	1		0629	390	939.	13.5	1707.1	1		1229	750	13.	0.0	1695.1
1		0030	31	7.	0.0	1696.1	1		0630	391	938.	13.3	1707.0	1		1230	751	13.	0.0	1695.1
1		0031	32	8.	0.0	1696.1	1		0631	392	937.	13.1	1707.0	1		1231	752	12.	0.0	1695.1
1		0032	33	9.	0.0	1696.1	1		0632	393	935.	13.0	1707.0	1		1232	753	12.	0.0	1695.1
1		0033	34	9.	0.0	1696.1	1		0633	394	934.	12.8	1707.0	1		1233	754	11.	0.0	1695.1
1		0034	35	10.	0.0	1696.1	1		0634	395	933.	12.6	1706.9	1		1234	755	11.	0.0	1695.1
1		0035	36	11.	0.0	1696.2	1		0635	396	931.	12.5	1706.9	1		1235	756	11.	0.0	1695.1
1		0036	37	12.	0.0	1696.2	1		0636	397	930.	12.3	1706.9	1		1236	757	10.	0.0	1695.1
1		0037	38	13.	0.0	1696.2	1		0637	398	929.	12.1	1706.8	1		1237	758	10.	0.0	1695.1
1		0038	39	13.	0.0	1696.2	1		0638	399	927.	11.9	1706.8	1		1238	759	9.	0.0	1695.0
1		0039	40	14.	0.0	1696.2	1		0639	400	926.	11.8	1706.8	1		1239	760	9.	0.0	1695.0
1		0040	41	15.	0.0	1696.2	1		0640	401	924.	11.6	1706.8	1		1240	761	9.	0.0	1695.0
1		0041	42	15.	0.0	1696.2	1		0641	402	923.	11.4	1706.7	1		1241	762	8.	0.0	1695.0
1		0042	43	16.	0.0	1696.2	1		0642	403	922.	11.2	1706.7	1		1242	763	8.	0.0	1695.0
1		0043	44	17.	0.0	1696.2	1		0643	404	920.	11.1	1706.7	1		1243	764	8.	0.0	1695.0
1		0044	45	17.	0.0	1696.2	1		0644	405	919.	10.9	1706.6	1		1244	765	8.	0.0	1695.0
1		0045	46	18.	0.0	1696.3	1		0645	406	917.	10.7	1706.6	1		1245	766	7.	0.0	1695.0
1		0046	47	18.	0.0	1696.3	1		0646	407	916.	10.5	1706.6	1		1246	767	7.	0.0	1695.0
1		0047	48	19.	0.0	1696.3	1		0647	408	914.	10.3	1706.5	1		1247	768	7.	0.0	1695.0
1		0048	49	20.	0.0	1696.3	1		0648	409	913.	10.1	1706.5	1		1248	769	7.	0.0	1695.0
1		0049	50	20.	0.0	1696.3	1		0649	410	911.	9.9	1706.5	1		1249	770	6.	0.0	1695.0
1		0050	51	21.	0.0	1696.3	1		0650	411	910.	9.7	1706.4	1		1250	771	6.	0.0	1695.0
1		0051	52	21.	0.0	1696.3	1		0651	412	908.	9.5	1706.4	1		1251	772	6.	0.0	1695.0
1		0052	53	22.	0.0	1696.3	1		0652	413	906.	9.3	1706.4	1		1252	773	6.	0.0	1695.0
1		0053	54	23.	0.0	1696.3	1		0653	414	905.	9.1	1706.3	1		1253	774	5.	0.0	1695.0
1		0054	55	23.	0.0	1696.3	1		0654	415	903.	8.9	1706.3	1		1254	775	5.	0.0	1695.0
1		0055	56	24.	0.0	1696.3	1		0655	416	901.	8.7	1706.3	1		1255	776	5.	0.0	1695.0
1		0056	57	25.	0.0	1696.4	1		0656	417	900.	8.5	1706.2	1		1256	777	5.	0.0	1695.0
1		0057	58	25.	0.0	1696.4	1		0657	418	898.	8.3	1706.2	1		1257	778	5.	0.0	1695.0
1		0058	59	26.	0.0	1696.4	1		0658	419	896.	8.1	1706.2	1		1258	779	5.	0.0	1695.0
1		0059	60	27.	0.0	1696.4	1		0659	420	895.	7.9	1706.1	1		1259	780	4.	0.0	1695.0
1		0100	61	28.	0.0	1696.4	1		0700	421	893.	7.7	1706.1	1		1300	781	4.	0.0	1695.0
1		0101	62	29.	0.0	1696.4	1		0701	422	891.	7.4	1706.0	1		1301	782	4.	0.0	1695.0
1		0102	63	30.	0.0	1696.4	1		0702	423	889.	7.2	1706.0	1		1302	783	4.	0.0	1695.0
1		0103	64	30.	0.0	1696.4	1		0703	424	884.	7.0	1705.9	1		1303	784	4.	0.0	1695.0
1		0104	65	31.	0.0	1696.4	1		0704	425	878.	6.8	1705.8	1		1304	785	4.	0.0	1695.0
1		0105	66	32.	0.0	1696.5	1		0705	426	872.	6.6	1705.8	1		1305	786	4.	0.0	1695.0
1		0106	67	33.	0.0	1696.5	1		0706	427	866.	6.4	1705.7	1		1306	787	3.	0.0	1694.9
1		0107	68	34.	0.0	1696.5	1		0707	428	861.	6.2	1705.6	1		1307	788	3.	0.0	1694.9
1		0108	69	35.	0.0	1696.5	1		0708	429	855.	6.0	1705.5	1		1308	789	3.	0.0	1694.9
1		0109	70	36.	0.0	1696.5	1		0709	430	850.	5.8	1705.4	1		1309	790	3.	0.0	1694.9
1		0110	71	37.	0.0	1696.5	1		0710	431	844.	5.6	1705.3	1		1310	791	3.	0.0	1694.9
1		0111	72	38.	0.0	1696.5	1		0711	432	839.	5.4	1705.3	1		1311	792	3.	0.0	1694.9
1		0112	73	39.	0.0	1696.6	1		0712	433	834.	5.2	1705.2	1		1312	793	3.	0.0	1694.9
1		0113	74	40.	0.0	1696.6	1		0713	434	829.	5.0	1705.1	1		1313	794	3.	0.0	1694.9
1		0114	75	41.	0.0	1696.6	1		0714	435	824.	4.8	1705.0	1		1314	795	3.	0.0	1694.9
1		0115	76	42.	0.0	1696.6	1		0715	436	819.	4.7	1705.0	1		1315	796	2.	0.0	1694.9
1		0116	77	43.	0.0	1696.6	1		0716	437	814.	4.5	1704.9	1		1316	797	2.	0.0	1694.9
1		0117	78	44.	0.0	1696.6	1		0717	438	809.	4.3	1704.8	1		1317	798	2.	0.0	1694.9
1		0118	79	45.	0.0	1696.6	1		0718	439	804.	4.2	1704.8	1		1318	799	2.	0.0	1694.9
1		0119	80	47.	0.0	1696.7	1		0719	440	800.	4.0	1704.7	1		1319	800	2.	0.0	1694.9
1		0120	81	48.	0.0	1696.7	1		0720	441	795.	3.8	1704.6	1		1320	801	2.	0.0	1694.9
1		0121	82	49.	0.0	1696.7	1		0721	442	790.	3.7	1704.6	1		1321	802	2.	0.0	1694.9
1		0122	83	50.	0.0	1696.7	1		0722	443	786.	3.5	1704.5	1		1322	803	2.	0.0	1694.9
1		0123	84	51.	0.0	1696.7	1		0723	444	781.	3.3	1704.4	1		1323	804	2.	0.0	1694.9
1		0124	85	52.	0.0	1696.7	1		0724	445	776.	3.2	1704.4	1		1324	805	2.	0.0	1694.9
1		0125	86	53.	0.0	1696.8	1		0725	446	772.	3.0	1704.3	1		1325	806	2.	0.0	1694.9
1		0126	87	54.	0.0	1696.8	1		0726	447	767.	2.8	1704.2	1		1326	807	2.	0.0	1694.9
1		0127	88	55.	0.0	1696.8	1		0727	448	762.	2.7	1704.1	1		1327	808	2.	0.0	1694.9
1		0128	89	56.	0.0	1696.8	1		0728	449	758.	2.5	1704.1	1		1328	809	2.	0.0	1694.9
1		0129	90	57.	0.0	1696.8	1		0729	450	753.	2.3	1704.0	1		1329	810	2.	0.0	1694.9

1	0130	91	58.	0.0	1696.8	*	1	0730	451	739.	2.2	1703.8	*	1	1330	811	1.	0.0	1694.9
1	0131	92	59.	0.0	1696.8	*	1	0731	452	725.	2.0	1703.6	*	1	1331	812	1.	0.0	1694.9
1	0132	93	60.	0.0	1696.9	*	1	0732	453	711.	1.9	1703.4	*	1	1332	813	1.	0.0	1694.9
1	0133	94	61.	0.0	1696.9	*	1	0733	454	699.	1.8	1703.2	*	1	1333	814	1.	0.0	1694.9
1	0134	95	62.	0.0	1696.9	*	1	0734	455	688.	1.7	1703.1	*	1	1334	815	1.	0.0	1694.9
1	0135	96	63.	0.0	1696.9	*	1	0735	456	678.	1.6	1702.9	*	1	1335	816	1.	0.0	1694.9
1	0136	97	64.	0.0	1696.9	*	1	0736	457	669.	1.5	1702.8	*	1	1336	817	1.	0.0	1694.9
1	0137	98	65.	0.0	1696.9	*	1	0737	458	660.	1.4	1702.7	*	1	1337	818	1.	0.0	1694.9
1	0138	99	66.	0.0	1696.9	*	1	0738	459	652.	1.3	1702.6	*	1	1338	819	1.	0.0	1694.9
1	0139	100	67.	0.0	1697.0	*	1	0739	460	645.	1.2	1702.5	*	1	1339	820	1.	0.0	1694.9
1	0140	101	68.	0.0	1697.0	*	1	0740	461	638.	1.2	1702.4	*	1	1340	821	1.	0.0	1694.9
1	0141	102	70.	0.0	1697.0	*	1	0741	462	632.	1.1	1702.3	*	1	1341	822	1.	0.0	1694.9
1	0142	103	143.	0.0	1697.0	*	1	0742	463	626.	1.1	1702.2	*	1	1342	823	1.	0.0	1694.9
1	0143	104	72.	0.0	1694.9	*	1	0743	464	620.	1.0	1702.1	*	1	1343	824	1.	0.0	1694.9
1	0144	105	74.	0.0	1694.9	*	1	0744	465	615.	1.0	1702.0	*	1	1344	825	1.	0.0	1694.9
1	0145	106	75.	0.0	1695.0	*	1	0745	466	607.	0.9	1701.9	*	1	1345	826	1.	0.0	1694.9
1	0146	107	77.	0.0	1695.0	*	1	0746	467	596.	0.9	1701.8	*	1	1346	827	1.	0.0	1694.9
1	0147	108	79.	0.0	1695.0	*	1	0747	468	588.	0.8	1701.8	*	1	1347	828	1.	0.0	1694.9
1	0148	109	81.	0.0	1695.0	*	1	0748	469	582.	0.8	1701.7	*	1	1348	829	1.	0.0	1694.9
1	0149	110	82.	0.0	1695.1	*	1	0749	470	577.	0.8	1701.6	*	1	1349	830	1.	0.0	1694.9
1	0150	111	84.	0.0	1695.1	*	1	0750	471	572.	0.8	1701.6	*	1	1350	831	1.	0.0	1694.9
1	0151	112	86.	0.0	1695.1	*	1	0751	472	568.	0.8	1701.5	*	1	1351	832	1.	0.0	1694.9
1	0152	113	87.	0.0	1695.1	*	1	0752	473	564.	0.8	1701.5	*	1	1352	833	1.	0.0	1694.9
1	0153	114	89.	0.0	1695.2	*	1	0753	474	560.	0.7	1701.5	*	1	1353	834	1.	0.0	1694.9
1	0154	115	91.	0.0	1695.2	*	1	0754	475	557.	0.7	1701.4	*	1	1354	835	1.	0.0	1694.9
1	0155	116	92.	0.0	1695.2	*	1	0755	476	553.	0.7	1701.4	*	1	1355	836	1.	0.0	1694.9
1	0156	117	94.	0.0	1695.2	*	1	0756	477	550.	0.7	1701.4	*	1	1356	837	1.	0.0	1694.9
1	0157	118	96.	0.0	1695.3	*	1	0757	478	546.	0.7	1701.3	*	1	1357	838	1.	0.0	1694.9
1	0158	119	97.	0.0	1695.3	*	1	0758	479	543.	0.7	1701.3	*	1	1358	839	1.	0.0	1694.9
1	0159	120	99.	0.0	1695.3	*	1	0759	480	540.	0.7	1701.3	*	1	1359	840	1.	0.0	1694.9
1	0200	121	100.	0.0	1695.3	*	1	0800	481	536.	0.7	1701.2	*	1	1400	841	1.	0.0	1694.9
1	0201	122	102.	0.0	1695.4	*	1	0801	482	532.	0.7	1701.2	*	1	1401	842	1.	0.0	1694.9
1	0202	123	103.	0.0	1695.4	*	1	0802	483	529.	0.6	1701.2	*	1	1402	843	1.	0.0	1694.9
1	0203	124	105.	0.0	1695.4	*	1	0803	484	525.	0.6	1701.1	*	1	1403	844	1.	0.0	1694.9
1	0204	125	106.	0.0	1695.4	*	1	0804	485	521.	0.6	1701.1	*	1	1404	845	1.	0.0	1694.9
1	0205	126	107.	0.0	1695.4	*	1	0805	486	518.	0.6	1701.0	*	1	1405	846	0.	0.0	1694.9
1	0206	127	109.	0.0	1695.5	*	1	0806	487	514.	0.6	1701.0	*	1	1406	847	0.	0.0	1694.9
1	0207	128	110.	0.0	1695.5	*	1	0807	488	511.	0.6	1701.0	*	1	1407	848	0.	0.0	1694.9
1	0208	129	111.	0.0	1695.5	*	1	0808	489	507.	0.6	1700.9	*	1	1408	849	0.	0.0	1694.9
1	0209	130	113.	0.0	1695.5	*	1	0809	490	504.	0.6	1700.9	*	1	1409	850	0.	0.0	1694.9
1	0210	131	114.	0.0	1695.5	*	1	0810	491	501.	0.5	1700.9	*	1	1410	851	0.	0.0	1694.9
1	0211	132	115.	0.0	1695.6	*	1	0811	492	498.	0.5	1700.8	*	1	1411	852	0.	0.0	1694.9
1	0212	133	117.	0.0	1695.6	*	1	0812	493	495.	0.5	1700.8	*	1	1412	853	0.	0.0	1694.9
1	0213	134	118.	0.0	1695.6	*	1	0813	494	492.	0.5	1700.8	*	1	1413	854	0.	0.0	1694.9
1	0214	135	119.	0.0	1695.6	*	1	0814	495	490.	0.5	1700.8	*	1	1414	855	0.	0.0	1694.9
1	0215	136	120.	0.0	1695.6	*	1	0815	496	488.	0.5	1700.7	*	1	1415	856	0.	0.0	1694.9
1	0216	137	121.	0.0	1695.7	*	1	0816	497	485.	0.5	1700.7	*	1	1416	857	0.	0.0	1694.9
1	0217	138	123.	0.0	1695.7	*	1	0817	498	483.	0.5	1700.7	*	1	1417	858	0.	0.0	1694.9
1	0218	139	124.	0.0	1695.7	*	1	0818	499	481.	0.5	1700.7	*	1	1418	859	0.	0.0	1694.9
1	0219	140	125.	0.0	1695.7	*	1	0819	500	479.	0.5	1700.7	*	1	1419	860	0.	0.0	1694.9
1	0220	141	126.	0.0	1695.7	*	1	0820	501	477.	0.5	1700.6	*	1	1420	861	0.	0.0	1694.9
1	0221	142	127.	0.0	1695.7	*	1	0821	502	475.	0.5	1700.6	*	1	1421	862	0.	0.0	1694.9
1	0222	143	128.	0.0	1695.8	*	1	0822	503	472.	0.4	1700.6	*	1	1422	863	0.	0.0	1694.9
1	0223	144	130.	0.0	1695.8	*	1	0823	504	470.	0.4	1700.6	*	1	1423	864	0.	0.0	1694.9
1	0224	145	131.	0.0	1695.8	*	1	0824	505	468.	0.4	1700.5	*	1	1424	865	0.	0.0	1694.9
1	0225	146	132.	0.0	1695.8	*	1	0825	506	466.	0.4	1700.5	*	1	1425	866	0.	0.0	1694.9
1	0226	147	133.	0.0	1695.8	*	1	0826	507	464.	0.4	1700.5	*	1	1426	867	0.	0.0	1694.9
1	0227	148	134.	0.0	1695.9	*	1	0827	508	462.	0.4	1700.5	*	1	1427	868	0.	0.0	1694.9
1	0228	149	135.	0.0	1695.9	*	1	0828	509	460.	0.4	1700.5	*	1	1428	869	0.	0.0	1694.9
1	0229	150	136.	0.0	1695.9	*	1	0829	510	458.	0.4	1700.4	*	1	1429	870	0.	0.0	1694.9
1	0230	151	137.	0.0	1695.9	*	1	0830	511	456.	0.4	1700.4	*	1	1430	871	0.	0.0	1694.9
1	0231	152	138.	0.0	1695.9	*	1	0831	512	453.	0.4	1700.4	*	1	1431	872	0.	0.0	1694.9
1	0232	153	139.	0.0	1695.9	*	1	0832	513	451.	0.4	1700.4	*	1	1432	873	0.	0.0	1694.9
1	0233	154	139.	0.0	1695.9	*	1	0833	514	448.	0.4	1700.3	*	1	1433	874	0.	0.0	1694.9
1	0234	155	140.	0.0	1695.9	*	1	0834	515	445.	0.3	1700.3	*	1	1434	875	0.	0.0	1694.9
1	0235	156	141.	0.0	1696.0	*	1	0835	516	442.	0.3	1700.3	*	1	1435	876	0.	0.0	1694.9
1	0236	157	142.	0.0	1696.0	*	1	0836	517	439.	0.3	1700.3	*	1	1436	877	0.	0.0	1694.9
1	0237	158	143.	0.0	1696.0	*	1	0837	518	436.	0.3	1700.2	*	1	1437	878	0.	0.0	1694.9
1	0238	159	144.	0.0	1696.0	*	1	0838	519	433.	0.3	1700.2	*	1	1438	879	0.	0.0	1694.9
1	0239	160	145.	0.0	1696.0	*	1	0839	520	430.	0.3	1700.2	*	1	1439	880	0.	0.0	1694.9
1	0240	161	145.	0.0	1696.0	*	1	0840	521	427.	0.3	1700.1	*	1	1440	881	0.	0.0	1694.9
1	0241	162	146.	0.0	1696.0	*	1	0841	522	424.	0.3	1700.1	*	1	1441	882	0.	0.0	1694.9
1	0242	163	147.	0.0	1696.0	*	1	0842	523	421.	0.3	1700.1	*	1	1442	883	0.	0.0	1694.9
1	0243	164	148.	0.0	1696.1	*	1	0843	524	417.	0.3	1700.0	*	1	1443	884	0.	0.0	1694.9
1	0244	165	149.	0.0	1696.1	*	1	0844	525	414.	0.2	1700.0	*	1	1444	885	0.	0.0	1694.9
1	0245	166	149.	0.0	1696.1	*	1	0845	526	408.	0.2	1699.9	*	1	1445	886	0.	0.0	1694.9
1	0246	167	150.	0.0	1696.1	*	1	0846	527	404.	0.2	1699.9	*	1	1446	887	0.	0.0	1694.9
1	0247	168	151.	0.0	1696.1	*	1	0847	528	401.	0.2	1699.9	*	1	1447	888	0.	0.0	1694.9
1	0248	169	152.	0.0	1696.1	*	1	0848	529	398.	0.2	1699.8	*	1	1448	889	0.	0.0	1694.9
1	0249	170	153.	0.0	1696.1	*	1	0849	530	395.	0.2	1699.8	*	1	1449	890	0.	0.0	1694.9
1	0250	171	154.	0.0	1696.1	*	1	0850	531	391.	0.2	1699.8	*	1	1450	891	0.	0.0	1694.9
1	0251	172	154.	0.0	1696.1	*	1	0851	532	388.	0.2	1699.7	*	1	1451	892	0.	0.0	1694.9
1	0252	173	155.	0.0	1696.2	*	1	0852	533	385.	0.2	1699.7	*	1	1452	893	0.	0.0	1694.9
1	0253	174	156.	0.0	1696.2	*	1	0853	534	383.	0.2	1699.7	*	1	1453	894	0.	0.0	1694.9
1	0254	175	157.	0.0	1696.2	*	1	0854	535	380.	0.2	1699.7	*	1	1454	895	0.	0.0	1694.9
1	0255	176	158.	0.0	1696.2	*	1	0855	536	377.	0.2	1699.6	*	1	1455	896	0.	0.0	1694.9
1	0256	177	159.	0.0	1696.2	*	1	0856	537	375.	0.2	1699.6	*	1	1456	897	0.	0.0	1694.9
1	0257	178	160.	0.0	1696.2	*	1	0857	538	372.	0.2	1699.6	*	1	1457	898	0.	0.0	1694.9
1	0258	179	161.	0.0	1696.2	*	1	0858	539	370.	0.2	1699.6	*	1	1458	899	0.	0.0	1694.9
1	0259	180	161.	0.0	1696.2	*	1	0859	540	367.	0.2	1699.5	*	1	1459	900	0.	0.0	1694.9
1	0300	181	162.	0.0	1696.3	*	1	0900	541	365.	0.2	1699.5	*	1	1500	901	0.	0.0	1694.9
1	0301	182	163.	0.0	1696.3	*	1	0901	542	362.	0.2	1699.5	*	1	1501	902	0.	0.0	1694.9
1	0302	183	164.	0.0	1696.3	*	1	0902	543	360.	0.2	1699.5	*	1	1502	903	0.	0.0	1694.9
1	0303	184	165.	0.0	1696.3	*	1	0903	544	357.	0.1	1699.4	*	1	1503	904	0.	0.0	1694.9
1	0304	185	167.	0.0	1696.3	*	1	0904	545	355.	0.1	1699.4	*	1	1504	905	0.	0.0	1694.9

1	0305	186	168.	0.0	1696.3	*	1	0905	546	352.	0.1	1699.4	*	1	1505	906	0.	0.0	1694.9
1	0306	187	170.	0.0	1696.4	*	1	0906	547	350.	0.1	1699.4	*	1	1506	907	0.	0.0	1694.9
1	0307	188	171.	0.0	1696.4	*	1	0907	548	347.	0.1	1699.3	*	1	1507	908	0.	0.0	1694.9
1	0308	189	173.	0.0	1696.4	*	1	0908	549	345.	0.1	1699.3	*	1	1508	909	0.	0.0	1694.9
1	0309	190	175.	0.0	1696.4	*	1	0909	550	342.	0.1	1699.3	*	1	1509	910	0.	0.0	1694.9
1	0310	191	176.	0.0	1696.5	*	1	0910	551	340.	0.1	1699.3	*	1	1510	911	0.	0.0	1694.9
1	0311	192	178.	0.0	1696.5	*	1	0911	552	337.	0.1	1699.2	*	1	1511	912	0.	0.0	1694.9
1	0312	193	180.	0.0	1696.5	*	1	0912	553	334.	0.1	1699.2	*	1	1512	913	0.	0.0	1694.9
1	0313	194	182.	0.0	1696.5	*	1	0913	554	331.	0.1	1699.2	*	1	1513	914	0.	0.0	1694.9
1	0314	195	183.	0.0	1696.6	*	1	0914	555	329.	0.1	1699.2	*	1	1514	915	0.	0.0	1694.9
1	0315	196	185.	0.0	1696.6	*	1	0915	556	326.	0.1	1699.1	*	1	1515	916	0.	0.0	1694.9
1	0316	197	187.	0.0	1696.6	*	1	0916	557	323.	0.1	1699.1	*	1	1516	917	0.	0.0	1694.9
1	0317	198	189.	0.0	1696.6	*	1	0917	558	320.	0.1	1699.1	*	1	1517	918	0.	0.0	1694.9
1	0318	199	192.	0.0	1696.7	*	1	0918	559	317.	0.1	1699.0	*	1	1518	919	0.	0.0	1694.9
1	0319	200	195.	0.0	1696.7	*	1	0919	560	314.	0.1	1699.0	*	1	1519	920	0.	0.0	1694.9
1	0320	201	199.	0.0	1696.8	*	1	0920	561	309.	0.1	1699.0	*	1	1520	921	0.	0.0	1694.9
1	0321	202	203.	0.0	1696.8	*	1	0921	562	305.	0.1	1698.9	*	1	1521	922	0.	0.0	1694.9
1	0322	203	207.	0.0	1696.9	*	1	0922	563	302.	0.1	1698.9	*	1	1522	923	0.	0.0	1694.9
1	0323	204	211.	0.0	1697.0	*	1	0923	564	299.	0.1	1698.9	*	1	1523	924	0.	0.0	1694.9
1	0324	205	144.	0.0	1697.0	*	1	0924	565	296.	0.1	1698.8	*	1	1524	925	0.	0.0	1694.9
1	0325	206	241.	0.0	1698.3	*	1	0925	566	293.	0.1	1698.8	*	1	1525	926	0.	0.0	1694.9
1	0326	207	222.	0.0	1698.1	*	1	0926	567	289.	0.1	1698.8	*	1	1526	927	0.	0.0	1694.9
1	0327	208	228.	0.0	1698.1	*	1	0927	568	286.	0.1	1698.7	*	1	1527	928	0.	0.0	1694.9
1	0328	209	233.	0.0	1698.2	*	1	0928	569	283.	0.1	1698.7	*	1	1528	929	0.	0.0	1694.9
1	0329	210	239.	0.0	1698.3	*	1	0929	570	280.	0.1	1698.7	*	1	1529	930	0.	0.0	1694.9
1	0330	211	245.	0.0	1698.3	*	1	0930	571	277.	0.1	1698.6	*	1	1530	931	0.	0.0	1694.9
1	0331	212	252.	0.0	1698.4	*	1	0931	572	274.	0.1	1698.6	*	1	1531	932	0.	0.0	1694.9
1	0332	213	262.	0.0	1698.5	*	1	0932	573	271.	0.1	1698.6	*	1	1532	933	0.	0.0	1694.9
1	0333	214	274.	0.1	1698.6	*	1	0933	574	268.	0.1	1698.6	*	1	1533	934	0.	0.0	1694.9
1	0334	215	291.	0.1	1698.8	*	1	0934	575	265.	0.1	1698.5	*	1	1534	935	0.	0.0	1694.9
1	0335	216	311.	0.1	1699.0	*	1	0935	576	263.	0.0	1698.5	*	1	1535	936	0.	0.0	1694.9
1	0336	217	325.	0.1	1699.1	*	1	0936	577	260.	0.0	1698.5	*	1	1536	937	0.	0.0	1694.9
1	0337	218	345.	0.1	1699.3	*	1	0937	578	257.	0.0	1698.4	*	1	1537	938	0.	0.0	1694.9
1	0338	219	369.	0.2	1699.6	*	1	0938	579	254.	0.0	1698.4	*	1	1538	939	0.	0.0	1694.9
1	0339	220	396.	0.2	1699.8	*	1	0939	580	251.	0.0	1698.4	*	1	1539	940	0.	0.0	1694.9
1	0340	221	419.	0.3	1700.0	*	1	0940	581	249.	0.0	1698.4	*	1	1540	941	0.	0.0	1694.9
1	0341	222	436.	0.3	1700.2	*	1	0941	582	246.	0.0	1698.3	*	1	1541	942	0.	0.0	1694.9
1	0342	223	457.	0.4	1700.4	*	1	0942	583	243.	0.0	1698.3	*	1	1542	943	0.	0.0	1694.9
1	0343	224	480.	0.5	1700.7	*	1	0943	584	241.	0.0	1698.3	*	1	1543	944	0.	0.0	1694.9
1	0344	225	506.	0.6	1700.9	*	1	0944	585	238.	0.0	1698.3	*	1	1544	945	0.	0.0	1694.9
1	0345	226	533.	0.7	1701.2	*	1	0945	586	235.	0.0	1698.2	*	1	1545	946	0.	0.0	1694.9
1	0346	227	563.	0.8	1701.5	*	1	0946	587	233.	0.0	1698.2	*	1	1546	947	0.	0.0	1694.9
1	0347	228	595.	0.9	1701.8	*	1	0947	588	231.	0.0	1698.2	*	1	1547	948	0.	0.0	1694.9
1	0348	229	620.	1.0	1702.1	*	1	0948	589	228.	0.0	1698.2	*	1	1548	949	0.	0.0	1694.9
1	0349	230	636.	1.2	1702.3	*	1	0949	590	226.	0.0	1698.1	*	1	1549	950	0.	0.0	1694.9
1	0350	231	656.	1.4	1702.6	*	1	0950	591	223.	0.0	1698.1	*	1	1550	951	0.	0.0	1694.9
1	0351	232	679.	1.6	1702.9	*	1	0951	592	221.	0.0	1698.1	*	1	1551	952	0.	0.0	1694.9
1	0352	233	704.	1.8	1703.3	*	1	0952	593	218.	0.0	1698.1	*	1	1552	953	0.	0.0	1694.9
1	0353	234	731.	2.1	1703.7	*	1	0953	594	216.	0.0	1698.0	*	1	1553	954	0.	0.0	1694.9
1	0354	235	754.	2.4	1704.0	*	1	0954	595	214.	0.0	1698.0	*	1	1554	955	0.	0.0	1694.9
1	0355	236	763.	2.7	1704.2	*	1	0955	596	211.	0.0	1698.0	*	1	1555	956	0.	0.0	1694.9
1	0356	237	774.	3.1	1704.3	*	1	0956	597	208.	0.0	1697.9	*	1	1556	957	0.	0.0	1694.9
1	0357	238	785.	3.5	1704.5	*	1	0957	598	206.	0.0	1697.9	*	1	1557	958	0.	0.0	1694.9
1	0358	239	797.	3.9	1704.7	*	1	0958	599	203.	0.0	1697.9	*	1	1558	959	0.	0.0	1694.9
1	0359	240	811.	4.4	1704.9	*	1	0959	600	201.	0.0	1697.8	*	1	1559	960	0.	0.0	1694.9
1	0400	241	826.	4.9	1705.1	*	1	1000	601	199.	0.0	1697.8	*	1	1600	961	0.	0.0	1694.9
1	0401	242	841.	5.5	1705.3	*	1	1001	602	196.	0.0	1697.8	*	1	1601	962	0.	0.0	1694.9
1	0402	243	858.	6.1	1705.6	*	1	1002	603	194.	0.0	1697.7	*	1	1602	963	0.	0.0	1694.9
1	0403	244	876.	6.7	1705.8	*	1	1003	604	192.	0.0	1697.7	*	1	1603	964	0.	0.0	1694.9
1	0404	245	891.	7.4	1706.0	*	1	1004	605	190.	0.0	1697.7	*	1	1604	965	0.	0.0	1694.9
1	0405	246	896.	8.1	1706.2	*	1	1005	606	187.	0.0	1697.6	*	1	1605	966	0.	0.0	1694.9
1	0406	247	902.	8.8	1706.3	*	1	1006	607	185.	0.0	1697.6	*	1	1606	967	0.	0.0	1694.9
1	0407	248	908.	9.6	1706.4	*	1	1007	608	183.	0.0	1697.6	*	1	1607	968	0.	0.0	1694.9
1	0408	249	914.	10.3	1706.5	*	1	1008	609	181.	0.0	1697.6	*	1	1608	969	0.	0.0	1694.9
1	0409	250	921.	11.1	1706.7	*	1	1009	610	179.	0.0	1697.5	*	1	1609	970	0.	0.0	1694.9
1	0410	251	927.	11.9	1706.8	*	1	1010	611	176.	0.0	1697.5	*	1	1610	971	0.	0.0	1694.9
1	0411	252	934.	12.7	1707.0	*	1	1011	612	174.	0.0	1697.5	*	1	1611	972	0.	0.0	1694.9
1	0412	253	940.	13.5	1707.1	*	1	1012	613	172.	0.0	1697.4	*	1	1612	973	0.	0.0	1694.9
1	0413	254	947.	14.4	1707.2	*	1	1013	614	170.	0.0	1697.4	*	1	1613	974	0.	0.0	1694.9
1	0414	255	953.	15.2	1707.4	*	1	1014	615	168.	0.0	1697.4	*	1	1614	975	0.	0.0	1694.9
1	0415	256	960.	16.0	1707.5	*	1	1015	616	166.	0.0	1697.3	*	1	1615	976	0.	0.0	1694.9
1	0416	257	966.	16.8	1707.6	*	1	1016	617	164.	0.0	1697.3	*	1	1616	977	0.	0.0	1694.9
1	0417	258	973.	17.6	1707.8	*	1	1017	618	163.	0.0	1697.3	*	1	1617	978	0.	0.0	1694.9
1	0418	259	979.	18.4	1707.9	*	1	1018	619	162.	0.0	1697.3	*	1	1618	979	0.	0.0	1694.9
1	0419	260	984.	19.1	1708.0	*	1	1019	620	159.	0.0	1697.2	*	1	1619	980	0.	0.0	1694.9
1	0420	261	988.	19.9	1708.1	*	1	1020	621	157.	0.0	1697.2	*	1	1620	981	0.	0.0	1694.9
1	0421	262	992.	20.6	1708.2	*	1	1021	622	155.	0.0	1697.2	*	1	1621	982	0.	0.0	1694.9
1	0422	263	996.	21.3	1708.3	*	1	1022	623	154.	0.0	1697.2	*	1	1622	983	0.	0.0	1694.9
1	0423	264	1000.	22.0	1708.4	*	1	1023	624	153.	0.0	1697.1	*	1	1623	984	0.	0.0	1694.9
1	0424	265	1003.	22.6	1708.4	*	1	1024	625	150.	0.0	1697.1	*	1	1624	985	0.	0.0	1694.9
1	0425	266	1006.	23.2	1708.5	*	1	1025	626	148.	0.0	1697.1	*	1	1625	986	0.	0.0	1694.9
1	0426	267	1009.	23.7	1708.6	*	1	1026	627	147.	0.0	1697.1	*	1	1626	987	0.	0.0	1694.9
1	0427	268	1012.	24.3	1708.6	*	1	1027	628	146.	0.0	1697.0	*	1	1627	988	0.	0.0	1694.9
1	0428	269	1015.	24.8	1708.7	*	1	1028	629	143.	0.0	1697.0	*	1	1628	989	0.	0.0	1694.9
1	0429	270	1017.	25.3	1708.7	*	1	1029	630	141.	0.0	1697.0	*	1	1629	990	0.	0.0	1694.9
1	0430	271	1020.	25.7	1708.8	*	1	1030	631	139.	0.0	1697.0	*	1	1630	991	0.	0.0	1694.9
1	0431	272	1022.	26.1	1708.8	*	1	1031	632	138.	0.0	1696.9	*	1	1631	992	0.	0.0	1694.9
1	0432	273	1024.	26.5	1708.9	*	1	1032	633	136.	0.0	1696.9	*	1	1632	993	0.	0.0	1694.9
1	0433	274	1026.	26.9	1708.9	*	1	1033	634	134.	0.0	1696.9	*	1	1633	994	0.	0.0	1694.9
1	0434	275	1028.	27.2	1709.0	*	1	1034	635	133.	0.0	1696.9	*	1	1634	995	0.	0.0	1694.9
1	0435	276	1030.	27.5	1709.0	*	1	1035	636	131.	0.0	1696.8	*	1	1635	996	0.	0.0	1694.9
1	0436	277	1031.	27.8	1709.0	*	1	1036	637	129.	0.0	1696.8	*	1	1636	997	0.	0.0	1694.9
1	0437	278	1033.	28.1	1709.1	*	1	1037	638	128.	0.0	1696.8	*	1	1637	998	0.	0.0	1694.9
1	0438	279	1034.	28.3	1709.1	*	1	1038	639	126.	0.0	1696.8	*	1	1638	999	0.	0.0	1694.9
1	0439	280	1035.	28.5	1709.1	*	1	1039	640	125.	0.0	1696.8	*	1	16391000		0.	0.0	1694.9

1	0440	281	1036.	28.7	1709.1	*	1	1040	641	123.	0.0	1696.7	*	1	16401001	0.	0.0	1694.9
1	0441	282	1037.	28.8	1709.2	*	1	1041	642	121.	0.0	1696.7	*	1	16411002	0.	0.0	1694.9
1	0442	283	1037.	28.9	1709.2	*	1	1042	643	120.	0.0	1696.7	*	1	16421003	0.	0.0	1694.9
1	0443	284	1038.	29.0	1709.2	*	1	1043	644	118.	0.0	1696.7	*	1	16431004	0.	0.0	1694.9
1	0444	285	1038.	29.0	1709.2	*	1	1044	645	117.	0.0	1696.6	*	1	16441005	0.	0.0	1694.9
1	0445	286	1038.	29.1	1709.2	*	1	1045	646	116.	0.0	1696.6	*	1	16451006	0.	0.0	1694.9
1	0446	287	1038.	29.1	1709.2	*	1	1046	647	114.	0.0	1696.6	*	1	16461007	0.	0.0	1694.9
1	0447	288	1038.	29.1	1709.2	*	1	1047	648	113.	0.0	1696.6	*	1	16471008	0.	0.0	1694.9
1	0448	289	1038.	29.1	1709.2	*	1	1048	649	112.	0.0	1696.6	*	1	16481009	0.	0.0	1694.9
1	0449	290	1038.	29.0	1709.2	*	1	1049	650	110.	0.0	1696.5	*	1	16491010	0.	0.0	1694.9
1	0450	291	1038.	29.0	1709.2	*	1	1050	651	109.	0.0	1696.5	*	1	16501011	0.	0.0	1694.9
1	0451	292	1037.	28.9	1709.2	*	1	1051	652	108.	0.0	1696.5	*	1	16511012	0.	0.0	1694.9
1	0452	293	1037.	28.9	1709.2	*	1	1052	653	107.	0.0	1696.5	*	1	16521013	0.	0.0	1694.9
1	0453	294	1037.	28.8	1709.2	*	1	1053	654	106.	0.0	1696.5	*	1	16531014	0.	0.0	1694.9
1	0454	295	1036.	28.7	1709.1	*	1	1054	655	104.	0.0	1696.5	*	1	16541015	0.	0.0	1694.9
1	0455	296	1036.	28.6	1709.1	*	1	1055	656	103.	0.0	1696.4	*	1	16551016	0.	0.0	1694.9
1	0456	297	1035.	28.5	1709.1	*	1	1056	657	102.	0.0	1696.4	*	1	16561017	0.	0.0	1694.9
1	0457	298	1035.	28.4	1709.1	*	1	1057	658	101.	0.0	1696.4	*	1	16571018	0.	0.0	1694.9
1	0458	299	1034.	28.3	1709.1	*	1	1058	659	100.	0.0	1696.4	*	1	16581019	0.	0.0	1694.9
1	0459	300	1033.	28.2	1709.1	*	1	1059	660	99.	0.0	1696.4	*	1	16591020	0.	0.0	1694.9
1	0500	301	1033.	28.1	1709.1	*	1	1100	661	98.	0.0	1696.4	*	1	17001021	0.	0.0	1694.9
1	0501	302	1032.	27.9	1709.1	*	1	1101	662	96.	0.0	1696.3	*	1	17011022	0.	0.0	1694.9
1	0502	303	1031.	27.8	1709.0	*	1	1102	663	95.	0.0	1696.3	*	1	17021023	0.	0.0	1694.9
1	0503	304	1031.	27.7	1709.0	*	1	1103	664	93.	0.0	1696.3	*	1	17031024	0.	0.0	1694.9
1	0504	305	1030.	27.5	1709.0	*	1	1104	665	92.	0.0	1696.3	*	1	17041025	0.	0.0	1694.9
1	0505	306	1029.	27.4	1709.0	*	1	1105	666	90.	0.0	1696.3	*	1	17051026	0.	0.0	1694.9
1	0506	307	1028.	27.3	1709.0	*	1	1106	667	89.	0.0	1696.2	*	1	17061027	0.	0.0	1694.9
1	0507	308	1027.	27.1	1709.0	*	1	1107	668	87.	0.0	1696.2	*	1	17071028	0.	0.0	1694.9
1	0508	309	1027.	27.0	1708.9	*	1	1108	669	85.	0.0	1696.2	*	1	17081029	0.	0.0	1694.9
1	0509	310	1026.	26.8	1708.9	*	1	1109	670	84.	0.0	1696.2	*	1	17091030	0.	0.0	1694.9
1	0510	311	1025.	26.7	1708.9	*	1	1110	671	82.	0.0	1696.1	*	1	17101031	0.	0.0	1694.9
1	0511	312	1024.	26.5	1708.9	*	1	1111	672	80.	0.0	1696.1	*	1	17111032	0.	0.0	1694.9
1	0512	313	1023.	26.3	1708.9	*	1	1112	673	79.	0.0	1696.1	*	1	17121033	0.	0.0	1694.9
1	0513	314	1022.	26.2	1708.8	*	1	1113	674	77.	0.0	1696.1	*	1	17131034	0.	0.0	1694.9
1	0514	315	1022.	26.0	1708.8	*	1	1114	675	76.	0.0	1696.1	*	1	17141035	0.	0.0	1694.9
1	0515	316	1021.	25.9	1708.8	*	1	1115	676	74.	0.0	1696.0	*	1	17151036	0.	0.0	1694.9
1	0516	317	1020.	25.7	1708.8	*	1	1116	677	73.	0.0	1696.0	*	1	17161037	0.	0.0	1694.9
1	0517	318	1019.	25.5	1708.8	*	1	1117	678	71.	0.0	1696.0	*	1	17171038	0.	0.0	1694.9
1	0518	319	1018.	25.4	1708.8	*	1	1118	679	70.	0.0	1696.0	*	1	17181039	0.	0.0	1694.9
1	0519	320	1017.	25.2	1708.7	*	1	1119	680	69.	0.0	1696.0	*	1	17191040	0.	0.0	1694.9
1	0520	321	1016.	25.0	1708.7	*	1	1120	681	68.	0.0	1695.9	*	1	17201041	0.	0.0	1694.9
1	0521	322	1015.	24.9	1708.7	*	1	1121	682	67.	0.0	1695.9	*	1	17211042	0.	0.0	1694.9
1	0522	323	1014.	24.7	1708.7	*	1	1122	683	66.	0.0	1695.9	*	1	17221043	0.	0.0	1694.9
1	0523	324	1013.	24.5	1708.7	*	1	1123	684	65.	0.0	1695.9	*	1	17231044	0.	0.0	1694.9
1	0524	325	1012.	24.3	1708.6	*	1	1124	685	64.	0.0	1695.9	*	1	17241045	0.	0.0	1694.9
1	0525	326	1012.	24.2	1708.6	*	1	1125	686	63.	0.0	1695.9	*	1	17251046	0.	0.0	1694.9
1	0526	327	1011.	24.0	1708.6	*	1	1126	687	61.	0.0	1695.8	*	1	17261047	0.	0.0	1694.9
1	0527	328	1010.	23.8	1708.6	*	1	1127	688	60.	0.0	1695.8	*	1	17271048	0.	0.0	1694.9
1	0528	329	1009.	23.7	1708.6	*	1	1128	689	59.	0.0	1695.8	*	1	17281049	0.	0.0	1694.9
1	0529	330	1008.	23.5	1708.5	*	1	1129	690	58.	0.0	1695.8	*	1	17291050	0.	0.0	1694.9
1	0530	331	1007.	23.3	1708.5	*	1	1130	691	57.	0.0	1695.8	*	1	17301051	0.	0.0	1694.9
1	0531	332	1006.	23.1	1708.5	*	1	1131	692	56.	0.0	1695.8	*	1	17311052	0.	0.0	1694.9
1	0532	333	1005.	23.0	1708.5	*	1	1132	693	55.	0.0	1695.7	*	1	17321053	0.	0.0	1694.9
1	0533	334	1004.	22.8	1708.5	*	1	1133	694	54.	0.0	1695.7	*	1	17331054	0.	0.0	1694.9
1	0534	335	1003.	22.6	1708.4	*	1	1134	695	54.	0.0	1695.7	*	1	17341055	0.	0.0	1694.9
1	0535	336	1002.	22.5	1708.4	*	1	1135	696	53.	0.0	1695.7	*	1	17351056	0.	0.0	1694.9
1	0536	337	1001.	22.3	1708.4	*	1	1136	697	52.	0.0	1695.7	*	1	17361057	0.	0.0	1694.9
1	0537	338	1000.	22.1	1708.4	*	1	1137	698	51.	0.0	1695.7	*	1	17371058	0.	0.0	1694.9
1	0538	339	999.	21.9	1708.4	*	1	1138	699	50.	0.0	1695.7	*	1	17381059	0.	0.0	1694.9
1	0539	340	999.	21.8	1708.3	*	1	1139	700	49.	0.0	1695.6	*	1	17391060	0.	0.0	1694.9
1	0540	341	998.	21.6	1708.3	*	1	1140	701	49.	0.0	1695.6	*	1	17401061	0.	0.0	1694.9
1	0541	342	997.	21.4	1708.3	*	1	1141	702	48.	0.0	1695.6	*	1	17411062	0.	0.0	1694.9
1	0542	343	996.	21.2	1708.3	*	1	1142	703	47.	0.0	1695.6	*	1	17421063	0.	0.0	1694.9
1	0543	344	995.	21.1	1708.3	*	1	1143	704	46.	0.0	1695.6	*	1	17431064	0.	0.0	1694.9
1	0544	345	994.	20.9	1708.2	*	1	1144	705	46.	0.0	1695.6	*	1	17441065	0.	0.0	1694.9
1	0545	346	993.	20.7	1708.2	*	1	1145	706	45.	0.0	1695.6	*	1	17451066	0.	0.0	1694.9
1	0546	347	992.	20.6	1708.2	*	1	1146	707	44.	0.0	1695.6	*	1	17461067	0.	0.0	1694.9
1	0547	348	991.	20.4	1708.2	*	1	1147	708	44.	0.0	1695.6	*	1	17471068	0.	0.0	1694.9
1	0548	349	990.	20.2	1708.2	*	1	1148	709	43.	0.0	1695.6	*	1	17481069	0.	0.0	1694.9
1	0549	350	989.	20.0	1708.1	*	1	1149	710	42.	0.0	1695.5	*	1	17491070	0.	0.0	1694.9
1	0550	351	988.	19.9	1708.1	*	1	1150	711	42.	0.0	1695.5	*	1	17501071	0.	0.0	1694.9
1	0551	352	987.	19.7	1708.1	*	1	1151	712	41.	0.0	1695.5	*	1	17511072	0.	0.0	1694.9
1	0552	353	986.	19.5	1708.1	*	1	1152	713	41.	0.0	1695.5	*	1	17521073	0.	0.0	1694.9
1	0553	354	986.	19.4	1708.1	*	1	1153	714	40.	0.0	1695.5	*	1	17531074	0.	0.0	1694.9
1	0554	355	985.	19.2	1708.0	*	1	1154	715	39.	0.0	1695.5	*	1	17541075	0.	0.0	1694.9
1	0555	356	984.	19.0	1708.0	*	1	1155	716	39.	0.0	1695.5	*	1	17551076	0.	0.0	1694.9
1	0556	357	983.	18.8	1708.0	*	1	1156	717	38.	0.0	1695.5	*	1	17561077	0.	0.0	1694.9
1	0557	358	981.	18.7	1708.0	*	1	1157	718	38.	0.0	1695.5	*	1	17571078	0.	0.0	1694.9
1	0558	359	980.	18.5	1707.9	*	1	1158	719	37.	0.0	1695.5	*	1	17581079	0.	0.0	1694.9
1	0559	360	979.	18.3	1707.9	*	1	1159	720	37.	0.0	1695.5	*	1	17591080	0.	0.0	1694.9
						*							*					

****

PEAK FLOW	TIME		MAXIMUM AVERAGE FLOW			
			6-HR	24-HR	72-HR	17.98-HR
+ (CFS)	(HR)					
		(CFS)				
+ 1038.	4.77		756.	288.	288.	288.
		(INCHES)	0.985	1.124	1.124	1.124
		(AC-FT)	375.	427.	427.	427.

PEAK STORAGE	TIME	MAXIMUM AVERAGE STORAGE			
		6-HR	24-HR	72-HR	17.98-HR
+ (AC-FT)	(HR)				

29.	4.77	10.	3.	3.	3.

PEAK STAGE	TIME	MAXIMUM AVERAGE STAGE			
		6-HR	24-HR	72-HR	17.98-HR
+ (FEET)	(HR)				
1709.18	4.77	1704.66	1698.68	1698.68	1698.68

CUMULATIVE AREA = 7.13 SQ MI

1

RUNOFF SUMMARY
FLOW IN CUBIC FEET PER SECOND
TIME IN HOURS, AREA IN SQUARE MILES

	OPERATION	STATION	PEAK FLOW	TIME OF PEAK	AVERAGE FLOW FOR MAXIMUM PERIOD			BASIN AREA	MAXIMUM STAGE	TIME OF MAX STAGE
+					6-HOUR	24-HOUR	72-HOUR			
	HYDROGRAPH AT									
+		C599I	1549.	4.27	756.	288.	288.	7.13		
	ROUTED TO									
+		C599O	1038.	4.77	756.	288.	288.	7.13		
+									1709.18	4.77

*** NORMAL END OF HEC-1 ***

100-Year, Future Condition (6-Hour)

```
1****************************************                                    ****************************************
*                                      *                                    *                                      *
*   FLOOD HYDROGRAPH PACKAGE  (HEC-1)  *                                    *   U.S. ARMY CORPS OF ENGINEERS       *
*              MAY   1991              *                                    *   HYDROLOGIC ENGINEERING CENTER      *
*            VERSION 4.0.1E            *                                    *         609 SECOND STREET            *
*                                      *                                    *      DAVIS, CALIFORNIA 95616         *
*  RUN DATE  02/16/:0  TIME  14:54:13  *                                    *          (916) 551-1748              *
*                                      *                                    *                                      *
****************************************                                    ****************************************
```

```
X     X  XXXXXXX   XXXXX          X
X     X  X        X     X        XX
X     X  X        X              X
XXXXXXX  XXXX     X        XXXXX X
X     X  X        X              X
X     X  X        X     X        X
X     X  XXXXXXX   XXXXX        XXX
```

THIS PROGRAM REPLACES ALL PREVIOUS VERSIONS OF HEC-1 KNOWN AS HEC1 (JAN 73), HEC1GS, HEC1DB, AND HEC1KW.

THE DEFINITIONS OF VARIABLES -RTIMP- AND -RTIOR- HAVE CHANGED FROM THOSE USED WITH THE 1973-STYLE INPUT STRUCTURE.
THE DEFINITION OF -AMSKK- ON RM-CARD WAS CHANGED WITH REVISIONS DATED 28 SEP 81. THIS IS THE FORTRAN77 VERSION
NEW OPTIONS: DAMBREAK OUTFLOW SUBMERGENCE , SINGLE EVENT DAMAGE CALCULATION, DSS:WRITE STAGE FREQUENCY,
DSS:READ TIME SERIES AT DESIRED CALCULATION INTERVAL LOSS RATE:GREEN AND AMPT INFILTRATION
KINEMATIC WAVE: NEW FINITE DIFFERENCE ALGORITHM

1 HEC-1 INPUT PAGE 1

```
LINE          ID.......1.......2.......3.......4.......5.......6.......7.......8.......9......10

  1           ID   ACCOUNTS FOR TRASH RACK LOSSES AT BOTH OUTLET WORKS INLETS - WITH NO CLOGGING
  2           ID   FUTURE CONDITIONS
  3           ID   STANTEC FILENAME:100_6-A.IH1 - 100-YEAR, 6-HOUR STORM
  4           ID   ALTERNATIVE "G" - 11-99 BY RJS
  5           ID
  6           ID   GOLDEN EAGLE PARK DAM - MODEL WITH REVISED STAGE-STORAGE CURVE 3/99
              * ****************************************************************************
              *   100-Year, 6-Hour Storm
              * ****************************************************************************
              *
              *
              *
              *  Modifications include a new stage-storage based on Stantec survey 1999
              *  Stage-storage reflects changes to park grading behind the existing GEPD.
              *  This grading ocurred since the time of the original ADMP 6/30/97.  The
              *  stage discharge curve represents the operation of the modified principal
              *  outlet works, the new auxiliary outlet works and the enlarged emergency
              *  spillway.
              *
  7           IT       1                    1080
  8           IO       5
  9           IN      15
              *
              *

 10           KK   C559I
 11           KM    INFLOW FROM UPPER WATERSHED AS DEFINED BY GVSCE HEC MODEL FU100-24.IH1 1994
 12           IN       1
 13           KO       1                              21
 14           BA    7.13
 15           QI       0       0       0       1       1       2       2       3       3       4
 16           QI       4       4       5       5       6       6       6       7       7       7
 17           QI       7       7       8       8       9      10      11      11      12      13
 18           QI      14      15      16      17      18      19      20      22      23      24
 19           QI      24      25      26      27      28      29      30      31      31      33
 20           QI      34      35      36      38      39      40      41      43      44      46
 21           QI      47      48      50      51      52      54      55      56      58      59
 22           QI      60      62      63      65      66      68      70      71      73      75
 23           QI      76      78      80      82      84      86      88      91      93      96
 24           QI      98     101     104     106     109     111     114     117     120     122
 25           QI     125     127     130     132     135     137     139     141     144     146
 26           QI     148     150     152     154     156     159     161     163     165     167
 27           QI     169     171     172     174     176     178     180     182     183     185
 28           QI     187     189     190     192     193     195     197     198     200     201
 29           QI     202     204     205     207     208     209     210     211     212     213
 30           QI     214     215     216     217     218     219     220     221     222     223
 31           QI     224     225     226     227     228     229     230     231     232     233
 32           QI     234     235     237     238     239     240     241     242     244     245
 33           QI     246     247     249     251     253     256     259     262     265     268
 34           QI     271     274     277     281     284     287     292     298     307     320
 35           QI     335     351     367     383     400     417     435     453     472     490
 36           QI     510     532     560     598     648     704     764     824     883     940
 37           QI     997    1053    1109    1165    1221    1279    1338    1401    1471    1544
 38           QI    1620    1697    1775    1852    1927    1998    2066    2128    2182    2232
 39           QI    2282    2331    2374    2407    2429    2445    2456    2464    2470    2473
 40           QI    2474    2466    2453    2438    2423    2409    2392    2369    2339    2302
 41           QI    2261    2219    2177    2135    2094    2053    2008    1953    1908    1871
 42           QI    1839    1811    1788    1770    1756    1746    1741    1738    1737    1736
 43           QI    1735    1732    1728    1729    1735    1746    1759    1775    1789    1797
 44           QI    1799    1795    1784    1764    1738    1718    1700    1681    1662    1642
 45           QI    1622    1601    1580    1559    1537    1516    1496    1475    1456    1436
 46           QI    1417    1398    1380    1362    1345    1329    1313    1297    1282    1267
```

```
47          QI    1253    1239    1226    1213    1200    1189    1177    1165    1154    1142
48          QI    1131    1120    1109    1099    1090    1081    1073    1066    1059    1054
49          QI    1049    1044    1040    1036    1033    1029    1026    1023    1021    1018
50          QI    1016    1013    1011    1009    1008    1006    1005    1004    1003    1002
51          QI    1002    1001    1001    1000     999     998     997     996     995     993
52          QI     992     991     990     989     988     987     986     984     983     982
53          QI     981     980     978     977     976     975     973     972     971     969
54          QI     968     967     966     964     963     962     961     960     959     958
55          QI     957     956     955     954     953     952     951     950     949     949
56          QI     948     947     946     946     945     944     944     943     942     942
57          QI     941     940     940     939     938     938     937     936     936     935
58          QI     934     934     933     932     932     931     931     930     929     929
59          QI     928     927     926     926     925     924     923     923     922     921
60          QI     921     920     919     918     918     917     916     915     915     914
61          QI     913     912     912     911     910     909     908     907     906     906
62          QI     905     904     903     902     901     900     899     898     897     896
63          QI     894     893     892     891     890     889     888     886     885     884
64          QI     883     882     880     879     878     876     875     874     873     871
65          QI     870     869     867     866     865     863     862     861     859     858
66          QI     857     855     854     853     851     850     848     847     845     843
67          QI     841     839     837     834     831     829     826     823     820     817
68          QI     814     810     807     804     800     797     793     789     785     781
69          QI     776     772     767     763     759     755     751     746     742     737
70          QI     733     728     723     719     714     709     704     699     694     689
71          QI     685     680     676     671     667     663     658     654     650     646
72          QI     642     639     635     632     628     625     622     619     615     612
73          QI     608     605     602     599     595     592     590     587     585     583
74          QI     580     578     576     574     572     570     568     566     563     561
75          QI     559     556     554     552     550     548     546     544     541     539
76          QI     537     535     533     530     528     526     524     521     519     517
77          QI     515     513     511     508     506     504     503     501     499     497
78          QI     495     493     491     490     488     486     484     483     481     479
79          QI     477     476     474     473     471     469     468     466     465     464
80          QI     462     461     459     458     456     455     454     452     451     449
81          QI     448     447     445     444     443     441     440     439     437     436
82          QI     435     433     432     430     429     427     426     424     423     421
83          QI     419     416     414     411     408     405     402     399     396     393
84          QI     390     387     384     381     378     375     371     368     365     362
85          QI     360     357     354     351     348     346     343     340     338     335
86          QI     332     330     327     324     322     319     316     313     311     308
87          QI     305     301     298     295     292     289     286     283     280     277
88          QI     274     271     268     265     263     260     257     255     252     250
89          QI     248     245     243     241     239     237     235     233     231     229
90          QI     227     225     223     221     219     217     215     213     211     209
91          QI     207     205     203     201     199     197     195     193     192     190
92          QI     188     187     185     184     182     181     179     178     177     175
93          QI     174     173     171     170     168     167     166     164     163     162
94          QI     160     159     158     156     155     154     153     151     150     149
95          QI     148     147     146     145     144     143     141     140     139     138
96          QI     137     136     135     134     133     132     131     130     129     128
97          QI     127     126     125     125     124     123     122     122     121     120
98          QI     119     119     118     117     116     115     115     114     113     112
99          QI     111     110     109     108     107     107     106     105     104     103
100         QI     102     101     100      99      98      97      96      96      95      94
101         QI      93      92      91      90      89      88      87      86      85      83
102         QI      82      81      79      78      76      75      73      72      71      69
103         QI      68      67      66      64      63      62      61      60      59      58
104         QI      57      56      55      54      54      53      52      51      50      50
105         QI      49      48      47      47      46      46      46      45      45      44
106         QI      44      43      43      42      42      41      41      40      40      39
107         QI      39      38      38      37      37      37      36      36      35      35
108         QI      35      34      34      34      33      33      32      32      32      31
109         QI      31      31      30      30      30      29      29      28      28      27
110         QI      27      26      25      24      23      23      22      21      20      19
111         QI      18      18      17      16      15      15      14      14      13      12
112         QI      12      11      11      10      10       9       9       9       8       8
113         QI       8       7       7       7       6       6       6       6       5       5
114         QI       5       5       4       4       4       4       4       4       3       3
115         QI       3       3       3       3       3       3       2       2       2       2
116         QI       2       2       2       2       2       2       2       1       1       1
117         QI       1       1       1       1       1       1       1       1       1       1
118         QI       1       1       1       1       1       1       1       1       1       1
119         QI       1       1       1       0       0       0       0       0       0       0
120         QI       0       0       0       0       0       0       0       0       0       0
121         QI       0       0       0       0       0       0       0       0       0       0
122         QI       0       0       0       0       0       0       0       0       0       0
            *
            * *
            * * C599I is the total flow in Ashbrook Wash upstream of DAM 4
            * *
            *

123         KK   C5990
124         KO       1                                  21
125         KM      Reservoir route at C599 (Dam 4 - GEPD). New Stage-Storage Curve 3/4/99
126         RS       1    ELEV  1694.7
127         SV    0.00    0.00    0.02    0.08    0.24    0.93    2.29    7.17   18.89   36.08
128         SV   58.41   86.41   99.21  105.97  112.96  120.18   127.6  146.86  154.86  158.92
129         SE  1695.0    1697    1698    1699    1700    1702    1704    1706    1708    1710
130         SE    1712    1714  1714.8  1715.2  1715.6    1716  1716.4  1717.4  1717.8    1718
131         SQ       0      72     213     414     613     752     889     983    1076    1168
132         SQ    1201    1248    1267    1280    2080    6496   10412   15018   18426   20223
133         SE  1695.0  1696.0  1698.0  1700.0  1702.0  1704.0  1706.0  1708.0  1710.0  1712.0
134         SE  1712.8 1714.00 1714.50 1714.86 1715.00  1717.5  1719.0  1720.5  1721.5  1722.0
135         RL                   0.97
            *
            * * End Basin 210.  Start Basin 211
            * *
            *
136         ZZ
```

```
1*****************************************
*                                       *
*   FLOOD HYDROGRAPH PACKAGE  (HEC-1)   *
*              MAY   1991               *
*           VERSION 4.0.1E              *
*                                       *
*  RUN DATE  02/16/:0  TIME  14:54:13   *
*                                       *
*****************************************
```

```
*************************************
*                                   *
*    U.S. ARMY CORPS OF ENGINEERS   *
*    HYDROLOGIC ENGINEERING CENTER  *
*          609 SECOND STREET        *
*       DAVIS, CALIFORNIA 95616     *
*           (916) 551-1748          *
*                                   *
*************************************
```

```
                    ACCOUNTS FOR TRASH RACK LOSSES AT THE PRINCIPAL INLET - NO CLOGG
                    FUTURE CONDITIONS
                    STANTEC FILENAME:100_6-A.IH1 - 100-YEAR, 6-HOUR STORM
                    ALTERNATIVE "G" - 11-99 BY RJS

                    GOLDEN EAGLE PARK DAM - MODEL WITH REVISED STAGE-STORAGE CURVE 3/99

  8 IO          OUTPUT CONTROL VARIABLES
                      IPRNT          5  PRINT CONTROL
                      IPLOT          0  PLOT CONTROL
                      QSCAL         0.  HYDROGRAPH PLOT SCALE

    IT          HYDROGRAPH TIME DATA
                       NMIN          1  MINUTES IN COMPUTATION INTERVAL
                      IDATE      1   0  STARTING DATE
                      ITIME       0000  STARTING TIME
                         NQ       1080  NUMBER OF HYDROGRAPH ORDINATES
                     NDDATE      1   0  ENDING DATE
                     NDTIME       1759  ENDING TIME
                      ICENT         19  CENTURY MARK

                 COMPUTATION INTERVAL    0.02 HOURS
                      TOTAL TIME BASE   17.98 HOURS

          ENGLISH UNITS
               DRAINAGE AREA          SQUARE MILES
               PRECIPITATION DEPTH    INCHES
               LENGTH, ELEVATION      FEET
               FLOW                   CUBIC FEET PER SECOND
               STORAGE VOLUME         ACRE-FEET
               SURFACE AREA           ACRES
               TEMPERATURE            DEGREES FAHRENHEIT


*** *** *** *** *** *** *** *** *** *** *** *** *** *** *** *** *** *** *** *** *** *** *** *** *** *** *** *** *** *** *** *** *** *** *** ***


            **************
            *            *
 10 KK      *     C559I  *
            *            *
            **************

 13 KO          OUTPUT CONTROL VARIABLES
                      IPRNT          1  PRINT CONTROL
                      IPLOT          0  PLOT CONTROL
                      QSCAL         0.  HYDROGRAPH PLOT SCALE
                      IPNCH          0  PUNCH COMPUTED HYDROGRAPH
                       IOUT         21  SAVE HYDROGRAPH ON THIS UNIT
                      ISAV1          1  FIRST ORDINATE PUNCHED OR SAVED
                      ISAV2       1080  LAST ORDINATE PUNCHED OR SAVED
                     TIMINT      0.017  TIME INTERVAL IN HOURS


 12 IN          TIME DATA FOR INPUT TIME SERIES
                       JXMIN          1  TIME INTERVAL IN MINUTES
                      JXDATE      1   0  STARTING DATE
                      JXTIME          0  STARTING TIME

             SUBBASIN RUNOFF DATA

 14 BA          SUBBASIN CHARACTERISTICS
                       TAREA       7.13  SUBBASIN AREA
```

***

HYDROGRAPH AT STATION C559I

DA	MON	HRMN	ORD	FLOW	DA	MON	HRMN	ORD	FLOW	DA	MON	HRMN	ORD	FLOW	DA	MON	HRMN	ORD	FLOW
1		0000	1	0.	1		0430	271	1839.	1		0900	541	776.	1		1330	811	137.
1		0001	2	0.	1		0431	272	1811.	1		0901	542	772.	1		1331	812	136.
1		0002	3	0.	1		0432	273	1788.	1		0902	543	767.	1		1332	813	135.
1		0003	4	1.	1		0433	274	1770.	1		0903	544	763.	1		1333	814	134.
1		0004	5	1.	1		0434	275	1756.	1		0904	545	759.	1		1334	815	133.
1		0005	6	2.	1		0435	276	1746.	1		0905	546	755.	1		1335	816	132.
1		0006	7	2.	1		0436	277	1741.	1		0906	547	751.	1		1336	817	131.
1		0007	8	3.	1		0437	278	1738.	1		0907	548	746.	1		1337	818	130.
1		0008	9	3.	1		0438	279	1737.	1		0908	549	742.	1		1338	819	129.
1		0009	10	4.	1		0439	280	1736.	1		0909	550	737.	1		1339	820	128.
1		0010	11	4.	1		0440	281	1735.	1		0910	551	733.	1		1340	821	127.
1		0011	12	4.	1		0441	282	1732.	1		0911	552	728.	1		1341	822	126.
1		0012	13	5.	1		0442	283	1728.	1		0912	553	723.	1		1342	823	125.
1		0013	14	5.	1		0443	284	1729.	1		0913	554	719.	1		1343	824	125.
1		0014	15	6.	1		0444	285	1735.	1		0914	555	714.	1		1344	825	124.
1		0015	16	6.	1		0445	286	1746.	1		0915	556	709.	1		1345	826	123.
1		0016	17	6.	1		0446	287	1759.	1		0916	557	704.	1		1346	827	122.
1		0017	18	7.	1		0447	288	1775.	1		0917	558	699.	1		1347	828	122.
1		0018	19	7.	1		0448	289	1789.	1		0918	559	694.	1		1348	829	121.
1		0019	20	7.	1		0449	290	1797.	1		0919	560	689.	1		1349	830	120.
1		0020	21	7.	1		0450	291	1799.	1		0920	561	685.	1		1350	831	119.
1		0021	22	7.	1		0451	292	1795.	1		0921	562	680.	1		1351	832	119.
1		0022	23	8.	1		0452	293	1784.	1		0922	563	676.	1		1352	833	118.
1		0023	24	8.	1		0453	294	1764.	1		0923	564	671.	1		1353	834	117.
1		0024	25	9.	1		0454	295	1738.	1		0924	565	667.	1		1354	835	116.
1		0025	26	10.	1		0455	296	1718.	1		0925	566	663.	1		1355	836	115.
1		0026	27	11.	1		0456	297	1700.	1		0926	567	658.	1		1356	837	115.
1		0027	28	11.	1		0457	298	1681.	1		0927	568	654.	1		1357	838	114.
1		0028	29	12.	1		0458	299	1662.	1		0928	569	650.	1		1358	839	113.
1		0029	30	13.	1		0459	300	1642.	1		0929	570	646.	1		1359	840	112.
1		0030	31	14.	1		0500	301	1622.	1		0930	571	642.	1		1400	841	111.
1		0031	32	15.	1		0501	302	1601.	1		0931	572	639.	1		1401	842	110.
1		0032	33	16.	1		0502	303	1580.	1		0932	573	635.	1		1402	843	109.
1		0033	34	17.	1		0503	304	1559.	1		0933	574	632.	1		1403	844	108.
1		0034	35	18.	1		0504	305	1537.	1		0934	575	628.	1		1404	845	107.
1		0035	36	19.	1		0505	306	1516.	1		0935	576	625.	1		1405	846	107.
1		0036	37	20.	1		0506	307	1496.	1		0936	577	622.	1		1406	847	106.
1		0037	38	22.	1		0507	308	1475.	1		0937	578	619.	1		1407	848	105.
1		0038	39	23.	1		0508	309	1456.	1		0938	579	615.	1		1408	849	104.
1		0039	40	24.	1		0509	310	1436.	1		0939	580	612.	1		1409	850	103.
1		0040	41	24.	1		0510	311	1417.	1		0940	581	608.	1		1410	851	102.
1		0041	42	25.	1		0511	312	1398.	1		0941	582	605.	1		1411	852	101.
1		0042	43	26.	1		0512	313	1380.	1		0942	583	602.	1		1412	853	100.
1		0043	44	27.	1		0513	314	1362.	1		0943	584	599.	1		1413	854	99.
1		0044	45	28.	1		0514	315	1345.	1		0944	585	595.	1		1414	855	98.
1		0045	46	29.	1		0515	316	1329.	1		0945	586	592.	1		1415	856	97.
1		0046	47	30.	1		0516	317	1313.	1		0946	587	590.	1		1416	857	96.
1		0047	48	31.	1		0517	318	1297.	1		0947	588	587.	1		1417	858	96.
1		0048	49	31.	1		0518	319	1282.	1		0948	589	585.	1		1418	859	95.
1		0049	50	33.	1		0519	320	1267.	1		0949	590	583.	1		1419	860	94.
1		0050	51	34.	1		0520	321	1253.	1		0950	591	580.	1		1420	861	93.
1		0051	52	35.	1		0521	322	1239.	1		0951	592	578.	1		1421	862	92.
1		0052	53	36.	1		0522	323	1226.	1		0952	593	576.	1		1422	863	91.
1		0053	54	38.	1		0523	324	1213.	1		0953	594	574.	1		1423	864	90.
1		0054	55	39.	1		0524	325	1200.	1		0954	595	572.	1		1424	865	89.
1		0055	56	40.	1		0525	326	1189.	1		0955	596	570.	1		1425	866	88.
1		0056	57	41.	1		0526	327	1177.	1		0956	597	568.	1		1426	867	87.
1		0057	58	43.	1		0527	328	1165.	1		0957	598	566.	1		1427	868	86.
1		0058	59	44.	1		0528	329	1154.	1		0958	599	563.	1		1428	869	85.
1		0059	60	46.	1		0529	330	1142.	1		0959	600	561.	1		1429	870	83.
1		0100	61	47.	1		0530	331	1131.	1		1000	601	559.	1		1430	871	82.
1		0101	62	48.	1		0531	332	1120.	1		1001	602	556.	1		1431	872	81.
1		0102	63	50.	1		0532	333	1109.	1		1002	603	554.	1		1432	873	79.
1		0103	64	51.	1		0533	334	1099.	1		1003	604	552.	1		1433	874	78.
1		0104	65	52.	1		0534	335	1090.	1		1004	605	550.	1		1434	875	76.
1		0105	66	54.	1		0535	336	1081.	1		1005	606	548.	1		1435	876	75.
1		0106	67	55.	1		0536	337	1073.	1		1006	607	546.	1		1436	877	73.
1		0107	68	56.	1		0537	338	1066.	1		1007	608	544.	1		1437	878	72.
1		0108	69	58.	1		0538	339	1059.	1		1008	609	541.	1		1438	879	71.
1		0109	70	59.	1		0539	340	1054.	1		1009	610	539.	1		1439	880	69.
1		0110	71	60.	1		0540	341	1049.	1		1010	611	537.	1		1440	881	68.
1		0111	72	62.	1		0541	342	1044.	1		1011	612	535.	1		1441	882	67.
1		0112	73	63.	1		0542	343	1040.	1		1012	613	533.	1		1442	883	66.
1		0113	74	65.	1		0543	344	1036.	1		1013	614	530.	1		1443	884	64.
1		0114	75	66.	1		0544	345	1033.	1		1014	615	528.	1		1444	885	63.
1		0115	76	68.	1		0545	346	1029.	1		1015	616	526.	1		1445	886	62.
1		0116	77	70.	1		0546	347	1026.	1		1016	617	524.	1		1446	887	61.
1		0117	78	71.	1		0547	348	1023.	1		1017	618	521.	1		1447	888	60.
1		0118	79	73.	1		0548	349	1021.	1		1018	619	519.	1		1448	889	59.
1		0119	80	75.	1		0549	350	1018.	1		1019	620	517.	1		1449	890	58.
1		0120	81	76.	1		0550	351	1016.	1		1020	621	515.	1		1450	891	57.
1		0121	82	78.	1		0551	352	1013.	1		1021	622	513.	1		1451	892	56.
1		0122	83	80.	1		0552	353	1011.	1		1022	623	511.	1		1452	893	55.
1		0123	84	82.	1		0553	354	1009.	1		1023	624	508.	1		1453	894	54.
1		0124	85	84.	1		0554	355	1008.	1		1024	625	506.	1		1454	895	54.
1		0125	86	86.	1		0555	356	1006.	1		1025	626	504.	1		1455	896	53.
1		0126	87	88.	1		0556	357	1005.	1		1026	627	503.	1		1456	897	52.
1		0127	88	91.	1		0557	358	1004.	1		1027	628	501.	1		1457	898	51.
1		0128	89	93.	1		0558	359	1003.	1		1028	629	499.	1		1458	899	50.

1	0129	90	96.	*	1	0559	360	1002.	*	1	1029	630	497.	*	1	1459	900	50.
1	0130	91	98.	*	1	0600	361	1002.	*	1	1030	631	495.	*	1	1500	901	49.
1	0131	92	101.	*	1	0601	362	1001.	*	1	1031	632	493.	*	1	1501	902	48.
1	0132	93	104.	*	1	0602	363	1001.	*	1	1032	633	491.	*	1	1502	903	47.
1	0133	94	106.	*	1	0603	364	1000.	*	1	1033	634	490.	*	1	1503	904	47.
1	0134	95	109.	*	1	0604	365	999.	*	1	1034	635	488.	*	1	1504	905	46.
1	0135	96	111.	*	1	0605	366	998.	*	1	1035	636	486.	*	1	1505	906	46.
1	0136	97	114.	*	1	0606	367	997.	*	1	1036	637	484.	*	1	1506	907	46.
1	0137	98	117.	*	1	0607	368	996.	*	1	1037	638	483.	*	1	1507	908	45.
1	0138	99	120.	*	1	0608	369	995.	*	1	1038	639	481.	*	1	1508	909	45.
1	0139	100	122.	*	1	0609	370	993.	*	1	1039	640	479.	*	1	1509	910	44.
1	0140	101	125.	*	1	0610	371	992.	*	1	1040	641	477.	*	1	1510	911	44.
1	0141	102	127.	*	1	0611	372	991.	*	1	1041	642	476.	*	1	1511	912	43.
1	0142	103	130.	*	1	0612	373	990.	*	1	1042	643	474.	*	1	1512	913	43.
1	0143	104	132.	*	1	0613	374	989.	*	1	1043	644	473.	*	1	1513	914	42.
1	0144	105	135.	*	1	0614	375	988.	*	1	1044	645	471.	*	1	1514	915	42.
1	0145	106	137.	*	1	0615	376	987.	*	1	1045	646	469.	*	1	1515	916	41.
1	0146	107	139.	*	1	0616	377	986.	*	1	1046	647	468.	*	1	1516	917	41.
1	0147	108	141.	*	1	0617	378	984.	*	1	1047	648	466.	*	1	1517	918	40.
1	0148	109	144.	*	1	0618	379	983.	*	1	1048	649	465.	*	1	1518	919	40.
1	0149	110	146.	*	1	0619	380	982.	*	1	1049	650	464.	*	1	1519	920	39.
1	0150	111	148.	*	1	0620	381	981.	*	1	1050	651	462.	*	1	1520	921	39.
1	0151	112	150.	*	1	0621	382	980.	*	1	1051	652	461.	*	1	1521	922	38.
1	0152	113	152.	*	1	0622	383	978.	*	1	1052	653	459.	*	1	1522	923	38.
1	0153	114	154.	*	1	0623	384	977.	*	1	1053	654	458.	*	1	1523	924	37.
1	0154	115	156.	*	1	0624	385	976.	*	1	1054	655	456.	*	1	1524	925	37.
1	0155	116	159.	*	1	0625	386	975.	*	1	1055	656	455.	*	1	1525	926	37.
1	0156	117	161.	*	1	0626	387	973.	*	1	1056	657	454.	*	1	1526	927	36.
1	0157	118	163.	*	1	0627	388	972.	*	1	1057	658	452.	*	1	1527	928	36.
1	0158	119	165.	*	1	0628	389	971.	*	1	1058	659	451.	*	1	1528	929	35.
1	0159	120	167.	*	1	0629	390	969.	*	1	1059	660	449.	*	1	1529	930	35.
1	0200	121	169.	*	1	0630	391	968.	*	1	1100	661	448.	*	1	1530	931	35.
1	0201	122	171.	*	1	0631	392	967.	*	1	1101	662	447.	*	1	1531	932	34.
1	0202	123	172.	*	1	0632	393	966.	*	1	1102	663	445.	*	1	1532	933	34.
1	0203	124	174.	*	1	0633	394	964.	*	1	1103	664	444.	*	1	1533	934	34.
1	0204	125	176.	*	1	0634	395	963.	*	1	1104	665	443.	*	1	1534	935	33.
1	0205	126	178.	*	1	0635	396	962.	*	1	1105	666	441.	*	1	1535	936	33.
1	0206	127	180.	*	1	0636	397	961.	*	1	1106	667	440.	*	1	1536	937	32.
1	0207	128	182.	*	1	0637	398	960.	*	1	1107	668	439.	*	1	1537	938	32.
1	0208	129	183.	*	1	0638	399	959.	*	1	1108	669	437.	*	1	1538	939	32.
1	0209	130	185.	*	1	0639	400	958.	*	1	1109	670	436.	*	1	1539	940	31.
1	0210	131	187.	*	1	0640	401	957.	*	1	1110	671	435.	*	1	1540	941	31.
1	0211	132	189.	*	1	0641	402	956.	*	1	1111	672	433.	*	1	1541	942	31.
1	0212	133	190.	*	1	0642	403	955.	*	1	1112	673	432.	*	1	1542	943	30.
1	0213	134	192.	*	1	0643	404	954.	*	1	1113	674	430.	*	1	1543	944	30.
1	0214	135	193.	*	1	0644	405	953.	*	1	1114	675	429.	*	1	1544	945	30.
1	0215	136	195.	*	1	0645	406	952.	*	1	1115	676	427.	*	1	1545	946	29.
1	0216	137	197.	*	1	0646	407	951.	*	1	1116	677	426.	*	1	1546	947	29.
1	0217	138	198.	*	1	0647	408	950.	*	1	1117	678	424.	*	1	1547	948	28.
1	0218	139	200.	*	1	0648	409	949.	*	1	1118	679	423.	*	1	1548	949	28.
1	0219	140	201.	*	1	0649	410	949.	*	1	1119	680	421.	*	1	1549	950	27.
1	0220	141	202.	*	1	0650	411	948.	*	1	1120	681	419.	*	1	1550	951	27.
1	0221	142	204.	*	1	0651	412	947.	*	1	1121	682	416.	*	1	1551	952	26.
1	0222	143	205.	*	1	0652	413	946.	*	1	1122	683	414.	*	1	1552	953	25.
1	0223	144	207.	*	1	0653	414	946.	*	1	1123	684	411.	*	1	1553	954	24.
1	0224	145	208.	*	1	0654	415	945.	*	1	1124	685	408.	*	1	1554	955	23.
1	0225	146	209.	*	1	0655	416	944.	*	1	1125	686	405.	*	1	1555	956	23.
1	0226	147	210.	*	1	0656	417	944.	*	1	1126	687	402.	*	1	1556	957	22.
1	0227	148	211.	*	1	0657	418	943.	*	1	1127	688	399.	*	1	1557	958	21.
1	0228	149	212.	*	1	0658	419	942.	*	1	1128	689	396.	*	1	1558	959	20.
1	0229	150	213.	*	1	0659	420	942.	*	1	1129	690	393.	*	1	1559	960	19.
1	0230	151	214.	*	1	0700	421	941.	*	1	1130	691	390.	*	1	1600	961	18.
1	0231	152	215.	*	1	0701	422	940.	*	1	1131	692	387.	*	1	1601	962	18.
1	0232	153	216.	*	1	0702	423	940.	*	1	1132	693	384.	*	1	1602	963	17.
1	0233	154	217.	*	1	0703	424	939.	*	1	1133	694	381.	*	1	1603	964	16.
1	0234	155	218.	*	1	0704	425	938.	*	1	1134	695	378.	*	1	1604	965	15.
1	0235	156	219.	*	1	0705	426	938.	*	1	1135	696	375.	*	1	1605	966	15.
1	0236	157	220.	*	1	0706	427	937.	*	1	1136	697	371.	*	1	1606	967	14.
1	0237	158	221.	*	1	0707	428	936.	*	1	1137	698	368.	*	1	1607	968	14.
1	0238	159	222.	*	1	0708	429	936.	*	1	1138	699	365.	*	1	1608	969	13.
1	0239	160	223.	*	1	0709	430	935.	*	1	1139	700	362.	*	1	1609	970	12.
1	0240	161	224.	*	1	0710	431	934.	*	1	1140	701	360.	*	1	1610	971	12.
1	0241	162	225.	*	1	0711	432	934.	*	1	1141	702	357.	*	1	1611	972	11.
1	0242	163	226.	*	1	0712	433	933.	*	1	1142	703	354.	*	1	1612	973	11.
1	0243	164	227.	*	1	0713	434	932.	*	1	1143	704	351.	*	1	1613	974	10.
1	0244	165	228.	*	1	0714	435	932.	*	1	1144	705	348.	*	1	1614	975	10.
1	0245	166	229.	*	1	0715	436	931.	*	1	1145	706	346.	*	1	1615	976	9.
1	0246	167	230.	*	1	0716	437	931.	*	1	1146	707	343.	*	1	1616	977	9.
1	0247	168	231.	*	1	0717	438	930.	*	1	1147	708	340.	*	1	1617	978	9.
1	0248	169	232.	*	1	0718	439	929.	*	1	1148	709	338.	*	1	1618	979	8.
1	0249	170	233.	*	1	0719	440	929.	*	1	1149	710	335.	*	1	1619	980	8.
1	0250	171	234.	*	1	0720	441	928.	*	1	1150	711	332.	*	1	1620	981	8.
1	0251	172	235.	*	1	0721	442	927.	*	1	1151	712	330.	*	1	1621	982	7.
1	0252	173	237.	*	1	0722	443	926.	*	1	1152	713	327.	*	1	1622	983	7.
1	0253	174	238.	*	1	0723	444	926.	*	1	1153	714	324.	*	1	1623	984	7.
1	0254	175	239.	*	1	0724	445	925.	*	1	1154	715	322.	*	1	1624	985	6.
1	0255	176	240.	*	1	0725	446	924.	*	1	1155	716	319.	*	1	1625	986	6.
1	0256	177	241.	*	1	0726	447	923.	*	1	1156	717	316.	*	1	1626	987	6.
1	0257	178	242.	*	1	0727	448	923.	*	1	1157	718	313.	*	1	1627	988	6.
1	0258	179	244.	*	1	0728	449	922.	*	1	1158	719	311.	*	1	1628	989	5.
1	0259	180	245.	*	1	0729	450	921.	*	1	1159	720	308.	*	1	1629	990	5.
1	0300	181	246.	*	1	0730	451	921.	*	1	1200	721	305.	*	1	1630	991	5.
1	0301	182	247.	*	1	0731	452	920.	*	1	1201	722	301.	*	1	1631	992	5.
1	0302	183	249.	*	1	0732	453	919.	*	1	1202	723	298.	*	1	1632	993	4.
1	0303	184	251.	*	1	0733	454	918.	*	1	1203	724	295.	*	1	1633	994	4.
1	0304	185	253.	*	1	0734	455	918.	*	1	1204	725	292.	*	1	1634	995	4.
1	0305	186	256.	*	1	0735	456	917.	*	1	1205	726	289.	*	1	1635	996	4.
1	0306	187	259.	*	1	0736	457	916.	*	1	1206	727	286.	*	1	1636	997	4.
1	0307	188	262.	*	1	0737	458	915.	*	1	1207	728	283.	*	1	1637	998	4.
1	0308	189	265.	*	1	0738	459	915.	*	1	1208	729	280.	*	1	1638	999	3.

1	0309	190	268.	*	1	0739	460	914.	*	1	1209	730	277.	*	1	1639	1000	3.
1	0310	191	271.	*	1	0740	461	913.	*	1	1210	731	274.	*	1	1640	1001	3.
1	0311	192	274.	*	1	0741	462	912.	*	1	1211	732	271.	*	1	1641	1002	3.
1	0312	193	277.	*	1	0742	463	912.	*	1	1212	733	268.	*	1	1642	1003	3.
1	0313	194	281.	*	1	0743	464	911.	*	1	1213	734	265.	*	1	1643	1004	3.
1	0314	195	284.	*	1	0744	465	910.	*	1	1214	735	263.	*	1	1644	1005	3.
1	0315	196	287.	*	1	0745	466	909.	*	1	1215	736	260.	*	1	1645	1006	3.
1	0316	197	292.	*	1	0746	467	908.	*	1	1216	737	257.	*	1	1646	1007	2.
1	0317	198	298.	*	1	0747	468	907.	*	1	1217	738	255.	*	1	1647	1008	2.
1	0318	199	307.	*	1	0748	469	906.	*	1	1218	739	252.	*	1	1648	1009	2.
1	0319	200	320.	*	1	0749	470	906.	*	1	1219	740	250.	*	1	1649	1010	2.
1	0320	201	335.	*	1	0750	471	905.	*	1	1220	741	248.	*	1	1650	1011	2.
1	0321	202	351.	*	1	0751	472	904.	*	1	1221	742	245.	*	1	1651	1012	2.
1	0322	203	367.	*	1	0752	473	903.	*	1	1222	743	243.	*	1	1652	1013	2.
1	0323	204	383.	*	1	0753	474	902.	*	1	1223	744	241.	*	1	1653	1014	2.
1	0324	205	400.	*	1	0754	475	901.	*	1	1224	745	239.	*	1	1654	1015	2.
1	0325	206	417.	*	1	0755	476	900.	*	1	1225	746	237.	*	1	1655	1016	2.
1	0326	207	435.	*	1	0756	477	899.	*	1	1226	747	235.	*	1	1656	1017	2.
1	0327	208	453.	*	1	0757	478	898.	*	1	1227	748	233.	*	1	1657	1018	1.
1	0328	209	472.	*	1	0758	479	897.	*	1	1228	749	231.	*	1	1658	1019	1.
1	0329	210	490.	*	1	0759	480	896.	*	1	1229	750	229.	*	1	1659	1020	1.
1	0330	211	510.	*	1	0800	481	894.	*	1	1230	751	227.	*	1	1700	1021	1.
1	0331	212	532.	*	1	0801	482	893.	*	1	1231	752	225.	*	1	1701	1022	1.
1	0332	213	560.	*	1	0802	483	892.	*	1	1232	753	223.	*	1	1702	1023	1.
1	0333	214	598.	*	1	0803	484	891.	*	1	1233	754	221.	*	1	1703	1024	1.
1	0334	215	648.	*	1	0804	485	890.	*	1	1234	755	219.	*	1	1704	1025	1.
1	0335	216	704.	*	1	0805	486	889.	*	1	1235	756	217.	*	1	1705	1026	1.
1	0336	217	764.	*	1	0806	487	888.	*	1	1236	757	215.	*	1	1706	1027	1.
1	0337	218	824.	*	1	0807	488	886.	*	1	1237	758	213.	*	1	1707	1028	1.
1	0338	219	883.	*	1	0808	489	885.	*	1	1238	759	211.	*	1	1708	1029	1.
1	0339	220	940.	*	1	0809	490	884.	*	1	1239	760	209.	*	1	1709	1030	1.
1	0340	221	997.	*	1	0810	491	883.	*	1	1240	761	207.	*	1	1710	1031	1.
1	0341	222	1053.	*	1	0811	492	882.	*	1	1241	762	205.	*	1	1711	1032	1.
1	0342	223	1109.	*	1	0812	493	880.	*	1	1242	763	203.	*	1	1712	1033	1.
1	0343	224	1165.	*	1	0813	494	879.	*	1	1243	764	201.	*	1	1713	1034	1.
1	0344	225	1221.	*	1	0814	495	878.	*	1	1244	765	199.	*	1	1714	1035	1.
1	0345	226	1279.	*	1	0815	496	876.	*	1	1245	766	197.	*	1	1715	1036	1.
1	0346	227	1338.	*	1	0816	497	875.	*	1	1246	767	195.	*	1	1716	1037	1.
1	0347	228	1401.	*	1	0817	498	874.	*	1	1247	768	193.	*	1	1717	1038	1.
1	0348	229	1471.	*	1	0818	499	873.	*	1	1248	769	192.	*	1	1718	1039	1.
1	0349	230	1544.	*	1	0819	500	871.	*	1	1249	770	190.	*	1	1719	1040	1.
1	0350	231	1620.	*	1	0820	501	870.	*	1	1250	771	188.	*	1	1720	1041	1.
1	0351	232	1697.	*	1	0821	502	869.	*	1	1251	772	187.	*	1	1721	1042	1.
1	0352	233	1775.	*	1	0822	503	867.	*	1	1252	773	185.	*	1	1722	1043	1.
1	0353	234	1852.	*	1	0823	504	866.	*	1	1253	774	184.	*	1	1723	1044	0.
1	0354	235	1927.	*	1	0824	505	865.	*	1	1254	775	182.	*	1	1724	1045	0.
1	0355	236	1998.	*	1	0825	506	863.	*	1	1255	776	181.	*	1	1725	1046	0.
1	0356	237	2066.	*	1	0826	507	862.	*	1	1256	777	179.	*	1	1726	1047	0.
1	0357	238	2128.	*	1	0827	508	861.	*	1	1257	778	178.	*	1	1727	1048	0.
1	0358	239	2182.	*	1	0828	509	859.	*	1	1258	779	177.	*	1	1728	1049	0.
1	0359	240	2232.	*	1	0829	510	858.	*	1	1259	780	175.	*	1	1729	1050	0.
1	0400	241	2282.	*	1	0830	511	857.	*	1	1300	781	174.	*	1	1730	1051	0.
1	0401	242	2331.	*	1	0831	512	855.	*	1	1301	782	173.	*	1	1731	1052	0.
1	0402	243	2374.	*	1	0832	513	854.	*	1	1302	783	171.	*	1	1732	1053	0.
1	0403	244	2407.	*	1	0833	514	853.	*	1	1303	784	170.	*	1	1733	1054	0.
1	0404	245	2429.	*	1	0834	515	851.	*	1	1304	785	168.	*	1	1734	1055	0.
1	0405	246	2445.	*	1	0835	516	850.	*	1	1305	786	167.	*	1	1735	1056	0.
1	0406	247	2456.	*	1	0836	517	848.	*	1	1306	787	166.	*	1	1736	1057	0.
1	0407	248	2464.	*	1	0837	518	847.	*	1	1307	788	164.	*	1	1737	1058	0.
1	0408	249	2470.	*	1	0838	519	845.	*	1	1308	789	163.	*	1	1738	1059	0.
1	0409	250	2473.	*	1	0839	520	843.	*	1	1309	790	162.	*	1	1739	1060	0.
1	0410	251	2474.	*	1	0840	521	841.	*	1	1310	791	160.	*	1	1740	1061	0.
1	0411	252	2466.	*	1	0841	522	839.	*	1	1311	792	159.	*	1	1741	1062	0.
1	0412	253	2453.	*	1	0842	523	837.	*	1	1312	793	158.	*	1	1742	1063	0.
1	0413	254	2438.	*	1	0843	524	834.	*	1	1313	794	156.	*	1	1743	1064	0.
1	0414	255	2423.	*	1	0844	525	831.	*	1	1314	795	155.	*	1	1744	1065	0.
1	0415	256	2409.	*	1	0845	526	829.	*	1	1315	796	154.	*	1	1745	1066	0.
1	0416	257	2392.	*	1	0846	527	826.	*	1	1316	797	153.	*	1	1746	1067	0.
1	0417	258	2369.	*	1	0847	528	823.	*	1	1317	798	151.	*	1	1747	1068	0.
1	0418	259	2339.	*	1	0848	529	820.	*	1	1318	799	150.	*	1	1748	1069	0.
1	0419	260	2302.	*	1	0849	530	817.	*	1	1319	800	149.	*	1	1749	1070	0.
1	0420	261	2261.	*	1	0850	531	814.	*	1	1320	801	148.	*	1	1750	1071	0.
1	0421	262	2219.	*	1	0851	532	810.	*	1	1321	802	147.	*	1	1751	1072	0.
1	0422	263	2177.	*	1	0852	533	807.	*	1	1322	803	146.	*	1	1752	1073	0.
1	0423	264	2135.	*	1	0853	534	804.	*	1	1323	804	145.	*	1	1753	1074	0.
1	0424	265	2094.	*	1	0854	535	800.	*	1	1324	805	144.	*	1	1754	1075	0.
1	0425	266	2053.	*	1	0855	536	797.	*	1	1325	806	143.	*	1	1755	1076	0.
1	0426	267	2008.	*	1	0856	537	793.	*	1	1326	807	141.	*	1	1756	1077	0.
1	0427	268	1953.	*	1	0857	538	789.	*	1	1327	808	140.	*	1	1757	1078	0.
1	0428	269	1908.	*	1	0858	539	785.	*	1	1328	809	139.	*	1	1758	1079	0.
1	0429	270	1871.	*	1	0859	540	781.	*	1	1329	810	138.	*	1	1759	1080	0.
				*					*					*				

****

PEAK FLOW	TIME		MAXIMUM AVERAGE FLOW			
			6-HR	24-HR	72-HR	17.98-HR
+ (CFS)	(HR)					
		(CFS)				
+ 2474.	4.17		1162.	508.	508.	508.
		(INCHES)	1.516	1.985	1.985	1.985
		(AC-FT)	576.	755.	755.	755.

CUMULATIVE AREA = 7.13 SQ MI

*** ***

```
              **************
              *            *
123 KK        *     C5990  *
              *            *
              **************

124 KO            OUTPUT CONTROL VARIABLES
                        IPRNT          1  PRINT CONTROL
                        IPLOT          0  PLOT CONTROL
                        QSCAL         0.  HYDROGRAPH PLOT SCALE
                        IPNCH          0  PUNCH COMPUTED HYDROGRAPH
                         IOUT         21  SAVE HYDROGRAPH ON THIS UNIT
                        ISAV1          1  FIRST ORDINATE PUNCHED OR SAVED
                        ISAV2       1080  LAST ORDINATE PUNCHED OR SAVED
                       TIMINT      0.017  TIME INTERVAL IN HOURS

                          Reservoir route at C599 (Dam 4 - GEPD). New Stage-Storage Curve 3/4/99

                HYDROGRAPH ROUTING DATA

135 RL            ROUTING LOSSES
                        QLOSS       0.00  INITIAL LOSS
                        CLOSS       0.00  ADDITIONAL FRACTION LOST
                       PERCRT       0.97  CHANNEL PERCOLATION RATE
                       ELVINV       0.00  INVERT ELEVATION

126 RS            STORAGE ROUTING
                        NSTPS          1  NUMBER OF SUBREACHES
                         ITYP       ELEV  TYPE OF INITIAL CONDITION
                       RSVRIC    1694.70  INITIAL CONDITION
                            X       0.00 WORKING R AND D COEFFICIENT

127 SV              STORAGE        0.0      0.0      0.0      0.1      0.2      0.9      2.3      7.2     18.9     36.1
                                  58.4     86.4     99.2    106.0    113.0    120.2    127.6    146.9    154.9    158.9

129 SE            ELEVATION     1695.00  1697.00  1698.00  1699.00  1700.00  1702.00  1704.00  1706.00  1708.00  1710.00
                                1712.00  1714.00  1714.80  1715.20  1715.60  1716.00  1716.40  1717.40  1717.80  1718.00

131 SQ            DISCHARGE         0.       72.      213.      414.      613.      752.      889.      983.     1076.     1168.
                                 1201.     1248.     1267.     1280.     2080.     6496.    10412.    15018.    18426.    20223.

133 SE            ELEVATION     1695.00  1696.00  1698.00  1700.00  1702.00  1704.00  1706.00  1708.00  1710.00  1712.00
                                1712.80  1714.00  1714.50  1714.86  1715.00  1717.50  1719.00  1720.50  1721.50  1722.00

                                                                  ***

                                                COMPUTED STORAGE-OUTFLOW-ELEVATION DATA

            STORAGE       0.00     0.00     0.00     0.02     0.08     0.24     0.93     2.29     7.17    18.89
            OUTFLOW       0.00    72.00   142.50   213.00   313.50   414.00   613.00   752.00   889.00   983.00
          ELEVATION    1695.00  1696.00  1697.00  1698.00  1699.00  1700.00  1702.00  1704.00  1706.00  1708.00

            STORAGE      36.08    58.41    69.61    86.41    94.41    99.21   100.22   102.59   105.97   112.96
            OUTFLOW    1076.00  1168.00  1201.00  1248.00  1267.00  1277.84  1280.00  2080.00  2433.19  3139.80
          ELEVATION    1710.00  1712.00  1712.80  1714.00  1714.50  1714.80  1714.86  1715.00  1715.20  1715.60

            STORAGE     120.18   127.60   146.86   148.86   154.86   158.92   179.22   209.68   229.99   240.14
            OUTFLOW    3846.40  4553.00  6319.40  6496.00  7279.33  7801.33 10412.00 15018.00 18426.00 20223.00
          ELEVATION    1716.00  1716.40  1717.40  1717.50  1717.80  1718.00  1719.00  1720.50  1721.50  1722.00

*** WARNING *** MODIFIED PULS ROUTING MAY BE NUMERICALLY UNSTABLE FOR OUTFLOWS BETWEEN      143. TO      314.
                THE ROUTED HYDROGRAPH SHOULD BE EXAMINED FOR OSCILLATIONS OR OUTFLOWS GREATER THAN PEAK INFLOWS.
                THIS CAN BE CORRECTED BY DECREASING THE TIME INTERVAL OR INCREASING STORAGE (USE A LONGER REACH.)

*************************************************************************************************************************

                                                HYDROGRAPH AT STATION    C5990

*************************************************************************************************************************
                                                *                                                *
 DA MON HRMN ORD  OUTFLOW  STORAGE   STAGE * DA MON HRMN ORD  OUTFLOW  STORAGE   STAGE * DA MON HRMN ORD  OUTFLOW  STORAGE   STAGE
                                                *                                                *
  1     0000   1       0.      0.0  1696.0 *  1     0600 361    1247.     86.1  1714.0 *  1     1200 721     306.      0.1  1698.9
  1     0001   2       0.      0.0  1696.0 *  1     0601 362    1246.     85.8  1714.0 *  1     1201 722     303.      0.1  1698.9
  1     0002   3       0.      0.0  1696.0 *  1     0602 363    1245.     85.4  1713.9 *  1     1202 723     299.      0.1  1698.9
  1     0003   4       1.      0.0  1696.0 *  1     0603 364    1244.     85.1  1713.9 *  1     1203 724     296.      0.1  1698.8
  1     0004   5       1.      0.0  1696.0 *  1     0604 365    1243.     84.7  1713.9 *  1     1204 725     293.      0.1  1698.8
  1     0005   6       2.      0.0  1696.0 *  1     0605 366    1242.     84.4  1713.9 *  1     1205 726     290.      0.1  1698.8
  1     0006   7       2.      0.0  1696.0 *  1     0606 367    1241.     84.1  1713.8 *  1     1206 727     287.      0.1  1698.7
  1     0007   8       3.      0.0  1696.0 *  1     0607 368    1240.     83.7  1713.8 *  1     1207 728     284.      0.1  1698.7
  1     0008   9       3.      0.0  1696.0 *  1     0608 369    1240.     83.4  1713.8 *  1     1208 729     281.      0.1  1698.7
  1     0009  10       4.      0.0  1696.1 *  1     0609 370    1239.     83.1  1713.8 *  1     1209 730     278.      0.1  1698.6
  1     0010  11       4.      0.0  1696.1 *  1     0610 371    1238.     82.7  1713.7 *  1     1210 731     275.      0.1  1698.6
  1     0011  12       4.      0.0  1696.1 *  1     0611 372    1237.     82.4  1713.7 *  1     1211 732     272.      0.1  1698.6
  1     0012  13       5.      0.0  1696.1 *  1     0612 373    1236.     82.0  1713.7 *  1     1212 733     269.      0.1  1698.6
  1     0013  14       5.      0.0  1696.1 *  1     0613 374    1235.     81.7  1713.7 *  1     1213 734     266.      0.1  1698.5
  1     0014  15       6.      0.0  1696.1 *  1     0614 375    1234.     81.4  1713.6 *  1     1214 735     264.      0.1  1698.5
  1     0015  16       6.      0.0  1696.1 *  1     0615 376    1233.     81.0  1713.6 *  1     1215 736     261.      0.0  1698.5
  1     0016  17       6.      0.0  1696.1 *  1     0616 377    1232.     80.7  1713.6 *  1     1216 737     258.      0.0  1698.5
  1     0017  18       7.      0.0  1696.1 *  1     0617 378    1231.     80.3  1713.6 *  1     1217 738     256.      0.0  1698.4
  1     0018  19       7.      0.0  1696.1 *  1     0618 379    1230.     80.0  1713.5 *  1     1218 739     253.      0.0  1698.4
  1     0019  20       7.      0.0  1696.1 *  1     0619 380    1229.     79.7  1713.5 *  1     1219 740     251.      0.0  1698.4
  1     0020  21       7.      0.0  1696.1 *  1     0620 381    1228.     79.3  1713.5 *  1     1220 741     249.      0.0  1698.4
  1     0021  22       7.      0.0  1696.1 *  1     0621 382    1227.     79.0  1713.5 *  1     1221 742     246.      0.0  1698.3
  1     0022  23       8.      0.0  1696.1 *  1     0622 383    1226.     78.6  1713.4 *  1     1222 743     244.      0.0  1698.3
  1     0023  24       8.      0.0  1696.1 *  1     0623 384    1225.     78.3  1713.4 *  1     1223 744     242.      0.0  1698.3
  1     0024  25       9.      0.0  1696.1 *  1     0624 385    1224.     78.0  1713.4 *  1     1224 745     240.      0.0  1698.3
  1     0025  26      10.      0.0  1696.1 *  1     0625 386    1223.     77.6  1713.4 *  1     1225 746     238.      0.0  1698.2
  1     0026  27      11.      0.0  1696.2 *  1     0626 387    1222.     77.3  1713.3 *  1     1226 747     236.      0.0  1698.2
```

1	0027	28	11.	0.0	1696.2	*	1	0627	388	1221.	76.9	1713.3	*	1	1227	748	234.	0.0	1698.2
1	0028	29	12.	0.0	1696.2	*	1	0628	389	1220.	76.6	1713.3	*	1	1228	749	232.	0.0	1698.2
1	0029	30	13.	0.0	1696.2	*	1	0629	390	1220.	76.2	1713.3	*	1	1229	750	230.	0.0	1698.2
1	0030	31	14.	0.0	1696.2	*	1	0630	391	1219.	75.9	1713.2	*	1	1230	751	228.	0.0	1698.1
1	0031	32	15.	0.0	1696.2	*	1	0631	392	1218.	75.6	1713.2	*	1	1231	752	226.	0.0	1698.1
1	0032	33	16.	0.0	1696.2	*	1	0632	393	1217.	75.2	1713.2	*	1	1232	753	224.	0.0	1698.1
1	0033	34	17.	0.0	1696.2	*	1	0633	394	1216.	74.9	1713.2	*	1	1233	754	222.	0.0	1698.1
1	0034	35	18.	0.0	1696.3	*	1	0634	395	1215.	74.5	1713.2	*	1	1234	755	220.	0.0	1698.1
1	0035	36	19.	0.0	1696.3	*	1	0635	396	1214.	74.2	1713.1	*	1	1235	756	218.	0.0	1698.0
1	0036	37	20.	0.0	1696.3	*	1	0636	397	1213.	73.8	1713.1	*	1	1236	757	216.	0.0	1698.0
1	0037	38	22.	0.0	1696.3	*	1	0637	398	1212.	73.5	1713.1	*	1	1237	758	214.	0.0	1698.0
1	0038	39	23.	0.0	1696.3	*	1	0638	399	1211.	73.1	1713.1	*	1	1238	759	212.	0.0	1698.0
1	0039	40	24.	0.0	1696.3	*	1	0639	400	1210.	72.8	1713.0	*	1	1239	760	209.	0.0	1697.9
1	0040	41	24.	0.0	1696.3	*	1	0640	401	1209.	72.4	1713.0	*	1	1240	761	207.	0.0	1697.9
1	0041	42	25.	0.0	1696.4	*	1	0641	402	1208.	72.1	1713.0	*	1	1241	762	205.	0.0	1697.9
1	0042	43	26.	0.0	1696.4	*	1	0642	403	1207.	71.7	1713.0	*	1	1242	763	203.	0.0	1697.9
1	0043	44	27.	0.0	1696.4	*	1	0643	404	1206.	71.4	1712.9	*	1	1243	764	201.	0.0	1697.8
1	0044	45	28.	0.0	1696.4	*	1	0644	405	1205.	71.0	1712.9	*	1	1244	765	199.	0.0	1697.8
1	0045	46	29.	0.0	1696.4	*	1	0645	406	1204.	70.7	1712.9	*	1	1245	766	197.	0.0	1697.8
1	0046	47	30.	0.0	1696.4	*	1	0646	407	1203.	70.4	1712.9	*	1	1246	767	195.	0.0	1697.8
1	0047	48	31.	0.0	1696.4	*	1	0647	408	1202.	70.0	1712.8	*	1	1247	768	193.	0.0	1697.7
1	0048	49	31.	0.0	1696.4	*	1	0648	409	1201.	69.7	1712.8	*	1	1248	769	192.	0.0	1697.7
1	0049	50	33.	0.0	1696.5	*	1	0649	410	1200.	69.3	1712.8	*	1	1249	770	191.	0.0	1697.7
1	0050	51	34.	0.0	1696.5	*	1	0650	411	1199.	69.0	1712.8	*	1	1250	771	188.	0.0	1697.7
1	0051	52	35.	0.0	1696.5	*	1	0651	412	1198.	68.6	1712.7	*	1	1251	772	187.	0.0	1697.6
1	0052	53	36.	0.0	1696.5	*	1	0652	413	1197.	68.3	1712.7	*	1	1252	773	186.	0.0	1697.6
1	0053	54	38.	0.0	1696.5	*	1	0653	414	1196.	67.9	1712.7	*	1	1253	774	184.	0.0	1697.6
1	0054	55	39.	0.0	1696.6	*	1	0654	415	1195.	67.6	1712.7	*	1	1254	775	183.	0.0	1697.6
1	0055	56	40.	0.0	1696.6	*	1	0655	416	1194.	67.2	1712.6	*	1	1255	776	181.	0.0	1697.5
1	0056	57	41.	0.0	1696.6	*	1	0656	417	1193.	66.9	1712.6	*	1	1256	777	180.	0.0	1697.5
1	0057	58	43.	0.0	1696.6	*	1	0657	418	1192.	66.6	1712.6	*	1	1257	778	178.	0.0	1697.5
1	0058	59	44.	0.0	1696.6	*	1	0658	419	1191.	66.2	1712.6	*	1	1258	779	177.	0.0	1697.5
1	0059	60	46.	0.0	1696.7	*	1	0659	420	1190.	65.9	1712.5	*	1	1259	780	175.	0.0	1697.5
1	0100	61	47.	0.0	1696.7	*	1	0700	421	1189.	65.5	1712.5	*	1	1300	781	174.	0.0	1697.4
1	0101	62	48.	0.0	1696.7	*	1	0701	422	1188.	65.2	1712.5	*	1	1301	782	173.	0.0	1697.4
1	0102	63	50.	0.0	1696.7	*	1	0702	423	1187.	64.8	1712.5	*	1	1302	783	171.	0.0	1697.4
1	0103	64	51.	0.0	1696.7	*	1	0703	424	1186.	64.5	1712.4	*	1	1303	784	170.	0.0	1697.4
1	0104	65	52.	0.0	1696.7	*	1	0704	425	1185.	64.2	1712.4	*	1	1304	785	169.	0.0	1697.4
1	0105	66	54.	0.0	1696.8	*	1	0705	426	1184.	63.8	1712.4	*	1	1305	786	167.	0.0	1697.3
1	0106	67	55.	0.0	1696.8	*	1	0706	427	1183.	63.5	1712.4	*	1	1306	787	166.	0.0	1697.3
1	0107	68	56.	0.0	1696.8	*	1	0707	428	1182.	63.1	1712.3	*	1	1307	788	164.	0.0	1697.3
1	0108	69	58.	0.0	1696.8	*	1	0708	429	1181.	62.8	1712.3	*	1	1308	789	163.	0.0	1697.3
1	0109	70	59.	0.0	1696.8	*	1	0709	430	1180.	62.5	1712.3	*	1	1309	790	162.	0.0	1697.3
1	0110	71	60.	0.0	1696.9	*	1	0710	431	1179.	62.1	1712.3	*	1	1310	791	160.	0.0	1697.3
1	0111	72	62.	0.0	1696.9	*	1	0711	432	1178.	61.8	1712.2	*	1	1311	792	159.	0.0	1697.2
1	0112	73	63.	0.0	1696.9	*	1	0712	433	1177.	61.5	1712.2	*	1	1312	793	158.	0.0	1697.2
1	0113	74	65.	0.0	1696.9	*	1	0713	434	1176.	61.1	1712.2	*	1	1313	794	156.	0.0	1697.2
1	0114	75	66.	0.0	1696.9	*	1	0714	435	1175.	60.8	1712.2	*	1	1314	795	155.	0.0	1697.2
1	0115	76	68.	0.0	1697.0	*	1	0715	436	1174.	60.5	1712.1	*	1	1315	796	154.	0.0	1697.2
1	0116	77	70.	0.0	1697.0	*	1	0716	437	1173.	60.1	1712.1	*	1	1316	797	153.	0.0	1697.2
1	0117	78	143.	0.0	1697.0	*	1	0717	438	1172.	59.8	1712.1	*	1	1317	798	152.	0.0	1697.1
1	0118	79	73.	0.0	1695.0	*	1	0718	439	1171.	59.5	1712.1	*	1	1318	799	150.	0.0	1697.1
1	0119	80	75.	0.0	1695.0	*	1	0719	440	1170.	59.1	1712.1	*	1	1319	800	149.	0.0	1697.1
1	0120	81	76.	0.0	1695.1	*	1	0720	441	1169.	58.8	1712.0	*	1	1320	801	148.	0.0	1697.1
1	0121	82	78.	0.0	1695.1	*	1	0721	442	1168.	58.5	1712.0	*	1	1321	802	147.	0.0	1697.1
1	0122	83	80.	0.0	1695.1	*	1	0722	443	1167.	58.1	1712.0	*	1	1322	803	146.	0.0	1697.1
1	0123	84	82.	0.0	1695.1	*	1	0723	444	1165.	57.8	1711.9	*	1	1323	804	145.	0.0	1697.0
1	0124	85	84.	0.0	1695.2	*	1	0724	445	1164.	57.5	1711.9	*	1	1324	805	144.	0.0	1697.0
1	0125	86	86.	0.0	1695.2	*	1	0725	446	1163.	57.1	1711.9	*	1	1325	806	143.	0.0	1697.0
1	0126	87	88.	0.0	1695.2	*	1	0726	447	1161.	56.8	1711.9	*	1	1326	807	141.	0.0	1697.0
1	0127	88	91.	0.0	1695.3	*	1	0727	448	1160.	56.5	1711.8	*	1	1327	808	140.	0.0	1697.0
1	0128	89	93.	0.0	1695.3	*	1	0728	449	1159.	56.2	1711.8	*	1	1328	809	139.	0.0	1697.0
1	0129	90	96.	0.0	1695.3	*	1	0729	450	1157.	55.8	1711.8	*	1	1329	810	138.	0.0	1696.9
1	0130	91	98.	0.0	1695.4	*	1	0730	451	1156.	55.5	1711.7	*	1	1330	811	137.	0.0	1696.9
1	0131	92	101.	0.0	1695.4	*	1	0731	452	1155.	55.2	1711.7	*	1	1331	812	136.	0.0	1696.9
1	0132	93	104.	0.0	1695.4	*	1	0732	453	1153.	54.9	1711.7	*	1	1332	813	135.	0.0	1696.9
1	0133	94	106.	0.0	1695.5	*	1	0733	454	1152.	54.5	1711.7	*	1	1333	814	134.	0.0	1696.9
1	0134	95	109.	0.0	1695.5	*	1	0734	455	1151.	54.2	1711.6	*	1	1334	815	133.	0.0	1696.9
1	0135	96	111.	0.0	1695.5	*	1	0735	456	1149.	53.9	1711.6	*	1	1335	816	132.	0.0	1696.9
1	0136	97	114.	0.0	1695.6	*	1	0736	457	1148.	53.6	1711.6	*	1	1336	817	131.	0.0	1696.8
1	0137	98	117.	0.0	1695.6	*	1	0737	458	1147.	53.3	1711.5	*	1	1337	818	130.	0.0	1696.8
1	0138	99	120.	0.0	1695.7	*	1	0738	459	1145.	52.9	1711.5	*	1	1338	819	129.	0.0	1696.8
1	0139	100	122.	0.0	1695.7	*	1	0739	460	1144.	52.6	1711.5	*	1	1339	820	128.	0.0	1696.8
1	0140	101	125.	0.0	1695.7	*	1	0740	461	1143.	52.3	1711.5	*	1	1340	821	127.	0.0	1696.8
1	0141	102	127.	0.0	1695.8	*	1	0741	462	1141.	52.0	1711.4	*	1	1341	822	126.	0.0	1696.8
1	0142	103	130.	0.0	1695.8	*	1	0742	463	1140.	51.7	1711.4	*	1	1342	823	125.	0.0	1696.8
1	0143	104	132.	0.0	1695.8	*	1	0743	464	1139.	51.4	1711.4	*	1	1343	824	125.	0.0	1696.8
1	0144	105	135.	0.0	1695.9	*	1	0744	465	1138.	51.0	1711.3	*	1	1344	825	124.	0.0	1696.7
1	0145	106	137.	0.0	1695.9	*	1	0745	466	1136.	50.7	1711.3	*	1	1345	826	123.	0.0	1696.7
1	0146	107	139.	0.0	1695.9	*	1	0746	467	1135.	50.4	1711.3	*	1	1346	827	122.	0.0	1696.7
1	0147	108	141.	0.0	1696.0	*	1	0747	468	1134.	50.1	1711.3	*	1	1347	828	122.	0.0	1696.7
1	0148	109	144.	0.0	1696.0	*	1	0748	469	1132.	49.8	1711.2	*	1	1348	829	121.	0.0	1696.7
1	0149	110	146.	0.0	1696.0	*	1	0749	470	1131.	49.5	1711.2	*	1	1349	830	120.	0.0	1696.7
1	0150	111	148.	0.0	1696.1	*	1	0750	471	1130.	49.2	1711.2	*	1	1350	831	119.	0.0	1696.7
1	0151	112	150.	0.0	1696.1	*	1	0751	472	1129.	48.9	1711.1	*	1	1351	832	119.	0.0	1696.7
1	0152	113	152.	0.0	1696.1	*	1	0752	473	1127.	48.5	1711.1	*	1	1352	833	118.	0.0	1696.7
1	0153	114	154.	0.0	1696.1	*	1	0753	474	1126.	48.2	1711.1	*	1	1353	834	117.	0.0	1696.6
1	0154	115	156.	0.0	1696.2	*	1	0754	475	1125.	47.9	1711.1	*	1	1354	835	116.	0.0	1696.6
1	0155	116	159.	0.0	1696.2	*	1	0755	476	1124.	47.6	1711.0	*	1	1355	836	115.	0.0	1696.6
1	0156	117	161.	0.0	1696.2	*	1	0756	477	1122.	47.3	1711.0	*	1	1356	837	115.	0.0	1696.6
1	0157	118	163.	0.0	1696.3	*	1	0757	478	1121.	47.0	1711.0	*	1	1357	838	114.	0.0	1696.6
1	0158	119	165.	0.0	1696.3	*	1	0758	479	1120.	46.7	1711.0	*	1	1358	839	113.	0.0	1696.6
1	0159	120	167.	0.0	1696.3	*	1	0759	480	1118.	46.4	1710.9	*	1	1359	840	112.	0.0	1696.6
1	0200	121	169.	0.0	1696.4	*	1	0800	481	1117.	46.1	1710.9	*	1	1400	841	111.	0.0	1696.6
1	0201	122	171.	0.0	1696.4	*	1	0801	482	1116.	45.8	1710.9	*	1	1401	842	110.	0.0	1696.5
1	0202	123	172.	0.0	1696.4	*	1	0802	483	1115.	45.5	1710.8	*	1	1402	843	109.	0.0	1696.5
1	0203	124	174.	0.0	1696.4	*	1	0803	484	1113.	45.2	1710.8	*	1	1403	844	108.	0.0	1696.5
1	0204	125	176.	0.0	1696.5	*	1	0804	485	1112.	44.9	1710.8	*	1	1404	845	107.	0.0	1696.5
1	0205	126	178.	0.0	1696.5	*	1	0805	486	1111.	44.6	1710.8	*	1	1405	846	107.	0.0	1696.5
1	0206	127	180.	0.0	1696.5	*	1	0806	487	1110.	44.2	1710.7	*	1	1406	847	106.	0.0	1696.5

1	0207	128	182.	0.0	1696.5	*	1	0807	488	1108.	43.9	1710.7	*	1	1407	848	105.	0.0	1696.5
1	0208	129	183.	0.0	1696.6	*	1	0808	489	1107.	43.6	1710.7	*	1	1408	849	104.	0.0	1696.5
1	0209	130	185.	0.0	1696.6	*	1	0809	490	1106.	43.3	1710.6	*	1	1409	850	103.	0.0	1696.4
1	0210	131	187.	0.0	1696.6	*	1	0810	491	1105.	43.0	1710.6	*	1	1410	851	102.	0.0	1696.4
1	0211	132	189.	0.0	1696.6	*	1	0811	492	1103.	42.7	1710.6	*	1	1411	852	101.	0.0	1696.4
1	0212	133	190.	0.0	1696.7	*	1	0812	493	1102.	42.4	1710.6	*	1	1412	853	100.	0.0	1696.4
1	0213	134	192.	0.0	1696.7	*	1	0813	494	1101.	42.1	1710.5	*	1	1413	854	99.	0.0	1696.4
1	0214	135	193.	0.0	1696.7	*	1	0814	495	1100.	41.8	1710.5	*	1	1414	855	98.	0.0	1696.4
1	0215	136	195.	0.0	1696.7	*	1	0815	496	1098.	41.5	1710.5	*	1	1415	856	97.	0.0	1696.4
1	0216	137	197.	0.0	1696.8	*	1	0816	497	1097.	41.2	1710.5	*	1	1416	857	96.	0.0	1696.3
1	0217	138	198.	0.0	1696.8	*	1	0817	498	1096.	40.9	1710.4	*	1	1417	858	96.	0.0	1696.3
1	0218	139	200.	0.0	1696.8	*	1	0818	499	1095.	40.6	1710.4	*	1	1418	859	95.	0.0	1696.3
1	0219	140	201.	0.0	1696.8	*	1	0819	500	1093.	40.3	1710.4	*	1	1419	860	94.	0.0	1696.3
1	0220	141	202.	0.0	1696.8	*	1	0820	501	1092.	40.0	1710.3	*	1	1420	861	93.	0.0	1696.3
1	0221	142	204.	0.0	1696.9	*	1	0821	502	1091.	39.7	1710.3	*	1	1421	862	92.	0.0	1696.3
1	0222	143	205.	0.0	1696.9	*	1	0822	503	1089.	39.4	1710.3	*	1	1422	863	91.	0.0	1696.3
1	0223	144	207.	0.0	1696.9	*	1	0823	504	1088.	39.1	1710.3	*	1	1423	864	90.	0.0	1696.3
1	0224	145	208.	0.0	1696.9	*	1	0824	505	1087.	38.7	1710.2	*	1	1424	865	89.	0.0	1696.2
1	0225	146	209.	0.0	1696.9	*	1	0825	506	1086.	38.4	1710.2	*	1	1425	866	88.	0.0	1696.2
1	0226	147	210.	0.0	1696.9	*	1	0826	507	1084.	38.1	1710.2	*	1	1426	867	87.	0.0	1696.2
1	0227	148	211.	0.0	1697.0	*	1	0827	508	1083.	37.8	1710.2	*	1	1427	868	86.	0.0	1696.2
1	0228	149	212.	0.0	1697.0	*	1	0828	509	1082.	37.5	1710.1	*	1	1428	869	85.	0.0	1696.2
1	0229	150	213.	0.0	1697.0	*	1	0829	510	1081.	37.2	1710.1	*	1	1429	870	83.	0.0	1696.2
1	0230	151	214.	0.0	1697.0	*	1	0830	511	1079.	36.9	1710.1	*	1	1430	871	82.	0.0	1696.1
1	0231	152	143.	0.0	1697.0	*	1	0831	512	1078.	36.6	1710.0	*	1	1431	872	81.	0.0	1696.1
1	0232	153	238.	0.0	1698.2	*	1	0832	513	1077.	36.3	1710.0	*	1	1432	873	79.	0.0	1696.1
1	0233	154	215.	0.0	1698.0	*	1	0833	514	1075.	36.0	1710.0	*	1	1433	874	78.	0.0	1696.1
1	0234	155	218.	0.0	1698.0	*	1	0834	515	1074.	35.7	1710.0	*	1	1434	875	76.	0.0	1696.1
1	0235	156	219.	0.0	1698.1	*	1	0835	516	1072.	35.4	1709.9	*	1	1435	876	75.	0.0	1696.0
1	0236	157	220.	0.0	1698.1	*	1	0836	517	1071.	35.1	1709.9	*	1	1436	877	73.	0.0	1696.0
1	0237	158	221.	0.0	1698.1	*	1	0837	518	1069.	34.8	1709.8	*	1	1437	878	72.	0.0	1696.0
1	0238	159	222.	0.0	1698.1	*	1	0838	519	1067.	34.5	1709.8	*	1	1438	879	71.	0.0	1696.0
1	0239	160	223.	0.0	1698.1	*	1	0839	520	1066.	34.1	1709.8	*	1	1439	880	69.	0.0	1696.0
1	0240	161	224.	0.0	1698.1	*	1	0840	521	1064.	33.8	1709.7	*	1	1440	881	68.	0.0	1695.9
1	0241	162	225.	0.0	1698.1	*	1	0841	522	1062.	33.5	1709.7	*	1	1441	882	67.	0.0	1695.9
1	0242	163	226.	0.0	1698.1	*	1	0842	523	1061.	33.2	1709.7	*	1	1442	883	66.	0.0	1695.9
1	0243	164	227.	0.0	1698.1	*	1	0843	524	1059.	32.9	1709.6	*	1	1443	884	64.	0.0	1695.9
1	0244	165	228.	0.0	1698.1	*	1	0844	525	1057.	32.6	1709.6	*	1	1444	885	63.	0.0	1695.9
1	0245	166	229.	0.0	1698.2	*	1	0845	526	1056.	32.3	1709.6	*	1	1445	886	62.	0.0	1695.9
1	0246	167	230.	0.0	1698.2	*	1	0846	527	1054.	32.0	1709.5	*	1	1446	887	61.	0.0	1695.8
1	0247	168	231.	0.0	1698.2	*	1	0847	528	1052.	31.7	1709.5	*	1	1447	888	60.	0.0	1695.8
1	0248	169	232.	0.0	1698.2	*	1	0848	529	1050.	31.4	1709.4	*	1	1448	889	59.	0.0	1695.8
1	0249	170	233.	0.0	1698.2	*	1	0849	530	1049.	31.0	1709.4	*	1	1449	890	58.	0.0	1695.8
1	0250	171	234.	0.0	1698.2	*	1	0850	531	1047.	30.7	1709.4	*	1	1450	891	57.	0.0	1695.8
1	0251	172	235.	0.0	1698.2	*	1	0851	532	1045.	30.4	1709.3	*	1	1451	892	56.	0.0	1695.8
1	0252	173	236.	0.0	1698.2	*	1	0852	533	1043.	30.1	1709.3	*	1	1452	893	55.	0.0	1695.8
1	0253	174	238.	0.0	1698.2	*	1	0853	534	1042.	29.7	1709.3	*	1	1453	894	54.	0.0	1695.8
1	0254	175	239.	0.0	1698.3	*	1	0854	535	1040.	29.4	1709.2	*	1	1454	895	54.	0.0	1695.8
1	0255	176	240.	0.0	1698.3	*	1	0855	536	1038.	29.1	1709.2	*	1	1455	896	53.	0.0	1695.7
1	0256	177	241.	0.0	1698.3	*	1	0856	537	1036.	28.7	1709.1	*	1	1456	897	52.	0.0	1695.7
1	0257	178	242.	0.0	1698.3	*	1	0857	538	1034.	28.4	1709.1	*	1	1457	898	51.	0.0	1695.7
1	0258	179	243.	0.0	1698.3	*	1	0858	539	1033.	28.1	1709.1	*	1	1458	899	50.	0.0	1695.7
1	0259	180	245.	0.0	1698.3	*	1	0859	540	1031.	27.7	1709.0	*	1	1459	900	50.	0.0	1695.7
1	0300	181	246.	0.0	1698.3	*	1	0900	541	1029.	27.4	1709.0	*	1	1500	901	49.	0.0	1695.7
1	0301	182	247.	0.0	1698.3	*	1	0901	542	1027.	27.0	1708.9	*	1	1501	902	48.	0.0	1695.7
1	0302	183	248.	0.0	1698.3	*	1	0902	543	1025.	26.7	1708.9	*	1	1502	903	47.	0.0	1695.7
1	0303	184	250.	0.0	1698.4	*	1	0903	544	1023.	26.3	1708.9	*	1	1503	904	47.	0.0	1695.7
1	0304	185	252.	0.0	1698.4	*	1	0904	545	1021.	26.0	1708.8	*	1	1504	905	46.	0.0	1695.6
1	0305	186	255.	0.0	1698.4	*	1	0905	546	1019.	25.6	1708.8	*	1	1505	906	46.	0.0	1695.6
1	0306	187	258.	0.0	1698.4	*	1	0906	547	1017.	25.2	1708.7	*	1	1506	907	46.	0.0	1695.6
1	0307	188	261.	0.0	1698.5	*	1	0907	548	1015.	24.9	1708.7	*	1	1507	908	45.	0.0	1695.6
1	0308	189	264.	0.1	1698.5	*	1	0908	549	1013.	24.5	1708.7	*	1	1508	909	45.	0.0	1695.6
1	0309	190	267.	0.1	1698.5	*	1	0909	550	1011.	24.1	1708.6	*	1	1509	910	44.	0.0	1695.6
1	0310	191	270.	0.1	1698.6	*	1	0910	551	1009.	23.7	1708.6	*	1	1510	911	44.	0.0	1695.6
1	0311	192	273.	0.1	1698.6	*	1	0911	552	1007.	23.4	1708.5	*	1	1511	912	43.	0.0	1695.6
1	0312	193	276.	0.1	1698.6	*	1	0912	553	1005.	23.0	1708.5	*	1	1512	913	43.	0.0	1695.6
1	0313	194	279.	0.1	1698.7	*	1	0913	554	1003.	22.6	1708.4	*	1	1513	914	42.	0.0	1695.6
1	0314	195	283.	0.1	1698.7	*	1	0914	555	1001.	22.2	1708.4	*	1	1514	915	42.	0.0	1695.6
1	0315	196	286.	0.1	1698.7	*	1	0915	556	999.	21.8	1708.3	*	1	1515	916	41.	0.0	1695.6
1	0316	197	290.	0.1	1698.8	*	1	0916	557	996.	21.4	1708.3	*	1	1516	917	41.	0.0	1695.6
1	0317	198	295.	0.1	1698.8	*	1	0917	558	994.	21.0	1708.2	*	1	1517	918	40.	0.0	1695.6
1	0318	199	303.	0.1	1698.9	*	1	0918	559	992.	20.6	1708.2	*	1	1518	919	40.	0.0	1695.6
1	0319	200	314.	0.1	1699.0	*	1	0919	560	990.	20.2	1708.1	*	1	1519	920	39.	0.0	1695.5
1	0320	201	322.	0.1	1699.1	*	1	0920	561	988.	19.7	1708.1	*	1	1520	921	39.	0.0	1695.5
1	0321	202	335.	0.1	1699.2	*	1	0921	562	985.	19.3	1708.1	*	1	1521	922	38.	0.0	1695.5
1	0322	203	349.	0.1	1699.4	*	1	0922	563	983.	18.9	1708.0	*	1	1522	923	38.	0.0	1695.5
1	0323	204	365.	0.2	1699.5	*	1	0923	564	980.	18.5	1707.9	*	1	1523	924	37.	0.0	1695.5
1	0324	205	381.	0.2	1699.7	*	1	0924	565	976.	18.1	1707.9	*	1	1524	925	37.	0.0	1695.5
1	0325	206	398.	0.2	1699.8	*	1	0925	566	973.	17.6	1707.8	*	1	1525	926	37.	0.0	1695.5
1	0326	207	414.	0.2	1700.0	*	1	0926	567	969.	17.2	1707.7	*	1	1526	927	36.	0.0	1695.5
1	0327	208	424.	0.3	1700.1	*	1	0927	568	966.	16.8	1707.6	*	1	1527	928	36.	0.0	1695.5
1	0328	209	437.	0.3	1700.2	*	1	0928	569	963.	16.3	1707.6	*	1	1528	929	35.	0.0	1695.5
1	0329	210	452.	0.4	1700.4	*	1	0929	570	959.	15.9	1707.5	*	1	1529	930	35.	0.0	1695.5
1	0330	211	468.	0.4	1700.5	*	1	0930	571	956.	15.5	1707.4	*	1	1530	931	35.	0.0	1695.5
1	0331	212	485.	0.5	1700.7	*	1	0931	572	952.	15.0	1707.3	*	1	1531	932	34.	0.0	1695.5
1	0332	213	505.	0.6	1700.9	*	1	0932	573	949.	14.6	1707.3	*	1	1532	933	34.	0.0	1695.5
1	0333	214	530.	0.6	1701.2	*	1	0933	574	945.	14.2	1707.2	*	1	1533	934	34.	0.0	1695.5
1	0334	215	561.	0.7	1701.5	*	1	0934	575	942.	13.8	1707.1	*	1	1534	935	33.	0.0	1695.5
1	0335	216	599.	0.9	1701.9	*	1	0935	576	938.	13.3	1707.0	*	1	1535	936	33.	0.0	1695.5
1	0336	217	625.	1.0	1702.2	*	1	0936	577	935.	12.9	1707.0	*	1	1536	937	32.	0.0	1695.4
1	0337	218	647.	1.3	1702.5	*	1	0937	578	931.	12.5	1706.9	*	1	1537	938	32.	0.0	1695.4
1	0338	219	674.	1.5	1702.9	*	1	0938	579	928.	12.0	1706.8	*	1	1538	939	32.	0.0	1695.4
1	0339	220	706.	1.8	1703.3	*	1	0939	580	924.	11.6	1706.8	*	1	1539	940	31.	0.0	1695.4
1	0340	221	740.	2.2	1703.8	*	1	0940	581	921.	11.2	1706.7	*	1	1540	941	31.	0.0	1695.4
1	0341	222	759.	2.6	1704.1	*	1	0941	582	918.	10.7	1706.6	*	1	1541	942	31.	0.0	1695.4
1	0342	223	772.	3.0	1704.3	*	1	0942	583	914.	10.3	1706.5	*	1	1542	943	30.	0.0	1695.4
1	0343	224	785.	3.5	1704.5	*	1	0943	584	911.	9.9	1706.5	*	1	1543	944	30.	0.0	1695.4
1	0344	225	801.	4.0	1704.7	*	1	0944	585	907.	9.4	1706.4	*	1	1544	945	30.	0.0	1695.4
1	0345	226	818.	4.6	1705.0	*	1	0945	586	904.	9.0	1706.3	*	1	1545	946	29.	0.0	1695.4
1	0346	227	837.	5.3	1705.2	*	1	0946	587	900.	8.6	1706.2	*	1	1546	947	29.	0.0	1695.4

1	0347	228	857.	6.0	1705.5	*	1	0947	588	897.	8.2	1706.2	*	1	1547	948	28.	0.0	1695.4
1	0348	229	879.	6.8	1705.9	*	1	0948	589	894.	7.7	1706.1	*	1	1548	949	28.	0.0	1695.4
1	0349	230	893.	7.7	1706.1	*	1	0949	590	890.	7.3	1706.0	*	1	1549	950	27.	0.0	1695.4
1	0350	231	901.	8.6	1706.2	*	1	0950	591	881.	6.9	1705.9	*	1	1550	951	27.	0.0	1695.4
1	0351	232	909.	9.6	1706.4	*	1	0951	592	870.	6.5	1705.7	*	1	1551	952	26.	0.0	1695.4
1	0352	233	918.	10.8	1706.6	*	1	0952	593	859.	6.1	1705.6	*	1	1552	953	25.	0.0	1695.3
1	0353	234	928.	12.0	1706.8	*	1	0953	594	848.	5.7	1705.4	*	1	1553	954	24.	0.0	1695.3
1	0354	235	938.	13.3	1707.0	*	1	0954	595	837.	5.3	1705.2	*	1	1554	955	23.	0.0	1695.3
1	0355	236	950.	14.7	1707.3	*	1	0955	596	827.	5.0	1705.1	*	1	1555	956	23.	0.0	1695.3
1	0356	237	961.	16.2	1707.5	*	1	0956	597	817.	4.6	1705.0	*	1	1556	957	22.	0.0	1695.3
1	0357	238	974.	17.8	1707.8	*	1	0957	598	808.	4.3	1704.8	*	1	1557	958	21.	0.0	1695.3
1	0358	239	986.	19.4	1708.1	*	1	0958	599	799.	4.0	1704.7	*	1	1558	959	20.	0.0	1695.3
1	0359	240	995.	21.1	1708.3	*	1	0959	600	790.	3.6	1704.6	*	1	1559	960	19.	0.0	1695.3
1	0400	241	1004.	22.8	1708.5	*	1	1000	601	781.	3.3	1704.4	*	1	1600	961	18.	0.0	1695.3
1	0401	242	1014.	24.6	1708.7	*	1	1001	602	773.	3.0	1704.3	*	1	1601	962	18.	0.0	1695.3
1	0402	243	1024.	26.4	1708.9	*	1	1002	603	764.	2.7	1704.2	*	1	1602	963	17.	0.0	1695.2
1	0403	244	1034.	28.3	1709.1	*	1	1003	604	756.	2.4	1704.1	*	1	1603	964	16.	0.0	1695.2
1	0404	245	1044.	30.2	1709.3	*	1	1004	605	740.	2.2	1703.8	*	1	1604	965	15.	0.0	1695.2
1	0405	246	1054.	32.1	1709.5	*	1	1005	606	715.	1.9	1703.5	*	1	1605	966	15.	0.0	1695.2
1	0406	247	1065.	34.0	1709.8	*	1	1006	607	693.	1.7	1703.1	*	1	1606	967	14.	0.0	1695.2
1	0407	248	1075.	35.9	1710.0	*	1	1007	608	673.	1.5	1702.9	*	1	1607	968	14.	0.0	1695.2
1	0408	249	1083.	37.8	1710.2	*	1	1008	609	656.	1.4	1702.6	*	1	1608	969	13.	0.0	1695.2
1	0409	250	1091.	39.7	1710.3	*	1	1009	610	641.	1.2	1702.4	*	1	1609	970	12.	0.0	1695.2
1	0410	251	1099.	41.6	1710.5	*	1	1010	611	627.	1.1	1702.2	*	1	1610	971	12.	0.0	1695.2
1	0411	252	1107.	43.5	1710.7	*	1	1011	612	615.	1.0	1702.0	*	1	1611	972	11.	0.0	1695.2
1	0412	253	1114.	45.4	1710.8	*	1	1012	613	592.	0.9	1701.8	*	1	1612	973	11.	0.0	1695.2
1	0413	254	1122.	47.2	1711.0	*	1	1013	614	572.	0.8	1701.6	*	1	1613	974	10.	0.0	1695.1
1	0414	255	1129.	49.0	1711.2	*	1	1014	615	558.	0.7	1701.4	*	1	1614	975	10.	0.0	1695.1
1	0415	256	1137.	50.8	1711.3	*	1	1015	616	547.	0.7	1701.3	*	1	1615	976	9.	0.0	1695.1
1	0416	257	1144.	52.5	1711.5	*	1	1016	617	540.	0.7	1701.3	*	1	1616	977	9.	0.0	1695.1
1	0417	258	1151.	54.2	1711.6	*	1	1017	618	534.	0.7	1701.2	*	1	1617	978	9.	0.0	1695.1
1	0418	259	1158.	55.9	1711.8	*	1	1018	619	530.	0.6	1701.2	*	1	1618	979	8.	0.0	1695.1
1	0419	260	1164.	57.5	1711.9	*	1	1019	620	526.	0.6	1701.1	*	1	1619	980	8.	0.0	1695.1
1	0420	261	1170.	59.0	1712.0	*	1	1020	621	522.	0.6	1701.1	*	1	1620	981	8.	0.0	1695.1
1	0421	262	1174.	60.5	1712.1	*	1	1021	622	520.	0.6	1701.1	*	1	1621	982	7.	0.0	1695.1
1	0422	263	1178.	61.9	1712.2	*	1	1022	623	517.	0.6	1701.0	*	1	1622	983	7.	0.0	1695.1
1	0423	264	1182.	63.2	1712.3	*	1	1023	624	515.	0.6	1701.0	*	1	1623	984	7.	0.0	1695.1
1	0424	265	1186.	64.5	1712.4	*	1	1024	625	512.	0.6	1701.0	*	1	1624	985	6.	0.0	1695.1
1	0425	266	1190.	65.7	1712.5	*	1	1025	626	510.	0.6	1701.0	*	1	1625	986	6.	0.0	1695.1
1	0426	267	1193.	66.9	1712.6	*	1	1026	627	508.	0.6	1700.9	*	1	1626	987	6.	0.0	1695.1
1	0427	268	1196.	68.0	1712.7	*	1	1027	628	506.	0.6	1700.9	*	1	1627	988	6.	0.0	1695.1
1	0428	269	1199.	69.0	1712.8	*	1	1028	629	504.	0.6	1700.9	*	1	1628	989	5.	0.0	1695.1
1	0429	270	1202.	69.9	1712.8	*	1	1029	630	502.	0.5	1700.9	*	1	1629	990	5.	0.0	1695.1
1	0430	271	1204.	70.8	1712.9	*	1	1030	631	500.	0.5	1700.9	*	1	1630	991	5.	0.0	1695.1
1	0431	272	1207.	71.7	1712.9	*	1	1031	632	498.	0.5	1700.8	*	1	1631	992	5.	0.0	1695.1
1	0432	273	1209.	72.5	1713.0	*	1	1032	633	496.	0.5	1700.8	*	1	1632	993	4.	0.0	1695.1
1	0433	274	1211.	73.3	1713.1	*	1	1033	634	494.	0.5	1700.8	*	1	1633	994	4.	0.0	1695.1
1	0434	275	1213.	74.0	1713.1	*	1	1034	635	492.	0.5	1700.8	*	1	1634	995	4.	0.0	1695.1
1	0435	276	1215.	74.8	1713.2	*	1	1035	636	491.	0.5	1700.8	*	1	1635	996	4.	0.0	1695.1
1	0436	277	1217.	75.5	1713.2	*	1	1036	637	489.	0.5	1700.8	*	1	1636	997	4.	0.0	1695.1
1	0437	278	1219.	76.2	1713.3	*	1	1037	638	487.	0.5	1700.7	*	1	1637	998	4.	0.0	1695.1
1	0438	279	1221.	76.9	1713.3	*	1	1038	639	485.	0.5	1700.7	*	1	1638	999	3.	0.0	1695.0
1	0439	280	1223.	77.6	1713.4	*	1	1039	640	484.	0.5	1700.7	*	1	16391000		3.	0.0	1695.0
1	0440	281	1225.	78.3	1713.4	*	1	1040	641	482.	0.5	1700.7	*	1	16401001		3.	0.0	1695.0
1	0441	282	1227.	79.0	1713.5	*	1	1041	642	480.	0.5	1700.7	*	1	16411002		3.	0.0	1695.0
1	0442	283	1229.	79.7	1713.5	*	1	1042	643	478.	0.5	1700.6	*	1	16421003		3.	0.0	1695.0
1	0443	284	1231.	80.4	1713.6	*	1	1043	644	477.	0.5	1700.6	*	1	16431004		3.	0.0	1695.0
1	0444	285	1233.	81.1	1713.6	*	1	1044	645	475.	0.5	1700.6	*	1	16441005		3.	0.0	1695.0
1	0445	286	1235.	81.8	1713.7	*	1	1045	646	473.	0.4	1700.6	*	1	16451006		3.	0.0	1695.0
1	0446	287	1237.	82.5	1713.7	*	1	1046	647	472.	0.4	1700.6	*	1	16461007		2.	0.0	1695.0
1	0447	288	1239.	83.2	1713.8	*	1	1047	648	470.	0.4	1700.6	*	1	16471008		2.	0.0	1695.0
1	0448	289	1241.	84.0	1713.8	*	1	1048	649	469.	0.4	1700.5	*	1	16481009		2.	0.0	1695.0
1	0449	290	1243.	84.7	1713.9	*	1	1049	650	467.	0.4	1700.5	*	1	16491010		2.	0.0	1695.0
1	0450	291	1245.	85.5	1713.9	*	1	1050	651	466.	0.4	1700.5	*	1	16501011		2.	0.0	1695.0
1	0451	292	1248.	86.3	1714.0	*	1	1051	652	464.	0.4	1700.5	*	1	16511012		2.	0.0	1695.0
1	0452	293	1249.	87.0	1714.0	*	1	1052	653	463.	0.4	1700.5	*	1	16521013		2.	0.0	1695.0
1	0453	294	1251.	87.7	1714.1	*	1	1053	654	461.	0.4	1700.5	*	1	16531014		2.	0.0	1695.0
1	0454	295	1253.	88.4	1714.1	*	1	1054	655	460.	0.4	1700.5	*	1	16541015		2.	0.0	1695.0
1	0455	296	1254.	89.1	1714.2	*	1	1055	656	459.	0.4	1700.4	*	1	16551016		2.	0.0	1695.0
1	0456	297	1256.	89.7	1714.2	*	1	1056	657	457.	0.4	1700.4	*	1	16561017		2.	0.0	1695.0
1	0457	298	1257.	90.3	1714.2	*	1	1057	658	456.	0.4	1700.4	*	1	16571018		1.	0.0	1695.0
1	0458	299	1259.	90.9	1714.3	*	1	1058	659	454.	0.4	1700.4	*	1	16581019		1.	0.0	1695.0
1	0459	300	1260.	91.4	1714.3	*	1	1059	660	453.	0.4	1700.4	*	1	16591020		1.	0.0	1695.0
1	0500	301	1261.	91.9	1714.3	*	1	1100	661	451.	0.4	1700.4	*	1	17001021		1.	0.0	1695.0
1	0501	302	1262.	92.4	1714.4	*	1	1101	662	450.	0.4	1700.4	*	1	17011022		1.	0.0	1695.0
1	0502	303	1263.	92.9	1714.4	*	1	1102	663	449.	0.4	1700.3	*	1	17021023		1.	0.0	1695.0
1	0503	304	1264.	93.3	1714.4	*	1	1103	664	447.	0.4	1700.3	*	1	17031024		1.	0.0	1695.0
1	0504	305	1265.	93.7	1714.5	*	1	1104	665	446.	0.4	1700.3	*	1	17041025		1.	0.0	1695.0
1	0505	306	1266.	94.0	1714.5	*	1	1105	666	445.	0.3	1700.3	*	1	17051026		1.	0.0	1695.0
1	0506	307	1267.	94.4	1714.5	*	1	1106	667	443.	0.3	1700.3	*	1	17061027		1.	0.0	1695.0
1	0507	308	1267.	94.7	1714.5	*	1	1107	668	442.	0.3	1700.3	*	1	17071028		1.	0.0	1695.0
1	0508	309	1268.	94.9	1714.5	*	1	1108	669	441.	0.3	1700.3	*	1	17081029		1.	0.0	1695.0
1	0509	310	1269.	95.2	1714.5	*	1	1109	670	439.	0.3	1700.3	*	1	17091030		1.	0.0	1695.0
1	0510	311	1269.	95.4	1714.6	*	1	1110	671	438.	0.3	1700.2	*	1	17101031		1.	0.0	1695.0
1	0511	312	1270.	95.6	1714.6	*	1	1111	672	437.	0.3	1700.2	*	1	17111032		1.	0.0	1695.0
1	0512	313	1270.	95.7	1714.6	*	1	1112	673	435.	0.3	1700.2	*	1	17121033		1.	0.0	1695.0
1	0513	314	1270.	95.9	1714.6	*	1	1113	674	434.	0.3	1700.2	*	1	17131034		1.	0.0	1695.0
1	0514	315	1271.	96.0	1714.6	*	1	1114	675	432.	0.3	1700.2	*	1	17141035		1.	0.0	1695.0
1	0515	316	1271.	96.1	1714.6	*	1	1115	676	431.	0.3	1700.2	*	1	17151036		1.	0.0	1695.0
1	0516	317	1271.	96.2	1714.6	*	1	1116	677	429.	0.3	1700.2	*	1	17161037		1.	0.0	1695.0
1	0517	318	1271.	96.2	1714.6	*	1	1117	678	428.	0.3	1700.1	*	1	17171038		1.	0.0	1695.0
1	0518	319	1271.	96.2	1714.6	*	1	1118	679	427.	0.3	1700.1	*	1	17181039		1.	0.0	1695.0
1	0519	320	1271.	96.2	1714.6	*	1	1119	680	425.	0.3	1700.1	*	1	17191040		1.	0.0	1695.0
1	0520	321	1271.	96.2	1714.6	*	1	1120	681	423.	0.3	1700.1	*	1	17201041		1.	0.0	1695.0
1	0521	322	1271.	96.2	1714.6	*	1	1121	682	421.	0.3	1700.1	*	1	17211042		1.	0.0	1695.0
1	0522	323	1271.	96.1	1714.6	*	1	1122	683	419.	0.3	1700.1	*	1	17221043		1.	0.0	1695.0
1	0523	324	1271.	96.1	1714.6	*	1	1123	684	417.	0.3	1700.0	*	1	17231044		0.	0.0	1695.0
1	0524	325	1270.	96.0	1714.6	*	1	1124	685	415.	0.2	1700.0	*	1	17241045		0.	0.0	1695.0
1	0525	326	1270.	95.9	1714.6	*	1	1125	686	410.	0.2	1700.0	*	1	17251046		0.	0.0	1695.0
1	0526	327	1270.	95.7	1714.6	*	1	1126	687	406.	0.2	1699.9	*	1	17261047		0.	0.0	1695.0

1	0527	328	1270.	95.6	1714.6	*	1	1127	688	403.	0.2	1699.9	*	1	17271048	0.	0.0	1695.0
1	0528	329	1269.	95.5	1714.6	*	1	1128	689	400.	0.2	1699.9	*	1	17281049	0.	0.0	1695.0
1	0529	330	1269.	95.3	1714.6	*	1	1129	690	397.	0.2	1699.8	*	1	17291050	0.	0.0	1695.0
1	0530	331	1269.	95.1	1714.5	*	1	1130	691	393.	0.2	1699.8	*	1	17301051	0.	0.0	1695.0
1	0531	332	1268.	94.9	1714.5	*	1	1131	692	390.	0.2	1699.8	*	1	17311052	0.	0.0	1695.0
1	0532	333	1268.	94.7	1714.5	*	1	1132	693	387.	0.2	1699.7	*	1	17321053	0.	0.0	1695.0
1	0533	334	1267.	94.5	1714.5	*	1	1133	694	384.	0.2	1699.7	*	1	17331054	0.	0.0	1695.0
1	0534	335	1267.	94.2	1714.5	*	1	1134	695	381.	0.2	1699.7	*	1	17341055	0.	0.0	1695.0
1	0535	336	1266.	94.0	1714.5	*	1	1135	696	378.	0.2	1699.6	*	1	17351056	0.	0.0	1695.0
1	0536	337	1265.	93.7	1714.5	*	1	1136	697	375.	0.2	1699.6	*	1	17361057	0.	0.0	1695.0
1	0537	338	1265.	93.5	1714.4	*	1	1137	698	372.	0.2	1699.6	*	1	17371058	0.	0.0	1695.0
1	0538	339	1264.	93.2	1714.4	*	1	1138	699	369.	0.2	1699.5	*	1	17381059	0.	0.0	1695.0
1	0539	340	1263.	92.9	1714.4	*	1	1139	700	366.	0.2	1699.5	*	1	17391060	0.	0.0	1695.0
1	0540	341	1263.	92.6	1714.4	*	1	1140	701	363.	0.2	1699.5	*	1	17401061	0.	0.0	1695.0
1	0541	342	1262.	92.3	1714.4	*	1	1141	702	360.	0.2	1699.5	*	1	17411062	0.	0.0	1695.0
1	0542	343	1261.	92.0	1714.3	*	1	1142	703	357.	0.1	1699.4	*	1	17421063	0.	0.0	1695.0
1	0543	344	1261.	91.7	1714.3	*	1	1143	704	354.	0.1	1699.4	*	1	17431064	0.	0.0	1695.0
1	0544	345	1260.	91.4	1714.3	*	1	1144	705	351.	0.1	1699.4	*	1	17441065	0.	0.0	1695.0
1	0545	346	1259.	91.1	1714.3	*	1	1145	706	349.	0.1	1699.4	*	1	17451066	0.	0.0	1695.0
1	0546	347	1258.	90.8	1714.3	*	1	1146	707	346.	0.1	1699.3	*	1	17461067	0.	0.0	1695.0
1	0547	348	1258.	90.4	1714.3	*	1	1147	708	343.	0.1	1699.3	*	1	17471068	0.	0.0	1695.0
1	0548	349	1257.	90.1	1714.2	*	1	1148	709	341.	0.1	1699.3	*	1	17481069	0.	0.0	1695.0
1	0549	350	1256.	89.8	1714.2	*	1	1149	710	338.	0.1	1699.2	*	1	17491070	0.	0.0	1695.0
1	0550	351	1255.	89.5	1714.2	*	1	1150	711	335.	0.1	1699.2	*	1	17501071	0.	0.0	1695.0
1	0551	352	1254.	89.1	1714.2	*	1	1151	712	333.	0.1	1699.2	*	1	17511072	0.	0.0	1695.0
1	0552	353	1254.	88.8	1714.1	*	1	1152	713	330.	0.1	1699.2	*	1	17521073	0.	0.0	1695.0
1	0553	354	1253.	88.5	1714.1	*	1	1153	714	327.	0.1	1699.1	*	1	17531074	0.	0.0	1695.0
1	0554	355	1252.	88.1	1714.1	*	1	1154	715	325.	0.1	1699.1	*	1	17541075	0.	0.0	1695.0
1	0555	356	1251.	87.8	1714.1	*	1	1155	716	322.	0.1	1699.1	*	1	17551076	0.	0.0	1695.0
1	0556	357	1250.	87.4	1714.1	*	1	1156	717	319.	0.1	1699.1	*	1	17561077	0.	0.0	1695.0
1	0557	358	1250.	87.1	1714.0	*	1	1157	718	316.	0.1	1699.0	*	1	17571078	0.	0.0	1695.0
1	0558	359	1249.	86.8	1714.0	*	1	1158	719	314.	0.1	1699.0	*	1	17581079	0.	0.0	1695.0
1	0559	360	1248.	86.4	1714.0	*	1	1159	720	309.	0.1	1699.0	*	1	17591080	0.	0.0	1695.0
						*							*					

****

PEAK FLOW	TIME		MAXIMUM AVERAGE FLOW			
			6-HR	24-HR	72-HR	17.98-HR
+ (CFS)	(HR)					
		(CFS)				
+ 1271.	5.32		1143.	508.	508.	508.
		(INCHES)	1.491	1.985	1.985	1.985
		(AC-FT)	567.	755.	755.	755.

PEAK STORAGE	TIME	MAXIMUM AVERAGE STORAGE			
		6-HR	24-HR	72-HR	17.98-HR
+ (AC-FT)	(HR)				
96.	5.32	57.	19.	19.	19.

PEAK STAGE	TIME	MAXIMUM AVERAGE STAGE			
		6-HR	24-HR	72-HR	17.98-HR
+ (FEET)	(HR)				
1714.61	5.32	1711.57	1702.14	1702.14	1702.14

CUMULATIVE AREA = 7.13 SQ MI

1

RUNOFF SUMMARY
FLOW IN CUBIC FEET PER SECOND
TIME IN HOURS, AREA IN SQUARE MILES

	OPERATION	STATION	PEAK FLOW	TIME OF PEAK	AVERAGE FLOW FOR MAXIMUM PERIOD 6-HOUR	24-HOUR	72-HOUR	BASIN AREA	MAXIMUM STAGE	TIME OF MAX STAGE
+	HYDROGRAPH AT	C559I	2474.	4.17	1162.	508.	508.	7.13		
+	ROUTED TO	C599O	1271.	5.32	1143.	508.	508.	7.13		
+									1714.61	5.32

*** NORMAL END OF HEC-1 ***

APPENDIX D

HYDRAULIC ANALYSIS OF EMERGENCY, PRINCIPAL & AUXILIARY OUTLET WORKS

Alternative G
Principal and Auxiliary Outlets

	No Clogging 4'x10' RCB with trash rack headloss at the inlet	No Clogging 1-60" RCP with trash rack headloss at the inlet	No Clogging Inlet trash rack HL 4'x10' AND 1-60" RCP	
Elev. (ft)	Q (cfs)	Q (cfs)	Elev. (ft)	Q (cfs)
1695.00	0	0	1695.00	**0**
1696.00	50	22	1696.00	**72**
1698.00	151	62	1698.00	**213**
1700.00	283	131	1700.00	**414**
1702.00	422	191	1702.00	**613**
1704.00	515	237	1704.00	**752**
1706.00	613	276	1706.00	**889**
1708.00	675	308	1708.00	**983**
1710.00	738	338	1710.00	**1076**
1712.00	803	365	1712.00	**1168**
1712.80	826	375	1712.80	**1201**
1714.00	858	391	1714.00	**1248**
1714.50	870	397	1714.50	**1267**
1714.86	879	401	1714.86	**1280**
1715.00	881	403	1715.00	**1283**
1716.00	(906 +	414) =	~~1716.00~~	**1320**
1717.50	945	429	1717.50	**1373**
1719.00	976	446	1719.00	**1422**
1720.50	1008	460	1720.50	**1468**
1721.50	1030	469	1721.50	**1498**
1722.00	1041	473	1722.00	**1514**
1722.50	1052	477	1722.50	**1529**
1723.00	1062	481	1723.00	**1543**
1723.50	1072	484	1723.50	**1556**
1724.00	1082	487	1724.00	**1569**
1724.50	1092	491	1724.50	**1582**
1725.00	1102	495	1725.00	**1596**
1725.50	1111	499	1725.50	**1610**
1726.00	1119	503	1726.00	**1622**
1726.50	1127	507	1726.50	**1634**
1727.00	1137	510	1727.00	**1646**
1727.50	1147	512	1727.50	**1659**
1728.00	1157	515	1728.00	**1672**
1728.50	1165	517	1728.50	**1682**
1729.00	1171	518	1729.00	**1690**
1729.50	1177	520	1729.50	**1697**
1730.00	1182	522	1730.00	**1704**

TOTAL Q
FOR BOTH OUTLET WORKS

Alternative G
Existing Emergency Spillway (Existing Portion Only)

EXISTING EMERGENCY SPILLWAY RATING CURVE				
WEIR EQUATION: $Q = CLH^{3/2}$				
L_e =	266.0	Feet		
C =	2.4			
Elev.	Q	[1]Area	Velocity	
(ft)	(cfs)	(sf)	(f/s)	
1712.80	0.0	0.0	0.00	
1714.00	0	0.0	0.00	
1714.50	0	0.0	0.00	
1714.86	0	0.0	0.00	
1715.00	33	585.2	0.06	
1716.00	777	851.2	0.91	
1717.50	2,738	1250.2	2.19	
1719.00	5,378	1649.2	3.26	
1720.50	8,551	2048.2	4.17	
1721.50	10,923	2314.2	4.72	
1722.00	12,180	2447.2	4.98	
1722.50	13,481	2580.2	5.22	
1723.00	14,826	2713.2	5.46	
1723.50	16,213	2846.2	5.70	
1724.00	17,641	2979.2	5.92	
1724.50	19,108	3112.2	6.14	
1725.00	20,613	3245.2	6.35	
1725.50	22,157	3378.2	6.56	
1726.00	23,737	3511.2	6.76	
1726.50	25,353	3644.2	6.96	
1727.00	27,004	3777.2	7.15	
1727.50	28,689	3910.2	7.34	
1728.00	30,408	4043.2	7.52	
1728.50	32,160	4176.2	7.70	
1729.00	33,944	4309.2	7.88	
1729.50	35,761	4442.2	8.05	
1730.00	37,608	4575.2	8.22	

Alternative G
Enlarged Emergency Spillway (Enlarged Portion Only)

Enlarged emergency spillway rating curve - FUSE PLUG GONE - IDF FLOODS ONLY						
WEIR EQUATION: $Q = CLH^{3/2}$						
L_{ee} =	90.0	Feet				
C =	2.6					
Elev.	Q		[1]Area	Velocity		
(ft)	(cfs)	Comments	(sf)	(f/s)		
1712.80	0	**H=0.0 Fuse Plug In Tact**	0.0	0.00		
1714.00	0	**H=0.0 Fuse Plug In Tact**	0.0	0.00		
1714.50	0	**H=0.0 Fuse Plug In Tact**	0.0	0.00		
1714.86	0	**H=0.0 Fuse Plug In Tact**	0.0	0.00		
1715.00	764	**H=2.2 Fuse Plug Blown**	198.0	3.86		
1716.00	1,339	**H=3.2 Fuse Plug Blown**	288.0	4.65		
1717.50	2,384	**H=4.7 Fuse Plug Blown**	423.0	5.64		
1719.00	3,612	**H=6.2 Fuse Plug Blown**	558.0	6.47		
1720.50	5,000	**H=7.7 Fuse Plug Blown**	693.0	7.21		
1721.50	6,005	**H=8.7 Fuse Plug Blown**	783.0	7.67		
1722.00	6,530	**H=9.2 Fuse Plug Blown**	828.0	7.89		
1722.50	7,069	**H=9.7 Fuse Plug Blown**	873.0	8.10		
1723.00	7,623	**H=10.2 Fuse Plug Blown**	918.0	8.30		
1723.50	8,190	**H=10.7 Fuse Plug Blown**	963.0	8.50		
1724.00	8,771	**H=11.2 Fuse Plug Blown**	1008.0	8.70		
1724.50	9,365	**H=11.7 Fuse Plug Blown**	1053.0	8.89		
1725.00	9,971	**H=12.2 Fuse Plug Blown**	1098.0	9.08		
1725.50	10,591	**H=12.7 Fuse Plug Blown**	1143.0	9.27		
1726.00	11,222	**H=13.2 Fuse Plug Blown**	1188.0	9.45		
1726.50	11,866	**H=13.7 Fuse Plug Blown**	1233.0	9.62		
1727.00	12,521	**H=14.2 Fuse Plug Blown**	1278.0	9.80		
1727.50	13,188	**H=14.7 Fuse Plug Blown**	1323.0	9.97		
1728.00	13,867	**H=15.2 Fuse Plug Blown**	1368.0	10.14		
1728.50	14,557	**H=15.7 Fuse Plug Blown**	1413.0	10.30		
1729.00	15,258	**H=16.2 Fuse Plug Blown**	1458.0	10.46		
1729.50	15,969	**H=16.7 Fuse Plug Blown**	1503.0	10.63		
1730.00	16,692	**H=17.2 Fuse Plug Blown**	1548.0	10.78		
1. Assumes vertical side walls.						

Alternative G
Entire Emergency Spillway

Proposed emergency spillway rating curve - total for IDF FLOODS ONLY.						
Fuse plug HAS SCOURED out.						
Rating Curve for Proposed Emergency Spillway - $L_e + L_{ee}$						
Elev.	Q					
(ft)	(cfs)					
1712.80	0					
1714.00	0					
1714.50	0					
1714.86	0					
1715.00	797					
1716.00	2117					
1717.50	5123					
1719.00	8990					
1720.50	13551					
1721.50	16928					
1722.00	18710					
1722.50	20551					
1723.00	22449					
1723.50	24403					
1724.00	26411					
1724.50	28472					
1725.00	30585					
1725.50	32747					
1726.00	34959					
1726.50	37218					
1727.00	39525					
1727.50	41877					
1728.00	44275					
1728.50	46717					
1729.00	49202					
1729.50	51730					
1730.00	54300					

TOTAL Q OVER EMERGENCY SPILLWAY

ALTERNATIVE "G"
Composite Rating Curve

	No Clogg
	T/Dam = 1726.5'
	Total Discharge
	Through Spillways
	and Over
	Top of Prop. Dam
Elev.	Q
(ft)	(cfs)
1695.00	0
1696.00	72
1698.00	213
1700.00	414
1702.00	613
1704.00	752
1706.00	889
1708.00	983
1710.00	1076
1712.00	1168
1712.80	1201
1714.00	1248
1714.50	1267
1714.86	1280
1715.00	2080
1716.00	3437
1717.50	6496
1719.00	10412
1720.50	15018
1721.50	18426
1722.00	20223
1722.50	22080
1723.00	23992
1723.50	25959
1724.00	27980
1724.50	30055
1725.00	32181
1725.50	34357
1726.00	36581
1726.50	38852
1727.00	41714
1727.50	45070
1728.00	48765
1728.50	52737
1729.00	56955
1729.50	61398
1730.00	66049

TOTAL Q FROM
OUTLET WORKS AND SPILLWAY

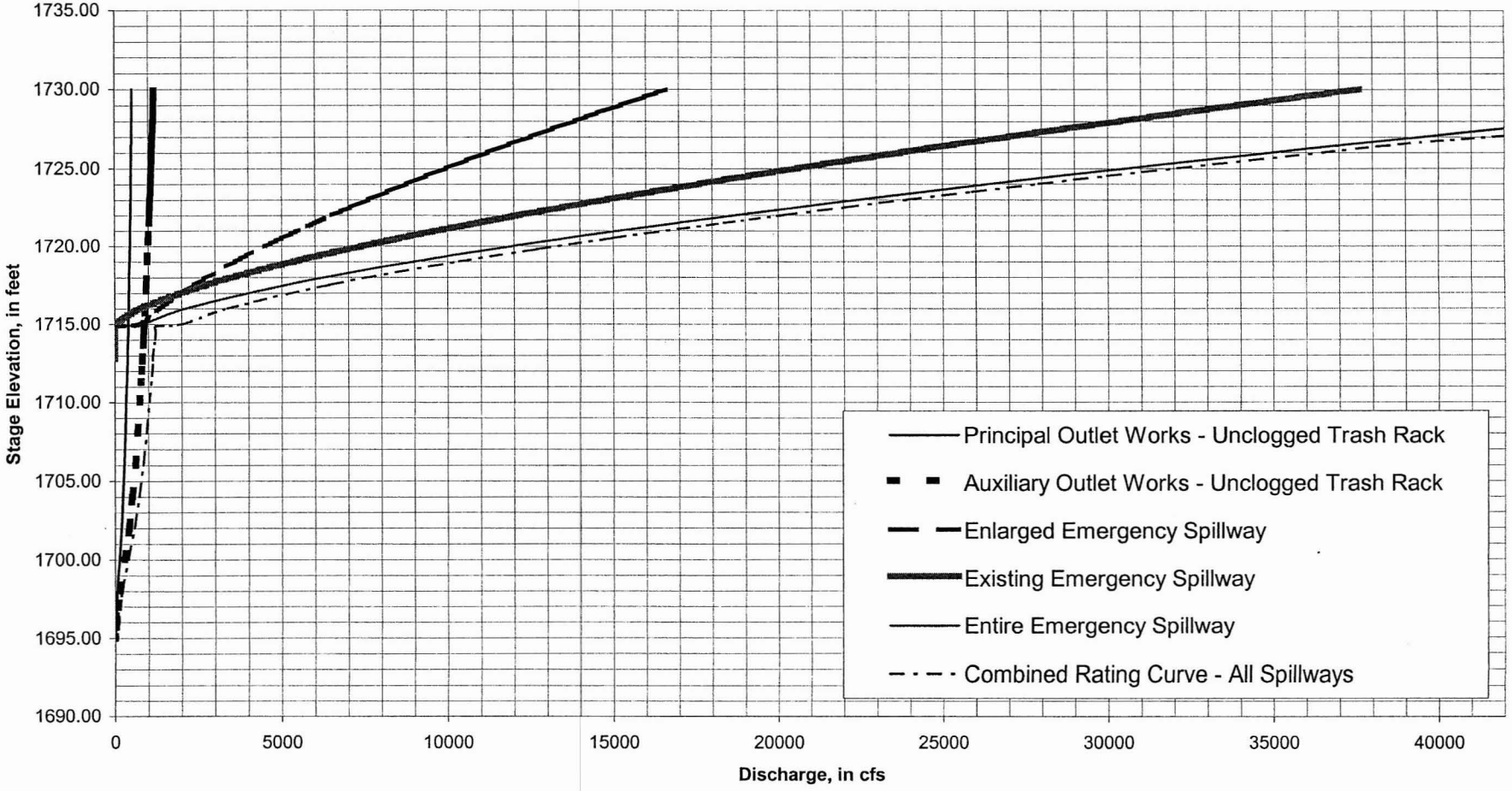

FIGURE 7

Golden Eagle Park Dam spillway
Discharge - Capacity Relation

CURRENT DATE: 02-17-2000 FILE DATE: 10-13-1999
CURRENT TIME: 09:58:56 FILE NAME: COMB-G

****
********** FHWA CULVERT ANALYSIS **********
********** HY-8, VERSION 6.1 **********

C U L V NO.	SITE DATA INLET ELEV. (ft)	OUTLET ELEV. (ft)	CULVERT LENGTH (ft)	CULVERT SHAPE, MATERIAL, INLET BARRELS SHAPE MATERIAL	SPAN (ft)	RISE (ft)	MANNING n	INLET TYPE
1	1694.85	1693.24	124.31	1 RCP	5.00	5.00	.013	CONVENTIONAL
2	1695.10	1693.95	120.01	1 RCB	10.00	4.00	.013	CONVENTIONAL
3								
4								
5								
6								

****

SUMMARY OF CULVERT FLOWS (cfs) FILE: COMB-G DATE: 10-13-1999

ELEV (ft)	TOTAL	1	2	3	4	5	6	ROADWAY	ITR
1694.85	0.0	0.0	0.0	0.0	0.0	0.0	0.0	0.00	0
1697.64	175.0	50.6	124.4	0.0	0.0	0.0	0.0	0.00	5
1699.27	350.0	105.8	244.5	0.0	0.0	0.0	0.0	0.00	3
1700.92	525.0	162.9	362.1	0.0	0.0	0.0	0.0	0.00	4
1703.00	700.0	217.2	483.1	0.0	0.0	0.0	0.0	0.00	4
1705.65	875.0	270.0	605.4	0.0	0.0	0.0	0.0	0.00	4
1709.06	1050.0	325.1	725.2	0.0	0.0	0.0	0.0	0.00	5
1713.24	1225.0	382.3	842.8	0.0	0.0	0.0	0.0	0.00	6
1718.07	1400.0	439.6	960.5	0.0	0.0	0.0	0.0	0.00	6
1723.61	1575.0	495.0	1080.1	0.0	0.0	0.0	0.0	0.00	7
1730.03	1750.0	546.2	1203.9	0.0	0.0	0.0	0.0	0.00	8
1735.00	1869.3	577.9	1291.4	0.0	0.0	0.0	0.0	OVERTOPPING	

****

SUMMARY OF ITERATIVE SOLUTION ERRORS FILE: COMB-G DATE: 10-13-1999

HEAD ELEV (ft)	HEAD ERROR (ft)	TOTAL FLOW (cfs)	FLOW ERROR (cfs)	% FLOW ERROR
1694.85	0.000	0.00	0.00	0.00
1697.64	0.000	175.00	0.02	0.01
1699.27	0.002	350.00	-0.26	-0.07
1700.92	0.001	525.00	-0.08	-0.02
1703.00	0.004	700.00	-0.29	-0.04
1705.65	0.008	875.00	-0.48	-0.05
1709.06	0.005	1050.00	-0.25	-0.02
1713.24	0.002	1225.00	-0.09	-0.01
1718.07	0.002	1400.00	-0.06	-0.00
1723.61	0.003	1575.00	-0.09	-0.01
1730.03	0.003	1750.00	-0.07	-0.00

****

<1> TOLERANCE (ft) = 0.010 <2> TOLERANCE (%) = 1.000

****

CURRENT DATE: 02-17-2000 FILE DATE: 10-13-1999
CURRENT TIME: 09:58:56 FILE NAME: COMB-G

PERFORMANCE CURVE FOR CULVERT 1 - 1(5.00 (ft) BY 5.00 (ft)) RCP

DIS-CHARGE FLOW (cfs)	HEAD-WATER ELEV. (ft)	INLET CONTROL DEPTH (ft)	OUTLET CONTROL DEPTH (ft)	FLOW TYPE <F4>	NORMAL DEPTH (ft)	CRIT. DEPTH (ft)	OUTLET DEPTH (ft)	TW DEPTH (ft)	OUTLET VEL. (fps)	TW VEL. (fps)
0.00	1694.85	0.00	0.00	0-NF	0.00	0.00	0.00	-3.24	0.00	0.00
50.56	1697.64	2.79	2.79	1-S2n	1.38	1.99	1.44	-1.09	10.75	2.30
105.75	1699.27	4.42	4.42	1-S2n	2.06	2.93	2.20	-0.58	12.73	2.90
162.95	1700.93	6.08	6.08	5-S2n	2.64	3.65	2.85	-0.18	14.12	3.32
217.24	1703.00	8.15	8.15	5-S2n	3.18	4.16	3.41	0.16	15.25	3.65
270.05	1705.64	10.79	10.79	5-S2n	3.75	4.55	3.95	0.46	16.24	3.92
325.08	1709.06	14.21	11.70	2-M2c	5.00	4.96	4.96	0.74	16.62	4.16
382.33	1713.24	18.39	14.89	6-S2n	5.00	5.00	4.90	0.98	19.68	4.37
439.57	1718.07	23.22	18.58	6-S2n	5.00	5.00	4.90	1.22	22.62	4.55
494.98	1723.61	28.76	22.66	6-S2n	5.00	5.00	4.90	1.44	25.47	4.72
546.19	1730.02	35.17	26.85	6-S2n	5.00	5.00	4.90	1.65	28.11	4.88

El. inlet face invert 1694.85 ft El. outlet invert 1693.24 ft
El. inlet throat invert 0.00 ft El. inlet crest 0.00 ft

***** SITE DATA ***** CULVERT INVERT **********

INLET STATION	949.00 ft
INLET ELEVATION	1694.85 ft
OUTLET STATION	1073.30 ft
OUTLET ELEVATION	1693.24 ft
NUMBER OF BARRELS	1
SLOPE (V/H)	0.0130
CULVERT LENGTH ALONG SLOPE	124.31 ft

***** CULVERT DATA SUMMARY **********

BARREL SHAPE	CIRCULAR
BARREL DIAMETER	5.00 ft
BARREL MATERIAL	CONCRETE
BARREL MANNING'S n	0.013
INLET TYPE	CONVENTIONAL
INLET EDGE AND WALL	SQUARE EDGE WITH HEADWALL
INLET DEPRESSION	NONE

CURRENT DATE: 02-17-2000 FILE DATE: 10-13-1999
CURRENT TIME: 09:58:56 FILE NAME: COMB-G

PERFORMANCE CURVE FOR CULVERT 2 - 1(10.00 (ft) BY 4.00 (ft)) RCB

DIS-CHARGE FLOW (cfs)	HEAD-WATER ELEV. (ft)	INLET CONTROL DEPTH (ft)	OUTLET CONTROL DEPTH (ft)	FLOW TYPE <F4>	NORMAL DEPTH (ft)	CRIT. DEPTH (ft)	OUTLET DEPTH (ft)	TW DEPTH (ft)	OUTLET VEL. (fps)	TW VEL. (fps)
0.00	1695.10	0.00	0.00	0-NF	0.00	0.00	0.00	-3.95	0.00	0.00
124.42	1697.64	2.54	2.54	1-S2n	1.15	1.69	1.20	-1.80	10.36	2.30
244.52	1699.26	4.16	4.16	5-S2n	1.80	2.65	1.95	-1.29	12.52	2.90
362.13	1700.92	5.82	5.82	5-S2n	2.36	3.45	2.61	-0.89	13.89	3.32
483.06	1703.00	7.90	6.40	6-S2n	2.88	4.00	3.23	-0.55	14.96	3.65
605.42	1705.64	10.54	8.42	6-S2n	3.38	4.00	3.74	-0.25	16.19	3.92
725.17	1709.05	13.95	10.84	6-S2n	4.00	4.00	3.90	0.03	18.59	4.16
842.76	1713.24	18.14	13.64	6-S2n	4.00	4.00	3.90	0.28	21.61	4.37
960.50	1718.06	22.96	16.87	6-S2n	4.00	4.00	3.90	0.51	24.63	4.55
1080.11	1723.61	28.51	20.58	6-S2n	4.00	4.00	3.90	0.73	27.70	4.72
1203.88	1730.03	34.93	24.87	6-S2n	4.00	4.00	3.90	0.94	30.87	4.88

El. inlet face invert 1695.10 ft El. outlet invert 1693.95 ft
El. inlet throat invert 0.00 ft El. inlet crest 0.00 ft

***** SITE DATA ***** CULVERT INVERT **********

INLET STATION	0.00 ft
INLET ELEVATION	1695.10 ft
OUTLET STATION	120.00 ft
OUTLET ELEVATION	1693.95 ft
NUMBER OF BARRELS	1
SLOPE (V/H)	0.0096
CULVERT LENGTH ALONG SLOPE	120.01 ft

***** CULVERT DATA SUMMARY **********

BARREL SHAPE	BOX
BARREL SPAN	10.00 ft
BARREL RISE	4.00 ft
BARREL MATERIAL	CONCRETE
BARREL MANNING'S n	0.013
INLET TYPE	CONVENTIONAL
INLET EDGE AND WALL	1:1 BEVEL (45 DEG. FLARE)
INLET DEPRESSION	NONE

CURRENT DATE: 02-17-2000 FILE DATE: 10-13-1999
CURRENT TIME: 09:58:56 FILE NAME: COMB-G

****
********** TAILWATER **********
****

***** USER DEFINED CHANNEL CROSS-SECTION FILE NAME: TAIL2
MAIN CHANNEL ONLY FILE DATE: 07-08-1999

LEFT CHANNEL BOUNDARY	0
RIGHT CHANNEL BOUNDARY	0
MANNING n LEFT OVER BANK	0.000
MANNING n MAIN CHANNEL	0.031
MANNING n RIGHT OVER BANK	0.000
SLOPE OF CHANNEL	0.0025 ft/ft

CROSS-SECTION COORD. NO.	X (ft)	Y (ft)
1	0.00	1715.00
2	33.00	1700.00
3	49.00	1695.00
4	89.00	1690.00
5	92.00	1690.00
6	96.00	1691.00
7	114.00	1691.00
8	152.00	1692.00
9	161.00	1693.00
10	180.00	1696.00
11	202.00	1700.00
12	326.00	1702.00
13	795.00	1702.00
14	914.00	1716.00

******* UNIFORM FLOW RATING CURVE FOR DOWNSTREAM CHANNEL

FLOW (cfs)	W.S.E. (ft)	FROUDE NUMBER	DEPTH (ft)	VEL. (f/s)	SHEAR (psf)
0.00	1690.00	0.000	-3.24	0.00	0.00
175.00	1692.15	0.417	-1.09	2.30	0.15
350.00	1692.66	0.442	-0.58	2.90	0.21
525.00	1693.06	0.457	-0.18	3.32	0.25
700.00	1693.40	0.468	0.16	3.65	0.29
875.00	1693.70	0.477	0.46	3.92	0.33
1050.00	1693.98	0.484	0.74	4.16	0.36
1225.00	1694.22	0.490	0.98	4.37	0.38
1400.00	1694.46	0.495	1.22	4.55	0.41
1575.00	1694.68	0.499	1.44	4.72	0.43
1750.00	1694.89	0.503	1.65	4.88	0.45

Note: Shear stress was calculated using R.

****
********** ROADWAY OVERTOPPING DATA **********
****

ROADWAY SURFACE	GRAVEL
EMBANKMENT TOP WIDTH	16.00 ft
CREST LENGTH	700.00 ft
OVERTOPPING CREST ELEVATION	1735.00 ft

****

APPENDIX E

HYDRAULIC ANALYSES OF TRASHRACKS FOR PRINCIPAL & AUXILIARY OUTLET WORKS

Headloss Calculations for Principal Spillway Trash Rack

Trashrack Headloss for Unclogged Condition
1 - 60" RCP

$k_t = 1.45-[0.45(a_n/a_g)]-(a_n/a_g)^2$, where a_g = gross area of trashrack and
a_n = net area of trashrack (subtraction of bar area)

Discharge (without Trashrack) (cfs)	Trashrack Areas[a] a_g Total[b] (sf)	a_n Net (sf)	[1]Headloss Coefficient kt ( )	Velocity Through Bars[c] Q/a_n (fps)	Headloss[d] (ft)	Old Stage (ft)	New Stage (ft)
0	182.67	152.77	0.374	0	0	1694.85	1694.85
22	182.67	152.77	0.374	0.14	0.00	1696.00	1696.00
62	182.67	152.77	0.374	0.41	0.00	1698.00	1698.00
131	182.67	152.77	0.374	0.86	0.00	1700.00	1700.00
191	182.67	152.77	0.374	1.25	0.01	1702.00	1702.01
237	182.67	152.77	0.374	1.55	0.01	1704.00	1704.01
276	182.67	152.77	0.374	1.81	0.02	1706.00	1706.02
308	182.67	152.77	0.374	2.02	0.02	1708.00	1708.02
338	182.67	152.77	0.374	2.21	0.03	1710.00	1710.03
365	182.67	152.77	0.374	2.39	0.03	1712.00	1712.03
375	182.67	152.77	0.374	2.46	0.04	1712.80	1712.84
391	182.67	152.77	0.374	2.56	0.04	1714.00	1714.04
397	182.67	152.77	0.374	2.60	0.04	1714.50	1714.54
402	182.67	152.77	0.374	2.63	0.04	1714.90	1714.94
403	182.67	152.77	0.374	2.64	0.04	1715.00	1715.04
415	182.67	152.77	0.374	2.72	0.04	1716.00	1716.04
429	182.67	152.77	0.374	2.81	0.05	1717.50	1717.55
447	182.67	152.77	0.374	2.93	0.05	1719.00	1719.05
460	182.67	152.77	0.374	3.01	0.05	1720.50	1720.55
469	182.67	152.77	0.374	3.07	0.05	1721.50	1721.55
474	182.67	152.77	0.374	3.10	0.06	1722.00	1722.06
478	182.67	152.77	0.374	3.13	0.06	1722.50	1722.56
481	182.67	152.77	0.374	3.15	0.06	1723.00	1723.06
484	182.67	152.77	0.374	3.17	0.06	1723.50	1723.56
488	182.67	152.77	0.374	3.19	0.06	1724.00	1724.06
491	182.67	152.77	0.374	3.21	0.06	1724.50	1724.56
495	182.67	152.77	0.374	3.24	0.06	1725.00	1725.06
500	182.67	152.77	0.374	3.27	0.06	1725.50	1725.56
504	182.67	152.77	0.374	3.30	0.06	1726.00	1726.06
507	182.67	152.77	0.374	3.32	0.06	1726.50	1726.56
510	182.67	152.77	0.374	3.34	0.06	1727.00	1727.06
513	182.67	152.77	0.374	3.35	0.07	1727.50	1727.57
515	182.67	152.77	0.374	3.37	0.07	1728.00	1728.07
517	182.67	152.77	0.374	3.38	0.07	1728.50	1728.57
519	182.67	152.77	0.374	3.39	0.07	1729.00	1729.07
520	182.67	152.77	0.374	3.41	0.07	1729.50	1729.57
522	182.67	152.77	0.374	3.42	0.07	1730.00	1730.07

Notes
a: Only fully submereged conditions are considered.
b: Assumes the trashrack is mounted on a "u-shaped" headwall.
c: Velocity through the net area.
d: Headloss below fully submerged trashrack is linearly interpolated.

1. Computation based on USBR method

SMALL Δ INDICATES NEGLIGIBLE EFFECTS DUE TO TRASHRACK

Dimensions and Area Calculations for Principal Spillway Trash Rack

	Trash Rack Dimensions:					
	Top Width:	11.17	ft.			
	Clearance Between Rack and Wall:	3.00	in.			
	Longitudinal Trash Rack Length:	17.12	ft.		**Total Rack Area:**	
	Center "Rectangular" Width:	10.67	ft.	Width	Length	Area
	Bar Spacing:	8.00	in.	10.67 ft	17.12 ft	182.67
	Bar Width:	0.50	in.			
	1/2 Bar Width plus 1/2 Bar Spacing:	4.25	in.	**Total Rack Area, A_g =**	182.67	sf
	Total # Bars:	30	ea.	**Total Bar Area, A_b =**	29.90	sf
				Net Rack Area, A_n =	**152.77**	sf
BARS AND FRAME OF TRASH RACK:						
# Bars	Longitudinal Bar Length	Bar Width	Bar Area			
(ea)	(ft)	(in)	(sf)			
30	17.12	0.50	21.40			
		$Ab_{rectangle}$:	21.40			
	Top Frame Member	Bottom Frame Member	Right Side Frame Member	Middle Frame Member		
Length:	10.67 ft	10.67 ft	17.12 ft	10.67 ft		
Thickness:	1.75 inches	2.00 inches	1.75 inches	3.00 inches		
Area:	1.56 ft	1.78 ft	2.50 ft	2.67 ft		
		$Ab_{rectangle}$ + Members =	**Total Bar Area, A_b =**	29.90		

Headloss Calculations for Auxiliary Spillway Trash Rack

Trashrack Headloss for Unclogged Condition
1 - 10'x4' RCBC

$k_t = 1.45-[0.45(a_n/a_g)]-(a_n/a_g)^2$, where a_g = gross area of trashrack and
a_n = net area of trashrack (subtraction of bar area)

Discharge (without trash rack) (cfs)	Trashrack Area[a] a_g Gross[b] (sf)	a_n Net (sf)	[1]Headloss Coefficient kt ( )	Velocity Through Bars[c] Q/a_n (fps)	Headloss[d] (ft)	old Stage (ft)	New Stage (ft)
0	208.87	170.71	0.414	0	0	1694.85	1694.85
50	208.87	170.71	0.414	0.29	0.00	1696.00	1696.00
152	208.87	170.71	0.414	0.89	0.01	1698.00	1698.01
284	208.87	170.71	0.414	1.66	0.02	1700.00	1700.02
425	208.87	170.71	0.414	2.49	0.04	1702.00	1702.04
518	208.87	170.71	0.414	3.03	0.06	1704.00	1704.06
617	208.87	170.71	0.414	3.61	0.08	1706.00	1706.08
678	208.87	170.71	0.414	3.97	0.10	1708.00	1708.10
742	208.87	170.71	0.414	4.35	0.12	1710.00	1710.12
808	208.87	170.71	0.414	4.73	0.14	1712.00	1712.14
830	208.87	170.71	0.414	4.86	0.15	1712.80	1712.95
862	208.87	170.71	0.414	5.05	0.16	1714.00	1714.16
874	208.87	170.71	0.414	5.12	0.17	1714.50	1714.67
882	208.87	170.71	0.414	5.17	0.17	1714.90	1715.07
886	208.87	170.71	0.414	5.19	0.17	1715.00	1715.17
910	208.87	170.71	0.414	5.33	0.18	1716.00	1716.18
950	208.87	170.71	0.414	5.56	0.20	1717.50	1717.70
980	208.87	170.71	0.414	5.74	0.21	1719.00	1719.21
1013	208.87	170.71	0.414	5.93	0.23	1720.50	1720.73
1035	208.87	170.71	0.414	6.06	0.24	1721.50	1721.74
1046	208.87	170.71	0.414	6.13	0.24	1722.00	1722.24
1057	208.87	170.71	0.414	6.19	0.25	1722.50	1722.75
1067	208.87	170.71	0.414	6.25	0.25	1723.00	1723.25
1077	208.87	170.71	0.414	6.31	0.26	1723.50	1723.76
1087	208.87	170.71	0.414	6.37	0.26	1724.00	1724.26
1097	208.87	170.71	0.414	6.43	0.27	1724.50	1724.77
1107	208.87	170.71	0.414	6.48	0.27	1725.00	1725.27
1115	208.87	170.71	0.414	6.53	0.27	1725.50	1725.77
1123	208.87	170.71	0.414	6.58	0.28	1726.00	1726.28
1133	208.87	170.71	0.414	6.64	0.28	1726.50	1726.78
1142	208.87	170.71	0.414	6.69	0.29	1727.00	1727.29
1153	208.87	170.71	0.414	6.75	0.29	1727.50	1727.79
1163	208.87	170.71	0.414	6.81	0.30	1728.00	1728.30
1169	208.87	170.71	0.414	6.85	0.30	1728.50	1728.80
1175	208.87	170.71	0.414	6.88	0.30	1729.00	1729.30
1180	208.87	170.71	0.414	6.91	0.31	1729.50	1729.81
1186	208.87	170.71	0.414	6.95	0.31	1730.00	1730.31

Notes
a: Only fully submereged conditions are considered.
b: Assumes the trashrack is mounted on a "u-shaped" headwall.
c: Velocity through the net area.
d: Headloss below fully submerged trashrack is linearly interpolated.

1. Computation based on USBR method

SMALL Δ INDICATES NEGLIGIBLE EFFECTS DUE TO TRASHRACK

Dimensions and Area Calculations for Auxiliary Spillway Trash Rack

TRASH RACK DIMENSIONS:	
top width:	10.00 ft
angle of trash rack flare:	45.00 degrees
clearance between rack and wall:	3.00 in
longitudinal trash rack length:	10.38 ft
1 side "triangular" base width:	10.13 ft
Bar spacing:	8.00 in
Bar width:	0.50 in
Length from edge of bar to center of space:	4.25 in
Width of side frame member:	1.75 in
Number of bars:	28.9
Number of bars:	28 bars

TRIANGULAR PORTION OF TRASH RACK:

Bars (ea)	X Length (ft)	Y Length (ft)	Width (in)	Area (sf)
1	0.35	10.01	0.5	0.42
2	0.71	9.65	0.5	0.40
3	1.06	9.29	0.5	0.39
4	1.42	8.93	0.5	0.37
5	1.77	8.56	0.5	0.36
6	2.12	8.20	0.5	0.34
7	2.48	7.84	0.5	0.33
8	2.83	7.48	0.5	0.31
9	3.19	7.11	0.5	0.30
10	3.54	6.75	0.5	0.28
11	3.89	6.39	0.5	0.27
12	4.25	6.02	0.5	0.25
13	4.60	5.66	0.5	0.24
14	4.96	5.30	0.5	0.22
15	5.31	4.94	0.5	0.21
16	5.66	4.57	0.5	0.19
17	6.02	4.21	0.5	0.18
18	6.37	3.85	0.5	0.16
19	6.73	3.49	0.5	0.15
20	7.08	3.12	0.5	0.13
21	7.43	2.76	0.5	0.11
22	7.79	2.40	0.5	0.10
23	8.14	2.03	0.5	0.08
24	8.50	1.67	0.5	0.07
25	8.85	1.31	0.5	0.05
26	9.20	0.95	0.5	0.04
27	9.56	0.58	0.5	0.02
28	9.91	0.22	0.5	0.01
			$Abar_{triangle}$ 1 side:	5.97
			$Abar_{triangle}$ both sides:	**11.94**

RECTANGULAR PORTION OF TRASH RACK:

Bars (ea)	Y Length (ft)	With (in)	Area (sf)
1	10.38 ft	0.5	0.43
2	10.38	0.5	0.43
3	10.38	0.5	0.43
4	10.38	0.5	0.43
5	10.38	0.5	0.43
6	10.38	0.5	0.43
7	10.38	0.5	0.43
8	10.38	0.5	0.43
9	10.38	0.5	0.43
10	10.38	0.5	0.43
11	10.38	0.5	0.43
12	10.38	0.5	0.43
13	10.38	0.5	0.43
14	10.38	0.5	0.43
15	10.38	0.5	0.43
16	10.38	0.5	0.43
17	10.38	0.5	0.43
18	10.38	0.5	0.43
19	10.38	0.5	0.43
20	10.38	0.5	0.43
21	10.38	0.5	0.43
22	10.38	0.5	0.43
23	10.38	0.5	0.43
24	10.38	0.5	0.43
25	10.38	0.5	0.43
26	10.38	0.5	0.43
27	10.38	0.5	0.43
28	10.38	0.5	0.43
29	10.38	0.5	0.43
		$Ab_{rectangle}$:	**12.54**

TRASH RACK AREA (GROSS):

Rect. Width (ft)	Y Length (ft)	Tria. Width (ft)	A_g (sf)
10.00 ft	10.38	10.13 ft	208.87
ag =	208.87		
ab =	38.16		
an =	170.71		
$an_{50\%}$ =	85.3562602		

	Top Frame Member	Bottom Frame Member	Side Frame Member	Middle Frame Member	
length	10.00 ft	30.25 ft	14.70 ft	20.13 ft	75.08 ft
thickness	1.75 inches	2.00 inches	1.75 inches	3.00 inches	
area	**1.46 ft**	**5.04 ft**	**2.14 ft**	**5.03 ft**	
Total Bar Area, A_b =	38.16				

APPENDIX F

HYDRAULIC ANALYSIS OF AUXILIARY OUTLET WORKS ENERGY DISSIPATOR

Hydraulic Performance of the Proposed Energy Dissipator
(4'x10' RCB)

$Q_{100\text{-}Box}$ =	881 cfs	100-year discharge (assuming reservoir elevation of 1715.00)							
$TW_{100\text{-}Confluence}$ =	1694.30'	100-year tailwater elevation at the confluence of the proposed 10'x4' RCB outlet channel and existing Ashbrook Wash.							
			Diameter						
		Discharge	or	Width of	Flow Depth		Area of	Hydraulic	Wetted
	Culvert	Through Culvert	Width of Culvert	Flow Jet at	in Culvert at		flow	radius	perimeter
Trial	Shape	Q	D_{pipe} or $W_{culvert}$	Culvert Brink	Outlet	Θ	A	R	P_w
(ea)	(Circular or Box)	(cfs)	(ft)	(ft)	(ft)	( )	(sf)	( )	(ft)
1	box	881 cfs	10	10	4	N/A	40.00 sf	N/A	N/A
	Summary								
D_1 =	5.0'								
V_1 =	17.1 ft/s								
Fn_1 =	1.35								
L_{jet} =	Ld = 20.4' from Chow								
D_2 =	7.35'								
L_{jump} =	25.7'								
L_{total} =	46.2'								
D_{jump} =	7.35' vs.	D2=7.89' from Chow							
TW =	6.32								
$\Delta = D_{jump}$ -TW =	1.0								
1. See "Chow", pg 423 - Chow is used to reflect the "Free Fall" condition at the outlet, USBR does not directly address this geometric condition									
2. Assumes a rectangular cross section									
3. See "Hydraulic Design of Stilling Basins and Energy Dissipators", from USBR, page 25.									
4. Assumes max rate of flow expansion of 10^0.									

Hydraulic Performance of the Proposed Energy Dissipator
(4'x10' RCB)

Unit discharge q (cfs/ft)	h (ft)	Dissipator Floor Elevation $Elev_{floor}$ (ft)	Adj. NG Elev. LT (ft)	Adj. NG Elev. RT (ft)	[1]Drop No.	[1]Flow depth at section #1 of hydraulic jump D_1 (ft)	Max. Rate of Flow Expansion (degrees)
88 cfs/ft	1.5'	1692.5'	1701.0' (8.5' Above Floor)	1701.0' (8.5' Above Floor)	71.49	5.0'	10.0 deg

Hydraulic Performance of the Proposed Energy Dissipator
(4'x10' RCB)

[4]Width of flow in dissipator at jet impact $W_{dissipator}$ (ft)	Flow area in dissipator at section #1 of the jump A_1 (sf)	Velocity V_1 (fps)	[2]Froude No. $F_{\#1}$ ( )	Pipe invert at outlet Elev (ft)	Jump Elev measured from (from $Elev_{floor}$) at outlet (ft)	TW Elev Obtained Using HECRAS or D_{normal} (ft)	USBR Fig 11 [3]Depth of Jump section #2 of hydraulic jump D_2 (ft)
10.4 Actual Width	51.48 sf	17.1 ft/s	1.35	1693.95'	1699.80'	1698.77'	7.35'
					Jmp ><TW !		

Assume length through D_1 is 1.0'

Hydraulic Performance of the Proposed Energy Dissipator
(4'x10' RCB)

compare to Chow? (y/n)	Depth of Jump (EQ. 15-13) From Chow (ft)	L/D_2 Fig 12, pg27 USBR ( )	USBR Fig 12 Length OF hydraulic jump USBR L_{jump} (ft)	compare to Chow? (y/n)	Length TO hydraulic jump L_{jet} (EQ. 15-13) From Chow (ft)	Total Length of Jump L_{total} (ft)
y	D2=7.89' from Chow	3.5	25.7'	y	Ld = 20.4' from Chow	**46.2'**

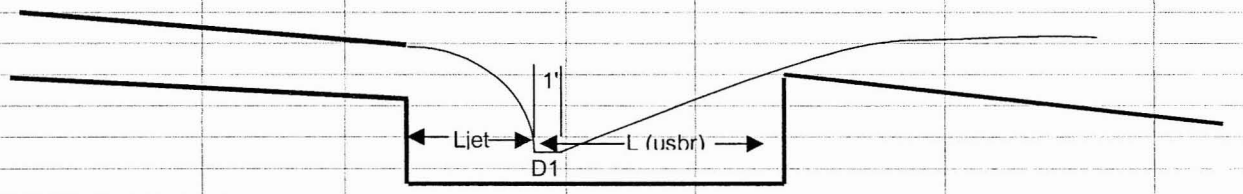

APPENDIX G

HYDRAULIC ANALYSIS OF ACCESS BARRIER FOR AUXILIARY OUTLET WORKS

Headloss Calculations for Auxiliary Spillway Outlet Access Barrier

let Access Barrier Headloss for Unclogged Condition
10'x4' RCBC

$k_t = 1.45-[0.45(a_n/a_g)]-(a_n/a_g)^2$, where a_g = gross area of access barrier and
a_n = net area of access barrier (subtraction of bar area)

Discharge (without barrier) (cfs)	Barrier Area[a] a_g Gross[b] (sf)	a_n Net (sf)	[1]Headloss Coefficient kt ( )	Velocity Through Bars[c] Q/a_n (fps)	Headloss[d] (ft)	Inlet Stage (ft)	Flow Elevation in Culvert Outlet (ft)	Tailwater at outlet (ft)
0	117.00	98.25	0.367	0	0.00	1694.85	**1690.00**	1690.00
50	117.00	98.25	0.367	0.51	0.02	1696.00	**1694.38**	1694.40
152	117.00	98.25	0.367	1.55	0.07	1698.00	**1695.32**	1695.39
284	117.00	98.25	0.367	2.89	0.11	1700.00	**1696.19**	1696.30
425	117.00	98.25	0.367	4.33	0.15	1702.00	**1696.88**	1697.03
518	117.00	98.25	0.367	5.27	0.19	1704.00	**1697.37**	1697.56
617	117.00	98.25	0.367	6.28	0.23	1706.00	**1697.71**	1697.94
678	117.00	98.25	0.367	6.90	0.27	1708.00	**1697.95**	1698.22
742	117.00	98.25	0.367	7.55	0.33	1710.00	**1697.95**	1698.28
808	117.00	98.25	0.367	8.22	0.39	1712.00	**1697.95**	1698.34
830	117.00	98.25	0.367	8.45	0.41	1712.80	**1697.95**	1698.36
862	117.00	98.25	0.367	8.77	0.44	1714.00	**1697.95**	1698.39
874	117.00	98.25	0.367	8.90	0.45	1714.50	**1697.95**	1698.40
882	117.00	98.25	0.367	8.98	0.46	1714.90	**1697.95**	1698.41

es:
a: Only fully submerged conditions are considered.
b: Assumes the access barrier is mounted on a "u-shaped" headwall.
c: Velocity through the net area.
d: Headloss below fully submerged access barrier is linearly interpolated.

1. Computation based on USBR method
2. Calculations for access barrier headloss shown only up to reservoir elevation 1714.90.
At this point the emergency spillway begins operate.

EFFECT ON TAILWATER
FROM FUTURE INSTALLATION
OF OUTLET ACCESS BARRIER

Dimensions and Area Calculations for Auxiliary Spillway Access Barrier (Outlet)

RECTANGULAR PORTION OF TRASH RACK:

top width:	11.70 ft	
Bar Width:	1/2 in	
Bar Spacing:	8 in	
1/2 bar width + 1/2 spacing:	4.25 in	(0.35 ft)
Width of trash rack:	11.70 ft	
# of Bars:	33 bars	
Longitudinal length of trash rack:	10.0 ft	

Bars (ea)	Y Length (ft)	Width (in)	Area (sf)
1	10.0 ft	0.5	0.42
2	10	0.5	0.42
3	10	0.5	0.42
4	10	0.5	0.42
5	10	0.5	0.42
6	10	0.5	0.42
7	10	0.5	0.42
8	10	0.5	0.42
9	10	0.5	0.42
10	10	0.5	0.42
11	10	0.5	0.42
12	10	0.5	0.42
13	10	0.5	0.42
14	10	0.5	0.42
15	10	0.5	0.42
16	10	0.5	0.42
17	10	0.5	0.42
18	10	0.5	0.42
19	10	0.5	0.42
20	10	0.5	0.42
21	10	0.5	0.42
22	10	0.5	0.42
23	10	0.5	0.42
24	10	0.5	0.42
25	10	0.5	0.42
26	10	0.5	0.42
27	10	0.5	0.42
28	10	0.5	0.42
29	10	0.5	0.42
30	10	0.5	0.42
31	10	0.5	0.42
32	10	0.5	0.42
33	10	0.5	0.42
34	10	0.5	0.42
35	10	0.5	0.42
36	10	0.5	0.42
37	10	0.5	0.42
38	10	0.5	0.42
39	10	0.5	0.42
40	10	0.5	0.42
41	10	0.5	0.42
42	10	0.5	0.42
43	10	0.5	0.42
44	10	0.5	0.42
45	10	0.5	0.42
		$Ab_{rectangle}$:	**18.75**

Trash Rack Area (gross):

rect. Width	length	tria. Width	A_g
11.70 ft	10.0 ft	0	117.00

ag = 117.00
ab = 18.75
an = 98.25

APPENDIX H

REPORT OF STRUCTURAL ANALYSIS OF PRINCIPAL OUTLET CONDUITS BY T.Y. LIN INTERNATIONAL, INC.

T·Y·LIN INTERNATIONAL

To : Mr. George Sabol, PE
Stantech Consulting Inc.
7776 Pointe Parkway West, Suite 290
Phoenix, AZ 85044

From : Claudia G. Perchinelli, P.E. cgp

Date : May 13, 1999

Copy : Dan Heller

Reference : Golden Eagle Park Dam – Principal Outlet Works

Memorandum

The existing outlet works at Golden Eagle Park Dam has been analyzed for a loading that reflects raising the dam 7 ft. Our analysis shows that the existing principal outlet works is adequate for this loading. Our analysis is based on the assumption that the double 60" diameter RCP is per ASTM C-76, Class III and the concrete cradle was only poured up to the springline of the pipe. These assumptions are conservative with respect to what was shown on the design documents. These assumptions were based on the construction inspection reports. Attached for your information are these construction inspection reports obtained from the Department of Water Resource's file.

If you have any questions or need additional information please call.

1270 E. Broadway Rd, Suite 122 Tempe, AZ 85282 Fax (602) 921-0002 Tel (602) 968 -8814

T·Y·LIN INTERNATIONAL

Project: Golden Eagle Park Dam | Job No. 1285 | Sheet: 1 of 2
Item: Pipe - 60" OD, C76 Principle Outlet Works | Designer: CGP | Date: 5/7/99
Checker: [illegible] | Date: 9/99
Grid: 1/10"

ASSUME ASTM C76, CLASS III

Inspection Report 3/29/72 and letter from State Water Engineer dated 3/28/72 (attached)

DLOAD

$$D\,LOAD = \frac{W_L + W_E}{E_f \times D} \times FS$$

FS = 1.0 for reinf concrete

Concrete Pipe Design Manual, pp 42

ASSUME WALL A

$t_w = 5''$

ASTM C76 (attached)

for $A_s = 0.4\%$ (assume) $B_f = 3.4$

Figure 227 of Concrete Pipe Design Manual; CLASS A (attached)

TRENCH WALL CONSTRUCTION WITH Concrete cradle (f'c = 2500ps)

INSPECTION RECORDS (attached)
4/21/72
4/26, 4/27 1972
5/3/72
5/5, 5/8 1972

DETERMINE W_L & W_E:

W_L = LIVE LOAD = 0

W_E = EARTH LOAD

∴ for Trench Wall Construction

Trench width c-top of double 60"φ pipe = 6.92×2 ≅ 14'

INSPECTION RECORDS (attached) 4/21/72 & CONSTRUCTION PLANS

for existing conduction:

H = 23', USE K = 0.110 ⇒ W_E = 20440# * 125/100 = 25550 #

To raise Dam 7'

H = 30', USE K = 0.110 ⇒ W_E = 26760# * 125/100 = 33450#

TABLE 28 D CONCRETE PIPE DESIGN MANUAL (attached)

T·Y·LIN INTERNATIONAL

Projects: Golden Eagle Park Dam	Job No. 1285.00	Sheet: 2 of 2	
Item: Pipe - 60" O.D	Designer: LGP	Date: 5/7/99	
ASTM C76	Checker:	Date: 9/99	
		Grid: 1/10"	

D LOAD / per pipe

$\therefore$ D LOAD (exist) = $\frac{25550/2}{3.4 \times (5.0)} \times 1.0$

D LOAD REQ'D = 752 < 1360 $\therefore$ OK

ASTM C76 CLASS III has D LOAD = 1360 and D LOAD ULT = 2000 (attached)

$\therefore$ D LOAD (new) = $\frac{33450/2}{3.4 \times (5.0)} \times 1.0$

D LOAD REQ'D = 984 < 1360 $\therefore$ OK

R1

STATE OF ARIZONA
OFFICE OF STATE WATER ENGINEER
SUPERVISION OF DAM SAFETY

INSPECTION OF DAM CONSTRUCTION

NAME OF DAM Fountain Hills #4 DAM NO. 7-33

TYPE OF DAM Earthfill

CONTACTS Messrs. R. Tulk and G. Beckwith

STAGE OF CONSTRUCTION:

Foundation excavation is progressing. Reservoir site clearing is nearly complete.

IMPORTANT ACTIONS TAKEN:

Informally approved Zone I borrow site. Disapproved owner's request that he be permitted to construct dam as a homogeneous section, entirely of Zone I material. Approved widening the bottom of the core trench from 10' to 12' to accommodate the 12-foot width of the D-9 tractor blade.

CONDITIONS NOTED AND REMARKS:

The purpose of this inspection was to inspect the foundation which the owner had expected to be ready for embankment placement on this date. However, the work had been delayed and this inspection revealed that foundation excavation was only partially completed. They had only begun excavating the core trench.

Discussion with Messrs. Tulk and Beckwith centered around the nature of the left abutment contact and the Zone I material. The cemented material exposed on the upper left abutment contact, at the core trench, is quite hard and massive. Loose material will be removed from the lower contact of the core trench to expose the harder cemented material.

The Zone I borrow area, upstream of the dam, had been cleared and the native soil had been sufficiently worked to reveal a generally well-graded clayey sandy silt. The material had been sampled and tested by Sergent, Hauskins and Beckwith. Results of the Atterberg tests revealed good gradation, adequate fines and some plasticity. This should make good Zone I material and there should be ample quantity available in the borrow area.

(see attached sheet)

Inspection by JDW/BGS
Date of Inspection 3-29-7[illegible]
Date of Report 3-31-72
Photos: Yes

Mr. Tulk favored the construction of a homogeneous dam composed entirely of Zone I material. However, we expressed our desire to retain the original zoned embankment design.

Mr. Tulk was also informed that we preferred the use of ASTM C76 culvert pipe for the outlet pipes through this and Fountain Hills #7 Dams. High head AWWA pipe was called for on the plans for No. 7 Dam, and was intended to be used on this dam as well.

JDW:mf

R3

March 28, 1972

Mr. Milton Cox, President
Trico International, Inc.
8718 East McDowell Road
Scottsdale, Arizona 85257

Attention: Mr. Hal Marron, Project Engineer

Re: Flood Retarding Dams Nos. 7 & 4
(7-32, 7-33)

Gentlemen:

In a recent telephone conversation, Mr. Roger Tulk requested permission to substitute AWWA Standard C-300 for AWWA Standard C-301 for the outlet pipe on Retarding Dam #4. This standard is not shown on the plans or in the specifications for Structure #4, but is noted on Sheet 5 of the plans for Structure #7.

In lieu of either of the above AWWA specifications, we suggest the use of ASTM C76 Class III, or equivalent AASHO specificatio for the 60 inch outlet pipes at Retarding Structure #4; and AST C76 Class IV, or equivalent AASHO specification, for the 48 inch outlet pipe at Retarding Structure #7.

As shown on the approved drawings, specially compacted backfill is required about the outlet pipes to the lines indicated. It is especially important that heavy construction equipment or embankment compactors not be permitted to cross the outlet works until the specially compacted material is in place to at least 3 feet above the top of the pipe.

Sincerely,

WESLEY E. STEINER
State Water Engineer

B. G. SCOTT
Chief, Supervision of Dam Safety

WES:BGS:JDW:mf

1994 - Annual Book of ASTM Standards

R4

TABLE 3 Design Requirements for Class III Reinforced Concrete Pipe[A]

NOTE—See Section 5 for basis of acceptance specified by the purchaser.

The strength test requirements in pounds-force per linear foot of pipe under the three-edge-bearing method shall be either the D-load (test load expressed in pounds-force per linear foot per foot of diameter) to produce a 0.01-in. crack, or the D-loads to produce the 0.01-in. crack and the ultimate load as specified below, multiplied by the internal diameter of the pipe in feet.

D-load to produce a 0.01-in. crack	1350
D-load to produce the ultimate load[F]	2000

Internal Designated Diameter, in.	Reinforcement, in.²/linear ft of pipe wall											
	Wall A				Wall B				Wall C			
	Concrete Strength, 4000 psi				Concrete Strength, 4000 psi				Concrete Strength, 4000 psi			
	Wall Thicknesses, in.	Circular Reinforcement[C] Inner Cage	Circular Reinforcement[C] Outer Cage	Elliptical Reinforcement[D]	Wall Thicknesses, in.	Circular Reinforcement[C] Inner Cage	Circular Reinforcement[C] Outer Cage	Elliptical Reinforcement[D]	Wall Thicknesses, in.	Circular Reinforcement[C] Inner Cage	Circular Reinforcement[C] Outer Cage	Elliptical Reinforcement[D]
12	1¾	0.07[B]	...	...	2	0.07[B]	...	...	2¾	0.07[B]	...	...
15	1⅞	0.07[B]	...	...	2¼	0.07[B]	...	...	3	0.07[B]	...	...
18	2	0.07[B]	...	0.07[B]	2½	0.07[B]	...	0.07[B]	3¼	0.07[B]	...	0.07[B]
21	2¼	0.14	...	0.11	2¾	0.07[B]	...	0.07[B]	3½	0.07[B]	...	0.07[B]
24	2½	0.17	...	0.14	3	0.07[B]	...	0.07[B]	3¾	0.07	...	0.07[B]
27	2⅝	0.18	...	0.16	3¼	0.16	...	0.14	4	0.08	...	0.07[B]
30	2¾	0.19	...	0.18	3½	0.18	...	0.15	4¼	0.10	...	0.08
33	2⅞	0.21	...	0.20	3¾	0.20	...	0.17	4½	0.12	...	0.10
36	3	0.21	0.13	0.23	4[E]	0.17	0.10	0.19	4¾[E]	0.08	0.07	0.09
42	3½	0.25	0.15	0.28	4½	0.21	0.13	0.23	5¼	0.12	0.07	0.13
48	4	0.32	0.19	0.35	5	0.24	0.14	0.27	5¾	0.16	0.10	0.18
54	4½	0.38	0.23	0.42	5½	0.29	0.17	0.32	6¼	0.21	0.13	0.23
60	5	0.44	0.26	0.49	6	0.34	0.20	0.38	6¾	0.25	0.15	0.28
66	5½	0.50	0.30	0.55	6½	0.41	0.25	0.46	7¼	0.31	0.19	0.34
72	6	0.57	0.34	0.63	7	0.49	0.29	0.54	7¾	0.36	0.22	0.40
	Concrete Strength, 5000 psi											
78	6½	0.64	0.38	0.71	7½	0.57	0.34	0.63	8¼	0.42	0.25	0.47
84	7	0.72	0.43	0.80	8	0.64	0.38	0.71	8¾	0.50	0.30	0.56
					Concrete Strength, 5000 psi				Concrete Strength, 5000 psi			
90	7½	0.81	0.49	0.90	8½	0.69	0.41	0.77	9¼	0.59	0.35	0.66
96	8	0.93	0.56	1.03	9	0.76	0.46	0.84	9¾	0.70	0.42	Inner Circular 0.28 Plus Elliptical 0.42
102	8½	1.03	0.62	Inner Circular 0.41 Plus Elliptical 0.62	9½	0.90	0.54	Inner Circular 0.36 Plus Elliptical 0.54	10¼	0.83	0.50	Inner Circular 0.33 Plus Elliptical 0.50
108	9	1.22	0.73	Inner Circular 0.49 Plus Elliptical 0.73	10	1.08	0.65	Inner Circular 0.43 Plus Elliptical 0.65	10¾	0.99	0.59	Inner Circular 0.40 Plus Elliptical 0.59
114	[A]	...	...	... ...	[A]	...	...	... ...	[A]	...	...	... ...
120	[A]	...	...	... ...	[A]	...	...	... ...	[A]	...	...	... ...
126	[A]	...	...	... ...	[A]	...	...	... ...	[A]	...	...	... ...
132	[A]	...	...	... ...	[A]	...	...	... ...	[A]	...	...	... ...
138	[A]	...	...	... ...	[A]	...	...	... ...	[A]	...	...	... ...
144	[A]	...	...	... ...	[A]	...	...	... ...	[A]	...	...	... ...

[A] For modified or special designs see 7.2 or with the permission of the purchaser utilize the provisions of Specification C 655. Steel areas may be interpolated between those shown for variations in diameter, loading, or wall thickness. Pipe over 96 in. in diameter shall have two circular cages or an inner circular plus one elliptical cage.

[B] For these classes and sizes, the minimum practical steel reinforcement is specified. The actual ultimate strength is greater than the minimum strength specified for nonreinforced pipe of equivalent diameters in Specification C 14.

[C] As an alternative to designs requiring both inner and outer circular cages the reinforcement may be positioned and proportioned in either of the following manners:

An inner circular cage plus an elliptical cage such that the area of the elliptical cage shall not be less than that specified for the outer cage in the table and the total area of the inner circular cage plus the elliptical cage shall not be less than that specified for the inner cage in the table,

An inner and outer cage plus quadrant mats in accordance with Fig. 1, or

An inner and outer cage plus an elliptical cage in accordance with Fig. 2.

[D] Elliptical and quadrant steel must be held in place by means of holding rods, chairs, or other positive means throughout the entire casting operation.

[E] As an alternative, single cage reinforcement may be used. The reinforcement area in square in. per linear foot shall be 0.30 for wall B and 0.20 for wall C.

[F] Three-edge-bearing test to ultimate load is not required for any class of pipe 60-in. or less in diameter provided all other requirements of this specification are met.

25

FIGURE 227

TRENCH BEDDINGS
CIRCULAR PIPE

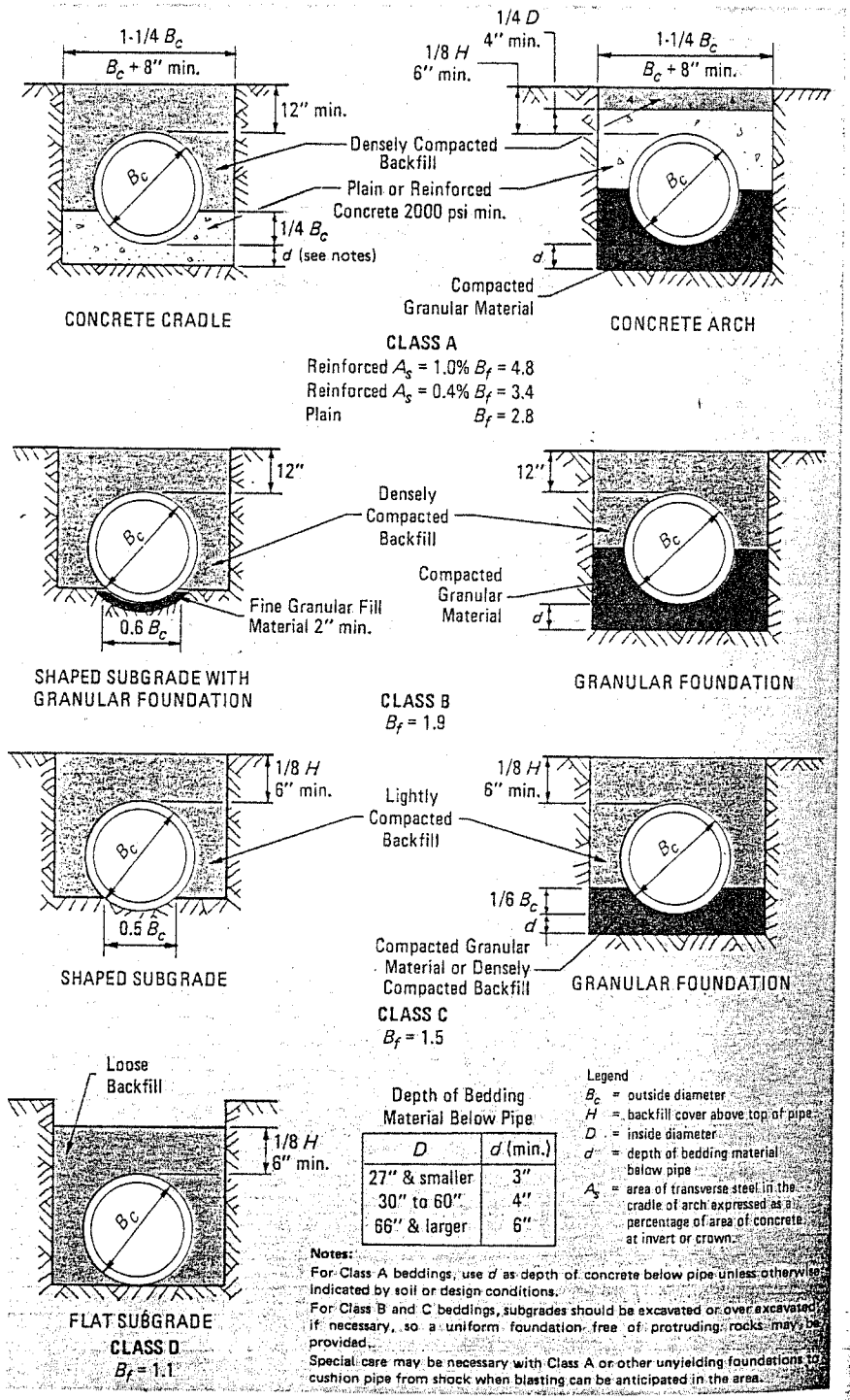

Depth of Bedding Material Below Pipe

D	d (min.)
27" & smaller	3"
30" to 60"	4"
66" & larger	6"

Legend
B_c = outside diameter
H = backfill cover above top of pipe
D = inside diameter
d = depth of bedding material below pipe
A_s = area of transverse steel in the cradle of arch expressed as a percentage of area of concrete at invert or crown.

Notes:
For Class A beddings, use d as depth of concrete below pipe unless otherwise indicated by soil or design conditions.
For Class B and C beddings, subgrades should be excavated or over excavated if necessary, so a uniform foundation free of protruding rocks may be provided.
Special care may be necessary with Class A or other unyielding foundations to cushion pipe from shock when blasting can be anticipated in the area.

R6

STATE OF ARIZONA
OFFICE OF STATE WATER ENGINEER
SUPERVISION OF DAM SAFETY

INSPECTION OF DAM CONSTRUCTION

NAME OF DAM Fountain Hills #4 DAM NO. 7-33

TYPE OF DAM Earthfill

CONTACTS Roger Tulk and J. Swindel

STAGE OF CONSTRUCTION:

Embankment to elevation 1708±.

IMPORTANT ACTIONS TAKEN:

Requested outlet trench excavation to vertical sides in the embankment and with clearance from pipe equal to the neat lines of the designed concrete encasement.

CONDITIONS NOTED AND REMARKS:

Embankment placement thus far is satisfactory with densities averaging nearly 100% of maximum specified densities. Zone II borrow is being obtained from downstream streambed.

Spillway excavation will await embankment placement to the level of the spillway crest.

R. Tulk's request to excavate the outlet trench to side slopes sloping upward from the bottom of the trench was denied. He agreed to my suggestion to excavate side slopes nearly vertical, up to a level equal to at least 6 inches above the top of the pipes, and then sloping to grade. Trench walls would clear the outside of the pipes by an amount equal to the concrete cradle thickness at the pipe sides. Concrete cradle placement would then be against the trench wall.

Inspection by J. D. Walters
Date of Inspection 4-21-72
Date of Report 4-24-72
Photos: Yes

STATE OF ARIZONA
OFFICE OF STATE WATER ENGINEER
SUPERVISION OF DAM SAFETY

27

INSPECTION OF DAM CONSTRUCTION

NAME OF DAM Fountain Hills #4 DAM NO. 7-33

TYPE OF DAM Earthfill

CONTACTS Roger Tulk and J. Swindel

STAGE OF CONSTRUCTION:

Embankment to elevation 1710±. Trench for outlet works excavated.

IMPORTANT ACTIONS TAKEN:

Approved foundation for outlet, subject to acceptable results of density tests on foundation material.

CONDITIONS NOTED AND REMARKS:

April 26, 1972:

Work had been temporarily stopped on embankment construction, pending completion of installation of the outlet. Trenching for the outlet was in progress, using a pusher cat-scraper operation. The cross section of the excavation will be finished to vertical sides, 8 inches clear of the pipe, O.D. on either side, and equivalent to at least 6 inches above the tops of pipes. The excavation would slope, on either side, from the top of the trench on a 2:1. The concrete encasement will be placed against the sides of the earth excavation, and backfilling will be by hand, or light equipment, to at least 4 feet above the tops of the pipes before resuming normal compacted embankment placement. I informed R. Tulk that, upon completion c excavation and after compaction of the trench bottom, I would inspect same for approval.

April 27, 1972:

The outlet trench had been completed; final compaction ot the trench bottom forming the base for the concrete encasement was accomplished with a 5 foot drum "Rayco" vibratory compactor. In response to my request, R. Tulk promised to complete density tests on samples extracted from the foundation are

Inspected by J. P[illegible]
Date of Inspection [illegible]-27
Date of Report 4-28-72
Photos: Yes.

(See attached sheet)

FOUNTAIN HILLS #4 (7-33)

5-5-72

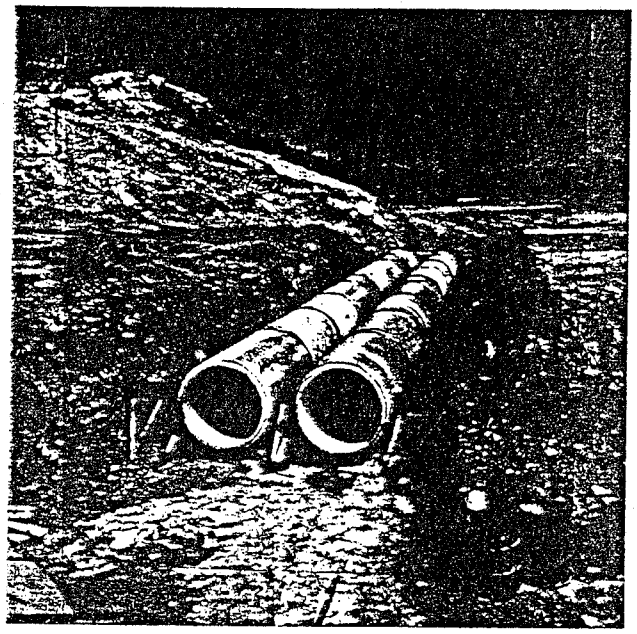

Outlet pipes in place before concrete encasement.

I approved the foundation, subject to satisfactory results of the density tests.

Laying of the double 60 inch RCP pipes for the outlet will be completed by 5-2-72 according to R. Tulk, and another approval inspection will be made at this stage, prior to concrete encasement.

JDW:mf

STATE OF ARIZONA
OFFICE OF STATE WATER ENGINEER
SUPERVISION OF DAM SAFETY

INSPECTION OF DAM CONSTRUCTION

NAME OF DAM Fountain Hills #4 DAM NO. 7-33

TYPE OF DAM Earthfill

CONTACTS R. Tulk of Trico International, Inc.

STAGE OF CONSTRUCTION:

Embankment to El. 1708; Dbl. 60" RCP outlet is in place.

IMPORTANT ACTIONS TAKEN:

Approved placement of the outlet.

CONDITIONS NOTED AND REMARKS:

May 5, 1972

In response to a telephone call from Mr. R. Tulk, I inspected the placement of the double 60" outlet pipes before concrete encasement. The pipes were supported by concrete pedestals, set at least 8 inches above the trench foundation. The joints had been mortared by the usual procedure, using a "diapered" joint for grout placement. Pointing of the joints on the pipe interiors was poorly done; I requested that the excess mortar projection be ground flush with the pipe surface. The "T" marks were not opposite the bottom or top of several of the pipe joints; however, this was so only near the inlet ends of the pipes where the fill will be of shallow depth; and, of course, there is no dynamic loading. I approved this stage of the work subject to the minor modifications hereinabove described.

May 8, 1972

Upon arrival at the site, Dan Lawrence and I observed that the con-

(see attached sheet)

Inspection by J. D. W./D.
Date of Inspection 5-5,8-72
Date of Report 5-9-72
Photos: Yes

crete encasement of the outlet pipes had been completed. Approximately 200 cubic yards of concrete were required. Class "A" concrete, or 6 sack, 2500 p.s.i. concrete had been used. Cylinder sampling was accomplished to confirm the 7 day and 28 day strengths. The encasement extended to within about 2 feet of the pipe ends and #4 bars were embedded @ about 18" centers for later extension into the second stage emplacement for the headwalls. I had previously approved this method of construction which would result in a second-stage monolithic placement of the remaining encasement and the head walls. The designed circular concrete collars, adjacent to the headwalls, would then not be required about the peripheries of the pipe O.D.'s.

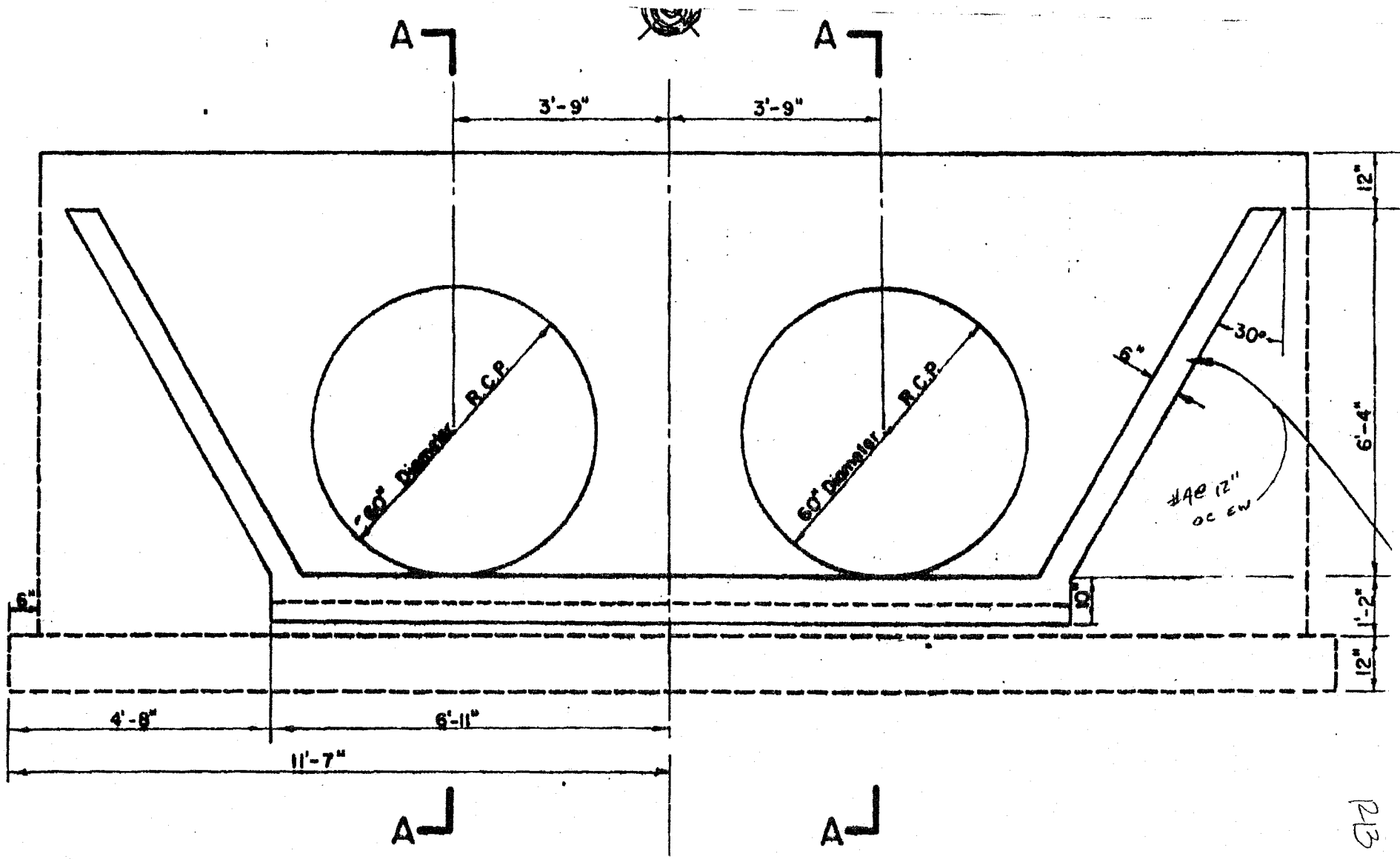
A
A
3'-9"
3'-9"
60" Diameter R.C.P.
60" Diameter R.C.P.
30°
6"
#4@ 12" OC EW
12"
6'-4"
1'-2"
12"
6"
9"
4'-8"
6'-11"
11'-7"
A
A

P3

TABLE 28

BACKFILL LOADS ON CIRCULAR PIPE IN TRENCH INSTALLATION

60″ 60″

* 100 POUNDS PER CUBIC FOOT BACKFILL MATERIAL — LOADS IN POUNDS PER LINEAR FOOT

A — SAND AND GRAVEL Kμ′—0.165

HEIGHT OF BACKFILL H ABOVE TOP OF PIPE, FEET	TRENCH WIDTH AT TOP OF PIPE 8′-0″	8′-6″	9′-0″	9′-6″	10′-0″	10′-6″	11′-0″	12′-0″	13′-0″	14′-0″	▲TRANSITION WIDTH
5	3522										7′-10″
6	4292	4368									8′- 2″
7	4864	5210	5268								8′- 7″
8	5451	5845	6226								9′- 0″
9	6014	6456	6899	7246							9′- 5″
10	6555	7044	7534	8025	8331						9′-10″
11	7074	7609	8146	8685	9224	9486					10′- 3″
12	7571	8153	8737	9322	9908	10480					10′- 6″
13	8049	8676	9306	9937	10570	11200	11390				10′- 8″
14	8508	9180	9855	10530	11210	11890	12300				10′-10″
15	8948	9664	10380	11110	11830	12560	13210				11′- 0″
16	9370	10130	10890	11660	12430	13200	13980	14120			11′- 1″
17	9775	10580	11380	12200	13010	13830	14650	15020			11′- 3″
18	10160	11010	11860	12710	13570	14430	15300	15930			11′- 4″
19	10540	11420	12320	13210	14120	15020	15930	16830			11′- 6″
20	10890	11820	12760	13700	14640	15590	16540	17740			11′- 7″
21	11240	12200	13180	14160	15150	16140	17140	18640			11′- 9″
22	11570	12570	13590	14610	15640	16680	17720	19540			11′-11″
23	11880	12930	13980	15050	16120	17190	18280	20440			12′- 0″
24	12190	13270	14360	15470	16580	17700	18820	21080	21340		12′- 1″
25	12480	13600	14730	15870	17020	18180	19350	21690	22240		12′- 3″
26	12760	13920	15080	16260	17450	18650	19860	22290	23150		12′- 1″
27	13030	14220	15420	16640	17870	19110	20360	22870	24060		12′- 6″
28	13280	14510	15750	17010	18270	19550	20840	23430	24960		12′- 7″
29	13530	14790	16070	17360	18660	19980	21300	23980	25860		12′- 8″
30	13770	15060	16370	17700	19040	20400	21760	24510	26760		12′-10″
31	13990	15320	16670	18030	19410	20800	22200	25030	27680		12′-11″
32	14210	15570	16950	18350	19760	21190	22630	25540	28560		13′- 0″
33	14420	15810	17230	18660	20100	21570	23040	26030	29050	29460	13′- 2″
34	14620	16040	17490	18950	20440	21930	23440	26500	29610	30380	13′- 3″
35	14820	16270	17740	19240	20760	22290	23840	26970	30150	31270	13′- 4″
36	15000	16480	17990	19520	21060	22630	24210	27420	30680	32140	13′- 5″
37	15180	16690	18220	19780	21360	22960	24580	27860	31190	33090	13′- 7″
38	15350	16890	18450	20040	21660	23290	24940	28290	31690	33970	13′- 8″
39	15510	17080	18670	20290	21940	23600	25290	28710	32180	34880	13′- 9″
40	15670	17260	18880	20530	22210	23900	25620	29110	32660	35770	13′-10″

B — SATURATED TOP SOIL Kμ′—0.150

HEIGHT OF BACKFILL H ABOVE TOP OF PIPE, FEET	TRENCH WIDTH AT TOP OF PIPE 8′-0″	8′-6″	9′-0″	9′-6″	10′-0″	10′-6″	11′-0″	12′-0″	13′-0″	14′-0″	▲TRANSITION WIDTH
5	3522										7′- 9″
6	4298	4368									8′- 1″
7	4925	5268									8′- 6″
8	5529	5924	6226								8′-11″
9	6110	6554	6997	7246							9′- 3″
10	6671	7161	7653	8146	8331						9′- 8″
11	7210	7748	8287	8828	9369	9486					10′- 1″
12	7730	8315	8901	9488	10080	10480					10′- 4″
13	8231	8862	9494	10130	10760	11390					10′- 6″
14	8713	9389	10070	10750	11430	12120	12300				10′- 7″
15	9177	9899	10620	11350	12080	12810	13210				10′-10″
16	9625	10390	11160	11930	12710	13480	14120				10′-11″
17	10060	10870	11680	12500	13320	14140	14960	15020			11′- 1″
18	10470	11320	12180	13040	13910	14780	15650	15930			11′- 2″
19	10870	11770	12670	13570	14480	15400	16310	16830			11′- 3″
20	11260	12190	13140	14090	15040	16000	16960	17740			11′- 5″
21	11630	12610	13590	14580	15580	16580	17580	18640			11′- 6″
22	11980	13000	14030	15060	16100	17150	18200	19540			11′- 8″
23	12330	13390	14460	15530	16610	17700	18790	20440			11′- 9″
24	12660	13760	14870	15980	17110	18240	19370	21340			11′-11″
25	12980	14120	15260	16420	17590	18760	19940	22240			12′- 0″
26	13290	14460	15650	16850	18050	19270	20480	22940	23150		12′- 1″
27	13580	14800	16020	17260	18500	19760	21020	23560	24060		12′- 2″
28	13870	15120	16380	17660	18940	20240	21540	24160	24960		12′- 4″
29	14140	15430	16730	18040	19370	20700	22040	24750	25860		12′- 5″
30	14410	15730	17070	18420	19780	21150	22540	25330	26760		12′- 6″
31	14660	16020	17390	18780	20180	21590	23020	25890	27680		12′- 7″
32	14910	16300	17710	19130	20570	22020	23480	26430	28560		12′- 8″
33	15140	16570	18010	19470	20950	22440	23940	26960	29460		12′-10″
34	15370	16830	18310	19800	21310	22840	24380	27480	30380		12′-11″
35	15590	17080	18590	20120	21670	23230	24800	27990	31270		13′- 0″
36	15800	17320	18870	20430	22010	23610	25220	28480	31790	32140	13′- 2″
37	16010	17560	19130	20730	22350	23980	25630	28970	32350	33090	13′- 3″
38	16200	17780	19390	21020	22670	24340	26020	29440	32900	33970	13′- 4″
39	16390	18000	19640	21300	22990	24690	26410	29890	33430	34880	13′- 5″
40	16570	18210	19880	21580	23290	25030	26760	30340	33950	35770	13′- 6″

P14

C. ORDINARY CLAY k_p = 0.150

D. SATURATED CLAY k_p = 0.110

Height of backfill above top of pipe, feet	Trench width at top of pipe, feet: 5.0	5.5	6.0	6.5	7.0	7.5	8.0	8.5	9.0	9.5	Trench Shield Width, feet	Height of backfill above top of pipe, feet
5	3522										7' 7"	5
6	4168										7' 11"	6
7		5268									8' 3"	7
8			6226								8' 7"	8
9				7246							9' 0"	9
10					8411						9' 4"	10
11						9486					9' 9"	11
12							10480				9' 11"	12
13								11500			10' 1"	13
14									12500		10' 2"	14
15										13210	10' 3"	15
16										14120	10' 5"	16
17										15620	10' 6"	17
18										15930	10' 7"	18
19										16830	10' 8"	19
20										17740	10' 10"	20
21										18640	10' 11"	21
22										19540	11' 0"	22
23										20440	11' 1"	23
24										21340	11' 2"	24
25										22240	11' 3"	25
26										23150	11' 4"	26
27										24060	11' 5"	27
28										24960	11' 6"	28
29										25860	11' 7"	29
30									26760		11' 8"	30
31									27680		11' 9"	31
32									28580		11' 10"	32
33									29460		11' 11"	33
34									30380		12' 0"	34
35								31270			12' 1"	35
36								32140			12' 2"	36
37								33090			12' 3"	37
38								33970			12' 4"	38
39								34880			12' 5"	39
40								35770			12' 6"	40

Height of backfill above top of pipe, feet	Trench width at top of pipe, feet: 5.0	5.5	6.0	6.5	7.0	7.5	8.0	8.5	9.0	9.5	Trench Shield Width, feet	Height of backfill above top of pipe, feet
5	3522										7' 7"	5
6	4168										7' 11"	6
7		5268									8' 3"	7
8			6226								8' 7"	8
9				7246							9' 0"	9
10					8411						9' 4"	10
11						9486					9' 9"	11
12							10480				9' 11"	12
13								11500			10' 1"	13
14									12500		10' 2"	14
15										13210	10' 3"	15
16										14120	10' 5"	16
17										15620	10' 6"	17
18										15930	10' 7"	18
19										16830	10' 8"	19
20										17740	10' 10"	20
21										18640	10' 11"	21
22										19540	11' 0"	22
23										20440	11' 1"	23
24										21340	11' 2"	24
25										22240	11' 3"	25
26										23150	11' 4"	26
27										24060	11' 5"	27
28										24960	11' 6"	28
29										25860	11' 7"	29
30									26760		11' 8"	30
31									27680		11' 9"	31
32									28580		11' 10"	32
33									29460		11' 11"	33
34									30380		12' 0"	34
35								31270			12' 1"	35
36								32140			12' 2"	36
37								33090			12' 3"	37
38								33970			12' 4"	38
39								34880			13' 5"	39
40								35770			13' 6"	40

March 28, 1972

Mr. Milton Cox, President
Trico International, Inc.
8718 East McDowell Road
Scottsdale, Arizona 85257

Attention: Mr. Hal Marron, Project Engineer

Re: Flood Retarding Dams Nos. 7 & 4
(7-32, 7-33)

Gentlemen:

In a recent telephone conversation, Mr. Roger Tulk requested permission to substitute AWWA Standard C-300 for AWWA Standard C-301 for the outlet pipe on Retarding Dam #4. This standard is not shown on the plans or in the specifications for Structure #4, but is noted on Sheet 5 of the plans for Structure #7.

In lieu of either of the above AWWA specifications, we suggest the use of ASTM C76 Class III, or equivalent AASHO specification, for the 60 inch outlet pipes at Retarding Structure #4; and ASTM C76 Class IV, or equivalent AASHO specification, for the 48 inch outlet pipe at Retarding Structure #7.

As shown on the approved drawings, specially compacted backfill is required about the outlet pipes to the lines indicated. It is especially important that heavy construction equipment or embankment compactors not be permitted to cross the outlet works until the specially compacted material is in place to at least 3 feet above the top of the pipe.

Sincerely,

WESLEY E. STEINER
State Water Engineer

B. G. SCOTT
Chief, Supervision of Dam Safety

WES:BGS:JDW:mf

STATE OF ARIZONA
OFFICE OF STATE WATER ENGINEER
SUPERVISION OF DAM SAFETY

INSPECTION OF DAM CONSTRUCTION

NAME OF DAM Fountain Hills #4 DAM NO. 7-33

TYPE OF DAM Earthfill

CONTACTS Messrs. R. Tulk and G. Beckwith

STAGE OF CONSTRUCTION:

Foundation excavation is progressing. Reservoir site clearing is nearly complete.

IMPORTANT ACTIONS TAKEN:

Informally approved Zone I borrow site. Disapproved owner's request that he be permitted to construct dam as a homogeneous section, entirely of Zone I material. Approved widening the bottom of the core trench from 10' to 12' to accommodate the 12-foot width of the D-9 tractor blade

CONDITIONS NOTED AND REMARKS:

The purpose of this inspection was to inspect the foundation which the owner had expected to be ready for embankment placement on this date. However, the work had been delayed and this inspection revealed that foundation excavation was only partially completed. They had only begun excavating the core trench.

Discussion with Messrs. Tulk and Beckwith centered around the nature of the left abutment contact and the Zone I material. The cemented material exposed on the upper left abutment contact, at the core trench, is quite hard and massive. Loose material will be removed from the lower contact of the core trench to expose the harder cemented material.

The Zone I borrow area, upstream of the dam, had been cleared and the native soil had been sufficiently worked to reveal a generally well-graded clayey sandy silt. The material had been sampled and tested by Sergent, Hauskins and Beckwith. Results of the Atterberg tests revealed good gradation, adequate fines and some plasticity. This should make good Zone I material and there should be ample quantity available in the borrow area.

(see attached sheet)

Inspection by JDW/BGS
Date of Inspection 3-29-72
Date of Report 3-31-72
Photos: Yes

Mr. Tulk favored the construction of a homogeneous dam composed entirely of Zone I material. However, we expressed our desire to retain the original zoned embankment design.

Mr. Tulk was also informed that we preferred the use of ASTM C76 culvert pipe for the outlet pipes through this and Fountain Hills #7 Dams. High head AWWA pipe was called for on the plans for No. 7 Dam, and was intended to be used on this dam as well.

JDW:mf

STATE OF ARIZONA
OFFICE OF STATE WATER ENGINEER
SUPERVISION OF DAM SAFETY

INSPECTION OF DAM CONSTRUCTION

NAME OF DAM Fountain Hills #4 DAM NO. 7-33

TYPE OF DAM Earthfill

CONTACTS Roger Tulk and J. Swindel

STAGE OF CONSTRUCTION:

Embankment to elevation 1708±.

IMPORTANT ACTIONS TAKEN:

Requested outlet trench excavation to vertical sides in the embankment and with clearance from pipe equal to the neat lines of the designed concrete encasement.

CONDITIONS NOTED AND REMARKS:

Embankment placement thus far is satisfactory with densities averaging nearly 100% of maximum specified densities. Zone II borrow is being obtained from downstream streambed.

Spillway excavation will await embankment placement to the level of the spillway crest.

R. Tulk's request to excavate the outlet trench to side slopes sloping upward from the bottom of the trench was denied. He agreed to my suggestion to excavate side slopes nearly vertical, up to a level equal to at least 6 inches above the top of the pipes, and then sloping to grade. Trench walls would clear the outside of the pipes by an amount equal to the concrete cradle thickness at the pipe sides. Concrete cradle placement would then be against the trench wall.

Inspection by J. D. Walters
Date of Inspection 4-21-72
Date of Report 4-24-72
Photos: Yes

STATE OF ARIZONA
OFFICE OF STATE WATER ENGINEER
SUPERVISION OF DAM SAFETY

INSPECTION OF DAM CONSTRUCTION

NAME OF DAM Fountain Hills #4 DAM NO. 7-33

TYPE OF DAM Earthfill

CONTACTS Roger Tulk and J. Swindel

STAGE OF CONSTRUCTION:

Embankment to elevation 1710±. Trench for outlet works excavated.

IMPORTANT ACTIONS TAKEN:

Approved foundation for outlet, subject to acceptable results of density tests on foundation material.

CONDITIONS NOTED AND REMARKS:

April 26, 1972:

Work had been temporarily stopped on embankment construction, pending completion of installation of the outlet. Trenching for the outlet was in progress, using a pusher cat-scraper operation. The cross section of the excavation will be finished to vertical sides, 8 inches clear of the pipe, O.D. on either side, and equivalent to at least 6 inches above the tops of pipes. The excavation would slope, on either side, from the top of the trench on a 2:1. The concrete encasement will be placed against the sides of the earth excavation, and backfilling will be by hand, or light equipment, to at least 4 feet above the tops of the pipes before resuming normal compacted embankment placement. I informed R. Tulk that, upon completion of excavation and after compaction of the trench bottom, I would inspect same for approval.

April 27, 1972:

The outlet trench had been completed; final compaction ot the trench bottom forming the base for the concrete encasement was accomplished with a 5 foot drum "Rayco" vibratory compactor. In response to my request, R. Tulk promised to complete density tests on samples extracted from the foundation are

Inspected by J. D[illegible]
Date of Inspection [illegible].27
Date of Report 4-28-72
Photos: Yes.

(See attached sheet)

FOUNTAIN HILLS #4 (7-33)

5-5-72

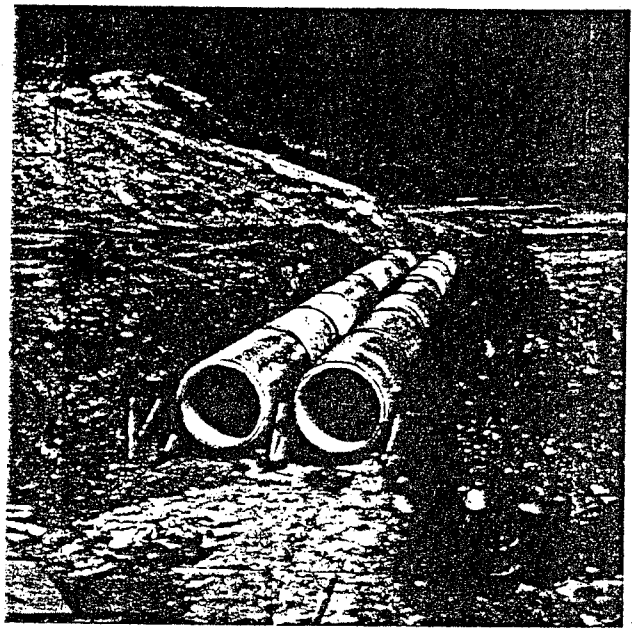

Outlet pipes in place before concrete encasement.

I approved the foundation, subject to satisfactory results of the density tests.

Laying of the double 60 inch RCP pipes for the outlet will be completed by 5-2-72 according to R. Tulk, and another approval inspection will be made at this stage, prior to concrete encasement.

JDW:mf

STATE OF ARIZONA
OFFICE OF STATE WATER ENGINEER
SUPERVISION OF DAM SAFETY

INSPECTION OF DAM CONSTRUCTION

NAME OF DAM Fountain Hills #4 DAM NO. 7-33

TYPE OF DAM Earthfill

CONTACTS R. Tulk and J. Swindel

STAGE OF CONSTRUCTION:

Embankment to 1708.

IMPORTANT ACTIONS TAKEN:

None

CONDITIONS NOTED AND REMARKS:

Work is still suspended on the embankment and spillway pending completion of the outlet works. The contractor was laying the double 6 outlets. The trench for the outlet works had been widened to approximately 18 feet bottom width and the side slopes had been trimmed to about 1/4:1 to a height of approximately 7 feet beyond which the slopes continued at 2:1.

Concrete encasement will be placed against the side slopes and to th spring line as previously planned. Mortaring of the joints is expected to be completed by Friday and concrete encasement will be pla during May 8th.

Inspection by J. D. Wal
Date of Inspection 5-3-72
Date of Report 5-5-72
Photos: No pho

TOTAL P.03

STATE OF ARIZONA
OFFICE OF STATE WATER ENGINEER
SUPERVISION OF DAM SAFETY

INSPECTION OF DAM CONSTRUCTION

NAME OF DAM Fountain Hills #4 DAM NO. 7-33

TYPE OF DAM Earthfill

CONTACTS R. Tulk of Trico International, Inc.

STAGE OF CONSTRUCTION:

Embankment to El. 1708; Dbl. 60" RCP outlet is in place.

IMPORTANT ACTIONS TAKEN:

Approved placement of the outlet.

CONDITIONS NOTED AND REMARKS:

May 5, 1972

In response to a telephone call from Mr. R. Tulk, I inspected the placement of the double 60" outlet pipes before concrete encasement. The pipes were supported by concrete pedestals, set at least 8 inches above the trench foundation. The joints had been mortared by the usual procedure, using a "diapered" joint for grout placement. Pointing of the joints on the pipe interiors was poorly done; I requested that the excess mortar projection be ground flush with the pipe surface. The "T" marks were not opposite the bottom or top of several of the pipe joints; however, this was so only near the inlet ends of the pipes where the fill will be of shallow depth; and, of course, there is no dynamic loading. I approved this stage of the work subject to the minor modifications hereinabove described.

May 8, 1972

Upon arrival at the site, Dan Lawrence and I observed that the con-

(see attached sheet)

Inspection by J. D. W. /D.
Date of Inspection 5-[illegible]-72
Date of Report 5-9-72
Photos: Yes

crete encasement of the outlet pipes had been completed. Approximately 200 cubic yards of concrete were required. Class "A" concrete, or 6 sack, 2500 p.s.i. concrete had been used. Cylinder sampling was accomplished to confirm the 7 day and 28 day strengths. The encasement extended to within about 2 feet of the pipe ends and #4 bars were embedded @ about 18" centers for later extension into the second stage emplacement for the headwalls. I had previously approved this method of construction which would result in a second-stage monolithic placement of the remaining encasement and the head walls. The designed circular concrete collars, adjacent to the headwalls, would then not be required about the peripheries of the pipe O.D.'s.

APPENDIX I

CONSTRUCTION QUALITY ASSURANCE PLAN

CONSTRUCTION QUALITY ASSURANCE PLAN

FOR

CONTRACT 1999C064
GOLDEN EAGLE PARK DAM IMPROVEMENTS
Fountain Hills, Arizona

STANTEC CONSULTING, INC.
7776 Pointe Parkway W. Suite 290
Phoenix, Arizona 85044

JANUARY 2000

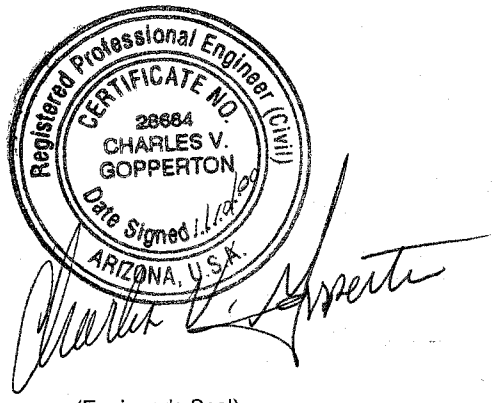

(Engineer's Seal)

Prepared For

FLOOD CONTROL DISTRICT OF MARICOPA COUNTY

Table of Contents

Introduction 3
Project Background 3
Proposed Construction 5
Owner 5
Engineer of Record 5
Construction Administrator 6
Geotechnical Engineer 7
Surveyor 7
Jurisdictional Agency 8
Permitting Agencies 8
Land Owner 8
Communication Chart 9
Policies and Procedures 10
Definitions 10
General Considerations 10
Importance of Construction Control 11
Relation of Construction and Design 12
Contractor Responsibility 12
General 12
Staffing 12
District Responsibilities. 13
General 13
Planning 13
Implementation and Enforcement 15
QA for Procedural Specifications 18
Performing Acceptance Inspections 18
Progress Meetings 18
Deficiencies 19
Earthwork 20
Field Organization and Responsibility 20
Resident Inspection Force 21
Technical responsibilities 21
Quality control. 22
Relationship with Contractor 24
Laboratory 24
Types of tests and facilities required 24
Engineers 25
Surveying 25
Records and Reports 26
General 26
Construction records 26
Construction reports 26

Daily Reports 27
Compaction Control Reports 28
Final Construction Report 28
References 29
Appendix A - Sample Forms 30
Project Punch List 31
Nonconformance Report 32
Concrete Placement Card 33
Concrete Field Test Summary 34
Quality Assurance Report (QAR) 35
Summary of Field Compaction Control 37
Summary of Field Compaction Control (both pervious fill and rock-fill) 38
Summary Form, Field Compaction Control Data, Impervious Material 39
Summary Form, Field Compaction Control Data, Pervious Material 40

Introduction

This manual provides the general policy and guidance for establishing quality management procedures in the construction of the improvements to Golden Eagle Park Dam, Fountain Hills, Arizona.

The objective of this manual is to provide a plan to verify that proper materials, construction techniques, and procedures are followed by the Contractor and the contract administrator and that the completed structure meets the requirements and intent of the plans and specifications.

Project Background

Golden Eagle Park Dam, previously known as Dam 4, is generally situated 600 feet east of Golden Eagle Boulevard, between Palisades Boulevard and Bainbridge Avenue. Fountain Hills High School is located immediately east and south of the Dam. The upstream impoundment area between the Dam embankment and Golden Eagle Boulevard is Golden Eagle Park with softball fields, tennis and volleyball courts, concession and equipment storage buildings, bathroom facilities, a playground area and parking lots.

Golden Eagle Park Dam was designed by Trico International, Inc. (Trico) and constructed by McCulloch Properties, Inc. (1970 – 1974). Construction of the Dam and preparation of as-built drawings was completed in late 1974 to early 1975. The Dam is presently owned and maintained by the Town of Fountain Hills and the Fountain Hills Unified School District.

The Dam is a zoned earthen embankment with a central inner core and upstream and downstream shells. The inner core is generally comprised of fine, high percentage clay material, while the outer zones are coarser material with higher percentages of gravel and some cobble. The Dam is equipped with an uncontrolled principal outlet works and an emergency spillway in the right abutment. The principal outlet works is comprised of

two 60-inch reinforced concrete pipes (RCP) located at the maximum embankment section near the left abutment. The conduits discharge to a concrete stilling basin with an end sill for an energy dissipater. In 1991, a 14-inch ductile iron pipe (DIP) sanitary sewer line was installed at the flowline of one of the principal spillway pipes. A concrete encasement was poured around the 14-inch DIP pipeline.

TABLE 1

Pertinent Data for Existing Golden Eagle Park Dam

Item	Description
Dam Type	Zoned Earthfill
Dam Crest Length	660 Feet
Dam Slopes	1V:2H upstream and downstream
Dam Height (Max)	26.8 feet
Dam Crest Elevation	1721.47 feet
Dam Crest Width	12 Feet
Drainage Area	7.13 square miles
Storage at Emergency Spillway Crest	95.8 acre-feet
Emergency Spillway Type	Unlined earth w/ concrete sill
Emergency Spillway Width	266 feet
Emergency Spillway Capacity at Dam Crest	12,750 cfs
Emergency Spillway Side Slopes	3:1
Emergency Spillway Crest Elevation	1714.86 feet
Principal Outlet Works	2-60 inch dia. pipes
Principal Outlet Works Capacity at Dam Crest	750 cfs

The emergency spillway is an earthen trapezoidal section with a concrete sill and is constructed at the southern (right) abutment of the Dam. Flows over the emergency spillway discharge directly to the Fountain Hills High School athletic field. Table 1 summarizes the various physical characteristics of the Dam.

A pressure transducer type water level recorder was installed at the inlet side of the principal spillway in December 1996 by the Flood Control District of Maricopa County (FCDMC) as part of the Fountain Hills Flood Warning System. A piezometer was

installed at the downstream toe of the Dam in 1998 to monitor ground water levels under the Dam. There are no other instrumentation or monitoring data for the Dam, existing or planned.

Proposed Construction

Proposed construction on the Dam includes widening the spillway, raising the embankment, repair of erosion damage on the downstream face of the Dam, construction of an auxiliary outlet works and modifications to the existing principal outlet works. The spillway modification consists of widening and deepening a portion of the spillway crest and backfill with a fuseplug. Gabion erosion protection will be placed on the spillway chute and the left abutment of the spillway. A concrete flood wall will be constructed on the right spillway abutment to direct flows away from the school cafeteria. The crest of the Dam is raised using zoned embankment earth fill. The auxiliary outlet works will be a reinforced concrete box culvert constructed through approximately the maximum section of the Dam. Rock riprap erosion protection will be placed on the upstream toe of the Dam and around the auxiliary outlet works outlet structure.

Owner

The Dam is jointly owned by the Town of Fountain Hills (Town) and the Fountain Hills Unified School District (School). The project is being administered by the Flood Control District of Maricopa County (District) and the District will be directly responsible for all activities related to the Dam and spillway construction.

Engineer of Record

Stantec Consulting Inc. (SCI) was selected by the District to design and prepare construction documents for Dam and spillway modifications and is the Engineer of Record. Agra Earth and Environmental, Inc. (AEE) prepared the Dam embankment

stability analysis and the geotechnical investigation. TY Lin International is the structural Engineer.

The Engineer will provide the following services during construction of the Dam:

- Review shop drawings and other submittals for conformance with the intent of the design
- Provide one or more persons to attend meetings, make observations of the work, review testing procedures and results, and comment on site specific conditions exposed during construction
- Participate in preparation of change orders relating to the design
- Observe critical periods of construction as determined by the District
- Visit the site on an as needed basis to review specific problem areas or render opinions on items that may affect critical features of the Dam
- Participate in the review of record drawings prepared by the construction Contractor
- Coordinate with ADWR and the District in resolving issues as appropriate
- Evaluation and inspection of emergency cleanup/force account work during flooding
- Evaluation and review of VE proposals from the Contractor

Construction Administrator

The District will be the Construction Administrator for the project and will be responsible for all construction activities including observation and direction, construction schedule, contract conditions, and payment during construction. The Construction Administrator is also responsible for coordination and quality assurance activities for the project. A full time Inspector will be on the site everyday during construction. The Construction Administrator shall serve as communications coordinator for the project initiating

preconstruction and weekly project meetings. As communications coordinator, the Construction Administrator will serve as a liaison between all parties involved in the project to ensure that ongoing communications are maintained. The Construction Administrator shall also be responsible for the resolution of all quality assurance issues that arise during construction.

Geotechnical Engineer

Agra Earth and Environmental, Inc. (AEE) will provide the Geotechnical testing and observations during the earthwork phase of the project. Specifically, they will verify the following:

- The materials used meet the specifications and the intent of the design
- Methods of placement and compaction are acceptable and proper compaction is achieved
- Structural foundations are sound

The geotechnical Engineer will be required to observe the construction of the Dam embankment, provide information to the District and Contractor during construction, and review reports and other data. This will require site visits and attendance at construction meetings as necessary. The geotechnical Engineer will also review and assist with the preparation of the as-builts and final report.

Surveyor

The surveyor is an independent land surveyor licensed in the State of Arizona, to be hired by the Contractor.

Jurisdictional Agency

Due to the size of the Dam, it is jurisdictional under the statutes of the State of Arizona as regulated by the Arizona Department of Water Resources (ADWR). As such, all design and construction must be approved by ADWR.

Permitting Agencies

The project requires a Section 404 permit by the US Army Corps of Engineers (USACOE). All construction activities within or affecting the Waters of the US as defined by the permit must follow the requirements of the permit. The 404 permit also requires that a 401 Water Quality Certification be issued. This permit is administered by the Arizona Department of Environmental Quality (ADEQ) and also regulates all construction activities within or affecting the Waters of the US. All construction work must follow the letter and intent of both permits.

Land Owner

The Dam is located entirely within the Town of Fountain Hills and the land is owned jointly by the Town and the School.

Communication Chart

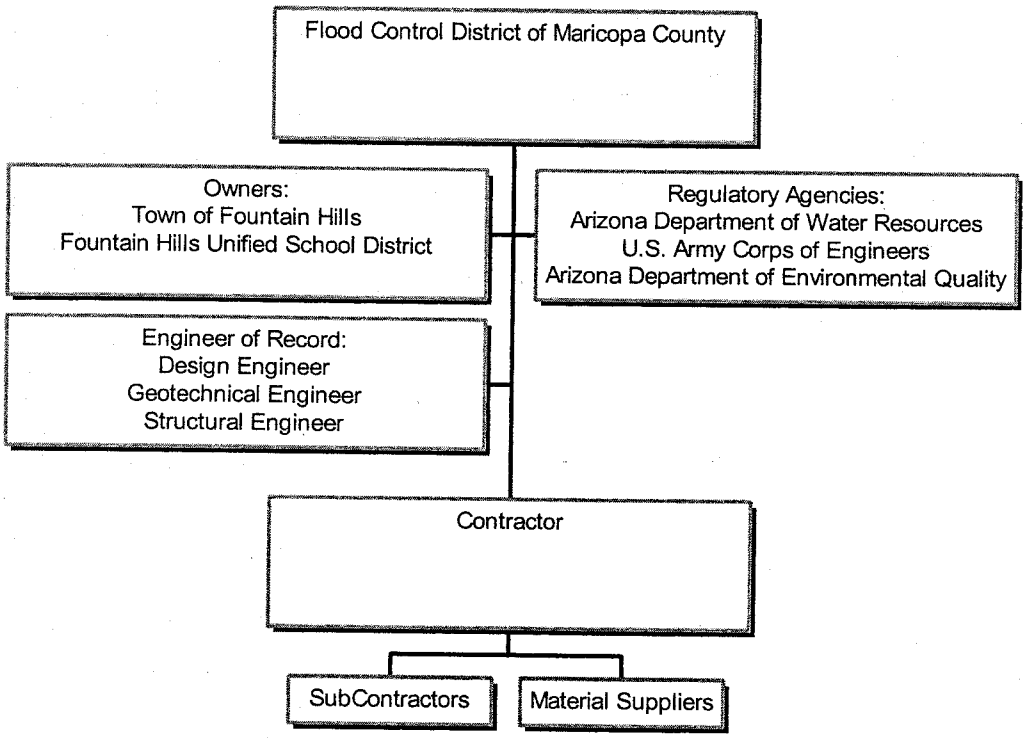

Policies and Procedures

Definitions

a. Quality - conformance to properly developed requirements. In the case of construction contracts, these requirements are established by the contract specifications and drawings.

b. Quality Management (QM) - is all control and assurance activities instituted to achieve the quality established by the contract requirements.

c. Contractor Quality Control (CQC) - is the construction Contractor's system to manage, control and document his/her own, his/her supplier's, and his/her Subcontractor's activities to comply with contract requirements.

d. Quality Assurance (QA) - is the system by which the District fulfills its responsibility to be certain the CQC is functioning and the specified end product is realized.

General Considerations

The safety and satisfactory performance of earth and rock-fill dams require competent and adequate supervision, careful inspection, and control testing. It is the responsibility of the Inspector to bring to the attention of the Engineer any design or construction detail not adequately covered by the plans and specifications. The Inspector must provide the field supervision and control required to accomplish the intent of the plans and specifications. The Inspector must also coordinate the work with the Engineer and provide guidance to the Contractor if unexpected conditions are discovered during construction.

Importance of Construction Control

Many earth and rock-fill dams have shown signs of distress or experienced partial failure (necessitating expensive remedial measures) from causes traceable to poor construction practices or to unexpected adverse conditions. Close observations by soils Engineers and geologists of foundation and abutment preparation, excavation, fill operations, movements and deformations of fill and foundation, and seepage can often enable early detection and correction of undesirable conditions. Construction control should ensure that:

(1) Necessary actions are taken to remedy or allow for unexpected conditions. Frequent and careful observations by Inspectors, geologists, and field Engineers, who are familiar with conditions assumed for design, are essential during stripping of the foundation, opening of borrow areas, and excavating operations. Immediate reporting of unexpected conditions will enable the Engineer to coordinate and plan, any additional investigations needed to establish design modifications.

(2) Equipment and procedures are adequate to satisfactorily accomplish the work. Review of the Contractor's plans for quality control, dewatering and draining work areas, and haul roads, together with inspections of the actual operations, is an important aspect of construction control.

(3) The completed structure meets the requirements and intent of the plans and specifications. This involves continuous inspection of foundation and abutment preparation, material processing, and embankment construction, and a comprehensive control testing program to ensure proper material placement and compaction.

(4) Adequate construction records are maintained. Preparation of completion reports of construction operations and maintenance of records of test results are essential aspects of field control. Such reports and records are often required to evaluate claims by the Contractor and to determine possible causes of distress that might later occur in portions of the completed work. These documents should include as many detailed photographs as necessary. Video photography may also

be included in the methods to document and record construction procedure and methods.

Relation of Construction and Design

The design of an earth or rock-fill dam is not finished until construction is complete, and the dam is functioning satisfactorily. During construction, the Engineer should frequently reassess design concepts and assumed conditions in light of actual conditions observed in the field. This involves frequent visits to the project to observe actual conditions and construction procedures. Consultation with specialists may be required to evaluate unusual problems or foundation conditions. Design evaluation must include analyses of compaction control results. It may also require reanalysis of stability conditions based on results of laboratory tests on record samples and additional foundation samples and field observations of pore water pressures, settlements, and lateral displacements. A high degree of coordination between design and construction Engineers is mandatory.

Contractor Responsibility

General

The Contractor shall be made responsible for all activities necessary to manage, control, and document work so as to ensure compliance with the contract plans and specifications. The Contractor's responsibility includes ensuring adequate quality control services are provided for work accomplished on-and off-site by his/her organization, suppliers, Subcontractors, technical laboratories and consultants. The work activities include safety, submittal management, and all other functions relating to the requirement for quality construction.

Staffing

It is the Contractor's responsibility to carefully examine the contract requirements for CQC and provide personnel capable of complying with the CQC requirements of the

contract clauses and technical provisions. The CQC staff must be of sufficient size and have the qualifications necessary to ensure contract compliance, whether work is performed by the prime Contractor or by Subcontractors or vendors. The CQC system manager will be an employee of the prime Contractor and must report directly to the project superintendent or someone higher in the Contractor's organization. The size and composition of the CQC organization may vary as the job progresses. At all times it should be compatible with the level of effort and capability required by the contract and construction schedule.

District Responsibilities.

General

Quality assurance is the process by which the District verifies end product quality. The process starts well before construction and includes reviews of the plans and specifications for biddability, constructibility, operability and environmental responsibility, plan-in-hand site reviews, coordination with using agencies or local interests, establishment of performance periods and quality control requirements, field office planning, preparation of QA plans, reviews of quality control plans, enforcement of contract clauses, maintenance of quality assurance and quality control inspection and work records, and acceptance of completed construction.

Planning

Prior to construction, the following activities should be performed:

(1) Participate in the design review conference. This may be conducted at the Pre-Construction meeting. However, it is recommended that sufficient time be allowed to review the design and discuss quality control and assurance, constructibility, operability and environmental issues. It is recommended that a representative of the field office responsible for the administration of the contract participate.

(2) Conduct site plan-in-hand reviews. This is a field office responsibility.

(3) Establish the contract CQC requirements. Input from the field office is required.

(4) Review field office workloads and staffing needs.

(5) Assure office and field personnel have a clear understanding of QA/CQC responsibilities.

(6) Review the Contractor's CQC plan and verify affirmative answers to the following questions as a minimum:

(a) Does the plan adequately cover control of all features of the contract?

(b) Is the CQC staff adequately sized to maintain quality and accomplish tests required?

(c) Have the person or persons responsible for each definable feature of work, all tests, and submittal control and review been identified?

(d) Do the qualifications of the staff appear adequate for the control and test requirements?

(e) Is the delegation of responsibility and authority to the CQC staff manager clear? Does this person report directly to the highest ranking Contractor personnel on-site with responsibility for the overall management of the project including quality and production?

(f) Are the CQC organization lines of authority and responsibility clear?

(g) Are individual control and test duties clearly assigned?

(h) Do the proposed control and test report forms include all the required features and reporting items?

(i) Does it comply with the specific requirements established by the contract?

(j) Are definable features of work identified. A definable feature of work is a task which is separate and distinct from other tasks and has separate control

requirements. For example, definable features for concrete would be formwork; reinforcing and imbedded items; placement including mix design, finish, etc.; and curing.

(7) Accept the CQC plan subject to satisfactory performance and reserve the right to require revisions to correct unsatisfactory performance. Revisions made by the Contractor are subject to District acceptance.

Implementation and Enforcement

During construction the following activities will be performed by Quality Assurance Personnel (QAP):

(1) After the preconstruction conference, the Inspector or other responsible designee shall conduct a coordination meeting with the Contractor on the CQC/QA program. Minutes of the meeting will be prepared for signature by both the Contractor and the District representative.

(2) Delay construction start until after the coordination meeting and submittal and acceptance of at least the interim CQC plan, if required.

(3) Require revision of the CQC plan and its execution as necessary to obtain quality.

(4) Verify adequacy and calibration of test equipment, application of specified test standards and computation of test results.

(5) Spot check CQC approved submittals.

(6) Review Contractor's daily quality control reports (QCR) to verify that they adequately document his/her quality control operations. If reports are not adequate, require the Contractor to submit a supplementary report containing the necessary information..

(7) Hold periodic job-site assurance conferences on CQC/QA interrelationship of activity and effectiveness.

(8) Participate in the three-phase control process as necessary to verify that the Contractor is adequately conducting the required control processes. Attendance at a majority of the preparatory and initial-phase meetings is required. District participant will be totally familiar with contract requirements. Ensure that the Contractor prepares minutes of each preparatory and initial meeting and includes highlights of each control phase on the daily CQC report. These reports shall be made readily accessible for quick reference throughout the life of the project.

(9) Conduct District QA tests at the job-site to verify acceptability of the completed work. A sufficient number of tests, but not less than 5 percent of the frequency of the CQC tests, should be scheduled to verify CQC test procedures and results. For test procedures for which duplicate sampling is appropriate the Contractor shall be required to furnish for possible QA testing duplicate samples of test specimens of a minimum of 20 percent of the CQC tests. A minimum of one-fourth of these duplicate samples should be tested and the results compared to the CQC test results to verify test procedures and results. The duplicate samples on which QA test are performed should not be known in advance by the Contractor, so that the CQC staff will not know which of the CQC test results are subject to verification. The results of QA test performed on duplicate samples should be made available to and discussed with the Contractor in order to reconcile any discrepancies. Testing duplicate samples is part of, not in addition to, the requirement to perform QA test at a minimum frequency of 5 percent of the CQC tests. QA testing and inspection should be conducted at unannounced intervals. The contracting officer's representative should verify the accuracy and calibration of equipment, verify correct application of specified test standards, and verify the coverage and accuracy of required CQC tests by observing approximately 10 percent of the CQC tests. The exact number of tests observed will be commensurate with the confidence level in the Contractor's CQC system and consistency in District and Contractor test results. Test reports, which should be submitted as attachments to the Contractor's CQC reports, should be reviewed by District engineering, laboratory, and/or QA personnel assigned to the work depending upon the type of test.

(10) Monitor Contractor's procedures for tracking construction deficiencies to verify acceptable corrective action and that an audit trail is maintained.

(11) Ensure that new work is not placed on unacceptable work and that progress payments do not include the value of non-conforming construction.

(12) Prepare QA reports (QAR) and all other necessary QA documentation as detailed below:

(a) Quality assurance personnel will prepare a report for each visit day of construction or fabrication. If for some reason QAP did not visit the site on a particular day of construction, the reason for non-visit and pertinent observations as to events occurring during period of absence will be included in the QAR for the next subsequent visit day. The purpose of the QAR is to document District activities in the day-to-day administration of the contract. Memoranda for the record (MFR), letters, and the QAR will be used to provide a formal record of contract information. Particular care will be taken to record and preserve all possible data and exhibits with respect to any matter which may become the basis for a claim.

(b) As a minimum the QAR will cover the following areas: Contractor name, date, contract number, daily report number, project title and location, weather, precipitation, temperature (max. and min.), portion of the day suitable for work, Contractors/Subcontractors on job and area of responsibility, operating plant or equipment, work performed today, results of control activities, tests performed, equipment and materials received, job safety, verbal instructions received, remarks. The QAP will document the results of their QA inspections and tests, deficiencies observed, actions taken and corrective actions of the Contractor. They should also include comments pertaining to the CQC activities.

(c) All pertinent items of information will be included on the QAR. Data incorporated on the Contractor quality control report will not be repeated on the QAR unless it is necessary to augment or correct erroneous entries on the QCR.

(d) The District Inspector or his designees are responsible for assuring that the QAR contains all pertinent items of information. In order to verify the accuracy and completeness of the QAR, this individual will review initial reports of any QAP and perform follow-up reviews as deemed necessary to confirm/maintain continued acceptability. Those reports reviewed will be initialed.

(13) The QAP will review the entries on the Contractor's QCR. The QCR should contain information on the Contractor's quality control operations as described above and not be burdened with other peripheral information. The QCR will be attached to or filed with the QAR, if separate report forms are used, to form a complete quality control/quality assurance report to be kept in the contract file.

(14) Document Contractor performance throughout the contract and initiate interim and final unsatisfactory ratings where necessary.

QA for Procedural Specifications

Some QA testing in the case of certain critical earthwork and concrete dam structures must be conducted continuously. A comprehensive quality assurance testing program is necessary on the part of the District when specifications limit the Contractor to prescriptive procedures leaving the responsibility for end product quality to the District. Contracting officers must limit Contractor responsibilities for tests to those which control the prescriptive procedures and strictly avoid any duplication of District testing.

Performing Acceptance Inspections

Subsequent to CQC completion inspections, acceptance inspections of completed construction are a District responsibility.

Progress Meetings

Progress meetings will be held weekly either at the beginning or end of the work week. At a minimum this meeting will be attended by the Construction Inspector and the

Contractor (Foreman or Superintendent). The Contractor's CQC system manager must attend the meetings. It is recommended that the Engineer attend meetings where discussion of changed conditions or proposed design changes are anticipated. Problems that occur should be immediately brought to the attention of the Inspector and not be held until the next progress meeting. The progress meetings will be documented by the Inspector and minutes will be distributed to the Contractor, Engineer and Owner. The following items relating to quality management will be a part of the agenda:

- Review scheduled work activities
- Review the previous week's activities and discuss any problems
- Review test data
- Discuss any environmental compliance issues
- Discuss safety issues
- Discuss non-conformance reports
- Discuss any changed conditions or proposed design changes

Deficiencies

When deficiencies (items that do not meet project requirements or do not meet the intent of the design) are discovered, the Inspector shall immediately determine the nature and extent of the problem and notify the Contractor. If unsatisfactory test results identify a deficiency, additional tests will be performed to define the extent of the deficient area. The Contractor shall correct the deficiency to the satisfaction of the Inspector. If unable to correct the problem, the Inspector will notify the Engineer who will assist in the resolution of the problem. Corrected deficiencies shall be retested and approved before any additional related work is performed by the Contractor. All retests and related documentation shall be recorded by the Inspector and included in the final report documentation.

The Owner will immediately report to ADWR the nature of any design revision. Written approval from ADWR is required prior to implementation of the design change.

Earthwork

Quality assurance testing and sampling will be performed by the Geotechnical Engineer under the direction of the Inspector. Documentation shall meet the requirement of the plans, specifications and this plan.

The Inspector shall observe and document that the following activities are conducted in accordance with the specifications and design drawings and with the requirements of the Engineer:

- Stripping and excavation activities to ensure that the excavation is conducted carefully to protect the existing embankment and excavated to the proper depths; and that excavated material is properly stockpiled for later reuse if necessary.
- Establishment of proper drainage on the embankment
- Placement of all fill materials, confirming that all fill meets the requirements of the specifications and the intent of the design.
- Preparation of foundation subgrade.
- Placement of clay layers, filter layers, bedding layers, riprap and gabions.

Field Organization and Responsibility

Resident Inspection Force

The Dam, outlet works, spillway and flood wall must be adequately inspected to ensure quality construction. The size and composition of the resident inspection force for foundation and earthwork control operations should be adequate to provide for continuous inspection of construction activities, field testing and sampling, observation of field instrumentation, laboratory testing, data compilation, maintenance of records, and preparation of reports. The inspection force must be so staffed and organized that inspectors and technicians are available for continuous inspection of the Contractor's operations. The District is responsible for all phases of the construction project, including the activities necessary to verify that the Contractor has complied with the requirements of the contract plans and specifications and in contrast to the Contractor's quality control, the District is responsible for quality assurance. This includes checks, inspections, and tests of the products which comprise the construction, the processes used in the work and the finished work for the purpose of determining whether the Contractor's quality control is effective and he is meeting the requirements of the contract. These activities are to verify that defective work or materials are not incorporated in the construction."

Technical responsibilities

The District Inspector is responsible for ensuring that construction of the embankment and related appurtenances is in compliance with the plans and specifications. Geologists and soils engineers provide technical assistance. Assisting the Inspector are office and field engineering staffs. The office engineering staff is responsible for preparing field modifications to the plans and specifications in accordance with ADWR regulations, reviewing plans submitted by the Contractor such as those for quality control and dewatering, value engineering, evaluating results of construction control tests, and compiling instrumentation data for evaluation. The Engineer of Record will assist the District engineering staff as needed. The District Inspector is in charge of field supervision and inspection and is responsible for planning, executing, and coordinating all field inspection and testing to ensure compliance with established

standards and detail drawings and specifications. The Inspector may be assisted by one or more construction inspectors on each shift and by a materials testing or soils Engineer who supervises a number of technicians in obtaining samples and performing required field and laboratory tests. The project is to be staffed with the number of experienced laboratory technicians needed to perform acceptance testing on compacted fill, including filter and drainage fills. Acceptance testing should be performed immediately after placement and compaction of the lift material to be sampled and tested. Attention should be given to selection of samples for acceptance testing so that all materials of generally different descriptions being placed in the same compacted zone of the embankment will be tested.

Good communication between design and construction personnel is essential. The construction staff should be familiar with the design memoranda pertinent to the work. Preconstruction instructions and training should be given to field inspection personnel to acquaint them with the design concepts and to provide them with a clear understanding of expected conditions, methods of construction, and the scope of plans and specifications. This may be done by training sessions, preferably with design personnel present, to discuss engineering considerations involved and to explain control procedures and required results. Inspection personnel should be familiar with the plans and specifications; excavation boundaries; types of materials to be excavated; temporary and permanent drainage and seepage control measures; approved sources of borrow materials; procedures and equipment most suitable for excavating, processing, and hauling borrow materials; characteristics of fill materials and compaction requirements; capabilities of various types of compaction equipment; and procedures required to obtain desired or specified compaction.

Quality control.

(1) The Contractor is responsible for quality control, and the contract specifications give requirements for the Contractor quality-control organization, personnel qualifications, facilities and types of tests, and reporting of test data and inspections. The field

inspection force has the responsibility of accepting completed work and must have a staff large enough to accomplish the following:

(a) Check the effectiveness and adequacy of the Contractor's quality-control system and take action to have deficiencies corrected.

(b) Inspect construction operations to prevent defective work and placement of unsatisfactory materials.

(c) Monitor progress.

(d) Perform check tests and acceptance tests.

(e) Resolve or report field problems and conflicts with contract documents to higher authority.

(f) Make acceptance inspections.

(2) Contractor quality-control operations will, if properly implemented, assist in achieving adequate construction, particularly on those operations where specifications contain product requirements such as water content limits and gradation of filter material. However, field inspectors must be present to witness operations for which construction procedures are specified and to conduct tests to ensure that results obtained are those required by design. Several important considerations are listed below:

(a) The Contractor is not required to conduct tests on the quality or durability of materials used for pervious fill, filter zones, bedding, spalls, or rip-rap. The District is responsible for determining such properties in approving sources of natural or processed (blasted, ripped, or crushed) pervious materials for use in embankments.

(b) The Contractor is not required to provide tests on compaction characteristics when fill placement procedure is specified. District inspection forces are responsible for inspecting the Contractor's specified construction activities and for testing embankment or slope materials to establish that excavation and fill placement

procedures result in an excavated slope or fill that conforms to properties assumed in the design.

Relationship with Contractor

Mutual understanding between the Inspector and his staff and the Contractor of the requirements of the contract specifications is necessary to obtain desired construction quality. The quality of the work must never be compromised. Unnecessary requirements and restrictions should not be imposed over and above the specification requirements. Firmness by Engineers and Inspectors who are efficient and know their job will gain the respect and cooperation of the Contractor.

Laboratory

Foundation and earth-fill materials are tested in the laboratory to determine gradation, water content, in situ density, compaction, relative density, and Atterberg limits. The data obtained serve as a basis for ensuring compliance with specifications and design requirements, for guidance toward maximum utilization of available materials, and for providing a record of the properties of materials placed in all parts of the project.

Types of tests and facilities required

The major portion of testing in the field laboratory is for acceptance testing of compacted fill. These tests must be conducted in a manner that will yield results of a quality comparable to the initial laboratory tests upon which the design was based. Discrepancies resulting from variations in testing equipment and techniques should be carefully avoided. Water content, compaction, relative density gradation, and Atterberg limits tests are the most common tests conducted. Water content and compaction tests are used for control of cohesive soils in impervious and random fills. Atterberg limits tests may be used for control of fills of fine-grained cohesive soils where good correlations of optimum water content and maximum dry density with the Atterberg limits have been established. Gradation and relative density tests are used for control of pervious fills. Gradation tests are also used for control of rock fill. Field density tests

are performed on the fill, but compaction tests on the material and water content determinations may be made either in the central laboratory or in the field. The central laboratory must have equipment for these tests, but supplemental portable units may be advisable for gradation, compaction, and water content testing at remote locations.

Engineers

The Engineer who designs the earth or rock-fill dam should visit the project during construction and assist field personnel in interpreting plans and specifications and observe problems that may not have been fully evaluated in the design. Visits should also be made whenever unexpected conditions are encountered that may require changes in the plans or specifications. A cooperative attitude must be maintained between Engineers and construction personnel so that mutual understanding is reached on existing problems and feasible solutions are developed. In some cases, conferences at the construction site may be necessary between construction personnel, designers, and specialists to review conditions and determine if design modifications are required. A regular schedule of visits should be set up so that design personnel can inspect field conditions at critical construction stages.

Surveying

Survey layout and as-built survey and documentation is to be provided by an independent licensed surveyor hired by the Contractor per the requirements in the specifications. Monitoring of settlement during construction will also be performed. The Inspector reserves the right to perform independent survey spot checks to verify the quality of the constructed structures.

Records and Reports

General

Construction records and reports are needed to document results of tests made to verify specification requirements and action taken to correct deficiencies and to provide a record describing the field conditions, modifications to plans and specifications, construction procedures, sequence of operations, and the location and as-built dimensions of important features. These are necessary to evaluate claims made by the Contractor based on changed conditions, or claims by the District that work performed does not meet contract requirements. Progress reports are also needed to provide a basis for payments to the Contractor for work accomplished. All inspectors should maintain a daily inspection report (or log), and a master diary should be kept by the District Inspector. Details of specific construction control records and reports follow.

Construction records

These records provide useful data for designing future alterations and additions to the structure, determining causes of later undesirable movement or seepage, or interpreting piezometric data. As-built drawings, construction photographs, descriptions of foundation conditions encountered and various treatments, compaction data, and test data on record samples should be included in the records.

Construction reports

The construction foundation report should include details such as dip and strike of rock, faults, artesian and other groundwater conditions, and other characteristics or conditions of foundation materials. A complete history of the project in narrative form should be written, giving the schedule of starting and completing various phases of the work, describing construction methods and equipment used, summarizing quantities of materials involved, and including other pertinent data. Foundation reports should be supplemented by photographs that clearly depict foundation conditions. Routine photographs should be taken at regular intervals, and additional pictures should be

taken of items of specific interest, such as the preparation of foundations and dam abutments. For these items, colored photographs should be taken to provide a better depiction of construction conditions. The captions of all photographs should contain the name of the project, the date on which the photograph was taken, the identity of the feature being reported, and the location of the camera. In reports containing a number of photographs, an alternative would be an index map with a circle indicating the location of the camera with an arrow pointing in the direction the camera was pointing, with each location keyed to the numbers on the accompanying photographs.

Daily Reports

Daily reports or logs are prepared by inspection personnel covering their assigned areas of work. The importance of daily reports should be stressed at all levels of the Inspector's force, since daily reports form a part of official records and may by used as evidence in court or in other legal action. The reports are also valuable in determining possible causes of distress, unusual seepage, or other potentially critical conditions during and after construction is completed. Inspectors' reports are not personal records and should be carefully controlled and accounted for as official records. The daily reports must be thorough, accurate, neat, and legible. Detailed information on the following items should be included:

a. Contract number and Contractor's name.

b. Description and location of the work.

c. Date.

d. Weather.

e. Items of equipment and procedures used.

f. Type and amount of work performed.

g. Type and number of field control tests performed by the Contractor and by District forces, and brief comments on results obtained.

h. Progress of work, delays, causes of delays, and extent of delays.

i. Instructions given to Contractor, including name of Contractor representative talked to, and resulting actions taken by Contractor.

j. Details of any controversial matters.

k. Visitors to the Inspector's area of responsibility.

l. Safety infractions/violations observed and corrective actions taken.

Compaction Control Reports

Records of compaction control are required to document the procedures used and the adequacy of results obtained. The records also provide information for evaluation of compaction control and for use in determining causes of distress or unusual conditions that may develop during or after construction. Sample forms for use in tabulating daily field control data are contained in the Appendix. Evaluation of compaction control is necessary to ensure that the method and procedures are producing the quality of in-place fill required by the specifications. Summaries of compaction control data provide a convenient means of evaluating the adequacy of compaction.

Final Construction Report

A final construction report should include the foundation report as described above and the following:

a. A narrative history of the project, including schedules of starting and completing various phases, treatment of unusual conditions, construction methods and equipment used, quantities of materials involved, and other pertinent information.

b. As-built drawings.

c. Construction photographs.

d. Summary of field compaction control data and laboratory test results.

e. Summary of other tests for acceptance control.

f. Test results on record samples.

g. Results of stability, seepage and other analyses during construction.

h. Summary of instrumentation data.

i. Summaries or references to conferences and inspection visits and resulting actions implemented.

j. Summaries of all design changes and the justification for these changes.

The report will certify that the work has been performed in compliance with the design drawings, project specifications, and related documents, and will include a final report from the Geotechnical Engineer who supervised the construction.

References

1. Michael Baker Jr., Inc., 1999, *Fool Hollow Spillway Rehabilitation, Quality Assurance Plan* for the Arizona Game & Fish Department, 11 p. plus attachments.

2. Department of the Army, ER 1180-1-6 *Construction Quality Management* .

3. Department of the Army, EM 1110-2-1911 Construction Control for Earth and Rock-Fill Dams.

4. Stantec Consulting, Inc., Construction Administration Procedures Manual.

Appendix A - Sample Forms

Project Punch List

PROJECT	PROJECT NO.	INSPECTION BY	DATE

OWNER:	ARCHITECT/ENGINEER

ITEM	DESCRIPTION	CONTRACTOR	COMMENTS	INITIAL	DATE

EACH CONTRACTOR LISTED SHALL PROVIDE COMMENT OR INITIAL AND DATE COMPLETED.

Nonconformance Report

Client	Date
Project	Project No.
Drawing, Specification or Code	Report No.
Description:	
Prepared By	Date
Contractor Response ☐ Repair or Replace in accordance with approved plans and specifications	☐ Engineering Evaluation
Comments:	
Prepared By	Date
Engineering Evaluation	
Prepared By	
Company/Title	Date
Repair Completed and Acceptable Contractor	Date
Inspector	Date

Concrete Placement Card

Pour Date:	Time:
Concrete Mix No.:	Required Strength:
Pour Description:	
CY Quantity Ordered:	
CY Quantity N.L.:	CY Quantity Final:

Prior to pour, contractor acknowledges their work will be completed per the contract documents.

INSPECTION ITEM	CONTRACTOR SIGNATURE	DATE	INSPECTOR	DATE
Formwork				
Re-shoring				
Keys, Blockouts, Exp. Jts.				
Clean Up				
Electrical				
Mechanical/Sleeves Duct				
Plumbing - Pipe Sleeves				
Re-Steel/Mesh				
Fire Protection				
P/T				
Anchor Bolt and Imbed Placement				

Pour is authorized to proceed:

Contractor's Superintendent

_____

Concrete Field Test Summary

LOCATION			DATE	JOB NO.	
OWNER					
PROJECT					
CONTRACTOR					
Mix Number:	Spec Strength	Concrete	Grout	Mortar	Other
Truck No.	Location/Time	Cyls Taken	Slump (inches)	Air Content %	Conc Temp F

Quality Assurance Report (QAR) Daily Log of Construction									Report Number	
Project									Date	
Contractor									Weather	
Portion of scheduled day suitable for operations (%)									Temperature	
Structural Excavation	Borrow Excavation	Embankment	Concrete	Structure					Minimum	Maximum
Number of District Employees									24 hour precipitation	
Supervisory	Office	Layout	Inspection	Total					inches	ending
Number of Contractor Employees									Lake Level	
Supervisory	Skilled	Laborers	Total	From	To	From	To		Feet	Time

Attach list of the following: (a) Major items of equipment either idle or working, and (b) Number and classification of contractor personnel

Contractors/Subcontractors and area of responsibility for work performed today:

a.

b.

c.

d.

e.

f.

Work performed today:: (Indicate location and description of work performed. Refer to work performed by prime and/or subcontractors by letter in table above. If no work performed, indicate reason.)

Information on progress of work, causes for delays and extend of delays, plant, material, etc.

CQC Control phases attended and instruction given:

Results of QA activities and tests, deficiencies observed, actions taken and corrective action of contractor. Include comment pertaining to contractors CQC activities.

Verbal instruction given to contractor (include names, reactions and remarks)
Has anything developed on the work which might lead to a change order or finding of fact?
Information on progress of work, causes for delays and extend of delays, weather, plant, material, etc.
Information, instructions or actions taken not covered on QCR report or disagreements:
Safety: (Include any infractions of approved safety plan, safety manual or instructions given. Specify corrective action taken)
Remarks: (Include visitors to project and miscellaneous remarks pertinent to work)

QA representatives signature	Date	Engineers Initials	Date

Summary of Field Compaction Control

(1) Daily — SUMMARY OF FIELD COMPACTION CONTROL OF IMPERVIOUS OR SEMIPERVIOUS SOILS FOR CIVIL WORKS PROJECTS

ENGINEER FORM — RCS: ENGCW-E-11(R1)

PROJECT	RIVER / STATE / TOWN	CONTRACT NO	CONTRACTOR	DATE OF REPORT	REPORT NO
Dam — Main Embankment Closure Section	(nearest)	(Fill in if desired for district or division use)		(date transmitted from field)	73 — SHEET 1 OF 1

SPACE RESERVED FOR PUNCH CARD OPERATOR: 1-2, 3-4, 5, 6-7, 8-9, 10-13

EMBANKMENT ZONE	(S) SPECIFIED OR (D) Desired % COMP	W % LIMITS	COMPACTION EQUIPMENT (3)	LOOSE LIFT THICKNESS (IN.)	NUMBER OF PASSES	CONTACT PRESSURE (PSI)
Upstream	95 D	+2 to -3 S	SFR	8	8	517
Central	95 D	+2 to -2 S	SFR	8	8	517
Downstream	95 D	+2 to -3 S	SFR	8	8	517

TEST NO (TEST IDENTIFICATION)	DATE MADE	TYPE TEST	STATION	OFFSET (FT)	ELEVATION (FT)	DEPTH (IN.)	EMBANKMENT ZONE	BORROW SOURCE	CLASS WORD OR LETTER SYMBOL (CLASSIFICATION)	MAX PART SIZE (IN.) (GRADATION)	% PASSING #4 SIEVE	% PASSING #200 SIEVE	LL (ATTERBERG LIMITS)	PI (NOT PL)	DRY DENSITY (PCF) (IN PLACE DATA, TOTAL SAMPLE)	WATER CONTENT (%)	DRY DENSITY (PCF) (-#4 FRACTION)	WATER CONTENT (%)	TEST (LABORATORY TEST DATA, STANDARD METHOD)	MAX DRY DENSITY (PCF)	OPT WATER CONTENT (%)	MAX DRY DENSITY (PCF) (Liquid Limit Correlation)	OPT WATER CONTENT (%)	% + OR -	PERCENT COMPACTION (FIELD AND LABORATORY CORRELATION)	COMMENTS ON TESTS
COL 1	COL 2	COL 3	COL 4	COL 5	COL 6	COL 7	COL 8	COL 9	COL 10	COL 11	COL 12	COL 13	COL 14	COL 15	COL 16	COL 17	COL 18	COL 19	COL 20	COL 21	COL 22	COL 23	COL 24	COL 25	COL 26	COL 27
488	1965 4 Mar	SV	147+50	480 DS	93		DS	"	SP	"	"	7	NP	NP	-	-	114.8	9.8	-	-	-	112.7	12.9	-3.1	102	
489	4 Mar	CYL	149+30	20 DS	104	"	Central	"	CH	"	"	62	52	32	-	-	110.0	16.5	-	-	-	107.2	17.1	-0.6	103	
490	4 Mar	CYL	149+00	175 US	105		US	"	CL	"	"	44	37	25	-	-	111.9	14.1	-	-	-	116.0	12.9	+1.2	96.5	
								Following data from					Dam,				District					Visual Class				
545	1963 9 Jul	NM	10+05	110 US	1375	"	A	Spillway Excav	CL(E)	"	"	"	"	"	113.0	"	-	-	-	-	-	113.5	"	"	98.8	Check les on NM
1	9 Jul	WV	10+05	110 US	1375	"	A	Spillway Excav	CL(E)	"	"	"	"	"	110.7	"	-	-	-	-	-	113.5	"	"	97.7	
								Following data from					Dam,				District					1 Pt. Std.				
CRF-7 DM D-30	1963 6 Sep	SV	7+25	85 DS	797	"	Random	Excav	SM	"	"	"		"	136.7	7.2	121.5	11.5	-	-	-	124.8	10.2	-3.0	97.3B	
CRF-8 DM D-48	9 Sep	SV	8+00	90 US	826		Impervious	Borrow	SM	"	"	"		"	126.2	9.6	118.9	11.9	-	-	-	126.3	10.2	-0.6	94.1B	
								Following data from					Dam,				District									
404	1964 19 Aug	CYL	30+00	8 DS	705		Impervious Core	"	MH	"	68	27	75	34	82.3	34.6	68.4	44.4	(A)	84.0	37.0			+7.4	81	
707	21 Sep	CYL	20+00	C	801		Impervious Core	"	MH	"	76	37	74	32	91.1	27.4	81.0	34.9	(A)	81.0	"			"	100	

Information not given in field report but should have been.

ATTN: Compaction procedure using 12-in. mold was added to EM 1110-2-1906 after note on COL 20 (see below) was prepared.

NOTE (1): FILL IN APPROPRIATE WORD: DAILY, WEEKLY, MONTHLY, OR PERIODIC.
(2): ENTER TYPE OF EQUIPMENT USED, E.G. SHEEPSFOOT ROLLER (SR), PNEUMATIC ROLLER (PR), VIBRATORY ROLLER (VR), PNEUMATIC HAND TAMPER (PHT), OR LABORATORY TAMPER (LT).
COL 3: CYLINDER (CYL), CHUNK (CK), SAND VOLUME (SV), WATER VOLUME (WV), NUCLEAR METHOD (NM), OTHER ____.
COL 5: RECORD OFFSET BY DISTANCE UPSTREAM OR DOWNSTREAM OF CENTERLINE OF DAM OR RIGHT OR LEFT OF AXIS.
COL 7: DEPTH FROM FILL SURFACE TO TOP OF DENSITY TEST.
COL 8: E.G. AREA C, SPILLWAY EXCAVATION, ETC.
COL 10: ENTER SOIL COLOR BEFORE CLASS. WHEN CLASS ESTIMATED, NOTE BY LETTER (E).
COL 11-12: WHEN BOTH GRADATION AND WATER CONTENT CONTROL OF THE FILL MATERIAL IS A SPECIFICATION REQUIREMENT, USE THE SUPPLEMENTAL FORM ALONG WITH THIS FORM, USING THE SAME SHEET NUMBER FOR THE SUPPLEMENTAL SHEET FOLLOWED BY SM S.
COL 20: STANDARD METHOD: (A) 4-IN. DIAM MOLD, (B) 6-IN. DIAM MOLD AS OUTLINED IN MANUAL 1110-2-1906. IF MATERIAL WITH MAX PARTICLE SIZE GREATER THAN 3/4 IN. OR OTHER EFFORT IS USED IN THE LAB COMPACTION TEST, NOTE AS PER UNDER COL 20 AND REPORT DETAILS OF PROCEDURE.
COL 21-22: 1-OR 3-POINT COMPACTION DATA ON FIELD SAMPLES CAN BE RECORDED IN COL 21 AND 22, MAKING APPROPRIATE CHANGES IN COLUMN HEADINGS.
COL 23-24: FOR USE WHEN MAX DENSITY AND OPTIMUM WATER CONTENT ESTIMATED. STATE HOW ESTIMATED BY FILLING IN BLANK, E.G. 1-POINT STANDARD METHOD, RAPID COMPACTION CONTROL, LIQUID LIMIT CORRELATION, VISUAL COMPARISON, ETC.
COL 25: COL 11 OR COL 18 MINUS COL 21 OR COL 23.
COL 26: INDICATE DERIVATION, E.G. FOR COL 18 ÷ COL 21 OR COL 23, INDICATE BY A OR B, RESPECTIVELY. FOR COL 10 ÷ COL 21 OR COL 23, INDICATE BY C OR D, RESPECTIVELY.
COL 27: IF TEST RESULTS DO NOT MEET SPECIFICATIONS, DENOTE BY LETTER (W) AND NOTE REMEDIAL TREATMENT IN FOOTNOTE. WHEN UNSATISFACTORY AREA IS REWORKED AND RETESTED, DENOTE BY (R).

U. S. ARMY ENGINEER District, ____
CORPS OF ENGINEERS

PREPARED BY ____ (Inspector)

SUBMITTED BY ____
RESIDENT ENGINEER

Summary of Field Compaction Control (both pervious fill and rock-fill)

(8): Daily — SUMMARY OF FIELD COMPACTION CONTROL OF PERVIOUS SOILS AND ROCKFILL FOR CIVIL WORKS PROJECTS — RCS: ENGCW-E-11(R1)

PROJECT	RIVER / STATE / TOWN	CONTRACT NO	CONTRACTOR	DATE OF REPORT	REPORT NO
Main Embankment Dam	(nearest)	(Optional entry if desired for district or division use)		date transmitted (from field)	96 — SHEET 1 OF 1

SPACE RESERVED FOR PUNCH CARD OPERATOR — 1 = CARD NO 1 AND CARD NO 2

EMBANKMENT ZONE	SPECIFICATIONS COMP	REL DEN	COMPACTION EQUIP (8)	LOOSE LIFT THICKNESS	NO OF PASSES	WEIGHT (LB) OR CONT PRESS (PSI)
(Data on Dam)						
Pervious			PR	8	3	50 T

ROCK DESCRIPTION — EMBANKMENT ZONE	TYPE	COLOR	HARDNESS	% WEATHERED
(Data on Dam)				
Class II 18"	Slabby Basalt	Gray		
Class I 18"	Basalt	Black		

TEST IDENTIFICATION: TEST NO	DATE MADE	TYPE TEST	STATION	OFFSET (FT)	ELEVATION (FT)	DEPTH (IN) OR VOLUME (CF)	EMBANKMENT ZONE	SOURCE	CLASSIFICATION SYMB	MAX PART SIZE (IN)	GRADATION PERCENT PASSING TOTAL SAMPLE 3"	1-1/2	3/4	4	10	40	100	200	-3" FRACTION 3/4"	4	-#4 FRACTION 40	#200	UNIF COEF C_u D_{60}/D_{10}	APPARENT SPECIFIC GRAVITY +#4	-#4	FIELD (PCF)	DRY DENSITY LABORATORY TEST METHOD	MAXIMUM (PCF)	MINIMUM (PCF)	% COMP OR REL DEN	COMMENTS ON TESTS
COL 1	COL 2	COL 3	COL 4	COL 5	COL 6	COL 7	COL 8	COL 9	COL 10	COL 11	COL 12	COL 13	COL 14	COL 15	COL 16	COL 17	COL 18	COL 19	COL 20	COL 21	COL 22	COL 23	COL 24	COL 25	COL 26	COL 27	COL 28	COL 29	COL 30	COL 31	COL 32
CF-10 D-D361	1 Oct	WV	10+70	10 US	338		Pervious	Borrow C	GP	3	100	92.9	77.4	44.2	33.6	25.1	-	0.7	77.5	44.2	56.9	1.6	82.5	*	*	135.8	PVD	138.8	-	D_M 97.8	
CF-15 D-D364	1 Oct	WV	15+00	25 DS	343		Pervious	Borrow C	GP	3	100	96.6	67.1	40.8	31.5	14.0	-	0.6	67.1	40.8	34.4	1.4	46.7	*	*	134.3	PVD	139.8	-	D_M 96.1	
Rock-fill data from Dam, District											Total Sample								-3" Fraction												
											12"	6	3	1	4	10	40	200	1"	4											
2026	1962 18 Apr	DT	21+00	240 US	1400		Class II 18"	Spillway	-	18	100	89	64	34	16	10	6.4	3.7	44	23.4	-	-	3.4	*	-	112.1	V	102.7	94.4	D_M 109	
2176	25 Jun	DT	21+20	100 DS	1461		Class I 18"	Helga Aggregate	-	18	100	89	68	22	2.9	1.7	0.7	0.2	25	3.3	-	-	4.7	*	-	118.6	V	114.1	100.8	D_M 104	

* Information not given in field report but should have been.

Remarks: Col 3 - Density Test (DT) performed using plastic membrane or tarpaulin and water.

Col 28 - V - laboratory test using 3/4 cu yd vibrating apparatus (ob-ha..lt).

NOTE 1: FILL IN APPROPRIATE WORD: DAILY, WEEKLY, MONTHLY OR PERIODIC. 2: ENTER TYPE OF EQUIPMENT USED E.G. PNEUMATIC ROLLER (PR), VIBRATORY ROLLER (VR), CRAWLER TRACTOR (CT), RUBBER TIRED TRACTOR (RT), STEEL TAMPING PLATE (STP), OTHER ____

COL 2: FOR GRAVEL OR SAND FILL: WATER VOLUME (W), SAND VOLUME (S), NUCLEAR METHOD (N), GRADATION SAMPLE (G), OTHER ____ FOR ROCKFILL: GRADATION SAMPLE (G), DENSITY TEST (DT)

COL 5: RECORD OFFSET BY DISTANCE UPSTREAM OR DOWNSTREAM OF CENTERLINE OF DAM OR RIGHT OR LEFT OF AXIS

COL 7: GRAVEL OR SAND FILL: SHOW DEPTH BELOW COMPACTED SURFACE TO TOP OF DENSITY TEST (E.G. "8"); ROCKFILL: SHOW VOLUME OF DENSITY TEST HOLE (E.G. "125 CF")

COL 8: E.G. PREC. SPILLWAY EXCAVATION, ETC.

COL 10: WHEN CLASSIFICATION ESTIMATED NOTE BY LETTER (E)

COL 27: IF ESTIMATED SO NOTE AS (E) AND STATE HOW ESTIMATED IN FOOTNOTE

COL 30: VIBRATORY TABLE (VT), PROVIDENCE VIBRATED DENSITY (PVD), OTHER ____ REPORT SEPARATELY DETAILS OF SPECIAL LABORATORY PROCEDURES USED

COL 31: INDICATE HOW DERIVED E.G. PERCENT COMPACTION (D_M) OR RELATIVE DENSITY (D_R) BY PLACING APPROPRIATE SYMBOL (D_M OR D_R) OVER VALUE OBTAINED

COL 32: IF TEST RESULTS DO NOT MEET SPECIFICATIONS DENOTE BY LETTER (N) AND NOTE REMEDIAL TREATMENT IN FOOTNOTE. WHEN UNSATISFACTORY AREA REWORKED AND RETESTED, DENOTE BY LETTER (R)

U.S. ARMY ENGINEER District, ____

CORPS OF ENGINEERS

PREPARED BY: Inspector

SUBMITTED BY: ____

RESIDENT ENGINEER

PERIODIC SUMMARY OF FIELD COMPACTION CONTROL DATA

Project _____ Dam _____ Resident Engr S. J. Smith
District _____ Insp. or Tech J. S. Jones
Location of Project _____ (River) _____ (Nearest town, state)
Report No. 12 Period 5 Nov 68 to 5 Dec 68

TYPE OF FILL	IMPERVIOUS (CORE)
Soil Classification (USCS Symbols)	CH, CL
Stationing of Areas Tested	14+75 to 46+50
Elevation of Areas Tested	832 to 840
Compaction Equipment	Sheepsfoot roller, Ferguson self-propelled model SP-120B (615 psi)
Number of Passes	8
Uncomp. Lift Thick.	8 in.
Roller Speed, MPH	3 to 5
In-Place Density Method (Give % of tests made with each method)	Sand Volume (90%) Nuclear (10%)*
Method of Determining Field w	Oven Drying
Method of Relating Field w to Std Opt w, and Field Density to Max. Dry Density, or Relative Density	Field results compared to laboratory compaction curve for similar soil. Appropriate laboratory curve selected by 1- or 2-point Std compaction test at field w or drier, supplemented with liquid limit test correlation
Specified Range of w (Percentage Points Above & Below Std Opt w)	Opt -1 % to Opt +2 %
(Desired) (Specified) Min. (% Comp. or Rel. Density)**	95%
No. Areas Tested	21
No. with w Outside Acceptable Limits	3
No. with Density Below Min.	2
No. with w and Density Outside Acceptable Limits	1
No. Areas Reworked	5
No. Areas Retested	4

Remarks

* Only the two "initial" tests shown on the summary plot were by nuclear method check tests and remainder of tests were by sand volume method.

**Strike out inapplicable words.

Summary Prepared by ARG Date 6 Dec 68
Summary Checked by JSJ Date 7 Dec 68

ENG Form 4287
JUN 69 (ER 1110-2-1925)

Summary Form, Field Compaction Control Data, Impervious Material

Project Dam Resident Engr J. S. Smith
District Insp. or Tech J. S. Jones
Location of Project (River) (nearest town, state
Report No. 12 Period 5 Nov 68 to 5 Dec 68

TYPE OF FILL	PERVIOUS (SAND DRAIN)
Soil Classification (USCS Symbols)	SW
Stationing of Areas Tested	15+50 to 37+50
Elevation of Areas Tested	830 to 839
Compaction Equipment *	Vibratory Roller, Tampo Model VC80 (static wt. = 3.5 tons, centrifugal force of 7.5 tons at 1600 rpm)
Number of Passes *	4
Uncomp. Lift Thick.	6 in.
Roller Speed, MPH	2
In-Place Density Method (Give % of tests made with each method)	Sand Volume (90%) Nuclear (10%)**
Method of Determining Field w	Visual Observation
Method of Relating Field w to Std Opt w, and Field Density to Max. Dry Density, or Relative Density	Field results compared to results of laboratory maximum (modified Providence vibrated) and minimum density tests on similar material. Appropriate laboratory results selected by gradation correlation.
Specified Range of w (Percentage Points Above & Below Std Opt w)	Saturated during compaction
(Desired) (Specified) Min. (% Comp. or Rel. Density)+	80%
No. Areas Tested	25
No. with w Outside Acceptable Limits	Not Applicable
No. with Density Below Min.	6
No. with w and Density Outside Acceptable Limits	Not applicable
No. Areas Reworked	5
No. Areas Retested	3

Remarks
* If compacted by crawler tractor, change "passes" to "coverages"
** Only the two "initial" tests shown on summary plot were by nuclear meth
Check tests and all other tests were by the Sand Volume method.

+Strike out inapplicable words.
ENG Form 4287
JUN 69 (ER 1110-2-1925)

Summary Prepared by ARG Date 6 Dec
Summary Checked by JSJ Date 7 Dec

Summary Form, Field Compaction Control Data, Pervious Material

APPENDIX J

ELECTRONIC FILES OF HEC-1 MODELS FOR FLOOD HYDROLOGY & FLOOD ROUTING THROUGH THE MODIFIED DAM

APPENDIX K

STRUCTURE ANALYSIS FOR AUXILIARY OUTLET WORKS AND FLOODWALL

T·Y·LIN INTERNATIONAL

To: Chuck Gopperton

From: Chris Bridges CTB

Date: January 17, 2000

Subject: Golden Eagle Park Dam

Copy:

MEMORANDUM

Chuck, Enclosed are design calculations and details (21 sheets) for:

- The pre-cast box auxiliary outlet works culvert and headwall
- The auxiliary outlet works inlet structure
- The auxiliary outlet works outlet structure
- The floodwall
- The inlet structure for the principal outlet works culvert
- Details for the trashrack

Please discard the calcs and details I sent you last week, because I've made some revisions to some of the sheets. Please give me a call if I can be of further assistance.

Goldern eagle park dam.doc/ ctb

T·Y·LIN INTERNATIONAL

To: Chuck Gopperton

From: Chris Bridges CTB

Date: January 28, 2000

Subject: Golden Eagle Park Dam

Copy:

MEMORANDUM

Chuck, Enclosed are six (6) detail sheets addressing the comments/questions that you and Laura had. The first two sheets (#8 and #11) have been revised with regard to the connection between the wingwall and the apron. The next sheet (#20) has been revised similarly; please discard the same sheet from the last submittal. The fourth sheet (#21) has been revised with an additional note; again, please discard the same sheet from the previous submittal.

The last two sheets are new details; the first details the reinforcement in the floodwall, and the second details the dowels used to connect the precast box with the cast-in-place section.

My last two tasks are to research the tongue and groove detail and explore removing the lateral angles from the trashrack. I will address these remaining issues shortly.

Please give me a call if I can be of further assistance.

Goldern eagle park dam.doc/ ctb

T·Y·LIN INTERNATIONAL

Projects: GOLDEN EAGLE DAM	Job No. 1285.00	Sheet: 1 of 21	
Item: PRE-CAST BOX AUXILIARY OUTLET WORKS CULVERT	Designer: GTB	Date: 12/99	
	Checker:	Date:	
		Grid: 1/8"	

DETERMINE FILL ON 10'x4' BOX CULVERT

As per Dwg. D1, zoned backfill max. elev. = 1726.5

In Typ. section, elev. of compacted subgrade = 1690.7

add 1' dim. shown to bottom of fnd. slab: +1.0

add 6" for fnd. slab: +0.5

∴ Bottom of box culvert = 1690.7 + 1 + 0.5 = 1692.2

For 1726.5 - 1692.2 - 4' box ≈ 30' fill => t = 16"

∴ Fill = 1726.5 - 1692.2 - 1.33' - 4' - 1.33' = 27.6'

Check Invert Elev. above w/ section B-B of Dwg. D1:

Invert Elevs are 1695 (max) & 1693.95 (min)

1692.2 + 16/12 = 1693.53 < 1693.95 OK

For Fill = 27.6' max use ADOT std B-02.10, Table NO. V

For 10'x4' => t = 16"; W = 13"

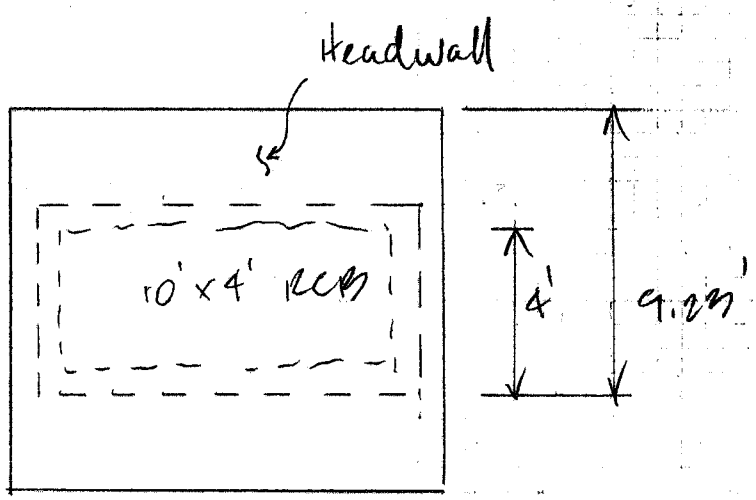

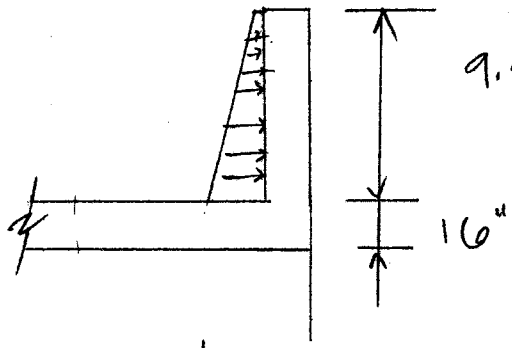

$9.23' - 4' - 16/12 = 3.9'$

$P_H = 0.3 \times 0.12 \times 3.9' = 0.14$ KSF

$P = 1/2\,(0.14\text{ KSF})(3.9') = 0.27$ KLF

$M = 1/2\,(0.14)(3.9)^2/3 = 0.36$ K/'

For service Load Design,

$n = 9$

$f_c = 0.4 f'_c = 0.4 \times 4000 \text{ psi} = 1600 \text{ psi}$

$f_s = 24000 \text{ psi}$

$k = f_c / (f_c + f_s/n) = 0.375$

$j = 1 - k/3 = 0.875$

$R = f_c k j / 2 = 262.5 \text{ psi}$

Req'd $bd^2 = M/R = 0.36 \times 12000 / 262.5 = 16.5 \text{ in}^3$

$b = 12 \text{ in.} \therefore d \geq 1.17''$

$d = 12'' - 3'' \text{ lip} - 2'' \text{ cover} - 0.625''/2 = 6.69''$ (#5)

Req'd $A_s = M / f_s j d = 0.36 \times 12 / 24 \times 0.875 \times 6.69$

$= 0.03 \square''$

Use #4 @18 ($A_s = 0.13 \square''$) as per std. dwg.

$v = V / b_w d = 0.27 \times 1000 / 12 \times 6.69 = 3.36 \text{ psi}$

$v_{allowable} = 0.95 \sqrt{f'_c} = 60 \text{ psi} \gg 3.36 \text{ psi}$ OK

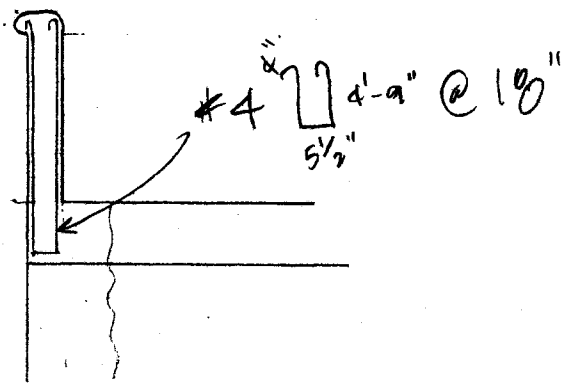

T·Y·LIN INTERNATIONAL

Projects:	Golden Eagle Dam	Job No.	1285.00	Sheet: 4	of 21
Item:	12' x 4' CBC	Designer:	CLM	Date:	1-00
	4' CIP end Section	Checker:		Date:	
				Grid: 1/8"	

$$OTM = \left[35\,pcf \times \frac{(4+2)^2}{2}\right]\left(\frac{6'}{3} + 6.67'\right)\left(10' + \frac{2 \times 13''}{12}\right) = 66.4\ k\text{-}ft$$

RM =

① $(1.565\,CY \times 27 \times 4')(0.15)\left(\frac{4'}{2}\right) = 50.7$

② $(1' \times 4' \times 12.17')(0.15)(0.5) = 3.7$

③ $(3' \times 4' \times 12.17')(0.12)(2.5') = 43.8$

$\Big\}\ 98.2\ k\text{-}ft$

Factor of Safety

$= 98.2 / 66.4$

$= 1.5$ ok

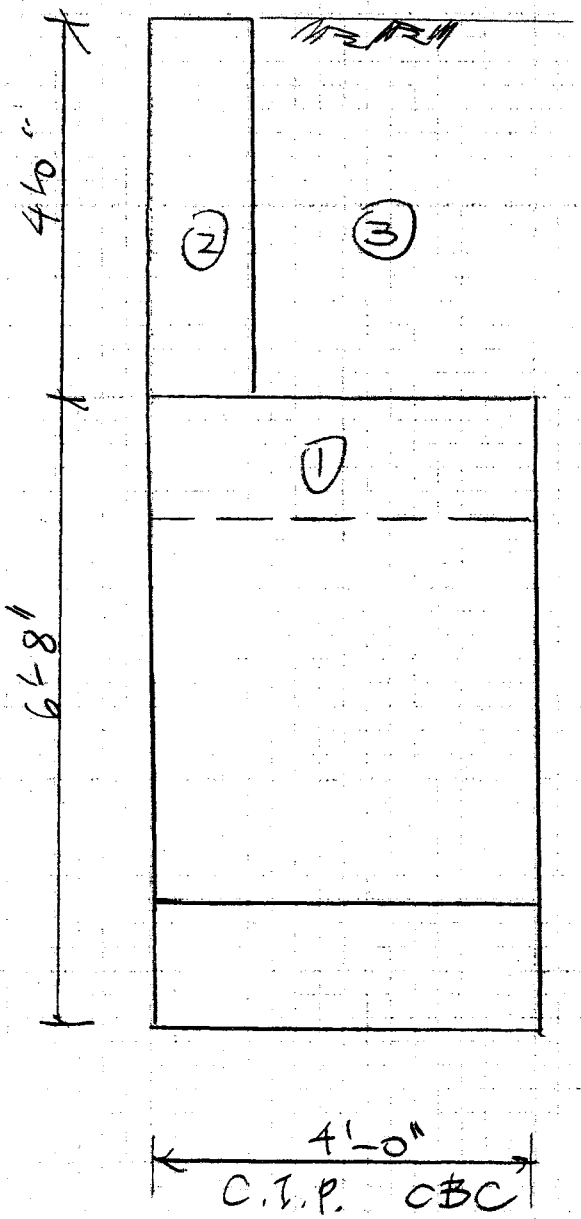

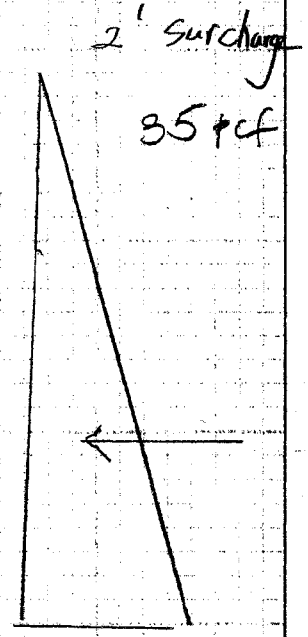

5/21

Post-it® Fax Note 7671	Date 1/13	# of pages ▶ 1
To CHRIS	From STEW	
Co./Dept. TY LIN	Co. HYDRO CONDUIT	
Phone #	Phone # 278-3526	
(480)921-0002	Fax # 484-0705	

CSR Hydro Conduit

Reinforced Concrete Boxes

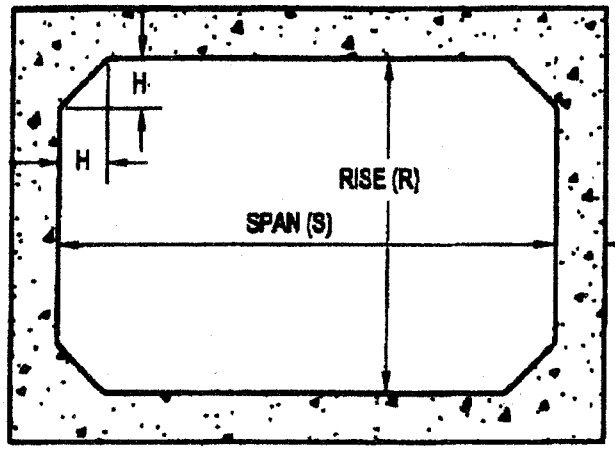

Section thru Box Culvert

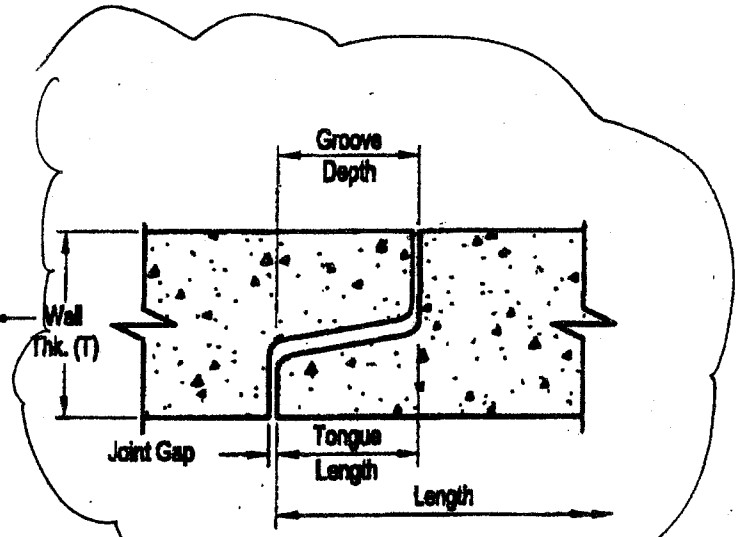

Section thru Box Joint

Standard Box Culvert Weights per ASTM Spec. C 789

Rise (R) \ Span (S)	3	4	5	6	7	8	9	10	11	12
2	605	905								
3	706	1025	1425	1885	2410					
4		1155	1575	2060	2600	2800			4880	5700
5			1725	2235	2800	3000	3655	4375		
6				2410	3000	3200	3885	4625	5430	6300
7					3200	3400	4105	4875		
8						3600	4335	5125	5980	6900
9							4555	5375		
10								5625	6530	7500
11									6810	
12										8100
Wall (T)	4	5	6	7	8	8	9	10	11	12
Haunch (H)	4	5	6	7	8	8	9	10	11	12

Box Dimensions will vary depending upon Equipment availability

Numbers in table are weights per foot.

NOTES:

1. Produced to current ASTM Specification.
2. This drawing is not intended to show reinforcement design- either as to placement or steel area. Acutal project specification or current ASTM specification will govern.
3. Contact CSR Hydro Conduit representative for further details not listed on this drawing.

T·Y·LIN INTERNATIONAL

Projects:	Job No.	Sheet: 6 of 21
Item: AUXILIARY OUTLET WORKS INLET STRUCTURE	Designer:	Date:
	Checker:	Date:
		Grid: 1/8"

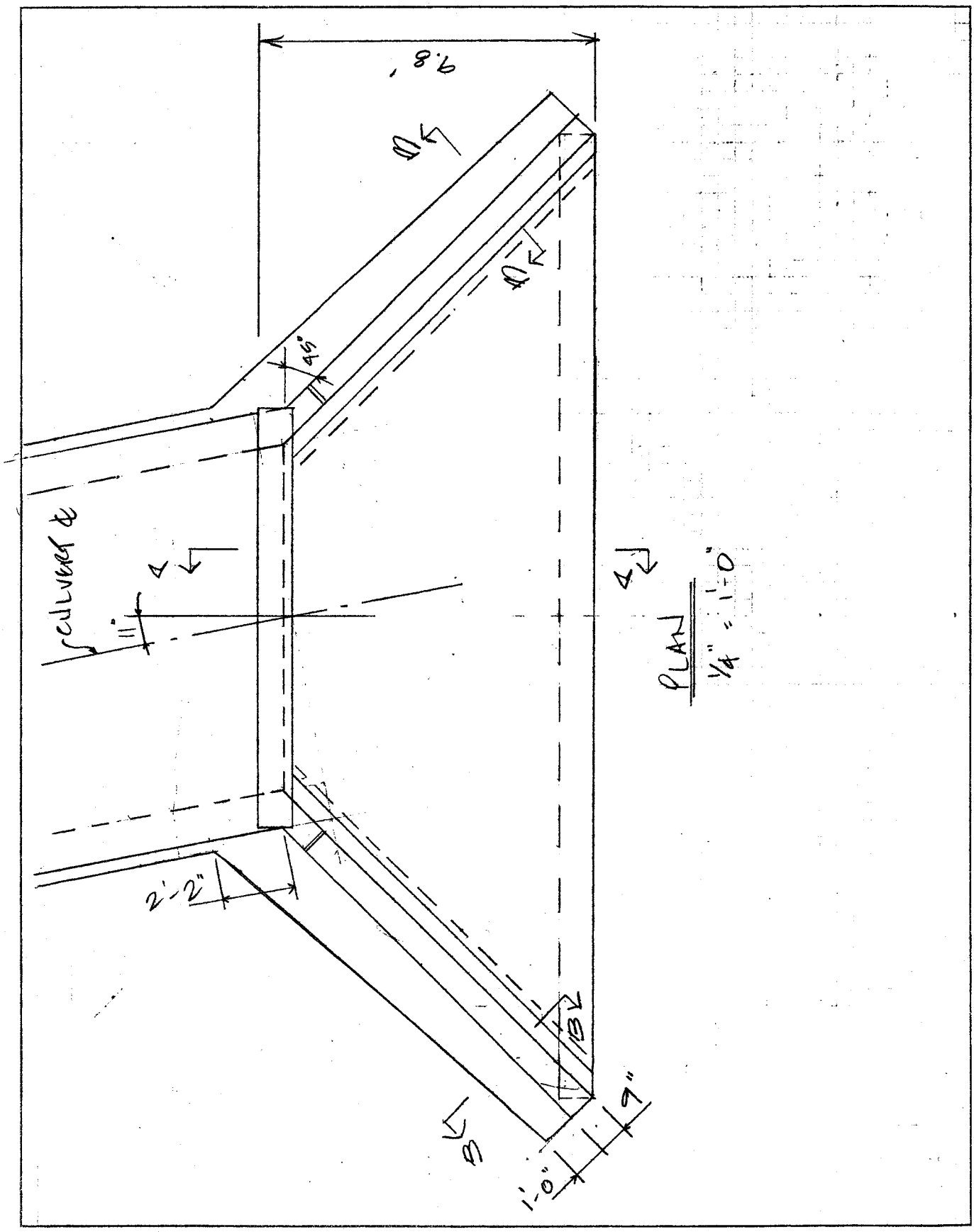

T·Y·LIN INTERNATIONAL

Projects:		Job No.	Sheet: 7 of 21
Item:	ALTS. OUTLET WORKS INLET STRUCTURE	Designer:	Date:
		Checker:	Date:
			Grid: 1/8"

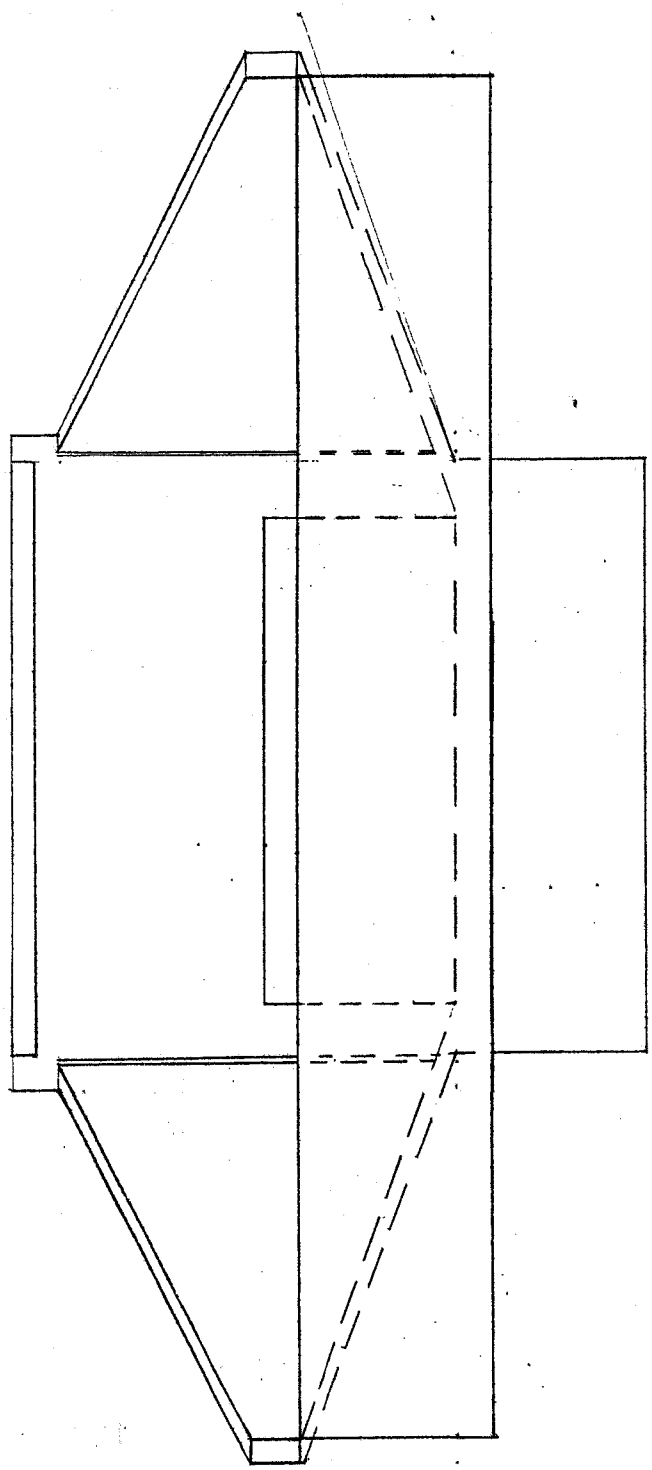

ELEVATION

1/4" = 1'-0"

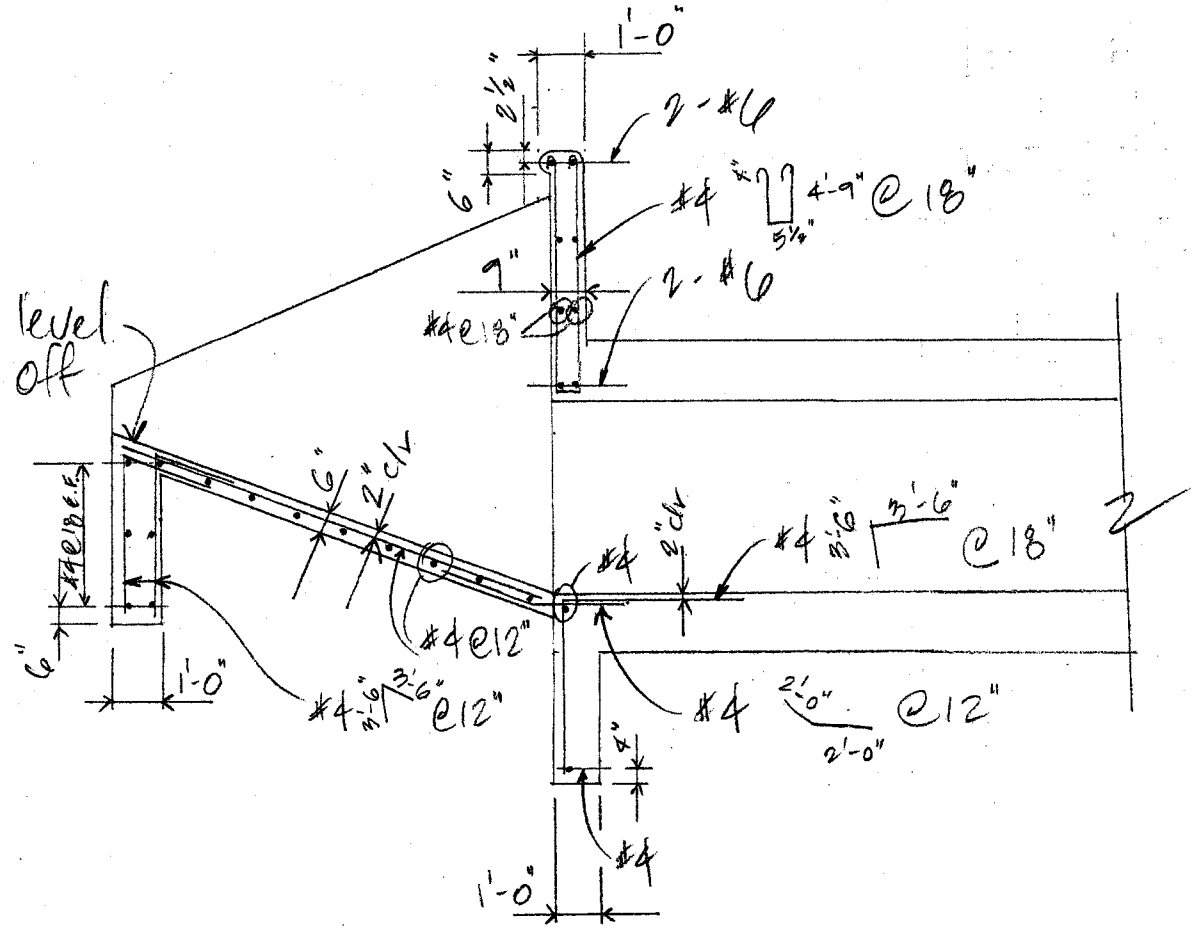

SECTION A-A

1/4" = 1'-0"

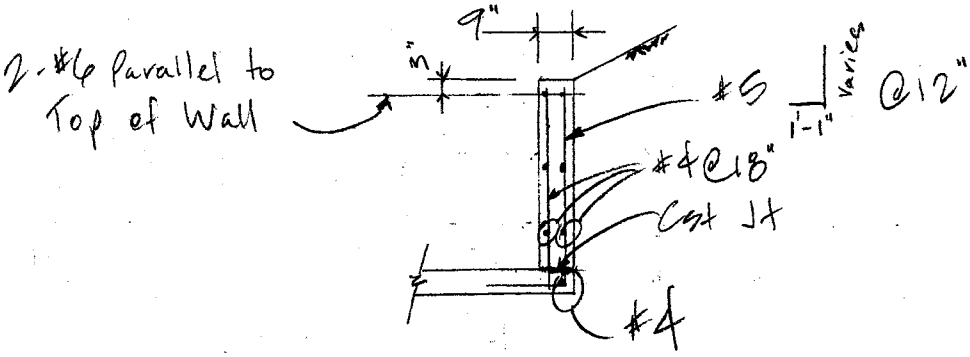

SECTION B-B

1/4" = 1'-0"

T·Y·LIN INTERNATIONAL

Projects: Golden Eagle Dam	Job No. 1285.00	Sheet: 9 of 21	
Item:	Designer: CM	Date: 1-00	
Trash Rack Hinge Anchor Reinf.	Checker:	Date:	
		Grid: 1/8"	

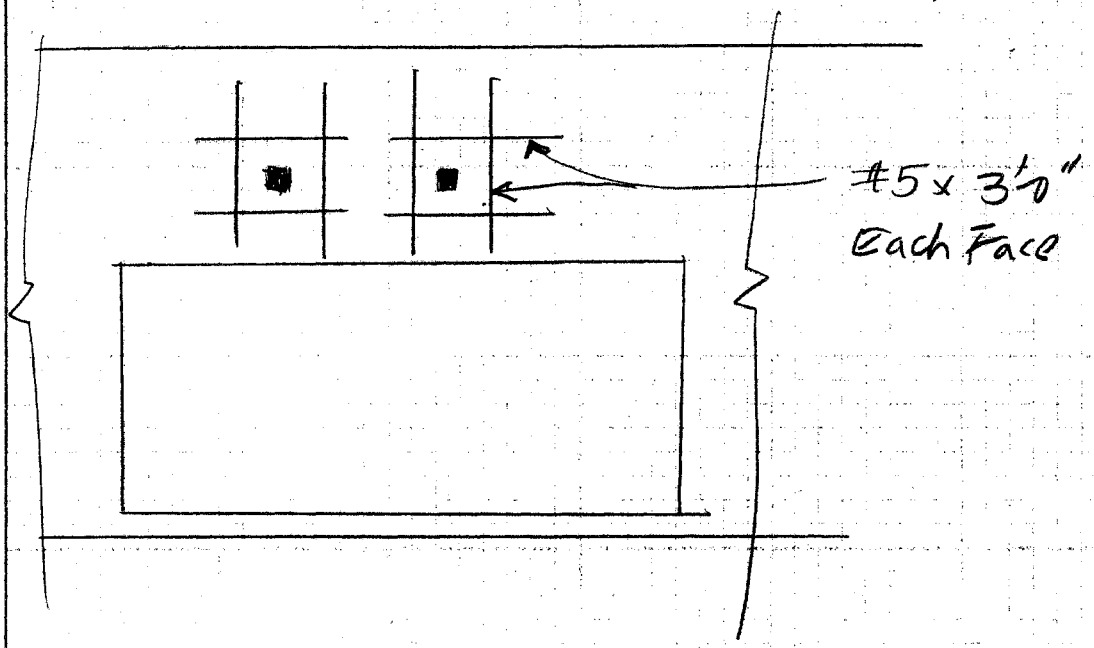

T·Y·LIN INTERNATIONAL

Projects:	Job No.	Sheet: 10 of 21
Item: AUX. OUTLET WORKS OUTLET STRUCTURE	Designer:	Date:
	Checker:	Date:
		Grid: 1/8"

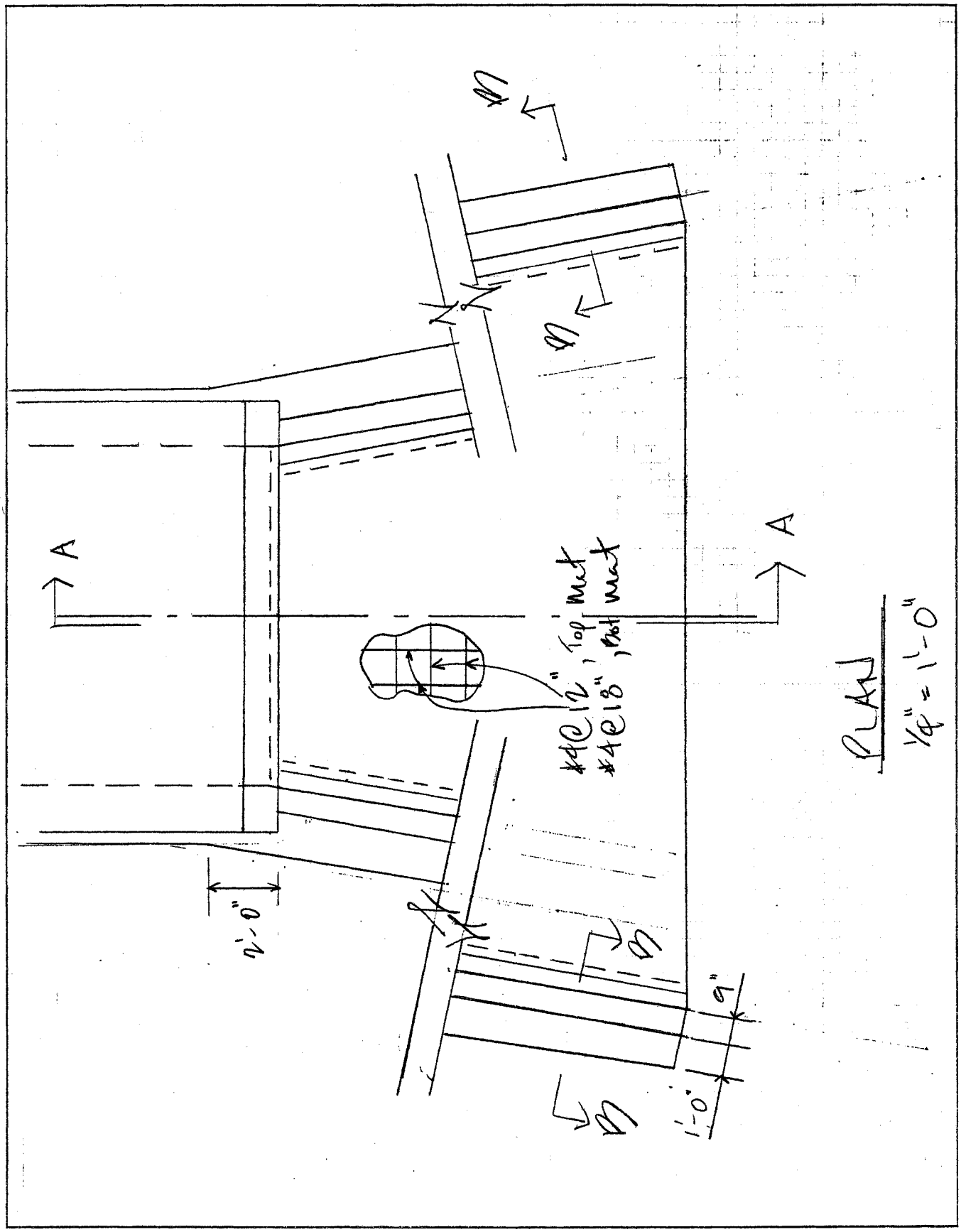

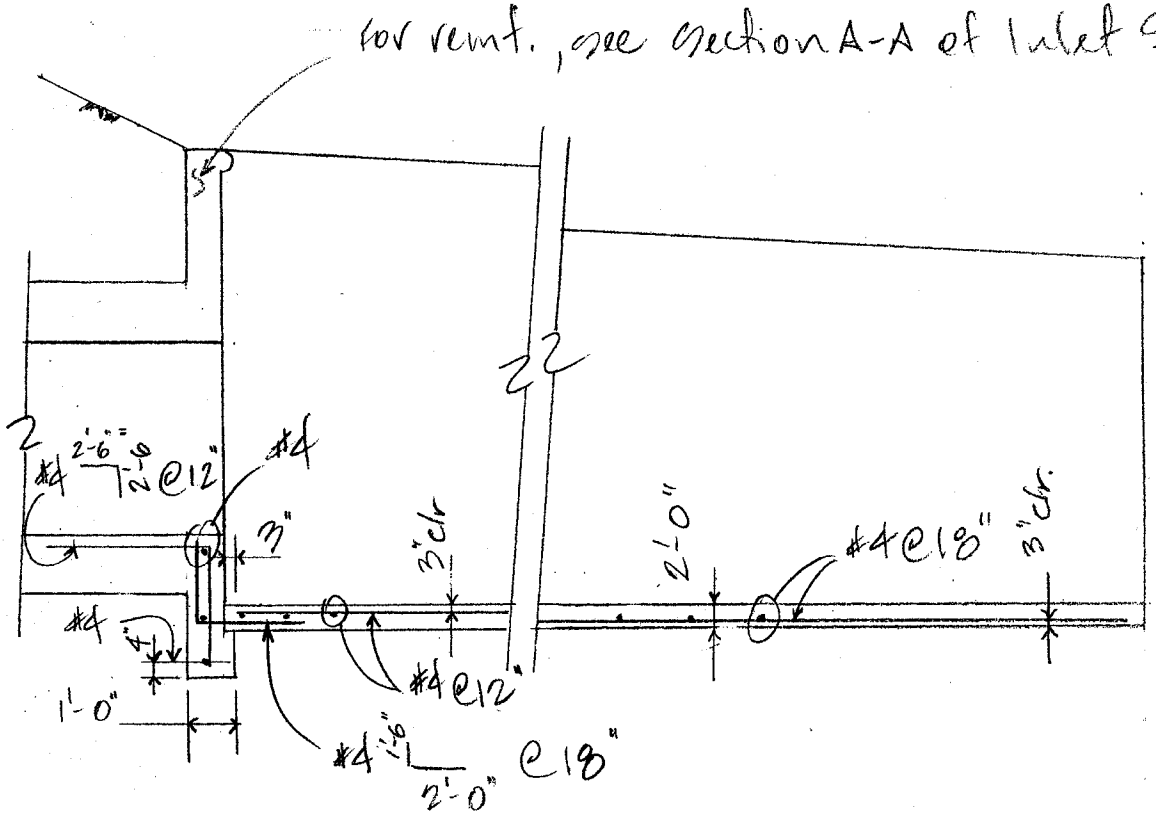

SECTION A-A

1/4" = 1'-0"

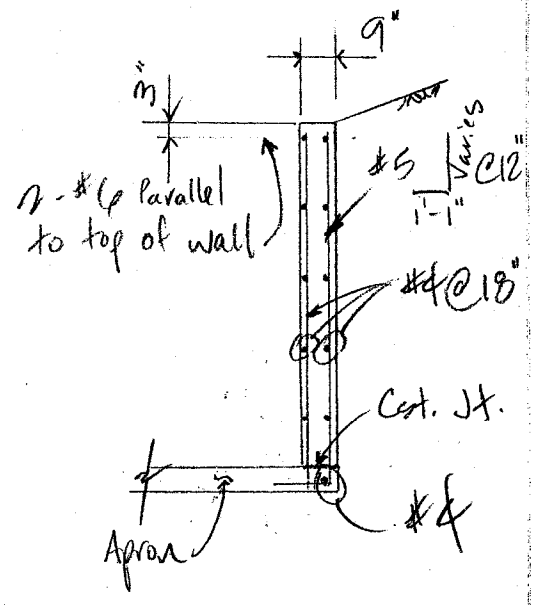

SECTION B-B

1/4" = 1'-0"

ALX. OUTLET WORKS
OUTLET STRUCTURE

Sheet 11 of 21

T·Y·LIN INTERNATIONAL

Projects: GOLDEN EAGLE PARK DAM Job No. 1285.00 Sheet: 12 of 21
Item: RETAINING WALL DESIGN Designer: CTB Date: 1/00
Checker: Date:
Grid: 1/8"

CHECK WALL STABILITY

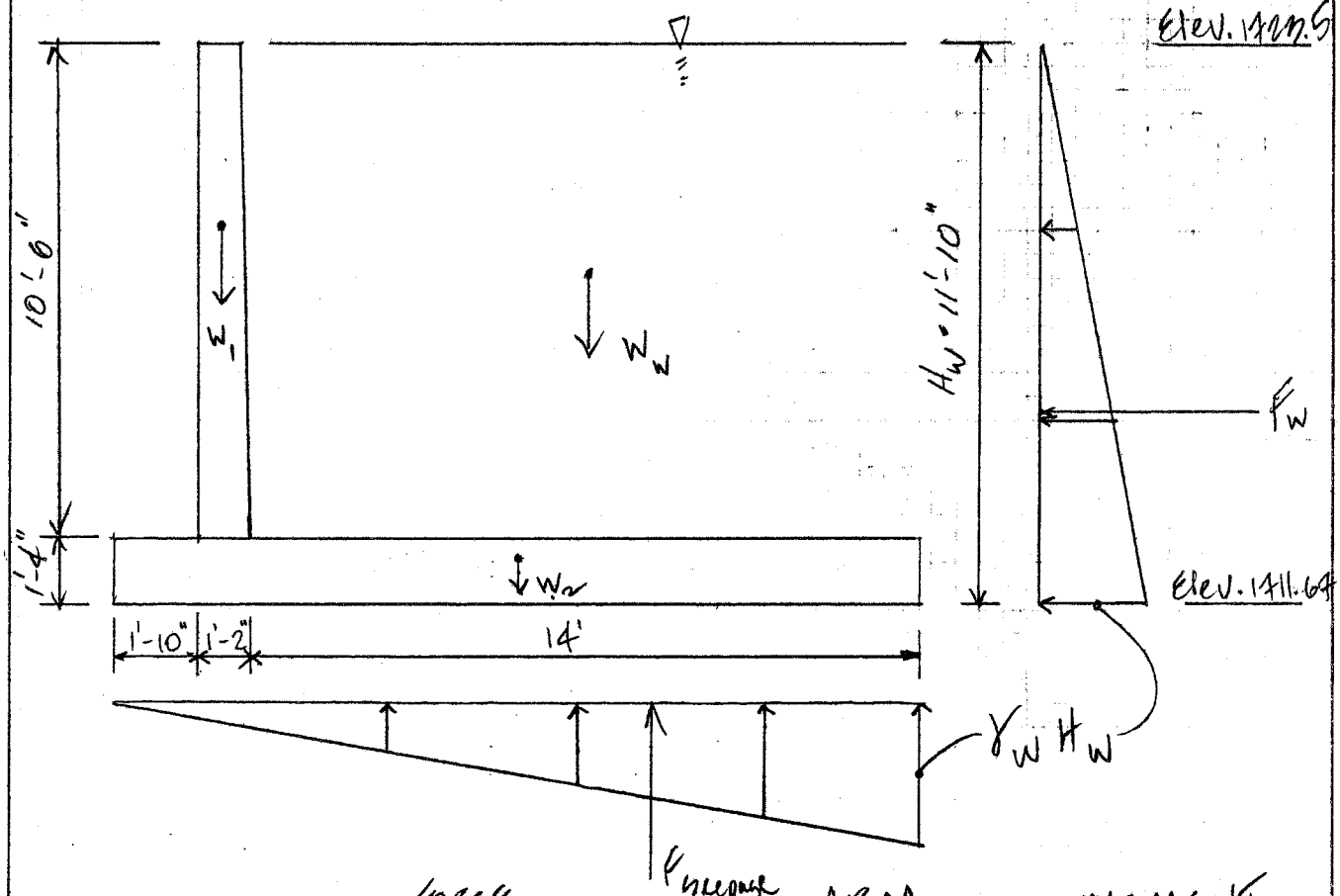

	FORCE (KLF)	ARM (FT)	MOMENT (1K/1)
1) F_W =	$0.0624\ K/ft^3 \times 11.83' \times 11.83' \times 1/2$	$11.83/3$	17.2
2) W_W =	$0.0624\ K/ft^3 \times 10.5' \times 14'$	$(3' + 14'/2)$	91.7
3) W_1 =	$1.17' \times 10.5' \times 0.15\ K/ft^3$	$(1.83 + 1.17/2)$	4.4
4) W_2 =	$1.33' \times 17' \times 0.15\ K/ft^3$	$17/2$	28.9
5) $F_{seepage}$ =	$0.0624\ K/ft^3 \times 11.83' \times 17' \times 1/2$	$17 \times 2/3$	71.1

$$\text{Factor of Safety} = \frac{\text{Resisting Moment}}{\text{Overturning Moment}}$$

$$= 91.7 + 4.4 + 28.9 / 17.2 + 71.1 = 1.41 > 1.4$$

CHECK BEARING PRESSURE

$\sigma = P/A \pm M/S$

$\bar{x} = \Sigma M_r - \Sigma M_o / \Sigma V$

$\Sigma V = 62.4 \times 10.5 \times 14 + 1.17 \times 10.5 \times 0.15 + 1.33 \times 17 \times 0.15$
$- 62.4 \times 11.83 \times 17 \times 1/2 = 8.13$

$\therefore \bar{x} = (91.7 \times 4.4 + 28.9 - 17.2 - 71.1) / 8.13$

$\bar{x} = 4.51'$

$e = 17/2 - 4.51 = 3.98'$

$\sigma = \Sigma V / 17' \times 1' \pm \Sigma V \times e / (1)(17)^3/12$

$= 8.13/17 \pm (8.13)(3.98)/409.4$

$= 0.48 \pm 0.08$

$= 0.56$ KSF ; 0.40 KSF << 3 KSF OK

CHECK SLIDING

$F_w = \gamma_w H_w \times H_w/2 = 4.37$ K/LF

$\Sigma V \times$ coef. of friction $= 8.13$ K/LF $\times 0.4$ (AS PER AGWLA)
$= 3.25$ K/'

$= 3.25/4.37$

$= 0.74 < 1.5$

$\therefore$ use a key

T.Y. LIN INTERNATIONAL

Project: Golden Eagle Park Dam	Job No.1285.00	Sheet: 14 of 21
Item: Floodwall Stem Design	Designer: CTB	Date: 1/00
	Checker:	Date:

RECTANGULAR BEAM DESIGN:

f'c =	4,000	PSI	SHEAR, V =	4.37	KIPS
fy =	60,000	PSI	MOMENT, M =	11.41	K-FT = 4.37 K x (11.83'/2 - 1.33')
n =	8		USE b =	12.00	IN
fc = 0.40 f'c =	1,600	PSI	h =	14.00	IN
fs =	24,000	PSI			
k = fc/(fc+fs/n) =	0.348		R = fc kj/2 =	246	PSI
j = 1 - k / 3 =	0.884		REQ'D bd^2 = M/R =	557	IN^3

d = h - 2.00 COVER - 0.438 DIAM = 11.56

bd^2 = 1,604 IN^3

UNDERREINFORCED SECTION

FOR IDEALLY REINFORCED SECTIONS: REQ'D As =M /(fs j d) = 0.56 IN^2

		BAR SIZE: NO.	7	
actual p =	0.0043	NO. OF BARS =	1	BARS
ideal p = k fc / 2 / fs =	0.0116	provide As =	0.60	IN^2 O.K.

CHECK STRESSES: LOCATE N.A.: b x x/2 = n As (d - x)

6 x^2 + 4.80 x - 56 = 0; x = 2.67 IN

arm = d - x / 3 =	10.67	IN	fs = T / As =	21,380	PSI O.K.
C = T = M / arm =	12.8	KIPS	fc = C / (0.5bx) =	801	PSI O.K.

CRACKING MOMENT:

fr = 7.5 (f'c)^.5 =	474	PSI			
Ig = b h^3 / 12 =	2744	IN^4	Mcr = fr Ig / yt =	15.50	K-FT
yt = h / 2 =	7	IN	1.2 Mcr =	18.59	K-FT

DETERMINE Mn:

T = As * fy =	36	KIPS			
a = T / (.85 f'c b) =	0.882	IN	phi =	0.9	
Mn = T (d - a/2) =	33.36	K-FT	phi Mn =	30.03	K-FT

COMPARISON: phi Mn >= 1.2 Mcr O.K.

Use #7 @ 12 in each face in stem

For additional details, see ADOT Std. Dwgs. B-18.10 & B-18.30, H = 11', Case III.

T.Y. LIN INTERNATIONAL

Project: Golden Eagle Park Dam	Job No.1285.00	Sheet: 15 of 21
Item: Floodwall Stem Design	Designer: CTB	Date: 1/00
	Checker:	Date:

RECTANGULAR BEAM DESIGN: (CONT.)

SHEAR DESIGN:

vc=.95 SQRT(f'c) =	60	PSI
0.5 vc =	30	PSI
2 SQRT(f'c) =	126	PSI
4 SQRT(f'c) =	253	PSI
v - vc =	0	PSI

v = V /(bw d) =	31	PSI
BAR SIZE: NO.	4	
NO. OF LEGS =		
Av =	0.00	IN^2
SPACING, s =		IN
fs =	24,000	PSI
fy =	60,000	PSI

IF v <= 0.5 vc, NO Av NEEDED

IF 0.5 vc < v <= vc,

MIN Av = 50 bw s / fy = 0.00 IN^2 O.K.

MAX s = d/2 = 5.78 IN <= 24 IN O.K.

IF 0 < v-vc <= 2 SQRT(f'c),

Av = (v - vc) bw s / fs =

MAX s = d/2 = <= 24 IN

IF 2 SQRT(f'c) < v-vc <= 4 SQRT(f'c),

Av = (v - vc) bw s / fs =

MAX s = d/4 = <= 12 IN

IF v-vc > 4 SQRT(f'c), N.G. TRY A LARGER SECTION

$v = 31$ psi $\approx v_{allowable} = 0.5 v_c = 30$ psi

Say OK

T·Y·LIN INTERNATIONAL

Projects: GOLDEN EAGLE PARK DAM Job No. 1285.00 Sheet: 16 of 21

Item: INLET STRUCTURE - PRINCIPAL OUTLET WORKS CULVERT Designer: CTB Date: 1/00

Checker: Date:

Grid: 1/8"

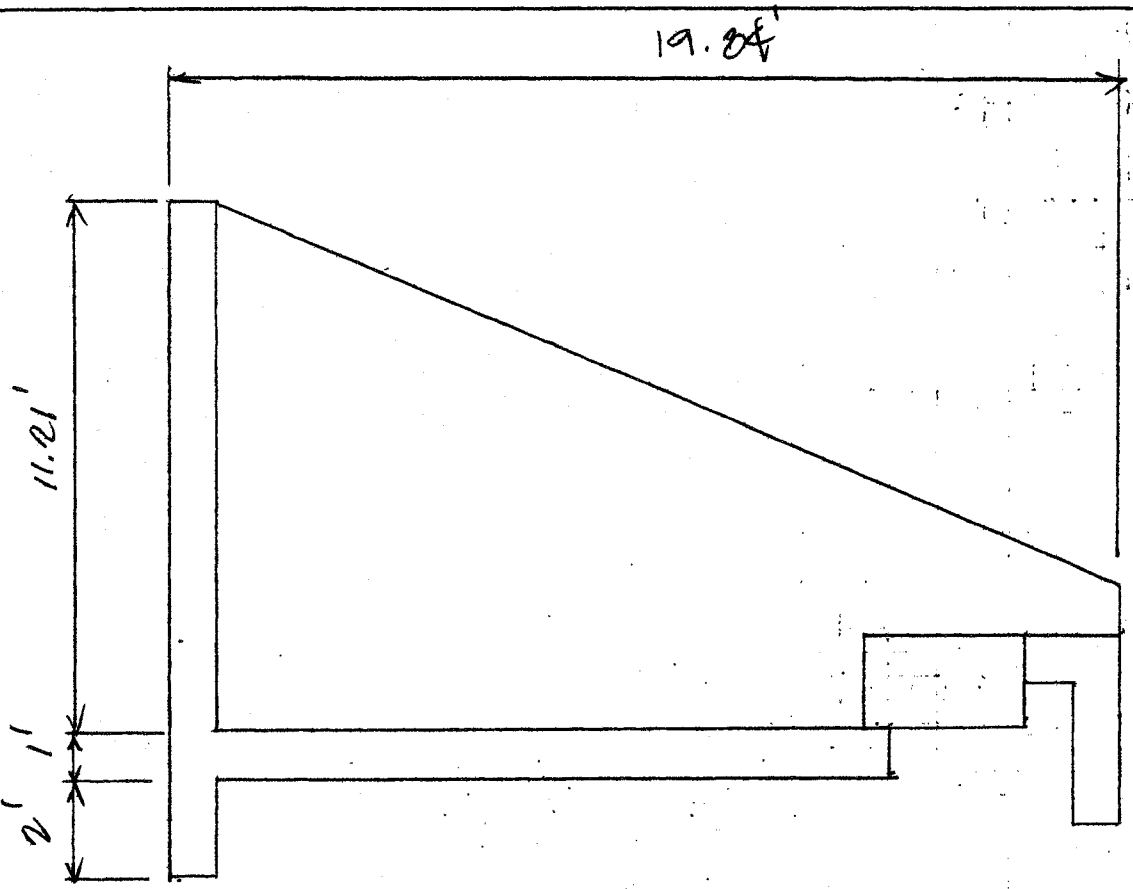

SECTION A-A

1/4" = 1'-0"

Design height for headwall = 11.21 ≈ 10.5' used for the floodwall. Furthermore, instead of being a free standing wall like the floodwall, the headwall is supported @ both sides by wingwalls. Therefore, steel in floodwall is adequate here. Use #7 @ 12" both sides of stem.

Project: GOLDEN EAGLE PARK DAM Job No. 1285.00 Sheet 17 of 21
Item: INLET STRUCTURE - PRINCIPAL OUTLET WORKS CULVERT Designed: CTB Date: 1/00
Checked: Date:
Scale: 1/8"

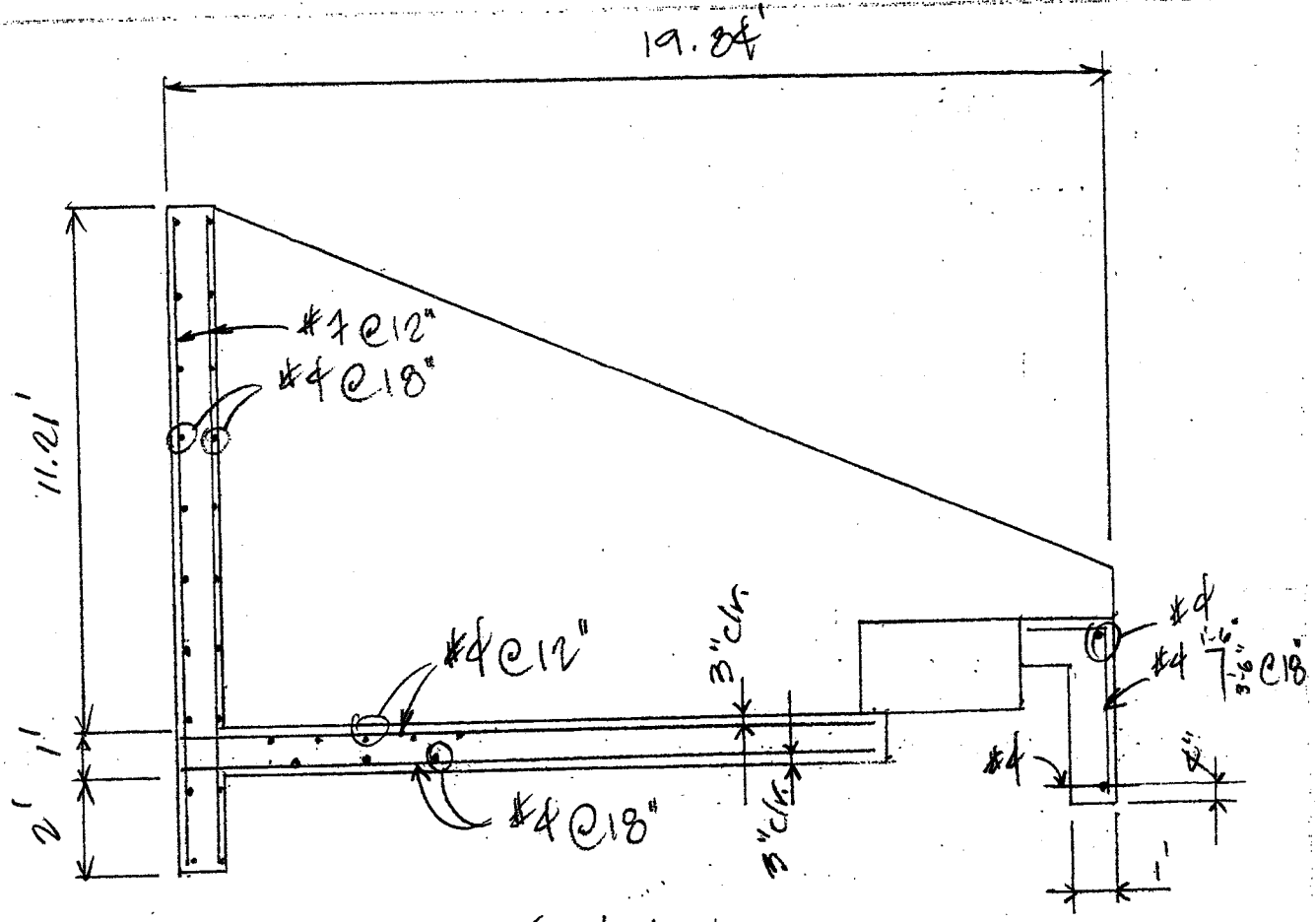

SECTION A-A

1/4" = 1'-0"

GOLDEN EAGLE PARK DAM Job No. 1285.00 Sheet 10 of 21
Item: INLET STRUCTURE - PRINCIPAL OUTLET WORKS CULVERT Designed: CTB Date: 1/00
Checked: Date:
Scale: 1/8"

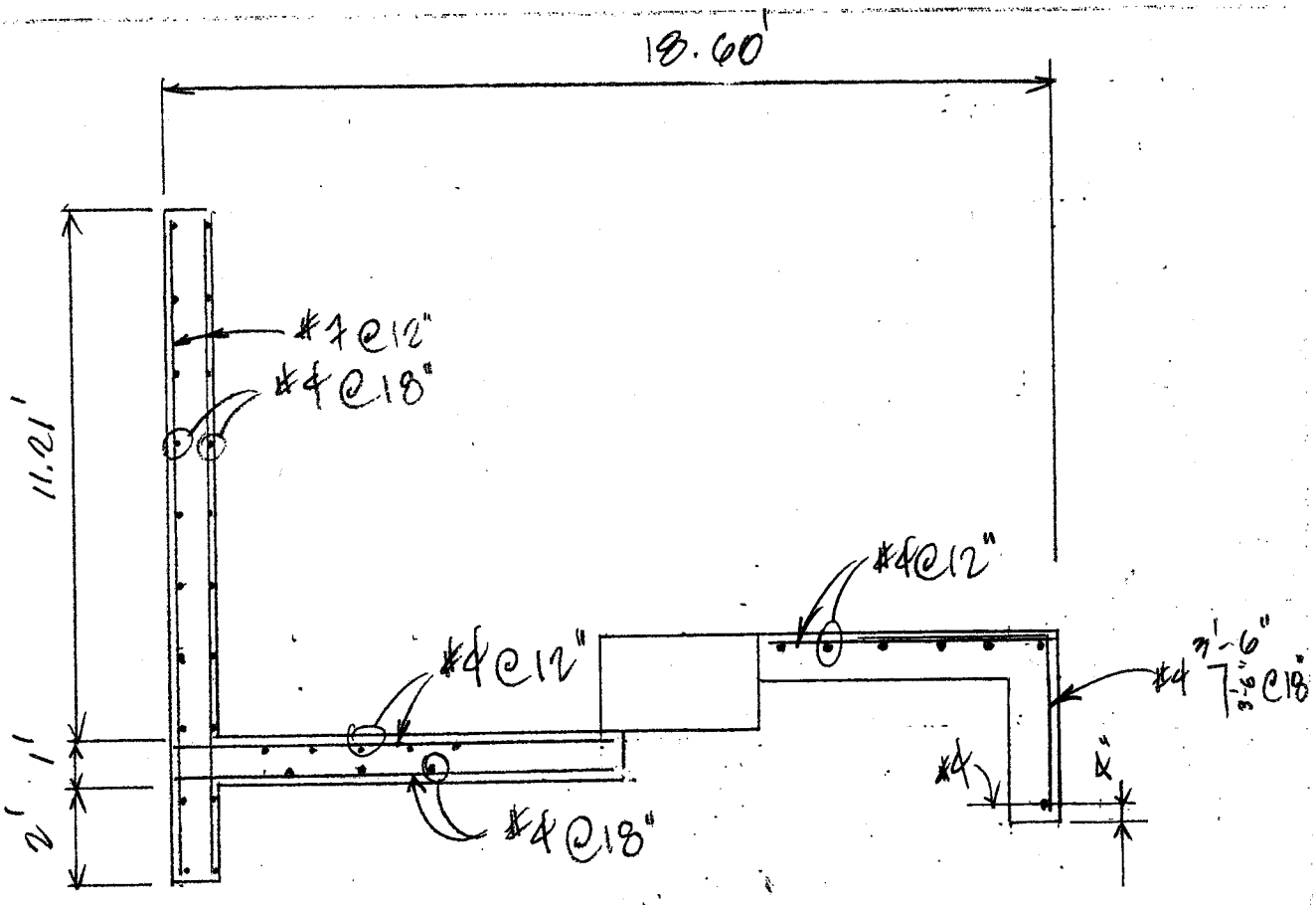

SECTION B-B

1/4" = 1'-0"

T·Y·LIN INTERNATIONAL

Projects: GOLDEN EAGLE PARK DAM Job No. 1285.00 Sheet: 19 of 21

Item: INLET STRUCTURE - PRINCIPAL OUTLET WORKS CULVERT Designer: CTB Date: 1/00

Checker: Date:

Grid: 1/8"

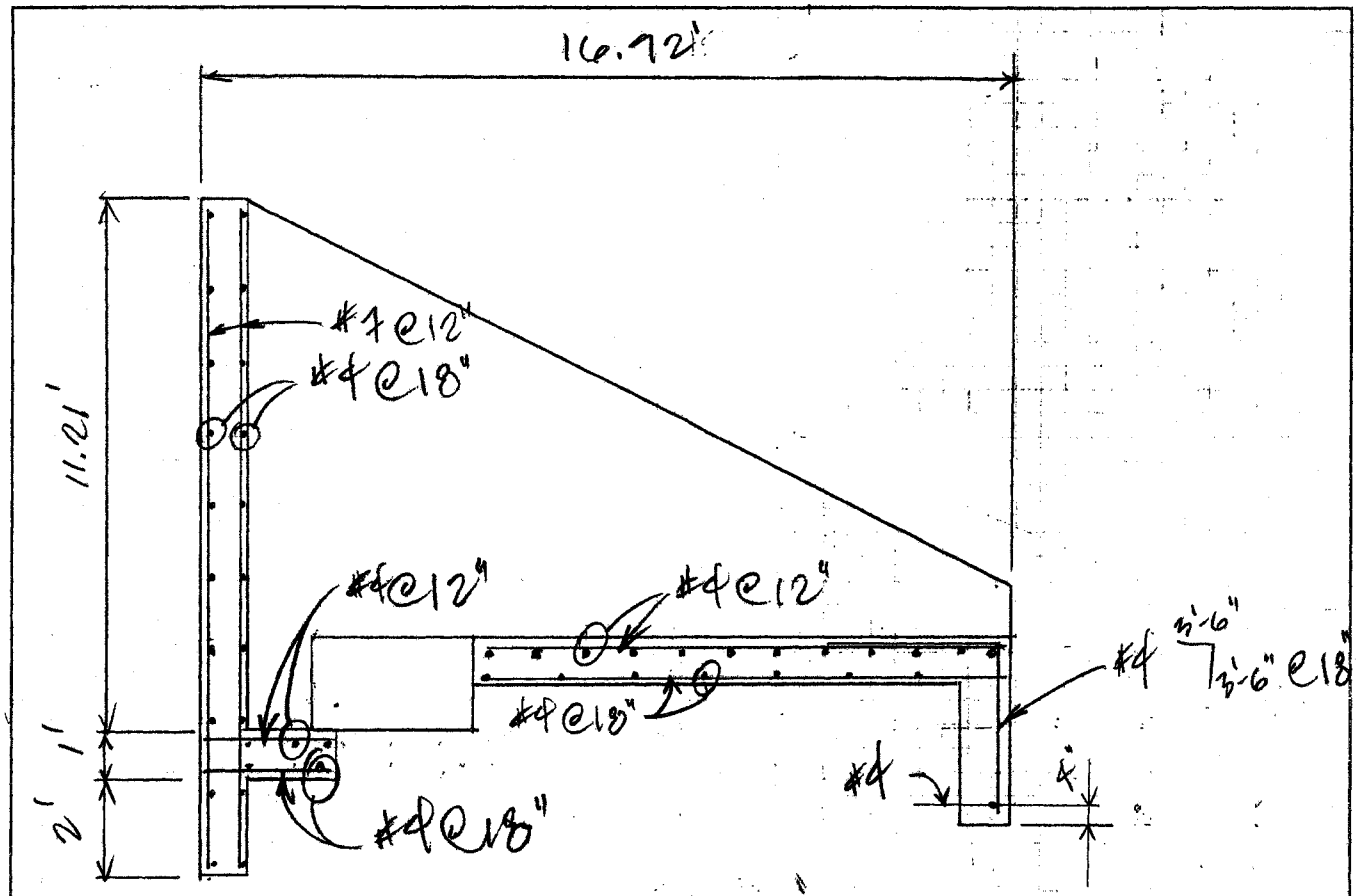

SECTION C-C

1/4" = 1'-0"

Project: GOLDEN EAGLE PARK DAM Job No. 1285.00 Sheet 20 of 21
Item: INLET STRUCTURE - PRINCIPAL OUTLET WORKS STRUCTURE Designer: CTB Date: 1/00
Checked: Date:
Grid: 1/8"

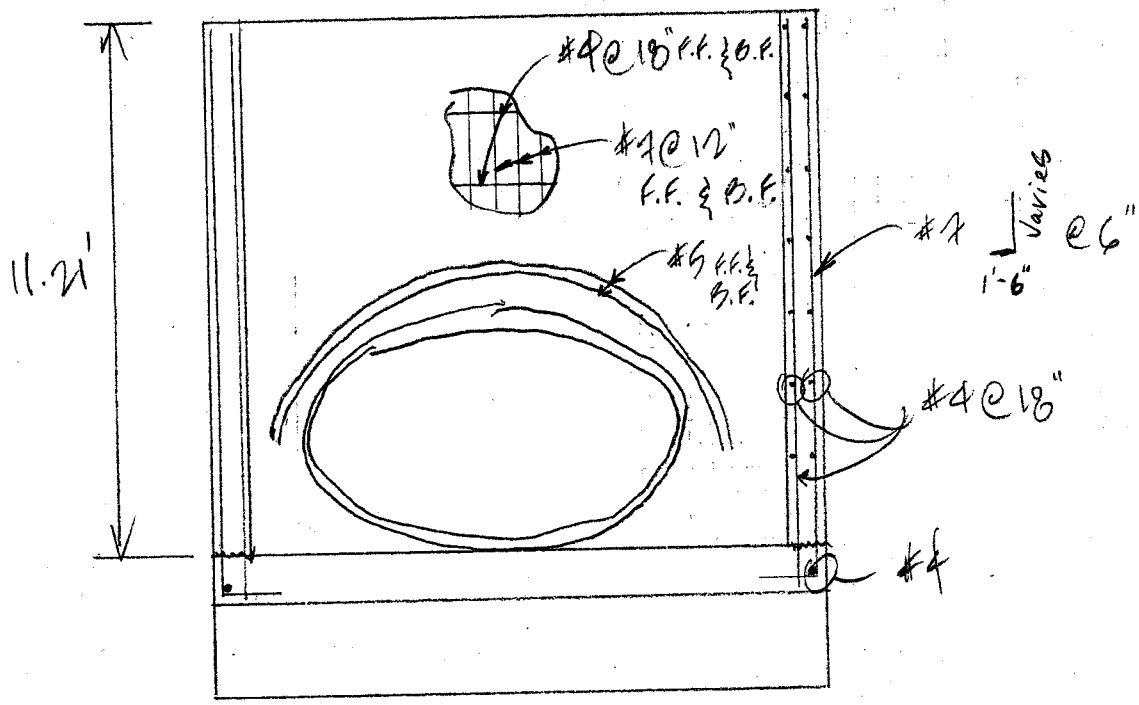

SECTION D-D

1/4" = 1'-0"

As per ADOT std. Dwg. B-04.40, for H = 12'
Alt. #7 @ 12 w/ #6 @ 12, Back Face
Use #7 @ 6", B.F.

Project: GOLDEN EAGLE PARK DAM Job No. 1285.00 Sheet 21 of 21
Item: INLET STRUCTURE - PRINCIPAL OUTLET WORKS CULVERT Designer: CTB Date: 1/00
Checker: Date:
Grid: 1/8"

NEW RCP / EXISTING HEADWALL CONNECTION DETAIL

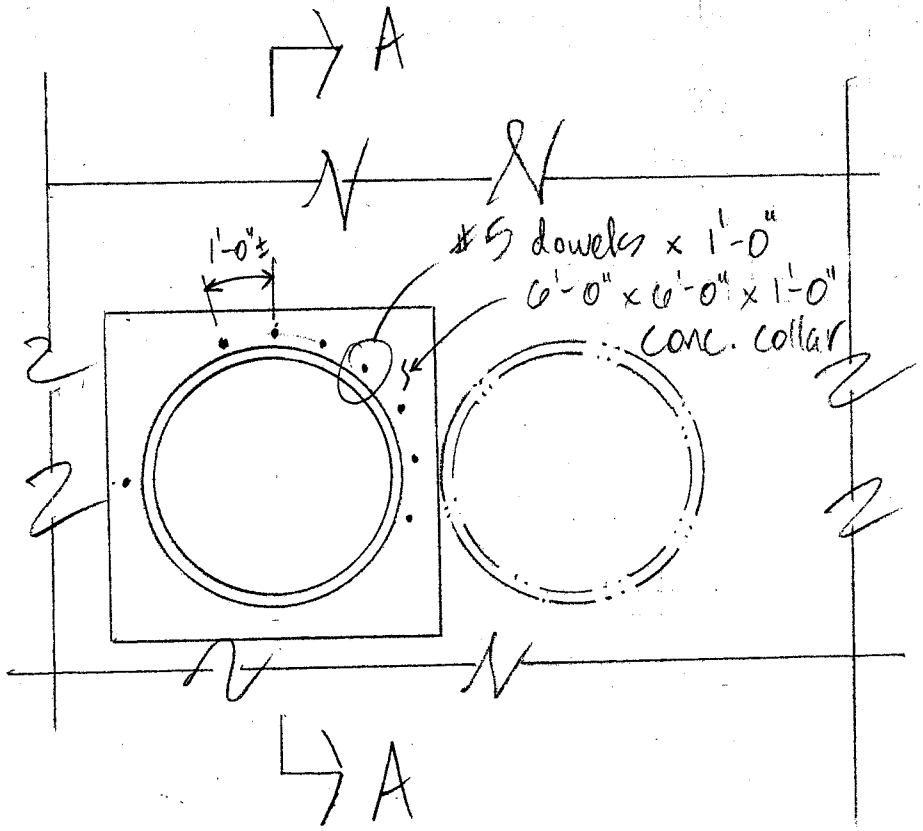

ELEVATION
1/4" = 1'-0"

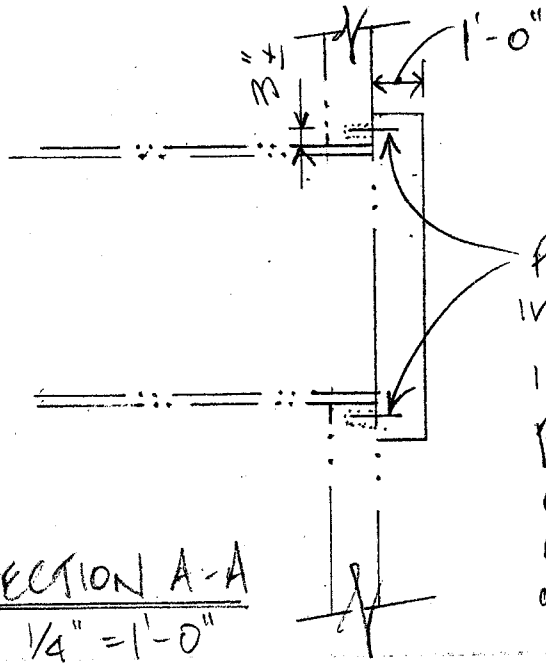

SECTION A-A
1/4" = 1'-0"

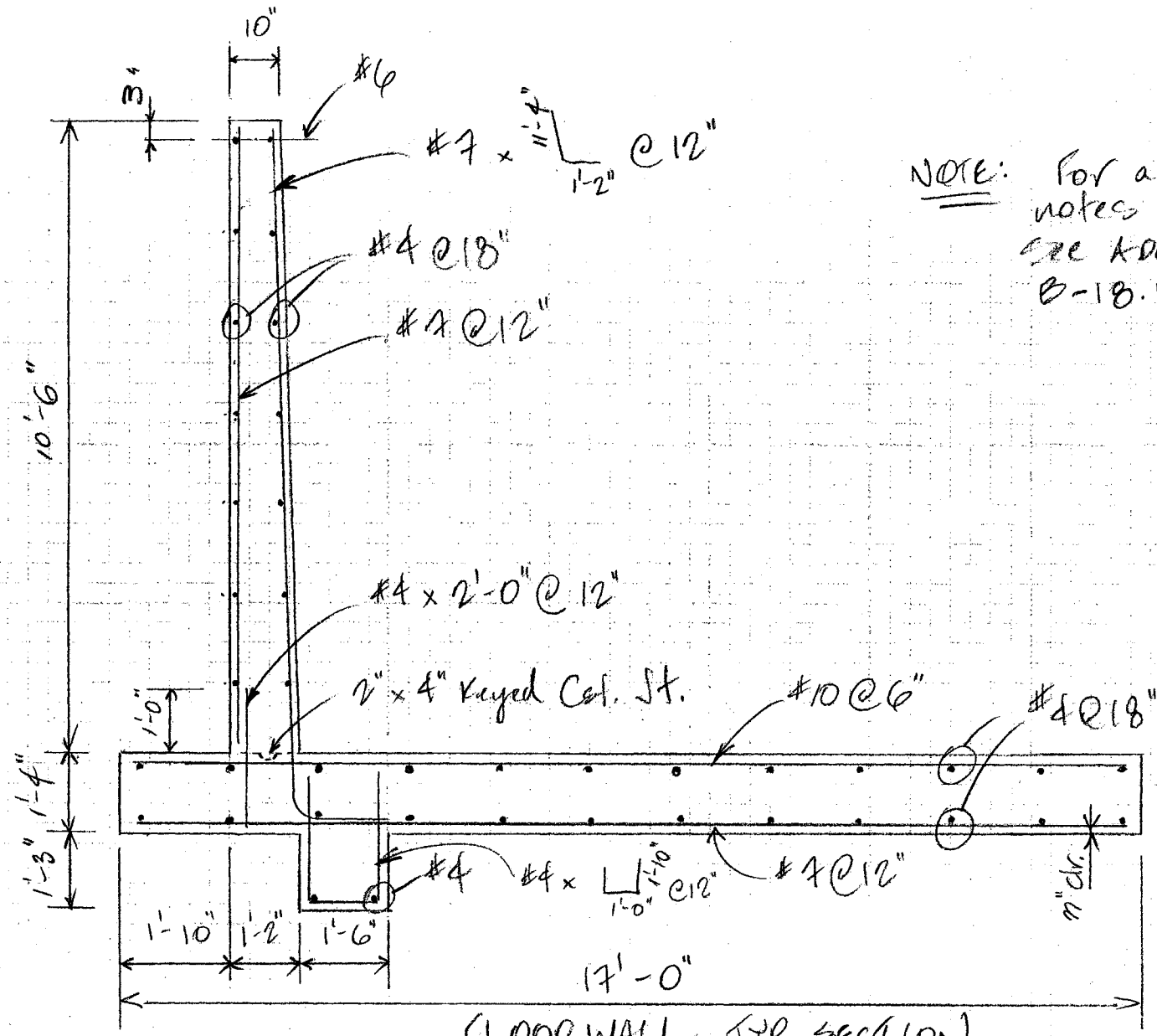

NOTE: For additional notes and details see ADOT Std. B-18.10

FLOOD WALL TYP. SECTION

3/8" = 1'-0"

T·K·L·M INTERNATIONAL

Project: GOLDEN EAGLE PARK PARK Job No. 1285.00 Sheet: 22 of

Item: FLOOD WALL DETAIL Designer: CTD Date: 1/00

Checker: Date:

Grid: 1/8"

TYLIN INTERNATIONAL

Projects: Job No. Sheet: 22 of

Item: Alk. Outlet Works Designer: CTB Date:

Inlet Structure Checker: Date:

Grid: 1/8"

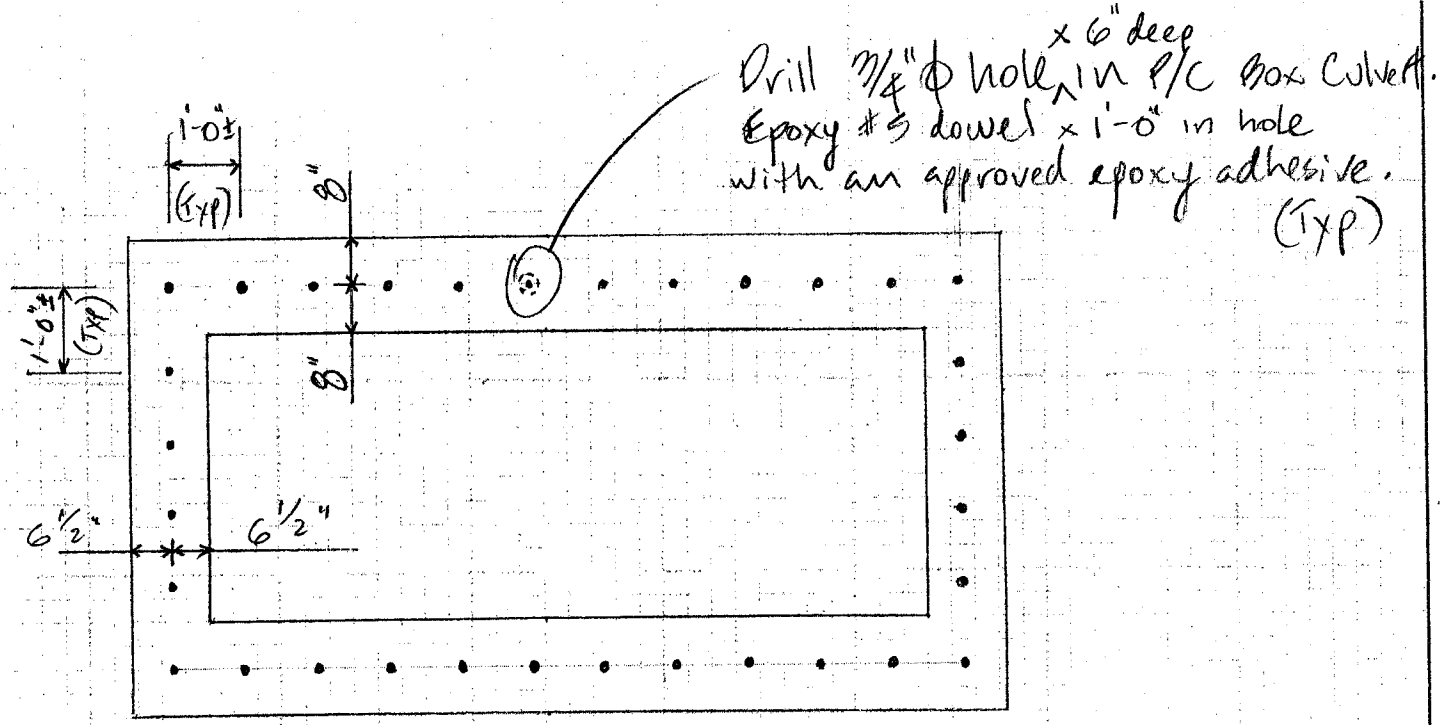

ELEVATION - P/C BOX CULVERT

3/8" = 1'-0"

TYLIN INTERNATIONAL

Projects: GOLDEN EAGLE PARK DAM Job No. 1285.00 Sheet: 24 of

Item: FLOODWALL DETAIL Designer: GPB Date: 1/00

H = 6.5' Checker: Date:

Post-it® Fax Note 7671	Date 2/2	# of pages ▶ 1
To Chuck Gopperton	From L. Bridges	
Co./Dept.	Co.	
Phone #	Phone #	
Fax # 602 431 9562	Fax #	

NOTE: for additional notes and details see floor std. 8-18.10

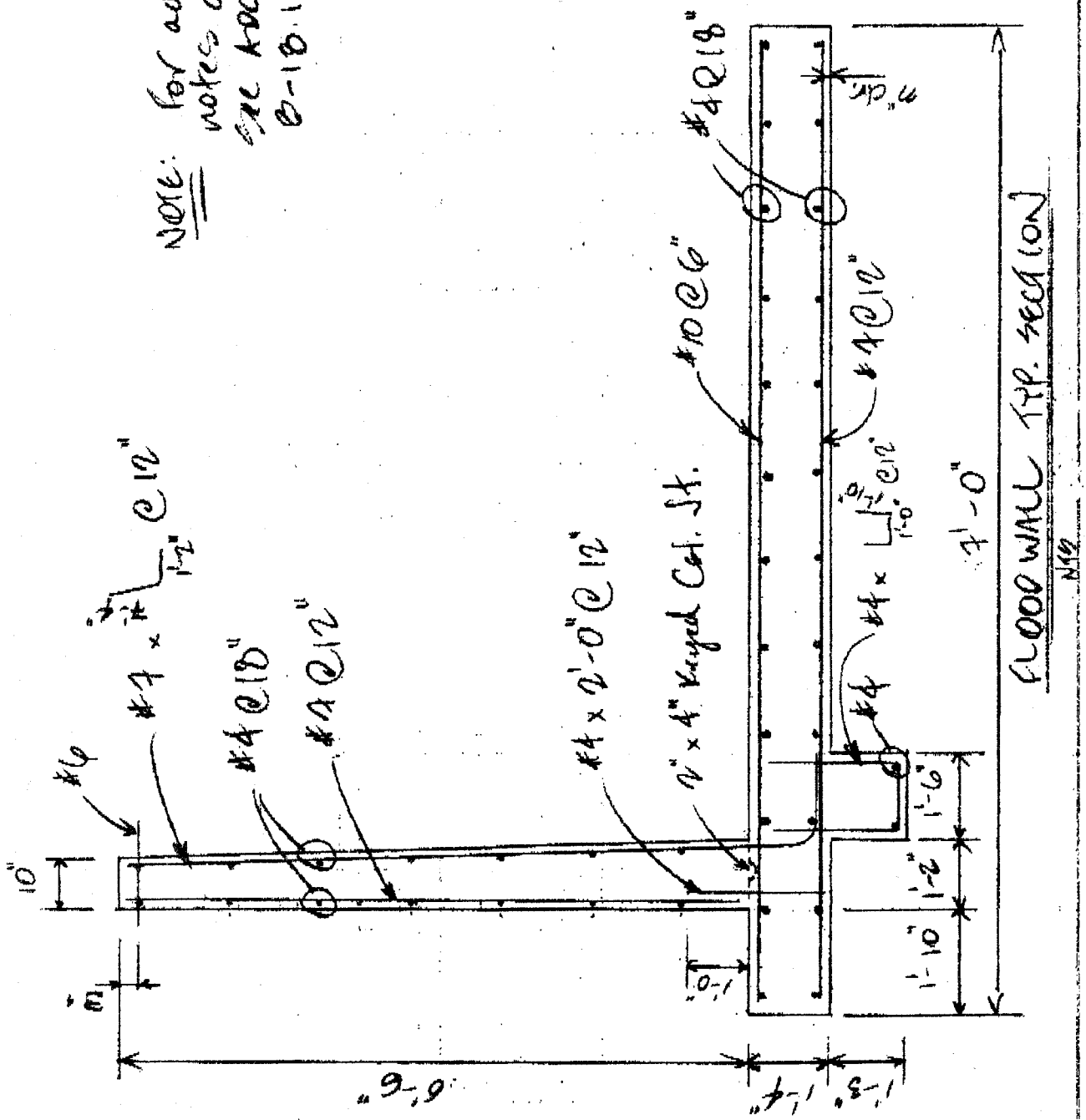

FLOOD WALL TYP. SECTION

NTS

ARIZONA DEPARTMENT OF WATER RESOURCES
SURFACE WATER MANAGEMENT DIVISION
DAM SAFETY AND FLOOD MITIGATION SECTIONS
500 North Third Street, Phoenix, Arizona 85004
Telephone (602) 417-2445
Fax (602) 417-2423

JANE D. HULL
Governor

RITA P. PEARSON
Director

FACSIMILE TRANSMITTAL COVER SHEET

DATE: 2/15/00

TO (Company): Stantec	ATTN: Chuck Gapperton
COMPANY FAX NUMBER: (602) 431-9562	COMPANY PHONE NUMBER: (602) 438-2200
FROM: Jerry Cox	DAM SAFETY AND FLOOD MITIGATIONS SEC.
OFFICE PHONE NO: (602) 417-2445	FACSIMILE NO: (602) 417-2423

RE: Golden Eagle Park Dam (07.33)

COMMENTS:

This is a follow-up copy of E-mail sent on 2/15/00 at 4:56PM

3 PAGES TRANSMITTED INCLUDING COVER SHEET.

IF ALL OF THE PAGES ARE NOT RECEIVED, PLEASE CALL ADWR:
SENDER - Jerry Cox

DEPARTMENT OF WATER RESOURCES

DAM SAFETY SECTION

MEMORANDUM

TO: File

FROM: Larry Lambert

DATE: February 15, 2000

SUBJECT: Golden Eagle Park Dam (07.33)
Review comments on Memorandum to Stantec from T-Y-Lin International, *Structural Analysis of the Auxiliary Outlet Works and Floodwall, Golden Eagle Park Dam, dated January 17, 2000* (received by ADWR on January 20, 2000).

1. The hydraulic (lateral and uplift pressures) loads on the various structures need to be reviewed and justification provided for using less than full uplift pressures. The following load cases should be considered in the design and exceptions must be justified and approved by ADWR:

   a) Maximum reservoir water elevation (head), maximum flow depth or maximum tailwater elevation shall be applied as uniform uplift pressure on all foundations (or horizontal surfaces). Lateral pressures shall be applied as linearly varying pressures based on maximum reservoir elevation, flow depth, and /or tailwater depth as the case may apply.

   b) Headwalls with restraint (e.g. wingwalls act as restraint) must be designed with "at rest" soil pressures instead of "active" pressure. "At rest" pressures must be based on fully saturated conditions to the elevations specified in "a)" above.

   c) The inlet structures must be designed to resist a buoyant (uplift pressure) of five feet of water. This is to account for plugging of the relief drains.

   For the cases listed above, the design must account for both maximum positive or negative pressure as may apply. Both overturning and sliding factors of safety must be determined for each load case. The minimum factor of safety for sliding or overturning shall be 1.5.

2. The design calculations submitted do not appear to include the affect of sloping backfill on the headwalls and/or wingwalls. Design sketches must be provided showing the basis for the analyses.

3. The analysis for the headwalls does not include a transfer of the lateral pressures into the foundation. How is the lateral pressure on the vertical wall above the box culvert and/or pipe transferred to the foundation and/or culvert and pipe?

4. The estimated differential settlement of the box culvert should be provided along with an analysis that shows the resulting rotations of the culvert segments will not cause the joints to open. Excessive rotation could result in producing a short circuit for piping of the backfill material.

5. Copies of any "standard" design (e.g. ADOT Box Culvert Standard) should be provided.

6. Structural details are required for weep holes, drainage behind walls, and joint seals of the box culvert sections.

7. The cross references from the plan drawings to the structural drawings and details should be checked.

APPENDIX L

PERMIT APPLICATION AND CHECKLIST FOR ADWR CONSTRUCTION PERMIT

ARIZONA DEPARTMENT OF WATER RESOURCES
SURFACE WATER MANAGEMENT DIVISION
Dam Safety Section

DRAFT

Application No. _____ Filed _____
(Applicant shall not fill in above blanks)

JANE DEE HULL
Governor

RITA P. PEARSON
Director

APPLICATION for APPROVAL of the PLANS and SPECIFICATIONS for the CONSTRUCTION, ENLARGEMENT, REPAIR, ALTERATION or REMOVAL of a DAM and RESERVOIR

This application is for the Improvements (Construction, Enlargement, Repair, etc.) to the Golden Eagle Park (Name of Dam) Dam.

LOCATION OF DAM

This dam is in Maricopa County, in the NE ¼, Sec. 9 and the NW ¼, Sec. 10, Twp. 3N, Rge. 6E, G&SR B&M, at North Latitude 33° 37' 7" and West Longitude 111° 44' 6", on USGS Quad Granite Reef Dam and is located on Ashbrook Wash (Wash, Creek, River or Watershed), tributary to Verde River (Wash, Creek or River)

OWNER

Name: Town of Fountain Hills Telephone: (480) 816-5141

Mailing Address: 16836 E. Palisades, PO Box 17958, Fountain Hills, Arizona 85269

and

Name: Fountain Hills Unified School District Telephone: (480) 837-0690

Mailing Address: 14605 N. Del Combre, Fountain Hills, AZ 85208

If this application is for construction of a new dam complete all items (1 through 21) except item 12. For enlargement, repair, alteration or removal, complete items 12 through 21 and those other items where a change is being made.

DESCRIPTION OF DAM AND RESERVOIR

1. Type of dam zoned earth embankment. (Earth, Rock, Concrete Gravity, etc.) Purpose of dam Flood Control.

2. Dam crest elevation Existing - 1721.5', Proposed 1726.5' feet. Spillway crest elev. Existing 1714.9', Proposed 1714.9' with fuseplug notch at 1712.9' feet. Outlet invert elev. Principal Outlet - 1695', Auxiliary Outlet - 1695' feet.

3. Dam height is Existing 26.8', Proposed 31.8' feet (Measured from the lowest elevation of the outside limit of the dam at its intersection with the natural ground surface to the crest of the spillway - ARS 45-1201.2).

4. Dam crest length Existing 660', Proposed 570' feet. Dam crest width 12' feet. Dam Crest Camber (if any) none feet.

5. Dam slope: Upstream 2.0 : 1 (horizontal:vertical); Downstream 2.0 : 1 (horizontal:vertical).

Spillway (type, dimensions, control(s), design capacity, flow depth, etc.): Existing spillway is an earthen broad crested weir with concrete cutoff wall. Length of 266' to be increased to 356' by construction of a 2' lower fuseplug notch, 90' long. Maximum water surface elevation for the IDF peak flow rate of 25,597 cfs is 1723.39'. Flow depth over the modified spillway is 8.5' and 10.5' in the notched fuseplug section.

DRAFT

7. Outlet (type, internal diameter, dimensions, control(s), capacity, trashrack, energy dissipater): The existing Principal Outlet Works is an ungated, 2 barrel, 60" diameter concrete pipe through the dam. One barrel will be grouted shut. Maximum capacity at a water surface elevation of 1723.39' is 483 cfs. The proposed Auxiliary Outlet Works is an ungated 10' x 4' concrete box culvert through the dam. Maximum capacity at a water surface elevation of 1723.39' is 1,075 cfs. Total capacity is 1,558 cfs. Both outlet works will be fitted with steel bar trashracks at the inlet headwall. Both outlet works discharge to concrete aprons with an end sill to force a hydraulic jump.

8. Reservoir at spillway crest elevation: Storage capacity 101 acre-feet; Surface area 16.8 acres.
Reservoir at dam crest elevation: Storage capacity 344 acre-feet; Surface area 23.0 acres.

HYDROLOGIC DATA

9. Drainage area 7.13 square miles. Names of upstream dams Aspen Dam (Dam 6), North Heights Dam (Dam 11), SunRidge Canyon Dam (Dam 7)

10. Downstream Hazard: Fountain Hills High School is built immediately downstream of the dam and spillway ; the dam is within the Town of Fountain Hills and Ashbrook Wash flows through Fountain Hills. The area downstream of the dam is a fully developed residential area. The hazard potential is high.
(Nearest downstream town, population, distance, other inhabitants or development, Downstream Hazard Potential Classification)

11. Inflow design flood: 0.5 PMF. Duration 6 hours. Precipitation 13.7 inches.
(100-year, 0.5 PMF, PMF)

Peak inflow rate 26,516 cfs. Water surface elevation is 1723.39' feet at the time of the maximum spillway discharge of 25,597 cfs during routing of the Inflow Design Flood.

GENERAL INFORMATION

12. Description of Work (enlargement, repair, alteration, etc.): Enlarge spillway, raise dam, construct auxiliary outlet works, modify principal outlet works, add erosion protection up and downstream of dam and spillway, construct spillway floodwall.

13. Type of stored water: none . Use of stored water: N/A .
(surface, groundwater, effluent, etc.)

Existing water rights claims/filings associated with water to be stored: N/A
Has primary storage permit application been made? _____ Yes _____ No

14. Other federal, state or local permits (to be) applied for; Give details, include date(s):
USACOE - 404 Permit - Application Date: month day, year
ADEQ - 401 Permit - Application Date: month day, year
ADWR - Temporary Dewatering Permit - Application Date: December 7, 1999

15. Describe provisions to divert flood flows during construction; include frequency (years) and flow rate (cfs): Stream diversion plan is to be designed by the contractor and will take advantage of the existing and proposed ungated outlet works, however, the following is the capacity of the existing and proposed outlet works and spillway to pass flood flows:
- The existing Principal Outlet works will pass up to a maximum of 750 cfs (headwater at spillway crest elevation) during construction of the Auxiliary Outlet Works.
- The Auxiliary Outlet works will pass up to a maximum of 880 cfs (headwater at spillway crest elevation) cfs during construction of the modified Principal Outlet Works.
- The combined flow through both outlet works is up to 1,285 cfs (at spillway crest elevation) during embankment raising and spillway construction. They are designed to pass the 100 year flow.
- During all construction, a 200 foot wide section of the spillway and spillway channel is to remain unblocked. This will pass 75% of the existing capacity of the spillway or approximately 9,560 cfs, plus additional flow through the outlet works.

16. Construction is expected to begin May 2000 (Month and Year) Estimated completion December, 2000 (Month and Year).

17. Estimated cost of dam, reservoir and appurtenances (ARS 45-1204.A): Design - $250,000 Construction - $804,000 Total - $1,054,000

DRAFT

18. Fees accompanying this application (fees based on cost; R12-15-151): $13,270

19. Investigations, design, drawings and specifications prepared by (identify firm and Engineer of Record; attach resume highlighting dam design experience): Stantec Consulting Inc. - Charles V. Gopperton, PE

20. Construction Quality Assurance & Quality Control to be performed by (identify firm, Site Engineer, and Engineer of Record; attach resume(s) highlighting dam construction experience): AGRA Earth and Environmental, Inc. - Norman H. Wetz, PE

21. Emergency Action Plan prepared by: Stantec Consulting Inc.

Application submitted by (signature): _____ Date: _____

Name: James P. Leubner – Town of Fountain Hills
Mailing Address: 16836 E. Palisades, PO Box 17958, Fountain Hills, Arizona 85269

Legal capacity if other than owner: _____

DRAFT

APPROVAL OF APPLICATION No. _____

This is to certify that Application No._____, including the drawings and specifications for Golden Eagle Park Dam and Reservoir has been examined and the same is hereby approved, subject to the following terms and limitations:

1. Construction work shall be started within one (1) year from date.

2. No foundations or abutments shall be covered by the material of the dam until the Department has been given an opportunity to inspect and approve the same.

Dated this _____ day of _____, 20___.

Assistant Director, Surface Water Management Division

DRAFT

ARIZONA DEPARTMENT OF WATER RESOURCES
SURFACE WATER MANAGEMENT DIVISION
Dam Safety Section

CHECKLIST OF ITEMS REQUIRED FOR A COMPLETE APPLICATION

Name of Dam: Golden Eagle Park Dam Owner of Dam: Town of Fountain Hills & Fountain Hills Unified School District

Application No._____ Date Filed: _____

(Application No. and Date Filed to be filled in by Arizona Department of Water Resources)

Instructions

Complete the following checklist by indicating to the left that the item has been included, and to the right its location(s) within the application documents. If a checklist item does not apply, indicate **N/A** and provide a supporting discussion. The checklist will be provided electronically via e-mail upon the applicants request.

Example

Y	Surface Water Diversion Plan - Details of the plan for control or diversion of surface water during construction, if required.	See Page 7 and Appendix C of the design report & Section 1036 of the specifications

I. GENERAL ITEMS

Y	Application Form - Complete and submitted in duplicate.	
N	Fee -The fee must be based upon the total estimated project cost associated with construction of the dam and appurtenant works. Preliminary investigations and surveys, engineering design, supervision of construction and any other engineering costs shall be included in the project construction costs (refer to Instructions for Filing an Application).	
Y	Two Sets (minimum) of Construction Drawings	
Y	Two Sets (minimum) of Specifications	
Y	Two Sets (minimum) of Construction Quality Assurance (CQA) Plan	See page 40, and Appendix I of the design report
Y	Two Design Reports (minimum)	

Y Drawings, Specifications, CQA Plan and Design Report Sealed by P.E. - The drawings, specifications, CQA Plan, and design reports (each of which are described in detail below) must be prepared by a professional engineer registered in Arizona to a level of detail appropriate for construction. The design engineer must be experienced in the design and construction of dams. The engineer's seal and signature must appear on all drawings, specifications, and engineering reports and conform with the requirements of the Arizona State Board of Technical Registration. A preliminary review set of drawings submitted with the application may also be stamped preliminary and/or not for construction in accordance with the rules (A.A.C. R4-304) of the Arizona State Board of Technical Registration.

N Two Sets (minimum) of the Construction Schedule, Operation and Maintenance Plan, and Emergency Action Plan - These documents, if not ready for submittal with the application filling, may be submitted no later than 30 days after the application filing date.

All will be submitted within 30 days of the filing date of this application

II. ENGINEERING DRAWINGS

All drawings submitted must be from 22" x 36" to 36"x 42" in size. Drawings should be prepared on conventional drafting material such that clear, legible prints can be obtained. Drawings must clearly present all details and dimensions required to construct the dam in accordance with the engineers design. Submittal of blue or black line prints for final approval will be satisfactory. The following drawings should be included. Additional drawings may be required if applicable to the design.

___ Dam Safety Section Approval Block - In preparing the drawings, each sheet must contain the normal title block in the lower right hand corner as well as a space 1:" high x 4" wide in proximity to the lower right hand corner for the Department's approval stamp.

Y Topographic Map - A topographic map(s) of the dam, spillway, outlet works and reservoir on a scale large enough to accurately locate the dam and appurtenances and to indicate cut and fill lines. Elevations must be to a national datum base such as mean sea level, rather than an assumed elevation. Contour intervals must be compatible with the height and size of the dam and its appurtenances as required to provide adequate design and construction details. Horizontal control must be in accordance with the State coordinate system and/or per latitude and longitude.

See sheets C1 through C7 of the construction drawings

Y Location Map - A location map showing the dam footprint and all exploration drill holes, test pits, trenches, adits, borrow areas and bench marks with elevations, reference points and permanent ties. This map shall use the same vertical and horizontal control as the topographic map.

See sheet B1 of the construction drawings for a site plan of all geotechnical investigation done in conjunction with this design, see ADWR file for additional investigations done for original design and construction of the dam.

Y Reservoir Area and Capacity Curves - The area-capacity curves shall reflect area in acres and capacity in acre-feet in relation to depth of water and elevation in the reservoir. The spillway invert and top of dam elevations must be shown. The reservoir volume/space functional allocations must also be shown. Alternate scales may be included as

See page 20 of the Design Report by Stantec Consulting, Inc.

required for the owners use.

Y	Geologic Information - Geologic information including geologic map(s), profile along the centerline, and other pertinent cross sections of the dam site, spillway(s) and appurtenant structures, aggregate and material sources, and reservoir area at scale(s) compatible with the site and geologic complexity, showing logs of exploration drill holes, test pits, trenches, and adits.	See Section 4.2 and Figure 1 of the Geotechnical Report by AGRA Earth & Environmental
Y	Dam Plan - A plan of the dam to adequately delineate design and construction details.	See sheet C4 of the construction drawings
N	Foundation Profile - A foundation profile along the dam centerline at a true scale (vertical = horizontal) showing the existing ground and proposed finished grade (cut and fill) elevations, including anticipated geologic formations. Include any proposed grout and drain holes.	Embankment will be built on top of existing dam and foundation will not be exposed
	Dam Profiles and Sections - A profile and a sufficient number of cross sections of the dam to adequately delineate design and construction details. Camber, crest details, interior filters and drains, and other zone details must be shown and dimensioned. The profile of the dam may be drawn to different horizontal and vertical scales if required for detail. As a minimum, a maximum section of the dam shall be included; it must be drawn to a true scale (vertical = horizontal). The outlet conduit may be shown on the maximum section if this is typical of the proposed construction.	See sheet C4 for dam plan and profile, sheet D1 for typical section, sheets XS1 through XS4 for cross sections
N	Foundation Plan - A foundation plan showing excavation grades and cut slopes with any proposed foundation preparation, grout and drain holes, and foundation dewatering requirements.	Embankment will be built on top of existing dam and foundation will not be exposed
Y	Outlet Works - A plan, profile, and details of the outlet works, including the intake structure, the gate system, conduit, trashrack, filter diaphragm, concrete encasement, and the downstream outlet structure. Include all connection and structural design details.	Plan and profile of Auxiliary Outlet Works shown on sheet C6, details on sheets D1, D3, D4, D5, D9 of the construction drawings. Plan and profile of Principal Outlet Works shown on sheet C7, details on sheets D7, D8, D10 of the construction drawings.
Y	Spillway - A plan, profile, control section, and cross sections of the spillway. Include details of any foundation preparation, grouting or concrete work that is contemplated. A complex control structure, a concrete chute or an energy dissipating device for a terminal structure will require both hydraulic and structural design details.	Plan and profile of Emergency Spillway shown on sheets C4, C5 of the construction drawings. Details on sheets D1, D3, D4, D5, D9.
Y	Spillway Rating Curve - The spillway rating curve must be at a scale or scales which allow determination of discharge rate (cfs) at both low and high flows as measured by depth of water passing over the control section.	See sheet G3 of the construction drawings
Y	Drainage Area - Hydrologic data, drainage area and flood routing criteria.	See the FLOOD HYDROLOGY section of the design report by Stantec Consulting, Inc., page 18, and Appendix A.

DRAFT

III. SPECIFICATIONS

The specifications must include a detailed description of the work to be performed and a statement of the requirements for the various types of material and installation techniques that will enter into the permanent construction. Of particular importance are those sections describing foundation preparation, placement of materials, and material testing. Specifications must be complete and not cross referenced to specifications in other documents. As a minimum, the following specifications should be included when applicable to the design. List additional specifications in this checklist.

Y	Earthwork Specification - Include all earth and rock material descriptions, placement criteria, and construction requirements for all elements of the dam and related structures.	Earthwork is specified in the following sections of the specifications: Section 201 - CLEARING AND GRUBBING Section 203 - EARTHWORK Section 205 - EMBANKMENT FOR EARTH DAMS Section 601 - TRENCH EXCAVATION, BACKFILLING AND COMPACTION
Y	Concrete, Grout and Shotcrete Specifications - Include all concrete, grout and shotcrete material descriptions, placement and consolidation criteria, temperature controls, and construction requirements for all elements of the dam and related structures.	Concrete work is specified in the following sections of the specifications: Section 340 - CONCRETE CURB, GUTTER, SIDEWALK, DRIVEWAY AND ALLEY ENTRANCE Section 505 - CONCRETE STRUCTURES Section 727 - STEEL REINFORCEMENT Section 730 - EXPANSION, CONTRACTION AND CONSTRUCTION JOINTS IN CONCRETE
Y	Foundation Specification - Include acceptable material criteria and testing, cleaning, and treatment. If foundation or curtain grouting is required, include the type of grout, grouting method, special equipment, recording during grouting, and foundation monitoring to avoid disturbance from grouting.	Foundation preparation is specified in the following sections of the specifications: Section 204 - FOUNDATION PREPARATION.
Y	Materials Testing - Include in each specification all materials testing to be performed by the contractor for pre-qualification of materials for use and acceptance of materials as constructed in place in accordance with specifications. Include all required special performance testing such as water pressure tests in conduits.	Testing requirements are included in each specification section as well as in Section 111 - CONTRACTOR QUALITY CONTROL, and also in the CONSTRUCTION QUALITY ASSURANCE PLAN.
y	Control of Stream During Construction - A plan for control or diversion of surface water during construction. The frequency of storm runoff to be controlled during construction may be determined by the design engineer commensurate with the risk of economic loss during construction.	Conceptual level drawings provided for discussion during design process, however, no construction drawings or details to be provided to the Contractor. The Contractor is required to submit his plan for approval prior to construction. See specifications, Section 107.19 - DAMAGE BY STORM, FLOOD OR EARTHQUAKE and 107.20 - DIVERSION AND CARE OF WATER for contractual requirements to divert and dewater, and establishment of responsibility for the diversion and dewatering.

N	Blasting - Criteria for blast monitoring and acceptable blast vibration levels (particle velocities), monitoring equipment, and monitoring locations must be included for the dam and other vibration sensitive structures and equipment.	No blasting is allowed
Y	Instrumentation - Include material descriptions, placement criteria, and construction requirements. Instrumentation should be required to be installed by experienced specialty subcontractors.	A piezometer was installed in boring P-1 in 1998, see location map or dam plans for location of the boring. No other instrumentation is recommended
Y	Additional Specification: - Gabion erosion protection to be placed on the emergency spillway.	Gabions are to be installed on the downstream side of the spillway to prevent erosion. They are specified in Section 221 - WIRE MESH GABIONS and filter fabric is specified in Section 704 - GEOTEXTILES USED AS FILTERS.
Y	Additional Specification: - Subdrain system to be constructed at the Auxiliary Outlet Works	A subdrain is to be constructed to drain the sand diaphragm It is specified in Section 605 - SUBDRAINAGE.
Y	Additional Specification: - Concrete pipe to be installed within the dam embankment the Auxiliary Outlet Works	Reinforced concrete pipe is to be installed within the embankment to extend the Principal Outlet Conduit and for a utility casing. It is specified in Section 618 - STORM DRAIN CONSTRUCTION

DESIGN REPORT

lesign report is required for all dams and appurtenant structures. The report should include a discussion and definition of the engineering ısideration and conclusions incorporated in the design. The report must also include copies of pertinent calculations as appendices. As a ıimum, the following sections should be included in the design report when applicable to the design. List additional sections to the design report his checklist.

Y	Hydrology - Hydrologic considerations, including calculations and a summary table of data used in determining the required emergency spillway capacity and freeboard, and design of any diversion or detention structures. Input and output listings (both hard copy and on diskette) of any computer programs used must be included. Include calculations for wave runup and wave setup in the reservoir as well as estimated sedimentation rates.	See the FLOOD HYDROLOGY section of the design report by Stantec Consulting, Inc., page 18, and Appendix A, B & C. A floppy disk is also included in the appendix.
Y	Hydraulics - Hydraulic characteristics, engineering data, and calculations used in determining the capacities of the outlet works and emergency spillway. Input and output listings (both hard copy and on diskette) of any computer programs used must be included. Technical references must also be included supporting any complex hydraulic designs.	See the SPILLWAY HYDRAULICS section of the design report by Stantec Consulting, Inc., page 23, and Appendix D, E, F & G.
Y	Geologic Investigation - Geologic investigation and testing of the dam site and reservoir basin. Results and analysis of subsurface investigations including logs of test borings and geologic cross sections.	See the Geotechnical Report by AGRA Earth & Environmental, Sections 3.0 - INVESTIGATION, 4.0 - SITE CONDITIONS & GEOTECHNICAL PROFILE, Appendix A and B.
N	Blasting Plan - Guidelines and criteria for blasting to be used by the	No blasting is allowed

DRAFT

contractor in preparing the blasting plan.

Y	Surface Water Diversion Plan - Details of the plan for control or diversion of surface water during construction. Include a discussion for the basis for selection of the frequency of storm runoff to be controlled during construction.	Conceptual level drawings provided for discussion during design process, however, no construction drawings or details to be provided to the Contractor. The Contractor is required to submit his plan for approval prior to construction. See specifications, Section 107.19 - DAMAGE BY STORM, FLOOD OR EARTHQUAKE and 107.20 - DIVERSION AND CARE OF WATER for contractual requirements to divert and dewater, and establishment of responsibility for the diversion and dewatering. See the SURFACE WATER DIVERSION PLAN section of the design Report by Stantec Consulting, Inc., page 36.
Y	Dewatering Plan - Details of the dewatering plan for subsurface water during construction.	See the Dewatering Plan section of the design Report by Stantec Consulting, Inc., page 34. See specifications, Section 107.20 - DIVERSION AND CARE OF WATER for contractual requirements to dewater, and establishment of responsibility for the dewatering
Y	Materials Information - Testing results of earth and rock materials, including the location of test pits and the logs of these pits. Strength test results must be plotted and the strengths selected for use in stability analyses shown.	See the Geotechnical Report by AGRA Earth & Environmental, Sections 3.0 - INVESTIGATION, 4.0 - SITE CONDITIONS & GEOTECHNICAL PROFILE, Appendix A and B.
N	Grout Design - Discussion and design of the foundation grouting, grout curtain, and grout cap based on foundation stability and seepage considerations.	No grouting anticipated
Y	Seepage - Permeability characteristics of foundation and dam embankment materials, including calculations for seepage quantities through the dam, the foundation, and anticipated in the internal drain system. Input and output listings (both hard copy and on diskette) of any computer programs used should be included. Copies of flow nets, if utilized, must be included.	See the Geotechnical Report by AGRA Earth & Environmental, Sections 6.2 - SEEPAGE ANALYSIS and Appendix C.
Y	Reinforced Concrete Design - Calculations and basic assumptions on loads and limiting stresses for reinforced concrete design. Input and output listings (both hard copy and on diskette) of any computer programs used should be included.	Structural analysis and design done by T.Y. Lin, International. See appendix ____
Y	Stability Analysis - A discussion and stability analysis of the dam including appropriate seismic loading, safety factors and embankment zone strength characteristics. Analyses must include both short term and long term loading on upstream and downstream slopes. Input and output listings (both hard copy and on diskette) of any computer programs used should be included. Plots of critical failure surfaces as well as the zones and phreatic surface used in the analyses must be shown on the critical cross section of the embankment.	See the Geotechnical Report by AGRA Earth & Environmental, Sections 5.0 - SEISMIC HAZARD & EARTHQUAKE DESIGN PARAMETERS, 6.4 - STABILITY ANALYSIS and Appendix C.

Y	Seismicity - The seismicity of the project area and activity of faults in the vicinity must be discussed. Both deterministic and statistical methods must be utilized and the appropriate seismic coefficient identified for use in analyses.	See the Geotechnical Report by AGRA Earth & Environmental, Section 5.0 - SEISMIC HAZARD.
Y	Cutoff Trench Design - Discussion and design of the cutoff trench based on seepage and/or other considerations.	No modifications to the existing cutoff trench.
Y	Internal Drainage - Discussion and design of internal drainage based on seepage quantity calculations. Include instrumentation necessary to monitor the drainage system, and filter design calculations for protection against piping of foundation and embankment materials.	See the Geotechnical Report by AGRA Earth & Environmental, Sections 6.2 - SEEPAGE ANALYSIS and Appendix C.
Y	Dam Foundation Treatment and Abutment Contact Design, and Spillway Foundation Design - Discussion and design of foundation treatment to adequately compensate for geological weakness in the dam foundation and abutment areas, and in the spillway foundation area.	No foundation treatment anticipated, however, Section 204 - FOUNDATION PREPARATION of the specifications covers required work if abutment or foundation surfaces are encountered during excavation for the outlet works.
Y	Reservoir Area and Capacity Tables and Curves - The area-capacity tables and curves must reflect area in acres and capacity in acre-feet in relation to depth of water and elevation in the reservoir. The spillway invert and top of dam elevations must be shown, as well as reservoir volume/space functional allocations. Alternate scales may be included as required for the owners use.	See Section - RESERVOIR AREA & STORAGE CAPACITY RELATION, page 20 of the Design Report by Stantec Consulting, Inc.
Y	Erosion Protection - Erosion protection against waves and rainfall runoff must be provided for both the upstream and downstream slopes, as appropriate.	Wave runup is not considered due to the small size of the reservoir. Riprap will be placed on the upstream toe of the dam, see typical dam section on Sheet D1 of the construction drawings. Riprap will be placed around the energy dissipater of the Auxiliary Outlet Works, see Sheet C6 of the construction drawings. Gabions will be placed on the emergency spillway chute, see sheet C4, C5, D2 of the Construction drawings. See Section - SPILLWAY HYDRAULICS of the design report.

V. CONSTRUCTION QUALITY ASSURANCE (CQA) PLAN

A Construction Quality Assurance (CQA) Plan is required for all dams and appurtenant structures. A statement of the designer's requirement with regard to construction testing frequencies, foundation preparation guidelines, etc. must be included in the CQA Plan to facilitate the construction in conformance with the plans and specifications. As a minimum, the CQA Plan should include the following sections:

Y	Third Party Testing - The CQA Plan should detail the responsibilities of third party (i.e., independent of the contractor) field and laboratory testing by a registered engineer for all elements of the dam and related structures.	See page 7 of the CQA Plan.
Y	Delineation of Responsibilities and Authority - The responsibilities and lines of authority of the organizations involved in the design and	See page 5-9 of the CQA Plan.

DRAFT

construction of the dam must be described in the CQA Plan. The role of periodic meetings (pre-construction, progress, and problem or work deficiency meetings) should be discussed.

Y	Statement of Qualifications - The CQA Plan should identify the training and experience of the CQA personnel, field supervisors, and engineer of record. This information should document their ability to fulfill their assigned roles.	See page 20-25 of the CQA Plan.
Y	Inspection and Testing Activities - The CQA Plan should specify the inspection, testing, and sampling activities to be implemented for all elements of dam construction. The CQA Plan should identify key inspection items that require the Departments involvement and approval.	See pages 6-7, 10-11, 13, 16-18, 20-25 of the CQA Plan.
Y	Acceptance and Rejection Criteria - The acceptance or rejection criteria for inspection and testing activities should be clearly stated in the CQA Plan. In addition, the CQA Plan should describe procedures for documenting corrective measures, and design changes that require prior approval by the Department.	See pages 16-18, 22-24 of the CQA plan, criteria are also specified in the specifications.
Y	Documentation Requirements - The CQA Plan should include requirements for the submittals of as-built drawings and a completion report which are required prior to the issuance of a license.	See pages 26-29 of the CQA plan.

VI. CONSTRUCTION SCHEDULE

Y	Construction Schedule - A statement of the anticipated sequence and duration of construction operations must be filed in duplicate with the application.	Will be submitted within 30 days of the filing date of this application

VII. OPERATION AND MAINTENANCE (O&M) PLAN

An Operation and Maintenance (O&M) Plan must be prepared for all dams and their appurtenant structures. The O&M Plan must specify the frequency of inspections and maintenance of the dam and appurtenant structures. The frequency for exercising any mechanical or electrical equipment or systems must also be specified. Equipment must be exercised and inspected at least once each year. The frequency of inspections for submerged facilities such as intake structures or outlet pipes must also be specified. More frequent inspections and operation may be required depending on the size of the dam or reservoir, hazard classification, or condition of the dam. The O&M Plan must specifically address the following:

Y	Dam Structure (Earth & Rockfill) - Settlement, slides, depressions, misalignment, cracking (transverse and longitudinal), burrowing animals, erosion, seepage, and adequacy of slope protection.	See page xx of the O&M Plan.
J	Dam Structure (Concrete & Masonry) - Cracking, spalling, scaling, joint displacement or offsets, foundation and abutment contacts displacement or offset, seepage, and adverse vegetation.	N/A
Y	Metal Surfaces – Corrosion, deficient protective coatings, misaligned or split seams. Includes gates, stairs and ladders, handrails, pipe,	See page xx of the O&M Plan.

drainage culverts, instrumentation pipes or hardware, drainage culverts, bridges, etc.

Y	Spillways – Spillway control structures (gates, concrete sills, flash boards, etc.), approach channels, main channels, stilling basins, and energy dissipaters.	See page xx of the O&M Plan.
Y	Outlet Works – Includes buildings or structures that enclose the outlet works, and submerged facilities such as intake structures.	See page xx of the O&M Plan.
Y	Downstream Channel Areas - Sloughing, eroding or backcutting, obstructions, adequacy of erosion protection, and tailwater and flow conditions.	See page xx of the O&M Plan.
Y	Reservoir Rim Area - Areas susceptible to slides or major rock falls that could result in overtopping of the dam or significant releases.	See page xx of the O&M Plan.
Y	Site Security – Fencing, surveillance cameras, security patrols, etc.	See page xx of the O&M Plan.
Y	Instrumentation – Description of the instrumentation system(s) that is part of the performance monitoring system for the dam and all appurtenant structures. The O&M Plan must clearly separate instruments and reading frequencies for the following conditions: (a)during construction, (b) immediately following completion of construction, (c) until initial reservoir fill is completed, and (d) long term monitoring. Vertical and horizontal movement monitoring of the dam must be performed, as a minimum. The design, construction, and geological conditions of the dam may require other instrumentation, such as monitoring wells, piezometers, inclinometers, pressure cells, extensometers, crack monitors, seepage or drainage monitors, and strong motion (seismograph).	See page xx of the O&M Plan.
Y	Log Book - A log book must be maintained for the life of the dam. The log book must be part of the dam's permanent records and must be used to document each inspection, maintenance work performed, and record of equipment operation (exercising). Each entry in the log book must include the date, a description of the inspection, operation or maintenance work done, and shall be signed by the responsible person. Dates when instrumentation readings are taken and person taking readings must be recorded in the log book.	See page xx of the O&M Plan.
Y	Annual Report - The owner or operator providing an annual report to ADWR Dam Safety Section must list all inspections made, maintenance work performed, instrumentation data collected, and dates of same. The report must include an interpretation of the instrumentation data by a person qualified to evaluate the data of the dam's performance. The report must include the significance of the instrumentation data and a discussion of planned maintenance or repairs at the dam.	See page xx of the O&M Plan.
Y	Photographic Record - The owner or operator maintaining complete photographic record of sufficient detail that would typically show the extent of cracks in concrete, erosion of embankments, or condition of metal parts. Photos must be taken on a five year interval (minimum)	See page xx of the O&M Plan.

and must be maintained for the life of the dam. A complete set of the photos (minimum 3 1/2 x 5 inches in size) must be provided to ADWR when taken and included as part of the annual report for that year.

VIII. EMERGENCY ACTION PLAN (EAP)

Dams classified as having High or Significant downstream hazard potential must file an Emergency Action Plan including a dam breach inundation map. The EAP must be filed in duplicate, and at a minimum, include the following elements:

Y	Notification Flow Chart – The EAP should include a notification chart showing the hierarchy for notification in an emergency situation, including priority of notifications. Notifications should included local emergency response agencies, affected downstream populations, county emergency management agencies, and affected flood control districts.	See page xx of the EAP.
Y	Statement of Purpose - The EAP must describe the project and scope of the EAP.	See page xx of the EAP.
Y	Emergency Detection, Evaluation and Action - The EAP must delineate the type of potential unsafe conditions, evaluation procedures, and triggering events that require the initiation of partial or full emergency notification procedures based on the urgency of the situation.	See page xx of the EAP.
Y	Responsibilities – The EAP should delineate areas of responsibility, particularly the owners, to ensure effective and timely action. The individuals responsible for notifications and declaring an emergency must be clearly identified.	See page xx of the EAP.
Y	Notification Procedures – The EAP should be specific for each emergency situation that is anticipated.	See page xx of the EAP.
Y	Preparedness - The EAP should identify emergency supplies and resources, equipment access to the site, and alternative means of communication. The EAP should also identify specific preparedness activities required such as annual full or partial mock exercises and updates of the EAP.	See page xx of the EAP.
Y	Inundation Map – An inundation map should show the area that would be subject to flooding due to spillway flows and dam failure.	See page xx of the EAP.

IX. OTHER PERMITS

It is not unusual that additional permits from this and/or other government agencies may also be required before construction may commence. Several other permits are described below. It is the responsibility of the owner to obtain all permits required for construction.

N	State Trust Land - If the dam is to be constructed on, any materials for the dam to be borrowed from, or the reservoir will inundate State Trust Land, contact the department at (602) 542-4621 for details of their requirements.	N/A

DRAFT

ADWR, Dam Safety Section
Checklist for Application No. _____

N	Federal Land - If the dam is to be constructed on, any materials for the dam are to be borrowed from, or the reservoir will inundate federal land, contact the appropriate federal agency for details of their requirements.	N/A
N	Water Rights - If surface waters are to be impounded, contact the Arizona Department of Water Resources, Surface Water Unit at (602) 417-2442 for details.	N/A
Y	Corps 404 Permit – Any significant work in or affecting a stream may require a 404 Permit. Contact the U.S. Army, Corps of Engineers for details.	404 Permit application filed with the Army Corps of Engineers on month, day, year.
Y	Corps 401 Certification - A 401 Certification from ADEQ is required before a 404 Permit can be obtained to ensure that federal activities do not violate state water quality standards.	401 Certification application filed with the Department of Environmental Quality on month, day, year.
N	Geotechnical Exploration Holes, Monitoring and Piezometers Wells - Certain types of drilled holes require permits and/or must be abandoned in accordance with prescribed procedures. For details, contact the Arizona Department of Water Resources, Groundwater Management Support Section at (602) 417-2470.	N/A
Y	Dewatering Wells – If dewatering of the dam foundation is required, contact the Arizona Department of Water Resources, Groundwater Management Support Section at (602) 417-2470.	Temporary dewatering permit application filed with ADWR on December 7, 1999.
Y	Floodplain Management - Any activity in a floodplain requires a floodplain use permit from the local flood control district. Any structure which will divert, retard or obstruct the flow of water will require an in-depth review by a flood control district before issuance of the permit. Removal of a dam will also require an in-depth review. Contact the local flood control district.	Project is being designed for and constructed by the Flood Control District of Maricopa County. An analysis of the floodplain impacts will be performed and submitted to the Town of Fountain Hills within the statutory time limits after construction of the dam.
Y	Archaeological Clearance - Any activity which involves ground disturbance requires prior clearance regarding cultural resources sensitivity and treatment from the State Historic Preservation Officer. Contact the Arizona State Parks at (602) 542-4174.	Site has been surveyed and clearance granted.

Gopperton, Chuck

From: Tom Renckly - FCDX [trr@mail.maricopa.gov]
Sent: Thursday, February 17, 2000 4:35 PM
To: 'cgopperton@stantec.com'
Cc: Warren Rosebraugh - FCDX
Subject: GEPD -90% Review Comments

Chuck,
See comments received so far on attached file and below.
Tom
<<gepd90.doc>>

Structural Review Comment from Kumar Hanumiah

General: Use At rest pressure of 60 psf. for any Restrained structures as per the recommendations of Geotechnical report.

Sht.17:

1. Check to see it is economical to use a precast box section which is so thick and heavy instead of using the poured in place concrete.

2. 10'x4' box culvert typical section shows # 5@7" wall steel on the inside face which stops at the inside faces of the top slab and the bottom slab. Extend these bars to the outside faces with the required clearance.

3. Head walls shall be designed with 2' of surcharge loading or with the sloping backfill in addition to the regular soil pressure. Check on the reinforcing # 4@18 " shown for the head walls are sufficient.

4. Check on the 9" wall thickness and the reinforcing #5@12 " shown on section B-B with a maximum height of wall of 8'-3". These walls can also be subjected to either live load surcharge or the sloping backfill. Detail shown on this section does not match with the detail shown on the plan view as a regular retaining wall with heel and toe.
Sht.19: 5. Same comment as the previous one and the maximum height of wall in this case for section B-B is 9'-6". Also explain as to why the base slab is so thick at 2'-0"

Sht.21:

6. Dimensions 19.34',18.09' and 16.60' of section A-A, B-B and C-C of sheet 21 does not match with the same dimensions shown on sheet 22.

Sht.22:

7. Section D-D of sht.21 shows 9" wall thickness but refers to ADOT std. B-04.40 which shows 1'-0' wall thickness.

8. Section D-D shows vertical reinforcing of # 7@12 " which do not agree with # 4@12 " shown on sections A-A, B-B and C-C

9. Section D-D shows wall reinforcing # 7@6 " which has a horizontal leg of 1'-6" bent into the base slab and this 1'-6" leg is not sufficient to take care of the negative bending moment developed between the walls and the base slab.

Sht.25:

10. Concrete flood wall section shown for 6'-6" wall height shows a reinforcing of # 7@12 " and the same reinforcing is also shown for the 10'-6" wall which is to be checked. Check to see the # 7@12 " shown on the other face is really required.

11. Also check on the footing width 17'-0" shown which appears to be too large.

gepd90.doc

APPENDIX M

DAM EMBANKMENT EROSION PROTECTION
RIPRAP EROSION PROTECTION
EMERGENCY SPILLWAY EROSION PROTECTION
EMERGENCY SPILLWAY FUSEPLUG

Memo

Stantec

To: File

File: 82000157

From: Chuck Gopperton

Date: 17 January, 2000

Re: Golden Eagle Park Dam

Dam Embankment Erosion Protection

(SCOUR ANALYSIS AT UPSTREAM TOE OF DAM)

Existing Conditions

Cloudburst Wash currently flows under Golden Eagle Boulevard upstream of the emergency spillway, and continues along the toe of the dam to the principal outlet works where it confluences with Ashbrook Wash. The wash is dry and only flows intermittently. The upstream end of the channel (near the spillway) is well incised, is lined with riprap erosion protection and is crossed by a pedestrian bridge. At the point where it begins to flow along the base of the dam embankment, the riprap is terminated and the channel becomes very wide and shallow and not well defined. It is confined by the dam embankment on the east side and the softball field on the west side. Higher flows overflow onto the softball field and spread out. See Figure 1 for a site plan.

Proposed Improvements

Raising of the embankment will require that the upstream face and toe of the dam be stripped prior to placing fill material. Part of the channel will be excavated to prepare the subgrade for the dam embankment. Embankment fill will then extend approximately 10 feet into the existing channel. The wash will be deepened and widened to provide additional capacity. This will replace some of the capacity lost by placing the dam embankment material within the channel. Erosion protection consisting of a layer of dumped riprap will be placed at the toe of the embankment to protect the dam from erosion caused by flows in the wash. The riprap will be "toed - down" a depth equal to the design scour depth. The height of the riprap will be equal to the design depth of flow plus some amount of freeboard. See Figure 2 for a typical section of the proposed improvements.

Scour Analysis

An HEC-RAS model was prepared for the developed channel and discharges ranging from 50 cfs up to the peak 10 year flow rate of 468 cfs were analyzed with the model. Four different flow conditions at different river stations and flow rates were chosen for local scour analysis. These reflect a mix of the maximum velocity, depth and unit discharge rates which should give maximum theoretical scour depths. Higher flow depths present at the highest flow rate of 468 cfs were not used, because, due to backwater effects, the flow velocities are too low to be considered for calculation of scour. Also, high theoretical velocities calculated for the low flow conditions are not considered because the flow depths are quite shallow and the volume of water available to move and transport large quantities of sediment is not available. A tabular printout of the results of the HEC-RAS model and a hydraulic water surface profile of the channel are presented in Exhibit A and B. The four conditions considered in the scour analysis are given in Table 1.

Table 1

Station (ft) (1)	Discharge (cfs) (2)	Flow Depth (ft) (3)	Flow Velocity (ft/s) (4)	Unit Discharge (cfs/ft) (5)
460	350	1.05	12.11	12.5
480	350	1.83	8.70	15.9
500	350	1.80	9.55	17.5
540	300	1.72	9.16	15.8

Another factor affecting the ability to scour is the grain size of the soil. The existing soil D_{50} is approximately 2.0 mm (No. 10 sieve).

Local scour analysis was performed for bankline structures, using 4 methods, referenced in the following:

- Blench, T. (1969, "Mobile-Bed Fluviology", Edmonton: University of Alberta Press.

- Bureau of Reclamation (1966), "Computation of "Z's" for use in the Modified Einstein Procedure, Denver, Colorado.
- Lacey, G. (1930), "Stable Channels in Alluvium", in Proceedings of the Institution of Civil Engineers, vol. 229.
- Neill, C. R. (1973), "Guide to Bridge Hydraulics", Published for Roads and Transportation Association of Canada.

All the above methods are published in "Computing Degradation and Local Scour", Technical Guideline for Bureau of Reclamation.

Results of the analysis are presented in Exhibit C. A summary of the results is shown in Table 2.

Table 2

		Local Scour Depth				
Station (ft) (1)	Discharge (cfs) (2)	Lacey (ft) (4)	Blench (ft) (5)	USBR (ft) (6)	Neill (ft) (7)	Average (ft) (8)
460	350	0.611	2.500	0.262	3.917	1.82
480	350	0.611	2.935	0.458	4.389	2.10
500	350	0.611	3.129	0.450	4.915	2.28
540	300	0.580	2.923	0.430	4.434	2.09

Values for local scour depth range from a minimum of 0.25 feet to a maximum of 4.92 feet. Averages range from 1.8 feet to 2.3 feet. The maximum average value of 2.3 feet will be used for the local scour. In addition to local scour calculated by these methods, 1 foot of low flow incisement is also added. A safety factor of 1.3 is used so that the total scour depth is:

$$(2.3 + 1.0) \times 1.3 = 4.3 \text{ feet.}$$

The recommended design value for scour is 4.3 feet.

In addition to downward cutting from scour, protection against lateral scour along the bank is also required. The maximum depth of flow at the design flow rates and sections is 1.8 feet. The height of the erosion protection should be a nominal 2 feet plus an additional 2 feet of freeboard. Therefore, total height of riprap erosion protection is 4 feet above the invert of the channel and 4.3 feet below the invert, for a total of 8.3 feet.

STANTEC CONSULTING INC.

Chuck Gopperton, PE
Project Engineer
cgopperton@stantec.com

c. Tom Renckly, FCDMC; George Sabol, Stantec; Jerry Cox, ADWR

p:\82000157\correspondence\memos\cvg011700m2f.doc

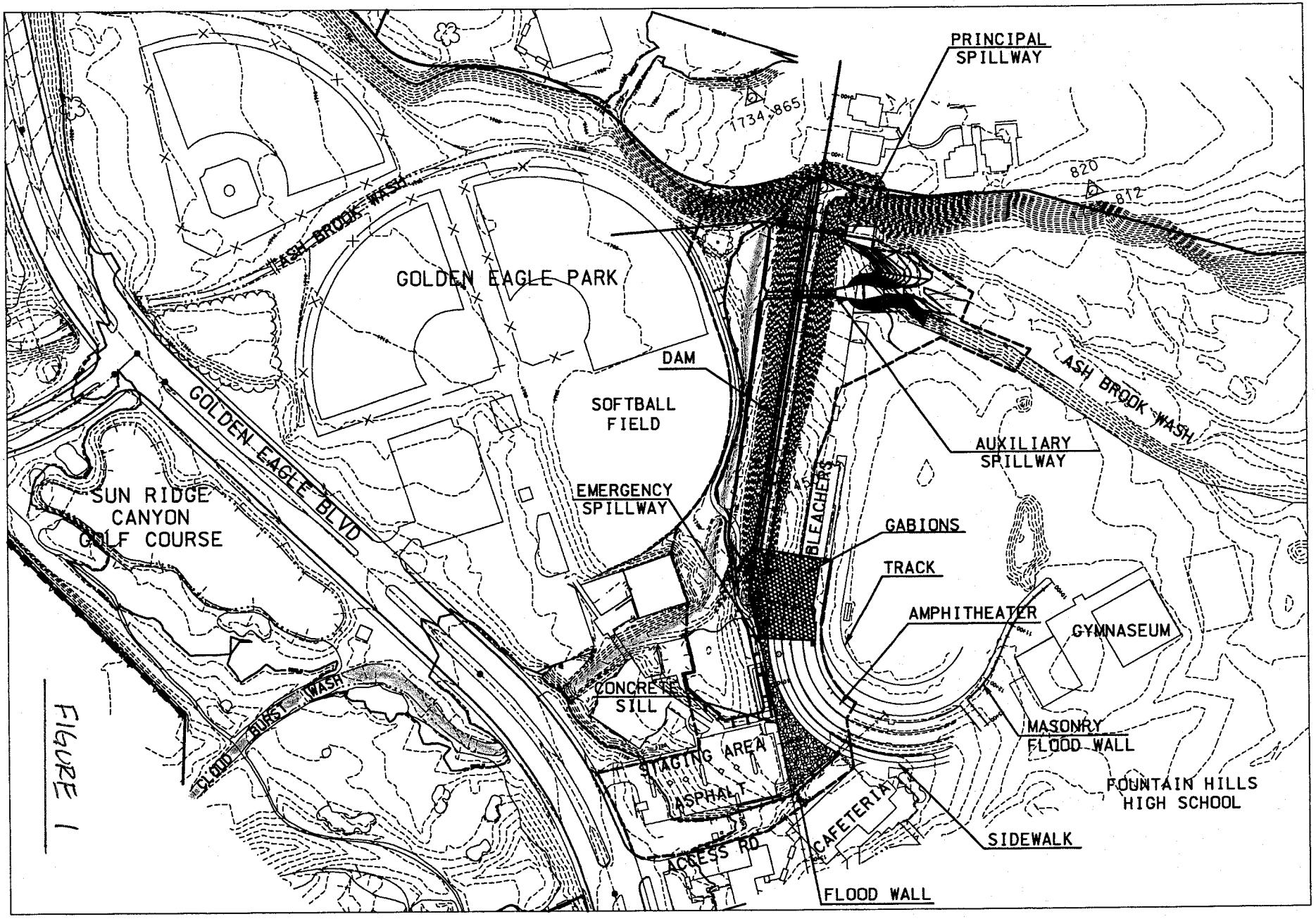
PRINCIPAL SPILLWAY
1734.865
820
812
ASH BROOK WASH
GOLDEN EAGLE PARK
DAM
SOFTBALL FIELD
GOLDEN EAGLE BLVD
SUN RIDGE CANYON GOLF COURSE
AUXILIARY SPILLWAY
EMERGENCY SPILLWAY
BLEACHERS
GABIONS
TRACK
AMPHITHEATER
GYMNASEUM
CONCRETE SILL
FLOOD BURST WASH
STAGING AREA
ASPHALT
MASONRY FLOOD WALL
FOUNTAIN HILLS HIGH SCHOOL
CAFETERIA
SIDEWALK
ACCESS RD
FLOOD WALL

FIGURE 1

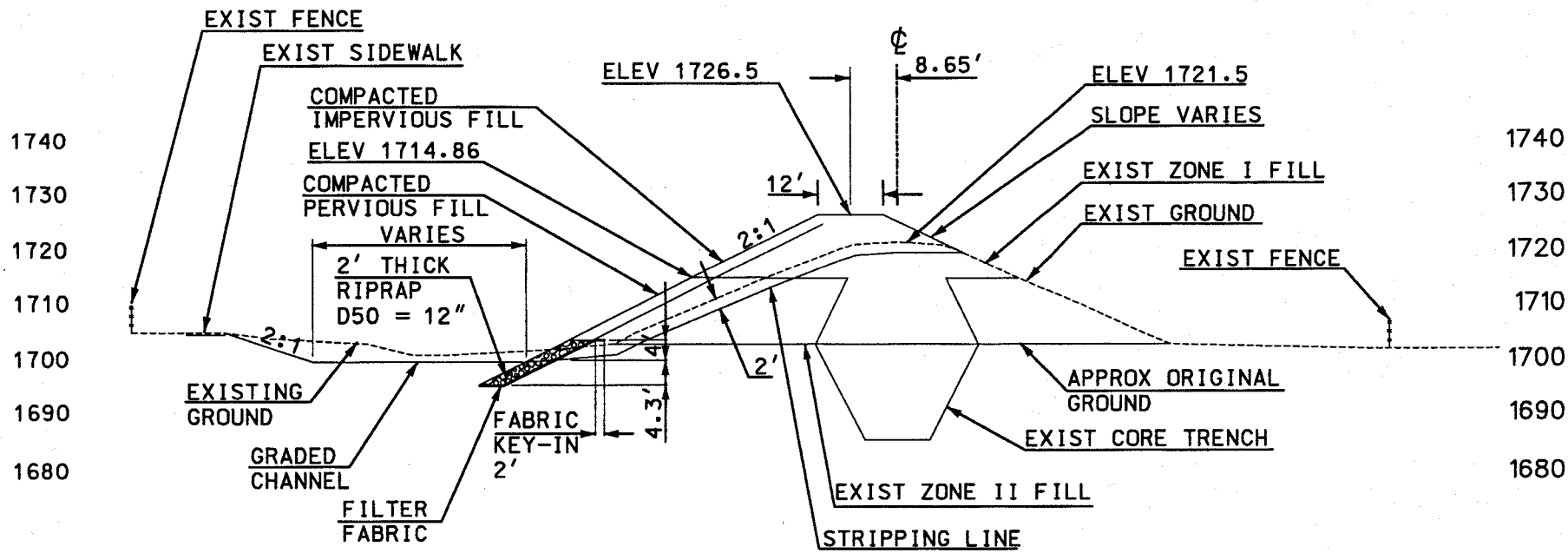

NOTES:
1. STRIP UPSTREAM SIDE AND TOP OF DAM 2' OR MORE AS DIRECTED BY THE ENGINEER PRIOR TO PLACING EMBANKMENT
2. BOTTOM ELEVATION OF IMPERVIOUS FILL SHALL BE AT OR BELOW THE LEVEL OF ADJACENT ZONE I FILL
3. COMPACT ALL LAYERS TO A MINIMUM OF 95% OF THE MAXIMUM DENSITY
4. WHERE CONSTRUCTION OF EMBANKMENT OCCURS AGAINST EXISTING SLOPES, THE SLOPE SHALL BE STRIPPED OF LOOSE MATERIAL AND BENCHED PER DETAIL THIS SHEET

DAM TYPICAL SECTION
NTS

FIGURE 2

Exhibit A

HEC-RAS Plan: 10-99 River: CloudBurst Wash Reach: Cloud-A1								
Reach	River Sta	Q Total	Min Ch El	W.S. Elev	Vel Chnl	Flow Area	Top Width	Hydr Depth C
		(cfs)	(ft)	(ft)	(ft/s)	(sq ft)	(ft)	(ft)
Cloud-A1	700	50	1704	1704.41	4.02	12.43	30.82	0.4
Cloud-A1	700	100	1704	1704.62	5.26	19	31.24	0.61
Cloud-A1	700	150	1704	1705.09	4.43	33.88	32.18	1.05
Cloud-A1	700	200	1704	1705.46	4.35	45.99	32.92	1.4
Cloud-A1	700	250	1704	1705.77	4.45	56.13	33.53	1.67
Cloud-A1	700	300	1704	1706.02	4.64	64.68	34.04	1.9
Cloud-A1	700	350	1704	1706.23	4.87	71.91	34.46	2.09
Cloud-A1	700	400	1704	1706.4	5.15	77.66	34.79	2.23
Cloud-A1	700	468	1704	1707.18	4.44	105.48	36.36	2.9
Cloud-A1	660	50	1703.4	1703.64	8.48	5.9	24.98	0.24
Cloud-A1	660	100	1703.4	1703.92	7.66	13.05	25.54	0.51
Cloud-A1	660	150	1703.4	1704.94	3.74	40.11	27.58	1.45
Cloud-A1	660	200	1703.4	1705.34	3.89	51.39	28.38	1.81
Cloud-A1	660	250	1703.4	1705.65	4.15	60.21	28.99	2.08
Cloud-A1	660	300	1703.4	1705.9	4.45	67.4	29.47	2.29
Cloud-A1	660	350	1703.4	1706.1	4.77	73.3	29.87	2.45
Cloud-A1	660	400	1703.4	1706.25	5.14	77.8	30.16	2.58
Cloud-A1	660	468	1703.4	1707.08	4.51	103.66	31.81	3.26
Cloud-A1	620	50	1702.8	1703.6	3.67	13.64	18.17	0.75
Cloud-A1	620	100	1702.8	1704.24	3.88	25.8	19.9	1.3
Cloud-A1	620	150	1702.8	1704.73	4.18	35.88	21.23	1.69
Cloud-A1	620	200	1702.8	1705.12	4.5	44.47	22.3	1.99
Cloud-A1	620	250	1702.8	1705.39	4.94	50.6	23.04	2.2
Cloud-A1	620	300	1702.8	1705.58	5.45	55.03	23.55	2.34
Cloud-A1	620	350	1702.8	1705.76	5.82	64.3	55.13	2.48
Cloud-A1	620	400	1702.8	1705.95	5.98	74.89	55.53	2.63
Cloud-A1	620	468	1702.8	1707.1	3.89	139.77	57.89	3.49
Cloud-A1	580	50	1702.2	1703.49	2.65	18.89	17.18	1.1
Cloud-A1	580	100	1702.2	1704.16	3.21	31.12	19.69	1.58
Cloud-A1	580	150	1702.2	1704.66	3.6	43.06	37.9	1.95
Cloud-A1	580	200	1702.2	1705.1	3.68	59.88	38.76	2.3
Cloud-A1	580	250	1702.2	1705.4	3.87	71.8	39.37	2.54
Cloud-A1	580	300	1702.2	1705.62	4.16	80.33	39.79	2.71
Cloud-A1	580	350	1702.2	1705.81	4.42	88.07	40.18	2.86
Cloud-A1	580	400	1702.2	1705.99	4.66	95.26	40.53	2.99
Cloud-A1	580	468	1702.2	1707.06	3.65	139.83	42.65	3.78
Cloud-A1	560	50	1701.9	1703	4.92	10.15	11.41	0.89
Cloud-A1	560	100	1701.9	1703.48	6.24	16.03	13.31	1.2
Cloud-A1	560	150	1701.9	1703.88	6.92	21.68	14.91	1.45
Cloud-A1	560	200	1701.9	1704.22	7.41	27	16.28	1.66
Cloud-A1	560	250	1701.9	1704.78	6.58	40.66	36.27	1.89
Cloud-A1	560	300	1701.9	1705	6.78	48.84	36.74	2.07
Cloud-A1	560	350	1701.9	1705.16	7.11	54.94	37.08	2.2
Cloud-A1	560	400	1701.9	1705.32	7.39	60.58	37.39	2.31
Cloud-A1	560	468	1701.9	1706.97	4.07	125.11	40.8	3.52

Exhibit A

HEC-RAS Plan: 10-99 River: CloudBurst Wash Reach: Cloud-A1								
Reach	River Sta	Q Total	Min Ch El	W.S. Elev	Vel Chnl	Flow Area	Top Width	Hydr Depth C
		(cfs)	(ft)	(ft)	(ft/s)	(sq ft)	(ft)	(ft)
Cloud-A1	540	50	1701.6	1702.47	4.9	10.19	13.47	0.76
Cloud-A1	540	100	1701.6	1702.85	6.42	15.58	14.99	1.04
Cloud-A1	540	150	1701.6	1703.13	7.5	20.01	16.13	1.24
Cloud-A1	540	200	1701.6	1703.37	8.34	23.98	17.08	1.4
Cloud-A1	540	250	1701.6	1703.57	9.09	27.51	17.89	1.54
Cloud-A1	540	300	1701.6	1703.86	9.16	32.74	19.02	1.72
Cloud-A1	540	350	1701.6	1704.18	8.96	39.06	20.31	1.92
Cloud-A1	540	400	1701.6	1704.52	8.65	46.8	27.84	2.15
Cloud-A1	540	468	1701.6	1706.88	4.17	118.29	32.59	3.92
Cloud-A1	500	50	1701	1701.96	4.02	12.45	14.85	0.84
Cloud-A1	500	100	1701	1702.45	4.97	20.13	16.79	1.2
Cloud-A1	500	150	1701	1702.79	5.74	26.12	18.16	1.44
Cloud-A1	500	200	1701	1702.76	7.8	25.64	18.06	1.42
Cloud-A1	500	250	1701	1703.01	8.27	30.23	19.05	1.59
Cloud-A1	500	300	1701	1703.17	9.04	33.2	19.66	1.69
Cloud-A1	500	350	1701	1703.34	9.55	36.64	20.35	1.8
Cloud-A1	500	400	1701	1704.38	6.68	59.92	24.5	2.45
Cloud-A1	500	468	1701	1706.89	3.53	137.18	33.28	4.33
Cloud-A1	480	50	1700.7	1701.61	4.9	10.2	13.53	0.75
Cloud-A1	480	100	1700.7	1702.07	5.89	16.97	15.83	1.07
Cloud-A1	480	150	1700.7	1702.44	6.45	23.25	17.7	1.31
Cloud-A1	480	200	1700.7	1702.61	7.62	26.26	18.54	1.42
Cloud-A1	480	250	1700.7	1702.87	7.98	31.32	19.86	1.58
Cloud-A1	480	300	1700.7	1703.13	8.19	36.62	21.15	1.73
Cloud-A1	480	350	1700.7	1703.3	8.7	40.25	21.99	1.83
Cloud-A1	480	400	1700.7	1704.43	5.49	75.62	43.47	2.21
Cloud-A1	480	468	1700.7	1706.94	2.58	191.25	48.54	4.25
Cloud-A1	460	50	1700.4	1700.73	6.32	7.92	24.34	0.33
Cloud-A1	460	100	1700.4	1700.9	8.4	11.91	24.99	0.48
Cloud-A1	460	150	1700.4	1701.04	9.58	15.66	25.58	0.61
Cloud-A1	460	200	1700.4	1701.19	10.31	19.39	26.16	0.74
Cloud-A1	460	250	1700.4	1701.31	11.03	22.66	26.65	0.85
Cloud-A1	460	300	1700.4	1701.43	11.63	25.8	27.12	0.95
Cloud-A1	460	350	1700.4	1701.54	12.11	28.9	27.57	1.05
Cloud-A1	460	400	1700.4	1704.67	2.49	201.51	111.25	3.61
Cloud-A1	460	468	1700.4	1707	1.13	493.67	128.95	5.39
Cloud-A1	440	50	1700.1	1700.39	5.89	8.48	30.15	0.28
Cloud-A1	440	100	1700.1	1700.78	4.87	20.55	31.71	0.65
Cloud-A1	440	150	1700.1	1700.9	6.1	24.59	32.21	0.76
Cloud-A1	440	200	1700.1	1701.01	7.17	27.89	32.62	0.85
Cloud-A1	440	250	1700.1	1701.1	8.08	30.92	32.99	0.94
Cloud-A1	440	300	1700.1	1701.18	8.96	33.49	33.3	1.01
Cloud-A1	440	350	1700.1	1703.13	3.3	106.14	41.11	2.58
Cloud-A1	440	400	1700.1	1704.67	2.24	180.29	79.43	3.3
Cloud-A1	440	468	1700.1	1706.99	1.15	479.13	133.99	5.33

Exhibit A

HEC-RAS Plan: 10-99 River: CloudBurst Wash Reach: Cloud-A1								
Reach	River Sta	Q Total	Min Ch El	W.S. Elev	Vel Chnl	Flow Area	Top Width	Hydr Depth C
		(cfs)	(ft)	(ft)	(ft/s)	(sq ft)	(ft)	(ft)
Cloud-A1	420	50	1699.8	1699.96	7.87	6.35	39.16	0.16
Cloud-A1	420	100	1699.8	1700.3	5.09	19.64	39.5	0.5
Cloud-A1	420	150	1699.8	1700.46	5.82	25.76	39.66	0.65
Cloud-A1	420	200	1699.8	1700.56	6.64	30.12	39.76	0.76
Cloud-A1	420	250	1699.8	1700.67	7.29	34.3	39.87	0.86
Cloud-A1	420	300	1699.8	1701.82	3.71	80.97	41.02	1.97
Cloud-A1	420	350	1699.8	1703.16	2.56	136.54	42.36	3.22
Cloud-A1	420	400	1699.8	1704.68	1.91	214.89	93.62	3.52
Cloud-A1	420	468	1699.8	1707	1.06	501.76	128.05	5.51
Cloud-A1	400	50	1699.5	1699.57	17.65	2.83	40.28	0.07
Cloud-A1	400	100	1699.5	1699.97	5.16	19.37	41.89	0.46
Cloud-A1	400	150	1699.5	1700.19	5.27	28.44	42.75	0.67
Cloud-A1	400	200	1699.5	1700.36	5.59	35.79	43.43	0.82
Cloud-A1	400	250	1699.5	1700.89	4.19	59.62	45.57	1.31
Cloud-A1	400	300	1699.5	1701.85	2.86	105.03	49.4	2.13
Cloud-A1	400	350	1699.5	1703.17	2.01	173.99	54.7	3.18
Cloud-A1	400	400	1699.5	1704.69	1.53	263.55	86.37	4.33
Cloud-A1	400	468	1699.5	1707	0.96	562.95	134.45	6.32
Cloud-A1	380	50	1699.2	1699.41	4.11	12.17	57.85	0.21
Cloud-A1	380	100	1699.2	1699.64	3.93	25.46	58.76	0.43
Cloud-A1	380	150	1699.2	1699.68	5.44	27.59	58.9	0.47
Cloud-A1	380	200	1699.2	1699.76	6.14	32.55	59.24	0.55
Cloud-A1	380	250	1699.2	1700.98	2.31	108.12	64.14	1.69
Cloud-A1	380	300	1699.2	1701.89	1.79	167.84	67.76	2.48
Cloud-A1	380	350	1699.2	1703.19	1.35	259.6	72.98	3.56
Cloud-A1	380	400	1699.2	1704.7	1.07	380.25	111.89	4.79
Cloud-A1	380	468	1699.2	1707	0.75	697.14	140.8	6.88
Cloud-A1	360	50	1698.9	1699.16	2.85	17.53	69.02	0.25
Cloud-A1	360	100	1698.9	1699.29	3.68	27.15	69.58	0.39
Cloud-A1	360	150	1698.9	1699.36	4.78	31.4	69.82	0.45
Cloud-A1	360	200	1698.9	1700	2.59	77.22	72.4	1.07
Cloud-A1	360	250	1698.9	1701	1.65	151.62	76.4	1.98
Cloud-A1	360	300	1698.9	1701.9	1.35	222	80	2.78
Cloud-A1	360	350	1698.9	1703.2	1.06	329.37	85.2	3.87
Cloud-A1	360	400	1698.9	1704.7	0.87	465.4	116.07	5.11
Cloud-A1	360	468	1698.9	1707	0.64	790.63	144.34	7.24

Exhibit B

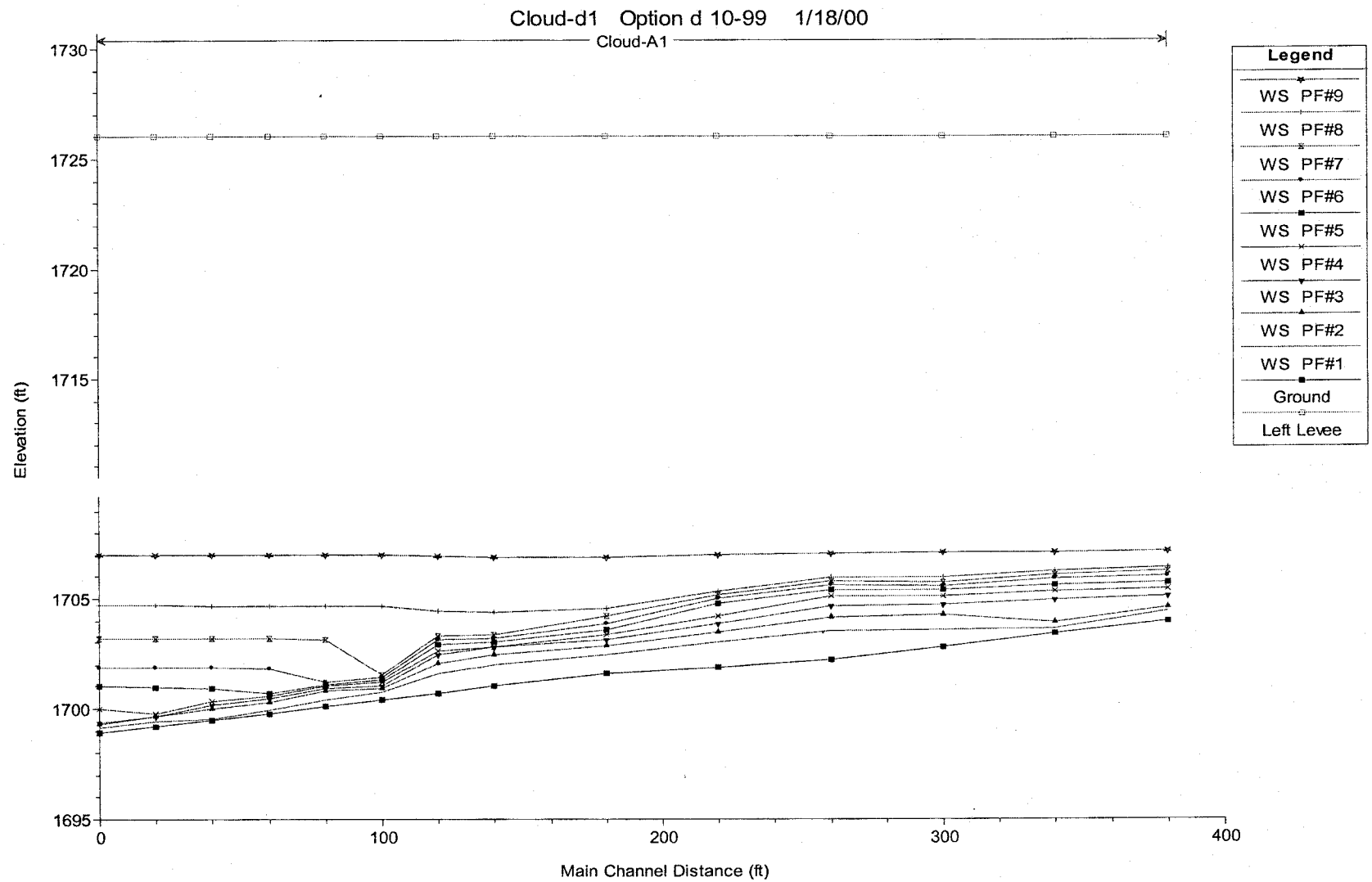
Cloud-d1 Option d 10-99 1/18/00
Cloud-A1
Elevation (ft)
1730
1725
1720
1715
1705
1700
1695
0
100
200
300
400
Main Channel Distance (ft)
Legend
WS PF#9
WS PF#8
WS PF#7
WS PF#6
WS PF#5
WS PF#4
WS PF#3
WS PF#2
WS PF#1
Ground
Left Levee

EXHIBIT C

Local Scour [Types A and B]

File Report

LOCAL SCOUR ANALYSIS

TYPES A and B - NATURAL CHANNEL FOR RESTRICTIONS AND BENDS AND BANKLINE STRUCTURES

HYDRAULIC DATA

Discharg	300	cfs	Mean Velocity	9.16	fps
Mean Depth	1.72	feet	Unit Discharge	15.8	cfs/ft
			Threshold Vel.	2.56	fps

SEDIMENT DATA

Bed Material Sizes:

D50:	2	mm
D85:		mm
D90:		mm

REACH DATA

Select Reach Type:

Straight Reach

SUMMARY OF RESULTS

English Units Metric Units

EXECUTE

METHOD	SCOUR DEPTH	
USBR I Equation	NA	
Lacey Equation	.58	feet
Blench Equation	2.923	feet
USBR II Equation	.43	feet
Neill Equation	4.434	feet
Ave.Scour Depth	2.09175	feet

EXHIBIT C

Local Scour [Types A and B]

File Report

LOCAL SCOUR ANALYSIS

TYPES A and B - NATURAL CHANNEL FOR RESTRICTIONS AND BENDS AND BANKLINE STRUCTURES

HYDRAULIC DATA

Discharg	350	cfs	Mean Velocity	8.7	fps
Mean Depth	1.83	feet	Unit Discharge	15.9	cfs/ft
			Threshold Vel.	2.56	fps

SEDIMENT DATA

Bed Material Sizes:

D50:	2	mm.
D85:		mm.
D90:		mm.

REACH DATA

Select Reach Type:

Straight Reach

SUMMARY OF RESULTS

(•) English Units ( ) Metric Units

EXECUTE

METHOD	SCOUR DEPTH	
☑ USBR I Equation	NA	
☑ Lacey Equation	.611	feet
☑ Blench Equation	2.935	feet
☑ USBR II Equation	.458	feet
☑ Neill Equation	4.389	feet
☑ Ave Scour Depth	2.09825	feet

EXHIBIT C

Local Scour [Types A and B]

File Report

LOCAL SCOUR ANALYSIS

TYPES A and B - NATURAL CHANNEL FOR RESTRICTIONS AND BENDS AND BANKLINE STRUCTURES

HYDRAULIC DATA

Discharg	350	cfs	Mean Velocity	9.55	fps
Mean Depth	1.8	feet	Unit Discharge	17.5	cfs/ft
			Threshold Vel.	2.56	fps

SEDIMENT DATA

Bed Material Sizes:

D50:	2	mm
D85:		mm
D90:		mm

REACH DATA

Select Reach Type:

Straight Reach

SUMMARY OF RESULTS

English Units Metric Units

EXECUTE

METHOD	SCOUR DEPTH	
USBR I Equation	NA	
Lacey Equation	.611	feet
Blench Equation	3.129	feet
USBR II Equation	.45	feet
Neill Equation	4.915	feet
Ave. Scour Depth	2.27625	feet

EXHIBIT C

Local Scour Types A and B

File Report

LOCAL SCOUR ANALYSIS

TYPES A and B - NATURAL CHANNEL FOR RESTRICTIONS AND BENDS AND BANKLINE STRUCTURES

HYDRAULIC DATA

Discharg	350	cfs	Mean Velocity	12.11	fps
Mean Depth	1.05	feet	Unit Discharge	12.5	cfs/ft
			Threshold Vel.	2.56	fps

SEDIMENT DATA

Bed Material Sizes:

D50:	2	mm
D85:		mm
D90:		mm

REACH DATA

Select Reach Type:

Straight Reach

SUMMARY OF RESULTS

English Units Metric Units

EXECUTE

METHOD	SCOUR DEPTH	
☑ USBR I Equation	NA	
☑ Lacey Equation	.611	feet
☑ Blench Equation	2.5	feet
☑ USBR II Equation	.262	feet
☑ Neill Equation	3.917	feet
☑ Ave.Scour Depth	1.8225	feet

Memo

Stantec

To: File

File: 82000157

From: Chuck Gopperton

Date: 18 January, 2000

Re: Golden Eagle Park Dam

Riprap Erosion Protection

(RIP-RAP SIZING/DESIGN)

Proposed Improvements

Cloudburst Wash

Cloudburst Wash flows along the toe of the dam to the principal outlet works where it confluences with Ashbrook Wash. See Figure 1 for a site plan.

Embankment fill for the dam will extend approximately 10 feet into the existing channel. The channel will be deepened and widened. Erosion protection consisting of a layer of dumped riprap will be placed at the toe of the embankment to protect the dam from erosion caused by flows in the wash. See Figure 2 for a typical section of the proposed improvements.

Auxiliary Outlet Works

The auxiliary outlet works is a low level drain which will be constructed parallel to the existing outlet works. It will consist of a 10' x 4' concrete box conduit through the dam embankment with an energy dissipater at the outlet to force a hydraulic jump and reduce the velocity of the flow. The flow will then discharge through a channel and confluence with Ashbrook Wash and the flow from the principal outlet works. Emergency spillway flows will return to the channel further downstream. See Figure 3 for a site plan. Riprap will be placed at the end of the energy dissipater on the bottom and sides of the channel. Riprap will continue downstream to tie into the existing shotcrete bank slope protection. It will also be placed between the two outlet works. See Figure 4 and 5 for details of the energy dissipater and riprap placement.

Riprap Sizing Analysis

Sizing of riprap is based on the flow velocity expected at the channel bed or along the side slopes.

Cloudburst Wash

An HEC-RAS model was prepared for the developed channel and discharges ranging from 50 cfs up to the peak 10 year flow rate of 468 cfs were analyzed with the model. Four different flow conditions at different river stations and flow rates were chosen for local scour analysis. These same stations will also be used for the design of the riprap. These reflect a mix of the maximum velocity, depth and unit discharge rates which should give maximum theoretical scour depths. A tabular printout of the results of the HEC-RAS model is provided in Exhibit A. The four conditions considered in the riprap analysis are summarized in Table 1.

Table 1

Station (ft) (1)	Discharge (cfs) (2)	Flow Depth (ft) (3)	Flow Velocity (ft/sec) (4)	Unit Discharge (cfs/ft) (5)
460	350	1.05	12.11	12.5
480	350	1.83	8.70	15.9
500	350	1.80	9.55	17.5
540	300	1.72	9.16	15.8

The design velocities for sizing the riprap range from 8 - 12 feet/sec. The size of the riprap is determined from the "Hydraulic Design of Stilling Basins and Energy Dissipaters", (U.S. Bureau of Reclamation, 1974, Figure 165). A copy of that figure is attached as Exhibit B. Table 2 summarizes the velocity and riprap size as determined by that method.

Table 2

Description (1)	Flow Velocity (ft/sec) (2)	Riprap size (in) (3)
Average velocity, all stations, all flows	5.15	4.0
Maximum velocity station 480	8.70	10.6
Maximum velocity station 460	12.11	21.0

The recommended minimum size of rock for riprap is between 4 - 21 inches. A majority of the peak velocities are in the 8 - 11 feet per second range which corresponds to a rock size of approximately 10 - 18 inches. It is recommended that a majority of the stones be of the larger sizes needed to resist the peak velocities expected in the channel.

Auxiliary Outlet Works

A concrete stilling basin with an end sill will be constructed to reduce the velocity of the flow from the auxiliary outlet works. The basin is sized for the 100 year flow event, and will drown out due to tailwater effects under higher flows. The velocity immediately downstream of the sill is estimated by multiplying the theoretical depth of the hydraulic jump by the width of the structure (28 feet). Table 3 summarizes the flow conditions analyzed for the design of the riprap.

Table 3

Description (1)	Flow Velocity (ft/sec) (2)	Flow Depth (ft) (3)	Riprap size (in) (4)
Q_{100} - 883 cfs	4.28	7.36	3.0
IDF - Peak stage - 1,077 cfs	3.24	11.85	2.0

The recommended size of riprap is between 2 - 3 inches. It is recommended that instead of providing a 3 inch rock, the same riprap used to fill the gabions be used at the outlet works. It is somewhat larger than needed, but it will be more economical than furnishing another smaller size of riprap. This will also provide an additional safety factor against erosion and reduce the maintenance that can be expected.

Recommended Riprap Sizing

The gradation should be based on the median rock diameter, identified as the D_{50} class. For the upstream face of the dam within Cloudburst Wash, the D_{50} class should be 12" and the riprap should meet the gradation requirements shown in Table 4.

Table 4

Median Rock Diameter	Percent By Weight, Passing Upper Limit	Percent By Weight, Passing Lower Limit
(1)	(2)	(3)
24 inch	100	90
18 inch	85	70
12 inch	50	30
8 inch	15	5
4 inch	5	0

Between 50% - 70% of the rock will remain stable during flows up to approximately 9 feet per second. Layer thickness should be 24" minimum. A logarithmic plot of the recommended gradation limits for the riprap is shown on Figure 6.

For the auxiliary outlet works and channel , the riprap should be the same rock used to fill the gabions. The D50 class should be 6" and the riprap should meet the gradation requirements shown in Table 5 below:

Table 5

Median Rock Diameter	Percent By Weight, Passing Upper Limit	Percent By Weight, Passing Lower Limit
(1)	(2)	(3)
12 inch	100	90
9 inch	85	70
6 inch	50	30
4 inch	15	5
2 inch	5	0

Between 85% - 95% of the rock will remain stable during flows up to approximately 5 feet per second. Layer thickness should be 12" minimum. A logarithmic plot of the recommended gradation limits for the riprap is shown on Figure 6.

STANTEC CONSULTING INC.

Chuck Gopperton, PE
Project Engineer
cgopperton@stantec.com

c. Tom Renckly, FCDMC; George Sabol, Stantec; Jerry Cox, ADWR

p:\82000157\correspondence\memos\cvg011800m2f.doc

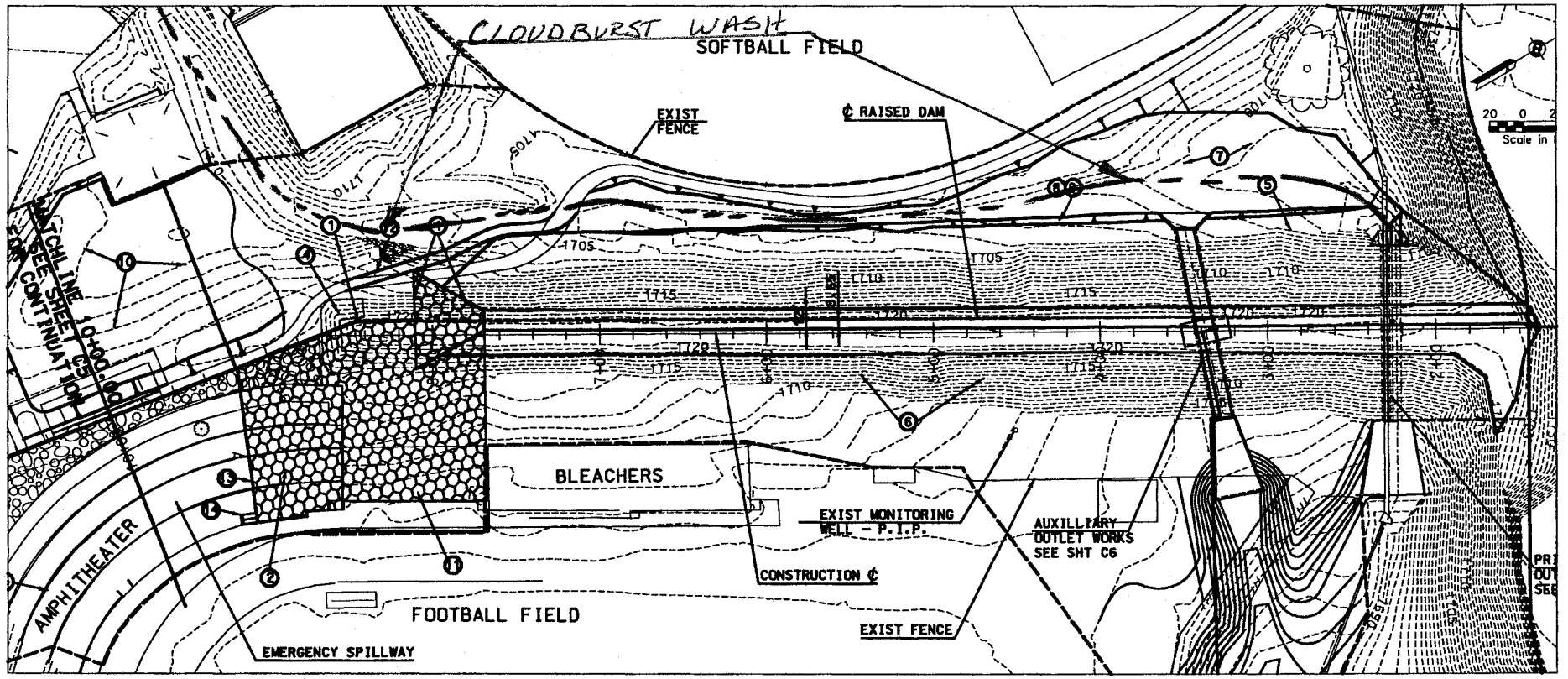
CLOUDBURST WASH
SOFTBALL FIELD
EXIST FENCE
℄ RAISED DAM
MATCH LINE 10+00.00
SEE SHEET C5
FOR CONTINUATION
BLEACHERS
EXIST MONITORING WELL - P.I.P.
AUXILLIARY OUTLET WORKS SEE SHT C6
CONSTRUCTION ℄
AMPHITHEATER
FOOTBALL FIELD
EXIST FENCE
EMERGENCY SPILLWAY
1705
1710
1715
1720
Scale in

FIGURE 1

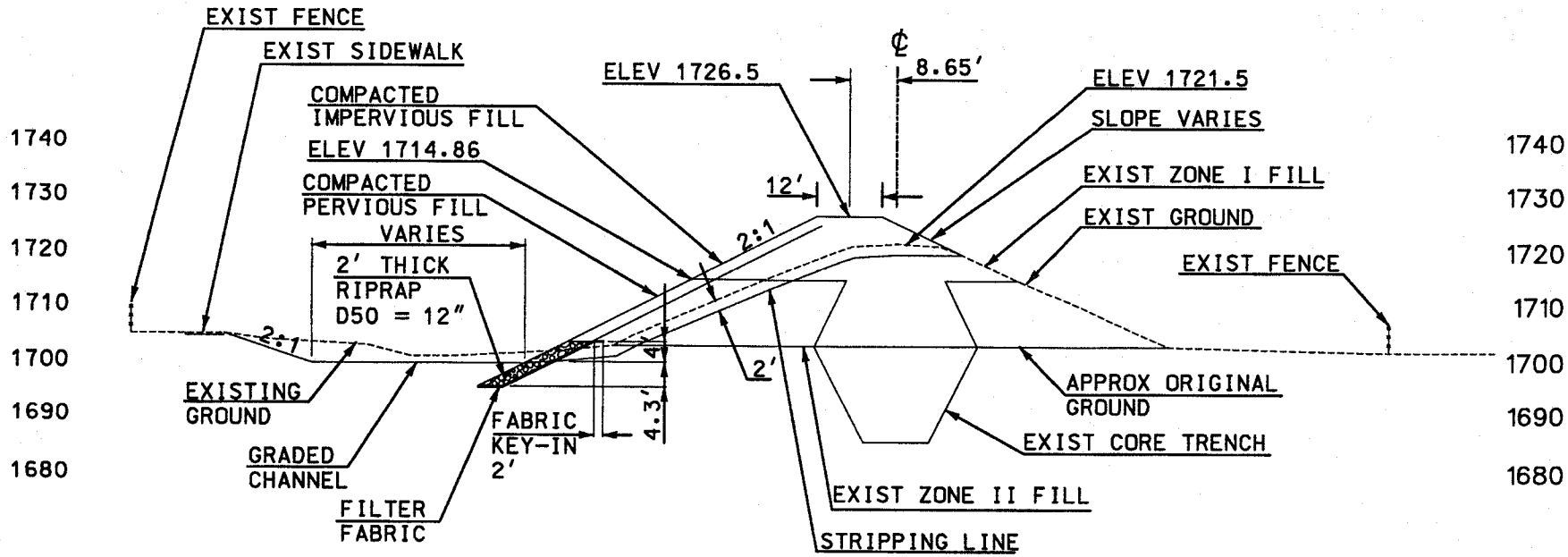

NOTES:
1. STRIP UPSTREAM SIDE AND TOP OF DAM 2' OR MORE AS DIRECTED BY THE ENGINEER PRIOR TO PLACING EMBANKMENT
2. BOTTOM ELEVATION OF IMPERVIOUS FILL SHALL BE AT OR BELOW THE LEVEL OF ADJACENT ZONE I FILL
3. COMPACT ALL LAYERS TO A MINIMUM OF 95% OF THE MAXIMUM DENSITY
4. WHERE CONSTRUCTION OF EMBANKMENT OCCURS AGAINST EXISTING SLOPES, THE SLOPE SHALL BE STRIPPED OF LOOSE MATERIAL AND BENCHED PER DETAIL THIS SHEET

DAM TYPICAL SECTION
NTS

FIGURE 2

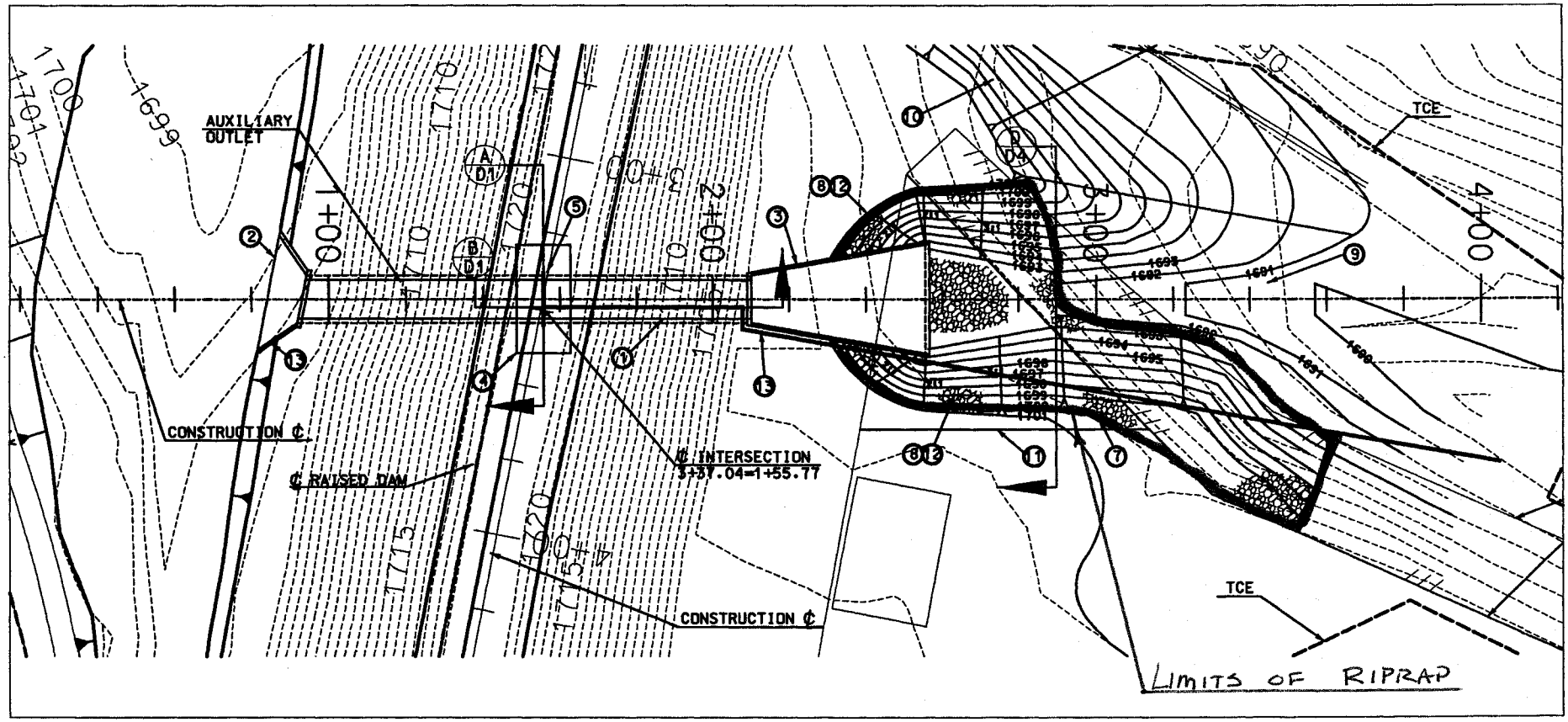
AUXILIARY OUTLET
CONSTRUCTION ℄
℄ RAISED DAM
℄ INTERSECTION
3+37.04=1+55.77
CONSTRUCTION ℄
TCE
TCE
LIMITS OF RIPRAP
1+00
2+00
3+00
4+00
1699
1700
1701
1710
1713
1715
1720
1722
1691
1692
1693
1694
1695
1696
1697
1698
1699
1700
1701

FIGURE 3

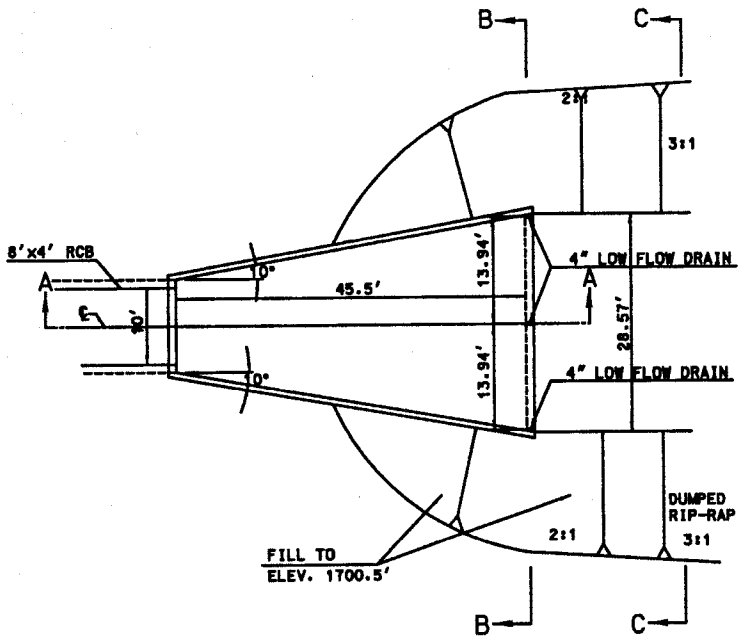

ENERGY DISSIPATOR
NTS

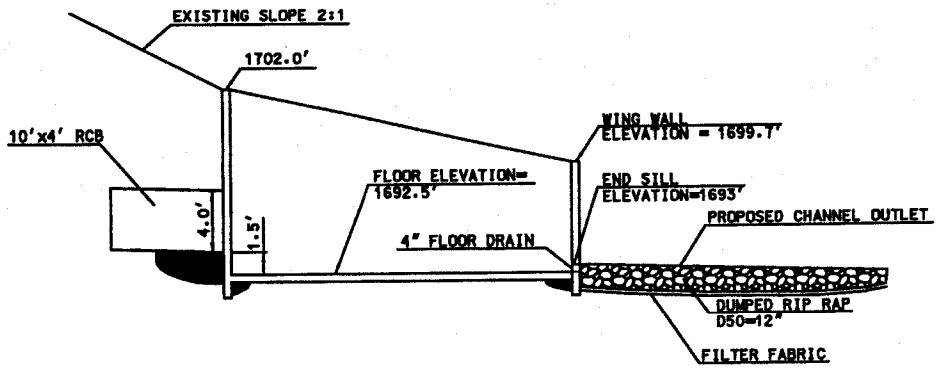

SECTION A-A
NTS

FIGURE 4

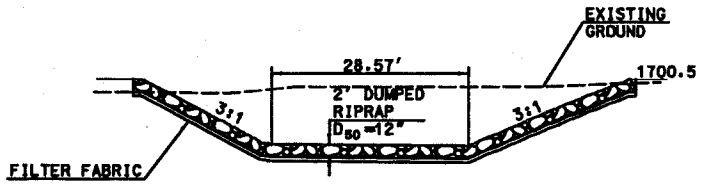

SECTION C-C
NTS

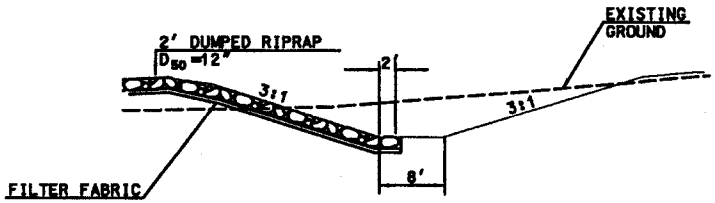

SECTION D-D
NTS

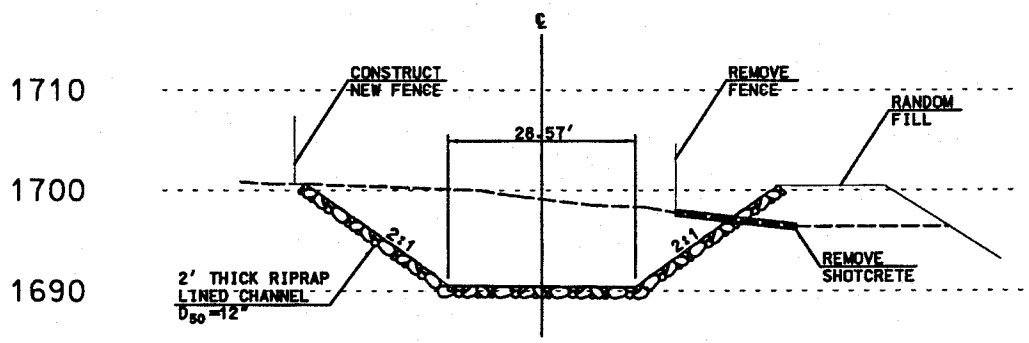

TYPICAL SECTION
IMMEDIATELY DOWNSTREAM
OF ENERGY DISSIPATER

NOTE:
1. FOR LIMITS OF RIPRAP, SEE SHEET C6.
2. FOR TRANSITION IN CHANNEL BOTTOM WIDTH SEE SHEET C6.

FIGURE 5

Exhibit A

Velocity Statistics for Cloudburst Wash							
River Sta	Q Total (cfs)	Vel Chnl (ft/s)	Hydr Depth (ft)				
360	50	2.85	0.25				
360	100	3.68	0.39	Avg Vel	5.15	ft/sec	
360	150	4.78	0.45	Max Vel	12.11	ft/sec	
360	200	2.59	1.07	Min Vel	0.64	ft/sec	
360	250	1.65	1.98	Std Dev	2.52	ft/sec	
360	300	1.35	2.78				
360	350	1.06	3.87	Design Range	2.62	ft/sec	
360	400	0.87	5.11	(plus/minus 1 std dev)	7.67	ft/sec	
360	468	0.64	7.24				
380	50	4.11	0.21				
380	100	3.93	0.43				
380	150	5.44	0.47				
380	200	6.14	0.55				
380	250	2.31	1.69				
380	300	1.79	2.48				
380	350	1.35	3.56				
380	400	1.07	4.79				
380	468	0.75	6.88				
400	100	5.16	0.46				
400	150	5.27	0.67				
400	200	5.59	0.82				
400	250	4.19	1.31				
400	300	2.86	2.13				
400	350	2.01	3.18				
400	400	1.53	4.33				
400	468	0.96	6.32				
420	50	7.87	0.16				
420	100	5.09	0.5				
420	150	5.82	0.65				
420	200	6.64	0.76				
420	250	7.29	0.86				
420	300	3.71	1.97				
420	350	2.56	3.22				
420	400	1.91	3.52				
420	468	1.06	5.51				
440	50	5.89	0.28				
440	100	4.87	0.65				
440	150	6.1	0.76				
440	200	7.17	0.85				
440	250	8.08	0.94				
440	300	8.96	1.01				
440	350	3.3	2.58				
440	400	2.24	3.3				
440	468	1.15	5.33				
460	50	6.32	0.33				
460	100	8.4	0.48				
460	150	9.58	0.61				
460	200	10.31	0.74				

Exhibit A

Velocity Statistics for Cloudburst Wash

River Sta	Q Total (cfs)	Vel Chnl (ft/s)	Hydr Depth (ft)
460	250	11.03	0.85
460	300	11.63	0.95
460	350	12.11	1.05
460	400	2.49	3.61
460	468	1.13	5.39
480	50	4.9	0.75
480	100	5.89	1.07
480	150	6.45	1.31
480	200	7.62	1.42
480	250	7.98	1.58
480	300	8.19	1.73
480	350	8.7	1.83
480	400	5.49	2.21
480	468	2.58	4.25
500	50	4.02	0.84
500	100	4.97	1.2
500	150	5.74	1.44
500	200	7.8	1.42
500	250	8.27	1.59
500	300	9.04	1.69
500	350	9.55	1.8
500	400	6.68	2.45
500	468	3.53	4.33
540	50	4.9	0.76
540	100	6.42	1.04
540	150	7.5	1.24
540	200	8.34	1.4
540	250	9.09	1.54
540	300	9.16	1.72
540	350	8.96	1.92
540	400	8.65	2.15
540	468	4.17	3.92
560	50	4.92	0.89
560	100	6.24	1.2
560	150	6.92	1.45
560	200	7.41	1.66
560	250	6.58	1.89
560	300	6.78	2.07
560	350	7.11	2.2
560	400	7.39	2.31
560	468	4.07	3.52
580	50	2.65	1.1
580	100	3.21	1.58
580	150	3.6	1.95
580	200	3.68	2.3
580	250	3.87	2.54
580	300	4.16	2.71
580	350	4.42	2.86

Exhibit A

Velocity Statistics for Cloudburst Wash

River Sta	Q Total (cfs)	Vel Chnl (ft/s)	Hydr Depth (ft)	
580	400	4.66	2.99	
580	468	3.65	3.78	
620	50	3.67	0.75	
620	100	3.88	1.3	
620	150	4.18	1.69	
620	200	4.5	1.99	
620	250	4.94	2.2	
620	300	5.45	2.34	
620	350	5.82	2.48	
620	400	5.98	2.63	
620	468	3.89	3.49	
660	50	8.48	0.24	
660	100	7.66	0.51	
660	150	3.74	1.45	
660	200	3.89	1.81	
660	250	4.15	2.08	
660	300	4.45	2.29	
660	350	4.77	2.45	
660	400	5.14	2.58	
660	468	4.51	3.26	
700	50	4.02	0.4	
700	100	5.26	0.61	
700	150	4.43	1.05	
700	200	4.35	1.4	
700	250	4.45	1.67	
700	300	4.64	1.9	
700	350	4.87	2.09	
700	400	5.15	2.23	
700	468	4.44	2.9	
400	50	17.65	0.07	throw out this value - flow depth is too shallow

EXHIBIT B

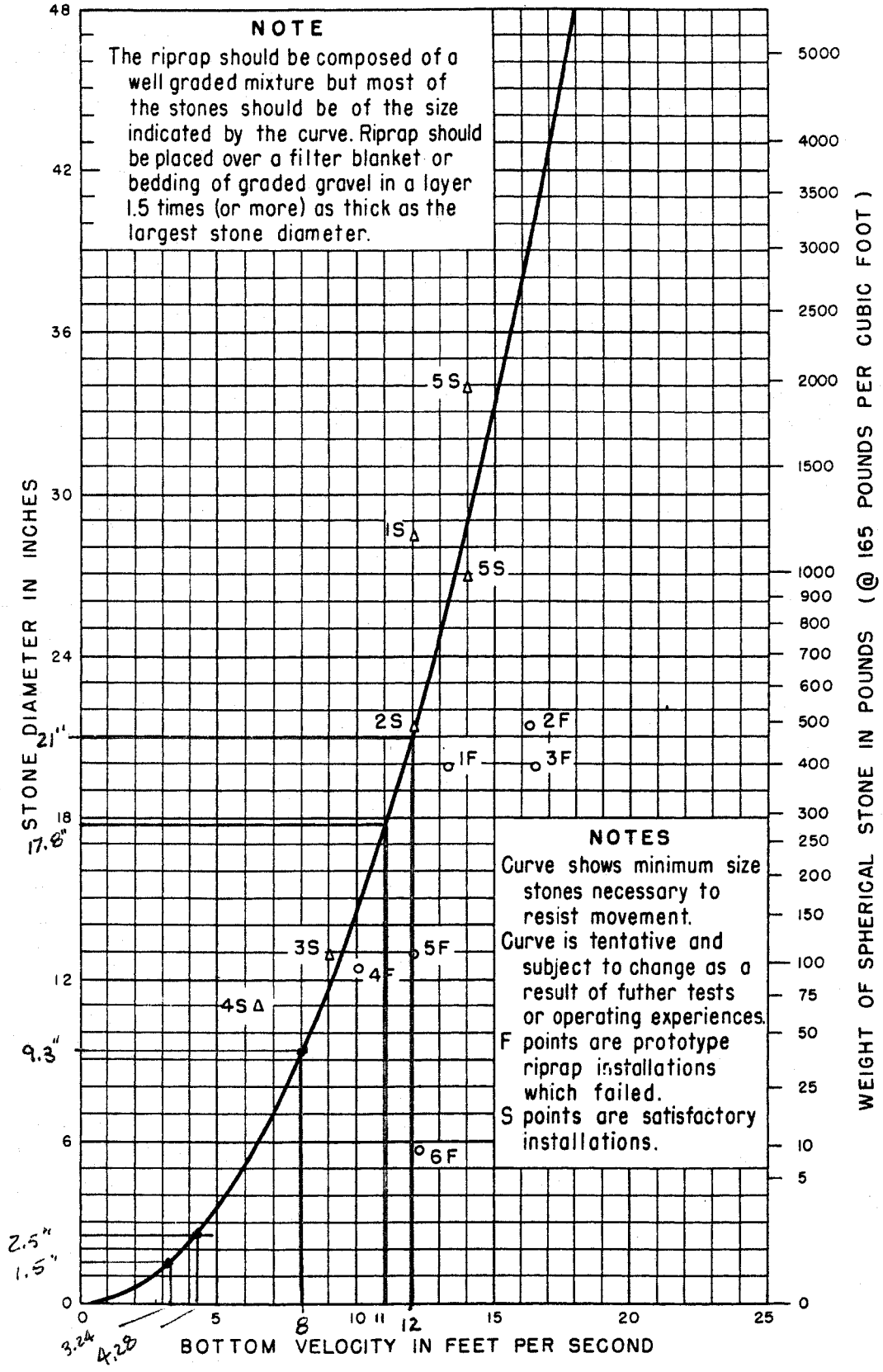

FIGURE 165.—*Curve to determine maximum stone size in riprap mixture.*

Figure 6
Riprap Gradation for Cloudburst Wash

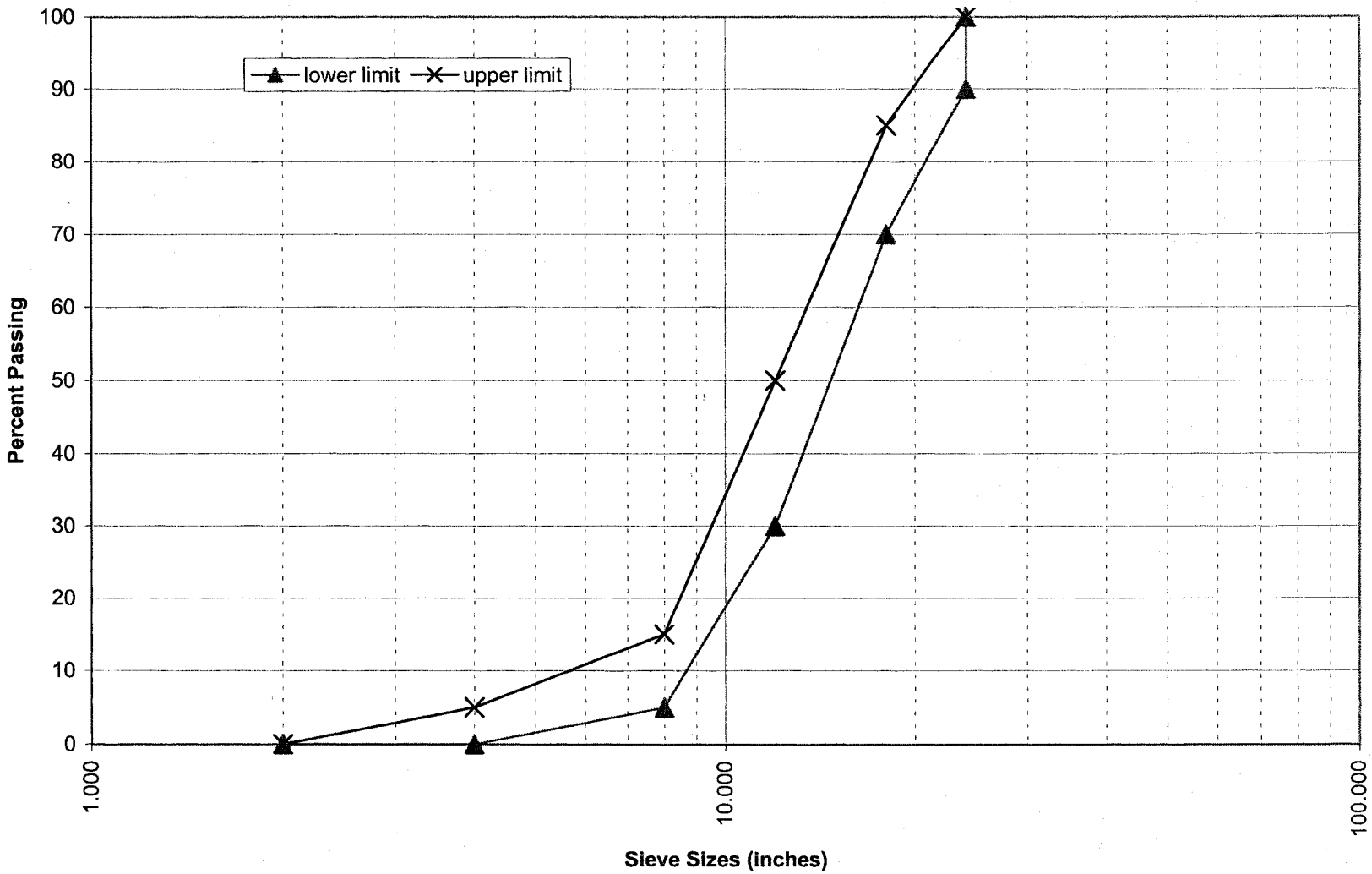

Figure 7
Riprap Gradation for Auxiliary Outlet Works

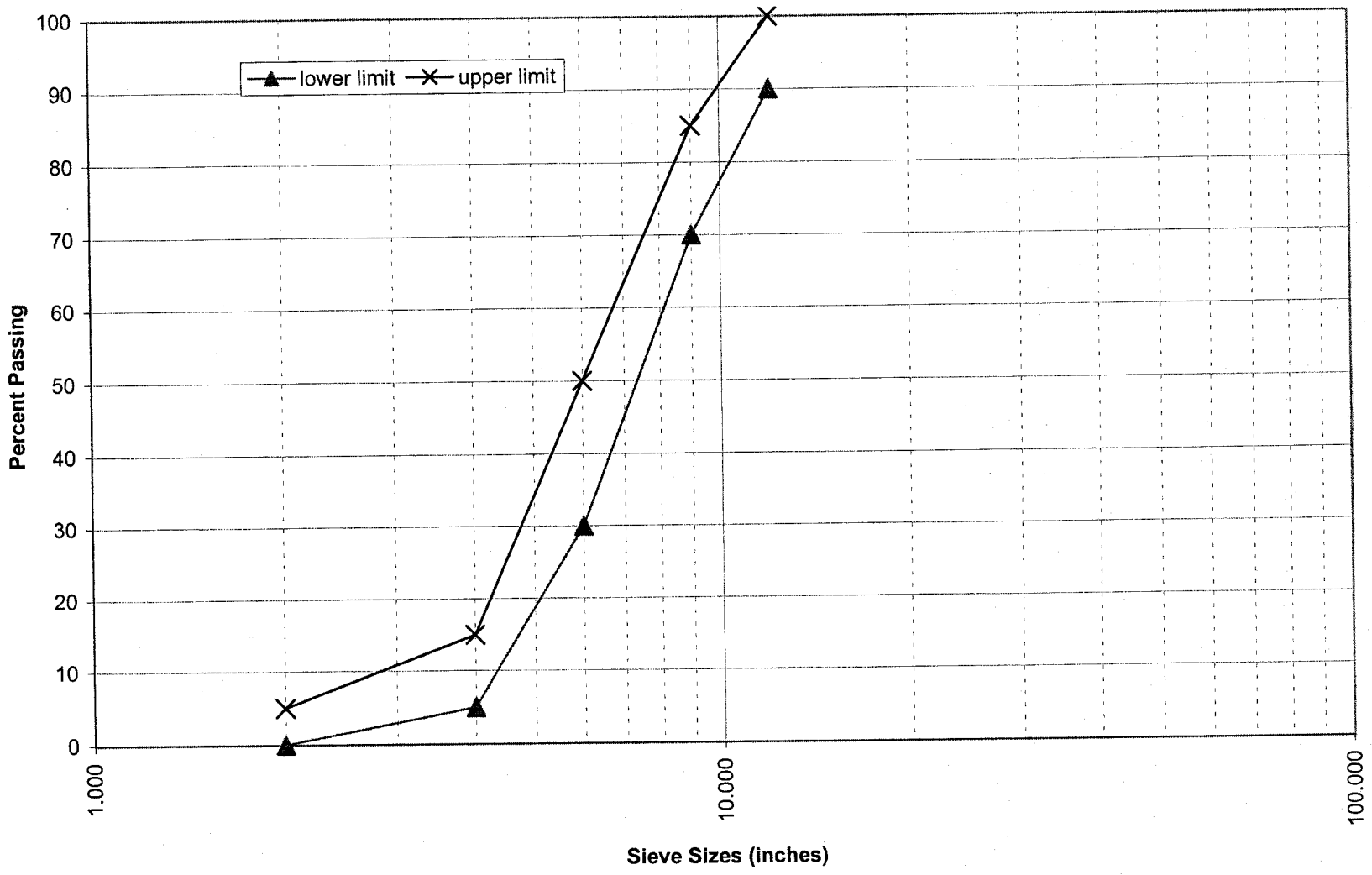

Memo

Stantec

To: File

File: 82000157

From: Chuck Gopperton

Date: 14 January, 2000

Re: Golden Eagle Park Dam

Emergency Spillway Erosion Protection

Configuration of spillway

The spillway consists of an existing and proposed section. The existing spillway has a crest elevation of approximately 1714.9' and a length of approximately 266 feet. The proposed new section is 90 feet long and is notched 2 feet lower with a crest elevation of 1712.9'. A concrete cutoff wall exists at the crest of the existing spillway and will be continued, 2 feet lower through the proposed new section. The notched section will be backfilled with an erodible uniform gravel "fuseplug" fill which will scour away quickly once flow begins through the spillway.

Hydraulics of spillway

For the inflow design flood (IDF2), the peak discharge through the emergency spillway is approximately 24,000 cfs. Approximate peak flows through the higher existing spillway are 16,000 cfs and 8,000 cfs through the proposed notched section. Peak unit discharges are approximately 60 cfs/foot for the existing spillway and 89 cfs/foot for the notched section at the maximum head during the Inflow Design Flood (IDF) flood. Peak velocities through the spillway vary from 14 cfs to 27 cfs depending on whether the velocity is calculated at the top or the toe of the spillway and in the notched or existing spillway. See Table 1 for the flow/velocity/time relationships for the spillway. In addition, velocities vary greatly with time since the IDF is sharply peaked. See Figure 1 for a graph of the IDF.

Erosion Protection

Based on anticipated spillway hydraulics, the need for spillway erosion protection was evaluated. This consisted of field exploration of conditions in the existing emergency spillway. Excavation of test pits in the crest and

amphitheater area under the direction of AEE was conducted (see the AEE geotechnical report). Although the spillway was originally designed and constructed with a dumped and grouted riprap spillway crest and chutes, much of this erosion protection does not currently exist. Furthermore, the masonry amphitheater steps will not withstand even moderate flows much less the spillway design flows. Therefore, the spillway can be expected to experience significant erosion during operation. Further consideration of spillway erosion potential indicates the following:

- Although spillway flows are erosive to the earthen structure, the duration of spillway flows are expected to be short (see Figure 1). The duration of the high velocity flows is even shorter (see Figure 3). Therefore, there will be limited opportunity for erosion to propagate through the earthen structure to cause breach of the impounded waters below elevation 1714.9 feet.
- The likely erosion path through the existing emergency spillway is quite long and would require a massive headcut through the earthen section to breach the dam.
- The shortest erosion path is where the spillway is being enlarged (the notched section) and some portion of that erosion path is through embankment fill.

Based on those considerations and evaluation of alternatives for erosion protection, the recommended spillway erosion protection will consist of rock-filled gabions and mattress on the crest and chute of the enlarged portion of the emergency spillway and extending some distance into the existing portion of the emergency spillway.

Analysis of Gabions

The analysis of the gabions is based on the velocity of the flowing water over the gabions. Gabions were chosen over rock riprap because they perform under higher velocity flows than riprap without failure. The gabion wire prevents the individual rocks from being carried away by the flow and the gabion mattress or basket acts as a unit. However, high velocities will cause the rock to shift within the baskets, and if the velocity is high enough, the baskets will deform to the point where failure can occur. High velocities may also create a negative pressure which causes the mattress to lift off the slope and can also cause failure. In the design of gabions for where water flows

over the top, the following two design velocities are considered. *Critical velocity* is the velocity at which the gabion revetment will remain stable without movement of the rock fill. The *limiting velocity* is the velocity at which there is an acceptable amount of deformation in the gabion mattress due to movement of the stones within the gabion compartments. Per Macaferri, the design velocities for a 1 foot thick gabion mattress with 4 - 6 inch rock are:

- Critical Velocity - 5 meters/sec (15.9 feet/sec)
- Limiting Velocity - 6.4 meters/sec (20.4 feet/second)

For 18" thick gabion headers at the top and bottom of the spillway, the design velocities with 4 - 8 inch rock are:

- Critical Velocity - 5.8 meters/sec (18.4 feet/sec)
- Limiting Velocity - 7.6 meters/sec (24.2 feet/second)

A copy of the Macaferri design guidelines are attached as Exhibit A.

Peak velocities at the crest of the spillway are between 14 - 20 feet/second and fall below the design limiting velocity of 20.4 - 24.2 feet/second. Velocities at the toe of the spillway range from 17 - 26 feet/second. This is acceptable for the gabion header at the bottom, however, it is too high for the 12 inch thick mattress. Since the design velocities for the mattress are based on 4 - 6 inch rock and on this project, rock fill will be 4 - 8 inch rock, this will provide an additional factor of safety. The design velocities for the gabion headers are based on an 18 inch thick gabion basket, and the gabion headers being constructed are 3 feet thick. This will also provide an additional factor of safety. The amount of time that the flow over the spillway actually creates the peak velocities is very short. A plot of the time-discharge relationship for the flow over the spillway is shown on Figure 2 and a plot of the time-velocity relationship for the flow over the spillway is shown on Figure 3.

To prevent shear force from moving the gabions off the chute or lifting them up, the gabions will be anchored down to the slope with steel posts. The posts are steel fence posts, driven into the ground at 3 feet on center each direction. A double wrap of tie wire at the top and bottom of each basket is wrapped around the post.

3 feet x 3 feet gabion headers will be constructed along all sides of the gabion mattress to prevent undercutting, and to anchor the mattress down at the edges. The top of the gabions will also be anchored into the concrete cutoff wall. It is proposed to excavate for the cutoff wall and pour it directly in the trench. The gabions will form one side of the trench, and the gabion basket will be embedded into the concrete, thus anchoring it the wall.

Filter fabric will be installed under the gabions which will prevent the detrimental movement of the foundation soil particles during high velocity flows over the spillway chute.

The function of the gabions is to prevent a headcut from breaching the dam at the spillway section. The gabions as designed (see Figures 4, 5 and 6) will prevent the headcut from beginning at the critical location and will provide low cost and low maintenance scour protection for the emergency spillway.

STANTEC CONSULTING INC.

Chuck Gopperton, PE
Project Engineer
cgopperton@stantec.com

c. Tom Renckly, FCDMC; George Sabol, Stantec; Jerry Cox, ADWR

p:\82000157\correspondence\memos\cvg011200m2f.doc

Figure 1

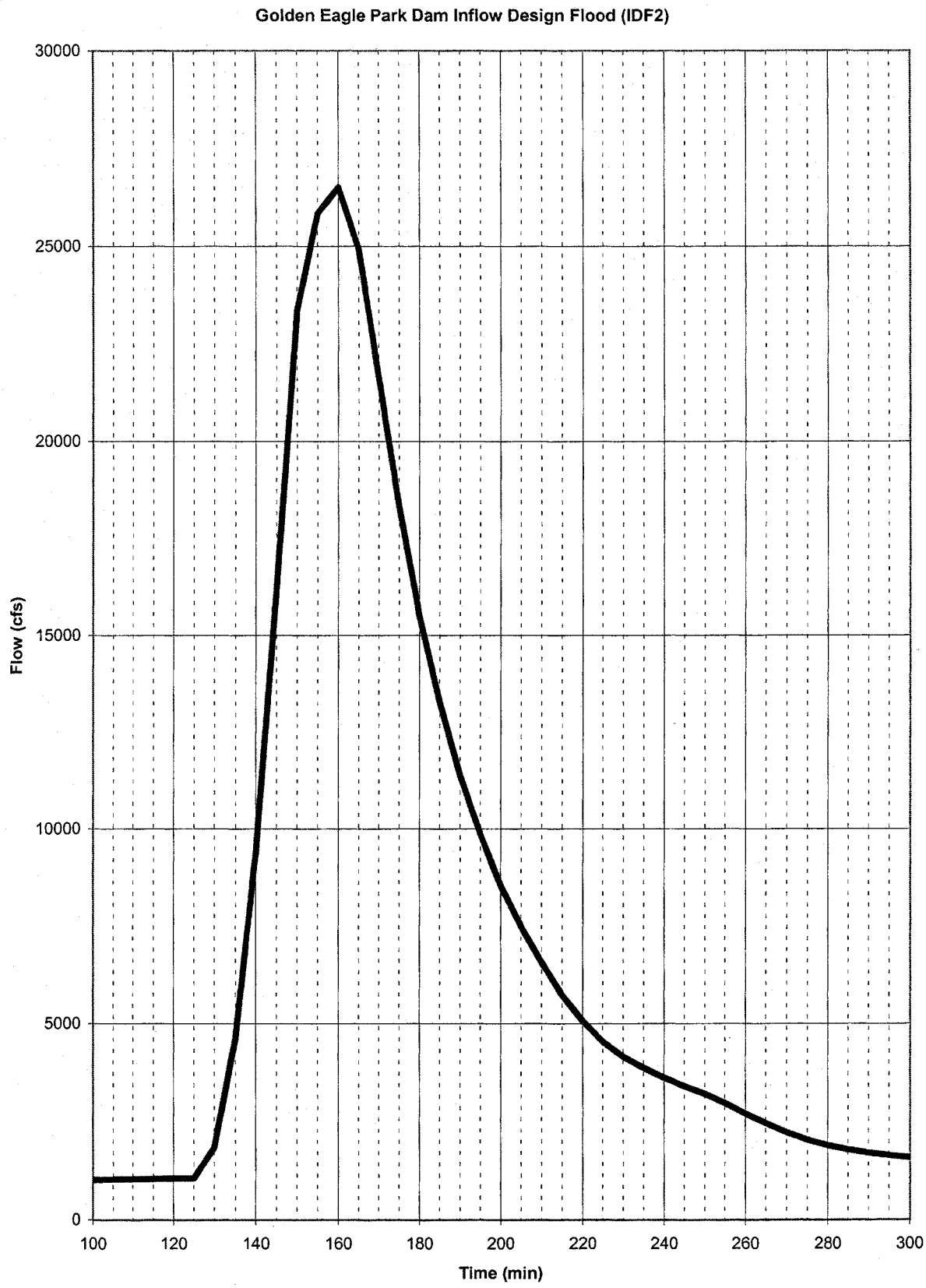
Golden Eagle Park Dam Inflow Design Flood (IDF2)
30000
25000
20000
15000
10000
5000
0
Flow (cfs)
100
120
140
160
180
200
220
240
260
280
300
Time (min)

Exhibit "A"

«Critical velocity» is the velocity at which the revetment will remain stable without movement of the fill, while «limit velocit» is that which is still acceptable although there is some deformation of the Reno mattress due to movement of the stones within the compartments (table 2).
It is essential for the longevity of the revetment that the mesh be protected against corrosion: Reno mattresses and gabions are therefore manufactured from meshes with a heavy zinc coating which complies with the strictest international standards.
However, when the lining is subjected to polluted or aggressive water, the risk of corrosion is increased, and Reno mattress and/or gabions made from wire which has been coated with both zinc and PVC, offering high resistance to chemicals, abrasion and ageing, should be used.

On entend par «vitesse critique» la vitesse maximale supportable par le revêtement sans provoquer le déplacement de la pierraille de remplissage et par «vitesse limite» celle, encore acceptable, qui engendre de légères déformations dues à l'entassement de la pierraille dans le matelas Reno (tableau 2).
Nous fournissons ici aussi le tableau 3 qui montre quelques valeurs indicatives de la vitesse limite au fond des cours d'eau naturels.
La protection du grillage contre la corrosion est d'une importance vitale pour la durée du revêtement; c'est pourquoi les matelas Reno et les gabions sont constitués d'un grillage métallique galvanisé conformément aux plus sévères normes internationales.
Toutefois, nous conseillons en présence d'eaux polluées, ou de toute façon agressives, c'est-à-dire là où la corrosion est particulièrement forte, de recourir aux matelas Reno et/ou aux gabions galvanisés sous gaine PVC, insensibles aux attaques chimiques, aux phénomènes d'abrasion et à l'usure.

Por «velocidad crítica» se entiende la velocidad máxima que puede soportar el revestimiento sin que se produzcan movimientos de las piedras en el interior del colchón y, por «velocidad límite», la velocidad, aún aceptable, que determina deformaciones reducidas debido al amontonamiento de las piedras en el colchón Reno (tabla 2).
Para mayor comodidad, se agrega la tabla 3 con algunos valores indicativos de la velocidad límite en el fondo de los cursos de agua naturales.
La protección de la red contra la corrosión es de vital importancia para la duración del revestimiento; por esta razón, los colchones Reno y los gaviones están formados por una red metálica fuertemente galvanizada, en conformidad con las más rigurosas normas internacionales.
Sin embargo, en el caso de aguas contaminadas o corrosivas, es decir, donde el problema de la corrosión es más agudo, es aconsejable la utilización de colchones Reno y/o gaviones galvanizados y revestidos con una capa de PVC altamente resistente a los agentes químicos, los fenómenos abrasivos y al envejecimiento.

***Tab. 2** - Indicative Reno mattress and gabion thicknesses in relation to water velocities*

***Tab. 2** - Epaisseurs approximatives des revêtements en matelas Reno et en gabions en fonction de la vitesse du courant*

***Tab. 2** - Espesores indicativos de los revestimientos en colchones Reno y en gaviones en función de la velocidad de la corriente*

Type Type Tipo	Thickness Epaisseur Espesor m	Filling stones Pierraille de remplissage Pedrisco de relleno Stone size Granulométrie Dimensiones mm	d_{50}	Critical velocity (*) Vitesse critique (*) Velocidad crítica (*) m/s	Limit velocity (*) Vitesse limite (*) Velocidad limite (*) m/s
Reno mattresses Matelas Reno Colchones Reno	0.15-0.17	70-100	0.085	3.5	4.2
		70-150	0.110	4.2	4.5
	0.23-0.25	70-100	0.085	3.6	5.5
		70-150	0.120	4.5	6.1
	* 0.30	70-120	0.100	4.2	5.5
		* 100-~~150~~ 200	~~0.125~~ .15	5.0	6.4
Gabions Gabions Gaviones	* ~~0.50~~ 1.0	* 100-200	0.150	5.8	7.6
		120-250	0.190	6.4	8.0

(*) The values of velocity reported were obtained experimentally for Froude numbers ≤1 (see pag. 33); values > have to be intended purely indicative and approximated.

(*) Les valeurs des vitesses indiquées sont tirées expérimentalement des nombres de Froude ≤1 (voir page 33); les valeurs >1 sont purement indicatives.

(*) Los valores de velocidad indicados han sido calculados experimentalmente para números de Froude ≤1 (pág. 33); para valores >1, deben considerarse como puramente indicativos y muy en general.

***Tab. 3** - Limiting velocities at bed level for various soils*

***Tab. 3** - Valeurs indicatives de vitesse limite au fond*

***Tab. 3** - Valores indicativos de la velocidad límite en el fondo*

Bed material / Matériaux constituant le lit / Material del cauce			Velocity / Vitesse / Velocidad m/s	
			A	B
Fine sand. (*)	Sable fin(*)	Arena fina	0.45	0.75
Sandy clay. (*)	Terrain argileux-sablonneux (*)	Terreno arcilloso-arenoso	0.55	0.75
Soft clays	Terrain argileux-vaseux	Terreno arcilloso-limoso	0.60	0.90
Muds	Limons normaux	Limos normales	0.75	1.05
Coarse sand	Gravier fin	Grava fina	0.75	1.50
Medium clay	Argile compacte	Arcilla compacta	1.15	1.50
Gravel	Gravier ordinaire	Grava gruesa	1.20	1.85
Shingle	Cailloux et galets	Guijarros y pedrisco	1.50	1.70
Hard clay	Schistes argileux	Arcillas-esquistosas	1.85	1.85

Table 1

Stage	Discharge through spillway Crest=1714.9 (cfs)	Discharge through spillway Crest=1712.9 (cfs)	Time Duration for which flow rate exceeds (min)	Velocity Over Brink Crest=1714.9 (f/s)	Velocity Over Brink Crest=1712.9 (f/s)	Velocity At Toe Crest=1714.9 (f/s)	Velocity At Toe Crest=1712.9 (f/s)
1715.0	20	764	146	0.12	6.53	17.26	17.26
1716.0	737	1339	114	3.01	7.83	17.81	17.81
1717.5	2676	2384	75	7.45	9.50	21.05	21.05
1719.0	5300	3612	52	11.19	10.82	22.80	22.80
1720.5	8460	5000	37	14.33	12.10	26.69	26.69
1721.5	10825	6005	28	16.21	12.88	25.41	25.41
1722.0	12078	6530	22	17.13	13.26	25.83	25.83
1722.5	13376	7069	18	18.02	13.61	26.22	26.22
1723.0	14717	7623	13	18.82	13.98	26.48	26.48
1723.5	16101	8190	0	19.59	14.31	26.94	26.94

Figure 2
Time-Discharge Relationship at Spillway

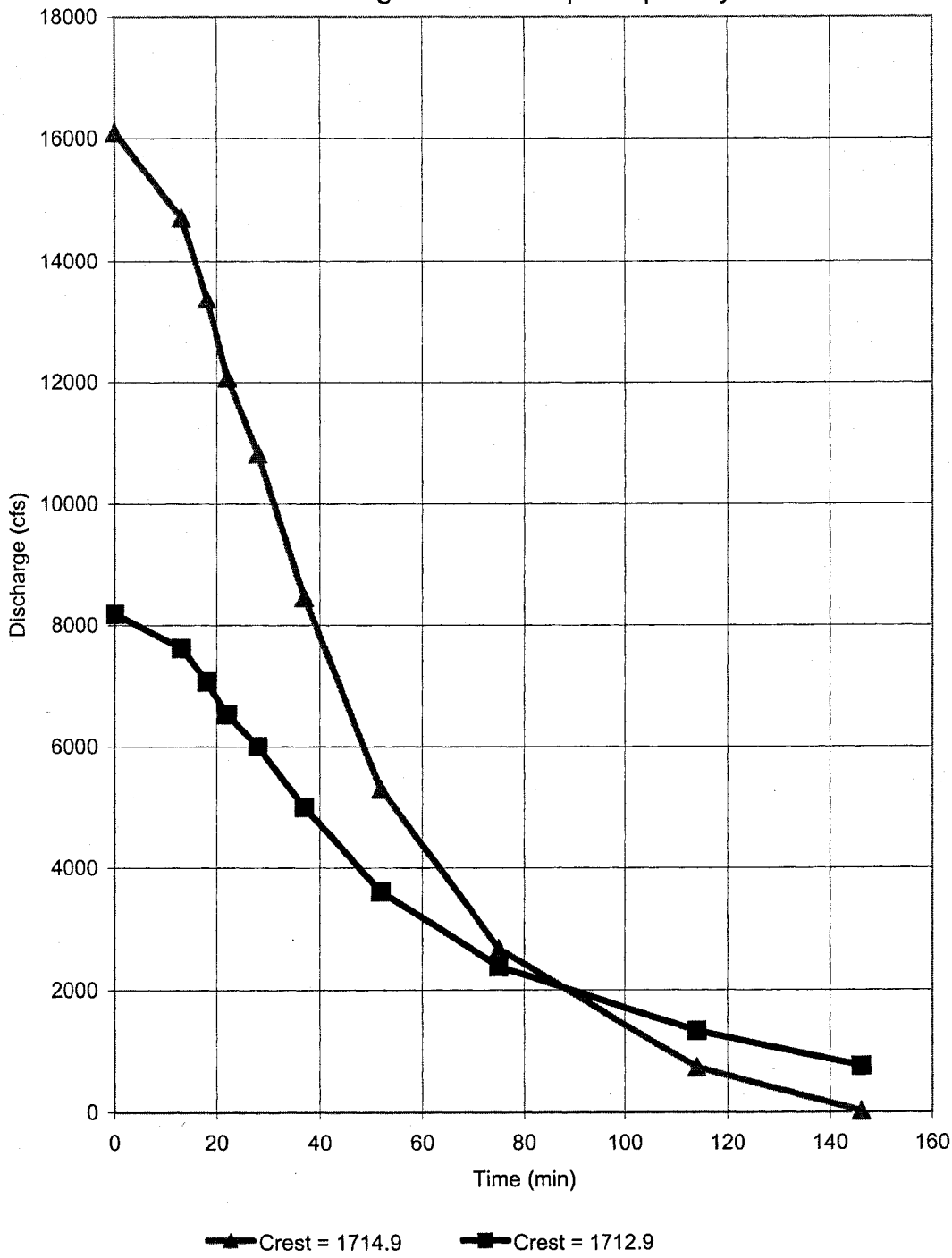

Figure 3
Time-Velocity Relationship at Spillway

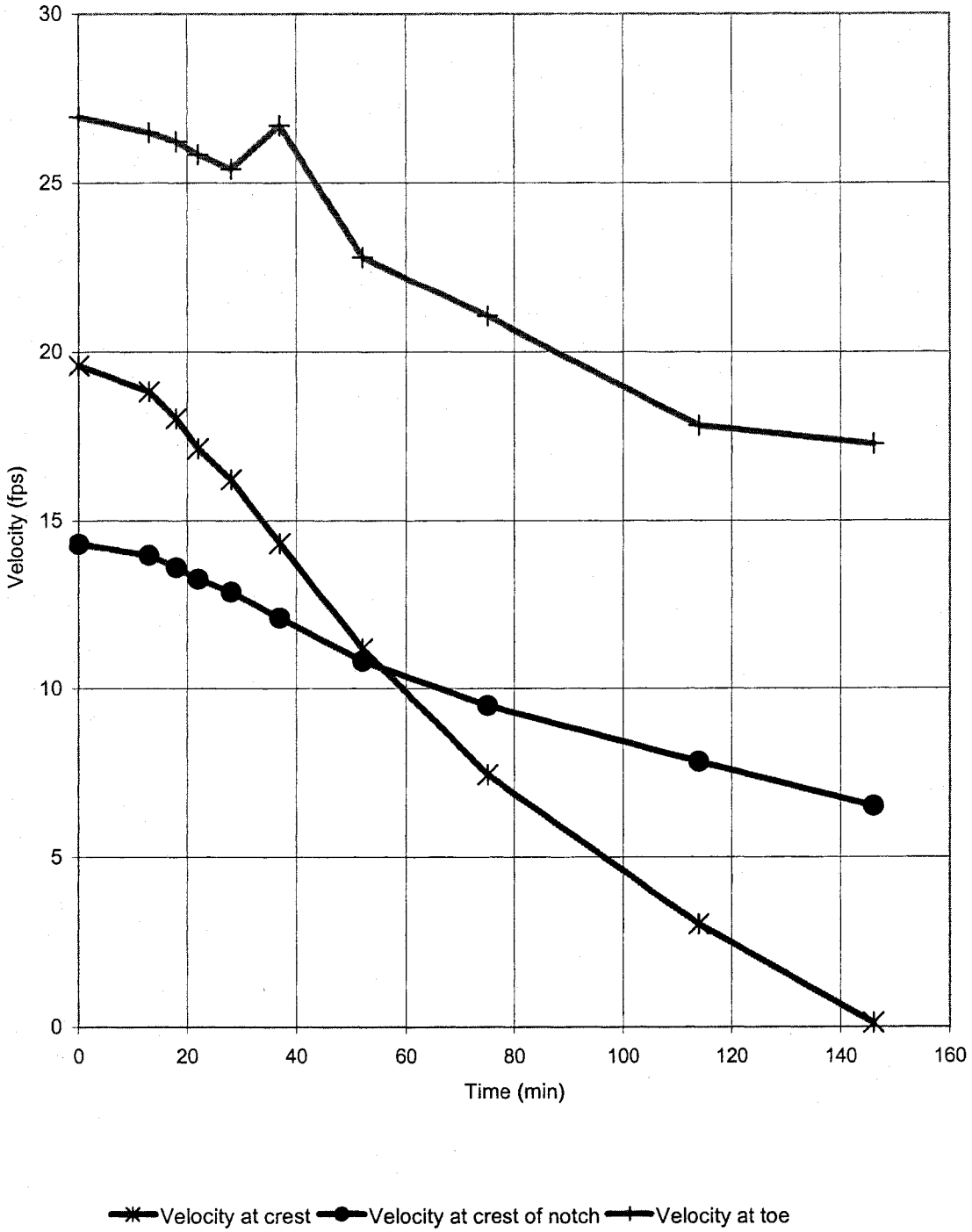

FIGURE 4

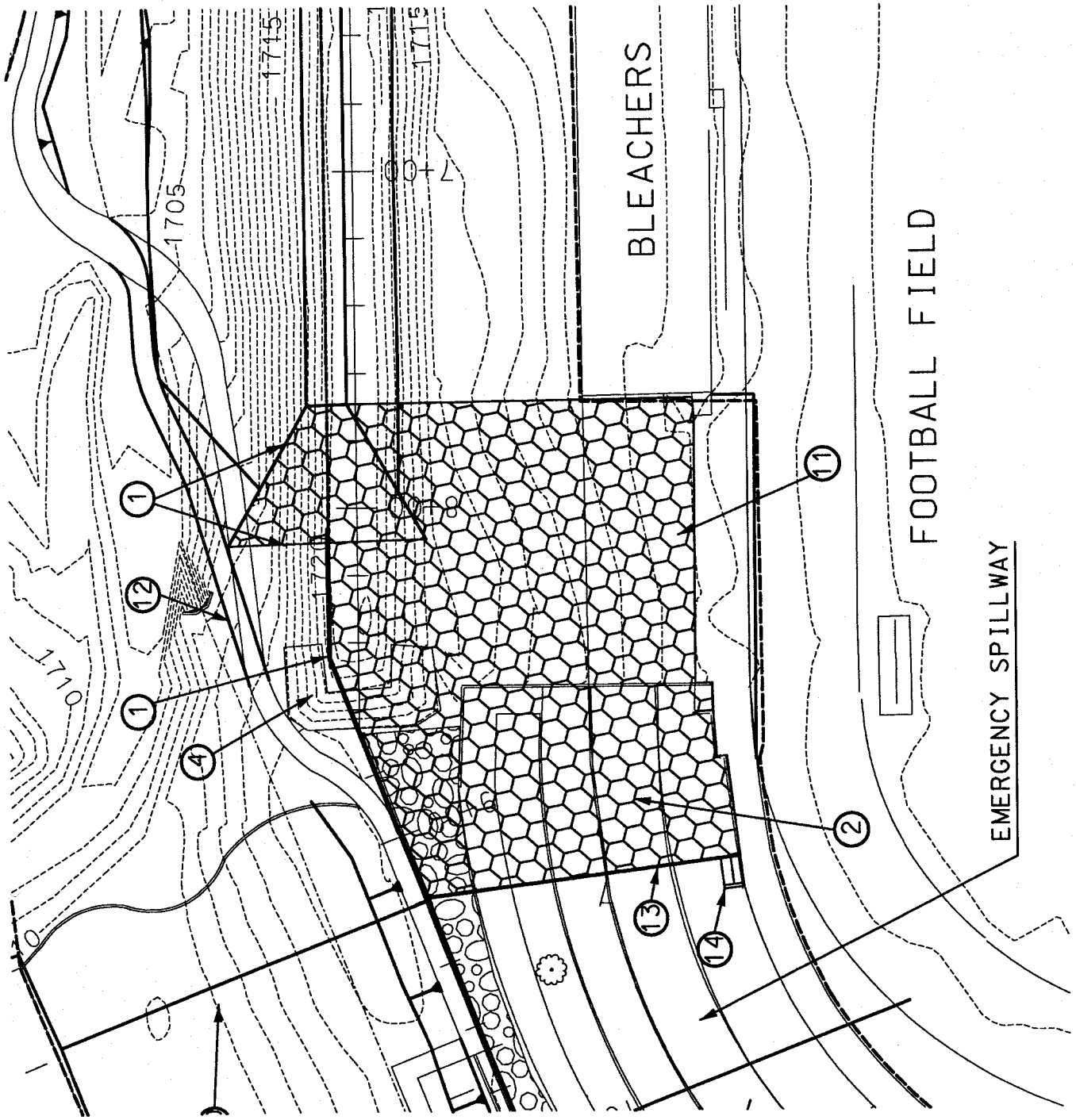
1705
1715
1715
1710
1720
00+7
BLEACHERS
FOOTBALL FIELD
EMERGENCY SPILLWAY
1
1
2
4
11
12
13
14

FIGURE 5

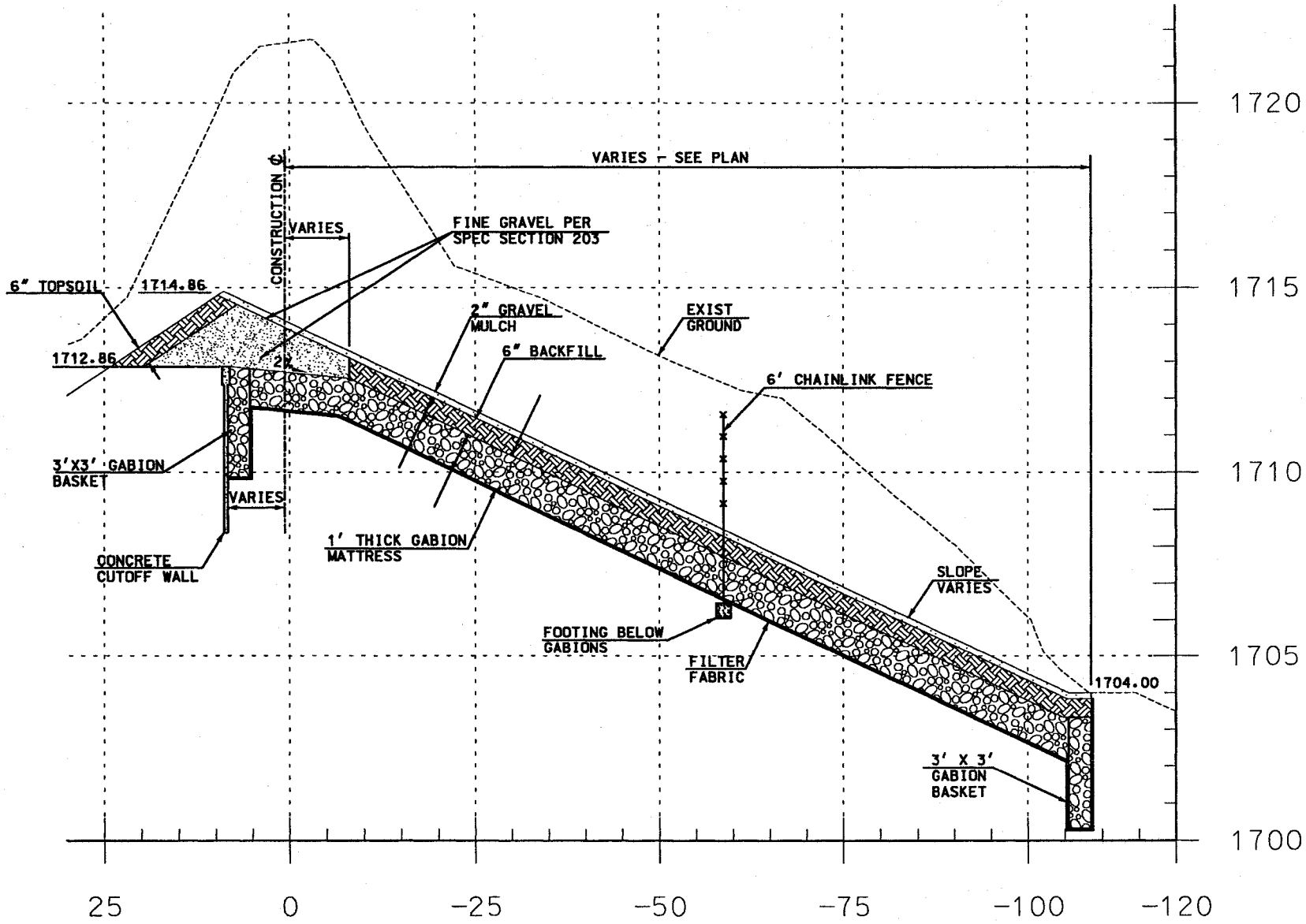

TYPICAL SECTION THROUGH
EMERGENCY SPILLWAY

NOTES:
CONSTRUCT 3'X3' GABION
UNIT ALONG ALL EDGES

FIGURE 6

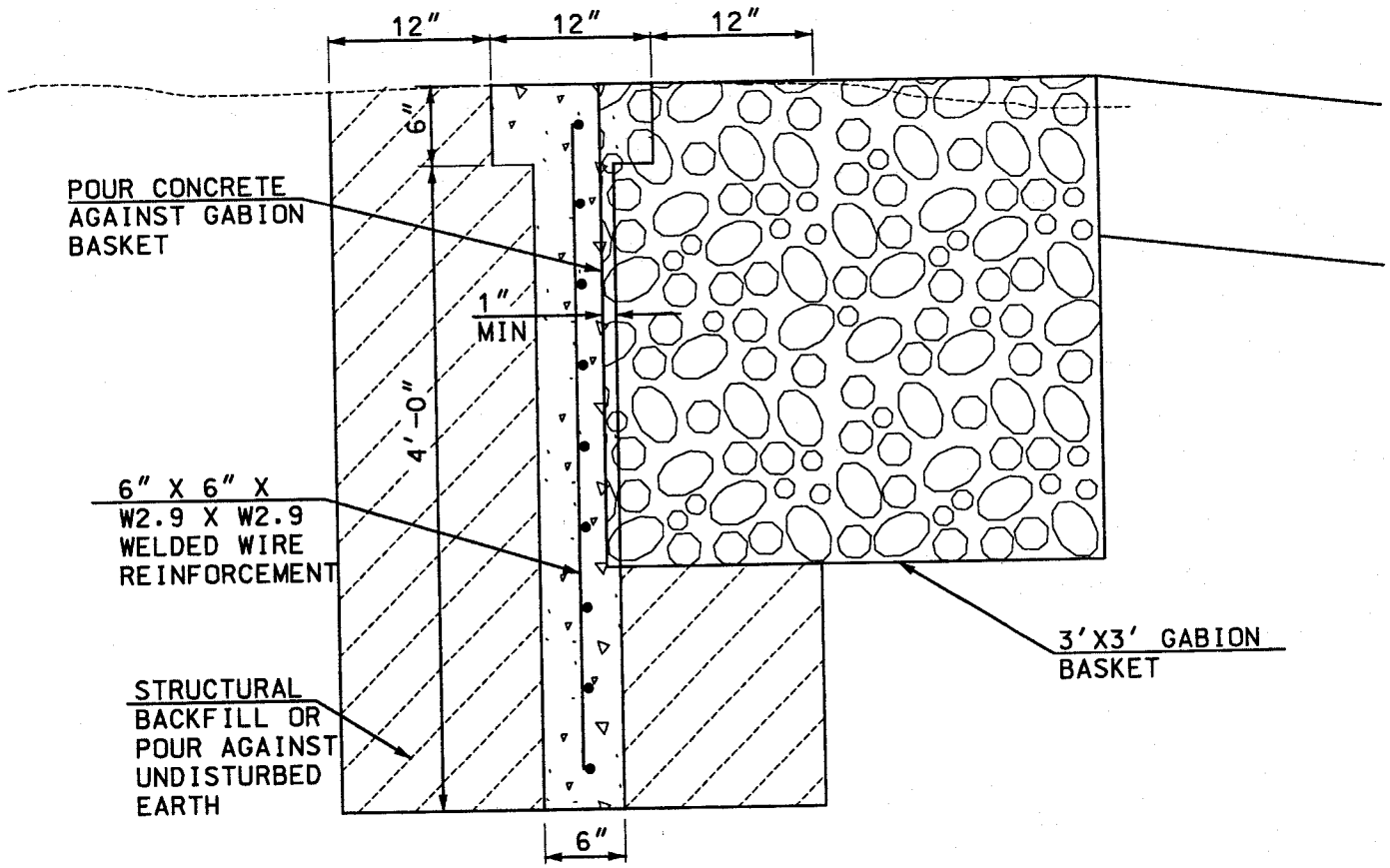

NOTE:
1. USE CLASS AA CONCRETE, __CY
2. COMPACT BACKFILL TO 95% SPD
3. MAY BE POURED AGAINST UNDISTURBED EARTH TO ELIMINATE FORMS & STRUCTURAL BACKFILL

SPILLWAY CREST CONCRETE CUTOFF WALL

NTS

Memo

Stantec

To: File

File: 82000157

From: Chuck Gopperton

Date: 20 January, 2000

Re: Golden Eagle Park Dam

Emergency Spillway Fuseplug

Proposed Improvements

It is desired to increase the capacity of the emergency spillway, reduce the amount of excavation into the dam embankment required to widen the spillway, and to maintain the normal crest elevation during the 100 year runoff and smaller events. Construction of a widened notch section in the spillway and backfill of the notch with a fuseplug fill allows 100 year and smaller flows to pond up to the level of the top of the fuseplug fill and larger flows will wash out the fuseplug and allow greater flows through the spillway.

The proposed notch is 90 feet long and 2 feet lower than the rest of the spillway. A reinforced concrete cutoff wall will be constructed at the crest and will connect to the existing cutoff wall. Gabion erosion protection is constructed downstream of the cutoff wall to prevent headcut and undermining of the spillway and cutoff wall. The gabions will be backfilled with a layer of random earth backfill. The crest of the spillway will be backfilled with an erodible gravel "fuseplug fill" which is designed to promote rapid and controlled erosion and washout. The front slope of the spillway will be backfilled with topsoil and planted with grass. The downstream slope will be topped off with a layer of gravel mulch. Figure 1 shows a profile of the spillway and Figure 2 shows a typical section.

Fuseplug Embankment Design

The Bureau of Reclamation undertook research to develop design guidelines for fuseplug embankments. The research is presented in the following paper:

> Clifford A. Pugh and Edward W. Gray, Jr., Bureau of Reclamation (1984), "Fuse Plug Embankments In Auxiliary

Spillways, Developing Design Guidelines and Parameters", Denver, Colorado.

The model studies and prototypes considered by Pugh and Gray are for a fuseplug constructed on the dam embankment and with heights of 3 to 9 meters. Figure 2-8 shows the embankment zoning which was used for the model tests. In this case, the fuseplug is constructed on the spillway and the height is only 2 feet. Therefore, the embankment design is simplified. Instead of providing a clay core and downstream sand filter as modeled, the fill consists of a uniform gravel which is non-cohesive and easily erodible once the washout process begins. The material meets the requirements of AASHTO M57-80 and M146-91. 100 percent of the material passes the 3/8" sieve and all is retained on the No. 10 sieve. Figure 2-9 shows the prototype gradation curves from Pugh and Gray and the proposed fuseplug fill gradation curve is also plotted. This shows that it falls within the recommended gradations for sand and gravel erodible fill.

The lateral erosion rate can be predicted using the following formula:

$$E_1 = 14.6H + 158$$

E_1 is in feet per hour, and H is the flow depth in the pilot channel in feet.

Due to the dimensions of the fuseplug being so small, a pilot channel is not recommended, however, the center of the fuseplug embankment will be 0.5' lower than the sides, and this will concentrate the first flows along this swale. Due to the small size of the reservoir and the sharp peak on the IDF, the depth of flow over the emergency spillway changes quite rapidly, so the washout rate is calculated for a range of flow depths. Table 1 summarizes the depths and washout rates and the time to washout, assuming that the pilot channel is in the center of a 90 foot wide spillway, it must washout 45 feet laterally each direction.

Table 1

Flow Depth (ft) (1)	Washout Rate (ft/hour) (2)	Time to Washout (minutes) (3)
1	173	16
2	187	14
4	216	12
6	246	11
8	275	10
10	304	9

As can be seen by the table, washout of the fuseplug is not instantaneous, but is rapid and controlled. It can be expected that the fuseplug embankment will washout in 10 - 15 minutes once flow begins in the spillway notch.

STANTEC CONSULTING INC.

Chuck Gopperton, PE
Project Engineer
cgopperton@stantec.com

c. Tom Renckly, FCDMC; George Sabol, Stantec; Jerry Cox, ADWR

p:\82000157\correspondence\memos\cvg012000m2f.doc

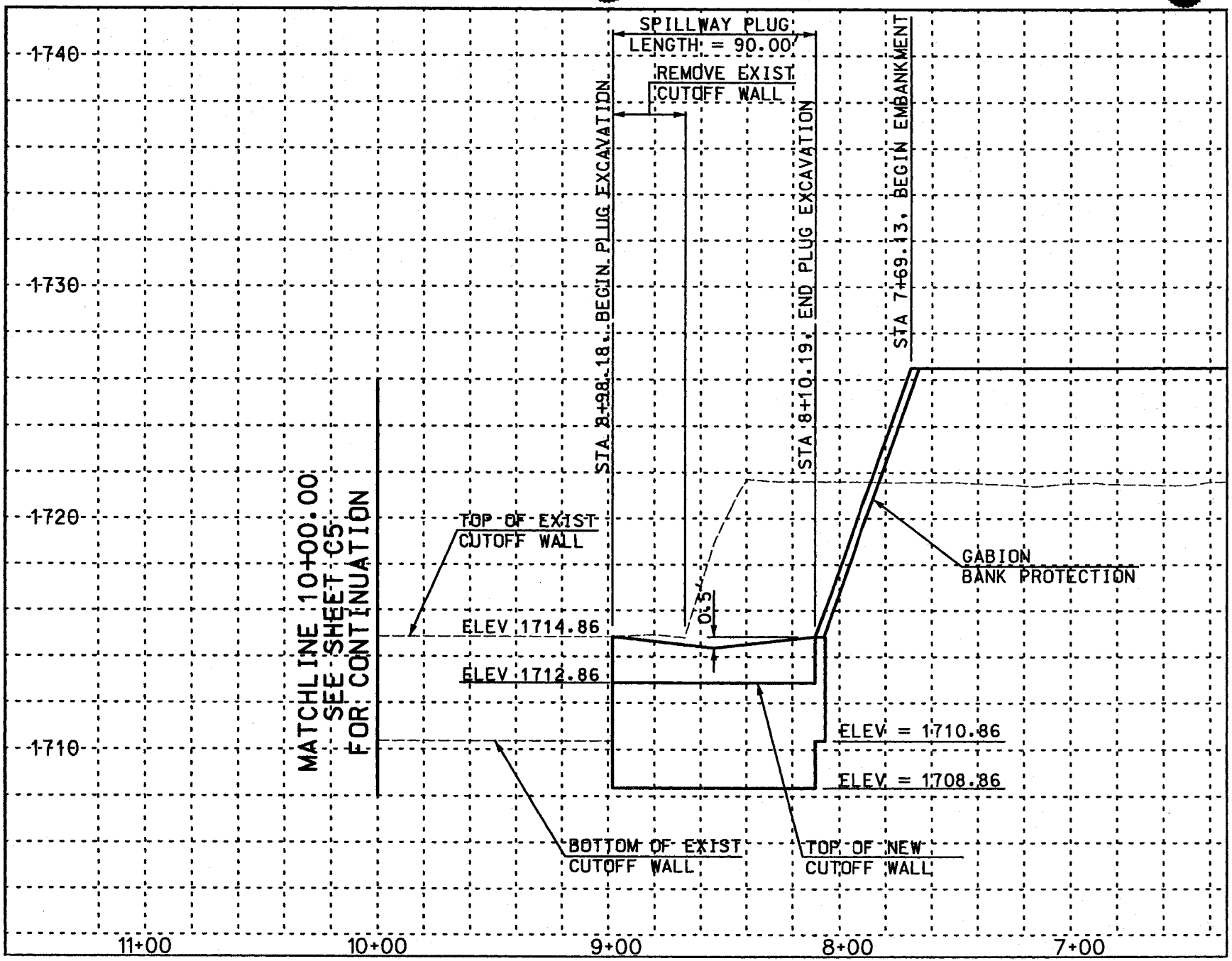
SPILLWAY PLUG
LENGTH = 90.00'
REMOVE EXIST
CUTOFF WALL
STA 8+98.18, BEGIN PLUG EXCAVATION
STA 8+10.19, END PLUG EXCAVATION
STA 7+69.13, BEGIN EMBANKMENT
1740
1730
1720
1710
MATCHLINE 10+00.00
SEE SHEET C5
FOR CONTINUATION
TOP OF EXIST
CUTOFF WALL
ELEV 1714.86
ELEV 1712.86
0.5
GABION
BANK PROTECTION
ELEV = 1710.86
ELEV = 1708.86
BOTTOM OF EXIST
CUTOFF WALL
TOP OF NEW
CUTOFF WALL
11+00
10+00
9+00
8+00
7+00

FIGURE 1

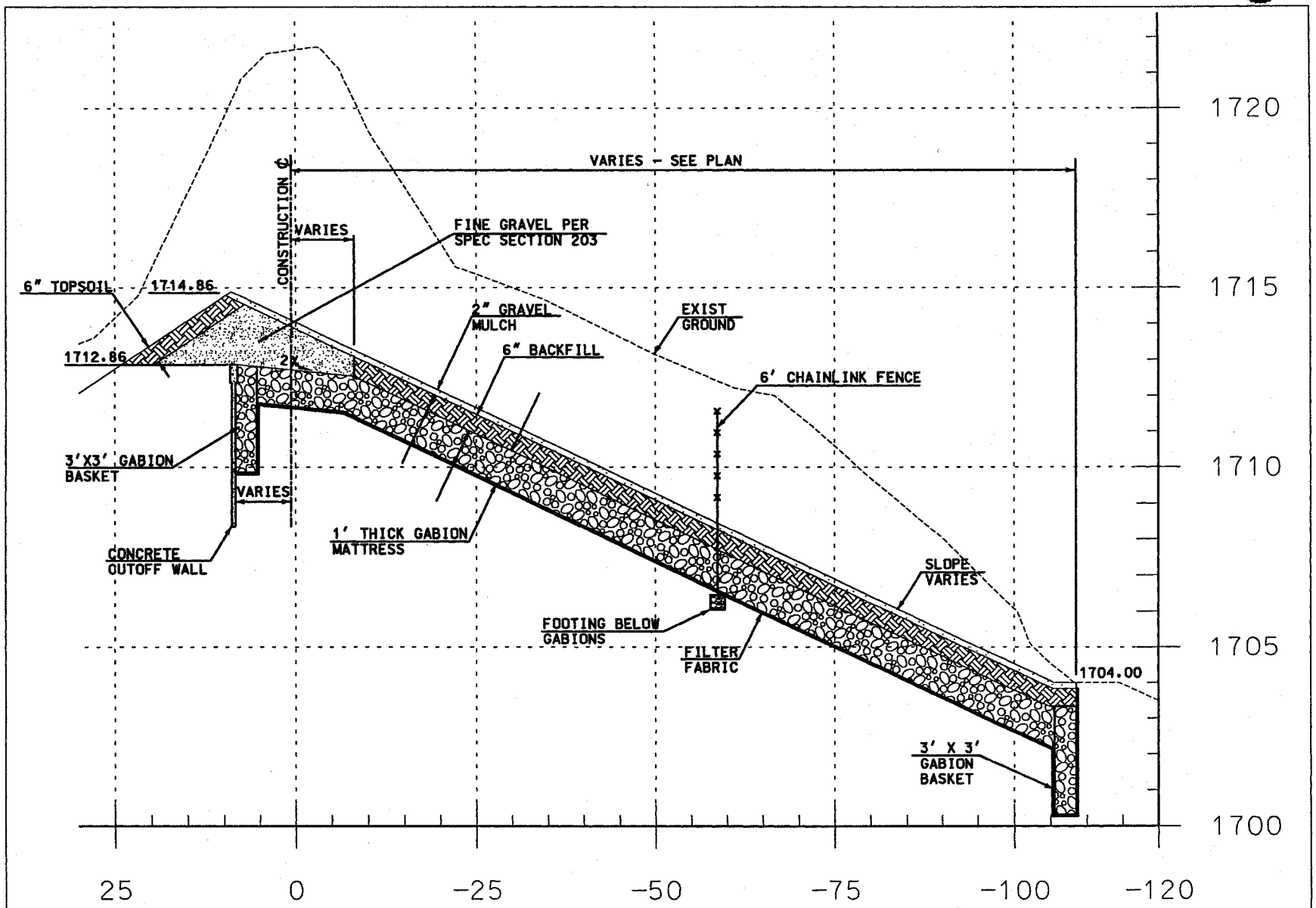

TYPICAL SECTION THROUGH
EMERGENCY SPILLWAY

NOTES:
CONSTRUCT 3'X3' GABION
UNIT ALONG ALL EDGES

FIGURE 2

MODEL & PROTOTYPE

(1) CORE MATERIAL

(2) SAND FILTER

(3) COMPACTED SAND AND GRAVEL

(4) SLOPE PROTECTION

(5) GRAVEL SURFACING

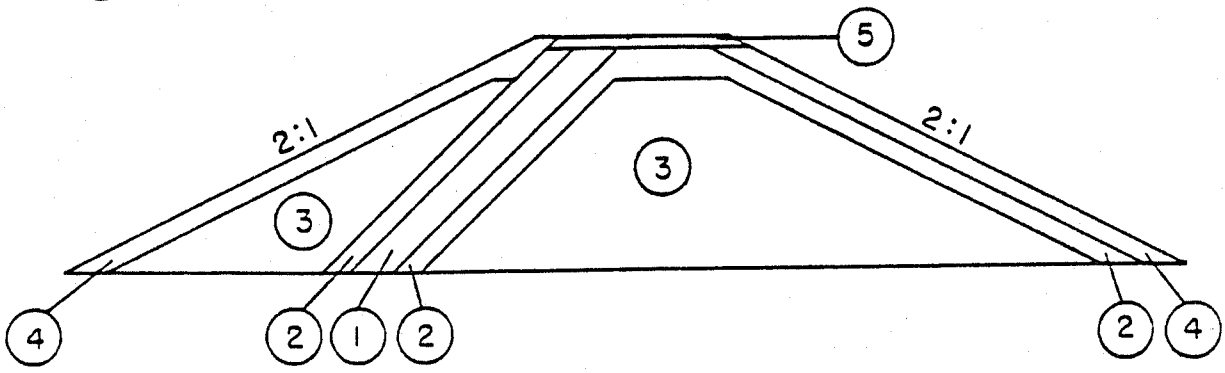

EMBANKMENT

(6) COMPACTED ROCKFILL

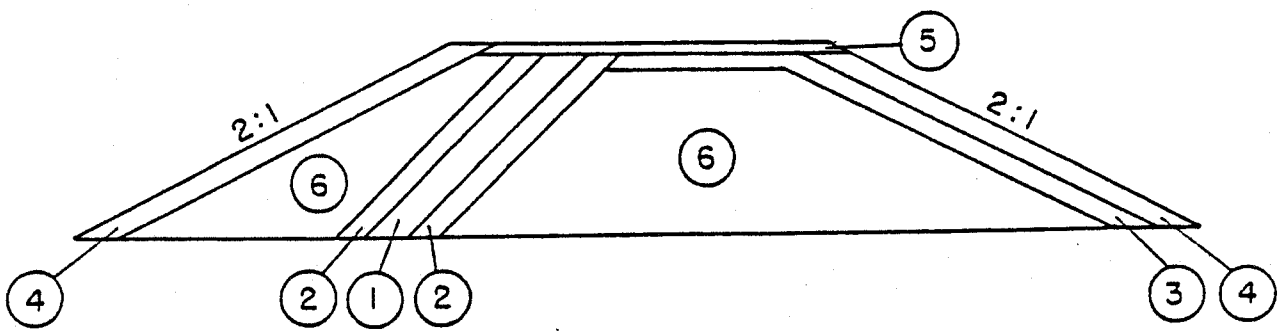

PILOT CHANNEL

Figure 2-8. - Fuse plug embankment and pilot channel.

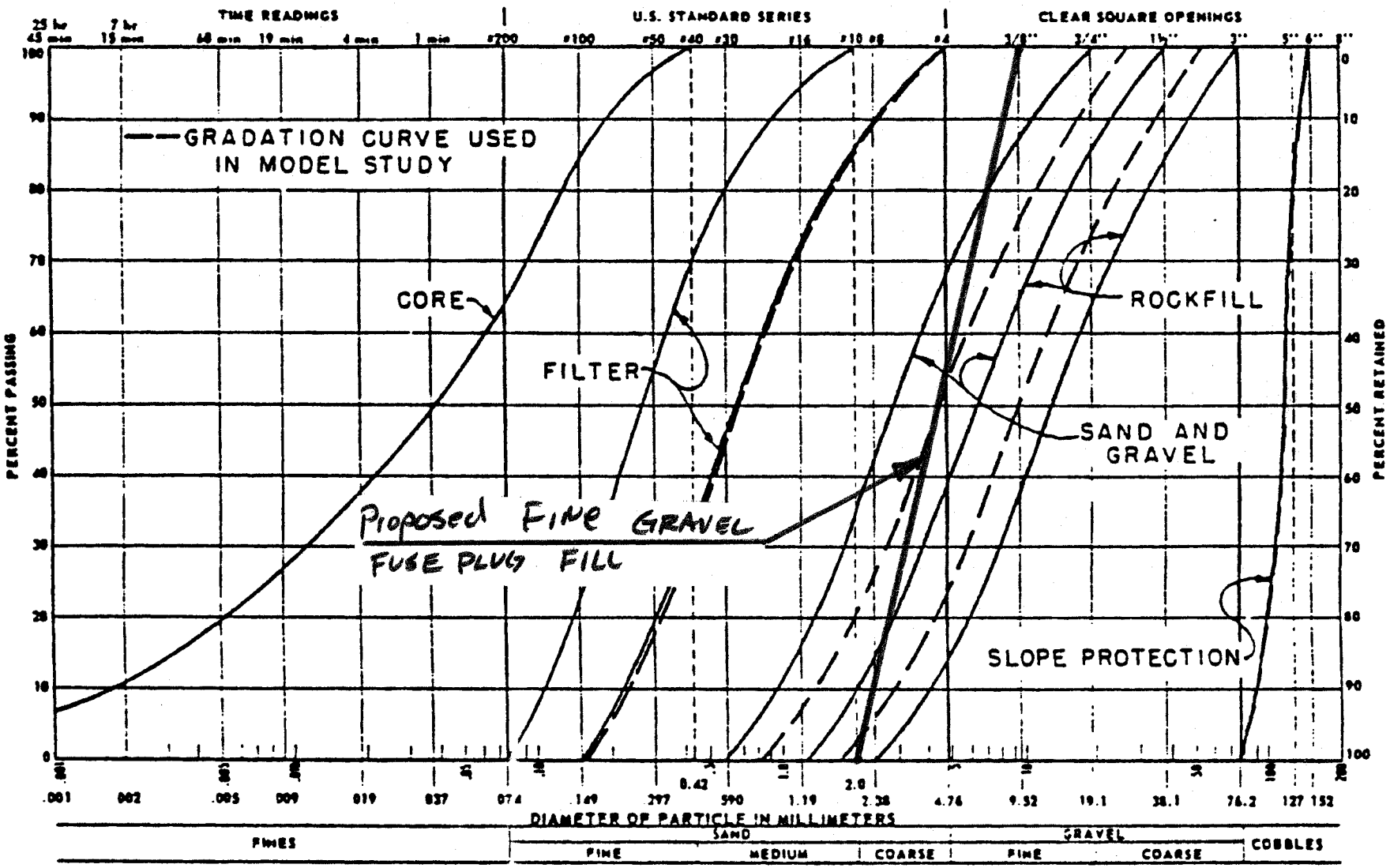

Figure 2-9. - Prototype gradation curves.

HEC-RAS September 1998 Version 2.2
U.S. Army Corp of Engineers
Hydrologic Engineering Center
609 Second Street, Suite D
Davis, California 95616-4687
(916) 756-1104

```
X     X  XXXXXX    XXXX        XXXX       XX      XXXX
X     X  X        X    X       X   X     X  X    X
X     X  X        X            X   X    X    X   X
XXXXXXX  XXXX     X       XXX  XXXX     XXXXXX   XXXX
X     X  X        X            X  X     X    X       X
X     X  X        X    X       X   X    X    X       X
X     X  XXXXXX    XXXX        X    X   X    X   XXXXX
```

FLOW CALCS AT CLOUDBURST WASH ALONG TOE OF DAM

****

PROJECT DATA
Project Title: Cloud-d1
Project File : d1.prj
Run Date and Time: 1/18/00 9:22:02 AM

Project in English units

Project Description:
CloudBurst Wash - Option "D" - do not re-locate the existing sidewalk along the ballfields 10/99

*what is the range of WSEL's in the proposed channel section along
CloudBurst wash for Q=0 through Q=10yr,6hr?

****

PLAN DATA

Plan Title: Option d 10-99
Plan File : p:\28900095\Hecras\Opt-D\d1.p03

Geometry Title: cloud-d1
Geometry File : p:\28900095\Hecras\Opt-D\d1.g02

Flow Title : cloud_d1
Flow File : p:\28900095\Hecras\Opt-D\d1.f01

Plan Summary Information:
Number of: Cross Sections = 14 Mulitple Openings = 0
Culverts = 0 Inline Weirs = 0
Bridges = 0

Computational Information
Water surface calculation tolerance = 0.01
Critical depth calculaton tolerance = 0.01
Maximum number of interations = 20
Maximum difference tolerance = 0.3
Flow tolerance factor = 0.001

Computation Options
Critical depth computed only where necessary
Conveyance Calculation Method: At breaks in n values only
Friction Slope Method: Average Conveyance
Computational Flow Regime: Mixed Flow

****

FLOW DATA

Flow Title: cloud_d1
Flow File : p:\28900095\Hecras\Opt-D\d1.f01

Flow Data (cfs)

```
*****************************************************************************************************************************
*********************************
* River          Reach          RS      *          PF#1          PF#2          PF#3          PF#4          PF#5          PF#6
PF#7          PF#8 *
* CloudBurst Wash Cloud-A1      700     *           50           100           150           200           250           300
350           400 *
* CloudBurst Wash Cloud-A1      550     *           50           100           150           200           250           300
350           400 *
*****************************************************************************************************************************
*********************************
*************************************************************
* River          Reach          RS      *          PF#9 *
* CloudBurst Wash Cloud-A1      700     *           468 *
* CloudBurst Wash Cloud-A1      550     *           468 *
*************************************************************
```

Boundary Conditions

River	Reach	Profile	Upstream	Downstream
CloudBurst Wash	Cloud-A1	PF#1	Normal S = .0226	Known WS = 1696.5
CloudBurst Wash	Cloud-A1	PF#2	Normal S = .0226	Known WS = 1698
CloudBurst Wash	Cloud-A1	PF#3	Normal S = .0226	Known WS = 1699
CloudBurst Wash	Cloud-A1	PF#4	Normal S = .0226	Known WS = 1700
CloudBurst Wash	Cloud-A1	PF#5	Normal S = .0226	Known WS = 1701
CloudBurst Wash	Cloud-A1	PF#6	Normal S = .0226	Known WS = 1701.9
CloudBurst Wash	Cloud-A1	PF#7	Normal S = .0226	Known WS = 1703.2
CloudBurst Wash	Cloud-A1	PF#8	Normal S = .0226	Known WS = 1704.7
CloudBurst Wash	Cloud-A1	PF#9	Normal S = .0226	Known WS = 1707

GEOMETRY DATA

Geometry Title: cloud-d1
Geometry File : p:\28900095\Hecras\Opt-D\d1.g02

CROSS SECTION RIVER: CloudBurst Wash
REACH: Cloud-A1 RS: 700

INPUT
Description: Cloud Burst Flowline Sta: 7+00
Station Elevation Data num= 7

Sta	Elev	Sta	Elev	Sta	Elev	Sta	Elev	Sta	Elev
-104	1708.6	-103.5	1706	-17.5	1704.74	-16	1704	0	1704
16	1704	61	1726.5						

Manning's n Values num= 3

Sta	n Val	Sta	n Val	Sta	n Val
-104	.03	-17.5	.03	61	.03

Bank Sta: Left	Right	Lengths: Left	Channel	Right	Coeff Contr.	Expan.
-17.5	61	40	40	40	.1	.3

Left Levee Station= -14 Elevation= 1726

CROSS SECTION OUTPUT Profile #PF#1

			Left OB	Channel	Right OB
E.G. Elev (ft)	1704.66	Element			
Vel Head (ft)	0.25	Wt. n-Val.		0.030	
W.S. Elev (ft)	1704.41	Reach Len. (ft)	40.00	40.00	40.00
Crit W.S. (ft)	1704.44	Flow Area (sq ft)		12.43	
E.G. Slope (ft/ft)	0.022608	Area (sq ft)		12.43	
Q Total (cfs)	50.00	Flow (cfs)		50.00	
Top Width (ft)	30.82	Top Width (ft)		30.82	
Vel Total (ft/s)	4.02	Avg. Vel. (ft/s)		4.02	
Max Chl Dpth (ft)	0.41	Hydr. Depth (ft)		0.40	
Conv. Total (cfs)	332.5	Conv. (cfs)		332.5	
Length Wtd. (ft)	40.00	Wetted Per. (ft)		31.32	
Min Ch El (ft)	1704.00	Shear (lb/sq ft)		0.56	
Alpha	1.00	Stream Power (lb/ft s)		2.25	
Frctn Loss (ft)		Cum Volume (acre-ft)		0.09	
C & E Loss (ft)		Cum SA (acres)		0.21	

CROSS SECTION OUTPUT Profile #PF#2

			Left OB	Channel	Right OB
E.G. Elev (ft)	1705.05	Element			
Vel Head (ft)	0.43	Wt. n-Val.		0.030	
W.S. Elev (ft)	1704.62	Reach Len. (ft)	40.00	40.00	40.00
Crit W.S. (ft)	1704.69	Flow Area (sq ft)		19.00	
E.G. Slope (ft/ft)	0.022621	Area (sq ft)		19.00	
Q Total (cfs)	100.00	Flow (cfs)		100.00	
Top Width (ft)	31.24	Top Width (ft)		31.24	
Vel Total (ft/s)	5.26	Avg. Vel. (ft/s)		5.26	
Max Chl Dpth (ft)	0.62	Hydr. Depth (ft)		0.61	
Conv. Total (cfs)	664.9	Conv. (cfs)		664.9	
Length Wtd. (ft)	40.00	Wetted Per. (ft)		32.01	
Min Ch El (ft)	1704.00	Shear (lb/sq ft)		0.84	
Alpha	1.00	Stream Power (lb/ft s)		4.41	
Frctn Loss (ft)		Cum Volume (acre-ft)		0.17	
C & E Loss (ft)		Cum SA (acres)		0.23	

CROSS SECTION OUTPUT Profile #PF#3

			Left OB	Channel	Right OB
E.G. Elev (ft)	1705.39	Element			
Vel Head (ft)	0.30	Wt. n-Val.		0.030	
W.S. Elev (ft)	1705.09	Reach Len. (ft)	40.00	40.00	40.00
Crit W.S. (ft)	1704.91	Flow Area (sq ft)		33.88	
E.G. Slope (ft/ft)	0.007877	Area (sq ft)		33.88	
Q Total (cfs)	150.00	Flow (cfs)		150.00	
Top Width (ft)	32.18	Top Width (ft)		32.18	
Vel Total (ft/s)	4.43	Avg. Vel. (ft/s)		4.43	
Max Chl Dpth (ft)	1.09	Hydr. Depth (ft)		1.05	
Conv. Total (cfs)	1690.1	Conv. (cfs)		1690.1	
Length Wtd. (ft)	40.00	Wetted Per. (ft)		33.53	
Min Ch El (ft)	1704.00	Shear (lb/sq ft)		0.50	
Alpha	1.00	Stream Power (lb/ft s)		2.20	

* Frctn Loss (ft)	* 0.21	* Cum Volume (acre-ft)	* 0.00 * 0.25 *
* C & E Loss (ft)	* 0.03	* Cum SA (acres)	* 0.02 * 0.24 *

Warning: The conveyance ratio (upstream conveyance divided by downstream conveyance) is less than 0.7 or greater than 1.4. This may indicate the need for additional cross sections.

CROSS SECTION OUTPUT Profile #PF#4

			Left OB	Channel	Right OB
* E.G. Elev (ft)	* 1705.76	* Element			
* Vel Head (ft)	* 0.29	* Wt. n-Val.		0.030	
* W.S. Elev (ft)	* 1705.46	* Reach Len. (ft)	40.00	40.00	40.00
* Crit W.S. (ft)	* 1705.10	* Flow Area (sq ft)		45.99	
* E.G. Slope (ft/ft)	* 0.005303	* Area (sq ft)		45.99	
* Q Total (cfs)	* 200.00	* Flow (cfs)		200.00	
* Top Width (ft)	* 32.92	* Top Width (ft)		32.92	
* Vel Total (ft/s)	* 4.35	* Avg. Vel. (ft/s)		4.35	
* Max Chl Dpth (ft)	* 1.46	* Hydr. Depth (ft)		1.40	
* Conv. Total (cfs)	* 2746.6	* Conv. (cfs)		2746.6	
* Length Wtd. (ft)	* 40.00	* Wetted Per. (ft)		34.73	
* Min Ch El (ft)	* 1704.00	* Shear (lb/sq ft)		0.44	
* Alpha	* 1.00	* Stream Power (lb/ft s)		1.91	
* Frctn Loss (ft)	* 0.16	* Cum Volume (acre-ft)	0.01	0.32	
* C & E Loss (ft)	* 0.02	* Cum SA (acres)	0.02	0.24	

CROSS SECTION OUTPUT Profile #PF#5

			Left OB	Channel	Right OB
* E.G. Elev (ft)	* 1706.07	* Element			
* Vel Head (ft)	* 0.31	* Wt. n-Val.		0.030	
* W.S. Elev (ft)	* 1705.77	* Reach Len. (ft)	40.00	40.00	40.00
* Crit W.S. (ft)	* 1705.27	* Flow Area (sq ft)		56.13	
* E.G. Slope (ft/ft)	* 0.004427	* Area (sq ft)		56.13	
* Q Total (cfs)	* 250.00	* Flow (cfs)		250.00	
* Top Width (ft)	* 33.53	* Top Width (ft)		33.53	
* Vel Total (ft/s)	* 4.45	* Avg. Vel. (ft/s)		4.45	
* Max Chl Dpth (ft)	* 1.77	* Hydr. Depth (ft)		1.67	
* Conv. Total (cfs)	* 3757.6	* Conv. (cfs)		3757.6	
* Length Wtd. (ft)	* 40.00	* Wetted Per. (ft)		35.72	
* Min Ch El (ft)	* 1704.00	* Shear (lb/sq ft)		0.43	
* Alpha	* 1.00	* Stream Power (lb/ft s)		1.93	
* Frctn Loss (ft)	* 0.14	* Cum Volume (acre-ft)	0.02	0.43	
* C & E Loss (ft)	* 0.01	* Cum SA (acres)	0.03	0.25	

CROSS SECTION OUTPUT Profile #PF#6

			Left OB	Channel	Right OB
* E.G. Elev (ft)	* 1706.35	* Element			
* Vel Head (ft)	* 0.33	* Wt. n-Val.		0.030	
* W.S. Elev (ft)	* 1706.02	* Reach Len. (ft)	40.00	40.00	40.00
* Crit W.S. (ft)	* 1705.43	* Flow Area (sq ft)		64.68	
* E.G. Slope (ft/ft)	* 0.004095	* Area (sq ft)		64.68	
* Q Total (cfs)	* 300.00	* Flow (cfs)		300.00	
* Top Width (ft)	* 34.04	* Top Width (ft)		34.04	
* Vel Total (ft/s)	* 4.64	* Avg. Vel. (ft/s)		4.64	
* Max Chl Dpth (ft)	* 2.02	* Hydr. Depth (ft)		1.90	
* Conv. Total (cfs)	* 4687.8	* Conv. (cfs)		4687.8	
* Length Wtd. (ft)	* 40.00	* Wetted Per. (ft)		36.54	
* Min Ch El (ft)	* 1704.00	* Shear (lb/sq ft)		0.45	
* Alpha	* 1.00	* Stream Power (lb/ft s)		2.10	
* Frctn Loss (ft)	* 0.14	* Cum Volume (acre-ft)	0.02	0.55	
* C & E Loss (ft)	* 0.01	* Cum SA (acres)	0.03	0.26	

CROSS SECTION OUTPUT Profile #PF#7

			Left OB	Channel	Right OB
* E.G. Elev (ft)	* 1706.60	* Element			
* Vel Head (ft)	* 0.37	* Wt. n-Val.		0.030	
* W.S. Elev (ft)	* 1706.23	* Reach Len. (ft)	40.00	40.00	40.00
* Crit W.S. (ft)	* 1705.58	* Flow Area (sq ft)		71.91	
* E.G. Slope (ft/ft)	* 0.004013	* Area (sq ft)		71.91	
* Q Total (cfs)	* 350.00	* Flow (cfs)		350.00	
* Top Width (ft)	* 34.46	* Top Width (ft)		34.46	
* Vel Total (ft/s)	* 4.87	* Avg. Vel. (ft/s)		4.87	
* Max Chl Dpth (ft)	* 2.23	* Hydr. Depth (ft)		2.09	
* Conv. Total (cfs)	* 5525.1	* Conv. (cfs)		5525.1	
* Length Wtd. (ft)	* 40.00	* Wetted Per. (ft)		37.22	
* Min Ch El (ft)	* 1704.00	* Shear (lb/sq ft)		0.48	
* Alpha	* 1.00	* Stream Power (lb/ft s)		2.36	
* Frctn Loss (ft)	* 0.14	* Cum Volume (acre-ft)	0.03	0.74	
* C & E Loss (ft)	* 0.00	* Cum SA (acres)	0.06	0.28	

CROSS SECTION OUTPUT Profile #PF#8

			Left OB	Channel	Right OB
* E.G. Elev (ft)	* 1706.81	* Element			
* Vel Head (ft)	* 0.41	* Wt. n-Val.		0.030	
* W.S. Elev (ft)	* 1706.40	* Reach Len. (ft)	40.00	40.00	40.00
* Crit W.S. (ft)	* 1705.73	* Flow Area (sq ft)		77.66	
* E.G. Slope (ft/ft)	* 0.004134	* Area (sq ft)		77.66	
* Q Total (cfs)	* 400.00	* Flow (cfs)		400.00	
* Top Width (ft)	* 34.79	* Top Width (ft)		34.79	
* Vel Total (ft/s)	* 5.15	* Avg. Vel. (ft/s)		5.15	
* Max Chl Dpth (ft)	* 2.40	* Hydr. Depth (ft)		2.23	
* Conv. Total (cfs)	* 6221.0	* Conv. (cfs)		6221.0	

* Length Wtd. (ft)	*	40.00	* Wetted Per. (ft)	*		*	37.76	*	*
* Min Ch El (ft)	*	1704.00	* Shear (lb/sq ft)	*		*	0.53	*	*
* Alpha	*	1.00	* Stream Power (lb/ft s)	*		*	2.73	*	*
* Frctn Loss (ft)	*	0.15	* Cum Volume (acre-ft)	*	0.09	*	1.03	*	*
* C & E Loss (ft)	*	0.00	* Cum SA (acres)	*	0.17	*	0.31	*	*

CROSS SECTION OUTPUT Profile #PF#9

* E.G. Elev (ft)	*	1707.48	* Element	*	Left OB	*	Channel	*	Right OB *
* Vel Head (ft)	*	0.31	* Wt. n-Val.	*		*	0.030	*	*
* W.S. Elev (ft)	*	1707.18	* Reach Len. (ft)	*	40.00	*	40.00	*	40.00 *
* Crit W.S. (ft)	*	1705.92	* Flow Area (sq ft)	*		*	105.48	*	*
* E.G. Slope (ft/ft)	*	0.002224	* Area (sq ft)	*		*	105.48	*	*
* Q Total (cfs)	*	468.00	* Flow (cfs)	*		*	468.00	*	*
* Top Width (ft)	*	36.36	* Top Width (ft)	*		*	36.36	*	*
* Vel Total (ft/s)	*	4.44	* Avg. Vel. (ft/s)	*		*	4.44	*	*
* Max Chl Dpth (ft)	*	3.18	* Hydr. Depth (ft)	*		*	2.90	*	*
* Conv. Total (cfs)	*	9924.3	* Conv. (cfs)	*		*	9924.3	*	*
* Length Wtd. (ft)	*	40.00	* Wetted Per. (ft)	*		*	40.29	*	*
* Min Ch El (ft)	*	1704.00	* Shear (lb/sq ft)	*		*	0.36	*	*
* Alpha	*	1.00	* Stream Power (lb/ft s)	*		*	1.61	*	*
* Frctn Loss (ft)	*	0.09	* Cum Volume (acre-ft)	*	0.59	*	1.65	*	*
* C & E Loss (ft)	*	0.00	* Cum SA (acres)	*	0.25	*	0.34	*	*

CROSS SECTION RIVER: CloudBurst Wash
REACH: Cloud-A1 RS: 660

INPUT
Description: Cloud Burst Flowline Sta: 6+60
Station Elevation Data num= 7

Sta	Elev	Sta	Elev	Sta	Elev	Sta	Elev	Sta	Elev
-108.8	1705.6	-17.1	1705.2	-13.5	1703.4	0	1703.4	13.5	1703.4
17.1	1705.2	59.1	1726.5						

Manning's n Values num= 3

Sta	n Val	Sta	n Val	Sta	n Val
-108.8	.03	-17.1	.03	59.1	.03

Bank Sta: Left	Right	Lengths: Left	Channel	Right	Coeff Contr.	Expan.
-17.1	59.1	40	40	40	.1	.3

Left Levee Station= -11 Elevation= 1726

CROSS SECTION OUTPUT Profile #PF#1

* E.G. Elev (ft)	*	1704.75	* Element	*	Left OB	*	Channel	*	Right OB *
* Vel Head (ft)	*	1.12	* Wt. n-Val.	*		*	0.030	*	*
* W.S. Elev (ft)	*	1703.64	* Reach Len. (ft)	*	40.00	*	40.00	*	40.00 *
* Crit W.S. (ft)	*	1703.91	* Flow Area (sq ft)	*		*	5.90	*	*
* E.G. Slope (ft/ft)	*	0.203901	* Area (sq ft)	*		*	5.90	*	*
* Q Total (cfs)	*	50.00	* Flow (cfs)	*		*	50.00	*	*
* Top Width (ft)	*	24.98	* Top Width (ft)	*		*	24.98	*	*
* Vel Total (ft/s)	*	8.48	* Avg. Vel. (ft/s)	*		*	8.48	*	*
* Max Chl Dpth (ft)	*	0.24	* Hydr. Depth (ft)	*		*	0.24	*	*
* Conv. Total (cfs)	*	110.7	* Conv. (cfs)	*		*	110.7	*	*
* Length Wtd. (ft)	*	40.00	* Wetted Per. (ft)	*		*	25.27	*	*
* Min Ch El (ft)	*	1703.40	* Shear (lb/sq ft)	*		*	2.97	*	*
* Alpha	*	1.00	* Stream Power (lb/ft s)	*		*	25.19	*	*
* Frctn Loss (ft)	*	0.78	* Cum Volume (acre-ft)	*		*	0.09	*	*
* C & E Loss (ft)	*	0.00	* Cum SA (acres)	*		*	0.19	*	*

Warning: The energy equation could not be balanced within the specified number of iterations. The program selected the water surface that had the least amount of error between computed and assumed values.
Warning: The velocity head has changed by more than 0.5 ft (0.15 m). This may indicate the need for additional cross sections.
Warning: The conveyance ratio (upstream conveyance divided by downstream conveyance) is less than 0.7 or greater than 1.4. This may indicate the need for additional cross sections.
Warning: During the supercritical standard step calculations, the final energy answer that was computed is greater than the upstream energy. This is not physically possible. Please check your data.

CROSS SECTION OUTPUT Profile #PF#2

* E.G. Elev (ft)	*	1704.83	* Element	*	Left OB	*	Channel	*	Right OB *
* Vel Head (ft)	*	0.91	* Wt. n-Val.	*		*	0.030	*	*
* W.S. Elev (ft)	*	1703.92	* Reach Len. (ft)	*	40.00	*	40.00	*	40.00 *
* Crit W.S. (ft)	*	1704.19	* Flow Area (sq ft)	*		*	13.05	*	*
* E.G. Slope (ft/ft)	*	0.060561	* Area (sq ft)	*		*	13.05	*	*
* Q Total (cfs)	*	100.00	* Flow (cfs)	*		*	100.00	*	*
* Top Width (ft)	*	25.54	* Top Width (ft)	*		*	25.54	*	*
* Vel Total (ft/s)	*	7.66	* Avg. Vel. (ft/s)	*		*	7.66	*	*
* Max Chl Dpth (ft)	*	0.52	* Hydr. Depth (ft)	*		*	0.51	*	*
* Conv. Total (cfs)	*	406.4	* Conv. (cfs)	*		*	406.4	*	*
* Length Wtd. (ft)	*	40.00	* Wetted Per. (ft)	*		*	26.19	*	*
* Min Ch El (ft)	*	1703.40	* Shear (lb/sq ft)	*		*	1.88	*	*
* Alpha	*	1.00	* Stream Power (lb/ft s)	*		*	14.44	*	*
* Frctn Loss (ft)	*	0.73	* Cum Volume (acre-ft)	*		*	0.16	*	*
* C & E Loss (ft)	*	0.01	* Cum SA (acres)	*		*	0.20	*	*

Warning: The energy equation could not be balanced within the specified number of iterations. The program selected the water surface that had the least amount of error between computed and assumed values.
Warning: The conveyance ratio (upstream conveyance divided by downstream conveyance) is less than 0.7 or greater than 1.4. This may indicate the need for additional cross sections.

CROSS SECTION OUTPUT Profile #PF#3

E.G. Elev (ft)	1705.16	Element	Left OB	Channel	Right OB
Vel Head (ft)	0.22	Wt. n-Val.		0.030	
W.S. Elev (ft)	1704.94	Reach Len. (ft)	40.00	40.00	40.00
Crit W.S. (ft)	1704.43	Flow Area (sq ft)		40.11	
E.G. Slope (ft/ft)	0.003782	Area (sq ft)		40.11	
Q Total (cfs)	150.00	Flow (cfs)		150.00	
Top Width (ft)	27.58	Top Width (ft)		27.58	
Vel Total (ft/s)	3.74	Avg. Vel. (ft/s)		3.74	
Max Chl Dpth (ft)	1.54	Hydr. Depth (ft)		1.45	
Conv. Total (cfs)	2439.1	Conv. (cfs)		2439.1	
Length Wtd. (ft)	40.00	Wetted Per. (ft)		29.48	
Min Ch El (ft)	1703.40	Shear (lb/sq ft)		0.32	
Alpha	1.00	Stream Power (lb/ft s)		1.20	
Frctn Loss (ft)	0.15	Cum Volume (acre-ft)	0.00	0.22	
C & E Loss (ft)	0.01	Cum SA (acres)	0.02	0.21	

CROSS SECTION OUTPUT Profile #PF#4

E.G. Elev (ft)	1705.58	Element	Left OB	Channel	Right OB
Vel Head (ft)	0.24	Wt. n-Val.		0.030	
W.S. Elev (ft)	1705.34	Reach Len. (ft)	40.00	40.00	40.00
Crit W.S. (ft)	1704.65	Flow Area (sq ft)		51.39	
E.G. Slope (ft/ft)	0.003118	Area (sq ft)		51.39	
Q Total (cfs)	200.00	Flow (cfs)		200.00	
Top Width (ft)	28.38	Top Width (ft)		28.38	
Vel Total (ft/s)	3.89	Avg. Vel. (ft/s)		3.89	
Max Chl Dpth (ft)	1.94	Hydr. Depth (ft)		1.81	
Conv. Total (cfs)	3581.7	Conv. (cfs)		3581.7	
Length Wtd. (ft)	40.00	Wetted Per. (ft)		30.79	
Min Ch El (ft)	1703.40	Shear (lb/sq ft)		0.32	
Alpha	1.00	Stream Power (lb/ft s)		1.26	
Frctn Loss (ft)	0.13	Cum Volume (acre-ft)	0.01	0.27	
C & E Loss (ft)	0.01	Cum SA (acres)	0.02	0.21	

CROSS SECTION OUTPUT Profile #PF#5

E.G. Elev (ft)	1705.92	Element	Left OB	Channel	Right OB
Vel Head (ft)	0.27	Wt. n-Val.		0.030	
W.S. Elev (ft)	1705.65	Reach Len. (ft)	40.00	40.00	40.00
Crit W.S. (ft)	1704.84	Flow Area (sq ft)		60.21	
E.G. Slope (ft/ft)	0.002997	Area (sq ft)		60.21	
Q Total (cfs)	250.00	Flow (cfs)		250.00	
Top Width (ft)	28.99	Top Width (ft)		28.99	
Vel Total (ft/s)	4.15	Avg. Vel. (ft/s)		4.15	
Max Chl Dpth (ft)	2.25	Hydr. Depth (ft)		2.08	
Conv. Total (cfs)	4566.4	Conv. (cfs)		4566.4	
Length Wtd. (ft)	40.00	Wetted Per. (ft)		31.77	
Min Ch El (ft)	1703.40	Shear (lb/sq ft)		0.35	
Alpha	1.00	Stream Power (lb/ft s)		1.47	
Frctn Loss (ft)	0.13	Cum Volume (acre-ft)	0.02	0.37	
C & E Loss (ft)	0.01	Cum SA (acres)	0.03	0.23	

CROSS SECTION OUTPUT Profile #PF#6

E.G. Elev (ft)	1706.20	Element	Left OB	Channel	Right OB
Vel Head (ft)	0.31	Wt. n-Val.		0.030	
W.S. Elev (ft)	1705.90	Reach Len. (ft)	40.00	40.00	40.00
Crit W.S. (ft)	1705.03	Flow Area (sq ft)		67.40	
E.G. Slope (ft/ft)	0.003061	Area (sq ft)		67.40	
Q Total (cfs)	300.00	Flow (cfs)		300.00	
Top Width (ft)	29.47	Top Width (ft)		29.47	
Vel Total (ft/s)	4.45	Avg. Vel. (ft/s)		4.45	
Max Chl Dpth (ft)	2.50	Hydr. Depth (ft)		2.29	
Conv. Total (cfs)	5422.4	Conv. (cfs)		5422.4	
Length Wtd. (ft)	40.00	Wetted Per. (ft)		32.56	
Min Ch El (ft)	1703.40	Shear (lb/sq ft)		0.40	
Alpha	1.00	Stream Power (lb/ft s)		1.76	
Frctn Loss (ft)	0.14	Cum Volume (acre-ft)	0.02	0.49	
C & E Loss (ft)	0.02	Cum SA (acres)	0.03	0.23	

CROSS SECTION OUTPUT Profile #PF#7

E.G. Elev (ft)	1706.45	Element	Left OB	Channel	Right OB
Vel Head (ft)	0.35	Wt. n-Val.		0.030	
W.S. Elev (ft)	1706.10	Reach Len. (ft)	40.00	40.00	40.00
Crit W.S. (ft)	1705.20	Flow Area (sq ft)		73.30	
E.G. Slope (ft/ft)	0.003232	Area (sq ft)		73.30	
Q Total (cfs)	350.00	Flow (cfs)		350.00	
Top Width (ft)	29.87	Top Width (ft)		29.87	
Vel Total (ft/s)	4.77	Avg. Vel. (ft/s)		4.77	
Max Chl Dpth (ft)	2.70	Hydr. Depth (ft)		2.45	
Conv. Total (cfs)	6156.2	Conv. (cfs)		6156.2	
Length Wtd. (ft)	40.00	Wetted Per. (ft)		33.20	

* Min Ch El (ft)	* 1703.40	* Shear (lb/sq ft)	*	* 0.45	*
* Alpha	* 1.00	* Stream Power (lb/ft s)	*	* 2.13	*
* Frctn Loss (ft)	* 0.15	* Cum Volume (acre-ft)	* 0.03	* 0.67	*
* C & E Loss (ft)	* 0.02	* Cum SA (acres)	* 0.06	* 0.25	*

CROSS SECTION OUTPUT Profile #PF#8

* E.G. Elev (ft)	* 1706.66	* Element	* Left OB	* Channel	* Right OB	*
* Vel Head (ft)	* 0.41	* Wt. n-Val.	*	* 0.030	*	*
* W.S. Elev (ft)	* 1706.25	* Reach Len. (ft)	* 40.00	* 40.00	* 40.00	*
* Crit W.S. (ft)	* 1705.36	* Flow Area (sq ft)	*	* 77.80	*	*
* E.G. Slope (ft/ft)	* 0.003530	* Area (sq ft)	*	* 77.80	*	*
* Q Total (cfs)	* 400.00	* Flow (cfs)	*	* 400.00	*	*
* Top Width (ft)	* 30.16	* Top Width (ft)	*	* 30.16	*	*
* Vel Total (ft/s)	* 5.14	* Avg. Vel. (ft/s)	*	* 5.14	*	*
* Max Chl Dpth (ft)	* 2.85	* Hydr. Depth (ft)	*	* 2.58	*	*
* Conv. Total (cfs)	* 6732.8	* Conv. (cfs)	*	* 6732.8	*	*
* Length Wtd. (ft)	* 40.00	* Wetted Per. (ft)	*	* 33.68	*	*
* Min Ch El (ft)	* 1703.40	* Shear (lb/sq ft)	*	* 0.51	*	*
* Alpha	* 1.00	* Stream Power (lb/ft s)	*	* 2.62	*	*
* Frctn Loss (ft)	* 0.16	* Cum Volume (acre-ft)	* 0.09	* 0.96	*	*
* C & E Loss (ft)	* 0.01	* Cum SA (acres)	* 0.17	* 0.28	*	*

CROSS SECTION OUTPUT Profile #PF#9

* E.G. Elev (ft)	* 1707.40	* Element	* Left OB	* Channel	* Right OB	*
* Vel Head (ft)	* 0.32	* Wt. n-Val.	*	* 0.030	*	*
* W.S. Elev (ft)	* 1707.08	* Reach Len. (ft)	* 40.00	* 40.00	* 40.00	*
* Crit W.S. (ft)	* 1705.57	* Flow Area (sq ft)	*	* 103.66	*	*
* E.G. Slope (ft/ft)	* 0.002055	* Area (sq ft)	*	* 103.66	*	*
* Q Total (cfs)	* 468.00	* Flow (cfs)	*	* 468.00	*	*
* Top Width (ft)	* 31.81	* Top Width (ft)	*	* 31.81	*	*
* Vel Total (ft/s)	* 4.51	* Avg. Vel. (ft/s)	*	* 4.51	*	*
* Max Chl Dpth (ft)	* 3.68	* Hydr. Depth (ft)	*	* 3.26	*	*
* Conv. Total (cfs)	* 10323.0	* Conv. (cfs)	*	* 10323.0	*	*
* Length Wtd. (ft)	* 40.00	* Wetted Per. (ft)	*	* 36.36	*	*
* Min Ch El (ft)	* 1703.40	* Shear (lb/sq ft)	*	* 0.37	*	*
* Alpha	* 1.00	* Stream Power (lb/ft s)	*	* 1.65	*	*
* Frctn Loss (ft)	* 0.06	* Cum Volume (acre-ft)	* 0.59	* 1.56	*	*
* C & E Loss (ft)	* 0.03	* Cum SA (acres)	* 0.25	* 0.31	*	*

CROSS SECTION RIVER: CloudBurst Wash
REACH: Cloud-A1 RS: 620

INPUT
Description: Cloud Burst Flowline Sta: 6+20
Station Elevation Data num= 7

Sta	Elev	Sta	Elev	Sta	Elev	Sta	Elev	Sta	Elev
-113.3	1705.6	-11.8	1705.6	-8	1702.8	0	1702.8	8	1702.8
11.8	1705.6	54.9	1726.5						

Manning's n Values num= 3

Sta	n Val	Sta	n Val	Sta	n Val
-113.3	.03	-11.8	.03	54.9	.03

Bank Sta: Left	Right	Lengths: Left	Channel	Right	Coeff Contr.	Expan.
-11.8	54.9	40	40	40	.1	.3

Left Levee Station= -43 Elevation= 1726

CROSS SECTION OUTPUT Profile #PF#1

* E.G. Elev (ft)	* 1703.81	* Element	* Left OB	* Channel	* Right OB	*
* Vel Head (ft)	* 0.21	* Wt. n-Val.	*	* 0.030	*	*
* W.S. Elev (ft)	* 1703.60	* Reach Len. (ft)	* 40.00	* 40.00	* 40.00	*
* Crit W.S. (ft)	* 1703.46	* Flow Area (sq ft)	*	* 13.64	*	*
* E.G. Slope (ft/ft)	* 0.008344	* Area (sq ft)	*	* 13.64	*	*
* Q Total (cfs)	* 50.00	* Flow (cfs)	*	* 50.00	*	*
* Top Width (ft)	* 18.17	* Top Width (ft)	*	* 18.17	*	*
* Vel Total (ft/s)	* 3.67	* Avg. Vel. (ft/s)	*	* 3.67	*	*
* Max Chl Dpth (ft)	* 0.80	* Hydr. Depth (ft)	*	* 0.75	*	*
* Conv. Total (cfs)	* 547.4	* Conv. (cfs)	*	* 547.4	*	*
* Length Wtd. (ft)	* 40.00	* Wetted Per. (ft)	*	* 18.69	*	*
* Min Ch El (ft)	* 1702.80	* Shear (lb/sq ft)	*	* 0.38	*	*
* Alpha	* 1.00	* Stream Power (lb/ft s)	*	* 1.39	*	*
* Frctn Loss (ft)	* 0.17	* Cum Volume (acre-ft)	*	* 0.08	*	*
* C & E Loss (ft)	* 0.03	* Cum SA (acres)	*	* 0.17	*	*

Warning: The conveyance ratio (upstream conveyance divided by downstream conveyance) is less than 0.7 or greater than 1.4. This may indicate the need for additional cross sections.
Note: Hydraulic jump has occurred between this cross section and the previous upstream section.

CROSS SECTION OUTPUT Profile #PF#2

* E.G. Elev (ft)	* 1704.47	* Element	* Left OB	* Channel	* Right OB	*
* Vel Head (ft)	* 0.23	* Wt. n-Val.	*	* 0.030	*	*
* W.S. Elev (ft)	* 1704.24	* Reach Len. (ft)	* 40.00	* 40.00	* 40.00	*
* Crit W.S. (ft)	* 1703.84	* Flow Area (sq ft)	*	* 25.80	*	*
* E.G. Slope (ft/ft)	* 0.004609	* Area (sq ft)	*	* 25.80	*	*
* Q Total (cfs)	* 100.00	* Flow (cfs)	*	* 100.00	*	*

Top Width (ft)	19.90	Top Width (ft)		19.90	
Vel Total (ft/s)	3.88	Avg. Vel. (ft/s)		3.88	
Max Chl Dpth (ft)	1.44	Hydr. Depth (ft)		1.30	
Conv. Total (cfs)	1473.0	Conv. (cfs)		1473.0	
Length Wtd. (ft)	40.00	Wetted Per. (ft)		20.85	
Min Ch El (ft)	1702.80	Shear (lb/sq ft)		0.36	
Alpha	1.00	Stream Power (lb/ft s)		1.38	
Frctn Loss (ft)	0.13	Cum Volume (acre-ft)		0.14	
C & E Loss (ft)	0.02	Cum SA (acres)		0.18	

Note: Hydraulic jump has occurred between this cross section and the previous upstream section.

CROSS SECTION OUTPUT Profile #PF#3

			Left OB	Channel	Right OB
E.G. Elev (ft)	1705.00	Element			
Vel Head (ft)	0.27	Wt. n-Val.		0.030	
W.S. Elev (ft)	1704.73	Reach Len. (ft)	40.00	40.00	40.00
Crit W.S. (ft)	1704.14	Flow Area (sq ft)		35.88	
E.G. Slope (ft/ft)	0.003825	Area (sq ft)		35.88	
Q Total (cfs)	150.00	Flow (cfs)		150.00	
Top Width (ft)	21.23	Top Width (ft)		21.23	
Vel Total (ft/s)	4.18	Avg. Vel. (ft/s)		4.18	
Max Chl Dpth (ft)	1.93	Hydr. Depth (ft)		1.69	
Conv. Total (cfs)	2425.5	Conv. (cfs)		2425.5	
Length Wtd. (ft)	40.00	Wetted Per. (ft)		22.50	
Min Ch El (ft)	1702.80	Shear (lb/sq ft)		0.38	
Alpha	1.00	Stream Power (lb/ft s)		1.59	
Frctn Loss (ft)	0.12	Cum Volume (acre-ft)	0.00	0.18	
C & E Loss (ft)	0.02	Cum SA (acres)	0.02	0.19	

CROSS SECTION OUTPUT Profile #PF#4

			Left OB	Channel	Right OB
E.G. Elev (ft)	1705.44	Element			
Vel Head (ft)	0.31	Wt. n-Val.		0.030	
W.S. Elev (ft)	1705.12	Reach Len. (ft)	40.00	40.00	40.00
Crit W.S. (ft)	1704.41	Flow Area (sq ft)		44.47	
E.G. Slope (ft/ft)	0.003589	Area (sq ft)		44.47	
Q Total (cfs)	200.00	Flow (cfs)		200.00	
Top Width (ft)	22.30	Top Width (ft)		22.30	
Vel Total (ft/s)	4.50	Avg. Vel. (ft/s)		4.50	
Max Chl Dpth (ft)	2.32	Hydr. Depth (ft)		1.99	
Conv. Total (cfs)	3338.4	Conv. (cfs)		3338.4	
Length Wtd. (ft)	40.00	Wetted Per. (ft)		23.83	
Min Ch El (ft)	1702.80	Shear (lb/sq ft)		0.42	
Alpha	1.00	Stream Power (lb/ft s)		1.88	
Frctn Loss (ft)	0.10	Cum Volume (acre-ft)	0.01	0.23	
C & E Loss (ft)	0.03	Cum SA (acres)	0.02	0.19	

CROSS SECTION OUTPUT Profile #PF#5

			Left OB	Channel	Right OB
E.G. Elev (ft)	1705.77	Element			
Vel Head (ft)	0.38	Wt. n-Val.		0.030	
W.S. Elev (ft)	1705.39	Reach Len. (ft)	40.00	40.00	40.00
Crit W.S. (ft)	1704.65	Flow Area (sq ft)		50.60	
E.G. Slope (ft/ft)	0.003833	Area (sq ft)		50.60	
Q Total (cfs)	250.00	Flow (cfs)		250.00	
Top Width (ft)	23.04	Top Width (ft)		23.04	
Vel Total (ft/s)	4.94	Avg. Vel. (ft/s)		4.94	
Max Chl Dpth (ft)	2.59	Hydr. Depth (ft)		2.20	
Conv. Total (cfs)	4037.8	Conv. (cfs)		4037.8	
Length Wtd. (ft)	40.00	Wetted Per. (ft)		24.74	
Min Ch El (ft)	1702.80	Shear (lb/sq ft)		0.49	
Alpha	1.00	Stream Power (lb/ft s)		2.42	
Frctn Loss (ft)	0.10	Cum Volume (acre-ft)	0.02	0.32	
C & E Loss (ft)	0.05	Cum SA (acres)	0.03	0.20	

CROSS SECTION OUTPUT Profile #PF#6

			Left OB	Channel	Right OB
E.G. Elev (ft)	1706.04	Element			
Vel Head (ft)	0.46	Wt. n-Val.		0.030	
W.S. Elev (ft)	1705.58	Reach Len. (ft)	40.00	40.00	40.00
Crit W.S. (ft)	1704.88	Flow Area (sq ft)		55.03	
E.G. Slope (ft/ft)	0.004316	Area (sq ft)		55.03	
Q Total (cfs)	300.00	Flow (cfs)		300.00	
Top Width (ft)	23.55	Top Width (ft)		23.55	
Vel Total (ft/s)	5.45	Avg. Vel. (ft/s)		5.45	
Max Chl Dpth (ft)	2.78	Hydr. Depth (ft)		2.34	
Conv. Total (cfs)	4566.2	Conv. (cfs)		4566.2	
Length Wtd. (ft)	40.00	Wetted Per. (ft)		25.38	
Min Ch El (ft)	1702.80	Shear (lb/sq ft)		0.58	
Alpha	1.00	Stream Power (lb/ft s)		3.19	
Frctn Loss (ft)	0.11	Cum Volume (acre-ft)	0.02	0.43	
C & E Loss (ft)	0.06	Cum SA (acres)	0.03	0.21	

Warning: The conveyance ratio (upstream conveyance divided by downstream conveyance) is less than 0.7 or greater than 1.4. This may indicate the need for additional cross sections.

CROSS SECTION OUTPUT Profile #PF#7

			Left OB	Channel	Right OB
E.G. Elev (ft)	1706.28	Element			

* Vel Head (ft)	* 0.52	* Wt. n-Val.	* 0.030	* 0.030	* *
* W.S. Elev (ft)	* 1705.76	* Reach Len. (ft)	* 40.00	* 40.00	* 40.00 *
* Crit W.S. (ft)	* 1705.09	* Flow Area (sq ft)	* 5.03	* 59.27	* *
* E.G. Slope (ft/ft)	* 0.004559	* Area (sq ft)	* 5.03	* 59.27	* *
* Q Total (cfs)	* 350.00	* Flow (cfs)	* 4.97	* 345.03	* *
* Top Width (ft)	* 55.13	* Top Width (ft)	* 31.20	* 23.93	* *
* Vel Total (ft/s)	* 5.44	* Avg. Vel. (ft/s)	* 0.99	* 5.82	* *
* Max Chl Dpth (ft)	* 2.96	* Hydr. Depth (ft)	* 0.16	* 2.48	* *
* Conv. Total (cfs)	* 5183.6	* Conv. (cfs)	* 73.6	* 5110.0	* *
* Length Wtd. (ft)	* 40.00	* Wetted Per. (ft)	* 31.36	* 25.81	* *
* Min Ch El (ft)	* 1702.80	* Shear (lb/sq ft)	* 0.05	* 0.65	* *
* Alpha	* 1.13	* Stream Power (lb/ft s)	* 0.05	* 3.80	* *
* Frctn Loss (ft)	* 0.12	* Cum Volume (acre-ft)	* 0.03	* 0.61	* *
* C & E Loss (ft)	* 0.07	* Cum SA (acres)	* 0.04	* 0.22	* *

Warning: The conveyance ratio (upstream conveyance divided by downstream conveyance) is less than 0.7 or greater than 1.4. This may indicate the need for additional cross sections.

CROSS SECTION OUTPUT Profile #PF#8

* E.G. Elev (ft)	* 1706.48	* Element	* Left OB	* Channel	* Right OB *
* Vel Head (ft)	* 0.53	* Wt. n-Val.	* 0.030	* 0.030	* *
* W.S. Elev (ft)	* 1705.95	* Reach Len. (ft)	* 40.00	* 40.00	* 40.00 *
* Crit W.S. (ft)	* 1705.29	* Flow Area (sq ft)	* 11.00	* 63.89	* *
* E.G. Slope (ft/ft)	* 0.004451	* Area (sq ft)	* 11.00	* 63.89	* *
* Q Total (cfs)	* 400.00	* Flow (cfs)	* 18.00	* 382.00	* *
* Top Width (ft)	* 55.53	* Top Width (ft)	* 31.20	* 24.33	* *
* Vel Total (ft/s)	* 5.34	* Avg. Vel. (ft/s)	* 1.64	* 5.98	* *
* Max Chl Dpth (ft)	* 3.15	* Hydr. Depth (ft)	* 0.35	* 2.63	* *
* Conv. Total (cfs)	* 5995.5	* Conv. (cfs)	* 269.8	* 5725.6	* *
* Length Wtd. (ft)	* 40.00	* Wetted Per. (ft)	* 31.55	* 26.25	* *
* Min Ch El (ft)	* 1702.80	* Shear (lb/sq ft)	* 0.10	* 0.68	* *
* Alpha	* 1.20	* Stream Power (lb/ft s)	* 0.16	* 4.04	* *
* Frctn Loss (ft)	* 0.12	* Cum Volume (acre-ft)	* 0.08	* 0.89	* *
* C & E Loss (ft)	* 0.07	* Cum SA (acres)	* 0.15	* 0.26	* *

CROSS SECTION OUTPUT Profile #PF#9

* E.G. Elev (ft)	* 1707.30	* Element	* Left OB	* Channel	* Right OB *
* Vel Head (ft)	* 0.20	* Wt. n-Val.	* 0.030	* 0.030	* *
* W.S. Elev (ft)	* 1707.10	* Reach Len. (ft)	* 40.00	* 40.00	* 40.00 *
* Crit W.S. (ft)	* 1705.90	* Flow Area (sq ft)	* 46.70	* 93.07	* *
* E.G. Slope (ft/ft)	* 0.001297	* Area (sq ft)	* 46.70	* 93.07	* *
* Q Total (cfs)	* 468.00	* Flow (cfs)	* 105.66	* 362.34	* *
* Top Width (ft)	* 57.89	* Top Width (ft)	* 31.20	* 26.69	* *
* Vel Total (ft/s)	* 3.35	* Avg. Vel. (ft/s)	* 2.26	* 3.89	* *
* Max Chl Dpth (ft)	* 4.30	* Hydr. Depth (ft)	* 1.50	* 3.49	* *
* Conv. Total (cfs)	* 12994.1	* Conv. (cfs)	* 2933.7	* 10060.4	* *
* Length Wtd. (ft)	* 40.00	* Wetted Per. (ft)	* 32.70	* 28.87	* *
* Min Ch El (ft)	* 1702.80	* Shear (lb/sq ft)	* 0.12	* 0.26	* *
* Alpha	* 1.15	* Stream Power (lb/ft s)	* 0.26	* 1.02	* *
* Frctn Loss (ft)	* 0.05	* Cum Volume (acre-ft)	* 0.57	* 1.47	* *
* C & E Loss (ft)	* 0.00	* Cum SA (acres)	* 0.23	* 0.28	* *

CROSS SECTION RIVER: CloudBurst Wash
REACH: Cloud-A1 RS: 580

INPUT
Description: Cloud Burst Flowline Sta: 5+80
Station Elevation Data num= 8

Sta	Elev	Sta	Elev	Sta	Elev	Sta	Elev	Sta	Elev
-114.7	1705.3	-10.4	1704.5	-8.8	1703.6	-6	1702.2	0	1702.2
6	1702.2	8.8	1703.6	54.1	1726.5				

Manning's n Values num= 3

Sta	n Val	Sta	n Val	Sta	n Val
-114.7	.03	-10.4	.03	54.1	.03

Bank Sta: Left	Right	Lengths: Left	Channel	Right	Coeff Contr.	Expan.
-10.4	54.1	40	40	40	.1	.3

Left Levee Station= -27 Elevation= 1726

CROSS SECTION OUTPUT Profile #PF#1

* E.G. Elev (ft)	* 1703.60	* Element	* Left OB	* Channel	* Right OB *
* Vel Head (ft)	* 0.11	* Wt. n-Val.	*	* 0.030	* *
* W.S. Elev (ft)	* 1703.49	* Reach Len. (ft)	* 40.00	* 40.00	* 40.00 *
* Crit W.S. (ft)	* 1702.98	* Flow Area (sq ft)	*	* 18.89	* *
* E.G. Slope (ft/ft)	* 0.002638	* Area (sq ft)	*	* 18.89	* *
* Q Total (cfs)	* 50.00	* Flow (cfs)	*	* 50.00	* *
* Top Width (ft)	* 17.18	* Top Width (ft)	*	* 17.18	* *
* Vel Total (ft/s)	* 2.65	* Avg. Vel. (ft/s)	*	* 2.65	* *
* Max Chl Dpth (ft)	* 1.29	* Hydr. Depth (ft)	*	* 1.10	* *
* Conv. Total (cfs)	* 973.5	* Conv. (cfs)	*	* 973.5	* *
* Length Wtd. (ft)	* 40.00	* Wetted Per. (ft)	*	* 17.79	* *
* Min Ch El (ft)	* 1702.20	* Shear (lb/sq ft)	*	* 0.17	* *
* Alpha	* 1.00	* Stream Power (lb/ft s)	*	* 0.46	* *
* Frctn Loss (ft)	* 0.20	* Cum Volume (acre-ft)	*	* 0.06	* *
* C & E Loss (ft)	* 0.03	* Cum SA (acres)	*	* 0.15	* *

Warning: The conveyance ratio (upstream conveyance divided by downstream conveyance) is less than 0.7 or greater than 1.4. This may indicate the need for additional cross sections.

CROSS SECTION OUTPUT Profile #PF#2

E.G. Elev (ft)	1704.32	Element	Left OB	Channel	Right OB
Vel Head (ft)	0.16	Wt. n-Val.		0.030	
W.S. Elev (ft)	1704.16	Reach Len. (ft)	40.00	40.00	40.00
Crit W.S. (ft)	1703.40	Flow Area (sq ft)		31.12	
E.G. Slope (ft/ft)	0.002433	Area (sq ft)		31.12	
Q Total (cfs)	100.00	Flow (cfs)		100.00	
Top Width (ft)	19.69	Top Width (ft)		19.69	
Vel Total (ft/s)	3.21	Avg. Vel. (ft/s)		3.21	
Max Chl Dpth (ft)	1.96	Hydr. Depth (ft)		1.58	
Conv. Total (cfs)	2027.2	Conv. (cfs)		2027.2	
Length Wtd. (ft)	40.00	Wetted Per. (ft)		20.63	
Min Ch El (ft)	1702.20	Shear (lb/sq ft)		0.23	
Alpha	1.00	Stream Power (lb/ft s)		0.74	
Frctn Loss (ft)	0.19	Cum Volume (acre-ft)		0.12	
C & E Loss (ft)	0.04	Cum SA (acres)		0.16	

Warning: The conveyance ratio (upstream conveyance divided by downstream conveyance) is less than 0.7 or greater than 1.4. This may indicate the need for additional cross sections.

CROSS SECTION OUTPUT Profile #PF#3

E.G. Elev (ft)	1704.86	Element	Left OB	Channel	Right OB
Vel Head (ft)	0.20	Wt. n-Val.	0.030	0.030	
W.S. Elev (ft)	1704.66	Reach Len. (ft)	40.00	40.00	40.00
Crit W.S. (ft)	1703.74	Flow Area (sq ft)	1.60	41.46	
E.G. Slope (ft/ft)	0.002328	Area (sq ft)	1.60	41.46	
Q Total (cfs)	150.00	Flow (cfs)	0.80	149.20	
Top Width (ft)	37.90	Top Width (ft)	16.60	21.30	
Vel Total (ft/s)	3.48	Avg. Vel. (ft/s)	0.50	3.60	
Max Chl Dpth (ft)	2.46	Hydr. Depth (ft)	0.10	1.95	
Conv. Total (cfs)	3108.7	Conv. (cfs)	16.6	3092.0	
Length Wtd. (ft)	40.00	Wetted Per. (ft)	16.63	22.45	
Min Ch El (ft)	1702.20	Shear (lb/sq ft)	0.01	0.27	
Alpha	1.06	Stream Power (lb/ft s)	0.01	0.97	
Frctn Loss (ft)	0.18	Cum Volume (acre-ft)	0.00	0.15	
C & E Loss (ft)	0.05	Cum SA (acres)	0.01	0.17	

Warning: The velocity head has changed by more than 0.5 ft (0.15 m). This may indicate the need for additional cross sections.
Warning: The conveyance ratio (upstream conveyance divided by downstream conveyance) is less than 0.7 or greater than 1.4. This may indicate the need for additional cross sections.

CROSS SECTION OUTPUT Profile #PF#4

E.G. Elev (ft)	1705.30	Element	Left OB	Channel	Right OB
Vel Head (ft)	0.20	Wt. n-Val.	0.030	0.030	
W.S. Elev (ft)	1705.10	Reach Len. (ft)	40.00	40.00	40.00
Crit W.S. (ft)	1704.03	Flow Area (sq ft)	8.88	51.00	
E.G. Slope (ft/ft)	0.001951	Area (sq ft)	8.88	51.00	
Q Total (cfs)	200.00	Flow (cfs)	12.57	187.43	
Top Width (ft)	38.76	Top Width (ft)	16.60	22.16	
Vel Total (ft/s)	3.34	Avg. Vel. (ft/s)	1.42	3.68	
Max Chl Dpth (ft)	2.90	Hydr. Depth (ft)	0.53	2.30	
Conv. Total (cfs)	4528.0	Conv. (cfs)	284.5	4243.5	
Length Wtd. (ft)	40.00	Wetted Per. (ft)	17.07	23.42	
Min Ch El (ft)	1702.20	Shear (lb/sq ft)	0.06	0.27	
Alpha	1.15	Stream Power (lb/ft s)	0.09	0.97	
Frctn Loss (ft)	0.16	Cum Volume (acre-ft)	0.00	0.18	
C & E Loss (ft)	0.07	Cum SA (acres)	0.01	0.17	

Warning: The velocity head has changed by more than 0.5 ft (0.15 m). This may indicate the need for additional cross sections.
Warning: The conveyance ratio (upstream conveyance divided by downstream conveyance) is less than 0.7 or greater than 1.4. This may indicate the need for additional cross sections.

CROSS SECTION OUTPUT Profile #PF#5

E.G. Elev (ft)	1705.62	Element	Left OB	Channel	Right OB
Vel Head (ft)	0.21	Wt. n-Val.	0.030	0.030	
W.S. Elev (ft)	1705.40	Reach Len. (ft)	40.00	40.00	40.00
Crit W.S. (ft)	1704.29	Flow Area (sq ft)	13.95	57.85	
E.G. Slope (ft/ft)	0.001901	Area (sq ft)	13.95	57.85	
Q Total (cfs)	250.00	Flow (cfs)	26.01	223.99	
Top Width (ft)	39.37	Top Width (ft)	16.60	22.77	
Vel Total (ft/s)	3.48	Avg. Vel. (ft/s)	1.86	3.87	
Max Chl Dpth (ft)	3.20	Hydr. Depth (ft)	0.84	2.54	
Conv. Total (cfs)	5734.5	Conv. (cfs)	596.6	5137.9	
Length Wtd. (ft)	40.00	Wetted Per. (ft)	17.38	24.10	
Min Ch El (ft)	1702.20	Shear (lb/sq ft)	0.10	0.28	
Alpha	1.14	Stream Power (lb/ft s)	0.18	1.10	
Frctn Loss (ft)	0.14	Cum Volume (acre-ft)	0.01	0.27	
C & E Loss (ft)	0.04	Cum SA (acres)	0.02	0.18	

Warning: The conveyance ratio (upstream conveyance divided by downstream conveyance) is less than 0.7 or greater than 1.4. This may indicate the need for additional cross sections.

CROSS SECTION OUTPUT Profile #PF#6

E.G. Elev (ft)	1705.86	Element	Left OB	Channel	Right OB
Vel Head (ft)	0.24	Wt. n-Val.	0.030	0.030	
W.S. Elev (ft)	1705.62	Reach Len. (ft)	40.00	40.00	40.00
Crit W.S. (ft)	1704.71	Flow Area (sq ft)	17.53	62.81	
E.G. Slope (ft/ft)	0.002016	Area (sq ft)	17.53	62.81	
Q Total (cfs)	300.00	Flow (cfs)	38.88	261.12	
Top Width (ft)	39.79	Top Width (ft)	16.60	23.19	
Vel Total (ft/s)	3.73	Avg. Vel. (ft/s)	2.22	4.16	
Max Chl Dpth (ft)	3.42	Hydr. Depth (ft)	1.06	2.71	
Conv. Total (cfs)	6681.2	Conv. (cfs)	865.8	5815.4	
Length Wtd. (ft)	40.00	Wetted Per. (ft)	17.59	24.57	
Min Ch El (ft)	1702.20	Shear (lb/sq ft)	0.13	0.32	
Alpha	1.12	Stream Power (lb/ft s)	0.28	1.34	
Frctn Loss (ft)	0.14	Cum Volume (acre-ft)	0.01	0.38	
C & E Loss (ft)	0.04	Cum SA (acres)	0.02	0.19	

Warning: The conveyance ratio (upstream conveyance divided by downstream conveyance) is less than 0.7 or greater than 1.4. This may indicate the need for additional cross sections.

CROSS SECTION OUTPUT Profile #PF#7

E.G. Elev (ft)	1706.09	Element	Left OB	Channel	Right OB
Vel Head (ft)	0.27	Wt. n-Val.	0.030	0.030	
W.S. Elev (ft)	1705.81	Reach Len. (ft)	40.00	40.00	40.00
Crit W.S. (ft)	1704.93	Flow Area (sq ft)	20.74	67.33	
E.G. Slope (ft/ft)	0.002125	Area (sq ft)	20.74	67.33	
Q Total (cfs)	350.00	Flow (cfs)	52.45	297.55	
Top Width (ft)	40.18	Top Width (ft)	16.60	23.58	
Vel Total (ft/s)	3.97	Avg. Vel. (ft/s)	2.53	4.42	
Max Chl Dpth (ft)	3.61	Hydr. Depth (ft)	1.25	2.86	
Conv. Total (cfs)	7593.2	Conv. (cfs)	1137.8	6455.4	
Length Wtd. (ft)	40.00	Wetted Per. (ft)	17.79	25.00	
Min Ch El (ft)	1702.20	Shear (lb/sq ft)	0.15	0.36	
Alpha	1.11	Stream Power (lb/ft s)	0.39	1.58	
Frctn Loss (ft)	0.15	Cum Volume (acre-ft)	0.02	0.55	
C & E Loss (ft)	0.05	Cum SA (acres)	0.02	0.20	

Warning: The conveyance ratio (upstream conveyance divided by downstream conveyance) is less than 0.7 or greater than 1.4. This may indicate the need for additional cross sections.

CROSS SECTION OUTPUT Profile #PF#8

E.G. Elev (ft)	1706.29	Element	Left OB	Channel	Right OB
Vel Head (ft)	0.30	Wt. n-Val.	0.030	0.030	
W.S. Elev (ft)	1705.99	Reach Len. (ft)	40.00	40.00	40.00
Crit W.S. (ft)	1705.10	Flow Area (sq ft)	23.69	71.56	
E.G. Slope (ft/ft)	0.002224	Area (sq ft)	23.69	71.56	
Q Total (cfs)	400.00	Flow (cfs)	66.55	333.45	
Top Width (ft)	40.53	Top Width (ft)	16.60	23.93	
Vel Total (ft/s)	4.20	Avg. Vel. (ft/s)	2.81	4.66	
Max Chl Dpth (ft)	3.79	Hydr. Depth (ft)	1.43	2.99	
Conv. Total (cfs)	8482.6	Conv. (cfs)	1411.4	7071.2	
Length Wtd. (ft)	40.00	Wetted Per. (ft)	17.96	25.40	
Min Ch El (ft)	1702.20	Shear (lb/sq ft)	0.18	0.39	
Alpha	1.10	Stream Power (lb/ft s)	0.51	1.82	
Frctn Loss (ft)	0.15	Cum Volume (acre-ft)	0.07	0.83	
C & E Loss (ft)	0.05	Cum SA (acres)	0.13	0.23	

Warning: The conveyance ratio (upstream conveyance divided by downstream conveyance) is less than 0.7 or greater than 1.4. This may indicate the need for additional cross sections.

CROSS SECTION OUTPUT Profile #PF#9

E.G. Elev (ft)	1707.25	Element	Left OB	Channel	Right OB
Vel Head (ft)	0.18	Wt. n-Val.	0.030	0.030	
W.S. Elev (ft)	1707.06	Reach Len. (ft)	40.00	40.00	40.00
Crit W.S. (ft)	1705.29	Flow Area (sq ft)	41.48	98.35	
E.G. Slope (ft/ft)	0.001004	Area (sq ft)	41.48	98.35	
Q Total (cfs)	468.00	Flow (cfs)	109.43	358.57	
Top Width (ft)	42.65	Top Width (ft)	16.60	26.05	
Vel Total (ft/s)	3.35	Avg. Vel. (ft/s)	2.64	3.65	
Max Chl Dpth (ft)	4.86	Hydr. Depth (ft)	2.50	3.78	
Conv. Total (cfs)	14770.7	Conv. (cfs)	3453.9	11316.8	
Length Wtd. (ft)	40.00	Wetted Per. (ft)	19.04	27.77	
Min Ch El (ft)	1702.20	Shear (lb/sq ft)	0.14	0.22	
Alpha	1.05	Stream Power (lb/ft s)	0.36	0.81	
Frctn Loss (ft)	0.05	Cum Volume (acre-ft)	0.53	1.38	
C & E Loss (ft)	0.00	Cum SA (acres)	0.21	0.26	

CROSS SECTION RIVER: CloudBurst Wash
REACH: Cloud-A1 RS: 560

INPUT
Description: Cloud Burst Flowline Sta: 5+80
Station Elevation Data num= 8

Sta	Elev	Sta	Elev	Sta	Elev	Sta	Elev	Sta	Elev
-114.7	1705.3	-10.4	1704.5	-8.5	1704.4	-3.5	1701.9	0	1701.9

```
     3.5  1701.9     8.5  1704.4    54.1  1726.5

Manning's n Values          num=       3
     Sta   n Val     Sta   n Val     Sta   n Val
**********************************************
  -114.7     .03   -10.4     .03    54.1     .03

Bank Sta: Left   Right    Lengths: Left Channel   Right     Coeff Contr.   Expan.
          -10.4   54.1               40      40      40            .1        .3
Left Levee      Station=     -27      Elevation=    1726

CROSS SECTION OUTPUT    Profile #PF#1
*****************************************************************************************
* E.G. Elev (ft)         *  1703.38 * Element                 *  Left OB *  Channel * Right OB *
* Vel Head (ft)          *     0.38 * Wt. n-Val.              *          *    0.030 *          *
* W.S. Elev (ft)         *  1703.00 * Reach Len. (ft)         *    40.00 *    40.00 *    40.00 *
* Crit W.S. (ft)         *  1702.95 * Flow Area (sq ft)       *          *    10.15 *          *
* E.G. Slope (ft/ft)     * 0.012255 * Area (sq ft)            *          *    10.15 *          *
* Q Total (cfs)          *    50.00 * Flow (cfs)              *          *    50.00 *          *
* Top Width (ft)         *    11.41 * Top Width (ft)          *          *    11.41 *          *
* Vel Total (ft/s)       *     4.92 * Avg. Vel. (ft/s)        *          *     4.92 *          *
* Max Chl Dpth (ft)      *     1.10 * Hydr. Depth (ft)        *          *     0.89 *          *
* Conv. Total (cfs)      *    451.7 * Conv. (cfs)             *          *    451.7 *          *
* Length Wtd. (ft)       *    40.00 * Wetted Per. (ft)        *          *    11.93 *          *
* Min Ch El (ft)         *  1701.90 * Shear (lb/sq ft)        *          *     0.65 *          *
* Alpha                  *     1.00 * Stream Power (lb/ft s)   *          *     3.21 *          *
* Frctn Loss (ft)        *     0.53 * Cum Volume (acre-ft)     *          *     0.05 *          *
* C & E Loss (ft)        *     0.00 * Cum SA (acres)           *          *     0.14 *          *
*****************************************************************************************

CROSS SECTION OUTPUT    Profile #PF#2
*****************************************************************************************
* E.G. Elev (ft)         *  1704.08 * Element                 *  Left OB *  Channel * Right OB *
* Vel Head (ft)          *     0.60 * Wt. n-Val.              *          *    0.030 *          *
* W.S. Elev (ft)         *  1703.48 * Reach Len. (ft)         *    40.00 *    40.00 *    40.00 *
* Crit W.S. (ft)         *  1703.48 * Flow Area (sq ft)       *          *    16.03 *          *
* E.G. Slope (ft/ft)     * 0.013325 * Area (sq ft)            *          *    16.03 *          *
* Q Total (cfs)          *   100.00 * Flow (cfs)              *          *   100.00 *          *
* Top Width (ft)         *    13.31 * Top Width (ft)          *          *    13.31 *          *
* Vel Total (ft/s)       *     6.24 * Avg. Vel. (ft/s)        *          *     6.24 *          *
* Max Chl Dpth (ft)      *     1.58 * Hydr. Depth (ft)        *          *     1.20 *          *
* Conv. Total (cfs)      *    866.3 * Conv. (cfs)             *          *    866.3 *          *
* Length Wtd. (ft)       *    40.00 * Wetted Per. (ft)        *          *    14.06 *          *
* Min Ch El (ft)         *  1701.90 * Shear (lb/sq ft)        *          *     0.95 *          *
* Alpha                  *     1.00 * Stream Power (lb/ft s)   *          *     5.92 *          *
* Frctn Loss (ft)        *     0.54 * Cum Volume (acre-ft)     *          *     0.09 *          *
* C & E Loss (ft)        *     0.02 * Cum SA (acres)           *          *     0.15 *          *
*****************************************************************************************

Warning: The energy equation could not be balanced within the specified number of iterations.  The
         program selected the water surface that had the least amount of error between computed
         and assumed values.
Warning: During the standard step iterations, when the assumed water surface was set equal to
         critical depth, the calculated water surface came back below critical depth.  This indicates
         that there is not a valid subcritical answer.  The program defaulted to critical depth.
Note:    Multiple critical depths were found at this location.  The critical depth with the lowest, valid,
         water surface was used.

CROSS SECTION OUTPUT    Profile #PF#3
*****************************************************************************************
* E.G. Elev (ft)         *  1704.62 * Element                 *  Left OB *  Channel * Right OB *
* Vel Head (ft)          *     0.74 * Wt. n-Val.              *          *    0.030 *          *
* W.S. Elev (ft)         *  1703.88 * Reach Len. (ft)         *    40.00 *    40.00 *    40.00 *
* Crit W.S. (ft)         *  1703.88 * Flow Area (sq ft)       *          *    21.68 *          *
* E.G. Slope (ft/ft)     * 0.012849 * Area (sq ft)            *          *    21.68 *          *
* Q Total (cfs)          *   150.00 * Flow (cfs)              *          *   150.00 *          *
* Top Width (ft)         *    14.91 * Top Width (ft)          *          *    14.91 *          *
* Vel Total (ft/s)       *     6.92 * Avg. Vel. (ft/s)        *          *     6.92 *          *
* Max Chl Dpth (ft)      *     1.98 * Hydr. Depth (ft)        *          *     1.45 *          *
* Conv. Total (cfs)      *   1323.3 * Conv. (cfs)             *          *   1323.3 *          *
* Length Wtd. (ft)       *    40.00 * Wetted Per. (ft)        *          *    15.85 *          *
* Min Ch El (ft)         *  1701.90 * Shear (lb/sq ft)        *          *     1.10 *          *
* Alpha                  *     1.00 * Stream Power (lb/ft s)   *          *     7.59 *          *
* Frctn Loss (ft)        *     0.51 * Cum Volume (acre-ft)     *          *     0.12 *          *
* C & E Loss (ft)        *     0.02 * Cum SA (acres)           *          *     0.15 *          *
*****************************************************************************************

Warning: The energy equation could not be balanced within the specified number of iterations.  The
         program selected the water surface that had the least amount of error between computed
         and assumed values.
Warning: During the standard step iterations, when the assumed water surface was set equal to
         critical depth, the calculated water surface came back below critical depth.  This indicates
         that there is not a valid subcritical answer.  The program defaulted to critical depth.
Note:    Multiple critical depths were found at this location.  The critical depth with the lowest, valid,
         water surface was used.

CROSS SECTION OUTPUT    Profile #PF#4
*****************************************************************************************
* E.G. Elev (ft)         *  1705.07 * Element                 *  Left OB *  Channel * Right OB *
* Vel Head (ft)          *     0.85 * Wt. n-Val.              *          *    0.030 *          *
* W.S. Elev (ft)         *  1704.22 * Reach Len. (ft)         *    40.00 *    40.00 *    40.00 *
* Crit W.S. (ft)         *  1704.22 * Flow Area (sq ft)       *          *    27.00 *          *
* E.G. Slope (ft/ft)     * 0.012420 * Area (sq ft)            *          *    27.00 *          *
* Q Total (cfs)          *   200.00 * Flow (cfs)              *          *   200.00 *          *
* Top Width (ft)         *    16.28 * Top Width (ft)          *          *    16.28 *          *
```

Vel Total (ft/s)	7.41	Avg. Vel. (ft/s)		7.41	
Max Chl Dpth (ft)	2.32	Hydr. Depth (ft)		1.66	
Conv. Total (cfs)	1794.6	Conv. (cfs)		1794.6	
Length Wtd. (ft)	40.00	Wetted Per. (ft)		17.38	
Min Ch El (ft)	1701.90	Shear (lb/sq ft)		1.21	
Alpha	1.00	Stream Power (lb/ft s)		8.93	
Frctn Loss (ft)		Cum Volume (acre-ft)		0.15	
C & E Loss (ft)		Cum SA (acres)		0.15	

Warning: The energy equation could not be balanced within the specified number of iterations. The program used critical depth for the water surface and continued on with the calculations.

CROSS SECTION OUTPUT Profile #PF#5

			Left OB	Channel	Right OB
E.G. Elev (ft)	1705.43	Element			
Vel Head (ft)	0.66	Wt. n-Val.	0.030	0.030	
W.S. Elev (ft)	1704.78	Reach Len. (ft)	40.00	40.00	40.00
Crit W.S. (ft)	1704.78	Flow Area (sq ft)	3.51	37.14	
E.G. Slope (ft/ft)	0.008224	Area (sq ft)	3.51	37.14	
Q Total (cfs)	250.00	Flow (cfs)	5.57	244.43	
Top Width (ft)	36.27	Top Width (ft)	16.60	19.67	
Vel Total (ft/s)	6.15	Avg. Vel. (ft/s)	1.59	6.58	
Max Chl Dpth (ft)	2.88	Hydr. Depth (ft)	0.21	1.89	
Conv. Total (cfs)	2756.8	Conv. (cfs)	61.4	2695.4	
Length Wtd. (ft)	40.00	Wetted Per. (ft)	16.75	20.94	
Min Ch El (ft)	1701.90	Shear (lb/sq ft)	0.11	0.91	
Alpha	1.12	Stream Power (lb/ft s)	0.17	5.99	
Frctn Loss (ft)	0.39	Cum Volume (acre-ft)	0.00	0.23	
C & E Loss (ft)	0.02	Cum SA (acres)	0.01	0.16	

Warning: The energy equation could not be balanced within the specified number of iterations. The program selected the water surface that had the least amount of error between computed and assumed values.
Warning: During the standard step iterations, when the assumed water surface was set equal to critical depth, the calculated water surface came back below critical depth. This indicates that there is not a valid subcritical answer. The program defaulted to critical depth.
Note: Multiple critical depths were found at this location. The critical depth with the lowest, valid, water surface was used.

CROSS SECTION OUTPUT Profile #PF#6

			Left OB	Channel	Right OB
E.G. Elev (ft)	1705.68	Element			
Vel Head (ft)	0.68	Wt. n-Val.	0.030	0.030	
W.S. Elev (ft)	1705.00	Reach Len. (ft)	40.00	40.00	40.00
Crit W.S. (ft)	1705.00	Flow Area (sq ft)	7.23	41.60	
E.G. Slope (ft/ft)	0.007753	Area (sq ft)	7.23	41.60	
Q Total (cfs)	300.00	Flow (cfs)	17.86	282.14	
Top Width (ft)	36.74	Top Width (ft)	16.60	20.14	
Vel Total (ft/s)	6.14	Avg. Vel. (ft/s)	2.47	6.78	
Max Chl Dpth (ft)	3.10	Hydr. Depth (ft)	0.44	2.07	
Conv. Total (cfs)	3407.0	Conv. (cfs)	202.9	3204.1	
Length Wtd. (ft)	40.00	Wetted Per. (ft)	16.97	21.46	
Min Ch El (ft)	1701.90	Shear (lb/sq ft)	0.21	0.94	
Alpha	1.16	Stream Power (lb/ft s)	0.51	6.36	
Frctn Loss (ft)	0.37	Cum Volume (acre-ft)	0.00	0.33	
C & E Loss (ft)	0.03	Cum SA (acres)	0.01	0.17	

Warning: The energy equation could not be balanced within the specified number of iterations. The program selected the water surface that had the least amount of error between computed and assumed values.
Warning: During the standard step iterations, when the assumed water surface was set equal to critical depth, the calculated water surface came back below critical depth. This indicates that there is not a valid subcritical answer. The program defaulted to critical depth.
Note: Multiple critical depths were found at this location. The critical depth with the lowest, valid, water surface was used.

CROSS SECTION OUTPUT Profile #PF#7

			Left OB	Channel	Right OB
E.G. Elev (ft)	1705.89	Element			
Vel Head (ft)	0.73	Wt. n-Val.	0.030	0.030	
W.S. Elev (ft)	1705.16	Reach Len. (ft)	40.00	40.00	40.00
Crit W.S. (ft)	1705.16	Flow Area (sq ft)	9.98	44.96	
E.G. Slope (ft/ft)	0.007857	Area (sq ft)	9.98	44.96	
Q Total (cfs)	350.00	Flow (cfs)	30.54	319.46	
Top Width (ft)	37.08	Top Width (ft)	16.60	20.48	
Vel Total (ft/s)	6.37	Avg. Vel. (ft/s)	3.06	7.11	
Max Chl Dpth (ft)	3.26	Hydr. Depth (ft)	0.60	2.20	
Conv. Total (cfs)	3948.7	Conv. (cfs)	344.5	3604.1	
Length Wtd. (ft)	40.00	Wetted Per. (ft)	17.14	21.84	
Min Ch El (ft)	1701.90	Shear (lb/sq ft)	0.29	1.01	
Alpha	1.16	Stream Power (lb/ft s)	0.87	7.18	
Frctn Loss (ft)	0.37	Cum Volume (acre-ft)	0.00	0.50	
C & E Loss (ft)	0.03	Cum SA (acres)	0.01	0.18	

Warning: The energy equation could not be balanced within the specified number of iterations. The program selected the water surface that had the least amount of error between computed and assumed values.
Warning: During the standard step iterations, when the assumed water surface was set equal to critical depth, the calculated water surface came back below critical depth. This indicates that there is not a valid subcritical answer. The program defaulted to critical depth.
Note: Multiple critical depths were found at this location. The critical depth with the lowest, valid,

water surface was used.

CROSS SECTION OUTPUT Profile #PF#8

E.G. Elev (ft)	1706.09	Element	Left OB	Channel	Right OB
Vel Head (ft)	0.78	Wt. n-Val.	0.030	0.030	
W.S. Elev (ft)	1705.32	Reach Len. (ft)	40.00	40.00	40.00
Crit W.S. (ft)	1705.32	Flow Area (sq ft)	12.49	48.09	
E.G. Slope (ft/ft)	0.007944	Area (sq ft)	12.49	48.09	
Q Total (cfs)	400.00	Flow (cfs)	44.41	355.59	
Top Width (ft)	37.39	Top Width (ft)	16.60	20.79	
Vel Total (ft/s)	6.60	Avg. Vel. (ft/s)	3.55	7.39	
Max Chl Dpth (ft)	3.42	Hydr. Depth (ft)	0.75	2.31	
Conv. Total (cfs)	4487.8	Conv. (cfs)	498.3	3989.5	
Length Wtd. (ft)	40.00	Wetted Per. (ft)	17.29	22.18	
Min Ch El (ft)	1701.90	Shear (lb/sq ft)	0.36	1.08	
Alpha	1.15	Stream Power (lb/ft s)	1.27	7.95	
Frctn Loss (ft)	0.35	Cum Volume (acre-ft)	0.05	0.77	
C & E Loss (ft)	0.02	Cum SA (acres)	0.11	0.21	

Warning: The energy equation could not be balanced within the specified number of iterations. The program selected the water surface that had the least amount of error between computed and assumed values.
Warning: During the standard step iterations, when the assumed water surface was set equal to critical depth, the calculated water surface came back below critical depth. This indicates that there is not a valid subcritical answer. The program defaulted to critical depth.
Note: Multiple critical depths were found at this location. The critical depth with the lowest, valid, water surface was used.

CROSS SECTION OUTPUT Profile #PF#9

E.G. Elev (ft)	1707.19	Element	Left OB	Channel	Right OB
Vel Head (ft)	0.23	Wt. n-Val.	0.030	0.030	
W.S. Elev (ft)	1706.97	Reach Len. (ft)	40.00	40.00	40.00
Crit W.S. (ft)	1705.50	Flow Area (sq ft)	39.89	85.22	
E.G. Slope (ft/ft)	0.001387	Area (sq ft)	39.89	85.22	
Q Total (cfs)	468.00	Flow (cfs)	120.91	347.09	
Top Width (ft)	40.80	Top Width (ft)	16.60	24.20	
Vel Total (ft/s)	3.74	Avg. Vel. (ft/s)	3.03	4.07	
Max Chl Dpth (ft)	5.07	Hydr. Depth (ft)	2.40	3.52	
Conv. Total (cfs)	12567.7	Conv. (cfs)	3246.9	9320.8	
Length Wtd. (ft)	40.00	Wetted Per. (ft)	18.94	25.97	
Min Ch El (ft)	1701.90	Shear (lb/sq ft)	0.18	0.28	
Alpha	1.05	Stream Power (lb/ft s)	0.55	1.16	
Frctn Loss (ft)	0.05	Cum Volume (acre-ft)	0.49	1.29	
C & E Loss (ft)	0.00	Cum SA (acres)	0.20	0.24	

CROSS SECTION RIVER: CloudBurst Wash
REACH: Cloud-A1 RS: 540

INPUT
Description: Cloud Burst Flowline Sta: 5+40
Station Elevation Data num= 7

Sta	Elev	Sta	Elev	Sta	Elev	Sta	Elev	Sta	Elev
-113.6	1705.1	-10.6	1704.4	-5	1701.6	0	1701.6	5	1701.6
10.6	1704.4	55	1726.5						

Manning's n Values num= 3

Sta	n Val	Sta	n Val	Sta	n Val
-113.6	.03	-10.6	.03	55	.03

Bank Sta: Left	Right	Lengths: Left	Channel	Right	Coeff Contr.	Expan.
-10.6	55	40	40	40	.1	.3

Left Levee Station= -17 Elevation= 1726

CROSS SECTION OUTPUT Profile #PF#1

E.G. Elev (ft)	1702.84	Element	Left OB	Channel	Right OB
Vel Head (ft)	0.37	Wt. n-Val.		0.030	
W.S. Elev (ft)	1702.47	Reach Len. (ft)	40.00	40.00	40.00
Crit W.S. (ft)	1702.47	Flow Area (sq ft)		10.19	
E.G. Slope (ft/ft)	0.014805	Area (sq ft)		10.19	
Q Total (cfs)	50.00	Flow (cfs)		50.00	
Top Width (ft)	13.47	Top Width (ft)		13.47	
Vel Total (ft/s)	4.90	Avg. Vel. (ft/s)		4.90	
Max Chl Dpth (ft)	0.87	Hydr. Depth (ft)		0.76	
Conv. Total (cfs)	410.9	Conv. (cfs)		410.9	
Length Wtd. (ft)	40.00	Wetted Per. (ft)		13.88	
Min Ch El (ft)	1701.60	Shear (lb/sq ft)		0.68	
Alpha	1.00	Stream Power (lb/ft s)		3.33	
Frctn Loss (ft)	0.45	Cum Volume (acre-ft)		0.04	
C & E Loss (ft)	0.04	Cum SA (acres)		0.13	

Warning: The energy equation could not be balanced within the specified number of iterations. The program selected the water surface that had the least amount of error between computed and assumed values.
Warning: During the standard step iterations, when the assumed water surface was set equal to critical depth, the calculated water surface came back below critical depth. This indicates that there is not a valid subcritical answer. The program defaulted to critical depth.

CROSS SECTION OUTPUT Profile #PF#2

E.G. Elev (ft)	1703.49	Element	Left OB	Channel	Right OB
Vel Head (ft)	0.64	Wt. n-Val.		0.030	
W.S. Elev (ft)	1702.85	Reach Len. (ft)	40.00	40.00	40.00
Crit W.S. (ft)	1702.92	Flow Area (sq ft)		15.58	
E.G. Slope (ft/ft)	0.016773	Area (sq ft)		15.58	
Q Total (cfs)	100.00	Flow (cfs)		100.00	
Top Width (ft)	14.99	Top Width (ft)		14.99	
Vel Total (ft/s)	6.42	Avg. Vel. (ft/s)		6.42	
Max Chl Dpth (ft)	1.25	Hydr. Depth (ft)		1.04	
Conv. Total (cfs)	772.1	Conv. (cfs)		772.1	
Length Wtd. (ft)	40.00	Wetted Per. (ft)		15.58	
Min Ch El (ft)	1701.60	Shear (lb/sq ft)		1.05	
Alpha	1.00	Stream Power (lb/ft s)		6.72	
Frctn Loss (ft)	0.60	Cum Volume (acre-ft)		0.08	
C & E Loss (ft)	0.00	Cum SA (acres)		0.13	

Note: Program found supercritical flow starting at this cross section.

CROSS SECTION OUTPUT Profile #PF#3

E.G. Elev (ft)	1704.00	Element	Left OB	Channel	Right OB
Vel Head (ft)	0.87	Wt. n-Val.		0.030	
W.S. Elev (ft)	1703.13	Reach Len. (ft)	40.00	40.00	40.00
Crit W.S. (ft)	1703.29	Flow Area (sq ft)		20.01	
E.G. Slope (ft/ft)	0.018225	Area (sq ft)		20.01	
Q Total (cfs)	150.00	Flow (cfs)		150.00	
Top Width (ft)	16.13	Top Width (ft)		16.13	
Vel Total (ft/s)	7.50	Avg. Vel. (ft/s)		7.50	
Max Chl Dpth (ft)	1.53	Hydr. Depth (ft)		1.24	
Conv. Total (cfs)	1111.1	Conv. (cfs)		1111.1	
Length Wtd. (ft)	40.00	Wetted Per. (ft)		16.85	
Min Ch El (ft)	1701.60	Shear (lb/sq ft)		1.35	
Alpha	1.00	Stream Power (lb/ft s)		10.13	
Frctn Loss (ft)	0.60	Cum Volume (acre-ft)		0.10	
C & E Loss (ft)	0.01	Cum SA (acres)		0.14	

Note: Program found supercritical flow starting at this cross section.

CROSS SECTION OUTPUT Profile #PF#4

E.G. Elev (ft)	1704.45	Element	Left OB	Channel	Right OB
Vel Head (ft)	1.08	Wt. n-Val.		0.030	
W.S. Elev (ft)	1703.37	Reach Len. (ft)	40.00	40.00	40.00
Crit W.S. (ft)	1703.60	Flow Area (sq ft)		23.98	
E.G. Slope (ft/ft)	0.019221	Area (sq ft)		23.98	
Q Total (cfs)	200.00	Flow (cfs)		200.00	
Top Width (ft)	17.08	Top Width (ft)		17.08	
Vel Total (ft/s)	8.34	Avg. Vel. (ft/s)		8.34	
Max Chl Dpth (ft)	1.77	Hydr. Depth (ft)		1.40	
Conv. Total (cfs)	1442.6	Conv. (cfs)		1442.6	
Length Wtd. (ft)	40.00	Wetted Per. (ft)		17.92	
Min Ch El (ft)	1701.60	Shear (lb/sq ft)		1.61	
Alpha	1.00	Stream Power (lb/ft s)		13.39	
Frctn Loss (ft)	0.60	Cum Volume (acre-ft)		0.13	
C & E Loss (ft)	0.02	Cum SA (acres)		0.14	

Note: Program found supercritical flow starting at this cross section.

CROSS SECTION OUTPUT Profile #PF#5

E.G. Elev (ft)	1704.86	Element	Left OB	Channel	Right OB
Vel Head (ft)	1.28	Wt. n-Val.		0.030	
W.S. Elev (ft)	1703.57	Reach Len. (ft)	40.00	40.00	40.00
Crit W.S. (ft)	1703.88	Flow Area (sq ft)		27.51	
E.G. Slope (ft/ft)	0.020301	Area (sq ft)		27.51	
Q Total (cfs)	250.00	Flow (cfs)		250.00	
Top Width (ft)	17.89	Top Width (ft)		17.89	
Vel Total (ft/s)	9.09	Avg. Vel. (ft/s)		9.09	
Max Chl Dpth (ft)	1.97	Hydr. Depth (ft)		1.54	
Conv. Total (cfs)	1754.6	Conv. (cfs)		1754.6	
Length Wtd. (ft)	40.00	Wetted Per. (ft)		18.82	
Min Ch El (ft)	1701.60	Shear (lb/sq ft)		1.85	
Alpha	1.00	Stream Power (lb/ft s)		16.83	
Frctn Loss (ft)	0.50	Cum Volume (acre-ft)		0.20	
C & E Loss (ft)	0.06	Cum SA (acres)		0.14	

Warning: The velocity head has changed by more than 0.5 ft (0.15 m). This may indicate the need for additional cross sections.
Warning: The conveyance ratio (upstream conveyance divided by downstream conveyance) is less than 0.7 or greater than 1.4. This may indicate the need for additional cross sections.
Note: Program found supercritical flow starting at this cross section.

CROSS SECTION OUTPUT Profile #PF#6

E.G. Elev (ft)	1705.16	Element	Left OB	Channel	Right OB
Vel Head (ft)	1.30	Wt. n-Val.		0.030	
W.S. Elev (ft)	1703.86	Reach Len. (ft)	40.00	40.00	40.00
Crit W.S. (ft)	1704.14	Flow Area (sq ft)		32.74	
E.G. Slope (ft/ft)	0.017840	Area (sq ft)		32.74	

* Q Total (cfs)	* 300.00	* Flow (cfs)	*	* 300.00	*
* Top Width (ft)	* 19.02	* Top Width (ft)	*	* 19.02	*
* Vel Total (ft/s)	* 9.16	* Avg. Vel. (ft/s)	*	* 9.16	*
* Max Chl Dpth (ft)	* 2.26	* Hydr. Depth (ft)	*	* 1.72	*
* Conv. Total (cfs)	* 2246.1	* Conv. (cfs)	*	* 2246.1	*
* Length Wtd. (ft)	* 40.00	* Wetted Per. (ft)	*	* 20.09	*
* Min Ch El (ft)	* 1701.60	* Shear (lb/sq ft)	*	* 1.82	*
* Alpha	* 1.00	* Stream Power (lb/ft s)	*	* 16.63	*
* Frctn Loss (ft)	* 0.46	* Cum Volume (acre-ft)	*	* 0.30	*
* C & E Loss (ft)	* 0.06	* Cum SA (acres)	*	* 0.15	*

Warning: The velocity head has changed by more than 0.5 ft (0.15 m). This may indicate the need for additional cross sections.
Warning: The conveyance ratio (upstream conveyance divided by downstream conveyance) is less than 0.7 or greater than 1.4. This may indicate the need for additional cross sections.
Note: Program found supercritical flow starting at this cross section.

CROSS SECTION OUTPUT Profile #PF#7

* E.G. Elev (ft)	* 1705.42	* Element	* Left OB	* Channel	* Right OB *
* Vel Head (ft)	* 1.25	* Wt. n-Val.	*	* 0.030	*
* W.S. Elev (ft)	* 1704.18	* Reach Len. (ft)	* 40.00	* 40.00	* 40.00 *
* Crit W.S. (ft)	* 1704.37	* Flow Area (sq ft)	*	* 39.06	*
* E.G. Slope (ft/ft)	* 0.014783	* Area (sq ft)	*	* 39.06	*
* Q Total (cfs)	* 350.00	* Flow (cfs)	*	* 350.00	*
* Top Width (ft)	* 20.31	* Top Width (ft)	*	* 20.31	*
* Vel Total (ft/s)	* 8.96	* Avg. Vel. (ft/s)	*	* 8.96	*
* Max Chl Dpth (ft)	* 2.58	* Hydr. Depth (ft)	*	* 1.92	*
* Conv. Total (cfs)	* 2878.6	* Conv. (cfs)	*	* 2878.6	*
* Length Wtd. (ft)	* 40.00	* Wetted Per. (ft)	*	* 21.53	*
* Min Ch El (ft)	* 1701.60	* Shear (lb/sq ft)	*	* 1.67	*
* Alpha	* 1.00	* Stream Power (lb/ft s)	*	* 15.01	*
* Frctn Loss (ft)	* 0.42	* Cum Volume (acre-ft)	*	* 0.46	*
* C & E Loss (ft)	* 0.05	* Cum SA (acres)	*	* 0.16	*

Warning: The velocity head has changed by more than 0.5 ft (0.15 m). This may indicate the need for additional cross sections.
Note: Program found supercritical flow starting at this cross section.

CROSS SECTION OUTPUT Profile #PF#8

* E.G. Elev (ft)	* 1705.68	* Element	* Left OB	* Channel	* Right OB *
* Vel Head (ft)	* 1.16	* Wt. n-Val.	* 0.030	* 0.030	*
* W.S. Elev (ft)	* 1704.52	* Reach Len. (ft)	* 40.00	* 40.00	* 40.00 *
* Crit W.S. (ft)	* 1704.66	* Flow Area (sq ft)	* 0.61	* 46.19	*
* E.G. Slope (ft/ft)	* 0.011877	* Area (sq ft)	* 0.61	* 46.19	*
* Q Total (cfs)	* 400.00	* Flow (cfs)	* 0.69	* 399.31	*
* Top Width (ft)	* 27.84	* Top Width (ft)	* 6.40	* 21.44	*
* Vel Total (ft/s)	* 8.55	* Avg. Vel. (ft/s)	* 1.12	* 8.65	*
* Max Chl Dpth (ft)	* 2.92	* Hydr. Depth (ft)	* 0.10	* 2.15	*
* Conv. Total (cfs)	* 3670.4	* Conv. (cfs)	* 6.3	* 3664.0	*
* Length Wtd. (ft)	* 40.00	* Wetted Per. (ft)	* 6.47	* 22.79	*
* Min Ch El (ft)	* 1701.60	* Shear (lb/sq ft)	* 0.07	* 1.50	*
* Alpha	* 1.02	* Stream Power (lb/ft s)	* 0.08	* 12.99	*
* Frctn Loss (ft)	* 0.38	* Cum Volume (acre-ft)	* 0.04	* 0.73	*
* C & E Loss (ft)	* 0.04	* Cum SA (acres)	* 0.10	* 0.19	*

Note: Program found supercritical flow starting at this cross section.

CROSS SECTION OUTPUT Profile #PF#9

* E.G. Elev (ft)	* 1707.14	* Element	* Left OB	* Channel	* Right OB *
* Vel Head (ft)	* 0.26	* Wt. n-Val.	* 0.030	* 0.030	*
* W.S. Elev (ft)	* 1706.88	* Reach Len. (ft)	* 40.00	* 40.00	* 40.00 *
* Crit W.S. (ft)	* 1704.92	* Flow Area (sq ft)	* 15.76	* 102.54	*
* E.G. Slope (ft/ft)	* 0.001260	* Area (sq ft)	* 15.76	* 102.54	*
* Q Total (cfs)	* 468.00	* Flow (cfs)	* 40.72	* 427.28	*
* Top Width (ft)	* 32.59	* Top Width (ft)	* 6.40	* 26.19	*
* Vel Total (ft/s)	* 3.96	* Avg. Vel. (ft/s)	* 2.58	* 4.17	*
* Max Chl Dpth (ft)	* 5.28	* Hydr. Depth (ft)	* 2.46	* 3.92	*
* Conv. Total (cfs)	* 13185.9	* Conv. (cfs)	* 1147.4	* 12038.5	*
* Length Wtd. (ft)	* 40.00	* Wetted Per. (ft)	* 8.84	* 28.10	*
* Min Ch El (ft)	* 1701.60	* Shear (lb/sq ft)	* 0.14	* 0.29	*
* Alpha	* 1.05	* Stream Power (lb/ft s)	* 0.36	* 1.20	*
* Frctn Loss (ft)	* 0.04	* Cum Volume (acre-ft)	* 0.47	* 1.21	*
* C & E Loss (ft)	* 0.02	* Cum SA (acres)	* 0.19	* 0.21	*

CROSS SECTION RIVER: CloudBurst Wash
REACH: Cloud-A1 RS: 500

INPUT
Description: Cloud Burst Flowline Sta: 5+00
Station Elevation Data num= 7

Sta	Elev	Sta	Elev	Sta	Elev	Sta	Elev	Sta	Elev
-113	1705.1	-12.3	1704.4	-5.5	1701	0	1701	5.5	1701
12.3	1704.4	56.5	1726.5						

Manning's n Values num= 3

Sta	n Val	Sta	n Val	Sta	n Val

-113 .03 -12.3 .03 56.5 .03

Bank Sta: Left	Right	Lengths: Left	Channel	Right	Coeff Contr.	Expan.
-12.3	56.5	20	20	20	.1	.3

Left Levee Station= -16 Elevation= 1726

CROSS SECTION OUTPUT Profile #PF#1

E.G. Elev (ft)	1702.21	Element	Left OB	Channel	Right OB
Vel Head (ft)	0.25	Wt. n-Val.		0.030	
W.S. Elev (ft)	1701.96	Reach Len. (ft)	20.00	20.00	20.00
Crit W.S. (ft)	1701.82	Flow Area (sq ft)		12.45	
E.G. Slope (ft/ft)	0.008668	Area (sq ft)		12.45	
Q Total (cfs)	50.00	Flow (cfs)		50.00	
Top Width (ft)	14.85	Top Width (ft)		14.85	
Vel Total (ft/s)	4.02	Avg. Vel. (ft/s)		4.02	
Max Chl Dpth (ft)	0.96	Hydr. Depth (ft)		0.84	
Conv. Total (cfs)	537.1	Conv. (cfs)		537.1	
Length Wtd. (ft)	20.00	Wetted Per. (ft)		15.31	
Min Ch El (ft)	1701.00	Shear (lb/sq ft)		0.44	
Alpha	1.00	Stream Power (lb/ft s)		1.77	
Frctn Loss (ft)	0.22	Cum Volume (acre-ft)		0.03	
C & E Loss (ft)	0.01	Cum SA (acres)		0.11	

CROSS SECTION OUTPUT Profile #PF#2

E.G. Elev (ft)	1702.83	Element	Left OB	Channel	Right OB
Vel Head (ft)	0.38	Wt. n-Val.		0.030	
W.S. Elev (ft)	1702.45	Reach Len. (ft)	20.00	20.00	20.00
Crit W.S. (ft)	1702.26	Flow Area (sq ft)		20.13	
E.G. Slope (ft/ft)	0.008328	Area (sq ft)		20.13	
Q Total (cfs)	100.00	Flow (cfs)		100.00	
Top Width (ft)	16.79	Top Width (ft)		16.79	
Vel Total (ft/s)	4.97	Avg. Vel. (ft/s)		4.97	
Max Chl Dpth (ft)	1.45	Hydr. Depth (ft)		1.20	
Conv. Total (cfs)	1095.8	Conv. (cfs)		1095.8	
Length Wtd. (ft)	20.00	Wetted Per. (ft)		17.48	
Min Ch El (ft)	1701.00	Shear (lb/sq ft)		0.60	
Alpha	1.00	Stream Power (lb/ft s)		2.97	
Frctn Loss (ft)	0.21	Cum Volume (acre-ft)		0.06	
C & E Loss (ft)	0.02	Cum SA (acres)		0.12	

Note: Hydraulic jump has occurred between this cross section and the previous upstream section.

CROSS SECTION OUTPUT Profile #PF#3

E.G. Elev (ft)	1703.30	Element	Left OB	Channel	Right OB
Vel Head (ft)	0.51	Wt. n-Val.		0.030	
W.S. Elev (ft)	1702.79	Reach Len. (ft)	20.00	20.00	20.00
Crit W.S. (ft)	1702.61	Flow Area (sq ft)		26.12	
E.G. Slope (ft/ft)	0.008804	Area (sq ft)		26.12	
Q Total (cfs)	150.00	Flow (cfs)		150.00	
Top Width (ft)	18.16	Top Width (ft)		18.16	
Vel Total (ft/s)	5.74	Avg. Vel. (ft/s)		5.74	
Max Chl Dpth (ft)	1.79	Hydr. Depth (ft)		1.44	
Conv. Total (cfs)	1598.6	Conv. (cfs)		1598.6	
Length Wtd. (ft)	20.00	Wetted Per. (ft)		19.01	
Min Ch El (ft)	1701.00	Shear (lb/sq ft)		0.76	
Alpha	1.00	Stream Power (lb/ft s)		4.34	
Frctn Loss (ft)	0.21	Cum Volume (acre-ft)		0.08	
C & E Loss (ft)	0.01	Cum SA (acres)		0.12	

Note: Hydraulic jump has occurred between this cross section and the previous upstream section.

CROSS SECTION OUTPUT Profile #PF#4

E.G. Elev (ft)	1703.71	Element	Left OB	Channel	Right OB
Vel Head (ft)	0.94	Wt. n-Val.		0.030	
W.S. Elev (ft)	1702.76	Reach Len. (ft)	20.00	20.00	20.00
Crit W.S. (ft)	1702.92	Flow Area (sq ft)		25.64	
E.G. Slope (ft/ft)	0.016507	Area (sq ft)		25.64	
Q Total (cfs)	200.00	Flow (cfs)		200.00	
Top Width (ft)	18.06	Top Width (ft)		18.06	
Vel Total (ft/s)	7.80	Avg. Vel. (ft/s)		7.80	
Max Chl Dpth (ft)	1.76	Hydr. Depth (ft)		1.42	
Conv. Total (cfs)	1556.7	Conv. (cfs)		1556.7	
Length Wtd. (ft)	20.00	Wetted Per. (ft)		18.89	
Min Ch El (ft)	1701.00	Shear (lb/sq ft)		1.40	
Alpha	1.00	Stream Power (lb/ft s)		10.91	
Frctn Loss (ft)	0.71	Cum Volume (acre-ft)		0.10	
C & E Loss (ft)	0.04	Cum SA (acres)		0.12	

CROSS SECTION OUTPUT Profile #PF#5

E.G. Elev (ft)	1704.07	Element	Left OB	Channel	Right OB
Vel Head (ft)	1.06	Wt. n-Val.		0.030	
W.S. Elev (ft)	1703.01	Reach Len. (ft)	20.00	20.00	20.00
Crit W.S. (ft)	1703.18	Flow Area (sq ft)		30.23	
E.G. Slope (ft/ft)	0.016069	Area (sq ft)		30.23	
Q Total (cfs)	250.00	Flow (cfs)		250.00	
Top Width (ft)	19.05	Top Width (ft)		19.05	

Vel Total (ft/s)	8.27	Avg. Vel. (ft/s)		8.27	
Max Chl Dpth (ft)	2.01	Hydr. Depth (ft)		1.59	
Conv. Total (cfs)	1972.1	Conv. (cfs)		1972.1	
Length Wtd. (ft)	20.00	Wetted Per. (ft)		20.00	
Min Ch El (ft)	1701.00	Shear (lb/sq ft)		1.52	
Alpha	1.00	Stream Power (lb/ft s)		12.54	
Frctn Loss (ft)	0.72	Cum Volume (acre-ft)		0.17	
C & E Loss (ft)	0.07	Cum SA (acres)		0.13	

CROSS SECTION OUTPUT Profile #PF#6

			Left OB	Channel	Right OB
E.G. Elev (ft)	1704.43	Element			
Vel Head (ft)	1.27	Wt. n-Val.		0.030	
W.S. Elev (ft)	1703.17	Reach Len. (ft)	20.00	20.00	20.00
Crit W.S. (ft)	1703.43	Flow Area (sq ft)		33.20	
E.G. Slope (ft/ft)	0.017714	Area (sq ft)		33.20	
Q Total (cfs)	300.00	Flow (cfs)		300.00	
Top Width (ft)	19.66	Top Width (ft)		19.66	
Vel Total (ft/s)	9.04	Avg. Vel. (ft/s)		9.04	
Max Chl Dpth (ft)	2.17	Hydr. Depth (ft)		1.69	
Conv. Total (cfs)	2254.0	Conv. (cfs)		2254.0	
Length Wtd. (ft)	20.00	Wetted Per. (ft)		20.68	
Min Ch El (ft)	1701.00	Shear (lb/sq ft)		1.77	
Alpha	1.00	Stream Power (lb/ft s)		16.04	
Frctn Loss (ft)	0.71	Cum Volume (acre-ft)		0.27	
C & E Loss (ft)	0.01	Cum SA (acres)		0.13	

CROSS SECTION OUTPUT Profile #PF#7

			Left OB	Channel	Right OB
E.G. Elev (ft)	1704.75	Element			
Vel Head (ft)	1.42	Wt. n-Val.		0.030	
W.S. Elev (ft)	1703.34	Reach Len. (ft)	20.00	20.00	20.00
Crit W.S. (ft)	1703.66	Flow Area (sq ft)		36.64	
E.G. Slope (ft/ft)	0.018222	Area (sq ft)		36.64	
Q Total (cfs)	350.00	Flow (cfs)		350.00	
Top Width (ft)	20.35	Top Width (ft)		20.35	
Vel Total (ft/s)	9.55	Avg. Vel. (ft/s)		9.55	
Max Chl Dpth (ft)	2.34	Hydr. Depth (ft)		1.80	
Conv. Total (cfs)	2592.8	Conv. (cfs)		2592.8	
Length Wtd. (ft)	20.00	Wetted Per. (ft)		21.45	
Min Ch El (ft)	1701.00	Shear (lb/sq ft)		1.94	
Alpha	1.00	Stream Power (lb/ft s)		18.56	
Frctn Loss (ft)	0.65	Cum Volume (acre-ft)		0.43	
C & E Loss (ft)	0.02	Cum SA (acres)		0.14	

CROSS SECTION OUTPUT Profile #PF#8

			Left OB	Channel	Right OB
E.G. Elev (ft)	1705.07	Element			
Vel Head (ft)	0.69	Wt. n-Val.		0.030	
W.S. Elev (ft)	1704.38	Reach Len. (ft)	20.00	20.00	20.00
Crit W.S. (ft)	1703.87	Flow Area (sq ft)		59.92	
E.G. Slope (ft/ft)	0.005997	Area (sq ft)		59.92	
Q Total (cfs)	400.00	Flow (cfs)		400.00	
Top Width (ft)	24.50	Top Width (ft)		24.50	
Vel Total (ft/s)	6.68	Avg. Vel. (ft/s)		6.68	
Max Chl Dpth (ft)	3.38	Hydr. Depth (ft)		2.45	
Conv. Total (cfs)	5165.3	Conv. (cfs)		5165.3	
Length Wtd. (ft)	20.00	Wetted Per. (ft)		26.10	
Min Ch El (ft)	1701.00	Shear (lb/sq ft)		0.86	
Alpha	1.00	Stream Power (lb/ft s)		5.74	
Frctn Loss (ft)	0.10	Cum Volume (acre-ft)	0.04	0.68	
C & E Loss (ft)	0.07	Cum SA (acres)	0.10	0.17	

Note: Hydraulic jump has occurred between this cross section and the previous upstream section.

CROSS SECTION OUTPUT Profile #PF#9

			Left OB	Channel	Right OB
E.G. Elev (ft)	1707.08	Element			
Vel Head (ft)	0.19	Wt. n-Val.	0.030	0.030	
W.S. Elev (ft)	1706.89	Reach Len. (ft)	20.00	20.00	20.00
Crit W.S. (ft)	1704.13	Flow Area (sq ft)	9.17	128.01	
E.G. Slope (ft/ft)	0.000791	Area (sq ft)	9.17	128.01	
Q Total (cfs)	468.00	Flow (cfs)	16.64	451.36	
Top Width (ft)	33.28	Top Width (ft)	3.70	29.58	
Vel Total (ft/s)	3.41	Avg. Vel. (ft/s)	1.81	3.53	
Max Chl Dpth (ft)	5.89	Hydr. Depth (ft)	2.48	4.33	
Conv. Total (cfs)	16645.3	Conv. (cfs)	591.8	16053.5	
Length Wtd. (ft)	20.00	Wetted Per. (ft)	6.17	31.78	
Min Ch El (ft)	1701.00	Shear (lb/sq ft)	0.07	0.20	
Alpha	1.04	Stream Power (lb/ft s)	0.13	0.70	
Frctn Loss (ft)	0.01	Cum Volume (acre-ft)	0.45	1.10	
C & E Loss (ft)	0.03	Cum SA (acres)	0.18	0.19	

CROSS SECTION RIVER: CloudBurst Wash
REACH: Cloud-A1 RS: 480

INPUT
Description: Cloud Burst Flowline Sta: 4+80
Station Elevation Data num= 7

Sta	Elev	Sta	Elev	Sta	Elev	Sta	Elev	Sta	Elev

```
*****************************************************************************
  -107.8  1705.1   -15.9    1704      -9  1703.7       0  1700.7       9  1700.7
     15  1703.7      61  1726.5

Manning's n Values          num=        3
     Sta   n Val      Sta   n Val      Sta   n Val
*********************************************
  -107.8     .03   -15.9     .03       61     .03

Bank Sta: Left   Right    Lengths: Left Channel   Right      Coeff Contr.   Expan.
        -15.9      61               20      20      20             .1          .3
Left Levee      Station=     -27      Elevation=    1726

CROSS SECTION OUTPUT     Profile #PF#1
*****************************************************************************************
* E.G. Elev (ft)          *  1701.98 * Element                 *  Left OB *  Channel * Right OB *
* Vel Head (ft)           *     0.37 * Wt. n-Val.              *          *     0.030 *          *
* W.S. Elev (ft)          *  1701.61 * Reach Len. (ft)         *    20.00 *    20.00 *    20.00 *
* Crit W.S. (ft)          *  1701.61 * Flow Area (sq ft)       *          *     10.20 *          *
* E.G. Slope (ft/ft)      * 0.014784 * Area (sq ft)            *          *     10.20 *          *
* Q Total (cfs)           *    50.00 * Flow (cfs)              *          *     50.00 *          *
* Top Width (ft)          *    13.53 * Top Width (ft)          *          *     13.53 *          *
* Vel Total (ft/s)        *     4.90 * Avg. Vel. (ft/s)        *          *      4.90 *          *
* Max Chl Dpth (ft)       *     0.91 * Hydr. Depth (ft)        *          *      0.75 *          *
* Conv. Total (cfs)       *    411.2 * Conv. (cfs)             *          *     411.2 *          *
* Length Wtd. (ft)        *    20.00 * Wetted Per. (ft)        *          *     13.89 *          *
* Min Ch El (ft)          *  1700.70 * Shear (lb/sq ft)        *          *      0.68 *          *
* Alpha                   *     1.00 * Stream Power (lb/ft s)   *          *      3.32 *          *
* Frctn Loss (ft)         *     0.31 * Cum Volume (acre-ft)     *          *      0.02 *          *
* C & E Loss (ft)         *     0.04 * Cum SA (acres)           *          *      0.11 *          *
*****************************************************************************************

Warning: The energy equation could not be balanced within the specified number of iterations.  The
         program used critical depth for the water surface and continued on with the calculations.
Warning: During the standard step iterations, when the assumed water surface was set equal to
         critical depth, the calculated water surface came back below critical depth.  This indicates
         that there is not a valid subcritical answer.  The program defaulted to critical depth.
Note:    Multiple critical depths were found at this location.  The critical depth with the lowest, valid,
         water surface was used.

CROSS SECTION OUTPUT     Profile #PF#2
*****************************************************************************************
* E.G. Elev (ft)          *  1702.61 * Element                 *  Left OB *  Channel * Right OB *
* Vel Head (ft)           *     0.54 * Wt. n-Val.              *          *     0.030 *          *
* W.S. Elev (ft)          *  1702.07 * Reach Len. (ft)         *    20.00 *    20.00 *    20.00 *
* Crit W.S. (ft)          *  1702.07 * Flow Area (sq ft)       *          *     16.97 *          *
* E.G. Slope (ft/ft)      * 0.013509 * Area (sq ft)            *          *     16.97 *          *
* Q Total (cfs)           *   100.00 * Flow (cfs)              *          *    100.00 *          *
* Top Width (ft)          *    15.83 * Top Width (ft)          *          *     15.83 *          *
* Vel Total (ft/s)        *     5.89 * Avg. Vel. (ft/s)        *          *      5.89 *          *
* Max Chl Dpth (ft)       *     1.37 * Hydr. Depth (ft)        *          *      1.07 *          *
* Conv. Total (cfs)       *    860.4 * Conv. (cfs)             *          *     860.4 *          *
* Length Wtd. (ft)        *    20.00 * Wetted Per. (ft)        *          *     16.38 *          *
* Min Ch El (ft)          *  1700.70 * Shear (lb/sq ft)        *          *      0.87 *          *
* Alpha                   *     1.00 * Stream Power (lb/ft s)   *          *      5.15 *          *
* Frctn Loss (ft)         *     0.28 * Cum Volume (acre-ft)     *          *      0.05 *          *
* C & E Loss (ft)         *     0.05 * Cum SA (acres)           *          *      0.11 *          *
*****************************************************************************************

Warning: The energy equation could not be balanced within the specified number of iterations.  The
         program used critical depth for the water surface and continued on with the calculations.
Warning: The energy loss was greater than 1.0 ft (0.3 m). between the current and previous cross
         section.  This may indicate the need for additional cross sections.
Warning: During the standard step iterations, when the assumed water surface was set equal to
         critical depth, the calculated water surface came back below critical depth.  This indicates
         that there is not a valid subcritical answer.  The program defaulted to critical depth.
Note:    Multiple critical depths were found at this location.  The critical depth with the lowest, valid,
         water surface was used.

CROSS SECTION OUTPUT     Profile #PF#3
*****************************************************************************************
* E.G. Elev (ft)          *  1703.09 * Element                 *  Left OB *  Channel * Right OB *
* Vel Head (ft)           *     0.65 * Wt. n-Val.              *          *     0.030 *          *
* W.S. Elev (ft)          *  1702.44 * Reach Len. (ft)         *    20.00 *    20.00 *    20.00 *
* Crit W.S. (ft)          *  1702.44 * Flow Area (sq ft)       *          *     23.25 *          *
* E.G. Slope (ft/ft)      * 0.012425 * Area (sq ft)            *          *     23.25 *          *
* Q Total (cfs)           *   150.00 * Flow (cfs)              *          *    150.00 *          *
* Top Width (ft)          *    17.70 * Top Width (ft)          *          *     17.70 *          *
* Vel Total (ft/s)        *     6.45 * Avg. Vel. (ft/s)        *          *      6.45 *          *
* Max Chl Dpth (ft)       *     1.74 * Hydr. Depth (ft)        *          *      1.31 *          *
* Conv. Total (cfs)       *   1345.7 * Conv. (cfs)             *          *    1345.7 *          *
* Length Wtd. (ft)        *    20.00 * Wetted Per. (ft)        *          *     18.40 *          *
* Min Ch El (ft)          *  1700.70 * Shear (lb/sq ft)        *          *      0.98 *          *
* Alpha                   *     1.00 * Stream Power (lb/ft s)   *          *      6.32 *          *
* Frctn Loss (ft)         *     0.26 * Cum Volume (acre-ft)     *          *      0.07 *          *
* C & E Loss (ft)         *     0.05 * Cum SA (acres)           *          *      0.11 *          *
*****************************************************************************************

Warning: The energy equation could not be balanced within the specified number of iterations.  The
         program used critical depth for the water surface and continued on with the calculations.
Warning: The energy loss was greater than 1.0 ft (0.3 m). between the current and previous cross
         section.  This may indicate the need for additional cross sections.
Warning: During the standard step iterations, when the assumed water surface was set equal to
         critical depth, the calculated water surface came back below critical depth.  This indicates
         that there is not a valid subcritical answer.  The program defaulted to critical depth.
```

Note: Multiple critical depths were found at this location. The critical depth with the lowest, valid, water surface was used.

CROSS SECTION OUTPUT Profile #PF#4

E.G. Elev (ft)	1703.51	Element	Left OB	Channel	Right OB
Vel Head (ft)	0.90	Wt. n-Val.		0.030	
W.S. Elev (ft)	1702.61	Reach Len. (ft)	20.00	20.00	20.00
Crit W.S. (ft)	1702.75	Flow Area (sq ft)		26.26	
E.G. Slope (ft/ft)	0.015684	Area (sq ft)		26.26	
Q Total (cfs)	200.00	Flow (cfs)		200.00	
Top Width (ft)	18.54	Top Width (ft)		18.54	
Vel Total (ft/s)	7.62	Avg. Vel. (ft/s)		7.62	
Max Chl Dpth (ft)	1.91	Hydr. Depth (ft)		1.42	
Conv. Total (cfs)	1597.0	Conv. (cfs)		1597.0	
Length Wtd. (ft)	20.00	Wetted Per. (ft)		19.30	
Min Ch El (ft)	1700.70	Shear (lb/sq ft)		1.33	
Alpha	1.00	Stream Power (lb/ft s)		10.15	
Frctn Loss (ft)	0.57	Cum Volume (acre-ft)		0.09	
C & E Loss (ft)	0.14	Cum SA (acres)		0.11	

Warning: The energy equation could not be balanced within the specified number of iterations. The program selected the water surface that had the least amount of error between computed and assumed values.

Note: Multiple critical depths were found at this location. The critical depth with the lowest, valid, water surface was used.

CROSS SECTION OUTPUT Profile #PF#5

E.G. Elev (ft)	1703.86	Element	Left OB	Channel	Right OB
Vel Head (ft)	0.99	Wt. n-Val.		0.030	
W.S. Elev (ft)	1702.87	Reach Len. (ft)	20.00	20.00	20.00
Crit W.S. (ft)	1703.01	Flow Area (sq ft)		31.32	
E.G. Slope (ft/ft)	0.014967	Area (sq ft)		31.32	
Q Total (cfs)	250.00	Flow (cfs)		250.00	
Top Width (ft)	19.86	Top Width (ft)		19.86	
Vel Total (ft/s)	7.98	Avg. Vel. (ft/s)		7.98	
Max Chl Dpth (ft)	2.17	Hydr. Depth (ft)		1.58	
Conv. Total (cfs)	2043.5	Conv. (cfs)		2043.5	
Length Wtd. (ft)	20.00	Wetted Per. (ft)		20.72	
Min Ch El (ft)	1700.70	Shear (lb/sq ft)		1.41	
Alpha	1.00	Stream Power (lb/ft s)		11.27	
Frctn Loss (ft)	0.56	Cum Volume (acre-ft)		0.16	
C & E Loss (ft)	0.16	Cum SA (acres)		0.12	

Warning: The energy equation could not be balanced within the specified number of iterations. The program selected the water surface that had the least amount of error between computed and assumed values.

Note: Multiple critical depths were found at this location. The critical depth with the lowest, valid, water surface was used.

CROSS SECTION OUTPUT Profile #PF#6

E.G. Elev (ft)	1704.17	Element	Left OB	Channel	Right OB
Vel Head (ft)	1.04	Wt. n-Val.		0.030	
W.S. Elev (ft)	1703.13	Reach Len. (ft)	20.00	20.00	20.00
Crit W.S. (ft)	1703.25	Flow Area (sq ft)		36.62	
E.G. Slope (ft/ft)	0.013966	Area (sq ft)		36.62	
Q Total (cfs)	300.00	Flow (cfs)		300.00	
Top Width (ft)	21.15	Top Width (ft)		21.15	
Vel Total (ft/s)	8.19	Avg. Vel. (ft/s)		8.19	
Max Chl Dpth (ft)	2.43	Hydr. Depth (ft)		1.73	
Conv. Total (cfs)	2538.5	Conv. (cfs)		2538.5	
Length Wtd. (ft)	20.00	Wetted Per. (ft)		22.11	
Min Ch El (ft)	1700.70	Shear (lb/sq ft)		1.44	
Alpha	1.00	Stream Power (lb/ft s)		11.83	
Frctn Loss (ft)	0.54	Cum Volume (acre-ft)		0.25	
C & E Loss (ft)	0.12	Cum SA (acres)		0.12	

Warning: The energy equation could not be balanced within the specified number of iterations. The program selected the water surface that had the least amount of error between computed and assumed values.

Note: Multiple critical depths were found at this location. The critical depth with the lowest, valid, water surface was used.

CROSS SECTION OUTPUT Profile #PF#7

E.G. Elev (ft)	1704.47	Element	Left OB	Channel	Right OB
Vel Head (ft)	1.17	Wt. n-Val.		0.030	
W.S. Elev (ft)	1703.30	Reach Len. (ft)	20.00	20.00	20.00
Crit W.S. (ft)	1703.48	Flow Area (sq ft)		40.25	
E.G. Slope (ft/ft)	0.014639	Area (sq ft)		40.25	
Q Total (cfs)	350.00	Flow (cfs)		350.00	
Top Width (ft)	21.99	Top Width (ft)		21.99	
Vel Total (ft/s)	8.70	Avg. Vel. (ft/s)		8.70	
Max Chl Dpth (ft)	2.60	Hydr. Depth (ft)		1.83	
Conv. Total (cfs)	2892.7	Conv. (cfs)		2892.7	
Length Wtd. (ft)	20.00	Wetted Per. (ft)		23.02	
Min Ch El (ft)	1700.70	Shear (lb/sq ft)		1.60	
Alpha	1.00	Stream Power (lb/ft s)		13.89	
Frctn Loss (ft)	0.54	Cum Volume (acre-ft)		0.41	
C & E Loss (ft)	0.12	Cum SA (acres)		0.13	

Warning: The energy equation could not be balanced within the specified number of iterations. The program selected the water surface that had the least amount of error between computed and assumed values.
Note: Multiple critical depths were found at this location. The critical depth with the lowest, valid, water surface was used.

CROSS SECTION OUTPUT Profile #PF#8

E.G. Elev (ft)	1704.89	Element	Left OB	Channel	Right OB
Vel Head (ft)	0.46	Wt. n-Val.	0.030	0.030	
W.S. Elev (ft)	1704.43	Reach Len. (ft)	20.00	20.00	20.00
Crit W.S. (ft)	1703.69	Flow Area (sq ft)	4.04	71.58	
E.G. Slope (ft/ft)	0.004515	Area (sq ft)	4.04	71.58	
Q Total (cfs)	400.00	Flow (cfs)	6.74	393.26	
Top Width (ft)	43.47	Top Width (ft)	11.10	32.37	
Vel Total (ft/s)	5.29	Avg. Vel. (ft/s)	1.67	5.49	
Max Chl Dpth (ft)	3.73	Hydr. Depth (ft)	0.36	2.21	
Conv. Total (cfs)	5953.0	Conv. (cfs)	100.3	5852.7	
Length Wtd. (ft)	20.00	Wetted Per. (ft)	11.40	33.75	
Min Ch El (ft)	1700.70	Shear (lb/sq ft)	0.10	0.60	
Alpha	1.06	Stream Power (lb/ft s)	0.17	3.28	
Frctn Loss (ft)	0.02	Cum Volume (acre-ft)	0.04	0.65	
C & E Loss (ft)	0.11	Cum SA (acres)	0.10	0.16	

Warning: The conveyance ratio (upstream conveyance divided by downstream conveyance) is less than 0.7 or greater than 1.4. This may indicate the need for additional cross sections.

CROSS SECTION OUTPUT Profile #PF#9

E.G. Elev (ft)	1707.04	Element	Left OB	Channel	Right OB
Vel Head (ft)	0.10	Wt. n-Val.	0.030	0.030	
W.S. Elev (ft)	1706.94	Reach Len. (ft)	20.00	20.00	20.00
Crit W.S. (ft)	1704.11	Flow Area (sq ft)	31.94	159.31	
E.G. Slope (ft/ft)	0.000422	Area (sq ft)	31.94	159.31	
Q Total (cfs)	468.00	Flow (cfs)	56.56	411.44	
Top Width (ft)	48.54	Top Width (ft)	11.10	37.44	
Vel Total (ft/s)	2.45	Avg. Vel. (ft/s)	1.77	2.58	
Max Chl Dpth (ft)	6.24	Hydr. Depth (ft)	2.88	4.25	
Conv. Total (cfs)	22778.4	Conv. (cfs)	2753.0	20025.4	
Length Wtd. (ft)	20.00	Wetted Per. (ft)	13.91	39.41	
Min Ch El (ft)	1700.70	Shear (lb/sq ft)	0.06	0.11	
Alpha	1.04	Stream Power (lb/ft s)	0.11	0.28	
Frctn Loss (ft)	0.00	Cum Volume (acre-ft)	0.44	1.04	
C & E Loss (ft)	0.02	Cum SA (acres)	0.18	0.17	

Warning: The conveyance ratio (upstream conveyance divided by downstream conveyance) is less than 0.7 or greater than 1.4. This may indicate the need for additional cross sections.

CROSS SECTION RIVER: CloudBurst Wash
REACH: Cloud-A1 RS: 460

INPUT
Description: Cloud Burst Flowline Sta: 4+60
Station Elevation Data num= 7

Sta	Elev	Sta	Elev	Sta	Elev	Sta	Elev	Sta	Elev
-104.2	1705	-16.3	1702.8	-11.5	1700.4	0	1700.4	11.5	1700.4
16.3	1702.8	64	1726.5						

Manning's n Values num= 3

Sta	n Val	Sta	n Val	Sta	n Val
-104.2	.03	-16.3	.03	64	.03

Bank Sta: Left Right Lengths: Left Channel Right Coeff Contr. Expan.
-16.3 64 20 20 20 .1 .3
Left Levee Station= -145 Elevation= 1726

CROSS SECTION OUTPUT Profile #PF#1

E.G. Elev (ft)	1701.35	Element	Left OB	Channel	Right OB
Vel Head (ft)	0.62	Wt. n-Val.		0.030	
W.S. Elev (ft)	1700.73	Reach Len. (ft)	20.00	20.00	20.00
Crit W.S. (ft)	1700.92	Flow Area (sq ft)		7.92	
E.G. Slope (ft/ft)	0.073313	Area (sq ft)		7.92	
Q Total (cfs)	50.00	Flow (cfs)		50.00	
Top Width (ft)	24.34	Top Width (ft)		24.34	
Vel Total (ft/s)	6.32	Avg. Vel. (ft/s)		6.32	
Max Chl Dpth (ft)	0.33	Hydr. Depth (ft)		0.33	
Conv. Total (cfs)	184.7	Conv. (cfs)		184.7	
Length Wtd. (ft)	20.00	Wetted Per. (ft)		24.50	
Min Ch El (ft)	1700.40	Shear (lb/sq ft)		1.48	
Alpha	1.00	Stream Power (lb/ft s)		9.34	
Frctn Loss (ft)	0.58	Cum Volume (acre-ft)		0.02	
C & E Loss (ft)	0.03	Cum SA (acres)		0.10	

Warning: The conveyance ratio (upstream conveyance divided by downstream conveyance) is less than 0.7 or greater than 1.4. This may indicate the need for additional cross sections.
Note: Program found supercritical flow starting at this cross section.

CROSS SECTION OUTPUT Profile #PF#2

E.G. Elev (ft)	1701.99	Element	Left OB	Channel	Right OB
Vel Head (ft)	1.09	Wt. n-Val.		0.030	
W.S. Elev (ft)	1700.90	Reach Len. (ft)	20.00	20.00	20.00
Crit W.S. (ft)	1701.22	Flow Area (sq ft)		11.91	
E.G. Slope (ft/ft)	0.078172	Area (sq ft)		11.91	
Q Total (cfs)	100.00	Flow (cfs)		100.00	
Top Width (ft)	24.99	Top Width (ft)		24.99	
Vel Total (ft/s)	8.40	Avg. Vel. (ft/s)		8.40	
Max Chl Dpth (ft)	0.50	Hydr. Depth (ft)		0.48	
Conv. Total (cfs)	357.7	Conv. (cfs)		357.7	
Length Wtd. (ft)	20.00	Wetted Per. (ft)		25.22	
Min Ch El (ft)	1700.40	Shear (lb/sq ft)		2.30	
Alpha	1.00	Stream Power (lb/ft s)		19.35	
Frctn Loss (ft)	0.54	Cum Volume (acre-ft)		0.05	
C & E Loss (ft)	0.06	Cum SA (acres)		0.10	

Warning: The velocity head has changed by more than 0.5 ft (0.15 m). This may indicate the need for additional cross sections.
Warning: The conveyance ratio (upstream conveyance divided by downstream conveyance) is less than 0.7 or greater than 1.4. This may indicate the need for additional cross sections.
Note: Program found supercritical flow starting at this cross section.

CROSS SECTION OUTPUT Profile #PF#3

E.G. Elev (ft)	1702.47	Element	Left OB	Channel	Right OB
Vel Head (ft)	1.42	Wt. n-Val.		0.030	
W.S. Elev (ft)	1701.04	Reach Len. (ft)	20.00	20.00	20.00
Crit W.S. (ft)	1701.46	Flow Area (sq ft)		15.66	
E.G. Slope (ft/ft)	0.073018	Area (sq ft)		15.66	
Q Total (cfs)	150.00	Flow (cfs)		150.00	
Top Width (ft)	25.58	Top Width (ft)		25.58	
Vel Total (ft/s)	9.58	Avg. Vel. (ft/s)		9.58	
Max Chl Dpth (ft)	0.64	Hydr. Depth (ft)		0.61	
Conv. Total (cfs)	555.1	Conv. (cfs)		555.1	
Length Wtd. (ft)	20.00	Wetted Per. (ft)		25.88	
Min Ch El (ft)	1700.40	Shear (lb/sq ft)		2.76	
Alpha	1.00	Stream Power (lb/ft s)		26.42	
Frctn Loss (ft)	0.51	Cum Volume (acre-ft)		0.06	
C & E Loss (ft)	0.08	Cum SA (acres)		0.10	

Warning: The velocity head has changed by more than 0.5 ft (0.15 m). This may indicate the need for additional cross sections.
Warning: The conveyance ratio (upstream conveyance divided by downstream conveyance) is less than 0.7 or greater than 1.4. This may indicate the need for additional cross sections.
Note: Program found supercritical flow starting at this cross section.

CROSS SECTION OUTPUT Profile #PF#4

E.G. Elev (ft)	1702.84	Element	Left OB	Channel	Right OB
Vel Head (ft)	1.65	Wt. n-Val.		0.030	
W.S. Elev (ft)	1701.19	Reach Len. (ft)	20.00	20.00	20.00
Crit W.S. (ft)	1701.68	Flow Area (sq ft)		19.39	
E.G. Slope (ft/ft)	0.065827	Area (sq ft)		19.39	
Q Total (cfs)	200.00	Flow (cfs)		200.00	
Top Width (ft)	26.16	Top Width (ft)		26.16	
Vel Total (ft/s)	10.31	Avg. Vel. (ft/s)		10.31	
Max Chl Dpth (ft)	0.79	Hydr. Depth (ft)		0.74	
Conv. Total (cfs)	779.5	Conv. (cfs)		779.5	
Length Wtd. (ft)	20.00	Wetted Per. (ft)		26.53	
Min Ch El (ft)	1700.40	Shear (lb/sq ft)		3.00	
Alpha	1.00	Stream Power (lb/ft s)		30.98	
Frctn Loss (ft)	0.57	Cum Volume (acre-ft)		0.08	
C & E Loss (ft)	0.08	Cum SA (acres)		0.10	

Warning: The velocity head has changed by more than 0.5 ft (0.15 m). This may indicate the need for additional cross sections.
Warning: The conveyance ratio (upstream conveyance divided by downstream conveyance) is less than 0.7 or greater than 1.4. This may indicate the need for additional cross sections.

CROSS SECTION OUTPUT Profile #PF#5

E.G. Elev (ft)	1703.20	Element	Left OB	Channel	Right OB
Vel Head (ft)	1.89	Wt. n-Val.		0.030	
W.S. Elev (ft)	1701.31	Reach Len. (ft)	20.00	20.00	20.00
Crit W.S. (ft)	1701.87	Flow Area (sq ft)		22.66	
E.G. Slope (ft/ft)	0.062911	Area (sq ft)		22.66	
Q Total (cfs)	250.00	Flow (cfs)		250.00	
Top Width (ft)	26.65	Top Width (ft)		26.65	
Vel Total (ft/s)	11.03	Avg. Vel. (ft/s)		11.03	
Max Chl Dpth (ft)	0.91	Hydr. Depth (ft)		0.85	
Conv. Total (cfs)	996.7	Conv. (cfs)		996.7	
Length Wtd. (ft)	20.00	Wetted Per. (ft)		27.08	
Min Ch El (ft)	1700.40	Shear (lb/sq ft)		3.29	
Alpha	1.00	Stream Power (lb/ft s)		36.26	
Frctn Loss (ft)	0.54	Cum Volume (acre-ft)		0.15	
C & E Loss (ft)	0.09	Cum SA (acres)		0.11	

Warning: The velocity head has changed by more than 0.5 ft (0.15 m). This may indicate the need for

additional cross sections.
Warning: The conveyance ratio (upstream conveyance divided by downstream conveyance) is less than 0.7 or greater than 1.4. This may indicate the need for additional cross sections.

CROSS SECTION OUTPUT Profile #PF#6

E.G. Elev (ft)	1703.53	Element	Left OB	Channel	Right OB
Vel Head (ft)	2.10	Wt. n-Val.		0.030	
W.S. Elev (ft)	1701.43	Reach Len. (ft)	20.00	20.00	20.00
Crit W.S. (ft)	1702.05	Flow Area (sq ft)		25.80	
E.G. Slope (ft/ft)	0.060292	Area (sq ft)		25.80	
Q Total (cfs)	300.00	Flow (cfs)		300.00	
Top Width (ft)	27.12	Top Width (ft)		27.12	
Vel Total (ft/s)	11.63	Avg. Vel. (ft/s)		11.63	
Max Chl Dpth (ft)	1.03	Hydr. Depth (ft)		0.95	
Conv. Total (cfs)	1221.8	Conv. (cfs)		1221.8	
Length Wtd. (ft)	20.00	Wetted Per. (ft)		27.60	
Min Ch El (ft)	1700.40	Shear (lb/sq ft)		3.52	
Alpha	1.00	Stream Power (lb/ft s)		40.91	
Frctn Loss (ft)	0.51	Cum Volume (acre-ft)		0.23	
C & E Loss (ft)	0.11	Cum SA (acres)		0.11	

Warning: The velocity head has changed by more than 0.5 ft (0.15 m). This may indicate the need for additional cross sections.
Warning: The conveyance ratio (upstream conveyance divided by downstream conveyance) is less than 0.7 or greater than 1.4. This may indicate the need for additional cross sections.

CROSS SECTION OUTPUT Profile #PF#7

E.G. Elev (ft)	1703.82	Element	Left OB	Channel	Right OB
Vel Head (ft)	2.28	Wt. n-Val.		0.030	
W.S. Elev (ft)	1701.54	Reach Len. (ft)	20.00	20.00	20.00
Crit W.S. (ft)	1702.22	Flow Area (sq ft)		28.90	
E.G. Slope (ft/ft)	0.057618	Area (sq ft)		28.90	
Q Total (cfs)	350.00	Flow (cfs)		350.00	
Top Width (ft)	27.57	Top Width (ft)		27.57	
Vel Total (ft/s)	12.11	Avg. Vel. (ft/s)		12.11	
Max Chl Dpth (ft)	1.14	Hydr. Depth (ft)		1.05	
Conv. Total (cfs)	1458.1	Conv. (cfs)		1458.1	
Length Wtd. (ft)	20.00	Wetted Per. (ft)		28.11	
Min Ch El (ft)	1700.40	Shear (lb/sq ft)		3.70	
Alpha	1.00	Stream Power (lb/ft s)		44.79	
Frctn Loss (ft)	0.52	Cum Volume (acre-ft)		0.39	
C & E Loss (ft)	0.11	Cum SA (acres)		0.12	

Warning: The velocity head has changed by more than 0.5 ft (0.15 m). This may indicate the need for additional cross sections.
Warning: The conveyance ratio (upstream conveyance divided by downstream conveyance) is less than 0.7 or greater than 1.4. This may indicate the need for additional cross sections.

CROSS SECTION OUTPUT Profile #PF#8

E.G. Elev (ft)	1704.76	Element	Left OB	Channel	Right OB
Vel Head (ft)	0.08	Wt. n-Val.	0.030	0.030	
W.S. Elev (ft)	1704.67	Reach Len. (ft)	20.00	20.00	20.00
Crit W.S. (ft)		Flow Area (sq ft)	70.16	131.35	
E.G. Slope (ft/ft)	0.000482	Area (sq ft)	70.16	131.35	
Q Total (cfs)	400.00	Flow (cfs)	73.06	326.94	
Top Width (ft)	111.25	Top Width (ft)	74.88	36.37	
Vel Total (ft/s)	1.99	Avg. Vel. (ft/s)	1.04	2.49	
Max Chl Dpth (ft)	4.27	Hydr. Depth (ft)	0.94	3.61	
Conv. Total (cfs)	18214.1	Conv. (cfs)	3326.9	14887.1	
Length Wtd. (ft)	20.00	Wetted Per. (ft)	74.90	37.94	
Min Ch El (ft)	1700.40	Shear (lb/sq ft)	0.03	0.10	
Alpha	1.34	Stream Power (lb/ft s)	0.03	0.26	
Frctn Loss (ft)	0.01	Cum Volume (acre-ft)	0.03	0.60	
C & E Loss (ft)	0.00	Cum SA (acres)	0.08	0.14	

CROSS SECTION OUTPUT Profile #PF#9

E.G. Elev (ft)	1707.01	Element	Left OB	Channel	Right OB
Vel Head (ft)	0.02	Wt. n-Val.	0.030	0.030	
W.S. Elev (ft)	1707.00	Reach Len. (ft)	20.00	20.00	20.00
Crit W.S. (ft)		Flow Area (sq ft)	272.35	221.33	
E.G. Slope (ft/ft)	0.000059	Area (sq ft)	272.35	221.33	
Q Total (cfs)	468.00	Flow (cfs)	217.24	250.76	
Top Width (ft)	128.95	Top Width (ft)	87.90	41.05	
Vel Total (ft/s)	0.95	Avg. Vel. (ft/s)	0.80	1.13	
Max Chl Dpth (ft)	6.60	Hydr. Depth (ft)	3.10	5.39	
Conv. Total (cfs)	60832.1	Conv. (cfs)	28237.4	32594.7	
Length Wtd. (ft)	20.00	Wetted Per. (ft)	89.93	43.17	
Min Ch El (ft)	1700.40	Shear (lb/sq ft)	0.01	0.02	
Alpha	1.09	Stream Power (lb/ft s)	0.01	0.02	
Frctn Loss (ft)	0.00	Cum Volume (acre-ft)	0.37	0.95	
C & E Loss (ft)	0.00	Cum SA (acres)	0.16	0.15	

Warning: The cross-section end points had to be extended vertically for the computed water surface.

CROSS SECTION RIVER: CloudBurst Wash
REACH: Cloud-A1 RS: 440

INPUT
Description: Cloud Burst Flowline Sta: 4+40
Station Elevation Data num= 8

Sta	Elev	Sta	Elev	Sta	Elev	Sta	Elev	Sta	Elev
-106.7	1705	-30.6	1704.5	-21.7	1703.7	-14.5	1700.1	0	1700.1
14.5	1700.1	21.7	1703.7	60.4	1726.5				

Manning's n Values num= 3

Sta	n Val	Sta	n Val	Sta	n Val
-106.7	.03	-30.6	.03	60.4	.03

Bank Sta: Left	Right	Lengths: Left	Channel	Right	Coeff Contr.	Expan.
-30.6	60.4	20	20	20	.1	.3

Left Levee Station= -202 Elevation= 1726

CROSS SECTION OUTPUT Profile #PF#1

E.G. Elev (ft)	1700.93	Element	Left OB	Channel	Right OB
Vel Head (ft)	0.54	Wt. n-Val.		0.030	
W.S. Elev (ft)	1700.39	Reach Len. (ft)	20.00	20.00	20.00
Crit W.S. (ft)	1700.55	Flow Area (sq ft)		8.48	
E.G. Slope (ft/ft)	0.077240	Area (sq ft)		8.48	
Q Total (cfs)	50.00	Flow (cfs)		50.00	
Top Width (ft)	30.15	Top Width (ft)		30.15	
Vel Total (ft/s)	5.89	Avg. Vel. (ft/s)		5.89	
Max Chl Dpth (ft)	0.29	Hydr. Depth (ft)		0.28	
Conv. Total (cfs)	179.9	Conv. (cfs)		179.9	
Length Wtd. (ft)	20.00	Wetted Per. (ft)		30.28	
Min Ch El (ft)	1700.10	Shear (lb/sq ft)		1.35	
Alpha	1.00	Stream Power (lb/ft s)		7.96	
Frctn Loss (ft)	0.67	Cum Volume (acre-ft)		0.02	
C & E Loss (ft)	0.12	Cum SA (acres)		0.09	

Warning: The energy equation could not be balanced within the specified number of iterations. The program selected the water surface that had the least amount of error between computed and assumed values.

CROSS SECTION OUTPUT Profile #PF#2

E.G. Elev (ft)	1701.14	Element	Left OB	Channel	Right OB
Vel Head (ft)	0.37	Wt. n-Val.		0.030	
W.S. Elev (ft)	1700.78	Reach Len. (ft)	20.00	20.00	20.00
Crit W.S. (ft)	1700.80	Flow Area (sq ft)		20.55	
E.G. Slope (ft/ft)	0.017453	Area (sq ft)		20.55	
Q Total (cfs)	100.00	Flow (cfs)		100.00	
Top Width (ft)	31.71	Top Width (ft)		31.71	
Vel Total (ft/s)	4.87	Avg. Vel. (ft/s)		4.87	
Max Chl Dpth (ft)	0.68	Hydr. Depth (ft)		0.65	
Conv. Total (cfs)	757.0	Conv. (cfs)		757.0	
Length Wtd. (ft)	20.00	Wetted Per. (ft)		32.03	
Min Ch El (ft)	1700.10	Shear (lb/sq ft)		0.70	
Alpha	1.00	Stream Power (lb/ft s)		3.40	
Frctn Loss (ft)	0.63	Cum Volume (acre-ft)		0.04	
C & E Loss (ft)	0.22	Cum SA (acres)		0.09	

Warning: The velocity head has changed by more than 0.5 ft (0.15 m). This may indicate the need for additional cross sections.
Warning: The conveyance ratio (upstream conveyance divided by downstream conveyance) is less than 0.7 or greater than 1.4. This may indicate the need for additional cross sections.

CROSS SECTION OUTPUT Profile #PF#3

E.G. Elev (ft)	1701.48	Element	Left OB	Channel	Right OB
Vel Head (ft)	0.58	Wt. n-Val.		0.030	
W.S. Elev (ft)	1700.90	Reach Len. (ft)	20.00	20.00	20.00
Crit W.S. (ft)	1701.02	Flow Area (sq ft)		24.59	
E.G. Slope (ft/ft)	0.022079	Area (sq ft)		24.59	
Q Total (cfs)	150.00	Flow (cfs)		150.00	
Top Width (ft)	32.21	Top Width (ft)		32.21	
Vel Total (ft/s)	6.10	Avg. Vel. (ft/s)		6.10	
Max Chl Dpth (ft)	0.80	Hydr. Depth (ft)		0.76	
Conv. Total (cfs)	1009.5	Conv. (cfs)		1009.5	
Length Wtd. (ft)	20.00	Wetted Per. (ft)		32.59	
Min Ch El (ft)	1700.10	Shear (lb/sq ft)		1.04	
Alpha	1.00	Stream Power (lb/ft s)		6.34	
Frctn Loss (ft)	0.73	Cum Volume (acre-ft)		0.05	
C & E Loss (ft)	0.25	Cum SA (acres)		0.09	

Warning: The velocity head has changed by more than 0.5 ft (0.15 m). This may indicate the need for additional cross sections.
Warning: The conveyance ratio (upstream conveyance divided by downstream conveyance) is less than 0.7 or greater than 1.4. This may indicate the need for additional cross sections.

CROSS SECTION OUTPUT Profile #PF#4

E.G. Elev (ft)	1701.80	Element	Left OB	Channel	Right OB
Vel Head (ft)	0.80	Wt. n-Val.		0.030	
W.S. Elev (ft)	1701.01	Reach Len. (ft)	20.00	20.00	20.00
Crit W.S. (ft)	1701.21	Flow Area (sq ft)		27.89	
E.G. Slope (ft/ft)	0.026289	Area (sq ft)		27.89	

* Q Total (cfs)	* 200.00	* Flow (cfs)	*	* 200.00 *	*
* Top Width (ft)	* 32.62	* Top Width (ft)	*	* 32.62 *	*
* Vel Total (ft/s)	* 7.17	* Avg. Vel. (ft/s)	*	* 7.17 *	*
* Max Chl Dpth (ft)	* 0.91	* Hydr. Depth (ft)	*	* 0.85 *	*
* Conv. Total (cfs)	* 1233.5	* Conv. (cfs)	*	* 1233.5 *	*
* Length Wtd. (ft)	* 20.00	* Wetted Per. (ft)	*	* 33.05 *	*
* Min Ch El (ft)	* 1700.10	* Shear (lb/sq ft)	*	* 1.38 *	*
* Alpha	* 1.00	* Stream Power (lb/ft s)	*	* 9.93 *	*
* Frctn Loss (ft)	* 0.78	* Cum Volume (acre-ft)	*	* 0.07 *	*
* C & E Loss (ft)	* 0.26	* Cum SA (acres)	*	* 0.09 *	*

Warning: The velocity head has changed by more than 0.5 ft (0.15 m). This may indicate the need for additional cross sections.
Warning: The conveyance ratio (upstream conveyance divided by downstream conveyance) is less than 0.7 or greater than 1.4. This may indicate the need for additional cross sections.
Warning: The energy loss was greater than 1.0 ft (0.3 m). between the current and previous cross section. This may indicate the need for additional cross sections.

CROSS SECTION OUTPUT Profile #PF#5

* E.G. Elev (ft)	* 1702.11	* Element	* Left OB *	Channel *	Right OB *
* Vel Head (ft)	* 1.01	* Wt. n-Val.	*	* 0.030 *	*
* W.S. Elev (ft)	* 1701.10	* Reach Len. (ft)	* 20.00 *	20.00 *	20.00 *
* Crit W.S. (ft)	* 1701.38	* Flow Area (sq ft)	*	* 30.92 *	*
* E.G. Slope (ft/ft)	* 0.029596	* Area (sq ft)	*	* 30.92 *	*
* Q Total (cfs)	* 250.00	* Flow (cfs)	*	* 250.00 *	*
* Top Width (ft)	* 32.99	* Top Width (ft)	*	* 32.99 *	*
* Vel Total (ft/s)	* 8.08	* Avg. Vel. (ft/s)	*	* 8.08 *	*
* Max Chl Dpth (ft)	* 1.00	* Hydr. Depth (ft)	*	* 0.94 *	*
* Conv. Total (cfs)	* 1453.2	* Conv. (cfs)	*	* 1453.2 *	*
* Length Wtd. (ft)	* 20.00	* Wetted Per. (ft)	*	* 33.46 *	*
* Min Ch El (ft)	* 1700.10	* Shear (lb/sq ft)	*	* 1.71 *	*
* Alpha	* 1.00	* Stream Power (lb/ft s)	*	* 13.80 *	*
* Frctn Loss (ft)	* 0.83	* Cum Volume (acre-ft)	*	* 0.13 *	*
* C & E Loss (ft)	* 0.26	* Cum SA (acres)	*	* 0.09 *	*

Warning: The velocity head has changed by more than 0.5 ft (0.15 m). This may indicate the need for additional cross sections.
Warning: The conveyance ratio (upstream conveyance divided by downstream conveyance) is less than 0.7 or greater than 1.4. This may indicate the need for additional cross sections.
Warning: The energy loss was greater than 1.0 ft (0.3 m). between the current and previous cross section. This may indicate the need for additional cross sections.

CROSS SECTION OUTPUT Profile #PF#6

* E.G. Elev (ft)	* 1702.42	* Element	* Left OB *	Channel *	Right OB *
* Vel Head (ft)	* 1.25	* Wt. n-Val.	*	* 0.030 *	*
* W.S. Elev (ft)	* 1701.18	* Reach Len. (ft)	* 20.00 *	20.00 *	20.00 *
* Crit W.S. (ft)	* 1701.54	* Flow Area (sq ft)	*	* 33.49 *	*
* E.G. Slope (ft/ft)	* 0.033115	* Area (sq ft)	*	* 33.49 *	*
* Q Total (cfs)	* 300.00	* Flow (cfs)	*	* 300.00 *	*
* Top Width (ft)	* 33.30	* Top Width (ft)	*	* 33.30 *	*
* Vel Total (ft/s)	* 8.96	* Avg. Vel. (ft/s)	*	* 8.96 *	*
* Max Chl Dpth (ft)	* 1.08	* Hydr. Depth (ft)	*	* 1.01 *	*
* Conv. Total (cfs)	* 1648.6	* Conv. (cfs)	*	* 1648.6 *	*
* Length Wtd. (ft)	* 20.00	* Wetted Per. (ft)	*	* 33.81 *	*
* Min Ch El (ft)	* 1700.10	* Shear (lb/sq ft)	*	* 2.05 *	*
* Alpha	* 1.00	* Stream Power (lb/ft s)	*	* 18.34 *	*
* Frctn Loss (ft)	* 0.86	* Cum Volume (acre-ft)	*	* 0.22 *	*
* C & E Loss (ft)	* 0.26	* Cum SA (acres)	*	* 0.10 *	*

Warning: The velocity head has changed by more than 0.5 ft (0.15 m). This may indicate the need for additional cross sections.
Warning: The energy loss was greater than 1.0 ft (0.3 m). between the current and previous cross section. This may indicate the need for additional cross sections.

CROSS SECTION OUTPUT Profile #PF#7

* E.G. Elev (ft)	* 1703.30	* Element	* Left OB *	Channel *	Right OB *
* Vel Head (ft)	* 0.17	* Wt. n-Val.	*	* 0.030 *	*
* W.S. Elev (ft)	* 1703.13	* Reach Len. (ft)	* 20.00 *	20.00 *	20.00 *
* Crit W.S. (ft)	* 1701.69	* Flow Area (sq ft)	*	* 106.14 *	*
* E.G. Slope (ft/ft)	* 0.001310	* Area (sq ft)	*	* 106.14 *	*
* Q Total (cfs)	* 350.00	* Flow (cfs)	*	* 350.00 *	*
* Top Width (ft)	* 41.11	* Top Width (ft)	*	* 41.11 *	*
* Vel Total (ft/s)	* 3.30	* Avg. Vel. (ft/s)	*	* 3.30 *	*
* Max Chl Dpth (ft)	* 3.03	* Hydr. Depth (ft)	*	* 2.58 *	*
* Conv. Total (cfs)	* 9670.7	* Conv. (cfs)	*	* 9670.7 *	*
* Length Wtd. (ft)	* 20.00	* Wetted Per. (ft)	*	* 42.54 *	*
* Min Ch El (ft)	* 1700.10	* Shear (lb/sq ft)	*	* 0.20 *	*
* Alpha	* 1.00	* Stream Power (lb/ft s)	*	* 0.67 *	*
* Frctn Loss (ft)	* 0.02	* Cum Volume (acre-ft)	*	* 0.36 *	*
* C & E Loss (ft)	* 0.02	* Cum SA (acres)	*	* 0.11 *	*

Warning: The conveyance ratio (upstream conveyance divided by downstream conveyance) is less than 0.7 or greater than 1.4. This may indicate the need for additional cross sections.
Note: Hydraulic jump has occurred between this cross section and the previous upstream section.

CROSS SECTION OUTPUT Profile #PF#8

* E.G. Elev (ft)	* 1704.75	* Element	* Left OB *	Channel *	Right OB *

Vel Head (ft)	0.08	Wt. n-Val.	0.030	0.030	
W.S. Elev (ft)	1704.67	Reach Len. (ft)	20.00	20.00	20.00
Crit W.S. (ft)		Flow Area (sq ft)	2.13	178.16	
E.G. Slope (ft/ft)	0.000438	Area (sq ft)	2.13	178.16	
Q Total (cfs)	400.00	Flow (cfs)	0.42	399.58	
Top Width (ft)	79.43	Top Width (ft)	25.49	53.94	
Vel Total (ft/s)	2.22	Avg. Vel. (ft/s)	0.20	2.24	
Max Chl Dpth (ft)	4.57	Hydr. Depth (ft)	0.08	3.30	
Conv. Total (cfs)	19120.9	Conv. (cfs)	20.2	19100.6	
Length Wtd. (ft)	20.00	Wetted Per. (ft)	25.49	55.94	
Min Ch El (ft)	1700.10	Shear (lb/sq ft)	0.00	0.09	
Alpha	1.02	Stream Power (lb/ft s)	0.00	0.20	
Frctn Loss (ft)	0.01	Cum Volume (acre-ft)	0.01	0.53	
C & E Loss (ft)	0.01	Cum SA (acres)	0.06	0.12	

CROSS SECTION OUTPUT Profile #PF#9

			Left OB	Channel	Right OB
E.G. Elev (ft)	1707.01	Element			
Vel Head (ft)	0.02	Wt. n-Val.	0.030	0.030	
W.S. Elev (ft)	1706.99	Reach Len. (ft)	20.00	20.00	20.00
Crit W.S. (ft)		Flow Area (sq ft)	170.83	308.30	
E.G. Slope (ft/ft)	0.000062	Area (sq ft)	170.83	308.30	
Q Total (cfs)	468.00	Flow (cfs)	112.22	355.78	
Top Width (ft)	133.99	Top Width (ft)	76.10	57.89	
Vel Total (ft/s)	0.98	Avg. Vel. (ft/s)	0.66	1.15	
Max Chl Dpth (ft)	6.89	Hydr. Depth (ft)	2.24	5.33	
Conv. Total (cfs)	59464.2	Conv. (cfs)	14258.7	45205.5	
Length Wtd. (ft)	20.00	Wetted Per. (ft)	78.10	60.53	
Min Ch El (ft)	1700.10	Shear (lb/sq ft)	0.01	0.02	
Alpha	1.17	Stream Power (lb/ft s)	0.01	0.02	
Frctn Loss (ft)	0.00	Cum Volume (acre-ft)	0.27	0.83	
C & E Loss (ft)	0.00	Cum SA (acres)	0.12	0.13	

Warning: The cross-section end points had to be extended vertically for the computed water surface.

CROSS SECTION RIVER: CloudBurst Wash
REACH: Cloud-A1 RS: 420

INPUT
Description: Cloud Burst Flowline Sta: 4+20
Station Elevation Data num= 8

Sta	Elev	Sta	Elev	Sta	Elev	Sta	Elev	Sta	Elev
-100.8	1705	-36.5	1704.3	-21.7	1704.2	-19.5	1699.8	0	1699.8
19.5	1699.8	21.7	1704.2	66	1726.5				

Manning's n Values num= 3

Sta	n Val	Sta	n Val	Sta	n Val
-100.8	.03	-36.5	.03	66	.03

Bank Sta: Left	Right	Lengths: Left	Channel	Right	Coeff Contr.	Expan.
-36.5	66	20	20	20	.1	.3

Left Levee Station= -202 Elevation= 1726

CROSS SECTION OUTPUT Profile #PF#1

			Left OB	Channel	Right OB
E.G. Elev (ft)	1700.92	Element			
Vel Head (ft)	0.96	Wt. n-Val.		0.030	
W.S. Elev (ft)	1699.96	Reach Len. (ft)	20.00	20.00	20.00
Crit W.S. (ft)	1700.17	Flow Area (sq ft)		6.35	
E.G. Slope (ft/ft)	0.287105	Area (sq ft)		6.35	
Q Total (cfs)	50.00	Flow (cfs)		50.00	
Top Width (ft)	39.16	Top Width (ft)		39.16	
Vel Total (ft/s)	7.87	Avg. Vel. (ft/s)		7.87	
Max Chl Dpth (ft)	0.16	Hydr. Depth (ft)		0.16	
Conv. Total (cfs)	93.3	Conv. (cfs)		93.3	
Length Wtd. (ft)	20.00	Wetted Per. (ft)		39.36	
Min Ch El (ft)	1699.80	Shear (lb/sq ft)		2.89	
Alpha	1.00	Stream Power (lb/ft s)		22.77	
Frctn Loss (ft)	0.67	Cum Volume (acre-ft)		0.01	
C & E Loss (ft)	0.11	Cum SA (acres)		0.07	

Warning: The energy equation could not be balanced within the specified number of iterations. The program selected the water surface that had the least amount of error between computed and assumed values.
Warning: The conveyance ratio (upstream conveyance divided by downstream conveyance) is less than 0.7 or greater than 1.4. This may indicate the need for additional cross sections.

CROSS SECTION OUTPUT Profile #PF#2

			Left OB	Channel	Right OB
E.G. Elev (ft)	1700.70	Element			
Vel Head (ft)	0.40	Wt. n-Val.		0.030	
W.S. Elev (ft)	1700.30	Reach Len. (ft)	20.00	20.00	20.00
Crit W.S. (ft)	1700.39	Flow Area (sq ft)		19.64	
E.G. Slope (ft/ft)	0.027369	Area (sq ft)		19.64	
Q Total (cfs)	100.00	Flow (cfs)		100.00	
Top Width (ft)	39.50	Top Width (ft)		39.50	
Vel Total (ft/s)	5.09	Avg. Vel. (ft/s)		5.09	
Max Chl Dpth (ft)	0.50	Hydr. Depth (ft)		0.50	
Conv. Total (cfs)	604.5	Conv. (cfs)		604.5	
Length Wtd. (ft)	20.00	Wetted Per. (ft)		40.12	

* Min Ch El (ft)	* 1699.80	* Shear (lb/sq ft)	*	* 0.84	*
* Alpha	* 1.00	* Stream Power (lb/ft s)	*	* 4.26	*
* Frctn Loss (ft)	* 0.43	* Cum Volume (acre-ft)	*	* 0.03	*
* C & E Loss (ft)	* 0.00	* Cum SA (acres)	*	* 0.07	*

CROSS SECTION OUTPUT Profile #PF#3

* E.G. Elev (ft)	* 1700.98	* Element	* Left OB	* Channel	* Right OB *
* Vel Head (ft)	* 0.53	* Wt. n-Val.	*	* 0.030	*
* W.S. Elev (ft)	* 1700.46	* Reach Len. (ft)	* 20.00	* 20.00	* 20.00 *
* Crit W.S. (ft)	* 1700.57	* Flow Area (sq ft)	*	* 25.76	*
* E.G. Slope (ft/ft)	* 0.025236	* Area (sq ft)	*	* 25.76	*
* Q Total (cfs)	* 150.00	* Flow (cfs)	*	* 150.00	*
* Top Width (ft)	* 39.66	* Top Width (ft)	*	* 39.66	*
* Vel Total (ft/s)	* 5.82	* Avg. Vel. (ft/s)	*	* 5.82	*
* Max Chl Dpth (ft)	* 0.66	* Hydr. Depth (ft)	*	* 0.65	*
* Conv. Total (cfs)	* 944.2	* Conv. (cfs)	*	* 944.2	*
* Length Wtd. (ft)	* 20.00	* Wetted Per. (ft)	*	* 40.46	*
* Min Ch El (ft)	* 1699.80	* Shear (lb/sq ft)	*	* 1.00	*
* Alpha	* 1.00	* Stream Power (lb/ft s)	*	* 5.84	*
* Frctn Loss (ft)	* 0.48	* Cum Volume (acre-ft)	*	* 0.04	*
* C & E Loss (ft)	* 0.01	* Cum SA (acres)	*	* 0.07	*

CROSS SECTION OUTPUT Profile #PF#4

* E.G. Elev (ft)	* 1701.25	* Element	* Left OB	* Channel	* Right OB *
* Vel Head (ft)	* 0.68	* Wt. n-Val.	*	* 0.030	*
* W.S. Elev (ft)	* 1700.56	* Reach Len. (ft)	* 20.00	* 20.00	* 20.00 *
* Crit W.S. (ft)	* 1700.73	* Flow Area (sq ft)	*	* 30.12	*
* E.G. Slope (ft/ft)	* 0.026862	* Area (sq ft)	*	* 30.12	*
* Q Total (cfs)	* 200.00	* Flow (cfs)	*	* 200.00	*
* Top Width (ft)	* 39.76	* Top Width (ft)	*	* 39.76	*
* Vel Total (ft/s)	* 6.64	* Avg. Vel. (ft/s)	*	* 6.64	*
* Max Chl Dpth (ft)	* 0.76	* Hydr. Depth (ft)	*	* 0.76	*
* Conv. Total (cfs)	* 1220.3	* Conv. (cfs)	*	* 1220.3	*
* Length Wtd. (ft)	* 20.00	* Wetted Per. (ft)	*	* 40.71	*
* Min Ch El (ft)	* 1699.80	* Shear (lb/sq ft)	*	* 1.24	*
* Alpha	* 1.00	* Stream Power (lb/ft s)	*	* 8.24	*
* Frctn Loss (ft)	* 0.53	* Cum Volume (acre-ft)	*	* 0.06	*
* C & E Loss (ft)	* 0.04	* Cum SA (acres)	*	* 0.07	*

CROSS SECTION OUTPUT Profile #PF#5

* E.G. Elev (ft)	* 1701.49	* Element	* Left OB	* Channel	* Right OB *
* Vel Head (ft)	* 0.82	* Wt. n-Val.	*	* 0.030	*
* W.S. Elev (ft)	* 1700.67	* Reach Len. (ft)	* 20.00	* 20.00	* 20.00 *
* Crit W.S. (ft)	* 1700.88	* Flow Area (sq ft)	*	* 34.30	*
* E.G. Slope (ft/ft)	* 0.027412	* Area (sq ft)	*	* 34.30	*
* Q Total (cfs)	* 250.00	* Flow (cfs)	*	* 250.00	*
* Top Width (ft)	* 39.87	* Top Width (ft)	*	* 39.87	*
* Vel Total (ft/s)	* 7.29	* Avg. Vel. (ft/s)	*	* 7.29	*
* Max Chl Dpth (ft)	* 0.87	* Hydr. Depth (ft)	*	* 0.86	*
* Conv. Total (cfs)	* 1510.0	* Conv. (cfs)	*	* 1510.0	*
* Length Wtd. (ft)	*	* Wetted Per. (ft)	*	* 40.95	*
* Min Ch El (ft)	* 1699.80	* Shear (lb/sq ft)	*	* 1.43	*
* Alpha	* 1.00	* Stream Power (lb/ft s)	*	* 10.45	*
* Frctn Loss (ft)	* 0.57	* Cum Volume (acre-ft)	*	* 0.12	*
* C & E Loss (ft)	* 0.06	* Cum SA (acres)	*	* 0.08	*

CROSS SECTION OUTPUT Profile #PF#6

* E.G. Elev (ft)	* 1702.04	* Element	* Left OB	* Channel	* Right OB *
* Vel Head (ft)	* 0.21	* Wt. n-Val.	*	* 0.030	*
* W.S. Elev (ft)	* 1701.82	* Reach Len. (ft)	* 20.00	* 20.00	* 20.00 *
* Crit W.S. (ft)	* 1701.02	* Flow Area (sq ft)	*	* 80.97	*
* E.G. Slope (ft/ft)	* 0.002446	* Area (sq ft)	*	* 80.97	*
* Q Total (cfs)	* 300.00	* Flow (cfs)	*	* 300.00	*
* Top Width (ft)	* 41.02	* Top Width (ft)	*	* 41.02	*
* Vel Total (ft/s)	* 3.71	* Avg. Vel. (ft/s)	*	* 3.71	*
* Max Chl Dpth (ft)	* 2.02	* Hydr. Depth (ft)	*	* 1.97	*
* Conv. Total (cfs)	* 6065.8	* Conv. (cfs)	*	* 6065.8	*
* Length Wtd. (ft)	* 20.00	* Wetted Per. (ft)	*	* 43.52	*
* Min Ch El (ft)	* 1699.80	* Shear (lb/sq ft)	*	* 0.28	*
* Alpha	* 1.00	* Stream Power (lb/ft s)	*	* 1.05	*
* Frctn Loss (ft)	* 0.03	* Cum Volume (acre-ft)	*	* 0.19	*
* C & E Loss (ft)	* 0.03	* Cum SA (acres)	*	* 0.08	*

Note: Hydraulic jump has occurred between this cross section and the previous upstream section.

CROSS SECTION OUTPUT Profile #PF#7

* E.G. Elev (ft)	* 1703.26	* Element	* Left OB	* Channel	* Right OB *
* Vel Head (ft)	* 0.10	* Wt. n-Val.	*	* 0.030	*
* W.S. Elev (ft)	* 1703.16	* Reach Len. (ft)	* 20.00	* 20.00	* 20.00 *
* Crit W.S. (ft)	*	* Flow Area (sq ft)	*	* 136.54	*
* E.G. Slope (ft/ft)	* 0.000637	* Area (sq ft)	*	* 136.54	*
* Q Total (cfs)	* 350.00	* Flow (cfs)	*	* 350.00	*
* Top Width (ft)	* 42.36	* Top Width (ft)	*	* 42.36	*
* Vel Total (ft/s)	* 2.56	* Avg. Vel. (ft/s)	*	* 2.56	*
* Max Chl Dpth (ft)	* 3.36	* Hydr. Depth (ft)	*	* 3.22	*

Conv. Total (cfs)	13866.5	Conv. (cfs)		13866.5	
Length Wtd. (ft)	20.00	Wetted Per. (ft)		46.51	
Min Ch El (ft)	1699.80	Shear (lb/sq ft)		0.12	
Alpha	1.00	Stream Power (lb/ft s)		0.30	
Frctn Loss (ft)	0.01	Cum Volume (acre-ft)		0.31	
C & E Loss (ft)	0.01	Cum SA (acres)		0.09	

CROSS SECTION OUTPUT Profile #PF#8

E.G. Elev (ft)	1704.73	Element	Left OB	Channel	Right OB
Vel Head (ft)	0.06	Wt. n-Val.	0.030	0.030	
W.S. Elev (ft)	1704.68	Reach Len. (ft)	20.00	20.00	20.00
Crit W.S. (ft)		Flow Area (sq ft)	6.47	208.42	
E.G. Slope (ft/ft)	0.000313	Area (sq ft)	6.47	208.42	
Q Total (cfs)	400.00	Flow (cfs)	1.86	398.14	
Top Width (ft)	93.62	Top Width (ft)	34.47	59.14	
Vel Total (ft/s)	1.86	Avg. Vel. (ft/s)	0.29	1.91	
Max Chl Dpth (ft)	4.88	Hydr. Depth (ft)	0.19	3.52	
Conv. Total (cfs)	22623.4	Conv. (cfs)	105.0	22518.4	
Length Wtd. (ft)	20.00	Wetted Per. (ft)	34.47	64.70	
Min Ch El (ft)	1699.80	Shear (lb/sq ft)	0.00	0.06	
Alpha	1.05	Stream Power (lb/ft s)	0.00	0.12	
Frctn Loss (ft)	0.00	Cum Volume (acre-ft)	0.01	0.45	
C & E Loss (ft)	0.01	Cum SA (acres)	0.04	0.10	

Warning: The conveyance ratio (upstream conveyance divided by downstream conveyance) is less than 0.7 or greater than 1.4. This may indicate the need for additional cross sections.

CROSS SECTION OUTPUT Profile #PF#9

E.G. Elev (ft)	1707.01	Element	Left OB	Channel	Right OB
Vel Head (ft)	0.02	Wt. n-Val.	0.030	0.030	
W.S. Elev (ft)	1707.00	Reach Len. (ft)	20.00	20.00	20.00
Crit W.S. (ft)		Flow Area (sq ft)	150.79	350.97	
E.G. Slope (ft/ft)	0.000054	Area (sq ft)	150.79	350.97	
Q Total (cfs)	468.00	Flow (cfs)	94.58	373.42	
Top Width (ft)	128.05	Top Width (ft)	64.30	63.75	
Vel Total (ft/s)	0.93	Avg. Vel. (ft/s)	0.63	1.06	
Max Chl Dpth (ft)	7.20	Hydr. Depth (ft)	2.35	5.51	
Conv. Total (cfs)	63912.4	Conv. (cfs)	12916.8	50995.6	
Length Wtd. (ft)	20.00	Wetted Per. (ft)	66.30	69.86	
Min Ch El (ft)	1699.80	Shear (lb/sq ft)	0.01	0.02	
Alpha	1.13	Stream Power (lb/ft s)	0.00	0.02	
Frctn Loss (ft)	0.00	Cum Volume (acre-ft)	0.20	0.68	
C & E Loss (ft)	0.00	Cum SA (acres)	0.09	0.10	

Warning: The cross-section end points had to be extended vertically for the computed water surface.

CROSS SECTION RIVER: CloudBurst Wash
REACH: Cloud-A1 RS: 400

INPUT
Description: Cloud Burst Flowline Sta: 4+00
Station Elevation Data num= 7

Sta	Elev	Sta	Elev	Sta	Elev	Sta	Elev	Sta	Elev
-100.4	1705	-30	1704.5	-20	1699.5	0	1699.5	20	1699.5
30	1704.5	65.7	1726.5						

Manning's n Values num= 3

Sta	n Val	Sta	n Val	Sta	n Val
-100.4	.03	-30	.03	65.7	.03

Bank Sta: Left	Right	Lengths: Left	Channel	Right	Coeff Contr.	Expan.
-30	65.7	20	20	20	.1	.3

Left Levee Station= -202 Elevation= 1726

CROSS SECTION OUTPUT Profile #PF#1

E.G. Elev (ft)	1704.41	Element	Left OB	Channel	Right OB
Vel Head (ft)	4.84	Wt. n-Val.		0.030	
W.S. Elev (ft)	1699.57	Reach Len. (ft)	20.00	20.00	20.00
Crit W.S. (ft)	1699.86	Flow Area (sq ft)		2.83	
E.G. Slope (ft/ft)	4.382594	Area (sq ft)		2.83	
Q Total (cfs)	50.00	Flow (cfs)		50.00	
Top Width (ft)	40.28	Top Width (ft)		40.28	
Vel Total (ft/s)	17.65	Avg. Vel. (ft/s)		17.65	
Max Chl Dpth (ft)	0.07	Hydr. Depth (ft)		0.07	
Conv. Total (cfs)	23.9	Conv. (cfs)		23.9	
Length Wtd. (ft)	20.00	Wetted Per. (ft)		40.32	
Min Ch El (ft)	1699.50	Shear (lb/sq ft)		19.22	
Alpha	1.00	Stream Power (lb/ft s)		339.33	
Frctn Loss (ft)	1.01	Cum Volume (acre-ft)		0.01	
C & E Loss (ft)	0.23	Cum SA (acres)		0.05	

Warning: The energy equation could not be balanced within the specified number of iterations. The program selected the water surface that had the least amount of error between computed and assumed values.
Warning: The velocity head has changed by more than 0.5 ft (0.15 m). This may indicate the need for additional cross sections.

Warning: The conveyance ratio (upstream conveyance divided by downstream conveyance) is less than 0.7 or greater than 1.4. This may indicate the need for additional cross sections.
Warning: The energy loss was greater than 1.0 ft (0.3 m). between the current and previous cross section. This may indicate the need for additional cross sections.
Warning: During the supercritical standard step calculations, the final energy answer that was computed is greater than the upstream energy. This is not physically possible. Please check your data.

CROSS SECTION OUTPUT Profile #PF#2

E.G. Elev (ft)	1700.39	Element	Left OB	Channel	Right OB
Vel Head (ft)	0.41	Wt. n-Val.		0.030	
W.S. Elev (ft)	1699.97	Reach Len. (ft)	20.00	20.00	20.00
Crit W.S. (ft)	1700.07	Flow Area (sq ft)		19.37	
E.G. Slope (ft/ft)	0.030583	Area (sq ft)		19.37	
Q Total (cfs)	100.00	Flow (cfs)		100.00	
Top Width (ft)	41.89	Top Width (ft)		41.89	
Vel Total (ft/s)	5.16	Avg. Vel. (ft/s)		5.16	
Max Chl Dpth (ft)	0.47	Hydr. Depth (ft)		0.46	
Conv. Total (cfs)	571.8	Conv. (cfs)		571.8	
Length Wtd. (ft)	20.00	Wetted Per. (ft)		42.12	
Min Ch El (ft)	1699.50	Shear (lb/sq ft)		0.88	
Alpha	1.00	Stream Power (lb/ft s)		4.53	
Frctn Loss (ft)	0.41	Cum Volume (acre-ft)		0.02	
C & E Loss (ft)	0.04	Cum SA (acres)		0.05	

Warning: The energy equation could not be balanced within the specified number of iterations. The program selected the water surface that had the least amount of error between computed and assumed values.

CROSS SECTION OUTPUT Profile #PF#3

E.G. Elev (ft)	1700.62	Element	Left OB	Channel	Right OB
Vel Head (ft)	0.43	Wt. n-Val.		0.030	
W.S. Elev (ft)	1700.19	Reach Len. (ft)	20.00	20.00	20.00
Crit W.S. (ft)	1700.25	Flow Area (sq ft)		28.44	
E.G. Slope (ft/ft)	0.019722	Area (sq ft)		28.44	
Q Total (cfs)	150.00	Flow (cfs)		150.00	
Top Width (ft)	42.75	Top Width (ft)		42.75	
Vel Total (ft/s)	5.27	Avg. Vel. (ft/s)		5.27	
Max Chl Dpth (ft)	0.69	Hydr. Depth (ft)		0.67	
Conv. Total (cfs)	1068.1	Conv. (cfs)		1068.1	
Length Wtd. (ft)	20.00	Wetted Per. (ft)		43.07	
Min Ch El (ft)	1699.50	Shear (lb/sq ft)		0.81	
Alpha	1.00	Stream Power (lb/ft s)		4.29	
Frctn Loss (ft)	0.84	Cum Volume (acre-ft)		0.03	
C & E Loss (ft)	0.05	Cum SA (acres)		0.05	

Warning: The energy equation could not be balanced within the specified number of iterations. The program selected the water surface that had the least amount of error between computed and assumed values.

CROSS SECTION OUTPUT Profile #PF#4

E.G. Elev (ft)	1700.84	Element	Left OB	Channel	Right OB
Vel Head (ft)	0.48	Wt. n-Val.		0.030	
W.S. Elev (ft)	1700.36	Reach Len. (ft)	20.00	20.00	20.00
Crit W.S. (ft)	1700.40	Flow Area (sq ft)		35.79	
E.G. Slope (ft/ft)	0.016676	Area (sq ft)		35.79	
Q Total (cfs)	200.00	Flow (cfs)		200.00	
Top Width (ft)	43.43	Top Width (ft)		43.43	
Vel Total (ft/s)	5.59	Avg. Vel. (ft/s)		5.59	
Max Chl Dpth (ft)	0.86	Hydr. Depth (ft)		0.82	
Conv. Total (cfs)	1548.8	Conv. (cfs)		1548.8	
Length Wtd. (ft)	20.00	Wetted Per. (ft)		43.84	
Min Ch El (ft)	1699.50	Shear (lb/sq ft)		0.85	
Alpha	1.00	Stream Power (lb/ft s)		4.75	
Frctn Loss (ft)	0.38	Cum Volume (acre-ft)		0.04	
C & E Loss (ft)	0.07	Cum SA (acres)		0.05	

Warning: The energy equation could not be balanced within the specified number of iterations. The program selected the water surface that had the least amount of error between computed and assumed values.

CROSS SECTION OUTPUT Profile #PF#5

E.G. Elev (ft)	1701.17	Element	Left OB	Channel	Right OB
Vel Head (ft)	0.27	Wt. n-Val.		0.030	
W.S. Elev (ft)	1700.89	Reach Len. (ft)	20.00	20.00	20.00
Crit W.S. (ft)	1700.54	Flow Area (sq ft)		59.62	
E.G. Slope (ft/ft)	0.005107	Area (sq ft)		59.62	
Q Total (cfs)	250.00	Flow (cfs)		250.00	
Top Width (ft)	45.57	Top Width (ft)		45.57	
Vel Total (ft/s)	4.19	Avg. Vel. (ft/s)		4.19	
Max Chl Dpth (ft)	1.39	Hydr. Depth (ft)		1.31	
Conv. Total (cfs)	3498.2	Conv. (cfs)		3498.2	
Length Wtd. (ft)	20.00	Wetted Per. (ft)		46.23	
Min Ch El (ft)	1699.50	Shear (lb/sq ft)		0.41	
Alpha	1.00	Stream Power (lb/ft s)		1.72	
Frctn Loss (ft)	0.04	Cum Volume (acre-ft)		0.10	
C & E Loss (ft)	0.06	Cum SA (acres)		0.06	

Warning: The conveyance ratio (upstream conveyance divided by downstream conveyance) is less than 0.7 or greater than 1.4. This may indicate the need for additional cross sections.
Note: Hydraulic jump has occurred between this cross section and the previous upstream section.

CROSS SECTION OUTPUT Profile #PF#6

E.G. Elev (ft)	1701.98	Element	Left OB	Channel	Right OB
Vel Head (ft)	0.13	Wt. n-Val.		0.030	
W.S. Elev (ft)	1701.85	Reach Len. (ft)	20.00	20.00	20.00
Crit W.S. (ft)		Flow Area (sq ft)		105.03	
E.G. Slope (ft/ft)	0.001253	Area (sq ft)		105.03	
Q Total (cfs)	300.00	Flow (cfs)		300.00	
Top Width (ft)	49.40	Top Width (ft)		49.40	
Vel Total (ft/s)	2.86	Avg. Vel. (ft/s)		2.86	
Max Chl Dpth (ft)	2.35	Hydr. Depth (ft)		2.13	
Conv. Total (cfs)	8475.5	Conv. (cfs)		8475.5	
Length Wtd. (ft)	20.00	Wetted Per. (ft)		50.51	
Min Ch El (ft)	1699.50	Shear (lb/sq ft)		0.16	
Alpha	1.00	Stream Power (lb/ft s)		0.46	
Frctn Loss (ft)	0.01	Cum Volume (acre-ft)		0.15	
C & E Loss (ft)	0.02	Cum SA (acres)		0.06	

Warning: The conveyance ratio (upstream conveyance divided by downstream conveyance) is less than 0.7 or greater than 1.4. This may indicate the need for additional cross sections.

CROSS SECTION OUTPUT Profile #PF#7

E.G. Elev (ft)	1703.24	Element	Left OB	Channel	Right OB
Vel Head (ft)	0.06	Wt. n-Val.		0.030	
W.S. Elev (ft)	1703.17	Reach Len. (ft)	20.00	20.00	20.00
Crit W.S. (ft)		Flow Area (sq ft)		173.99	
E.G. Slope (ft/ft)	0.000368	Area (sq ft)		173.99	
Q Total (cfs)	350.00	Flow (cfs)		350.00	
Top Width (ft)	54.70	Top Width (ft)		54.70	
Vel Total (ft/s)	2.01	Avg. Vel. (ft/s)		2.01	
Max Chl Dpth (ft)	3.67	Hydr. Depth (ft)		3.18	
Conv. Total (cfs)	18254.9	Conv. (cfs)		18254.9	
Length Wtd. (ft)	20.00	Wetted Per. (ft)		56.43	
Min Ch El (ft)	1699.50	Shear (lb/sq ft)		0.07	
Alpha	1.00	Stream Power (lb/ft s)		0.14	
Frctn Loss (ft)	0.00	Cum Volume (acre-ft)		0.23	
C & E Loss (ft)	0.01	Cum SA (acres)		0.07	

Warning: The conveyance ratio (upstream conveyance divided by downstream conveyance) is less than 0.7 or greater than 1.4. This may indicate the need for additional cross sections.

CROSS SECTION OUTPUT Profile #PF#8

E.G. Elev (ft)	1704.72	Element	Left OB	Channel	Right OB
Vel Head (ft)	0.04	Wt. n-Val.	0.030	0.030	
W.S. Elev (ft)	1704.69	Reach Len. (ft)	20.00	20.00	20.00
Crit W.S. (ft)		Flow Area (sq ft)	2.41	261.14	
E.G. Slope (ft/ft)	0.000143	Area (sq ft)	2.41	261.14	
Q Total (cfs)	400.00	Flow (cfs)	0.29	399.71	
Top Width (ft)	86.37	Top Width (ft)	26.07	60.30	
Vel Total (ft/s)	1.52	Avg. Vel. (ft/s)	0.12	1.53	
Max Chl Dpth (ft)	5.19	Hydr. Depth (ft)	0.09	4.33	
Conv. Total (cfs)	33501.8	Conv. (cfs)	24.5	33477.4	
Length Wtd. (ft)	20.00	Wetted Per. (ft)	26.07	62.71	
Min Ch El (ft)	1699.50	Shear (lb/sq ft)	0.00	0.04	
Alpha	1.02	Stream Power (lb/ft s)	0.00	0.06	
Frctn Loss (ft)	0.00	Cum Volume (acre-ft)	0.00	0.34	
C & E Loss (ft)	0.01	Cum SA (acres)	0.03	0.07	

Warning: The conveyance ratio (upstream conveyance divided by downstream conveyance) is less than 0.7 or greater than 1.4. This may indicate the need for additional cross sections.

CROSS SECTION OUTPUT Profile #PF#9

E.G. Elev (ft)	1707.01	Element	Left OB	Channel	Right OB
Vel Head (ft)	0.01	Wt. n-Val.	0.030	0.030	
W.S. Elev (ft)	1707.00	Reach Len. (ft)	20.00	20.00	20.00
Crit W.S. (ft)		Flow Area (sq ft)	158.13	404.82	
E.G. Slope (ft/ft)	0.000035	Area (sq ft)	158.13	404.82	
Q Total (cfs)	468.00	Flow (cfs)	77.49	390.51	
Top Width (ft)	134.45	Top Width (ft)	70.40	64.05	
Vel Total (ft/s)	0.83	Avg. Vel. (ft/s)	0.49	0.96	
Max Chl Dpth (ft)	7.50	Hydr. Depth (ft)	2.25	6.32	
Conv. Total (cfs)	79622.4	Conv. (cfs)	13184.3	66438.1	
Length Wtd. (ft)	20.00	Wetted Per. (ft)	72.40	67.12	
Min Ch El (ft)	1699.50	Shear (lb/sq ft)	0.00	0.01	
Alpha	1.18	Stream Power (lb/ft s)	0.00	0.01	
Frctn Loss (ft)	0.00	Cum Volume (acre-ft)	0.13	0.50	
C & E Loss (ft)	0.00	Cum SA (acres)	0.06	0.07	

Warning: The cross-section end points had to be extended vertically for the computed water surface.

CROSS SECTION RIVER: CloudBurst Wash
REACH: Cloud-A1 RS: 380

INPUT
Description: Cloud Burst Flowline Sta: 3+80
Station Elevation Data num= 7

Sta	Elev	Sta	Elev	Sta	Elev	Sta	Elev	Sta	Elev	Sta	Elev
-98.7	1705	-38.7	1704.3	-28.5	1699.2	0	1699.2	28.5	1699.2		
38.7	1704.3	66.7	1726.5								

Manning's n Values num= 3

Sta	n Val	Sta	n Val	Sta	n Val
-98.7	.03	-38.7	.03	66.7	.03

Bank Sta: Left	Right	Lengths: Left	Channel	Right	Coeff Contr.	Expan.
-38.7	66.7	20	20	20	.1	.3

Left Levee Station= -202 Elevation= 1726

CROSS SECTION OUTPUT Profile #PF#1

E.G. Elev (ft)	1699.67	Element	Left OB	Channel	Right OB
Vel Head (ft)	0.26	Wt. n-Val.		0.030	
W.S. Elev (ft)	1699.41	Reach Len. (ft)	20.00	20.00	20.00
Crit W.S. (ft)	1699.49	Flow Area (sq ft)		12.17	
E.G. Slope (ft/ft)	0.055132	Area (sq ft)		12.17	
Q Total (cfs)	50.00	Flow (cfs)		50.00	
Top Width (ft)	57.85	Top Width (ft)		57.85	
Vel Total (ft/s)	4.11	Avg. Vel. (ft/s)		4.11	
Max Chl Dpth (ft)	0.21	Hydr. Depth (ft)		0.21	
Conv. Total (cfs)	212.9	Conv. (cfs)		212.9	
Length Wtd. (ft)	20.00	Wetted Per. (ft)		57.95	
Min Ch El (ft)	1699.20	Shear (lb/sq ft)		0.72	
Alpha	1.00	Stream Power (lb/ft s)		2.97	
Frctn Loss (ft)	3.37	Cum Volume (acre-ft)		0.01	
C & E Loss (ft)	1.38	Cum SA (acres)		0.03	

Warning: The velocity head has changed by more than 0.5 ft (0.15 m). This may indicate the need for additional cross sections.
Warning: The conveyance ratio (upstream conveyance divided by downstream conveyance) is less than 0.7 or greater than 1.4. This may indicate the need for additional cross sections.
Warning: The energy loss was greater than 1.0 ft (0.3 m). between the current and previous cross section. This may indicate the need for additional cross sections.

CROSS SECTION OUTPUT Profile #PF#2

E.G. Elev (ft)	1699.88	Element	Left OB	Channel	Right OB
Vel Head (ft)	0.24	Wt. n-Val.		0.030	
W.S. Elev (ft)	1699.64	Reach Len. (ft)	20.00	20.00	20.00
Crit W.S. (ft)	1699.66	Flow Area (sq ft)		25.46	
E.G. Slope (ft/ft)	0.019260	Area (sq ft)		25.46	
Q Total (cfs)	100.00	Flow (cfs)		100.00	
Top Width (ft)	58.76	Top Width (ft)		58.76	
Vel Total (ft/s)	3.93	Avg. Vel. (ft/s)		3.93	
Max Chl Dpth (ft)	0.44	Hydr. Depth (ft)		0.43	
Conv. Total (cfs)	720.6	Conv. (cfs)		720.6	
Length Wtd. (ft)	20.00	Wetted Per. (ft)		58.97	
Min Ch El (ft)	1699.20	Shear (lb/sq ft)		0.52	
Alpha	1.00	Stream Power (lb/ft s)		2.04	
Frctn Loss (ft)	0.46	Cum Volume (acre-ft)		0.01	
C & E Loss (ft)	0.06	Cum SA (acres)		0.03	

CROSS SECTION OUTPUT Profile #PF#3

E.G. Elev (ft)	1700.14	Element	Left OB	Channel	Right OB
Vel Head (ft)	0.46	Wt. n-Val.		0.030	
W.S. Elev (ft)	1699.68	Reach Len. (ft)	20.00	20.00	20.00
Crit W.S. (ft)	1699.79	Flow Area (sq ft)		27.59	
E.G. Slope (ft/ft)	0.033293	Area (sq ft)		27.59	
Q Total (cfs)	150.00	Flow (cfs)		150.00	
Top Width (ft)	58.90	Top Width (ft)		58.90	
Vel Total (ft/s)	5.44	Avg. Vel. (ft/s)		5.44	
Max Chl Dpth (ft)	0.48	Hydr. Depth (ft)		0.47	
Conv. Total (cfs)	822.1	Conv. (cfs)		822.1	
Length Wtd. (ft)	20.00	Wetted Per. (ft)		59.13	
Min Ch El (ft)	1699.20	Shear (lb/sq ft)		0.97	
Alpha	1.00	Stream Power (lb/ft s)		5.27	
Frctn Loss (ft)	0.49	Cum Volume (acre-ft)		0.01	
C & E Loss (ft)	0.00	Cum SA (acres)		0.03	

CROSS SECTION OUTPUT Profile #PF#4

E.G. Elev (ft)	1700.35	Element	Left OB	Channel	Right OB
Vel Head (ft)	0.59	Wt. n-Val.		0.030	
W.S. Elev (ft)	1699.76	Reach Len. (ft)	20.00	20.00	20.00
Crit W.S. (ft)	1699.92	Flow Area (sq ft)		32.55	
E.G. Slope (ft/ft)	0.034396	Area (sq ft)		32.55	
Q Total (cfs)	200.00	Flow (cfs)		200.00	
Top Width (ft)	59.24	Top Width (ft)		59.24	
Vel Total (ft/s)	6.14	Avg. Vel. (ft/s)		6.14	
Max Chl Dpth (ft)	0.56	Hydr. Depth (ft)		0.55	
Conv. Total (cfs)	1078.4	Conv. (cfs)		1078.4	
Length Wtd. (ft)	20.00	Wetted Per. (ft)		59.50	
Min Ch El (ft)	1699.20	Shear (lb/sq ft)		1.17	

Alpha	1.00	Stream Power (lb/ft s)		7.22	
Frctn Loss (ft)	0.47	Cum Volume (acre-ft)		0.03	
C & E Loss (ft)	0.01	Cum SA (acres)		0.03	

Warning: The conveyance ratio (upstream conveyance divided by downstream conveyance) is less than 0.7 or greater than 1.4. This may indicate the need for additional cross sections.

CROSS SECTION OUTPUT Profile #PF#5

			Left OB	Channel	Right OB
E.G. Elev (ft)	1701.07	Element			
Vel Head (ft)	0.08	Wt. n-Val.		0.030	
W.S. Elev (ft)	1700.98	Reach Len. (ft)	20.00	20.00	20.00
Crit W.S. (ft)		Flow Area (sq ft)		108.12	
E.G. Slope (ft/ft)	0.001105	Area (sq ft)		108.12	
Q Total (cfs)	250.00	Flow (cfs)		250.00	
Top Width (ft)	64.14	Top Width (ft)		64.14	
Vel Total (ft/s)	2.31	Avg. Vel. (ft/s)		2.31	
Max Chl Dpth (ft)	1.79	Hydr. Depth (ft)		1.69	
Conv. Total (cfs)	7519.4	Conv. (cfs)		7519.4	
Length Wtd. (ft)	20.00	Wetted Per. (ft)		64.98	
Min Ch El (ft)	1699.20	Shear (lb/sq ft)		0.11	
Alpha	1.00	Stream Power (lb/ft s)		0.27	
Frctn Loss (ft)	0.01	Cum Volume (acre-ft)		0.06	
C & E Loss (ft)	0.01	Cum SA (acres)		0.03	

Warning: The conveyance ratio (upstream conveyance divided by downstream conveyance) is less than 0.7 or greater than 1.4. This may indicate the need for additional cross sections.

CROSS SECTION OUTPUT Profile #PF#6

			Left OB	Channel	Right OB
E.G. Elev (ft)	1701.94	Element			
Vel Head (ft)	0.05	Wt. n-Val.		0.030	
W.S. Elev (ft)	1701.89	Reach Len. (ft)	20.00	20.00	20.00
Crit W.S. (ft)		Flow Area (sq ft)		167.84	
E.G. Slope (ft/ft)	0.000398	Area (sq ft)		167.84	
Q Total (cfs)	300.00	Flow (cfs)		300.00	
Top Width (ft)	67.76	Top Width (ft)		67.76	
Vel Total (ft/s)	1.79	Avg. Vel. (ft/s)		1.79	
Max Chl Dpth (ft)	2.69	Hydr. Depth (ft)		2.48	
Conv. Total (cfs)	15031.2	Conv. (cfs)		15031.2	
Length Wtd. (ft)	20.00	Wetted Per. (ft)		69.03	
Min Ch El (ft)	1699.20	Shear (lb/sq ft)		0.06	
Alpha	1.00	Stream Power (lb/ft s)		0.11	
Frctn Loss (ft)	0.01	Cum Volume (acre-ft)		0.09	
C & E Loss (ft)	0.01	Cum SA (acres)		0.03	

CROSS SECTION OUTPUT Profile #PF#7

			Left OB	Channel	Right OB
E.G. Elev (ft)	1703.22	Element			
Vel Head (ft)	0.03	Wt. n-Val.		0.030	
W.S. Elev (ft)	1703.19	Reach Len. (ft)	20.00	20.00	20.00
Crit W.S. (ft)		Flow Area (sq ft)		259.60	
E.G. Slope (ft/ft)	0.000141	Area (sq ft)		259.60	
Q Total (cfs)	350.00	Flow (cfs)		350.00	
Top Width (ft)	72.98	Top Width (ft)		72.98	
Vel Total (ft/s)	1.35	Avg. Vel. (ft/s)		1.35	
Max Chl Dpth (ft)	3.99	Hydr. Depth (ft)		3.56	
Conv. Total (cfs)	29457.5	Conv. (cfs)		29457.5	
Length Wtd. (ft)	20.00	Wetted Per. (ft)		74.86	
Min Ch El (ft)	1699.20	Shear (lb/sq ft)		0.03	
Alpha	1.00	Stream Power (lb/ft s)		0.04	
Frctn Loss (ft)	0.00	Cum Volume (acre-ft)		0.14	
C & E Loss (ft)	0.00	Cum SA (acres)		0.04	

CROSS SECTION OUTPUT Profile #PF#8

			Left OB	Channel	Right OB
E.G. Elev (ft)	1704.71	Element			
Vel Head (ft)	0.02	Wt. n-Val.	0.030	0.030	
W.S. Elev (ft)	1704.70	Reach Len. (ft)	20.00	20.00	20.00
Crit W.S. (ft)		Flow Area (sq ft)	6.74	373.51	
E.G. Slope (ft/ft)	0.000060	Area (sq ft)	6.74	373.51	
Q Total (cfs)	400.00	Flow (cfs)	0.88	399.12	
Top Width (ft)	111.89	Top Width (ft)	33.99	77.90	
Vel Total (ft/s)	1.05	Avg. Vel. (ft/s)	0.13	1.07	
Max Chl Dpth (ft)	5.50	Hydr. Depth (ft)	0.20	4.79	
Conv. Total (cfs)	51602.4	Conv. (cfs)	113.5	51489.0	
Length Wtd. (ft)	20.00	Wetted Per. (ft)	33.99	80.45	
Min Ch El (ft)	1699.20	Shear (lb/sq ft)	0.00	0.02	
Alpha	1.03	Stream Power (lb/ft s)	0.00	0.02	
Frctn Loss (ft)	0.00	Cum Volume (acre-ft)	0.00	0.19	
C & E Loss (ft)	0.00	Cum SA (acres)	0.01	0.04	

CROSS SECTION OUTPUT Profile #PF#9

			Left OB	Channel	Right OB
E.G. Elev (ft)	1707.01	Element			
Vel Head (ft)	0.01	Wt. n-Val.	0.030	0.030	
W.S. Elev (ft)	1707.00	Reach Len. (ft)	20.00	20.00	20.00
Crit W.S. (ft)		Flow Area (sq ft)	140.93	556.21	
E.G. Slope (ft/ft)	0.000018	Area (sq ft)	140.93	556.21	
Q Total (cfs)	468.00	Flow (cfs)	51.77	416.23	

* Top Width (ft)	*	140.80	* Top Width (ft)	*	60.00	*	80.80	*	*
* Vel Total (ft/s)	*	0.67	* Avg. Vel. (ft/s)	*	0.37	*	0.75	*	*
* Max Chl Dpth (ft)	*	7.80	* Hydr. Depth (ft)	*	2.35	*	6.88	*	*
* Conv. Total (cfs)	*	109095.5	* Conv. (cfs)	*	12067.5	*	97028.0	*	*
* Length Wtd. (ft)	*	20.00	* Wetted Per. (ft)	*	62.00	*	84.15	*	*
* Min Ch El (ft)	*	1699.20	* Shear (lb/sq ft)	*	0.00	*	0.01	*	*
* Alpha	*	1.14	* Stream Power (lb/ft s)	*	0.00	*	0.01	*	*
* Frctn Loss (ft)	*	0.00	* Cum Volume (acre-ft)	*	0.06	*	0.28	*	*
* C & E Loss (ft)	*	0.00	* Cum SA (acres)	*	0.03	*	0.04	*	*

Warning: The cross-section end points had to be extended vertically for the computed water surface.

CROSS SECTION RIVER: CloudBurst Wash
REACH: Cloud-A1 RS: 360

INPUT
Description: Cloud Burst Flowline Sta: 3+80
Station Elevation Data num= 7

Sta	Elev	Sta	Elev	Sta	Elev	Sta	Elev	Sta	Elev
-96.5	1705	-45	1704.4	-34	1698.9	0	1698.9	34	1698.9
45	1704.4	69.1	1726.5						

Manning's n Values num= 3

Sta	n Val	Sta	n Val	Sta	n Val
-96.5	.03	-45	.03	69.1	.03

Bank Sta: Left	Right	Lengths: Left	Channel	Right	Coeff Contr.	Expan.
-45	69.1	20	20	20	.1	.3

Left Levee Station= -202 Elevation= 1726

CROSS SECTION OUTPUT Profile #PF#1

* E.G. Elev (ft)	*	1699.28	* Element	*	Left OB	*	Channel	*	Right OB *
* Vel Head (ft)	*	0.13	* Wt. n-Val.	*		*	0.030	*	*
* W.S. Elev (ft)	*	1699.16	* Reach Len. (ft)	*		*		*	*
* Crit W.S. (ft)	*	1699.16	* Flow Area (sq ft)	*		*	17.53	*	*
* E.G. Slope (ft/ft)	*	0.020669	* Area (sq ft)	*		*	17.53	*	*
* Q Total (cfs)	*	50.00	* Flow (cfs)	*		*	50.00	*	*
* Top Width (ft)	*	69.02	* Top Width (ft)	*		*	69.02	*	*
* Vel Total (ft/s)	*	2.85	* Avg. Vel. (ft/s)	*		*	2.85	*	*
* Max Chl Dpth (ft)	*	0.26	* Hydr. Depth (ft)	*		*	0.25	*	*
* Conv. Total (cfs)	*	347.8	* Conv. (cfs)	*		*	347.8	*	*
* Length Wtd. (ft)	*		* Wetted Per. (ft)	*		*	69.14	*	*
* Min Ch El (ft)	*	1698.90	* Shear (lb/sq ft)	*		*	0.33	*	*
* Alpha	*	1.00	* Stream Power (lb/ft s)	*		*	0.93	*	*
* Frctn Loss (ft)	*		* Cum Volume (acre-ft)	*		*		*	*
* C & E Loss (ft)	*		* Cum SA (acres)	*		*		*	*

CROSS SECTION OUTPUT Profile #PF#2

* E.G. Elev (ft)	*	1699.51	* Element	*	Left OB	*	Channel	*	Right OB *
* Vel Head (ft)	*	0.21	* Wt. n-Val.	*		*	0.030	*	*
* W.S. Elev (ft)	*	1699.29	* Reach Len. (ft)	*		*		*	*
* Crit W.S. (ft)	*	1699.30	* Flow Area (sq ft)	*		*	27.15	*	*
* E.G. Slope (ft/ft)	*	0.019468	* Area (sq ft)	*		*	27.15	*	*
* Q Total (cfs)	*	100.00	* Flow (cfs)	*		*	100.00	*	*
* Top Width (ft)	*	69.58	* Top Width (ft)	*		*	69.58	*	*
* Vel Total (ft/s)	*	3.68	* Avg. Vel. (ft/s)	*		*	3.68	*	*
* Max Chl Dpth (ft)	*	0.39	* Hydr. Depth (ft)	*		*	0.39	*	*
* Conv. Total (cfs)	*	716.7	* Conv. (cfs)	*		*	716.7	*	*
* Length Wtd. (ft)	*		* Wetted Per. (ft)	*		*	69.76	*	*
* Min Ch El (ft)	*	1698.90	* Shear (lb/sq ft)	*		*	0.47	*	*
* Alpha	*	1.00	* Stream Power (lb/ft s)	*		*	1.74	*	*
* Frctn Loss (ft)	*	0.37	* Cum Volume (acre-ft)	*		*		*	*
* C & E Loss (ft)	*	0.01	* Cum SA (acres)	*		*		*	*

CROSS SECTION OUTPUT Profile #PF#3

* E.G. Elev (ft)	*	1699.71	* Element	*	Left OB	*	Channel	*	Right OB *
* Vel Head (ft)	*	0.35	* Wt. n-Val.	*		*	0.030	*	*
* W.S. Elev (ft)	*	1699.36	* Reach Len. (ft)	*		*		*	*
* Crit W.S. (ft)	*	1699.43	* Flow Area (sq ft)	*		*	31.40	*	*
* E.G. Slope (ft/ft)	*	0.027103	* Area (sq ft)	*		*	31.40	*	*
* Q Total (cfs)	*	150.00	* Flow (cfs)	*		*	150.00	*	*
* Top Width (ft)	*	69.82	* Top Width (ft)	*		*	69.82	*	*
* Vel Total (ft/s)	*	4.78	* Avg. Vel. (ft/s)	*		*	4.78	*	*
* Max Chl Dpth (ft)	*	0.46	* Hydr. Depth (ft)	*		*	0.45	*	*
* Conv. Total (cfs)	*	911.1	* Conv. (cfs)	*		*	911.1	*	*
* Length Wtd. (ft)	*		* Wetted Per. (ft)	*		*	70.04	*	*
* Min Ch El (ft)	*	1698.90	* Shear (lb/sq ft)	*		*	0.76	*	*
* Alpha	*	1.00	* Stream Power (lb/ft s)	*		*	3.62	*	*
* Frctn Loss (ft)	*	0.48	* Cum Volume (acre-ft)	*		*		*	*
* C & E Loss (ft)	*	0.05	* Cum SA (acres)	*		*		*	*

Warning: The energy equation could not be balanced within the specified number of iterations. The program selected the water surface that had the least amount of error between computed and assumed values.

CROSS SECTION OUTPUT Profile #PF#4

E.G. Elev (ft)	1700.10	Element	Left OB	Channel	Right OB
Vel Head (ft)	0.10	Wt. n-Val.		0.030	
W.S. Elev (ft)	1700.00	Reach Len. (ft)			
Crit W.S. (ft)	1699.54	Flow Area (sq ft)		77.22	
E.G. Slope (ft/ft)	0.002533	Area (sq ft)		77.22	
Q Total (cfs)	200.00	Flow (cfs)		200.00	
Top Width (ft)	72.40	Top Width (ft)		72.40	
Vel Total (ft/s)	2.59	Avg. Vel. (ft/s)		2.59	
Max Chl Dpth (ft)	1.10	Hydr. Depth (ft)		1.07	
Conv. Total (cfs)	3973.6	Conv. (cfs)		3973.6	
Length Wtd. (ft)		Wetted Per. (ft)		72.92	
Min Ch El (ft)	1698.90	Shear (lb/sq ft)		0.17	
Alpha	1.00	Stream Power (lb/ft s)		0.43	
Frctn Loss (ft)		Cum Volume (acre-ft)			
C & E Loss (ft)		Cum SA (acres)			

Note: Hydraulic jump has occurred between this cross section and the previous upstream section.

CROSS SECTION OUTPUT Profile #PF#5

E.G. Elev (ft)	1701.04	Element	Left OB	Channel	Right OB
Vel Head (ft)	0.04	Wt. n-Val.		0.030	
W.S. Elev (ft)	1701.00	Reach Len. (ft)			
Crit W.S. (ft)	1699.64	Flow Area (sq ft)		151.62	
E.G. Slope (ft/ft)	0.000452	Area (sq ft)		151.62	
Q Total (cfs)	250.00	Flow (cfs)		250.00	
Top Width (ft)	76.40	Top Width (ft)		76.40	
Vel Total (ft/s)	1.65	Avg. Vel. (ft/s)		1.65	
Max Chl Dpth (ft)	2.10	Hydr. Depth (ft)		1.98	
Conv. Total (cfs)	11757.9	Conv. (cfs)		11757.9	
Length Wtd. (ft)		Wetted Per. (ft)		77.39	
Min Ch El (ft)	1698.90	Shear (lb/sq ft)		0.06	
Alpha	1.00	Stream Power (lb/ft s)		0.09	
Frctn Loss (ft)		Cum Volume (acre-ft)			
C & E Loss (ft)		Cum SA (acres)			

CROSS SECTION OUTPUT Profile #PF#6

E.G. Elev (ft)	1701.93	Element	Left OB	Channel	Right OB
Vel Head (ft)	0.03	Wt. n-Val.		0.030	
W.S. Elev (ft)	1701.90	Reach Len. (ft)			
Crit W.S. (ft)	1699.74	Flow Area (sq ft)		222.00	
E.G. Slope (ft/ft)	0.000195	Area (sq ft)		222.00	
Q Total (cfs)	300.00	Flow (cfs)		300.00	
Top Width (ft)	80.00	Top Width (ft)		80.00	
Vel Total (ft/s)	1.35	Avg. Vel. (ft/s)		1.35	
Max Chl Dpth (ft)	3.00	Hydr. Depth (ft)		2.78	
Conv. Total (cfs)	21461.2	Conv. (cfs)		21461.2	
Length Wtd. (ft)		Wetted Per. (ft)		81.42	
Min Ch El (ft)	1698.90	Shear (lb/sq ft)		0.03	
Alpha	1.00	Stream Power (lb/ft s)		0.04	
Frctn Loss (ft)		Cum Volume (acre-ft)			
C & E Loss (ft)		Cum SA (acres)			

CROSS SECTION OUTPUT Profile #PF#7

E.G. Elev (ft)	1703.22	Element	Left OB	Channel	Right OB
Vel Head (ft)	0.02	Wt. n-Val.		0.030	
W.S. Elev (ft)	1703.20	Reach Len. (ft)			
Crit W.S. (ft)	1699.83	Flow Area (sq ft)		329.37	
E.G. Slope (ft/ft)	0.000078	Area (sq ft)		329.37	
Q Total (cfs)	350.00	Flow (cfs)		350.00	
Top Width (ft)	85.20	Top Width (ft)		85.20	
Vel Total (ft/s)	1.06	Avg. Vel. (ft/s)		1.06	
Max Chl Dpth (ft)	4.30	Hydr. Depth (ft)		3.87	
Conv. Total (cfs)	39559.0	Conv. (cfs)		39559.0	
Length Wtd. (ft)		Wetted Per. (ft)		87.23	
Min Ch El (ft)	1698.90	Shear (lb/sq ft)		0.02	
Alpha	1.00	Stream Power (lb/ft s)		0.02	
Frctn Loss (ft)		Cum Volume (acre-ft)			
C & E Loss (ft)		Cum SA (acres)			

CROSS SECTION OUTPUT Profile #PF#8

E.G. Elev (ft)	1704.71	Element	Left OB	Channel	Right OB
Vel Head (ft)	0.01	Wt. n-Val.	0.030	0.030	
W.S. Elev (ft)	1704.70	Reach Len. (ft)			
Crit W.S. (ft)	1699.91	Flow Area (sq ft)	3.86	461.54	
E.G. Slope (ft/ft)	0.000036	Area (sq ft)	3.86	461.54	
Q Total (cfs)	400.00	Flow (cfs)	0.32	399.68	
Top Width (ft)	116.07	Top Width (ft)	25.74	90.33	
Vel Total (ft/s)	0.86	Avg. Vel. (ft/s)	0.08	0.87	
Max Chl Dpth (ft)	5.80	Hydr. Depth (ft)	0.15	5.11	
Conv. Total (cfs)	66547.4	Conv. (cfs)	54.0	66493.4	
Length Wtd. (ft)		Wetted Per. (ft)	25.75	93.04	
Min Ch El (ft)	1698.90	Shear (lb/sq ft)	0.00	0.01	
Alpha	1.01	Stream Power (lb/ft s)	0.00	0.01	
Frctn Loss (ft)		Cum Volume (acre-ft)			

* C & E Loss (ft)	*	* Cum SA (acres)	*	*	*

CROSS SECTION OUTPUT Profile #PF#9

* E.G. Elev (ft)	* 1707.01	* Element	* Left OB	* Channel	* Right OB
* Vel Head (ft)	* 0.01	* Wt. n-Val.	* 0.030	* 0.030	*
* W.S. Elev (ft)	* 1707.00	* Reach Len. (ft)	*	*	*
* Crit W.S. (ft)	* 1700.02	* Flow Area (sq ft)	* 118.45	* 672.18	*
* E.G. Slope (ft/ft)	* 0.000013	* Area (sq ft)	* 118.45	* 672.18	*
* Q Total (cfs)	* 468.00	* Flow (cfs)	* 35.48	* 432.52	*
* Top Width (ft)	* 144.34	* Top Width (ft)	* 51.50	* 92.84	*
* Vel Total (ft/s)	* 0.59	* Avg. Vel. (ft/s)	* 0.30	* 0.64	*
* Max Chl Dpth (ft)	* 8.10	* Hydr. Depth (ft)	* 2.30	* 7.24	*
* Conv. Total (cfs)	* 131445.7	* Conv. (cfs)	* 9965.7	* 121480.0	*
* Length Wtd. (ft)	*	* Wetted Per. (ft)	* 53.50	* 96.44	*
* Min Ch El (ft)	* 1698.90	* Shear (lb/sq ft)	* 0.00	* 0.01	*
* Alpha	* 1.11	* Stream Power (lb/ft s)	* 0.00	* 0.00	*
* Frctn Loss (ft)	*	* Cum Volume (acre-ft)	*	*	*
* C & E Loss (ft)	*	* Cum SA (acres)	*	*	*

SUMMARY OF MANNING'S N VALUES

River:CloudBurst Wash

Reach	River Sta.	n1	n2	n3
Cloud-A1	700	.03	.03	.03
Cloud-A1	660	.03	.03	.03
Cloud-A1	620	.03	.03	.03
Cloud-A1	580	.03	.03	.03
Cloud-A1	560	.03	.03	.03
Cloud-A1	540	.03	.03	.03
Cloud-A1	500	.03	.03	.03
Cloud-A1	480	.03	.03	.03
Cloud-A1	460	.03	.03	.03
Cloud-A1	440	.03	.03	.03
Cloud-A1	420	.03	.03	.03
Cloud-A1	400	.03	.03	.03
Cloud-A1	380	.03	.03	.03
Cloud-A1	360	.03	.03	.03

SUMMARY OF REACH LENGTHS

River: CloudBurst Wash

Reach	River Sta.	Left	Channel	Right
Cloud-A1	700	40	40	40
Cloud-A1	660	40	40	40
Cloud-A1	620	40	40	40
Cloud-A1	580	40	40	40
Cloud-A1	560	40	40	40
Cloud-A1	540	40	40	40
Cloud-A1	500	20	20	20
Cloud-A1	480	20	20	20
Cloud-A1	460	20	20	20
Cloud-A1	440	20	20	20
Cloud-A1	420	20	20	20
Cloud-A1	400	20	20	20
Cloud-A1	380	20	20	20
Cloud-A1	360	20	20	20

SUMMARY OF CONTRACTION AND EXPANSION COEFFICIENTS
River: CloudBurst Wash

Reach	River Sta.	Contr.	Expan.
Cloud-A1	700	.1	.3
Cloud-A1	660	.1	.3
Cloud-A1	620	.1	.3
Cloud-A1	580	.1	.3
Cloud-A1	560	.1	.3
Cloud-A1	540	.1	.3
Cloud-A1	500	.1	.3
Cloud-A1	480	.1	.3
Cloud-A1	460	.1	.3
Cloud-A1	440	.1	.3
Cloud-A1	420	.1	.3
Cloud-A1	400	.1	.3
Cloud-A1	380	.1	.3
Cloud-A1	360	.1	.3