2005P041

FINAL DRAINAGE REPORT – VOLUME 2

RED MOUNTAIN FREEWAY (SR 202L)
Power Road to University Drive

ADOT Contract No. 04-15
ADOT TRACS No H5782 01 C
SCI Project No. 17000
April 2005

Prepared for: **Arizona Department of Transportation**
205 S 17th Ave
Phoenix, AZ

Prepared by: **Stanley Consultants**
2929 E Camelback Rd, Suite 130
Phoenix, AZ 85016

With Subconsultants:
J2 Engineering & Environmental Design

ADOT

Stanley Consultants INC

REGISTERED PROFESSIONAL ENGINEER (CIVIL)
CERTIFICATE NO.
26313
CHRISTOPHER S
D'ARCANGELIS
Date Signed 4-26-05
ARIZONA, U.S.A.

FINAL DRAINAGE REPORT – VOLUME 2

RED MOUNTAIN FREEWAY (SR 202L)
Power Road to University Drive

ADOT Contract No. 04-15
ADOT TRACS No H5782 01 C
SCI Project No. 17000
April 2005

Prepared for: **Arizona Department of Transportation**
205 S 17th Ave
Phoenix, AZ

Prepared by: **Stanley Consultants**
2929 E Camelback Rd, Suite 130
Phoenix, AZ 85016

With Subconsultants:
J2 Engineering & Environmental Design

ADOT

Stanley Consultants INC.

REGISTERED PROFESSIONAL ENGINEER (CIVIL)
CERTIFICATE NO.
26313
CHRISTOPHER D'ARCANGELIS
Date Signed 4-26-05
ARIZONA, U.S.A.

TABLE OF CONTENTS

VOLUME 1:	SECTION A –	Stanley Consultants Final Drainage Report Appendices A – D
VOLUME 2:	SECTION A –	Stanley Consultants Appendices E – J
	SECTION B –	J2 Engineering and Environmental Design

APPENDIX E

MEDIAN AND INFIELD DITCH DESIGN

- **Median and Infield Design Calculations**

APPENDIX E

MEDIAN AND INFIELD DITCH DESIGN

Median and Infield Design Calculations

Worksheet
Worksheet for Triangular Channel

Project Description	
Worksheet	Triangular Channel 1055+00 CL → Existing Catch Basin
Flow Element	Triangular Channel
Method	Manning's Formula
Solve For	Channel Depth

Input Data		
Mannings Coeffic	0.025	
Channel Slope	0.029500	ft/ft
Left Side Slope	8.00	H : V
Right Side Slope	8.00	H : V
Discharge	7.50	cfs

Results		
Depth	0.49	ft
Flow Area	1.9	ft²
Wetted Perim	7.85	ft
Top Width	7.79	ft
Critical Depth	0.56	ft
Critical Slope	0.014055	ft/ft
Velocity	3.96	ft/s
Velocity Head	0.24	ft
Specific Energ	0.73	ft
Froude Numb	1.41	
Flow Type	Supercritical	

FL = 1571.37
Low Edge = 1573.17
0.49' < 1.8' √ O.K.

Worksheet
Worksheet for Triangular Channel

Project Description	
Worksheet	Triangular Channel 1078+00 → CB 103
Flow Element	Triangular Channel
Method	Manning's Formula
Solve For	Channel Depth

Input Data		
Mannings Coeffic	0.025	
Channel Slope	0.008600	ft/ft
Left Side Slope	8.00	H : V
Right Side Slope	8.00	H : V
Discharge	4.30	cfs

Results		
Depth	0.50	ft
Flow Area	2.0	ft²
Wetted Perim	8.03	ft
Top Width	7.96	ft
Critical Depth	0.45	ft
Critical Slope	0.015115	ft/ft
Velocity	2.17	ft/s
Velocity Head	0.07	ft
Specific Energ	0.57	ft
Froude Numb	0.77	
Flow Type	Subcritical	

FL = 1602.12

Low Edge = 1602.65

0.50 < 0.53 ✓ O.K.

Worksheet
Worksheet for Triangular Channel

Project Description	
Worksheet	Triangular Channel 1081+00 CL → CB 105
Flow Element	Triangular Channel
Method	Manning's Formula
Solve For	Channel Depth

Input Data		
Mannings Coeffic	0.025	
Channel Slope	0.014800	ft/ft
Left Side Slope	8.00	H : V
Right Side Slope	8.00	H : V
Discharge	4.30	cfs

Results		
Depth	0.45	ft
Flow Area	1.6	ft²
Wetted Perim	7.25	ft
Top Width	7.19	ft
Critical Depth	0.45	ft
Critical Slope	0.015167	ft/ft
Velocity	2.66	ft/s
Velocity Head	0.11	ft
Specific Energ	0.56	ft
Froude Numb	0.99	
Flow Type	Subcritical	

FL = 1598.22
Low Edge = 1598.95
0.45' < 0.73' ✓ O.K.

Worksheet
Worksheet for Triangular Channel

Project Description	
Worksheet	Triangular Channel 1085+00 CL → CB106
Flow Element	Triangular Channel
Method	Manning's Formula
Solve For	Channel Depth

Input Data		
Mannings Coeffic	0.025	
Channel Slope	0.023100	ft/ft
Left Side Slope	8.00	H : V
Right Side Slope	8.00	H : V
Discharge	4.20	cfs

Results		
Depth	0.41	ft
Flow Area	1.3	ft²
Wetted Perim	6.61	ft
Top Width	6.56	ft
Critical Depth	0.44	ft
Critical Slope	0.015219	ft/ft
Velocity	3.12	ft/s
Velocity Head	0.15	ft
Specific Energ	0.56	ft
Froude Numb	1.22	
Flow Type	Supercritical	

FL = 1590.23
Low Edge = 1591.04
0.41' < 0.81' ✓ O.K.

Worksheet
Worksheet for Triangular Channel

Project Description	
Worksheet	Triangular Channel 1089+00 CL → CB109
Flow Element	Triangular Channel
Method	Manning's Formula
Solve For	Channel Depth

Input Data		
Mannings Coeffic	0.025	
Channel Slope	0.026800	ft/ft
Left Side Slope	8.00	H : V
Right Side Slope	8.00	H : V
Discharge	5.10	cfs

Results		
Depth	0.43	ft
Flow Area	1.5	ft²
Wetted Perim	6.91	ft
Top Width	6.86	ft
Critical Depth	0.48	ft
Critical Slope	0.014801	ft/ft
Velocity	3.47	ft/s
Velocity Head	0.19	ft
Specific Energ	0.62	ft
Froude Numb	1.32	
Flow Type	Supercritical	

FL= 1579.36
Low Edge = 1580.36
0.43 < 1.0 ✓ ok.

Project Summary Report

Project Description	
Worksheet	Triangular Channel 1089 +00 Rt → CB 109
Flow Element	Triangular Channel
Method	Manning's Formula
Solve For	Channel Depth

Input Data		
Mannings Coeffic	0.025	
Channel Slope	0.011200	ft/ft
Left Side Slope	20.00	H : V
Right Side Slope	5.80	H : V
Discharge	13.80	cfs

Results		
Depth	0.61	ft
Flow Area	4.8	ft²
Wetted Perim	15.87	ft
Top Width	15.80	ft
Critical Depth	0.59	ft
Critical Slope	0.013754	ft/ft
Velocity	2.85	ft/s
Velocity Head	0.13	ft
Specific Energ	0.74	ft
Froude Numb	0.91	
Flow Type	Subcritical	

Ditch FL = 1577.61
Edge of Pavement = 1578.74
Top of Curb = 1578.94
(Type C)
0.61 < 1.33 ✓ ok

Worksheet
Worksheet for Triangular Channel

Project Description	
Worksheet	Triangular Channel 1098+00 CL → CB 115
Flow Element	Triangular Channel
Method	Manning's Formula
Solve For	Channel Depth

Input Data		
Mannings Coeffic	0.025	
Channel Slope	0.002900	ft/ft
Left Side Slope	8.00	H : V
Right Side Slope	8.00	H : V
Discharge	9.20	cfs

Results		
Depth	0.81	ft
Flow Area	5.3	ft²
Wetted Perim	13.09	ft
Top Width	12.99	ft
Critical Depth	0.61	ft
Critical Slope	0.013697	ft/ft
Velocity	1.75	ft/s
Velocity Head	0.05	ft
Specific Energ	0.86	ft
Froude Numb	0.48	
Flow Type	Subcritical	

FL: 1567.11
Low Edge = 1570.30
0.81' < 3.19' ✓ OK

∴ Based on engineering judgement this calculation shows the associated ditch sections have the capacity to convey flows to:

CB 127, CB 153, CB 157, CB 160, CB 169, CB 167, CB 178, CB 184, CB 186, CB 190, CB 196, CB 202, CB 210, CB 228, CB 232, CB 239, CB 253, CB 257, CB 264, CB 289, CB 298, CB 306, CB 312, CB 326, CB 334, CB 340 and CB 341.

Worksheet
Worksheet for Triangular Channel

Project Description	
Worksheet	Triangular Channel 1104+00 Rt → CB142 Parcel D
Flow Element	Triangular Channel
Method	Manning's Formula
Solve For	Channel Depth

Input Data		
Mannings Coeffic	0.025	
Channel Slope	0.006400	ft/ft
Left Side Slope	3.00	H : V
Right Side Slope	3.00	H : V
Discharge	7.30	cfs

Results		
Depth	0.94	ft
Flow Area	2.6	ft²
Wetted Perim	5.93	ft
Top Width	5.62	ft
Critical Depth	0.82	ft
Critical Slope	0.013148	ft/ft
Velocity	2.77	ft/s
Velocity Head	0.12	ft
Specific Energ	1.06	ft
Froude Numb	0.71	
Flow Type	Subcritical	

FL = 1572.03
EP = 1570.48
Top of Barrier = 1572.98
0.94 < 0.95 ✓ OK

Total Q To Inlet = 12.3 cfs

Area from North = 77,288 SF = 1.774 ac
Q_{north} = 1.774(.70)5.86 = 7.3 cfs

Worksheet
Worksheet for Triangular Channel

Project Description	
Worksheet	Triangular Channel 1105+00 Rd ⟶ CB 142 Perched
Flow Element	Triangular Channel
Method	Manning's Formula
Solve For	Channel Depth

Input Data		
Mannings Coeffic	0.025	
Channel Slope	0.003800	ft/ft
Left Side Slope	3.00	H : V
Right Side Slope	3.00	H : V
Discharge	5.00	cfs

Results		
Depth	0.90	ft
Flow Area	2.4	ft²
Wetted Perim	5.67	ft
Top Width	5.38	ft
Critical Depth	0.70	ft
Critical Slope	0.013841	ft/ft
Velocity	2.07	ft/s
Velocity Head	0.07	ft
Specific Energ	0.96	ft
Froude Numb	0.55	
Flow Type	Subcritical	

FL = 1572.12
EP = 1570.63
Top of Barrier = 1573.13
0.90 < 1.01 ✓ O.K.

Total Q to Inlet = 12.3 cfs

Area from South = 52,890 sf = 1.214

Q_{south} = 1.214 (.70) 5.86 = 5.0 cfs

Project Summary Report

Project Description	
Worksheet	Triangular Channel 1118+00 Rt → CB 155
Flow Element	Triangular Channel
Method	Manning's Formula
Solve For	Channel Depth

Input Data		
Mannings Coeffic	0.025	
Channel Slope	0.002600	ft/ft
Left Side Slope	20.00	H : V
Right Side Slope	5.20	H : V
Discharge	16.50	cfs

Results		
Depth	0.87	ft ←
Flow Area	9.5	ft²
Wetted Perim	22.01	ft
Top Width	21.90	ft
Critical Depth	0.64	ft
Critical Slope	0.013409	ft/ft
Velocity	1.73	ft/s
Velocity Head	0.05	ft
Specific Energ	0.92	ft
Froude Numb	0.46	
Flow Type	Subcritical	

FL = 1570.73
EP = 1571.82
0.87 < 1.09 ✓ o.k.

Project Summary Report

Project Description	
Worksheet	Triangular Channel 1129+00 Rt → CB 161
Flow Element	Triangular Channel
Method	Manning's Formula
Solve For	Channel Depth

Input Data		
Mannings Coeffic	0.025	
Channel Slope	0.001500	ft/ft
Left Side Slope	20.00	H : V
Right Side Slope	30.00	H : V
Discharge	26.30	cfs

Results		
Depth	0.89	ft ←
Flow Area	19.7	ft²
Wetted Perim	44.38	ft
Top Width	44.34	ft
Critical Depth	0.59	ft
Critical Slope	0.013732	ft/ft
Velocity	1.34	ft/s
Velocity Head	0.03	ft
Specific Energ	0.91	ft
Froude Numb	0.35	
Flow Type	Subcritical	

FL = 1571.23
EP = 1572.12
0.89 = 0.89 ✓ OK

Worksheet
Worksheet for Triangular Channel

Project Description	
Worksheet	Triangular Channel 1138+00 Rt → CB 170
Flow Element	Triangular Channel
Method	Manning's Formula
Solve For	Channel Depth

Input Data		
Mannings Coeffic	0.025	
Channel Slope	0.024000	ft/ft
Left Side Slope	10.00	H : V
Right Side Slope	10.00	H : V
Discharge	7.10	cfs

Results		
Depth	0.46	ft
Flow Area	2.1	ft²
Wetted Perim	9.15	ft
Top Width	9.11	ft
Critical Depth	0.50	ft
Critical Slope	0.014552	ft/ft
Velocity	3.42	ft/s
Velocity Head	0.18	ft
Specific Energ	0.64	ft
Froude Numb	1.26	
Flow Type	Supercritical	

Channel Depth = 0.5'

0.46' < 0.5' ✓ O.K.

Project Summary Report

Project Description	
Worksheet	Triangular Channel 1141+00 Rt → CB180
Flow Element	Triangular Channel
Method	Manning's Formula
Solve For	Channel Depth

Input Data		
Mannings Coeffic	0.025	
Channel Slope	0.010700	ft/ft
Left Side Slope	3.00	H : V
Right Side Slope	30.00	H : V
Discharge	19.70	cfs

Results		
Depth	0.64	ft
Flow Area	6.8	ft²
Wetted Perim	21.37	ft
Top Width	21.25	ft
Critical Depth	0.62	ft
Critical Slope	0.013583	ft/ft
Velocity	2.88	ft/s
Velocity Head	0.13	ft
Specific Ener	0.77	ft
Froude Numb	0.89	
Flow Type	Subcritical	

FL = 1570.80
EP = 1577.80

0.64 < 7.08 ✓ o.k.

Worksheet
Worksheet for Triangular Channel

Project Description	
Worksheet	Triangular Channel 1173+00 Rt → CB 395
Flow Element	Triangular Channel
Method	Manning's Formula
Solve For	Channel Depth

Input Data		
Mannings Coeffic	0.025	
Channel Slope	0.001600	ft/ft
Left Side Slope	20.00	H : V
Right Side Slope	19.80	H : V
Discharge	28.50	cfs

Results		
Depth	0.98	ft
Flow Area	19.3	ft²
Wetted Perim	39.20	ft
Top Width	39.15	ft
Critical Depth	0.66	ft
Critical Slope	0.013180	ft/ft
Velocity	1.48	ft/s
Velocity Head	0.03	ft
Specific Energ	1.02	ft
Froude Numb	0.37	
Flow Type	Subcritical	

FL: 1572.19
EP: 1573.26
0.98 < 1.07 ✓ O.K.

Worksheet
Worksheet for Triangular Channel

Project Description	
Worksheet	Triangular Channel 1181+00 Rt → CB234
Flow Element	Triangular Channel
Method	Manning's Formula
Solve For	Channel Depth

Input Data		
Mannings Coeffic	0.025	
Channel Slope	0.001500	ft/ft
Left Side Slope	20.00	H : V
Right Side Slope	6.50	H : V
Discharge	15.00	cfs

Results		
Depth	0.91	ft
Flow Area	11.0	ft²
Wetted Perim	24.27	ft
Top Width	24.17	ft
Critical Depth	0.60	ft
Critical Slope	0.013652	ft/ft
Velocity	1.36	ft/s
Velocity Head	0.03	ft
Specific Energ	0.94	ft
Froude Numb	0.36	
Flow Type	Subcritical	

FL = 1570.09
EP = 1571.18
0.91 < 1.09 ✓ O.K.

Total Q to Inlet = 25.8 cfs

Area from North = 159,770 sf = 3.668 ac

$Q_{north} = 3.668 (.7) 5.86 = 15 cfs$

Worksheet
Worksheet for Triangular Channel

Project Description	
Worksheet	Triangular Channel 1183+00 Rt → CB234
Flow Element	Triangular Channel
Method	Manning's Formula
Solve For	Channel Depth

Input Data		
Mannings Coeffic	0.025	
Channel Slope	0.001500	ft/ft
Left Side Slope	20.00	H : V
Right Side Slope	6.50	H : V
Discharge	10.80	cfs

Results		
Depth	0.81	ft
Flow Area	8.6	ft²
Wetted Perim	21.45	ft
Top Width	21.37	ft
Critical Depth	0.53	ft
Critical Slope	0.014265	ft/ft
Velocity	1.25	ft/s
Velocity Head	0.02	ft
Specific Energ	0.83	ft
Froude Numb	0.35	
Flow Type	Subcritical	

FL = 1570.10
EP = 1571.18

.81 < 1.08 ✓ O.K.

Total Q to Inlet = 25.8 cfs

Area from South = 114,338 = 2.625

Q_{South} = 2.625 (.7) 5.86 = 10.8 cfs

Project Summary Report

Project Description	
Worksheet	Triangular Channel 1191+00 Rt → CB 243
Flow Element	Triangular Channel
Method	Manning's Formula
Solve For	Channel Depth

Input Data		
Mannings Coeffic	0.025	
Channel Slope	0.002400	ft/ft
Left Side Slope	20.00	H : V
Right Side Slope	26.00	H : V
Discharge	7.30	cfs

Results		
Depth	0.52	ft
Flow Area	6.2	ft²
Wetted Perim	23.85	ft
Top Width	23.83	ft
Critical Depth	0.36	ft
Critical Slope	0.016115	ft/ft
Velocity	1.18	ft/s
Velocity Head	0.02	ft
Specific Energ	0.54	ft
Froude Numb	0.41	
Flow Type	Subcritical	

FL = 1571.98
EP = 1573.07

0.52 < 1.09 ✓ O.K.

Project Summary Report

Project Description	
Worksheet	Triangular Channel 1205+00 Rt → CB 259
Flow Element	Triangular Channel
Method	Manning's Formula
Solve For	Channel Depth

Input Data		
Mannings Coeffic	0.025	
Channel Slope	0.001500	ft/ft
Left Side Slope	20.00	H : V
Right Side Slope	23.00	H : V
Discharge	28.40	cfs

Results		
Depth	0.97	ft
Flow Area	20.1	ft²
Wetted Perim	41.57	ft
Top Width	41.53	ft
Critical Depth	0.64	ft
Critical Slope	0.013305	ft/ft
Velocity	1.42	ft/s
Velocity Head	0.03	ft
Specific Energ	1.00	ft
Froude Numb	0.36	
Flow Type	Subcritical	

FL = 1570.09
EP = 1571.18
0.97 < 1.09 ✓ O.K.

Worksheet
Worksheet for Triangular Channel

Project Description	
Worksheet	Triangular Channel 1211+00 Rt → ℄ B281
Flow Element	Triangular Channel
Method	Manning's Formula
Solve For	Channel Depth

Input Data		
Mannings Coeffic	0.025	
Channel Slope	003400	ft/ft
Left Side Slope	20.00	H : V
Right Side Slope	16.20	H : V
Discharge	50.00	cfs

Results		
Depth	1.09	ft
Flow Area	21.6	ft²
Wetted Perim	39.61	ft
Top Width	39.55	ft
Critical Depth	0.86	ft
Critical Slope	0.012086	ft/ft
Velocity	2.31	ft/s
Velocity Head	0.08	ft
Specific Ener	1.18	ft
Froude Numb	0.55	
Flow Type	Subcritical	

FL= 1570.73

EP= 1571.98

1.09 < 1.25 ✓ O.K.

Worksheet
Worksheet for Triangular Channel

Project Description	
Worksheet	Triangular Channel 1211+00 → CB281
Flow Element	Triangular Channel
Method	Manning's Formula
Solve For	Channel Depth

Input Data		
Mannings Coeffic	0.025	
Channel Slope	0.002000	ft/ft
Left Side Slope	20.00	H : V
Right Side Slope	16.20	H : V
Discharge	38.00	cfs

Results		
Depth	1.09	ft
Flow Area	21.5	ft²
Wetted Perim	39.48	ft
Top Width	39.41	ft
Critical Depth	0.77	ft
Critical Slope	0.012535	ft/ft
Velocity	1.77	ft/s
Velocity Head	0.05	ft
Specific Energ	1.14	ft
Froude Numb	0.42	
Flow Type	Subcritical	

FL = 1570.73
EP = 1571.98
1.09 = 1.25 ✓ O.K.

Project Summary Report

Project Description	
Worksheet	Triangular Channel 1249+00 Rt → CB 327
Flow Element	Triangular Channel
Method	Manning's Formula
Solve For	Channel Depth

Input Data		
Mannings Coeffic	0.025	
Channel Slope	001000	ft/ft
Left Side Slope	20.00	H : V
Right Side Slope	40.00	H : V
Discharge	39.70	cfs

Results		
Depth	1.04	ft
Flow Area	32.6	ft²
Wetted Perim	62.60	ft
Top Width	62.56	ft
Critical Depth	0.64	ft
Critical Slope	0.013320	ft/ft
Velocity	1.22	ft/s
Velocity Head	0.02	ft
Specific Ener	1.07	ft
Froude Numb	0.30	
Flow Type	Subcritical	

FL = 1576.91
EP = 1578.70
1.04 < 1.79 ✓ O.K.

Worksheet
Worksheet for Triangular Channel

Project Description	
Worksheet	Triangular Channel 1268+00 → CB 342
Flow Element	Triangular Channel
Method	Manning's Formula
Solve For	Channel Depth

Input Data		
Mannings Coeffic	0.025	
Channel Slope	0.006100	ft/ft
Left Side Slope	8.00	H : V
Right Side Slope	8.00	H : V
Discharge	3.30	cfs

Results		
Depth	0.48	ft
Flow Area	1.8	ft²
Wetted Perim	7.75	ft
Top Width	7.69	ft
Critical Depth	0.40	ft
Critical Slope	0.015703	ft/ft
Velocity	1.79	ft/s
Velocity Head	0.05	ft
Specific Energ	0.53	ft
Froude Numb	0.64	
Flow Type	Subcritical	

FL = 1596.45

Low Edge = 1597.15

0.48' < 0.70' ✓ O.K.

Worksheet
Worksheet for Triangular Channel

Project Description	
Worksheet	Triangular Channel 1270+00 CL → CB344
Flow Element	Triangular Channel
Method	Manning's Formula
Solve For	Channel Depth

Input Data		
Mannings Coeffic	0.025	
Channel Slope	0.006000	ft/ft
Left Side Slope	8.00	H : V
Right Side Slope	8.00	H : V
Discharge	4.00	cfs

Results		
Depth	0.52	ft
Flow Area	2.1	ft²
Wetted Perim	8.36	ft
Top Width	8.29	ft
Critical Depth	0.43	ft
Critical Slope	0.015305	ft/ft
Velocity	1.86	ft/s
Velocity Head	0.05	ft
Specific Energ	0.57	ft
Froude Numb	0.64	
Flow Type	Subcritical	

FL = 1597.66

Low ED_{sc} = 1598.36

0.52' < 0.70' ✓ O.K.

Worksheet
Worksheet for Triangular Channel

Project Description	
Worksheet	Triangular Channel 1273+00 CL → CB 346
Flow Element	Triangular Channel
Method	Manning's Formula
Solve For	Channel Depth

Input Data		
Mannings Coeffic	0.025	
Channel Slope	0.005400	ft/ft
Left Side Slope	8.00	H : V
Right Side Slope	8.00	H : V
Discharge	3.40	cfs

Results		
Depth	0.50	ft
Flow Area	2.0	ft²
Wetted Perim	8.02	ft
Top Width	7.96	ft
Critical Depth	0.41	ft
Critical Slope	0.015632	ft/ft
Velocity	1.72	ft/s
Velocity Head	0.05	ft
Specific Ener	0.54	ft
Froude Numb	0.61	
Flow Type	Subcritical	

FL = 1599.47

Low Edge = 1600.17

0.50' < 0.70' ✓ O.K.

Project Summary Report

Project Description	
Worksheet	Triangular Channel 1276+00 Rt → South C,A,F Basin
Flow Element	Triangular Channel
Method	Manning's Formula
Solve For	Channel Depth

Input Data		
Mannings Coeffic	0.025	
Channel Slope	0.004000	ft/ft
Left Side Slope	3.00	H : V
Right Side Slope	3.00	H : V
Discharge	7.40	cfs

Results		
Depth	1.03	ft
Flow Area	3.2	ft²
Wetted Perim	6.51	ft
Top Width	6.17	ft
Critical Depth	0.82	ft
Critical Slope	0.013134	ft/ft
Velocity	2.33	ft/s
Velocity Head	0.08	ft
Specific Energ	1.11	ft
Froude Numb	0.57	
Flow Type	Subcritical	

FL = 1575.23
Top of Ditch = 1578.50
1.03 < 3.27 ✓ ok.

Worksheet
Worksheet for Triangular Channel

Project Description	
Worksheet	Triangular Channel 1279+00 CL → CB347
Flow Element	Triangular Channel
Method	Manning's Formula
Solve For	Channel Depth

Input Data		
Mannings Coeffic	0.025	
Channel Slope	0.009000	ft/ft
Left Side Slope	8.00	H : V
Right Side Slope	8.00	H : V
Discharge	5.90	cfs

Results		
Depth	0.56	ft
Flow Area	2.5	ft²
Wetted Perim	8.96	ft
Top Width	8.89	ft
Critical Depth	0.51	ft
Critical Slope	0.014527	ft/ft
Velocity	2.39	ft/s
Velocity Head	0.09	ft
Specific Energ	0.64	ft
Froude Numb	0.80	
Flow Type	Subcritical	

FL = 1598.33
Low Edge = 1599.33
0.56' < 1.0' ✓ O.K.

Worksheet
Worksheet for Triangular Channel

Project Description	
Worksheet	Triangular Channel 1281+00 CL → CB349
Flow Element	Triangular Channel
Method	Manning's Formula
Solve For	Channel Depth

Input Data		
Mannings Coeffic	0.025	
Channel Slope	0.013000	ft/ft
Left Side Slope	8.00	H : V
Right Side Slope	8.00	H : V
Discharge	3.30	cfs

Results		
Depth	0.42	ft
Flow Area	1.4	ft²
Wetted Perim	6.73	ft
Top Width	6.67	ft
Critical Depth	0.40	ft
Critical Slope	0.015681	ft/ft
Velocity	2.37	ft/s
Velocity Head	0.09	ft
Specific Energ	0.50	ft
Froude Numb	0.92	
Flow Type	Subcritical	

FL = 1595.93

Low Edge = 1596.92

0.42' < 0.99'

Worksheet
Worksheet for Triangular Channel

Project Description	
Worksheet	Triangular Channel 1283+00 CL → CB350
Flow Element	Triangular Channel
Method	Manning's Formula
Solve For	Channel Depth

Input Data		
Mannings Coeffic	0.025	
Channel Slope	0.013000	ft/ft
Left Side Slope	8.00	H : V
Right Side Slope	8.00	H : V
Discharge	3.00	cfs

Results		
Depth	0.40	ft
Flow Area	1.3	ft²
Wetted Perim	6.49	ft
Top Width	6.44	ft
Critical Depth	0.39	ft
Critical Slope	0.015889	ft/ft
Velocity	2.32	ft/s
Velocity Head	0.08	ft
Specific Energ	0.49	ft
Froude Numb	0.91	
Flow Type	Subcritical	

FL = 1592.69

Low Edge = 1593.69

0.40' < 1.0' ✓ O.K.

Worksheet
Worksheet for Triangular Channel

Project Description	
Worksheet	Triangular Channel 1292+00 CL → CB386
Flow Element	Triangular Channel
Method	Manning's Formula
Solve For	Channel Depth

Input Data		
Mannings Coeffic	0.025	
Channel Slope	029600	ft/ft
Left Side Slope	8.00	H : V
Right Side Slope	8.00	H : V
Discharge	2.10	cfs

Results		
Depth	0.30	ft
Flow Area	0.7	ft²
Wetted Perim	4.87	ft
Top Width	4.83	ft
Critical Depth	0.34	ft
Critical Slope	0.016679	ft/ft
Velocity	2.88	ft/s
Velocity Head	0.13	ft
Specific Energ	0.43	ft
Froude Numb	1.31	
Flow Type	Supercritical	

FL = 1569.67

Low ED_{gc} = 1570.18

0.30 < 0.51 ✓ o.K.

Worksheet
Worksheet for Triangular Channel

Project Description	
Worksheet	Triangular Channel 1293+00 CL → CB356
Flow Element	Triangular Channel
Method	Manning's Formula
Solve For	Channel Depth

Input Data		
Mannings Coeffic	0.025	
Channel Slope	0.029600	ft/ft
Left Side Slope	8.00	H : V
Right Side Slope	8.00	H : V
Discharge	1.60	cfs

Results		
Depth	0.27	ft
Flow Area	0.6	ft²
Wetted Perim	4.39	ft
Top Width	4.36	ft
Critical Depth	0.30	ft
Critical Slope	0.017294	ft/ft
Velocity	2.69	ft/s
Velocity Head	0.11	ft
Specific Energ	0.39	ft
Froude Numb	1.29	
Flow Type	Supercritical	

FL = 1566.71

Low Edge = 1567.22

0.27' < 0.51' ✓ O.K.

Worksheet
Worksheet for Triangular Channel

Project Description	
Worksheet	Triangular Channel 1296+00 CL → CB386
Flow Element	Triangular Channel
Method	Manning's Formula
Solve For	Channel Depth

Input Data		
Mannings Coeffic	0.025	
Channel Slope	0.029600	ft/ft
Left Side Slope	8.00	H : V
Right Side Slope	8.00	H : V
Discharge	2.10	cfs

Results		
Depth	0.30	ft
Flow Area	0.7	ft²
Wetted Perim	4.87	ft
Top Width	4.83	ft
Critical Depth	0.34	ft
Critical Slope	0.016679	ft/ft
Velocity	2.88	ft/s
Velocity Head	0.13	ft
Specific Energ	0.43	ft
Froude Numb	1.31	
Flow Type	Supercritical	

FL = 1569.67

Low Edge = 1570.18

0.30 < 0.51 ✓ o.k.

Worksheet
Worksheet for Triangular Channel

Project Description	
Worksheet	Triangular Channel 1296+00 CL → CB386
Flow Element	Triangular Channel
Method	Manning's Formula
Solve For	Channel Depth

Input Data		
Mannings Coeffic	0.025	
Channel Slope	0.029600	ft/ft
Left Side Slope	8.00	H : V
Right Side Slope	8.00	H : V
Discharge	2.00	cfs

Results		
Depth	0.30	ft
Flow Area	0.7	ft²
Wetted Perim	4.78	ft
Top Width	4.74	ft
Critical Depth	0.33	ft
Critical Slope	0.016787	ft/ft
Velocity	2.85	ft/s
Velocity Head	0.13	ft
Specific Energ	0.42	ft
Froude Numb	1.30	
Flow Type	Supercritical	

FL = 1557.83

Low Edge = 1570.18

Worksheet
Worksheet for Triangular Channel

Project Description	
Worksheet	Triangular Channel 1297+00 Rt → CB360
Flow Element	Triangular Channel
Method	Manning's Formula
Solve For	Channel Depth

Input Data		
Mannings Coeffic	0.025	
Channel Slope	0.024900	ft/ft
Left Side Slope	10.00	H : V
Right Side Slope	10.00	H : V
Discharge	0.90	cfs

Results		
Depth	0.21	ft
Flow Area	0.4	ft²
Wetted Perim	4.19	ft
Top Width	4.17	ft
Critical Depth	0.22	ft
Critical Slope	0.019121	ft/ft
Velocity	2.07	ft/s
Velocity Head	0.07	ft
Specific Energ	0.28	ft
Froude Numb	1.13	
Flow Type	Supercritical	

Ditch Depth = 0.5'
0.21' < 0.5' ✓ O.K.

Worksheet
Worksheet for Triangular Channel

Project Description	
Worksheet	Triangular Channel 1299+00 CL → CB 367
Flow Element	Triangular Channel
Method	Manning's Formula
Solve For	Channel Depth

Input Data		
Mannings Coeffic	0.025	
Channel Slope	0.029600	ft/ft
Left Side Slope	8.00	H : V
Right Side Slope	8.00	H : V
Discharge	3.30	cfs

Results		
Depth	0.36	ft
Flow Area	1.0	ft²
Wetted Perim	5.76	ft
Top Width	5.72	ft
Critical Depth	0.40	ft
Critical Slope	0.015668	ft/ft
Velocity	3.23	ft/s
Velocity Head	0.16	ft
Specific Energ	0.52	ft
Froude Numb	1.35	
Flow Type	Supercritical	

FL = 1548.95
LowEdge = 1549.45
0.36' < 0.50' ✓ O.K.

Worksheet
Worksheet for Triangular Channel

Project Description	
Worksheet	Triangular Channel 1300+00 Lt → CB 365
Flow Element	Triangular Channel
Method	Manning's Formula
Solve For	Channel Depth

Input Data		
Mannings Coeffic	0.025	
Channel Slope	0.014000	ft/ft
Left Side Slope	3.00	H : V
Right Side Slope	10.00	H : V
Discharge	1.70	cfs

Results		
Depth	0.35	ft
Flow Area	0.8	ft²
Wetted Perim	4.59	ft
Top Width	4.52	ft
Critical Depth	0.34	ft
Critical Slope	0.016848	ft/ft
Velocity	2.17	ft/s
Velocity Head	0.07	ft
Specific Energ	0.42	ft
Froude Numb	0.92	
Flow Type	Subcritical	

Ditch Depth = 0.5'

0.35 < 0.5' ✓ O.K.

Worksheet
Worksheet for Triangular Channel

Project Description	
Worksheet	Triangular Channel 1302+00 CL → CB 371
Flow Element	Triangular Channel
Method	Manning's Formula
Solve For	Channel Depth

Input Data		
Mannings Coeffic	0.025	
Channel Slope	0.030500	ft/ft
Left Side Slope	8.00	H : V
Right Side Slope	8.00	H : V
Discharge	2.90	cfs

Results		
Depth	0.34	ft
Flow Area	0.9	ft²
Wetted Perim	5.46	ft
Top Width	5.42	ft
Critical Depth	0.38	ft
Critical Slope	0.015933	ft/ft
Velocity	3.16	ft/s
Velocity Head	0.16	ft
Specific Energ	0.49	ft
Froude Numb	1.36	
Flow Type	Supercritical	

FL = 1539.95

Low Edge = 1540.45

0.34' < 0.50' ✓ O.K.

Worksheet
Worksheet for Triangular Channel

Project Description	
Worksheet	Triangular Channel 1307100 CL → CB378
Flow Element	Triangular Channel
Method	Manning's Formula
Solve For	Channel Depth

Input Data		
Mannings Coeffic	0.025	
Channel Slope	018000	ft/ft
Left Side Slope	8.00	H : V
Right Side Slope	8.00	H : V
Discharge	4.90	cfs

Results		
Depth	0.46	ft
Flow Area	1.7	ft²
Wetted Perim	7.34	ft
Top Width	7.28	ft
Critical Depth	0.47	ft
Critical Slope	0.014898	ft/ft
Velocity	2.96	ft/s
Velocity Head	0.14	ft
Specific Energ	0.59	ft
Froude Numb	1.09	
Flow Type	Supercritical	

FL = 1529.03

LowEdge = 1529.53

0.46' < 0.5' ✓ O.K.

APPENDIX F

STORM DRAIN DESIGN

- North End Storm Drain
- Middle Storm Drain
- Pump Station Storm Drain
- South End Storm Drain
- South Trunk Storm Drain
- McDowell Road Storm Drain
- McKellips Road Storm Drain
- Brown Road Storm Drain
- Pump Station Outlet Culvert Hydraulics
- ADOT/FCDMC Storm Water Quality Correspondence

APPENDIX F

STORM DRAIN DESIGN

North End Storm Drain

Pipe Report

Label	System CA (acres)	System Intensity (in/hr)	System Flow Time (min)	Total System Flow (cfs)	Full Capacity (cfs)	Length (ft)	Section Size	Mannings n	Upstream Invert Elevation (ft)	Downstream Invert Elevation (ft)	Slope (ft/ft)	Upstream Ground Elevation (ft)	Downstream Ground Elevation (ft)	Hydraulic Grade Line In (ft)	Hydraulic Grade Line Out (ft)	Average Velocity (ft/s)
P100A	4.192	4.22	3.30	17.83	73.10	158.00	24 inch	0.013	1,580.99	1,564.49	0.104430	1,588.84	1,570.50	1,582.51	1,566.65	19.21
P100B	4.192	4.22	3.44	17.83	10.11	20.01	24 inch	0.013	1,564.49	1,564.45	0.001999	1,570.50	1,567.50	1,566.62	1,566.50	5.68
P101	2.014	4.22	3.00	8.57	16.02	93.75	24 inch	0.013	1,581.46	1,580.99	0.005013	1,587.13	1,588.84	1,582.65	1,582.59	5.18
P102	0.150	4.22	3.00	0.64	30.68	362.08	24 inch	0.013	1,601.88	1,595.22	0.018394	1,607.38	1,601.06	1,602.15	1,596.19	3.91
P103A	1.721	4.22	4.54	7.32	78.93	213.00	24 inch	0.013	1,595.22	1,569.29	0.121737	1,601.06	1,575.47	1,596.18	1,570.47	15.72
P103B	1.721	4.22	4.77	7.32	9.92	52.00	24 inch	0.013	1,569.29	1,569.19	0.001923	1,575.47	1,574.04	1,570.45	1,570.15	3.45
P104	0.918	4.22	3.00	3.90	16.05	77.50	24 inch	0.013	1,595.61	1,595.22	0.005032	1,601.11	1,601.06	1,596.30	1,596.22	4.21
P105A	0.710	4.22	3.00	3.02	78.67	188.00	24 inch	0.013	1,592.01	1,569.27	0.120957	1,596.01	1,576.03	1,592.62	1,569.99	12.06
P105B	0.710	4.22	3.26	3.02	10.26	34.00	24 inch	0.013	1,569.27	1,569.20	0.002059	1,576.03	1,573.75	1,569.98	1,569.81	2.84
P106A	2.016	4.22	3.27	8.58	63.98	162.00	24 inch	0.013	1,582.28	1,569.32	0.080000	1,588.38	1,576.11	1,583.32	1,570.57	14.18
P106B	2.016	4.22	3.46	8.58	10.27	33.99	24 inch	0.013	1,569.32	1,569.25	0.002059	1,576.11	1,573.12	1,570.55	1,570.29	3.66
P107	1.331	4.22	3.00	5.66	16.05	75.50	24 inch	0.013	1,582.66	1,582.28	0.005033	1,588.21	1,588.38	1,583.50	1,583.36	4.67

Node Report

Label	Area (acres)	Inlet C	Inlet CA (acres)	System CA (acres)	Inlet Tc (min)	System Tc (min)	System Intensity (in/hr)	System Rational Flow (cfs)	Rim Elevation (ft)	Sump Elevation (ft)	Hydraulic Grade Line In (ft)	Hydraulic Grade Line Out (ft)	Headloss Method
CB100 1060+67 4' Lt	2.293	0.95	2.178	4.192	3.00	3.30	4.22	17.83	1,588.84	1,580.99	1,582.59	1,582.51	HEC-22 Energy
CB101 1061+06 79.5' Rt	2.120	0.95	2.014	2.014	3.00	3.00	4.22	8.57	1,586.88	1,581.46	1,582.65	1,582.65	HEC-22 Energy
CB102 1074+58 4' Lt	0.158	0.95	0.150	0.150	3.00	3.00	4.22	0.64	1,607.38	1,601.88	1,602.15	1,602.15	HEC-22 Energy
CB103 1078+20 6' Rt	0.688	0.95	0.654	1.721	3.00	4.54	4.22	7.32	1,601.06	1,595.22	1,596.19	1,596.18	HEC-22 Energy
CB104 1078+20 79.5' Rt	0.966	0.95	0.918	0.918	3.00	3.00	4.22	3.90	1,600.86	1,595.61	1,596.30	1,596.30	HEC-22 Energy
CB105 1081+90 6' Rt	0.747	0.95	0.710	0.710	3.00	3.00	4.22	3.02	1,596.01	1,592.01	1,592.62	1,592.62	HEC-22 Energy
CB106 1085+50 6' Rt	0.721	0.95	0.685	2.016	3.00	3.27	4.22	8.58	1,588.38	1,582.28	1,583.36	1,583.32	HEC-22 Energy
CB107 1085+50 79.5' Rt	1.401	0.95	1.331	1.331	3.00	3.00	4.22	5.66	1,588.07	1,582.66	1,583.50	1,583.50	HEC-22 Energy
Jct100 1060+00.69 166.44' Lt				4.192		3.50	4.22	17.83	1,567.50	1,564.45	1,566.50	1,566.50	
Jct100AB				4.192		3.44	4.22	17.83	1,570.50	1,564.49	1,566.65	1,566.62	HEC-22 Energy
Jct103 1078+20 259' Lt				1.721		5.02	4.22	7.32	1,574.04	1,569.19	1,569.19	1,569.19	
Jct103AB				1.721		4.77	4.22	7.32	1,575.47	1,569.29	1,570.47	1,570.45	HEC-22 Energy
Jct105 1081+90 216' Lt				0.710		3.46	4.22	3.02	1,573.75	1,569.20	1,569.20	1,569.20	
Jct105AB				0.710		3.26	4.22	3.02	1,576.03	1,569.27	1,569.99	1,569.98	HEC-22 Energy
Jct106 1085+50 190' Lt				2.016		3.61	4.22	8.58	1,573.12	1,569.25	1,569.25	1,569.25	
Jct106AB				2.016		3.46	4.22	8.58	1,576.11	1,569.32	1,570.57	1,570.55	HEC-22 Energy

APPENDIX F

STORM DRAIN DESIGN

Middle Storm Drain

Pipe Report

Label	System CA (acres)	System Intensity (in/hr)	System Flow Time (min)	Total System Flow (cfs)	Full Capacity (cfs)	Length (ft)	Section Size	Mannings n	Upstream Invert Elevation (ft)	Downstream Invert Elevation (ft)	Slope (ft/ft)	Upstream Ground Elevation (ft)	Downstream Ground Elevation (ft)	Hydraulic Grade Line In (ft)	Hydraulic Grade Line Out (ft)	Average Velocity (ft/s)
P187	0.325	5.86	3.00	1.92	15.97	94.35	24 inch	0.013	1,586.37	1,585.90	0.0050	1,591.04	1,589.00	1,586.85	1,586.37	3.43
P188A	0.454	5.86	3.00	2.68	96.06	59.73	24 inch	0.013	1,581.00	1,570.23	0.1803	1,588.14	1,574.76	1,581.57	1,570.90	13.39
P188B	0.454	5.86	3.07	2.68	10.12	25.00	24 inch	0.013	1,570.23	1,570.18	0.0020	1,574.76	1,574.39	1,570.89	1,570.75	2.72
P193	0.271	5.86	3.00	1.60	59.12	180.53	24 inch	0.013	1,585.53	1,573.20	0.0683	1,589.53	1,587.03	1,585.97	1,573.43	8.16
P200	0.620	5.86	3.00	3.66	49.44	27.01	24 inch	0.013	1,576.99	1,575.70	0.0478	1,582.66	1,579.00	1,577.66	1,576.09	9.22
P204A	0.601	5.86	3.00	3.55	84.09	87.50	24 inch	0.013	1,582.41	1,570.32	0.1382	1,588.05	1,575.09	1,583.07	1,571.06	13.27
P204B	0.601	5.86	3.11	3.55	10.11	10.01	24 inch	0.013	1,570.32	1,570.30	0.0020	1,575.09	1,573.26	1,571.05	1,570.96	2.94
P286	0.373	5.86	3.00	2.21	16.21	54.52	24 inch	0.013	1,573.50	1,573.22	0.0051	1,577.86	1,576.00	1,574.02	1,573.72	3.61
P291A	0.431	5.86	3.00	2.55	85.25	54.00	24 inch	0.013	1,583.23	1,575.56	0.1420	1,588.92	1,578.81	1,583.79	1,576.19	12.13
P291B	0.431	5.86	3.07	2.55	10.12	10.00	24 inch	0.013	1,575.56	1,575.54	0.0020	1,578.81	1,578.00	1,576.18	1,576.10	2.68
P292A	0.169	5.86	3.00	1.00	83.12	100.00	24 inch	0.013	1,589.76	1,576.26	0.1350	1,595.26	1,579.62	1,590.10	1,576.66	8.98
P292B	0.169	5.86	3.19	1.00	10.12	10.00	24 inch	0.013	1,576.26	1,576.24	0.0020	1,579.62	1,579.00	1,576.66	1,576.58	2.05
P293A	0.836	5.86	3.00	4.94	68.39	66.51	24 inch	0.013	1,577.54	1,571.46	0.0914	1,583.21	1,576.93	1,578.32	1,572.34	12.65
P293B	0.836	5.86	3.09	4.94	10.12	9.99	24 inch	0.013	1,571.46	1,571.44	0.0020	1,576.93	1,575.51	1,572.33	1,572.22	3.20
P303A	0.750	5.86	3.00	4.43	56.86	154.00	24 inch	0.013	1,581.31	1,571.58	0.0632	1,585.31	1,576.90	1,582.05	1,572.41	10.76
P303B	0.750	5.86	3.24	4.43	10.12	10.00	24 inch	0.013	1,571.58	1,571.56	0.0020	1,576.90	1,575.01	1,572.40	1,572.30	3.11
P307	0.635	5.86	3.00	3.75	56.26	24.90	24 inch	0.013	1,582.94	1,581.40	0.0618	1,588.61	1,584.00	1,583.62	1,581.77	10.16
P310A	0.298	5.86	3.00	1.76	81.79	120.87	24 inch	0.013	1,587.56	1,571.76	0.1307	1,593.06	1,576.88	1,588.02	1,572.28	10.54
P310B	0.298	5.86	3.19	1.76	10.12	10.00	24 inch	0.013	1,571.76	1,571.74	0.0020	1,576.88	1,576.46	1,572.28	1,572.20	2.42
P315A	0.369	5.86	3.00	2.18	93.44	79.00	24 inch	0.013	1,585.24	1,571.76	0.1706	1,590.88	1,575.93	1,585.75	1,572.34	12.33
P315B	0.369	5.86	3.11	2.18	10.12	10.00	24 inch	0.013	1,571.76	1,571.74	0.0020	1,575.93	1,574.00	1,572.34	1,572.25	2.57
P389A	0.647	5.86	3.00	3.82	116.80	63.50	24 inch	0.013	1,586.40	1,569.47	0.2666	1,591.90	1,574.37	1,587.09	1,570.27	17.07
P389B	0.647	5.86	3.06	3.82	10.12	25.00	24 inch	0.013	1,569.47	1,569.42	0.0020	1,574.37	1,571.50	1,570.26	1,570.11	3.00

Node Report

Label	Area (acres)	Inlet C	Inlet CA (acres)	System CA (acres)	Inlet Tc (min)	System Tc (min)	System Intensity (in/hr)	System Rational Flow (cfs)	Rim Elevation (ft)	Sump Elevation (ft)	Hydraulic Grade Line In (ft)	Hydraulic Grade Line Out (ft)	Headloss Method
CB187 17+20 23.5' Rt	0.342	0.950	0.325	0.325	3.00	3.00	5.86	1.92	1,590.90	1,586.37	1,586.85	1,586.85	HEC-22 Energy
CB188 20+00 11.5' Lt	0.478	0.950	0.454	0.454	3.00	3.00	5.86	2.68	1,587.89	1,581.00	1,581.57	1,581.57	HEC-22 Energy
CB193 23+45 73' Rt	0.387	0.700	0.271	0.271	3.00	3.00	5.86	1.60	1,589.53	1,585.53	1,585.97	1,585.97	HEC-22 Energy
CB200 10+00 11.5' Rt	0.653	0.950	0.620	0.620	3.00	3.00	5.86	3.66	1,582.41	1,576.99	1,577.66	1,577.66	HEC-22 Energy
CB204 5+00 23.5' LT	0.633	0.950	0.601	0.601	3.00	3.00	5.86	3.55	1,587.91	1,582.41	1,583.07	1,583.07	HEC-22 Energy
CB286 13+50 11.5' Lt	0.393	0.950	0.373	0.373	3.00	3.00	5.86	2.21	1,577.61	1,573.50	1,574.02	1,574.02	HEC-22 Energy
CB291 17+34 27.2' Rt	0.454	0.950	0.431	0.431	3.00	3.00	5.86	2.55	1,588.78	1,583.23	1,583.79	1,583.79	HEC-22 Energy
CB292 19+59 16' Rt	0.178	0.950	0.169	0.169	3.00	3.00	5.86	1.00	1,595.26	1,589.76	1,590.10	1,590.10	HEC-22 Energy
CB293 18+00 11.5' Lt	0.880	0.950	0.836	0.836	3.00	3.00	5.86	4.94	1,582.96	1,577.54	1,578.32	1,578.32	HEC-22 Energy
CB303 24+20 71' Rt	0.790	0.950	0.750	0.750	3.00	3.00	5.86	4.43	1,585.31	1,581.31	1,582.05	1,582.05	HEC-22 Energy
CB307 9+18 11.5' Rt	0.668	0.950	0.635	0.635	3.00	3.00	5.86	3.75	1,588.36	1,582.94	1,583.62	1,583.62	HEC-22 Energy
CB310 1+92 16' Lt	0.314	0.950	0.298	0.298	3.00	3.00	5.86	1.76	1,593.06	1,587.56	1,588.02	1,588.02	HEC-22 Energy
CB315 4+00 23.5' Lt	0.388	0.950	0.369	0.369	3.00	3.00	5.86	2.18	1,590.74	1,585.24	1,585.75	1,585.75	HEC-22 Energy
CB389 Sta 5+00 23.5' Lt	0.950	0.681	0.647	0.647	3.00	3.00	5.86	3.82	1,591.65	1,586.40	1,587.09	1,587.09	HEC-22 Energy
J293AB				0.836		3.09	5.86	4.94	1,576.93	1,571.46	1,572.34	1,572.33	HEC-22 Energy
Jct187 17+20 74.48' Rt				0.325		3.46	5.86	1.92	1,589.00	1,585.90	1,585.90	1,585.90	
Jct188 19+93.71 100' Lt				0.454		3.23	5.86	2.68	1,574.39	1,570.18	1,570.18	1,570.18	
Jct188AB				0.454		3.07	5.86	2.68	1,574.76	1,570.23	1,570.90	1,570.89	HEC-22 Energy
Jct193 23+82.77 103.34' Lt				0.271		3.37	5.86	1.60	1,587.03	1,573.20	1,573.20	1,573.20	
Jct200 10+00 42.5' Rt				0.620		3.05	5.86	3.66	1,579.00	1,575.70	1,575.70	1,575.70	
Jct204 5+00 123' LT				0.601		3.17	5.86	3.55	1,573.26	1,570.30	1,570.30	1,570.30	
Jct204AB				0.601		3.11	5.86	3.55	1,575.09	1,570.32	1,571.06	1,571.05	HEC-22 Energy
Jct286 13+44.12 38.7' Rt				0.373		3.25	5.86	2.21	1,576.00	1,573.22	1,573.22	1,573.22	
Jct291 17+31.45 93.15' Rt				0.431		3.14	5.86	2.55	1,578.00	1,575.54	1,575.54	1,575.54	
Jct291AB				0.431		3.07	5.86	2.55	1,578.81	1,575.56	1,576.19	1,576.18	HEC-22 Energy
Jct292 19+19.76 121.26' Rt				0.169		3.27	5.86	1.00	1,579.00	1,576.24	1,576.24	1,576.24	
Jct292AB				0.169		3.19	5.86	1.00	1,579.62	1,576.26	1,576.66	1,576.66	HEC-22 Energy
Jct293 18+00 92' Lt				0.836		3.14	5.86	4.94	1,575.51	1,571.44	1,571.44	1,571.44	
Jct303 24+20 93' Lt				0.750		3.29	5.86	4.43	1,575.01	1,571.56	1,571.56	1,571.56	
Jct303AB				0.750		3.24	5.86	4.43	1,576.90	1,571.58	1,572.41	1,572.40	HEC-22 Energy
Jct307 9+18 40.40' Rt				0.635		3.04	5.86	3.75	1,584.00	1,581.40	1,581.40	1,581.40	
Jct310 2+70 122.6' Lt				0.298		3.26	5.86	1.76	1,576.46	1,571.74	1,571.74	1,571.74	
Jct310AB				0.298		3.19	5.86	1.76	1,576.88	1,571.76	1,572.28	1,572.28	HEC-22 Energy
Jct315 4+00 115' Lt				0.369		3.17	5.86	2.18	1,574.00	1,571.74	1,571.74	1,571.74	
Jct315AB				0.369		3.11	5.86	2.18	1,575.93	1,571.76	1,572.34	1,572.34	HEC-22 Energy

Node Report

Label	Area (acres)	Inlet C	Inlet CA (acres)	System CA (acres)	Inlet Tc (min)	System Tc (min)	System Intensity (in/hr)	System Rational Flow (cfs)	Rim Elevation (ft)	Sump Elevation (ft)	Hydraulic Grade Line In (ft)	Hydraulic Grade Line Out (ft)	Headloss Method
Jct389 Sta 5+00 116' Lt				0.647		3.20	5.86	3.82	1,571.50	1,569.42	1,569.42	1,569.42	
Jct389AB				0.647		3.06	5.86	3.82	1,574.37	1,569.47	1,570.27	1,570.26	HEC-22 Energy

© Haestad Methods, Inc.

APPENDIX F

STORM DRAIN DESIGN

Pump Station Storm Drain

Scenario: ___np Station

Pipe Report - 50yr

Label	System CA (acres)	System Intensity (in/hr)	System Flow Time (min)	Total System Flow (cfs)	Full Capacity (cfs)	Length (ft)	Section Size	Mannings n	Upstream Invert Elevation (ft)	Downstream Invert Elevation (ft)	Slope (ft/ft)	Upstream Ground Elevation (ft)	Downstream Ground Elevation (ft)	Hydraulic Grade Line In (ft)	Hydraulic Grade Line Out (ft)	Average Velocity (ft/s)
Box9A	51.239	3.59	28.05	185.39	659.27	336.57	10 x 10 ft	0.013	1,551.54	1,551.21	0.0010	1,575.95	1,574.40	1,562.15	1,562.12	1.97
Box9B	52.783	3.34	30.90	177.81	683.53	47.44	10 x 10 ft	0.013	1,551.21	1,551.16	0.0011	1,574.40	1,574.34	1,562.12	1,562.11	1.90
Box9C	52.783	3.32	31.31	176.88	663.14	282.25	10 x 10 ft	0.013	1,551.16	1,550.88	0.0010	1,574.34	1,575.17	1,562.11	1,562.09	1.89
Box9D	54.788	3.22	33.81	177.77	668.85	218.00	10 x 10 ft	0.013	1,550.88	1,550.66	0.0010	1,575.17	1,575.71	1,562.09	1,562.07	1.86
Box9E	145.939	2.74	45.10	403.21	674.42	253.40	10 x 10 ft	0.013	1,550.66	1,550.40	0.0010	1,575.71	1,573.12	1,561.92	1,561.83	3.83
Box9F	145.939	2.69	46.20	396.34	663.86	402.34	10 x 10 ft	0.013	1,550.40	1,550.00	0.0010	1,573.12	1,590.86	1,561.73	1,561.60	3.79
P10	4.451	5.86	8.67	26.29	54.93	165.00	30 inch	0.013	1,570.02	1,567.06	0.0179	1,578.45	1,573.73	1,571.77	1,569.17	11.07
P11	5.555	5.86	8.92	32.81	41.01	160.00	30 inch	0.013	1,567.06	1,565.46	0.0100	1,573.73	1,571.33	1,569.01	1,567.84	9.28
P12A	5.555	5.86	9.21	32.81	66.73	230.78	36 inch	0.013	1,564.96	1,562.65	0.0100	1,571.33	1,569.70	1,567.81	1,567.26	9.40
P12B	6.918	5.86	9.62	40.86	66.60	101.29	36 inch	0.013	1,562.65	1,561.64	0.0100	1,569.70	1,569.57	1,567.21	1,566.83	5.76
P13A	10.362	5.86	9.91	61.21	81.75	101.49	60 inch	0.013	1,559.64	1,559.54	0.0010	1,569.57	1,569.69	1,566.81	1,566.76	3.08
P13B	11.151	5.78	10.46	64.97	81.93	303.14	60 inch	0.013	1,559.54	1,559.24	0.0010	1,569.69	1,570.61	1,566.75	1,566.57	3.26
P14A	14.064	5.51	12.01	78.11	82.68	238.09	60 inch	0.013	1,559.24	1,559.00	0.0010	1,570.61	1,572.05	1,566.52	1,566.31	3.92
P14B	14.437	5.33	13.02	77.62	84.13	95.82	60 inch	0.013	1,559.00	1,558.90	0.0010	1,572.05	1,571.11	1,566.30	1,566.21	3.90
P14C	14.561	5.26	13.43	77.25	81.58	61.14	60 inch	0.013	1,558.90	1,558.84	0.0010	1,571.11	1,571.02	1,566.20	1,566.14	3.89
P15A	18.627	5.22	13.69	97.95	105.74	60.51	66 inch	0.013	1,558.34	1,558.28	0.0010	1,571.02	1,571.10	1,566.09	1,566.04	4.08
P15B	19.019	5.17	13.94	99.19	106.27	119.82	66 inch	0.013	1,558.28	1,558.16	0.0010	1,571.10	1,571.56	1,566.02	1,565.92	4.13
P15C	19.486	5.09	14.43	99.98	105.93	150.74	66 inch	0.013	1,558.16	1,558.01	0.0010	1,571.56	1,572.19	1,565.91	1,565.78	4.17
P16A	19.921	4.99	15.03	100.14	133.89	150.07	72 inch	0.013	1,557.51	1,557.36	0.0010	1,572.19	1,572.62	1,565.76	1,565.68	3.53
P16B	20.464	4.91	15.74	101.30	135.51	205.10	72 inch	0.013	1,557.36	1,557.15	0.0010	1,572.62	1,572.95	1,565.67	1,565.55	3.58
P17	20.464	4.81	16.69	99.19	133.07	395.00	72 inch	0.013	1,557.15	1,556.76	0.0010	1,572.95	1,572.28	1,565.54	1,565.32	3.52
P18	22.439	4.61	18.56	104.22	132.88	325.01	72 inch	0.013	1,556.76	1,556.44	0.0010	1,572.28	1,571.47	1,565.31	1,565.11	3.72
P19	27.144	4.45	20.02	121.80	134.27	447.65	72 inch	0.013	1,556.44	1,555.99	0.0010	1,571.47	1,570.11	1,565.09	1,564.71	4.38
P20	29.084	4.27	21.72	125.15	134.85	295.86	72 inch	0.013	1,555.99	1,555.69	0.0010	1,570.11	1,569.41	1,564.68	1,564.41	4.53
P20B	29.943	4.15	22.81	125.31	134.84	98.64	72 inch	0.013	1,555.69	1,555.59	0.0010	1,569.41	1,569.43	1,564.39	1,564.30	4.55
P21A	36.406	4.11	23.17	150.94	134.84	98.64	72 inch	0.013	1,555.59	1,555.49	0.0010	1,569.43	1,569.43	1,564.26	1,564.13	5.49
P21B	36.835	4.08	23.47	151.52	134.84	147.95	72 inch	0.013	1,555.49	1,555.34	0.0010	1,569.43	1,569.74	1,564.10	1,563.90	5.52
P22A	38.232	4.03	23.92	155.42	166.58	217.91	78 inch	0.013	1,554.84	1,554.62	0.0010	1,569.74	1,570.88	1,563.87	1,563.67	4.84
P22B	38.575	3.95	24.67	153.69	166.92	118.37	78 inch	0.013	1,554.62	1,554.50	0.0010	1,570.88	1,570.52	1,563.65	1,563.54	4.80
P23A	40.195	3.91	25.08	158.35	166.30	168.94	78 inch	0.013	1,554.50	1,554.33	0.0010	1,570.52	1,572.80	1,563.49	1,563.32	4.96
P23B	40.594	3.85	25.65	157.43	166.37	129.08	78 inch	0.013	1,554.33	1,554.20	0.0010	1,572.80	1,572.83	1,563.31	1,563.18	4.95
P23C	42.671	3.80	26.08	163.48	164.04	204.27	78 inch	0.013	1,554.20	1,554.00	0.0010	1,572.83	1,571.37	1,563.17	1,562.95	5.15
P24A	48.527	3.73	26.74	182.44	164.40	203.37	78 inch	0.013	1,554.00	1,553.80	0.0010	1,571.37	1,572.36	1,562.88	1,562.61	5.78
P24B	48.794	3.67	27.33	180.35	169.12	192.19	78 inch	0.013	1,553.80	1,553.60	0.0010	1,572.36	1,573.15	1,562.59	1,562.33	5.74
P25	51.239	3.61	27.89	186.30	167.79	58.57	78 inch	0.013	1,553.60	1,553.54	0.0010	1,573.15	1,575.95	1,562.23	1,562.15	5.95

© Haestad Methods, Inc. 37 Brookside Road Waterbury, CT 06708 USA +1-203-755-1666

Pipe Report

Label	System CA (acres)	System Intensity (in/hr)	System Flow Time (min)	Total System Flow (cfs)	Full Capacity (cfs)	Length (ft)	Section Size	Mannings n	Upstream Invert Elevation (ft)	Downstream Invert Elevation (ft)	Slope (ft/ft)	Upstream Ground Elevation (ft)	Downstream Ground Elevation (ft)	Hydraulic Grade Line In (ft)	Hydraulic Grade Line Out (ft)	Average Velocity (ft/s)
P28A	90.100	2.78	44.22	252.31	292.27	185.01	96 inch	0.013	1,551.92	1,551.73	0.0010	1,576.40	1,575.92	1,562.25	1,562.12	4.74
P28B	91.151	2.75	44.87	252.72	277.09	65.00	96 inch	0.013	1,551.73	1,551.67	0.0009	1,575.92	1,575.71	1,562.11	1,562.07	4.77
P29	87.655	2.88	41.83	254.38	287.34	675.00	96 inch	0.013	1,552.75	1,552.08	0.0010	1,576.15	1,576.40	1,562.72	1,562.26	4.72
P30A	82.537	2.98	39.48	247.83	283.86	134.20	96 inch	0.013	1,553.40	1,553.27	0.0010	1,574.52	1,574.85	1,563.17	1,563.09	4.54
P30B	83.058	2.96	39.97	247.65	285.57	142.80	96 inch	0.013	1,553.27	1,553.13	0.0010	1,574.85	1,575.21	1,563.08	1,562.99	4.55
P30C	85.451	2.94	40.49	252.88	290.33	375.00	96 inch	0.013	1,553.13	1,552.75	0.0010	1,575.21	1,576.15	1,562.98	1,562.73	4.66
P31A	73.479	3.02	38.62	223.33	291.25	137.28	96 inch	0.013	1,553.61	1,553.47	0.0010	1,573.51	1,574.58	1,563.35	1,563.28	4.08
P31B	73.700	2.99	39.18	222.23	283.31	72.54	96 inch	0.013	1,553.47	1,553.40	0.0010	1,574.58	1,574.52	1,563.28	1,563.24	4.07
P32A	71.618	3.11	36.42	224.39	285.88	142.49	96 inch	0.013	1,554.14	1,554.00	0.0010	1,572.37	1,572.85	1,563.71	1,563.64	4.05
P32B	71.982	3.08	37.00	223.73	287.06	121.13	96 inch	0.013	1,554.00	1,553.88	0.0010	1,572.85	1,573.25	1,563.63	1,563.57	4.05
P32C	72.501	3.06	37.50	223.80	284.97	163.89	96 inch	0.013	1,553.88	1,553.72	0.0010	1,573.25	1,573.12	1,563.56	1,563.48	4.06
P32D	73.037	3.03	38.18	223.36	291.28	107.84	96 inch	0.013	1,553.72	1,553.61	0.0010	1,573.12	1,573.51	1,563.47	1,563.42	4.07
P33A	68.578	3.22	33.80	222.52	295.26	124.04	96 inch	0.013	1,554.77	1,554.64	0.0010	1,571.16	1,571.20	1,564.07	1,564.01	3.98
P33B	69.187	3.20	34.32	222.97	285.54	214.24	96 inch	0.013	1,554.64	1,554.43	0.0010	1,571.20	1,571.90	1,564.00	1,563.90	3.99
P33C	70.913	3.16	35.21	225.82	288.40	190.01	96 inch	0.013	1,554.43	1,554.24	0.0010	1,571.90	1,572.35	1,563.89	1,563.79	4.06
P33D	71.205	3.13	35.99	224.38	284.12	103.04	96 inch	0.013	1,554.24	1,554.14	0.0010	1,572.35	1,572.37	1,563.79	1,563.73	4.05
P34A	59.153	3.38	30.09	201.30	292.39	398.92	96 inch	0.013	1,555.57	1,555.16	0.0010	1,572.85	1,572.64	1,564.41	1,564.26	3.55
P34B	61.115	3.30	31.97	203.09	286.78	273.07	96 inch	0.013	1,555.16	1,554.89	0.0010	1,572.64	1,571.46	1,564.25	1,564.14	3.61
P34C	61.890	3.24	33.23	202.34	283.54	124.16	96 inch	0.013	1,554.89	1,554.77	0.0010	1,571.46	1,571.16	1,564.14	1,564.09	3.61
P35	55.968	3.73	26.72	210.55	241.29	799.99	90 inch	0.013	1,556.86	1,556.07	0.0010	1,572.85	1,572.85	1,564.84	1,564.42	3.95
P36	54.028	3.92	25.00	213.32	242.81	400.01	90 inch	0.013	1,557.26	1,556.86	0.0010	1,571.85	1,572.85	1,565.04	1,564.85	3.87
P37A	51.299	4.08	23.46	211.07	206.71	124.15	84 inch	0.013	1,558.17	1,558.04	0.0010	1,571.16	1,571.19	1,565.34	1,565.25	4.28
P37B	52.072	4.03	23.94	211.53	204.23	273.93	84 inch	0.013	1,558.04	1,557.76	0.0010	1,571.19	1,571.85	1,565.24	1,565.06	4.33
P38A	32.015	4.34	21.05	140.09	168.69	106.24	78 inch	0.013	1,559.27	1,559.16	0.0010	1,572.30	1,572.77	1,565.76	1,565.72	5.36
P38B	32.313	4.31	21.38	140.24	165.55	100.28	78 inch	0.013	1,559.16	1,559.06	0.0010	1,572.77	1,572.90	1,565.71	1,565.67	3.18
P38C	43.220	4.25	21.90	185.12	164.85	273.06	78 inch	0.013	1,559.06	1,558.79	0.0010	1,572.90	1,571.53	1,565.66	1,565.46	4.24
P38D	43.994	4.13	22.98	183.32	162.97	124.17	78 inch	0.013	1,558.79	1,558.67	0.0010	1,571.53	1,571.16	1,565.45	1,565.36	4.28
P39A	30.716	4.49	19.67	138.98	139.12	120.46	72 inch	0.013	1,560.21	1,560.08	0.0011	1,573.12	1,573.31	1,566.04	1,565.98	5.38
P39B	31.090	4.45	20.04	139.41	134.15	169.42	72 inch	0.013	1,560.08	1,559.91	0.0010	1,573.31	1,573.43	1,565.97	1,565.88	5.23
P39C	31.602	4.39	20.58	139.86	132.36	143.31	72 inch	0.013	1,559.91	1,559.77	0.0010	1,573.43	1,572.30	1,565.87	1,565.79	5.18
P40A	29.248	4.70	17.69	138.60	107.09	108.15	66 inch	0.013	1,561.31	1,561.20	0.0010	1,572.96	1,574.25	1,566.57	1,566.49	5.12
P40B	29.757	4.66	18.04	139.88	105.89	301.70	66 inch	0.013	1,561.20	1,560.90	0.0010	1,574.25	1,574.11	1,566.47	1,566.24	5.07
P40C	30.124	4.56	19.03	138.38	105.30	193.23	66 inch	0.013	1,560.90	1,560.71	0.0010	1,574.11	1,573.12	1,566.22	1,566.07	5.05
P41A	24.436	4.94	15.48	121.64	106.39	99.62	66 inch	0.013	1,561.98	1,561.88	0.0010	1,571.59	1,571.65	1,567.06	1,567.01	4.99
P41B	24.940	4.90	15.81	123.26	106.20	169.95	66 inch	0.013	1,561.88	1,561.71	0.0010	1,571.65	1,572.32	1,567.00	1,566.90	4.99

© Haestad Methods, Inc.

Pipe Report

Label	System CA (acres)	System Intensity (in/hr)	System Flow Time (min)	Total System Flow (cfs)	Full Capacity (cfs)	Length (ft)	Section Size	Mannings n	Upstream Invert Elevation (ft)	Downstream Invert Elevation (ft)	Slope (ft/ft)	Upstream Ground Elevation (ft)	Downstream Ground Elevation (ft)	Hydraulic Grade Line In (ft)	Hydraulic Grade Line Out (ft)	Average Velocity (ft/s)
P41C	27.059	4.84	16.38	132.07	106.51	397.54	66 inch	0.013	1,561.71	1,561.31	0.0010	1,572.32	1,572.96	1,566.89	1,566.62	5.06
P42A	21.344	5.07	14.51	109.18	84.19	153.10	60 inch	0.013	1,562.76	1,562.60	0.0010	1,572.08	1,571.68	1,567.31	1,567.19	4.86
P42B	22.070	4.99	15.04	110.92	81.01	124.03	60 inch	0.013	1,562.60	1,562.48	0.0010	1,571.68	1,571.59	1,567.18	1,567.08	4.70
P43A	18.458	5.24	13.54	97.58	98.61	198.81	54 inch	0.013	1,564.26	1,563.76	0.0025	1,573.71	1,572.82	1,567.78	1,567.60	6.70
P43B	21.344	5.16	14.03	110.98	98.61	198.81	54 inch	0.013	1,563.76	1,563.26	0.0025	1,572.82	1,572.08	1,567.57	1,567.33	6.87
P44B	18.458	5.33	13.03	99.22	72.03	198.82	48 inch	0.013	1,565.25	1,564.75	0.0025	1,574.43	1,573.71	1,568.36	1,567.83	6.53
P45	15.290	5.51	11.99	84.97	72.04	397.59	48 inch	0.013	1,566.25	1,565.25	0.0025	1,576.01	1,574.43	1,569.12	1,568.42	6.39
P46	11.737	5.64	11.28	66.70	50.46	298.18	42 inch	0.013	1,567.50	1,566.75	0.0025	1,577.24	1,576.01	1,570.99	1,569.31	6.93
P47A	10.009	5.77	10.53	58.19	50.57	95.00	42 inch	0.013	1,568.24	1,568.00	0.0025	1,578.63	1,578.09	1,572.35	1,572.03	6.04
P47B	11.445	5.72	10.79	66.01	50.42	199.08	42 inch	0.013	1,568.00	1,567.50	0.0025	1,578.09	1,577.24	1,571.95	1,571.10	6.86
P108	4.451	5.86	8.27	26.29	28.95	162.59	30 inch	0.013	1,570.83	1,570.02	0.0050	1,576.89	1,578.45	1,572.71	1,572.09	6.68
P109	3.631	5.86	8.02	21.45	15.95	100.63	24 inch	0.013	1,571.83	1,571.33	0.0050	1,576.33	1,576.89	1,574.05	1,573.01	6.83
P110	1.104	5.86	3.00	6.52	15.56	175.50	24 inch	0.013	1,567.89	1,567.06	0.0047	1,572.14	1,573.73	1,569.27	1,569.17	4.73
P112	0.408	5.86	3.00	2.41	89.56	117.52	24 inch	0.013	1,582.41	1,563.99	0.1567	1,592.58	1,569.49	1,582.95	1,567.78	12.34
P113	1.363	5.86	3.00	8.05	64.65	11.51	24 inch	0.013	1,564.22	1,563.28	0.0817	1,569.72	1,569.70	1,567.86	1,567.85	2.56
P114	3.444	5.86	5.80	20.35	28.30	10.50	30 inch	0.013	1,562.15	1,562.10	0.0048	1,569.54	1,569.57	1,567.00	1,566.97	4.14
P115	2.888	5.86	5.41	17.06	28.74	81.49	30 inch	0.013	1,562.55	1,562.15	0.0049	1,568.05	1,569.54	1,567.18	1,567.04	3.48
P116	2.888	5.86	5.01	17.06	28.97	84.21	30 inch	0.013	1,562.97	1,562.55	0.0050	1,569.49	1,568.05	1,567.42	1,567.27	3.48
P117	1.271	5.86	3.16	7.51	28.99	100.07	30 inch	0.013	1,563.99	1,563.49	0.0050	1,569.49	1,569.32	1,567.75	1,567.72	1.53
P118	1.834	5.86	4.25	10.83	29.46	100.79	30 inch	0.013	1,563.49	1,562.97	0.0052	1,569.32	1,569.49	1,567.71	1,567.64	2.21
P119	0.788	5.86	3.00	4.66	103.08	11.51	24 inch	0.013	1,564.22	1,561.83	0.2076	1,569.71	1,569.69	1,566.93	1,566.92	1.48
P120	0.433	5.86	3.00	2.56	71.67	86.38	24 inch	0.013	1,571.76	1,563.09	0.1004	1,577.26	1,570.61	1,572.32	1,566.74	10.75
P121	2.480	5.86	4.02	14.65	22.08	10.50	24 inch	0.013	1,563.19	1,563.09	0.0095	1,570.58	1,570.61	1,566.82	1,566.77	4.66
P122	1.560	5.86	3.09	9.22	22.63	163.92	24 inch	0.013	1,564.83	1,563.19	0.0100	1,570.58	1,570.58	1,567.16	1,566.89	2.93
P123	0.497	5.86	3.00	2.93	50.38	47.38	24 inch	0.013	1,567.18	1,564.83	0.0496	1,572.68	1,570.58	1,567.78	1,567.21	8.75
P124	0.374	5.86	3.00	2.21	119.11	16.70	24 inch	0.013	1,566.04	1,561.41	0.2772	1,571.79	1,572.05	1,566.56	1,566.54	14.67
P126	4.065	5.81	10.29	23.81	28.30	10.50	30 inch	0.013	1,562.39	1,562.34	0.0048	1,570.99	1,571.02	1,566.38	1,566.35	4.66
P127	3.800	5.86	9.82	22.44	28.98	124.23	30 inch	0.013	1,563.01	1,562.39	0.0050	1,569.20	1,570.99	1,566.80	1,566.46	4.42
P128	1.346	5.86	5.64	7.95	15.94	133.00	24 inch	0.013	1,565.00	1,564.34	0.0050	1,571.18	1,570.63	1,567.89	1,567.73	2.53
P129	0.141	5.86	3.00	0.83	16.10	75.01	24 inch	0.013	1,564.96	1,564.58	0.0051	1,570.63	1,570.46	1,568.14	1,568.14	0.26
P130	2.340	5.86	9.02	13.83	16.00	75.99	24 inch	0.013	1,564.58	1,564.20	0.0050	1,570.46	1,570.63	1,568.01	1,567.73	4.40
P131	3.800	5.86	9.31	22.44	28.99	138.08	30 inch	0.013	1,563.70	1,563.01	0.0050	1,570.63	1,569.20	1,567.35	1,566.95	4.49
P132	0.947	5.86	4.18	5.59	16.00	155.92	24 inch	0.013	1,565.78	1,565.00	0.0050	1,571.88	1,571.18	1,568.01	1,567.91	1.78
P133	0.603	5.86	3.57	3.56	16.04	149.26	24 inch	0.013	1,566.53	1,565.78	0.0050	1,572.49	1,571.88	1,568.05	1,568.02	4.11
P134	0.344	5.86	3.00	2.03	16.00	120.00	24 inch	0.013	1,567.13	1,566.53	0.0050	1,572.80	1,572.49	1,568.05	1,568.05	3.49

Pipe Report

Label	System CA (acres)	System Intensity (in/hr)	System Flow Time (min)	Total System Flow (cfs)	Full Capacity (cfs)	Length (ft)	Section Size	Mannings n	Upstream Invert Elevation (ft)	Downstream Invert Elevation (ft)	Slope (ft/ft)	Upstream Ground Elevation (ft)	Downstream Ground Elevation (ft)	Hydraulic Grade Line In (ft)	Hydraulic Grade Line Out (ft)	Average Velocity (ft/s)
P135	0.393	5.86	3.00	2.32	132.87	11.13	24 inch	0.013	1,565.35	1,561.51	0.3450	1,571.11	1,571.10	1,566.25	1,566.29	16.07
P137	0.467	5.86	3.00	2.76	137.33	11.83	24 inch	0.013	1,565.85	1,561.49	0.3686	1,571.59	1,571.56	1,566.43	1,566.18	17.33
P139	0.435	5.86	3.00	2.57	15.30	10.93	24 inch	0.013	1,566.44	1,566.39	0.0046	1,572.19	1,572.19	1,567.00	1,566.94	3.62
P141	0.542	5.86	3.00	3.20	151.02	12.34	24 inch	0.013	1,566.91	1,561.41	0.4457	1,572.66	1,572.62	1,567.54	1,565.86	19.38
P142	2.092	5.86	8.99	12.35	17.10	7.00	24 inch	0.013	1,564.62	1,564.58	0.0057	1,571.50	1,570.46	1,568.40	1,568.38	3.93
P150	1.975	5.86	3.70	11.67	15.61	10.50	24 inch	0.013	1,565.65	1,565.60	0.0048	1,572.26	1,572.28	1,566.92	1,566.83	5.45
P151	0.862	5.86	3.00	5.09	15.95	189.00	24 inch	0.013	1,566.59	1,565.65	0.0050	1,572.26	1,572.26	1,567.39	1,566.99	4.51
P152	4.705	4.93	15.54	23.39	15.61	10.50	24 inch	0.013	1,564.83	1,564.78	0.0048	1,571.45	1,571.47	1,566.74	1,566.50	7.45
P153	3.805	4.96	15.29	19.02	16.04	93.50	24 inch	0.013	1,565.30	1,564.83	0.0050	1,569.20	1,571.45	1,567.53	1,566.87	6.05
P154	3.805	4.99	15.03	19.13	16.04	95.50	24 inch	0.013	1,565.78	1,565.30	0.0050	1,571.45	1,569.20	1,568.31	1,567.62	6.09
P155	2.822	5.04	14.74	14.33	15.99	78.02	24 inch	0.013	1,566.17	1,565.78	0.0050	1,570.56	1,571.45	1,569.27	1,568.96	4.56
P156	1.940	5.86	3.37	11.46	15.61	10.50	24 inch	0.013	1,563.60	1,563.55	0.0048	1,570.10	1,570.11	1,565.00	1,564.98	5.43
P157	0.664	5.86	3.00	3.92	16.04	93.50	24 inch	0.013	1,564.07	1,563.60	0.0050	1,568.07	1,570.10	1,565.07	1,565.07	4.22
P158	0.859	5.86	3.00	5.07	133.15	12.44	24 inch	0.013	1,563.71	1,559.40	0.3465	1,569.46	1,569.41	1,564.50	1,564.70	20.37
P159	6.463	5.27	13.42	34.30	28.30	10.50	30 inch	0.013	1,562.91	1,562.86	0.0048	1,569.41	1,569.43	1,565.04	1,564.85	6.97
P160	5.884	5.31	13.17	31.48	29.08	93.51	30 inch	0.013	1,563.38	1,562.91	0.0050	1,567.38	1,569.41	1,565.65	1,565.16	6.39
P161	4.496	5.36	12.88	24.29	29.13	117.00	30 inch	0.013	1,563.97	1,563.38	0.0050	1,570.00	1,567.38	1,566.01	1,565.74	6.64
P162	0.429	5.86	3.00	2.53	140.49	11.46	24 inch	0.013	1,563.71	1,559.29	0.3857	1,569.46	1,569.43	1,564.48	1,564.55	17.16
P163	1.397	5.86	3.36	8.25	15.60	10.51	24 inch	0.013	1,563.23	1,563.18	0.0048	1,569.72	1,569.74	1,564.26	1,564.20	5.04
P164	0.766	5.86	3.00	4.52	16.04	93.50	24 inch	0.013	1,563.70	1,563.23	0.0050	1,567.70	1,569.72	1,564.45	1,564.32	4.39
P165	0.343	5.86	3.00	2.03	146.50	13.71	24 inch	0.013	1,564.52	1,558.77	0.4194	1,570.27	1,570.88	1,565.01	1,563.97	16.52
P166	1.619	5.86	3.33	9.57	15.60	10.51	24 inch	0.013	1,564.07	1,564.02	0.0048	1,570.51	1,570.52	1,565.20	1,565.13	5.22
P167	1.120	5.86	3.00	6.62	15.96	96.37	24 inch	0.013	1,564.55	1,564.07	0.0050	1,568.55	1,570.51	1,565.46	1,565.25	4.84
P168	0.399	5.86	3.00	2.36	139.54	18.08	24 inch	0.013	1,565.06	1,558.18	0.3805	1,570.81	1,572.80	1,565.59	1,563.64	16.71
P169	2.077	5.86	3.43	12.27	136.64	17.65	24 inch	0.013	1,564.49	1,558.05	0.3649	1,570.96	1,572.83	1,565.75	1,563.53	26.95
P170	1.416	5.86	3.04	8.36	32.18	202.09	24 inch	0.013	1,568.58	1,564.49	0.0202	1,573.50	1,570.96	1,569.61	1,565.82	8.61
P171	0.209	5.86	3.00	1.23	31.78	12.16	24 inch	0.013	1,568.82	1,568.58	0.0197	1,574.36	1,573.50	1,569.66	1,569.67	4.89
P176	5.855	5.64	11.25	33.30	28.30	10.50	30 inch	0.013	1,564.31	1,564.26	0.0048	1,571.38	1,571.37	1,566.41	1,566.22	6.78
P177	5.573	5.66	11.14	31.80	28.80	42.59	30 inch	0.013	1,564.52	1,564.31	0.0049	1,572.12	1,571.38	1,566.86	1,566.63	6.47
P178	4.684	5.70	10.94	26.90	29.09	81.50	30 inch	0.013	1,564.93	1,564.52	0.0050	1,569.80	1,572.12	1,567.32	1,567.02	6.73
P179	3.938	5.78	10.44	22.95	15.97	218.67	24 inch	0.013	1,566.02	1,564.93	0.0050	1,576.48	1,569.80	1,569.87	1,567.62	7.31
P180	3.358	5.81	10.29	19.66	15.92	56.54	24 inch	0.013	1,566.30	1,566.02	0.0050	1,570.30	1,576.48	1,570.97	1,570.54	6.26
P181	0.268	5.86	3.00	1.58	141.93	21.49	24 inch	0.013	1,566.12	1,557.66	0.3937	1,571.89	1,572.36	1,566.56	1,563.02	14.99
P182	0.648	5.86	3.00	3.83	22.53	60.50	24 inch	0.013	1,567.62	1,567.02	0.0099	1,573.39	1,573.15	1,568.31	1,567.58	5.34
P183	1.797	5.86	3.31	10.61	15.61	10.50	24 inch	0.013	1,566.41	1,566.36	0.0048	1,573.14	1,573.15	1,567.61	1,567.53	5.34

Pipe Report

Label	System CA (acres)	System Intensity (in/hr)	System Flow Time (min)	Total System Flow (cfs)	Full Capacity (cfs)	Length (ft)	Section Size	Mannings n	Upstream Invert Elevation (ft)	Downstream Invert Elevation (ft)	Slope (ft/ft)	Upstream Ground Elevation (ft)	Downstream Ground Elevation (ft)	Hydraulic Grade Line In (ft)	Hydraulic Grade Line Out (ft)	Average Velocity (ft/s)
P184	0.732	5.86	3.00	4.33	16.04	81.50	24 inch	0.013	1,566.82	1,566.41	0.0050	1,570.82	1,573.14	1,567.65	1,567.65	4.34
P185	1.544	5.86	3.34	9.12	15.60	10.51	24 inch	0.013	1,567.41	1,567.36	0.0048	1,574.14	1,574.40	1,568.51	1,568.44	5.16
P186	0.560	5.86	3.00	3.31	16.04	81.50	24 inch	0.013	1,567.82	1,567.41	0.0050	1,571.82	1,574.14	1,568.53	1,568.54	4.02
P189	2.004	5.86	3.68	11.84	15.61	10.50	24 inch	0.013	1,568.25	1,568.20	0.0048	1,575.14	1,575.17	1,569.54	1,569.44	5.47
P190	1.094	5.86	3.40	6.46	16.04	81.53	24 inch	0.013	1,568.66	1,568.25	0.0050	1,572.66	1,575.14	1,569.59	1,569.58	4.83
P191	1.094	5.86	3.00	6.46	16.02	115.62	24 inch	0.013	1,569.24	1,568.66	0.0050	1,575.35	1,572.66	1,570.14	1,569.70	4.83
P192	1.051	5.86	3.00	6.21	236.94	10.50	24 inch	0.013	1,570.10	1,558.58	1.0971	1,575.85	1,575.92	1,570.98	1,562.39	32.40
P194A	2.445	5.86	3.18	14.44	16.05	81.49	24 inch	0.013	1,569.69	1,569.28	0.0050	1,576.31	1,573.82	1,571.18	1,570.81	5.78
P194B	2.445	5.86	3.42	14.44	15.99	92.01	24 inch	0.013	1,569.28	1,568.82	0.0050	1,573.82	1,576.40	1,570.77	1,570.19	5.76
P195	1.528	5.86	3.00	9.03	74.99	175.91	24 inch	0.013	1,589.02	1,569.69	0.1099	1,596.00	1,576.31	1,590.09	1,571.44	16.11
P196	0.000	0.00	3.00	0.00	19.98	100.00	24 inch	0.013	1,570.06	1,569.28	0.0078	1,574.06	1,573.82	1,570.77	1,570.77	0.00
P201	2.204	5.86	3.56	13.02	15.61	10.50	24 inch	0.013	1,569.22	1,569.17	0.0048	1,576.12	1,576.15	1,570.58	1,570.47	5.56
P202	1.101	5.86	3.28	6.50	16.04	81.50	24 inch	0.013	1,569.63	1,569.22	0.0050	1,573.63	1,576.12	1,570.64	1,570.63	4.84
P203	1.101	5.86	3.00	6.50	16.04	81.50	24 inch	0.013	1,570.04	1,569.63	0.0050	1,576.12	1,573.63	1,570.94	1,570.66	4.84
P205	2.393	5.86	3.87	14.13	205.67	10.50	24 inch	0.013	1,568.20	1,559.52	0.8267	1,575.19	1,575.21	1,569.55	1,563.26	37.49
P206	1.323	5.86	3.33	7.81	15.95	163.00	24 inch	0.013	1,569.01	1,568.20	0.0050	1,575.19	1,575.19	1,570.00	1,569.61	5.05
P207	0.330	5.86	3.00	1.95	15.93	68.56	24 inch	0.013	1,569.35	1,569.01	0.0050	1,575.02	1,575.19	1,570.03	1,570.03	3.44
P208	0.521	5.86	3.00	3.08	105.74	61.10	24 inch	0.013	1,570.61	1,557.26	0.2185	1,576.25	1,574.85	1,571.22	1,563.35	14.92
P209	8.837	4.81	16.69	42.83	46.02	10.50	36 inch	0.013	1,563.49	1,563.44	0.0048	1,574.49	1,574.52	1,565.69	1,565.57	7.39
P210	8.133	4.83	16.51	39.58	47.30	81.50	36 inch	0.013	1,563.90	1,563.49	0.0050	1,572.00	1,574.49	1,566.01	1,565.77	7.49
P211	8.133	4.85	16.33	39.74	47.30	81.50	36 inch	0.013	1,564.31	1,563.90	0.0050	1,574.49	1,572.00	1,566.41	1,566.08	7.49
P212	7.527	4.86	16.23	36.86	47.47	43.43	36 inch	0.013	1,564.53	1,564.31	0.0051	1,573.88	1,574.49	1,566.57	1,566.49	7.42
P213	7.327	4.88	16.06	36.01	46.85	74.99	36 inch	0.013	1,564.90	1,564.53	0.0049	1,573.71	1,573.88	1,567.33	1,567.21	7.31
P214	7.123	4.89	15.92	35.12	47.25	59.78	36 inch	0.013	1,565.20	1,564.90	0.0050	1,573.57	1,573.71	1,567.46	1,567.38	7.32
P215	6.972	4.90	15.80	34.47	29.27	53.01	30 inch	0.013	1,565.97	1,565.70	0.0051	1,573.52	1,573.57	1,568.25	1,567.70	7.02
P216	6.842	4.92	15.66	33.92	29.22	55.15	30 inch	0.013	1,566.25	1,565.97	0.0051	1,573.47	1,573.52	1,568.69	1,568.34	6.91
P217	6.712	4.93	15.52	33.38	28.97	58.13	30 inch	0.013	1,566.54	1,566.25	0.0050	1,573.40	1,573.47	1,569.16	1,568.77	6.80
P218	6.580	4.96	15.32	32.87	28.99	82.07	30 inch	0.013	1,566.95	1,566.54	0.0050	1,573.26	1,573.40	1,569.78	1,569.25	6.70
P219	6.400	4.98	15.09	32.13	29.00	90.02	30 inch	0.013	1,567.40	1,566.95	0.0050	1,573.07	1,573.26	1,570.42	1,569.87	6.55
P220	0.221	5.86	3.00	1.30	133.46	29.19	24 inch	0.013	1,568.32	1,558.16	0.3481	1,573.99	1,574.58	1,568.71	1,563.49	13.55
P221	0.442	5.86	3.00	2.61	15.98	54.10	24 inch	0.013	1,568.25	1,567.98	0.0050	1,574.00	1,573.51	1,568.81	1,568.53	3.75
P222	0.536	5.86	3.00	3.17	174.69	12.51	24 inch	0.013	1,567.40	1,559.94	0.5963	1,573.15	1,573.12	1,568.02	1,563.69	21.38
P223	0.519	5.86	3.00	3.06	165.15	13.64	24 inch	0.013	1,567.04	1,559.77	0.5330	1,572.79	1,573.25	1,567.65	1,563.78	20.35
P224	0.364	5.86	3.00	2.15	164.64	12.95	24 inch	0.013	1,566.85	1,559.99	0.5297	1,572.60	1,572.85	1,567.36	1,563.85	18.25
P225	0.412	5.86	3.00	2.44	15.61	10.50	24 inch	0.013	1,566.60	1,566.55	0.0048	1,572.35	1,572.37	1,567.14	1,567.08	3.61

Pipe Report

Label	System CA (acres)	System Intensity (in/hr)	System Flow Time (min)	Total System Flow (cfs)	Full Capacity (cfs)	Length (ft)	Section Size	Mannings n	Upstream Invert Elevation (ft)	Downstream Invert Elevation (ft)	Slope (ft/ft)	Upstream Ground Elevation (ft)	Downstream Ground Elevation (ft)	Hydraulic Grade Line In (ft)	Hydraulic Grade Line Out (ft)	Average Velocity (ft/s)
P226	0.292	5.86	3.00	1.73	158.15	12.89	24 inch	0.013	1,566.39	1,560.09	0.4888	1,572.14	1,572.35	1,566.85	1,564.01	16.60
P227	1.726	5.86	3.64	10.19	141.62	12.91	24 inch	0.013	1,564.95	1,559.89	0.3919	1,571.67	1,571.90	1,566.09	1,564.11	26.17
P228	1.188	5.86	3.33	7.01	16.04	93.50	24 inch	0.013	1,565.42	1,564.95	0.0050	1,569.42	1,571.67	1,566.36	1,566.17	4.93
P229	1.188	5.86	3.00	7.01	15.87	95.50	24 inch	0.013	1,565.89	1,565.42	0.0049	1,571.67	1,569.42	1,566.83	1,566.42	4.90
P230	0.609	5.86	3.00	3.60	147.28	12.15	24 inch	0.013	1,565.46	1,560.31	0.4239	1,571.21	1,571.20	1,566.12	1,564.22	19.72
P231	6.688	4.88	16.03	32.90	46.02	10.50	36 inch	0.013	1,563.41	1,563.36	0.0048	1,571.13	1,571.16	1,565.28	1,565.21	7.07
P232	5.979	4.90	15.81	29.55	47.29	93.49	36 inch	0.013	1,563.88	1,563.41	0.0050	1,568.88	1,571.13	1,565.64	1,565.36	7.05
P233	5.979	4.93	15.58	29.70	47.28	95.50	36 inch	0.013	1,564.36	1,563.88	0.0050	1,571.13	1,568.88	1,566.12	1,565.72	7.07
P234	4.405	4.93	15.53	21.90	29.34	21.50	30 inch	0.013	1,564.97	1,564.86	0.0051	1,569.67	1,571.13	1,566.58	1,566.45	6.55
P235	0.457	5.86	3.00	2.70	15.88	125.78	24 inch	0.013	1,565.98	1,565.36	0.0049	1,571.21	1,571.13	1,566.84	1,566.84	3.77
P236	0.585	5.86	3.00	3.46	15.88	125.78	24 inch	0.013	1,565.98	1,565.36	0.0049	1,571.21	1,571.13	1,566.84	1,566.84	4.04
P237	0.775	5.86	3.00	4.58	142.15	12.94	24 inch	0.013	1,565.46	1,560.35	0.3949	1,571.21	1,571.46	1,566.21	1,564.31	20.67
P238	1.962	5.86	3.70	11.59	132.23	14.75	24 inch	0.013	1,565.10	1,560.06	0.3417	1,571.82	1,572.64	1,566.32	1,564.43	25.90
P239	0.849	5.86	3.35	5.02	16.04	93.50	24 inch	0.013	1,565.57	1,565.10	0.0050	1,569.57	1,571.82	1,566.41	1,566.41	4.51
P240	0.849	5.86	3.00	5.02	16.04	95.49	24 inch	0.013	1,566.05	1,565.57	0.0050	1,571.82	1,569.57	1,566.84	1,566.45	4.51
P241	3.185	5.70	10.92	18.30	15.61	10.50	24 inch	0.013	1,566.13	1,566.08	0.0048	1,572.82	1,572.85	1,567.79	1,567.61	5.77
P242	2.092	5.80	10.36	12.23	15.95	189.00	24 inch	0.013	1,567.07	1,566.13	0.0050	1,572.82	1,572.82	1,568.38	1,567.90	5.59
P243	1.244	5.81	10.29	7.28	16.18	21.50	24 inch	0.013	1,567.18	1,567.07	0.0051	1,571.74	1,572.82	1,568.46	1,568.46	5.02
P250	1.939	5.86	3.70	11.45	15.61	10.50	24 inch	0.013	1,566.13	1,566.08	0.0048	1,572.82	1,572.85	1,567.39	1,567.29	5.43
P251	0.848	5.86	3.00	5.01	15.95	189.00	24 inch	0.013	1,567.07	1,566.13	0.0050	1,572.82	1,572.82	1,567.86	1,567.48	4.49
P252	1.957	5.86	3.70	11.56	15.61	10.50	24 inch	0.013	1,565.10	1,565.05	0.0048	1,571.82	1,571.85	1,566.37	1,566.27	5.44
P253	0.848	5.86	3.35	5.01	16.04	93.50	24 inch	0.013	1,565.57	1,565.10	0.0050	1,569.57	1,571.82	1,566.48	1,566.47	4.51
P254	0.848	5.86	3.00	5.01	16.04	95.49	24 inch	0.013	1,566.05	1,565.57	0.0050	1,571.82	1,569.57	1,566.84	1,566.52	4.51
P255	0.773	5.86	3.00	4.56	120.04	11.47	24 inch	0.013	1,565.46	1,562.23	0.2816	1,571.21	1,571.19	1,566.21	1,565.51	18.35
P256	7.305	4.49	19.65	33.07	46.05	10.49	36 inch	0.013	1,562.96	1,562.91	0.0048	1,571.13	1,571.16	1,565.62	1,565.61	7.07
P257	6.599	4.51	19.43	30.03	47.29	93.50	36 inch	0.013	1,563.43	1,562.96	0.0050	1,568.88	1,571.13	1,565.77	1,565.68	7.08
P258	6.599	4.54	19.20	30.19	47.28	95.50	36 inch	0.013	1,563.91	1,563.43	0.0050	1,571.13	1,568.88	1,565.89	1,565.82	7.09
P259	4.850	4.54	19.15	22.22	47.71	21.50	36 inch	0.013	1,564.02	1,563.91	0.0051	1,569.40	1,571.13	1,565.95	1,565.95	6.63
P260	0.584	5.86	3.00	3.45	16.01	125.78	24 inch	0.013	1,565.54	1,564.91	0.0050	1,571.21	1,571.13	1,566.49	1,566.48	4.06
P261	0.633	5.86	3.00	3.74	16.01	125.79	24 inch	0.013	1,565.54	1,564.91	0.0050	1,571.21	1,571.13	1,566.49	1,566.48	4.16
P262	0.775	5.86	3.00	4.58	110.94	13.18	24 inch	0.013	1,565.46	1,562.29	0.2405	1,571.21	1,571.53	1,566.21	1,565.73	17.38
P263	10.907	5.54	11.84	60.91	183.24	15.50	36 inch	0.013	1,562.30	1,561.13	0.0755	1,571.82	1,572.90	1,566.03	1,565.94	7.30
P264	10.626	5.58	11.62	59.75	47.29	93.50	36 inch	0.013	1,562.77	1,562.30	0.0050	1,569.57	1,571.82	1,566.69	1,566.15	7.14
P265	10.626	5.62	11.39	60.18	47.57	100.24	36 inch	0.013	1,563.28	1,562.77	0.0051	1,571.82	1,569.57	1,567.61	1,567.03	7.17
P266	1.865	5.86	8.03	11.02	15.94	104.69	24 inch	0.013	1,564.80	1,564.28	0.0050	1,572.02	1,571.82	1,568.75	1,568.58	2.87

Pipe Report

Label	System CA (acres)	System Intensity (in/hr)	System Flow Time (min)	Total System Flow (cfs)	Full Capacity (cfs)	Length (ft)	Section Size	Mannings n	Upstream Invert Elevation (ft)	Downstream Invert Elevation (ft)	Slope (ft/ft)	Upstream Ground Elevation (ft)	Downstream Ground Elevation (ft)	Hydraulic Grade Line In (ft)	Hydraulic Grade Line Out (ft)	Average Velocity (ft/s)
P267	1.637	5.86	7.37	9.67	15.94	100.70	24 inch	0.013	1,565.30	1,564.80	0.0050	1,572.20	1,572.02	1,568.91	1,568.78	2.55
P268	1.424	5.86	6.69	8.41	15.94	90.68	24 inch	0.013	1,565.75	1,565.30	0.0050	1,572.36	1,572.20	1,569.02	1,568.93	2.24
P269	1.236	5.86	6.04	7.30	16.04	77.61	24 inch	0.013	1,566.14	1,565.75	0.0050	1,572.48	1,572.36	1,569.09	1,569.03	1.97
P270	1.051	5.86	5.31	6.21	15.99	74.07	24 inch	0.013	1,566.51	1,566.14	0.0050	1,572.62	1,572.48	1,569.15	1,569.11	1.71
P271	0.807	5.86	4.16	4.77	16.00	94.00	24 inch	0.013	1,566.98	1,566.51	0.0050	1,572.85	1,572.62	1,569.19	1,569.16	1.36
P272	0.553	5.86	3.80	3.27	15.90	85.00	24 inch	0.013	1,567.40	1,566.98	0.0049	1,573.07	1,572.85	1,569.21	1,569.20	3.91
P273	0.143	5.86	3.00	0.85	19.63	148.79	24 inch	0.013	1,568.52	1,567.40	0.0075	1,574.16	1,573.07	1,569.22	1,569.22	3.12
P274	0.324	5.86	3.00	1.91	23.42	45.73	24 inch	0.013	1,567.89	1,567.40	0.0107	1,573.64	1,573.07	1,569.22	1,569.22	4.49
P275	0.298	5.86	3.00	1.76	114.32	14.33	24 inch	0.013	1,566.31	1,562.65	0.2554	1,572.06	1,572.77	1,566.77	1,565.87	13.31
P276	0.413	5.86	3.00	2.44	15.60	10.51	24 inch	0.013	1,566.52	1,566.47	0.0048	1,572.27	1,572.30	1,567.06	1,567.00	3.61
P277	0.512	5.86	3.00	3.02	113.87	14.76	24 inch	0.013	1,566.77	1,563.03	0.2534	1,572.52	1,573.43	1,567.38	1,566.09	15.63
P278	0.374	5.86	3.00	2.21	118.90	13.43	24 inch	0.013	1,567.04	1,563.33	0.2762	1,572.80	1,573.31	1,567.56	1,566.19	14.65
P279	0.593	5.86	3.15	3.50	23.15	10.50	24 inch	0.013	1,567.35	1,567.24	0.0105	1,573.10	1,573.12	1,568.00	1,567.80	5.31
P280	0.342	5.86	3.00	2.02	24.60	43.12	24 inch	0.013	1,567.86	1,567.35	0.0118	1,573.61	1,573.10	1,568.35	1,568.15	4.73
P281	8.531	5.63	11.35	48.37	29.33	21.51	30 inch	0.013	1,563.89	1,563.78	0.0051	1,569.35	1,571.82	1,568.19	1,567.89	9.85
P284	0.521	5.86	3.00	3.08	73.73	253.58	24 inch	0.013	1,593.50	1,566.56	0.1062	1,597.50	1,572.70	1,594.11	1,568.87	11.59
P285	0.367	5.86	3.00	2.17	124.18	14.27	24 inch	0.013	1,568.13	1,563.83	0.3013	1,573.88	1,574.11	1,568.64	1,566.54	15.02
P287	0.509	5.86	3.00	3.00	81.96	58.58	24 inch	0.013	1,571.02	1,563.33	0.1313	1,576.66	1,574.25	1,571.62	1,566.80	12.39
P288	2.189	5.86	3.56	12.93	15.61	10.50	24 inch	0.013	1,566.04	1,565.99	0.0048	1,572.94	1,572.96	1,567.40	1,567.28	5.55
P289	1.096	5.86	3.28	6.47	16.05	81.49	24 inch	0.013	1,566.45	1,566.04	0.0050	1,570.45	1,572.94	1,567.53	1,567.51	4.83
P290	1.096	5.86	3.00	6.47	16.04	81.51	24 inch	0.013	1,566.86	1,566.45	0.0050	1,572.94	1,570.45	1,567.76	1,567.58	4.83
P294	2.119	5.86	3.58	12.52	73.97	14.03	24 inch	0.013	1,565.37	1,563.87	0.1069	1,571.94	1,572.32	1,567.17	1,567.16	17.53
P295	0.997	5.86	3.00	5.89	15.95	163.00	24 inch	0.013	1,566.18	1,565.37	0.0050	1,571.94	1,571.94	1,567.28	1,567.23	4.69
P296	0.505	5.86	3.00	2.98	82.65	12.36	24 inch	0.013	1,565.87	1,564.22	0.1335	1,571.62	1,571.65	1,567.21	1,567.22	12.44
P297	2.365	5.86	4.34	13.97	15.61	10.50	24 inch	0.013	1,564.67	1,564.62	0.0048	1,571.56	1,571.59	1,567.31	1,567.27	4.45
P298	1.688	5.86	3.91	9.97	16.04	81.51	24 inch	0.013	1,565.08	1,564.67	0.0050	1,569.08	1,571.56	1,567.54	1,567.38	3.17
P299	1.688	5.86	3.49	9.97	16.04	81.50	24 inch	0.013	1,565.49	1,565.08	0.0050	1,571.56	1,569.08	1,567.74	1,567.58	3.17
P300	0.441	5.86	3.00	2.60	15.94	100.74	24 inch	0.013	1,565.99	1,565.49	0.0050	1,571.62	1,571.56	1,567.78	1,567.77	3.74
P301	0.709	5.86	3.00	4.19	16.03	125.46	24 inch	0.013	1,566.12	1,565.49	0.0050	1,571.64	1,571.56	1,567.83	1,567.80	4.29
P302	0.726	5.86	3.00	4.29	81.91	10.22	24 inch	0.013	1,565.89	1,564.55	0.1311	1,571.64	1,571.68	1,567.43	1,567.44	13.78
P304	2.887	5.86	4.12	17.05	55.00	9.81	24 inch	0.013	1,565.74	1,565.16	0.0591	1,572.70	1,572.82	1,568.11	1,568.05	5.43
P305A	1.922	5.86	3.36	11.35	16.04	81.50	24 inch	0.013	1,566.56	1,566.15	0.0050	1,572.70	1,570.21	1,568.66	1,568.46	3.61
P305B	1.922	5.86	3.74	11.35	16.04	81.50	24 inch	0.013	1,566.15	1,565.74	0.0050	1,570.21	1,572.70	1,568.42	1,568.21	3.61
P306	0.000	0.00	3.00	0.00	15.89	75.00	24 inch	0.013	1,566.52	1,566.15	0.0049	1,570.52	1,570.21	1,568.42	1,568.42	0.00
P307	0.635	5.86	3.00	3.75	67.33	163.89	24 inch	0.013	1,583.11	1,568.59	0.0886	1,588.61	1,574.34	1,583.79	1,570.45	11.53

Pipe Report

Label	System CA (acres)	System Intensity (in/hr)	System Flow Time (min)	Total System Flow (cfs)	Full Capacity (cfs)	Length (ft)	Section Size	Mannings n	Upstream Invert Elevation (ft)	Downstream Invert Elevation (ft)	Slope (ft/ft)	Upstream Ground Elevation (ft)	Downstream Ground Elevation (ft)	Hydraulic Grade Line In (ft)	Hydraulic Grade Line Out (ft)	Average Velocity (ft/s)
P308	3.168	5.86	3.72	18.71	15.61	10.50	24 inch	0.013	1,567.78	1,567.73	0.0048	1,574.34	1,574.43	1,569.47	1,569.29	5.96
P309	2.039	5.86	3.24	12.05	15.95	162.99	24 inch	0.013	1,568.59	1,567.78	0.0050	1,574.34	1,574.34	1,569.95	1,569.63	5.58
P311	3.553	5.86	6.46	20.99	15.61	10.50	24 inch	0.013	1,568.18	1,568.13	0.0048	1,575.98	1,576.01	1,569.85	1,569.82	5.60
P312	2.209	5.86	6.19	13.05	16.04	81.50	24 inch	0.013	1,568.59	1,568.18	0.0050	1,573.49	1,575.98	1,569.99	1,569.93	5.19
P313	2.209	5.86	5.92	13.05	16.06	85.27	24 inch	0.013	1,569.02	1,568.59	0.0050	1,576.08	1,573.49	1,570.18	1,570.12	5.21
P314	0.816	5.86	5.58	4.82	16.06	81.36	24 inch	0.013	1,569.43	1,569.02	0.0050	1,579.36	1,576.08	1,570.31	1,570.31	4.01
P316	0.410	5.86	4.53	2.42	16.00	213.97	24 inch	0.013	1,570.50	1,569.43	0.0050	1,577.39	1,579.36	1,570.97	1,570.42	3.40
P317	0.259	5.86	3.87	1.53	16.04	121.36	24 inch	0.013	1,571.11	1,570.50	0.0050	1,577.10	1,577.39	1,571.50	1,571.02	3.06
P318	0.085	5.86	3.00	0.51	16.03	121.41	24 inch	0.013	1,571.72	1,571.11	0.0050	1,577.39	1,577.10	1,571.96	1,571.52	2.32
P319	8.483	5.86	10.02	50.07	46.98	122.95	36 inch	0.013	1,570.99	1,570.38	0.0050	1,577.98	1,576.12	1,574.52	1,573.83	7.08
P320	1.340	5.86	3.79	7.92	22.65	145.59	24 inch	0.013	1,573.45	1,571.99	0.0100	1,579.14	1,577.98	1,575.56	1,575.39	2.52
P321	1.016	5.86	3.41	6.00	22.59	140.34	24 inch	0.013	1,574.85	1,573.45	0.0100	1,580.49	1,579.14	1,575.72	1,575.58	6.08
P322	0.723	5.86	3.00	4.27	22.59	135.38	24 inch	0.013	1,576.20	1,574.85	0.0100	1,581.87	1,580.49	1,576.93	1,575.78	5.53
P323	0.292	5.86	3.00	1.72	69.12	89.12	24 inch	0.013	1,581.56	1,573.24	0.0934	1,587.06	1,577.24	1,582.01	1,573.46	9.31
P324	1.436	5.86	3.00	8.48	118.70	10.75	24 inch	0.013	1,572.33	1,569.37	0.2753	1,578.08	1,578.09	1,573.37	1,572.94	21.89
P325	0.315	5.86	3.00	1.86	72.78	66.08	24 inch	0.013	1,577.76	1,570.92	0.1035	1,583.40	1,578.63	1,578.23	1,573.13	9.88
P326	8.483	5.81	10.31	49.64	47.16	92.00	36 inch	0.013	1,570.38	1,569.92	0.0050	1,576.12	1,578.63	1,573.64	1,573.13	7.02
P327	6.769	5.86	10.00	39.98	80.68	21.71	30 inch	0.013	1,572.33	1,571.49	0.0387	1,576.33	1,577.98	1,574.82	1,574.61	16.40
P328	0.194	5.86	3.00	1.15	64.85	21.17	24 inch	0.013	1,575.92	1,574.18	0.0822	1,581.56	1,581.91	1,576.29	1,575.19	7.87
P329A	1.017	5.86	4.27	6.01	15.92	106.96	24 inch	0.013	1,574.71	1,574.18	0.0050	1,581.28	1,581.91	1,575.58	1,575.21	4.71
P329B	1.211	5.86	4.65	7.15	15.98	198.29	24 inch	0.013	1,574.18	1,573.19	0.0050	1,581.91	1,578.63	1,575.13	1,574.13	4.95
P330	0.816	5.86	3.86	4.82	15.92	108.97	24 inch	0.013	1,575.25	1,574.71	0.0050	1,581.58	1,581.28	1,576.02	1,575.70	4.44
P331	0.700	5.86	3.54	4.13	25.40	115.01	24 inch	0.013	1,576.70	1,575.25	0.0126	1,582.52	1,581.58	1,577.41	1,576.07	5.95
P332	0.473	5.86	3.31	2.80	25.33	74.99	24 inch	0.013	1,577.64	1,576.70	0.0125	1,583.41	1,582.52	1,578.22	1,577.46	5.31
P333	0.241	5.86	3.00	1.42	25.29	80.00	24 inch	0.013	1,578.64	1,577.64	0.0125	1,584.36	1,583.41	1,579.05	1,578.24	4.34
P334	0.000	0.00	0.00	0.00	12.39	123.38	24 inch	0.013	1,577.07	1,576.70	0.0030	1,580.60	1,582.52	1,577.41	1,577.41	0.00
P395	6.208	4.99	15.03	31.21	29.34	21.50	30 inch	0.013	1,567.51	1,567.40	0.0051	1,572.07	1,573.07	1,571.22	1,571.09	6.36

Scenario: ___np Station

Node Report - 50yr

Label	Area (acres)	Inlet C	Inlet CA (acres)	System CA (acres)	Inlet Tc (min)	System Tc (min)	System Intensity (in/hr)	System Rational Flow (cfs)	Rim Elevation (ft)	Sump Elevation (ft)	Hydraulic Grade Line In (ft)	Hydraulic Grade Line Out (ft)	Headloss Method
CB108 1089+57, 6' Rt	0.863	0.950	0.820	4.451	3.00	8.27	5.86	26.29	1,576.89	1,570.83	1,573.01	1,572.71	HEC-22 Energy
CB109 1089+34, 104' Rt	4.706	0.772	3.631	3.631	8.02	8.02	5.86	21.45	1,576.33	1,571.83	1,574.05	1,574.05	HEC-22 Energy
CB110 1092+50, 79.5' Rt	1.189	0.928	1.104	1.104	3.00	3.00	5.86	6.52	1,571.89	1,567.89	1,569.27	1,569.27	HEC-22 Energy
CB112 4+20 11.5' Rt	0.429	0.950	0.408	0.408	3.00	3.00	5.86	2.41	1,592.33	1,582.41	1,582.95	1,582.95	HEC-22 Energy
CB113 1096+41, 79.5' Lt	1.580	0.863	1.363	1.363	3.00	3.00	5.86	8.05	1,569.47	1,564.22	1,567.86	1,567.86	HEC-22 Energy
CB114 1097+42.90, 79.5' Lt	0.655	0.849	0.556	3.444	3.00	5.80	5.86	20.35	1,569.29	1,562.15	1,567.04	1,567.00	HEC-22 Energy
CB115 1094+42.90, 0' Rt	0.000	0.000	0.000	2.888	3.00	5.41	5.86	17.06	1,568.05	1,562.55	1,567.27	1,567.18	HEC-22 Energy
CB116 1097+64, 79.5' Rt	1.241	0.849	1.054	2.888	3.00	5.01	5.86	17.06	1,569.24	1,562.97	1,567.64	1,567.42	HEC-22 Energy
CB117 1095+64, 79.5' Lt	1.019	0.848	0.864	1.271	3.00	3.16	5.86	7.51	1,569.24	1,563.99	1,567.78	1,567.75	HEC-22 Energy
CB118 1096+63.75, 79.5' Rt	0.667	0.844	0.563	1.834	3.00	4.25	5.86	10.83	1,569.07	1,563.49	1,567.72	1,567.71	HEC-22 Energy
CB119 1098+45, 79.5' Lt	0.918	0.859	0.788	0.788	3.00	3.00	5.86	4.66	1,569.46	1,564.22	1,566.93	1,566.93	HEC-22 Energy
CB120 8+90, 13.9' Lt	0.479	0.904	0.433	0.433	3.00	3.00	5.86	2.56	1,577.01	1,571.76	1,572.32	1,572.32	HEC-22 Energy
CB121 1101+50, 79.5' Lt	1.039	0.886	0.920	2.480	3.00	4.02	5.86	14.65	1,570.33	1,563.19	1,566.89	1,566.82	HEC-22 Energy
CB122 1101+50, 79.5' Rt	1.194	0.891	1.063	1.560	3.00	3.09	5.86	9.22	1,570.33	1,564.83	1,567.21	1,567.16	HEC-22 Energy
CB123 10+85, 11.5' Lt	0.523	0.950	0.497	0.497	3.00	3.00	5.86	2.93	1,572.54	1,567.18	1,567.78	1,567.78	HEC-22 Energy
CB124 11+80, 5.5' Lt	0.458	0.816	0.374	0.374	3.00	3.00	5.86	2.21	1,571.54	1,566.04	1,566.56	1,566.56	HEC-22 Energy
CB125 12+77 5.5' Lt	0.157	0.789	0.124	14.561	3.00	13.43	5.26	77.25	1,570.86	1,558.90	1,566.21	1,566.20	HEC-22 Energy
CB126 13+37.49, 5.5' Lt	0.313	0.849	0.266	4.065	3.00	10.29	5.81	23.81	1,570.74	1,562.39	1,566.46	1,566.38	HEC-22 Energy
CB127 1105+40, 0' Rt	0.000	0.000	0.000	3.800	3.00	9.82	5.86	22.44	1,569.20	1,563.01	1,566.95	1,566.80	HEC-22 Energy
CB128 15+66, 11.32' Rt	0.420	0.950	0.399	1.346	3.00	5.64	5.86	7.95	1,570.93	1,565.00	1,567.91	1,567.89	HEC-22 Energy
CB129 12+82, 11.5' Rt	0.148	0.950	0.141	0.141	3.00	3.00	5.86	0.83	1,570.38	1,564.96	1,568.14	1,568.14	HEC-22 Energy
CB130 13+57.01, 11.5' Rt	0.114	0.950	0.108	2.340	3.00	9.02	5.86	13.83	1,570.21	1,564.58	1,568.14	1,568.01	HEC-22 Energy
CB131 14+33, 11.5' Rt	0.119	0.950	0.113	3.800	3.00	9.31	5.86	22.44	1,570.38	1,563.70	1,567.73	1,567.35	HEC-22 Energy
CB132 1107+88, 105.27' Rt	0.362	0.950	0.344	0.947	3.00	4.18	5.86	5.59	1,571.63	1,565.78	1,568.02	1,568.01	HEC-22 Energy
CB133 1109+37 95.30' Rt	0.273	0.950	0.259	0.603	3.00	3.57	5.86	3.56	1,572.24	1,566.53	1,568.05	1,568.05	HEC-22 Energy
CB134 1110+57 91.56' Rt	0.362	0.950	0.344	0.344	3.00	3.00	5.86	2.03	1,572.55	1,567.13	1,568.05	1,568.05	HEC-22 Energy
CB135 13+98, 5.5' Lt	0.445	0.882	0.393	0.393	3.00	3.00	5.86	2.32	1,570.86	1,565.35	1,566.25	1,566.25	HEC-22 Energy
CB137 15+18, 5.5' Lt	0.531	0.880	0.467	0.467	3.00	3.00	5.86	2.76	1,571.34	1,565.85	1,566.43	1,566.43	HEC-22 Energy
CB139 1108+75,102.05' Lt	0.495	0.879	0.435	0.435	3.00	3.00	5.86	2.57	1,571.94	1,566.44	1,567.00	1,567.00	HEC-22 Energy
CB141 1110+25, 96.01' Lt	0.620	0.875	0.542	0.542	3.00	3.00	5.86	3.20	1,572.41	1,566.91	1,567.54	1,567.54	HEC-22 Energy
CB142 13+57.01, 22.5' Rt	2.988	0.700	2.092	2.092	8.99	8.99	5.86	12.35	1,571.50	1,564.62	1,568.40	1,568.40	HEC-22 Energy
CB150 1116+25 91.5' Lt	1.273	0.875	1.114	1.975	3.00	3.70	5.86	11.67	1,572.01	1,565.65	1,566.99	1,566.92	HEC-22 Energy
CB151 1116+25 91.5' Rt	0.907	0.950	0.862	0.862	3.00	3.00	5.86	5.09	1,572.01	1,566.59	1,567.39	1,567.39	HEC-22 Energy
CB152 1119+50 91.5' Lt	1.032	0.873	0.901	4.705	3.00	15.54	4.93	23.39	1,571.20	1,564.83	1,566.87	1,566.74	HEC-22 Energy
CB153 1119+50 0' Lt	0.000	0.000	0.000	3.805	3.00	15.29	4.96	19.02	1,569.20	1,565.30	1,567.62	1,567.53	HEC-22 Energy

© Haestad Methods, Inc.

Node Report

Label	Area (acres)	Inlet C	Inlet CA (acres)	System CA (acres)	Inlet Tc (min)	System Tc (min)	System Intensity (in/hr)	System Rational Flow (cfs)	Rim Elevation (ft)	Sump Elevation (ft)	Hydraulic Grade Line In (ft)	Hydraulic Grade Line Out (ft)	Headloss Method
CB154 1119+50 91.5' Rt	1.034	0.950	0.982	3.805	3.00	15.03	4.99	19.13	1,571.20	1,565.78	1,568.96	1,568.31	HEC-22 Energy
CB155 1118+75 117' Rt	4.032	0.700	2.822	2.822	14.74	14.74	5.04	14.33	1,570.56	1,566.17	1,569.27	1,569.27	HEC-22 Energy
CB156 1124+00 91.5' Lt	1.471	0.867	1.276	1.940	3.00	3.37	5.86	11.46	1,569.85	1,563.60	1,565.07	1,565.00	HEC-22 Energy
CB157 1124+00 0' Lt	0.699	0.950	0.664	0.664	3.00	3.00	5.86	3.92	1,568.07	1,564.07	1,565.07	1,565.07	HEC-22 Energy
CB158 1127+00 91.5' Lt	0.993	0.865	0.859	0.859	3.00	3.00	5.86	5.07	1,569.21	1,563.71	1,564.50	1,564.50	HEC-22 Energy
CB159 1128+00 91.5' Lt	0.672	0.862	0.579	6.463	3.00	13.42	5.27	34.30	1,569.16	1,562.91	1,565.16	1,565.04	HEC-22 Energy
CB160 1128+00 0' Rt	1.461	0.950	1.388	5.884	3.00	13.17	5.31	31.48	1,567.38	1,563.38	1,565.74	1,565.65	HEC-22 Energy
CB161 1128+00 117' Rt	6.423	0.700	4.496	4.496	12.88	12.88	5.36	24.29	1,570.00	1,563.97	1,566.01	1,566.01	HEC-22 Energy
CB162 1129+00 91.5' Lt	0.496	0.865	0.429	0.429	3.00	3.00	5.86	2.53	1,569.21	1,563.71	1,564.48	1,564.48	HEC-22 Energy
CB163 1130+50 91.5' Lt	0.730	0.865	0.631	1.397	3.00	3.36	5.86	8.25	1,569.47	1,563.23	1,564.32	1,564.26	HEC-22 Energy
CB164 1130+50 0' Rt	0.806	0.950	0.766	0.766	3.00	3.00	5.86	4.52	1,567.70	1,563.70	1,564.45	1,564.45	HEC-22 Energy
CB165 1132+71 91.86' Lt	0.395	0.868	0.343	0.343	3.00	3.00	5.86	2.03	1,570.02	1,564.52	1,565.01	1,565.01	HEC-22 Energy
CB166 1133+91 94.37' Lt	0.573	0.871	0.499	1.619	3.00	3.33	5.86	9.57	1,570.26	1,564.07	1,565.25	1,565.20	HEC-22 Energy
CB167 1133+91 0' Rt	1.179	0.950	1.120	1.120	3.00	3.00	5.86	6.62	1,568.55	1,564.55	1,565.46	1,565.46	HEC-22 Energy
CB168 1135+62 99.5' Lt	0.456	0.875	0.399	0.399	3.00	3.00	5.86	2.36	1,570.56	1,565.06	1,565.59	1,565.59	HEC-22 Energy
CB169 1136+93 107.10' Lt	0.752	0.880	0.662	2.077	3.00	3.43	5.86	12.27	1,570.71	1,564.49	1,565.82	1,565.75	HEC-22 Energy
CB170 1137+13 92' Rt	1.724	0.700	1.207	1.416	3.00	3.04	5.86	8.36	1,573.50	1,568.58	1,569.67	1,569.61	HEC-22 Energy
CB171 7+21 11.5' Lt	0.220	0.950	0.209	0.209	3.00	3.00	5.86	1.23	1,574.22	1,568.82	1,569.66	1,569.66	HEC-22 Energy
CB176 8+95 11.5' Lt	0.351	0.804	0.282	5.855	3.00	11.25	5.64	33.30	1,571.13	1,564.31	1,566.63	1,566.41	HEC-22 Energy
CB177 1138+92 79.5' Lt	0.992	0.896	0.889	5.573	3.00	11.14	5.66	31.80	1,571.87	1,564.52	1,567.02	1,566.86	HEC-22 Energy
CB178 1138+92 0' Rt	0.786	0.950	0.747	4.684	3.00	10.94	5.70	26.90	1,569.80	1,564.93	1,567.62	1,567.32	HEC-22 Energy
CB179 10+75 11.5' Lt	0.610	0.950	0.580	3.938	3.00	10.44	5.78	22.95	1,576.34	1,566.02	1,570.54	1,569.87	HEC-22 Energy
CB180 10+90 41' Rt	4.675	0.718	3.358	3.358	10.29	10.29	5.81	19.66	1,570.30	1,566.30	1,570.30	1,570.30	HEC-22 Energy
CB181 11+00 11.5' Lt	0.332	0.807	0.268	0.268	3.00	3.00	5.86	1.58	1,571.64	1,566.12	1,566.56	1,566.56	HEC-22 Energy
CB182 13+00 11.5' Lt	0.741	0.874	0.648	0.648	3.00	3.00	5.86	3.83	1,573.14	1,567.62	1,568.31	1,568.31	HEC-22 Energy
CB183 1143+00 79.5' Lt	1.248	0.853	1.064	1.797	3.00	3.31	5.86	10.61	1,572.89	1,566.41	1,567.65	1,567.61	HEC-22 Energy
CB184 1143+00 0' Rt	0.771	0.950	0.732	0.732	3.00	3.00	5.86	4.33	1,570.82	1,566.82	1,567.65	1,567.65	HEC-22 Energy
CB185 1147+00 79.5' Lt	1.180	0.834	0.984	1.544	3.00	3.34	5.86	9.12	1,573.89	1,567.41	1,568.54	1,568.51	HEC-22 Energy
CB186 1147+00 0' Rt	0.589	0.950	0.560	0.560	3.00	3.00	5.86	3.31	1,571.82	1,567.82	1,568.53	1,568.53	HEC-22 Energy
CB189 1150+32 79.5' Lt	1.107	0.822	0.910	2.004	3.00	3.68	5.86	11.84	1,574.89	1,568.25	1,569.58	1,569.54	HEC-22 Energy
CB190 1150+34 0' Rt	0.000	0.000	0.000	1.094	3.00	3.40	5.86	6.46	1,572.66	1,568.66	1,569.70	1,569.59	HEC-22 Energy
CB191 1151+16 79.5' Rt	1.310	0.835	1.094	1.094	3.00	3.00	5.86	6.46	1,575.10	1,569.24	1,570.14	1,570.14	HEC-22 Energy
CB192 1153+15 79.5' Lt	1.255	0.838	1.051	1.051	3.00	3.00	5.86	6.21	1,575.60	1,570.10	1,570.98	1,570.98	HEC-22 Energy
CB194 1155+00 79.5' Rt	1.105	0.830	0.917	2.445	3.00	3.18	5.86	14.44	1,576.06	1,569.69	1,571.44	1,571.18	HEC-22 Energy
CB195 1153+70 200' Rt	1.766	0.865	1.528	1.528	3.00	3.00	5.86	9.03	1,596.00	1,589.02	1,590.09	1,590.09	HEC-22 Energy

Node Report

Label	Area (acres)	Inlet C	Inlet CA (acres)	System CA (acres)	Inlet Tc (min)	System Tc (min)	System Intensity (in/hr)	System Rational Flow (cfs)	Rim Elevation (ft)	Sump Elevation (ft)	Hydraulic Grade Line In (ft)	Hydraulic Grade Line Out (ft)	Headloss Method
CB196 1156+00 0' Rt	0.000	0.000	0.000	0.000	3.00	3.00	0.00	0.00	1,574.06	1,570.06	1,570.77	1,570.77	HEC-22 Energy
CB201 1161+75 79.5' Lt	1.319	0.836	1.103	2.204	3.00	3.56	5.86	13.02	1,575.87	1,569.22	1,570.63	1,570.58	HEC-22 Energy
CB202 1161+75 0' Rt	0.000	0.000	0.000	1.101	3.00	3.28	5.86	6.50	1,573.63	1,569.63	1,570.66	1,570.64	HEC-22 Energy
CB203 1161+75 79.5' Rt	1.316	0.837	1.101	1.101	3.00	3.00	5.86	6.50	1,575.87	1,570.04	1,570.94	1,570.94	HEC-22 Energy
CB205 1165+50 79.5' Lt	1.272	0.841	1.070	2.393	3.00	3.87	5.86	14.13	1,574.94	1,568.20	1,569.61	1,569.55	HEC-22 Energy
CB206 1165+50 79.5' Rt	1.162	0.855	0.993	1.323	3.00	3.33	5.86	7.81	1,574.94	1,569.01	1,570.03	1,570.00	HEC-22 Energy
CB207 14+61 11.5' Rt	0.347	0.950	0.330	0.330	3.00	3.00	5.86	1.95	1,574.77	1,569.35	1,570.03	1,570.03	HEC-22 Energy
CB208 10+00 7.5' Lt	0.588	0.886	0.521	0.521	3.00	3.00	5.86	3.08	1,576.00	1,570.61	1,571.22	1,571.22	HEC-22 Energy
CB209 1168+27 79.5' Lt	0.816	0.863	0.704	8.837	3.00	16.69	4.81	42.83	1,574.24	1,563.49	1,565.77	1,565.69	HEC-22 Energy
CB210 1168+27 0' Rt	0.000	0.000	0.000	8.133	3.00	16.51	4.83	39.58	1,572.00	1,563.90	1,566.08	1,566.01	HEC-22 Energy
CB211 1168+27 79.5' Rt	0.676	0.896	0.606	8.133	3.00	16.33	4.85	39.74	1,574.24	1,564.31	1,566.49	1,566.41	HEC-22 Energy
CB212 17+40 11.5' Rt	0.211	0.950	0.200	7.527	3.00	16.23	4.86	36.86	1,573.63	1,564.53	1,567.21	1,566.57	HEC-22 Energy
CB213 18+15 10.33' Rt	0.214	0.950	0.203	7.327	3.00	16.06	4.88	36.01	1,573.46	1,564.90	1,567.38	1,567.33	HEC-22 Energy
CB214 18+75 9.14' Rt	0.159	0.950	0.151	7.123	3.00	15.92	4.89	35.12	1,573.32	1,565.20	1,567.52	1,567.46	HEC-22 Energy
CB215 1170+15 104.48' Rt	0.137	0.950	0.130	6.972	3.00	15.80	4.90	34.47	1,573.27	1,565.97	1,568.34	1,568.25	HEC-22 Energy
CB216 1170+70 100.44 Rt	0.137	0.950	0.130	6.842	3.00	15.66	4.92	33.92	1,573.22	1,566.25	1,568.77	1,568.69	HEC-22 Energy
CB217 1171+28 96.6' Rt	0.139	0.950	0.132	6.712	3.00	15.52	4.93	33.38	1,573.14	1,566.54	1,569.25	1,569.16	HEC-22 Energy
CB218 1172+10 93.27' Rt	0.189	0.950	0.180	6.580	3.00	15.32	4.96	32.87	1,573.01	1,566.95	1,569.87	1,569.78	HEC-22 Energy
CB219 1173+00 91.5' Rt	0.202	0.950	0.192	6.400	3.00	15.09	4.98	32.13	1,572.82	1,567.40	1,571.09	1,570.42	HEC-22 Energy
CB220 12+00 5.5' Lt	0.274	0.806	0.221	0.221	3.00	3.00	5.86	1.30	1,573.74	1,568.32	1,568.71	1,568.71	HEC-22 Energy
CB221 1170+24 79.5' Lt	0.497	0.890	0.442	0.442	3.00	3.00	5.86	2.61	1,573.75	1,568.25	1,568.81	1,568.81	HEC-22 Energy
CB222 14+48 5.5' Lt	0.623	0.861	0.536	0.536	3.00	3.00	5.86	3.17	1,572.90	1,567.40	1,568.02	1,568.02	HEC-22 Energy
CB223 1173+03 105.07' Lt	0.588	0.882	0.519	0.519	3.00	3.00	5.86	3.06	1,572.54	1,567.04	1,567.65	1,567.65	HEC-22 Energy
CB224 1174+24 99.4' Lt	0.415	0.878	0.364	0.364	3.00	3.00	5.86	2.15	1,572.35	1,566.85	1,567.36	1,567.36	HEC-22 Energy
CB225 1175+67 94.34' Lt	0.471	0.876	0.412	0.412	3.00	3.00	5.86	2.44	1,572.10	1,566.60	1,567.14	1,567.14	HEC-22 Energy
CB226 1176+70 91.81' Lt	0.336	0.870	0.292	0.292	3.00	3.00	5.86	1.73	1,571.89	1,566.39	1,566.85	1,566.85	HEC-22 Energy
CB227 1178+60 91.5' Lt	0.620	0.868	0.538	1.726	3.00	3.64	5.86	10.19	1,571.42	1,564.95	1,566.17	1,566.09	HEC-22 Energy
CB228 1178+60 0' Rt	0.000	0.000	0.000	1.188	3.00	3.33	5.86	7.01	1,569.42	1,565.42	1,566.42	1,566.36	HEC-22 Energy
CB229 1178+60 91.5' Rt	1.250	0.950	1.188	1.188	3.00	3.00	5.86	7.01	1,571.42	1,565.89	1,566.83	1,566.83	HEC-22 Energy
CB230 1180+75 91.5' Lt	0.702	0.868	0.609	0.609	3.00	3.00	5.86	3.60	1,570.96	1,565.46	1,566.12	1,566.12	HEC-22 Energy
CB231 1182+00 91.5' Lt	0.818	0.867	0.709	6.688	3.00	16.03	4.88	32.90	1,570.88	1,563.41	1,565.36	1,565.28	HEC-22 Energy
CB232 1182+00 0' Rt	0.000	0.000	0.000	5.979	3.00	15.81	4.90	29.55	1,568.88	1,563.88	1,565.72	1,565.64	HEC-22 Energy
CB233 1182+00 91.5' Rt	0.560	0.950	0.532	5.979	3.00	15.58	4.93	29.70	1,570.88	1,564.36	1,566.20	1,566.12	HEC-22 Energy
CB234 1182+00 117' Rt	6.293	0.700	4.405	4.405	15.53	15.53	4.93	21.90	1,568.97	1,564.97	1,566.58	1,566.58	HEC-22 Energy
CB235 1180+75 91.5' Rt	0.481	0.950	0.457	0.457	3.00	3.00	5.86	2.70	1,570.96	1,565.98	1,566.84	1,566.84	HEC-22 Energy

© Haestad Methods, Inc.

Node Report

Label	Area (acres)	Inlet C	Inlet CA (acres)	System CA (acres)	Inlet Tc (min)	System Tc (min)	System Intensity (in/hr)	System Rational Flow (cfs)	Rim Elevation (ft)	Sump Elevation (ft)	Hydraulic Grade Line In (ft)	Hydraulic Grade Line Out (ft)	Headloss Method
CB236 1183+25 91.5' Rt	0.616	0.950	0.585	0.585	3.00	3.00	5.86	3.46	1,570.96	1,565.98	1,566.84	1,566.84	HEC-22 Energy
CB237 1183+25 106.45' Lt	0.892	0.868	0.775	0.775	3.00	3.00	5.86	4.58	1,570.96	1,565.46	1,566.21	1,566.21	HEC-22 Energy
CB238 1186+00 91.5' Lt	1.277	0.871	1.113	1.962	3.00	3.70	5.86	11.59	1,571.57	1,565.10	1,566.41	1,566.32	HEC-22 Energy
CB239 1168+00 0' Rt	0.000	0.000	0.000	0.849	3.00	3.35	5.86	5.02	1,569.57	1,565.57	1,566.45	1,566.41	HEC-22 Energy
CB240 1186+00 91.5' Rt	0.894	0.950	0.849	0.849	3.00	3.00	5.86	5.02	1,571.57	1,566.05	1,566.84	1,566.84	HEC-22 Energy
CB241 1190+00 91.5' LT	1.248	0.876	1.093	3.185	3.00	10.92	5.70	18.30	1,572.57	1,566.13	1,567.90	1,567.79	HEC-22 Energy
CB242 1190+00 91.5' Rt	0.893	0.950	0.848	2.092	3.00	10.36	5.80	12.23	1,572.57	1,567.07	1,568.46	1,568.38	HEC-22 Energy
CB243 1190+00 117' Rt	1.777	0.700	1.244	1.244	10.29	10.29	5.81	7.28	1,571.74	1,567.18	1,568.46	1,568.46	HEC-22 Energy
CB250 1198+00 91.5' Lt	1.245	0.876	1.091	1.939	3.00	3.70	5.86	11.45	1,572.57	1,566.13	1,567.48	1,567.39	HEC-22 Energy
CB251 1198+00 91.5' Rt	0.893	0.950	0.848	0.848	3.00	3.00	5.86	5.01	1,572.57	1,567.07	1,567.86	1,567.86	HEC-22 Energy
CB252 1202+00 91.5' Lt	1.270	0.873	1.108	1.957	3.00	3.70	5.86	11.56	1,571.57	1,565.10	1,566.47	1,566.37	HEC-22 Energy
CB253 1202+00 0' Rt	0.000	0.000	0.000	0.848	3.00	3.35	5.86	5.01	1,569.57	1,565.57	1,566.52	1,566.48	HEC-22 Energy
CB254 1202+00 91.5' Rt	0.893	0.950	0.848	0.848	3.00	3.00	5.86	5.01	1,571.57	1,566.05	1,566.84	1,566.84	HEC-22 Energy
CB255 1204+75 91.5' Lt	0.889	0.869	0.773	0.773	3.00	3.00	5.86	4.56	1,570.96	1,565.46	1,566.21	1,566.21	HEC-22 Energy
CB256 1206+00 91.5' Lt	0.814	0.868	0.706	7.305	3.00	19.65	4.49	33.07	1,570.88	1,562.96	1,565.68	1,565.62	HEC-22 Energy
CB257 1206+00 0' Rt	0.000	0.000	0.000	6.599	3.00	19.43	4.51	30.03	1,568.88	1,563.43	1,565.82	1,565.77	HEC-22 Energy
CB258 1206+00 91.5' Rt	0.560	0.950	0.532	6.599	3.00	19.20	4.54	30.19	1,570.88	1,563.91	1,565.95	1,565.89	HEC-22 Energy
CB259 1206+00 117' Rt	6.928	0.700	4.850	4.850	19.15	19.15	4.54	22.22	1,569.40	1,564.02	1,565.95	1,565.95	HEC-22 Energy
CB260 1204+75 91.5' Rt	0.950	0.615	0.584	0.584	3.00	3.00	5.86	3.45	1,570.96	1,565.54	1,566.49	1,566.49	HEC-22 Energy
CB261 1207+25 91.5' Rt	0.666	0.950	0.633	0.633	3.00	3.00	5.86	3.74	1,570.96	1,565.54	1,566.49	1,566.49	HEC-22 Energy
CB262 1207+25 91.5' Lt	0.892	0.868	0.775	0.775	3.00	3.00	5.86	4.58	1,570.96	1,565.46	1,566.21	1,566.21	HEC-22 Energy
CB263 1210+00 91.5' Lt	0.323	0.871	0.281	10.907	3.00	11.84	5.54	60.91	1,571.57	1,562.30	1,566.15	1,566.03	HEC-22 Energy
CB264 1210+00 0' Rt	0.000	0.000	0.000	10.626	3.00	11.62	5.58	59.75	1,569.57	1,562.77	1,567.03	1,566.69	HEC-22 Energy
CB265 1210+21 94.03' Rt	0.242	0.950	0.230	10.626	3.00	11.39	5.62	60.18	1,571.57	1,563.28	1,567.89	1,567.61	HEC-22 Energy
CB266 1211+25 96.93' Rt	0.240	0.950	0.228	1.865	3.00	8.03	5.86	11.02	1,571.77	1,564.80	1,568.78	1,568.75	HEC-22 Energy
CB267 1212+25 100.39' Rt	0.224	0.950	0.213	1.637	3.00	7.37	5.86	9.67	1,571.95	1,565.30	1,568.93	1,568.91	HEC-22 Energy
CB268 1213+15 104.07' Rt	0.198	0.950	0.188	1.424	3.00	6.69	5.86	8.41	1,572.11	1,565.75	1,569.03	1,569.02	HEC-22 Energy
CB269 1213+92 107.64' Rt	0.195	0.950	0.185	1.236	3.00	6.04	5.86	7.30	1,572.23	1,566.14	1,569.11	1,569.09	HEC-22 Energy
CB270 8+21 5.5' Rt	0.257	0.950	0.244	1.051	3.00	5.31	5.86	6.21	1,572.37	1,566.51	1,569.16	1,569.15	HEC-22 Energy
CB271 9+15 5.5' Rt	0.267	0.950	0.254	0.807	3.00	4.16	5.86	4.77	1,572.60	1,566.98	1,569.20	1,569.19	HEC-22 Energy
CB272 10+00 5.5' Rt	0.090	0.950	0.085	0.553	3.00	3.80	5.86	3.27	1,572.82	1,567.40	1,569.22	1,569.21	HEC-22 Energy
CB273 11+47 11.5' Lt	0.151	0.950	0.143	0.143	3.00	3.00	5.86	0.85	1,574.02	1,568.52	1,569.22	1,569.22	HEC-22 Energy
CB274 1216+53 79.5' Rt	0.362	0.895	0.324	0.324	3.00	3.00	5.86	1.91	1,573.39	1,567.89	1,569.22	1,569.22	HEC-22 Energy
CB275 1211+01 92.29' Lt	0.340	0.876	0.298	0.298	3.00	3.00	5.86	1.76	1,571.81	1,566.31	1,566.77	1,566.77	HEC-22 Energy
CB276 1212+08 94.98' Lt	0.469	0.880	0.413	0.413	3.00	3.00	5.86	2.44	1,572.02	1,566.52	1,567.06	1,567.06	HEC-22 Energy

© Haestad Methods, Inc.

Node Report

Label	Area (acres)	Inlet C	Inlet CA (acres)	System CA (acres)	Inlet Tc (min)	System Tc (min)	System Intensity (in/hr)	System Rational Flow (cfs)	Rim Elevation (ft)	Sump Elevation (ft)	Hydraulic Grade Line In (ft)	Hydraulic Grade Line Out (ft)	Headloss Method
CB277 1213+53 100.83' Lt	0.578	0.886	0.512	0.512	3.00	3.00	5.86	3.02	1,572.27	1,566.77	1,567.38	1,567.38	HEC-22 Energy
CB278 6+85 9.65' Lt	0.422	0.886	0.374	0.374	3.00	3.00	5.86	2.21	1,572.55	1,567.04	1,567.56	1,567.56	HEC-22 Energy
CB279 8+06 11.5' Lt	0.308	0.812	0.250	0.593	3.00	3.15	5.86	3.50	1,572.85	1,567.35	1,568.15	1,568.00	HEC-22 Energy
CB280 1216+34 79.5' Lt	0.376	0.911	0.342	0.342	3.00	3.00	5.86	2.02	1,573.36	1,567.86	1,568.35	1,568.35	HEC-22 Energy
CB281 1210+21 119.54' Rt	11.115	0.767	8.531	8.531	11.35	11.35	5.63	48.37	1,569.35	1,563.89	1,568.19	1,568.19	HEC-22 Energy
CB284 1231+89 219' Rt	0.744	0.700	0.521	0.521	3.00	3.00	5.86	3.08	1,597.50	1,593.50	1,594.11	1,594.11	HEC-22 Energy
CB285 10+00 11.5' Lt	0.447	0.821	0.367	0.367	3.00	3.00	5.86	2.17	1,573.63	1,568.13	1,568.64	1,568.64	HEC-22 Energy
CB287 13+05 11.5' Lt	0.596	0.854	0.509	0.509	3.00	3.00	5.86	3.00	1,576.41	1,571.02	1,571.62	1,571.62	HEC-22 Energy
CB288 1222+50 79.5' Lt	1.254	0.871	1.093	2.189	3.00	3.56	5.86	12.93	1,572.69	1,566.04	1,567.51	1,567.40	HEC-22 Energy
CB289 1222+50 0' Rt	0.000	0.000	0.000	1.096	3.00	3.28	5.86	6.47	1,570.45	1,566.45	1,567.58	1,567.53	HEC-22 Energy
CB290 1222+50 79.5' Rt	1.257	0.872	1.096	1.096	3.00	3.00	5.86	6.47	1,572.69	1,566.86	1,567.76	1,567.76	HEC-22 Energy
CB294 1226+50 79.5' Lt	1.330	0.844	1.122	2.119	3.00	3.58	5.86	12.52	1,571.69	1,565.37	1,567.23	1,567.17	HEC-22 Energy
CB295 1226+50 79.5' Rt	1.149	0.867	0.997	0.997	3.00	3.00	5.86	5.89	1,571.69	1,566.18	1,567.28	1,567.28	HEC-22 Energy
CB296 1228+21 79.5' Rt	0.604	0.835	0.505	0.505	3.00	3.00	5.86	2.98	1,571.37	1,565.87	1,567.21	1,567.21	HEC-22 Energy
CB297 1229+21.21 79.5' Lt	0.814	0.832	0.677	2.365	3.00	4.34	5.86	13.97	1,571.31	1,564.67	1,567.38	1,567.31	HEC-22 Energy
CB298 1229+21.21 0' Rt	0.000	0.000	0.000	1.688	3.00	3.91	5.86	9.97	1,569.08	1,565.08	1,567.58	1,567.54	HEC-22 Energy
CB299 1229+21.21 79.5' Rt	0.615	0.875	0.538	1.688	3.00	3.49	5.86	9.97	1,571.31	1,565.49	1,567.77	1,567.74	HEC-22 Energy
CB300 1228+21 79.5' Rt	0.512	0.861	0.441	0.441	3.00	3.00	5.86	2.60	1,571.37	1,565.99	1,567.78	1,567.78	HEC-22 Energy
CB301 1230+46 79.5' Rt	0.884	0.802	0.709	0.709	3.00	3.00	5.86	4.19	1,571.39	1,566.12	1,567.83	1,567.83	HEC-22 Energy
CB302 1230+46 79.5' Lt	0.903	0.804	0.726	0.726	3.00	3.00	5.86	4.29	1,571.39	1,565.89	1,567.43	1,567.43	HEC-22 Energy
CB304 1234+00 79.5' Lt	1.114	0.866	0.965	2.887	3.00	4.12	5.86	17.05	1,572.45	1,565.74	1,568.21	1,568.11	HEC-22 Energy
CB305 1234+00 79.5' Rt	1.727	0.811	1.401	1.922	3.00	3.36	5.86	11.35	1,572.45	1,566.56	1,568.87	1,568.66	HEC-22 Energy
CB306 1234+75 0' Rt	0.000	0.000	0.000	0.000	3.00	3.00	0.00	0.00	1,570.52	1,566.52	1,568.42	1,568.42	HEC-22 Energy
CB307 9+18 11.5' Rt	0.668	0.950	0.635	0.635	3.00	3.00	5.86	3.75	1,588.36	1,583.11	1,583.79	1,583.79	HEC-22 Energy
CB308 1238+00 79.5' Lt	1.339	0.843	1.129	3.168	3.00	3.72	5.86	18.71	1,574.09	1,567.78	1,569.63	1,569.47	HEC-22 Energy
CB309 1238+00 79.5' Rt	1.715	0.819	1.405	2.039	3.00	3.24	5.86	12.05	1,574.09	1,568.59	1,570.45	1,569.95	HEC-22 Energy
CB311 1242+00 79.5' Lt	1.579	0.851	1.344	3.553	3.00	6.46	5.86	20.99	1,575.73	1,568.18	1,569.93	1,569.85	HEC-22 Energy
CB312 1242+00 0' Rt	0.000	0.000	0.000	2.209	3.00	6.19	5.86	13.05	1,573.49	1,568.59	1,570.12	1,569.99	HEC-22 Energy
CB313 1242+25 79.5' Rt	1.599	0.871	1.393	2.209	3.00	5.92	5.86	13.05	1,575.83	1,569.02	1,570.31	1,570.18	HEC-22 Energy
CB314 14+85 11.5' Lt	0.427	0.950	0.406	0.816	3.00	5.58	5.86	4.82	1,579.22	1,569.43	1,570.42	1,570.31	HEC-22 Energy
CB316 16+97 11.5' Rt	0.159	0.950	0.151	0.410	3.00	4.53	5.86	2.42	1,577.14	1,570.50	1,571.02	1,570.97	HEC-22 Energy
CB317 18+18.36 11.5' Rt	0.183	0.950	0.174	0.259	3.00	3.87	5.86	1.53	1,576.85	1,571.11	1,571.52	1,571.50	HEC-22 Energy
CB318 19+40 11.5' Rt	0.090	0.950	0.085	0.085	3.00	3.00	5.86	0.51	1,577.14	1,571.72	1,571.96	1,571.96	HEC-22 Energy
CB319 20+31 11.29' Rt	0.393	0.950	0.373	8.483	3.00	10.02	5.86	50.07	1,577.73	1,570.99	1,574.61	1,574.52	HEC-22 Energy
CB320 1249+50 105.65' Rt	0.342	0.950	0.325	1.340	3.00	3.79	5.86	7.92	1,578.89	1,573.45	1,575.58	1,575.56	HEC-22 Energy

Node Report

Label	Area (acres)	Inlet C	Inlet CA (acres)	System CA (acres)	Inlet Tc (min)	System Tc (min)	System Intensity (in/hr)	System Rational Flow (cfs)	Rim Elevation (ft)	Sump Elevation (ft)	Hydraulic Grade Line In (ft)	Hydraulic Grade Line Out (ft)	Headloss Method
CB321 1250+90 95.87' Rt	0.308	0.950	0.293	1.016	3.00	3.41	5.86	6.00	1,580.24	1,574.85	1,575.78	1,575.72	HEC-22 Energy
CB322 1252+25 91.5' Rt	0.761	0.950	0.723	0.723	3.00	3.00	5.86	4.27	1,581.62	1,576.20	1,576.93	1,576.93	HEC-22 Energy
CB323 7+00 23.5' Lt	0.307	0.950	0.292	0.292	3.00	3.00	5.86	1.72	1,586.92	1,581.56	1,582.01	1,582.01	HEC-22 Energy
CB324 1247+00 79.5' Lt	1.630	0.881	1.436	1.436	3.00	3.00	5.86	8.48	1,577.83	1,572.33	1,573.37	1,573.37	HEC-22 Energy
CB325 10+00 14.5' Lt	0.349	0.903	0.315	0.315	3.00	3.00	5.86	1.86	1,583.26	1,577.76	1,578.23	1,578.23	HEC-22 Energy
CB326 1247+95 0' Rt	0.000	0.000	0.000	8.483	3.00	10.31	5.81	49.64	1,576.12	1,570.38	1,573.83	1,573.64	HEC-22 Energy
CB327 20+31 37' Rt	9.670	0.700	6.769	6.769	10.00	10.00	5.86	39.98	1,576.33	1,572.33	1,574.82	1,574.82	HEC-22 Energy
CB328 12+00 6.5' Lt	0.228	0.851	0.194	0.194	3.00	3.00	5.86	1.15	1,581.42	1,575.92	1,576.29	1,576.29	HEC-22 Energy
CB329 13+09.02, 7.5' Lt	0.242	0.829	0.201	1.017	3.00	4.27	5.86	6.01	1,581.14	1,574.71	1,575.70	1,575.58	HEC-22 Energy
CB330 14+18, 5.5' Lt	0.138	0.841	0.116	0.816	3.00	3.86	5.86	4.82	1,581.44	1,575.25	1,576.07	1,576.02	HEC-22 Energy
CB331 15+33, 5.5' Lt	0.248	0.914	0.227	0.700	3.00	3.54	5.86	4.13	1,582.38	1,576.70	1,577.41	1,577.41	HEC-22 Energy
CB332 16+08 5.5' Lt	0.254	0.917	0.233	0.473	3.00	3.31	5.86	2.80	1,583.27	1,577.64	1,578.24	1,578.22	HEC-22 Energy
CB333 16+88 5.5' Lt	0.258	0.933	0.241	0.241	3.00	3.00	5.86	1.42	1,584.22	1,578.64	1,579.05	1,579.05	HEC-22 Energy
CB334 Sta 1253+16 0' Rt	0.000	0.000	0.000	0.000	0.00	0.00	0.00	0.00	1,580.60	1,577.07	1,577.41	1,577.41	HEC-22 Energy
CB395 1173+00 117' Rt	6.707	0.926	6.208	6.208	15.03	15.03	4.99	31.21	1,572.07	1,567.51	1,571.22	1,571.22	HEC-22 Energy
Jct9 1155+28.48 635.79' Lt				45.939		47.97	2.62	385.32	1,590.86	1,550.00	1,561.60	1,561.60	
Jct25 1143+59.27 93.31Lt				51.239		28.05	3.59	185.39	1,575.95	1,551.54	1,562.15	1,562.15	HEC-22 Energy
Jct113 1096+41, 93.01' Lt				6.918		9.62	5.86	40.86	1,569.70	1,562.65	1,567.26	1,567.21	HEC-22 Energy
Jct119 1098+45, 93.01' Lt				11.151		10.46	5.78	64.97	1,569.69	1,559.54	1,566.76	1,566.75	HEC-22 Energy
Jct124 11+82.87, 8.96 Rt				14.437		13.02	5.33	77.62	1,572.05	1,559.00	1,566.31	1,566.30	HEC-22 Energy
Jct135 13+98, 18.63' Lt				19.019		13.94	5.17	99.19	1,571.10	1,558.28	1,566.04	1,566.02	HEC-22 Energy
Jct137 15+18, 19.32' Lt				19.486		14.43	5.09	99.98	1,571.56	1,558.16	1,565.92	1,565.91	HEC-22 Energy
Jct141 1110+25, 110.34' Lt				20.464		15.74	4.91	101.30	1,572.62	1,557.36	1,565.68	1,565.67	HEC-22 Energy
Jct158 1127+00 105.94' Lt				29.943		22.81	4.15	125.31	1,569.41	1,555.69	1,564.41	1,564.39	HEC-22 Energy
Jct162 1129+00 104.97'Lt				36.835		23.47	4.08	151.52	1,569.43	1,555.49	1,564.13	1,564.10	HEC-22 Energy
Jct165 1132+70.95 107.57' Lt				38.575		24.67	3.95	153.69	1,570.88	1,554.62	1,563.67	1,563.65	HEC-22 Energy
Jct168 1135+62 119.58' Lt				40.594		25.65	3.85	157.43	1,572.80	1,554.33	1,563.32	1,563.31	HEC-22 Energy
Jct169 1136+93 126.75' Lt				42.671		26.08	3.80	163.48	1,572.83	1,554.20	1,563.18	1,563.17	HEC-22 Energy
Jct181 10+96.23 7.65' Rt				48.794		27.33	3.67	180.35	1,572.36	1,553.80	1,562.61	1,562.59	HEC-22 Energy
Jct192 1153+15 92' Lt				91.151		44.87	2.75	252.72	1,575.92	1,551.73	1,562.12	1,562.11	HEC-22 Energy
Jct196 1155+00 0' Rt				2.445		3.42	5.86	14.44	1,573.82	1,569.28	1,570.77	1,570.77	HEC-22 Energy
Jct205 1165+50 92' Lt				85.451		40.49	2.94	252.88	1,575.21	1,553.13	1,562.99	1,562.98	HEC-22 Energy
Jct208 1166+92.81 92' Lt				83.058		39.97	2.96	247.65	1,574.85	1,553.27	1,563.09	1,563.08	HEC-22 Energy
Jct220 12+08.20 20.51' Rt				73.700		39.18	2.99	222.23	1,574.58	1,553.47	1,563.28	1,563.28	HEC-22 Energy
Jct222 14+48 20.01' Lt				73.037		38.18	3.03	223.36	1,573.12	1,553.72	1,563.48	1,563.47	HEC-22 Energy

Node Report

Label	Area (acres)	Inlet C	Inlet CA (acres)	System CA (acres)	Inlet Tc (min)	System Tc (min)	System Intensity (in/hr)	System Rational Flow (cfs)	Rim Elevation (ft)	Sump Elevation (ft)	Hydraulic Grade Line In (ft)	Hydraulic Grade Line Out (ft)	Headloss Method
Jct223 1173+03.74 120.68' Lt				72.501		37.50	3.06	223.80	1,573.25	1,553.88	1,563.57	1,563.56	HEC-22 Energy
Jct224 1174+24.70 114.33 Lt				71.982		37.00	3.08	223.73	1,572.85	1,554.00	1,563.64	1,563.63	HEC-22 Energy
Jct226 1176+70.04 106.69' Lt				71.205		35.99	3.13	224.38	1,572.35	1,554.24	1,563.79	1,563.79	HEC-22 Energy
Jct227 1178+60.05 106.41' Lt				70.913		35.21	3.16	225.82	1,571.90	1,554.43	1,563.90	1,563.89	HEC-22 Energy
Jct230 1180+75.11 105.65' Lt				69.187		34.32	3.20	222.97	1,571.20	1,554.64	1,564.01	1,564.00	HEC-22 Energy
Jct237 1183+25 106.45' Lt				61.890		33.23	3.24	202.34	1,571.46	1,554.89	1,564.14	1,564.14	HEC-22 Energy
Jct238 1186+00 108.25' Lt				61.115		31.97	3.30	203.09	1,572.64	1,555.16	1,564.26	1,564.25	HEC-22 Energy
Jct255 1204+75 104.97' Lt				52.072		23.94	4.03	211.53	1,571.19	1,558.04	1,565.25	1,565.24	HEC-22 Energy
Jct262 1207+25 106.68' Lt				43.994		22.98	4.13	183.32	1,571.53	1,558.79	1,565.46	1,565.45	HEC-22 Energy
Jct263 1210+00 109' Lt				43.220		21.90	4.25	185.12	1,572.90	1,559.06	1,565.67	1,565.66	HEC-22 Energy
Jct275 1211+01 108.61' Lt				32.313		21.38	4.31	140.24	1,572.77	1,559.16	1,565.72	1,565.71	HEC-22 Energy
Jct277 1213+52.01 117.56' Lt				31.602		20.58	4.39	139.86	1,573.43	1,559.91	1,565.88	1,565.87	HEC-22 Energy
Jct278 6+85.10 25.08' Lt				31.090		20.04	4.45	139.41	1,573.31	1,560.08	1,565.98	1,565.97	HEC-22 Energy
Jct285 9+97.98 0.63' Rt				30.124		19.03	4.56	138.38	1,574.11	1,560.90	1,566.24	1,566.22	HEC-22 Energy
Jct287 1221+41.57 101.25' Lt				29.757		18.04	4.66	139.88	1,574.25	1,561.20	1,566.49	1,566.47	HEC-22 Energy
Jct294 1226+50 95.53' Lt				27.059		16.38	4.84	132.07	1,572.32	1,561.71	1,566.90	1,566.89	HEC-22 Energy
Jct296 1228+21 79.5' Rt				24.940		15.81	4.90	123.26	1,571.65	1,561.88	1,567.01	1,567.00	HEC-22 Energy
Jct302 1230+46 91.73' Lt				22.070		15.04	4.99	110.92	1,571.68	1,562.60	1,567.19	1,567.18	HEC-22 Energy
Jct304 1234+00 91.3' Lt				21.344		14.03	5.16	110.98	1,572.82	1,563.76	1,567.60	1,567.57	HEC-22 Energy
Jct306 1234+00 0' Rt				1.922		3.74	5.86	11.35	1,570.21	1,566.15	1,568.42	1,568.42	HEC-22 Energy
Jct324 1247+00 92.25' Lt				11.445		10.79	5.72	66.01	1,578.09	1,568.00	1,572.03	1,571.95	HEC-22 Energy
Jct328 12+03.82 12.3' Rt				1.211		4.65	5.86	7.15	1,581.91	1,574.18	1,575.19	1,575.13	HEC-22 Energy
MH10 1090+85, 94'Lt	0.000	0.000	0.000	4.451	3.00	8.67	5.86	26.29	1,578.45	1,570.02	1,572.09	1,571.77	HEC-22 Energy
MH11 1092+50, 94' Lt	0.000	0.000	0.000	5.555	3.00	8.92	5.86	32.81	1,573.73	1,567.06	1,569.17	1,569.01	HEC-22 Energy
MH12 1094+20, 94' Lt	0.000	0.000	0.000	5.555	3.00	9.21	5.86	32.81	1,571.33	1,564.96	1,567.84	1,567.81	HEC-22 Energy
MH13 1097+42.90, 92' Lt	0.000	0.000	0.000	10.362	3.00	9.91	5.86	61.21	1,569.57	1,559.64	1,566.83	1,566.81	HEC-22 Energy
MH14 1101+50, 92' Lt	0.000	0.000	0.000	14.064	3.00	12.01	5.51	78.11	1,570.61	1,559.24	1,566.57	1,566.52	HEC-22 Energy
MH15 13+37.49, 18' Lt	0.000	0.000	0.000	18.627	3.00	13.69	5.22	97.95	1,571.02	1,558.34	1,566.14	1,566.09	HEC-22 Energy
MH16 1108+75,114.98' Lt				19.921		15.03	4.99	100.14	1,572.19	1,557.51	1,565.78	1,565.76	HEC-22 Energy
MH17 1112+30, 104' Lt	0.000	0.000	0.000	20.464	3.00	16.69	4.81	99.19	1,572.95	1,557.15	1,565.55	1,565.54	HEC-22 Energy
MH18 1116+25 104' Lt				22.439		18.56	4.61	104.22	1,572.28	1,556.76	1,565.32	1,565.31	HEC-22 Energy
MH19 1119+50 104' Lt				27.144		20.02	4.45	121.80	1,571.47	1,556.44	1,565.11	1,565.09	HEC-22 Energy
MH20 1124+00 104' Lt				29.084		21.72	4.27	125.15	1,570.11	1,555.99	1,564.71	1,564.68	HEC-22 Energy
MH21 1128+00, 104' Lt	0.000	0.000	0.000	36.406	3.00	23.17	4.11	150.94	1,569.43	1,555.59	1,564.30	1,564.26	HEC-22 Energy
MH22 1130+50, 104' Lt	0.000	0.000	0.000	38.232	3.00	23.92	4.03	155.42	1,569.74	1,554.84	1,563.90	1,563.87	HEC-22 Energy

Node Report

Label	Area (acres)	Inlet C	Inlet CA (acres)	System CA (acres)	Inlet Tc (min)	System Tc (min)	System Intensity (in/hr)	System Rational Flow (cfs)	Rim Elevation (ft)	Sump Elevation (ft)	Hydraulic Grade Line In (ft)	Hydraulic Grade Line Out (ft)	Headloss Method
MH23 1133+91, 106.87' Lt	0.000	0.000	0.000	40.195	3.00	25.08	3.91	158.35	1,570.52	1,554.50	1,563.54	1,563.49	HEC-22 Energy
MH24 8+95, 24' Lt	0.000	0.000	0.000	48.527	3.00	26.74	3.73	182.44	1,571.37	1,554.00	1,562.95	1,562.88	HEC-22 Energy
MH25 1143+00, 92' Lt	0.000	0.000	0.000	51.239	3.00	27.89	3.61	186.30	1,573.15	1,553.60	1,562.33	1,562.23	HEC-22 Energy
MH28 1155+00 92' Lt				90.100		44.22	2.78	252.31	1,576.40	1,551.92	1,562.26	1,562.25	HEC-22 Energy
MH29 1161+75, 92' Lt	0.000	0.000	0.000	87.655	3.00	41.83	2.88	254.38	1,576.15	1,552.75	1,562.73	1,562.72	HEC-22 Energy
MH30 1168+27, 92' Lt	0.000	0.000	0.000	82.537	3.00	39.48	2.98	247.83	1,574.52	1,553.40	1,563.24	1,563.17	HEC-22 Energy
MH31 13+40, 18' Lt	0.000	0.000	0.000	73.479	3.00	38.62	3.02	223.33	1,573.51	1,553.61	1,563.42	1,563.35	HEC-22 Energy
MH32 1175+67, 106.85' Lt	0.000	0.000	0.000	71.618	3.00	36.42	3.11	224.39	1,572.37	1,554.14	1,563.73	1,563.71	HEC-22 Energy
MH33 1182+00, 104' Lt	0.000	0.000	0.000	68.578	3.00	33.80	3.22	222.52	1,571.16	1,554.77	1,564.09	1,564.07	HEC-22 Energy
MH34 1190+00, 104' Lt	0.000	0.000	0.000	59.153	3.00	30.09	3.38	201.30	1,572.85	1,555.57	1,564.42	1,564.41	HEC-22 Energy
MH35 1198+00, 104' Lt	0.000	0.000	0.000	55.968	3.00	26.72	3.73	210.55	1,572.85	1,556.86	1,564.85	1,564.84	HEC-22 Energy
MH36 1202+00, 104' Lt	0.000	0.000	0.000	54.028	3.00	25.00	3.92	213.32	1,571.85	1,557.26	1,565.06	1,565.04	HEC-22 Energy
MH37 1206+00, 104' Lt	0.000	0.000	0.000	51.299	3.00	23.46	4.08	211.07	1,571.16	1,558.17	1,565.36	1,565.34	HEC-22 Energy
MH38 1212+08, 107.49' Lt	0.000	0.000	0.000	32.015	3.00	21.05	4.34	140.09	1,572.30	1,559.27	1,565.79	1,565.76	HEC-22 Energy
MH39 8+06 24' Lt				30.716		19.67	4.49	138.98	1,573.12	1,560.21	1,566.07	1,566.04	HEC-22 Energy
MH40 1222+50, 92' Lt	0.000	0.000	0.000	29.248	3.00	17.69	4.70	138.60	1,572.96	1,561.31	1,566.62	1,566.57	HEC-22 Energy
MH41 1229+21.21 92' Lt	0.000	0.000	0.000	24.436	3.00	15.48	4.94	121.64	1,571.59	1,561.98	1,567.08	1,567.06	HEC-22 Energy
MH42 1232+00, 90' Lt	0.000	0.000	0.000	21.344	3.00	14.51	5.07	109.18	1,572.08	1,562.76	1,567.33	1,567.31	HEC-22 Energy
MH43 1236+00, 90' Lt	0.000	0.000	0.000	18.458	3.00	13.54	5.24	97.58	1,573.71	1,564.26	1,567.83	1,567.78	HEC-22 Energy
MH44 1238+00 92' Lt				18.458		13.03	5.33	99.22	1,574.43	1,565.25	1,568.42	1,568.36	HEC-22 Energy
MH45 1242+00, 92' Lt	0.000	0.000	0.000	15.290	3.00	11.99	5.51	84.97	1,576.01	1,566.25	1,569.19	1,569.12	HEC-22 Energy
MH46 1245+00, 92' Lt	0.000	0.000	0.000	11.737	3.00	11.28	5.64	66.70	1,577.24	1,567.50	1,571.10	1,570.99	HEC-22 Energy
MH47 1247+95, 92' Lt	0.000	0.000	0.000	10.009	3.00	10.53	5.77	58.19	1,578.63	1,568.24	1,572.52	1,572.35	HEC-22 Energy
MH405 1147+00 92' Lt				52.783		30.90	3.34	177.81	1,574.40	1,551.21	1,562.12	1,562.12	HEC-22 Energy
MH406 1150+32 92' Lt				54.788		33.81	3.22	177.77	1,575.17	1,550.88	1,562.09	1,562.09	HEC-22 Energy
PI Sta 1147+48 90.61' Lt				52.783		31.31	3.32	176.88	1,574.34	1,551.16	1,562.11	1,562.11	HEC-22 Energy
PI Sta 1152+50 345.39' Lt				45.939		46.20	2.69	396.34	1,573.12	1,550.40	1,561.83	1,561.73	HEC-22 Energy
PI Sta 1152+50 92' Lt				45.939		45.10	2.74	403.21	1,575.71	1,550.66	1,562.07	1,561.92	HEC-22 Energy

APPENDIX F

STORM DRAIN DESIGN

South End Storm Drain

Pipe Report

Label	System CA (acres)	System Intensity (in/hr)	System Flow Time (min)	Total System Flow (cfs)	Full Capacity (cfs)	Length (ft)	Section Size	Mannings n	Upstream Invert Elevation (ft)	Downstream Invert Elevation (ft)	Slope (ft/ft)	Upstream Ground Elevation (ft)	Downstream Ground Elevation (ft)	Hydraulic Grade Line In (ft)	Hydraulic Grade Line Out (ft)	Average Velocity (ft/s)
P335A	3.706	4.22	4.09	15.76	79.42	58.49	24 inch	0.013	1,579.26	1,572.05	0.1233	1,585.45	1,576.94	1,580.69	1,576.94	19.70
P335B	3.706	4.22	4.14	15.76	10.12	20.00	24 inch	0.013	1,572.05	1,572.01	0.0020	1,576.94	1,575.00	1,583.60	1,583.50	5.02
P336	1.963	4.22	3.00	8.35	16.03	209.01	24 inch	0.013	1,580.31	1,579.26	0.0050	1,585.81	1,585.45	1,581.34	1,580.79	5.16
P337	1.357	4.22	3.67	5.77	24.19	159.18	24 inch	0.013	1,581.08	1,579.26	0.0114	1,587.51	1,585.45	1,581.93	1,580.82	6.32
P338	1.053	4.22	3.29	4.48	24.17	133.11	24 inch	0.013	1,582.60	1,581.08	0.0114	1,589.20	1,587.51	1,583.34	1,581.95	5.88
P339	0.796	4.22	3.00	3.39	32.93	117.06	24 inch	0.013	1,585.08	1,582.60	0.0212	1,590.58	1,589.20	1,585.72	1,583.37	6.76
P340	0.000	0.00	3.00	0.00	15.96	100.47	24 inch	0.013	1,583.10	1,582.60	0.0050	1,587.05	1,589.20	1,583.34	1,583.34	0.00
P341A	0.740	4.22	3.00	3.15	67.76	174.00	24 inch	0.013	1,587.84	1,572.23	0.0897	1,591.84	1,576.69	1,588.46	1,576.69	11.00
P341B	0.740	4.22	3.26	3.15	10.12	20.00	24 inch	0.013	1,572.23	1,572.19	0.0020	1,576.69	1,575.00	1,583.00	1,583.00	1.00
P342A	1.510	4.22	3.53	6.43	66.36	179.99	24 inch	0.013	1,588.55	1,573.06	0.0861	1,595.53	1,578.01	1,589.45	1,578.01	13.38
P342B	1.510	4.22	3.75	6.43	10.12	20.00	24 inch	0.013	1,573.06	1,573.02	0.0020	1,578.01	1,576.00	1,583.02	1,583.00	2.05
P343	0.967	4.22	3.00	4.11	16.02	135.58	24 inch	0.013	1,589.23	1,588.55	0.0050	1,594.73	1,595.53	1,589.94	1,589.56	4.27
P344	0.647	4.22	3.00	2.75	16.03	103.50	24 inch	0.013	1,590.93	1,590.41	0.0050	1,597.11	1,595.91	1,591.51	1,591.37	3.82
P345A	1.625	4.22	3.45	6.91	91.27	75.00	24 inch	0.013	1,590.41	1,578.20	0.1628	1,595.91	1,581.54	1,591.34	1,579.28	17.12
P345B	1.625	4.22	3.53	6.91	10.12	20.00	24 inch	0.013	1,578.20	1,578.16	0.0020	1,581.54	1,582.50	1,579.27	1,579.09	3.47
P346A	0.711	4.22	3.00	3.02	67.80	187.00	24 inch	0.013	1,593.92	1,577.12	0.0898	1,598.92	1,581.29	1,594.53	1,577.83	10.87
P346B	0.711	4.22	3.29	3.02	10.12	20.00	24 inch	0.013	1,577.12	1,577.08	0.0020	1,581.29	1,580.00	1,577.82	1,577.69	2.81
P347	0.802	4.22	3.00	3.41	16.04	91.50	24 inch	0.013	1,589.79	1,589.33	0.0050	1,597.58	1,594.83	1,590.44	1,590.38	4.06
P348A	1.914	4.22	3.38	8.14	111.68	75.00	24 inch	0.013	1,589.33	1,571.05	0.2437	1,594.83	1,576.88	1,590.35	1,572.25	20.72
P348B	1.914	4.22	3.44	8.14	10.12	24.99	24 inch	0.013	1,571.05	1,571.00	0.0020	1,576.88	1,574.00	1,572.23	1,572.02	3.58
P349	0.540	4.22	3.00	2.30	30.32	174.73	24 inch	0.013	1,589.21	1,586.07	0.0180	1,594.21	1,591.07	1,589.74	1,586.83	5.69
P350	1.028	4.22	3.51	4.37	105.47	69.32	24 inch	0.013	1,586.07	1,571.00	0.2174	1,591.07	1,591.18	1,586.80	1,571.28	16.55
P351	1.141	4.22	3.00	4.85	112.53	38.27	24 inch	0.013	1,580.38	1,570.91	0.2475	1,585.88	1,586.80	1,581.16	1,571.19	17.86
P352	0.486	4.22	3.00	2.07	53.93	178.07	24 inch	0.013	1,581.26	1,571.14	0.0568	1,586.76	1,574.00	1,581.76	1,571.41	8.27
P385	1.143	4.22	3.00	4.86	17.25	159.89	24 inch	0.013	1,564.00	1,563.07	0.0058	1,568.00	1,568.28	1,565.77	1,565.71	4.72
P386	1.497	4.22	3.56	6.37	17.17	107.62	24 inch	0.013	1,563.07	1,562.45	0.0058	1,568.28	1,566.75	1,565.70	1,565.61	2.03
P387	3.727	4.22	4.45	15.85	29.38	80.03	24 inch	0.013	1,562.45	1,561.10	0.0169	1,566.75	1,564.00	1,565.39	1,565.00	5.05
P388	0.912	4.22	3.00	3.88	49.53	144.76	24 inch	0.013	1,569.39	1,562.45	0.0479	1,574.89	1,566.75	1,570.08	1,565.47	9.38

Node Report

Label	Area (acres)	Inlet C	Inlet CA (acres)	System CA (acres)	Inlet Tc (min)	System Tc (min)	System Intensity (in/hr)	System Rational Flow (cfs)	Rim Elevation (ft)	Sump Elevation (ft)	Hydraulic Grade Line In (ft)	Hydraulic Grade Line Out (ft)	Headloss Method
CB335 1255+66 109.50' Lt	0.407	0.950	0.387	3.706	3.00	4.09	4.22	15.76	1,585.20	1,579.26	1,580.79	1,580.69	HEC-22 Energy
CB336 1255+66 91.5' Rt	2.066	0.950	1.963	1.963	3.00	3.00	4.22	8.35	1,585.56	1,580.31	1,581.34	1,581.34	HEC-22 Energy
CB337 1257+25 101.88' Lt	0.320	0.950	0.304	1.357	3.00	3.67	4.22	5.77	1,587.26	1,581.08	1,581.95	1,581.93	HEC-22 Energy
CB338 1258+58 96.47' Lt	0.270	0.950	0.257	1.053	3.00	3.29	4.22	4.48	1,588.95	1,582.60	1,583.34	1,583.34	HEC-22 Energy
CB339 1259+75 92.98' Lt	0.838	0.950	0.796	0.796	3.00	3.00	4.22	3.39	1,590.33	1,585.08	1,585.72	1,585.72	HEC-22 Energy
CB340 1258+58 0' Rt	0.000	0.000	0.000	0.000	3.00	3.00	0.00	0.00	1,587.05	1,583.10	1,583.34	1,583.34	HEC-22 Energy
CB341 1263+50 0' Rt	0.779	0.950	0.740	0.740	3.00	3.00	4.22	3.15	1,591.84	1,587.84	1,588.46	1,588.46	HEC-22 Energy
CB342 1266+98 0' Rt	0.572	0.950	0.543	1.510	3.00	3.53	4.22	6.43	1,595.53	1,588.55	1,589.56	1,589.45	HEC-22 Energy
CB343 1266+10 91.5' Rt	1.018	0.950	0.967	0.967	3.00	3.00	4.22	4.11	1,594.48	1,589.23	1,589.94	1,589.94	HEC-22 Energy
CB344 1269+50 8' Lt	0.681	0.950	0.647	0.647	3.00	3.00	4.22	2.75	1,597.11	1,590.93	1,591.51	1,591.51	HEC-22 Energy
CB345 1269+50 91.51' Rt	1.030	0.950	0.978	1.625	3.00	3.45	4.22	6.91	1,595.66	1,590.41	1,591.37	1,591.34	HEC-22 Energy
CB346 1272+50 8' Lt	0.748	0.950	0.711	0.711	3.00	3.00	4.22	3.02	1,598.92	1,593.92	1,594.53	1,594.53	HEC-22 Energy
CB347 1279+50 4' Rt	0.844	0.950	0.802	0.802	3.00	3.00	4.22	3.41	1,597.58	1,589.79	1,590.44	1,590.44	HEC-22 Energy
CB348 1279+50 91.5' Rt	1.171	0.950	1.112	1.914	3.00	3.38	4.22	8.14	1,594.58	1,589.33	1,590.38	1,590.35	HEC-22 Energy
CB349 1282+00 4' Rt	0.568	0.950	0.540	0.540	3.00	3.00	4.22	2.30	1,594.21	1,589.21	1,589.74	1,589.74	HEC-22 Energy
CB350 1283+75 4' Rt	0.514	0.950	0.488	1.028	3.00	3.51	4.22	4.37	1,591.07	1,586.07	1,586.83	1,586.80	HEC-22 Energy
CB351 1284+90 91.5' Rt	1.201	0.950	1.141	1.141	3.00	3.00	4.22	4.85	1,585.63	1,580.38	1,581.16	1,581.16	HEC-22 Energy
CB352 1286+51 2' Lt	0.512	0.950	0.486	0.486	3.00	3.00	4.22	2.07	1,586.76	1,581.26	1,581.76	1,581.76	HEC-22 Energy
CB385 Sta 1292+95 135' Lt	2.285	0.500	1.143	1.143	3.00	3.00	4.22	4.86	1,568.00	1,564.00	1,565.77	1,565.77	HEC-22 Energy
CB386 Sta 1292+25 8' Rt	0.373	0.950	0.354	1.497	3.00	3.56	4.22	6.37	1,568.28	1,563.07	1,565.71	1,565.70	HEC-22 Energy
CB387 Sta 1291+71 97.63' Rt	1.387	0.950	1.318	3.727	3.00	4.45	4.22	15.85	1,566.50	1,562.45	1,565.47	1,565.39	HEC-22 Energy
CB388 Sta 1290+68 4' Lt	0.960	0.950	0.912	0.912	3.00	3.00	4.22	3.88	1,574.79	1,569.39	1,570.08	1,570.08	HEC-22 Energy
Jct335 1255+66 192' Lt				3.706		4.20	4.22	15.76	1,575.00	1,572.01	1,583.50	1,583.50	
Jct335AB				3.706		4.14	4.22	15.76	1,576.94	1,572.05	1,577.02	1,576.94	HEC-22 Energy
Jct341 1263+50 194' Lt				0.740		3.60	4.22	3.15	1,575.00	1,572.19	1,583.00	1,583.00	
Jct341AB				0.740		3.26	4.22	3.15	1,576.69	1,572.23	1,576.69	1,576.69	HEC-22 Energy
Jct342 1266+98 208' Lt				1.510		3.92	4.22	6.43	1,576.00	1,573.02	1,583.00	1,583.00	
Jct342AB				1.510		3.75	4.22	6.43	1,578.01	1,573.06	1,578.02	1,578.01	HEC-22 Energy
Jct345 1269+50 190.5' Rt				1.625		3.62	4.22	6.91	1,582.50	1,578.16	1,578.16	1,578.16	
Jct345AB				1.625		3.53	4.22	6.91	1,581.54	1,578.20	1,579.28	1,579.27	HEC-22 Energy
Jct346 1272+50 199' Rt				0.711		3.41	4.22	3.02	1,580.00	1,577.08	1,577.08	1,577.08	
Jct346AB				0.711		3.29	4.22	3.02	1,581.29	1,577.12	1,577.83	1,577.82	HEC-22 Energy
Jct348 1279+50 195.5' Rt				1.914		3.55	4.22	8.14	1,574.00	1,571.00	1,571.00	1,571.00	
Jct348AB				1.914		3.44	4.22	8.14	1,576.88	1,571.05	1,572.25	1,572.23	HEC-22 Energy
Jct350 1284+44.42 5' Rt				1.028		3.58	4.22	4.37	1,591.18	1,571.00	1,571.00	1,571.00	

Node Report

Label	Area (acres)	Inlet C	Inlet CA (acres)	System CA (acres)	Inlet Tc (min)	System Tc (min)	System Intensity (in/hr)	System Rational Flow (cfs)	Rim Elevation (ft)	Sump Elevation (ft)	Hydraulic Grade Line In (ft)	Hydraulic Grade Line Out (ft)	Headloss Method
Jct351 1284+50.41 95.78' Rt				1.141		3.04	4.22	4.85	1,586.80	1,570.91	1,570.91	1,570.91	
Jct352 1286+51 178.06' Lt				0.486		3.36	4.22	2.07	1,574.00	1,571.14	1,571.14	1,571.14	
Jct387 Sta 1291+03.11 148.58' Rt				3.727		4.71	4.22	15.85	1,564.00	1,561.10	1,565.00	1,565.00	

© Haestad Methods, Inc.

Stanley Consultants Inc
37 Brookside Road Waterbury, CT 06708 USA +1-203-755-1666

APPENDIX F

STORM DRAIN DESIGN

South Trunk Storm Drain

Pipe Report

Label	System CA (acres)	System Intensity (in/hr)	System Flow Time (min)	Total System Flow (cfs)	Full Capacity (cfs)	Length (ft)	Section Size	Mannings n	Upstream Invert Elevation (ft)	Downstream Invert Elevation (ft)	Slope (ft/ft)	Upstream Ground Elevation (ft)	Downstream Ground Elevation (ft)	Hydraulic Grade Line In (ft)	Hydraulic Grade Line Out (ft)	Average Velocity (ft/s)
P353	0.000	0.00	5.00	0.00	16.11	33.51	24 inch	0.013	1,557.00	1,556.83	0.0051	1,561.00	1,567.00	1,557.00	1,556.83	0.00
P354	0.000	0.00	5.00	1.00	11.19	69.49	24 inch	0.013	1,541.43	1,541.26	0.0024	1,567.00	1,546.26	1,542.05	1,542.04	2.20
P355A	0.000	0.00	5.53	1.00	11.36	178.35	24 inch	0.013	1,541.26	1,540.81	0.0025	1,546.26	1,560.49	1,542.04	1,542.03	2.23
P355B	0.382	5.86	6.86	3.26	11.34	139.39	24 inch	0.013	1,540.81	1,540.46	0.0025	1,560.49	1,556.07	1,542.03	1,542.00	3.12
P356	0.382	5.86	3.00	2.26	93.41	111.03	24 inch	0.013	1,559.74	1,540.81	0.1705	1,563.74	1,560.49	1,560.26	1,542.04	12.46
P357	0.730	5.86	3.00	4.31	16.08	31.68	24 inch	0.013	1,549.58	1,549.42	0.0051	1,555.37	1,556.07	1,550.31	1,550.13	4.34
P358	0.632	5.86	3.00	3.73	74.26	87.78	24 inch	0.013	1,549.60	1,540.14	0.1078	1,555.10	1,553.60	1,550.28	1,541.74	12.34
P360	0.155	5.86	3.00	0.91	15.90	30.35	24 inch	0.013	1,544.50	1,544.35	0.0049	1,548.50	1,549.44	1,544.83	1,544.68	2.75
P361	0.639	5.86	3.00	3.78	21.40	103.88	24 inch	0.013	1,540.85	1,539.92	0.0090	1,546.35	1,545.42	1,541.53	1,540.73	5.13
P362	0.844	5.86	3.34	4.99	15.99	78.06	24 inch	0.013	1,539.92	1,539.53	0.0050	1,545.42	1,545.22	1,540.71	1,540.65	4.50
P363	1.373	5.86	3.63	8.11	46.35	116.26	24 inch	0.013	1,539.53	1,534.65	0.0420	1,545.22	1,541.88	1,540.54	1,536.19	11.09
P364	0.463	5.86	3.00	2.74	15.60	10.51	24 inch	0.013	1,539.58	1,539.53	0.0048	1,545.00	1,545.22	1,540.61	1,540.61	3.74
P365	0.289	5.86	3.00	1.71	43.71	37.50	24 inch	0.013	1,547.13	1,545.73	0.0373	1,551.13	1,551.37	1,547.58	1,546.47	6.74
P366	0.615	5.86	3.09	3.63	41.38	168.59	24 inch	0.013	1,545.73	1,540.09	0.0335	1,551.37	1,545.09	1,546.40	1,541.19	8.11
P367	1.237	5.86	3.44	7.31	46.51	87.51	24 inch	0.013	1,540.09	1,536.39	0.0423	1,545.09	1,544.95	1,541.05	1,538.14	10.79
P368	1.669	5.86	3.00	9.86	15.82	22.50	24 inch	0.013	1,534.76	1,534.65	0.0049	1,540.51	1,541.88	1,536.21	1,536.19	5.31
P369	0.972	5.86	3.97	5.74	61.33	81.07	24 inch	0.013	1,542.24	1,536.28	0.0735	1,549.42	1,540.28	1,543.09	1,537.28	12.25
P370	1.196	5.86	4.08	7.06	43.55	93.08	24 inch	0.013	1,536.28	1,532.83	0.0371	1,540.28	1,536.83	1,537.22	1,534.01	10.20
P371	1.715	5.86	4.23	10.13	40.40	84.03	24 inch	0.013	1,532.83	1,530.15	0.0319	1,536.83	1,538.57	1,533.97	1,532.61	10.70
P372	0.708	5.86	3.52	4.18	15.95	114.65	24 inch	0.013	1,542.81	1,542.24	0.0050	1,549.12	1,549.42	1,543.53	1,543.23	4.28
P373	0.406	5.86	3.00	2.40	15.97	114.35	24 inch	0.013	1,543.38	1,542.81	0.0050	1,549.42	1,549.12	1,543.92	1,543.54	3.66
P374	0.782	5.86	3.37	4.62	72.24	105.30	24 inch	0.013	1,538.51	1,527.77	0.1020	1,544.93	1,535.77	1,539.27	1,529.92	12.89
P375	1.593	5.86	3.00	9.41	22.08	42.00	24 inch	0.013	1,525.54	1,525.14	0.0095	1,531.29	1,530.89	1,526.64	1,526.56	6.75
P376	1.743	5.86	3.10	10.29	61.34	22.44	24 inch	0.013	1,525.14	1,523.49	0.0735	1,530.89	1,533.39	1,526.29	1,526.44	14.50
P377	1.338	5.86	3.00	7.90	16.06	73.44	24 inch	0.013	1,521.99	1,521.62	0.0050	1,527.74	1,527.81	1,524.12	1,524.03	2.52
P378	1.680	5.86	3.49	9.92	16.00	99.96	24 inch	0.013	1,521.62	1,521.12	0.0050	1,527.81	1,533.00	1,524.00	1,523.81	3.16
P379	0.205	5.86	3.00	1.21	87.38	153.87	24 inch	0.013	1,544.08	1,521.12	0.1492	1,549.72	1,533.00	1,544.46	1,523.81	9.86
P390	0.304	5.86	3.00	1.80	16.00	73.99	24 inch	0.013	1,538.88	1,538.51	0.0050	1,544.38	1,544.93	1,539.37	1,539.39	3.37
P400A	1.112	5.86	7.61	7.57	11.35	127.15	24 inch	0.013	1,540.46	1,540.14	0.0025	1,556.07	1,553.60	1,541.87	1,541.73	3.87
P400B	1.744	5.86	8.15	11.30	11.34	163.09	24 inch	0.013	1,540.14	1,539.73	0.0025	1,553.60	1,549.44	1,541.69	1,541.09	4.12
P401A	1.898	5.86	8.81	12.21	32.16	165.25	24 inch	0.013	1,539.73	1,536.39	0.0202	1,549.44	1,544.95	1,540.99	1,538.09	9.54
P401B	3.136	5.86	9.10	19.52	32.16	126.67	24 inch	0.013	1,536.39	1,533.83	0.0202	1,544.95	1,541.88	1,537.98	1,535.52	10.73
P402A	6.178	5.86	9.30	37.49	58.28	157.50	30 inch	0.013	1,533.33	1,530.15	0.0202	1,541.88	1,538.57	1,535.40	1,532.58	12.61
P402B	7.893	5.86	9.51	47.62	58.31	142.49	30 inch	0.013	1,530.15	1,527.27	0.0202	1,538.57	1,535.77	1,532.42	1,529.91	13.25
P403A	8.674	5.86	9.69	52.24	58.30	202.93	30 inch	0.013	1,527.27	1,523.17	0.0202	1,535.77	1,533.39	1,529.73	1,526.45	13.43

Pipe Report

Label	System CA (acres)	System Intensity (in/hr)	System Flow Time (min)	Total System Flow (cfs)	Full Capacity (cfs)	Length (ft)	Section Size	Mannings n	Upstream Invert Elevation (ft)	Downstream Invert Elevation (ft)	Slope (ft/ft)	Upstream Ground Elevation (ft)	Downstream Ground Elevation (ft)	Hydraulic Grade Line In (ft)	Hydraulic Grade Line Out (ft)	Average Velocity (ft/s)
P403B	10.417	5.86	9.94	62.53	58.28	101.52	30 inch	0.013	1,523.17	1,521.12	0.0202	1,533.39	1,533.00	1,526.17	1,523.81	12.74

© Haestad Methods, Inc.

Node Report

Label	Area (acres)	Inlet C	Inlet CA (acres)	System CA (acres)	Inlet Tc (min)	System Tc (min)	System Intensity (in/hr)	System Rational Flow (cfs)	Rim Elevation (ft)	Sump Elevation (ft)	Hydraulic Grade Line In (ft)	Hydraulic Grade Line Out (ft)	Headloss Method
CB353 1290+95 155' Rt	0.000	0.000	0.000	0.000	5.00	5.00	0.00	0.00	1,561.00	1,557.00	1,557.00	1,557.00	HEC-22 Energy
CB355 58+50 18.75' Rt	0.000	0.000	0.000	0.000	3.00	5.53	0.00	0.00	1,546.26	1,541.26	1,542.04	1,542.04	HEC-22 Energy
CB356 1293+70 8' Rt	0.402	0.950	0.382	0.382	3.00	3.00	5.86	2.26	1,563.74	1,559.74	1,560.26	1,560.26	HEC-22 Energy
CB357 8+51 5.5' Rt	0.823	0.887	0.730	0.730	3.00	3.00	5.86	4.31	1,555.12	1,549.58	1,550.31	1,550.31	HEC-22 Energy
CB358 1296+62 8' Rt	0.665	0.950	0.632	0.632	3.00	3.00	5.86	3.73	1,555.10	1,549.60	1,550.28	1,550.28	HEC-22 Energy
CB360 1298+00 101' Rt	0.221	0.700	0.155	0.155	3.00	3.00	5.86	0.91	1,548.50	1,544.50	1,544.83	1,544.83	HEC-22 Energy
CB361 12+45 9.58' Rt	0.831	0.769	0.639	0.639	3.00	3.00	5.86	3.78	1,546.10	1,540.85	1,541.53	1,541.53	HEC-22 Energy
CB362 13+49 13.74' Rt	0.265	0.772	0.205	0.844	3.00	3.34	5.86	4.99	1,545.17	1,539.92	1,540.73	1,540.71	HEC-22 Energy
CB363 14+27 16.86' Rt	0.069	0.950	0.066	1.373	3.00	3.63	5.86	8.11	1,544.97	1,539.53	1,540.61	1,540.54	HEC-22 Energy
CB364 14+27 29.37' Rt	0.662	0.700	0.463	0.463	3.00	3.00	5.86	2.74	1,545.00	1,539.58	1,540.61	1,540.61	HEC-22 Energy
CB365 12+48 24' Lt	0.413	0.700	0.289	0.289	3.00	3.00	5.86	1.71	1,551.13	1,547.13	1,547.58	1,547.58	HEC-22 Energy
CB366 12+48 11.5' Rt	0.343	0.950	0.326	0.615	3.00	3.09	5.86	3.63	1,551.23	1,545.73	1,546.47	1,546.40	HEC-22 Energy
CB367 1300+00 8' Rt	0.655	0.950	0.622	1.237	3.00	3.44	5.86	7.31	1,545.09	1,540.09	1,541.19	1,541.05	HEC-22 Energy
CB368 1301+30 67.5' Rt	1.890	0.883	1.669	1.669	3.00	3.00	5.86	9.86	1,540.26	1,534.76	1,536.21	1,536.21	HEC-22 Energy
CB369 14+40 11.5' Lt	0.328	0.804	0.264	0.972	3.00	3.97	5.86	5.74	1,549.17	1,542.24	1,543.23	1,543.09	HEC-22 Energy
CB370 1302+85 85.09' Lt	0.320	0.700	0.224	1.196	3.00	4.08	5.86	7.06	1,540.28	1,536.28	1,537.28	1,537.22	HEC-22 Energy
CB371 1302+85 8' Rt	0.546	0.950	0.519	1.715	3.00	4.23	5.86	10.13	1,536.83	1,532.83	1,534.01	1,533.97	HEC-22 Energy
CB372 15+54.65 11.5' Lt	0.374	0.809	0.303	0.708	3.00	3.52	5.86	4.18	1,548.98	1,542.81	1,543.54	1,543.53	HEC-22 Energy
CB373 16+69 11.5' Lt	0.462	0.878	0.406	0.406	3.00	3.00	5.86	2.40	1,549.28	1,543.38	1,543.92	1,543.92	HEC-22 Energy
CB374 17+00 23.5' Lt	0.503	0.950	0.478	0.782	3.00	3.37	5.86	4.62	1,544.79	1,538.51	1,539.39	1,539.27	HEC-22 Energy
CB375 1305+91 67.5' Rt	1.960	0.813	1.593	1.593	3.00	3.00	5.86	9.41	1,531.04	1,525.54	1,526.64	1,526.64	HEC-22 Energy
CB376 1306+33 67.5' Rt	0.185	0.809	0.150	1.743	3.00	3.10	5.86	10.29	1,530.64	1,525.14	1,526.56	1,526.29	HEC-22 Energy
CB377 1307+31 79.5' Lt	1.606	0.833	1.338	1.338	3.00	3.00	5.86	7.90	1,527.49	1,521.99	1,524.12	1,524.12	HEC-22 Energy
CB378 1307+31 8' Lt	0.421	0.812	0.342	1.680	3.00	3.49	5.86	9.92	1,527.81	1,521.62	1,524.03	1,524.00	HEC-22 Energy
CB379 20+98 23.5' Rt	0.216	0.950	0.205	0.205	3.00	3.00	5.86	1.21	1,549.58	1,544.08	1,544.46	1,544.46	HEC-22 Energy
CB390 16+25 23.5' Lt	0.320	0.950	0.304	0.304	3.00	3.00	5.86	1.80	1,544.24	1,538.88	1,539.37	1,539.37	HEC-22 Energy
Jct356 1393+87.77 117.66' Rt				0.382		6.86	5.86	2.26	1,560.49	1,540.81	1,542.03	1,542.03	HEC-22 Energy
Jct358 1296+61.40 95.78' Rt				1.744		8.15	5.86	10.30	1,553.60	1,540.14	1,541.73	1,541.69	HEC-22 Energy
Jct367 1300+00.82 95.5' Rt				3.136		9.10	5.86	18.52	1,544.95	1,536.39	1,538.09	1,537.98	HEC-22 Energy
Jct371 1302+87.5 92' Rt				7.893		9.51	5.86	46.62	1,538.57	1,530.15	1,532.58	1,532.42	HEC-22 Energy
Jct376 1306+32.93 91.93' Rt				10.417		9.94	5.86	61.53	1,533.39	1,523.17	1,526.44	1,526.17	HEC-22 Energy
MH354 1291+30 150' Rt	0.000	0.000	0.000	0.000	3.00	5.00	0.00	0.00	1,567.00	1,541.43	1,542.05	1,542.05	HEC-22 Energy
MH400 1295+30 92' Rt	0.000	0.000	0.000	1.112	3.00	7.61	5.86	6.57	1,556.07	1,540.46	1,541.97	1,541.87	HEC-22 Energy
MH401 1298+30 92' Rt	0.000	0.000	0.000	1.898	3.00	8.81	5.86	11.21	1,549.44	1,539.73	1,541.09	1,540.99	HEC-22 Energy
MH402 1301+30 92' Rt	0.000	0.000	0.000	6.178	3.00	9.30	5.86	36.49	1,541.88	1,533.33	1,535.52	1,535.40	HEC-22 Energy

Node Report

Label	Area (acres)	Inlet C	Inlet CA (acres)	System CA (acres)	Inlet Tc (min)	System Tc (min)	System Intensity (in/hr)	System Rational Flow (cfs)	Rim Elevation (ft)	Sump Elevation (ft)	Hydraulic Grade Line In (ft)	Hydraulic Grade Line Out (ft)	Headloss Method
MH403 1304+30 92' Rt	0.000	0.000	0.000	8.674	3.00	9.69	5.86	51.24	1,535.77	1,527.27	1,529.91	1,529.73	HEC-22 Energy
MH404 1307+34.45 91.9' Rt				12.302		10.07	5.85	72.51	1,533.00	1,521.12	1,523.81	1,523.81	

© Haestad Methods, Inc.

Stanley Consultants Inc
37 Brookside Road Waterbury, CT 06708 USA +1-203-755-1666

APPENDIX F

STORM DRAIN DESIGN

McDowell Road Storm Drain

Scenario: Base

Pipe Report

Label	System CA (ft²)	System Intensity (in/hr)	System Flow Time (min)	Total System Flow (cfs)	Full Capacity (cfs)	Length (ft)	Section Size	Mannings n	Upstream Invert Elevation (ft)	Downstream Invert Elevation (ft)	Slope (ft/ft)	Upstream Ground Elevation (ft)	Downstream Ground Elevation (ft)	Hydraulic Grade Line In (ft)	Hydraulic Grade Line Out (ft)	Average Velocity (ft/s)
P-713	8,068	4.22	5.00	0.79	65.50	126.00	24 inch	0.012	1,582.00	1,573.00	0.071429	1,604.20	1,578.45	1,582.31	1,575.00	7.08
P717	12,462	4.22	5.00	1.22	81.76	115.71	24 inch	0.012	1,595.38	1,582.50	0.111313	1,599.81	1,598.10	1,595.76	1,583.12	9.43
P716	28,418	4.22	5.20	2.78	80.54	98.78	24 inch	0.012	1,582.50	1,571.83	0.108018	1,598.10	1,576.33	1,583.08	1,573.83	11.96
P-16 (replica)	11,849	4.22	5.00	1.16	17.40	115.01	24 inch	0.012	1,551.30	1,550.72	0.005043	1,555.89	1,555.81	1,551.67	1,551.29	3.14
P-17 (replica)	22,767	4.22	5.61	2.22	22.85	48.32	24 inch	0.012	1,550.72	1,550.30	0.008692	1,555.81	1,557.00	1,551.24	1,550.72	4.61
P5207 (exist)	47,687	4.22	5.00	4.66	18.69	20.64	24 inch	0.012	1,596.28	1,596.16	0.005814	1,600.87	1,601.44	1,597.04	1,597.04	4.94
P5208 (exist)	47,687	4.22	5.07	4.66	23.25	117.73	24 inch	0.012	1,596.16	1,595.10	0.009004	1,601.44	1,599.40	1,596.92	1,596.69	5.78
P711	47,687	4.22	5.41	4.66	17.49	82.41	24 inch	0.012	1,595.10	1,594.68	0.005096	1,599.40	1,600.25	1,596.65	1,596.64	4.71
P715A	93,753	4.22	5.70	9.16	17.44	57.28	24 inch	0.012	1,594.68	1,594.39	0.005063	1,600.25	1,599.87	1,596.54	1,596.47	5.62
P715B	111,699	4.22	5.87	10.91	17.33	10.00	24 inch	0.012	1,594.39	1,594.34	0.005000	1,599.87	1,599.83	1,596.46	1,596.44	3.47
P715C	124,175	4.22	5.92	12.13	17.13	47.06	24 inch	0.012	1,594.34	1,594.11	0.004887	1,599.83	1,599.74	1,596.42	1,596.31	3.86
P714A	136,399	4.22	6.12	13.32	17.40	51.56	24 inch	0.012	1,594.11	1,593.85	0.005043	1,599.74	1,599.83	1,596.27	1,596.12	4.24
P714B	154,059	4.22	6.32	15.04	16.89	10.53	24 inch	0.012	1,593.85	1,593.80	0.004748	1,599.83	1,599.87	1,596.10	1,596.06	4.79
P714C	171,954	4.22	6.36	16.79	17.36	308.90	24 inch	0.012	1,593.80	1,592.25	0.005018	1,599.87	1,602.84	1,596.03	1,594.58	5.35
P706	46,066	4.22	5.00	4.50	8.15	35.08	18 inch	0.012	1,597.06	1,596.88	0.005131	1,601.44	1,601.65	1,597.87	1,597.74	4.73
P701	46,066	4.22	5.12	4.50	24.86	109.81	24 inch	0.012	1,596.88	1,595.75	0.010291	1,601.65	1,600.25	1,597.63	1,596.55	6.01
P708	21,185	4.22	5.00	2.07	17.34	71.90	24 inch	0.012	1,597.46	1,597.10	0.005007	1,602.60	1,602.84	1,597.96	1,597.57	3.72
P702A	193,139	4.22	7.32	18.86	57.83	36.27	24 inch	0.012	1,592.25	1,590.23	0.055693	1,602.84	1,602.70	1,593.81	1,591.92	16.46
P707	21,189	4.22	5.00	2.07	200.44	10.00	24 inch	0.012	1,596.92	1,590.23	0.669000	1,602.70	1,602.70	1,597.42	1,591.91	20.68
P703	17,895	4.22	5.00	1.75	23.90	34.00	18 inch	0.012	1,595.30	1,593.80	0.044118	1,599.67	1,599.87	1,596.02	1,596.06	7.89
P712	17,660	4.22	5.00	1.72	25.62	64.07	24 inch	0.012	1,594.55	1,593.85	0.010926	1,599.64	1,599.83	1,596.12	1,596.12	4.64
P702B	214,328	4.22	7.36	20.93	57.79	88.66	24 inch	0.012	1,590.23	1,585.30	0.055606	1,602.70	1,592.00	1,591.87	1,587.22	16.92
P702C	214,328	4.22	7.45	20.93	34.58	15.07	24 inch	0.012	1,585.30	1,585.00	0.019907	1,592.00	1,587.00	1,586.94	1,586.35	11.53
P704	6,094	4.22	5.00	0.60	19.84	34.55	18 inch	0.012	1,595.16	1,594.11	0.030391	1,599.53	1,599.74	1,596.28	1,596.28	5.02
P709	6,130	4.22	5.00	0.60	19.91	63.62	24 inch	0.012	1,594.53	1,594.11	0.006602	1,599.54	1,599.74	1,596.28	1,596.28	2.84
P705	12,476	4.22	5.00	1.22	18.46	34.97	18 inch	0.012	1,595.26	1,594.34	0.026308	1,599.64	1,599.83	1,596.44	1,596.44	5.91
P710	17,945	4.22	5.00	1.75	17.72	63.11	24 inch	0.012	1,594.72	1,594.39	0.005229	1,599.64	1,599.87	1,596.48	1,596.47	3.60
P45 (replica)	8,722	4.22	10.00	0.85	311.31	117.00	4 x 2 ft	0.013	1,595.12	1,571.83	0.199017	1,595.52	1,576.33	1,595.23	1,571.87	5.65

© Haestad Methods, Inc.
Stanley Consultants Inc
37 Brookside Road Waterbury, CT 06708 USA +1-203-755-1666

Scenario: Base

Node Report

Label	Area (ft²)	Inlet C	Inlet CA (ft²)	System CA (ft²)	Inlet Tc (min)	System Tc (min)	System Intensity (in/hr)	System Rational Flow (cfs)	Rim Elevation (ft)	Sump Elevation (ft)	Hydraulic Grade Line In (ft)	Hydraulic Grade Line Out (ft)	Headloss Method
Outlet 18+75.0 177.0' Rt				8,068		5.30	4.22	0.79	1,578.45	1,573.00	1,573.00	1,573.00	
CB713 Sta 18+75 50.0' Rt	10,378	0.94	9,732	8,068	5.00	5.00	4.22	0.79	1,604.20	1,582.00	1,582.31	1,582.31	HEC-22 Energy
CB109 ML 1089+34.0 104.0' Rt				28,418		5.34	4.22	2.78	1,576.33	1,571.83	1,571.83	1,571.83	
CB716 21+68.53 50' Rt	22,836	0.95	21,694	28,418	5.00	5.20	4.22	2.78	1,598.17	1,582.50	1,583.12	1,583.08	HEC-22 Energy
CB717 21+10.31 50' Lt	17,451	0.95	16,578	12,462	5.00	5.00	4.22	1.22	1,599.88	1,595.38	1,595.76	1,595.76	HEC-22 Energy
O-6 (replica)				22,767		5.78	4.22	2.22	1,557.00	1,550.30	1,550.30	1,550.30	
32+00 58.0' Rt (replica)	55,539	0.92	51,306	22,767	5.00	5.61	4.22	2.22	1,555.81	1,550.72	1,551.29	1,551.24	HEC-22 Energy
32+00 54.17' Lt (replica)	60,723	0.93	56,708	11,849	5.00	5.00	4.22	1.16	1,555.89	1,551.30	1,551.67	1,551.67	HEC-22 Energy
709 9+64.03 45.58' Lt	6,333	0.93	5,878	6,130	5.00	5.00	4.22	0.60	1,599.12	1,594.53	1,596.28	1,596.28	HEC-22 Energy
Jct702 13+28.11 156.11' Rt				214,328		7.47	4.22	20.93	1,587.00	1,585.00	1,585.00	1,585.00	
Jct02BC 13+35 142.74' Rt				214,328		7.45	4.22	20.93	1,587.30	1,585.30	1,587.22	1,586.94	HEC-22 Energy
Jct707 13+35 54.08' Rt				214,328		7.36	4.22	20.93	1,592.23	1,590.23	1,591.91	1,591.87	HEC-22 Energy
MH702 13+35 17.82' Rt				193,139		7.32	4.22	18.86	1,602.84	1,592.25	1,593.88	1,593.81	HEC-22 Energy
Jct703 10+26.19 15.08' Rt				171,954		6.36	4.22	16.79	1,595.30	1,593.80	1,596.06	1,596.03	HEC-22 Energy
Jct712 10+15.62 14.99' Rt				154,059		6.32	4.22	15.04	1,595.85	1,593.85	1,596.12	1,596.10	HEC-22 Energy
MH714 9+64.03 14.53' Rt				136,399		6.12	4.22	13.32	1,599.74	1,594.11	1,596.28	1,596.27	HEC-22 Energy
Jct705 9+17.02 14.12' Rt				124,175		5.92	4.22	12.13	1,595.84	1,594.34	1,596.44	1,596.42	HEC-22 Energy
Jct710 9+06.97 14.03' Rt				111,699		5.87	4.22	10.91	1,596.39	1,594.39	1,596.47	1,596.46	HEC-22 Energy
MH715 8+49.69 13.52' Rt				93,753		5.70	4.22	9.16	1,600.25	1,594.68	1,596.55	1,596.54	HEC-22 Energy
MH5208 8+49.69 68.89' Lt (exist)				47,687		5.41	4.22	4.66	1,599.40	1,595.10	1,596.69	1,596.65	HEC-22 Energy
MH5207 7+31.98 69.7' Lt (exist)				47,687		5.07	4.22	4.66	1,601.44	1,596.16	1,597.04	1,596.92	HEC-22 Energy
7+31.05 45.58' Lt (exist)	60,057	0.94	56,306	47,687	5.00	5.00	4.22	4.66	1,600.87	1,596.28	1,597.04	1,597.04	HEC-22 Energy
MH701 7+40.01 14.01' Rt				46,066		5.12	4.22	4.50	1,601.65	1,596.88	1,597.74	1,597.63	HEC-22 Energy
CB706 7+40 45.59' Rt	53,156	0.93	49,498	46,066	5.00	5.00	4.22	4.50	1,601.02	1,597.06	1,597.87	1,597.87	HEC-22 Energy
CB708 13+35 50.58' Lt	23,025	0.93	21,486	21,185	5.00	5.00	4.22	2.07	1,602.18	1,597.46	1,597.96	1,597.96	HEC-22 Energy
CB707 13+45 50.58' Rt	23,106	0.93	21,490	21,189	5.00	5.00	4.22	2.07	1,602.29	1,596.92	1,597.42	1,597.42	HEC-22 Energy
CB703 10+26 45.59' Rt	18,888	0.93	17,594	17,895	5.00	5.00	4.22	1.75	1,599.26	1,595.30	1,596.02	1,596.02	HEC-22 Energy
CB712 10+15.5 45.58' Lt	18,687	0.93	17,359	17,660	5.00	5.00	4.22	1.72	1,599.22	1,594.55	1,596.12	1,596.12	HEC-22 Energy
CB704 9+64.03 45.58' Rt	6,564	0.93	6,094	6,094	5.00	5.00	4.22	0.60	1,599.12	1,595.16	1,596.28	1,596.28	HEC-22 Energy
CB705 9+17 45.59' Rt	9,738	0.93	9,045	12,476	5.00	5.00	4.22	1.22	1,599.20	1,595.26	1,596.44	1,596.44	HEC-22 Energy
CB710 9+07 45.58' Lt	10,322	0.93	9,578	17,945	5.00	5.00	4.22	1.75	1,599.24	1,594.72	1,596.48	1,596.48	HEC-22 Energy
CB109 1089+34.0 104' Rt (replica)				8,722		10.34	4.17	0.84	1,576.33	1,571.83	1,571.83	1,571.83	
SC784 22+47.65 48.53' Rt	5,665	0.90	5,098	8,722	10.00	10.00	4.22	0.85	1,595.52	1,595.12	1,595.23	1,595.23	HEC-22 Energy

© Haestad Methods, Inc. Stanley Consultants Inc
37 Brookside Road Waterbury, CT 06708 USA +1-203-755-1666

APPENDIX F

STORM DRAIN DESIGN

McKellips Road Storm Drain

Scenario: Base

Pipe Report

Label	System CA (ft²)	System Intensity (in/hr)	System Flow Time (min)	Total System Flow (cfs)	Full Capacity (cfs)	Length (ft)	Section Size	Mannings n	Upstream Invert Elevation (ft)	Downstream Invert Elevation (ft)	Slope (ft/ft)	Upstream Ground Elevation (ft)	Downstream Ground Elevation (ft)	Hydraulic Grade Line In (ft)	Hydraulic Grade Line Out (ft)	Average Velocity (ft/s)
P1 (replica)	19,818	4.22	5.00	1.94	17.34	89.85	24 inch	0.012	1,555.70	1,555.25	0.005008	1,560.29	1,560.29	1,556.18	1,556.04	3.64
P2 (replica)	40,470	4.22	5.41	3.95	21.99	93.14	24 inch	0.012	1,555.25	1,554.50	0.008052	1,560.29	1,558.00	1,555.95	1,555.07	5.30
P758B	30,376	4.22	5.53	2.97	11.13	10.67	24 inch	0.012	1,573.92	1,573.90	0.002062	1,590.00	1,590.00	1,574.58	1,574.50	3.00
P760	4,417	4.22	5.00	0.43	21.58	26.42	18 inch	0.012	1,585.18	1,584.23	0.035958	1,589.55	1,589.05	1,585.42	1,584.38	4.83
P758	30,376	4.22	5.27	2.97	50.09	133.50	24 inch	0.012	1,579.50	1,573.92	0.041783	1,589.05	1,590.00	1,580.10	1,574.63	8.74
P763	8,104	4.22	5.00	0.79	18.46	25.45	18 inch	0.012	1,585.16	1,584.49	0.026326	1,589.59	1,589.47	1,585.49	1,584.94	5.20
P762	4,955	4.22	5.00	0.48	18.24	26.84	18 inch	0.012	1,585.18	1,584.49	0.025708	1,589.55	1,589.47	1,585.44	1,584.93	4.45
P759	15,574	4.22	5.10	1.52	17.76	36.16	24 inch	0.012	1,584.49	1,584.30	0.005254	1,589.47	1,589.05	1,584.92	1,584.70	3.45
P765A	4,492	4.22	5.00	0.44	276.28	5.55	24 inch	0.012	1,589.26	1,582.21	1.270991	1,594.39	1,595.70	1,589.49	1,582.46	16.12
P765B	4,492	4.22	5.01	0.44	10.96	3.00	24 inch	0.012	1,582.21	1,582.20	0.002000	1,595.70	1,594.08	1,582.46	1,582.43	1.70
P769	28,579	4.15	10.52	2.74	11.54	166.74	24 inch	0.012	1,591.68	1,591.31	0.002219	1,597.64	1,600.70	1,592.35	1,592.14	3.01
P768	38,157	4.03	11.44	3.56	12.28	67.66	24 inch	0.012	1,591.31	1,591.14	0.002513	1,600.70	1,600.78	1,592.07	1,591.99	3.38
P767	47,697	3.98	11.78	4.40	16.00	133.72	24 inch	0.012	1,591.14	1,590.57	0.004263	1,600.78	1,598.31	1,591.88	1,591.44	4.35
P799	3,495	4.22	10.00	0.34	29.72	78.21	24 inch	0.012	1,592.83	1,591.68	0.014704	1,597.50	1,597.64	1,593.03	1,592.36	3.17
P766A	54,200	3.91	12.29	4.91	108.89	87.87	24 inch	0.012	1,590.57	1,573.22	0.197451	1,598.31	1,597.00	1,591.35	1,574.09	17.52
P766B	54,200	3.90	12.37	4.89	10.96	10.00	24 inch	0.012	1,573.22	1,573.20	0.002000	1,597.00	1,597.00	1,574.07	1,573.98	3.39
P797	8,293	4.22	5.00	0.81	12.69	41.04	24 inch	0.012	1,592.02	1,591.91	0.002680	1,596.52	1,596.44	1,592.46	1,592.45	2.26
P798	16,628	4.22	10.00	1.62	12.65	86.29	24 inch	0.012	1,591.91	1,591.68	0.002665	1,596.44	1,597.64	1,592.43	1,592.38	2.77
P50 (replica pipe)	40,855	4.22	5.00	3.99	1,334.36	53.68	24 inch	0.012	1,591.50	0.00	29.647914	1,595.99	0.00	1,592.20	0.08	94.44
P751	143,628	3.31	18.07	11.01	12.18	113.38	24 inch	0.012	1,581.72	1,581.44	0.002470	1,591.94	1,591.63	1,583.22	1,582.96	4.39
P778	126,868	3.33	17.82	9.78	12.11	65.47	24 inch	0.012	1,581.88	1,581.72	0.002444	1,591.36	1,591.94	1,583.50	1,583.41	4.29
P756	9,588	4.22	5.00	0.94	8.05	65.06	18 inch	0.012	1,586.47	1,586.14	0.005000	1,590.93	1,590.87	1,586.83	1,586.49	3.04
P757	59,558	4.22	5.00	5.82	8.00	48.57	18 inch	0.012	1,586.36	1,586.12	0.004941	1,590.82	1,590.72	1,587.31	1,587.05	4.94
P755	35,815	3.40	17.00	2.81	8.02	20.12	18 inch	0.012	1,586.36	1,586.26	0.004970	1,590.20	1,590.72	1,587.00	1,586.87	4.14
P754	102,901	3.39	17.08	8.07	8.06	102.53	18 inch	0.012	1,582.64	1,582.12	0.005023	1,590.72	1,590.87	1,584.36	1,583.84	4.57
P753A	119,509	3.36	17.46	9.29	12.34	39.44	24 inch	0.012	1,582.12	1,582.02	0.002535	1,590.87	1,590.95	1,583.70	1,583.65	4.31
P753B	126,868	3.35	17.61	9.83	12.41	54.63	24 inch	0.012	1,582.02	1,581.88	0.002563	1,590.95	1,591.36	1,583.64	1,583.57	4.38
P752	7,359	4.22	5.00	0.72	156.38	6.95	24 inch	0.012	1,584.85	1,582.02	0.407194	1,590.93	1,590.95	1,585.14	1,583.64	12.62
P750A	167,844	3.28	18.50	12.74	59.16	129.03	24 inch	0.012	1,581.44	1,573.92	0.058281	1,591.63	1,593.00	1,582.72	1,575.38	15.01
P750B	167,844	3.27	18.64	12.69	10.87	10.17	24 inch	0.012	1,573.92	1,573.90	0.001967	1,593.00	1,578.00	1,575.33	1,575.18	4.04
P-58	4,809	4.22	10.02	0.47	11.85	164.12	4 x 2 ft	0.035	1,596.34	1,596.00	0.002090	1,596.98	1,596.00	1,596.54	1,596.08	0.61
P-63	4,809	4.22	10.00	0.47	94.78	7.20	24 inch	0.012	1,597.42	1,596.34	0.149583	1,597.75	1,596.98	1,597.65	1,596.45	7.82
P-61	5,611	4.22	10.00	0.55	88.17	8.50	4 x 2 ft	0.035	1,596.23	1,595.25	0.115706	1,596.75	1,595.25	1,596.32	1,595.31	2.21
P-62	5,611	4.21	10.06	0.55	25.68	13.24	4 x 2 ft	0.035	1,594.66	1,594.53	0.009819	1,595.25	1,594.54	1,594.79	1,594.61	1.04
P772	16,504	4.07	11.13	1.55	17.56	31.16	24 inch	0.012	1,590.72	1,590.56	0.005135	1,600.12	1,601.20	1,591.18	1,591.21	3.45

© Haestad Methods, Inc.

Scenario: Base

Pipe Report

Label	System CA (ft²)	System Intensity (in/hr)	System Flow Time (min)	Total System Flow (cfs)	Full Capacity (cfs)	Length (ft)	Section Size	Mannings n	Upstream Invert Elevation (ft)	Downstream Invert Elevation (ft)	Slope (ft/ft)	Upstream Ground Elevation (ft)	Downstream Ground Elevation (ft)	Hydraulic Grade Line In (ft)	Hydraulic Grade Line Out (ft)	Average Velocity (ft/s)
P771	33,393	4.05	11.28	3.13	17.07	30.90	24 inch	0.012	1,590.56	1,590.41	0.004854	1,601.20	1,600.17	1,591.18	1,591.14	4.14
P774	16,889	4.22	5.26	1.65	12.23	208.75	24 inch	0.012	1,591.08	1,590.56	0.002491	1,595.05	1,601.20	1,591.58	1,591.21	2.72
P773	10,861	4.22	10.00	1.06	13.80	176.66	24 inch	0.012	1,591.28	1,590.72	0.003170	1,595.60	1,600.12	1,591.66	1,591.21	2.60
P770	39,047	4.03	11.41	3.64	25.62	127.18	24 inch	0.012	1,590.41	1,589.02	0.010929	1,600.17	1,596.00	1,591.08	1,589.82	5.78
P776	6,085	4.22	5.00	0.59	9.96	48.29	18 inch	0.012	1,591.45	1,591.08	0.007662	1,595.41	1,595.05	1,591.74	1,591.59	3.10
P775	6,363	4.22	5.00	0.62	8.01	34.34	18 inch	0.012	1,591.25	1,591.08	0.004950	1,595.21	1,595.05	1,591.58	1,591.59	2.69
P195	44,639	3.98	11.77	4.11	106.06	103.20	24 inch	0.012	1,589.02	1,569.69	0.187306	1,596.00	1,576.06	1,589.73	1,569.96	16.31
P-64	5,658	4.22	5.01	0.55	14.15	3.00	24 inch	0.012	1,581.41	1,581.40	0.003333	1,594.33	1,594.33	1,583.40	1,583.40	2.18
P-65	5,658	4.22	5.00	0.55	200.97	12.00	24 inch	0.012	1,589.48	1,581.41	0.672500	1,594.45	1,594.33	1,589.73	1,583.40	13.86

Scenario: Base

Node Report

Label	Area (ft²)	Inlet C	Inlet CA (ft²)	System CA (ft²)	Inlet Tc (min)	System Tc (min)	System Intensity (in/hr)	System Rational Flow (cfs)	Rim Elevation (ft)	Sump Elevation (ft)	Hydraulic Grade Line In (ft)	Hydraulic Grade Line Out (ft)	Headloss Method
O-2				40,470		5.70	4.22	3.95	1,558.00	1,554.50	1,554.50	1,554.50	
54+00.0 45.5' Rt	50,357	0.94	47,231	40,470	5.00	5.41	4.22	3.95	1,560.29	1,555.25	1,556.04	1,555.95	HEC-22 Energy
54+00.0 41.44' Lt	54,056	0.94	50,747	19,818	5.00	5.00	4.22	1.94	1,560.29	1,555.70	1,556.18	1,556.18	HEC-22 Energy
Jct758 76th 11+98.89 155.73' Lt				30,376		5.59	4.22	2.97	1,590.00	1,573.90	1,573.90	1,573.90	
Jct758AB Sta 12+04.60 146.97' Lt				30,376		5.53	4.22	2.97	1,575.92	1,573.92	1,574.63	1,574.58	HEC-22 Energy
CB758 11+80.61 15.58' Lt	10,718	0.90	9,654	30,376	5.00	5.27	4.22	2.97	1,589.05	1,579.50	1,580.12	1,580.10	HEC-22 Energy
CB760 11+54.10 15.58' Lt	4,653	0.92	4,303	4,417	5.00	5.00	4.22	0.43	1,589.55	1,585.18	1,585.42	1,585.42	HEC-22 Energy
CB762 11+54.09 15.58' Rt	5,448	0.91	4,955	4,955	5.00	5.00	4.22	0.48	1,589.14	1,585.18	1,585.44	1,585.44	HEC-22 Energy
CB759 11+80.61 15.58' Rt	2,236	0.88	1,970	15,574	5.00	5.10	4.22	1.52	1,589.05	1,584.49	1,584.93	1,584.92	HEC-22 Energy
CB763 12+05.94 15.58' Rt	9,902	0.87	8,649	8,104	5.00	5.00	4.22	0.79	1,589.17	1,585.16	1,585.49	1,585.49	HEC-22 Energy
Jct765 34+20.22 36.92' Lt (tie into box)				4,492		5.04	4.22	0.44	1,594.08	1,582.20	1,582.20	1,582.20	
Jct765AB				4,492		5.01	4.22	0.44	1,595.70	1,582.21	1,582.46	1,582.46	HEC-22 Energy
CB765 34+27.86 37.30' Lt	6,701	0.95	6,366	4,492	5.00	5.00	4.22	0.44	1,593.89	1,589.26	1,589.49	1,589.49	HEC-22 Energy
Jct766 36+05.0 173.0' Rt				54,200		12.42	3.90	4.89	1,597.00	1,573.20	1,573.20	1,573.20	
Jct766AB				54,200		12.37	3.90	4.89	1,575.22	1,573.22	1,574.09	1,574.07	HEC-22 Energy
CB766 36+45.0 80.14' Rt	7,437	0.87	6,503	54,200	5.00	12.29	3.91	4.91	1,597.87	1,590.57	1,591.44	1,591.35	HEC-22 Energy
CB767 37+70 29.5' Rt	10,128	0.94	9,540	47,697	5.00	11.78	3.98	4.40	1,600.34	1,591.14	1,591.99	1,591.88	HEC-22 Energy
CB768 37+65.0 29.50' Lt	10,082	0.95	9,578	38,157	5.00	11.44	4.03	3.56	1,600.26	1,591.31	1,592.14	1,592.07	HEC-22 Energy
CB769 36+11.0 93.13' Lt	9,332	0.91	8,457	28,579	5.00	10.52	4.15	2.74	1,597.20	1,591.68	1,592.36	1,592.35	HEC-22 Energy
CB799 36+14.0 175.50' Lt	5,575	0.70	3,902	3,495	10.00	10.00	4.22	0.34	1,597.50	1,592.83	1,593.03	1,593.03	HEC-22 Energy
CB798 35+64.62 24.52' Lt	9,433	0.88	8,335	16,628	10.00	10.00	4.22	1.62	1,596.44	1,591.91	1,592.45	1,592.43	HEC-22 Energy
CB797 35+64.62 16.52' Rt	9,401	0.88	8,293	8,293	5.00	5.00	4.22	0.81	1,596.52	1,592.02	1,592.46	1,592.46	HEC-22 Energy
outlet to ditch from scupper				40,855		5.01	4.22	3.99	0.00	0.00	0.00	0.00	
SC 26+80 45.50' Rt	46,281	0.91	42,156	40,855	5.00	5.00	4.22	3.99	1,595.99	1,591.50	1,592.20	1,592.20	HEC-22 Energy
Jct750 33+98.0 158.0' Rt				167,844		18.69	3.26	12.68	1,578.00	1,573.90	1,573.90	1,573.90	
Jct750AB				167,844		18.64	3.27	12.69	1,575.92	1,573.92	1,575.38	1,575.33	HEC-22 Energy
CB750 33+00.0 54.04' Rt	24,754	0.93	23,070	167,844	5.00	18.50	3.28	12.74	1,591.43	1,581.44	1,582.96	1,582.72	HEC-22 Energy
CB751 33+00.0 50.85' Lt	15,973	0.93	14,886	143,628	5.00	18.07	3.31	11.01	1,591.50	1,581.72	1,583.41	1,583.22	HEC-22 Energy
MH778 32+35.69 68.36' Lt				126,868		17.82	3.33	9.78	1,591.36	1,581.88	1,583.57	1,583.50	HEC-22 Energy
Jct752 31+82.29 56.21' Lt				126,868		17.61	3.35	9.83	1,584.02	1,582.02	1,583.64	1,583.64	HEC-22 Energy
CB753 31+44.0 44.28' Lt	7,477	0.94	7,020	119,509	5.00	17.46	3.36	9.29	1,590.45	1,582.12	1,583.74	1,583.70	HEC-22 Energy
CB756 30+79.0 47.03' Lt	10,328	0.93	9,588	9,588	5.00	5.00	4.22	0.94	1,590.51	1,586.47	1,586.83	1,586.83	HEC-22 Energy
CB754 31+37.0 51.73' Rt	8,062	0.93	7,524	102,901	5.00	17.08	3.39	8.07	1,590.30	1,582.64	1,584.41	1,584.36	HEC-22 Energy
CB757 30+89.00 50.76' Rt	62,094	0.94	58,261	59,558	5.00	5.00	4.22	5.82	1,590.40	1,586.36	1,587.31	1,587.31	HEC-22 Energy
CB755 31+37.0 75.0' Rt	19,287	0.70	13,501	35,815	17.00	17.00	3.40	2.81	1,590.20	1,586.36	1,587.00	1,587.00	HEC-22 Energy

© Haestad Methods, Inc.

Scenario: Base

Node Report

Label	Area (ft²)	Inlet C	Inlet CA (ft²)	System CA (ft²)	Inlet Tc (min)	System Tc (min)	System Intensity (in/hr)	System Rational Flow (cfs)	Rim Elevation (ft)	Sump Elevation (ft)	Hydraulic Grade Line In (ft)	Hydraulic Grade Line Out (ft)	Headloss Method
CB752 31+84.0 46.38' Lt	7,899	0.93	7,359	7,359	5.00	5.00	4.22	0.72	1,590.52	1,584.85	1,585.14	1,585.14	HEC-22 Energy
replica outlet2				4,809		14.51	3.62	0.40	1,596.00	1,596.00	1,596.00	1,596.00	
SC783 43+25.02 87.06' Lt	0	0.00	0	4,809	10.00	10.02	4.22	0.47	1,596.98	1,596.34	1,596.54	1,596.54	HEC-22 Energy
SC782 43+34.54 73.58' Lt	6,135	0.91	5,592	4,809	10.00	10.00	4.22	0.47	1,597.75	1,597.42	1,597.65	1,597.65	HEC-22 Energy
replica Outlet3				5,611		10.28	4.18	0.54	1,594.54	1,594.53	1,594.53	1,594.53	
SC781 43+72.43 110.45' Rt	0	0.00	0	5,611	10.00	10.06	4.21	0.55	1,595.25	1,594.66	1,594.79	1,594.79	HEC-22 Energy
SC780 43+75.39 92.97' Rt	7,596	0.90	6,868	5,611	10.00	10.00	4.22	0.55	1,596.75	1,596.23	1,596.32	1,596.32	HEC-22 Energy
O-13				44,639		11.88	3.97	4.10	1,576.06	1,569.69	1,569.69	1,569.69	
CB775 44+22.3 32.89' Lt	7,609	0.89	6,747	6,363	5.00	5.00	4.22	0.62	1,595.21	1,591.25	1,591.58	1,591.58	HEC-22 Energy
MH771 42+25.0 0.0' Rt				33,393		11.28	4.05	3.13	1,601.20	1,590.56	1,591.21	1,591.18	HEC-22 Energy
CB772 42+30.0 29.50' Rt	10,003	0.95	9,503	16,504	5.00	11.13	4.07	1.55	1,599.98	1,590.72	1,591.21	1,591.18	HEC-22 Energy
CB770 42+25.0 29.5' Lt	10,044	0.94	9,458	39,047	5.00	11.41	4.03	3.64	1,600.03	1,590.41	1,591.14	1,591.08	HEC-22 Energy
CB774 44+34.87 0.0' Rt	3,926	0.89	3,478	16,889	5.00	5.26	4.22	1.65	1,595.05	1,591.08	1,591.59	1,591.58	HEC-22 Energy
CB773 43+67 141.95' Rt	13,300	0.82	10,861	10,861	10.00	10.00	4.22	1.06	1,594.53	1,591.28	1,591.66	1,591.66	HEC-22 Energy
CB776 44+17.7 46.17' Rt	7,523	0.89	6,664	6,085	5.00	5.00	4.22	0.59	1,595.41	1,591.45	1,591.74	1,591.74	HEC-22 Energy
CB195 41+49.41 133.13' Lt	6,135	0.91	5,592	44,639	10.00	11.77	3.98	4.11	1,596.00	1,589.02	1,589.82	1,589.73	HEC-22 Energy
CB764 34+18.69 32.52' Rt	8,052	0.95	7,649	5,658	5.00	5.00	4.22	0.55	1,593.95	1,589.48	1,589.73	1,589.73	HEC-22 Energy
34+32.73 27.76' Rt (tie into box)				5,658		5.04	4.22	0.55	1,583.65	1,569.65	1,569.65	1,569.65	
J-9				5,658		5.01	4.22	0.55	1,583.41	1,581.41	1,583.40	1,583.40	HEC-22 Energy

APPENDIX F

STORM DRAIN DESIGN

Brown Road Storm Drain

Scenario: Base

Pipe Report

Label	System CA (acres)	System Intensity (in/hr)	System Flow Time (min)	Total System Flow (cfs)	Full Capacity (cfs)	Length (ft)	Section Size	Mannings n	Upstream Invert Elevation (ft)	Downstream Invert Elevation (ft)	Slope (ft/ft)	Upstream Ground Elevation (ft)	Downstream Ground Elevation (ft)	Hydraulic Grade Line In (ft)	Hydraulic Grade Line Out (ft)	Average Velocity (ft/s)
P851	0.742	4.22	5.00	3.16	17.65	46.98	18 inch	0.012	1,595.63	1,594.50	0.0241	1,599.71	1,599.55	1,596.31	1,596.00	7.56
P850	0.833	4.22	5.00	3.54	18.71	13.73	24 inch	0.012	1,595.13	1,595.05	0.0058	1,599.81	1,599.72	1,597.05	1,597.05	4.58
P853	0.600	4.22	5.00	2.55	17.31	98.17	24 inch	0.012	1,592.28	1,591.79	0.0050	1,596.96	1,596.96	1,592.84	1,592.57	3.94
P852A	1.117	4.22	5.41	4.75	95.38	123.92	24 inch	0.012	1,591.79	1,573.02	0.1515	1,596.96	1,579.00	1,592.56	1,575.01	15.81
P852B	1.117	4.22	5.55	4.75	10.96	10.00	24 inch	0.012	1,573.02	1,573.00	0.0020	1,579.00	1,581.00	1,575.00	1,575.00	3.36
P862	0.482	4.22	5.00	2.05	17.50	68.60	24 inch	0.012	1,593.42	1,593.07	0.0051	1,598.01	1,598.07	1,593.92	1,593.88	3.73
P861	0.968	4.22	5.31	4.12	41.75	131.95	24 inch	0.012	1,593.07	1,589.24	0.0290	1,598.07	1,595.56	1,593.78	1,590.37	8.46
P858A	1.924	4.22	6.25	8.19	76.56	135.45	24 inch	0.012	1,589.24	1,576.02	0.0976	1,595.56	1,581.00	1,590.26	1,578.02	15.89
P858B	1.924	4.22	6.39	8.19	10.95	10.01	24 inch	0.012	1,576.02	1,576.00	0.0020	1,581.00	1,580.00	1,578.01	1,578.00	3.82
P884	0.812	4.22	5.94	3.45	17.40	79.38	24 inch	0.012	1,589.64	1,589.24	0.0050	1,594.78	1,595.56	1,590.29	1,590.34	4.31
P860	0.206	4.22	5.00	0.88	17.26	58.49	24 inch	0.012	1,590.61	1,590.32	0.0050	1,594.00	1,594.91	1,590.93	1,590.78	2.88
P859	0.396	4.22	5.34	1.68	17.34	53.92	24 inch	0.012	1,590.32	1,590.05	0.0050	1,594.91	1,594.69	1,590.77	1,590.63	3.50
P885	0.604	4.22	5.60	2.57	17.28	82.46	24 inch	0.012	1,590.05	1,589.64	0.0050	1,594.69	1,594.78	1,590.61	1,590.36	3.95
P878	0.217	4.22	5.00	0.92	7.93	32.97	18 inch	0.012	1,552.26	1,552.10	0.0049	1,555.25	1,556.01	1,554.00	1,554.00	0.52
P855	0.190	4.22	5.00	0.81	24.34	21.28	24 inch	0.012	1,589.69	1,589.48	0.0099	1,594.27	1,593.86	1,590.12	1,590.13	3.57
P854	0.650	4.22	5.10	2.77	227.61	4.44	24 inch	0.012	1,589.48	1,585.65	0.8626	1,593.86	1,593.75	1,590.06	1,585.86	24.68
P879	0.442	4.22	5.00	1.88	60.08	12.31	24 inch	0.012	1,587.61	1,586.87	0.0601	1,594.19	1,594.40	1,588.86	1,588.87	8.66
P856	0.399	4.22	5.12	1.70	58.78	20.16	24 inch	0.012	1,586.83	1,585.67	0.0575	1,594.23	1,594.41	1,587.28	1,585.92	8.28
P857	0.274	4.22	5.00	1.16	22.80	26.57	24 inch	0.013	1,589.10	1,588.83	0.0102	1,593.72	1,594.23	1,589.47	1,589.14	3.81
P880	0.458	4.22	5.00	1.95	176.34	7.32	24 inch	0.012	1,589.47	1,585.68	0.5178	1,594.05	1,594.20	1,589.95	1,587.68	18.57
P870	0.596	4.22	5.76	2.53	17.28	36.22	24 inch	0.012	1,590.91	1,590.73	0.0050	1,595.96	1,595.54	1,591.46	1,591.43	3.93
P869	0.757	4.22	5.91	3.22	17.45	67.06	24 inch	0.012	1,590.73	1,590.39	0.0051	1,595.54	1,595.51	1,591.36	1,591.39	4.24
P868	0.870	4.22	6.18	3.70	17.58	25.25	24 inch	0.012	1,590.39	1,590.26	0.0051	1,595.51	1,595.17	1,591.38	1,591.39	4.43
P867A	2.024	4.22	6.33	8.61	103.19	74.85	24 inch	0.012	1,590.26	1,576.99	0.1773	1,595.17	1,581.00	1,591.31	1,578.99	19.92
P867B	2.024	4.22	6.39	8.61	10.95	10.01	24 inch	0.012	1,576.99	1,576.97	0.0020	1,581.00	1,581.00	1,578.98	1,578.97	3.86
P871B	0.125	4.22	5.00	0.53	32.93	78.07	24 inch	0.012	1,594.74	1,593.33	0.0181	1,599.35	1,598.28	1,594.99	1,593.75	3.89
P871A	0.334	4.22	5.33	1.42	32.94	133.91	24 inch	0.012	1,593.33	1,590.91	0.0181	1,598.28	1,595.96	1,593.74	1,591.50	5.23
P881	0.208	4.22	5.00	0.89	33.17	46.40	24 inch	0.012	1,594.18	1,593.33	0.0183	1,598.35	1,598.28	1,594.50	1,593.76	4.56
P866	0.281	4.22	5.00	1.20	17.50	68.67	24 inch	0.012	1,596.60	1,596.25	0.0051	1,601.20	1,601.18	1,596.98	1,596.84	3.19
P865	0.556	4.22	5.36	2.37	30.26	179.00	24 inch	0.012	1,596.25	1,593.52	0.0153	1,601.18	1,598.55	1,596.78	1,594.23	5.73
P863	0.119	4.22	5.00	0.51	18.97	53.39	24 inch	0.012	1,593.84	1,593.52	0.0060	1,597.00	1,598.55	1,594.19	1,594.20	2.61
P864B	0.828	4.22	5.88	3.52	32.06	29.79	24 inch	0.012	1,593.52	1,593.01	0.0171	1,598.55	1,598.14	1,594.18	1,593.76	6.71
P864A	1.037	4.22	5.95	4.41	32.15	159.76	24 inch	0.012	1,593.01	1,590.26	0.0172	1,598.14	1,595.17	1,593.75	1,591.40	7.17
P882	0.208	4.22	5.00	0.89	34.32	55.07	24 inch	0.012	1,594.09	1,593.01	0.0196	1,598.26	1,598.14	1,594.41	1,593.76	4.67
P877	1.097	4.22	5.00	4.67	3.79	68.08	15 inch	0.012	1,555.12	1,554.92	0.0029	1,558.70	1,559.23	1,557.69	1,557.39	3.80

Scenario: Base

Pipe Report

Label	System CA (acres)	System Intensity (in/hr)	System Flow Time (min)	Total System Flow (cfs)	Full Capacity (cfs)	Length (ft)	Section Size	Mannings n	Upstream Invert Elevation (ft)	Downstream Invert Elevation (ft)	Slope (ft/ft)	Upstream Ground Elevation (ft)	Downstream Ground Elevation (ft)	Hydraulic Grade Line In (ft)	Hydraulic Grade Line Out (ft)	Average Velocity (ft/s)
P876	1.124	4.22	5.00	4.78	3.83	30.08	15 inch	0.012	1,556.22	1,556.13	0.0030	1,558.70	1,559.23	1,557.53	1,557.39	3.90
P883	2.221	4.22	5.30	9.45	13.27	280.11	18 inch	0.012	1,554.67	1,550.86	0.0136	1,559.23	1,556.58	1,556.93	1,555.00	5.35

Scenario: Base

Node Report

Label	Area (acres)	Inlet C	Inlet CA (acres)	System CA (acres)	Inlet Tc (min)	System Tc (min)	System Intensity (in/hr)	System Rational Flow (cfs)	Rim Elevation (ft)	Sump Elevation (ft)	Hydraulic Grade Line In (ft)	Hydraulic Grade Line Out (ft)	Headloss Method
Jct851 14+36.1 47.5' Lt				0.742		5.10	4.22	3.16	1,599.55	1,594.50	1,594.50	1,594.50	
CB851 13+90 45.58' Lt	0.830	0.93	0.775	0.742	5.00	5.00	4.22	3.16	1,600.13	1,595.63	1,596.31	1,596.31	HEC-22 Energy
Jct850 13+83 49' Rt				0.833		5.05	4.22	3.54	1,599.72	1,595.05	1,595.05	1,595.05	
CB850 13+69 45.58' Rt	0.985	0.91	0.895	0.833	5.00	5.00	4.22	3.54	1,600.23	1,595.13	1,597.05	1,597.05	HEC-22 Energy
Jct852 17+90 183' Lt				1.117		5.60	4.22	4.75	1,581.00	1,573.00	1,573.00	1,573.00	
Jct852AB				1.117		5.55	4.22	4.75	1,579.00	1,573.02	1,575.01	1,575.00	HEC-22 Energy
CB852 17+90 45.58' Lt	0.528	0.93	0.491	1.117	5.00	5.41	4.22	4.75	1,597.38	1,591.79	1,592.57	1,592.56	HEC-22 Energy
CB853 17+90 45.58' Rt	0.604	0.93	0.561	0.600	5.00	5.00	4.22	2.55	1,597.38	1,592.28	1,592.84	1,592.84	HEC-22 Energy
Jct858 23+94.35 223.46' Rt				1.924		6.44	4.22	8.19	1,580.00	1,576.00	1,576.00	1,576.00	
Jct858AB				1.924		6.39	4.22	8.19	1,581.00	1,576.02	1,578.02	1,578.01	HEC-22 Energy
CB858 24+38.73 80.2' Rt	0.129	0.91	0.118	1.924	5.00	6.25	4.22	8.19	1,595.56	1,589.24	1,590.34	1,590.26	HEC-22 Energy
CB861 25+60 29.5' Rt	0.545	0.94	0.513	0.968	5.00	5.31	4.22	4.12	1,598.50	1,593.07	1,593.88	1,593.78	HEC-22 Energy
CB862 25+55 29.5' Lt	0.539	0.94	0.509	0.482	5.00	5.00	4.22	2.05	1,598.44	1,593.42	1,593.92	1,593.92	HEC-22 Energy
CB884 23+73.5 39.29' Rt	0.219	0.95	0.208	0.812	5.00	5.94	4.22	3.45	1,594.97	1,589.64	1,590.36	1,590.29	HEC-22 Energy
CB885 23+75.66 49.36' Lt	0.219	0.95	0.208	0.604	5.00	5.60	4.22	2.57	1,594.88	1,590.05	1,590.63	1,590.61	HEC-22 Energy
CB859 23+96.07 92.43' Lt	0.182	0.89	0.163	0.396	5.00	5.34	4.22	1.68	1,595.34	1,590.32	1,590.78	1,590.77	HEC-22 Energy
CB860 24+10 154' Lt	0.295	0.70	0.206	0.206	5.00	5.00	4.22	0.88	1,594.00	1,590.61	1,590.93	1,590.93	HEC-22 Energy
MH EXST 53+29.79 19.61' Lt				0.217		6.05	4.22	0.92	1,556.01	1,552.10	1,554.00	1,554.00	
CB878 53+15 45.58' Lt	0.561	0.93	0.521	0.217	5.00	5.00	4.22	0.92	1,555.67	1,552.26	1,554.00	1,554.00	HEC-22 Energy
Jct854 22+04.41 54.74' Rt				0.650		5.10	4.22	2.77	1,593.75	1,585.65	1,585.65	1,585.65	
CB855 22+00 30.82' Rt	0.200	0.95	0.190	0.190	5.00	5.00	4.22	0.81	1,594.85	1,589.69	1,590.12	1,590.12	HEC-22 Energy
CB854 22+00 49.88' Rt	0.446	0.95	0.424	0.650	5.00	5.10	4.22	2.77	1,594.29	1,589.48	1,590.13	1,590.06	HEC-22 Energy
CB879 21+31 47.82' Rt	0.488	0.93	0.454	0.442	5.00	5.00	4.22	1.88	1,594.62	1,587.61	1,588.86	1,588.86	HEC-22 Energy
Jct879 21+43.26 52.76' Rt				0.442		5.02	4.22	1.88	1,594.40	1,586.87	1,586.87	1,586.87	
CB857 22+00 56.88' Lt	0.275	0.93	0.257	0.274	5.00	5.00	4.22	1.16	1,594.15	1,589.10	1,589.47	1,589.47	HEC-22 Energy
CB856 22+00 32.56' Lt	0.132	0.95	0.125	0.399	5.00	5.12	4.22	1.70	1,594.81	1,586.83	1,587.33	1,587.28	HEC-22 Energy
Jct856 21+81.93 26.04' Lt				0.399		5.16	4.22	1.70	1,594.41	1,585.67	1,585.67	1,585.67	
Jct880 21+48.33 57.09' Lt				0.458		5.01	4.22	1.95	1,594.20	1,585.68	1,585.68	1,585.68	
CB880 21+41 51.93' Lt	0.503	0.93	0.470	0.458	5.00	5.00	4.22	1.95	1,594.48	1,589.47	1,589.95	1,589.95	HEC-22 Energy
CB882 35+34 38.63' Rt	0.219	0.95	0.208	0.208	5.00	5.00	4.22	0.89	1,598.40	1,594.09	1,594.41	1,594.41	HEC-22 Energy
Jct867 37+13.49 142.88' Rt				2.024		6.43	4.22	8.61	1,581.00	1,576.97	1,576.97	1,576.97	
Jct867AB				2.024		6.39	4.22	8.61	1,581.00	1,576.99	1,578.99	1,578.98	HEC-22 Energy
CB867 36+98 54.54' Rt	0.136	0.95	0.129	2.024	5.00	6.33	4.22	8.61	1,595.60	1,590.26	1,591.39	1,591.31	HEC-22 Energy
CB868 36+98 31.71' Rt	0.136	0.95	0.129	0.870	5.00	6.18	4.22	3.70	1,595.93	1,590.39	1,591.39	1,591.38	HEC-22 Energy
CB869 36+98 30.35' Lt	0.181	0.95	0.172	0.757	5.00	5.91	4.22	3.22	1,595.97	1,590.73	1,591.43	1,591.36	HEC-22 Energy

Scenario: Base

Node Report

Label	Area (acres)	Inlet C	Inlet CA (acres)	System CA (acres)	Inlet Tc (min)	System Tc (min)	System Intensity (in/hr)	System Rational Flow (cfs)	Rim Elevation (ft)	Sump Elevation (ft)	Hydraulic Grade Line In (ft)	Hydraulic Grade Line Out (ft)	Headloss Method
CB870 36+70 51.1' Lt	0.297	0.93	0.275	0.596	5.00	5.76	4.22	2.53	1,596.39	1,590.91	1,591.50	1,591.46	HEC-22 Energy
CB871 34+60 79.85' Lt	0.138	0.90	0.125	0.125	5.00	5.00	4.22	0.53	1,599.85	1,594.74	1,594.99	1,594.99	HEC-22 Energy
Jct881 35+34 30.63' Lt				0.334		5.33	4.22	1.42	1,598.28	1,593.33	1,593.75	1,593.74	HEC-22 Energy
CB881 35+34 30.63' Lt	0.219	0.95	0.208	0.208	5.00	5.00	4.22	0.89	1,598.54	1,594.18	1,594.50	1,594.50	HEC-22 Energy
Jct882 35+41.23 90.22' Rt				1.037		5.95	4.22	4.41	1,598.14	1,593.01	1,593.76	1,593.75	HEC-22 Energy
CB864 35+12 91.18' Rt	0.167	0.91	0.152	0.828	5.00	5.88	4.22	3.52	1,598.98	1,593.52	1,594.20	1,594.18	HEC-22 Energy
CB865 33+44 29.5' Rt	0.290	0.95	0.276	0.556	5.00	5.36	4.22	2.37	1,601.61	1,596.25	1,596.84	1,596.78	HEC-22 Energy
CB866 33+38 29.5' Lt	0.300	0.94	0.282	0.281	5.00	5.00	4.22	1.20	1,601.62	1,596.60	1,596.98	1,596.98	HEC-22 Energy
CB863 35+00 148' Rt	0.170	0.70	0.119	0.119	5.00	5.00	4.22	0.51	1,597.00	1,593.84	1,594.19	1,594.19	HEC-22 Energy
CB876 49+50 45.58' Lt	1.744	0.94	1.635	1.124	5.00	5.00	4.22	4.78	1,559.12	1,556.22	1,557.53	1,557.53	HEC-22 Energy
MH883 49+50 19' Lt				2.221		5.30	4.22	9.45	1,559.23	1,554.67	1,557.39	1,556.93	HEC-22 Energy
CB877 49+50 45.58' Rt	1.675	0.93	1.562	1.097	5.00	5.00	4.22	4.67	1,559.12	1,555.12	1,557.69	1,557.69	HEC-22 Energy
Jct883 52+30.1 19' Lt				2.221		6.17	4.22	9.45	1,556.58	1,550.86	1,555.00	1,555.00	

APPENDIX F

STORM DRAIN DESIGN

Pump Station Outlet Culvert Hydraulics

Pipe 409 - Inlet
(Culvert High Water)

CURRENT DATE: 03-03-2005
CURRENT TIME: 13:07:35

FILE DATE: 03-03-2005
FILE NAME: PSOUT

FHWA CULVERT ANALYSIS
HY-8, VERSION 6.0

CULV NO.	SITE DATA: INLET ELEV. (ft)	SITE DATA: OUTLET ELEV. (ft)	SITE DATA: CULVERT LENGTH (ft)	CULVERT SHAPE, MATERIAL, INLET: BARRELS SHAPE MATERIAL	SPAN (ft)	RISE (ft)	MANNING n	INLET TYPE
1	1581.58	1570.50	244.25	1 RCP	7.50	7.50	.012	CONVENTIONAL
2								
3								
4								
5								
6								

SUMMARY OF CULVERT FLOWS (cfs) FILE: PSOUT DATE: 03-03-2005

ELEV (ft)	TOTAL	1	2	3	4	5	6	ROADWAY	ITR
1581.58	0.0	0.0	0.0	0.0	0.0	0.0	0.0	0.00	0
1583.18	35.0	0.0	0.0	0.0	0.0	0.0	0.0	0.00	0
1584.13	70.0	0.0	0.0	0.0	0.0	0.0	0.0	0.00	0
1584.94	105.0	0.0	0.0	0.0	0.0	0.0	0.0	0.00	0
1585.66	140.0	0.0	0.0	0.0	0.0	0.0	0.0	0.00	0
1586.29	175.0	0.0	0.0	0.0	0.0	0.0	0.0	0.00	0
1586.86	210.0	0.0	0.0	0.0	0.0	0.0	0.0	0.00	0
1587.40	245.0	0.0	0.0	0.0	0.0	0.0	0.0	0.00	0
1587.92	280.0	0.0	0.0	0.0	0.0	0.0	0.0	0.00	0
1588.21	300.0 Q50	0.0	0.0	0.0	0.0	0.0	0.0	0.00	0
1588.96	350.0	0.0	0.0	0.0	0.0	0.0	0.0	0.00	0
0.00	0.0	0.0	0.0	0.0	0.0	0.0	0.0	OVERTOPPING	

SUMMARY OF ITERATIVE SOLUTION ERRORS FILE: PSOUT DATE: 03-03-2005

HEAD ELEV (ft)	HEAD ERROR (ft)	TOTAL FLOW (cfs)	FLOW ERROR (cfs)	% FLOW ERROR
1581.58	0.000	0.00	0.00	0.00
1583.18	0.000	35.00	0.00	0.00
1584.13	0.000	70.00	0.00	0.00
1584.94	0.000	105.00	0.00	0.00
1585.66	0.000	140.00	0.00	0.00
1586.29	0.000	175.00	0.00	0.00
1586.86	0.000	210.00	0.00	0.00
1587.40	0.000	245.00	0.00	0.00
1587.92	0.000	280.00	0.00	0.00
1588.21	0.000	300.00	0.00	0.00
1588.96	0.000	350.00	0.00	0.00

<1> TOLERANCE (ft) = 0.010 <2> TOLERANCE (%) = 1.000

CURRENT DATE: 03-03-2005 FILE DATE: 03-03-2005
CURRENT TIME: 13:07:35 FILE NAME: PSOUT

PERFORMANCE CURVE FOR CULVERT 1 - 1(7.50 (ft) BY 7.50 (ft)) RCP

DIS-CHARGE FLOW (cfs)	HEAD-WATER ELEV. (ft)	INLET CONTROL DEPTH (ft)	OUTLET CONTROL DEPTH (ft)	FLOW TYPE <F4>	NORMAL DEPTH (ft)	CRIT. DEPTH (ft)	OUTLET DEPTH (ft)	TW DEPTH (ft)	OUTLET VEL. (fps)	TW VEL. (fps)
0.00	1581.58	0.00	-11.08	0-NF	0.00	0.00	0.00	0.00	0.00	0.00
35.00	1583.18	1.60	-6.58	1-S2n	0.71	1.46	0.56	1.71	16.30	1.59
70.00	1584.13	2.55	-6.22	1-S2n	0.96	2.07	1.02	2.49	18.79	1.95
105.00	1584.94	3.36	-5.88	1-S2n	1.18	2.56	1.26	3.08	21.02	2.18
140.00	1585.66	4.08	-5.53	1-S2n	1.40	3.00	1.50	3.57	22.33	2.36
175.00	1586.29	4.71	-5.18	1-S2n	1.58	3.35	1.69	3.99	23.32	2.51
210.00	1586.86	5.28	-4.80	1-S2n	1.71	3.70	1.87	4.37	24.20	2.63
245.00	1587.40	5.82	-4.40	1-S2n	1.85	4.00	2.05	4.72	24.87	2.74
280.00	1587.92	6.34	-3.97	1-S2n	1.99	4.29	2.23	5.04	25.37	2.84
300.00	1588.21	6.63	-3.71	1-S2n	2.06	4.46	2.32	5.21	25.76	2.89
350.00	1588.96	7.38	-3.03	1-S2n	2.26	4.82	2.52	5.61	26.77	3.01

El. inlet face invert 1581.58 ft El. outlet invert 1570.50 ft
El. inlet throat invert 0.00 ft El. inlet crest 0.00 ft

```
*     * SITE DATA ***** CULVERT INVERT **************
      INLET STATION                              0.00 ft
      INLET ELEVATION                         1581.58 ft
      OUTLET STATION                           244.00 ft
      OUTLET ELEVATION                        1570.50 ft
      NUMBER OF BARRELS                             1
      SLOPE (V/H)                              0.0454
      CULVERT LENGTH ALONG SLOPE              244.25 ft

***** CULVERT DATA SUMMARY ************************
      BARREL SHAPE          CIRCULAR
      BARREL DIAMETER         7.50 ft
      BARREL MATERIAL       CONCRETE
      BARREL MANNING'S n    0.012
      INLET TYPE            CONVENTIONAL
      INLET EDGE AND WALL   SQUARE EDGE WITH HEADWALL
      INLET DEPRESSION      NONE
```

CURRENT DATE: 03-03-2005
CURRENT TIME: 13:07:35

FILE DATE: 03-03-2005
FILE NAME: PSOUT

TAILWATER

******* REGULAR CHANNEL CROSS SECTION **********

BOTTOM WIDTH	9.50 ft
SIDE SLOPE H/V (X:1)	2.0
CHANNEL SLOPE V/H (ft/ft)	0.001
MANNING'S n (.01-0.1)	0.035
CHANNEL INVERT ELEVATION	1570.50 ft
CULVERT NO.1 OUTLET INVERT ELEVATION	1570.50 ft

******* UNIFORM FLOW RATING CURVE FOR DOWNSTREAM CHANNEL

FLOW (cfs)	W.S.E. (ft)	FROUDE NUMBER	DEPTH (ft)	VEL. (f/s)	SHEAR (psf)
0.00	1570.50	0.000	0.00	0.00	0.00
35.00	1572.21	0.214	1.71	1.59	0.11
70.00	1572.99	0.218	2.49	1.95	0.16
105.00	1573.58	0.219	3.08	2.18	0.19
140.00	1574.07	0.220	3.57	2.36	0.22
175.00	1574.49	0.221	3.99	2.51	0.25
210.00	1574.87	0.222	4.37	2.63	0.27
245.00	1575.22	0.222	4.72	2.74	0.29
280.00	1575.54	0.223	5.04	2.84	0.31
300.00	1575.71	0.223	5.21	2.89	0.32
350.00	1576.11	0.224	5.61	3.01	0.35

ROADWAY OVERTOPPING DATA

ROADWAY SURFACE	PAVED
EMBANKMENT TOP WIDTH	1.00 ft
CREST LENGTH	10.00 ft
OVERTOPPING CREST ELEVATION	1594.00 ft

Pipe 409 Outlet

(Culvert Energy Dissipater)

CURRENT DATE: 03-03-2005
CURRENT TIME: 13:33:40

FILE DATE: 03-03-2005
FILE NAME: PSOUT

FHWA CULVERT ANALYSIS
HY-8, VERSION 6.0

CULV NO.	SITE DATA: INLET ELEV. (ft)	SITE DATA: OUTLET ELEV. (ft)	SITE DATA: CULVERT LENGTH (ft)	CULVERT SHAPE, MATERIAL, INLET: BARRELS SHAPE MATERIAL	SPAN (ft)	RISE (ft)	MANNING n	INLET TYPE
1	1571.00	1570.50	100.00	1 RCP	7.50	7.50	.012	CONVENTIONAL
2								
3								
4								
5								
6								

SUMMARY OF CULVERT FLOWS (cfs) FILE: PSOUT DATE: 03-03-2005

ELEV (ft)	TOTAL	1	2	3	4	5	6	ROADWAY	ITR
1571.00	0.0	0.0	0.0	0.0	0.0	0.0	0.0	0.00	0
1574.99	35.0	0.0	0.0	0.0	0.0	0.0	0.0	0.00	0
1575.35	70.0	0.0	0.0	0.0	0.0	0.0	0.0	0.00	0
1575.68	105.0	0.0	0.0	0.0	0.0	0.0	0.0	0.00	0
1576.01	140.0	0.0	0.0	0.0	0.0	0.0	0.0	0.00	0
1576.33	175.0	0.0	0.0	0.0	0.0	0.0	0.0	0.00	0
1576.69	210.0	0.0	0.0	0.0	0.0	0.0	0.0	0.00	0
1577.05	245.0	0.0	0.0	0.0	0.0	0.0	0.0	0.00	0
1577.49	280.0	0.0	0.0	0.0	0.0	0.0	0.0	0.00	0
1577.79	300.0	0.0	0.0	0.0	0.0	0.0	0.0	0.00	0
1578.53	350.0	0.0	0.0	0.0	0.0	0.0	0.0	0.00	0
0.00	0.0	0.0	0.0	0.0	0.0	0.0	0.0	OVERTOPPING	

SUMMARY OF ITERATIVE SOLUTION ERRORS FILE: PSOUT DATE: 03-03-2005

HEAD ELEV (ft)	HEAD ERROR (ft)	TOTAL FLOW (cfs)	FLOW ERROR (cfs)	% FLOW ERROR
1571.00	0.000	0.00	0.00	0.00
1574.99	0.000	35.00	0.00	0.00
1575.35	0.000	70.00	0.00	0.00
1575.68	0.000	105.00	0.00	0.00
1576.01	0.000	140.00	0.00	0.00
1576.33	0.000	175.00	0.00	0.00
1576.69	0.000	210.00	0.00	0.00
1577.05	0.000	245.00	0.00	0.00
1577.49	0.000	280.00	0.00	0.00
1577.79	0.000	300.00	0.00	0.00
1578.53	0.000	350.00	0.00	0.00

<1> TOLERANCE (ft) = 0.010 <2> TOLERANCE (%) = 1.000

CURRENT DATE: 03-03-2005 FILE DATE: 03-03-2005
CURRENT TIME: 13:33:40 FILE NAME: PSOUT

PERFORMANCE CURVE FOR CULVERT 1 - 1(7.50 (ft) BY 7.50 (ft)) RCP

DIS-CHARGE FLOW (cfs)	HEAD-WATER ELEV. (ft)	INLET CONTROL DEPTH (ft)	OUTLET CONTROL DEPTH (ft)	FLOW TYPE <F4>	NORMAL DEPTH (ft)	CRIT. DEPTH (ft)	OUTLET DEPTH (ft)	TW DEPTH (ft)	OUTLET VEL. (fps)	TW VEL. (fps)
0.00	1571.00	0.00	-0.50	0-NF	0.00	0.00	0.00	0.00	0.00	0.00
35.00	1575.00	1.75	4.00	1-S2n	1.18	1.46	1.18	1.71	7.60	1.59
70.00	1575.35	2.70	4.35	1-S2n	1.72	2.07	1.78	2.49	8.61	1.95
105.00	1575.68	3.51	4.68	1-S2n	2.13	2.56	2.22	3.08	9.58	2.18
140.00	1576.01	4.23	5.01	1-S2n	2.47	3.00	2.59	3.57	10.32	2.36
175.00	1576.33	4.86	5.33	1-S2n	2.79	3.35	2.93	3.99	10.92	2.51
210.00	1576.69	5.44	5.69	1-S2n	3.09	3.70	3.25	4.37	11.43	2.63
245.00	1577.05	5.97	6.05	1-S2n	3.36	4.00	3.55	4.72	11.91	2.74
280.00	1577.49	6.49	6.44	1-S2n	3.64	4.29	3.83	5.04	12.33	2.84
300.00	1577.79	6.79	6.68	1-S2n	3.79	4.46	3.99	5.21	12.56	2.89
350.00	1578.53	7.53	7.30	1-S2n	4.16	4.82	4.36	5.61	13.14	3.01

El. inlet face invert 1571.00 ft El. outlet invert 1570.50 ft
El. inlet throat invert 0.00 ft El. inlet crest 0.00 ft

```
*     * SITE DATA ***** CULVERT INVERT **************
      INLET STATION                              0.00 ft
      INLET ELEVATION                         1571.00 ft
      OUTLET STATION                           100.00 ft
      OUTLET ELEVATION                        1570.50 ft
      NUMBER OF BARRELS                             1
      SLOPE (V/H)                              0.0050
      CULVERT LENGTH ALONG SLOPE              100.00 ft

***** CULVERT DATA SUMMARY ************************
      BARREL SHAPE          CIRCULAR
      BARREL DIAMETER         7.50 ft
      BARREL MATERIAL       CONCRETE
      BARREL MANNING'S n    0.012
      INLET TYPE            CONVENTIONAL
      INLET EDGE AND WALL   SQUARE EDGE WITH HEADWALL
      INLET DEPRESSION      NONE
```

CURRENT DATE: 03-03-2005
CURRENT TIME: 13:33:40

FILE DATE: 03-03-2005
FILE NAME: PSOUT

TAILWATER

******* REGULAR CHANNEL CROSS SECTION ****************

BOTTOM WIDTH	9.50 ft
SIDE SLOPE H/V (X:1)	2.0
CHANNEL SLOPE V/H (ft/ft)	0.001
MANNING'S n (.01-0.1)	0.035
CHANNEL INVERT ELEVATION	1570.50 ft
CULVERT NO.1 OUTLET INVERT ELEVATION	1570.50 ft

******* UNIFORM FLOW RATING CURVE FOR DOWNSTREAM CHANNEL

FLOW (cfs)	W.S.E. (ft)	FROUDE NUMBER	DEPTH (ft)	VEL. (f/s)	SHEAR (psf)
0.00	1570.50	0.000	0.00	0.00	0.00
35.00	1572.21	0.214	1.71	1.59	0.11
70.00	1572.99	0.218	2.49	1.95	0.16
105.00	1573.58	0.219	3.08	2.18	0.19
140.00	1574.07	0.220	3.57	2.36	0.22
175.00	1574.49	0.221	3.99	2.51	0.25
210.00	1574.87	0.222	4.37	2.63	0.27
245.00	1575.22	0.222	4.72	2.74	0.29
280.00	1575.54	0.223	5.04	2.84	0.31
300.00	1575.71	0.223	5.21	2.89	0.32
350.00	1576.11	0.224	5.61	3.01	0.35

ROADWAY OVERTOPPING DATA

ROADWAY SURFACE	PAVED
EMBANKMENT TOP WIDTH	1.00 ft
CREST LENGTH	10.00 ft
OVERTOPPING CREST ELEVATION	1594.00 ft

FHWA CULVERT ANALYSIS, HY-8, VERSION 6.0

CURRENT DATE	CURRENT TIME	FILE NAME	FILE DATE
03-03-2005	13:32:57	PSOUT	03-03-2005

CULVERT AND CHANNEL DATA

CULVERT NO. 1		DOWNSTREAM CHANNEL	
CULVERT TYPE:	7.500 ft CIRCULAR	CHANNEL TYPE :	TRAPEZOIDAL
CULVERT LENGTH	= 100.001 ft	BOTTOM WIDTH	= 9.500 ft
NO. OF BARRELS	= 1.0	TAILWATER DEPTH	= 5.206 ft
FLOW PER BARREL	= 300.000 cfs	TOTAL DESIGN FLOW	= 300.000 cfs
INVERT ELEVATION	= 1570.500 ft	BOTTOM ELEVATION	= 1570.500 ft
OUTLET VELOCITY	= 12.560 fps	NORMAL VELOCITY	= 2.894 fps
OUTLET DEPTH	= 3.990 ft		

RIPRAP STILLING BASIN -- FINAL DESIGN

THE LENGTH OF THE BASIN	=	34.353 ft
THE LENGTH OF THE POOL	=	22.902 ft
THE LENGTH OF THE APRON	=	11.451 ft
THE WIDTH OF THE BASIN AT THE OUTLET	=	9.500 ft
THE DEPTH OF POOL BELOW CULVERT INVERT	=	2.290 ft
THE THICKNESS OF THE RIPRAP ON THE APRON	=	4.000 ft
THE THICKNESS OF THE RIPRAP ON THE REST OF THE BASIN	=	3.000 ft
THE BASIN OUTLET VELOCITY	=	12.157 fps
THE DEPTH OF FLOW AT BASIN OUTLET	=	2.598 ft

APPENDIX F

STORM DRAIN DESIGN

ADOT/FCDMC Storm Water Quality Correspondence

Flood Control District
of Maricopa County

Board of Directors
Fulton Brock, District 1
Don Stapley, District 2
Andrew Kunasek, District 3
Max Wilson, District 4
Mary Rose Wilcox, District 5

www.fcd.maricopa.gov
3301 West Durango Street
Phoenix, Arizona 85009
Phone: 602-506-1501
Fax: 602-506-4601
TDD: 602-506-5897

February 9, 2005

RECEIVED

VALLEY PROJECT MANAGEMENT

Joseph W. Warren, P.E.
Arizona Department of Transportation
Project Manager
Valley Project Management
205 S. 17th Ave., MD 614E
Phoenix, AZ 85007

RE: Red Mountain Freeway, Power Road to University Drive Section, Stormwater Best Management Practices (PCN 300.02.01)

Dear Mr. Warren:

This letter is in response to the Arizona Department of Transportation's (ADOT's) inquiry regarding stormwater best management practices to the Flood Control District of Maricopa County (District) in a letter dated December 6, 2004. The District's response and position are as follows:

As ADOT is aware, stormwater quality concerns have been a national issue since the Clean Water Act was passed in 1972. ADOT were in fact a permittee under Phase I of the federal National Pollutant Discharge Elimination System (NPDES permit # AZS000018) and were required to submit a renewal permit application prior to the expiry date on permit (AZS000018) and most recently has been required through a consent decree with ADEQ to submit a statewide stormwater management plan.

On March 10, 2003, smaller cities and urbanized County areas (including Maricopa County which is inclusive of the District) were required to obtain AZPDES permits for their municipal separate storm sewer systems. To carry out the District's water quality program Arizona Revised Statute 48-3622 allows the District to make reasonable conditions for and restrictions on discharges entering or connecting to District structures. This statute requires those desiring to connect to the District system to get permission from the District. ADOT will require a right of way permit from the District to construct portions of the freeway in the vicinity of the Spook Hill FRS. Since 1999, the District has imposed first flush as a minimum standard/requirement upon any entity connecting to a District structure.

In the Intergovernmental Agreement for the Project ADOT agrees to abide by ADOT's NPDES/AZPDES permit and to hold the District harmless for environmental claims. Because of those provisions the District will accept the proposed Best Management Practices (BMPs) (with some modifications) as outlined in your letter (dated December 6, 2004) as sufficient at this point in time. It has always been the District's contention that water quality impacting District property and structures needs to be addressed by utilizing BMPs to the Maximum Extent Possible (MEP). We do however, want to put ADOT on notice that they will solely be responsible and held liable for any water quality concerns associated with the highway runoff if such runoff is ever determined to be causing or contributing to a violation of water quality standards.

The following are the modifications requested:

1) The lines discharging directly to the freeway (as outlined in comment 67; February 1, 2005 letter to ADOT 60% submittal) must be modified to either direct flow to the pump station or else pretreated prior to discharge via a media filtration type basket or BMP device to clean up the water prior to discharge.

2) Further clarification on how the pump station functions if the pump station is shut down to contain a spill. This information can be contained in ADOT's Emergency Action Plan for the freeway segment within the Spook Hill FRS flood pool. The District wants to ensure that no hazardous spill material is discharged into the flood pool.

3) Provide a further evaluation of the first flush volume maintained within trunk lines and the box at the pump station. ADOT may in fact already have that volume contained. We are only interested in the onsite volume of the freeway prism (excluding discharge that would be eliminated via cross streets entering into the City of Mesa's storm drain system or some other form of pretreatment). Options in the design of the pump station system could allow for a bypass if first flush is already contained. That way once the main event has passed, a controlled release could allow more specific BMPs to pretreat the water prior to discharge into the flood pool.

The District will allow the discharges in accordance with the ADOT NPDES/AZPDES permit as it is now or as it may be modified in the future by ADEQ including the outlined BMPs and modifications above. However, the District strongly encourages and recommends that ADOT evaluate the following considerations into their design.

1) Consider the possibility that if first flush (or a portion of first flush) is maintained in the pump station storage box and trunk lines that there may be a simple and cost effective solution to filter the water as it is pumped to the flood pool. Various media filtration type devices are available. ADOT may still be able to install a continuous flow separation device at a much cheaper cost (significantly smaller unit) if flows are small enough and gradually released into the flood pool. This would tend to be more of an operations type solution.

2) Considering the fact that ADOT is under permit renegotiations with ADEQ and that ADOT's own permit conditions with ADEQ may change within several months prior to construction, it would be advisable for ADOT to consider a structural solution to stormwater quality entering the District structure. This would be far less costly than retrofitting in the future if a water quality problem was identified.

3) Consider talking to Caltrans and consider BMPs they are utilizing. They are very experienced in BMPs related to highway runoff and have changed their means of doing business substantially due to many lawsuits and consent decrees related to their operations. It would be in ADOT's best interest to protect themselves due to their proximity to the Salt River in this situation. (Caltrans website - http://www.dot.ca.gov/hq/env/stormwater/index.htm).

The District continues to look forward to working with ADOT on addressing water quality issues. If you have any questions or concerns relevant to this response, please do not hesitate to contact Mike Greenslade at 602-506-5426. I will be moving on to a new position at the County Environmental Services Department as the County's Stormwater Program Coordinator effective February 14, 2005.

Yours truly,

Todd G. Williams

Todd G. Williams, M.Sc.
Water Quality Branch Manager

C.c: Michael Greenslade, P.E. – Structures Management Branch
Shelby Brown, CFM – Contracts Branch

Arizona Department of Transportation

Intermodal Transportation Division

206 South Seventeenth Avenue Phoenix, Arizona 85007-3213

Janet Napolitano
Governor

Victor M. Mendez
Director

Michael J. Ortega
State Engineer

December 6, 2004

Todd Williams
Flood Control District of Maricopa County
2801 West Durango Street
Phoenix, AZ 85009-6399

Re: Red Mountain Freeway
Power Road to University Drive Section
Storm Water Best Management Practices

Dear Mr. Williams:

In this letter we would like to address the Flood Control District of Maricopa County's (the District's) water quality concerns regarding the Red Mountain Freeway, Power to University project, by providing specific information on how the Arizona Department of Transportation (ADOT) will implement Best Management Practices (BMP's) on this project. As you know, ADOT has a Municipal Stormwater Permit. One of the responsibilities of maintaining ADOT's permit is to construct all new facilities in compliance with provisions of the permit.

ADOT's action plan for this project will include the following:

1) During the construction phase, the project will be subject to ADEQ's General Permit for Discharge from Construction Activities to Waters of the U.S. The bid documents require the Contractor to obtain and comply with the Permit requirements. ADOT's Resident Engineer will include this as a point of discussion at weekly construction meetings.

2) Once the project is completed, or during interim periods where Construction Permit coverage is not needed, ADOT's Municipal Stormwater Permit (AZS000018) will cover the areas within the ADOT roadway. ADOT will implement a number of Best Management Practices (BMP) to protect storm water quality. The non-structural BMPs include:

   a) Public Outreach and Education – This is a multifaceted program designed to raise public awareness, education, and involvement on environmental quality impacts that have a direct bearing on storm water quality. Most of these programs are managed through ADOT's Communication and Community Partnership Section and are lead by Patricia Powers-Zermano. These programs include:
      a. Website – Within ADOT's main website will be a link to environmental issues and storm water quality measures to raise public awareness.
      b. Clean Air Campaign – ADOT is an official sponsor of this campaign which encourages commuters to "don't drive one in five" and use an alternative means of transportation one day of the week.
      c. Capitol Ride Share Program – Promotes State employees to reduce travel through programs that include rideshare, telecommuting, flexible work schedules, and the use of transit.

d. Adopt-a-Highway Program – Public education and involvement program that reduces litter along Arizona's highways. People and/or organizations are required to remove litter three times a year along designated sections of highways.
e. Storm Water Outreach for Regional Municipalities (STORM) – ADOT has joined this regional group that was established to promote storm water public education efforts within the greater Maricopa County area.

b) Environmental Training for ADOT Construction and Maintenance Staff - ADOT approach on environmental training of construction and maintenance personnel is two-fold. First is the development of standard details and special provisions for BMPs used on construction projects as outlined in the *ADOT Erosion Control and Pollution Control Manual for Highway Design and Construction*, which is currently being updated to incorporate AZPDES construction permit requirements. Second are the training sessions ADOT conducts for their construction and maintenance staff in the area of storm water erosion control and "good housekeeping" procedures on construction sites. Contractors hired by ADOT to perform construction projects are invited to attend these training sessions. ADOT is currently developing new training to incorporate individual and collective responsibilities to the AZPDES program. That training is through ADOT's technical training group lead by Erica Martinez.

c) Highway and Street Sweeping Program – Highway and street sweeping is conducted on a weekly and bi-weekly basis by contractors. Contractors also respond to emergency situations within 30 minutes of being contacted by ADOT. This program is managed by Craig Cornwell from the Phoenix Maintenance District.

d) Debris and Litter Pick-Up – Larger debris is removed manually by ADOT Maintenance personnel and prison work crews to coincide with the highway and street sweeping schedule, or as needed. ADOT has an on-call contract for litter pick up on an as needed basis. Highway locations with higher traffic volumes are scheduled for more frequent pick up. As noted above there is also the Adopt-a-Highway program which helps in this area, as well. This program is managed by Craig Cornwell from the Phoenix Maintenance District.

e) Hazardous Materials Spill Response Team – ADOT has signed a memorandum of understanding (MOU) to follow the State of Arizona Hazardous Materials Response and Recovery Plan. In conjunction with the plan ADOT has created a response team called ALERT (acronym for ADOT Local Emergency Response Team) that responds to all types of emergencies, to include hazardous materials spills. In the event of a hazardous spill the ALERT's duties include containing the spill, coordinate with local fire and police departments, traffic management, and manage the cleanup of the spill. In most cases, the responsible party for the spill is held responsible to contract with a waste management company for cleanup. If the responsible party cannot be identified or does not have the resources necessary for cleanup, ADOT has an on-call contract and funds available to have the spill cleaned up. The ALERT team is managed by Craig Cornwell from the Phoenix Maintenance District.

f) Storm Sewer System and Pump Station Maintenance

a. Storm Sewer Maintenance - Large diameter storm sewers (those large enough to walk through) are inspected on a yearly basis and cleaned as needed. Small diameter sewers are

Arizona Governor's Award for Quality
2001 Award Recipient

self cleaning and are not inspected or cleaned unless necessary. Storm sewer inlets and catch basins are inspected and cleaned on an as needed basis. ADOT's storm sewer system includes three large drainage tunnels (18' to 21' in diameter) which are pumped out and inspected yearly. Sediment and debris are removed as needed. Open channels are inspected annually and cleaned at least once every three years. ADOT has an on-call contract to clean the open channels on an as needed basis. This program is overseen by Craig Cornwell.

b. Pump Station Maintenance - All pump stations are inspected once a week and if it is determined that a pump station requires cleaning, the wells are de-watered and sediment and debris removed. Pump stations have a gas detection system that shuts down the pump station upon detection and sends an alarm signal to maintenance personnel. An on-call waste management company is contacted for cleanup. Pump station maintenance is overseen by John Stepins from the Phoenix Maintenance District.

g) Outfall Inspection - Outfalls on this portion of the Red Mountain Freeway will be included in ADOT's outfall yearly inspection program as required by the permit. If dry weather discharge is found the local municipality is contacted and charged with identifying the source of the discharge. ADOT has no land use authority beyond the highway right-of-way and the local municipalities, with different enabling legislation, do have land use authority, along with enforcement authority. This program is managed by Richard Tafoya from ADOT Central Maintenance.

h) Erosion Control Practices - Ongoing maintenance programs provide permanent erosion control, including soil stabilization, reseeding bare ground, turf renovations, landscape irrigation maintenance, granite erosion control, and landscaping. Inspection and routine maintenance are performed on an as needed basis. ADOT's landscape irrigation system is routinely monitored for malfunctions or leaks and this monitoring provides notification which allows repair crews to respond timely. In addition, ADOT maintains a roadside vegetation management program to control annual weeds that tend to choke out more desirable perennial grasses. The annual weeds provide little if any erosion control while the grasses and other perennial species have extensive root systems that hold soil in place. The landscape management program is overseen by Mark Schalliol from the Phoenix Maintenance District.

3) Project specific structural BMPs providing improvement to the storm water quality include:

a) Pump Station Operation – The configuration of the storage box and wet well captures a certain amount of sediment and debris. The pump station storage box for the Red Mountain Power to University Project is a 1500 foot long 10 ft by 10 ft box with a longitudinal slope of 0.001 ft/ft. This arrangement slows the velocity of flow considerably allowing deposition of sediment and debris. Another BMP feature of the pump station is the inlet bar rack that captures mid to large size floatables in the wet well where they can be removed with the routine maintenance and cleaning activities. The operation of the pump station is also considered a BMP as it holds minor flows in storage below the first float switch ON position. These stored flows are held until District personnel manually start the nuisance pump or main pumps.

In addition, the combustible gas detection system prevents pump start up or shuts down the pump operation and holds these spills at the pump station allowing for proper cleanup.

Arizona Governor's Award for Quality
2001 Award Recipient

b) Storm Sewer System, Box Culvert, hardened pad at Principal Outlet and Signal Butte Stilling Basin – These systems work in conjunction with each other providing a certain amount of storm water storage allowing sediment and debris removal through maintenance activities.

In addition the Department has indicated an interest in implementing a system wide solution to maintain water quality with respect to discharges from the SHFRS. We feel a system solution is needed since not all storm water entering the Buckhorn – Mesa system is pretreated before passing through the SHFRS. We recognize releasing a mixture of pretreated storm water and untreated storm water from the SHFRS is not as effective as treating all storm water passing through the SHFRS system. If ADOT storm water (about 1% of all storm water passing through the SHFRS for a 100 year event) is treated and discharged to the SHFRS but the vast majority of the inflow into the SHFRS is not treated before it enters the SHFRS we will have a mixture of treated and untreated storm water. The benefit of the Department's pretreatment is lost in this case, as well as the benefit of taxpayer dollars spent on the treatment effort. We feel there is a better way to accomplish the treatment goals. As we have briefly discussed, a more effective solution would be to implement a regional treatment solution in the low flow channel and upstream of the Principal Outlet of the SHFRS. We would like to pursue this concept further with the District.

We think this overall approach makes the most sense to achieve water quality goals and seek the District's comments and concurrence with this approach for the Power to University project. If further information is required, please feel free to contact me at (602) 712-8695.
Sincerely,

Joe Warren

JOSEPH W. WARREN
Project Manager
Valley Project Management
205 S. 17th Ave., MD 614E
Phoenix, AZ 85007

cc:
Dan Lance, ADOT
Richard Tafoya, ADOT
Mike Chase, Stanley Consultants

Arizona Governor's Award for Quality
2001 Award Recipient

APPENDIX G

POWER ROAD AND CAP UNDERPASS DETENTION BASIN DESIGN

- **Detention Basin Volumes and Calculations**

APPENDIX G

POWER ROAD AND CAP UNDERPASS DETENTION BASIN DESIGN

Detention Basin Volumes and Calculations

Red Mountain Freeway - Power Road to University Drive
Drainage Basin Runoff & Detention Volumes: SCS Dimensionless Hydrograph

Designed by: RSB Date: 4-7-05
Checked by: _____ Date: _____

ID	Area Paved (ac)	Runoff Coefficient "C"	Area Unpaved (ac)	Runoff Coefficient "C"	Area Total (ac)	Composite "C"	Rational Discharge 10-yr (cfs)	Tc (min)	Tc (hr)	qt_{max}	K
Basin B	6.23	0.95	2.65	0.50	8.88	0.82	30.6	10.0	0.17	1010	0.0303

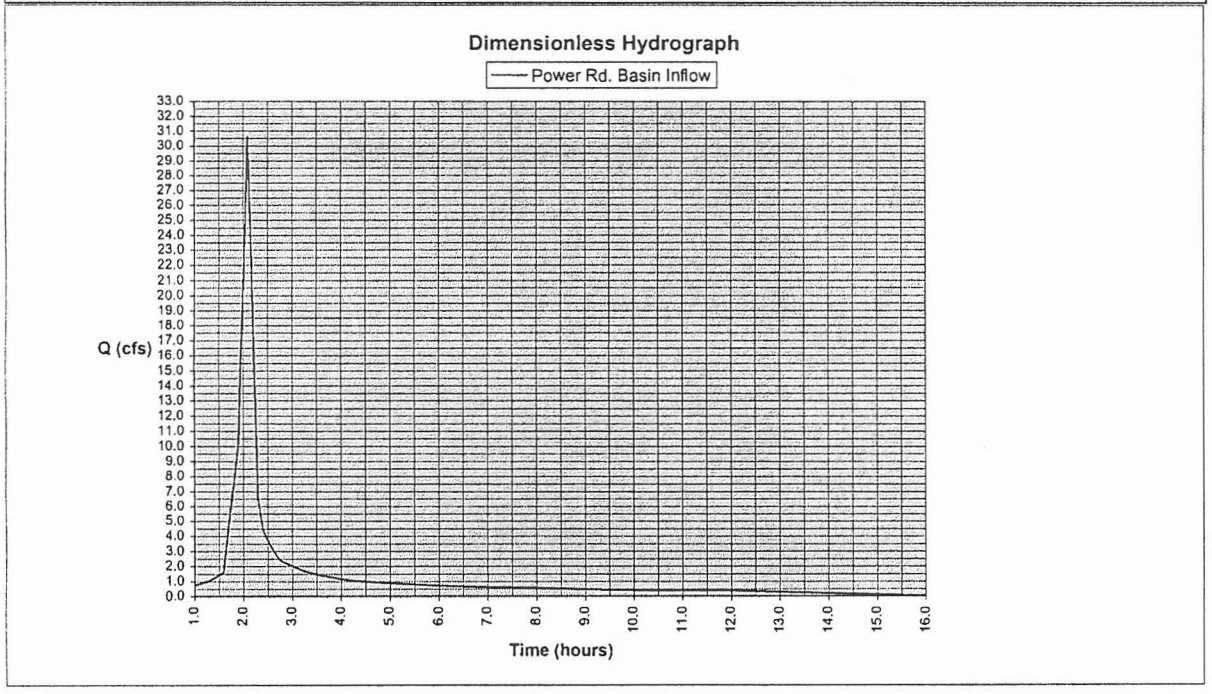

Tabulated Time t (hr)	Dimensionless Hydrograph, qt (cfs/in)	Runoff Hydrograph (cfs) q_i=Kxq_t	Average Discharge (cfs) $(q_i + q_{i+1})/2=q_{avg}$	Volume (cfs-hr) $q_{avg}x(t_{i+1}-t_i)$
	(Tc=0.17)			
1.0	24	0.7	0.9	0.26
1.3	34	1.0	1.3	0.39
1.6	53	1.6	5.9	1.76
1.9	334	10.1	14.8	1.48
2.0	647	19.6	25.1	2.51
2.1	1010	30.6	24.7	2.47
2.2	623	18.9	12.7	1.27
2.3	217	6.6	5.5	0.55
2.4	147	4.4	4.1	0.41
2.5	123	3.7	3.4	0.34
2.6	104	3.1	2.9	0.29
2.7	86	2.6	2.5	0.25
2.8	76	2.3	2.1	0.43
3.0	66	2.0	1.9	0.37
3.2	57	1.7	1.6	0.33
3.4	51	1.5	1.5	0.29
3.6	46	1.4	1.3	0.27
3.8	42	1.3	1.2	0.24
4.0	38	1.2	1.1	0.33
4.3	34	1.0	1.0	0.30
4.6	32	1.0	0.9	0.37
5.0	29	0.9	0.8	0.42
5.5	26	0.8	0.7	0.37
6.0	23	0.7	0.7	0.33
6.5	21	0.6	0.6	0.31
7.0	20	0.6	0.6	0.30
7.5	19	0.6	0.6	0.28
8.0	18	0.5	0.5	0.50
9.0	15	0.5	0.4	0.42
10.0	13	0.4	0.4	0.76
12.0	12	0.4	0.2	0.73
16.0	0	0.0	0.0	0.00
			Runoff (cfs-hr)=	19.32
			Total Runoff Volume (cf)=	69561

Power Rd. Basin Grading		
Elevation	Area (sf)	Vol. (cf)
1557.50	0	0
1558.00	176	44
1559.00	1588	882
1560.00	4411	3000
1561.00	8645	6528
1562.00	14792	11719
1563.00	22368	18580
1564.00	31609	26989
1565.00	44027	37818

Detention Basin Volume Provided (cf)= 105559

Red Mountain Freeway - Power Road to University Drive
Drainage Basin Runoff & Detention Volumes: SCS Dimensionless Hydrograph

Designed by: RSR Date: 4-7-05
Checked by: _____ Date: _____

ID	Area Paved (ac)	Runoff Coefficient "C"	Area Unpaved (ac)	Runoff Coefficient "C"	Area Total (ac)	Composite "C"	Rational Discharge 10-yr (cfs)	Tc (min)	Tc (hr)	qt_{max}	K
Basin A	2.89	0.95	2.58	0.50	5.46	0.74	17.0	10	0.17	1010	0.0168

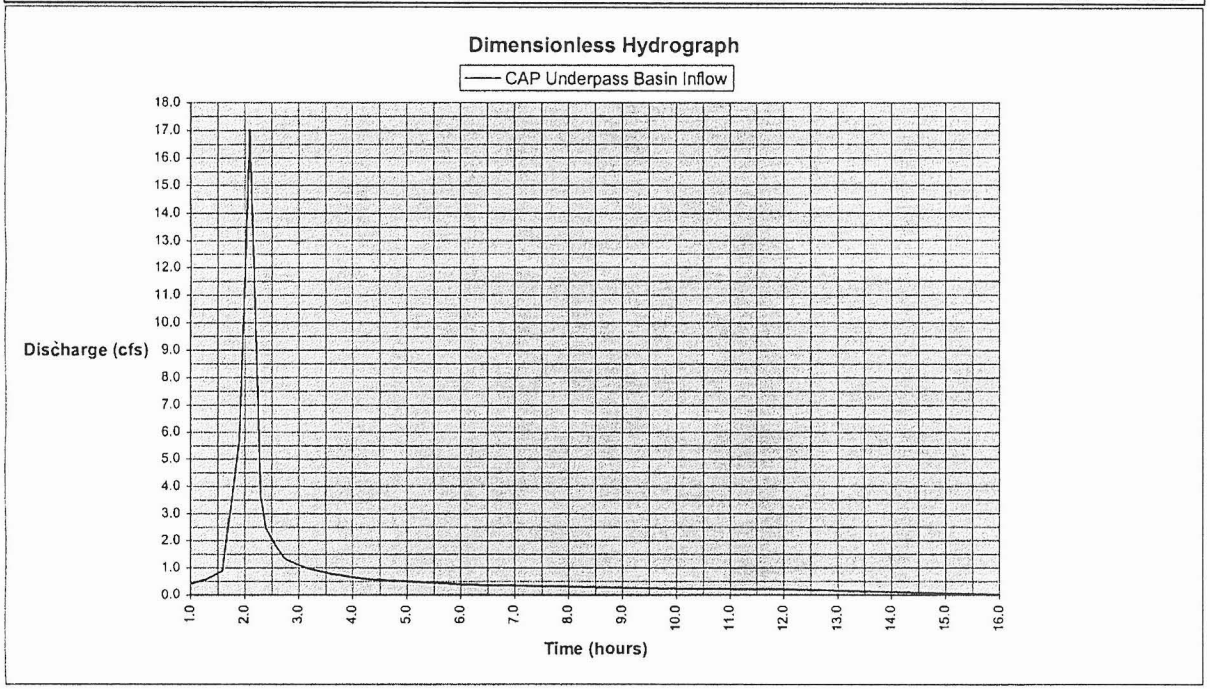

Tabulated Time t (hr)	Dimensionless Hydrograph, qt (cfs/in)	Runoff Hydrograph (cfs) $q_i=Kxq_t$	Average Discharge (cfs) $(q_i + q_{i+1})/2=q_{avg}$	Volume (cfs-hr) $q_{avg}x(t_{i+1}-t_i)$
	(Tc=0.17)			
1.0	24	0.4	0.5	0.15
1.3	34	0.6	0.7	0.22
1.6	53	0.9	3.3	0.98
1.9	334	5.6	8.3	0.83
2.0	647	10.9	13.9	1.39
2.1	1010	17.0	13.7	1.37
2.2	623	10.5	7.1	0.71
2.3	217	3.7	3.1	0.31
2.4	147	2.5	2.3	0.23
2.5	123	2.1	1.9	0.19
2.6	104	1.8	1.6	0.16
2.7	86	1.4	1.4	0.14
2.8	76	1.3	1.2	0.24
3.0	66	1.1	1.0	0.21
3.2	57	1.0	0.9	0.18
3.4	51	0.9	0.8	0.16
3.6	46	0.8	0.7	0.15
3.8	42	0.7	0.7	0.13
4.0	38	0.6	0.6	0.18
4.3	34	0.6	0.6	0.17
4.6	32	0.5	0.5	0.21
5.0	29	0.5	0.5	0.23
5.5	26	0.4	0.4	0.21
6.0	23	0.4	0.4	0.19
6.5	21	0.4	0.3	0.17
7.0	20	0.3	0.3	0.16
7.5	19	0.3	0.3	0.16
8.0	18	0.3	0.3	0.28
9.0	15	0.3	0.2	0.24
10.0	13	0.2	0.2	0.42
12.0	12	0.2	0.1	0.40
16.0	0	0.0	0.0	0.00

Runoff (cfs-hr)= 10.75
Total Runoff Volume (cf)= 38689

CAP Underpass Basin Grading		
Elevation	Area (sf)	Vol. (cf)
1561.00	0	0
1562.00	5799	2900
1563.00	8076	6938
1564.00	9235	8656
1565.00	10451	9843
1566.00	11723	11087

Detention Basin Volume Provided (cf)= 39423

APPENDIX H

McKELLIPS ROAD PUMP STATION ANALYSIS

- Pump Station & RCB Vault Stage-Storage
- Freeway Drainage System 50-Year Hydrograph (Pump Station Design Inflow Hydrograph)
- Summary of Pump Curves
- Pump Station Analysis Summary Output Curves
- Main Storm Water Pump
- Submersible Pump

APPENDIX H

McKELLIPS ROAD PUMP STATION ANALYSIS

Pump Station & RCB Vault Stage-Storage

Red Mountain Freeway - SR 202L Power to University - Stage-Storage

Stanley Consultants INC.

ADOT

SCI Proj. # : 17000
ADOT Proj # : H5782 01C
Designed By: CLJ Date: 1/21/2005
Checked By: Date:
Approved By: Date:

Box Culvert Data	RCB1	RCB2	RCB3
Number of Barrels =	1	1	1
Culvert Span, W (ft) =	10	10	10
Culvert Height, H (ft) =	10	10	10
Culvert Slope, S (ft/ft) =	0.000994	0.001026	0.000995
Culvert Length, L (ft) =	402.3	253.4	884.3
Downstream Invert (ft) =	1550	1550.4	1550.66
Upstream Invert (ft) =	1550.4	1550.66	1551.54

Wet Well Data	
Top of Well =	1567 ft
Bottom of Well =	1543 ft

WSEL (ft)	Depth in Wet Well (ft)	Volume RCBC1 (cu ft)	Volume RCBC2 (cu ft)	Volume RCBC3 (cu ft)	Total Volume (cu ft)	WSEL (ft)
1543	0	0	0	0	0	1543
1544	1	0	0	0	0	1544
1545	2	0	0	0	0	1545
1546	3	0	0	0	0	1546
1547	4	0	0	0	0	1547
1548	5	0	0	0	0	1548
1549	6	0	0	0	0	1549
1550	7	0	0	0	0	1550
1551	8	3,218	1,191	581	4,990	1551
1552	9	7,241	3,725	7,959	18,925	1552
1553	10	11,264	6,259	16,802	34,325	1553
1554	11	15,287	8,793	25,645	49,725	1554
1555	12	19,310	11,327	34,488	65,125	1555
1556	13	23,333	13,861	43,331	80,525	1556
1557	14	27,356	16,395	52,174	95,925	1557
1558	15	31,379	18,929	61,017	111,325	1558
1559	16	35,402	21,463	69,860	126,725	1559
1560	17	39,425	23,997	78,703	142,125	1560
1561	18	40,230	25,340	86,965	152,535	1561
1562	19	40,230	25,340	88,430	154,000	1562
1563	20	40,230	25,340	88,430	154,000	1563
1564	21	40,230	25,340	88,430	154,000	1564
1565	22	40,230	25,340	88,430	154,000	1565

Stanley Consultants INC.

ADOT

SCI Proj. # : 17000
ADOT Proj # : H5782 01C
Designed By: CLJ Date: 1/21/2005
Checked By: Date:
Approved By: Date:

Wet Well Data

Length of Sloping Bottom =	30.67 ft	Width (at 3 pumps) =	49.33 ft	
Length of Flat Apron =	2.00 ft	Additional Pumps =	2 each	(5 pumps)
Bottom to Corner Chamfer =	21 ft	Total Width =	73.33 ft	
Corner Chamfer to End Wall =	9.67 ft	Wet Well Invert =	1543 ft	(CBC Outlet - 7')
Bottom Slope =	0.228 ft/ft	Top of Wet Well =	1567 ft	(CBC Outlet + 17')
		CBC Outlet Invert =	1550 ft	(1550.32 in 30% plans)
		Elev at Beg of Chamfer =	1547.79 ft	

Water	Pumping Area				Sloped Apron Before Chamfered Corners				Sloped Apron Above Chamfer					Flat CBC Outlet Apron				Total		Water
Surface	Depth	Length	Width	Volume	Depth	Length	Width	Volume	Depth	Length	Width		Volume	Depth	Length	Width	Volume	Length	Volume	Surface
Elevation	D_a	L_a	W_a	V_a	D_b	L_b	W_b	V_b	D_c	L_c	W_c	W_{ave}	V_c	D_d	L_d	W_d	V_d	L_t	V_t	Elevation
(ft)	(ft)	(ft)	(ft)	(cu ft)	(ft)	(ft)	(ft)	(cu ft)	(ft)	(ft)	(ft)	(ft)	(cu ft)	(ft)	(ft)	(ft)	(cu ft)	(sq ft)	(cu ft)	(ft)
1543	0	25.17	73.33	0	0.00	0.00	73.33	0	0.00	0.00	73.33	73.33	0	0.00	0.00	54.00	0	25.17	0	1543
1544	1	25.17	73.33	1,846	0.00	4.38	73.33	161	0.00	0.00	73.33	73.33	0	0.00	0.00	54.00	0	29.55	2,006	1544
1545	2	25.17	73.33	3,691	0.00	8.76	73.33	643	0.00	0.00	73.33	73.33	0	0.00	0.00	54.00	0	33.93	4,334	1545
1546	3	25.17	73.33	5,537	0.00	13.14	73.33	1,446	0.00	0.00	73.33	73.33	0	0.00	0.00	54.00	0	38.31	6,982	1546
1547	4	25.17	73.33	7,382	0.00	17.52	73.33	2,570	0.00	0.00	73.33	73.33	0	0.00	0.00	54.00	0	42.69	9,952	1547
1548	5	25.17	73.33	9,228	0.21	21.00	73.33	4,009	0.00	0.90	71.52	72.43	7	0.00	0.00	54.00	0	47.07	13,244	1548
1549	6	25.17	73.33	11,073	1.21	21.00	73.33	5,549	0.00	5.29	62.76	68.05	217	0.00	0.00	54.00	0	51.45	16,839	1549
1550	7	25.17	73.33	12,919	2.21	21.00	73.33	7,089	0.00	9.67	54.00	63.67	679	0.00	0.00	54.00	0	55.83	20,687	1550
1551	8	25.17	73.33	14,764	3.21	21.00	73.33	8,629	1.00	9.67	54.00	63.67	1,294	1.00	2.00	54.00	108	57.83	24,796	1551
1552	9	25.17	73.33	16,610	4.21	21.00	73.33	10,169	2.00	9.67	54.00	63.67	1,910	2.00	2.00	54.00	216	57.83	28,905	1552
1553	10	25.17	73.33	18,456	5.21	21.00	73.33	11,709	3.00	9.67	54.00	63.67	2,525	3.00	2.00	54.00	324	57.83	33,014	1553
1554	11	25.17	73.33	20,301	6.21	21.00	73.33	13,249	4.00	9.67	54.00	63.67	3,141	4.00	2.00	54.00	432	57.83	37,123	1554
1555	12	25.17	73.33	22,147	7.21	21.00	73.33	14,789	5.00	9.67	54.00	63.67	3,756	5.00	2.00	54.00	540	57.83	41,232	1555
1556	13	25.17	73.33	23,992	8.21	21.00	73.33	16,329	6.00	9.67	54.00	63.67	4,372	6.00	2.00	54.00	648	57.83	45,341	1556
1557	14	25.17	73.33	25,838	9.21	21.00	73.33	17,869	7.00	9.67	54.00	63.67	4,987	7.00	2.00	54.00	756	57.83	49,450	1557
1558	15	25.17	73.33	27,683	10.21	21.00	73.33	19,409	8.00	9.67	54.00	63.67	5,603	8.00	2.00	54.00	864	57.83	53,559	1558
1559	16	25.17	73.33	29,529	11.21	21.00	73.33	20,949	9.00	9.67	54.00	63.67	6,218	9.00	2.00	54.00	972	57.83	57,668	1559
1560	17	25.17	73.33	31,374	12.21	21.00	73.33	22,489	10.00	9.67	54.00	63.67	6,833	10.00	2.00	54.00	1,080	57.83	61,777	1560
1561	18	25.17	73.33	33,220	13.21	21.00	73.33	24,029	11.00	9.67	54.00	63.67	7,449	11.00	2.00	54.00	1,188	57.83	65,886	1561
1562	19	25.17	73.33	35,066	14.21	21.00	73.33	25,569	12.00	9.67	54.00	63.67	8,064	12.00	2.00	54.00	1,296	57.83	69,995	1562
1563	20	25.17	73.33	36,911	15.21	21.00	73.33	27,109	13.00	9.67	54.00	63.67	8,680	13.00	2.00	54.00	1,404	57.83	74,104	1563
1564	21	25.17	73.33	38,757	16.21	21.00	73.33	28,649	14.00	9.67	54.00	63.67	9,295	14.00	2.00	54.00	1,512	57.83	78,213	1564
1565	22	25.17	73.33	40,602	17.21	21.00	73.33	30,189	15.00	9.67	54.00	63.67	9,911	15.00	2.00	54.00	1,620	57.83	82,322	1565

Note: Wet Well volume calculations do not include the stair well area.

Red Mountain Freeway - SR 202L Power to University - Stage-Storage

ADOT

Stanley Consultants INC.

SCI Proj. # :	17000		
ADOT Proj # :	H5782 01C		
Designed By:	CLJ	Date:	1/21/2005
Checked By:		Date:	
Approved By:		Date:	

Wet Well Data

Top of Well = 1567 ft

Bottom of Well = 1543 ft

WSEL (ft)	Depth in Wet Well (ft)	Volume		Total Volume (cu ft)	WSEL (ft)
		Wet Well (cu ft)	RCBC (cu ft)		
1543	0	0	0	0	1543
1544	1	2,006	0	2,006	1544
1545	2	4,334	0	4,334	1545
1546	3	6,982	0	6,982	1546
1547	4	9,952	0	9,952	1547
1548	5	13,244	0	13,244	1548
1549	6	16,839	0	16,839	1549
1550	7	20,687	0	20,687	1550
1551	8	24,796	4,990	29,786	1551
1552	9	28,905	18,925	47,830	1552
1553	10	33,014	34,325	67,339	1553
1554	11	37,123	49,725	86,848	1554
1555	12	41,232	65,125	106,357	1555
1556	13	45,341	80,525	125,866	1556
1557	14	49,450	95,925	145,375	1557
1558	15	53,559	111,325	164,884	1558
1559	16	57,668	126,725	184,393	1559
1560	17	61,777	142,125	203,902	1560
1561	18	65,886	152,535	218,421	1561
1562	19	69,995	154,000	223,995	1562
1563	20	74,104	154,000	228,104	1563
1564	21	78,213	154,000	232,213	1564
1565	22	82,322	154,000	236,322	1565

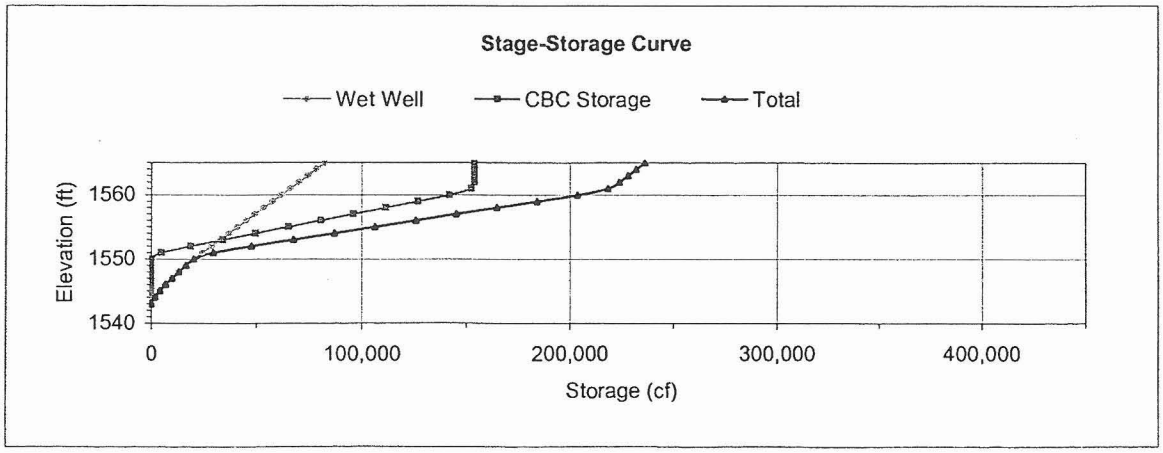

APPENDIX H

McKELLIPS ROAD PUMP STATION ANALYSIS

Freeway Drainage System 50-Year Hydrograph (Pump Station Design Inflow Hydrograph)

Stanley Consultants INC.

Project No. _____ Page No. _____

Computed by CJ Day Date April 2005

Checked by AD Date 8/05

Approved by _____ Date _____

Subject Summary of Unit Hydrograph Parameters for Pump Station Inflow Hydrograph Calculations

Sheet No. _____ of _____

Pump Station Design Event = 50 yr

Freeway Drainage System Peak Discharge = 414 cfs
(see On Site Drainage Calculations)

T_c = 0.73 hrs (see On Site Drainage Calculations)

Red Mtn Fwy - SR 202L Power to University - Onsite Drainage System Inflow Hydrograph

Stanley Consultants INC.

SCI Proj # : 17000
ADOT Proj # : H5782 01C

Designed By: CLJ
Checked By: (A)
Approved By:

Date: 1/21/2005
Date: 8/05
Date:

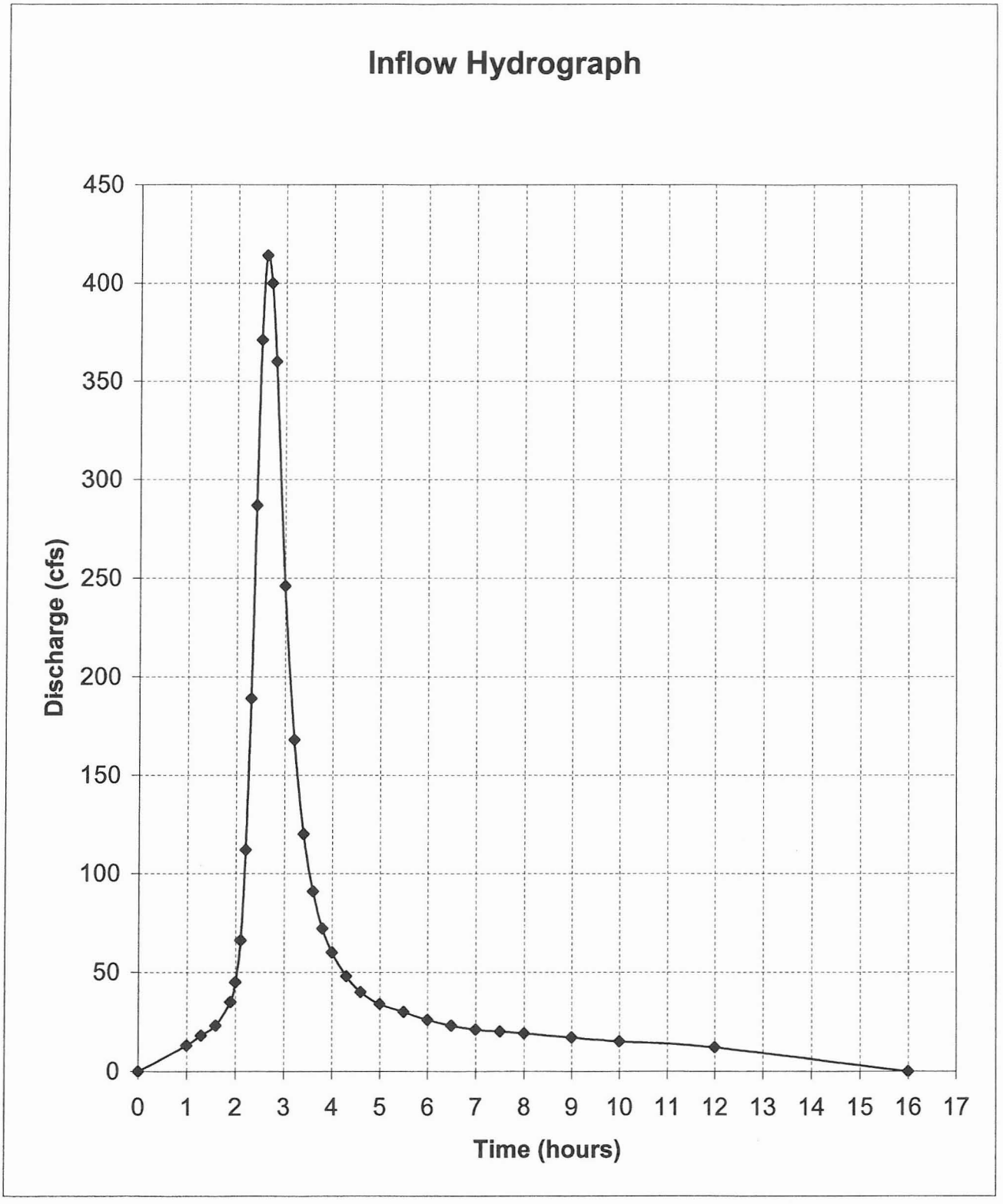

Red Mtn Fwy - SR 202L Power to University - Onsite Drainage System Inflow Hydrograph

ADOT | Stanley Consultants INC.

SCI Proj # : 17000 | Designed By: CLJ | Date: 1/21/2005
ADOT Proj # : H5782 01C | Checked By: [A] | Date: 8/05
Approved By: | Date:

Dimensionless Unit Hydrograph			Runoff Hydrograph	Average Discharge	Input Parameters	q_{tmax} = 414		$K = q_{tmax}/Q$ = 0.9760			
						Q = 424				T_c = 0.73	
Time	for T_c[1] q_t	Time	$q_i = Kq_t$		Volume Calculation						
					Period	Cumulative	Period		Cumulative		
(hr)	(cfs)	(hr)	(cfs)	(cfs)	(cfs-hr)	(cfs-hr)	(cu ft)	(acre-ft)	(cu ft)	(acre-ft)	
0.0	0	0	0	0	0	0	0	0	0	0	
1.0	13	1.0	13	16	4.65	4.7	16,740	0.38	16,740	0.38	
1.3	18	1.3	18	21	6.15	10.8	22,140	0.51	38,880	0.89	
1.6	24	1.6	23	29	8.70	19.5	31,320	0.72	70,200	1.61	
1.9	36	1.9	35	40	4.00	23.5	14,400	0.33	84,600	1.94	
2.0	46	2.0	45	56	5.55	29.1	19,980	0.46	104,580	2.40	
2.1	68	2.1	66	89	8.90	38.0	32,040	0.74	136,620	3.14	
2.2	115	2.2	112	151	15.05	53.0	54,180	1.24	190,800	4.38	
2.3	194	2.3	189	238	23.80	76.8	85,680	1.97	276,480	6.35	
2.4	294	2.4	287	329	32.90	109.7	118,440	2.72	394,920	9.07	
2.5	380	2.5	371	393	39.25	149.0	141,300	3.24	536,220	12.31	
2.6	424	2.6	414	407	40.70	189.7	146,520	3.36	682,740	15.67	
2.7	410	2.7	400	380	38.00	227.7	136,800	3.14	819,540	18.81	
2.8	369	2.8	360	303	60.60	288.3	218,160	5.01	1,037,700	23.82	
3.0	252	3.0	246	207	41.40	329.7	149,040	3.42	1,186,740	27.24	
3.2	172	3.2	168	144	28.80	358.5	103,680	2.38	1,290,420	29.62	
3.4	123	3.4	120	106	21.10	379.6	75,960	1.74	1,366,380	31.37	
3.6	93	3.6	91	82	16.30	395.9	58,680	1.35	1,425,060	32.71	
3.8	74	3.8	72	66	13.20	409.1	47,520	1.09	1,472,580	33.81	
4.0	61	4.0	60	54	16.20	425.3	58,320	1.34	1,530,900	35.14	
4.3	49	4.3	48	44	13.20	438.5	47,520	1.09	1,578,420	36.24	
4.6	41	4.6	40	37	14.80	453.3	53,280	1.22	1,631,700	37.46	
5.0	35	5.0	34	32	16.00	469.3	57,600	1.32	1,689,300	38.78	
5.5	31	5.5	30	28	14.00	483.3	50,400	1.16	1,739,700	39.94	
6.0	27	6.0	26	25	12.25	495.5	44,100	1.01	1,783,800	40.95	
6.5	24	6.5	23	22	11.00	506.5	39,600	0.91	1,823,400	41.86	
7.0	22	7.0	21	21	10.25	516.8	36,900	0.85	1,860,300	42.71	
7.5	20	7.5	20	20	9.75	526.5	35,100	0.81	1,895,400	43.51	
8.0	19	8.0	19	18	18.00	544.5	64,800	1.49	1,960,200	45.00	
9.0	17	9.0	17	16	16.00	560.5	57,600	1.32	2,017,800	46.32	
10.0	15	10.0	15	14	27.00	587.5	97,200	2.23	2,115,000	48.55	
12.0	12	12.0	12	6	24.00	**611.5**	86,400	1.98	**2,201,400**	**50.54**	
16.0	0	16.0	0	0.00	0.000	0.000	0	0.0000	0	0.0000	

1. Based upon the drainage area T_c and Table 2.2 for urban watersheds and Table 2.3 for undeveloped watersheds.

Urban Watershed Dimensionless Unit Hydrograph Coordinates for use with Rational Method

Stanley Consultants INC.

ADOT

SCI Proj # : 17000
ADOT Proj # : H5782 01C

Designed By: CLJ
Checked By: CA
Approved By:

Date: 1/21/2005
Date: 8/05
Date:

Time (hr)	Urban Watershed (Only) Coordinates of Dimensionless Unit Hydrograph to be used with the Rational Method									
	q_t (cfs/in runoff)									
	T_c (hours)									
	0.17 (cfs)	0.18 - 0.25 (cfs)	0.26 - 0.35 (cfs)	0.36 - 0.46 (cfs)	0.46 - 0.62 (cfs)	0.63 - 0.88 (cfs)	0.89 - 1.12 (cfs)	1.13 - 1.38 (cfs)	1.39 - 1.75 (cfs)	1.76 - 2.5 (cfs)
0	0	0	0	0	0	0	0	0	0	0
1.0	24	23	20	18	17	13	11	10	9	7
1.3	34	34	28	25	23	18	15	13	11	9
1.6	53	47	41	36	32	24	20	18	15	12
1.9	334	209	118	77	57	36	29	25	21	16
2.0	647	403	235	141	94	46	35	29	25	18
2.1	**1010**	739	447	271	170	68	47	38	31	21
2.2	623	**800**	**676**	468	308	115	72	54	41	27
2.3	217	481	**676**	**592**	467	194	112	81	58	36
2.4	147	250	459	574	**529**	294	168	118	82	49
2.5	123	166	283	431	507	380	231	163	112	64
2.6	104	128	196	298	402	**424**	289	213	147	82
2.7	86	102	146	216	297	410	329	256	184	104
2.8	76	86	114	163	226	369	**357**	284	216	127
3.0	66	70	80	104	140	252	313	**311**	255	171
3.2	57	61	66	77	96	172	239	266	**275**	201
3.4	51	54	57	63	74	123	175	212	236	**226**
3.6	46	49	51	56	61	93	133	163	198	205
3.8	42	44	46	49	53	74	103	129	159	193
4.0	38	40	42	44	47	61	83	104	129	171
4.3	34	35	37	38	41	49	63	78	98	132
4.6	32	33	33	34	36	41	50	61	76	105
5.0	29	30	31	31	32	35	40	47	57	79
5.5	26	27	28	28	29	31	33	37	43	58
6.0	23	24	24	25	26	27	29	31	35	45
6.5	21	21	22	22	23	24	26	27	30	36
7.0	20	20	20	21	21	22	23	24	25	30
7.5	19	19	19	20	20	20	21	22	23	26
8.0	18	18	18	18	19	19	20	20	21	23
9.0	15	16	16	16	16	17	17	18	18	20
10.0	13	13	13	14	14	15	15	16	16	17
12.0	12	12	12	12	12	12	12	12	12	13
16.0	0	0	0	0	0	0	0	1	1	3

APPENDIX H

McKELLIPS ROAD PUMP STATION ANALYSIS

Summary of Pump Curves

Red Mountain Freeway - SR 202L Power to University - Pump Curves

Stanley Consultants INC

ADOT

SCI Proj # : 17000
ADOT Proj # : H5782 01C

Designed By: CLJ
Checked By: AJ
Approved By:

Date: 1/21/2005
Date: 8/05
Date:

Pump System Operation Curve		
WSEL (ft)	Q (cfs)	Q (gpm)
1548.00	53.2	23,900
1548.67	53.5	24,000
1550.00	54.1	24,300
1552.00	55.0	24,700
1554.00	55.9	25,100
1556.00	56.8	25,500
1558.00	57.9	26,000
1560.00	58.8	26,400
1561.00	59.3	26,600
1562.00	59.7	26,800
1564.00	60.6	27,200

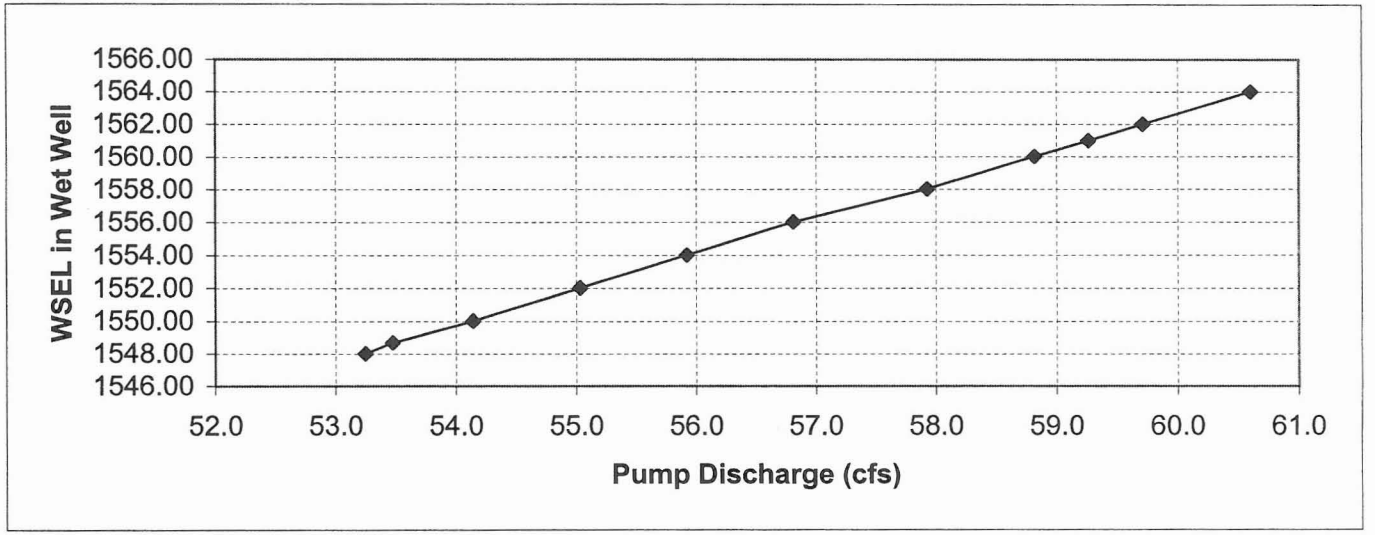

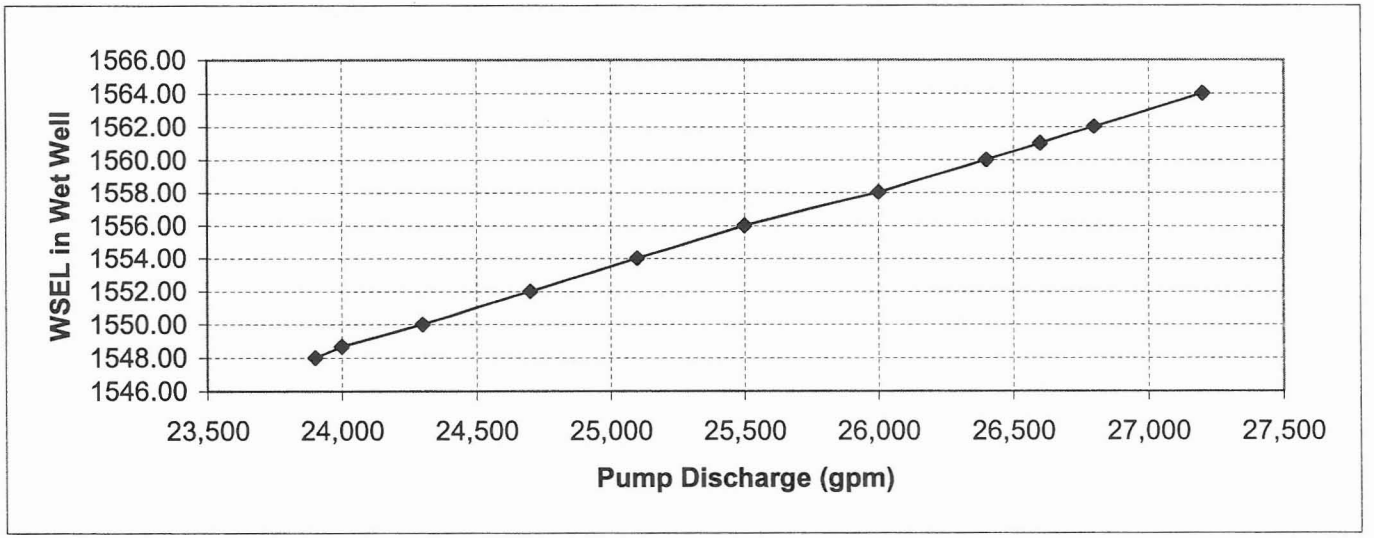

APPENDIX H

McKELLIPS ROAD PUMP STATION ANALYSIS

Pump Station Analysis Summary Output Curves

Red Mountain Freeway (SR 202L) Pump Station
Inflow and Outflow Hydrographs

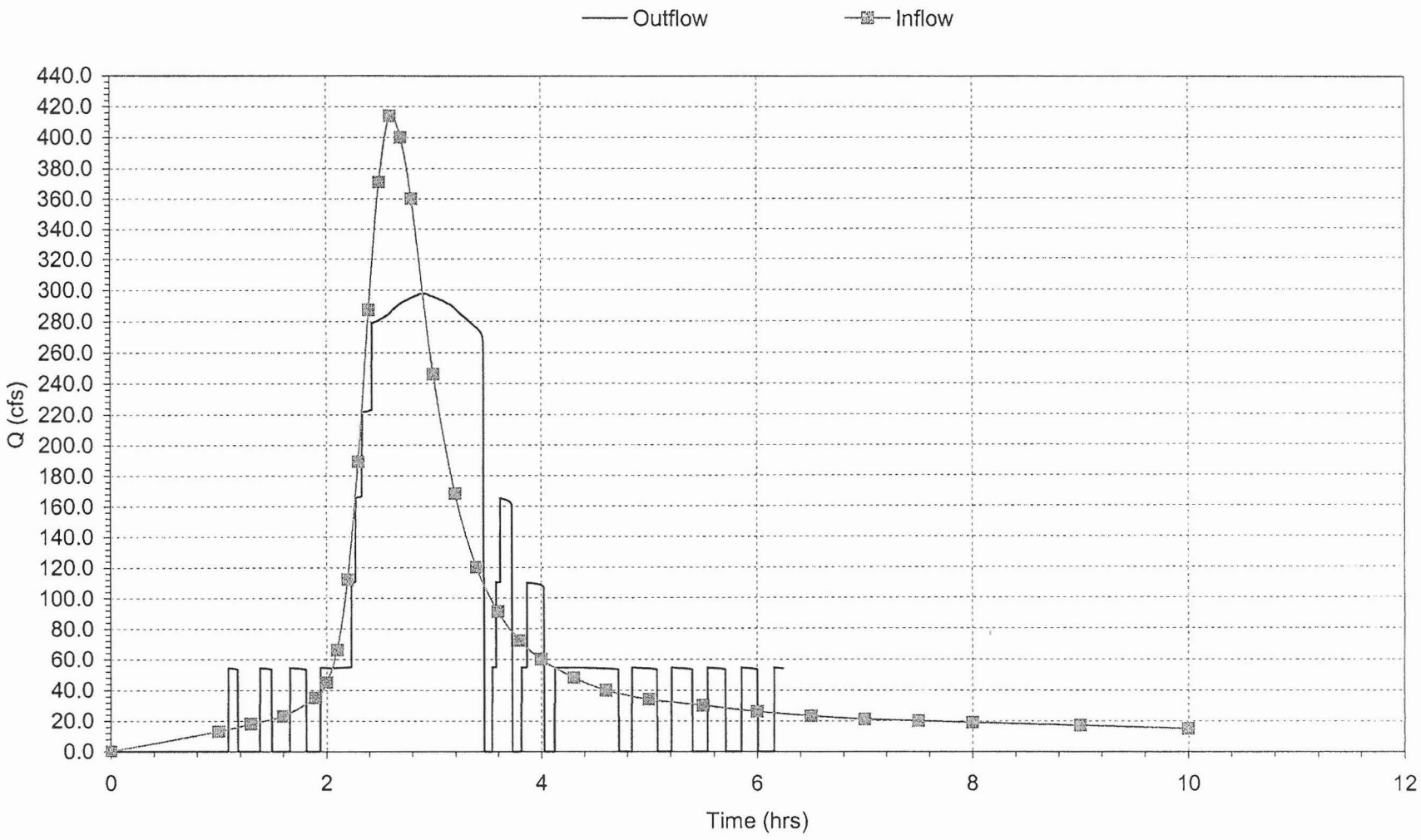

Red Mountain Freeway (SR 202L) Pump Station
Inflow, Outflow and Total Storage Mass Curves

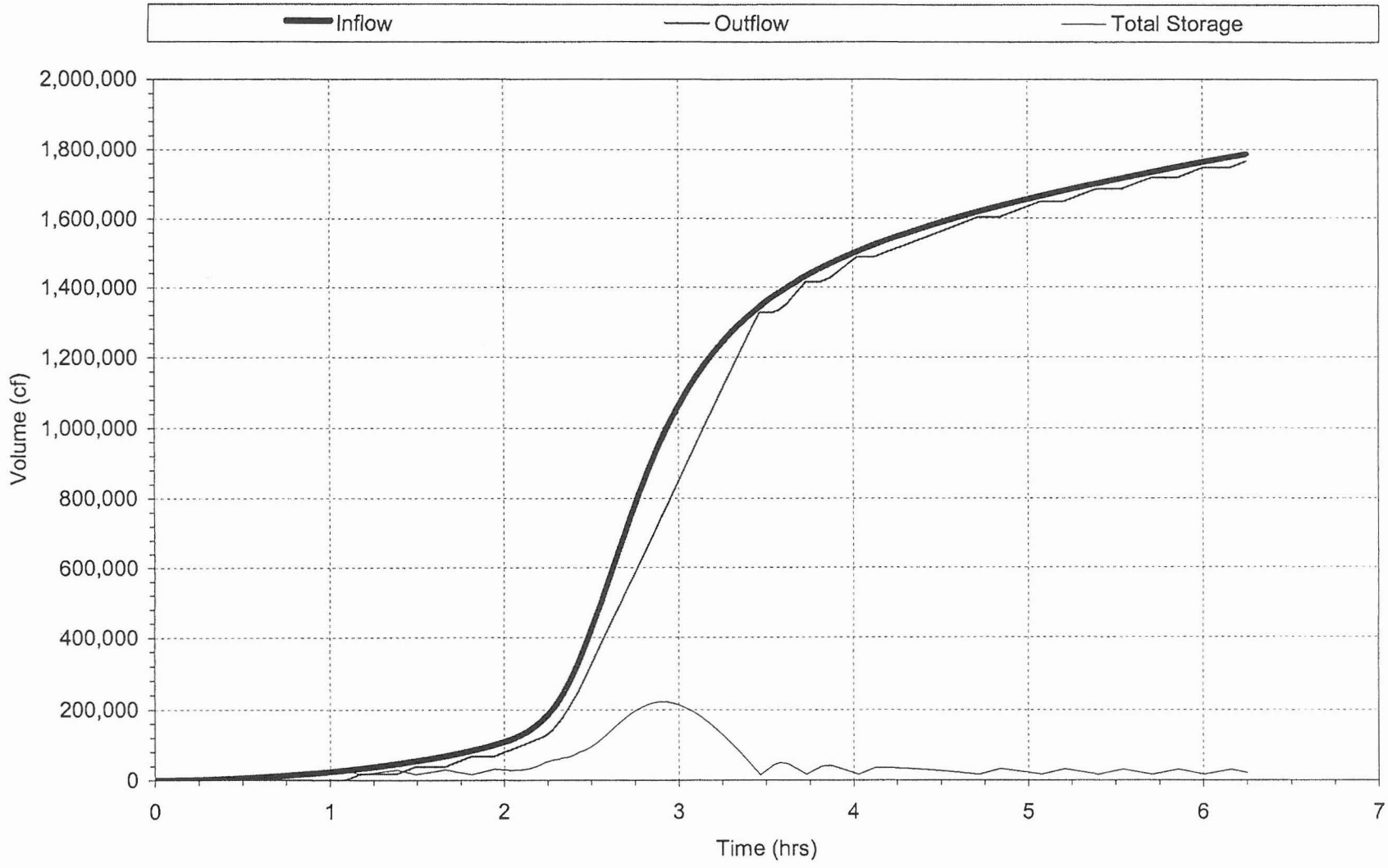

Red Mountain Freeway (SR 202L) Pump Station
Wet Well Water Surface Elevation Curve

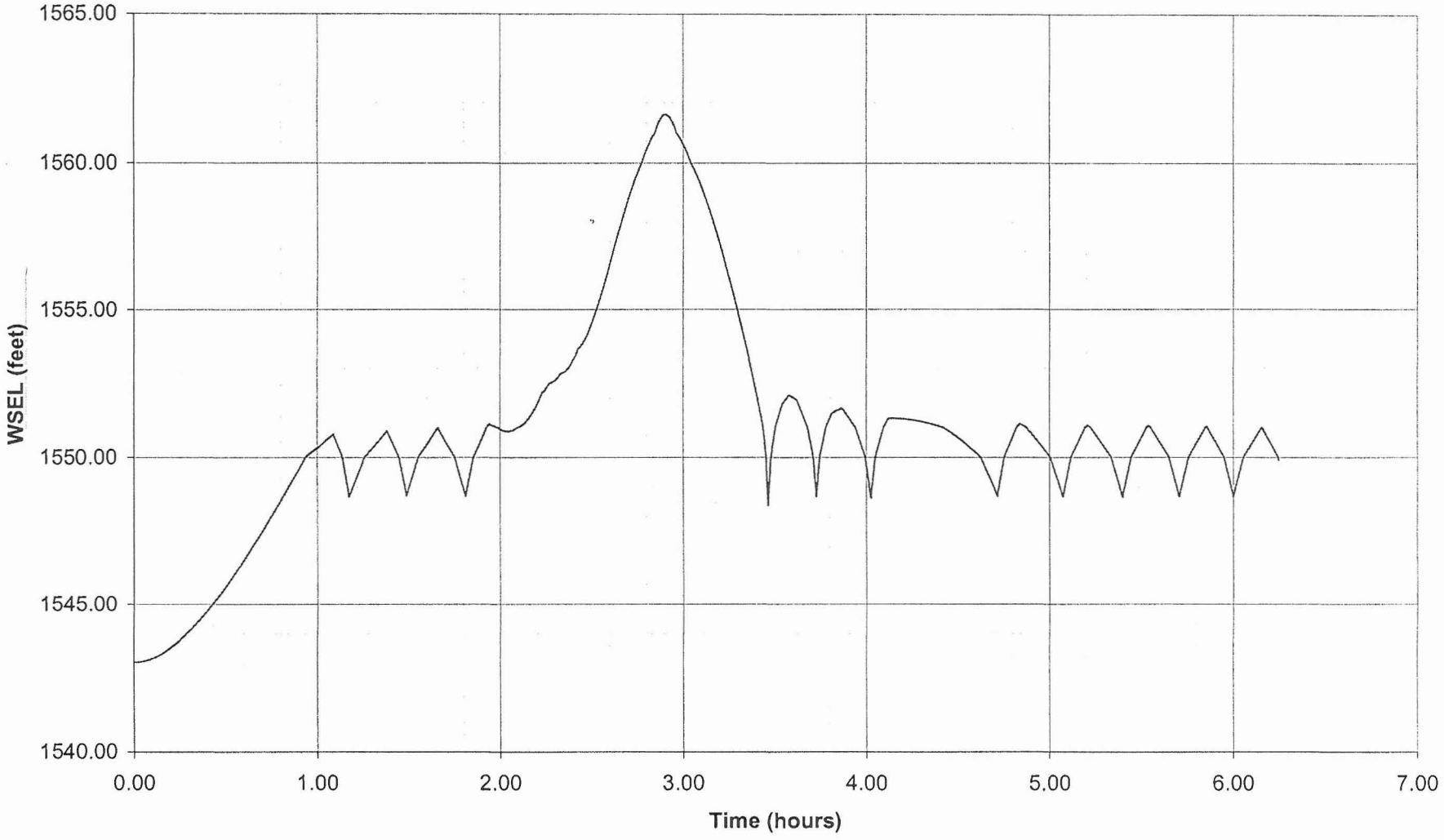

APPENDIX H

McKELLIPS ROAD PUMP STATION ANALYSIS

Main Storm Water Pump

CASCADE PUMP COMPANY
10107 South Norwalk Boulevard • PO Box 2767
Santa Fe Springs, California 90670-0767

CURVE NUMBER	MF2408A5
DATE	07-92
SUPERCEDES	NEW ISSUE

24

MF

880 RPM

Preliminary - System Curve - Revised 10/2/04

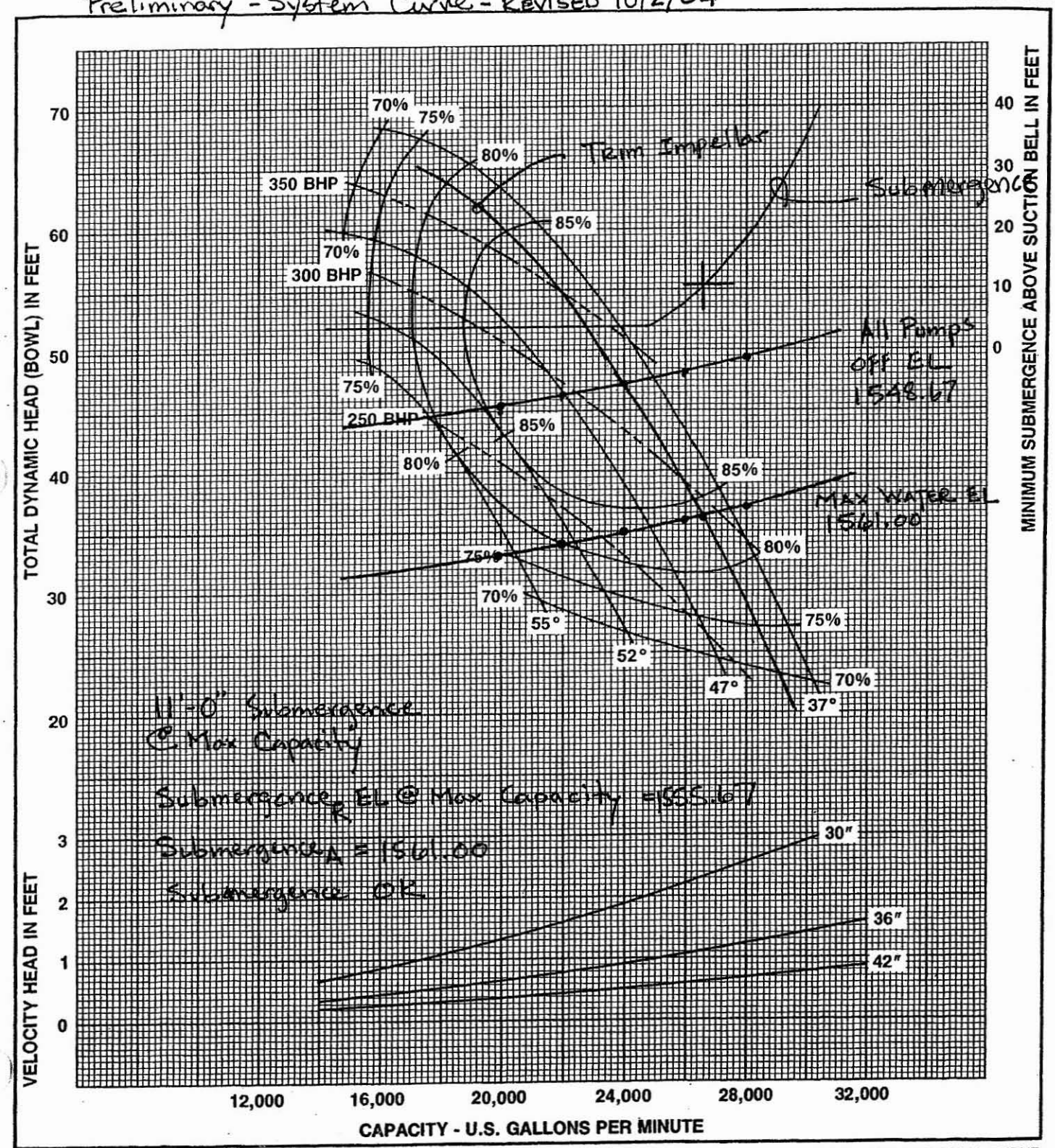

CURVE CHARACTERISTICS BASED ON PUMP PERFORMANCE WITH SPECIFIED AMOUNT OF CLEAR, NON-AERATED, FRESH COLD WATER.

THIS PERFORMANCE CURVE IS FOR ESTIMATING ONLY. CURVE SHOWS SINGLE STAGE PERFORMANCE. FOR MULTIPLE, VARIABLE AND OTHER SPEED APPLICATIONS, CONSULT FACTORY.

DIST. REGION	STATE	PROJECT	FINAL SHTS	AS BUILT
9	ARIZ.	~~202-C(005)~~ 202 MA 031	46	

023

"Mirror Image"

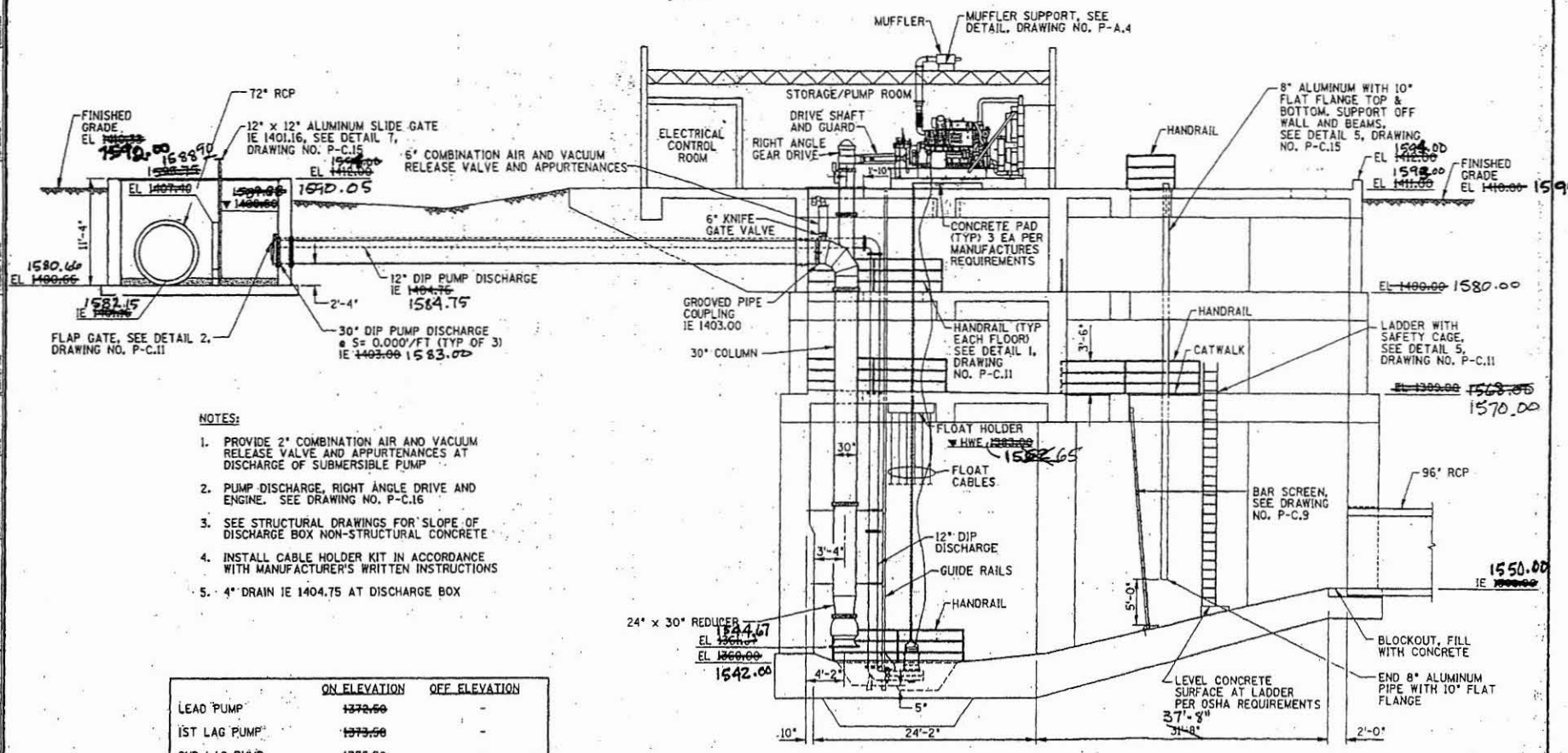

NOTES:

1. PROVIDE 2" COMBINATION AIR AND VACUUM RELEASE VALVE AND APPURTENANCES AT DISCHARGE OF SUBMERSIBLE PUMP
2. PUMP DISCHARGE, RIGHT ANGLE DRIVE AND ENGINE. SEE DRAWING NO. P-C.16
3. SEE STRUCTURAL DRAWINGS FOR SLOPE OF DISCHARGE BOX NON-STRUCTURAL CONCRETE
4. INSTALL CABLE HOLDER KIT IN ACCORDANCE WITH MANUFACTURER'S WRITTEN INSTRUCTIONS
5. 4" DRAIN IE 1404.75 AT DISCHARGE BOX

	ON ELEVATION	OFF ELEVATION
LEAD PUMP	~~1372.50~~	-
1ST LAG PUMP	~~1373.50~~	-
2ND LAG PUMP	~~1375.50~~	-
MAXIMUM WATER ELEV	~~1380.91~~	-
HIGH WATER ALARM	~~1383.00~~	-
ALL PUMPS OFF	-	~~1366.00~~ 1548.00

REDUCED SIZE DO NOT SCALE

SECTION A P-C.2

	NAME	DATE
DESIGN	FLR	7/03
DRAWN	JJD	7/03
CHECKED	L.L.	7/03

Stanley Consultants Inc.

ARIZONA DEPARTMENT OF TRANSPORTATION
INTERMODAL TRANSPORTATION DIVISION
ROADWAY DESIGN SERVICES

PUMP STATION SECTION A

ROUTE	LOCATION	DWG NO. P-C.6
202L	SANTAN FWY, ELLIOT ROAD - BASELINE ROAD	
TRACS NO. H ~~5919~~ 01C	~~202 C(005)~~	___ OF ___

FREDERICK L. ROLOFF, JR. 18668 ARIZONA

5782

RED MTN FWY, POWER ROAD - UNIVERSITY DRIVE

05/11/03 q:\36118\stro\pump\p5119n05.dgn

REVISIONS

ITEM	REQ'D	DESCRIPTION	MATERIAL	PART NO.
1	1	SUCTION BOWL	ASTM A48-CL 30	MFH101B
2	1	SUCT. BOWL BUSHING	ASTM B505-(932)	J105B
3	1	THRUST COLLAR RETAINER	ASTM A48-CL 30	MFH922
4	1	THRUST COLLAR & KEY	ASTM 1582-CL 416	M100L
5	1	IMPELLER	ASTM B145-(836)	MFH103
6	1	DISCHARGE BOWL BUSHING	ASTM B505-(932)	J105B
7	1	DISCHARGE BOWL	ASTM A48-CL 30	MFH100G
8	9	LINE SHAFT BEARING	ASTM B505-(932)	L106E
9	1	BOWL SHAFT	ASTM 1582-CL 416	MFH150
10	5	LINE SHAFT COUPLING	C-1020 STL.	SK950
11	8	BOTTOM ENCL. TUBE	ASTM A120	L108B
12	1	BOTTOM DISCH. COLUMN	ASTM A283-GR D	T24X30-T
13	3	BOTTOM LINE SHAFT	AISI-1045 STL.	N900
14	2	INTER. DISCH. COLUMN	ASTM A283-GR D	S30
15	1	INTER. LINE SHAFT	AISI-1045 STL.	N900
16	1	TOP ENCL. TUBE	ASTM A120	L108B
17	1	TOP LINE SHAFT	AISI-1045 STL.	L91D
18	1	DISCHARGE ELBOW	ASTM A283-GR D	16344-1
19	1	TENSION NUT BODY	ASTM A48-CL 30	L36J
20	1	TENSION NUT BUSHING	ASTM B505-(932)	L35A
21	1	TENSION NUT	CAST IRON	L38B
22	1	LOCK RING	BRONZE	L39A
23	1	PUMP HALF COUPLING	STEEL	L990F
24	1	INTER. ADJ. FLANGE	STEEL	L991F
25	1	MOTOR HALF COUPLING	STEEL	M992A
26	1	LUBRICATOR - 24 VOLT DC	SOLENOID	STOCK
27	1	OIL RESERVOIR - 2.5 GALLON	ALUMINUM	STOCK

ITEMS NO. 2, 5, 6, 8, 9 & 20 ARE RECOMMENDED SPARE PARTS

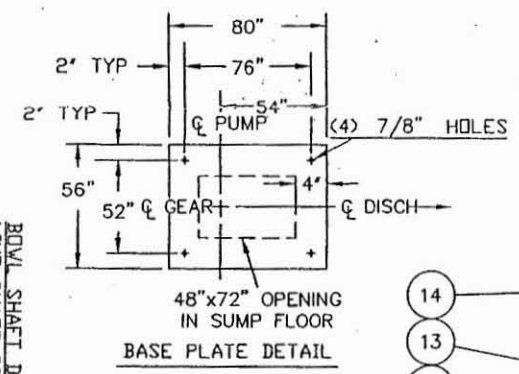

BASE PLATE DETAIL

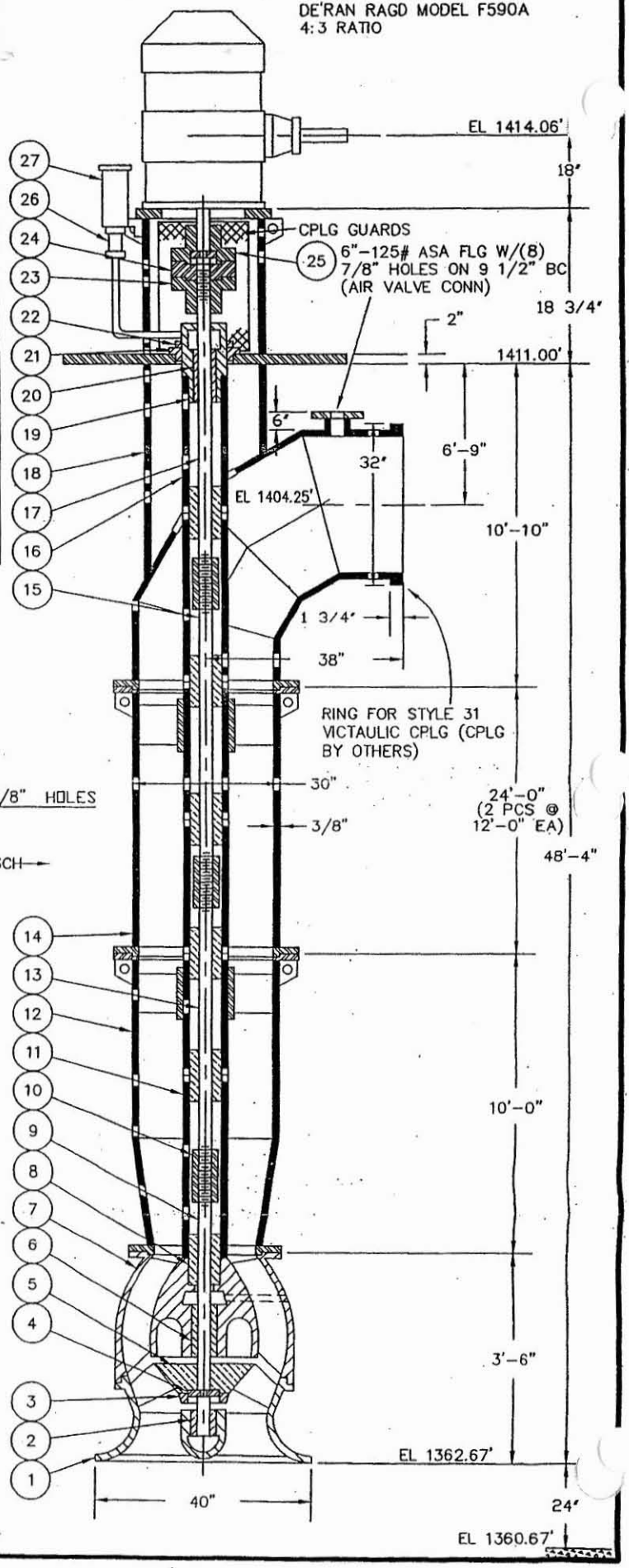

BOWL SHAFT DIA= 2 11/16"
LINE SHAFT DIA= 2 11/16"
ENCLOSING TUBE= 5"

SHOP ORDER - 16344/46

ARIZONA DEPT. OF TRANSPORTATION
SANTAN FREEWAY (SR LOOP 202)
ELLIOT ROAD / BASELINE ROAD PUMP STATION

CASCADE PUMP COMPANY
SANTA FE SPRINGS, CALIFORNIA

#24MF MIXED FLOW PUMP
30" O.D. DISCHARGE

JAMES, COOKE & HOBSON

DRAWN	CHECKED	DATE	SCALE
HB		11-13-03	

ORDER 102803-IMPL

3MS5904

Calculations By: Fred Rouse 9/6/04
Checked By: [signature] 8/5/05

RED MTN FWY, POWER ROAD - UNIVERSITY DRIVE
ADOT
MESA, ARIZONA

FLOW (GPM)	VELOCITY (FPS)				
	20	24	[illegible]	36	42
22000	22.47	15.6	[illegible]	6.93	5.09
23000	23.49	16.31	[illegible]	7.25	5.33
24000	24.51	17.02	[illegible]	7.57	5.56
25000	25.53	17.73	[illegible]	7.88	5.79
26000	26.55	18.44	[illegible]	8.2	6.02

The recommended design velocity should be in the range of 5.0 to 12.0 fps.

Preliminary Static Head Calculation: Red Mtn Fwy Storm Water Pump Station

Weir Crest Elevation @ Max Discharge Flowrate 241 cfs	1590.05 Ft	Weir Cresat Elevation @ Max Dsicharge Flowrate 241 cfs	1590.05 Ft
Low Level Pumps Off Elevation	1548.67 Ft	High level Max Elevation	1561
Static Head (Z)	**41.38 Ft**		29.05 Ft

Pump Hydraulics

Flowrate(gpm) (cfs)		20000	44.56	20000	44.56	20000	44.56	0	0	0	0	0	0	0	0
		Pump Inlet		Pipe Number 1		Pipe Number 2		Pipe Number 3		Pipe Number 4		Pipe Number 5		Pipe Number 6	
Sum K		0.04		0.25		1.87		0		0		0		0	
Pipe D(in)		24		24		30		30		30		30		30	
Pipe D(ft)		2		2		2.5		2.5		2.5		2.5		2.5	
HyRa(ft)		0.5		0.5		0.63		0.63		0.63		0.63		0.63	
Pipe Lenght(ft)		0		0		94		0		0		0		0	
		Minor HL(ft)	C-factor 120	Minor HL(ft)	C-factor 120	Minor HL(ft)	C-factor 120	Minor HL(ft)	C-factor 120	Minor HL(ft)	C-factor 120	Minor HL(ft)	C-factor 120	Minor HL(ft)	C-factor 120
Total Headloss	4.11	0.12	0	0.78	0	2.39	0.82	0	0	0	0	0	0	0	0

TDH (MAX)	**45.49**
TDH (MIN)	33.16
THD (MIN) Use	**33**

Calculated By: Fred Rowse 9/6/04
Checked By: [signature] 8/5/05

RED MTN FWY, POWER ROAD - UNIVERSITY DRIVE
ADOT
MESA, ARIZONA

FLOW (GPM)	VELOCITY (FPS)				
	20	24	[illegible]	36	42
22000	22.47	15.6	[illegible]	6.93	5.09
23000	23.49	16.31	[illegible]	7.25	5.33
24000	24.51	17.02	[illegible]	7.57	5.56
25000	25.53	17.73	[illegible]	7.88	5.79
26000	26.55	18.44	[illegible]	8.2	6.02

The recommended design velocity should be in the range of 5.0 to 12.0 fps.

Preliminary Static Head Calculation: Red Mtn Fwy Storm Water Pump Station

Weir Crest Elevation @ Max Discharge Flowrate 241 cfs	1590.05 Ft	Weir Cresat Elevation @ Max Dsicharge Flowrate 241 cfs	1590.05 Ft
Low Level Pumps Off Elevation	1548.67 Ft	High level Max Elevation	1561
Static Head (Z)	**41.38 Ft**		**29.05 Ft**

Pump Hydraulics

Flowrate(gpm)	(cfs)	22000	49.02	22000	49.02	22000	49.02	0	0	0	0	0	0	0	0
		Pump Inlet		Pipe Number 1		Pipe Number 2		Pipe Number 3		Pipe Number 4		Pipe Number 5		Pipe Number 6	
Sum K		0.04		0.25		1.87		0		0		0		0	
Pipe D(in)		24		24		30		30		30		30		30	
Pipe D(ft)		2		2		2.5		2.5		2.5		2.5		2.5	
HyRa(ft)		0.5		0.5		0.63		0.63		0.63		0.63		0.63	
Pipe Lenght(ft)		0		0		94		0		0		0		0	
		Minor HL(ft)	C-factor 120	Minor HL(ft)	C-factor 120	Minor HL(ft)	C-factor 120	Minor HL(ft)	C-factor 120	Minor HL(ft)	C-factor 120	Minor HL(ft)	C-factor 120	Minor HL(ft)	C-factor 120
Total Headloss	4.98	0.15	0	0.95	0	2.9	0.98	0	0	0	0	0	0	0	0

TDH (MAX)	**46.36**
TDH (MIN)	34.03
THD (MIN) Use	**34.03**

RED MTN FWY, POWER ROAD - UNIVERSITY DRIVE
ADOT
MESA, ARIZONA

Calculated By: Fred Romsey 8/5/05
Checked By: [illegible] 8/5/05

FLOW (GPM)	VELOCITY (FPS)				
	20	24	30	36	42
22000	22.47	15.6	9.99	6.93	5.09
23000	23.49	16.31	10.44	7.25	5.33
24000	24.51	17.02	10.89	7.57	5.56
25000	25.53	17.73	11.35	7.88	5.79
26000	26.55	18.44	11.8	8.2	6.02

The recommended design velocity should be in the range of 5.0 to 12.0 fps.

Preliminary Static Head Calculation: Red Mtn Fwy Storm Water Pump Station

Weir Crest Elevation @ Max Discharge Flowrate 241 cfs	1590.05 Ft	Weir Cresat Elevation @ Max Dsicharge Flowrate 241 cfs	1590.05 Ft
Low Level Pumps Off Elevation	1548.67 Ft	High level Max Elevation	1561
Static Head (Z)	**41.38 Ft**		**29.05 Ft**

Pump Hydraulics Flowrate(gpm) (cfs)		24000	53.48	24000	53.48	24000	53.48	0	0	0	0	0	0	0	0
		Pump Inlet		Pipe Number 1		Pipe Number 2		Pipe Number 3		Pipe Number 4		Pipe Number 5		Pipe Number 6	
Sum K		0.04		0.25		1.87		0		0		0		0	
Pipe D(in)		24		24		30		30		30		30		30	
Pipe D(ft)		2		2		2.5		2.5		2.5		2.5		2.5	
HyRa(ft)		0.5		0.5		0.63		0.63		0.63		0.63		0.63	
Pipe Lenght(ft)		0		0		94		0		0		0		0	
		Minor HL(ft)	C-factor 120	Minor HL(ft)	C-factor 120	Minor HL(ft)	C-factor 120	Minor HL(ft)	C-factor 120	Minor HL(ft)	C-factor 120	Minor HL(ft)	C-factor 120	Minor HL(ft)	C-factor 120
Total Headloss	5.9	0.18	0	1.12	0	3.45	1.15	0	0	0	0	0	0	0	0

TDH (MAX)	**47.28**
TDH (MIN)	34.95
THD (MIN) Use	**34.95**

Calculated By: Fred Rouse 9/6/04
Checked By: [signature] 8/5/05

RED MTN FWY, POWER ROAD - UNIVERSITY DRIVE
ADOT
MESA, ARIZONA

FLOW (GPM)	VELOCITY (FPS)				
	20	24	30	36	42
22000	22.47	15.6	9.99	6.93	5.09
23000	23.49	16.31	10.44	7.25	5.33
24000	24.51	17.02	10.89	7.57	5.56
25000	25.53	17.73	11.35	7.88	5.79
26000	26.55	18.44	11.8	8.2	6.02

The recommended design velocity should be in the range of 5.0 to 12.0 fps.

Preliminary Static Head Calculation: Red Mtn Fwy Storm Water Pump Station

Weir Crest Elevation @ Max Discharge Flowrate 241 cfs	1590.05 Ft	Weir Cresat Elevation @ Max Dsicharge Flowrate 241 cfs	1590.05 Ft
Low Level Pumps Off Elevation	1548.67 Ft	High level Max Elevation	1561
Static Head (Z)	**41.38 Ft**		**29.05 Ft**

Pump Hydraulics

Flowrate(gpm) (cfs)		26000	57.93	26000	57.93	26000	57.93	0	0	0	0	0	0	0	0
		Pump Inlet		Pipe Number 1		Pipe Number 2		Pipe Number 3		Pipe Number 4		Pipe Number 5		Pipe Number 6	
Sum K		0.04		0.25		1.87		0		0		0		0	
Pipe D(in)		24		24		30		30		30		30		30	
Pipe D(ft)		2		2		2.5		2.5		2.5		2.5		2.5	
HyRa(ft)		0.5		0.5		0.63		0.63		0.63		0.63		0.63	
Pipe Lenght(ft)		0		0		94		0		0		0		0	
		Minor HL(ft)	C-factor 120	Minor HL(ft)	C-factor 120	Minor HL(ft)	C-factor 120	Minor HL(ft)	C-factor 120	Minor HL(ft)	C-factor 120	Minor HL(ft)	C-factor 120	Minor HL(ft)	C-factor 120
Total Headloss	6.9	0.21	0	1.32	0	4.04	1.33	0	0	0	0	0	0	0	0

TDH (MAX)	**48.28**
TDH (MIN)	35.95
THD (MIN) Use	**35.95**

Calculated By: Fred Rouse, 9/7/04
Checked By: [illegible] 9/5/05

RED MTN FWY, POWER ROAD - UNIVERSITY DRIVE
ADOT
MESA, ARIZONA

FLOW (GPM)	VELOCITY (FPS)				
	20	24	30	36	42
22000	22.47	15.6	9.99	6.93	5.09
23000	23.49	16.31	10.44	7.25	5.33
24000	24.51	17.02	10.89	7.57	5.56
25000	25.53	17.73	11.35	7.88	5.79
26000	26.55	18.44	11.8	8.2	6.02

The recommended design velocity should be in the range of 5.0 to 12.0 fps.

Preliminary Static Head Calculation: Red Mtn Fwy Storm Water Pump Station

Weir Crest Elevation @ Max Discharge Flowrate 241 cfs	1590.05 Ft	Weir Cresat Elevation @ Max Dsicharge Flowrate 241 cfs	1590.05 Ft	
Low Level Pumps Off Elevation	1548.67 Ft	High level Max Elevation	1561 Ft	Preliminary Elevation
Static Head (Z)	**41.38 Ft**		**29.05 Ft**	

Pump Hydraulics Flowrate(gpm) (cfs)		28000	62.39	28000	62.39	28000	62.39	0	0	0	0	0	0	0	0
		Pump Inlet		Pipe Number 1		Pipe Number 2		Pipe Number 3		Pipe Number 4		Pipe Number 5		Pipe Number 6	
Sum K		0.04		0.25		1.87		0		0		0		0	
Pipe D(in)		24		24		30		30		30		30		30	
Pipe D(ft)		2		2		2.5		2.5		2.5		2.5		2.5	
HyRa(ft)		0.5		0.5		0.63		0.63		0.63		0.63		0.63	
Pipe Lenght(ft)		0		0		94		0		0		0		0	
		Minor HL(ft)	C-factor 120	Minor HL(ft)	C-factor 120	Minor HL(ft)	C-factor 120	Minor HL(ft)	C-factor 120	Minor HL(ft)	C-factor 120	Minor HL(ft)	C-factor 120	Minor HL(ft)	C-factor 120
Total Headloss	7.99	0.24	0	1.53	0	4.69	1.53	0	0	0	0	0	0	0	0

TDH (MAX)	**49.37**
TDH (MIN)	**37.04**
THD (MIN) Use	**37.04**

Stanley Consultants INC

Project No. 17000.01.00 Page No.

Subject Red MTN FWY, Power Rd - University Dr Storm Water Pump Station - Engine Horsepower Requirement - Revised 10/2/

Computed by FLR Date 9/2/04

Checked by ME Date 8/5/05

Approved by Date

Sheet No. 2 of

Preliminary Horsepower Requirement -

Maximum Elevation:
Q = 26,800 gpm
TDH = 34.50'
Efficiency = 82%

Minimum Elevation:
Q = 24,000 gpm
TDH = 47.00'
Efficiency = 85.5%

* Pump ACTUAL Efficiency During Pump Test - Certified Pump Curve ≅ 88%. See JCH Letter Dated 9/13/02 & Attached Certified Pump Curve.

Low Elevation (MAX Head)

$$BHP = \frac{(24{,}000\ gpm)(\cancel{47.5}\ 47.28)}{(3960)(0.855)^*} \cong \cancel{336.7}\ 335.14$$

$$BHP_T = \frac{BHP}{(Gear\ Headlosses)(Line\ Shaft\ Losses)(Drive\ Line\ Losses)}$$

Gear Headlosses = 97% (3%)
Line Shaft Losses = 99% (1%)
Deive Line Losses = 99% (1%)

$$BHP_T = \frac{\cancel{336.7}\ 335.14}{(97\%)(99\%)(99\%)} \cong \cancel{354.2}\ 352.5$$

$$BHP_{REQ} = BHP_T \times 1.12 = \cancel{354.2}\ 352.5 \times 1.12 \cong \cancel{396.7}\ 394.8$$

DERATE ENGINE For Equipment & Environmental factors:

Engine Rated HP = 525
Fan (HP) = -56.00
NET HP = 469
DERATED HP = 398

[1] DERATE PER CATERPILLAR 86%
USE 85%
HP_{DERATE} 469 × 0.85% = 398.65
USE: $HP_{Drated} \cong 398$

ENGINE & DERATED POWER REQUIRED OK.

Stanley Consultants INC

Project No. 17000.01.00 Page No.

Subject Operating Weight - Pump - Engine Assembly

Computed by FLR Date 9/3/04

Checked by MRC Date 8/5/05

Approved by Date

Sheet No. 1 of 2

Operating Weight: Information from Caterpiller &

* Caterpiller G3512 Engine - 13,400 lbs (dry) + 360 lbs (45 gal. c Coolant) = 13,760 lbs

* IEA Radiator 2900 lbs + 328 lbs (41 Gal of Coolant) = = 3,228 lbs.

* Twin Disc Clutch - 700 lbs.

* Universal Joint Drive Shaft - 200 lbs

* Cascade Model 24mf pump - 11,300 lbs.

* DeRan Model 590A Right Angle Drive - 2,000 lbs

* Steel Support Plate Weight - 2,450 lbs.

* Pump Column Water Weight - 1,449 gallons (194 cf) 12,106 lb

- Δ Pipe Length 80' - 48.67' = 31.33'

- A = Area = $\frac{\pi D^2}{4} = \frac{\pi (2.5)^2}{4} \simeq 4.91$ SF

- Volume = A x ΔL = 4.91 SF x 31.33' = 153.8 cf

- Discharge Curve
  R = 5'-2"

  1/4 Circumference = 1/4 x (π 2R) = 1/4 (π x 2 x 5.17')
  = 8.12'

- Volume = A x 1/4 Circumference = 4.91 SF x 8.12' = 39.9 cf

V/T = 153.8 cf + 39.9 cf = 193.7 cf

Stanley Consultants INC.

Project No. 17000.01.00 Page No.

Subject Operating Weight - Pump Engine Assembly - Summary

Computed by FLR Date 9/3/04

Checked by [illegible] Date 9/5/05

Approved by Date

Sheet No. 2 of 2

△ Engine Portion:

* Engine	13,782 lbs
* Radiator	3,228 lbs
* TwinDisc Clutch	700 lbs
* Universal Joint Shaft	200 lbs
TOTAL Engine Portion	17,910 lbs

Note: Does not include Weight of Concrete Support As recommended by Manufactures.

△ Mixed Flow Pump Portion:

* Cascade Model 24mf pump	11,300 lbs
* Right Angle Drive	2,000 lbs
* Steel Support Plate	2,450 lbs
* WATER Column	12,106 lbs
TOTAL Pump Portion	27,856 lbs

TOTAL WEIGHT PER PUMP/ENGINE ASSEMBLY 45,766 lbs

Stanley Consultants INC.

Project No. 17000.06.02 Page No.

Subject Check RECIRCULATION - Verified SIZE & WEIR Height.

Computed by FLR Date 1/25/05

Checked by MRL Date 8/5/05

Approved by _____ Date _____

Sheet No. _____ of _____

30" DIP Recirculation Line. ID = 30.99" (2.58')

Maximum Flow 26,600 gpm (59.3 cfs) at Wetwell Depth - 19'

Pipe Length - 165.58'

* Minor Losses:

Inlet Loss	0.5
Outlet Loss	1.00
90° Bend	0.36
	$\Sigma K = 1.86$

* Minor Losses from Cameron Hydraulic Data Book.

A = Pipe Area = $\frac{\pi D^2}{4} = \frac{\pi}{4}(2.58)^2 = 5.23$ SF

$V = \frac{Q}{A} = \frac{59.3 \text{ cfs}}{5.23 \text{ SF}} = 11.34$ fps $\quad M_L = \frac{(1.86)(11.34)^2}{2 \times 32.2 \text{ fps}^2} = 3.71'$

$Hf = (0.002083) \times L \times \left(\frac{100}{120}\right)^{1.85} \times \frac{(26{,}600 \text{ gpm})^{1.85}}{(30.99)^{4.8655}} = 2.10'$

$H_T = Hf + M_L = 2.10' + 3.71' = 5.81$

Inv. @ Wetwell = 1579.29

℄ of Pipe = 1579.29 + 1.29' = 1580.58

WSE @ Discharge Box = 1580.58 + 5.81 = 1586.39

FREEBOARD = Weir Elevation - WSE = 1588.90 - 1586.39

= 2.51'

Stanley Consultants INC

Project No. 17000.06.00 Page No. _____

Subject RED MTN FWY STORM WATER PUMP STATION

Computed by FLR Date 9/2/04

Checked by MC Date 9/5/05

Approved by _____ Date _____

Sheet No. 1 of _____

PRELIMINARY Pump Hydraulics -

STATIC HEAD @ WETWELL high LEVEL

HEIGHT OVER WEIR Elevation 1,589.88 <

LOW Elevation Shut-Off 1548.67

Minor Loss Coefficients:

ITEM	K-VALUE	SOURCE
* 24" INLET LOSSES (40")	0.04	CAMERON
24" x 30" REDUCER	0.25	FLOW - Hydraulic DATA
30" - 90° Mitred BEND	0.72	CAMERON
30" Flap Gate	0.15	WATERMAN - PERFORANCE CHART. SEE ATTACHED
EXIT LOSS	1.00	CAMERON
TOTAL	$\Sigma K = 2.16$	

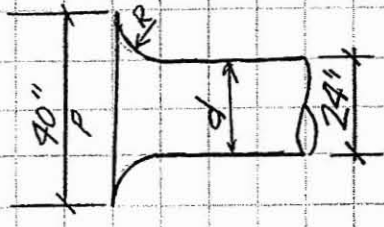

* P = 40"

d = 24"

$R = \frac{P-d}{2} = \frac{40-24}{2} = 8"$

$\frac{R}{P} = \frac{8}{24} = 0.333$

$\frac{r}{d}$ = 0.15 & up $\Rightarrow$ K = 0.04

Cameron 3-116 pg

Stanley Consultants INC.

Project No. 15176.07.01 Page No.

Subject SANTAN LIFT STATION - Calculate "K" (Minor Loss Factor) from Headloss Curves - Waterman.

Computed by FLR Date 11/05/00

Checked by BCR Date 11/20/01

Approved by Date

Sheet No. of

FM WATERMAN INDUSTRIES

$H_{LM} = \frac{KV^2}{2g}$ HEAD LOSS$_{(MAX)}$ = 0.125 ft @ Diameter = 30" Q = 52 cfs

$V = \frac{Q}{A} = \frac{52 cfs}{\left[\frac{\pi (2.5)^2}{4}\right]} = 10.59 fps$ ✓

$K = \frac{2g H_{LM}}{V^2}$

$K = \frac{(2)(32.2 fps^2)(0.125 ft)}{(10.59 fps^2)} \cong 0.072$ ✓

USE SF ≃ 2.08 $SF \times K = K_{DM} = (2.08)(0.072) = 0.149$

USE $K_{LM} \cong 0.15$ ✓

Maximum Headloss for 30" Flap Gate @ 52 cfs

Post-it® Fax Note 7671	Date 11/07	# of pages ▶
To Ray Jordan	From Fred Rouse	
Co./Dept. Premier	Co. Stanley Consult.	
Phone # (480) 829-6000	Phone # (602) 912-6500	
Fax # (480) 829-6016	Fax # (602) 912-6549	

IND INC

001/001

CHART

PERFORMANCE CHART APPLICABLE FOR WATERMAN F-10 & F-50 GATES. HEAD LOSS THRU HEAVIER F-25 & F-55 SERIES GATES MAY BE SLIGHTLY GREATER. NOT APPLICABLE TO SQUARE OR RECTANGULAR GATES.

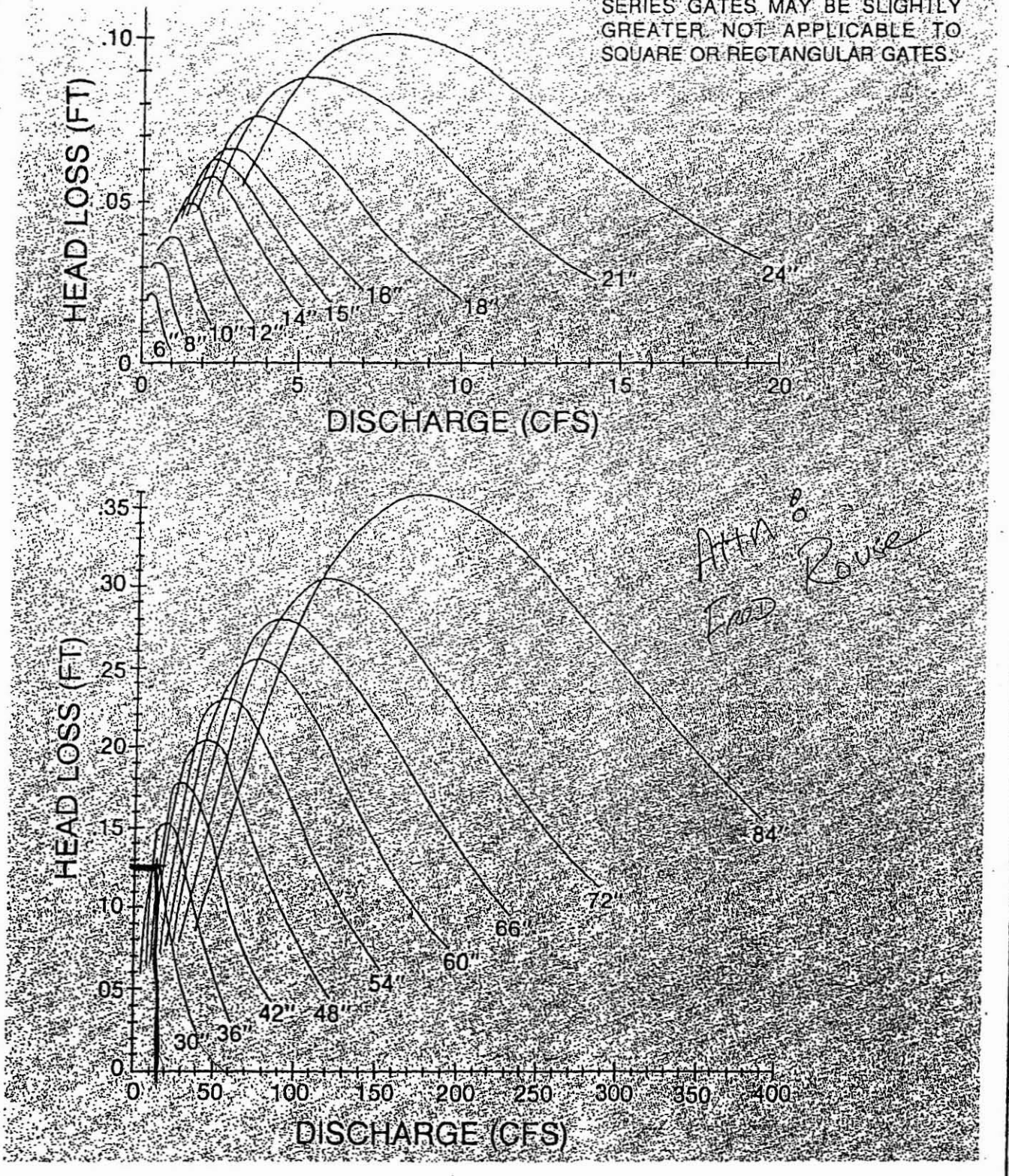

Attn: Fred Rouse
End

NOTE: FOR PRELIMINARY DESIGN PURPOSES ONLY
DO NOT USE FOR INSTALLATION
UNLESS PART OF CERTIFIED & APPROVED SUBMITTAL

Waterman® INDUSTRIES, INC.

CERTIFIED CORRECT

CURVE NO. 2821

CASCADE PUMP COMPANY
SANTA FE SPRINGS, CALIFORNIA

PUMP PERFORMANCE

ONE STAGE 24 MF PUMP

880 RPM

GULF STATES ENGINEERING CO., INC.
CITY OF GREENVILLE, MISSISSIPPI
STORMWATER DRAINAGE PROJECT
PROJECT NO. 89
C.O. No. 366584
S.O. No. 13425

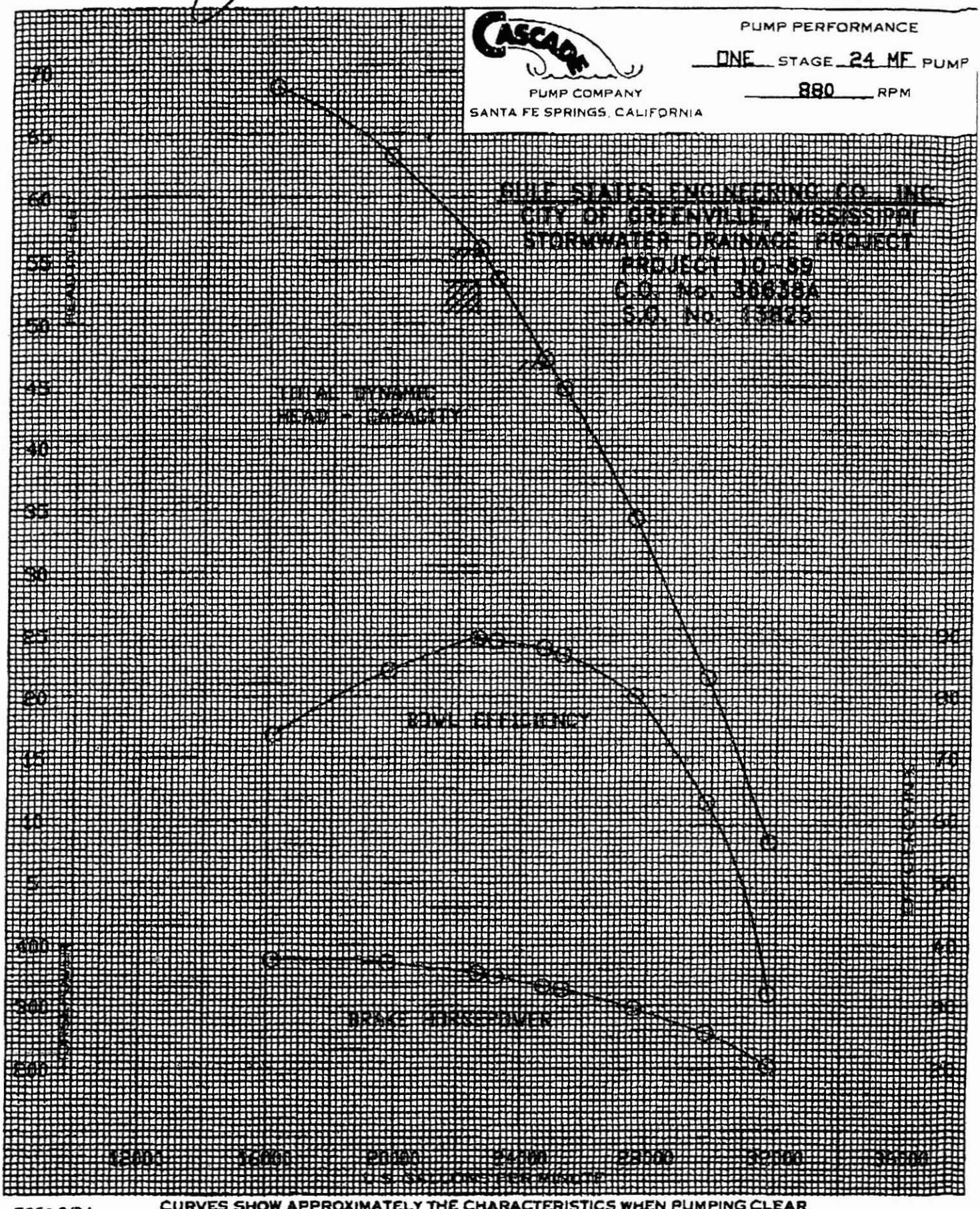

E061 9/84

CURVES SHOW APPROXIMATELY THE CHARACTERISTICS WHEN PUMPING CLEAR NON-AERATED WATER. NO GUARANTEE IS MADE EXCEPT FOR THE RATED POINT.

Stanley Consultants INC.

Project No. 17000.0800 Page No.

Subject Engine Drive - Natural Gas Usage - Revised 10/1/04

Computed by FLR Date 9/3/04

Checked by [signature] Date 9/5/05

Approved by Date

Sheet No. 1 of 2

Std NA 525 HP ENGINE from Caterpiller SEE FUEL Consump DATA on 2 of 2

Assumed: Natural Gas Heat Content 925 BTUs/CF

BTU/(bhp-hr) = 7,900 @ 525 HP

$$\frac{\text{Volume}_{NG}}{\text{hour}} = 7{,}900 \frac{\text{BTU}}{\text{bhp-hr}} \times \frac{525 \text{ HP}}{925 \text{ BTUs/CF}} \cong 4484. \frac{\text{CF NG}}{\text{hr}}$$

Natural Gas RATE: $\frac{4{,}484 \text{ CFPH}}{60 \text{ m/h}} = 74.73 \text{ cfpm}$

USE 75 cfpm

Number of Engines = ~~4~~ 5 EACH

TOTAL NG RATE: $\frac{75 \text{ cfpm}}{\text{unit}} \times$ ~~4~~ 5 UNITS = ~~300~~ 375 cfpm

OR ~~18,000~~ 22,500 cfph.

W/ ALL Pumps Running
Maximum Flow Rate: 296 cfs (59.2 cfs EA PUMP)
Minimum Flow Rate: 267 cfs (53.4 cfs EA PUMP)

Fuel Consumption Data (Cont'd)

STD TA-90

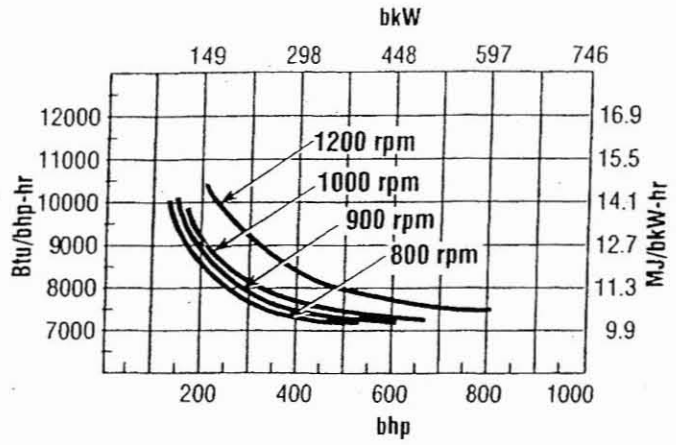

STD TA-130

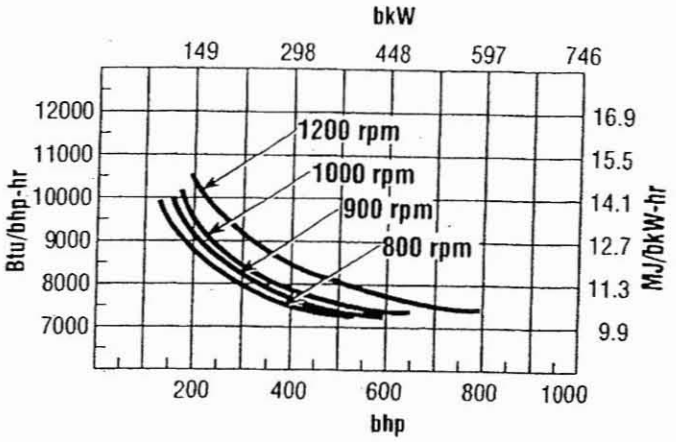

STD NA ←

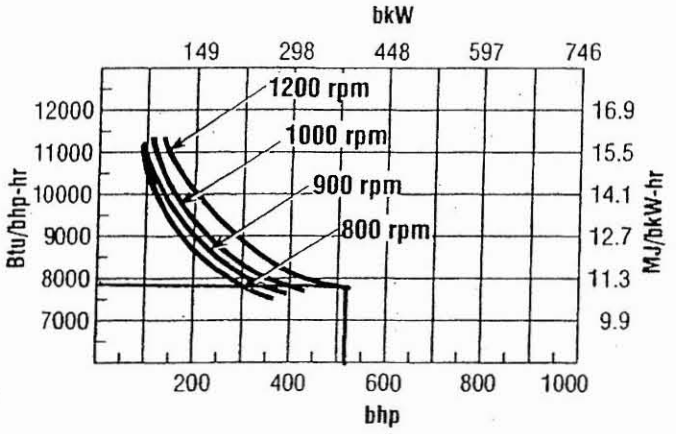

525HP / 7,900 BTU/(bhp-hr)

CONDITIONS & DEFINITIONS

Ratings are based on SAE J1349 standard conditions of 100 kPa (29.61 in-Hg) and 25°C (77°F). These ratings also apply at ISO 3046, DIN 6271, and BS 5514 standard conditions of 100 kPa (29.61 in-Hg), 27°C (81°F); and API 7B-11C standard conditions of 99 kPa (29.38 in-Hg), 29°C (85°F).

Ratings are based on dry natural gas having a low heat value of 35.54 MJ/N m³ (905 btu/ ft³). Variations in altitude, temperature and gas composition from standard conditions may require a reduction in engine horsepower.

Turbocharged-aftercooled ratings apply to 1525 m (5,000 ft) and 25°C (77°F). For applications which exceed these limits contact your Caterpillar® Dealer. Naturally aspirated engines apply to 150 m (500 ft) and 29°C (85°F). For applications above these limits derate 3% per 305 m (1000 ft) and 1.86% per 5.6°C (10°F).

Materials and specifications are subject to change without notice.
The International System of Units (SI) is used in this publication.

LE refers to low emission engine configuration.
STD refers to standard engine configuration.
90 refers to aftercooler water inlet temperature in 90°F (32°C).
130 refers to aftercooler water inlet temperature in 130°F (54°C).
All data is based on standard conditions. 77°F (25°C) 500 ft Alt.
These ratings do not allow for overload capabilty.

Stanley Consultants INC.

Project No. 17000.06.00 Page No.

Subject Trash Screen Angle.

Computed by FLR Date 10/2/04

Checked by MR Date 9/5/05

Approved by Date

Sheet No. 1 of 1

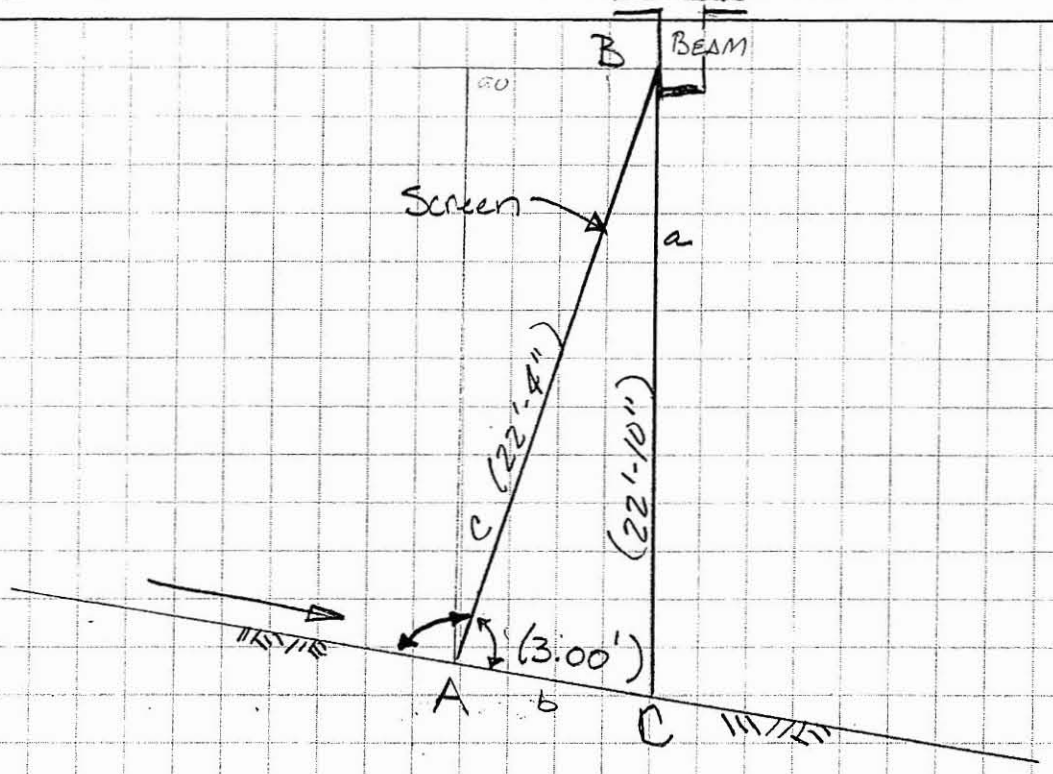

$$S = \frac{1}{2}(a+b+c) = \frac{1}{2}(22.833 + 3.000 + 22.333) = \frac{1}{2}(48.167')$$

$$S = 24.0833' \text{ or } 24'-1"$$

$$\sin A = \frac{2\sqrt{S(S-a)(S-b)(S-c)}}{bc}$$

$$\sin A = \frac{2\sqrt{(24.083)(24.083-22.833)(24.083-3.000)(24.083-22.333)}}{(3 \times 22.333)}$$

$$\sin A = \frac{2\sqrt{(24.083)(1.25)(21.083)(1.75)}}{67.000}$$

$$\sin A = 0.994834232$$

$$\angle A = \sin^{-1} 0.994834232 = 84°-10'-25"$$

$180° - 84°-10'-25" = 95°-49'-35"$

SC 3004 R4 898

Stanley Consultants INC.

Project No. 17000.06.00 Page No.

Subject PRELIMINARY WEIR HEIGHTS Clogged Trash Screen - WEIR AT Discharge Box. Revised 10/2/04

Computed by FLR Date 9/1/04

Checked by MC Date 9/5/05

Approved by Date

Sheet No. 1 of 2

Revised w/ Extra Pump Configuration 297

Preliminary Flowrate (Q_{OUT}) ≈ ~~241~~ cfs based on maximum flow for ~~four~~ Five (~~4~~) 5 pumps.

Trash Screen (Clogged).

WEIR LENGTH = ~~61'-4"~~ 73'-4" - ~~15'-0"~~ 17'-0" (VERTICAL BRACING) = ~~46'-4"~~ 56'-

Weir Height - w/ screening 100% clogged = H_e

From Handbook of Hydraulics - King & Brater Page 5-9, Equation 5-33

$$Q = C_e L H_e^{3/2} \qquad C_e = 3.22 + 0.44\frac{H}{P}$$

$H \approx$ ~~1.75'~~ 1.36'

$P = 18'-9"$

$\frac{H}{P} \approx$ ~~0.093~~ 0.072

$C_e = 3.22 + (0.44 \times$ ~~0.09~~ $0.072) =$ ~~3.223~~ 3.252

$$H_e = \left[\frac{Q}{C_e L}\right]^{2/3} = \left[\frac{\frac{297}{5}}{(3.252)(56.333)}\right]^{2/3} \approx \text{~~1.38'~~} \; 1.38$$

From STEVENS WATER RESOURCES DATA BOOK

$$Q = 3.33 L H^{3/2}$$

$$H = \left[\frac{Q}{(3.33)(L)}\right]^{2/3} = \left[\frac{297}{3.33 \times (46.33)}\right]^{2/3} \approx \text{~~1.35'~~} \; 1.36$$

* USE WEIR HEIGHT FROM "Handbook of Hydraulics": $H_e = 1.38'$

Stanley Consultants INC.

Project No. 17000.06.00 Page No.

Subject PRELIMINARY Discharge Box WEIR - Revised 10/2/04.

Computed by FLR Date 9-1-04

Checked by MR Date 8/3/05

Approved by Date

Sheet No. 2 of 2

Discharge Box - WEIR Length = ~~61'-0"~~ 73'-0"

From Handbook of Hydraulics - King & Brater, Page 5-9, Equation 5.33

$$Q_e = C_e L H_e^{3/2} \qquad C_e = 3.22 + \left(0.44 \times \frac{H}{P}\right)$$

$H \cong$ ~~1.12'~~ 1.15'

$P \cong$ ~~7.25'~~ 6.32'

$$\frac{H}{P} = \frac{\text{~~1.12'~~ } 1.15'}{\text{~~7.25'~~ } 6.32} = \text{~~0.1545~~ } 0.182$$

$$C_e = 3.22 + (0.44 \times \text{~~0.1545~~ } 0.182) = 3.22 + \text{~~0.068~~ } 0.080$$

$C_e \cong$ ~~3.288~~ 3.300 VSE $C_e =$ ~~3.29~~ 3.30'

$$H_e = \left[\frac{Q_e}{(C_e)(L)}\right]^{2/3} = \left[\frac{\text{~~241~~ } 297}{(\text{~~3.29~~ } 3.30)(\text{~~61'~~ } 73)}\right]^{2/3} \cong \text{~~1.13'~~ } 1.15'$$

* SET Weir for SF = 2.0' Minimum.
AND PROVIDE 2'-0" of FREEBOARD.

* WSE = Weir Height + H_e = 1588.90 + 1.15

WSE = ~~1589.05~~ 1590.05

Stanley Consultants INC

Project No. 17000.06.00 Page No.

Subject HEADLOSS Through Trash Screen (Clean)

Computed by FLR Date 9/3/04

Checked by [illegible] Date 8/5/05

Approved by Date

Sheet No. 1 of 2

Screen Headloss: See M&E 3d Edition Page 203, Eq 6-1

$$h_L = \frac{1}{0.7}\left(\frac{V^2 - v^2}{2g}\right)$$

h_L = headloss, ft

0.7 = an empirical discharge coefficient to account for turbulence and eddy losses.

V = Velocity of flow Through the openings of the bar rack.

v = Approach velocity in upstream channel.

g = gravity acceleration Constant. (ft/s^2)

Screen Width = 46'-4" ≡ 46.333'

Screen Height = 21'-6"

$$v = \frac{Q_I}{A_F} = \frac{400\ cfs}{(61.333' \times 21.5)} \quad 0.30\ fps$$

Screen Area = 46.333' × 21.5' = 996.16 SF

$$V\ @\ screen = \frac{400\ cfs}{996.16\ sf} = 0.40\ fps$$

open area of Screen ≅ 60%

V = 0.40 fps / 0.60 = 0.67 fps

Stanley Consultants INC.

Project No. 17000.0600 Page No.

Subject HEADLOSS Through Trash Screen (Clean)

Computed by FLR Date 9/3/04

Checked by MC Date 8/5/05

Approved by Date

Sheet No. 2 of 2

$$H_L = \frac{1}{0.7}\left(\frac{V^2 - v^2}{2g}\right) = \frac{1}{0.7}\left(\frac{(0.67\,fps)^2 - (0.30\,fps)^2}{2 \times 32.2\,fps^2}\right)$$

$$\cong 0.01$$

* Minimal Headloss under clean conditions

APPENDIX H

McKELLIPS ROAD PUMP STATION ANALYSIS

Submersible Pump

PERFORMANCE CURVE

PRODUCT	TYPE
CP3201.180	MT

DATE	PROJECT	CURVE NO	ISSUE
2002-02-04		63-639-00-6030	2

	1/1-LOAD	3/4-LOAD	1/2-LOAD
MOTOR COS PHI	0.88	0.85	0.78
MOTOR EFFICIENCY	86.0 %	87.0 %	86.0 %
GEAR EFFICIENCY	---	---	---

COMMENTS: IMP. DIAM. 350 MM

INLET/OUTLET: - /195 mm

IMP. THROUGHLET: 84 mm

MOTOR SHAFT POWER	40	hp
STARTING CURRENT ...	249	A
RATED CURRENT ...	50	A
RATED SPEED	1155	rpm
TOT.MOM.OF INERTIA ...	---	
NO. OF BLADES	2	

IMPELLER DIAMETER: 350 mm

MOTORTYPE	STATOR	REV
27-26-6AA	37YSER	11

FREQ.	PHASES	VOLTAGE	POLES
60 Hz	3	460 V	6

GEARTYPE	RATIO
---	---

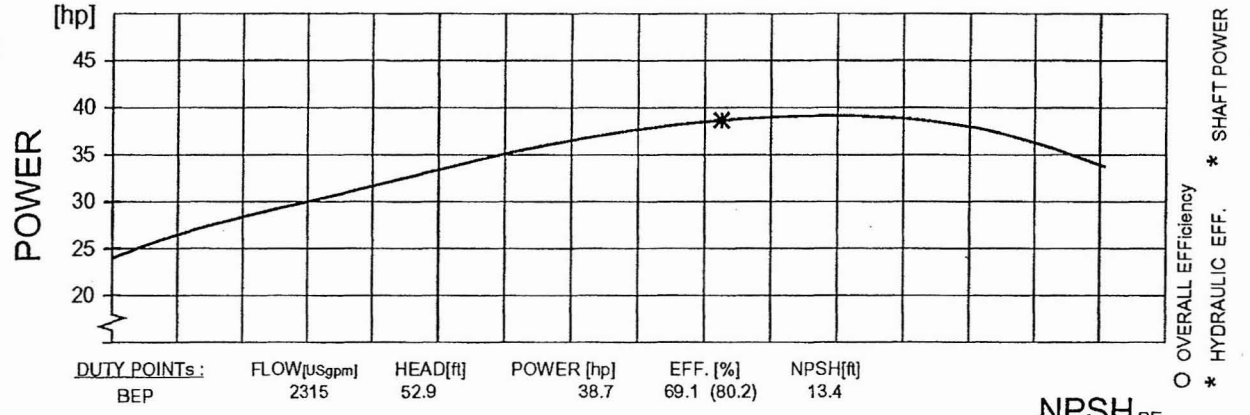

DUTY POINTs :	FLOW[USgpm]	HEAD[ft]	POWER [hp]	EFF. [%]	NPSH[ft]
BEP	2315	52.9	38.7	69.1 (80.2)	13.4

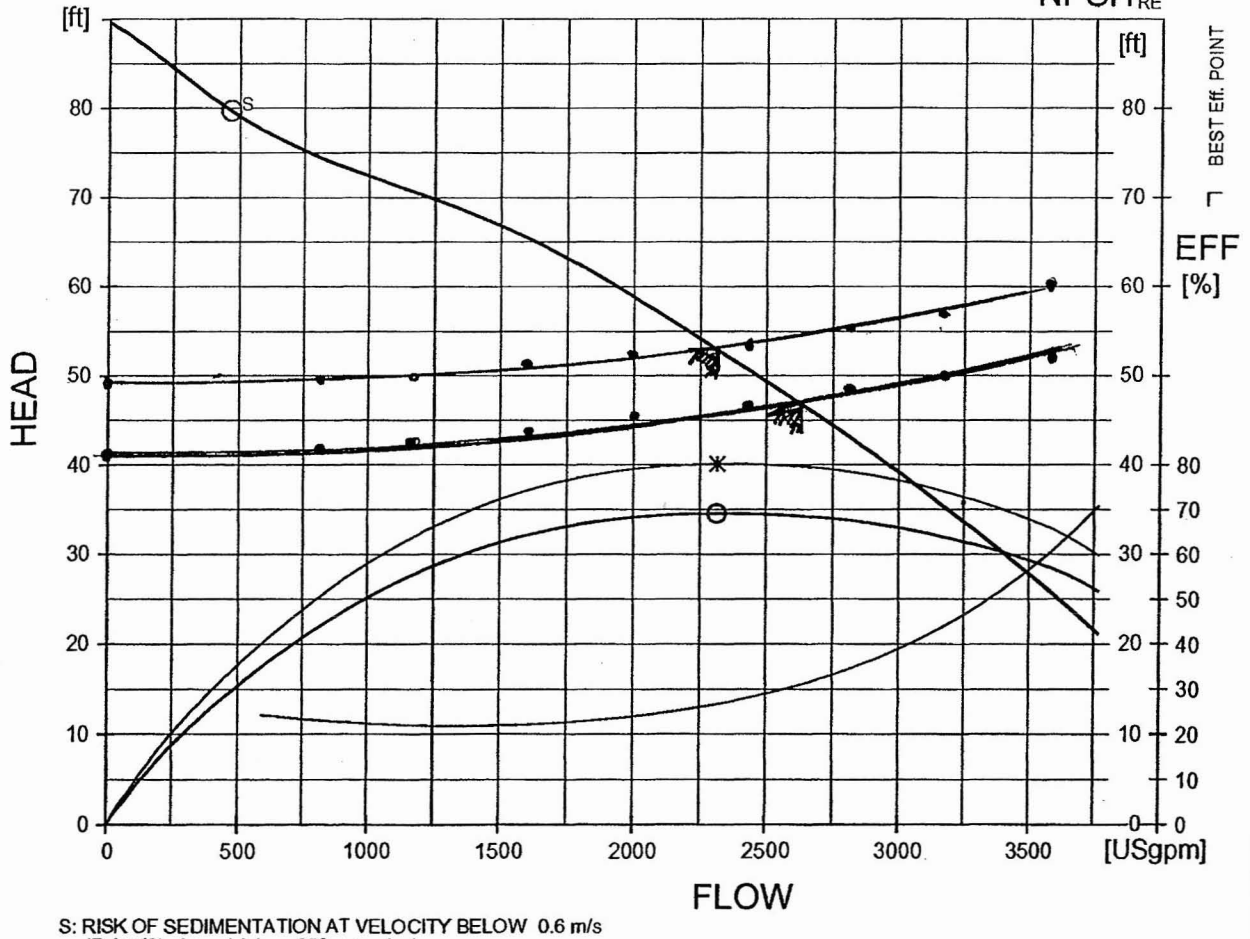

S: RISK OF SEDIMENTATION AT VELOCITY BELOW 0.6 m/s
(Point (S) show risk in a 250 mm pipe)

CURVES SHOW PERFORMANCE WITH CLEAR COLD WATER

FLYGT CURVE

Stanley Consultants INC.

Project No. 17000.06.00 Page No.

Subject Minor Losses for Submersible Pump -

Computed by FLR Date 9/3/04

Checked by [signature] Date 8/5/05

Approved by Date

Sheet No. 1 of 1

12" DIP PIPE = 115 LF

CAMERON HYDRAULIC DATA FOR LOSS COEFFICIENTS (K)

Minor Losses:

10" DIAMETER

	K
10" INLET	0.5
10"x12" REDUCER	0.25
90° BEND	0.39
ΣK=	1.14

12" DIAMETER

	K
90° BEND	0.39
Outlet	1.00
FLAP VALVE	0.15
	1.54

CALCULATED BY Fred Rouse 9/3/04
Check By: [signature] 9/5/05

RED MTN FWY, POWER ROAD - UNIVERSITY DRIVE
ADOT
MESA, ARIZONA

FLOW (GPM)	VELOCITY (FPS)				
	8	10	12	16	20
1600	10.21	6.54	4.54	2.55	1.63
2000	12.77	8.17	5.67	3.19	2.04
2400	15.32	9.8	6.81	3.83	2.45
2800	17.87	11.44	7.94	4.47	2.86
3200	20.43	13.07	9.03	5.11	3.27

The recommended design velocity should be in the range of 5.0 to 12.0 fps.

Preliminary Static Head Calculation: Red Mtn Fwy Storm Water Pump Station - Submersible Pump

Weir Crest Elevation @ Max Discharge Flowrate	1590.05 Ft	Weir Cresat Elevation @ Max Dsicharge Flowrate	1590.05 Ft
Low Level Pumps Off Elevation	1541 Ft	High level Max Elevation	1548
Static Head (Z)	**49.05 Ft**		**42.05 Ft**

Pump Hydraulics

Flowrate(gpm) (cfs)	0 0	0 0	0 0	0 0	0 0	0 0	0 0
	Pump Connection	Pipe Number 1	Pipe Number 2	Pipe Number 3	Pipe Number 4	Pipe Number 5	Pipe Number 6
Sum K	1.14	1.54	0	0	0	0	0
Pipe D(in)	10	12	12	12	12	12	12
Pipe D(ft)	0.83	1	1	1	1	1	1
HyRa(ft)	0.21	0.25	0.25	0.25	0.25	0.25	0.25
Pipe Lenght(ft)	0	115	57	0	0	0	0
	Minor HL(ft) C-factor 120	Minor HL(ft) C-factor 120	Minor HL(ft) C-factor 120	Minor HL(ft) C-factor 120	Minor HL(ft) C-factor 120	Minor HL(ft) C-factor 120	Minor HL(ft) C-factor 120
Total Headloss 0	0	0	0	0	0	0	0

TDH (MAX)	**49.05**
TDH (MIN)	42.05
THD (MIN) Use	**42**

Calculated By: Fred Rouse 9/3/04
Check By: MZ 9/5/05

RED MTN FWY, POWER ROAD - UNIVERSITY DRIVE
ADOT
MESA, ARIZONA

FLOW (GPM)	VELOCITY (FPS)				
	8	10	12	16	20
1600	10.21	6.54	4.54	2.55	1.63
2000	12.77	8.17	5.67	3.19	2.04
2400	15.32	9.8	6.81	3.83	2.45
2800	17.87	11.44	7.94	4.47	2.86
3200	20.43	13.07	9.08	5.11	3.27

The recommended design velocity should be in the range of 5.0 to 12.0 fps.

Preliminary Static Head Calculation: Red Mtn Fwy Storm Water Pump Station

Weir Crest Elevation @ Max Discharge Flowrate	1590.05 Ft	Weir Cresat Elevation @ Max Dsicharge Flowrate	1590.05 Ft
Low Level Pumps Off Elevation	1541 Ft	High level Max Elevation	1548
Static Head (Z)	**49.05 Ft**		**42.05 Ft**

Pump Hydraulics

Flowrate(gpm) (cfs)		800	1.78	800	1.78	0	0	0	0	0	0	0	0	0	0
		Pump Connection		Pipe Number 1		Pipe Number 2		Pipe Number 3		Pipe Number 4		Pipe Number 5		Pipe Number 6	
Sum K		1.14		1.54		0		0		0		0		0	
Pipe D(in)		10		12		12		12		12		12		12	
Pipe D(ft)		0.83		1		1		1		1		1		1	
HyRa(ft)		0.21		0.25		0.25		0.25		0.25		0.25		0.25	
Pipe Lenght(ft)		0		115		0		0		0		0		0	
		Minor HL(ft)	C-factor 120	Minor HL(ft)	C-factor 120	Minor HL(ft)	C-factor 120	Minor HL(ft)	C-factor 120	Minor HL(ft)	C-factor 120	Minor HL(ft)	C-factor 120	Minor HL(ft)	C-factor 120
Total Headloss	0.54	0.19	0	0.12	0.23	0	0	0	0	0	0	0	0	0	0

TDH (MAX)	**49.59**
TDH (MIN)	42.59
THD (MIN) Use	**42.59**

Calculated By:
Checked By: MR 9/5/05

RED MTN FWY, POWER ROAD - UNIVERSITY DRIVE
ADOT
MESA, ARIZONA

FLOW (GPM)	VELOCITY (FPS)				
	8	10	12	16	20
1600	10.21	6.54	4.54	2.55	1.63
2000	12.77	8.17	5.67	3.19	2.04
2400	15.32	9.8	6.81	3.83	2.45
2800	17.87	11.44	7.94	4.47	2.86
3200	20.43	13.07	9.08	5.11	3.27

The recommended design velocity should be in the range of 5.0 to 12.0 fps.

Preliminary Static Head Calculation: Red Mtn Fwy Storm Water Pump Station

Weir Crest Elevation @ Max Discharge Flowrate	1590.05 Ft	Weir Cresat Elevation @ Max Dsicharge Flowrate	1590.05 Ft
Low Level Pumps Off Elevation	1541 Ft	High level Max Elevation	1548
Static Head (Z)	**49.05 Ft**		**42.05 Ft**

Pump Hydraulics																			
Flowrate(gpm)	(cfs)	1200	2.67	1200	2.67	0	0	0	0	0	0	0	0	0	0				
		Pump Connection		Pipe Number 1		Pipe Number 2		Pipe Number 3		Pipe Number 4		Pipe Number 5		Pipe Number 6					
Sum K		1.14		1.54		0		0		0		0		0					
Pipe D(in)		10		12		12		12		12		12		12					
Pipe D(ft)		0.83		1		1		1		1		1		1					
HyRa(ft)		0.21		0.25		0.25		0.25		0.25		0.25		0.25					
Pipe Lenght(ft)		0		0		57		0		0		0		0					
		Minor HL(ft)	C-factor 120	Minor HL(ft)	C-factor 120	Minor HL(ft)	C-factor 120	Minor HL(ft)	C-factor 120	Minor HL(ft)	C-factor 120	Minor HL(ft)	C-factor 120	Minor HL(ft)	C-factor 120				
Total Headloss	0.71	0.43	0	0.28	0	0	0	0	0	0	0	0	0	0	0				

TDH (MAX)	**49.76**
TDH (MIN)	42.76
THD (MIN) Use	**42.76**

Calculated By: Fred Rowe 9/3/05
Checked By: MR 9/5/05

RED MTN FWY, POWER ROAD - UNIVERSITY DRIVE
ADOT
MESA, ARIZONA

FLOW (GPM)	VELOCITY (FPS)				
	8	10	12	16	20
1600	10.21	6.54	4.54	2.55	1.63
2000	12.77	8.17	5.67	3.19	2.04
2400	15.32	9.8	6.81	3.83	2.45
2800	17.87	11.44	7.94	4.47	2.86
3200	20.43	13.07	9.08	5.11	3.27

The recommended design velocity should be in the range of 5.0 to 12.0 fps.

Preliminary Static Head Calculation: Red Mtn Fwy Storm Water Pump Station

Weir Crest Elevation @ Max Discharge Flowrate	1590.05 Ft	Weir Cresat Elevation @ Max Dsicharge Flowrate	1590.05 Ft
Low Level Pumps Off Elevation	1541 Ft	High level Max Elevation	1548
Static Head (Z)	**49.05 Ft**		**42.05 Ft**

Pump Hydraulics

Flowrate(gpm)	(cfs)	1600	3.57	1600	3.57	0	0	0	0	0	0	0	0	0	0
		Pump Connection		Pipe Number 1		Pipe Number 2		Pipe Number 3		Pipe Number 4		Pipe Number 5		Pipe Number 6	
Sum K		1.14		1.54		0		0		0		0		0	
Pipe D(in)		10		12		12		12		12		12		12	
Pipe D(ft)		0.83		1		1		1		1		1		1	
HyRa(ft)		0.21		0.25		0.25		0.25		0.25		0.25		0.25	
Pipe Lenght(ft)		0		115		0		0		0		0		0	
		Minor HL(ft)	C-factor 120	Minor HL(ft)	C-factor 120	Minor HL(ft)	C-factor 120	Minor HL(ft)	C-factor 120	Minor HL(ft)	C-factor 120	Minor HL(ft)	C-factor 120	Minor HL(ft)	C-factor 120
Total Headloss	2.08	0.77	0	0.49	0.82	0	0	0	0	0	0	0	0	0	0

TDH (MAX)	**51.13**
TDH (MIN)	**44.13**
THD (MIN) Use	**44.13**

Calculated By:
Checked By: mc 8/5/05

RED MTN FWY, POWER ROAD - UNIVERSITY DRIVE
ADOT
MESA, ARIZONA

FLOW (GPM)	VELOCITY (FPS)				
	8	10	12	16	20
1600	10.21	6.54	4.54	2.55	1.63
2000	12.77	8.17	5.67	3.19	2.04
2400	15.32	9.8	6.81	3.83	2.45
2800	17.87	11.44	7.94	4.47	2.86
3200	20.43	13.07	9.08	5.11	3.27

The recommended design velocity should be in the range of 4.0 to 10.0 fps.

Preliminary Static Head Calculation: Red Mtn Fwy Storm Water Pump Station

Weir Crest Elevation @ Max Discharge Flowrate	1590.05 Ft	Weir Cresat Elevation @ Max Dsicharge Flowrate	1590.05 Ft	
Low Level Pumps Off Elevation	1541 Ft	High level Max Elevation	1548 Ft	Preliminary Elevation
Static Head (Z)	**49.05 Ft**		**42.05 Ft**	

Pump Hydraulics

Flowrate(gpm)	(cfs)	2000	4.46	2000	4.46	0	0	0	0	0	0	0	0	0	0
		Pump Connection		Pipe Number 1		Pipe Number 2		Pipe Number 3		Pipe Number 4		Pipe Number 5		Pipe Number 6	
Sum K		1.14		1.54		0		0		0		0		0	
Pipe D(in)		10		12		12		12		12		12		12	
Pipe D(ft)		0.83		1		1		1		1		1		1	
HyRa(ft)		0.21		0.25		0.25		0.25		0.25		0.25		0.25	
Pipe Lenght(ft)		0		115		0		0		0		0		0	
		Minor HL(ft)	C-factor 120	Minor HL(ft)	C-factor 120	Minor HL(ft)	C-factor 120	Minor HL(ft)	C-factor 120	Minor HL(ft)	C-factor 120	Minor HL(ft)	C-factor 120	Minor HL(ft)	C-factor 120
Total Headloss	3.2	1.2	0	0.77	1.23	0	0	0	0	0	0	0	0	0	0

TDH (MAX)	**52.25**
TDH (MIN)	45.25
THD (MIN) Use	**45.25**

Calculated By: Fred Rouse 9/3/05
Checked By: MR 9/5/05

RED MTN FWY, POWER ROAD - UNIVERSITY DRIVE
ADOT
MESA, ARIZONA

FLOW (GPM)	VELOCITY (FPS)				
	8	10	12	16	20
1600	10.21	6.54	4.54	2.55	1.63
2000	12.77	8.17	5.67	3.19	2.04
2400	15.32	9.8	6.81	3.83	2.45
2800	17.87	11.44	7.94	4.47	2.86
3200	20.43	13.07	9.08	5.11	3.27

The recommended design velocity should be in the range of 4.0 to 10.0 fps.

Preliminary Static Head Calculation: Red Mtn Fwy Storm Water Pump Station

Weir Crest Elevation @ Max Discharge Flowrate	1590.05 Ft	Weir Cresat Elevation @ Max Dsicharge Flowrate	1590.05 Ft	
Low Level Pumps Off Elevation	1541 Ft	High level Max Elevation	1548 Ft	Preliminary Elevation
Static Head (Z)	**49.05 Ft**		**42.05 Ft**	

Pump Hydraulics

Flowrate(gpm) (cfs)		2400	5.35	2400	5.35	0	0	0	0	0	0	0	0	0	0
		Pump Connection		Pipe Number 1		Pipe Number 2		Pipe Number 3		Pipe Number 4		Pipe Number 5		Pipe Number 6	
Sum K		1.14		1.54		0		0		0		0		0	
Pipe D(in)		10		12		12		12		12		12		12	
Pipe D(ft)		0.83		1		1		1		1		1		1	
HyRa(ft)		0.21		0.25		0.25		0.25		0.25		0.25		0.25	
Pipe Lenght(ft)		0		115		0		0		0		0		0	
		Minor HL(ft)	C-factor 120	Minor HL(ft)	C-factor 120	Minor HL(ft)	C-factor 120	Minor HL(ft)	C-factor 120	Minor HL(ft)	C-factor 120	Minor HL(ft)	C-factor 120	Minor HL(ft)	C-factor 120
Total Headloss	4.56	1.73	0	1.11	1.72	0	0	0	0	0	0	0	0	0	0

TDH (MAX)	**53.61**
TDH (MIN)	46.61
THD (MIN) Use	**46.61**

Calculated By: Fred Rouse 5/3/04
Checked By: MK 8/5/05

RED MTN FWY, POWER ROAD - UNIVERSITY DRIVE
ADOT
MESA, ARIZONA

FLOW (GPM)	VELOCITY (FPS)				
	8	10	12	16	20
1600	10.21	6.54	4.54	2.55	1.63
2000	12.77	8.17	5.67	3.19	2.04
2400	15.32	9.8	6.81	3.83	2.45
2800	17.87	11.44	7.94	4.47	2.86
3200	20.43	13.07	9.03	5.11	3.27

The recommended design velocity should be in the range
of 4.0 to 10.0 fps.

Preliminary Static Head Calculation: Red Mtn Fwy Storm Water Pump Station

Weir Crest Elevation @ Max Discharge Flowrate	1590.05 Ft	Weir Cresat Elevation @ Max Dsicharge Flowrate	1590.05 Ft	
Low Level Pumps Off Elevation	1541 Ft	High level Max Elevation	1548 Ft	Preliminary Elevation
Static Head (Z)	**49.05 Ft**		**42.05 Ft**	

Pump Hydraulics

Flowrate(gpm)	(cfs)		2800	6.24	2800	6.24	0	0	0	0	0	0	0	0	0	0
			Pump Connection		Pipe Number 1		Pipe Number 2		Pipe Number 3		Pipe Number 4		Pipe Number 5		Pipe Number 6	
Sum K			1.14		1.54		0		0		0		0		0	
Pipe D(in)			10		12		12		12		12		12		12	
Pipe D(ft)			0.83		1		1		1		1		1		1	
HyRa(ft)			0.21		0.25		0.25		0.25		0.25		0.25		0.25	
Pipe Lenght(ft)			0		115		0		0		0		0		0	
			Minor HL(ft)	C-factor 120	Minor HL(ft)	C-factor 120	Minor HL(ft)	C-factor 120	Minor HL(ft)	C-factor 120	Minor HL(ft)	C-factor 120	Minor HL(ft)	C-factor 120	Minor HL(ft)	C-factor 120
Total Headloss		6.15	2.35	0	1.51	2.29	0	0	0	0	0	0	0	0	0	0

TDH (MAX)	**55.2**
TDH (MIN)	48.2
THD (MIN) Use	**48.2**

Calculated By : Fred Rouse 12/3/04
Check By : MA 8/5/05

RED MTN FWY, POWER ROAD - UNIVERSITY DRIVE
ADOT
MESA, ARIZONA

FLOW (GPM)	VELOCITY (FPS)				
	8	10	12	16	20
1600	10.21	6.54	4.54	2.55	1.63
2000	12.77	8.17	6.62	3.19	2.04
2400	15.32	9.8	6.81	3.83	2.45
2800	17.87	11.44	7.94	4.47	2.86
3200	20.43	13.07	9.08	5.11	3.27

The recommended design velocity should be in the range of 4.0 to 10.0 fps.

Preliminary Static Head Calculation: Red Mtn Fwy Storm Water Pump Station

Weir Crest Elevation @ Max Discharge Flowrate	1590.05 Ft	Weir Cresat Elevation @ Max Dsicharge Flowrate	1590.05 Ft	
Low Level Pumps Off Elevation	1541 Ft	High level Max Elevation	1548 Ft	Preliminary Elevation
Static Head (Z)	**49.05 Ft**		**42.05 Ft**	

Pump Hydraulics

Flowrate(gpm)	(cfs)	3200	7.13	3200	7.13	0	0	0	0	0	0	0	0	0	0			
		Pump Connection		Pipe Number 1		Pipe Number 2		Pipe Number 3		Pipe Number 4		Pipe Number 5		Pipe Number 6				
Sum K		1.14		1.54		0		0		0		0		0				
Pipe D(in)		10		12		12		12		12		12		12				
Pipe D(ft)		0.83		1		1		1		1		1		1				
HyRa(ft)		0.21		0.25		0.25		0.25		0.25		0.25		0.25				
Pipe Lenght(ft)		0		115		0		0		0		0		0				
		Minor HL(ft)	C-factor 120	Minor HL(ft)	C-factor 120	Minor HL(ft)	C-factor 120	Minor HL(ft)	C-factor 120	Minor HL(ft)	C-factor 120	Minor HL(ft)	C-factor 120	Minor HL(ft)	C-factor 120			
Total Headloss	7.97	3.07	0	1.97	2.93	0	0	0	0	0	0	0	0	0	0			

TDH (MAX)	**57.02**
TDH (MIN)	50.02
THD (MIN) Use	**50.02**

Calculated By: Fred Rouse 9/3/04
Check By: MR 8/5/05

RED MTN FWY, POWER ROAD - UNIVERSITY DRIVE
ADOT
MESA, ARIZONA

FLOW (GPM)	VELOCITY (FPS)				
	8	10	12	16	20
1600	10.21	6.54	4.54	2.55	1.63
2000	12.77	8.17	5.67	3.19	2.04
2400	15.32	9.8	6.81	3.83	2.45
2800	17.87	11.44	7.94	4.47	2.86
3200	20.43	13.07	9.08	5.11	3.27

The recommended design velocity should be in the range of 4.0 to 10.0 fps.

Preliminary Static Head Calculation: Red Mtn Fwy Storm Water Pump Station

Weir Crest Elevation @ Max Discharge Flowrate	1590.05 Ft	Weir Cresat Elevation @ Max Dsicharge Flowrate	1590.05 Ft	
Low Level Pumps Off Elevation	1541 Ft	High level Max Elevation	1548 Ft	Preliminary Elevation
Static Head (Z)	**49.05 Ft**		**42.05 Ft**	

Pump Hydraulics

Flowrate(gpm)	(cfs)	3600	8.02	3600	8.02	0	0	0	0	0	0	0	0	0	0
		Pump Connection		Pipe Number 1		Pipe Number 2		Pipe Number 3		Pipe Number 4		Pipe Number 5		Pipe Number 6	
Sum K		1.14		1.54		0		0		0		0		0	
Pipe D(in)		10		12		12		12		12		12		12	
Pipe D(ft)		0.83		1		1		1		1		1		1	
HyRa(ft)		0.21		0.25		0.25		0.25		0.25		0.25		0.25	
Pipe Lenght(ft)		0		115		0		0		0		0		0	
		Minor HL(ft)	C-factor 120	Minor HL(ft)	C-factor 120	Minor HL(ft)	C-factor 120	Minor HL(ft)	C-factor 120	Minor HL(ft)	C-factor 120	Minor HL(ft)	C-factor 120	Minor HL(ft)	C-factor 120
Total Headloss	10.03	3.89	0	2.49	3.65	0	0	0	0	0	0	0	0	0	0

TDH (MAX)	**59.08**
TDH (MIN)	52.08
THD (MIN) Use	**52.08**

APPENDIX I

LIFT STATION CALCULATIONS

- Signal Butte Lift Station
- CAP & FRS Equipment Underpass Lift Stations

APPENDIX I

LIFT STATION CALCULATIONS

Signal Butte Lift Station

Stanley Consultants INC

Project No. 17000.06.02 Page No.

Subject Signal Butte Energy Dissipation Pump Station

Computed by FLR Date 10/28/04

Checked by [illegible] Date 8/5/05

Approved by Date

Sheet No. 1 of

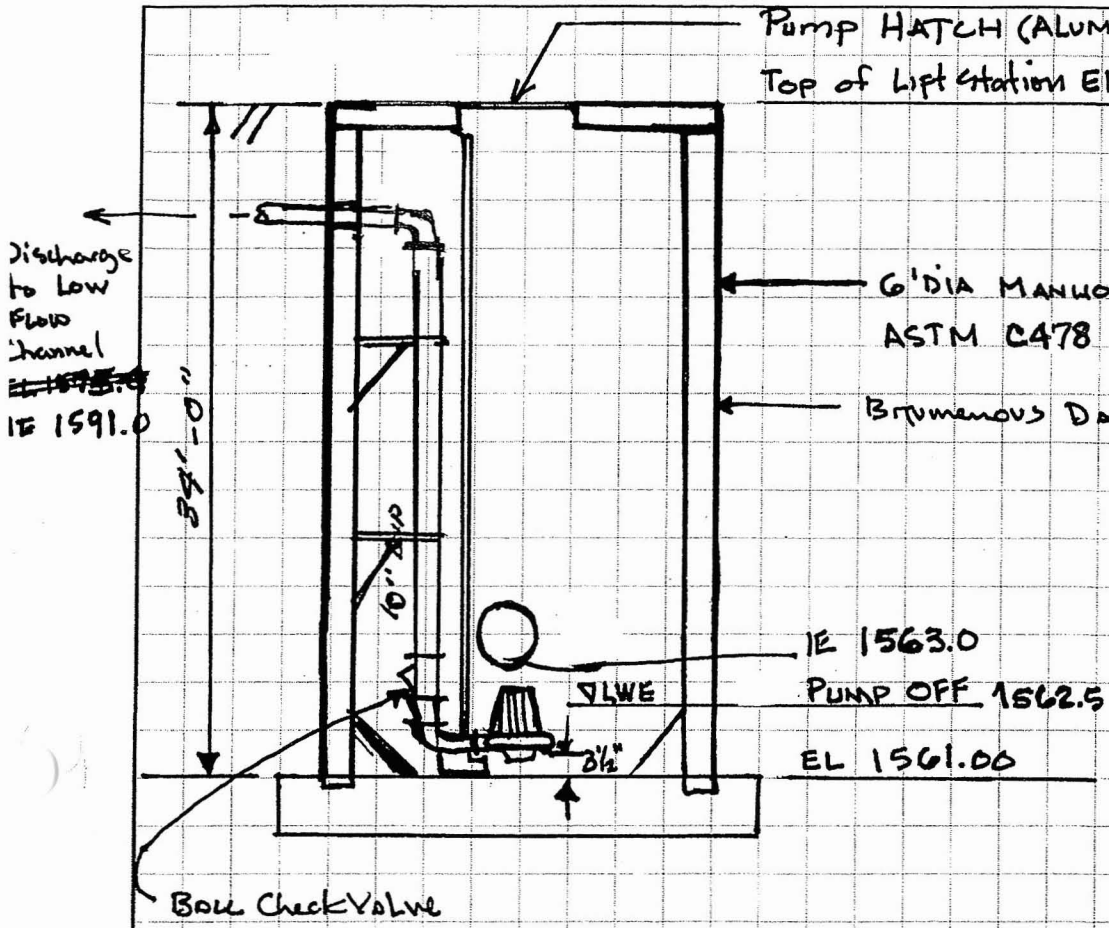

550 gpm Flygt Model 3127 Impeller Code 432

1591 - 1561.00 = 30' + 50' to ~~floor~~ Low flow channel

3" - 90° Bend	~~0.45~~ - 0.39	
3"x4" Reducer	- 0.25	0.70
4"x8" Reducer	- 0.25	
	0.89	
Entrance loss	- 0.50	
	~~1.39~~	

CHK VALVE	0.77
90° Bend	0.42
Free Discharge =	1.0
Entrance =	0.50
	2.69'

C/N-3127

Motor Data

RATED OUTPUT POWER HP	(kW)	Ø	VOLTS NOM.	FULL LOAD AMPS	LOCKED ROTOR AMPS	LOCKED ROTOR KVA	LOCKED ROTOR CODE LETTER KVA/HP	RATED INPUT POWER kW	POLES/RPM
10.0	(7.5)	3	200 230 460 575	29.0 26.0 13.0 10.0	173 150 75 60	60	G	8.9	4/1745
11.0	(8.2)	3	200 230 460 575	30.0 26.0 13.0 11.0	258 192 96 85	89 76 76 85	K H H J	9.8	2/3495

PUMP MOTOR HP	EFFICIENCY			POWER FACTOR		
	100% LOAD	75% LOAD	50% LOAD	100% LOAD	75% LOAD	50% LOAD
10.0	84.0	85.0	84.0	0.87	0.85	0.77
11.0	83.5	84.0	82.5	0.93	0.92	0.88

Cable Data

HP	VOLTS	MAX. LENGTH FT.	CABLE SIZE/ NOMINAL DIA.	CONDUCTORS (IN ONE CABLE)	PART NUMBER
10.0	200	165	8/3-2-1-GC 28.2mm (1.11")	(3) 8 AWG (PWR) (2) 10 AWG (CTRL) (1) 8 AWG (GND) (1) 10 AWG (GC)	94 21 08
10.0	230 460 575	135 535 870	10/3-2-1-GC 21.3mm (0.84")	(3) 10 AWG (PWR) (2) 12 AWG (CTRL) (1) 10 AWG (GND) (1) 12 AWG (GC)	94 21 06
11.0	200 230 460 575	150 200 795 1,175	8/3-2-1-GC 28.2mm (1.11")	(3) 8 AWG (PWR) (2) 10 AWG (CTRL) (1) 8 AWG (GND) (1) 10 AWG (GC)	94 21 08

PERFORMANCE CURVE

FLYGT		PRODUCT: CP3127.180	TYPE: MT
DATE: 2002-02-04	PROJECT:	CURVE NO: 63-432-00-3730	ISSUE: 3

	1/1-LOAD	3/4-LOAD	1/2-LOAD
MOTOR COS PHI	0.89	0.87	0.81
MOTOR EFFICIENCY	83.5 %	85.0 %	84.5 %
GEAR EFFICIENCY	—	---	—

MOTOR SHAFT POWER	10	hp
STARTING CURRENT ...	64	A
RATED CURRENT ...	13	A
RATED SPEED	1735	rpm
TOT.MOM.OF INERTIA ...	---	
NO. OF BLADES	1	

IMPELLER DIAMETER: 229 mm

MOTORTYPE	STATOR	REV
21-12-4AL	12YSER	10

FREQ.	PHASES	VOLTAGE	POLES
60 Hz	3	460 V	4

GEARTYPE	RATIO
---	---

COMMENTS: DISCH. CONN. DIAM 150 MM

INLET/OUTLET: - /150 mm

IMP. THROUGHLET: 87 mm

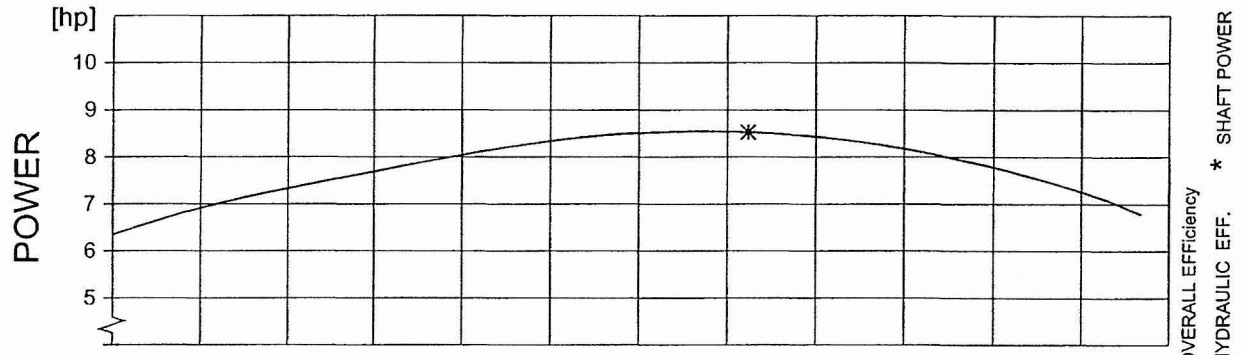

DUTY POINTs :	FLOW[USgpm]	HEAD[ft]	POWER [hp]	EFF. [%]	NPSH[ft]
BEP	724	30.3	8.5	55.2 (65.0)	9.4

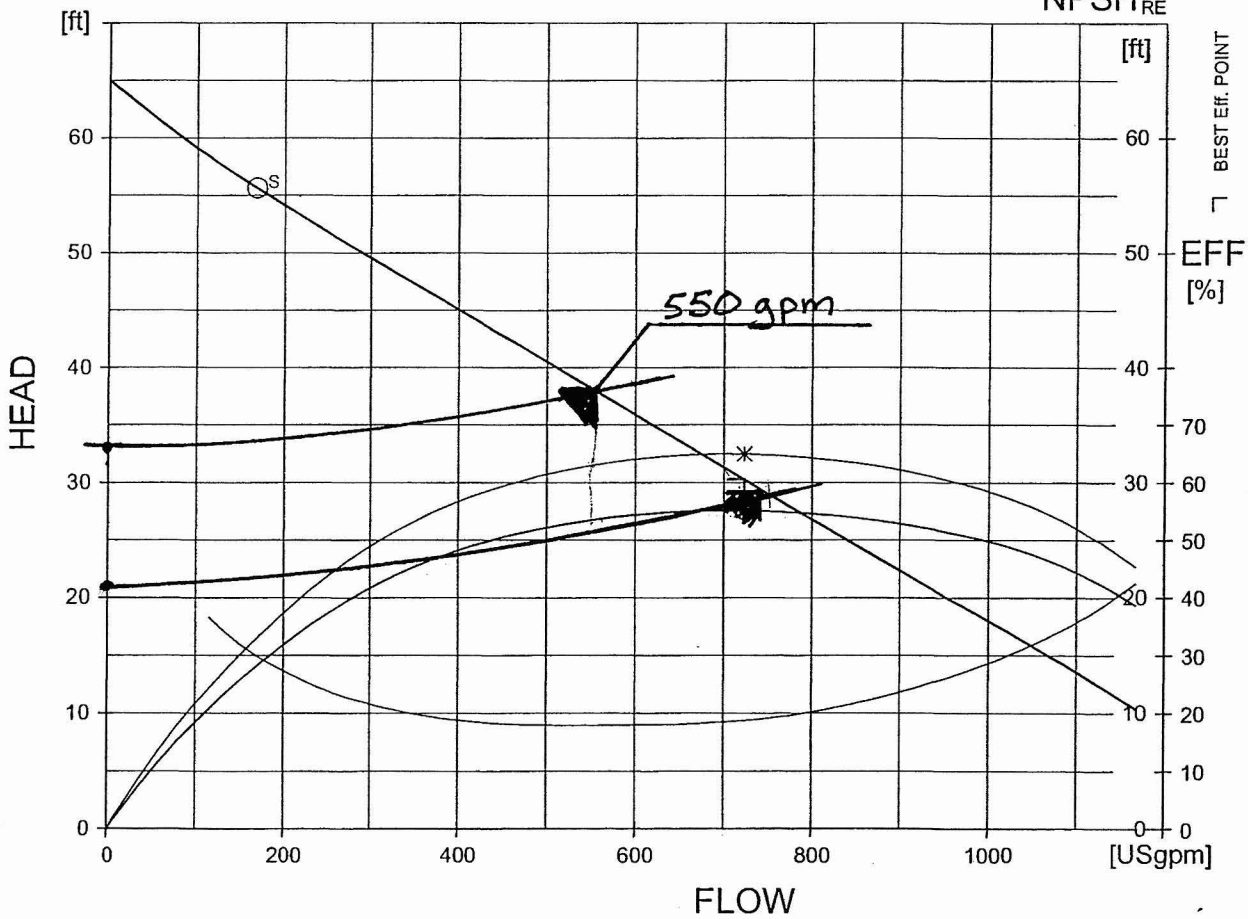

S: RISK OF SEDIMENTATION AT VELOCITY BELOW 0.6 m/s
(Point (S) show risk in a 150 mm pipe)

CURVES SHOW PERFORMANCE WITH CLEAR COLD WATER

FLYGT CURVE

RED MTN FWY, POWER ROAD - UNIVERSITY DRIVE
SINGLE BUTTE ENERGY BASIN LIFT STATION
ADOT
MESA, ARIZONA

FLOW (GPM)	VELOCITY (FPS)				
	3	6	8	10	12
400	18.16	4.54	2.55	1.63	1.13
500	22.7	5.67	3.19	2.04	1.42
550	24.97	6.24	3.51	2.25	1.56
600	27.24	6.81	3.83	2.45	1.7
650	29.5	7.38	4.15	2.66	1.84

The recommended design velocity should be in the range
of 4.0 to 10.0 fps.

Preliminary Static Head Calculation: Red Mtn Fwy Single Butte Lift Station

Discharge @ Max Discharge Flowrate	1591 Ft	Weir Cresat Elevation @ Max Dsicharge Flowrate	1591 Ft	
Low Level Pumps Off Elevation	1562.5 Ft	High level Max Elevation	1574.4 Ft	Preliminary Elevation
Static Head (Z)	**29 Ft**		**17 Ft**	

Pump Hydraulics

Flowrate(gpm)	(cfs)	550	1.23	550	1.23	550	1.23	0	0	0	0	0	0	0	0
		Pump Connection		Pipe Number 1		Pipe Number 2		Pipe Number 3		Pipe Number 4		Pipe Number 5		Pipe Number 6	
Sum K		0.63		0.25		2.69		0		0		0		0	
Pipe D(in)		3		4		8		12		12		12		12	
Pipe D(ft)		0.25		0.33		0.67		1		1		1		1	
HyRa(ft)		0.06		0.08		0.17		0.25		0.25		0.25		0.25	
Pipe Lenght(ft)		0		0		80		0		0		0		0	
		Minor HL(ft)	C-factor 120	Minor HL(ft)	C-factor 120	Minor HL(ft)	C-factor 120	Minor HL(ft)	C-factor 120	Minor HL(ft)	C-factor 120	Minor HL(ft)	C-factor 120	Minor HL(ft)	C-factor 120
Total Headloss	8.01	6.14	0	0.8	0	0.51	0.56	0	0	0	0	0	0	0	0

TDH (MAX)	**37.01**
TDH (MIN)	25.01
THD (MIN) Use	**25.01**

APPENDIX I

LIFT STATION CALCULATIONS

CAP & FRS Equipment Underpass Lift Stations

Stanley Consultants INC

Project No. 17000.04.01 Page No.

Subject Pump Design - CAP Equipment Underpass LIFT STATION

Computed by FLR Date 12/28/04

Checked by [signature] Date 8/5/05

Approved by Date

Sheet No. 1 of

Mc Dowell Road West:

* Discharge Elevation 1579.00 - 0.50 = 1578.50

* Low Level off 1562.00

MAX STATIC Head 1578.50 - 1562.00 = 16.50

* MIN STATIC Head 1578.50 - 1564.00 = 14.50

DESIGN Flow Rate = 80 gpm (0.18 cfs)

Force main - 3" DIA - 200 LF. * Actual length 275 LF TOTAL

Pump Station

Item	K	ΣK
Inlet	0.5	0.50
90° Bend	0.54	1.08
Ball Check	0.72	0.72
ΣΣK =		2.30

Force Main (FM)

Item	K	ΣK
45° Bend	0.29	0.87
Free Discharge	1.00	1.00
ΣΣK =		1.87

Q	TDH
0	16.5
40	18.65
80	24.30
100	27.85'

* Mc Dowell Rd - West - Flowrate = 90 gpm.

McDowell Rd CAP LIFT STATION

PERFORMANCE CURVE

PRODUCT	CF3057.181
TYPE	HT
DATE	2002-02-04
PROJECT	
CURVE NO	61-254-00-7360
ISSUE	3

	1/1-LOAD	3/4-LOAD	1/2-LOAD
MOTOR COS PHI	0.97	0.97	0.96
MOTOR EFFICIENCY	74.5 %	76.0 %	73.0 %
GEAR EFFICIENCY	---	---	---

MOTOR SHAFT POWER	2.3	hp
STARTING CURRENT ...	35	A
RATED CURRENT ...	10	A
RATED SPEED	3325	rpm
TOT.MOM.OF INERTIA ...	---	
NO. OF BLADES	1	

IMPELLER DIAMETER: 101 mm

MOTORTYPE	STATOR	REV
13-10-2BZ	03-	10

FREQ.	PHASES	VOLTAGE	POLES
60 Hz	1	230 V	2

GEARTYPE	RATIO
---	---

COMMENTS

INLET/OUTLET: - / 55 mm

IMP. THROUGHLET: 48 mm

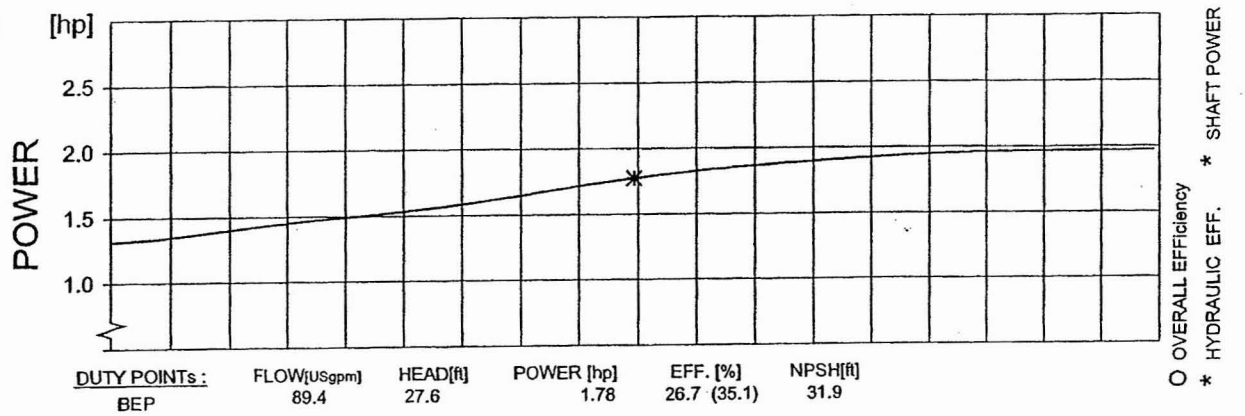

DUTY POINTs :	FLOW[USgpm]	HEAD[ft]	POWER [hp]	EFF. [%]	NPSH[ft]
BEP	89.4	27.6	1.78	26.7 (35.1)	31.9

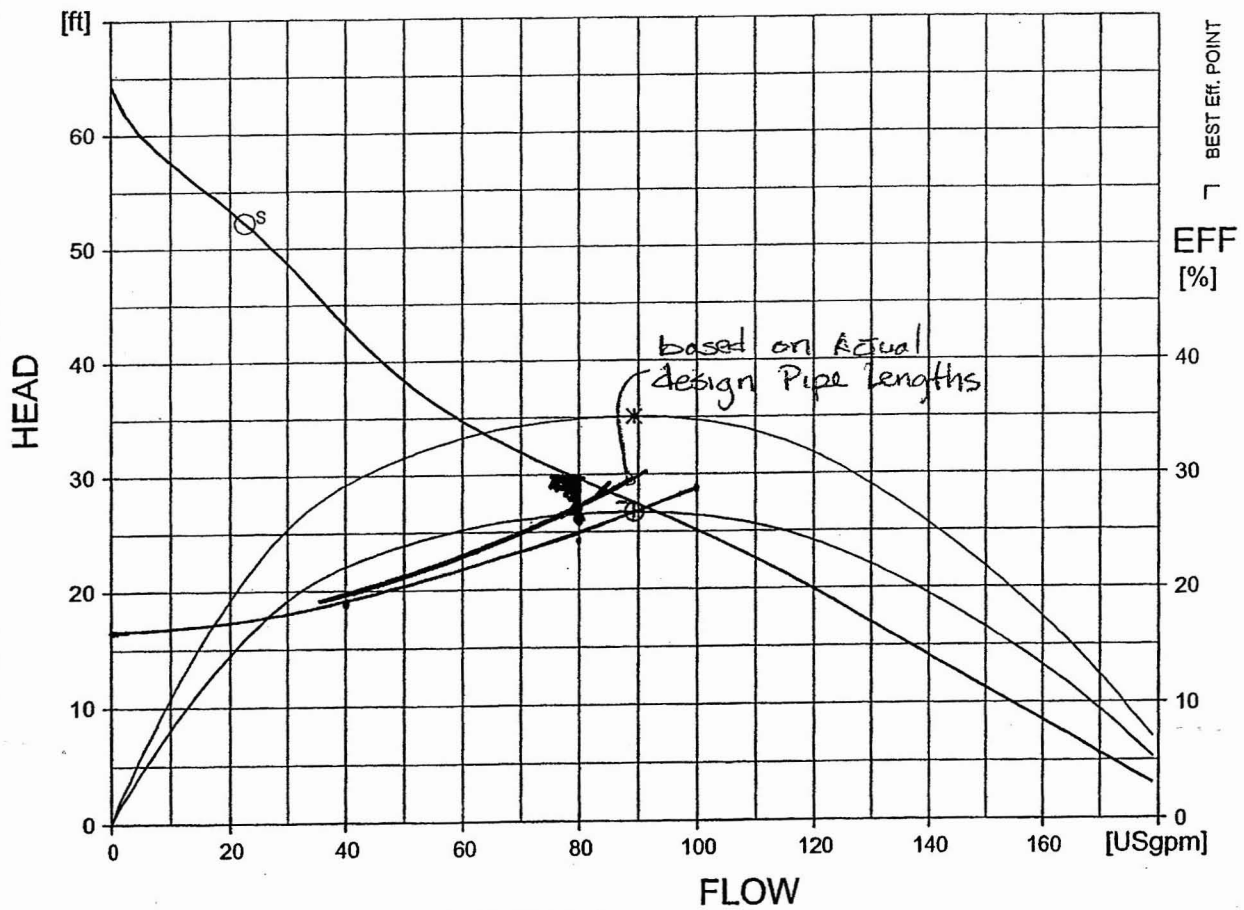

S: RISK OF SEDIMENTATION AT VELOCITY BELOW 0.6 m/s
(Point (S) show risk in a 55 mm pipe)

CURVES SHOW PERFORMANCE WITH CLEAR COLD WATER

FLYGT CURVE

McDowell Rd Lt CAP Equipment Underpass - Revised for Actual Pipe Lengths
Mesa, AZ

Calculated By: Fred Rouse Date: 3-16-05
Check By: ___ Date: 8/5/05

FLOW (GPM)	VELOCITY (FPS)				
	1.5	2	2.5	3	4
20	3.63	2.04	1.31	0.91	0.51
40	7.26	4.09	2.61	1.82	1.02
60	10.89	6.13	3.92	2.72	1.53
80	14.53	8.17	5.23	3.63	2.04
100	18.16	10.21	6.54	4.54	2.55

The recommended design velocity should be in the range of 3.0 to 4.0 fps.

Preliminary Static Head Calculation: McDowell Rd CAP Equipment Underpass Lift station

Discharge Elevation	1578.5 Ft	Discharge Elevation	1575.5 Ft	
Low Level Pumps Off Elevation	1562 Ft	High level Max Elevation	1564 Ft	Preliminary Elevation
Static Head (Z)	**16.5 Ft**		**11.5 Ft**	

Pump Hydraulics
Flowrate(gpm) (cfs) 80 0.18 80 0.18 0 0 0 0 0 0 0 0 0 0

		Pump Connection		Pipe Number 1		Pipe Number 2		Pipe Number 3		Pipe Number 4		Pipe Number 5		Pipe Number 6	
Sum K		2.3		1.87		0		0		0		0		0	
Pipe D(in)		3		3		3		3		3		3		3	
Pipe D(ft)		0.25		0.25		0.25		0.25		0.25		0.25		0.25	
HyRa(ft)		0.06		0.06		0.06		0.06		0.06		0.06		0.06	
Pipe Lenght(ft)		5		270		0		0		0		0		0	
		Minor HL(ft)	C-factor 100	Minor HL(ft)	C-factor 100	Minor HL(ft)	C-factor 120	Minor HL(ft)	C-factor 120	Minor HL(ft)	C-factor 120	Minor HL(ft)	C-factor 120	Minor HL(ft)	C-factor 120
Total Headloss	10.17	0.48	0.17	0.39	9.13	0	0	0	0	0	0	0	0	0	0

TDH (MAX) **26.67**
TDH (MIN) 21.67
THD (MIN) Use **21.67**

Calculated By: Fred Rouse, 12/20/04
Checked By: MR 8/5/05

Red Mtn Fwy - McDowell Rd CAP Lift Station
Mesa, AZ

FLOW (GPM)	VELOCITY (FPS)				
	1.5	2	2.5	3	4
40	7.26	4.09	2.61	1.82	1.02
60	10.89	6.13	3.92	2.72	1.53
80	14.53	8.17	5.23	3.63	2.04
100	18.16	10.21	6.54	4.54	2.55
120	21.79	12.26	7.84	5.45	3.06

The recommended design velocity should be in the range of 3.0 to 4.0 fps.

Preliminary Static Head Calculation: McDowell Rd CAP Lift Station

Discharge Elevation	1578.5 Ft	Discharge Elevation	1578.5 Ft	
Low Level Pumps Off Elevation	1562 Ft	High level Max Elevation	1564 Ft	
Static Head (Z)	**16.5 Ft**		**14.5 Ft**	

Pump Hydraulics																	
Flowrate(gpm)	(cfs)	40	0.09	40	0.09	0	0	0	0	0	0	0	0	0	0	0	0
		Pump Connection		Pipe Number 1		Pipe Number 2		Pipe Number 3		Pipe Number 4		Pipe Number 5		Pipe Number 6			
Sum K		2.3		1.87		0		0		0		0		0			
Pipe D(in)		3		3		3		3		3		3		3			
Pipe D(ft)		0.25		0.25		0.25		0.25		0.25		0.25		0.25			
HyRa(ft)		0.06		0.06		0.06		0.06		0.06		0.06		0.06			
Pipe Lenght(ft)		5		200		57		0		0		0		0			
		Minor HL(ft)	C-factor 100	Minor HL(ft)	C-factor 100	Minor HL(ft)	C-factor 120	Minor HL(ft)	C-factor 120	Minor HL(ft)	C-factor 120	Minor HL(ft)	C-factor 120	Minor HL(ft)	C-factor 120		
Total Headloss	2.15	0.12	0.05	0.1	1.88	0	0	0	0	0	0	0	0	0	0	0	0

TDH (MAX)	**18.65**
TDH (MIN)	16.65
THD (MIN) Use	**16.65**

Calculated By: Fred Rouse 12/20/04
Checked By: [illegible] 8/5/05

Red Mtn Fwy - McDowell Rd CAP Lift Station
Mesa, AZ

FLOW (GPM)	VELOCITY (FPS)				
	1.5	2	2.5	3	4
40	7.26	4.09	2.61	1.82	1.02
60	10.89	6.13	3.92	2.72	1.53
80	14.53	8.17	5.23	3.63	2.04
100	18.16	10.21	6.54	4.54	2.55
120	21.79	12.26	7.84	5.45	3.06

The recommended design velocity should be in the range of 3.0 to 4.0 fps.

Preliminary Static Head Calculation: McDowell Rd CAP Lift Station

Discharge Elevation	1578.5 Ft	Discharge Elevation	1578.5 Ft
Low Level Pumps Off Elevation	1562 Ft	High level Max Elevation	1564 Ft
Static Head (Z)	**16.5 Ft**		**14.5 Ft**

Pump Hydraulics

Flowrate(gpm)	(cfs)	80	0.18	80	0.18	0	0	0	0	0	0	0	0	0	0
		Pump Connection		Pipe Number 1		Pipe Number 2		Pipe Number 3		Pipe Number 4		Pipe Number 5		Pipe Number 6	
Sum K		2.3		1.87		0		0		0		0		0	
Pipe D(in)		3		3		3		3		3		3		3	
Pipe D(ft)		0.25		0.25		0.25		0.25		0.25		0.25		0.25	
HyRa(ft)		0.06		0.06		0.06		0.06		0.06		0.06		0.06	
Pipe Lenght(ft)		5		200		57		0		0		0		0	
		Minor HL(ft)	C-factor 100	Minor HL(ft)	C-factor 100	Minor HL(ft)	C-factor 120	Minor HL(ft)	C-factor 120	Minor HL(ft)	C-factor 120	Minor HL(ft)	C-factor 120	Minor HL(ft)	C-factor 120
Total Headloss	7.8	0.48	0.17	0.39	6.76	0	0	0	0	0	0	0	0	0	0

TDH (MAX)	**24.3**
TDH (MIN)	22.3
THD (MIN) Use	**22.3**

Calculated By: Fred Rouse 2/20/04
Checked By: MC 8/5/05

Red Mtn Fwy - McDowell Rd CAP Lift Station
Mesa, AZ

FLOW (GPM)	VELOCITY (FPS)				
	1.5	2	2.5	3	4
40	7.26	4.09	2.61	1.82	1.02
60	10.89	6.13	3.92	2.72	1.53
80	14.53	8.17	5.23	3.63	2.04
100	18.16	10.21	6.54	4.54	2.55
120	21.79	12.26	7.84	5.45	3.06

The recommended design velocity should be in the range of 3.0 to 4.0 fps.

Preliminary Static Head Calculation: McDowell Rd CAP Lift Station

Discharge Elevation	1578.5 Ft	Discharge Elevation	1578.5 Ft	
Low Level Pumps Off Elevation	1562 Ft	High level Max Elevation	1564 Ft	
Static Head (Z)	**16.5 Ft**		**14.5 Ft**	

Pump Hydraulics

Flowrate(gpm) (cfs)		100	0.22	100	0.22	0	0	0	0	0	0	0	0	0	0
		Pump Connection		Pipe Number 1		Pipe Number 2		Pipe Number 3		Pipe Number 4		Pipe Number 5		Pipe Number 6	
Sum K		2.3		1.87		0		0		0		0		0	
Pipe D(in)		3		3		3		3		3		3		3	
Pipe D(ft)		0.25		0.25		0.25		0.25		0.25		0.25		0.25	
HyRa(ft)		0.06		0.06		0.06		0.06		0.06		0.06		0.06	
Pipe Lenght(ft)		5		200		57		0		0		0		0	
		Minor HL(ft)	C-factor 100	Minor HL(ft)	C-factor 100	Minor HL(ft)	C-factor 120	Minor HL(ft)	C-factor 120	Minor HL(ft)	C-factor 120	Minor HL(ft)	C-factor 120	Minor HL(ft)	C-factor 120
Total Headloss	11.35	0.72	0.25	0.58	9.8	0	0	0	0	0	0	0	0	0	0

TDH (MAX)	**27.85**
TDH (MIN)	25.85
THD (MIN) Use	**25.85**

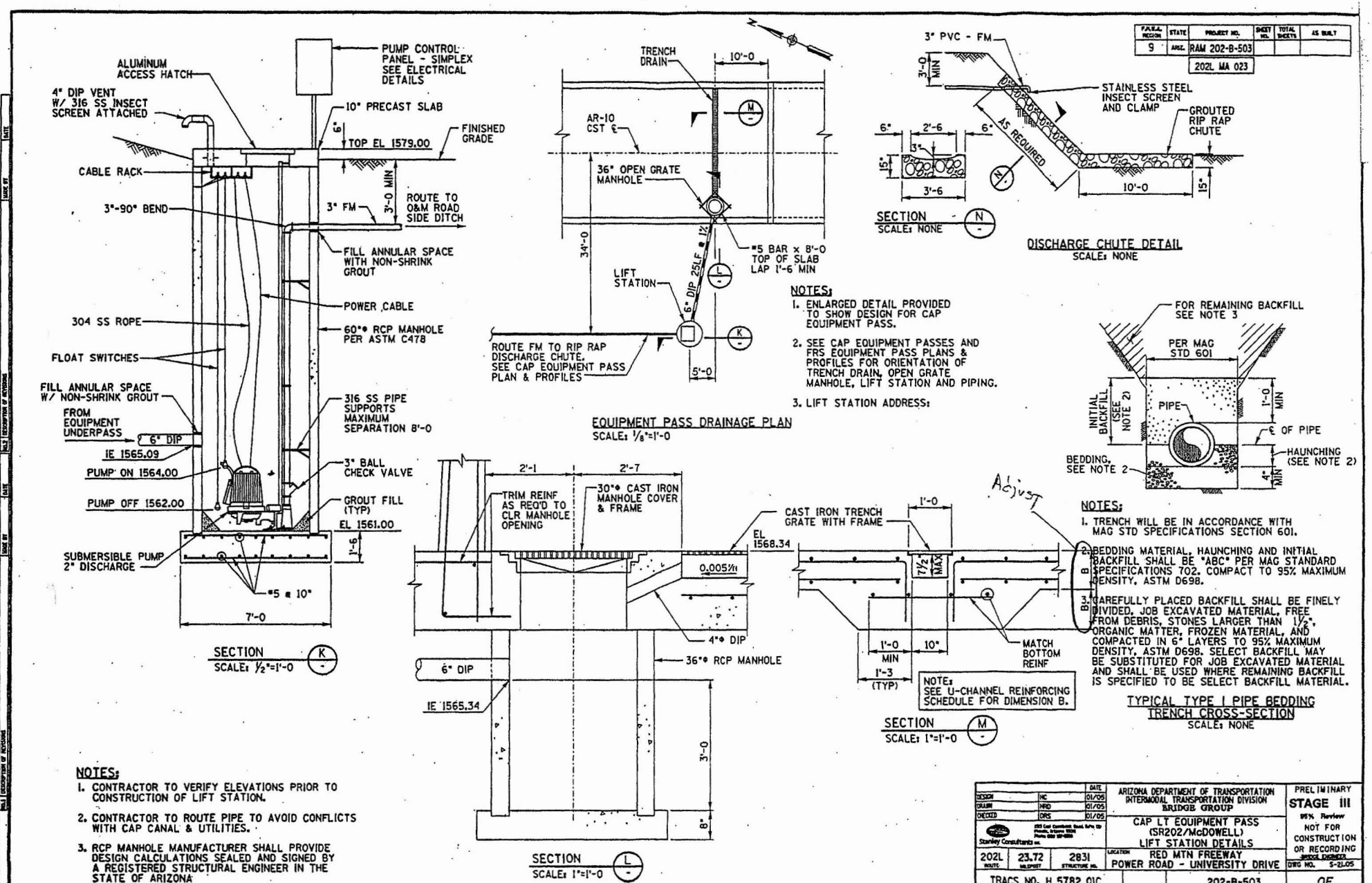
ALUMINUM ACCESS HATCH
PUMP CONTROL PANEL - SIMPLEX SEE ELECTRICAL DETAILS
4" DIP VENT W/ 316 SS INSECT SCREEN ATTACHED
10" PRECAST SLAB
6"
TOP EL 1579.00
FINISHED GRADE
CABLE RACK
3'-0 MIN
3" FM
ROUTE TO O&M ROAD SIDE DITCH
3"-90° BEND
FILL ANNULAR SPACE WITH NON-SHRINK GROUT
POWER CABLE
304 SS ROPE
60"ø RCP MANHOLE PER ASTM C478
FLOAT SWITCHES
FILL ANNULAR SPACE W/ NON-SHRINK GROUT
316 SS PIPE SUPPORTS MAXIMUM SEPARATION 8'-0
FROM EQUIPMENT UNDERPASS
6" DIP
IE 1565.09
3" BALL CHECK VALVE
PUMP ON 1564.00
PUMP OFF 1562.00
GROUT FILL (TYP)
EL 1561.00
1'-6
SUBMERSIBLE PUMP 2" DISCHARGE
#5 @ 10"
7'-0
SECTION K SCALE: 1/2"=1'-0
TRENCH DRAIN
10'-0
AR-10 CST ℄
36" OPEN GRATE MANHOLE
34'-0
#5 BAR x 8'-0 TOP OF SLAB LAP 1'-6 MIN
LIFT STATION
6" DIP 25LF @ 1%
ROUTE FM TO RIP RAP DISCHARGE CHUTE. SEE CAP EQUIPMENT PASS PLAN & PROFILES
5'-0
EQUIPMENT PASS DRAINAGE PLAN SCALE: 1/8"=1'-0
3" PVC - FM
3'-0 MIN
STAINLESS STEEL INSECT SCREEN AND CLAMP
GROUTED RIP RAP CHUTE
AS REQUIRED
6"
2'-6
3"
15"
3'-6
10'-0
SECTION N SCALE: NONE
DISCHARGE CHUTE DETAIL SCALE: NONE
NOTES:
1. ENLARGED DETAIL PROVIDED TO SHOW DESIGN FOR CAP EQUIPMENT PASS.
2. SEE CAP EQUIPMENT PASSES AND FRS EQUIPMENT PASS PLANS & PROFILES FOR ORIENTATION OF TRENCH DRAIN, OPEN GRATE MANHOLE, LIFT STATION AND PIPING.
3. LIFT STATION ADDRESS:
FOR REMAINING BACKFILL SEE NOTE 3
PER MAG STD 601
INITIAL BACKFILL (SEE NOTE 2)
PIPE
1'-0 MIN
℄ OF PIPE
HAUNCHING (SEE NOTE 2)
BEDDING, SEE NOTE 2
4" MIN
NOTES:
1. TRENCH WILL BE IN ACCORDANCE WITH MAG STD SPECIFICATIONS SECTION 601.
2. BEDDING MATERIAL, HAUNCHING AND INITIAL BACKFILL SHALL BE "ABC" PER MAG STANDARD SPECIFICATIONS 702. COMPACT TO 95% MAXIMUM DENSITY, ASTM D698.
3. CAREFULLY PLACED BACKFILL SHALL BE FINELY DIVIDED, JOB EXCAVATED MATERIAL, FREE FROM DEBRIS, STONES LARGER THAN 1 1/2", ORGANIC MATTER, FROZEN MATERIAL, AND COMPACTED IN 6" LAYERS TO 95% MAXIMUM DENSITY, ASTM D698. SELECT BACKFILL MAY BE SUBSTITUTED FOR JOB EXCAVATED MATERIAL AND SHALL BE USED WHERE REMAINING BACKFILL IS SPECIFIED TO BE SELECT BACKFILL MATERIAL.
TYPICAL TYPE I PIPE BEDDING TRENCH CROSS-SECTION SCALE: NONE
2'-1
2'-7
TRIM REINF AS REQ'D TO CLR MANHOLE OPENING
30"ø CAST IRON MANHOLE COVER & FRAME
EL 1568.34
0.005/ft
4"ø DIP
6" DIP
36"ø RCP MANHOLE
IE 1565.34
3'-0
8"
SECTION L SCALE: 1"=1'-0
CAST IRON TRENCH GRATE WITH FRAME
1'-0
Adjust
7 1/2" MAX
B
MATCH BOTTOM REINF
1'-0 MIN
10"
1'-3 (TYP)
NOTE: SEE U-CHANNEL REINFORCING SCHEDULE FOR DIMENSION B.
SECTION M SCALE: 1"=1'-0
NOTES:
1. CONTRACTOR TO VERIFY ELEVATIONS PRIOR TO CONSTRUCTION OF LIFT STATION.
2. CONTRACTOR TO ROUTE PIPE TO AVOID CONFLICTS WITH CAP CANAL & UTILITIES.
3. RCP MANHOLE MANUFACTURER SHALL PROVIDE DESIGN CALCULATIONS SEALED AND SIGNED BY A REGISTERED STRUCTURAL ENGINEER IN THE STATE OF ARIZONA
F.A.P.M. REGION 9
STATE ARIZ.
PROJECT NO. RAM 202-B-503
202L MA 023
SHEET NO.
TOTAL SHEETS
AS BUILT
DESIGN NC 01/05
DRAWN NRD 01/05
CHECKED DRS 01/05
Stanley Consultants Inc.
ARIZONA DEPARTMENT OF TRANSPORTATION INTERMODAL TRANSPORTATION DIVISION BRIDGE GROUP
CAP LT EQUIPMENT PASS (SR202/McDOWELL) LIFT STATION DETAILS
202L ROUTE 23.72 MILEPOST 2831 STRUCTURE NO.
LOCATION RED MTN FREEWAY POWER ROAD - UNIVERSITY DRIVE
TRACS NO. H 5782 01C
202-B-503
PRELIMINARY
STAGE III
95% Review
NOT FOR CONSTRUCTION OR RECORDING
BRIDGE ENGINEER
DWG NO. S-21.05
___ OF ___
Checked by ... Date
Drafted by ... Date
Back Checked by ... Date
DESIGN ENGINEER OF RECORD
3/14/2005
cp\17000\active\07-05-dwgs\05-stro\equip\s2831dt02.dgn

Stanley Consultants INC.

Project No. 17000.04.01 Page No.

Subject Pump Design - CAP Equipment Under pass LIFT STATION

Computed by FLR Date 12/21/04

Checked by MR Date 3/5/05

Approved by Date

Sheet No. of

McKellips Road - West:

Discharge Elevation: 1581.00 - 0.50' = 1580.50

Low Level Off: 1550.50'

Max Static Head: 30'

Pump-On: 1552.50'

Min Static Head 1580.50 - 1552.50 = 28'

Design Flow Rate: 80 gpm (0.18 cfs)

Force Main 3" DIA - ~~200~~ 350 LF Revised 3-16-05

Pump Station

Item	K	ΣK
Inlet	0.5	0.5
90° Bend	0.54	1.08
Ball Check	0.72	0.72
	ΣΣK =	2.30

Low Level

Q	TDH
0	30'
40	32.15
80	37.8
100	41.35

Force Main (FM)

Item	K	ΣK
45° Bend	0.29	0.58
Free Discharge	1.00	1.00
	ΣΣK =	1.58

Pump ON Elev.

Q	TDH
0	28'
40	30.15'
80	35.8'
100	39.35'

* McKellips - West flowrate = ~~60 - 63~~ / ~~63 - 67~~ gpm

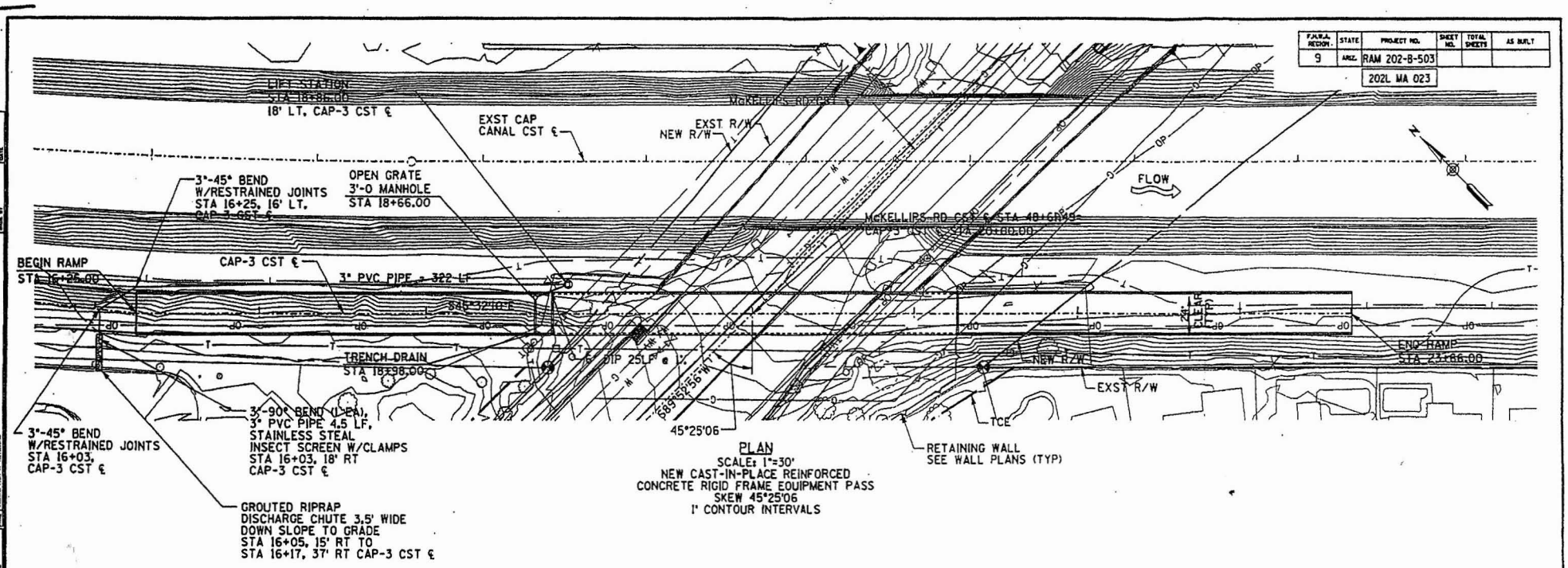

PLAN
SCALE: 1"=30'
NEW CAST-IN-PLACE REINFORCED
CONCRETE RIGID FRAME EQUIPMENT PASS
SKEW 45°25'06
1' CONTOUR INTERVALS

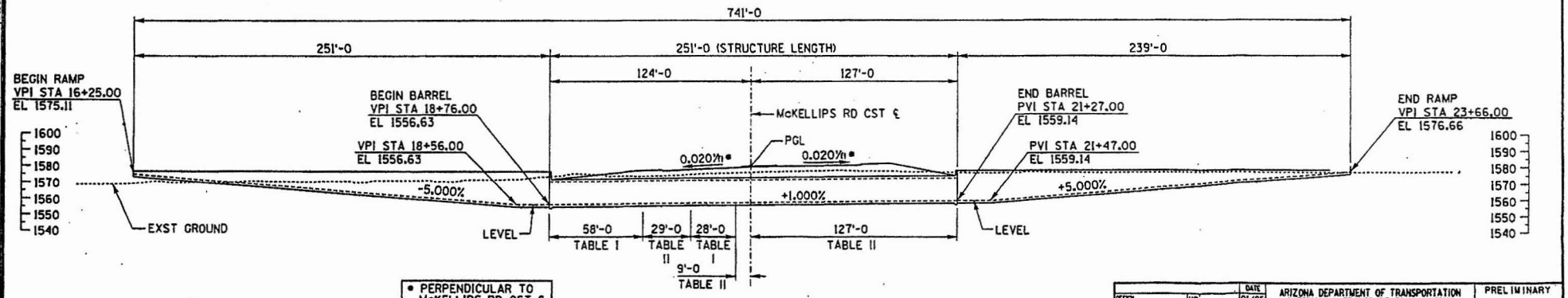

ELEVATION
SCALE: 1"=30'

NOTES:
1. STATIONS, DIMENSIONS & ELEVATIONS ARE ALONG CAP-3 CST ℄.
2. FOR LIGHTING & EMBEDDED CONDUIT, SEE DWG NO. X.XX.

F.H.W.A. REGION	STATE	PROJECT NO.	SHEET NO.	TOTAL SHEETS	AS BUILT
9	ARIZ.	RAM 202-B-503			
		202L MA 023			

		DATE
DESIGN	HC	01/05
DRAWN	NRD	01/05
CHECKED	DRS	01/05

Stanley Consultants Inc.

ARIZONA DEPARTMENT OF TRANSPORTATION
INTERMODAL TRANSPORTATION DIVISION
BRIDGE GROUP

CAP RT EQUIPMENT PASS
(SR202/McKELLIPS)
GENERAL PLAN & ELEVATION

ROUTE	MILEPOST	STRUCTURE NO.	LOCATION
202L	24.82	2833	RED MTN FREEWAY POWER ROAD - UNIVERSITY DRIVE

TRACS NO. H 5782 01C | 202-B-503

PRELIMINARY
STAGE III
95% Review
NOT FOR CONSTRUCTION OR RECORDING
BRIDGE ENGINEER
DWG NO. S-23.01
___ OF ___

Drafted by
Back Checked
Date
Date
DATE
DESCRIPTION OF REVISIONS
MADE BY
DATE
DESCRIPTION OF REVISIONS
MADE BY

3/14/2005

F.H.W.A. REGION	STATE	PROJECT NO.	SHEET NO.	TOTAL SHEETS	AS BUILT
9	ARIZ.	RAM 202-B-503			
		202L MA 023			

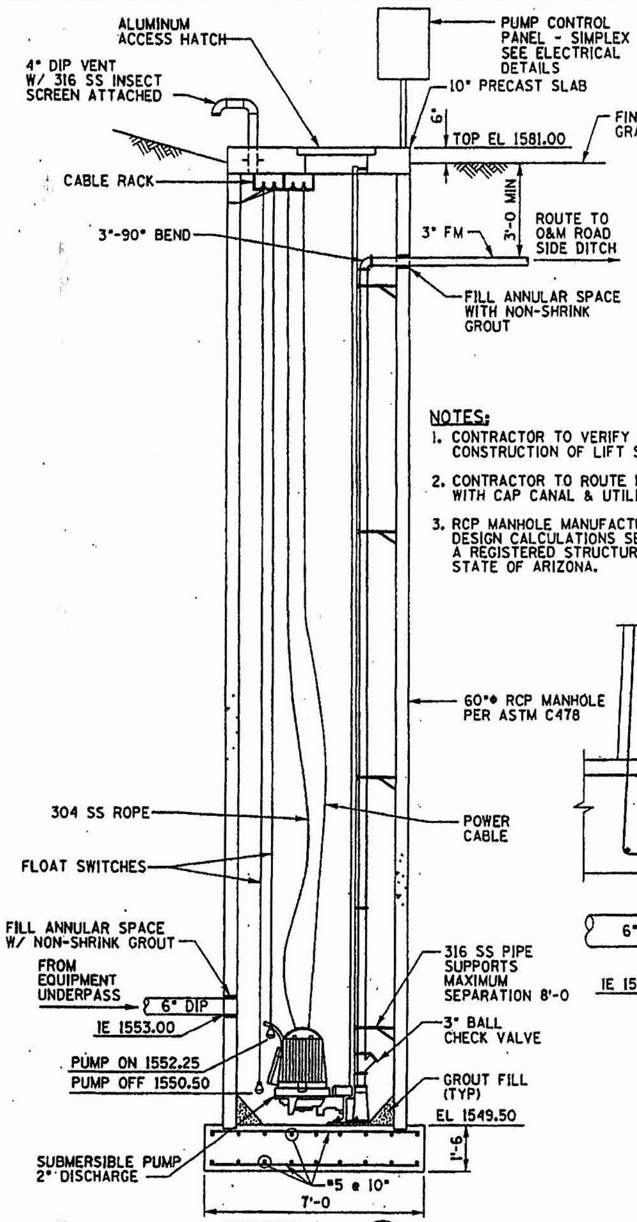

SECTION K
SCALE: 1/2"=1'-0

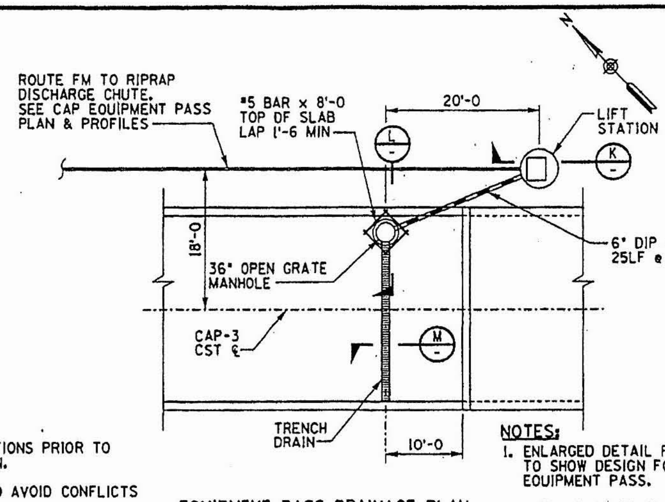

EQUIPMENT PASS DRAINAGE PLAN
SCALE: 1/8"=1'-0

NOTES:

1. CONTRACTOR TO VERIFY ELEVATIONS PRIOR TO CONSTRUCTION OF LIFT STATION.
2. CONTRACTOR TO ROUTE PIPE TO AVOID CONFLICTS WITH CAP CANAL & UTILITIES.
3. RCP MANHOLE MANUFACTURER SHALL PROVIDE DESIGN CALCULATIONS SEALED AND SIGNED BY A REGISTERED STRUCTURAL ENGINEER IN THE STATE OF ARIZONA.

NOTES:

1. ENLARGED DETAIL PROVIDED TO SHOW DESIGN FOR CAP EQUIPMENT PASS.
2. SEE CAP EQUIPMENT PASSES AND FRS EQUIPMENT PASS PLANS & PROFILES FOR ORIENTATION OF TRENCH DRAIN, OPEN GRATE MANHOLE, LIFT STATION AND PIPING.
3. LIFT STATION ADDRESS:

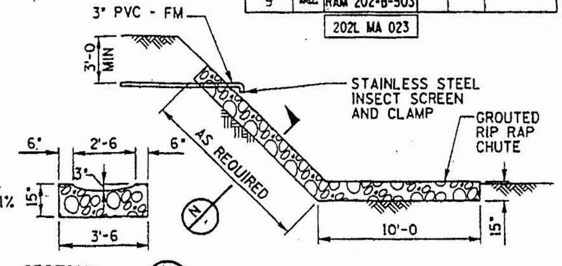

SECTION N
SCALE: NONE

DISCHARGE CHUTE DETAIL
SCALE: NONE

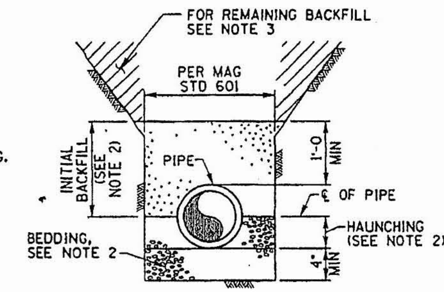

NOTES:

1. TRENCH WILL BE IN ACCORDANCE WITH MAG STD SPECIFICATIONS SECTION 601.
2. BEDDING MATERIAL, HAUNCHING AND INITIAL BACKFILL SHALL BE "ABC" PER MAG STANDARD SPECIFICATIONS 702. COMPACT TO 95% MAXIMUM DENSITY, ASTM D698.
3. CAREFULLY PLACED BACKFILL SHALL BE FINELY DIVIDED, JOB EXCAVATED MATERIAL, FREE FROM DEBRIS, STONES LARGER THAN 1 1/2", ORGANIC MATTER, FROZEN MATERIAL, AND COMPACTED IN 6" LAYERS TO 95% MAXIMUM DENSITY, ASTM D698. SELECT BACKFILL MAY BE SUBSTITUTED FOR JOB EXCAVATED MATERIAL AND SHALL BE USED WHERE REMAINING BACKFILL IS SPECIFIED TO BE SELECT BACKFILL MATERIAL.

TYPICAL TYPE I PIPE BEDDING TRENCH CROSS-SECTION
SCALE: NONE

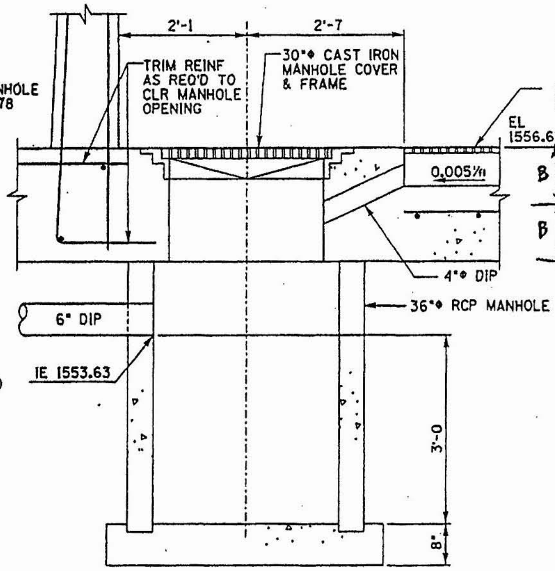

SECTION L
SCALE: 1"=1'-0

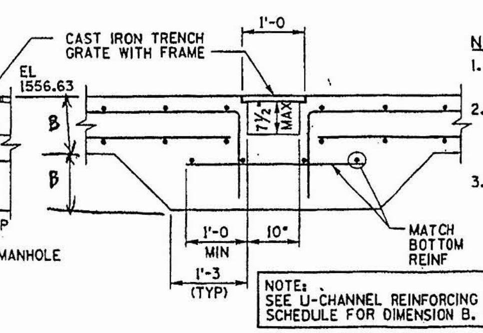

NOTE:
SEE U-CHANNEL REINFORCING SCHEDULE FOR DIMENSION B.

SECTION M
SCALE: 1"=1'-0

		DATE	
DESIGN	FR	01/05	ARIZONA DEPARTMENT OF TRANSPORTATION INTERMODAL TRANSPORTATION DIVISION BRIDGE GROUP
DRAWN	NRD	01/05	
CHECKED	DRS	01/05	CAP RT EQUIPMENT PASS (SR202/McKELLIPS) LIFT STATION DETAILS
Stanley Consultants INC.			
202L ROUTE	24.82 MILEPOST	2833 STRUCTURE NO.	LOCATION RED MTN FREEWAY POWER ROAD - UNIVERSITY DRIVE
TRACS NO. H 5782 01C			202-B-503

PRELIMINARY
STAGE III
95% Review
NOT FOR CONSTRUCTION OR RECORDING
BRIDGE ENGINEER
DWG NO. S-23.05
OF

PERFORMANCE CURVE

FLYGT		PRODUCT: CF3057.181	TYPE: HT
DATE: 2002-02-04	PROJECT:	CURVE NO: 61-254-00-7360	ISSUE: 3

	1/1-LOAD	3/4-LOAD	1/2-LOAD
MOTOR COS PHI	0.97	0.97	0.96
MOTOR EFFICIENCY	74.5 %	76.0 %	73.0 %
GEAR EFFICIENCY	---	---	---

MOTOR SHAFT POWER	2.3	hp
STARTING CURRENT ...	35	A
RATED CURRENT ...	10	A
RATED SPEED	3325	rpm
TOT.MOM.OF INERTIA ...	---	
NO. OF BLADES	1	

IMPELLER DIAMETER: 101 mm

MOTORTYPE	STATOR	REV
13-10-2BZ	03-	10

FREQ.	PHASES	VOLTAGE	POLES
60 Hz	1	230 V	2

GEARTYPE: --- RATIO: ---

COMMENTS

INLET/OUTLET: - / 55 mm

IMP. THROUGHLET: 48 mm

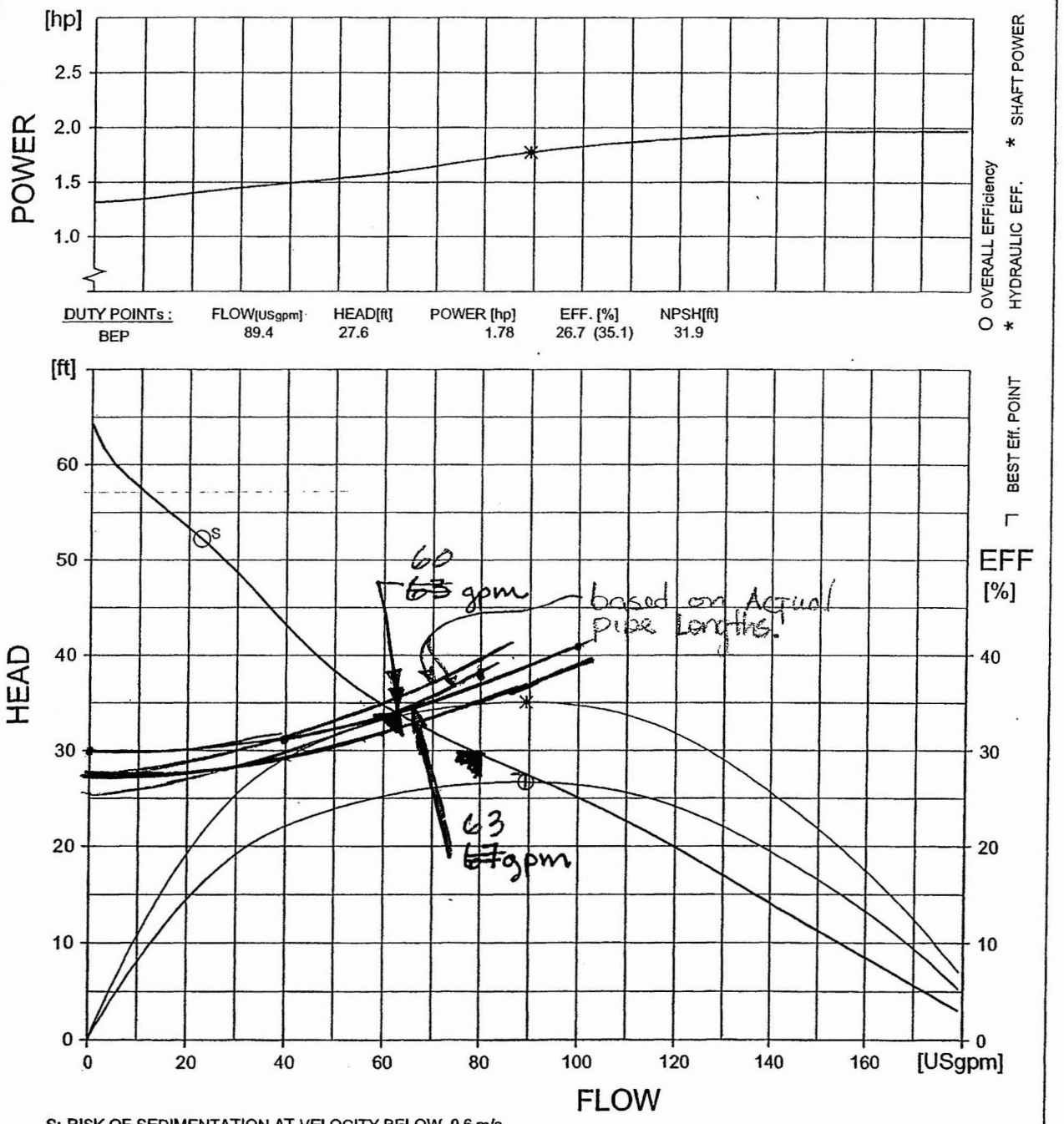

DUTY POINTs :	FLOW[USgpm]	HEAD[ft]	POWER [hp]	EFF. [%]	NPSH[ft]
BEP	89.4	27.6	1.78	26.7 (35.1)	31.9

S: RISK OF SEDIMENTATION AT VELOCITY BELOW 0.6 m/s
(Point (S) show risk in a 55 mm pipe)

CURVES SHOW PERFORMANCE WITH CLEAR COLD WATER

FLYGT CURVE

Red Mtn Fwy - McKellips Rd West CAP Lift Station - Revised for Actual Pipe Length
Mesa, AZ

Calculated By: Fred Rouse Date: 3 - 16 - 05
Checked By: _____ Date: 8/5/05

FLOW (GPM)	VELOCITY (FPS)				
	1.5	2	2.5	3	4
40	7.26	4.09	2.61	1.82	1.02
60	10.89	6.13	3.92	2.72	1.53
80	14.53	8.17	5.23	3.63	2.04
100	18.16	10.21	6.54	4.54	2.55
120	21.79	12.26	7.84	5.45	3.06

The recommended design velocity should be in the range of 3.0 to 4.0 fps.

Preliminary Static Head Calculation: McKellips Rd West CAP Lift Station

Discharge Elevation	1577.5 Ft	Discharge Elevation	1577.5 Ft
Low Level Pumps Off Elevation	1550.5 Ft	High level Max Elevation	1552.25 Ft
Static Head (Z)	**27 Ft**		**25.25 Ft**

Pump Hydraulics

Flowrate(gpm) (cfs)		80	0.18	80	0.18	0	0	0	0	0	0	0	0	0	0
		Pump Connection		Pipe Number 1		Pipe Number 2		Pipe Number 3		Pipe Number 4		Pipe Number 5		Pipe Number 6	
Sum K		2.3		1.87		0		0		0		0		0	
Pipe D(in)		3		3		3		3		3		3		3	
Pipe D(ft)		0.25		0.25		0.25		0.25		0.25		0.25		0.25	
HyRa(ft)		0.06		0.06		0.06		0.06		0.06		0.06		0.06	
Pipe Lenght(ft)		5		345		57		0		0		0		0	
		Minor HL(ft)	C-factor 100	Minor HL(ft)	C-factor 100	Minor HL(ft)	C-factor 100	Minor HL(ft)	C-factor 100	Minor HL(ft)	C-factor 100	Minor HL(ft)	C-factor 100	Minor HL(ft)	C-factor 100
Total Headloss	12.71	0.48	0.17	0.39	11.67	0	0	0	0	0	0	0	0	0	0

TDH (MAX)	**39.71**
TDH (MIN)	37.96
THD (MIN) Use	**37.96**

Calculated By: Fred Rouse JR 12/20/
Checked By: MLC 8/5/05

Red Mtn Fwy - McKellips Rd West CAP Lift Station
Mesa, AZ

FLOW (GPM)	VELOCITY (FPS)				
	1.5	2	2.5	3	4
40	7.26	4.09	2.61	1.82	1.02
60	10.89	6.13	3.92	2.72	1.53
80	14.53	8.17	5.23	3.63	2.04
100	18.16	10.21	6.54	4.54	2.55
120	21.79	12.26	7.84	5.45	3.06

The recommended design velocity should be in the range of 3.0 to 4.0 fps.

Preliminary Static Head Calculation: McKellips Rd West CAP Lift Station

Discharge Elevation	1580.5 Ft	Discharge Elevation	1580.5 Ft
Low Level Pumps Off Elevation	1550.5 Ft	High level Max Elevation	1552.5 Ft
Static Head (Z)	**30 Ft**		**28 Ft**

Pump Hydraulics

Flowrate(gpm) (cfs)		40	0.09	40	0.09	0	0	0	0	0	0	0	0	0	0
		Pump Connection		Pipe Number 1		Pipe Number 2		Pipe Number 3		Pipe Number 4		Pipe Number 5		Pipe Number 6	
Sum K		2.3		1.87		0		0		0		0		0	
Pipe D(in)		3		3		3		3		3		3		3	
Pipe D(ft)		0.25		0.25		0.25		0.25		0.25		0.25		0.25	
HyRa(ft)		0.06		0.06		0.06		0.06		0.06		0.06		0.06	
Pipe Lenght(ft)		5		200		57		0		0		0		0	
		Minor HL(ft)	C-factor 100	Minor HL(ft)	C-factor 100	Minor HL(ft)	C-factor 120	Minor HL(ft)	C-factor 120	Minor HL(ft)	C-factor 120	Minor HL(ft)	C-factor 120	Minor HL(ft)	C-factor 120
Total Headloss	2.15	0.12	0.05	0.1	1.88	0	0	0	0	0	0	0	0	0	0

TDH (MAX)	**32.15**
TDH (MIN)	30.15
THD (MIN) Use	**30.15**

Calculated By: Fred Rouse 12/20/04
Checked By: [signature] 8/5/05

Red Mtn Fwy - McKellips Rd West CAP Lift Station
Mesa, AZ

FLOW (GPM)	VELOCITY (FPS)				
	1.5	2	2.5	3	4
40	7.26	4.09	2.61	1.82	1.02
60	10.89	6.13	3.92	2.72	1.53
80	14.53	8.17	5.23	3.63	2.04
100	18.16	10.21	6.54	4.54	2.55
120	21.79	12.26	7.84	5.45	3.06

The recommended design velocity should be in the range of 3.0 to 4.0 fps.

Preliminary Static Head Calculation: McKellips Rd West CAP Lift Station

Discharge Elevation	1580.5 Ft	Discharge Elevation	1580.5 Ft
Low Level Pumps Off Elevation	1550.5 Ft	High level Max Elevation	1552.5 Ft
Static Head (Z)	**30 Ft**		**28 Ft**

Pump Hydraulics

Flowrate(gpm)	(cfs)	80	0.18	80	0.18	0	0	0	0	0	0	0	0	0	0
		Pump Connection		Pipe Number 1		Pipe Number 2		Pipe Number 3		Pipe Number 4		Pipe Number 5		Pipe Number 6	
Sum K		2.3		1.87		0		0		0		0		0	
Pipe D(in)		3		3		3		3		3		3		3	
Pipe D(ft)		0.25		0.25		0.25		0.25		0.25		0.25		0.25	
HyRa(ft)		0.06		0.06		0.06		0.06		0.06		0.06		0.06	
Pipe Lenght(ft)		5		200		57		0		0		0		0	
		Minor HL(ft)	C-factor 100	Minor HL(ft)	C-factor 100	Minor HL(ft)	C-factor 120	Minor HL(ft)	C-factor 120	Minor HL(ft)	C-factor 120	Minor HL(ft)	C-factor 120	Minor HL(ft)	C-factor 120
Total Headloss	7.8	0.48	0.17	0.39	6.76	0	0	0	0	0	0	0	0	0	0

TDH (MAX)	**37.8**
TDH (MIN)	35.8
THD (MIN) Use	**35.8**

Calculated By: Fred Rouse 12/20/04
Checked By: [illegible] 2/5/05

Red Mtn Fwy - McKellips Rd West CAP Lift Station
Mesa, AZ

FLOW (GPM)	VELOCITY (FPS)				
	1.5	2	2.5	3	4
40	7.26	4.09	2.61	1.82	1.02
60	10.89	6.13	3.92	2.72	1.53
80	14.53	8.17	5.23	3.63	2.04
100	18.16	10.21	6.54	4.54	2.55
120	21.79	12.26	7.84	5.45	3.06

The recommended design velocity should be in the range of 3.0 to 4.0 fps.

Preliminary Static Head Calculation: McKellips Rd West CAP Lift Station

Discharge Elevation	1580.5 Ft	Discharge Elevation	1580.5 Ft
Low Level Pumps Off Elevation	1550.5 Ft	High level Max Elevation	1552.5 Ft
Static Head (Z)	**30 Ft**		**28 Ft**

Pump Hydraulics

Flowrate(gpm) (cfs)		100	0.22	100	0.22	0	0	0	0	0	0	0	0	0	0	0	0
		Pump Connection				Pipe Number 1				Pipe Number 2		Pipe Number 3		Pipe Number 4		Pipe Number 5		Pipe Number 6	
Sum K		2.3				1.87				0		0		0		0		0	
Pipe D(in)		3				3				3		3		3		3		3	
Pipe D(ft)		0.25				0.25				0.25		0.25		0.25		0.25		0.25	
HyRa(ft)		0.06				0.06				0.06		0.06		0.06		0.06		0.06	
Pipe Lenght(ft)		5				200				57		0		0		0		0	
		Minor HL(ft)		C-factor	100	Minor HL(ft)		C-factor	100	Minor HL(ft)	C-factor 120	Minor HL(ft)	C-factor 120	Minor HL(ft)	C-factor 120	Minor HL(ft)	C-factor 120	Minor HL(ft)	C-factor 120
Total Headloss	11.35	0.72		0.25		0.58		9.8		0	0	0	0	0	0	0	0	0	0

TDH (MAX)	**41.35**
TDH (MIN)	39.35
THD (MIN) Use	**39.35**

Stanley Consultants INC.

Project No. 17000.04.01 Page No.

Subject Pump Design - CAP Equipment
Underpass LIFT STATION

Computed by FLR Date 12/21/04

Checked by [illegible] Date 8/5/05

Approved by Date

Sheet No. of

McKellips Road East CAP:

Discharge Elevation: 1583.80 - 3.50 = 1580.30'

Low Level Off: 1560.75'

Maximum Static Head: 1588.30 - 1560.75 = 19.55'

Pump-On Elevation: 1562.50'

Minimum Static Head: 1580.30 - 1562.50 = 17.80'

Design Flowrate: 80 gpm (0.18 cfs)

Force Main: 3" DIA - ~~200~~ 275 LF. REVISED PER ACTUAL LENGTH & ELEVATIONS

Pump Station

Item	K	ΣK
Inlet	0.50	0.50
90° Bend	0.54	1.08
Ball Ck	0.72	0.72

ΣΣK = 2.30

Forcemain (F.M.)

Item	K	ΣK
45° Bend	0.29	0.58
Free Disch	1.00	1.00

ΣΣK = 1.58

Low Level

Q	TDH
0	22.50'
40	24.9
80	30.55
100	34.10

Pump-ON Level

Q	TDH
0	21.00
40	23.15
80	28.80
100	32.35

* McKellips - East Flowrate: ~~80~~ 83 - ~~84~~ 82 gpm.

F.H.W.A. REGION	STATE	PROJECT NO.	SHEET NO.	TOTAL SHEETS	AS BUILT
9	ARIZ.	RAM 202-B-503			
		202L MA 023			

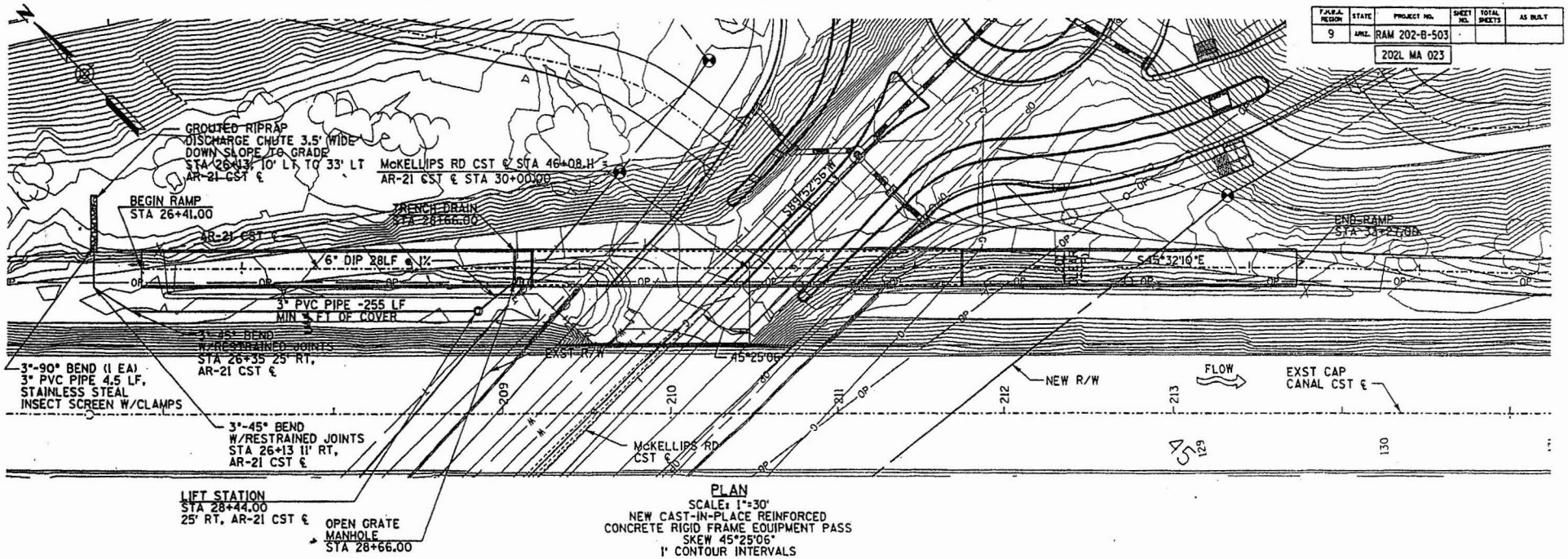

PLAN
SCALE: 1"=30'
NEW CAST-IN-PLACE REINFORCED
CONCRETE RIGID FRAME EQUIPMENT PASS
SKEW 45°25'06"
1' CONTOUR INTERVALS

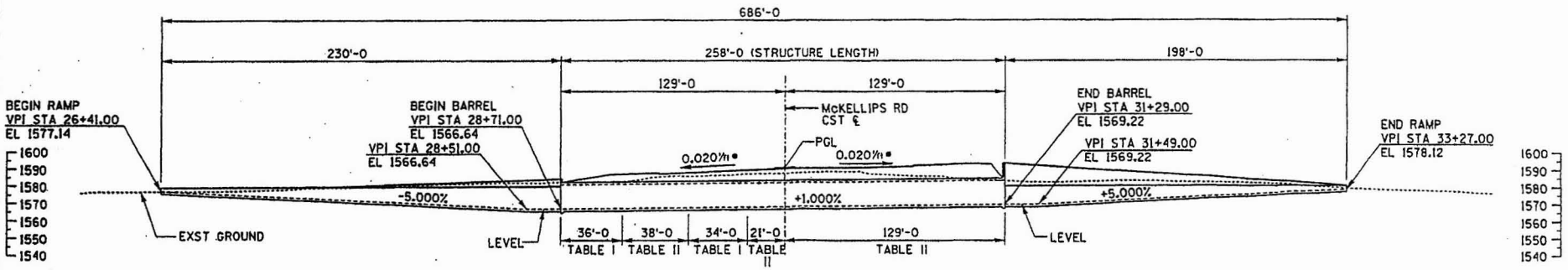

ELEVATION
SCALE: 1"=30'

* PERPENDICULAR TO McKELLIPS RD CST ℄

NOTES:
1. STATIONS, DIMENSIONS & ELEVATIONS ARE ALONG AR-21 CST ℄.
2. FOR LIGHTING & EMBEDDED CONDUIT, SEE DWG NO. X.XX

		DATE
DESIGN	MC	01/05
DRAWN	MRD	01/05
CHECKED	DRS	01/05

Stanley Consultants Inc.

ARIZONA DEPARTMENT OF TRANSPORTATION
INTERMODAL TRANSPORTATION DIVISION
BRIDGE GROUP

CAP LT EQUIPMENT PASS
(SR202/McKELLIPS)
GENERAL PLAN & ELEVATION

ROUTE	MILEPOST	STRUCTURE NO.
202L	24.85	2832

LOCATION: RED MTN FREEWAY
POWER ROAD - UNIVERSITY DRIVE

TRACS NO. H 5782 01C | 202-B-503 | ___ OF ___

PRELIMINARY
STAGE III
95% Review
NOT FOR CONSTRUCTION OR RECORDING
BRIDGE ENGINEER
DWG NO. S-22.01

3/14/2005 q:\17000\active\07-05-dwgs\05-stru\equip\s2832gp01.dgn

F.A.H.U.A. REGION	STATE	PROJECT NO.	SHEET NO.	TOTAL SHEETS	AS BUILT
9	ARIZ.	RAM 202-B-503			
		202L MA 023			

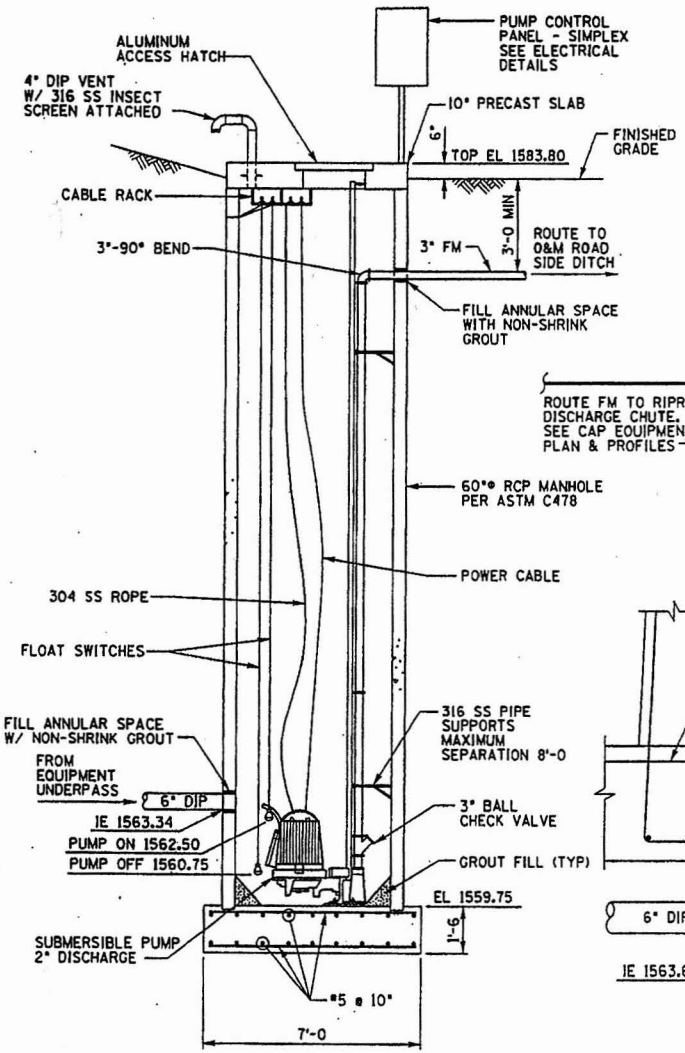

SECTION (K) SCALE: 1/2"=1'-0

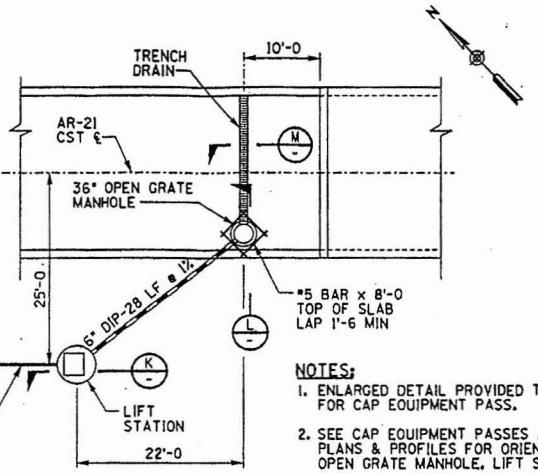

EQUIPMENT PASS DRAINAGE PLAN
SCALE: 1/8"=1'-0

NOTES:
1. ENLARGED DETAIL PROVIDED TO SHOW DESIGN FOR CAP EQUIPMENT PASS.
2. SEE CAP EQUIPMENT PASSES AND FRS EQUIPMENT PASS PLANS & PROFILES FOR ORIENTATION OF TRENCH DRAIN, OPEN GRATE MANHOLE, LIFT STATION AND PIPING.
3. LIFT STATION ADDRESS

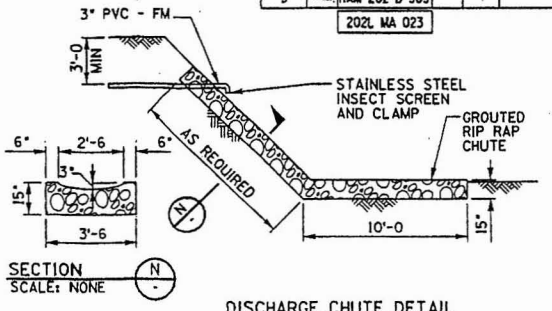

SECTION (N) SCALE: NONE

DISCHARGE CHUTE DETAIL
SCALE: NONE

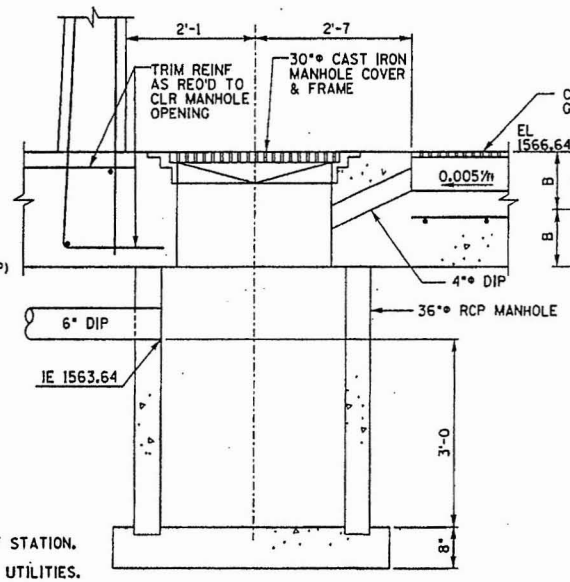

SECTION (L) SCALE: 1"=1'-0

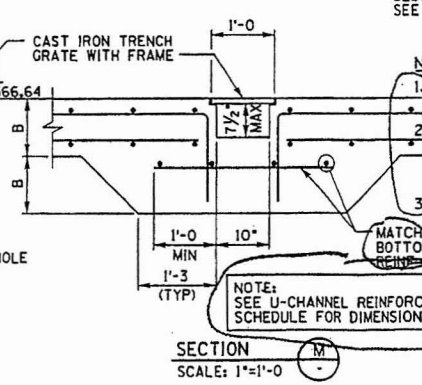

SECTION (M) SCALE: 1"=1'-0

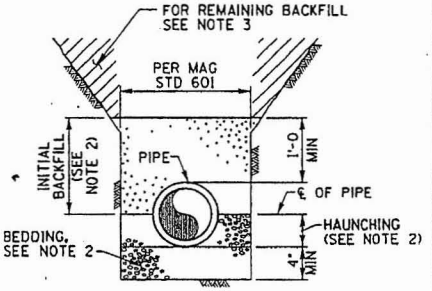

NOTES:
1. TRENCH WILL BE IN ACCORDANCE WITH MAG STD SPECIFICATIONS SECTION 601.
2. BEDDING MATERIAL, HAUNCHING AND INITIAL BACKFILL SHALL BE "ABC" PER MAG STANDARD SPECIFICATIONS 702. COMPACT TO 95% MAXIMUM DENSITY, ASTM D698.
3. CAREFULLY PLACED BACKFILL SHALL BE FINELY DIVIDED, JOB EXCAVATED MATERIAL, FREE FROM DEBRIS, STONES LARGER THAN 1½", ORGANIC MATTER, FROZEN MATERIAL, AND COMPACTED IN 6" LAYERS TO 95% MAXIMUM DENSITY, ASTM D698. SELECT BACKFILL MAY BE SUBSTITUTED FOR JOB EXCAVATED MATERIAL AND SHALL BE USED WHERE REMAINING BACKFILL IS SPECIFIED TO BE SELECT BACKFILL MATERIAL.

TYPICAL TYPE I PIPE BEDDING TRENCH CROSS-SECTION
SCALE: NONE

NOTES:
1. CONTRACTOR TO VERIFY ELEVATIONS PRIOR TO CONSTRUCTION OF LIFT STATION.
2. CONTRACTOR TO ROUTE PIPE TO AVOID CONFLICTS WITH CAP CANAL & UTILITIES.
3. RCP MANHOLE MANUFACTURER SHALL PROVIDE DESIGN CALCULATIONS SEALED AND SIGNED BY A REGISTERED STRUCTURAL ENGINEER IN THE STATE OF ARIZONA.

		DATE
DESIGN	FR	01/05
DRAWN	NRD	01/05
CHECKED	DRS	01/05

Stanley Consultants Inc. 3200 East Camelback Road, Suite 130 Phoenix, Arizona 85018 Phone: (602) 522-0600

ARIZONA DEPARTMENT OF TRANSPORTATION
INTERMODAL TRANSPORTATION DIVISION
BRIDGE GROUP

CAP LT EQUIPMENT PASS (SR202/McKELLIPS)
LIFT STATION DETAILS

202L ROUTE	24.85 MILEPOST	2832 STRUCTURE NO.

LOCATION: RED MTN FREEWAY POWER ROAD - UNIVERSITY DRIVE

TRACS NO. H 5782 01C | 202-B-503

PRELIMINARY
STAGE III
95% Review
NOT FOR CONSTRUCTION OR RECORDING
BRIDGE ENGINEER
DWG NO. S-22.05
___ OF ___

3/14/2005 a:\17000\active\07-05-dras\05-stra\equip\s2832dt02.dgn

McKellips Rd - East

PERFORMANCE CURVE

PRODUCT	CF3057.181	TYPE	HT
DATE	2002-02-04	PROJECT	
CURVE NO	61-254-00-7360	ISSUE	3

	1/1-LOAD	3/4-LOAD	1/2-LOAD
MOTOR COS PHI	0.97	0.97	0.96
MOTOR EFFICIENCY	74.5 %	76.0 %	73.0 %
GEAR EFFICIENCY	—	—	—

MOTOR SHAFT POWER	2.3	hp
STARTING CURRENT ...	35	A
RATED CURRENT ...	10	A
RATED SPEED	3325	rpm
TOT.MOM.OF INERTIA ...	---	
NO. OF BLADES	1	

IMPELLER DIAMETER: 101 mm

MOTORTYPE	STATOR	REV
13-10-2BZ	03-	10

FREQ.	PHASES	VOLTAGE	POLES
60 Hz	1	230 V	2

GEARTYPE: --- RATIO: ---

COMMENTS

INLET/OUTLET: - / 55 mm

IMP. THROUGHLET: 48 mm

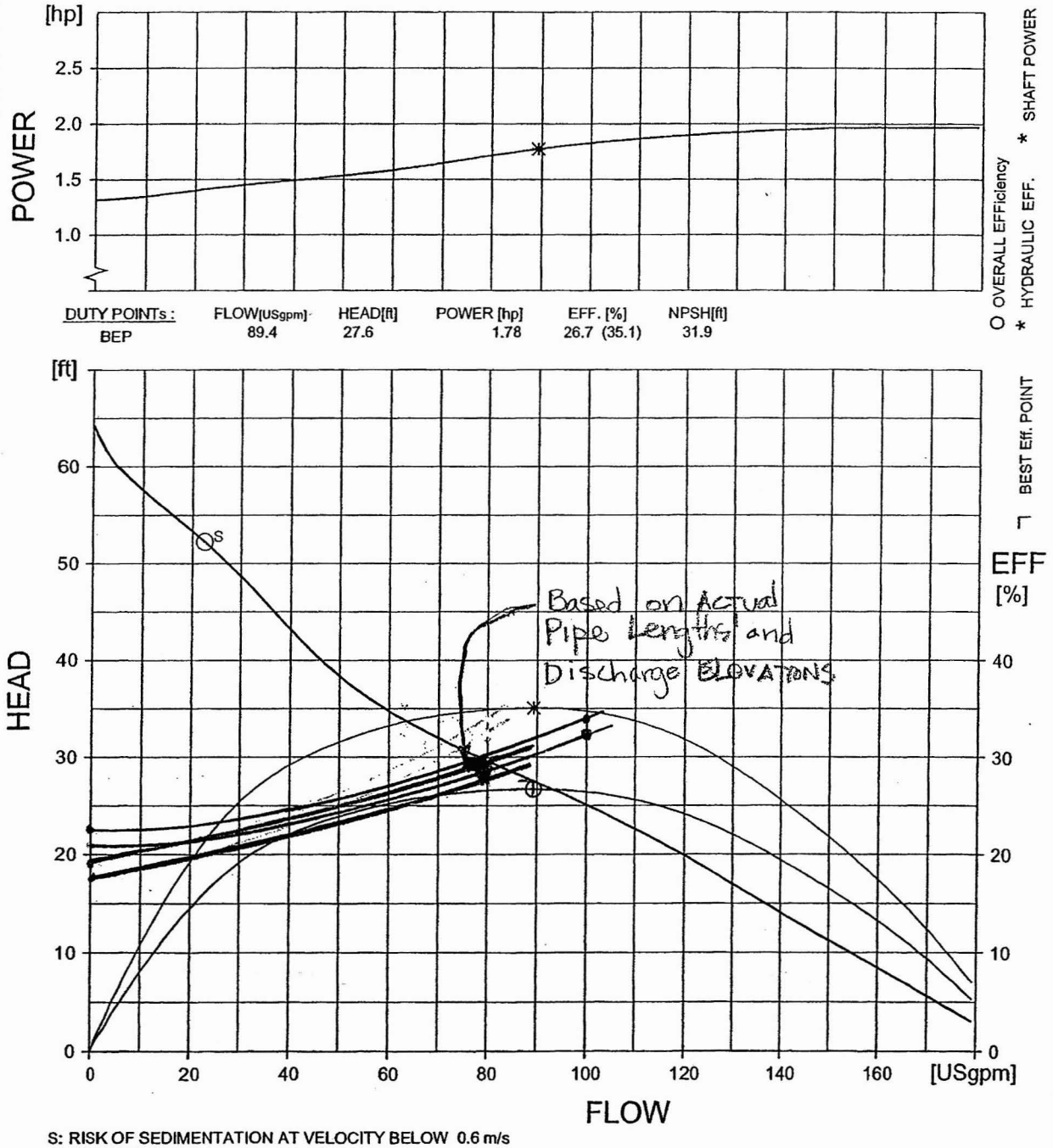

DUTY POINTs :	FLOW[USgpm]	HEAD[ft]	POWER [hp]	EFF. [%]	NPSH[ft]
BEP	89.4	27.6	1.78	26.7 (35.1)	31.9

S: RISK OF SEDIMENTATION AT VELOCITY BELOW 0.6 m/s
(Point (S) show risk in a 55 mm pipe)

CURVES SHOW PERFORMANCE WITH CLEAR COLD WATER

FLYGT CURVE

Calculated By: Fred Rouse DATE: 3-16-05
Checked By: [signature] DATE 3/5/05

Red Mtn Fwy - McDowell Rd CAP East Lift Station - Revised for Actual Pipe Length
Mesa, AZ

FLOW (GPM)	VELOCITY (FPS)				
	1.5	2	2.5	3	4
40	7.26	4.09	2.61	1.82	1.02
60	10.89	6.13	3.92	2.72	1.53
80	14.53	8.17	5.23	3.63	2.04
100	18.16	10.21	6.54	4.54	2.55
120	21.79	12.26	7.84	5.45	3.06

The recommended design velocity should be in the range of 3.0 to 4.0 fps.

Preliminary Static Head Calculation: McDowell Rd CAP Lift Station

Discharge Elevation	1580.3 Ft	Discharge Elevation	1580.3 Ft
Low Level Pumps Off Elevation	1560.75 Ft	High level Max Elevation	1562.5 Ft
Static Head (Z)	**19.55 Ft**		**17.8 Ft**

Pump Hydraulics

Flowrate(gpm) (cfs)		80	0.18	80	0.18	0	0	0	0	0	0	0	0	0	0
		Pump Connection		Pipe Number 1		Pipe Number 2		Pipe Number 3		Pipe Number 4		Pipe Number 5		Pipe Number 6	
Sum K		2.3		1.87		0		0		0		0		0	
Pipe D(in)		3		3		3		3		3		3		3	
Pipe D(ft)		0.25		0.25		0.25		0.25		0.25		0.25		0.25	
HyRa(ft)		0.06		0.06		0.06		0.06		0.06		0.06		0.06	
Pipe Lenght(ft)		5		270		57		0		0		0		0	
		Minor HL(ft)	C-factor 100	Minor HL(ft)	C-factor 100	Minor HL(ft)	C-factor 120	Minor HL(ft)	C-factor 120	Minor HL(ft)	C-factor 120	Minor HL(ft)	C-factor 120	Minor HL(ft)	C-factor 120
Total Headloss	10.17	0.48	0.17	0.39	9.13	0	0	0	0	0	0	0	0	0	0

TDH (MAX)	**29.72**
TDH (MIN)	27.97
THD (MIN) Use	**27.97**

Calculated By: Fred Rouse 12/20/04
Checked By: [illegible] 8/5/05

Red Mtn Fwy - McKellips Rd East CAP Lift Station
Mesa, AZ

FLOW (GPM)	VELOCITY (FPS)				
	1.5	2	2.5	3	4
40	7.26	4.09	2.61	1.82	1.02
60	10.89	6.13	3.92	2.72	1.53
80	14.53	8.17	5.23	3.63	2.04
100	18.16	10.21	6.54	4.54	2.55
120	21.79	12.26	7.84	5.45	3.06

The recommended design velocity should be in the range of 3.0 to 4.0 fps.

Preliminary Static Head Calculation: McKellips Rd East CAP Lift Station

Discharge Elevation	1583.5 Ft	Discharge Elevation	1583.5 Ft
Low Level Pumps Off Elevation	1560.75 Ft	High level Max Elevation	1562.5 Ft
Static Head (Z)	**22.75 Ft**		**21 Ft**

Pump Hydraulics

Flowrate(gpm)	(cfs)	40	0.09	40	0.09	0	0	0	0	0	0	0	0	0	0	0	0
		Pump Connection		Pipe Number 1		Pipe Number 2		Pipe Number 3		Pipe Number 4		Pipe Number 5		Pipe Number 6			
Sum K		2.3		1.87		0		0		0		0		0			
Pipe D(in)		3		3		3		3		3		3		3			
Pipe D(ft)		0.25		0.25		0.25		0.25		0.25		0.25		0.25			
HyRa(ft)		0.06		0.06		0.06		0.06		0.06		0.06		0.06			
Pipe Lenght(ft)		5		200		57		0		0		0		0			
		Minor HL(ft)	C-factor 100	Minor HL(ft)	C-factor 100	Minor HL(ft)	C-factor 120	Minor HL(ft)	C-factor 120	Minor HL(ft)	C-factor 120	Minor HL(ft)	C-factor 120	Minor HL(ft)	C-factor 120		
Total Headloss	2.15	0.12	0.05	0.1	1.88	0	0	0	0	0	0	0	0	0	0		

TDH (MAX)	**24.9**
TDH (MIN)	23.15
THD (MIN) Use	**23.15**

Calculated By: Fred Rouse 12/20/04
Checked By: MR 8/5/05

Red Mtn Fwy - McKellips Rd East CAP Lift Station
Mesa, AZ

FLOW (GPM)	VELOCITY (FPS)				
	1.5	2	2.5	3	4
40	7.26	4.09	2.61	1.82	1.02
60	10.89	6.13	3.92	2.72	1.53
80	14.53	8.17	5.23	3.63	2.04
100	18.16	10.21	6.54	4.54	2.55
120	21.79	12.26	7.84	5.45	3.06

The recommended design velocity should be in the range of 3.0 to 4.0 fps.

Preliminary Static Head Calculation: McKellips Rd East CAP Lift Station

Discharge Elevation	1583.5 Ft	Discharge Elevation	1583.5 Ft
Low Level Pumps Off Elevation	1560.75 Ft	High level Max Elevation	1562.5 Ft
Static Head (Z)	**22.75 Ft**		**21 Ft**

Pump Hydraulics

Flowrate(gpm) (cfs)		80	0.18	80	0.18	0	0	0	0	0	0	0	0	0	0
		Pump Connection		Pipe Number 1		Pipe Number 2		Pipe Number 3		Pipe Number 4		Pipe Number 5		Pipe Number 6	
Sum K		2.3		1.87		0		0		0		0		0	
Pipe D(in)		3		3		3		3		3		3		3	
Pipe D(ft)		0.25		0.25		0.25		0.25		0.25		0.25		0.25	
HyRa(ft)		0.06		0.06		0.06		0.06		0.06		0.06		0.06	
Pipe Lenght(ft)		5		200		57		0		0		0		0	
		Minor HL(ft)	C-factor 100	Minor HL(ft)	C-factor 100	Minor HL(ft)	C-factor 120	Minor HL(ft)	C-factor 120	Minor HL(ft)	C-factor 120	Minor HL(ft)	C-factor 120	Minor HL(ft)	C-factor 120
Total Headloss	7.8	0.48	0.17	0.39	6.76	0	0	0	0	0	0	0	0	0	0

TDH (MAX)	**30.55**
TDH (MIN)	28.8
THD (MIN) Use	**28.8**

Calculated By: Fred Rowse 12/20/04
Checked By: [illegible] 8/5/05

Red Mtn Fwy - McKellips Rd East CAP Lift Station
Mesa, AZ

FLOW (GPM)	VELOCITY (FPS)				
	1.5	2	2.5	3	4
40	7.26	4.09	2.61	1.82	1.02
60	10.89	6.13	3.92	2.72	1.53
80	14.53	8.17	5.23	3.63	2.04
100	18.16	10.21	6.54	4.54	2.55
120	21.79	12.26	7.84	5.45	3.06

The recommended design velocity should be in the range of 3.0 to 4.0 fps.

Preliminary Static Head Calculation: McKellips Rd East CAP Lift Station

Discharge Elevation	1583.5 Ft	Discharge Elevation	1583.5 Ft
Low Level Pumps Off Elevation	1560.75 Ft	High level Max Elevation	1562.5 Ft
Static Head (Z)	**22.75 Ft**		**21 Ft**

Pump Hydraulics

Flowrate(gpm)	(cfs)	100	0.22	100	0.22	0	0	0	0	0	0	0	0	0	0	0	0
		Pump Connection			Pipe Number 1			Pipe Number 2			Pipe Number 3			Pipe Number 4			Pipe Number 5			Pipe Number 6		
Sum K		2.3			1.87			0			0			0			0			0		
Pipe D(in)		3			3			3			3			3			3			3		
Pipe D(ft)		0.25			0.25			0.25			0.25			0.25			0.25			0.25		
HyRa(ft)		0.06			0.06			0.06			0.06			0.06			0.06			0.06		
Pipe Lenght(ft)		5			200			57			0			0			0			0		
		Minor HL(ft)		C-factor 100	Minor HL(ft)		C-factor 100	Minor HL(ft)		C-factor 120	Minor HL(ft)		C-factor 120	Minor HL(ft)		C-factor 120	Minor HL(ft)		C-factor 120	Minor HL(ft)		C-factor 120
Total Headloss	11.35	0.72	0.25		0.58	9.8		0	0		0	0		0	0		0	0		0	0	

TDH (MAX)	**34.1**
TDH (MIN)	32.35
THD (MIN) Use	**32.35**

Stanley Consultants INC.

Project No. 17000.04.01 Page No.

Subject Pump Design - CAP Equipment
Underpass Lift Station

Computed by FLR Date 12/21/04

Checked by MR Date 8/5/05

Approved by Date

Sheet No. of

BROWN Road - East:

Discharge Elevation: 1578.40 - 0.50 = 1577.90 USE 1578.0

Low Level off : 1564.40

Maximum Static Head: 1578.00 - 1564.40 = 13.60'

Pump On Elev: 1565.40

Minimum Static Head: 1578.00 - 1565.40 = 12.60'

DESIGN FLOWRATE: 80gpm (0.18 cfs)

Forcemain: 3" DIA - 200 LF

Pump Station

ITem	K	ΣK
Inlet	0.50	0.50
90° Bend	0.54	1.08
Ball Ck	0.72	0.72
		ΣΣK=2.30

Forcemain (FM)

ITEM	K	ΣK
45° Bend	0.29	0.58
Free Disch	1.00	1.00
		ΣΣK= 1.58

LOW LEVEL

Q	TDH
0	12.5
40	14.65
80	20.3
100	23.85
120	29.14
140	34.03

REVISED FOR ACTUAL Pipe Lengths & Elevations. 3/17/05 FJR

* Brown Rd - East Flowrate = ~~101~~ 98 gpm

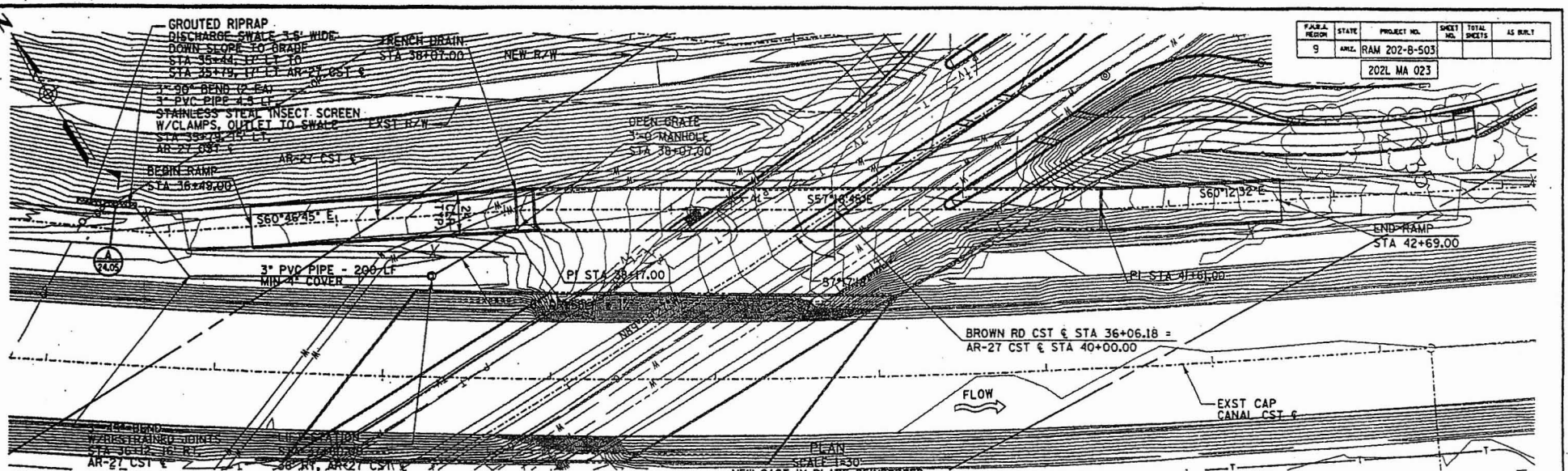

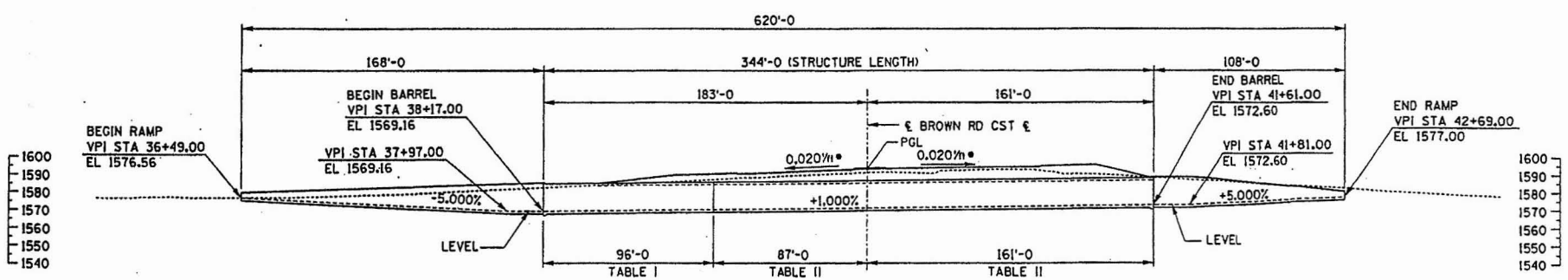

• PERPENDICULAR TO BROWN RD CST ℄

ELEVATION
SCALE 1=30'

NOTES:
1. STATIONS, DIMENSIONS & ELEVATIONS ARE ALONG AR-27 CST ℄.
2. FOR LIGHTING AND EMBEDDED CONDUIT SEE DWG NO. X.XX.

		DATE
DESIGN	HC	01/05
DRAWN	MRD	01/05
CHECKED	DRS	01/05

Stanley Consultants Inc.

ARIZONA DEPARTMENT OF TRANSPORTATION
INTERMODAL TRANSPORTATION DIVISION
BRIDGE GROUP

CAP LT EQUIPMENT PASS
(SR202/BROWN)
GENERAL PLAN & ELEVATION

LOCATION: RED MTN FREEWAY
POWER ROAD - UNIVERSITY DRIVE

ROUTE	MILEPOST	STRUCTURE NO.
202L	26.29	2834

TRACS NO. H 5782 01C

202-B-503

PRELIMINARY
STAGE III
95% Review
NOT FOR CONSTRUCTION OR RECORDING
BRIDGE ENGINEER

DWG NO. S-24.01

___ OF ___

Drafted by / Date
Check / Date
Mgr. / Date

3/14/2005 q:\17000\active\07-05-dwgs\05-str\equip\s2834gp01.dgn

F.A.H.R.A. REGION	STATE	PROJECT NO.	SHEET NO.	TOTAL SHEETS	AS BUILT
9	ARIZ.	RAM 202-B-503			
		202L MA 023			

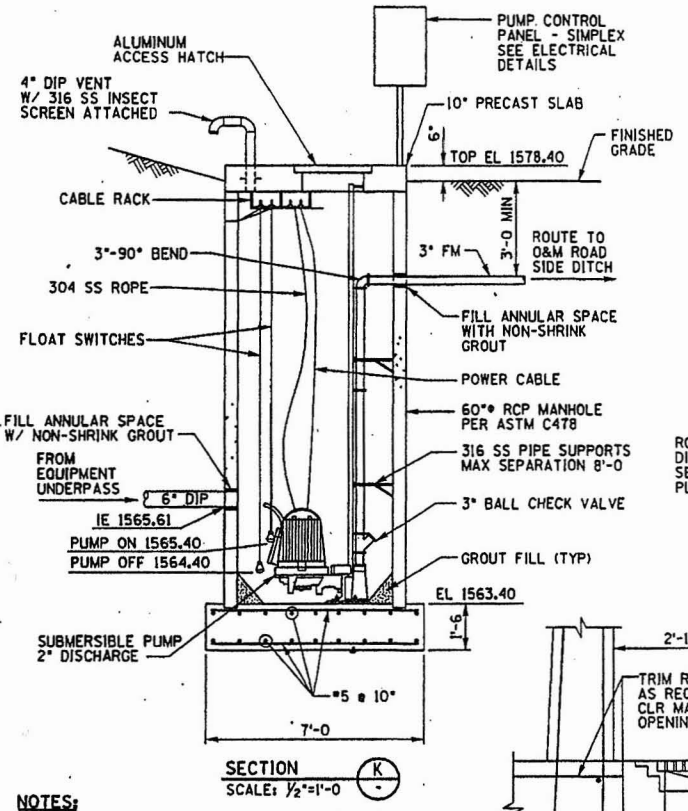

SECTION (K)
SCALE: 1/2"=1'-0

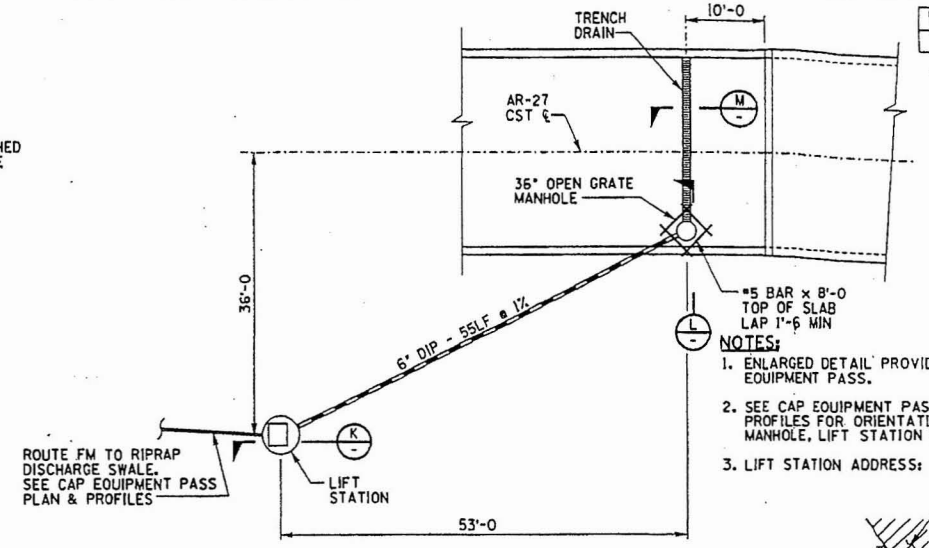

EQUIPMENT PASS DRAINAGE PLAN
SCALE: 1/8"=1'-0

NOTES:
1. ENLARGED DETAIL PROVIDED TO SHOW DESIGN FOR CAP EQUIPMENT PASS.
2. SEE CAP EQUIPMENT PASSES AND FRS EQUIPMENT PASS PLANS & PROFILES FOR ORIENTATION OF TRENCH DRAIN, OPEN GRATE MANHOLE, LIFT STATION AND PIPING.
3. LIFT STATION ADDRESS:

NOTES:
1. CONTRACTOR TO VERIFY ELEVATIONS PRIOR TO CONSTRUCTION OF LIFT STATION.
2. CONTRACTOR TO ROUTE PIPE TO AVOID CONFLICTS WITH CAP CANAL & UTILITIES.
3. RCP MANHOLE MANUFACTURER SHALL PROVIDE DESIGN CALCULATIONS SEALED AND SIGNED BY A REGISTERED STRUCTURAL ENGINEER IN THE STATE OF ARIZONA.

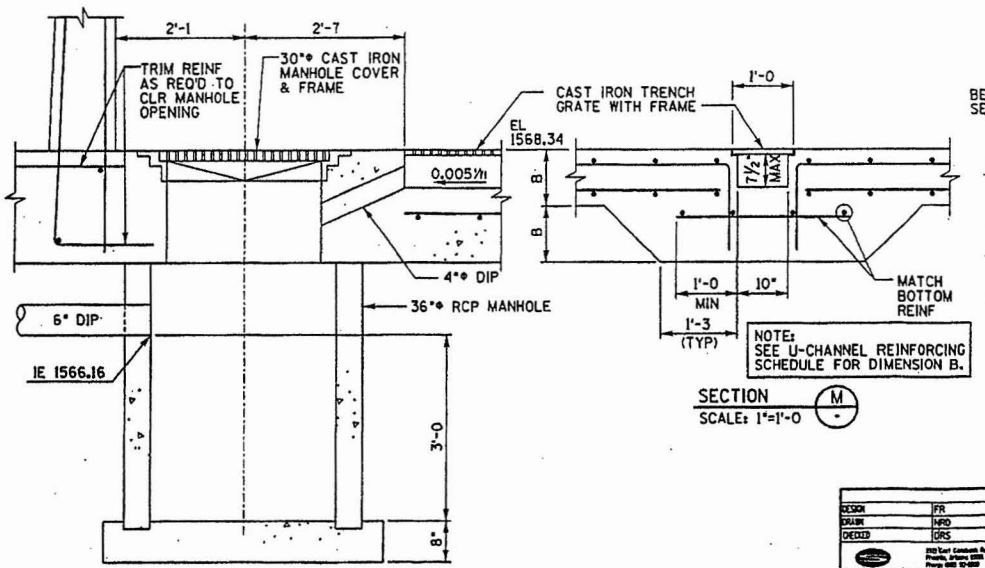

NOTE:
SEE U-CHANNEL REINFORCING SCHEDULE FOR DIMENSION B.

SECTION (M)
SCALE: 1"=1'-0

SECTION (L)
SCALE: 1"=1'-0

DISCHARGE SWALE SECTION (A 2901)
SCALE: NONE

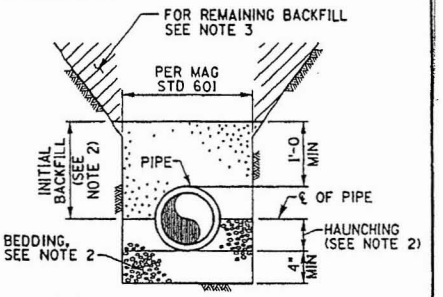

NOTES:
1. TRENCH WILL BE IN ACCORDANCE WITH MAG STD SPECIFICATIONS SECTION 601.
2. BEDDING MATERIAL, HAUNCHING AND INITIAL BACKFILL SHALL BE "ABC" PER MAG STANDARD SPECIFICATIONS 702. COMPACT TO 95% MAXIMUM DENSITY, ASTM D698.
3. CAREFULLY PLACED BACKFILL SHALL BE FINELY DIVIDED, JOB EXCAVATED MATERIAL, FREE FROM DEBRIS, STONES LARGER THAN 1½", ORGANIC MATTER, FROZEN MATERIAL, AND COMPACTED IN 6" LAYERS TO 95% MAXIMUM DENSITY, ASTM D698. SELECT BACKFILL MAY BE SUBSTITUTED FOR JOB EXCAVATED MATERIAL AND SHALL BE USED WHERE REMAINING BACKFILL IS SPECIFIED TO BE SELECT BACKFILL MATERIAL.

TYPICAL TYPE I PIPE BEDDING TRENCH CROSS-SECTION
SCALE: NONE

		DATE
DESIGN	FR	01/05
DRAWN	MRD	01/05
CHECKED	DRS	01/05

Stanley Consultants Inc.

ARIZONA DEPARTMENT OF TRANSPORTATION
INTERMODAL TRANSPORTATION DIVISION
BRIDGE GROUP

CAP LT EQUIPMENT PASS (SR202/BROWN)
LIFT STATION DETAILS

202L ROUTE	26.29 MILEPOST	2834 STRUCTURE NO.

LOCATION: RED MTN FREEWAY
POWER ROAD - UNIVERSITY DRIVE

PRELIMINARY
STAGE III
95% Review
NOT FOR CONSTRUCTION OR RECORDING
BRIDGE ENGINEER
DWG NO. S-24.05

TRACS NO. H 5782 01C | 202-B-503 | ___ OF ___

3/14/2005 m:\17888\active\07-05-dvos\05-stro\equip\s2834dt02.dgn

FLYGT

PERFORMANCE CURVE

PRODUCT	TYPE
CF3057.181	HT

DATE	PROJECT	CURVE NO	ISSUE
2002-02-04		61-254-00-7360	3

	1/1-LOAD	3/4-LOAD	1/2-LOAD
MOTOR COS PHI	0.97	0.97	0.96
MOTOR EFFICIENCY	74.5 %	76.0 %	73.0 %
GEAR EFFICIENCY	---	---	---

MOTOR SHAFT POWER	2.3	hp
STARTING CURRENT ...	35	A
RATED CURRENT ...	10	A
RATED SPEED	3325	rpm
TOT.MOM.OF INERTIA ...	---	
NO. OF BLADES	1	

IMPELLER DIAMETER: 101 mm

MOTORTYPE	STATOR	REV
13-10-2BZ	03-	10

FREQ.	PHASES	VOLTAGE	POLES
60 Hz	1	230 V	2

GEARTYPE	RATIO
---	---

COMMENTS

INLET/OUTLET	IMP. THROUGHLET
- / 55 mm	48 mm

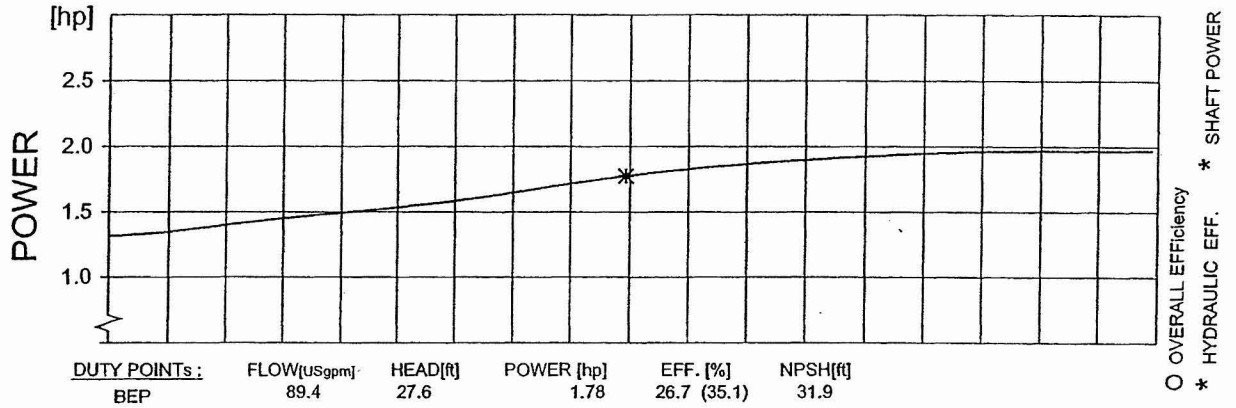

DUTY POINTs :	FLOW[USgpm]	HEAD[ft]	POWER [hp]	EFF. [%]	NPSH[ft]
BEP	89.4	27.6	1.78	26.7 (35.1)	31.9

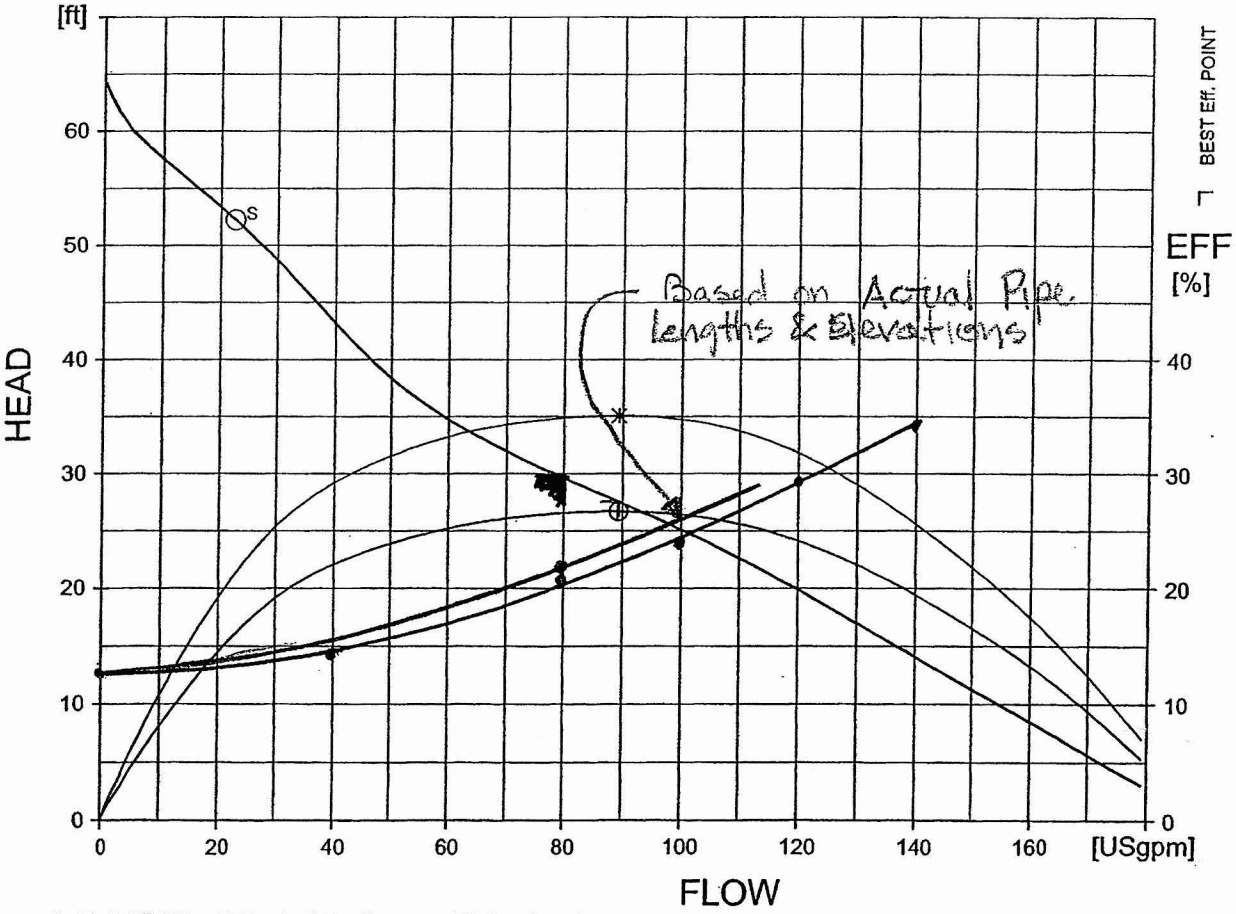

S: RISK OF SEDIMENTATION AT VELOCITY BELOW 0.6 m/s
(Point (S) show risk in a 55 mm pipe)

CURVES SHOW PERFORMANCE WITH CLEAR COLD WATER

FLYGT CURVE

Red Mtn Fwy - Brown Rd East CAP Lift Station - Revied for Actual Pipe Lengths & Elevations
Mesa, AZ

Calculated By: Fred Rouse Date: 3-17-05
Checked By: _____ Date: 8/5/05

FLOW (GPM)	VELOCITY (FPS)				
	1.5	2	2.5	3	4
40	7.26	4.09	2.61	1.82	1.02
60	10.89	6.13	3.92	2.72	1.53
80	14.53	8.17	5.23	3.63	2.04
100	18.16	10.21	6.54	4.54	2.55
120	21.79	12.26	7.84	5.45	3.06

The recommended design velocity should be in the range of 3.0 to 4.0 fps.

Preliminary Static Head Calculation: Brown Rd East CAP Lift Station

Discharge Elevation	1578 Ft	Discharge Elevation	1578 Ft
Low Level Pumps Off Elevation	1564.4 Ft	High level Max Elevation	1565.4 Ft
Static Head (Z)	**13.6 Ft**		**12.6 Ft**

Pump Hydraulics

Flowrate(gpm) (cfs)		80	0.18	80	0.18	0	0	0	0	0	0	0	0	0	0
		Pump Connection		Pipe Number 1		Pipe Number 2		Pipe Number 3		Pipe Number 4		Pipe Number 5		Pipe Number 6	
Sum K		2.3		1.87		0		0		0		0		0	
Pipe D(in)		3		3		3		3		3		3		3	
Pipe D(ft)		0.25		0.25		0.25		0.25		0.25		0.25		0.25	
HyRa(ft)		0.06		0.06		0.06		0.06		0.06		0.06		0.06	
Pipe Lenght(ft)		5		208		57		0		0		0		0	
		Minor HL(ft)	C-factor 100	Minor HL(ft)	C-factor 100	Minor HL(ft)	C-factor 120	Minor HL(ft)	C-factor 120	Minor HL(ft)	C-factor 120	Minor HL(ft)	C-factor 120	Minor HL(ft)	C-factor 120
Total Headloss	8.07	0.48	0.17	0.39	7.03	0	0	0	0	0	0	0	0	0	0

TDH (MAX)	**21.67**
TDH (MIN)	20.67
THD (MIN) Use	**20.67**

Red Mtn Fwy - Brown Rd East CAP Lift Station - Revied for Actual Pipe Lengths & Elevations
Mesa, AZ

Calculated By: Fred Rouse Date: 3-17-05
Checked By: MR Date: 9/5/05

FLOW (GPM)	VELOCITY (FPS)				
	1.5	2	2.5	3	4
40	7.26	4.09	2.61	1.82	1.02
60	10.89	6.13	3.92	2.72	1.53
80	14.53	8.17	5.23	3.63	2.04
100	18.16	10.21	6.54	4.54	2.55
120	21.79	12.26	7.84	5.45	3.06

The recommended design velocity should be in the range of 3.0 to 4.0 fps.

Preliminary Static Head Calculation: Brown Rd East CAP Lift Station

Discharge Elevation	1578 Ft	Discharge Elevation	1578 Ft
Low Level Pumps Off Elevation	1564.4 Ft	High level Max Elevation	1565.4 Ft
Static Head (Z)	**13.6 Ft**		**12.6 Ft**

Pump Hydraulics

Flowrate(gpm) (cfs)		100	0.22	100	0.22	0	0	0	0	0	0	0	0	0	0
		Pump Connection		Pipe Number 1		Pipe Number 2		Pipe Number 3		Pipe Number 4		Pipe Number 5		Pipe Number 6	
Sum K		2.3		1.87		0		0		0		0		0	
Pipe D(in)		3		3		3		3		3		3		3	
Pipe D(ft)		0.25		0.25		0.25		0.25		0.25		0.25		0.25	
HyRa(ft)		0.06		0.06		0.06		0.06		0.06		0.06		0.06	
Pipe Lenght(ft)		5		208		57		0		0		0		0	
		Minor HL(ft)	C-factor 100	Minor HL(ft)	C-factor 100	Minor HL(ft)	C-factor 120	Minor HL(ft)	C-factor 120	Minor HL(ft)	C-factor 120	Minor HL(ft)	C-factor 120	Minor HL(ft)	C-factor 120
Total Headloss	11.75	0.72	0.25	0.58	10.2	0	0	0	0	0	0	0	0	0	0

TDH (MAX)	**25.35**
TDH (MIN)	24.35
THD (MIN) Use	**24.35**

Calculated By: Fred Rouse 12/20/04
Checked By: MR 8/5/05

Red Mtn Fwy - Brown Rd East CAP Lift Station
Mesa, AZ

FLOW (GPM)	VELOCITY (FPS)				
	1.5	2	2.5	3	4
40	7.26	4.09	2.61	1.82	1.02
60	10.89	6.13	3.92	2.72	1.53
80	14.53	8.17	5.23	3.63	2.04
100	18.16	10.21	6.54	4.54	2.55
120	21.79	12.26	7.84	5.45	3.06

The recommended design velocity should be in the range of 3.0 to 4.0 fps.

Preliminary Static Head Calculation: Brown Rd East CAP Lift Station

Discharge Elevation	1577.9 Ft	Discharge Elevation	1577.9 Ft
Low Level Pumps Off Elevation	1565.4 Ft	High level Max Elevation	1566.4 Ft
Static Head (Z)	**12.5 Ft**		**11.5 Ft**

Pump Hydraulics

Flowrate(gpm) (cfs)		40	0.09	40	0.09	0	0	0	0	0	0	0	0	0	0
		Pump Connection		Pipe Number 1		Pipe Number 2		Pipe Number 3		Pipe Number 4		Pipe Number 5		Pipe Number 6	
Sum K		2.3		1.87		0		0		0		0		0	
Pipe D(in)		3		3		3		3		3		3		3	
Pipe D(ft)		0.25		0.25		0.25		0.25		0.25		0.25		0.25	
HyRa(ft)		0.06		0.06		0.06		0.06		0.06		0.06		0.06	
Pipe Lenght(ft)		5		200		57		0		0		0		0	
		Minor HL(ft)	C-factor 100	Minor HL(ft)	C-factor 100	Minor HL(ft)	C-factor 120	Minor HL(ft)	C-factor 120	Minor HL(ft)	C-factor 120	Minor HL(ft)	C-factor 120	Minor HL(ft)	C-factor 120
Total Headloss	2.15	0.12	0.05	0.1	1.88	0	0	0	0	0	0	0	0	0	0

TDH (MAX)	**14.65**
TDH (MIN)	13.65
THD (MIN) Use	**13.65**

Calculated By: Fred Rouse, 12/20/04
Checked By: MEL 8/5/05

Red Mtn Fwy - Brown Rd East CAP Lift Station
Mesa, AZ

FLOW (GPM)	VELOCITY (FPS)				
	1.5	2	2.5	3	4
40	7.26	4.09	2.61	1.82	1.02
60	10.89	6.13	3.92	2.72	1.53
80	14.53	8.17	5.23	3.63	2.04
100	18.16	10.21	6.54	4.54	2.55
120	21.79	12.26	7.84	5.45	3.06

The recommended design velocity should be in the range of 3.0 to 4.0 fps.

Preliminary Static Head Calculation: Brown Rd East CAP Lift Station

Discharge Elevation	1577.9 Ft	Discharge Elevation	1577.9 Ft
Low Level Pumps Off Elevation	1565.4 Ft	High level Max Elevation	1566.4 Ft
Static Head (Z)	**12.5 Ft**		**11.5 Ft**

Pump Hydraulics

Flowrate(gpm) (cfs)		80	0.18	80	0.18	0	0	0	0	0	0	0	0	0	0
		Pump Connection		Pipe Number 1		Pipe Number 2		Pipe Number 3		Pipe Number 4		Pipe Number 5		Pipe Number 6	
Sum K		2.3		1.87		0		0		0		0		0	
Pipe D(in)		3		3		3		3		3		3		3	
Pipe D(ft)		0.25		0.25		0.25		0.25		0.25		0.25		0.25	
HyRa(ft)		0.06		0.06		0.06		0.06		0.06		0.06		0.06	
Pipe Lenght(ft)		5		200		57		0		0		0		0	
		Minor HL(ft)	C-factor 100	Minor HL(ft)	C-factor 100	Minor HL(ft)	C-factor 120	Minor HL(ft)	C-factor 120	Minor HL(ft)	C-factor 120	Minor HL(ft)	C-factor 120	Minor HL(ft)	C-factor 120
Total Headloss	7.8	0.48	0.17	0.39	6.76	0	0	0	0	0	0	0	0	0	0

TDH (MAX)	**20.3**
TDH (MIN)	19.3
THD (MIN) Use	**19.3**

Calculated By: Fred Rouse 12/20/04
Checked By: MEE 8/5/05

Red Mtn Fwy - Brown Rd East CAP Lift Station
Mesa, AZ

FLOW (GPM)	VELOCITY (FPS)				
	1.5	2	2.5	3	4
40	7.26	4.09	2.61	1.82	1.02
60	10.89	6.13	3.92	2.72	1.53
80	14.53	8.17	5.23	3.63	2.04
100	18.16	10.21	6.54	4.54	2.55
120	21.79	12.26	7.84	5.45	3.06

The recommended design velocity should be in the range of 3.0 to 4.0 fps.

Preliminary Static Head Calculation: Brown Rd East CAP Lift Station

Discharge Elevation	1577.9 Ft	Discharge Elevation	1577.9 Ft
Low Level Pumps Off Elevation	1565.4 Ft	High level Max Elevation	1566.4 Ft
Static Head (Z)	**12.5 Ft**		**11.5 Ft**

Pump Hydraulics

Flowrate(gpm)	(cfs)	100	0.22	100	0.22	0	0	0	0	0	0	0	0	0	0
		Pump Connection		Pipe Number 1		Pipe Number 2		Pipe Number 3		Pipe Number 4		Pipe Number 5		Pipe Number 6	
Sum K		2.3		1.87		0		0		0		0		0	
Pipe D(in)		3		3		3		3		3		3		3	
Pipe D(ft)		0.25		0.25		0.25		0.25		0.25		0.25		0.25	
HyRa(ft)		0.06		0.06		0.06		0.06		0.06		0.06		0.06	
Pipe Lenght(ft)		5		200		57		0		0		0		0	
		Minor HL(ft)	C-factor 100	Minor HL(ft)	C-factor 100	Minor HL(ft)	C-factor 120	Minor HL(ft)	C-factor 120	Minor HL(ft)	C-factor 120	Minor HL(ft)	C-factor 120	Minor HL(ft)	C-factor 120
Total Headloss	11.35	0.72	0.25	0.58	9.8	0	0	0	0	0	0	0	0	0	0

TDH (MAX)	**23.85**
TDH (MIN)	22.85
THD (MIN) Use	**22.85**

Calculated By: Fred Rouse 12/20/04
Checked By: MR 2/5/05

Red Mtn Fwy - Brown Rd East CAP Lift Station
Mesa, AZ

FLOW (GPM)	VELOCITY (FPS)				
	1.5	2	2.5	3	4
40	7.26	4.09	2.61	1.82	1.02
60	10.89	6.13	3.92	2.72	1.53
80	14.53	8.17	5.23	3.63	2.04
100	18.16	10.21	6.54	4.54	2.55
120	21.79	12.26	7.84	5.45	3.06

The recommended design velocity should be in the range of 3.0 to 4.0 fps.

Preliminary Static Head Calculation: Brown Rd East CAP Lift Station

Discharge Elevation	1577.9 Ft	Discharge Elevation	1577.9 Ft
Low Level Pumps Off Elevation	1565.4 Ft	High level Max Elevation	1566.4 Ft
Static Head (Z)	**12.5 Ft**		**11.5 Ft**

Pump Hydraulics

Flowrate(gpm) (cfs)		120	0.27	120	0.27	0	0	0	0	0	0	0	0	0	0
		Pump Connection		Pipe Number 1		Pipe Number 2		Pipe Number 3		Pipe Number 4		Pipe Number 5		Pipe Number 6	
Sum K		2.3		1.87		0		0		0		0		0	
Pipe D(in)		3		3		3		3		3		3		3	
Pipe D(ft)		0.25		0.25		0.25		0.25		0.25		0.25		0.25	
HyRa(ft)		0.06		0.06		0.06		0.06		0.06		0.06		0.06	
Pipe Lenght(ft)		5		200		57		0		0		0		0	
		Minor HL(ft)	C-factor 100	Minor HL(ft)	C-factor 100	Minor HL(ft)	C-factor 120	Minor HL(ft)	C-factor 120	Minor HL(ft)	C-factor 120	Minor HL(ft)	C-factor 120	Minor HL(ft)	C-factor 120
Total Headloss	16.64	1.08	0.36	0.88	14.32	0	0	0	0	0	0	0	0	0	0

TDH (MAX)	**29.14**
TDH (MIN)	28.14
THD (MIN) Use	**28.14**

Calculated By: Fred Rouse 12/20/04
Checked By: MR 01/5/05

Red Mtn Fwy - Brown Rd East CAP Lift Station
Mesa, AZ

FLOW (GPM)	VELOCITY (FPS)				
	1.5	2	2.5	3	4
40	7.26	4.09	2.61	1.82	1.02
60	10.89	6.13	3.92	2.72	1.53
80	14.53	8.17	5.23	3.63	2.04
100	18.16	10.21	6.54	4.54	2.55
120	21.79	12.26	7.84	5.45	3.06

The recommended design velocity should be in the range of 3.0 to 4.0 fps.

Preliminary Static Head Calculation: Brown Rd East CAP Lift Station

Discharge Elevation	1577.9 Ft	Discharge Elevation	1577.9 Ft
Low Level Pumps Off Elevation	1565.4 Ft	High level Max Elevation	1566.4 Ft
Static Head (Z)	**12.5 Ft**		**11.5 Ft**

Pump Hydraulics

Flowrate(gpm) (cfs)		140	0.31	140	0.31	0	0	0	0	0	0	0	0	0	0
		Pump Connection		Pipe Number 1		Pipe Number 2		Pipe Number 3		Pipe Number 4		Pipe Number 5		Pipe Number 6	
Sum K		2.3		1.87		0		0		0		0		0	
Pipe D(in)		3		3		3		3		3		3		3	
Pipe D(ft)		0.25		0.25		0.25		0.25		0.25		0.25		0.25	
HyRa(ft)		0.06		0.06		0.06		0.06		0.06		0.06		0.06	
Pipe Lenght(ft)		5		200		57		0		0		0		0	
		Minor HL(ft)	C-factor 100	Minor HL(ft)	C-factor 100	Minor HL(ft)	C-factor 120	Minor HL(ft)	C-factor 120	Minor HL(ft)	C-factor 120	Minor HL(ft)	C-factor 120	Minor HL(ft)	C-factor 120
Total Headloss	21.53	1.42	0.46	1.16	18.49	0	0	0	0	0	0	0	0	0	0

TDH (MAX)	**34.03**
TDH (MIN)	**33.03**
THD (MIN) Use	**33.03**

Stanley Consultants INC.

Project No. 17000.04.01 Page No.

Subject Pump Design - CAP Equipment
Underpass LIFT STATION

Computed by FLR Date 12/21/04

Checked by MRA Date 8/5/05

Approved by Date

Sheet No. of

FRS Underpass:

Discharge Elev: 1580.5 - 3.50 + 1' = 1578.0'

Low Level Off: 1564.50

Maximum TDH: 1578.0 - 1564.50 = 13.50'

Pump-ON Elev: 1565.50

Minimum TDH: 1578.0 - 1565.5 = 12.50'

Design Flowrate: 80 gpm (0.18 cfs)

Forcemain: 3" DIA - ~~200~~ 149' LF TOTAL LENGTH

Pump Station

ITEM	K	ΣK
Inlet	0.5	0.50
90° Bend	0.54	1.80
Ball Ck	0.72	0.72

ΣΣK = 2.30

Forcemain (FM)

ITEM	K	ΣK
45° BEND	0.29	0.58
Free Disch	1.00	1.00

ΣΣK = 1.58

Revised Based on Actual Pipe Lengths & Elevations 3/17/05 MRA

Low Level

Q	TDH
0	15.50'
40	17.65'
80	23.30
100	26.85
120	32.14

* FRS Underpass - Flowrate = 97 gpm

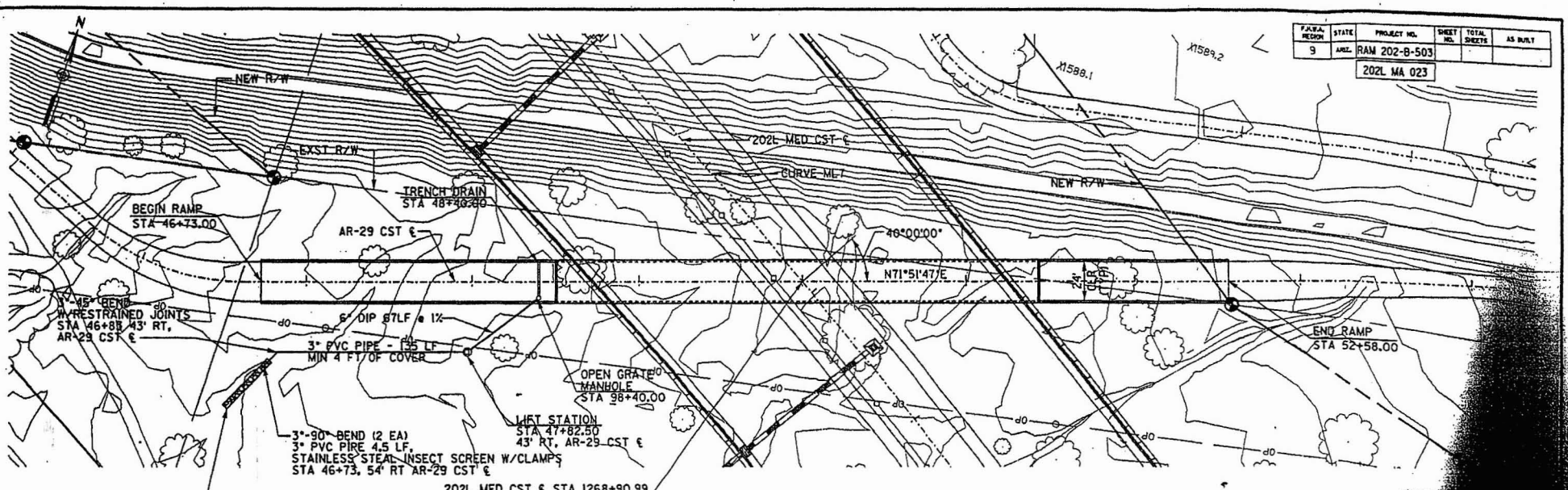

PLAN
SCALE: 1"=30'
NEW CAST-IN-PLACE REINFORCED
CONCRETE RIGID FRAME EQUIPMENT PASS
SKEW 40°00'00"
1' CONTOUR INTERVALS

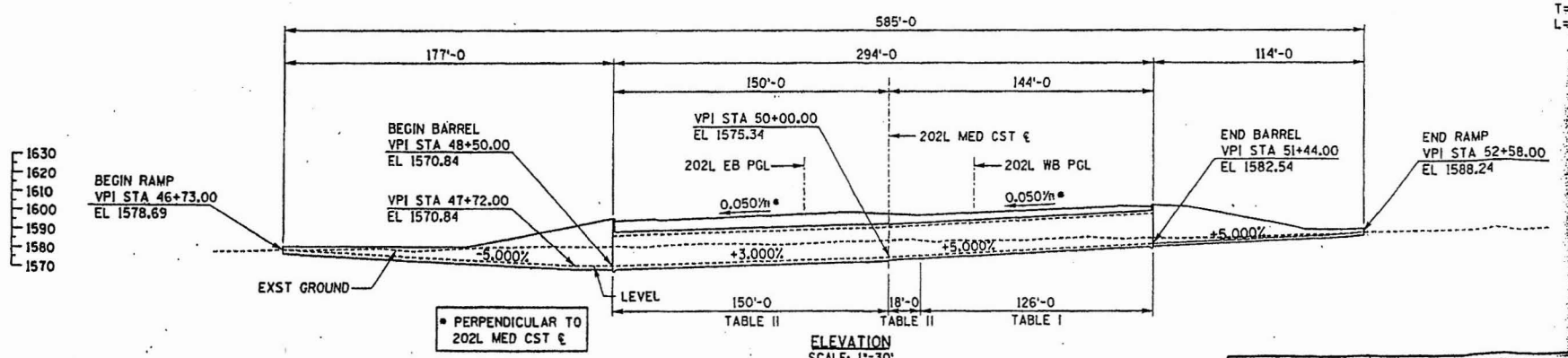

ELEVATION
SCALE: 1"=30'

NOTES:
1. STATIONS, DIMENSIONS & ELEVATIONS ARE ALONG AR-29 CST ℄.
2. FOR PROFILE, SEE DWG NO. S-25.02.
3. FOR LIGHTING AND EMBEDDED CONDUIT, SEE DWG NO. X-X.XX.

F.H.W.A. REGION	STATE	PROJECT NO.	SHEET NO.	TOTAL SHEETS	AS BUILT
9	ARIZ.	RAM 202-B-503			

202L MA 023

		DATE
DESIGN	HC	01/05
DRAWN	HRD	01/05
CHECKED	DAS	01/05

Stanley Consultants INC.

ARIZONA DEPARTMENT OF TRANSPORTATION
INTERMODAL TRANSPORTATION DIVISION
BRIDGE GROUP

1268+90
SPOOK HILL FRS EQUIPMENT PASS
GENERAL PLAN & ELEVATION

LOCATION: RED MTN FREEWAY
POWER ROAD - UNIVERSITY

202L	27.11	2835
ROUTE	MILEPOST	STRUCTURE NO.

TRACS NO. H 5782 01C

202-

Drafted by
Back Checked
Date
Date

F.H.W.A. REGION	STATE	PROJECT NO.	SHEET NO.	TOTAL SHEETS	AS BUILT
9	ARIZ.	RAM 202-B-503			
		202L MA 023			

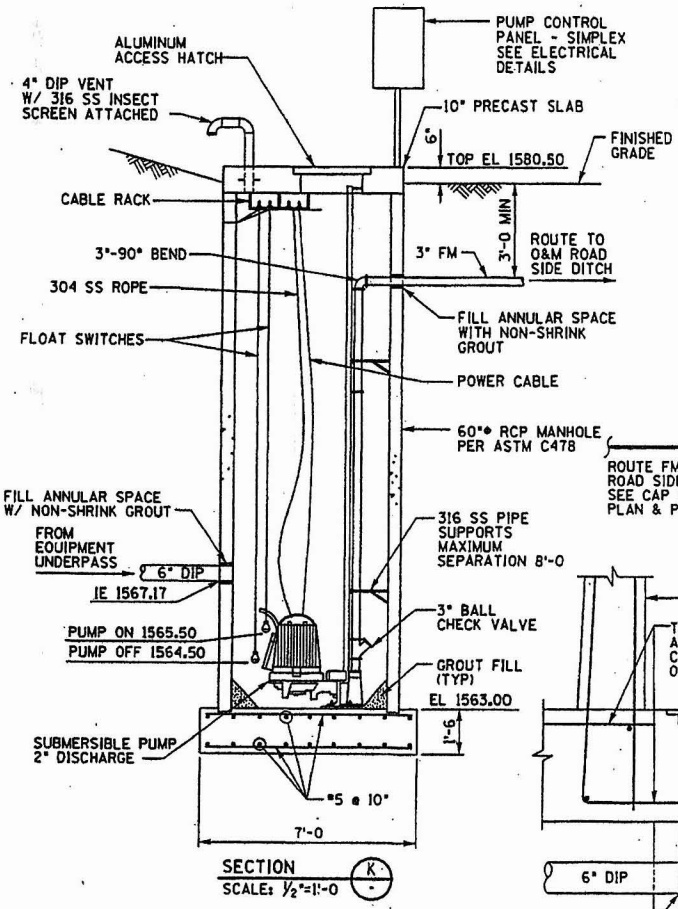

SECTION (K)
SCALE: 1/2"=1'-0

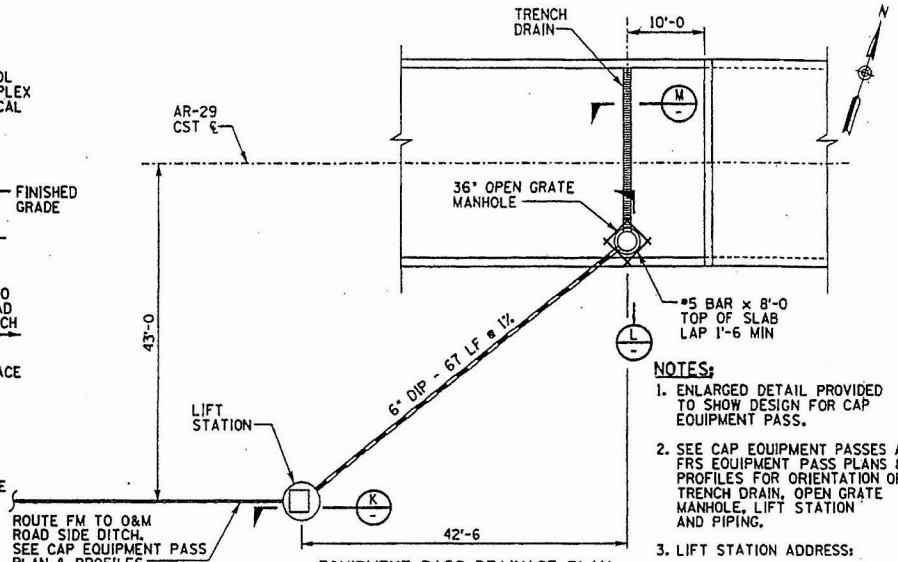

EQUIPMENT PASS DRAINAGE PLAN
SCALE: 1/8"=1'-0

NOTES:
1. ENLARGED DETAIL PROVIDED TO SHOW DESIGN FOR CAP EQUIPMENT PASS.
2. SEE CAP EQUIPMENT PASSES AND FRS EQUIPMENT PASS PLANS & PROFILES FOR ORIENTATION OF TRENCH DRAIN, OPEN GRATE MANHOLE, LIFT STATION AND PIPING.
3. LIFT STATION ADDRESS:

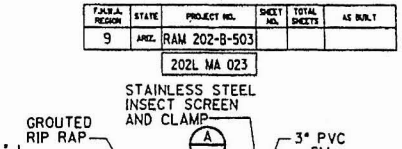

DISCHARGE RIPRAP DETAIL
SCALE: NONE

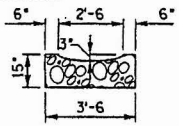

SECTION (A)
SCALE: NONE

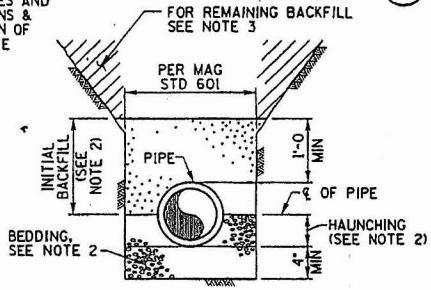

NOTES:
1. TRENCH WILL BE IN ACCORDANCE WITH MAG STD SPECIFICATIONS SECTION 601.
2. BEDDING MATERIAL, HAUNCHING AND INITIAL BACKFILL SHALL BE "ABC" PER MAG STANDARD SPECIFICATIONS 702. COMPACT TO 95% MAXIMUM DENSITY, ASTM D698.
3. CAREFULLY PLACED BACKFILL SHALL BE FINELY DIVIDED, JOB EXCAVATED MATERIAL, FREE FROM DEBRIS, STONES LARGER THAN 1½", ORGANIC MATTER, FROZEN MATERIAL, AND COMPACTED IN 6" LAYERS TO 95% MAXIMUM DENSITY, ASTM D698. SELECT BACKFILL MAY BE SUBSTITUTED FOR JOB EXCAVATED MATERIAL AND SHALL BE USED WHERE REMAINING BACKFILL IS SPECIFIED TO BE SELECT BACKFILL MATERIAL.

TYPICAL TYPE I PIPE BEDDING TRENCH CROSS-SECTION
SCALE: NONE

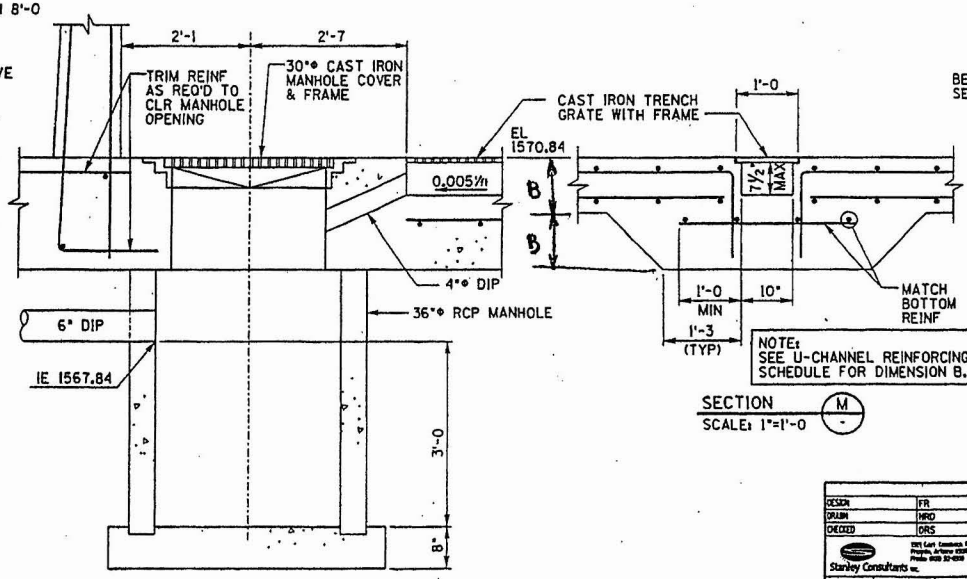

NOTE: SEE U-CHANNEL REINFORCING SCHEDULE FOR DIMENSION B.

SECTION (M)
SCALE: 1"=1'-0

SECTION (L)
SCALE: 1"=1'-0

NOTES:
1. CONTRACTOR TO VERIFY ELEVATIONS PRIOR TO CONSTRUCTION OF LIFT STATION.
2. CONTRACTOR TO ROUTE PIPE TO AVOID CONFLICTS WITH CAP CANAL & UTILITIES.
3. RCP MANHOLE MANUFACTURER SHALL PROVIDE DESIGN CALCULATIONS SEALED AND SIGNED BY A REGISTERED STRUCTURAL ENGINEER IN THE STATE OF ARIZONA.

		DATE
DESIGN	FR	01/05
DRAWN	HRD	01/05
CHECKED	DRS	01/05

Stanley Consultants Inc.

ARIZONA DEPARTMENT OF TRANSPORTATION
INTERMODAL TRANSPORTATION DIVISION
BRIDGE GROUP

1268+90
SPOOK HILL FRS EQUIPMENT PASS
LIFT STATION DETAILS

ROUTE	MILEPOST	STRUCTURE NO.	LOCATION
202L	27.11	2835	RED MTN FREEWAY POWER ROAD - UNIVERSITY DRIVE

TRACS NO. H 5782 01C | 202-B-503

PRELIMINARY
STAGE III
95% Review
NOT FOR CONSTRUCTION OR RECORDING
BRIDGE ENGINEER
DWG NO. 5-25.05

OF

PERFORMANCE CURVE

FLYGT		PRODUCT: CF3057.181	TYPE: HT
DATE: 2002-02-04	PROJECT:	CURVE NO: 61-254-00-7360	ISSUE: 3

	1/1-LOAD	3/4-LOAD	1/2-LOAD
MOTOR COS PHI	0.97	0.97	0.96
MOTOR EFFICIENCY	74.5 %	76.0 %	73.0 %
GEAR EFFICIENCY	---	---	---

COMMENTS

INLET/OUTLET	- / 55 mm	
IMP. THROUGHLET	48 mm	
MOTOR SHAFT POWER	2.3	hp
STARTING CURRENT ...	35	A
RATED CURRENT ...	10	A
RATED SPEED	3325	rpm
TOT.MOM.OF INERTIA ...	---	
NO. OF BLADES	1	

IMPELLER DIAMETER: 101 mm			
MOTORTYPE: 13-10-2BZ	STATOR: 03-	REV: 10	
FREQ.: 60 Hz	PHASES: 1	VOLTAGE: 230 V	POLES: 2
GEARTYPE: ---	RATIO: ---		

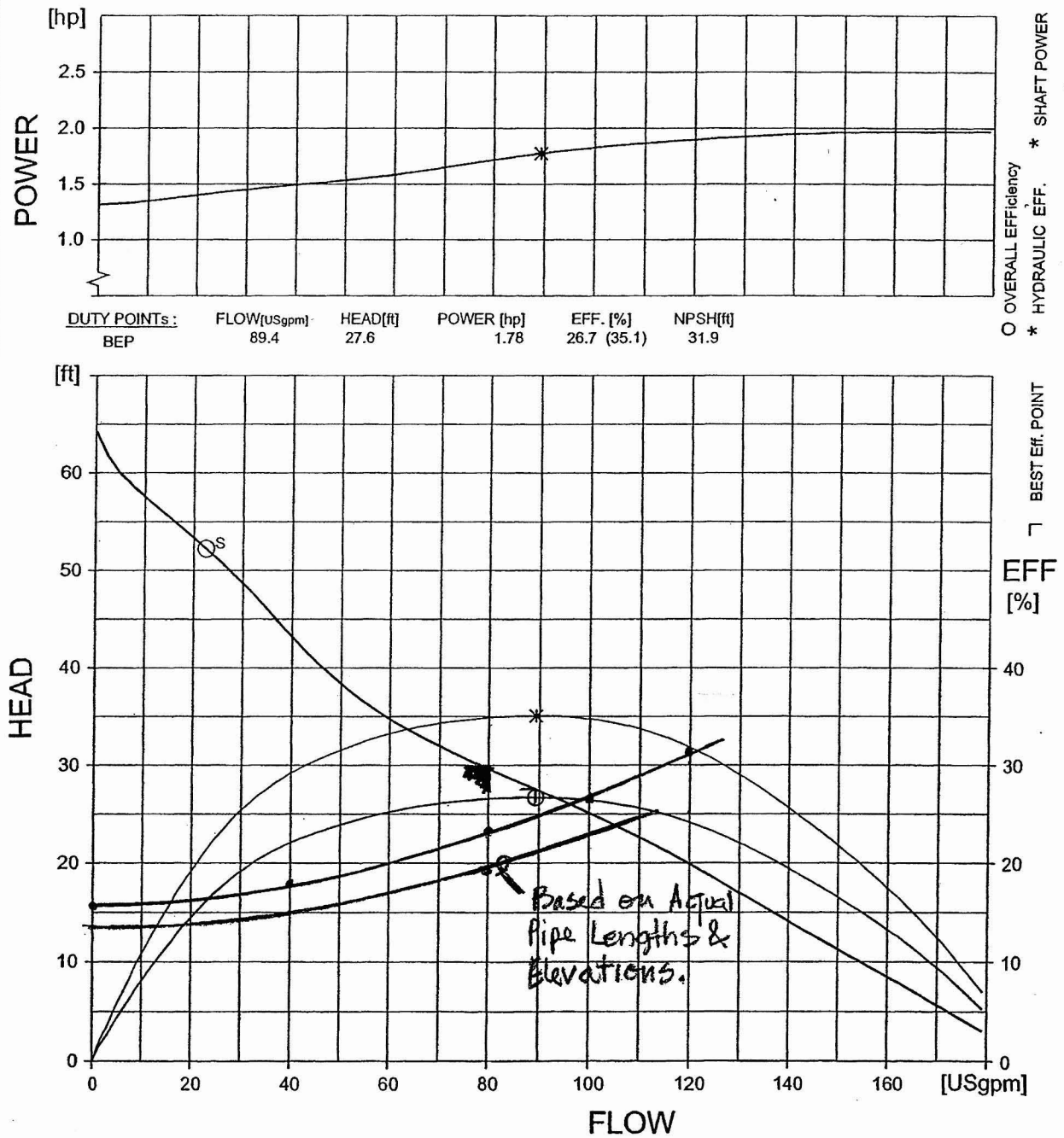

DUTY POINTs:	FLOW[USgpm]	HEAD[ft]	POWER [hp]	EFF. [%]	NPSH[ft]
BEP	89.4	27.6	1.78	26.7 (35.1)	31.9

S: RISK OF SEDIMENTATION AT VELOCITY BELOW 0.6 m/s
(Point (S) show risk in a 55 mm pipe)

CURVES SHOW PERFORMANCE WITH CLEAR COLD WATER

FLYGT CURVE

Red Mtn Fwy - 202 FRS Lift Station-Revised for Actual Pipe Lengths & Elevations
Mesa, AZ

Calculated By: Fred Rouse Date: 3-17-05
Checked By: _____ Date: 8/5/05

FLOW (GPM)	VELOCITY (FPS)				
	1.5	2	2.5	3	4
40	7.26	4.09	2.61	1.82	1.02
60	10.89	6.13	3.92	2.72	1.53
80	14.53	8.17	5.23	3.63	2.04
100	18.16	10.21	6.54	4.54	2.55
120	21.79	12.26	7.84	5.45	3.06

The recommended design velocity should be in the range of 3.0 to 4.0 fps.

Preliminary Static Head Calculation: 202 FRS Lift Station

Discharge Elevation	1578 Ft	Discharge Elevation	1578 Ft
Low Level Pumps Off Elevation	1564.5 Ft	High level Max Elevation	1565.5 Ft
Static Head (Z)	**13.5 Ft**		**12.5 Ft**

Pump Hydraulics																			
Flowrate(gpm)	(cfs)		80	0.18	80	0.18	0	0	0	0	0	0	0	0	0	0			
			Pump Connection		Pipe Number 1		Pipe Number 2		Pipe Number 3		Pipe Number 4		Pipe Number 5		Pipe Number 6				
Sum K			2.3		1.87		0		0		0		0		0				
Pipe D(in)			3		3		3		3		3		3		3				
Pipe D(ft)			0.25		0.25		0.25		0.25		0.25		0.25		0.25				
HyRa(ft)			0.06		0.06		0.06		0.06		0.06		0.06		0.06				
Pipe Lenght(ft)			5		144		57		0		0		0		0				
			Minor HL(ft)	C-factor 100	Minor HL(ft)	C-factor 100	Minor HL(ft)	C-factor 120	Minor HL(ft)	C-factor 120	Minor HL(ft)	C-factor 120	Minor HL(ft)	C-factor 120	Minor HL(ft)	C-factor 120			
Total Headloss		5.91	0.48	0.17	0.39	4.87	0	0	0	0	0	0	0	0	0	0			

TDH (MAX)	**19.41**
TDH (MIN)	18.41
THD (MIN) Use	**18.41**

Red Mtn Fwy - 202 FRS Underpass Lift Station-Revised for Actual Pipe Lengths & Elevations
Mesa, AZ

Calculated By: Fred Rouse Date: 3-17-05
Checked By: MK Date: 8/5/05

FLOW (GPM)	VELOCITY (FPS)				
	1.5	2	2.5	3	4
40	7.26	4.09	2.61	1.82	1.02
60	10.89	6.13	3.92	2.72	1.53
80	14.53	8.17	5.23	3.63	2.04
100	18.16	10.21	6.54	4.54	2.55
120	21.79	12.26	7.84	5.45	3.06

The recommended design velocity should be in the range of 3.0 to 4.0 fps.

Preliminary Static Head Calculation: 202 FRS Lift Station

Discharge Elevation	1578 Ft	Discharge Elevation	1578 Ft
Low Level Pumps Off Elevation	1564.5 Ft	High level Max Elevation	1565.5 Ft
Static Head (Z)	**13.5 Ft**		**12.5 Ft**

Pump Hydraulics
Flowrate(gpm) (cfs) 100 0.22 100 0.22 0 0 0 0 0 0 0 0 0 0

		Pump Connection		Pipe Number 1		Pipe Number 2		Pipe Number 3		Pipe Number 4		Pipe Number 5		Pipe Number 6	
Sum K		2.3		1.87		0		0		0		0		0	
Pipe D(in)		3		3		3		3		3		3		3	
Pipe D(ft)		0.25		0.25		0.25		0.25		0.25		0.25		0.25	
HyRa(ft)		0.06		0.06		0.06		0.06		0.06		0.06		0.06	
Pipe Lenght(ft)		5		144		57		0		0		0		0	
		Minor HL(ft)	C-factor 100	Minor HL(ft)	C-factor 100	Minor HL(ft)	C-factor 120	Minor HL(ft)	C-factor 120	Minor HL(ft)	C-factor 120	Minor HL(ft)	C-factor 120	Minor HL(ft)	C-factor 120
Total Headloss	8.61	0.72	0.25	0.58	7.06	0	0	0	0	0	0	0	0	0	0

TDH (MAX) **22.11**
TDH (MIN) 21.11
THD (MIN) Use **21.11**

Red Mtn Fwy - 202 FRS Lift Station
Mesa, AZ

Calculated By: Fred Rouse 12/20/04
Checked By: MC 8/5/05

FLOW (GPM)	VELOCITY (FPS)				
	1.5	2	2.5	3	4
40	7.26	4.09	2.61	1.82	1.02
60	10.89	6.13	3.92	2.72	1.53
80	14.53	8.17	5.23	3.63	2.04
100	18.16	10.21	6.54	4.54	2.55
120	21.79	12.26	7.84	5.45	3.06

The recommended design velocity should be in the range of 3.0 to 4.0 fps.

Preliminary Static Head Calculation: 202 FRS Lift Station

Discharge Elevation	1580 Ft	Discharge Elevation	1580 Ft
Low Level Pumps Off Elevation	1564.5 Ft	High level Max Elevation	1565.5 Ft
Static Head (Z)	**15.5 Ft**		**14.5 Ft**

Pump Hydraulics

Flowrate(gpm)	(cfs)	40	0.09	40	0.09	0	0	0	0	0	0	0	0	0	0
		Pump Connection		Pipe Number 1		Pipe Number 2		Pipe Number 3		Pipe Number 4		Pipe Number 5		Pipe Number 6	
Sum K		2.3		1.87		0		0		0		0		0	
Pipe D(in)		3		3		3		3		3		3		3	
Pipe D(ft)		0.25		0.25		0.25		0.25		0.25		0.25		0.25	
HyRa(ft)		0.06		0.06		0.06		0.06		0.06		0.06		0.06	
Pipe Lenght(ft)		5		200		57		0		0		0		0	
		Minor HL(ft)	C-factor 100	Minor HL(ft)	C-factor 100	Minor HL(ft)	C-factor 120	Minor HL(ft)	C-factor 120	Minor HL(ft)	C-factor 120	Minor HL(ft)	C-factor 120	Minor HL(ft)	C-factor 120
Total Headloss	2.15	0.12	0.05	0.1	1.88	0	0	0	0	0	0	0	0	0	0

TDH (MAX)	**17.65**
TDH (MIN)	16.65
THD (MIN) Use	**16.65**

Calculated By: Fred Rouse 12/20/04
Checked By: MRC 8/5/05

Red Mtn Fwy - 202 FRS Lift Station
Mesa, AZ

FLOW (GPM)	VELOCITY (FPS)				
	1.5	2	2.5	3	4
40	7.26	4.09	2.61	1.82	1.02
60	10.89	6.13	3.92	2.72	1.53
80	14.53	8.17	5.23	3.63	2.04
100	18.16	10.21	6.54	4.54	2.55
120	21.79	12.26	7.84	5.45	3.06

The recommended design velocity should be in the range of 3.0 to 4.0 fps.

Preliminary Static Head Calculation: 202 FRS Lift Station

Discharge Elevation	1580 Ft	Discharge Elevation	1580 Ft
Low Level Pumps Off Elevation	1564.5 Ft	High level Max Elevation	1565.5 Ft
Static Head (Z)	**15.5 Ft**		**14.5 Ft**

Pump Hydraulics

Flowrate(gpm) (cfs)		80	0.18	80	0.18	0	0	0	0	0	0	0	0	0	0
		Pump Connection		Pipe Number 1		Pipe Number 2		Pipe Number 3		Pipe Number 4		Pipe Number 5		Pipe Number 6	
Sum K		2.3		1.87		0		0		0		0		0	
Pipe D(in)		3		3		3		3		3		3		3	
Pipe D(ft)		0.25		0.25		0.25		0.25		0.25		0.25		0.25	
HyRa(ft)		0.06		0.06		0.06		0.06		0.06		0.06		0.06	
Pipe Lenght(ft)		5		200		57		0		0		0		0	
		Minor HL(ft)	C-factor 100	Minor HL(ft)	C-factor 100	Minor HL(ft)	C-factor 120	Minor HL(ft)	C-factor 120	Minor HL(ft)	C-factor 120	Minor HL(ft)	C-factor 120	Minor HL(ft)	C-factor 120
Total Headloss	7.8	0.48	0.17	0.39	6.76	0	0	0	0	0	0	0	0	0	0

TDH (MAX)	**23.3**
TDH (MIN)	22.3
THD (MIN) Use	**22.3**

Red Mtn Fwy - 202 FRS Lift Station
Mesa, AZ

Calculated By: Fred Rouse 12/20/04
Checked By: MM 8/5/05

FLOW (GPM)	VELOCITY (FPS)				
	1.5	2	2.5	3	4
40	7.26	4.09	2.61	1.82	1.02
60	10.89	6.13	3.92	2.72	1.53
80	14.53	8.17	5.23	3.63	2.04
100	18.16	10.21	6.54	4.54	2.55
120	21.79	12.26	7.84	5.45	3.06

The recommended design velocity should be in the range of 3.0 to 4.0 fps.

Preliminary Static Head Calculation: 202 FRS Lift Station

Discharge Elevation	1580 Ft	Discharge Elevation	1580 Ft
Low Level Pumps Off Elevation	1564.5 Ft	High level Max Elevation	1565.5 Ft
Static Head (Z)	**15.5 Ft**		**14.5 Ft**

Pump Hydraulics

Flowrate(gpm)	(cfs)	100	0.22	100	0.22	0	0	0	0	0	0	0	0	0	0
		Pump Connection		Pipe Number 1		Pipe Number 2		Pipe Number 3		Pipe Number 4		Pipe Number 5		Pipe Number 6	
Sum K		2.3		1.87		0		0		0		0		0	
Pipe D(In)		3		3		3		3		3		3		3	
Pipe D(ft)		0.25		0.25		0.25		0.25		0.25		0.25		0.25	
HyRa(ft)		0.06		0.06		0.06		0.06		0.06		0.06		0.06	
Pipe Lenght(ft)		5		200		57		0		0		0		0	
		Minor HL(ft)	C-factor 100	Minor HL(ft)	C-factor 100	Minor HL(ft)	C-factor 120	Minor HL(ft)	C-factor 120	Minor HL(ft)	C-factor 120	Minor HL(ft)	C-factor 120	Minor HL(ft)	C-factor 120
Total Headloss	11.35	0.72	0.25	0.58	9.8	0	0	0	0	0	0	0	0	0	0

TDH (MAX)	**26.85**
TDH (MIN)	25.85
THD (MIN) Use	**25.85**

Calculated By: Fred Rouse 12/20/
Checked By: MF 8/5/05

Red Mtn Fwy - 202 FRS Lift Station
Mesa, AZ

FLOW (GPM)	VELOCITY (FPS)				
	1.5	2	2.5	3	4
40	7.26	4.09	2.61	1.82	1.02
60	10.89	6.13	3.92	2.72	1.53
80	14.53	8.17	5.23	3.63	2.04
100	18.16	10.21	6.54	4.54	2.55
120	21.79	12.26	7.84	5.45	3.06

The recommended design velocity should be in the range of 3.0 to 4.0 fps.

Preliminary Static Head Calculation: 202 FRS Lift Station

Discharge Elevation	1580 Ft	Discharge Elevation	1580 Ft
Low Level Pumps Off Elevation	1564.5 Ft	High level Max Elevation	1565.5 Ft
Static Head (Z)	**15.5 Ft**		**14.5 Ft**

Pump Hydraulics

Flowrate(gpm) (cfs)		120	0.27	120	0.27	0	0	0	0	0	0	0	0	0	0
		Pump Connection		Pipe Number 1		Pipe Number 2		Pipe Number 3		Pipe Number 4		Pipe Number 5		Pipe Number 6	
Sum K		2.3		1.87		0		0		0		0		0	
Pipe D(in)		3		3		3		3		3		3		3	
Pipe D(ft)		0.25		0.25		0.25		0.25		0.25		0.25		0.25	
HyRa(ft)		0.06		0.06		0.06		0.06		0.06		0.06		0.06	
Pipe Lenght(ft)		5		200		57		0		0		0		0	
		Minor HL(ft)	C-factor 100	Minor HL(ft)	C-factor 100	Minor HL(ft)	C-factor 120	Minor HL(ft)	C-factor 120	Minor HL(ft)	C-factor 120	Minor HL(ft)	C-factor 120	Minor HL(ft)	C-factor 120
Total Headloss	16.64	1.08	0.36	0.88	14.32	0	0	0	0	0	0	0	0	0	0

TDH (MAX)	**32.14**
TDH (MIN)	31.14
THD (MIN) Use	**31.14**

APPENDIX J

DRAINAGE DESIGN PLANS

NOTE:
THE ZEROS IN PARENTHESIS (0, 0.0 & 0.00) IN THE HEADING OF SOME OF THE COLUMNS ARE THE RECOMMENDED PRECISION OF THE VALUE TO BE ENTERED IN THE COLUMN.

NOTE:
FOR PIPE CULVERT PLACEMENT SEE STANDARD DRAWING C-13.15

NOTE:
PIPE OPTIONS SELECTED ARE THOSE REQUIRED TO MEET MINIMUM SERVICE LIFE.
SHADED PIPE OPTION FIELDS ARE NOT ALLOWABLE ALTERNATES.

CSP - CORRUGATED STEEL PIPE
CAP - CORRUGATED ALUMINUM PIPE
RCP - REINFORCED CONCRETE PIPE
NRCP - NON-REINFORCED CONCRETE PIPE
NRCIPCP - NON-REINFORCED CAST-IN-PLACE CONCRETE PIPE
CHDPEPP - CORRUGATED HIGH DENSTIY POLYETHYLENE PLASTIC PIPE

F.H.W.A. REGION	STATE	PROJECT NO.	SHEET NO.	TOTAL SHEETS	AS BUILT
9	ARIZ.	202-B(007)B			

202 MA 023

Station	Plan Ref No.	Controlling Fill Height Range	Size, Corrugated (In.)	Size, Smooth (In.)	Length (0) (Ft.)	Skew (0) (Degree)	CSP: Corrugation	CSP: Wall Thickness (0.000)	CSP: Zinc	CSP: Bit. Coated Zinc	CSP: Aluminum	CSP: Bit. Coated Aluminum	CAP: Corrugation	CAP: Wall Thickness (0.000)	CAP: Uncoated	CAP: Bit. Coated	RCP: Class - Non Trench	RCP: Class - Trench	NRCP: Class	NRCIPCP: Min Wall Thickness (0) (In.)	CHDPEPP: AASHTO M-294 Type C	CHDPEPP: AASHTO M-294 Type S	End Sec: C-13.20 & C-13.25	End Sec: Detail -	Manhole Size (In)	Standard or Detail	S-Single / D-Double / T-Triple	Location	H (0.0)	L Wing (0.0)	L 18" Slotted Drn (0)	L 24" Slotted Drn (0)	Grate Type	Elev. (0.00)	Inlet Depression Depth (In.)	Inlet Depression L (0.0) (Ft.)	Pipe Exc (0)	Pipe Bkfl (0)	Drn Exc (0)	Berm/Dike Emb (0)	REMARKS
202L Med Sta 1295+30 92' Rt to	400	5		24	291												IV	IV							24	C-18.10			15.6					1556.07			511	58			MH400 to MH401
202L Med Sta 1298+30 92' Rt																																									
202L Med Sta 1298+30 92' Rt to	401	3		24	292												II	II	2			X			24	C-18.10			9.7					1549.44			365	59			MH401 to MH402
202L Med Sta 1301+30 92' Rt																																									
202L Med Sta 1301+30 92' Rt to	402	3		30	300												II	II	2	3		X			24	C-18.10			8.6					1541.88			411	74			MH402 to MH403
202L Med Sta 1304+30 92' Rt																																									
202L Med Sta 1304+30 92' Rt to	403	4		30	305												III	III		3		X			24	C-18.10			8.5					1535.77			494	75			MH403 to MH404
202L Med Sta 1307+34.45 91.9' Rt																																									
202L Med Sta 1307+34.45 91.9' Rt	-	-		-	-																				24	C-18.10			-					1533.00							MH404, Detail D13
202L Med Sta 1147+00 92' Lt	-	-		-	-																				24	C-18.10			-					1574.15							MH405, Detail D13
202L Med Sta 1150+32 92' Lt	-	-		-	-																				24	C-18.10			-					1575.17							MH406, Detail D13
202L Med Sta 1152+50 92' Lt	-	-		-	-																				24	C-18.10			-					1575.71							MH407, Detail D13
202L Med Sta 1152+50 345.39' Lt	-	-		-	-																				24	C-18.10			-					1573.12							MH408, Detail D13
Sheet Total																																					1781	266			

FILL HEIGHT RANGE TABLE (Ft.)

RANGE NO.		1	2	3	4	5	6	7	8	9	10	11	12
FILL	>	1	3	5	8	11	15	20	25	30	40	55	70
HEIGHT (Ft.)	≤	3	5	8	11	15	20	25	30	40	55	70	90

SHOULD FIELD CONDITIONS VARY FROM THE RANGE INDICATED, CONTACT DESIGN FOR RE-EVALUATION OF PIPE DESIGN REQUIREMENTS.

PIPE CORRUGATION

A	2⅔x½	D	6x2
B	3x1	E	3x1 or 9x2½
C	9x2½		

	NAME	DATE
DESIGN	RSR	4/05
DRAWN	SJP	4/05
CHECKED	CAD	4/05

Stanley Consultants inc.

ARIZONA DEPARTMENT OF TRANSPORTATION
INTERMODAL TRANSPORTATION DIVISION
ROADWAY DESIGN SERVICES

NEW PIPE SUMMARY SHEET

PRELIMINARY STAGE IV
95% Review
NOT FOR CONSTRUCTION OR RECORDING

ROUTE: 202L
LOCATION: RED MTN FWY, POWER ROAD - UNIVERSITY DRIVE
DWG NO. G-6.35

TRACS NO. H 5782 01C | 202-B(007)B | ___ OF ___

REV. DATE: 01-05-2000

NOTE:
THE ZEROS IN PARENTHESIS (0, 0.0 & 0.00) IN THE HEADING OF SOME OF THE COLUMNS ARE THE RECOMMENDED PRECISION OF THE VALUE TO BE ENTERED IN THE COLUMN.

NOTE:
FOR PIPE CULVERT PLACEMENT SEE STANDARD DRAWING C-13.15

NOTE:
PIPE OPTIONS SELECTED ARE THOSE REQUIRED TO MEET MINIMUM SERVICE LIFE.
SHADED PIPE OPTION FIELDS ARE NOT ALLOWABLE ALTERNATES.

CSP - CORRUGATED STEEL PIPE
CAP - CORRUGATED ALUMINUM PIPE
RCP - REINFORCED CONCRETE PIPE
NRCP - NON-REINFORCED CONCRETE PIPE
NRCIPCP - NON-REINFORCED CAST-IN-PLACE CONCRETE PIPE
CHDPEPP - CORRUGATED HIGH DENSITY POLYETHYLENE PLASTIC PIPE

F.H.W.A. REGION	STATE	PROJECT NO.	SHEET NO.	TOTAL SHEETS	AS BUILT
9	ARIZ.	202-B(007)B			
		202 MA 023			

DESCRIPTION							CSP				CAP			RCP	NRCP	NRCIPCP	CHDPEPP	END TREATMENT												QUANTITIES	
				In.	In.	Ft. / Degree	In.	Coating			In.					In.		Each	Catch basin, Manhole, Headwall & Junction Structure											Cubic Yard	
Station	Plan Ref No.	Controlling Fill Height Range	Size, Corrugated	Size, Smooth	Length (0)	Skew (0)	Corrugation	Wall Thickness (0.00)	Zinc	Bit. Coated Zinc	Aluminum	Bit. Coated Aluminum	Corrugation	Wall Thickness (0.00)	Uncoated	Bit. Coated	Class - Non Trench	Class - Trench	Class	Min Wall Thickness (0)	AASHTO M-294 Type C	AASHTO M-294 Type S	C-13.20 & C-13.25 Detail -	Size, (in) Manhole	End Sec Standard or Detail	S-Single / D-Double / T-Triple	Location	H (0.0)	L Wing (0.0)	L 18" Slotted Drn (0)	L 24" Slotted Drn (0)	Type	Elev. (0.00)	Grate Depth	Grate Inlet Depression L (0.0)	Pipe Exc (0)	Pipe Bkfl (0)	Drn Exc (0)	Berm/Dike Emb (0)	REMARKS
																									Ea		Ft.					Grate Ft.	In.	Ft.					
McD Rd Sta 7+40.01 14.01' Rt	701	1		24	110											III	III	3		X			30	C-18.10			4.8					1601.65			81	22			MH701 to MH715
to McD Rd Sta 8+49.69 13.52' Rt																																							
McD Rd Sta 13+35 17.82' Rt	702	4		24	140											III	III			X			30	C-18.10			10.6					1602.84			105	28			MH702 to Jct702
to McD Rd Sta 13+28.11 156.17' Rt																																							
McD Rd Sta 10+26 45.59' Rt	703	1		18	34											IV	IV			X				C-15.20			4.4	11.5				1599.26	1	22	23	5			CB703 to Jct703
to McD Rd Sta 10+26.19 15.08' Rt																																							
McD Rd Sta 9+64.03 45.58' Rt	704	1		18	35											IV	IV			X				C-15.20			4.4					1599.12	1	10	28	8			CB704 to MH714
to McD Rd Sta 9+64.03 14.53' Rt																																							
McD Rd Sta 9+17 45.59' Rt	705	1		18	35											IV	IV			X				C-15.20			4.4	7.5				1599.20	1	18	29	8			CB705 to Jct705
to McD Rd Sta 9+17.02 14.12' Rt																																							
McD Rd Sta 7+40 45.59' Rt	706	1		18	36											IV	IV			X				C-15.20			4.4	19.5				1601.02	1	30	42	8			CB706 to MH701
to McD Rd Sta 7+40.01 14.01' Rt																																							
McD Rd Sta 13+45 50.58' Rt	707	4		24	13											III	III			X				C-15.20			5.8	11.5				1602.29	1	22	21	4			CB707 to Jct707
to McD Rd Sta 13+35 54.08' Rt																																							
McD Rd Sta 13+35 50.58' Lt	708	1		24	72											III	III	3		X				C-15.20			5.1	11.5				1602.18	1	22	100	20			CB708 to MH702
to McD Rd Sta 13+35 17.82' Rt																																							
McD Rd Sta 9+64.03 45.58' Lt	709	1		24	64											III	III	3		X				C-15.20			5.0					1599.12	1	10	62	18			CB709 to MH714
to McD Rd Sta 9+64.03 14.53' Rt																																							
Sheet Total																																		491	121				

REV. DATE: 01-05-2000

FILL HEIGHT RANGE TABLE (Ft.)													
RANGE NO.		1	2	3	4	5	6	7	8	9	10	11	12
FILL HEIGHT (Ft.)	>	1	3	5	8	11	15	20	25	30	40	55	70
	≤	3	5	8	11	15	20	25	30	40	55	70	90

◒ SHOULD FIELD CONDITIONS VARY FROM THE RANGE INDICATED, CONTACT DESIGN FOR RE-EVALUATION OF PIPE DESIGN REQUIREMENTS.

PIPE CORRUGATION			
A	2⅔x½	D	6x2
B	3x1	E	3x1 or 9x2½
C	9x2½		

	NAME	DATE
DESIGN	DJO	07/05
DRAWN	WJP	07/05
CHECKED	CAD	07/05

Stanley Consultants Inc. 2929 East Camelback Road, Suite 130 Phoenix, Arizona 85016 Phone (602) 957-8500

ARIZONA DEPARTMENT OF TRANSPORTATION
INTERMODAL TRANSPORTATION DIVISION
ROADWAY DESIGN SERVICES

NEW PIPE SUMMARY SHEET

PRELIMINARY
STAGE V
100% Review
NOT FOR CONSTRUCTION OR RECORDING

ROUTE	LOCATION
202L	RED MTN FWY, POWER ROAD - UNIVERSITY DRIVE

DWG NO. G-6.101

TRACS NO. H 5782 01C | 202-B(007)B | OF

NOTE:
THE ZEROS IN PARENTHESIS (0, 0.0 & 0.00) IN THE HEADING OF SOME OF THE COLUMNS ARE THE RECOMMENDED PRECISION OF THE VALUE TO BE ENTERED IN THE COLUMN.

NOTE:
FOR PIPE CULVERT PLACEMENT SEE STANDARD DRAWING C-13.15

NOTE:
PIPE OPTIONS SELECTED ARE THOSE REQUIRED TO MEET MINIMUM SERVICE LIFE.
SHADED PIPE OPTION FIELDS ARE NOT ALLOWABLE ALTERNATES.

CSP - CORRUGATED STEEL PIPE
CAP - CORRUGATED ALUMINUM PIPE
RCP - REINFORCED CONCRETE PIPE
NRCP - NON-REINFORCED CONCRETE PIPE
NRCIPCP - NON-REINFORCED CAST-IN-PLACE CONCRETE PIPE
CHDPEPP - CORRUGATED HIGH DENSTIY POLYETHYLENE PLASTIC PIPE

F.H.W.A. REGION	STATE	PROJECT NO.	SHEET NO.	TOTAL SHEETS	AS BUILT
9	ARIZ.	202-B(007)B			
		202 MA 023			

DESCRIPTION / CSP / CAP / RCP / NRCP / NRCIPCP / CHDPEPP

Station	Plan Ref No. ⬡	● Controlling Fill Height Range	Size, Corrugated (In.)	Size, Smooth (In.)	Length (0) (Ft.)	Skew (0) (Degree)	CSP ☒ Corrugation (In.)	CSP Wall Thickness (0.00)	CSP Coating Zinc	CSP Coating Blt. Coated Zinc	CSP Coating Aluminum	CSP Coating Blt. Coated Aluminum	CAP ☒ Corrugation (In.)	CAP Wall Thickness (0.00)	CAP Uncoated	CAP Blt. Coated	RCP Class - Non Trench	RCP Class - Trench	NRCP Class	NRCIPCP Min Wall Thickness (0) (In.)	CHDPEPP AASHTO M-294 Type C	CHDPEPP AASHTO M-294 Type S
McD Rd Sta 9+07 45.58' Lt	710	1		24	64												III	III	3			X
to McD Rd Sta 9+06.97 14.03' Rt																						
McD Rd Sta 8+49.69± 68.89'± Lt	711	1		24	83												III	III	3			X
to McD Rd Sta 8+49.69 13.52' Rt																						
McD Rd Sta 10+15.5 45.58' Lt	712	1		24	65												III	III	3			X
to McD Rd Sta 10+15.62 14.99' Rt																						
McD Rd Sta 18+75 50' Rt	713	5		24	126												IV	IV				
to McD Rd 18+75.0 177' Rt																						
McD Rd Sta 9+64.03 14.53' Rt	714	1		24	371												III	III	3			X
to McD Rd Sta 13+35 17.82' Rt																						
McD Rd Sta 8+49.69 13.52' Rt	715	1		24	115												III	III	3			X
to McD Rd Sta 9+64.03 14.53' Rt																						
McD Rd Sta 21+68.53 50' Rt	716	5		24	102												IV	IV				
to ML 1089+34 104' Rt																						
McD Rd Sta 21+10.31 50' Lt	717	1		24	116												III	III	3			X
to McD Rd Sta 21+68.53 50' Rt																						
McK Rd Sta 33+00 54.04' Rt	750	6		24	139												IV	IV				
to McK Rd Sta 33+98 158' Rt																						
Sheet Total																						

END TREATMENT / QUANTITIES

Station	End Sec C-13.20 & C-13.25 (Each)	End Sec Detail - (Each)	Size, (In) Manhole	Catch basin, Manhole, Headwall & Junction Structure: Standard or Detail	S-Single / D-Double / T-Triple (Ea)	Location	H (0.0) (Ft.)	L Wing (0.0) (Ft.)	L 18" Slotted Drn (0) (Ft.)	L 24" Slotted Drn (0) (Ft.)	Grate Type	Grate Elev. (0.00) (Ft.)	Inlet Depression Depth (In.)	Inlet Depression L (0.0) (Ft.)	Pipe Exc (0) (Cubic Yard)	Pipe Bkfl (0) (Cubic Yard)	Drn Exc (0) (Cubic Yard)	Berm/Dike Emb (0) (Cubic Yard)	REMARKS
McD Rd Sta 9+07 45.58' Lt				C-15.20			4.9	7.5				1599.24	1	18	64	18			CB710 to Jct710
to McD Rd Sta 9+06.97 14.03' Rt																			
McD Rd Sta 8+49.69± 68.89'± Lt				Exst MH			4.3					1599.40			75	24			Jct711 to MH715
to McD Rd Sta 8+49.69 13.52' Rt																			
McD Rd Sta 10+15.5 45.58' Lt				C-15.20			5.1	11.5				1599.22	1	22	66	18			CB712 to Jct712
to McD Rd Sta 10+15.62 14.99' Rt																			
McD Rd Sta 18+75 50' Rt	1			C-15.30	S		15.3					1604.20	1	10	171	36			CB713 to Jct713
to McD Rd 18+75.0 177' Rt				Dtl D15															Detail D8
McD Rd Sta 9+64.03 14.53' Rt			30	C-18.10			5.6					1600.00			533	105			MH714 to MH702
to McD Rd Sta 13+35 17.82' Rt																			
McD Rd Sta 8+49.69 13.52' Rt			30	C-18.10			5.6					1600.25			117	33			MH715 to MH714
to McD Rd Sta 9+64.03 14.53' Rt																			
McD Rd Sta 21+68.53 50' Rt				C-15.30	S		15.7					1598.17	1	10	180	29			CB716 to CB109
to ML 1089+34 104' Rt																			
McD Rd Sta 21+10.31 50' Lt				C-15.30	S		4.4					1599.88	1	10	204	33			CB717 to CB716
to McD Rd Sta 21+68.53 50' Rt																			
McK Rd Sta 33+00 54.04' Rt				C-15.20			10.2	11.5				1591.43	1	22	354	39			CB750 to Jct750
to McK Rd Sta 33+98 158' Rt				C-13.75															Detail D8
Sheet Total	1														1634	335			

FILL HEIGHT RANGE TABLE (Ft.)

RANGE NO.		1	2	3	4	5	6	7	8	9	10	11	12
FILL	>	1	3	5	8	11	15	20	25	30	40	55	70
HEIGHT (Ft.)	≤	3	5	8	11	15	20	25	30	40	55	70	90

● SHOULD FIELD CONDITIONS VARY FROM THE RANGE INDICATED, CONTACT DESIGN FOR RE-EVALUATION OF PIPE DESIGN REQUIREMENTS.

☒ PIPE CORRUGATION

A	2⅔x½	D	6x2
B	3x1	E	3x1 or 9x2½
C	9x2½		

	NAME	DATE
DESIGN	DJO	07/05
DRAWN	WJP	07/05
CHECKED	CAD	07/05

Stanley Consultants INC.

ARIZONA DEPARTMENT OF TRANSPORTATION
INTERMODAL TRANSPORTATION DIVISION
ROADWAY DESIGN SERVICES

NEW PIPE SUMMARY SHEET

PRELIMINARY
STAGE V
100% Review
NOT FOR CONSTRUCTION OR RECORDING

ROUTE: 202L
LOCATION: RED MTN FWY, POWER ROAD - UNIVERSITY DRIVE
DWG NO. G-6.102

TRACS NO. H 5782 01C | 202-B(007)B | ____ OF ____

REV. DATE: 01-05-2000

08/16/2005 q:\17000\active\07-05-dwgs\02-gen\h5782spx02.dgn

NOTE:
THE ZEROS IN PARENTHESIS (0, 0.0 & 0.00) IN THE HEADING OF SOME OF THE COLUMNS ARE THE RECOMMENDED PRECISION OF THE VALUE TO BE ENTERED IN THE COLUMN.

NOTE:
FOR PIPE CULVERT PLACEMENT SEE STANDARD DRAWING C-13.15

NOTE:
PIPE OPTIONS SELECTED ARE THOSE REQUIRED TO MEET MINIMUM SERVICE LIFE.
SHADED PIPE OPTION FIELDS ARE NOT ALLOWABLE ALTERNATES.

CSP - CORRUGATED STEEL PIPE
CAP - CORRUGATED ALUMINUM PIPE
RCP - REINFORCED CONCRETE PIPE
NRCP - NON-REINFORCED CONCRETE PIPE
NRCIPCP - NON-REINFORCED CAST-IN-PLACE CONCRETE PIPE
CHDPEPP - CORRUGATED HIGH DENSTIY POLYETHYLENE PLASTIC PIPE

F.H.W.A. REGION	STATE	PROJECT NO.	SHEET NO.	TOTAL SHEETS	AS BUILT
9	ARIZ.	202-B(007)B			
		202 MA 023			

DESCRIPTION / CSP / CAP / RCP / NRCP / NRCIPCP / CHDPEPP

Station	Plan Ref No.	Controlling Fill Height Range	Size, Corrugated (In.)	Size, Smooth (In.)	Length (0) (Ft.)	Skew (0) (Degree)	CSP Corrugation	CSP Wall Thickness (0.00)	Zinc	Blt. Coated Zinc	Aluminum	Blt. Coated Aluminum	CAP Corrugation	CAP Wall Thickness (0.00)	Uncoated	Blt. Coated	RCP Class - Non Trench	RCP Class - Trench	NRCP Class	NRCIPCP Min Wall Thickness (0) (In.)	CHDPEPP AASHTO M-294 Type C	CHDPEPP AASHTO M-294 Type S
McK Rd Sta 33+00 50.85' Lt	751	5		24	114												III	III				
to McK Rd Sta 33+00 54.04' Rt																						
McK Rd Sta 31+32.29 46.38' Lt	752	2		24	8												II	II	I			X
to McK Rd Sta 31+32.29 56.21' Lt																						
McK Rd Sta 31+44 44.28' Lt	753	2		24	94												II	II	I			X
to McK Rd Sta 32+35.69 68.36' Lt																						
McK Rd Sta 31+37 51.73' Rt	754	3		18	103												II	II	2			X
to McK Rd Sta 31+44 44.28' Lt																						
McK Rd Sta 31+37 74.45' Rt	755	1		18	21												IV	IV				X
to McK Rd Sta 31+37 51.73' Rt																						
McK Rd Sta 30+79 47.03' Lt	756	1		18	66												IV	IV				X
to McK Rd Sta 31+44 44.28' Lt																						
McK Rd Sta 30+89 50.76' Rt	757	1		18	49												IV	IV				X
to McK Rd Sta 31+37 51.73' Rt																						
76th St Sta 11+80.70 15.58' Lt	758	6		24	145												IV	IV				
to 76th St Sta 11+91.86 153.33' Lt																						
76th St Sta 11+80.61 15.58' Rt	759	4		24	34												III	III				X
to 76th St Sta 11+80.70 15.58' Lt																						
Sheet Total																						

END TREATMENT / QUANTITIES

Station	End Sec (Each) C-13.20 & C-13.25	Detail -	Size, (In)	Catch basin, Manhole, Headwall & Junction Structure: Standard or Detail	S-Single / D-Double / T-Triple (Ea)	Location	H (0.0) (Ft.)	L Wing (0.0) (Ft.)	L 18" Slotted Drn (0) (Ft.)	L 24" Slotted Drn (0) (Ft.)	Grate Type	Grate Elev. (0.00) (Ft.)	Inlet Depression Depth (In.)	Inlet Depression L (0.0) (Ft.)	Pipe Exc (0) (Cubic Yard)	Pipe Bkfl (0) (Cubic Yard)	Drn Exc (0) (Cubic Yard)	Berm/Dike Emb (0) (Cubic Yard)	REMARKS
McK Rd Sta 33+00 50.85' Lt				C-15.20			10.2	11.5				1591.50	1	22	203	32			CB751 to CB750
to McK Rd Sta 33+00 54.04' Rt																			
McK Rd Sta 31+32.29 46.38' Lt				C-15.20			6.1	7.5				1590.52	1	18	9	2			CB752 to Jct752
to McK Rd Sta 31+32.29 56.21' Lt																			
McK Rd Sta 31+44 44.28' Lt				C-15.20			8.8					1590.45	1	10	156	27			CB753 to MH778
to McK Rd Sta 32+35.69 68.36' Lt																			
McK Rd Sta 31+37 51.73' Rt				C-15.20			8.1	3.5				1590.30	1	14	133	24			CB754 to CB753
to McK Rd Sta 31+44 44.28' Lt																			
McK Rd Sta 31+37 74.45' Rt				C-15.80			4.2					1590.20			20	5			CB755 to CB754
to McK Rd Sta 31+37 51.73' Rt																			
McK Rd Sta 30+79 47.03' Lt				C-15.20			4.5	7.5				1590.51	1	18	67	15			CB756 to CB753
to McK Rd Sta 31+44 44.28' Lt																			
McK Rd Sta 30+89 50.76' Rt				C-15.20			4.9	19.5				1590.40	1	30	50	11			CB757 to CB754
to McK Rd Sta 31+37 51.73' Rt																			
76th St Sta 11+80.70 15.58' Lt				C-15.30	D		9.5					1589.05	1	13.8	323	41			CB758 to Jct758
to 76th St Sta 11+91.86 153.33' Lt				C-13.75															Detail D8
				Dtl D15															
76th St Sta 11+80.61 15.58' Rt				C-15.20			5.0					1589.05	1	10	48	11			CB759 to CB758
to 76th St Sta 11+80.70 15.58' Lt																			
Sheet Total															1009	168			

FILL HEIGHT RANGE TABLE (Ft.)

RANGE NO.		1	2	3	4	5	6	7	8	9	10	11	12
FILL	>	1	3	5	8	11	15	20	25	30	40	55	70
HEIGHT (Ft.)	≤	3	5	8	11	15	20	25	30	40	55	70	90

SHOULD FIELD CONDITIONS VARY FROM THE RANGE INDICATED, CONTACT DESIGN FOR RE-EVALUATION OF PIPE DESIGN REQUIREMENTS.

PIPE CORRUGATION

A	2⅔x½	D	6x2
B	3x1	E	3x1 or 9x2½
C	9x2½		

	NAME	DATE
DESIGN	OJO	07/05
DRAWN	WJP	07/05
CHECKED	CAD	07/05

Stanley Consultants INC.

ARIZONA DEPARTMENT OF TRANSPORTATION
INTERMODAL TRANSPORTATION DIVISION
ROADWAY DESIGN SERVICES

NEW PIPE SUMMARY SHEET

ROUTE: 202L
LOCATION: RED MTN FWY, POWER ROAD - UNIVERSITY DRIVE

TRACS NO. H 5782 01C

202-B(007)B

PRELIMINARY
STAGE V
100% Review
NOT FOR CONSTRUCTION OR RECORDING

DWG NO. G-6.103

___ OF ___

REV. DATE: 01-05-2000

NOTE:
THE ZEROS IN PARENTHESIS (0, 0.0 & 0.00) IN THE HEADING OF SOME OF THE COLUMNS ARE THE RECOMMENDED PRECISION OF THE VALUE TO BE ENTERED IN THE COLUMN.

NOTE:
FOR PIPE CULVERT PLACEMENT SEE STANDARD DRAWING C-13.15

NOTE:
PIPE OPTIONS SELECTED ARE THOSE REQUIRED TO MEET MINIMUM SERVICE LIFE.
SHADED PIPE OPTION FIELDS ARE NOT ALLOWABLE ALTERNATES.

NRCP NRCIPCP CHDPEPP

CSP - CORRUGATED STEEL PIPE
CAP - CORRUGATED ALUMINUM PIPE
RCP - REINFORCED CONCRETE PIPE
NRCP - NON-REINFORCED CONCRETE PIPE
NRCIPCP - NON-REINFORCED CAST-IN-PLACE CONCRETE PIPE
CHDPEPP - CORRUGATED HIGH DENSTIY POLYETHYLENE PLASTIC PIPE

F.A.R.A. REGION	STATE	PROJECT NO.	SHEET NO.	TOTAL SHEETS	AS BUILT
9	ARIZ.	202-B(007)B			
		202 MA 023			

Station	Plan Ref No.	Controlling Fill Height Range	Size, Corrugated (In.)	Size, Smooth (In.)	Length (0) (Ft.)	Skew (0) (Degree)	CSP: Corrugation	CSP: Wall Thickness (0.00)	CSP: Coating: Zinc	CSP: Coating: Bit. Coated Zinc	CSP: Coating: Aluminum	CSP: Coating: Bit. Coated Aluminum	CAP: Corrugation	CAP: Wall Thickness (0.00)	CAP: Uncoated	CAP: Bit. Coated	RCP: Class - Non Trench	RCP: Class - Trench	RCP: Class	RCP: Min Wall Thickness (0) (In.)	NRCP: AASHTO M-294 Type C	NRCP: AASHTO M-294 Type S	NRCIPCP: C-13.20 & C-13.25	CHDPEPP: Detail -	End Sec: Size, (In) Manhole (Each)	End Sec: Standard or Detail	End Sec: S-Single / D-Double / T-Triple	Catch basin, Manhole, Headwall & Junction Structure: Location (Ea)	Catch basin, Manhole, Headwall & Junction Structure: H (0.0) (Ft.)	Catch basin, Manhole, Headwall & Junction Structure: L Wing (0.0) (Ft.)	Catch basin, Manhole, Headwall & Junction Structure: L 18" Slotted Drn (0) (Ft.)	Catch basin, Manhole, Headwall & Junction Structure: L 24" Slotted Drn (0) (Ft.)	Catch basin, Manhole, Headwall & Junction Structure: Type (Grate)	Catch basin, Manhole, Headwall & Junction Structure: Elev. (0.00) (Ft.)	Inlet Depression: Depth (In.)	Inlet Depression: L (0.0) (Ft.)	Pipe Exc (0) (QUANTITIES, Cubic Yard)	Pipe Bkfl (0) (QUANTITIES, Cubic Yard)	Drn Exc (0) (QUANTITIES, Cubic Yard)	Berm/Dike End (0) (QUANTITIES, Cubic Yard)	REMARKS
76th St Sta 11+54.10 15.58' Lt	760	3		18	27								II	II		1				X				C-15.30	S		4.4					1589.55	1	10	29	6			CB760 to CB758
to 76th St Sta 11+80.61 15.58' Lt																								D11 D15														Detail D5
76th St Sta 11+54.10 15.58' Rt	762	1		18	27								IV	IV						X				C-15.20			4.4	3.5				1589.14	1	14	20	6			CB762 to CB759
to 76th St Sta 11+80.61 15.58' Rt																																						
76th St Sta 12+05.94 15.58' Rt	763	1		18	26								IV	IV						X				C-15.20			4.4	3.5				1589.17	1	14	20	6			CB763 to CB759
to 76th St Sta 11+80.61 15.58' Rt																																						
McK Rd Sta 34+18.69 32.52' Rt	764	1		24	18								III	III		3				X				C-15.20			5.1	3.5				1593.95			24	5			CB764 to Jct764
to McK Rd Sta 34+32.73 27.76' Rt																								D11 D15														Detail D5
McK Rd Sta 34+27.86 37.30' Lt	765	1		24	12								III	III		3				X				C-15.20			5.1	3.5				1593.89			18	3			CB765 to Jct765
to McK Rd Sta 34+20.22 36.92' Lt																								D11 D15														Detail D5
McK Rd Sta 36+45 80.14' Rt	766	7		24	100								V	V						X				C-15.20			7.7	7.5				1597.87	1	18	271	28			CB766 to Jct766
to McK Rd Sta 36+05 173' Rt																								C-13.75														Detail D8
McK Rd Sta 37+70 29.5' Rt	767	3		24	134								II	II		2				X				C-15.20			9.6	7.5				1600.34	1	18	204	38			CB767 to CB766
to McK Rd Sta 36+45 80.14' Rt																																						
McK Rd Sta 37+65 29.5' Lt	768	3		24	68								II	II		2				X				C-15.20			9.4	7.5				1600.26	1	18	113	19			CB768 to CB767
to McK Rd Sta 37+70 29.5' Rt																																						
McK Rd Sta 36+11 93.13' Lt	769	1		24	167								III	III		3				X				C-15.20			6.0	7.5				1597.20	1	18	228	48			CB769 to CB768
to McK Rd Sta 37+65 29.5' Lt																																						
Sheet Total																																			927	159		

REV. DATE: 01-05-2000

FILL HEIGHT RANGE TABLE (Ft.)													
RANGE NO.		1	2	3	4	5	6	7	8	9	10	11	12
FILL HEIGHT (Ft.)	>	1	3	5	8	11	15	20	25	30	40	55	70
	≤	3	5	8	11	15	20	25	30	40	55	70	90

SHOULD FIELD CONDITIONS VARY FROM THE RANGE INDICATED, CONTACT DESIGN FOR RE-EVALUATION OF PIPE DESIGN REQUIREMENTS.

PIPE CORRUGATION			
A	2⅔x½	D	6x2
B	3x1	E	3x1 or 9x2½
C	9x2½		

	NAME	DATE
DESIGN	DJO	07/05
DRAWN	WJP	07/05
CHECKED	CAD	07/05

Stanley Consultants inc.
2929 East Camelback Road, Suite 130
Phoenix, Arizona 85016
Phone: (602) 957-0500

ARIZONA DEPARTMENT OF TRANSPORTATION
INTERMODAL TRANSPORTATION DIVISION
ROADWAY DESIGN SERVICES

NEW PIPE SUMMARY SHEET

PRELIMINARY
STAGE V
100% Review
NOT FOR CONSTRUCTION OR RECORDING

ROUTE	LOCATION	DWG NO.
202L	RED MTN FWY, POWER ROAD - UNIVERSITY DRIVE	G-6.104
TRACS NO. H 5782 01C	202-B(007)B	___ OF ___

08/16/2005 q:\17000\active\07-05-dwgs\02-gen\h5782spx04.dgn

NOTE:
THE ZEROS IN PARENTHESIS (0, 0.0 & 0.00) IN THE HEADING OF SOME OF THE COLUMNS ARE THE RECOMMENDED PRECISION OF THE VALUE TO BE ENTERED IN THE COLUMN.

NOTE:
FOR PIPE CULVERT PLACEMENT SEE STANDARD DRAWING C-13.15

NOTE:
PIPE OPTIONS SELECTED ARE THOSE REQUIRED TO MEET MINIMUM SERVICE LIFE.
SHADED PIPE OPTION FIELDS ARE NOT ALLOWABLE ALTERNATES.

CSP - CORRUGATED STEEL PIPE
CAP - CORRUGATED ALUMINUM PIPE
RCP - REINFORCED CONCRETE PIPE
NRCP - NON-REINFORCED CONCRETE PIPE
NRCIPCP - NON-REINFORCED CAST-IN-PLACE CONCRETE PIPE
CHDPEPP - CORRUGATED HIGH DENSTIY POLYETHYLENE PLASTIC PIPE

F.H.W.A. REGION	STATE	PROJECT NO.	SHEET NO.	TOTAL SHEETS	AS BUILT
9	ARIZ.	202-B(007)B			
		202 MA 023			

DESCRIPTION							CSP						CAP						RCP						NRCP	NRCIPCP	CHDPEPP	END TREATMENT														QUANTITIES	
				In.	In.	Ft.	Degree	In.	Coating				In.													In.			Each		Catch basin, Manhole, Headwall & Junction Structure													Cubic Yard	
Station	Plan Ref No.	Controlling Fill Height Range	Size, Corrugated	Size, Smooth	Length (0)	Skew (0)	Corrugation	Wall Thickness (0.00)	Zinc	Bit. Coated Zinc	Aluminum	Bit. Coated Aluminum	Corrugation	Wall Thickness (0.00)	Uncoated	Bit. Coated	Class - Non Trench	Class - Trench	Class	Min Wall Thickness (0)	AASHTO M-294 Type C	AASHTO M-294 Type S	C-13.20 & C-13.25	Detail -	Size, (in) Manhole	Standard or Detail	End Sec	S-Single / D-Double / T-Triple	Location	H (0.0)	L Wing (0.0)	L 18" slotted Drn (0)	L 24" slotted Drn (0)	Type	Elev. (0.00)	Grate Depth	Grate Ft. L (0.0)	Inlet Depression Pipe Exc (0)	Pipe Bk fl (0)	Drn Exc (0)	Berm/Dike Emb (0)	REMARKS
Mck Rd Sta 42+25 29.5' Lt	770	4		24	128								III	III					X				C-15.30	S			9.8					1600.03	1	10.3	188	36			CB770 to CB195
to 202L Med Sta 1153+70, 200' Rt																																									
Mck Rd Sta 42+25 0' Rt	771	4		24	31								III	III					X				30	C-18.10			10.6					1601.20			55	9			MH771 to CB770
to Mck Rd Sta 42+25 29.5' Lt																																								
Mck Rd Sta 42+30 29.5' Rt	772	4		24	32								III	III					X				C-15.30	S			9.4					1599.98	1	10.3	54	9			CB772 to MH771
to Mck Rd Sta 42+25 0' Rt																																								
Mck Rd Sta 43+67 141.95' Rt	773	4		24	177								III	III					X				C-15.80				4.3					1594.53			217	50			CB773 to CB772
to Mck Rd Sta 42+30 29.5' Rt																																								
Mck Rd Sta 44+34.87 0' Rt	774	4		24	209								III	III					X				C-15.30	D			4.0					1595.05	1	13.5	272	59			CB774 to MH771
to Mck Rd Sta 42+25 0' Rt																							D+I	DI5																
Mck Rd Sta 44+22.3 32.89' Lt	775	1		18	34								IV	IV					X				C-15.30	D			4.5					1595.21	1	13.5	27	10			CB775 to CB774
to Mck Rd Sta 44+34.87 0.0' Rt																																								
Mck Rd Sta 44+17.7 46.17' Rt	776	1		18	48								IV	IV					X				C-15.30	D			4.5					1595.41	1	13.5	38	14			CB776 to CB774
to Mck Rd Sta 44+34.87 0.0' Rt																																								
Mck Rd Sta 32+35.69 68.36' Lt	778	3		24	66								II	II	2				X				30	C-18.10			10.1					1591.36			25	4			MH778 to CB751
to Mck Rd Sta 33+00 50.85' Lt																																								
Mck Rd Sta 43+75.39 92.97' Rt	780																							D+I	DI0																Scupper 780
Sheet Total																																					876	191		

REV. DATE: 01-05-2000

FILL HEIGHT RANGE TABLE (Ft.)													
RANGE NO.		1	2	3	4	5	6	7	8	9	10	11	12
FILL HEIGHT (Ft.)	>	1	3	5	8	11	15	20	25	30	40	55	70
	≤	3	5	8	11	15	20	25	30	40	55	70	90

Should field conditions vary from the range indicated, contact design for re-evaluation of pipe design requirements.

Pipe Corrugation			
A	2⅔x½	D	6x2
B	3x1	E	3x1 or 9x2½
C	9x2½		

	NAME	DATE
DESIGN	DJO	07/05
DRAWN	W.JP	07/05
CHECKED	CJD	07/05

Stanley Consultants Inc. — 2175 East Camelback Road, Suite 130, Phoenix, Arizona 85016, Phone 602 912-4500

ARIZONA DEPARTMENT OF TRANSPORTATION
INTERMODAL TRANSPORTATION DIVISION
ROADWAY DESIGN SERVICES

NEW PIPE SUMMARY SHEET

PRELIMINARY
STAGE V
100% Review
NOT FOR CONSTRUCTION OR RECORDING

ROUTE	LOCATION	DWG NO.
202L	RED MTN FWY, POWER ROAD - UNIVERSITY DRIVE	G-6.105
TRACS NO. H 5782 01C	202-B(007)B	___ OF ___

08/16/2005 g:\17000\active\07-05-dvas\02-sen\h5782sn05.dgn

NOTE:
THE ZEROS IN PARENTHESIS (0, 0.0 & 0.00) IN THE HEADING OF SOME OF THE COLUMNS ARE THE RECOMMENDED PRECISION OF THE VALUE TO BE ENTERED IN THE COLUMN.

NOTE:
FOR PIPE CULVERT PLACEMENT SEE STANDARD DRAWING C-13.15

NOTE:
PIPE OPTIONS SELECTED ARE THOSE REQUIRED TO MEET MINIMUM SERVICE LIFE.
SHADED PIPE OPTION FIELDS ARE NOT ALLOWABLE ALTERNATES.

NRCP NRCIPCP CHDPEPP

CSP - CORRUGATED STEEL PIPE
CAP - CORRUGATED ALUMINUM PIPE
RCP - REINFORCED CONCRETE PIPE
NRCP - NON-REINFORCED CONCRETE PIPE
NRCIPCP - NON-REINFORCED CAST-IN-PLACE CONCRETE PIPE
CHDPEPP - CORRUGATED HIGH DENSTIY POLYETHYLENE PLASTIC PIPE

FAIR.A. REGION	STATE	PROJECT NO.	SHEET NO.	TOTAL SHEETS	AS BUILT
9	ARIZ.	202-B(007)B			
		202 MA 023			

DESCRIPTION							CSP			CAP			RCP				END TREATMENT														QUANTITIES	
Station	Plan Ref No.	● Controlling Fill Height Range	Size, Corrugated In.	Size, Smooth In.	Length (0) Ft.	Skew (0) Degree	☑ Corrugation	Wall Thickness (0.00)	Zinc	Bit. Coated Zinc	Aluminum	Bit. Coated Aluminum	☑ Corrugation	Wall Thickness (0.00)	Uncoated	Bit. Coated	Class - Non Trench	Class - Trench	Class	Min Wall Thickness (0)	AASHTO M-294 Type C	AASHTO M-294 Type S	C-13.20 & C-13.25	Detail - Size, (In) Manhole or Detail	Standard or Detail	End Sec Each	Ea	Catch basin, Manhole, Headwall & Junction Structure											Cubic Yard	
																												Location	H (0.0)	L Wing (0.0)	L 18' Slotted Drn (0)	L 24' Slotted Drn (0)	Type	Elev. (0.00)	Grate Depth Ft.	Inlet Depression In.	L (0.0) Ft.	Pipe Exc (0)	Pipe Bk-fl (0)	Drn Exc (0)	Berm/Dike End (0)	REMARKS
McK Rd Sta 43+72.43 110.45' Rt	781																							D†1 D10																Scupper 781
McK Rd Sta 43+34.54 73.58' Lt	782																							D†1 D10																Scupper 782
McK Rd Sta 43+25.02 87.06' Lt	783																							D†1 D10																Scupper 783
McD Rd Sta 22+47.65 48.53' Rt	784																							D†1 D10																Scupper 784
McK Rd Sta 35+64.62 16.52' Rt	797	1		24	42								III	III	3					X				C-15.30	D		4.5				1596.52	1	13.5	34	11				CB797 to CB798
McK Rd Sta 35+64.62 24.52' Lt																								D†1 D15																
McK Rd Sta 35+64.62 24.52' Lt	798	1		24	87								III	III	3					X				C-15.30	D		4.5				1596.44	1	13.5	128	38				CB798 to CB769
to McK Rd Sta 36+11 93.13' Lt																								D†1 D15																
McK Rd Sta 36+14.0 175.50' Lt	799	1		24	78								III	III	3					X				C-15.80			4.7				1597.50			96	28				CB799 to CB769
to McK Rd Sta 36+111.0 93.13' Lt																																								
Brn Rd Sta 13+69 45.58' Rt	850	1		18	14								V	V										C-15.20			5.1	11.5			1599.81	1	22	11	3				CB850 to Jct850
to Brn Rd Sta 13+83± 49±' Rt																								D†1 D23																
Brn Rd Sta 13+89 45.58' Lt	851	1		18	47								V	V										C-15.20			4.5	11.5			1599.71	1	22	33	11				CB851 to Jct851
to Brn Rd Sta 14+36.1± 47.5±' Lt																								D†1 D23																
Sheet Total																																				300	91			

FILL HEIGHT RANGE TABLE (Ft.)													
RANGE NO.		1	2	3	4	5	6	7	8	9	10	11	12
FILL HEIGHT (Ft.)	>	1	3	5	8	11	15	20	25	30	40	55	70
	≤	3	5	8	11	15	20	25	30	40	55	70	90

● SHOULD FIELD CONDITIONS VARY FROM THE RANGE INDICATED, CONTACT DESIGN FOR RE-EVALUATION OF PIPE DESIGN REQUIREMENTS.

☑ PIPE CORRUGATION			
A	2⅔x½	D	6x2
B	3x1	E	3x1 or 9x2½
C	9x2½		

	NAME	DATE
DESIGN	DJO	07/05
DRAWN	W.JP	07/05
CHECKED	CAD	07/05

ARIZONA DEPARTMENT OF TRANSPORTATION
INTERMODAL TRANSPORTATION DIVISION
ROADWAY DESIGN SERVICES

Stanley Consultants Inc.
7101 East Greenway Road, Suite 130
Phoenix, Arizona 85254
Phone (602) 391-0100

NEW PIPE SUMMARY SHEET

PRELIMINARY
STAGE V
100% Review
NOT FOR CONSTRUCTION OR RECORDING

ROUTE	LOCATION	DWG NO.
202L	RED MTN FWY, POWER ROAD - UNIVERSITY DRIVE	G-6.106
TRACS NO. H 5782 01C		202-B(007)B

OF

REV. DATE: 01-05-2000

08/16/2005 q:\17000\active\07-05-dwgs\02-gen\h5782sps06.dgn

NOTE:
THE ZEROS IN PARENTHESIS (0, 0.0 & 0.00) IN THE HEADING OF SOME OF THE COLUMNS ARE THE RECOMMENDED PRECISION OF THE VALUE TO BE ENTERED IN THE COLUMN.

NOTE:
FOR PIPE CULVERT PLACEMENT SEE STANDARD DRAWING C-13.15

NOTE:
PIPE OPTIONS SELECTED ARE THOSE REQUIRED TO MEET MINIMUM SERVICE LIFE.
SHADED PIPE OPTION FIELDS ARE NOT ALLOWABLE ALTERNATES.

CSP - CORRUGATED STEEL PIPE
CAP - CORRUGATED ALUMINUM PIPE
RCP - REINFORCED CONCRETE PIPE
NRCP - NON-REINFORCED CONCRETE PIPE
NRCIPCP - NON-REINFORCED CAST-IN-PLACE CONCRETE PIPE
CHDPEPP - CORRUGATED HIGH DENSTIY POLYETHYLENE PLASTIC PIPE

F.H.W.A. REGION	STATE	PROJECT NO.	SHEET NO.	TOTAL SHEETS	AS BUILT
9	ARIZ.	202-B(007)B			

202 MA 023

DESCRIPTION							CSP						CAP				RCP			NRCP	NRCIPCP	CHDPEPP
Station	Plan Ref No.	⬢ Controlling Fill Height Range	Size, Corrugated (In.)	Size, Smooth (In.)	Length (0) (Ft.)	Skew (0) (Degree)	☑ Corrugation	Wall Thickness (0.00) (In.)	Zinc (Coating)	Bit. Coated Zinc	Aluminum	Bit. Coated Aluminum	☑ Corrugation	Wall Thickness (0.00) (In.)	Uncoated	Bit. Coated	Class - Non Trench	Class - Trench	Class	Min Wall Thickness (0)	AASHTO M-294 Type C	AASHTO M-294 Type S
Brn Rd Sta 17+90 45.58' Lt	852	1		24	134												III	III	3			X
to Brn Rd Sta 17+90 18.3' Lt																						
Brn Rd Sta 17+90 45.58' Rt	853	1		24	99												III	III	3			X
to Brn Rd Sta 17+90 45.58' Lt																						
Brn Rd Sta 22+00 49.88' Rt	854	4		24	10												III	III				X
to Brn Rd Sta 22+04.41 54.74' Rt																						
Brn Rd Sta 22+00 30.82' Rt	855	1		24	22												III	III	3			X
to Brn Rd Sta 22+00 49.88' Rt																						
Brn Rd Sta 22+00 32.56' Lt	856	4		24	21												III	III				X
to Brn Rd Sta 22+00 26.04' Lt																						
Brn Rd Sta 22+00 56.88' Lt	857	1		24	27												III	III	3			X
to Brn Rd Sta 22+00 32.56' Lt																						
Brn Rd Sta 24+38.73 80.2' Rt	858	5		24	146												IV	IV				
to Brn Rd Sta 23+94.35 223.46' Rt																						
Brn Rd Sta 23+96.07 92.43' Lt	859	1		24	54												III	III	3			X
to Brn Rd Sta 23+75.66 49.36' Lt																						
Brn Rd Sta 24+10 15.4' Lt	860	1		24	59												III	III	3			X
to Brn Rd Sta 23+96.07' 92.43' Lt																						
Sheet Total																						

Station	C-13.20 & C-13.25	Detail -	Size, (In) Manhole	Standard or Detail	S-Single / D-Double / T-Triple	Location	H (0.0)	L Wing (0.0)	L 18" Slotted Drn (0)	L 24" Slotted Drn (0)	Type	Elev. (0.00)	Depth (In.)	L (0.0) (Ft.)	Pipe Exc (0)	Pipe Bkfl (0)	Drn Exc (0)	Berm/Dike Emb (0)	REMARKS
Brn Rd Sta 17+90 45.58' Lt	1			C-15.20			5.6	11.5				1596.96	1	22	136	38			CB852 to Jct852
to Brn Rd Sta 17+90 18.3' Lt				Dtl D8															
Brn Rd Sta 17+90 45.58' Rt				C-15.20			5.1	11.5				1596.96	1	22	93	28			CB853 to CB852
to Brn Rd Sta 17+90 45.58' Lt																			
Brn Rd Sta 22+00 49.88' Rt				C-15.20			4.8	3.5				1593.86	1	14	14	3			CB854 to Jct854
to Brn Rd Sta 22+04.41 54.74' Rt				Dtl D5															
Brn Rd Sta 22+00 30.82' Rt				C-15.20			5.2	3.5				1594.27	1	14	19	6			CB855 to CB854
to Brn Rd Sta 22+00 49.88' Rt				Dtl D15															
Brn Rd Sta 22+00 32.56' Lt				C-15.20			8.0	3.5				1594.23	1	14	35	6			CB856 to Jct856
to Brn Rd Sta 22+00 26.04' Lt				Dtl D15															Detail D5
Brn Rd Sta 22+00 56.88' Lt				C-15.20			5.1					1593.72	1	10	26	8			CB857 to CB856
to Brn Rd Sta 22+00 32.56' Lt																			
Brn Rd Sta 24+38.73 80.2' Rt				C-15.20			6.8	7.5				1595.57	1	18	229	41			CB858 to Jct858
to Brn Rd Sta 23+94.35 223.46' Rt				C-13.75															Detail D8
Brn Rd Sta 23+96.07 92.43' Lt				C-15.20			5.0	7.5				1594.91	1	18	48	15			CB859 to CB885
to Brn Rd Sta 23+75.66 49.36' Lt																			
Brn Rd Sta 24+10 15.4' Lt				C-15.80			3.4					1594.00			44	17			CB860 to CB859
to Brn Rd Sta 23+96.07' 92.43' Lt																			
Sheet Total	1														642	162			

Column group headings: END TREATMENT (End Sec, Each; Catch basin, Manhole, Headwall & Junction Structure: Ea, Ft., Grate Ft., Inlet Depression In./Ft.); QUANTITIES (Cubic Yard).

FILL HEIGHT RANGE TABLE (Ft.)

RANGE NO.		1	2	3	4	5	6	7	8	9	10	11	12
FILL	>	1	3	5	8	11	15	20	25	30	40	55	70
HEIGHT (Ft.)	≤	3	5	8	11	15	20	25	30	40	55	70	90

⬢ SHOULD FIELD CONDITIONS VARY FROM THE RANGE INDICATED, CONTACT DESIGN FOR RE-EVALUATION OF PIPE DESIGN REQUIREMENTS.

☑ PIPE CORRUGATION

A	$2\frac{2}{3} \times \frac{1}{2}$	D	6x2
B	3x1	E	3x1 or $9 \times 2\frac{1}{2}$
C	$9 \times 2\frac{1}{2}$		

	NAME	DATE
DESIGN	DJO	07/05
DRAWN	WJP	07/05
CHECKED	CAD	07/05

Stanley Consultants inc. 2929 East Camelback Road, Suite 130 Phoenix, Arizona 85016 Phone: (602) 912-6500

ARIZONA DEPARTMENT OF TRANSPORTATION
INTERMODAL TRANSPORTATION DIVISION
ROADWAY DESIGN SERVICES

NEW PIPE SUMMARY SHEET

PRELIMINARY
STAGE V
100% Review
NOT FOR CONSTRUCTION OR RECORDING

ROUTE 202L LOCATION RED MTN FWY, POWER ROAD - UNIVERSITY DRIVE

DWG NO. G-6.107

TRACS NO. H 5782 01C 202-B(007)B ____ OF ____

REV. DATE: 01-05-2000

08/16/2005 g:\17000\active\07-05-dwgs\02-geo\h5782gs 07.dgn

NOTE:
THE ZEROS IN PARENTHESIS (0, 0.0 & 0.00) IN THE HEADING OF SOME OF THE COLUMNS ARE THE RECOMMENDED PRECISION OF THE VALUE TO BE ENTERED IN THE COLUMN.

NOTE:
FOR PIPE CULVERT PLACEMENT SEE STANDARD DRAWING C-13.15

NOTE:
PIPE OPTIONS SELECTED ARE THOSE REQUIRED TO MEET MINIMUM SERVICE LIFE.
SHADED PIPE OPTION FIELDS ARE NOT ALLOWABLE ALTERNATES.

CSP - CORRUGATED STEEL PIPE
CAP - CORRUGATED ALUMINUM PIPE
RCP - REINFORCED CONCRETE PIPE
NRCP - NON-REINFORCED CONCRETE PIPE
NRCIPCP - NON-REINFORCED CAST-IN-PLACE CONCRETE PIPE
CHDPEPP - CORRUGATED HIGH DENSTIY POLYETHYLENE PLASTIC PIPE

F.H.W.A. REGION	STATE	PROJECT NO.	SHEET NO.	TOTAL SHEETS	AS BUILT
9	ARIZ.	202-B(007)B			
		202 MA 023			

Station	Plan Ref No.	⬢ Controlling Fill Height Range	Size, Corrugated (In.)	Size, Smooth (In.)	Length (0) (Ft.)	Skew (0) (Deg.)	CSP ☑ Corrugation	CSP Wall Thickness (0.00) (In.)	CSP Coating: Zinc	CSP Coating: Bit. Coated Zinc	CSP Coating: Aluminum	CSP Coating: Bit. Coated Aluminum	CAP ☑ Corrugation	CAP Wall Thickness (0.00) (In.)	RCP Uncoated	RCP Bit. Coated	RCP Class - Non Trench	RCP Class - Trench	RCP Class	RCP Min Wall Thickness (0) (In.)	NRCP AASHTO M-294 Type C	NRCIPCP AASHTO M-294 Type S	CHDPEPP C-13.20 & C-13.25 Detail -	END TREATMENT: Each End Sec Size, (In) Manhole Standard or Detail	Ea Catch basin, Manhole, Headwall & Junction Structure: S-Single / D-Double / T-Triple	Location	H (0.0)	Ft. L Wing (0.0)	Ft. L 18" Slotted Drn (0)	Ft. L 24" Slotted Drn (0)	Grate Type	Grate Elev. (0.00)	Grate Ft. Depth (In.)	Grate Ft. Inlet Depression L (0.0) (Ft.)	QUANTITIES Cubic Yard: Pipe Exc (0)	Pipe Bk-fl (0)	Drn Exc (0)	Berm/Dike Emb (0)	REMARKS
Brn Rd Sta 25+60 29.5' Rt	861	1		24	132												III	III	3		X				C-15.20		5.4	11.5				1598.07	1	22	139	38			CB861 to CB858
to Brn Rd Sta 24+38.73 80.2' Rt																																						
Brn Rd Sta 25+55 29.5' Lt	862	1		24	69												III	III	3		X				C-15.20		5.0	11.5				1598.01	1	22	63	20			CB862 to CB861
to Brn Rd Sta 25+60 29.5' Rt																																						
Brn Rd Sta 35+00 148' Rt	863	1		24	54												III	III	3		X				C-15.80		3.2					1597.00			41	15			CB863 to CB864
to Brn Rd Sta 35+12 91.18' Rt																																						
Brn Rd Sta 35+12 91.18' Rt	864	1		24	190												III	III	3		X				C-15.20		5.5	7.5				1598.55	1	18	180	54			CB864 to CB867
to Brn Rd Sta 36+98 54.54' Rt																																						
Brn Rd Sta 33+44 29.5' Rt	865	1		24	179												III	III	3		X				C-15.20		5.4	7.5				1601.18	1	18	170	51			CB865 to CB864
to Brn Rd Sta 35+12 91.18' Rt																																						
Brn Rd Sta 33+38 29.5' Lt	866	1		24	69												III	III	3		X				C-15.20		5.0	7.5				1601.20	1	18	63	20			CB866 to CB865
to Brn Rd Sta 33+44 29.5' Rt																																						
Brn Rd Sta 36+98 54.54' Rt	867	1		24	85												III	III	3		X	1			C-15.20		5.3	3.5				1595.17	1	14	69	24			CB867 to Jct867
to Brn Rd Sta 37+13.49 142.88' Rt																									D11 D8													
Brn Rd Sta 36+98 31.71' Rt	868	1		24	26												III	III	3		X				C-15.20		5.6	7.5				1595.51	1	18	25	7			CB868 to CB867
to Brn Rd Sta 36+98 54.54' Rt																									D11 D15													
Brn Rd Sta 36+98 30.35' Lt	869	1		24	68												III	III	3		X				C-15.20		5.4	11.5				1595.54	1	22	65	19			CB869 to CB868
to Brn Rd Sta 36+98 31.71' Rt																									D11 D15													
Sheet Total																						1												814	248			

REV. DATE: 01-05-2000

NO.1 DESCRIPTION OF REVISION — DATE — MADE BY
NO.2 DESCRIPTION OF REVISION — DATE — MADE BY

FILL HEIGHT RANGE TABLE (Ft.)												
RANGE NO.		1	2	3	4	5	6	7	8	9	10	11	12
FILL HEIGHT (Ft.)	>	1	3	5	8	11	15	20	25	30	40	55	70
	≤	3	5	8	11	15	20	25	30	40	55	70	90

⬢ SHOULD FIELD CONDITIONS VARY FROM THE RANGE INDICATED, CONTACT DESIGN FOR RE-EVALUATION OF PIPE DESIGN REQUIREMENTS.

☑ PIPE CORRUGATION			
A	2⅔x½	D	6x2
B	3x1	E	3x1 or 9x2½
C	9x2½		

	NAME	DATE
DESIGN	OJO	07/05
DRAWN	WJP	07/05
CHECKED	CAD	07/05

Stanley Consultants Inc. 2175 East Camelback Road, Suite 125, Phoenix, Arizona 85016, Phone: (602) 381-1000

ARIZONA DEPARTMENT OF TRANSPORTATION
INTERMODAL TRANSPORTATION DIVISION
ROADWAY DESIGN SERVICES

NEW PIPE SUMMARY SHEET

PRELIMINARY
STAGE V
100% Review
NOT FOR CONSTRUCTION OR RECORDING

ROUTE	LOCATION	DWG NO. G-6.108
202L	RED MTN FWY, POWER ROAD - UNIVERSITY DRIVE	
TRACS NO. H 5782 01C	202-B(007)B	___ OF ___

08/16/2005 q:\17000\active\07-05-dwgs\02-gen\h5782spx05.dgn

NOTE:
THE ZEROS IN PARENTHESIS (0, 0.0 & 0.00) IN THE HEADING OF SOME OF THE COLUMNS ARE THE RECOMMENDED PRECISION OF THE VALUE TO BE ENTERED IN THE COLUMN.

NOTE:
FOR PIPE CULVERT PLACEMENT SEE STANDARD DRAWING C-13.15

NOTE:
PIPE OPTIONS SELECTED ARE THOSE REQUIRED TO MEET MINIMUM SERVICE LIFE.
SHADED PIPE OPTION FIELDS ARE NOT ALLOWABLE ALTERNATES.

CSP - CORRUGATED STEEL PIPE
CAP - CORRUGATED ALUMINUM PIPE
RCP - REINFORCED CONCRETE PIPE
NRCP - NON-REINFORCED CONCRETE PIPE
NRCIPCP - NON-REINFORCED CAST-IN-PLACE CONCRETE PIPE
CHDPEPP - CORRUGATED HIGH DENSTIY POLYETHYLENE PLASTIC PIPE

F.A.H.U. REGION	STATE	PROJECT NO.	SHEET NO.	TOTAL SHEETS	AS BUILT
9	ARIZ.	202-B(007)B			
		202 MA 023			

Station	Plan Ref No.	⬢ Controlling Fill Height Range	Size, Corrugated (In.)	Size, Smooth (In.)	Length (0) (Ft.)	Skew (0) (Degree)	◪ Corrugation (CSP)	Wall Thickness (0.00) (In.)	Zinc Coating	Bit. Coated Zinc	Aluminum	Bit. Coated Aluminum	◪ Corrugation (CAP)	Wall Thickness (0.00) (In.)	Uncoated	Bit. Coated	Class - Non Trench	Class - Trench	Class	Min Wall Thickness (0) (In.)	AASHTO M-294 Type C	AASHTO M-294 Type S	C-13.20 & C-13.25 Detail -	Size, (In) Manhole Standard or Detail	End Sec (Each)	S-Single / D-Double / T-Triple (Ea)	Location (Catch basin, Manhole, Headwall & Junction Structure)	H (0.0) (Ft.)	L Wing (0.0) (Ft.)	L 18" Slotted Drn (0) (Ft.)	L 24" Slotted Drn (0) (Ft.)	Type (Grate)	Elev. (0.00) (Ft.)	Inlet Depression Depth (In.)	Inlet Depression L (0.0) (Ft.)	Pipe Exc (0) (Cubic Yard)	Pipe Bkfl (0) (Cubic Yard)	Drn Exc (0) (Cubic Yard)	Berm/Dike Emb (0) (Cubic Yard)	REMARKS
Brn Rd Sta 36+70 51.1' Lt	870	1		24	37											III	III	3		X			C-15.20				5.5	7.5				1595.96	1	18	35	11			CB870 to CB869
to Brn Rd Sta 36+98 30.35' Lt																																							
Brn Rd Sta 34+60 79.85' Lt	871	1		24	212											III	III	3		X			C-15.20				5.1	7.5				1599.35	1	18	198	60			CB871 to CB870
to Brn Rd Sta 36+70 51.1' Lt																																							
Brn Rd Sta 49+50 45.58' Lt	876	1		15	31											IV	IV	3		X			C-15.20				2.9	11.5				1558.70	1	22	15	6			CB876 to MH883
to Brn Rd Sta 49+50 19' Lt																																							
Brn Rd Sta 49+50 45.58' Rt	877	1		15	69											IV	IV	3		X			C-15.20				4.0	11.5				1558.70	1	22	43	14			CB877 to MH883
to Brn Rd Sta 49+50 19' Lt																																							
Brn Rd Sta 53+15 45.58' Lt	878	1		15	33											IV	IV	3		X			C-15.20				3.4					1555.25	1	10	17	7			CB878 to Jct878
to Brn Rd Sta 53+29.84 19.55' Lt																																							
Brn Rd Sta 21+31 47.82' Rt	879	3		24	13											II	II	2		X			C-15.20				7.0	7.5				1594.19	1	18	17	4			CB879 to Jct879
to Brn Rd Sta 21+43.26 52.76' Rt																							Dtl D5																
Brn Rd Sta 21+41 51.93' Lt	880	4		24	13											III	III			X			C-15.20				5.0	7.5				1594.05	1	18	18	4			CB880 to Jct880
to Brn Rd Sta 21+48.33 57.09' Lt																							Dtl D5																
Brn Rd Sta 35+34 30.63' Lt	881	1		24	47											III	III	3		X			C-15.30	D			4.2					1598.35	1	13.5	41	13			CB881 to Jct881
to Brn Rd Sta 35+37.35 74.09' Lt																							Dtl D15																
Brn Rd Sta 35+34 38.63' Rt	882	1		24	56											III	III	3		X			C-15.30	D			4.2					1598.26	1	13.5	49	16			CB882 to Jct882
to Brn Rd Sta 35+41.23 90.22' Rt																							Dtl D15																
Sheet Total																																			433	136			

REV. DATE: 01-05-2000

FILL HEIGHT RANGE TABLE (Ft.)													
RANGE NO.		1	2	3	4	5	6	7	8	9	10	11	12
FILL HEIGHT (Ft.)	>	1	3	5	8	11	15	20	25	30	40	55	70
	≤	3	5	8	11	15	20	25	30	40	55	70	90

⬢ SHOULD FIELD CONDITIONS VARY FROM THE RANGE INDICATED, CONTACT DESIGN FOR RE-EVALUATION OF PIPE DESIGN REQUIREMENTS.

◪ PIPE CORRUGATION					
A	2⅔x½	D	6x2		
B	3x1	E	3x1 or 9x2½		
C	9x2½				

	NAME	DATE
DESIGN	OJO	07/05
DRAWN	WJP	07/05
CHECKED	CAD	07/05

Stanley Consultants inc. 2175 East Camelback Road, Suite 130 Phoenix, Arizona 85016 Phone (602) 957-6500

ARIZONA DEPARTMENT OF TRANSPORTATION
INTERMODAL TRANSPORTATION DIVISION
ROADWAY DESIGN SERVICES

NEW PIPE SUMMARY SHEET

PRELIMINARY
STAGE V
100% Review
NOT FOR CONSTRUCTION OR RECORDING

ROUTE	LOCATION	DWG NO.
202L	RED MTN FWY, POWER ROAD - UNIVERSITY DRIVE	G-6.109
TRACS NO. H 5782 01C		202-B(007)B

OF

0871672005 R:\17000\active\07-05-dwgs\02-pgp\h5782pgp09.dgn

NOTE:
THE ZEROS IN PARENTHESIS (0, 0.0 & 0.00) IN THE HEADING OF SOME OF THE COLUMNS ARE THE RECOMMENDED PRECISION OF THE VALUE TO BE ENTERED IN THE COLUMN.

NOTE:
FOR PIPE CULVERT PLACEMENT SEE STANDARD DRAWING C-13.15

NOTE:
PIPE OPTIONS SELECTED ARE THOSE REQUIRED TO MEET MINIMUM SERVICE LIFE.
SHADED PIPE OPTION FIELDS ARE NOT ALLOWABLE ALTERNATES.

CSP - CORRUGATED STEEL PIPE
CAP - CORRUGATED ALUMINUM PIPE
RCP - REINFORCED CONCRETE PIPE
NRCP - NON-REINFORCED CONCRETE PIPE
NRCIPCP - NON-REINFORCED CAST-IN-PLACE CONCRETE PIPE
CHDPEPP - CORRUGATED HIGH DENSTIY POLYETHYLENE PLASTIC PIPE

F.A.H.R.A. REGION	STATE	PROJECT NO.	SHEET NO.	TOTAL SHEETS	AS BUILT
9	ARIZ.	202-B(007)B			
		202 MA 023			

DESCRIPTION							CSP				CAP			RCP	NRCP	NRCIPCP	CHDPEPP	END TREATMENT													QUANTITIES	
				In.	In.	Ft.	Degree	In.	Coating			In.			In.			Each	Catch basin, Manhole, Headwall & Junction Structure												Cubic Yard	
Station	Plan Ref No.	Controlling Fill Height Range	Size, Corrugated	Size, Smooth	Length (0)	Skew (0)	Corrugation	Wall Thickness (0.00)	Zinc	Bit. Coated Zinc	Aluminum	Bit. Coated Aluminum	Corrugation	Wall Thickness (0.00)	Uncoated	Bit. Coated	Class - Non Trench	Class - Trench	Class	Min Wall Thickness (0)	AASHTO M-294 Type C	AASHTO M-294 Type S	C-13.20 & C-13.25	Detail -	Size, (In) Manhole	End Sec Standard or Detail	Ea S-Single / D-Double /T-Triple	Location	H (0.0)	L Wing (0.0)	L 18" Slotted Drn (0)	L 24" Slotted Drn (0)	Type	Elev. (0.00)	Grate Depth	Ft. Inlet Depression In.	Ft. L (0.0)	Pipe Exc (0)	Pipe Bkfl (0)	Drn Exc (0)	Berm/Dike Emb (0)	REMARKS
Brn Rd Sta 49+50 19' Lt	883	1		18	281										IV	IV			X						C-18.10			4.6					1559.23			230	65			MH883 to Jct883
to Brn Rd Sta 52+30.1± 19' Lt±																									D1 D15														
Brn Rd Sta 23+73.5 39.29' Rt	884	1		24	80										III	III	3		X						C-15.30	D		5.1					1594.78	I	13.5	75	23			CB884 to CB858
to Brn Rd Sta 24+38.73 80.2' Rt																									D1 D15														
Brn Rd Sta 23+75.66 49.36' Lt	885	1		24	83										III	III	3		X						C-15.30	D		4.6					1594.69	I	13.5	71	24			CB885 to CB884
to Brn Rd Sta 23+73.5 39.29' Rt																									D1 D15														
202L Med Sta 1073+90.0 146.72' Rt	890	1	18		55		A	0.064	X		X		A	0.060	X																									CAP Maintenance Rd
to 202L Med Sta 1074+12.0 96.2' Rt																																							See DWG NO D-1.3 for Inv Elev's.
202L Med Sta 1076+27.7 152.5' Rt	891	1	18		19		A	0.064	X		X		A	0.060	X																									CAP Maintenance Rd
to 202L Med Sta 1076+33.8 158.8' Rt																																							See DWG NO D-1.3 for Inv Elev's.
McD Rd Ramp D Sta 3+69.9 161.2' Rt	892	1	18		30		A	0.064	X		X		A	0.060	X																									CAP Maintenance Rd
to McD Rd Ramp D Sta 3+98.9 160.7' Rt																																							See DWG NO D-1.5 for Inv Elev's.
McK Rd Ramp B Sta 9+69.6 319.7' Rt	893	1	18		73		A	0.064	X		X		A	0.060	X																									CAP Maintenance Rd
to McK Rd Ramp B Sta 10+33.7 305.0' Rt																																							See DWG NO D-1.8 for Inv Elev's.
McK Rd Ramp D Sta 1+95.2 202.4' Rt	894	1	18		73		A	0.064	X		X		A	0.060	X																									CAP Maintenance Rd
to McK Rd Ramp D Sta 2+12.2 154.5' Rt																																							See DWG NO D-1.9 for Inv Elev's.
Brn Rd Ramp D Sta 1+53.3 65.4' Rt	895	1	18		81		A	0.064	X		X		A	0.060	X																									CAP Maintenance Rd
to Brn Rd Ramp D Sta 2+27.6 96.7' Rt																																							See DWG NO D-1.27 for Inv Elev's.
Sheet Total																																				378	112		

REV. DATE: 01-05-2000

DATE	DESCRIPTION OF REVISION
MADE BY	
DATE	
MADE BY	
DATE	
DESCRIPTION OF REVISION	

FILL HEIGHT RANGE TABLE (Ft.)												
RANGE NO.		1	2	3	4	5	6	7	8	9	10	11	12
FILL HEIGHT (Ft.)	>	1	3	5	8	11	15	20	25	30	40	55	70
	≤	3	5	8	11	15	20	25	30	40	55	70	90

SHOULD FIELD CONDITIONS VARY FROM THE RANGE INDICATED, CONTACT DESIGN FOR RE-EVALUATION OF PIPE DESIGN REQUIREMENTS.

PIPE CORRUGATION			
A	2⅔x½	D	6x2
B	3x1	E	3x1 or 9x2½
C	9x2½		

	NAME	DATE
DESIGN	DJO	07/05
DRAWN	WJP	07/05
CHECKED	CAD	07/05

Stanley Consultants inc.
2525 East Camelback Road, Suite 530
Phoenix, Arizona 85016
Phone (602) 957-6000

ARIZONA DEPARTMENT OF TRANSPORTATION
INTERMODAL TRANSPORTATION DIVISION
ROADWAY DESIGN SERVICES

NEW PIPE SUMMARY SHEET

PRELIMINARY
STAGE V
100% Review
NOT FOR CONSTRUCTION OR RECORDING

ROUTE	LOCATION	DWG NO.
202L	RED MTN FWY, POWER ROAD - UNIVERSITY DRIVE	G-6J09A
TRACS NO. H 5782 01C	202-B(007)B	___ OF ___

08/16/2005 q:\17000\active\07-05-dwgs\02-gen\h5782spx10.dgn

F.H.W.A. REGION	STATE	PROJECT NO.	SHEET NO.	TOTAL SHEETS	AS BUILT
9	ARIZ.	202-B(007)B			
		202 MA 023			

Plan Ref No. ⓒ & ◪	Structure No.	New	Extend	No. of Barrels	Barrel Span (0.0)	Barrel Height (0.0)	Culvert Length (0.0)	Skew (Degree) (0)	B-01.10 Misc Details	B-01.11 Ext Details	◪ Standard or Detail	▲ Location	Inlet Wings	Outlet Wings	◪ Standard or Detail	Apron	◪ Standard or Detail	Scour/Bank Protection	◪ Standard or Detail	Energy Dissipaters	Detail	▲ Left of ℄ I	▲ Left of ℄ II	▲ Left of ℄ III	▲ Left of ℄ IV	▲ Left of ℄ V	▲ Right of ℄ V	▲ Right of ℄ IV	▲ Right of ℄ III	▲ Right of ℄ II	▲ Right of ℄ I	ⓒ Reinforcing Steel (0)	ⓒ Place Dowels	ⓒ Class S Conc f'c=3,000 psi	ⓒ Remove Str Conc (0)	ⓒ Str Exc (0)	ⓒ Structure Backfill (0)	Berm Emb (0)	Dike Emb (0)	Drainage Exc (0)	REMARKS
1		X		1	12	8	90	0			B-02.10	Inlet										19	33.2	9								12259	84							Summary Sheet Qtys for Standard
Station: 19+57.75 to 20+47.75												Outlet								X								9	38.8	27	13853	94							Culvert Section Only. For Details
Existing: Spook Hill Floodway ℄																												Box Culvert Total				26113	178		1980	1506				See DWG No. F1.1 thru F-1.9
2		X		1	16	14	320	25			B-03.10	Inlet	X		D20							15	33	14	92							88933	601							
Station: 16+51.17												Outlet		X	D20												98	17	35	16	95404	644							
Existing: McDowell Cst ℄																												Box Culvert Total				184337	1245		3919	5980				
3		X		1	16	14	300	25			B-03.10	Left	X		D20							31	15	15	79.2							79386	541							
Station: 15+61.23												Right		X	D20												83.8	23	37	16	91371	615							
Existing: McDowell Cst ℄																												Box Culvert Total				170757	1156		3272	5590				
4		X		1	16	14	260	25			B-03.10	Left	X		D20							15	117.8									75216	447							Type II Headwall, Detail D22
Station: 34+28.60												Right			D22												15	112.2			69251	405							
Existing: McKellips Cst ℄																												Box Culvert Total				144467	852		3339	4758				
5		X		1	16	14	272	25			B-03.10	Left	X		D20							113.6										64476	350							Type I Headwall, Detail D23
Station: 33+54.05												Right			D22												15			143.4	71073	445							
Existing: McKellips Cst ℄																												Box Culvert Total				125549	795		2756	4668				
6		X		1	16	14	240.2	25			B-03.10	Left	X		D20							16	113.9									73542	438							Type II Headwall, Detail D24
Station: 21+86.03												Right			D22												15			95.3	60108	353							
Existing: Brown Cst ℄																												Box Culvert Total				133650	791		3020	4304				
7		X		1	16	14	222.7	25			B-03.10	Left	X		D20							116.4										55697	357							Type I Headwall, Detail D23
Station: 21+25.62												Right			D22												15			91.3	48357	305							
Existing: Brown Cst ℄																												Box Culvert Total				104054	662		2307	3766				
8		X		1	6	6	282.4	0			B-02.10	Left	X		B-08.20							39.8	19.9	123.4								27516	169							Type III Headwall, Detail D23
Station: 1284+47.43												Right			D22			X								15		35.7	48.6		13348	77							B-08.20, H=10, L=16 (Use span=10'
Existing: 202L Med Cst ℄																												Box Culvert Total				40864	246		1043	1180				for Wingwall Dimension)
9		X		1	10	10	1552.4					Inlet											1208.3	38.5	110.6	195.0						39343	2748							
Station: 1143+59.27 93.31' Lt to 1155+28.48 635.79' Lt												Outlet																												
Existing: 202L Med Cst ℄																												Box Culvert Total				39343	2748		17437	14518				
												Left																												
Station:												Right																												
Existing:																												Box Culvert Total												
												Left																												
Station:												Right																												
Existing:																												Box Culvert Total												
																												Sheet Total												

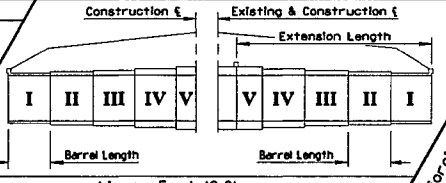

REV. DATE: 01-05-2000

NOTE:
FOR STRUCTURAL EXCAVATION, STRUCTURE BACKFILL PLACEMENT AND MEASUREMENT, SEE STANDARD DRAWING B-19.50

NOTE:
THE ZEROS IN PARENTHESIS (0, 0.0 & 0.00) IN THE HEADING OF SOME OF THE COLUMNS ARE THE RECOMMENDED PRECISION OF THE VALUE TO BE ENTERED IN THE COLUMN.

ⓒ TOTALS SHOWN FOR THE BOX CULVERT INCLUDE THE QUANTITIES FOR HEADWALLS, WINGS, APRONS, CURBS, CUT-OFF WALLS AND LAPS AT CONSTRUCTION JOINTS.

◪ STRUCTURES SECTION STANDARD DRAWINGS JUNE, 1992 (PUBLICATION NO. 31-002) (ENGLISH EDITION)

▲ Construction ℄ Looking Ahead

	NAME	DATE
DESIGN	CJ	07/05
DRAWN	WJP	07/05
CHECKED	CAD	07/05

Stanley Consultants Inc.
2525 East Camelback Road, Suite 230
Phoenix, Arizona 85016
Phone (602) 957-9500

ARIZONA DEPARTMENT OF TRANSPORTATION
INTERMODAL TRANSPORTATION DIVISION
ROADWAY DESIGN SERVICES

REINFORCED CONC BOX CULVERT AND BOX CULVERT EXTENSION SUMMARY SHEET

PRELIMINARY
STAGE V
100% Review
NOT FOR CONSTRUCTION OR RECORDING

ROUTE	LOCATION	DWG NO. G-8.1
202L	RED MTN FWY, POWER ROAD - UNIVERSITY DRIVE	
TRACS NO. H 5782 01C	202-B(007)B	___ OF ___

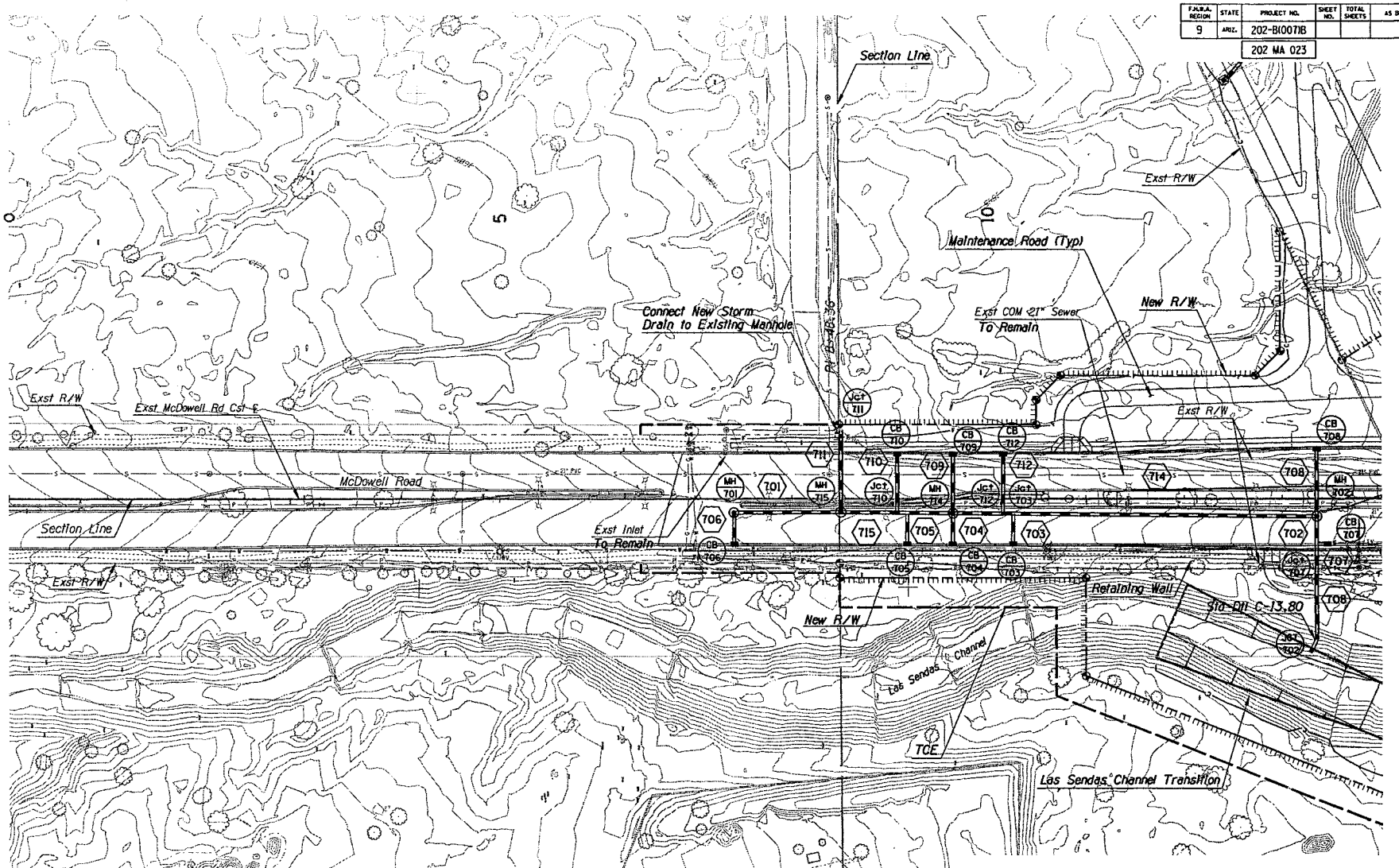

F.A.H.A. REGION	STATE	PROJECT NO.	SHEET NO.	TOTAL SHEETS	AS BUILT
9	ARIZ.	202-B(007)B			
		202 MA 023			

	NAME	DATE
DESIGN	DJO	07/05
DRAWN	RCM	07/05
CHECKED	CAD	07/05

Stanley Consultants INC.

ARIZONA DEPARTMENT OF TRANSPORTATION
INTERMODAL TRANSPORTATION DIVISION
ROADWAY DESIGN SERVICES

McDOWELL ROAD
STORM DRAIN PLAN
Sta 0+00 to Sta 14+00

PRELIMINARY
STAGE V
100% Review
NOT FOR CONSTRUCTION OR RECORDING

ROUTE	LOCATION	DWG NO. D-1.21
202L	RED MTN FWY, POWER ROAD - UNIVERSITY DRIVE	
TRACS NO. H 5782 01C		202-B(007)B

OF

08/16/2005 G:\17000\Active\07-05-Dwgs\04-Drain\h5782sd3a.dgn

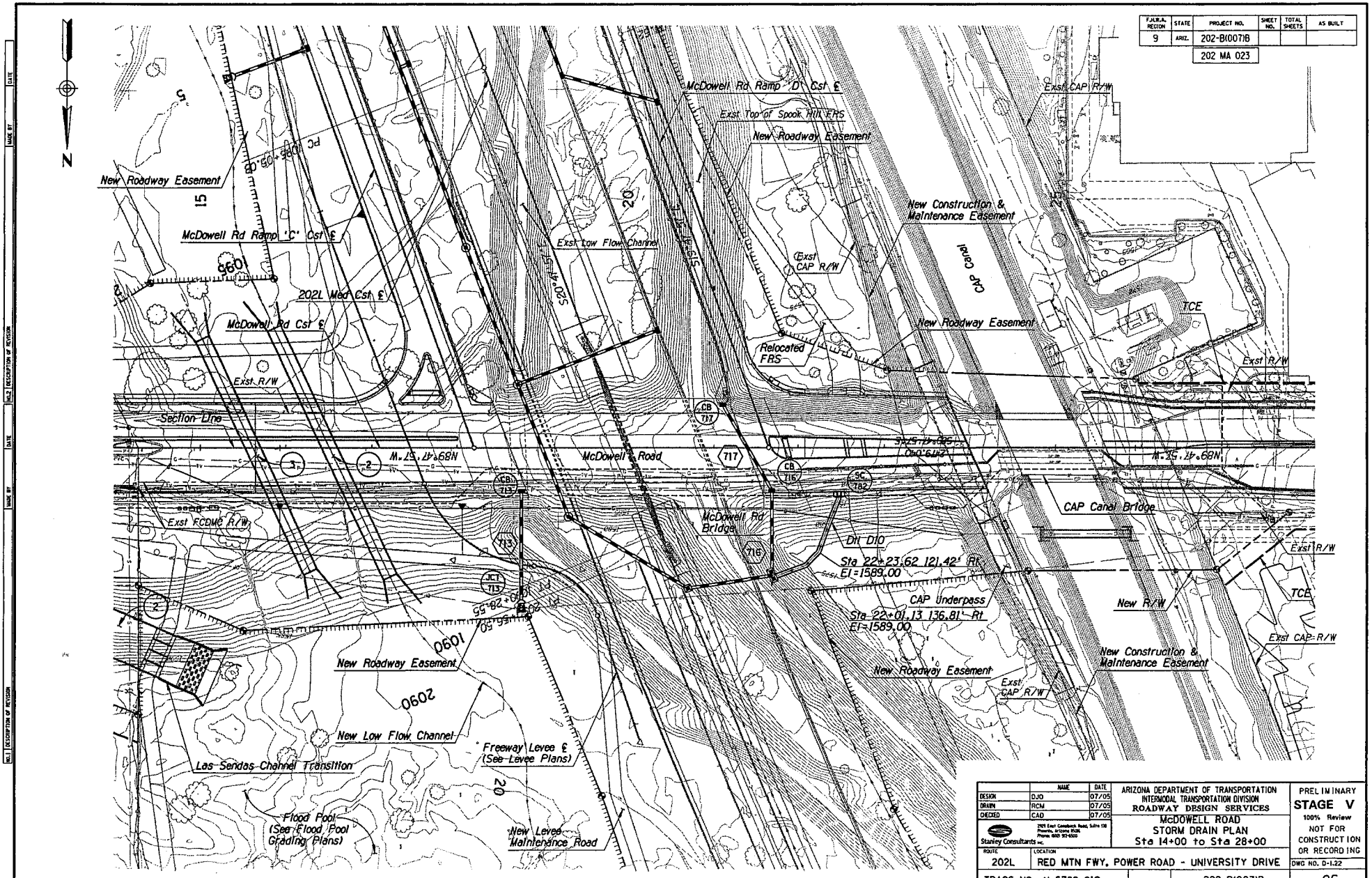

F.A.H.R.A. REGION	STATE	PROJECT NO.	SHEET NO.	TOTAL SHEETS	AS BUILT
9	ARIZ.	202-B(007)B			
		202 MA 023			

	NAME	DATE
DESIGN	DJO	07/05
DRAWN	RCM	07/05
CHECKED	CAD	07/05

Stanley Consultants Inc.
2901 East Camelback Road, Suite 130
Phoenix, Arizona 85016
Phone: (602) 957-9000

ARIZONA DEPARTMENT OF TRANSPORTATION
INTERMODAL TRANSPORTATION DIVISION
ROADWAY DESIGN SERVICES

McDOWELL ROAD
STORM DRAIN PLAN
Sta 14+00 to Sta 28+00

PRELIMINARY
STAGE V
100% Review
NOT FOR CONSTRUCTION OR RECORDING

ROUTE	LOCATION	DWG NO. D-1.22
202L	RED MTN FWY, POWER ROAD - UNIVERSITY DRIVE	
TRACS NO. H 5782 01C	202-B(007)B	___ OF ___

08/16/2005 D:\17000\Active\07-05-Dwgs\04-Drain\h5782d4b.dgn

F.H.W.A. REGION	STATE	PROJECT NO.	SHEET NO.	TOTAL SHEETS	AS BUILT
9	ARIZ.	202-B(007)B			

202 MA 023

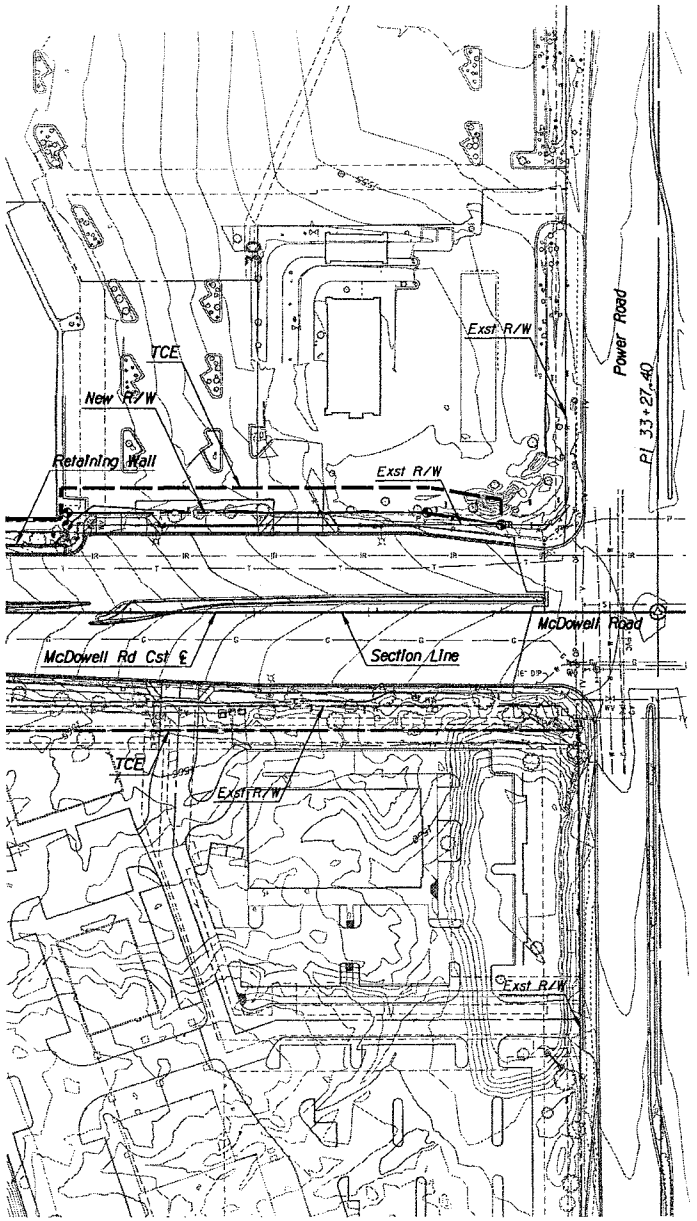

	NAME	DATE
DESIGN	DJO	07/05
DRAWN	RCM	07/05
CHECKED	CAD	07/05

Stanley Consultants inc.

ARIZONA DEPARTMENT OF TRANSPORTATION
INTERMODAL TRANSPORTATION DIVISION
ROADWAY DESIGN SERVICES

McDOWELL ROAD
STORM DRAIN PLAN
Sta 28+00 to Sta 33+50

PRELIMINARY
STAGE V
100% Review
NOT FOR CONSTRUCTION OR RECORDING

ROUTE	LOCATION	DWG NO. D-1.23
202L	RED MTN FWY, POWER ROAD - UNIVERSITY DRIVE	
TRACS NO. H 5782 01C	202-B(007)B	___ OF ___

08/16/2005 G:\17000\Active\07-05-Dega\04-Drain\h5782sd3o.dgn

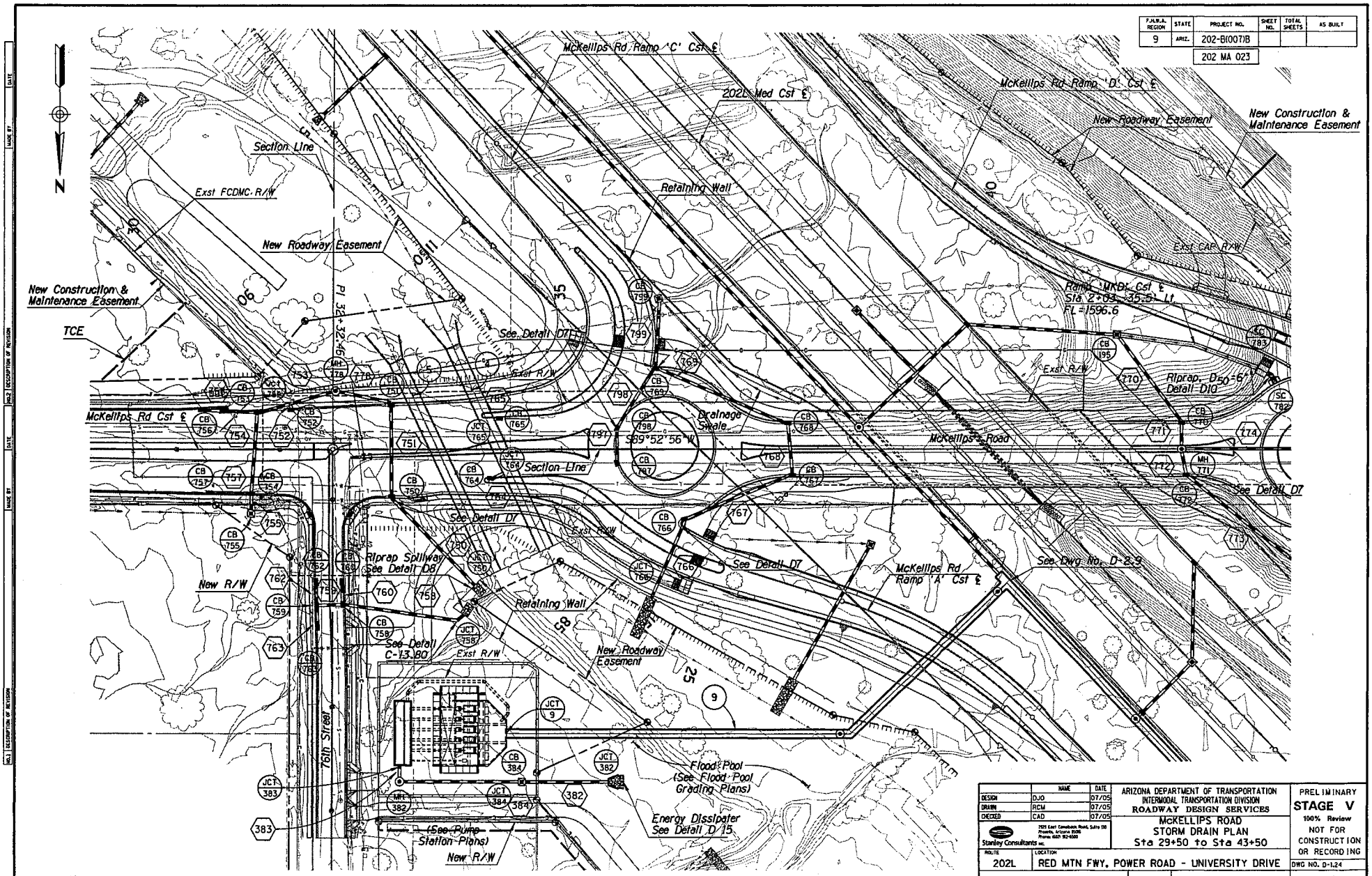

F.A.H.R.A. REGION	STATE	PROJECT NO.	SHEET NO.	TOTAL SHEETS	AS BUILT
9	ARIZ.	202-B(007)B			
		202 MA 023			

	NAME	DATE
DESIGN	DJO	07/05
DRAWN	RCM	07/05
CHECKED	CAD	07/05

Stanley Consultants inc.
2525 East Camelback Road, Suite 130
Phoenix, Arizona 85016
Phone (602) 952-8500

ARIZONA DEPARTMENT OF TRANSPORTATION
INTERMODAL TRANSPORTATION DIVISION
ROADWAY DESIGN SERVICES

McKELLIPS ROAD
STORM DRAIN PLAN
Sta 29+50 to Sta 43+50

PRELIMINARY
STAGE V
100% Review
NOT FOR CONSTRUCTION OR RECORDING

ROUTE	LOCATION	DWG NO. D-1.24
202L	RED MTN FWY, POWER ROAD - UNIVERSITY DRIVE	
TRACS NO. H 5782 01C	202-B(007)B	___ OF ___

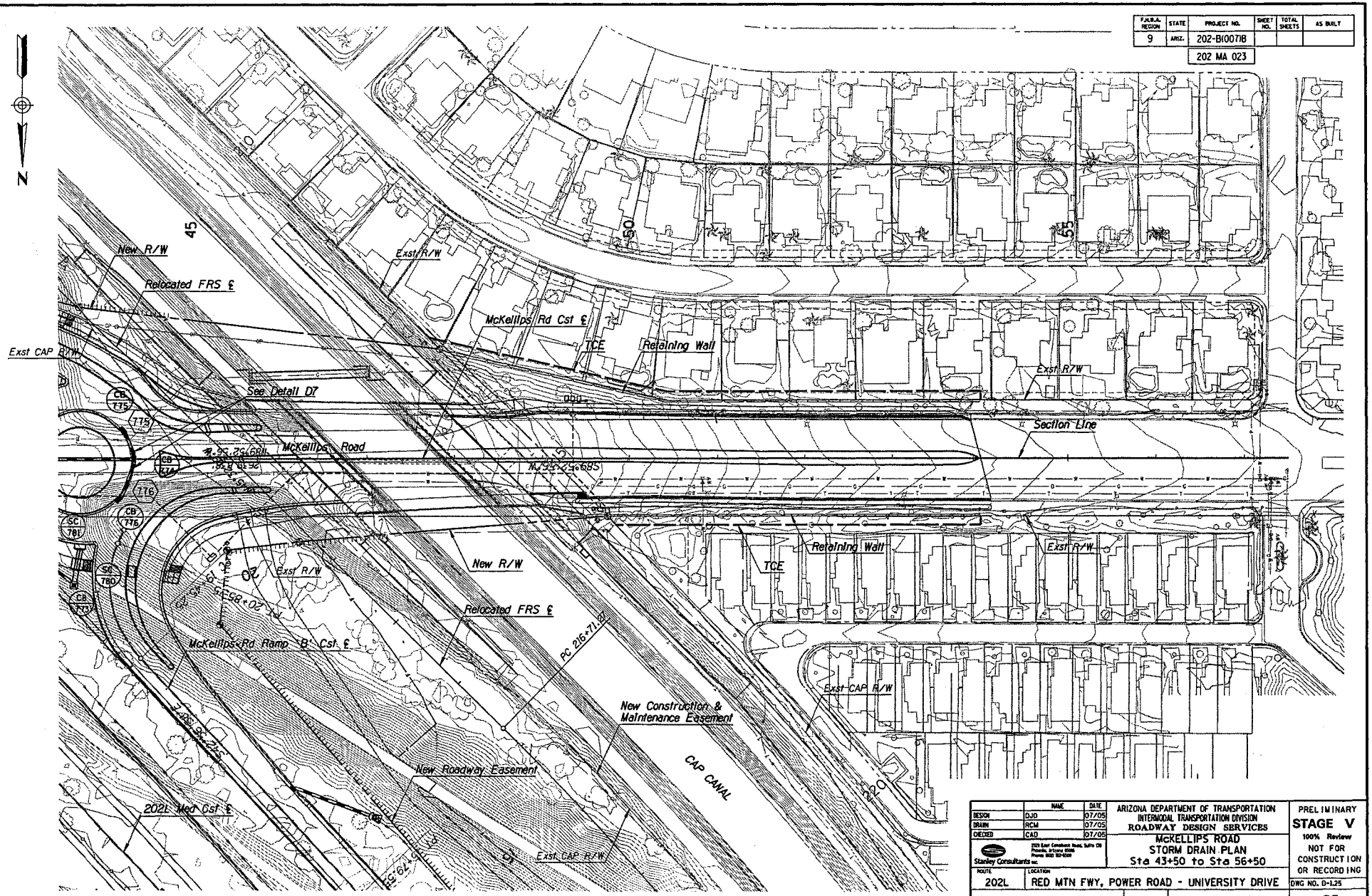

F.H.W.A. REGION	STATE	PROJECT NO.	SHEET NO.	TOTAL SHEETS	AS BUILT
9	ARIZ.	202-B(007)B			
		202 MA 023			

	NAME	DATE
DESIGN	DJO	07/05
DRAWN	RCM	07/05
CHECKED	CAD	07/05

Stanley Consultants Inc.
2525 East Camelback Road, Suite 126
Phoenix, Arizona 85016
Phone: (602) 957-0009

ARIZONA DEPARTMENT OF TRANSPORTATION
INTERMODAL TRANSPORTATION DIVISION
ROADWAY DESIGN SERVICES

McKELLIPS ROAD
STORM DRAIN PLAN
Sta 43+50 to Sta 56+50

PRELIMINARY
STAGE V
100% Review
NOT FOR CONSTRUCTION OR RECORDING

ROUTE	LOCATION	DWG NO. D-1.25
202L	RED MTN FWY, POWER ROAD - UNIVERSITY DRIVE	
TRACS NO. H 5782 01C	202-B(007)B	OF

08/16/2005 U:\17000\Active\07-05-Dwgs\04-Drain\h5782sd45.dgn

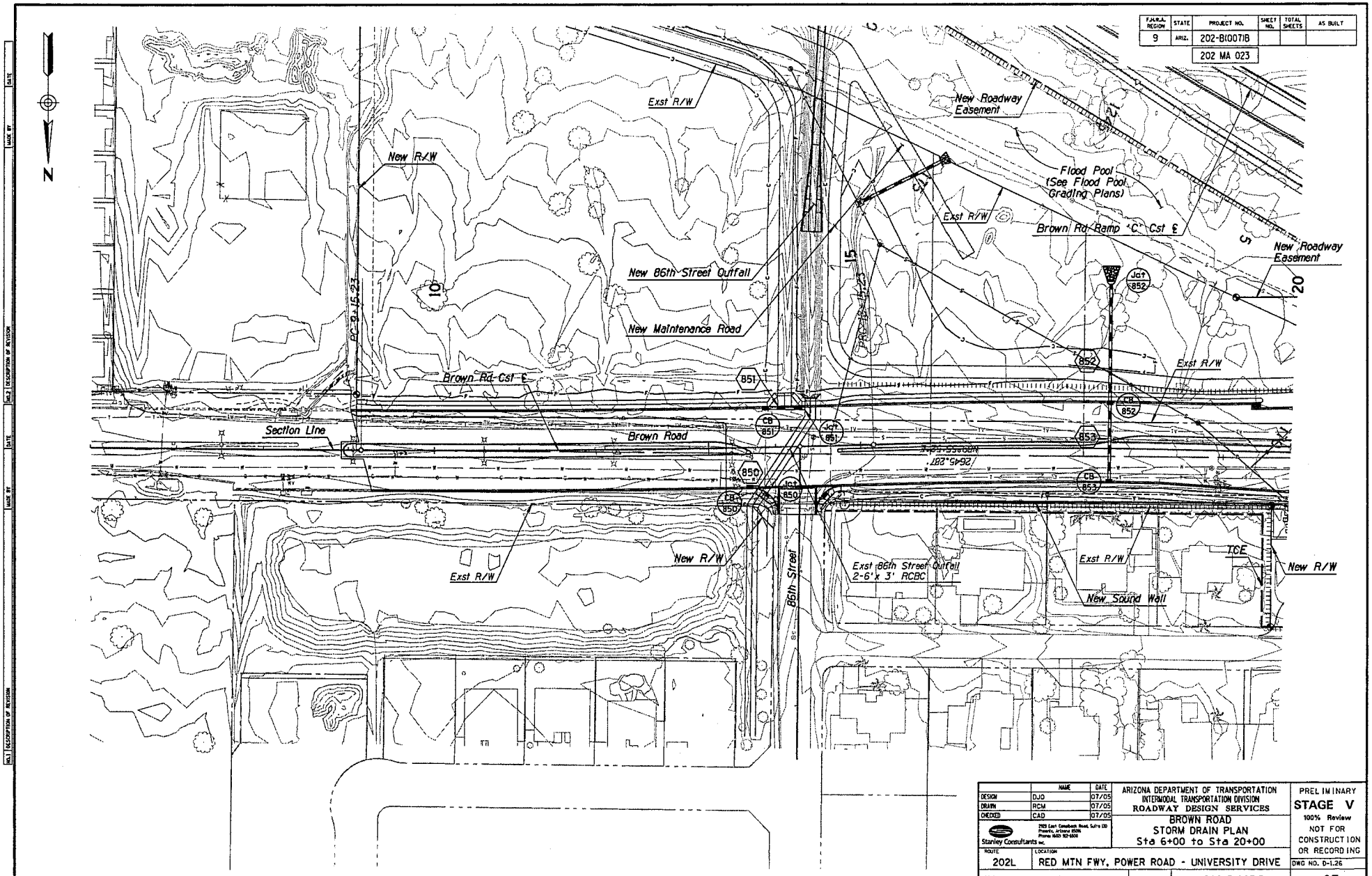

F.A.H.U.A. REGION	STATE	PROJECT NO.	SHEET NO.	TOTAL SHEETS	AS BUILT
9	ARIZ.	202-B(007)B			
		202 MA 023			

	NAME	DATE
DESIGN	DJO	07/05
DRAWN	RCM	07/05
CHECKED	CAD	07/05

Stanley Consultants inc.
2525 East Camelback Road, Suite 120
Phoenix, Arizona 85016
Phone: (602) 912-0606

ARIZONA DEPARTMENT OF TRANSPORTATION
INTERMODAL TRANSPORTATION DIVISION
ROADWAY DESIGN SERVICES

BROWN ROAD
STORM DRAIN PLAN
Sta 6+00 to Sta 20+00

ROUTE	LOCATION
202L	RED MTN FWY, POWER ROAD - UNIVERSITY DRIVE

TRACS NO. H 5782 01C | 202-B(007)B

PRELIMINARY
STAGE V
100% Review
NOT FOR CONSTRUCTION OR RECORDING

DWG NO. D-1.26

___ OF ___

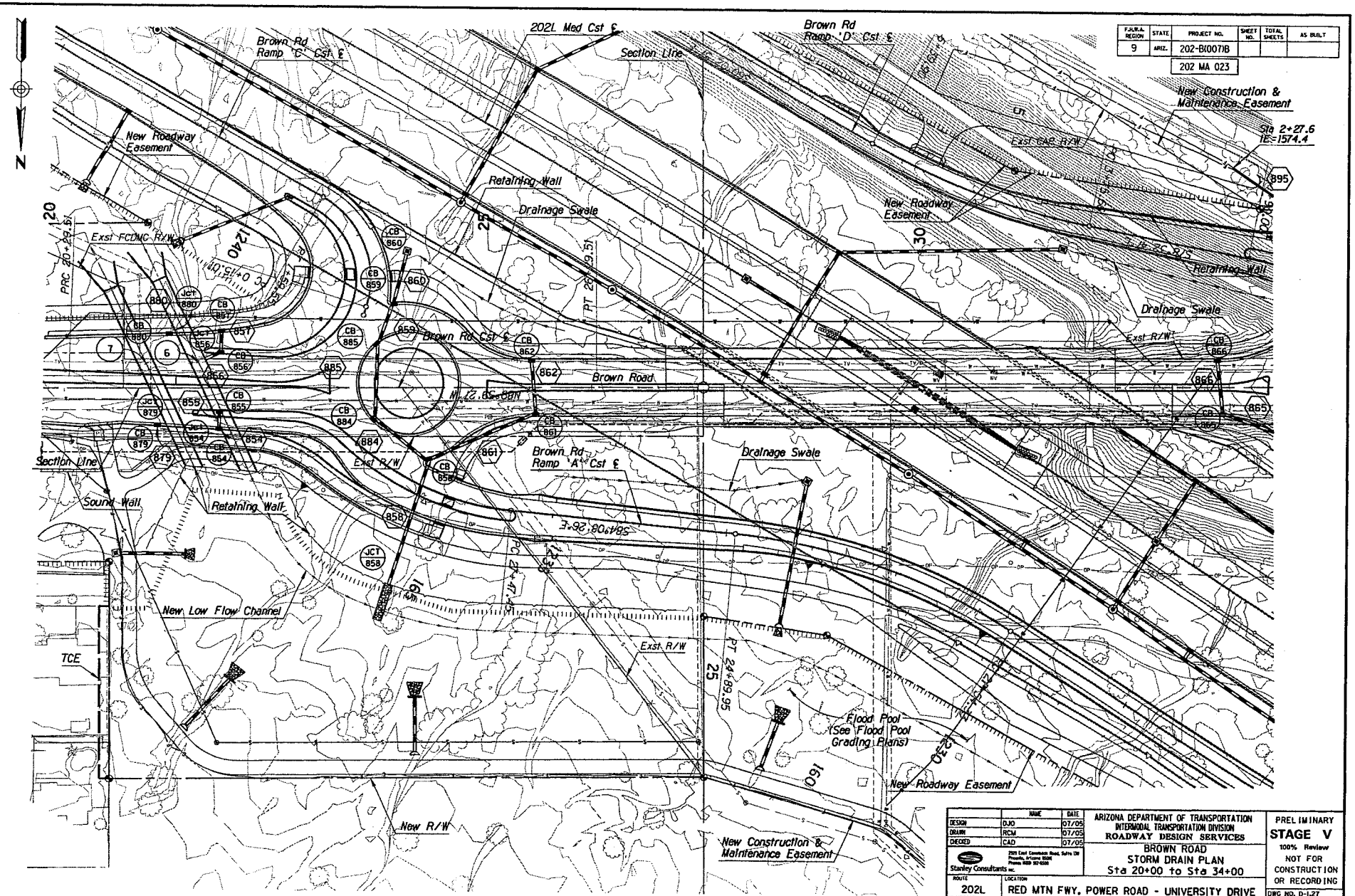

F.H.W.A. REGION	STATE	PROJECT NO.	SHEET NO.	TOTAL SHEETS	AS BUILT
9	ARIZ.	202-B(007)B			
		202 MA 023			

	NAME	DATE
DESIGN	DJO	07/05
DRAWN	RCM	07/05
CHECKED	CAD	07/05

Stanley Consultants Inc.
2901 East Camelback Road, Suite 130
Phoenix, Arizona 85016
Phone (602) 957-0585

ARIZONA DEPARTMENT OF TRANSPORTATION
INTERMODAL TRANSPORTATION DIVISION
ROADWAY DESIGN SERVICES

BROWN ROAD
STORM DRAIN PLAN
Sta 20+00 to Sta 34+00

PRELIMINARY
STAGE V
100% Review
NOT FOR CONSTRUCTION OR RECORDING

ROUTE	LOCATION
202L	RED MTN FWY. POWER ROAD - UNIVERSITY DRIVE

DWG NO. D-1.27

TRACS NO. H 5782 01C | 202-B(007)B | ___ OF ___

08/16/2005 U:\17000\Active\07-05-Dwgs\04-Drain\h5782sd5b.dgn

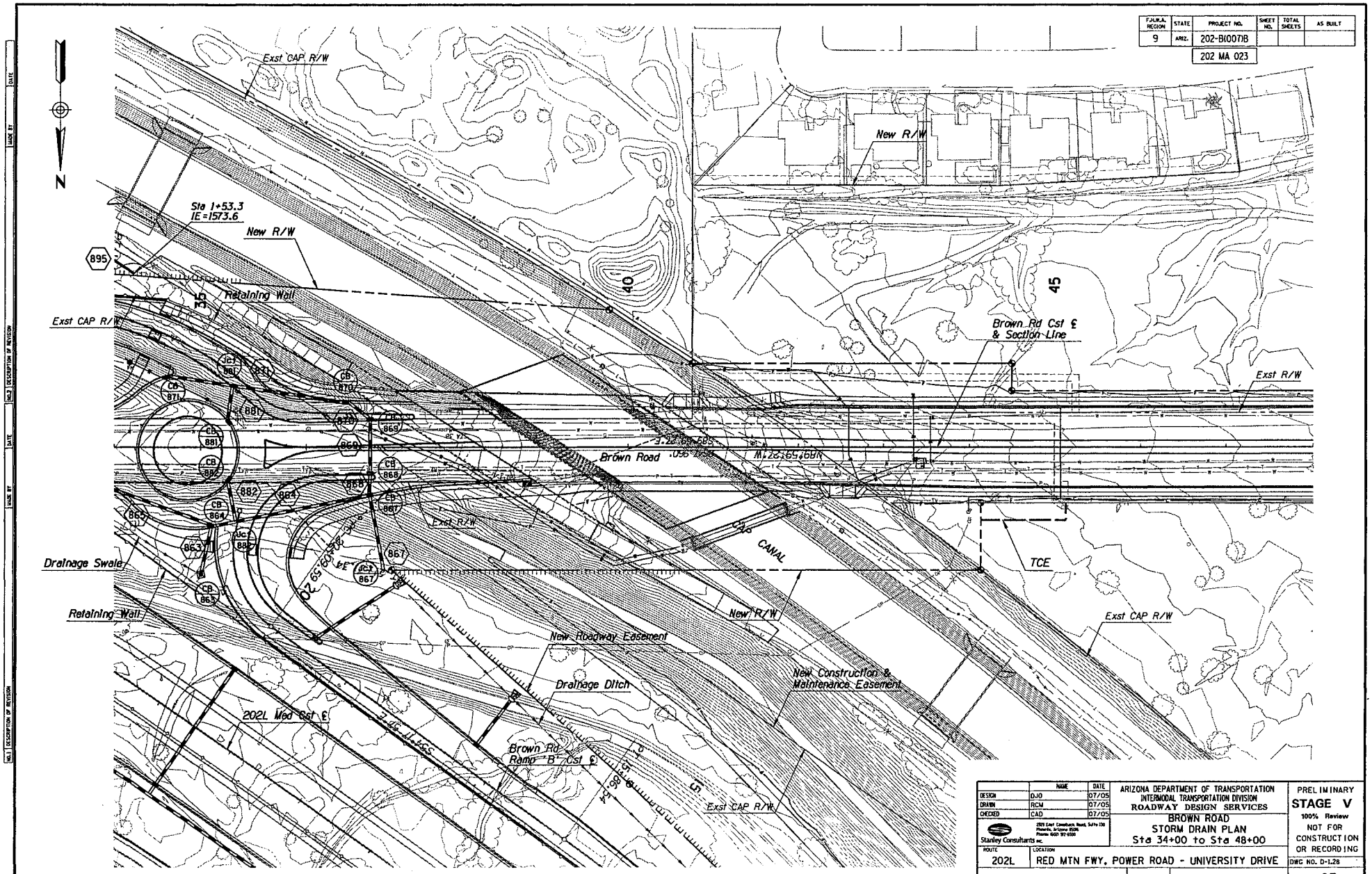

FAP/A REGION	STATE	PROJECT NO.	SHEET NO.	TOTAL SHEETS	AS BUILT
9	ARIZ.	202-B(007)B			

202 MA 023

	NAME	DATE
DESIGN	OJO	07/05
DRAWN	RCM	07/05
CHECKED	CAD	07/05

Stanley Consultants inc.

ARIZONA DEPARTMENT OF TRANSPORTATION
INTERMODAL TRANSPORTATION DIVISION
ROADWAY DESIGN SERVICES

BROWN ROAD
STORM DRAIN PLAN
Sta 34+00 to Sta 48+00

PRELIMINARY
STAGE V
100% Review
NOT FOR CONSTRUCTION OR RECORDING

ROUTE	LOCATION	DWG NO. D-1.28
202L	RED MTN FWY, POWER ROAD - UNIVERSITY DRIVE	
TRACS NO. H 5782 01C	202-B(007)B	___ OF ___

08/16/2005

F.A.H.U.A. REGION	STATE	PROJECT NO.	SHEET NO.	TOTAL SHEETS	AS BUILT
9	ARIZ.	202-B(007)B			
		202 MA 023			

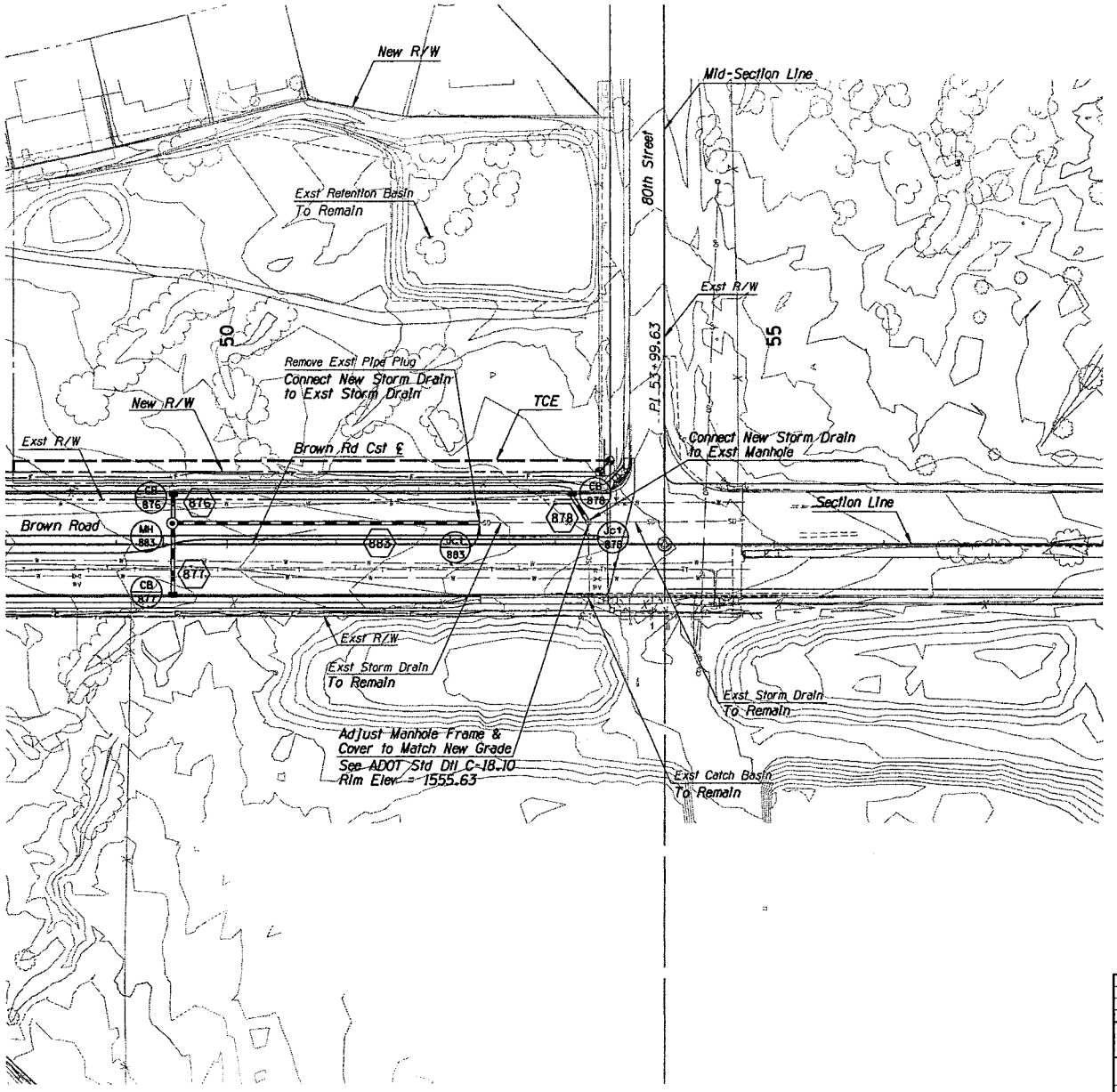

	NAME	DATE
DESIGN	DJO	07/05
DRAWN	RCM	07/05
CHECKED	CAD	07/05

Stanley Consultants Inc.
2525 East Camelback Road, Suite 320
Phoenix, Arizona 85016
Phone: (602) 957-9500

ARIZONA DEPARTMENT OF TRANSPORTATION
INTERMODAL TRANSPORTATION DIVISION
ROADWAY DESIGN SERVICES

BROWN ROAD
STORM DRAIN PLAN
Sta 48+00 to Sta 58+00

PRELIMINARY
STAGE V
100% Review
NOT FOR CONSTRUCTION OR RECORDING

ROUTE	LOCATION	DWG NO. D-1.29
202L	RED MTN FWY, POWER ROAD - UNIVERSITY DRIVE	
TRACS NO. H 5782 01C	202-B(007)B	___ OF ___

08/16/2005 D:\17000\Active\07-05-Dwgs\04-Drain\h5782sd5d.dgn

F.A.P.A. REGION	STATE	PROJECT NO.	SHEET NO.	TOTAL SHEETS	AS BUILT
9	ARIZ.	202-B(007)B			
		202 MA 023			

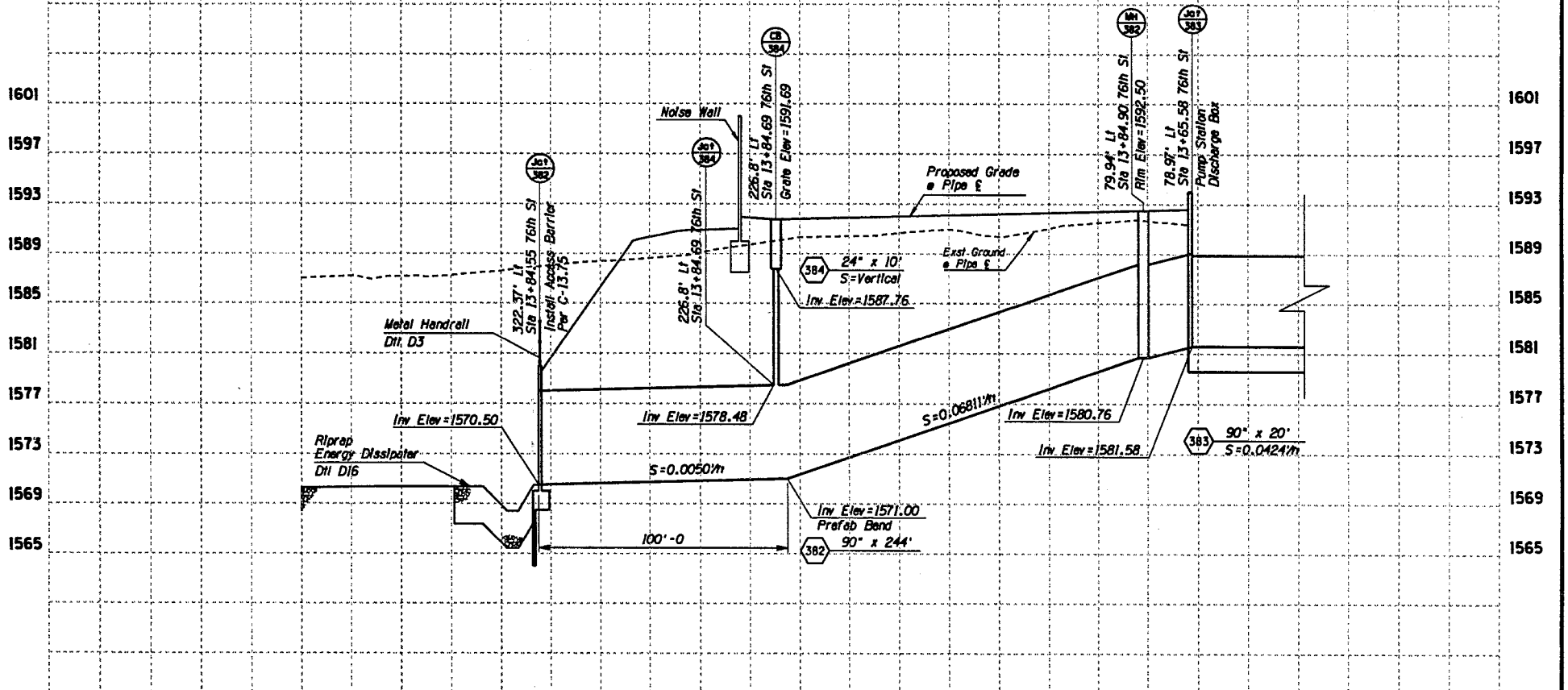

	NAME	DATE
DESIGN	RSR	4/05
DRAWN	AEM	4/05
CHECKED	CAD	4/05

Stanley Consultants Inc.

ARIZONA DEPARTMENT OF TRANSPORTATION
INTERMODAL TRANSPORTATION DIVISION
ROADWAY DESIGN SERVICES

STORM DRAIN PROFILES

PRELIMINARY
STAGE IV
95% Review
NOT FOR CONSTRUCTION OR RECORDING

ROUTE	LOCATION	DWG NO. D-2.62
202L	RED MTN FWY, POWER ROAD - UNIVERSITY DRIVE	
TRACS NO. H 5782 01C	202-B(007)B	___ OF ___

472272005 q:\17888\active\87-85-dsgn\84-drain\h5782sdp83.dgn

F.H.W.A. REGION	STATE	PROJECT NO.	SHEET NO.	TOTAL SHEETS	AS BUILT
9	ARIZ.	202-B(007)B			

202 MA 023

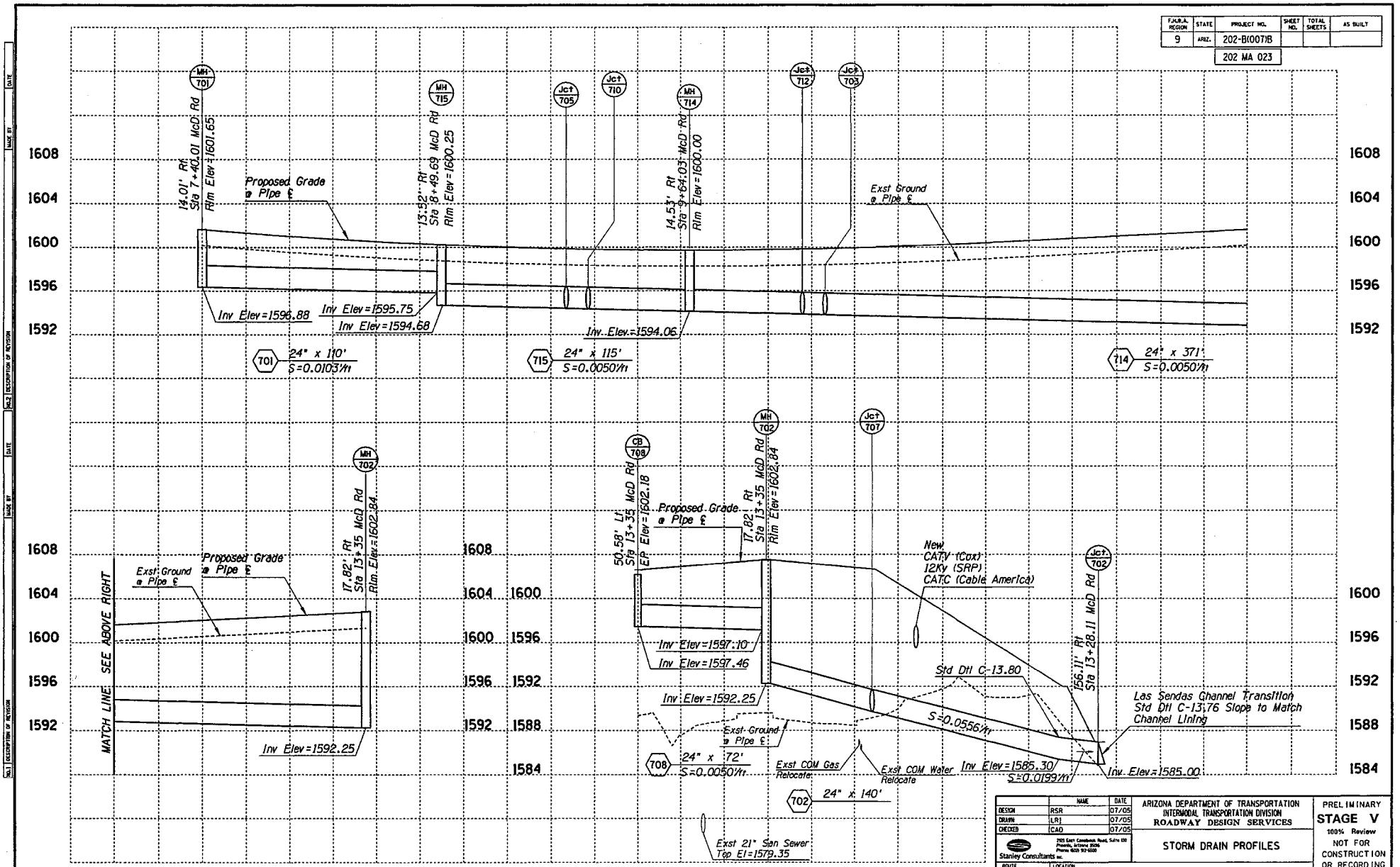

	NAME	DATE
DESIGN	RSR	07/05
DRAWN	LRJ	07/05
CHECKED	CAD	07/05

Stanley Consultants Inc.
2525 East Camelback Road, Suite 130
Phoenix, Arizona 85016
Phone: (602) 912-0500

ARIZONA DEPARTMENT OF TRANSPORTATION
INTERMODAL TRANSPORTATION DIVISION
ROADWAY DESIGN SERVICES

STORM DRAIN PROFILES

PRELIMINARY
STAGE V
100% Review
NOT FOR CONSTRUCTION OR RECORDING

ROUTE	LOCATION	DWG NO. D-2.64
202L	RED MTN FWY, POWER ROAD - UNIVERSITY DRIVE	
TRACS NO. H 5782 01C	202-B(007)B	___ OF ___

F.A.R.A. REGION	STATE	PROJECT NO.	SHEET NO.	TOTAL SHEETS	AS BUILT
9	ARIZ.	202-B(007)B			
		202 MA 023			

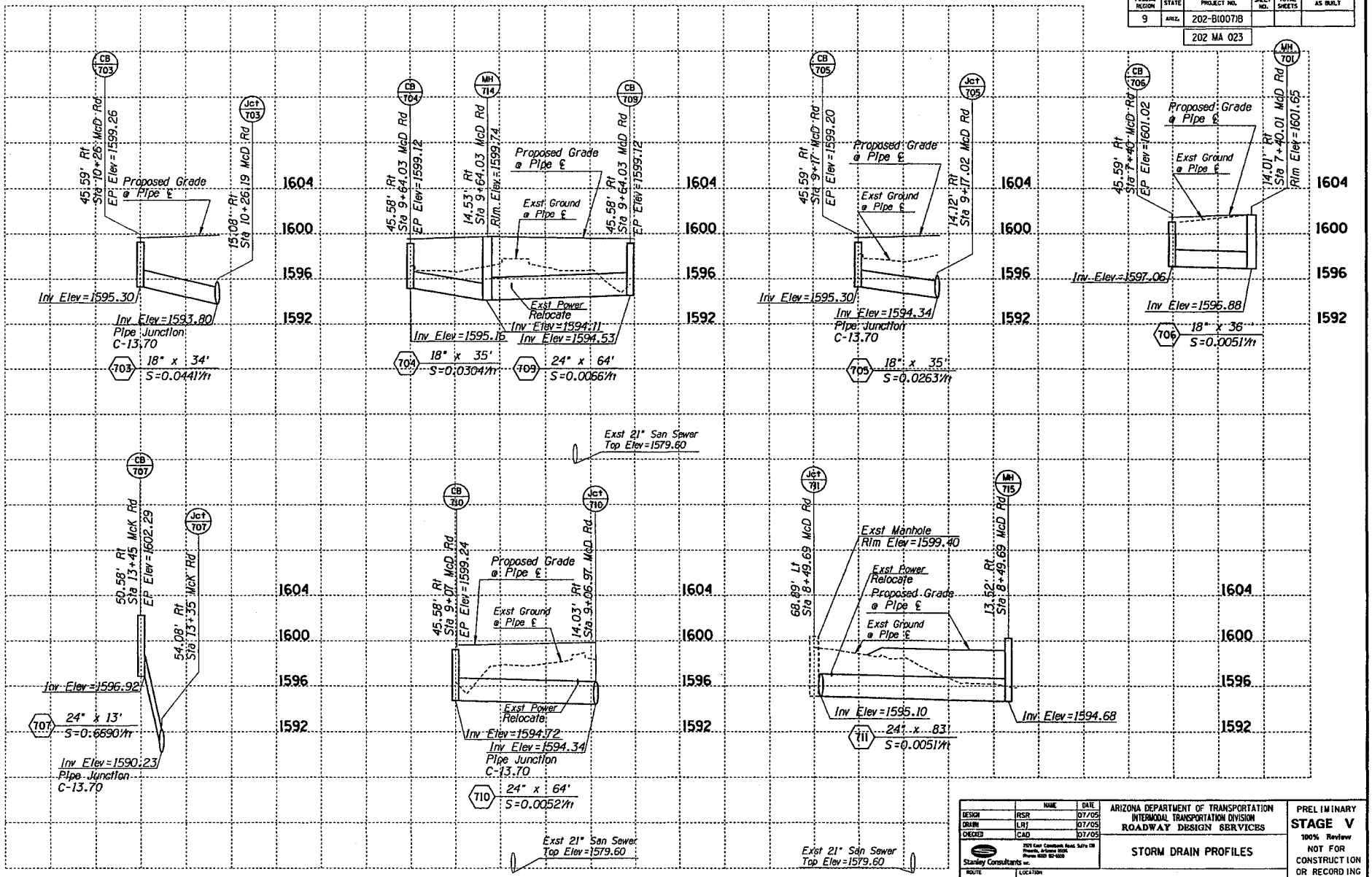

	NAME	DATE
DESIGN	RSR	07/05
DRAWN	LRJ	07/05
CHECKED	CAD	07/05

Stanley Consultants Inc.

ARIZONA DEPARTMENT OF TRANSPORTATION
INTERMODAL TRANSPORTATION DIVISION
ROADWAY DESIGN SERVICES

STORM DRAIN PROFILES

PRELIMINARY
STAGE V
100% Review
NOT FOR CONSTRUCTION OR RECORDING

ROUTE	LOCATION	DWG NO. D-2.65
202L	RED MTN FWY, POWER ROAD - UNIVERSITY DRIVE	
TRACS NO. H 5782 01C		202-B(007)B ___ OF ___

08/16/2005 g:\17000\active\07-05-dwgs\04-drain\h5782sdpx02.dgn

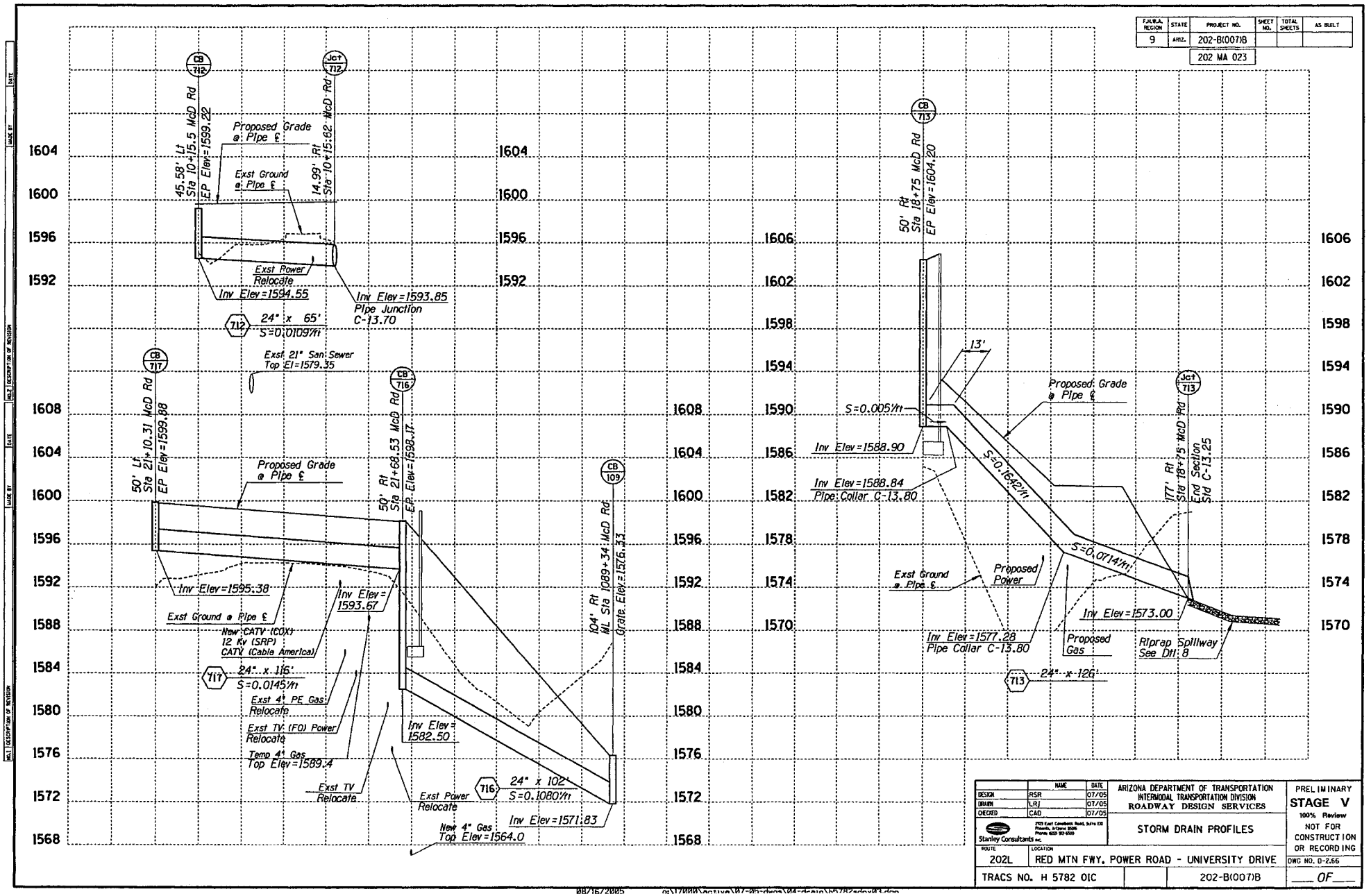

F.H.W.A. REGION	STATE	PROJECT NO.	SHEET NO.	TOTAL SHEETS	AS BUILT
9	ARIZ.	202-B(007)B			
		202 MA 023			

	NAME	DATE
DESIGN	RSR	07/05
DRAWN	LRJ	07/05
CHECKED	CAD	07/05

Stanley Consultants Inc.
2920 East Camelback Road, Suite 130
Phoenix, Arizona 85016
Phone: (602) 957-1000

ARIZONA DEPARTMENT OF TRANSPORTATION
INTERMODAL TRANSPORTATION DIVISION
ROADWAY DESIGN SERVICES

STORM DRAIN PROFILES

PRELIMINARY
STAGE V
100% Review
NOT FOR CONSTRUCTION OR RECORDING

ROUTE	LOCATION
202L	RED MTN FWY, POWER ROAD - UNIVERSITY DRIVE

TRACS NO. H 5782 01C | 202-B(007)B

DWG NO. D-2.66

___ OF ___

08/16/2005 g:\17000\active\07-05-dwgs\04-drain\h5782rdv01.dgn

F.A.H.R.A. REGION	STATE	PROJECT NO.	SHEET NO.	TOTAL SHEETS	AS BUILT
9	ARIZ.	202-B(007)B			
		202 MA 023			

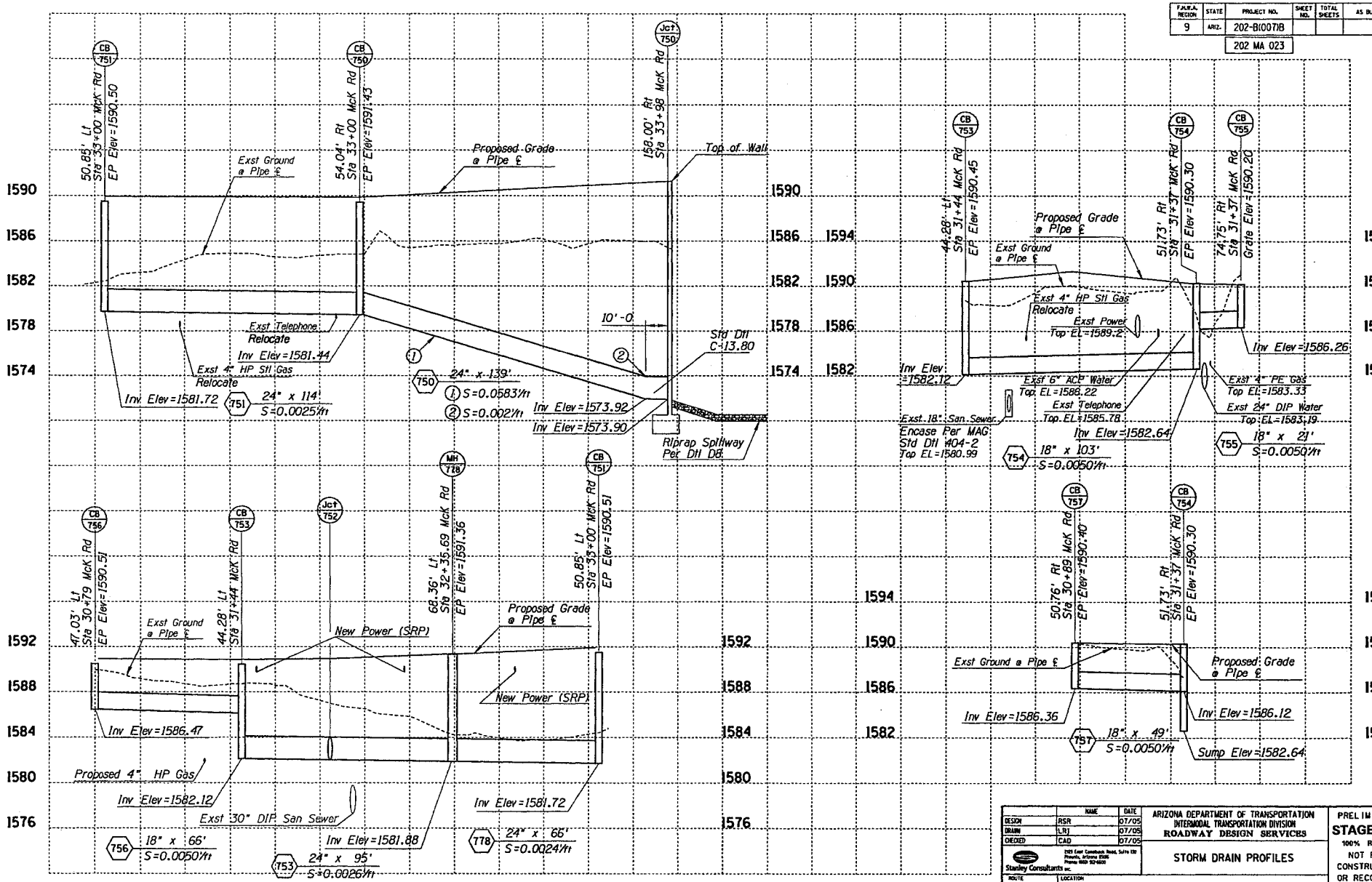

	NAME	DATE
DESIGN	RSR	07/05
DRAWN	LRJ	07/05
CHECKED	CAD	07/05

Stanley Consultants inc.

ARIZONA DEPARTMENT OF TRANSPORTATION
INTERMODAL TRANSPORTATION DIVISION
ROADWAY DESIGN SERVICES

STORM DRAIN PROFILES

PRELIMINARY
STAGE V
100% Review
NOT FOR CONSTRUCTION OR RECORDING

ROUTE	LOCATION	DWG NO. D-2.67
202L	RED MTN FWY, POWER ROAD - UNIVERSITY DRIVE	
TRACS NO. H 5782 01C		202-B(007)B

OF

08/16/2005 g:\17000\active\07-05-dwgs\04-drain\h5782sdpx04.dgn

F.H.W.A. REGION	STATE	PROJECT NO.	SHEET NO.	TOTAL SHEETS	AS BUILT
9	ARIZ.	202-B(007)B			

202 MA 023

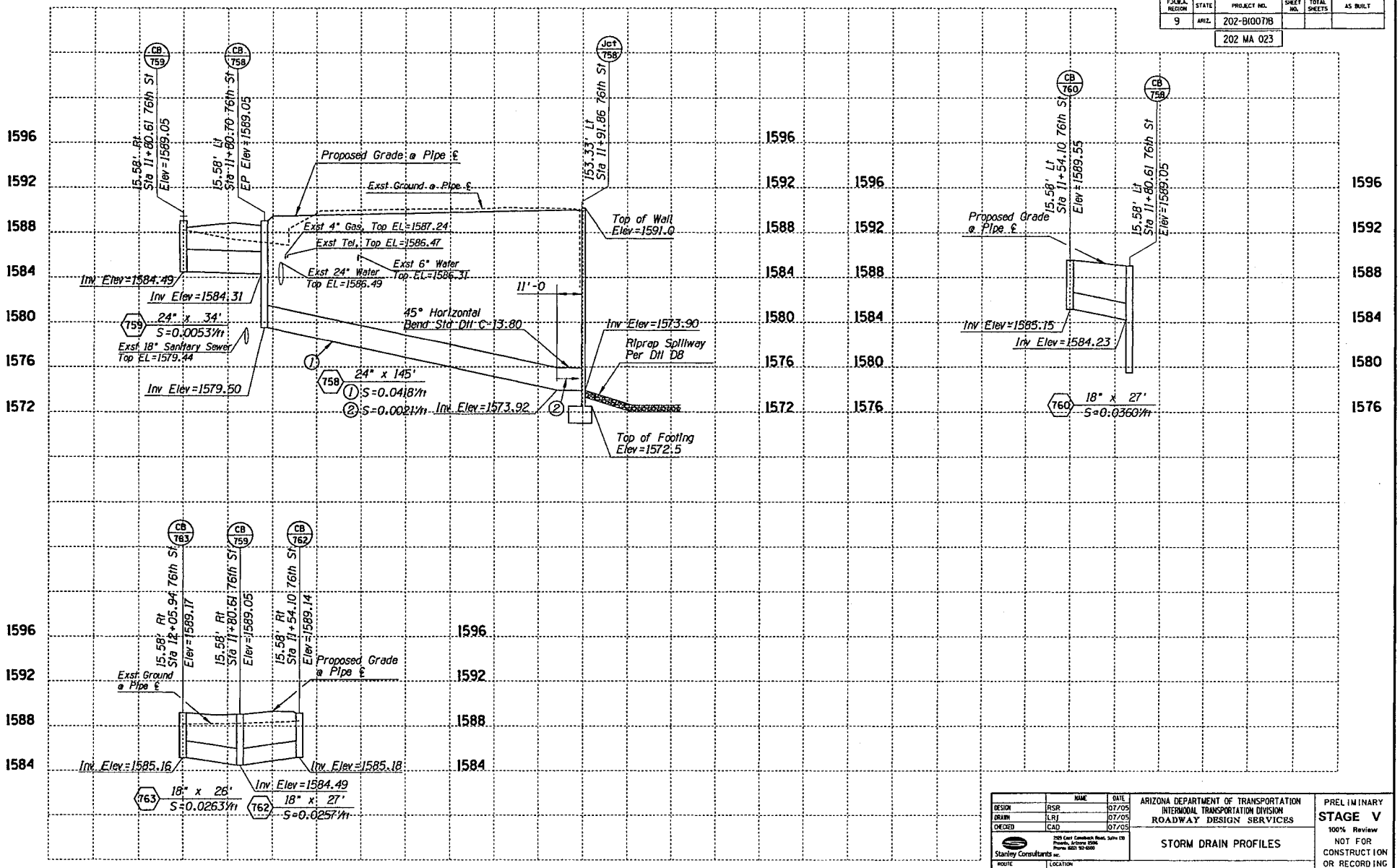

	NAME	DATE
DESIGN	RSR	07/05
DRAWN	LRJ	07/05
CHECKED	CAD	07/05

Stanley Consultants Inc.
2525 East Camelback Road, Suite 170 Phoenix, Arizona 85016 Phone (602) 952-8000

ARIZONA DEPARTMENT OF TRANSPORTATION
INTERMODAL TRANSPORTATION DIVISION
ROADWAY DESIGN SERVICES

STORM DRAIN PROFILES

PRELIMINARY
STAGE V
100% Review
NOT FOR CONSTRUCTION OR RECORDING

ROUTE	LOCATION	DWG NO. D-2.68
202L	RED MTN FWY, POWER ROAD - UNIVERSITY DRIVE	
TRACS NO. H 5782 01C	202-B(007)B	OF

08/16/2005 q:\17000\active\07-05-dwgs\04-drain\h5782sdpx05.dgn

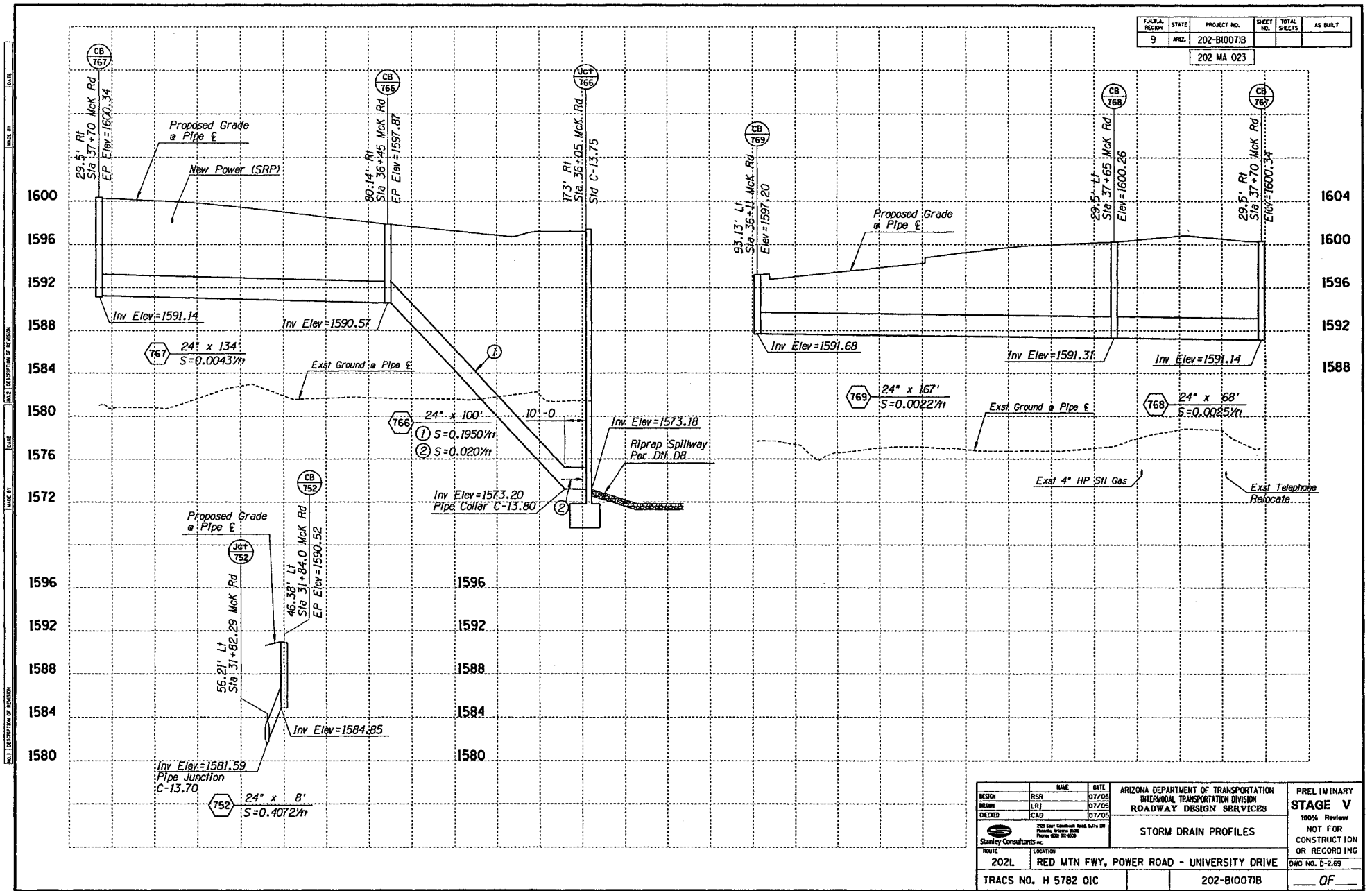

F.A.H.R.A. REGION	STATE	PROJECT NO.	SHEET NO.	TOTAL SHEETS	AS BUILT
9	ARIZ.	202-B(007)B			
		202 MA 023			

	NAME	DATE
DESIGN	RSR	07/05
DRAWN	LRJ	07/05
CHECKED	CAD	07/05

Stanley Consultants Inc.

ARIZONA DEPARTMENT OF TRANSPORTATION
INTERMODAL TRANSPORTATION DIVISION
ROADWAY DESIGN SERVICES

STORM DRAIN PROFILES

PRELIMINARY
STAGE V
100% Review
NOT FOR CONSTRUCTION OR RECORDING

ROUTE	LOCATION	DWG NO. D-2.69
202L	RED MTN FWY, POWER ROAD - UNIVERSITY DRIVE	
TRACS NO. H 5782 01C	202-B(007)B	___ OF ___

0871672005 c:\17000\active\07-05-dwgs\04-drain\h5782sdpx06.dgn

F.H.W.A. REGION	STATE	PROJECT NO.	SHEET NO.	TOTAL SHEETS	AS BUILT
9	ARIZ.	202-B(007)B			
		202 MA 023			

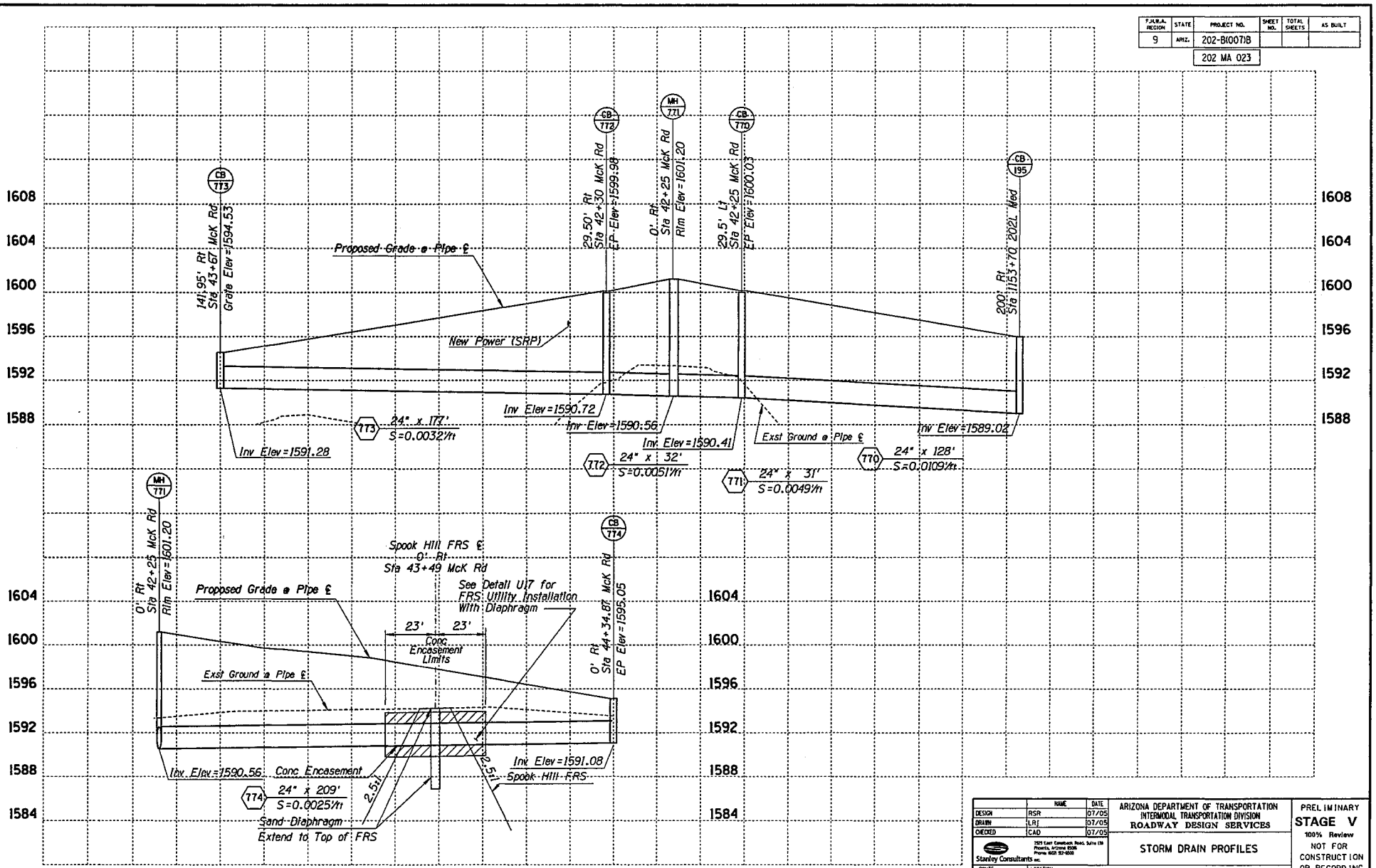

	NAME	DATE
DESIGN	RSR	07/05
DRAWN	LRJ	07/05
CHECKED	CAD	07/05

Stanley Consultants inc.
1525 East Camelback Road, Suite 130
Phoenix, Arizona 85016
Phone (602) 952-8500

ARIZONA DEPARTMENT OF TRANSPORTATION
INTERMODAL TRANSPORTATION DIVISION
ROADWAY DESIGN SERVICES

STORM DRAIN PROFILES

PRELIMINARY
STAGE V
100% Review
NOT FOR CONSTRUCTION OR RECORDING

ROUTE	LOCATION	DWG NO. D-2.70
202L	RED MTN FWY, POWER ROAD - UNIVERSITY DRIVE	
TRACS NO. H 5782 01C	202-B(007)B	___ OF ___

F.A.H.A. REGION	STATE	PROJECT NO.	SHEET NO.	TOTAL SHEETS	AS BUILT
9	ARIZ.	202-B(007)B			
		202 MA 023			

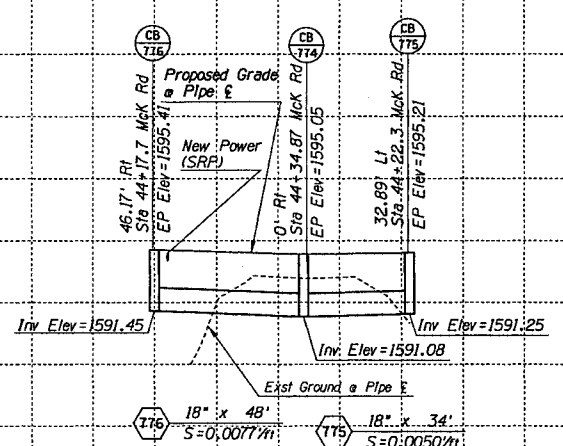

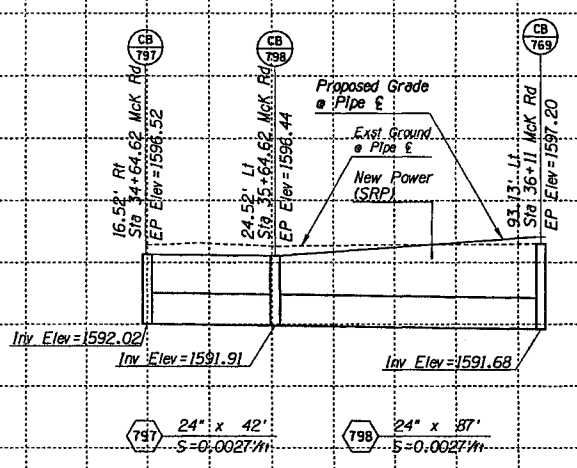

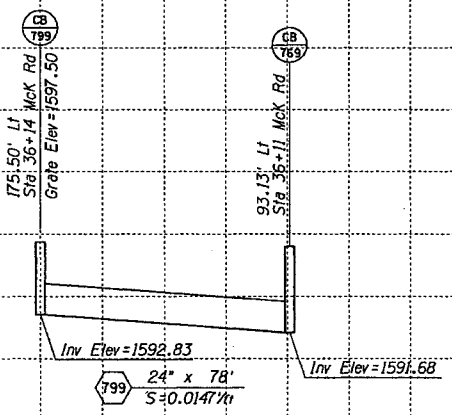

	NAME	DATE
DESIGN	RSR	07/05
DRAWN	LRJ	07/05
CHECKED	CAD	07/05

Stanley Consultants Inc. 2929 East Camelback Road, Suite 130 Phoenix, Arizona 85016 Phone: (602) 957-0000

ARIZONA DEPARTMENT OF TRANSPORTATION
INTERMODAL TRANSPORTATION DIVISION
ROADWAY DESIGN SERVICES

STORM DRAIN PROFILES

PRELIMINARY
STAGE V
100% Review
NOT FOR CONSTRUCTION OR RECORDING

ROUTE	LOCATION	DWG NO. D-2.71
202L	RED MTN FWY, POWER ROAD - UNIVERSITY DRIVE	
TRACS NO. H 5782 01C		202-B(007)B

OF

08/16/2005 g:\17000\active\07-05-dwgs\04-drain\h5782sdpx08.dgn

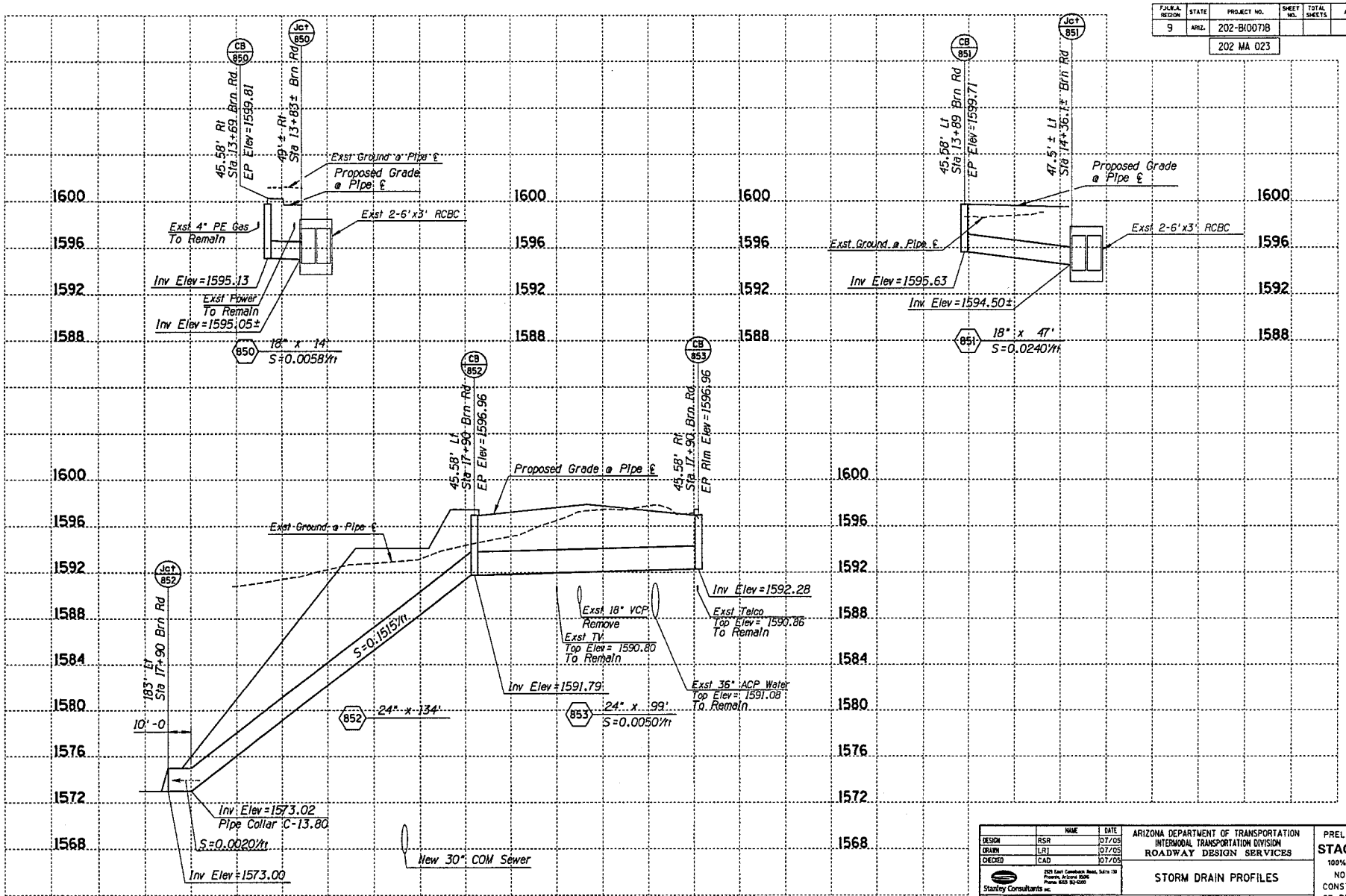

F.H.W.A. REGION	STATE	PROJECT NO.	SHEET NO.	TOTAL SHEETS	AS BUILT
9	ARIZ.	202-B(007)B			
		202 MA 023			

	NAME	DATE
DESIGN	RSR	07/05
DRAWN	LRJ	07/05
CHECKED	CAD	07/05

Stanley Consultants inc.
2525 East Camelback Road, Suite 130
Phoenix, Arizona 85016
Phone 602 952-0200

ARIZONA DEPARTMENT OF TRANSPORTATION
INTERMODAL TRANSPORTATION DIVISION
ROADWAY DESIGN SERVICES

STORM DRAIN PROFILES

PRELIMINARY
STAGE V
100% Review
NOT FOR CONSTRUCTION OR RECORDING

ROUTE	LOCATION	DWG NO. D-2.72
202L	RED MTN FWY, POWER ROAD - UNIVERSITY DRIVE	
TRACS NO. H 5782 01C	202-B(007)B	___ OF ___

08/15/2005 c:\17000\active\07-05-dwgs\04-drain\h5782dor04.dgn

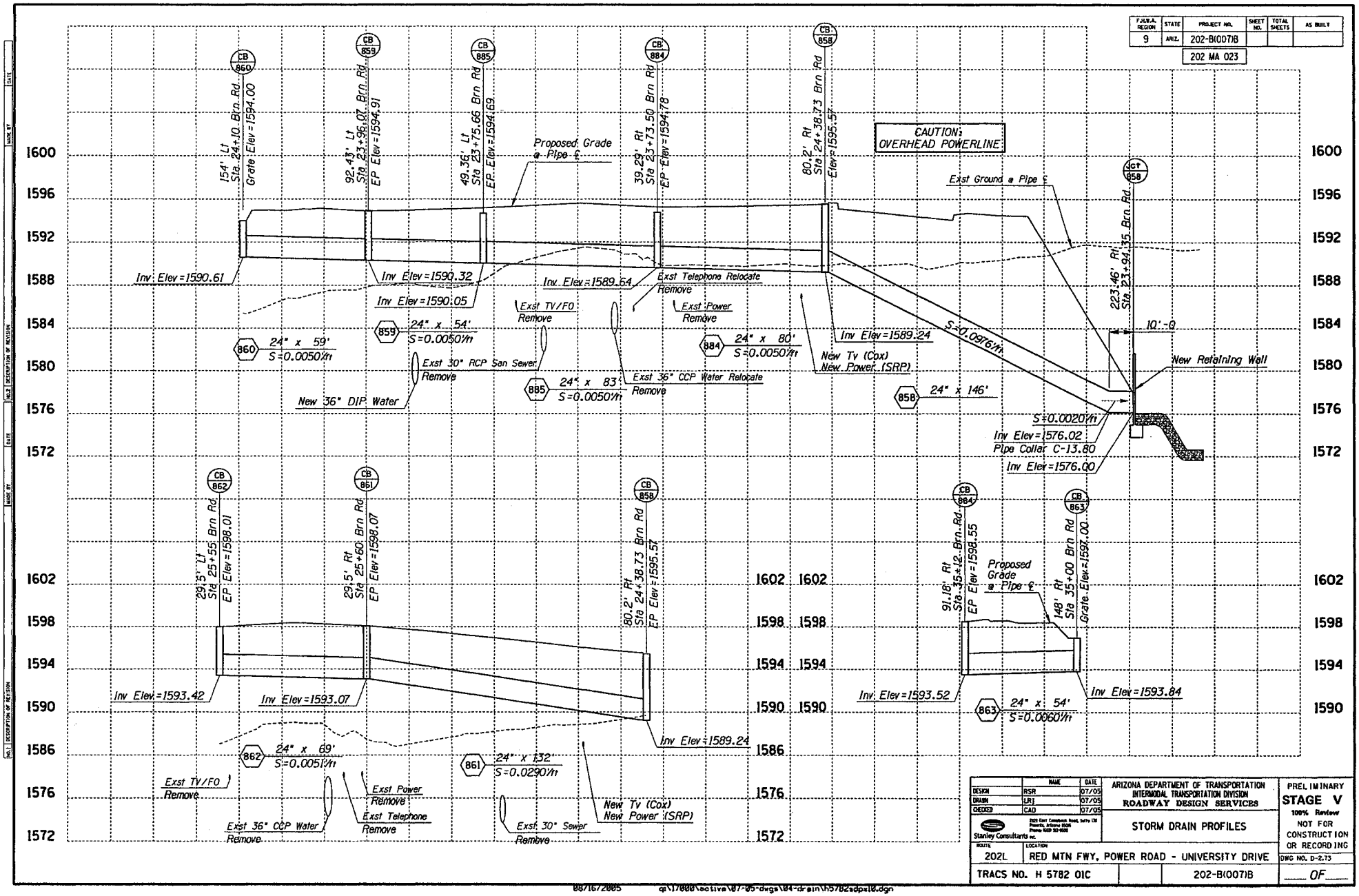

F.H.W.A. REGION	STATE	PROJECT NO.	SHEET NO.	TOTAL SHEETS	AS BUILT
9	ARIZ.	202-B(007)B			
		202 MA 023			

	NAME	DATE
DESIGN	RSR	07/05
DRAWN	LRJ	07/05
CHECKED	CAD	07/05

Stanley Consultants Inc.
2525 East Camelback Road, Suite 130
Phoenix, Arizona 85016
Phone (602) 952-0052

ARIZONA DEPARTMENT OF TRANSPORTATION
INTERMODAL TRANSPORTATION DIVISION
ROADWAY DESIGN SERVICES

STORM DRAIN PROFILES

PRELIMINARY
STAGE V
100% Review
NOT FOR CONSTRUCTION OR RECORDING

ROUTE	LOCATION	DWG NO. D-2.73
202L	RED MTN FWY, POWER ROAD - UNIVERSITY DRIVE	
TRACS NO. H 5782 01C	202-B(007)B	___ OF ___

08/16/2005 q:\17000\active\07-05-dwgs\04-drain\h5782sdps10.dgn

F.A.P.A. REGION	STATE	PROJECT NO.	SHEET NO.	TOTAL SHEETS	AS BUILT
9	ARIZ.	202-B(007)B			
		202 MA 023			

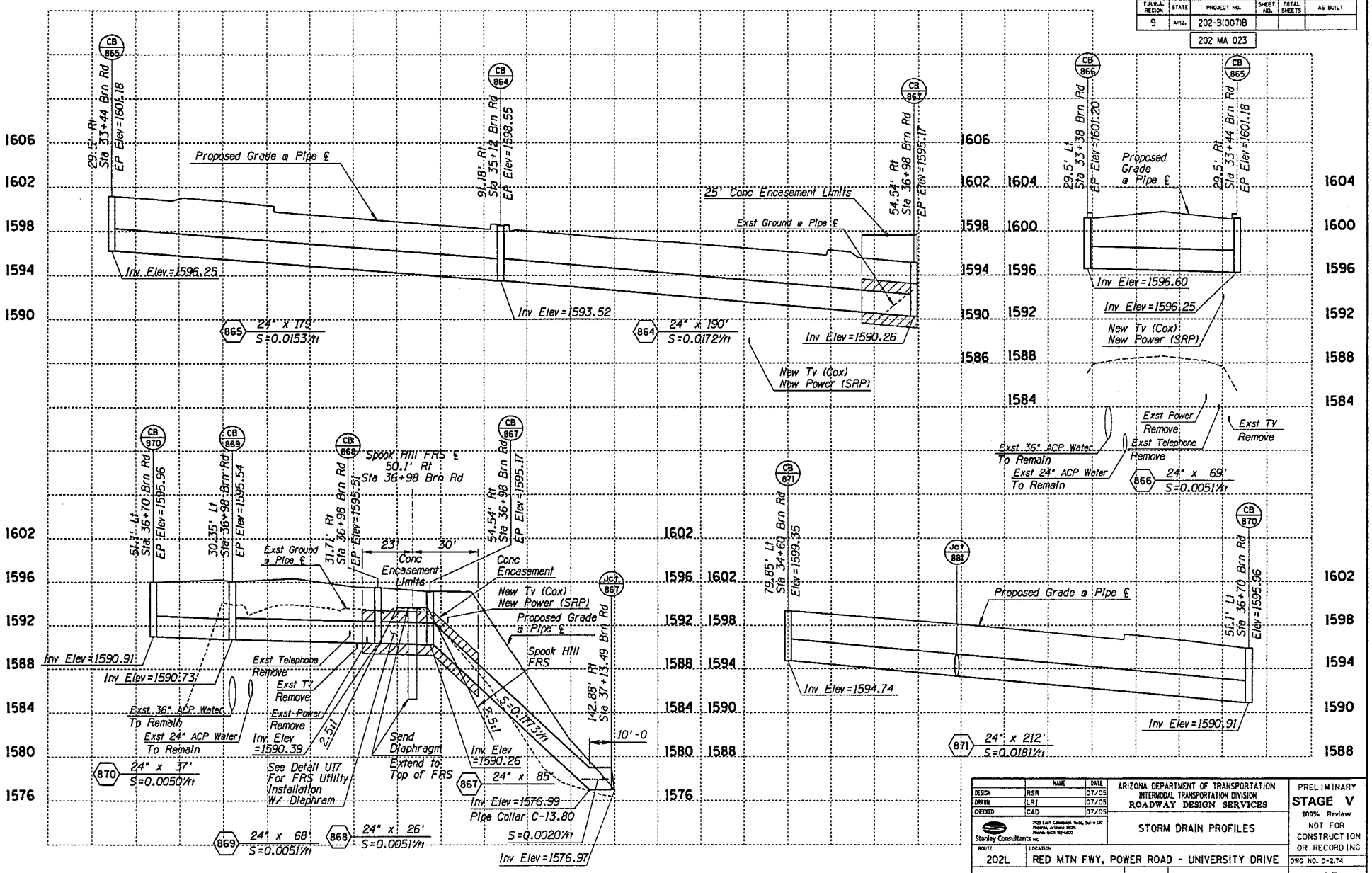

	NAME	DATE
DESIGN	RSR	07/05
DRAWN	LRJ	07/05
CHECKED	CAD	07/05

Stanley Consultants Inc. 2525 East Camelback Road, Suite 130 Phoenix, Arizona 85016 Phone: (602) 952-6000

ARIZONA DEPARTMENT OF TRANSPORTATION
INTERMODAL TRANSPORTATION DIVISION
ROADWAY DESIGN SERVICES

STORM DRAIN PROFILES

PRELIMINARY
STAGE V
100% Review
NOT FOR CONSTRUCTION OR RECORDING

ROUTE	LOCATION	DWG NO. D-2.74
202L	RED MTN FWY, POWER ROAD - UNIVERSITY DRIVE	
TRACS NO. H 5782 01C	202-B(007)B	___ OF ___

08/16/2005 G:\17000\active\07-05-dwgs\04-drain\h5782sdox11.dgn

F.A.H.W.A. REGION	STATE	PROJECT NO.	SHEET NO.	TOTAL SHEETS	AS BUILT
9	ARIZ.	202-B(007)B			
		202 MA 023			

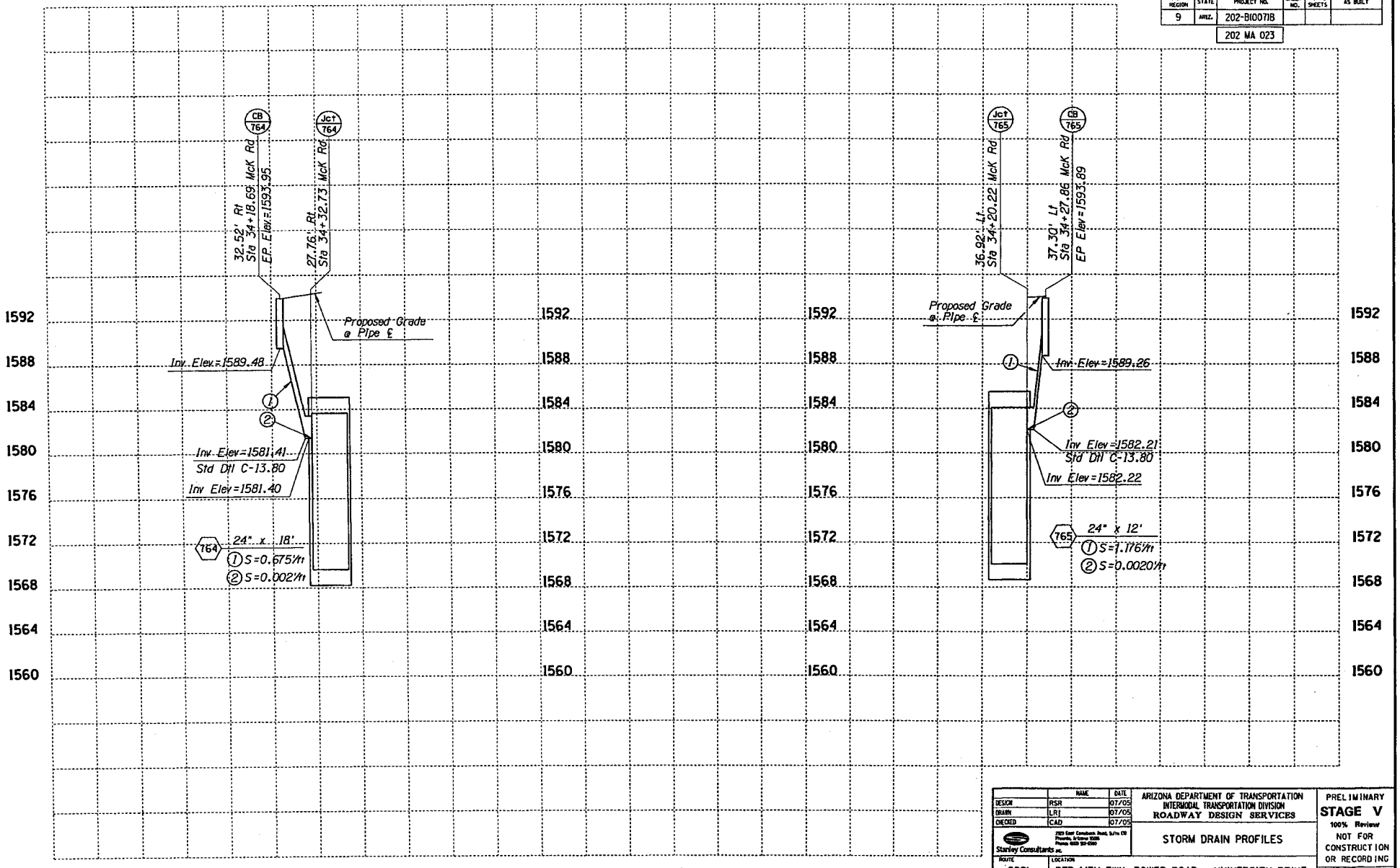

	NAME	DATE
DESIGN	RSR	07/05
DRAWN	LRJ	07/05
CHECKED	CAD	07/05

ARIZONA DEPARTMENT OF TRANSPORTATION
INTERMODAL TRANSPORTATION DIVISION
ROADWAY DESIGN SERVICES

Stanley Consultants Inc.
2525 East Camelback Road, Suite 130
Phoenix, Arizona 85016
Phone (602) 957-0300

STORM DRAIN PROFILES

PRELIMINARY
STAGE V
100% Review
NOT FOR CONSTRUCTION OR RECORDING

ROUTE	LOCATION	DWG NO. D-2.75
202L	RED MTN FWY, POWER ROAD - UNIVERSITY DRIVE	
TRACS NO. H 5782 01C		202-B(007)B

___ OF ___

08/16/2005 q:\17000\active\07-05-dwgs\04-drain\h5782sdpx05a.dgn

F.A.P.R.A. REGION	STATE	PROJECT NO.	SHEET NO.	TOTAL SHEETS	AS BUILT
9	ARIZ.	202-B(007)B			

202 MA 023

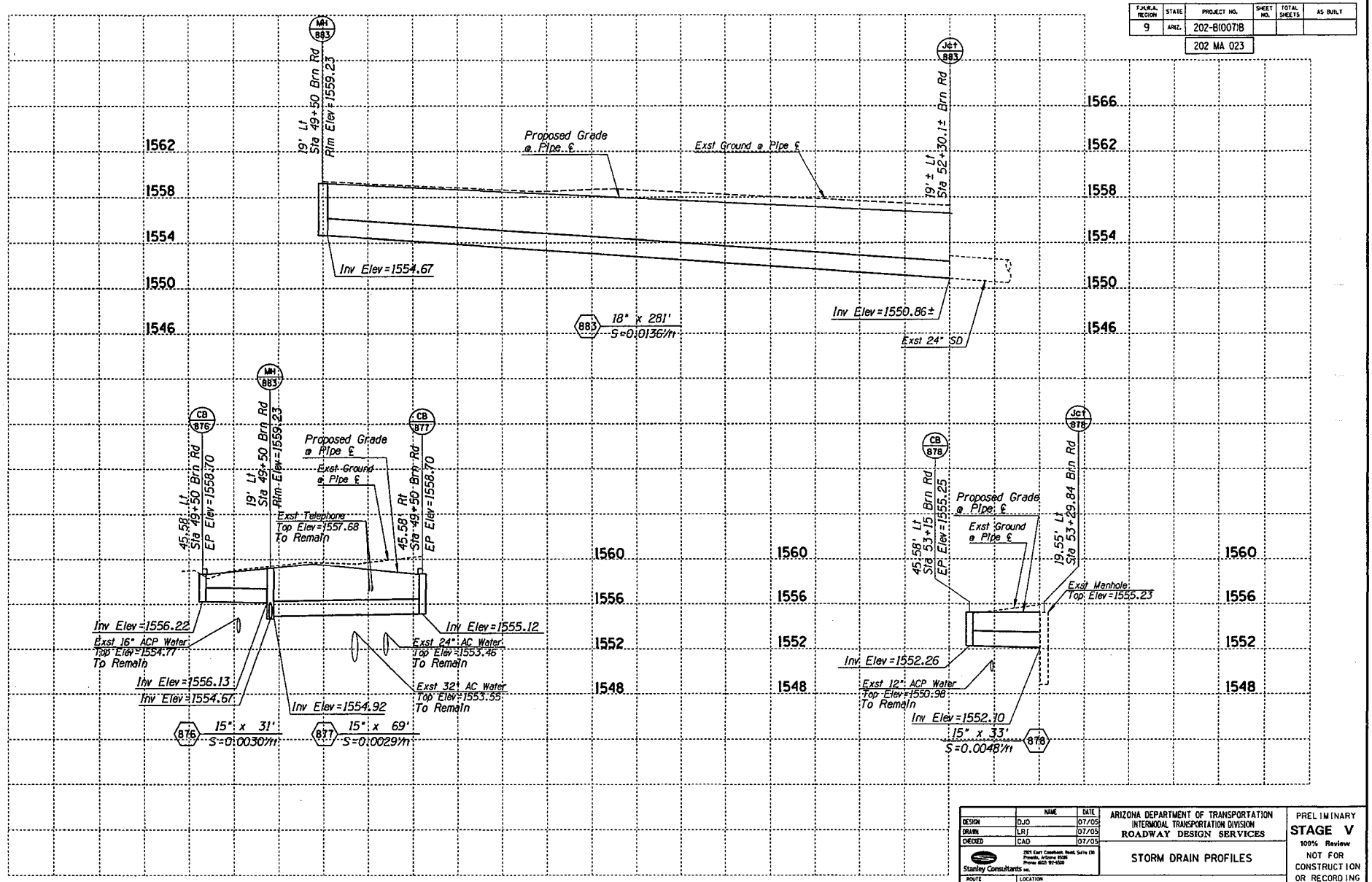

	NAME	DATE
DESIGN	DJO	07/05
DRAWN	LRJ	07/05
CHECKED	CAD	07/05

Stanley Consultants inc. 2501 East Camelback Road, Suite 130 Phoenix, Arizona 85016 Phone: (602) 957-9500

ARIZONA DEPARTMENT OF TRANSPORTATION
INTERMODAL TRANSPORTATION DIVISION
ROADWAY DESIGN SERVICES

STORM DRAIN PROFILES

PRELIMINARY
STAGE V
100% Review
NOT FOR CONSTRUCTION OR RECORDING

ROUTE	LOCATION	DWG NO. D-2.76
202L	RED MTN FWY, POWER ROAD - UNIVERSITY DRIVE	
TRACS NO. H 5782 01C	202-B(007)B	___ OF ___

08/16/2005 qt\17000\active\07-05-dwgs\04-drain\h5782sdpx12.dgn

F.H.W.A. REGION	STATE	PROJECT NO.	SHEET NO.	TOTAL SHEETS	AS BUILT
9	ARIZ.	202-B(007)B			

202 MA 023

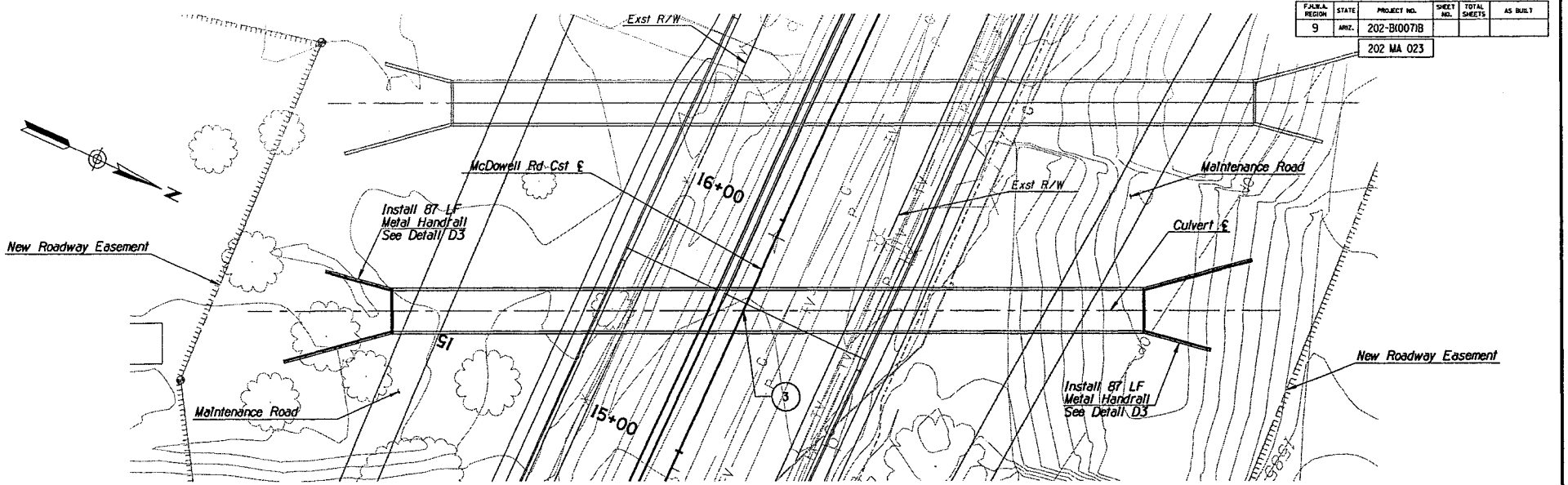

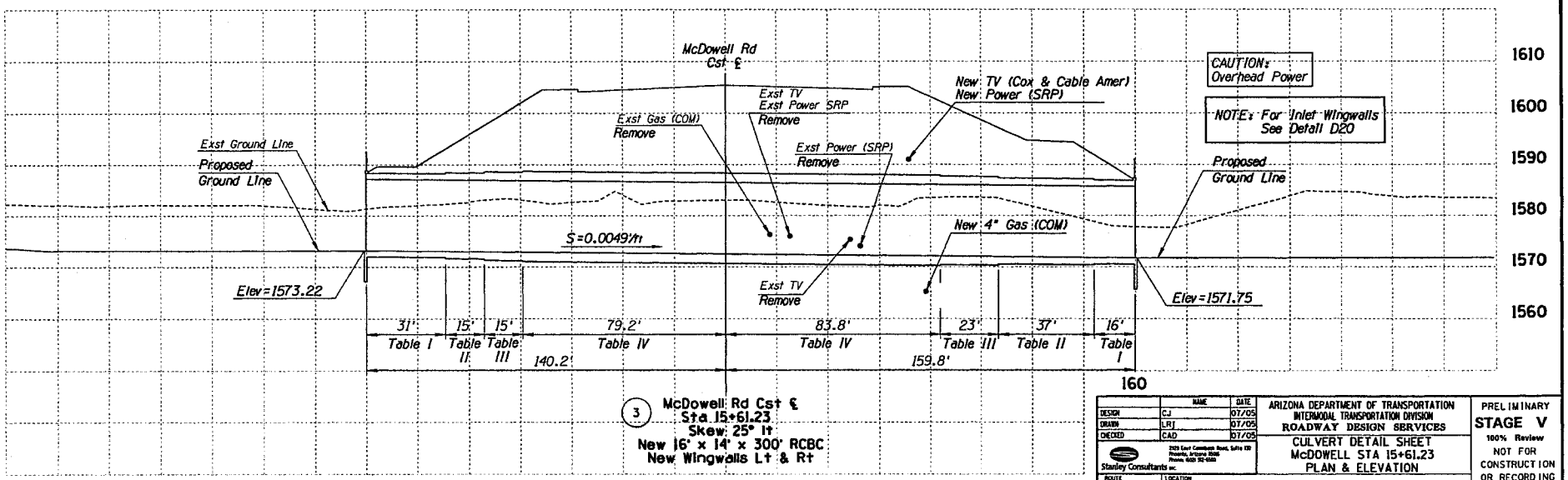

3 McDowell Rd Cst ℄
Sta 15+61.23
Skew: 25° lt
New 16' x 14' x 300' RCBC
New Wingwalls Lt & Rt

	NAME	DATE
DESIGN	CJ	07/05
DRAWN	LRJ	07/05
CHECKED	CAD	07/05

Stanley Consultants inc.
2929 East Camelback Road, Suite 120
Phoenix, Arizona 85016
Phone: (602) 952-0555

ARIZONA DEPARTMENT OF TRANSPORTATION
INTERMODAL TRANSPORTATION DIVISION
ROADWAY DESIGN SERVICES

CULVERT DETAIL SHEET
McDOWELL STA 15+61.23
PLAN & ELEVATION

PRELIMINARY
STAGE V
100% Review
NOT FOR CONSTRUCTION OR RECORDING

ROUTE	LOCATION	DWG NO. D-3.1
202L	RED MTN FWY, POWER ROAD - UNIVERSITY DRIVE	
TRACS NO. H 5782 01C	202-B(007)B	___ OF ___

08/15/2005 gt\17000\active\07-05-dwgs\04-drain\h5782dcv01.dgn

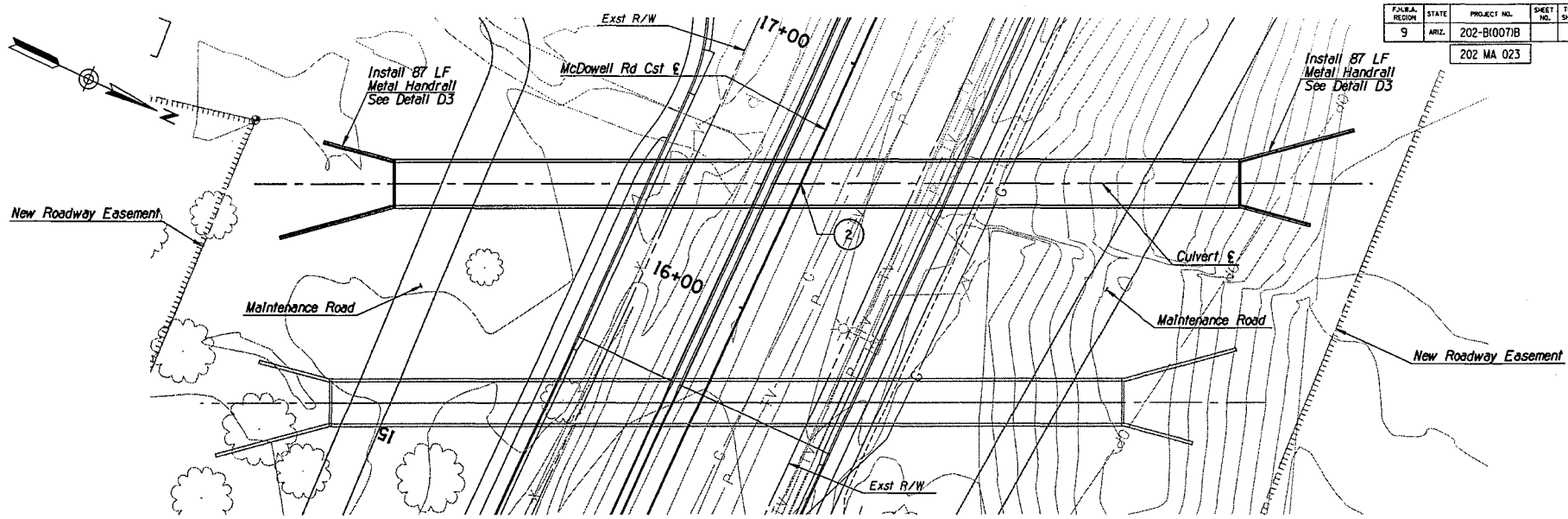

F.H.W.A. REGION	STATE	PROJECT NO.	SHEET NO.	TOTAL SHEETS	AS BUILT
9	ARIZ.	202-B(007)B			
		202 MA 023			

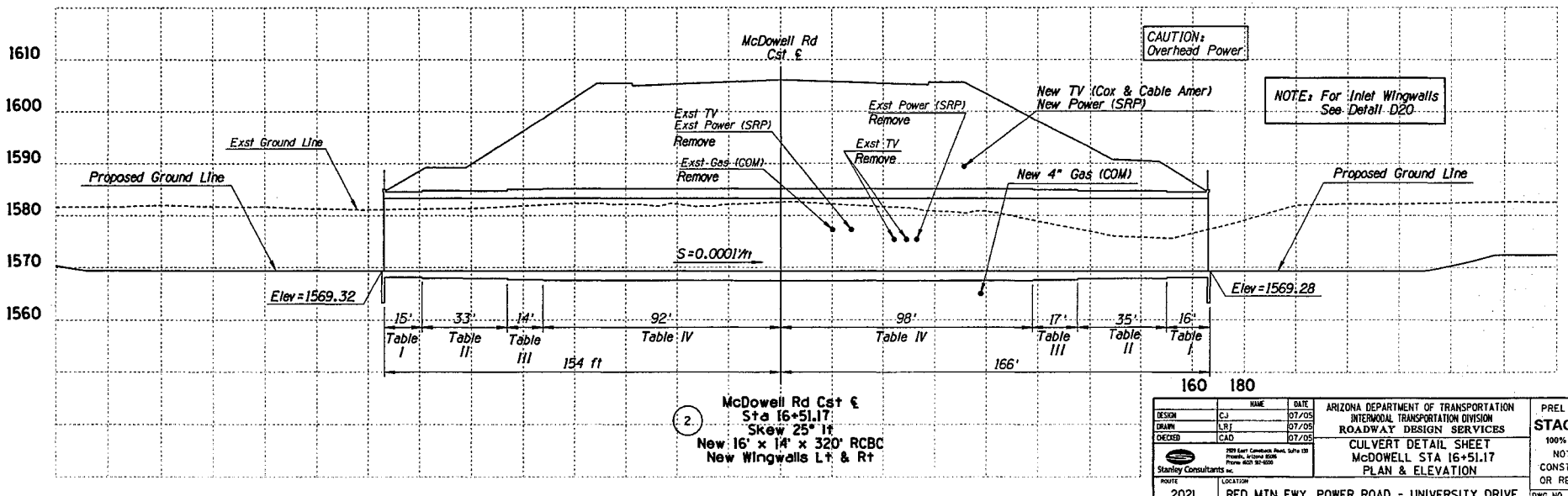

2

McDowell Rd Cst ℄
Sta 16+51.17
Skew 25° lt
New 16' x 14' x 320' RCBC
New Wingwalls Lt & Rt

	NAME	DATE
DESIGN	CJ	07/05
DRAWN	LRJ	07/05
CHECKED	CAD	07/05

Stanley Consultants Inc.
7229 East Camelback Road, Suite 130
Phoenix, Arizona 85016
Phone: (602) 367-9000

ARIZONA DEPARTMENT OF TRANSPORTATION
INTERMODAL TRANSPORTATION DIVISION
ROADWAY DESIGN SERVICES

CULVERT DETAIL SHEET
McDOWELL STA 16+51.17
PLAN & ELEVATION

PRELIMINARY
STAGE V
100% Review
NOT FOR CONSTRUCTION OR RECORDING

ROUTE	LOCATION	DWG NO. D-3.2
202L	RED MTN FWY. POWER ROAD - UNIVERSITY DRIVE	
TRACS NO. H 5782 01C	202-B(007)B	___ OF ___

08/16/2005 gt\17000\active\07-05-dwgs\04-drain\h5782dcv02.dgn

F.A.H.A. REGION	STATE	PROJECT NO.	SHEET NO.	TOTAL SHEETS	AS BUILT
9	ARIZ.	202-B(007)B			
		202 MA 023			

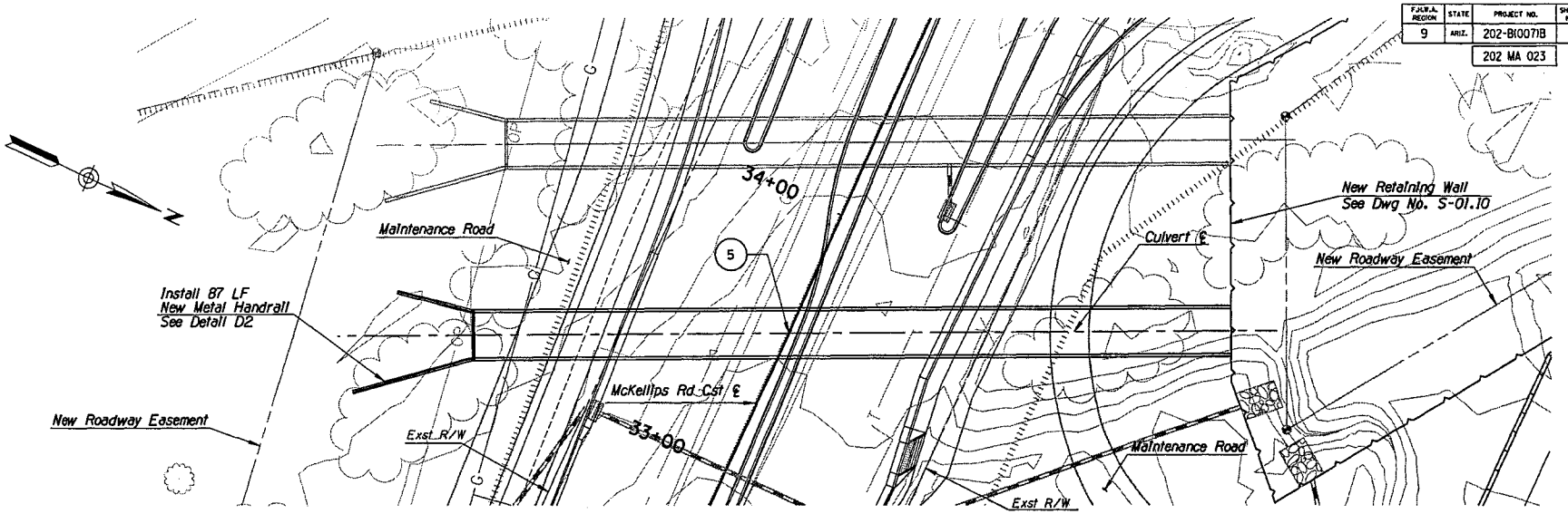

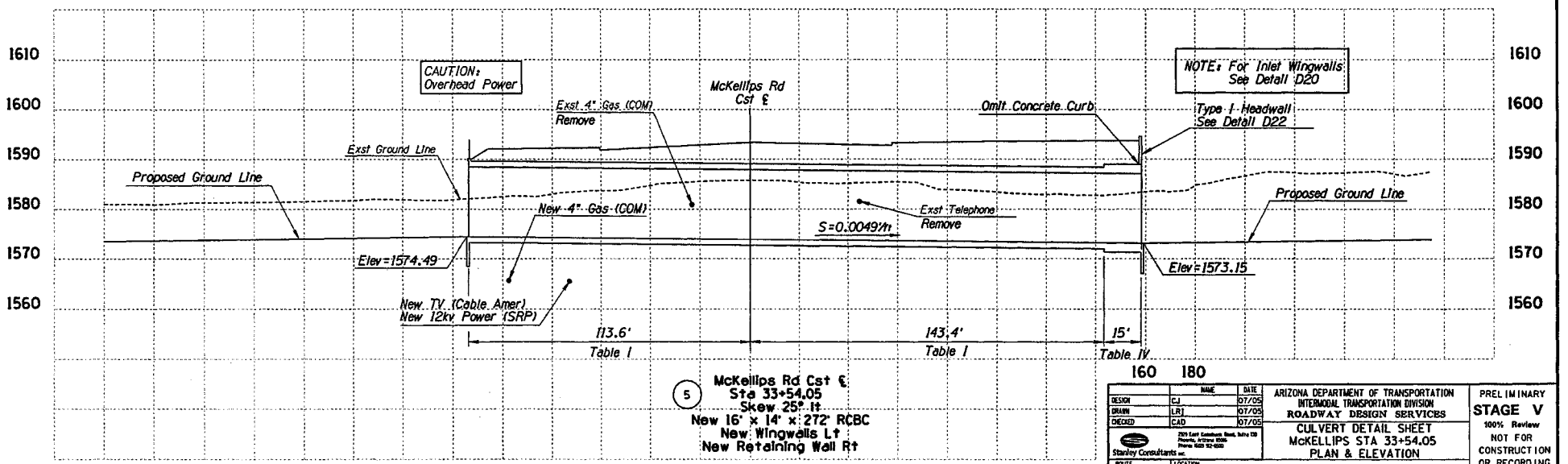

(5) McKellips Rd Cst ℄
Sta 33+54.05
Skew 25° lt
New 16' x 14' x 272' RCBC
New Wingwalls Lt
New Retaining Wall Rt

	NAME	DATE
DESIGN	CJ	07/05
DRAWN	LRJ	07/05
CHECKED	CAD	07/05

Stanley Consultants inc.
2901 East Camelback Road, Suite 120
Phoenix, Arizona 85016
Phone: (602) 912-0500

ARIZONA DEPARTMENT OF TRANSPORTATION
INTERMODAL TRANSPORTATION DIVISION
ROADWAY DESIGN SERVICES

CULVERT DETAIL SHEET
McKELLIPS STA 33+54.05
PLAN & ELEVATION

PRELIMINARY
STAGE V
100% Review
NOT FOR CONSTRUCTION OR RECORDING

ROUTE	LOCATION
202L	RED MTN FWY, POWER ROAD - UNIVERSITY DRIVE

DWG NO. D-3.3

TRACS NO. H 5782 01C | 202-B(007)B | ___ OF ___

08/16/2005 q:\17000\active\07-05-dwgs\04-drain\h5782dev03.dgn

NO. | DESCRIPTION OF REVISION | DATE | MADE BY

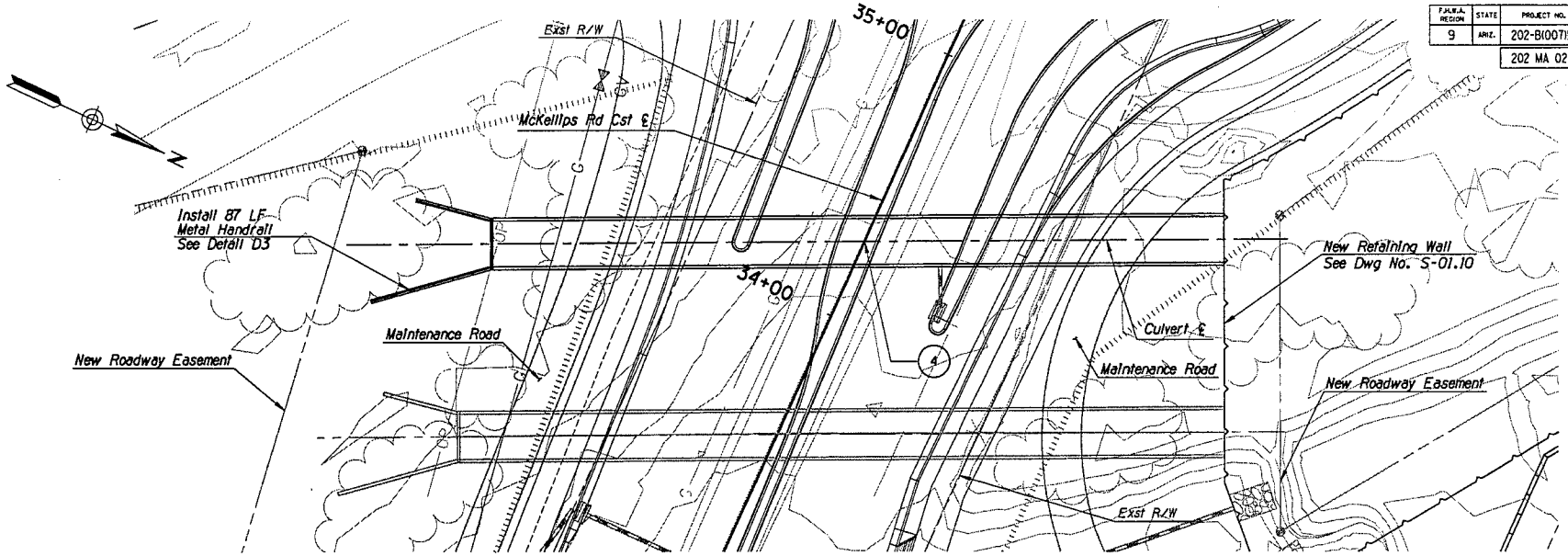

F.H.W.A. REGION	STATE	PROJECT NO.	SHEET NO.	TOTAL SHEETS	AS BUILT
9	ARIZ.	202-B(007)B			
		202 MA 023			

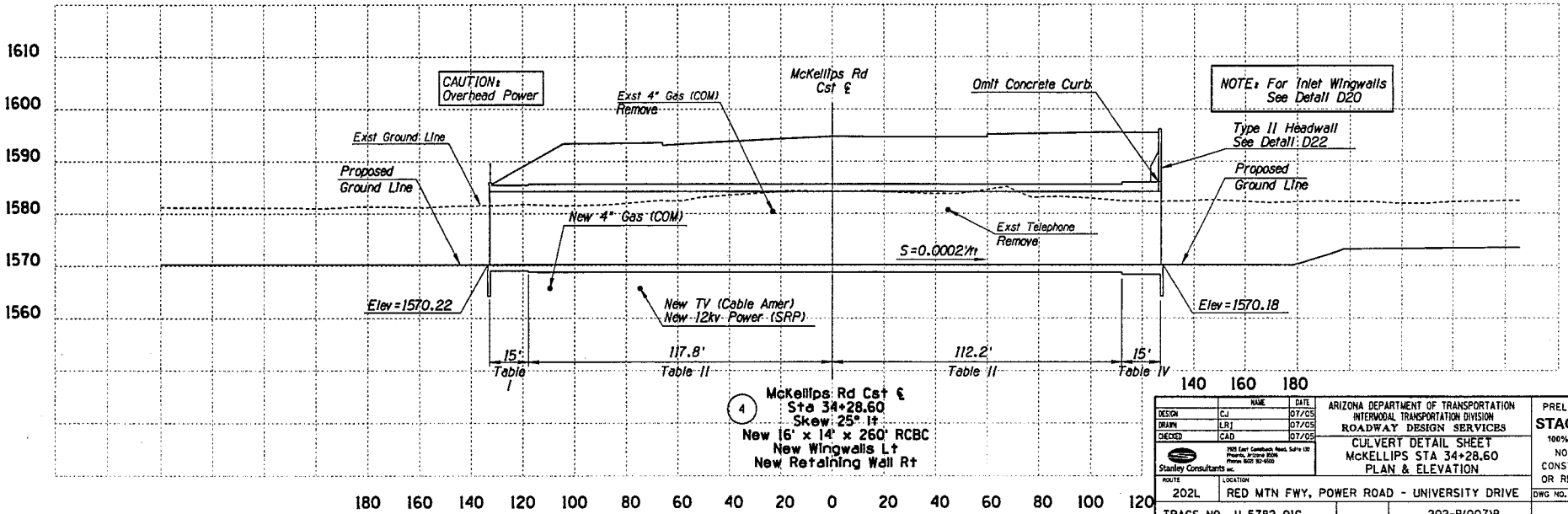

(4) McKellips Rd Cst ℄
Sta 34+28.60
Skew 25° lt
New 16' x 14' x 260' RCBC
New Wingwalls Lt
New Retaining Wall Rt

	NAME	DATE
DESIGN	CJ	07/05
DRAWN	LRJ	07/05
CHECKED	CAD	07/05

Stanley Consultants Inc.
2525 East Camelback Road, Suite 130
Phoenix, Arizona 85016
Phone (602) 952-6000

ARIZONA DEPARTMENT OF TRANSPORTATION
INTERMODAL TRANSPORTATION DIVISION
ROADWAY DESIGN SERVICES

CULVERT DETAIL SHEET
McKELLIPS STA 34+28.60
PLAN & ELEVATION

PRELIMINARY
STAGE V
100% Review
NOT FOR CONSTRUCTION OR RECORDING

ROUTE	LOCATION	DWG NO. D-3.4
202L	RED MTN FWY, POWER ROAD - UNIVERSITY DRIVE	
TRACS NO. H 5782 01C		202-B(007)B

___ OF ___

08/15/2005 n:\17000\active\07-05-dwg\04-dsgn\5578dsn04.dgn

F.A.H.A. REGION	STATE	PROJECT NO.	SHEET NO.	TOTAL SHEETS	AS BUILT
9	ARIZ.	202-B(007)B			
		202 MA 023			

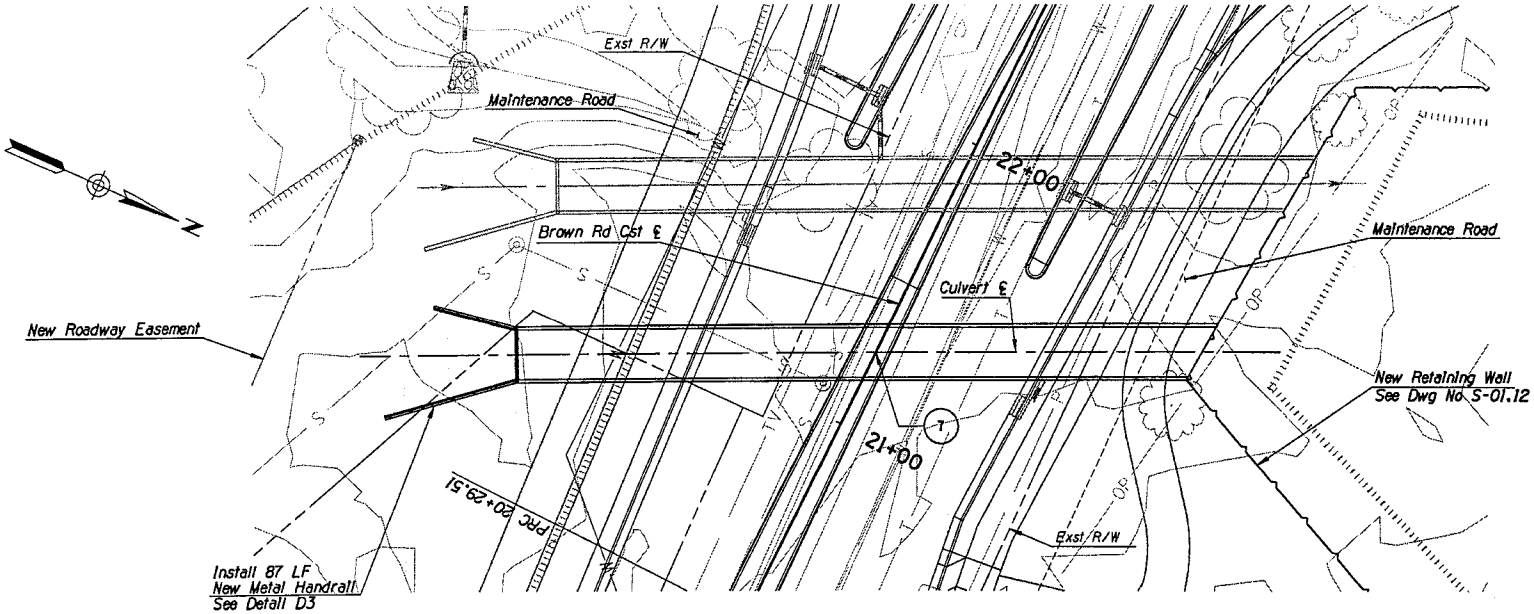

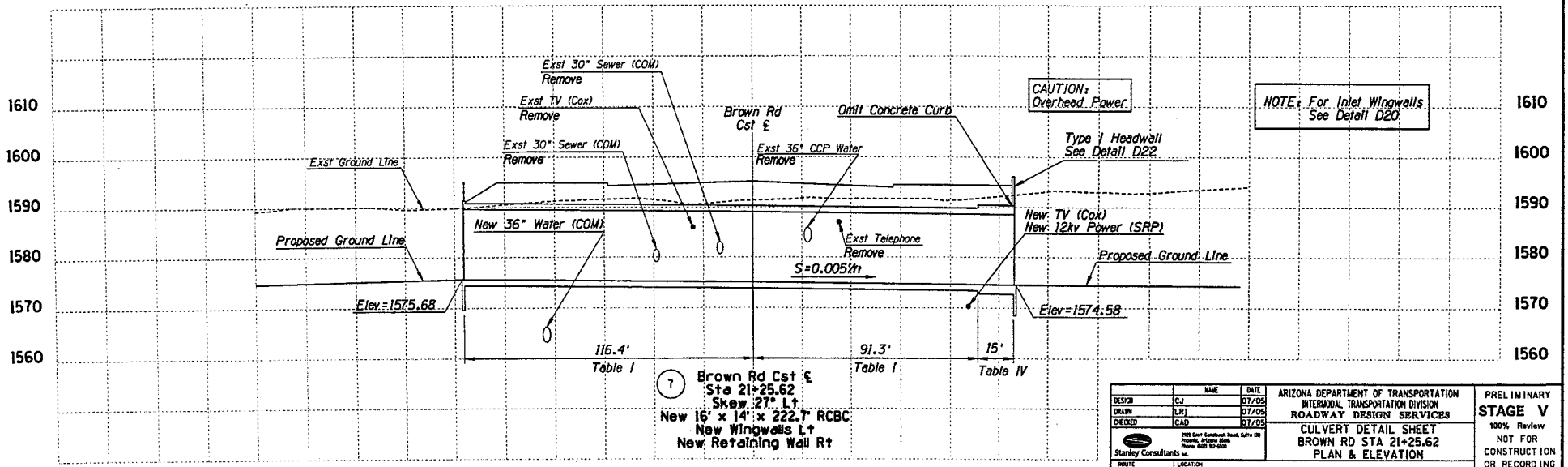

(7) Brown Rd Cst ℄
Sta 21+25.62
Skew 27° Lt
New 16' x 14' x 222.7' RCBC
New Wingwalls Lt
New Retaining Wall Rt

	NAME	DATE
DESIGN	CJ	07/05
DRAWN	LRJ	07/05
CHECKED	CAD	07/05

Stanley Consultants Inc.
2525 East Camelback Road, Suite 130
Phoenix, Arizona 85016
Phone (602) 952-2600

ARIZONA DEPARTMENT OF TRANSPORTATION
INTERMODAL TRANSPORTATION DIVISION
ROADWAY DESIGN SERVICES

CULVERT DETAIL SHEET
BROWN RD STA 21+25.62
PLAN & ELEVATION

ROUTE	LOCATION
202L	RED MTN FWY, POWER ROAD - UNIVERSITY DRIVE

TRACS NO. H 5782 01C | 202-B(007)B

PRELIMINARY
STAGE V
100% Review
NOT FOR CONSTRUCTION OR RECORDING

DWG NO. D-3.5

OF

08/16/2005 q:\17000\active\07-05-d+gs\04-drain\h5782dcv05.dgn

NO.	DESCRIPTION OF REVISION	DATE	MADE BY

F.A.H.A. REGION	STATE	PROJECT NO.	SHEET NO.	TOTAL SHEETS	AS BUILT
9	ARIZ.	202-B(007)B			
		202 MA 023			

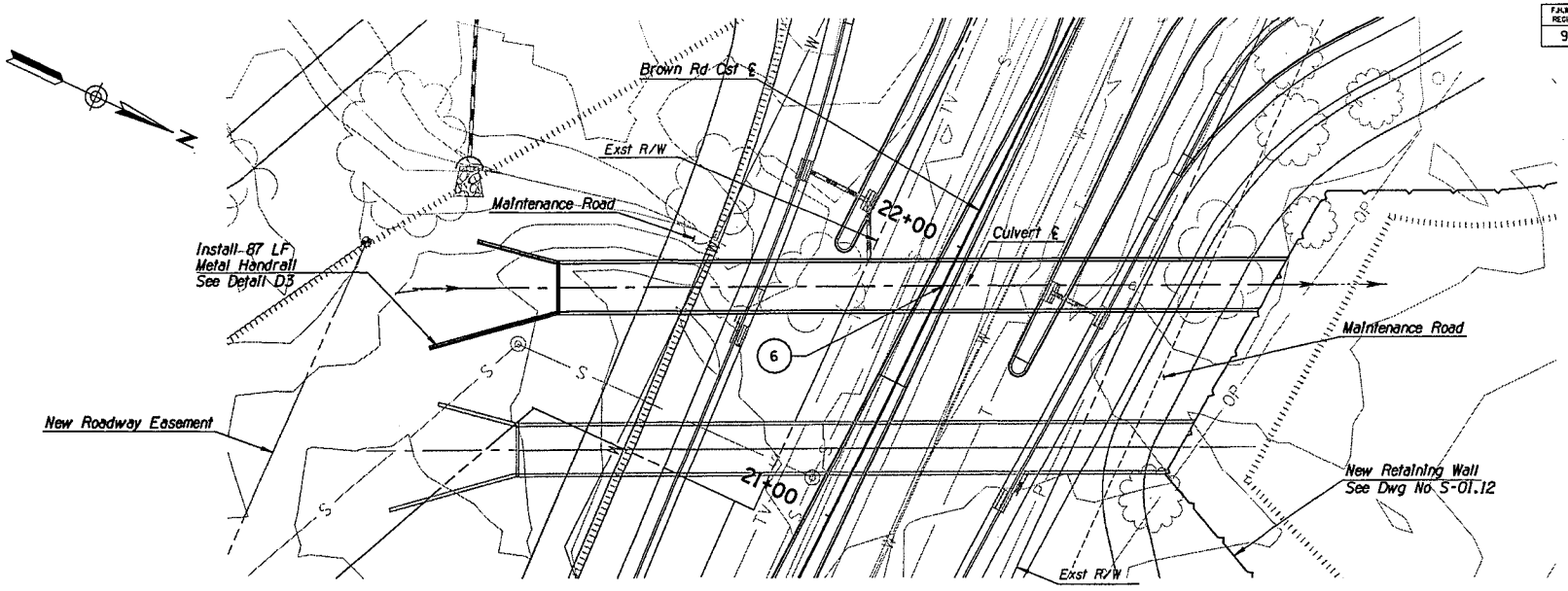

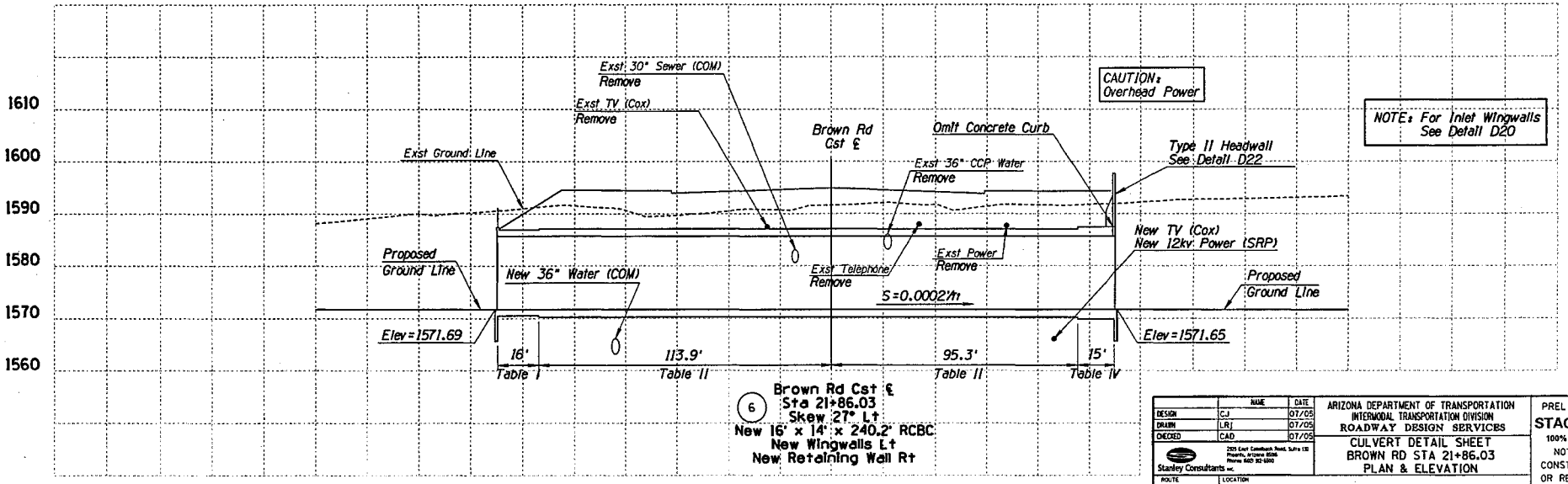

	NAME	DATE
DESIGN	CJ	07/05
DRAWN	LRJ	07/05
CHECKED	CAD	07/05

Stanley Consultants Inc.
2175 East Camelback Road, Suite 130
Phoenix, Arizona 85016
Phone: (602) 912-5892

ARIZONA DEPARTMENT OF TRANSPORTATION
INTERMODAL TRANSPORTATION DIVISION
ROADWAY DESIGN SERVICES

CULVERT DETAIL SHEET
BROWN RD STA 21+86.03
PLAN & ELEVATION

PRELIMINARY
STAGE V
100% Review
NOT FOR
CONSTRUCTION
OR RECORDING

ROUTE	LOCATION	DWG NO. D-3.6
202L	RED MTN FWY, POWER ROAD - UNIVERSITY DRIVE	
TRACS NO. H 5782 01C		202-B(007)B

___ OF ___

08/16/2005 q:\17000\active\07-05-dwgs\04-drain\h5782dcv06.dgn

F.H.W.A. REGION	STATE	PROJECT NO.	SHEET NO.	TOTAL SHEETS	AS BUILT
9	ARIZ.	202-B(007)B			
		202 MA 023			

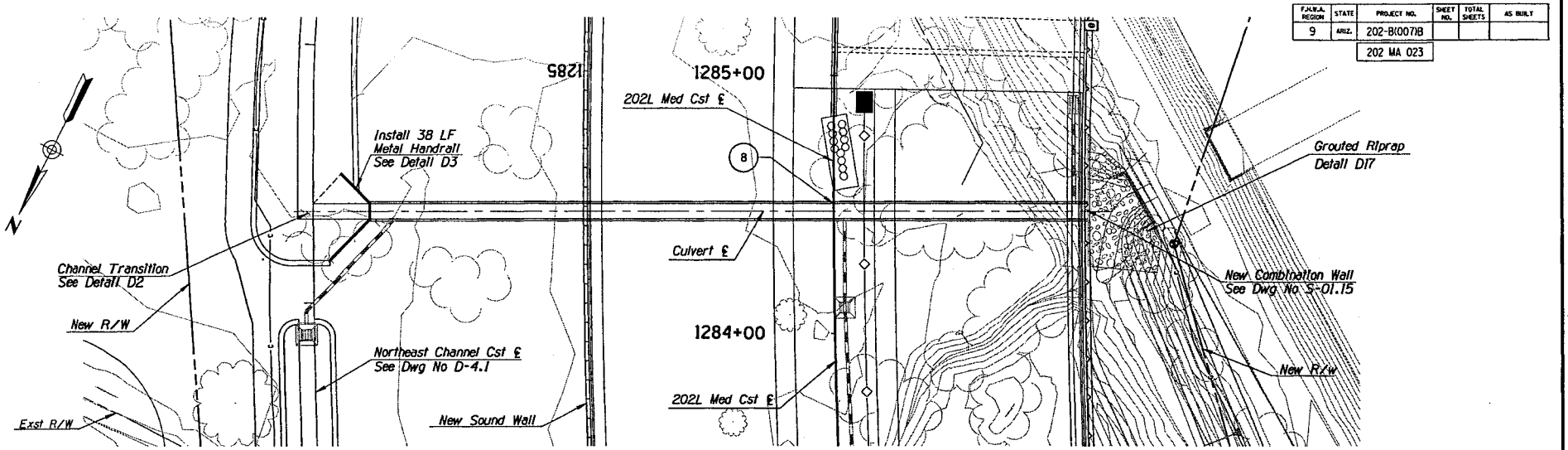

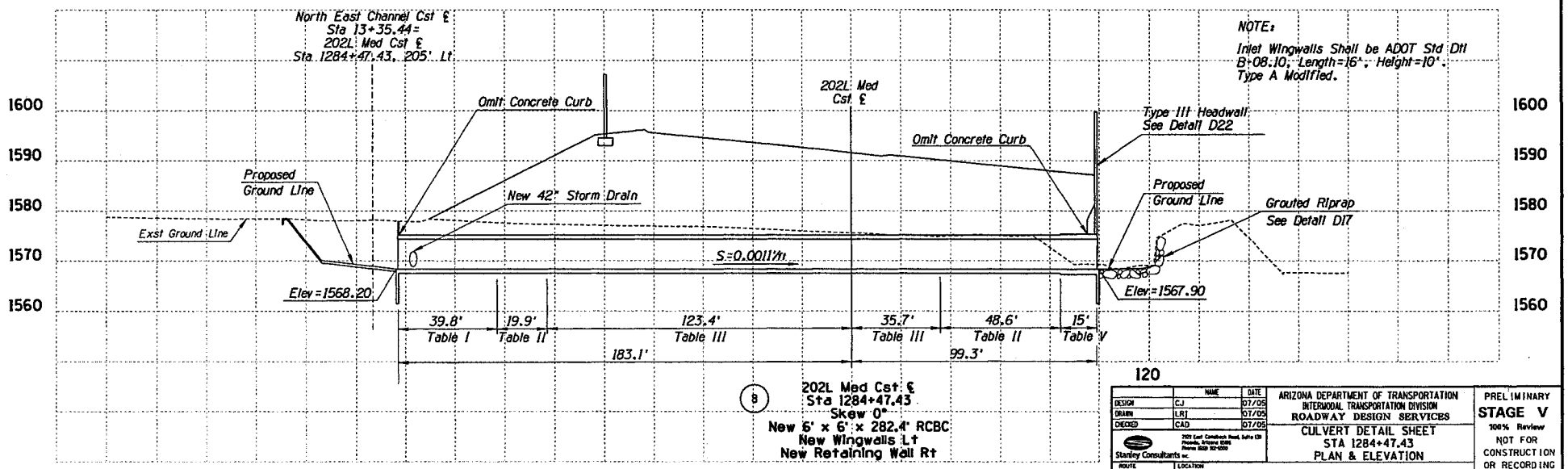

	NAME	DATE
DESIGN	CJ	07/05
DRAWN	LRJ	07/05
CHECKED	CAD	07/05

Stanley Consultants inc.

ARIZONA DEPARTMENT OF TRANSPORTATION
INTERMODAL TRANSPORTATION DIVISION
ROADWAY DESIGN SERVICES

CULVERT DETAIL SHEET
STA 1284+47.43
PLAN & ELEVATION

PRELIMINARY
STAGE V
100% Review
NOT FOR CONSTRUCTION OR RECORDING

ROUTE	LOCATION	DWG NO. D-3.7
202L	RED MTN FWY, POWER ROAD - UNIVERSITY DRIVE	
TRACS NO. H 5782 01C		202-B(007)B

OF

08/15/2005 q:\17000\active\07-05-dwgs\04-drain\h5782dcv07.dgn

F.H.W.A. REGION	STATE	PROJECT NO.	SHEET NO.	TOTAL SHEETS	AS BUILT
9	ARIZ.	202-B(007)B			
		202 MA 023			

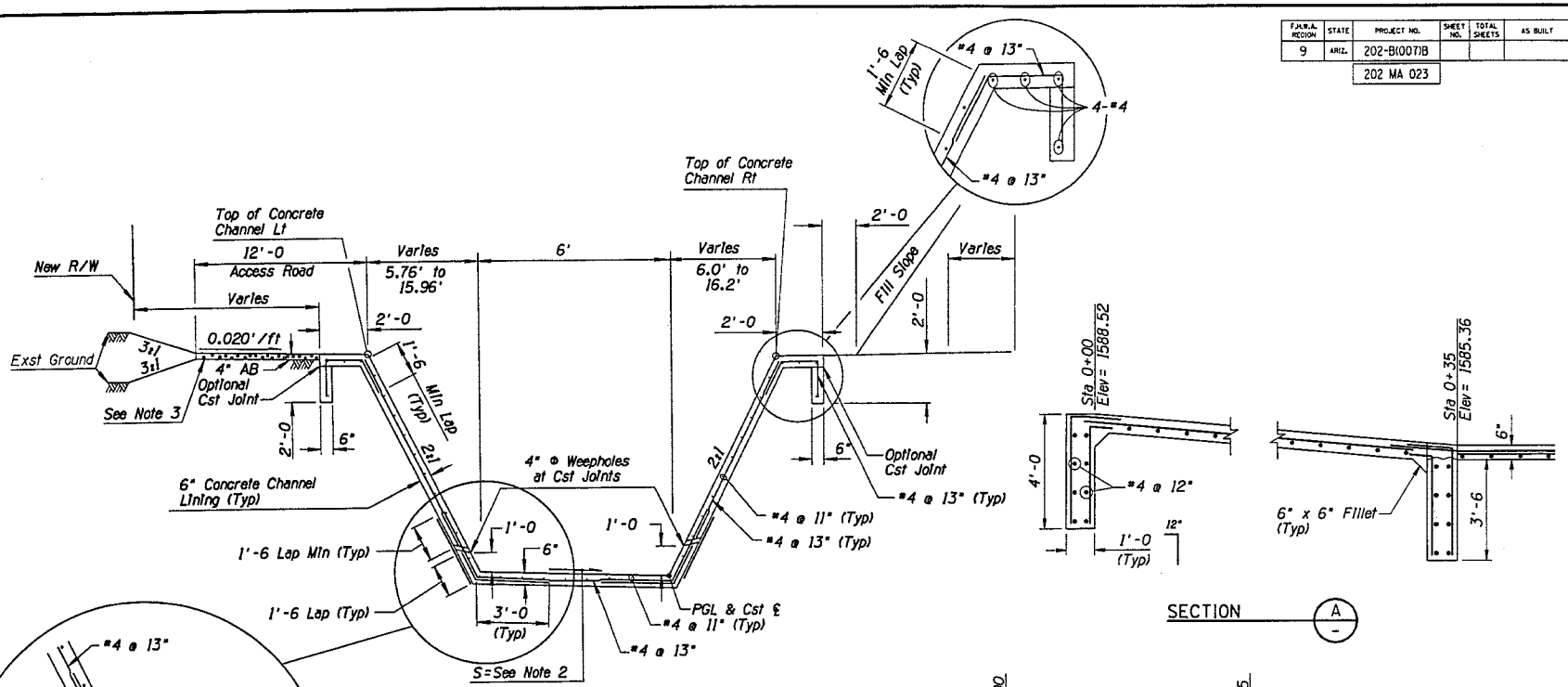

SECTION A

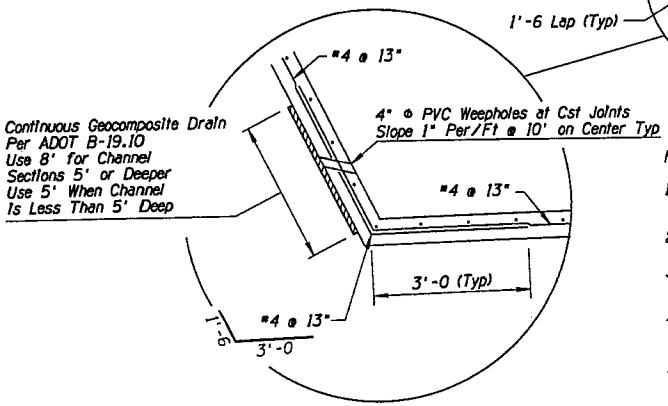

TYPICAL NORTH EAST CHANNEL

Notes:

1. Top of channel lining Lt is to be a minimum of 6" below existing ground, at R/W line.
2. Drop in elevation across the channel bottom shall be 2%.
3. Top 2 ft of earth under the maintenance road shall be material compacted 95% of maximum dry density.
4. All concrete shall be Class S (f'_c=3000 psi).
5. All reinforced steel shall conform to ASTM A615/A615M-96a, Grade 60.
6. All reinforcing steel shall have a minimum 2" clear cover to grade and 2" to exposed surfaces unless otherwise noted.
7. Channel lining shall be continuously reinforced without expansion or tooled joints except as follows: Construction joints shall be located at the end of a day's pour or when concrete placement stops for more than forty-five (45) minutes and between longitudinal paving strips. Longitudinal construction joints shall be located one foot up each side slope. Reinforcing steel shall be continuous through lining construction joints and through joints with box culverts and other hydraulic structures unless noted otherwise.

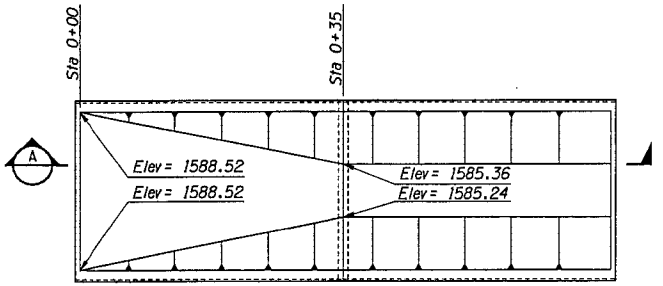

CHANNEL ACCESS RAMP

DETAIL D1

	NAME	DATE
DESIGN	RSR	07/05
DRAWN	AEM	07/05
CHECKED	CAD	07/05

Stanley Consultants Inc. 7295 East Gemsbok Road, Suite 130 Prescott, Arizona 86301 Phone: (602) 912-6500

ARIZONA DEPARTMENT OF TRANSPORTATION
INTERMODAL TRANSPORTATION DIVISION
ROADWAY DESIGN SERVICES

TYPICAL NORTH EAST CHANNEL SECTION

PRELIMINARY
STAGE V
100% Review
NOT FOR CONSTRUCTION OR RECORDING

ROUTE	LOCATION	DWG NO. D-4.5
202L	RED MTN FWY, POWER ROAD - UNIVERSITY DRIVE	
TRACS NO. H 5782 01C	202-B(007)B	___ OF ___

08/16/2005 q:\17000\active\07-05-dwgs\04-drain\h5782dd05.dgn

F.H.W.A. REGION	STATE	PROJECT NO.	SHEET NO.	TOTAL SHEETS	AS BUILT
9	ARIZ.	202-B(007)B			
		202 MA 023			

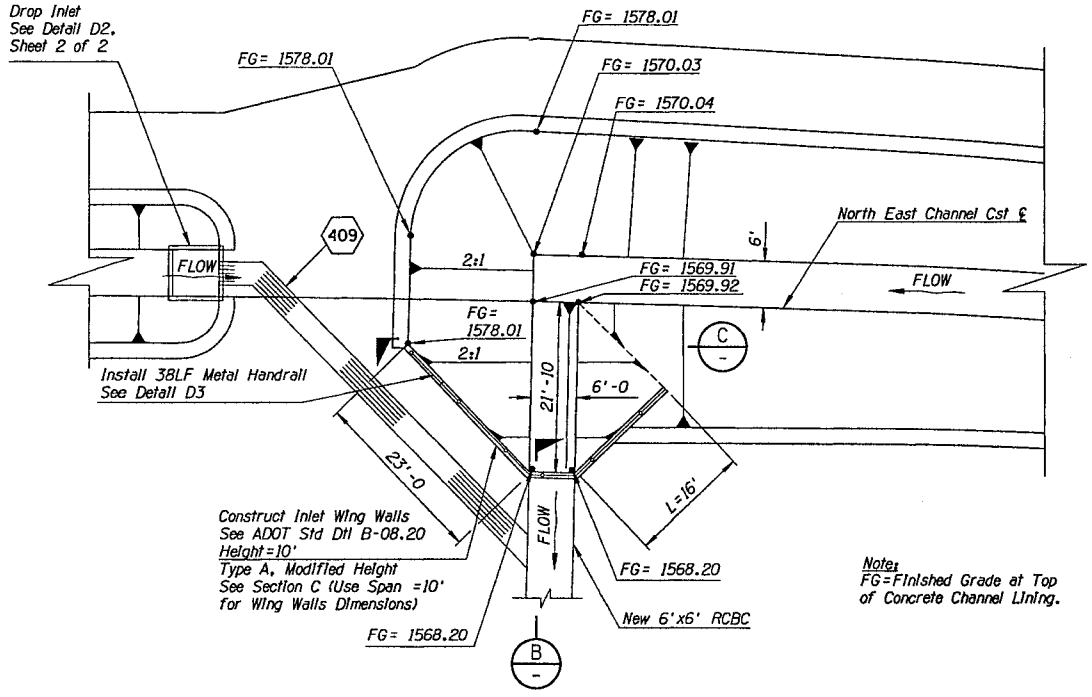

PLAN-CHANNEL TRANSITION

Note:
FG=Finished Grade at Top of Concrete Channel Lining.

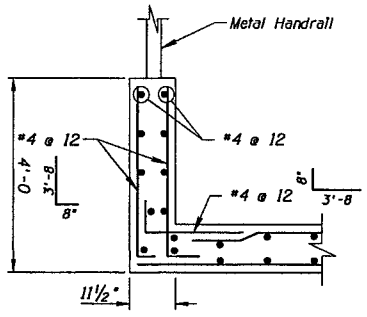

SECTION B
Headwall

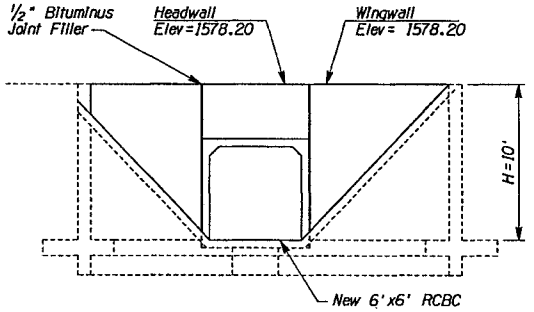

SECTION C
6'x6' RCBC Inlet

DETAIL D2

SHEET 1 OF 2

	NAME	DATE
DESIGN	RSR	07/05
DRAWN	AEM	07/05
CHECKED	CAD	07/05

ARIZONA DEPARTMENT OF TRANSPORTATION
INTERMODAL TRANSPORTATION DIVISION
ROADWAY DESIGN SERVICES

Stanley Consultants inc.
2525 East Camelback Road, Suite 130
Phoenix, Arizona 85016
Phone: (602) 912-6500

CHANNEL TRANSITION

PRELIMINARY
STAGE V
100% Review
NOT FOR CONSTRUCTION OR RECORDING

ROUTE	LOCATION	DWG NO. D-4.6
202L	RED MTN FWY, POWER ROAD - UNIVERSITY DRIVE	
TRACS NO. H 5782 01C		202-B(007)B ___ OF ___

08/16/2005 q:\17008\active\07-05-dwgs\04-drain\h5782dd06.dgn

F.H.W.A. REGION	STATE	PROJECT NO.	SHEET NO.	TOTAL SHEETS	AS BUILT
9	ARIZ.	202-B(007)B			
		202 MA 023			

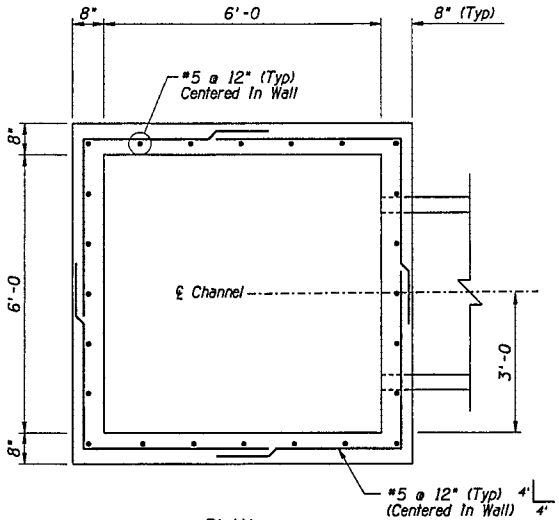

PLAN

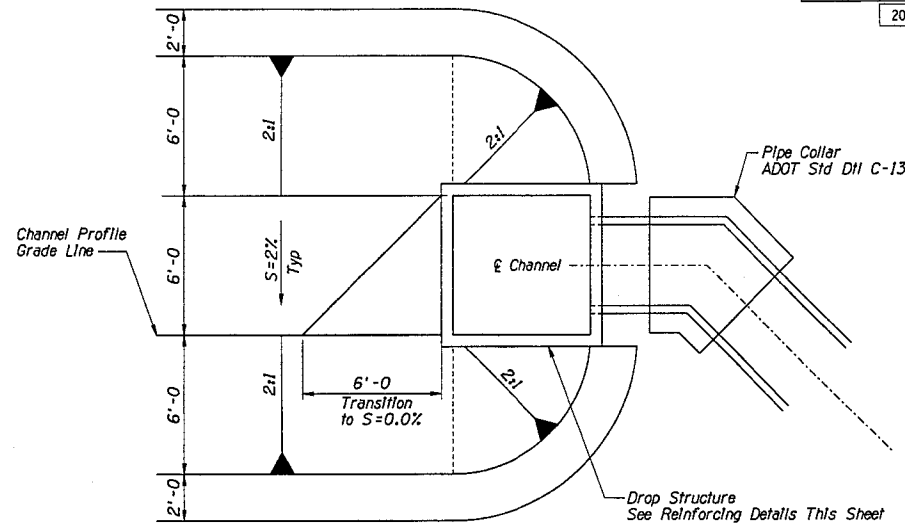

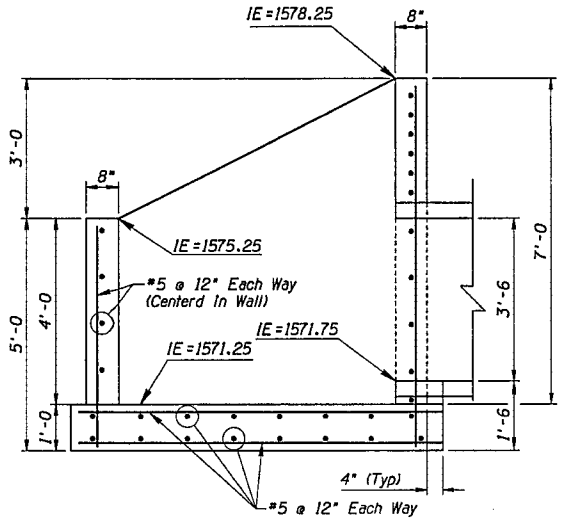

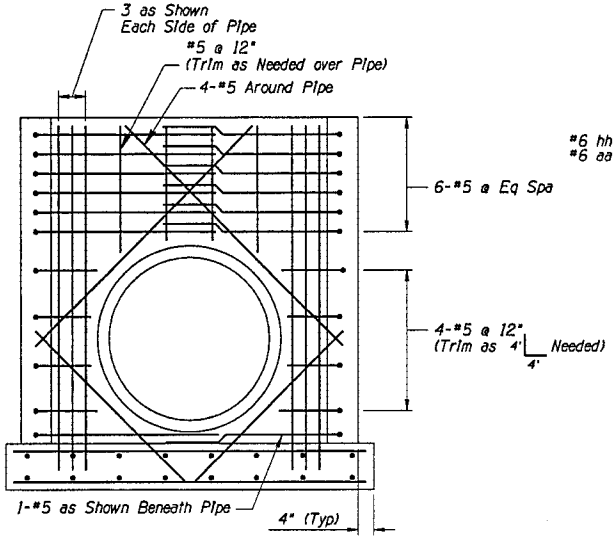

BACK WALL (@ PIPE PENETRATION)

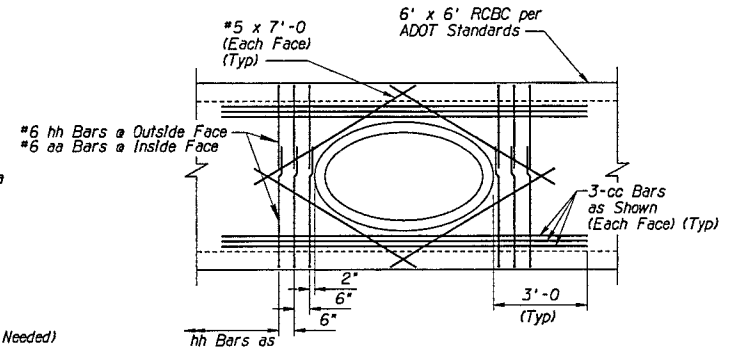

ELEV: SUPPLEMENTAL REINFORCING @ 42" RCP OPENING

(Typical RCBC Reinforcing not Shown for Clarity)

DETAIL D2

SHEET 2 OF 2

	NAME	DATE
DESIGN	RSR	07/05
DRAWN	AEM	07/05
CHECKED	CAD	07/05

Stanley Consultants inc.
2525 East Camelback Road, Suite 130
Phoenix, Arizona 85016
Phone (602) 952-8300

ARIZONA DEPARTMENT OF TRANSPORTATION
INTERMODAL TRANSPORTATION DIVISION
ROADWAY DESIGN SERVICES

DROP STRUCTURE
REINFORCING DETAILS

PRELIMINARY
STAGE V
100% Review
NOT FOR CONSTRUCTION OR RECORDING

ROUTE	LOCATION	DWG NO. D-4.6.e
202L	RED MTN FWY, POWER ROAD - UNIVERSITY DRIVE	
TRACS NO. H 5782 01C	202-B(007)B	___ OF ___

F.A.H.A. REGION	STATE	PROJECT NO.	SHEET NO.	TOTAL SHEETS	AS BUILT
9	ARIZ.	202-B(007)B			
		202 MA 023			

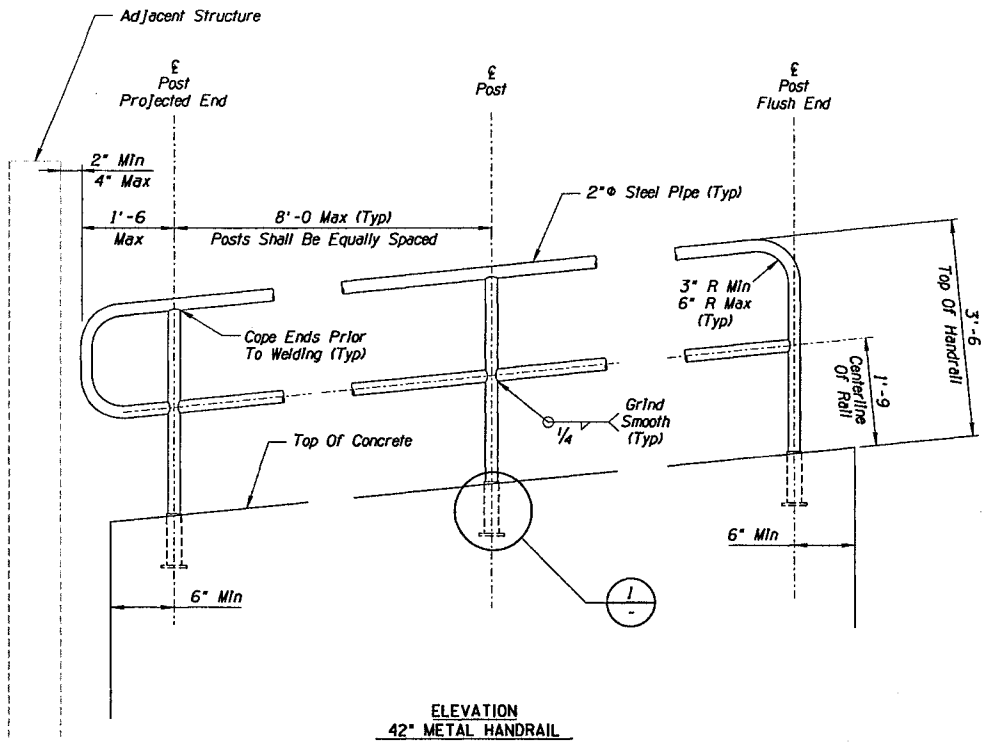

ELEVATION
42" METAL HANDRAIL
N.T.S.

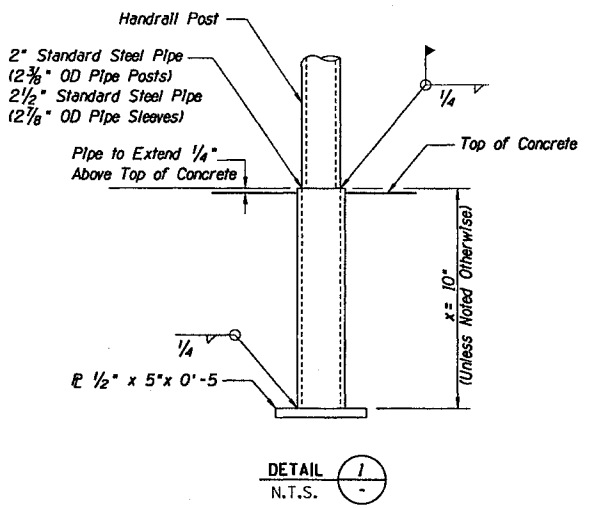

DETAIL 1
N.T.S.

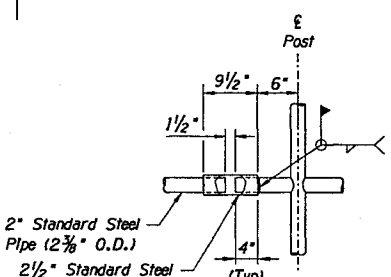

EXPANSION SLEEVE
N.T.S.

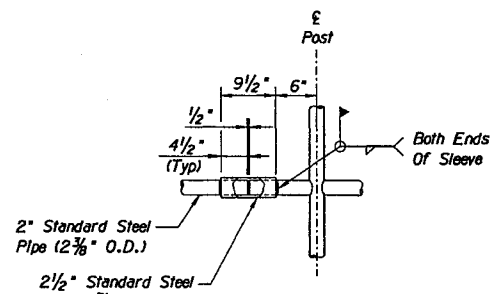

RAIL SPLICE
N.T.S.

RAIL DETAIL

Notes:

1. All Posts Shall Be Vertical & Rails Shall Be Parllel To Top of Concrete.
2. HandRail Shall Be Continous At Construction Joints & Expansion Sleeves Shall Be Used At Expansion Joints.
3. All Structural Steel Shall Be ASTM A36 Or ASTM A572. All Pipe Shall Be ASTM A53 Grade B, Standard Weight.
4. All Handrail Shall Be Galvanized In Accordance With ASTM A153.
5. Field Welds Shall Be Treated With A Zinc Rich Compound After Welding In Accordance With The Manufacturer's Instructions.
6. All Portions Of The Handrail And Connections Shall Be Painted In Accordance With The Special Provisions.
7. Any Paint That Has Been Damaged Due To Handling, Transporting Or Welding Shall Be Repaired By The Contractor At No Cost To The State.

DETAIL D3

	NAME	DATE
DESIGN	RSR	07/05
DRAWN	AEM	07/05
CHECKED	CAD	07/05

Stanley Consultants inc.

ARIZONA DEPARTMENT OF TRANSPORTATION
INTERMODAL TRANSPORTATION DIVISION
ROADWAY DESIGN SERVICES

METAL HANDRAIL DETAIL

PRELIMINARY
STAGE V
100% Review
NOT FOR CONSTRUCTION OR RECORDING

ROUTE	LOCATION	DWG NO. D-4.7
202L	RED MTN FWY, POWER ROAD - UNIVERSITY DRIVE	
TRACS NO. H 5782 01C		202-B(007)B ___ OF ___

08/16/2005 q:\17000\active\07-05-dwgs\04-drain\h5782dd07.dgn

F.H.W.A. REGION	STATE	PROJECT NO.	SHEET NO.	TOTAL SHEETS	AS BUILT
9	ARIZ.	202-B(007)B			
		202 MA 023			

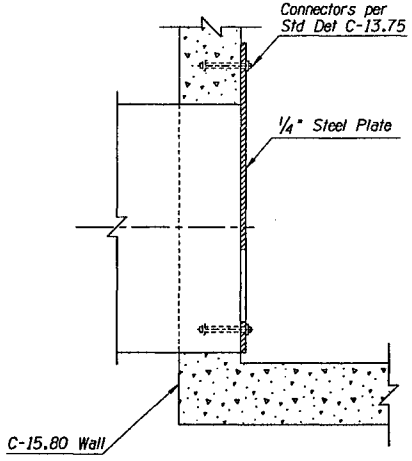

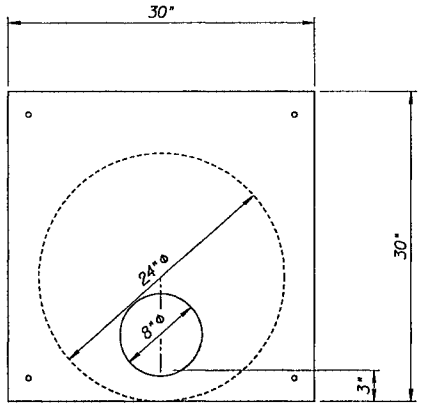

CATCH BASIN ID'S
CB 353
CB 355

Note:
This detail shall be considered incidental to the cost of catch basins 353 and 355.

DETAIL D4
ORIFICE PLATE

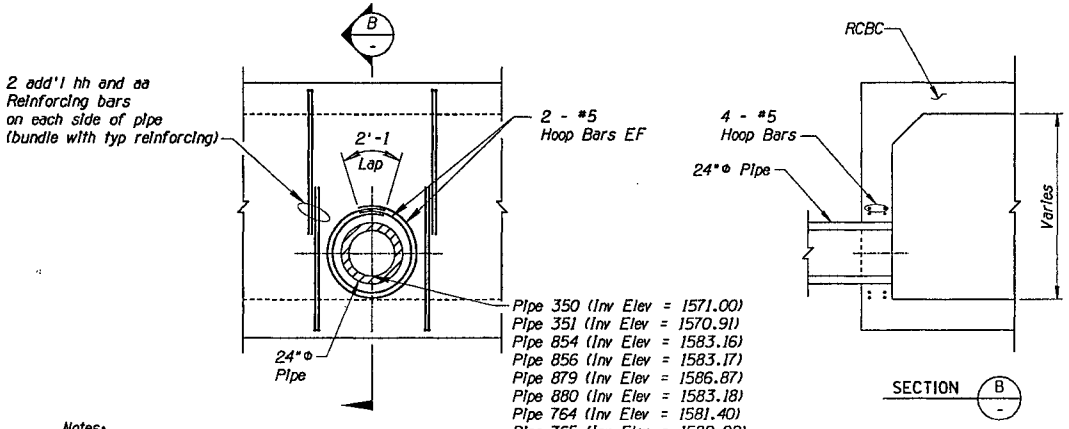

Notes:
1. Typical RCBC and Equipment underpass reinforcing not shown for clarity. See ADOT Std Dtl B-02-10 for RCBC or B-03.10 for Equipment underpass.
2. Detail shown for RCBC, similar for Equipment underpass.
3. This detail shall be considered incidental to the cost of the reinforced concrete box culvert.

DETAIL D5
PIPE CONNECTION

	NAME	DATE
DESIGN	RSR	07/05
DRAWN	AEM	07/05
CHECKED	CAD	07/05

Stanley Consultants Inc.
2525 East Camelback Road, Suite 130
Phoenix, Arizona 85016
Phone (602) 957-4500

ARIZONA DEPARTMENT OF TRANSPORTATION
INTERMODAL TRANSPORTATION DIVISION
ROADWAY DESIGN SERVICES

MISC. DETAILS

PRELIMINARY
STAGE V
100% Review
NOT FOR CONSTRUCTION OR RECORDING

ROUTE	LOCATION	DWG NO. D-4.8
202L	RED MTN FWY, POWER ROAD - UNIVERSITY DRIVE	
TRACS NO. H 5782 01C	202-B(007)B	___ OF ___

08/16/2005 p:\7000\active\07-05-dwgs\04-drain\h5782d008.dgn

F.A.H.W.A. REGION	STATE	PROJECT NO.	SHEET NO.	TOTAL SHEETS	AS BUILT
9	ARIZ.	202-B(007)B			

202 MA 023

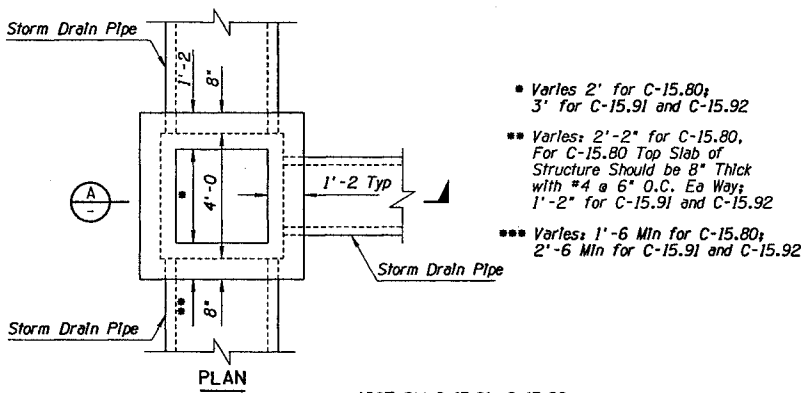

* Varies 2' for C-15.80; 3' for C-15.91 and C-15.92

** Varies: 2'-2" for C-15.80, For C-15.80 Top Slab of Structure Should be 8" Thick with #4 @ 6" O.C. Ea Way; 1'-2" for C-15.91 and C-15.92

*** Varies: 1'-6 Min for C-15.80; 2'-6 Min for C-15.91 and C-15.92

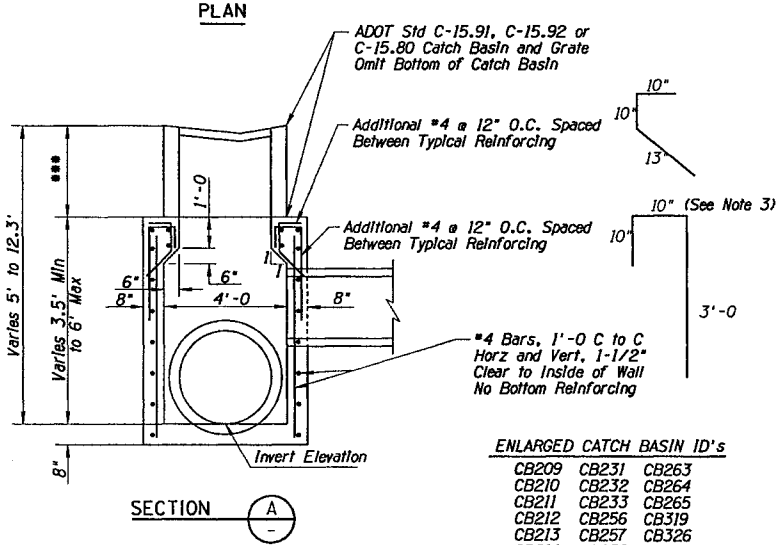

ENLARGED CATCH BASIN DETAIL

ENLARGED CATCH BASIN ID's		
CB209	CB231	CB263
CB210	CB232	CB264
CB211	CB233	CB265
CB212	CB256	CB319
CB213	CB257	CB326
CB214	CB258	

NOTES:

1. Catch basin materials per ADOT Std C-15.80, C-15.91, and C-15.92.
2. Dimensions, reinforcing, and items not shown per ADOT Std C-15.80, C-15.91, and C-15.92.
3. Use 22" for C-15.80
4. This detail shall be considered incidental to the cost of catch basins referenced on this sheet.

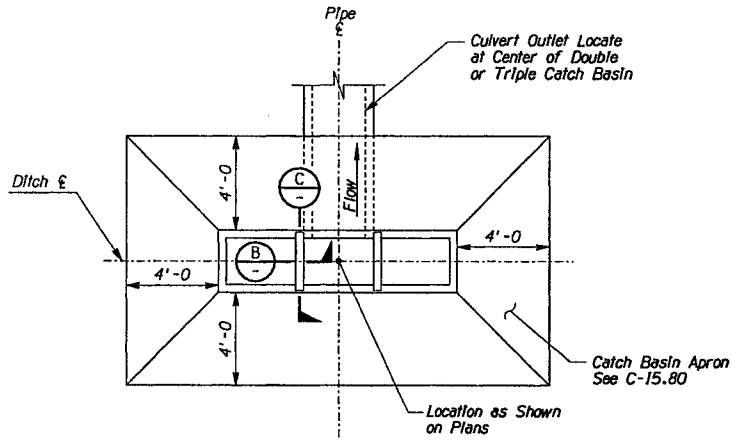

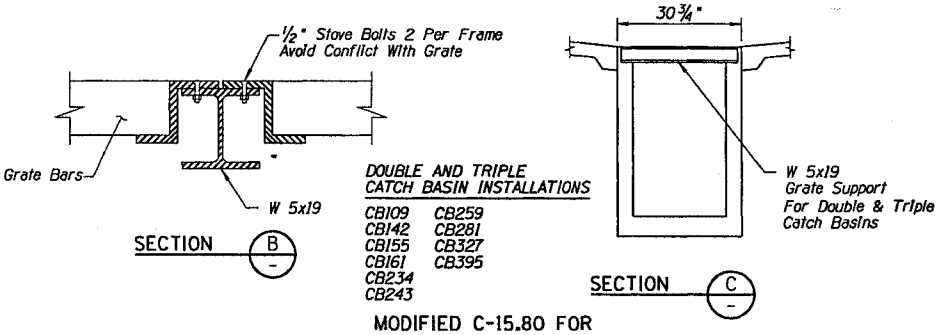

MODIFIED C-15.80 FOR DOUBLE AND TRIPLE INSTALLATIONS

Note: For Catch Basin Grates and Details Not Shown See Detail C-15.80.

DETAIL D6

	NAME	DATE
DESIGN	RSR	07/05
DRAWN	AEM	07/05
CHECKED	CAD	07/05

Stanley Consultants Inc.

ARIZONA DEPARTMENT OF TRANSPORTATION
INTERMODAL TRANSPORTATION DIVISION
ROADWAY DESIGN SERVICES

SPECIAL CATCH BASINS

PRELIMINARY
STAGE V
100% Review
NOT FOR CONSTRUCTION OR RECORDING

ROUTE	LOCATION	DWG NO. D-4.9
202L	RED MTN FWY, POWER ROAD - UNIVERSITY DRIVE	
TRACS NO. H 5782 01C	202-B(007)B	___ OF ___

08/16/2005 q:\17000\active\07-05-dwgs\04-drain\h5782dd04.dgn

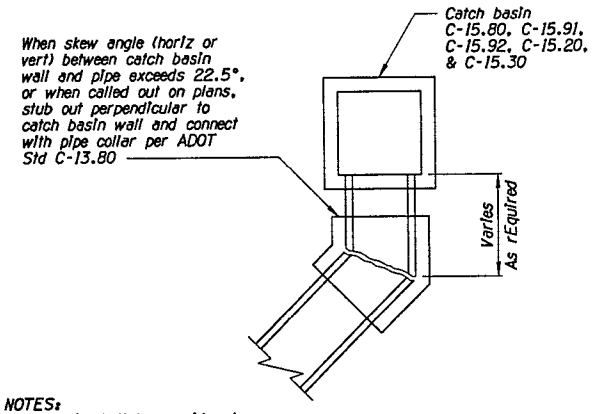

NOTES:
This detail shall be considered incidental to the cost of the pipe.

PLAN VIEW
PIPE TO CATCH BASIN CONNECTION

DETAIL D7

CATCH BASIN CONNECTION

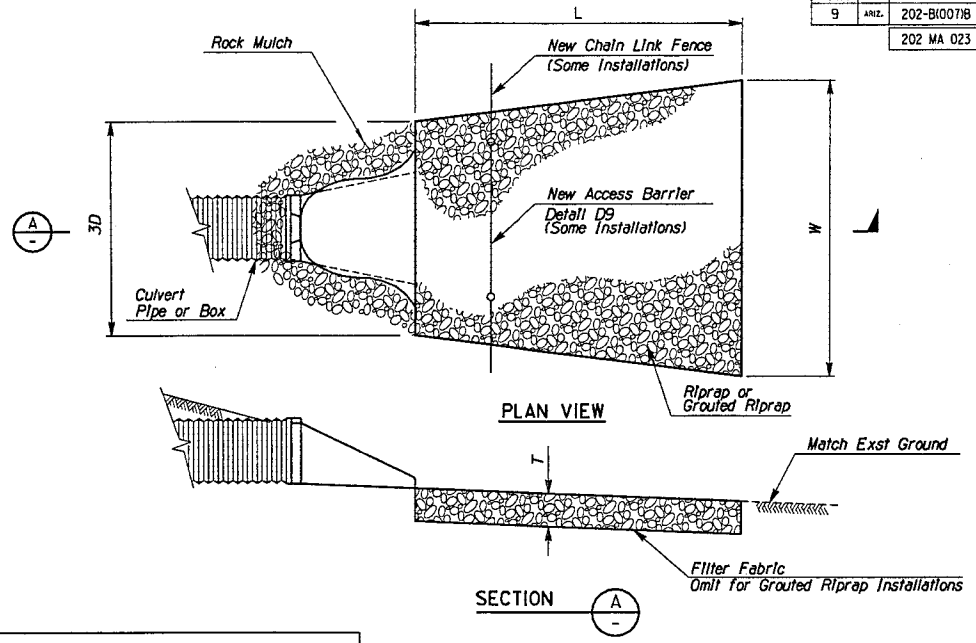

RIPRAP &
GROUTED RIPRAP APRON

F.A.H.R.A. REGION	STATE	PROJECT NO.	SHEET NO.	TOTAL SHEETS	AS BUILT
9	ARIZ.	202-B(007)B			
		202 MA 023			

RIPRAP APRONS					
Outlet ID	L (ft)	W (ft)	T (ft)	D_{50} (In)	Riprap Qty (cy)
Jct 100	10	10	1	6	3
Jct 187	10	10	1	6	3
Jct 200	10	10	1	6	3
Jct 286	10	10	1	6	3
Jct 291	10	10	1	6	3
Jct 292	10	10	1	6	3
Jct 345	10	10	1	6	3
Jct 346	10	10	1	6	3
Jct 348	10	10	1	6	3
Jct 381	10	10	1	6	3

GROUTED RIPRAP APRONS					
Outlet ID	L (ft)	W (ft)	T (ft)	D_{50} (In)	Riprap Qty (cy)
Jct 103	10	10	1	6	3
Jct 105	10	10	1	6	3
Jct 106	10	10	1	6	3
Jct 389	10	10	1	6	3
Jct 188	10	10	1	6	3
Jct 204	10	10	1	6	3
Jct 293	10	10	1	6	3
Jct 303	10	10	1	6	3
Jct 310	10	10	1	6	3
Jct 315	10	10	1	6	3
Jct 335	10	10	1	6	3
Jct 341	10	10	1	6	3
Jct 342	10	10	1	6	3
Jct 713	10	10	1	6	3
Jct 852	10	10	1	6	3
Jct 193	10	10	1	6	3
Jct 867	10	10	1	6	3

Design Gradations for Riprap Classifications (D_{50})						
Gradation		Riprap Classification (D_{50})				
% Passing	Size	6"	8"	12"	18"	24"
100-90	$2.0D_{50}$	12	16	24	36	48
85-70	$1.5D_{50}$	9	12	18	24	36
50-30	$1.0D_{50}$	6	8	12	18	24
15-5	$0.67D_{50}$	4	5	8	12	12
5-0	$0.33D_{50}$	2	3	4	6	8

DETAIL D8

EROSION CONTROL SHEET 1 OF 2

	NAME	DATE
DESIGN	RSR	07/05
DRAWN	AEM	07/05
CHECKED	CAD	07/05

Stanley Consultants Inc.
2525 East Camelback Road, Suite 130
Phoenix, Arizona 85016
Phone (602) 52-5000

ARIZONA DEPARTMENT OF TRANSPORTATION
INTERMODAL TRANSPORTATION DIVISION
ROADWAY DESIGN SERVICES

EROSION CONTROL
& CATCH BASIN CONNECTION

PRELIMINARY
STAGE V
100% Review
NOT FOR CONSTRUCTION OR RECORDING

ROUTE	LOCATION	DWG NO. D-4.10
202L	RED MTN FWY. POWER ROAD - UNIVERSITY DRIVE	
TRACS NO. H 5782 01C	202-B(007)B	___ OF ___

08/16/2005 q:\17000\active\07-05-dwas\04-drain\h5782dd10.dgn

F.A.H.P.A. REGION	STATE	PROJECT NO.	SHEET NO.	TOTAL SHEETS	AS BUILT
9	ARIZ.	202-B(007)B			

202 MA 023

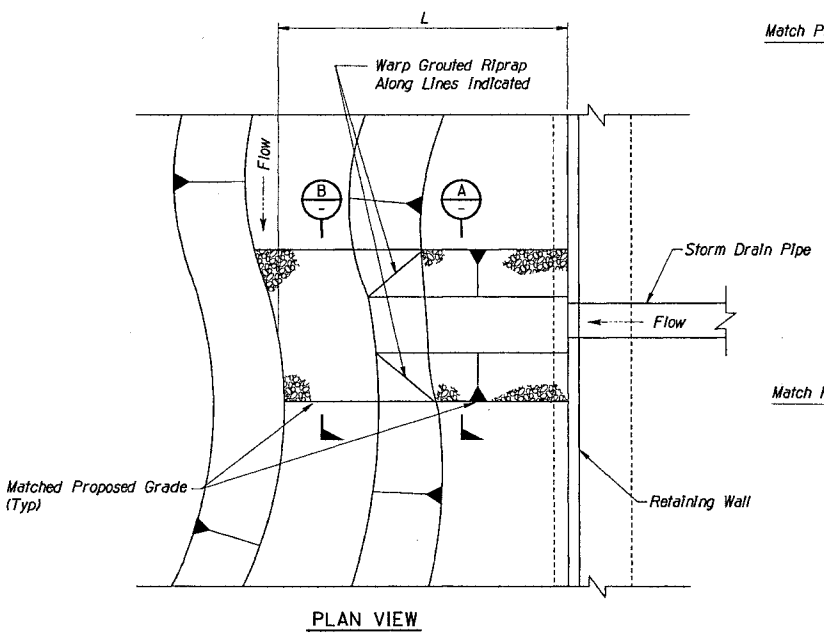

PLAN VIEW

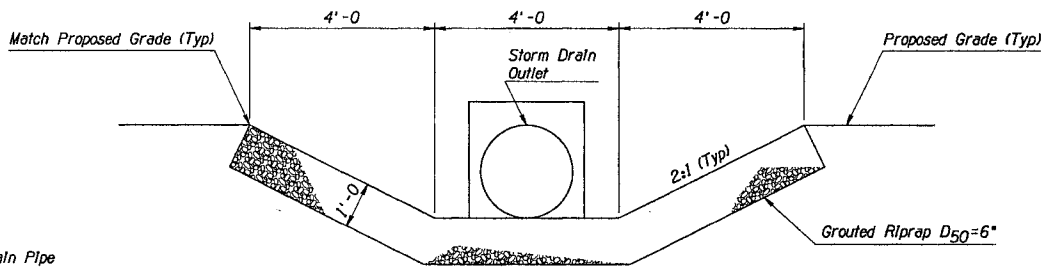

SECTION A

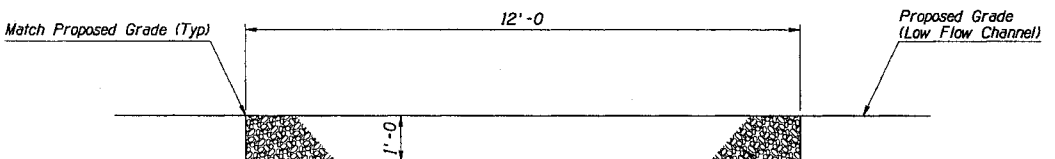

SECTION B

GROUTED RIPRAP SPILLWAY

GROUTED RIPRAP SPILLWAYS		
Outlet ID	L	Qty
Jct 193	45	20
Jct 750	175	78
Jct 758	33	15
Jct 766	50	23
Jct 858	40	18

DETAIL D8

EROSION CONTROL SHEET 2 OF 2

	NAME	DATE
DESIGN	RSR	07/05
DRAWN	AEM	07/05
CHECKED	CAD	07/05

ARIZONA DEPARTMENT OF TRANSPORTATION
INTERMODAL TRANSPORTATION DIVISION
ROADWAY DESIGN SERVICES

Stanley Consultants Inc.
2525 East Camelback Road, Suite 130
Phoenix, Arizona 85016
Phone (602) 912-4500

EROSION CONTROL

THIS SHEET HAS BEEN SEALED

ROUTE	LOCATION	DWG NO. D-4.10a
202L	RED MTN FWY, POWER ROAD - UNIVERSITY DRIVE	
TRACS NO. H 5782 01C	202-B(007)B	___ OF ___

08/16/2005 q:\17000\active\07-05-dwgs\04-drain\h5782dd10a.dgn

F.H.W.A. REGION	STATE	PROJECT NO.	SHEET NO.	TOTAL SHEETS	AS BUILT
9	ARIZ.	202-B(007)B			
		202 MA 023			

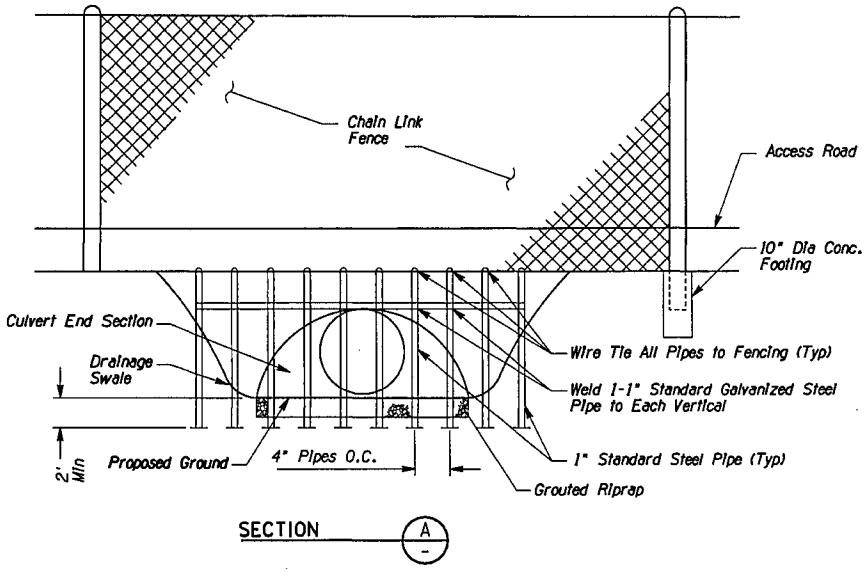

SECTION A

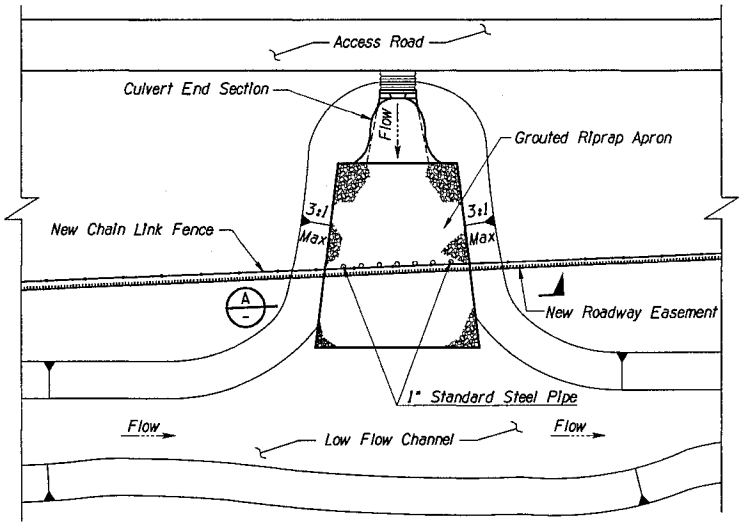

PLAN VIEW

End Section ID's

Jct 103	Jct 293
Jct 105	Jct 303
Jct 106	Jct 310
Jct 389	Jct 315
Jct 188	Jct 335
Jct 204	Jct 341
	Jct 342
	Jct 348
	Jct 389

NOTE:
This detail shall be considered incidental to the cost of Chain Link Fence, Type 1 (72") Bid Item #9020004.

DETAIL D9

	NAME	DATE
DESIGN	RSR	07/05
DRAWN	AEM	07/05
CHECKED	CAD	07/05

Stanley Consultants Inc. 2525 East Camelback Road, Suite 130 Phoenix, Arizona 85016 Phone: (602) 952-8000

ARIZONA DEPARTMENT OF TRANSPORTATION
INTERMODAL TRANSPORTATION DIVISION
ROADWAY DESIGN SERVICES

PIPE ACCESS BARRIER

THIS SHEET HAS BEEN SEALED

ROUTE	LOCATION	DWG NO. D-4.11
202L	RED MTN FWY, POWER ROAD - UNIVERSITY DRIVE	
TRACS NO. H 5782 01C	202-B(007)B	___ OF ___

08/16/2005 pt\17000\active\07-05-dgns\04-drain\h5782d11.dgn

F.H.W.A. REGION	STATE	PROJECT NO.	SHEET NO.	TOTAL SHEETS	AS BUILT
9	ARIZ.	202-B(007)B			
		202 MA 023			

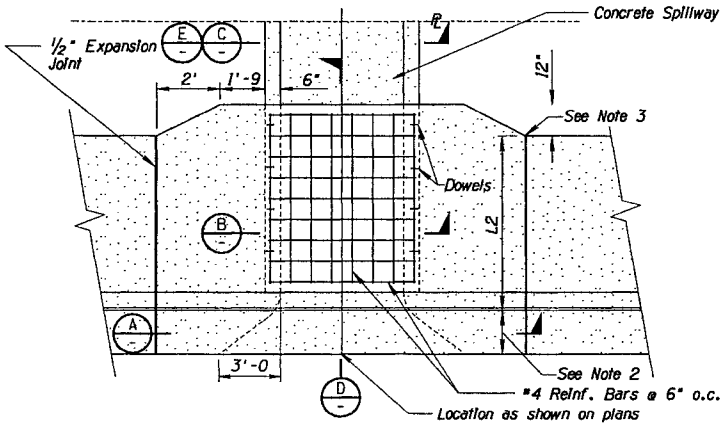

SCUPPER PLAN VIEW

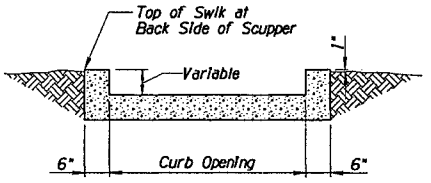

SECTION C
Concrete Spillway

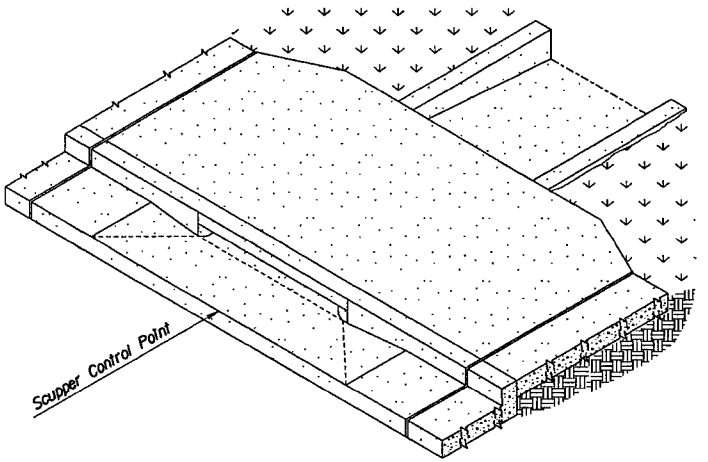

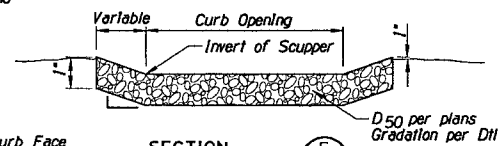

SECTION E
Riprap Spillway

SCUPPER SUMMARY (SC)						
Ref No.	Control Point	Curb Opening (ft)	Elev 1	L (ft)	Spillway Material	L_2 (ft)
780	McK 43+75.39 92.97' Rt	4	1596.75	7.2	Riprap	5.5
781	McK 43+72.43 110.45' Rt	4	1595.25	13.2	Riprap	12
782	McK 43+34.54 73.58' Lt	4	1597.75	8.5	Riprap	5.5
783	McK 43+25.02 87.06' Lt	4	1596.98	164.1	Riprap	12
784	McK 22+47.65 48.53' Rt	4	1595.52	117.9	Concrete	5.5

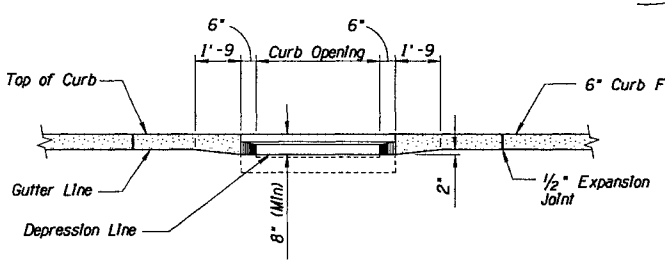

SECTION A

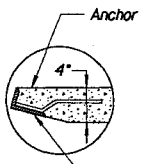

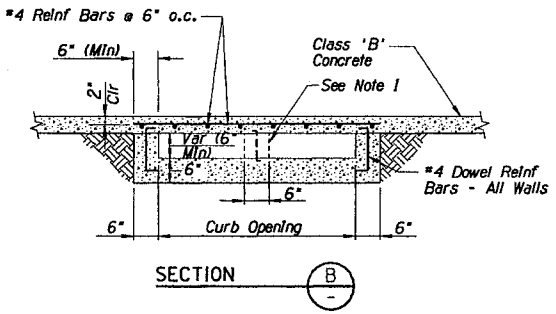

SECTION B

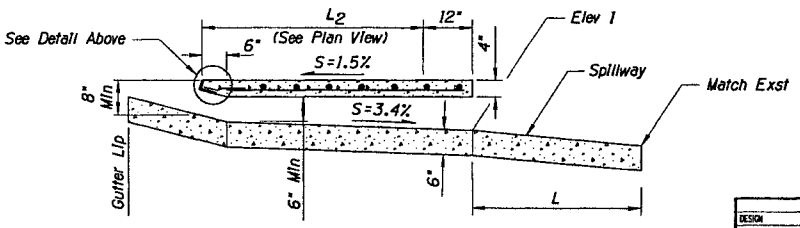

SECTION D

NOTE:

1. A Center Wall Shall be Installed In Scuppers Wider than 48"
2. Unless Otherwise Noted, Gutter Width shall be 2".
3. Edge of Sidewalk, If Present.

DETAIL D10

	NAME	DATE
DESIGN	RSR	07/05
DRAWN	AEM	07/05
CHECKED	CAD	07/05

Stanley Consultants inc.
2121 East Camelback Road, Suite 130
Phoenix, Arizona 85016
Phone: (602) 957-6200

ARIZONA DEPARTMENT OF TRANSPORTATION
INTERMODAL TRANSPORTATION DIVISION
ROADWAY DESIGN SERVICES

CONCRETE SCUPPER DETAILS

THIS SHEET HAS BEEN SEALED

ROUTE	LOCATION	DWG NO. D-4.12
202L	RED MTN FWY, POWER ROAD - UNIVERSITY DRIVE	
TRACS NO. H 5782 01C	202-B(007)B	___ OF ___

08/16/2005 q:\17000\active\07-05-dwgs\04-drain\h5782ddl2.dgn

F.H.W.A. REGION	STATE	PROJECT NO.	SHEET NO.	TOTAL SHEETS	AS BUILT
9	ARIZ.	202-B(007)B			
		202 MA 023			

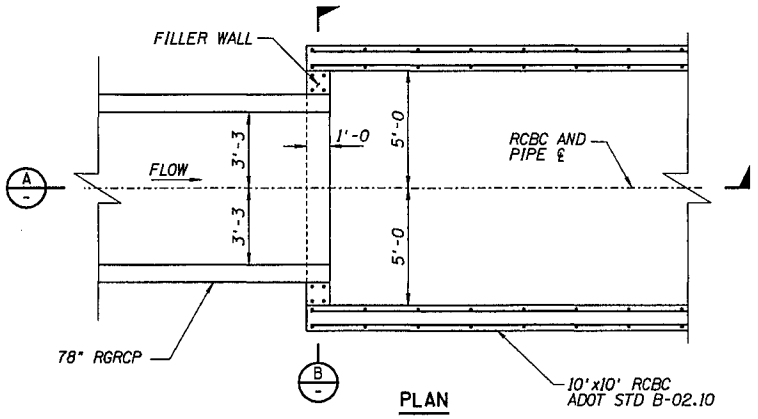

PLAN

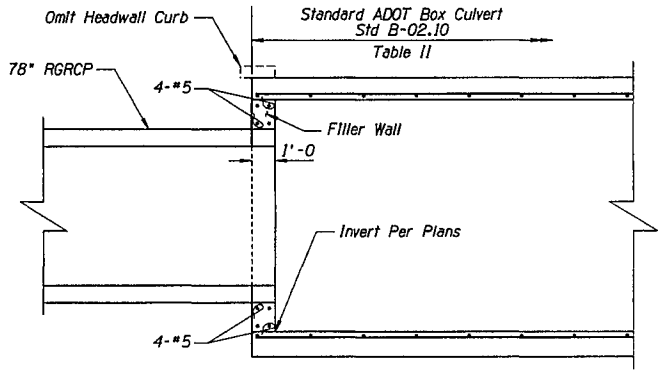

SECTION A

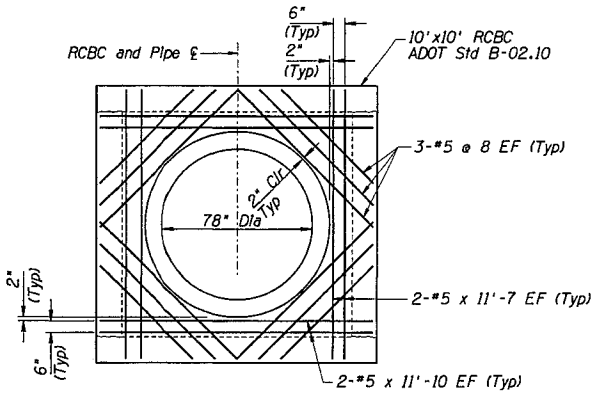

SECTION B

STANDARD 10'x10' BOX CULVERT TO 78" RGRCP TRANSITION DETAIL

NOTES:

1. TYPICAL RCBC REINFORCING NOT SHOWN FOR CLARITY UNLESS NOTED OTHERWISE. SEE ADOT STD B-02.10 FOR ADDITIONAL INFORMATION.
2. FOR PLAN LOCATION AND PROFILE, SEE DWG NO's D-2.4 AND D-2.12
3. THIS DETAIL SHALL BE CONSIDERED INCIDENTAL TO THE COST OF RCBC NO. 9, PUMP STATION STORAGE BOX BID ITEM *9999903AC.

DETAIL D11

	NAME	DATE
DESIGN	RSR	07/05
DRAWN	AEM	07/05
CHECKED	CAD	07/05

Stanley Consultants Inc.
2525 East Camelback Road, Suite 130
Phoenix, Arizona 85016
Phone: (602) 957-4200

ARIZONA DEPARTMENT OF TRANSPORTATION
INTERMODAL TRANSPORTATION DIVISION
ROADWAY DESIGN SERVICES

RCBC
JUNCTION STRUCTURE

THIS SHEET HAS BEEN SEALED

ROUTE	LOCATION	DWG NO. D-4.13
202L	RED MTN FWY, POWER ROAD - UNIVERSITY DRIVE	
TRACS NO. H 5782 01C	202-B(007)B	___ OF ___

08/16/2005 g:\17000\active\07-05-dwgs\04-drain\h5782dd13.dgn

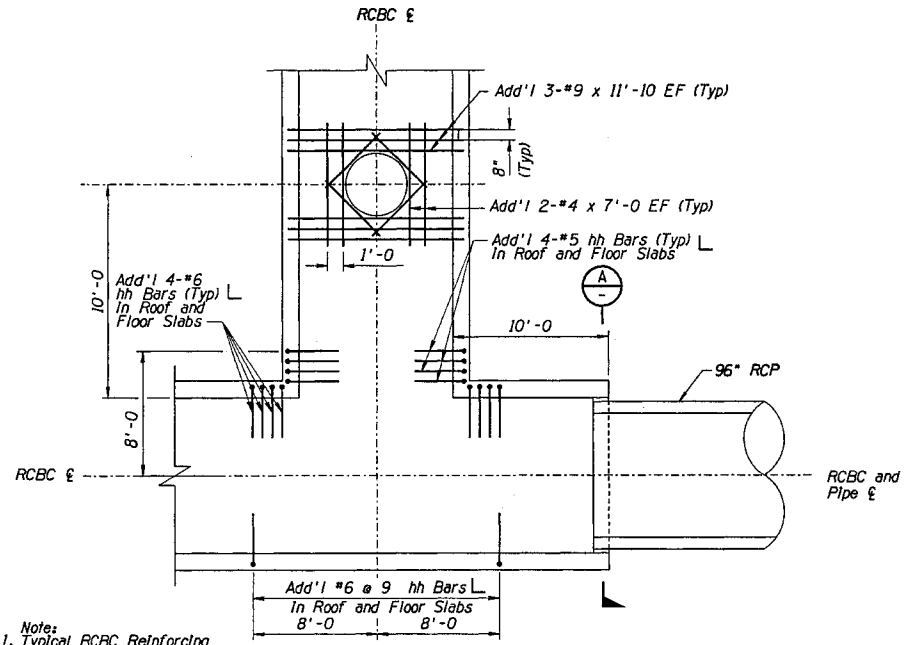

Note:
1. Typical RCBC Reinforcing not shown for Clarity. See ADOT Std B-02.10 for Addtional Information.
2. This Detail shall be Considered Incidental to the Cost of RCBC No.9 Pump Station Storage Box, Bid Item #9999903AC.

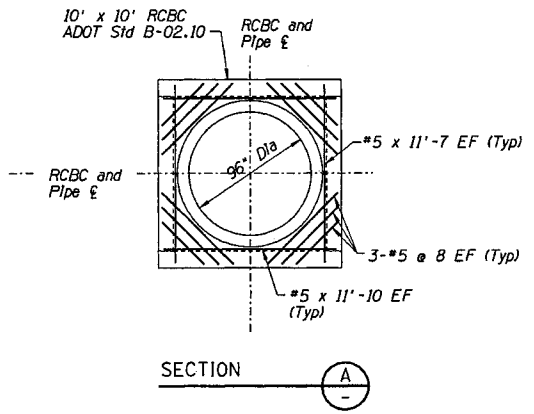

DETAIL D12
JUNCTION STRUCTURE

F.H.W.A. REGION	STATE	PROJECT NO.	SHEET NO.	TOTAL SHEETS	AS BUILT
9	ARIZ.	202-B(007)B			
		202 MA 023			

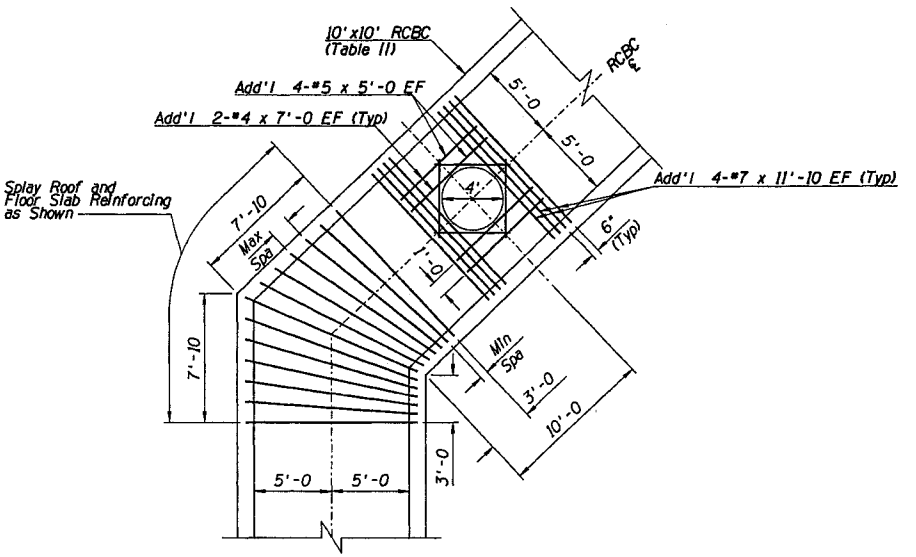

Note:
1. Typical RCBC Reinforcing not shown for Clarity. Unless Noted Otherwise. See ADOT Std B-02.10 for Addtional Information.
2. This Detail shall be Considered Incidental to the Cost of RCBC No.9 Pump Station Storage Box, Bid Item #9999903AC.

Location	No. of Bars Splayed	ADOT Bar Designation	Max Spacing	Min Spacing
Top Slab	23	ee	9"	3"
Top Slab/ Walls	15#	hh	13"	5"
Bottom Slab	23	ee	9"	3"

#4 Locations (Total Bars = 60)

DETAIL D13
ACCESS OPENING

	NAME	DATE
DESIGN	RSR	07/05
DRAWN	AEM	07/05
CHECKED	CAD	07/05

Stanley Consultants Inc. 2929 East Camelback Road, Suite 130 Phoenix, Arizona 85016 Phone: (602) 912-6000

ARIZONA DEPARTMENT OF TRANSPORTATION
INTERMODAL TRANSPORTATION DIVISION
ROADWAY DESIGN SERVICES

RCBC
JUNCTION STRUCTURE/
ACCESS HOLE

THIS SHEET HAS BEEN SEALED

ROUTE	LOCATION	DWG NO. D-4.14
202L	RED MTN FWY, POWER ROAD - UNIVERSITY DRIVE	
TRACS NO. H 5782 01C	202-B(007)B	___ OF ___

08/16/2005 cp:\17000\active\07-05-dwgs\04-drain\h5782dd14.dgn

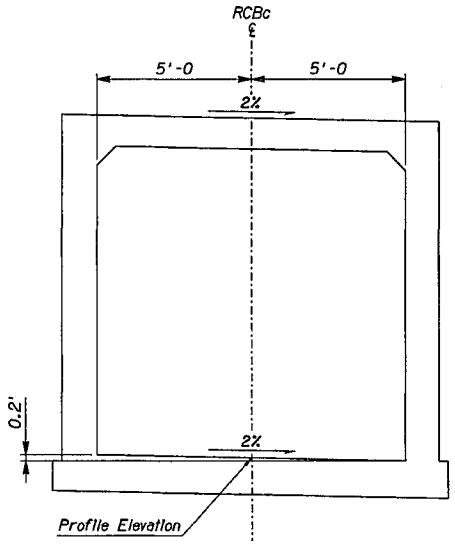

SECTION LOOKING DOWN STREAM

10' X 10' RCBC Sta 1143+59.27 93.31' Lt
to Sta 1155+28.48 635.79' Lt

Note: This detail shall be considered incidental to the cost of RCBC No.9, Pump Station Storage Box, Bid Item #9999903AC.

DETAIL D14

BOX CULVERT CROSS SLOPE

F.H.W.A. REGION	STATE	PROJECT NO.	SHEET NO.	TOTAL SHEETS	AS BUILT
9	ARIZ.	202-B(007)B			

202 MA 023

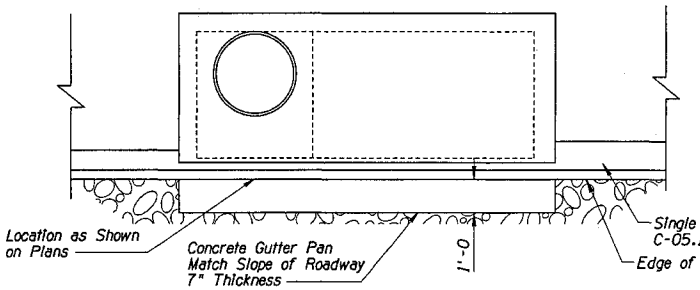

Catch Basin ID's

CB855	CB764
CB856	CB765
CB868	
CB869	

Note: All Work and Materials Included In Cost of Catch Basins.

MODIFIED CATCH BASIN DETAIL C-15.20

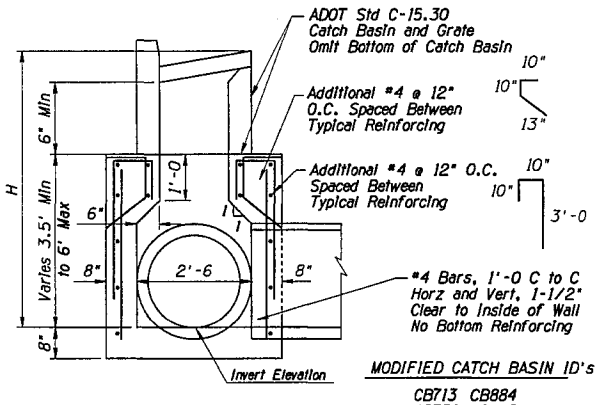

SECTION (A)

MODIFIED CATCH BASIN ID's

CB713	CB884
CB758	CB885
CB760	CB881
CB774	CB882
CB797	CB750
CB798	

MODIFIED CATCH BASIN DETAIL - C-15.30

NOTES:

1. Catch basin materials per ADOT Std C-15.30
2. Dimensions, reinforcing, and items not shown per ADOT Std C-15.30
3. This detail shall be considered incidental to the cost of catch basins referenced on this sheet.

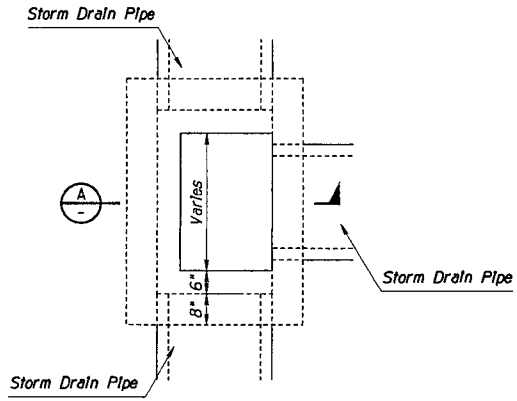

PLAN

DETAIL D15

MODIFIED CATCH BASINS

	NAME	DATE
DESIGN	RSR	07/05
DRAWN	AEM	07/05
CHECKED	CAD	07/05

Stanley Consultants Inc. 2525 East Camelback Road, Suite 130 Phoenix, Arizona 85016 Phone: (602) 957-4500

ARIZONA DEPARTMENT OF TRANSPORTATION
INTERMODAL TRANSPORTATION DIVISION
ROADWAY DESIGN SERVICES

MISC DETAILS

THIS SHEET HAS BEEN SEALED

ROUTE	LOCATION	DWG NO. D-4.15
202L	RED MTN FWY, POWER ROAD - UNIVERSITY DRIVE	
TRACS NO. H 5782 01C	202-B(007)B	___ OF ___

F.H.W.A. REGION	STATE	PROJECT NO.	SHEET NO.	TOTAL SHEETS	AS BUILT
9	ARIZ.	202-B(007)B			
		202 MA 023			

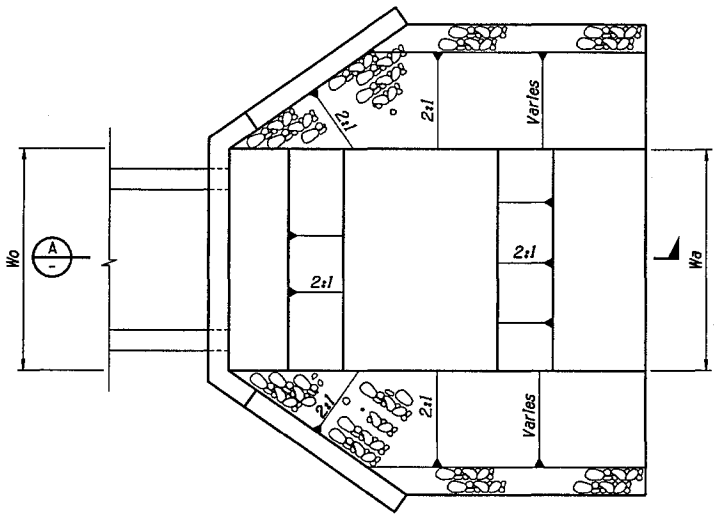

PLAN VIEW

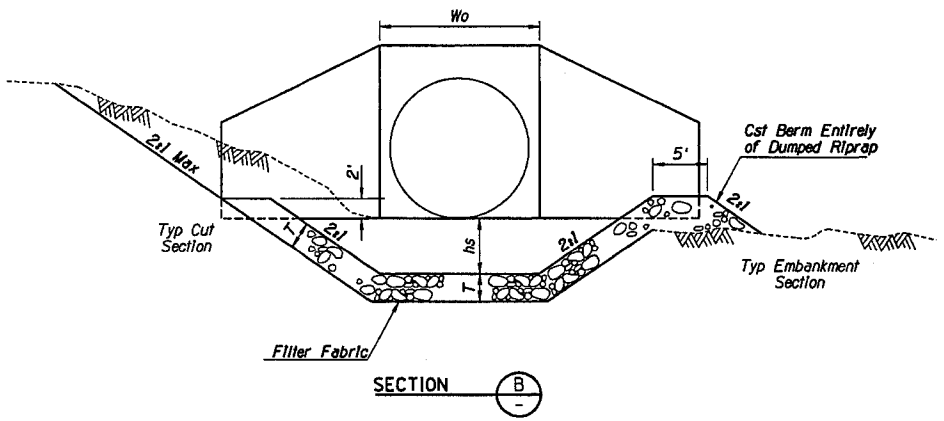

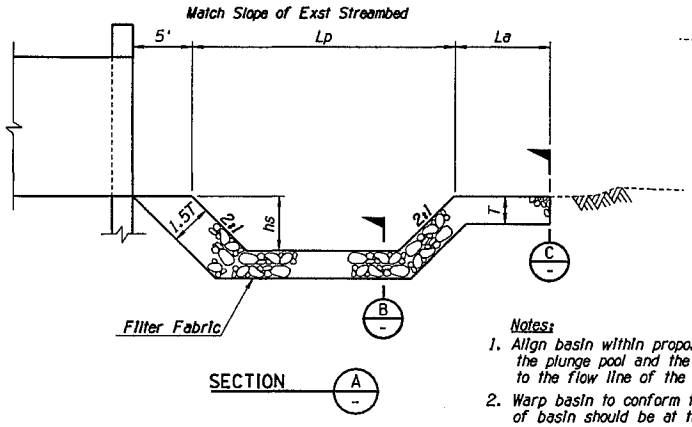

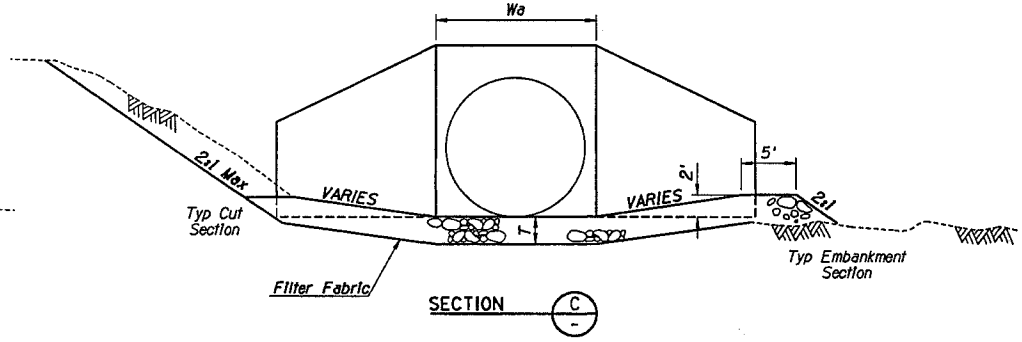

Notes:

1. Align basin within proposed channel so that the culvert discharges into the plunge pool and the downstream edge of the apron is perpendicular to the flow line of the proposed channel.
2. Warp basin to conform to proposed contouring. Top of riprap in floor of basin should be at the same elevation or lower than proposed channel bottom.

DETAIL D16

RIPRAP BASIN TABLE

Culvert No./Dtl	76th St Sta @ Clv ℄	Culvert Dia (in)	Riprap Size D_{50}(in)	T (in)	hs (ft)	Lp (ft)	La (ft)	Wo (ft)	Wa (ft)	Riprap Qty (cy)
382	13+84.55	90"	12"	36	2.3	23	11.5	9.5	9.5	175

	NAME	DATE
DESIGN	RSR	07/05
DRAWN	AEM	07/05
CHECKED	CAD	07/05

ARIZONA DEPARTMENT OF TRANSPORTATION
INTERMODAL TRANSPORTATION DIVISION
ROADWAY DESIGN SERVICES

Stanley Consultants Inc.

CULVERT OUTLET
ENERGY DISSIPATER

THIS SHEET HAS BEEN SEALED

ROUTE	LOCATION	DWG NO. D-4.16
202L	RED MTN FWY, POWER ROAD - UNIVERSITY DRIVE	
TRACS NO. H 5782 01C		202-B(007)B — OF —

08/16/2005 q:\17000\active\07-05-dwgs\04-drain\h5782dd16.dgn

F.H.W.A. REGION	STATE	PROJECT NO.	SHEET NO.	TOTAL SHEETS	AS BUILT
9	ARIZ.	202-B(007)B			
		202 MA 023			

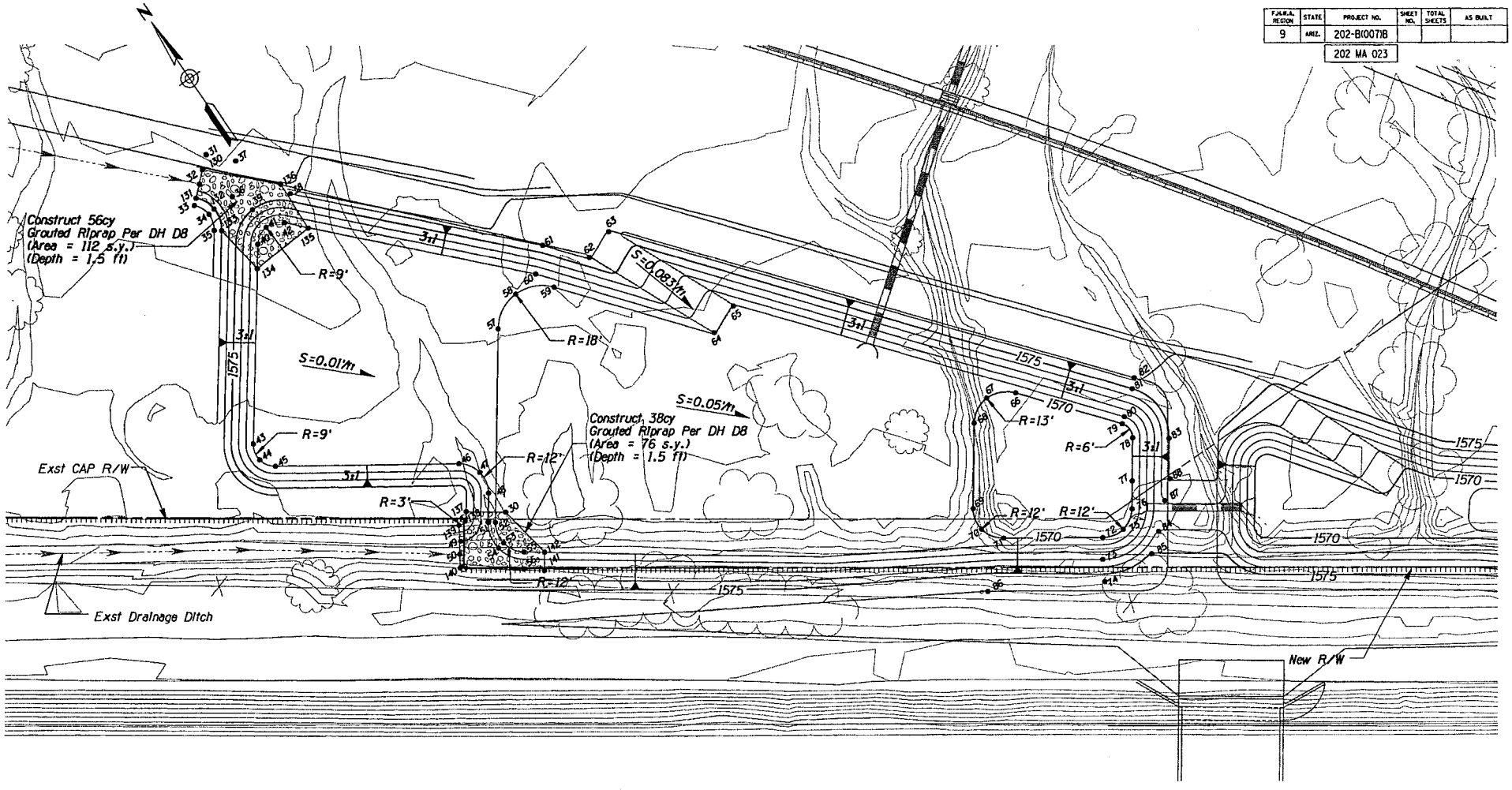

DETAIL D17

SHEET 1 OF 3

	NAME	DATE
DESIGN	CJ	07/05
DRAWN	AEM	07/05
CHECKED	CAD	07/05

Stanley Consultants inc.

ARIZONA DEPARTMENT OF TRANSPORTATION
INTERMODAL TRANSPORTATION DIVISION
ROADWAY DESIGN SERVICES

202L MAINLINE
RETENTION BASIN

THIS SHEET HAS BEEN SEALED

ROUTE	LOCATION	DWG NO. D-4.17
202L	RED MTN FWY, POWER ROAD - UNIVERSITY DRIVE	
TRACS NO. H 5782 01C	202-B(007)B	___ OF ___

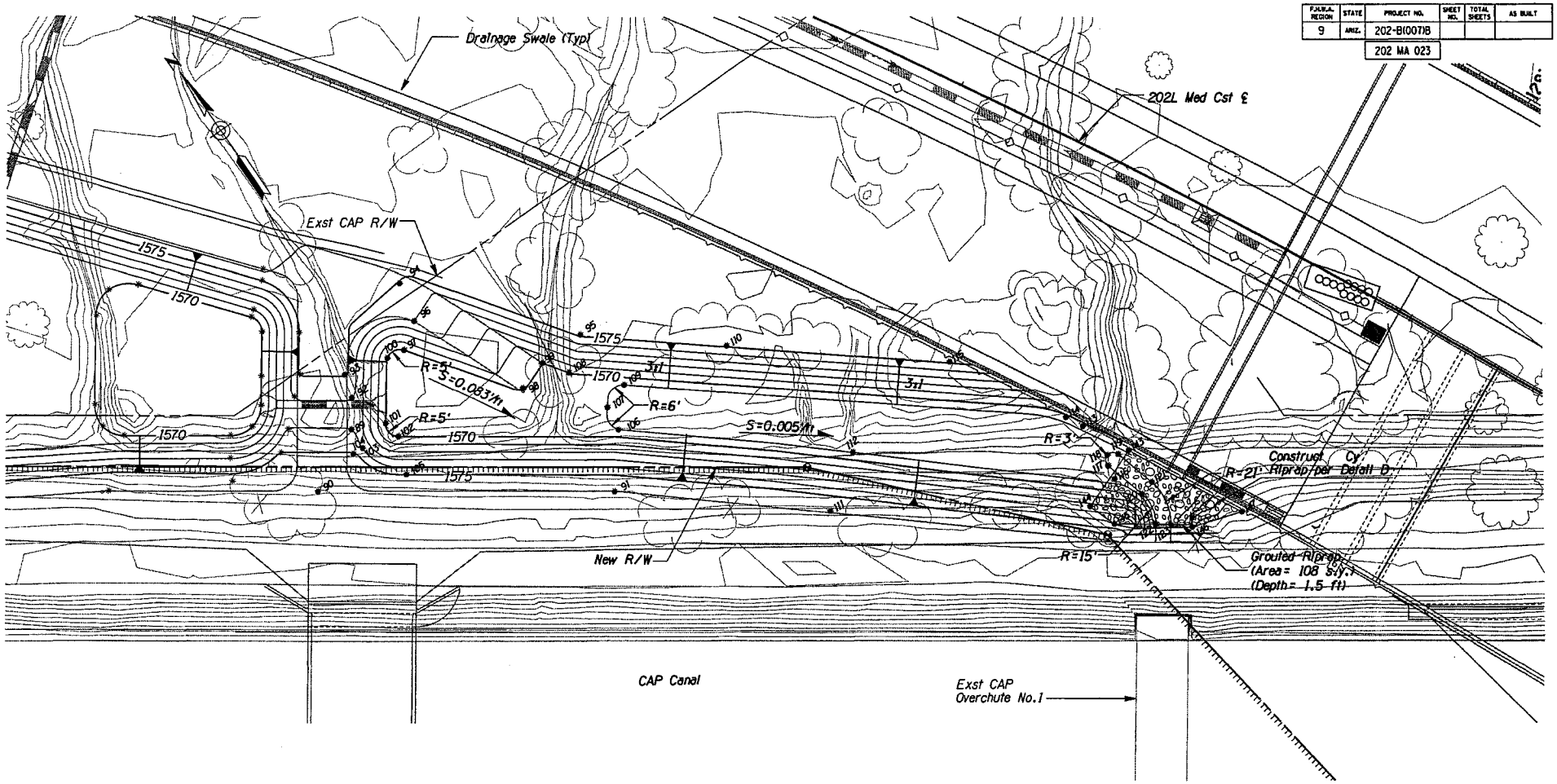

F.H.W.A. REGION	STATE	PROJECT NO.	SHEET NO.	TOTAL SHEETS	AS BUILT
9	ARIZ.	202-B(007)B			

202 MA 023

DETAIL D17

SHEET 2 OF 3

	NAME	DATE
DESIGN	CJ	07/05
DRAWN	AEM	07/05
CHECKED	CAD	07/05

Stanley Consultants inc.

ARIZONA DEPARTMENT OF TRANSPORTATION
INTERMODAL TRANSPORTATION DIVISION
ROADWAY DESIGN SERVICES

202L MAINLINE
RETENTION BASIN

THIS SHEET HAS BEEN SEALED

ROUTE	LOCATION	DWG NO. D-4.18
202L	RED MTN FWY, POWER ROAD - UNIVERSITY DRIVE	
TRACS NO. H 5782 01C	202-B(007)B	___ OF ___

NO. | DESCRIPTION OF REVISION | DATE | MADE BY

08/16/2005 q:\17000\active\07-05-dwgs\04-drain\h5782dd18.dgn

F.H.W.A. REGION	STATE	PROJECT NO.	SHEET NO.	TOTAL SHEETS	AS BUILT
9	ARIZ.	202-B(007)B			
		202 MA 023			

PT. NO	NORTHING	EASTING	ELEV
30	884211.75	784906.67	1571.0
31	884322.97	784973.52	1577.2
32	884393.86	784879.30	1576.6
33	884387.85	784872.73	1578.0
34	884381.62	784875.52	1578.0
35	884375.04	784873.66	1578.0
36	884382.10	784887.48	1576.4
37	884292.52	785018.20	1576.7
38	884369.61	784907.65	1576.0
39	884373.00	784891.25	1575.0
40	884360.31	784885.22	1572.0
41	884364.02	784891.89	1572.0
42	884361.28	784899.01	1572.0
43	884293.95	784837.34	1572.0
44	884287.10	784835.78	1572.0
45	884281.21	784839.62	1572.0
46	884239.19	784902.15	1572.0
47	884231.39	784907.26	1572.0
48	884222.29	784905.24	1572.0
49	884212.46	784884.55	1573.0
50	884208.29	784881.29	1573.0
51	884212.50	784898.30	1572.0
52	884210.77	784900.75	1571.0
53	884201.86	784898.70	1571.0
54	884201.37	784895.74	1572.0
55	884194.09	784903.52	1571.0
56	884188.31	784899.49	1572.9
57	884275.63	784946.75	1571.0
58	884283.21	784960.85	1571.0
59	884276.57	784975.41	1571.0
60	884285.29	784972.19	1572.0
61	884293.25	784981.18	1576.0
62	884278.07	784994.32	1576.0
63	884282.36	785006.69	1576.0
64	884223.52	785019.31	1571.0
65	884227.97	785032.03	1571.0
66	884132.76	785106.70	1570.0
67	884137.53	785096.19	1570.0
68	884132.06	785086.03	1570.0
69	884103.38	785065.69	1570.0
70	884094.35	785063.66	1570.0
71	884086.56	785068.66	1570.0
72	884063.16	785102.55	1570.0

PT. NO	NORTHING	EASTING	ELEV
73	884055.76	785097.43	1573.0
74	884047.80	785092.95	1576.0
75	884061.22	785111.45	1570.0
76	884066.09	785119.15	1570.0
77	884075.53	785125.85	1570.0
78	884089.88	785136.02	1570.0
79	884097.14	785135.77	1570.0
80	884099.04	785138.10	1571.0
81	884106.62	785147.40	1575.0
82	884110.13	785150.32	1576.0
83	884081.19	785148.26	1575.0
84	884052.19	785122.90	1574.0
85	884046.25	785115.20	1575.0
86	884071.99	785051.20	1576.7
87	884061.20	785132.19	1574.0
88	884067.37	785139.17	1575.0
89	884037.7	785143.7	1574.0
90	884025.1	785118.9	1576.6
91	883958.2	785215.6	1576.6
92	884047.8	785151.0	1574.0
93	884057.0	785154.0	1575.0
94	884074.5	785192.1	1575.0
95	884016.9	785239.8	1575.0
96	884059.0	785188.3	1574.0
97	884051.8	785178.6	1570.0
98	884012.5	785208.8	1570.0
99	884016.3	785221.0	1570.0
100	884052.9	785171.5	1570.0
101	884032.0	785156.2	1570.0
102	884024.9	785157.4	1570.0
103	884029.1	785143.3	1574.0
104	884029.3	785139.0	1575.0
105	884010.8	785151.6	1575.0
106	883977.4	785230.7	1569.0
107	883987.1	785232.1	1569.0
108	884007.1	785227.6	1570.0
109	883990.7	785242.7	1569.0
110	883980.2	785285.1	1575.0
111	883902.9	785282.1	1576.5
112	883917.0	785302.5	1569.0
113	883873.3	785383.5	1569.0
114	883880.0	785379.9	1570.0
115	883924.3	785354.8	1575.0

PT. NO	NORTHING	EASTING	ELEV
116	883849.1	785381.9	1569.0
117	883854.9	785382.9	1568.0
118	883858.6	785385.0	1568.0
119	883856.5	785388.7	1568.0
120	883838.0	785387.6	1568.0
121	883839.6	785393.4	1568.0
122	883825.0	785385.3	1568.0
123	883821.4	785390.1	1568.0

RIPRAP AREAS

PT. NO	NORTHING	EASTING	ELEV
130	884397.92	784883.57	
131	884389.94	784874.88	
132	884382.26	784878.47	
133	884373.28	784876.09	
134	884352.20	784879.37	
135	884353.98	784905.84	
136	884374.99	784906.57	
137	884221.15	784893.41	
138	884218.10	784890.81	
139	884218.25	784887.73	
140	884203.51	784878.19	
141	884182.97	784906.11	
142	884189.11	784910.43	
143	883855.26	785392.97	
144	883845.69	785367.86	
145	883834.50	785371.60	
146	883815.83	785396.48	
147	883809.66	785416.13	

NO.1 DESCRIPTION OF REVISION | MADE BY | DATE
NO.2 DESCRIPTION OF REVISION | MADE BY | DATE

DETAIL D17

SHEET 3 OF 3

	NAME	DATE
DESIGN	CJ	07/05
DRAWN	WJP	07/05
CHECKED	CAD	07/05

Stanley Consultants inc.
2901 East Camelback Road, Suite 130
Phoenix, Arizona 85016
Phone (602) 912-9000

ARIZONA DEPARTMENT OF TRANSPORTATION
INTERMODAL TRANSPORTATION DIVISION
ROADWAY DESIGN SERVICES

202L MAINLINE
RETENTION BASIN

THIS SHEET HAS BEEN SEALED

ROUTE	LOCATION	DWG NO. D-4.19
202L	RED MTN FWY, POWER ROAD - UNIVERSITY DRIVE	
TRACS NO. H 5782 01C	202-B(007)B	___ OF ___

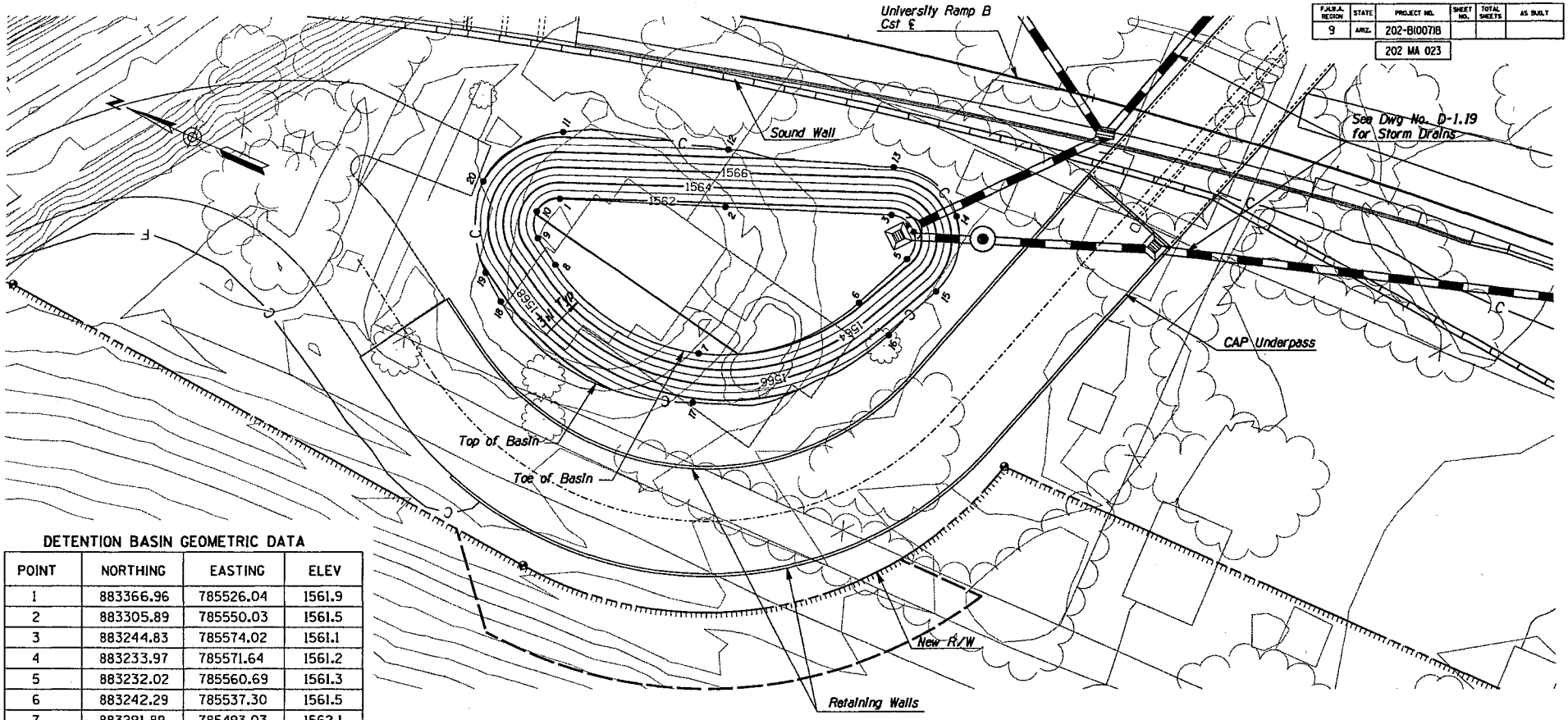

F.H.W.A. REGION	STATE	PROJECT NO.	SHEET NO.	TOTAL SHEETS	AS BUILT
9	ARIZ.	202-B(007)B			
		202 MA 023			

DETENTION BASIN GEOMETRIC DATA

POINT	NORTHING	EASTING	ELEV
1	883366.96	785526.04	1561.9
2	883305.89	785550.03	1561.5
3	883244.83	785574.02	1561.1
4	883233.97	785571.64	1561.2
5	883232.02	785560.69	1561.3
6	883242.29	785537.30	1561.5
7	883291.89	785493.03	1562.1
8	883357.84	785501.55	1562.1
9	883368.59	785508.25	1562.1
10	883373.26	785517.65	1562.0
11	883376.61	785550.62	1570.7
12	883314.13	785570.99	1569.0
13	883251.69	785591.47	1567.4
14	883220.98	785584.13	1567.2
15	883216.31	785553.80	1567.0
16	883226.45	785530.35	1567.3
17	883286.15	785474.48	1568.6
18	883371.52	785479.58	1570.8
19	883381.61	785487.34	1570.3
20	883397.20	785519.84	1570.0

DETAIL D18

	NAME	DATE
DESIGN	RSR	07/05
DRAWN	AEM	07/05
CHECKED	CAD	07/05

ARIZONA DEPARTMENT OF TRANSPORTATION
INTERMODAL TRANSPORTATION DIVISION
ROADWAY DESIGN SERVICES

Stanley Consultants inc.
2929 East Camelback Road, Suite 210
Phoenix, Arizona 85016
Phone (602) 912-0100

CAP UNDERPASS
DETENTION BASIN

THIS SHEET HAS BEEN SEALED

ROUTE	LOCATION	DWG NO. D-4.20
202L	RED MTN FWY, POWER ROAD - UNIVERSITY DRIVE	
TRACS NO. H 5782 01C	202-B(007)B	___ OF ___

08/16/2005 q:\17000\active\07-05-dwgs\04-drain\h5782dd19.dgn

F.H.W.A. REGION	STATE	PROJECT NO.	SHEET NO.	TOTAL SHEETS	AS BUILT
9	ARIZ.	202-B(007)B			
		202 MA 023			

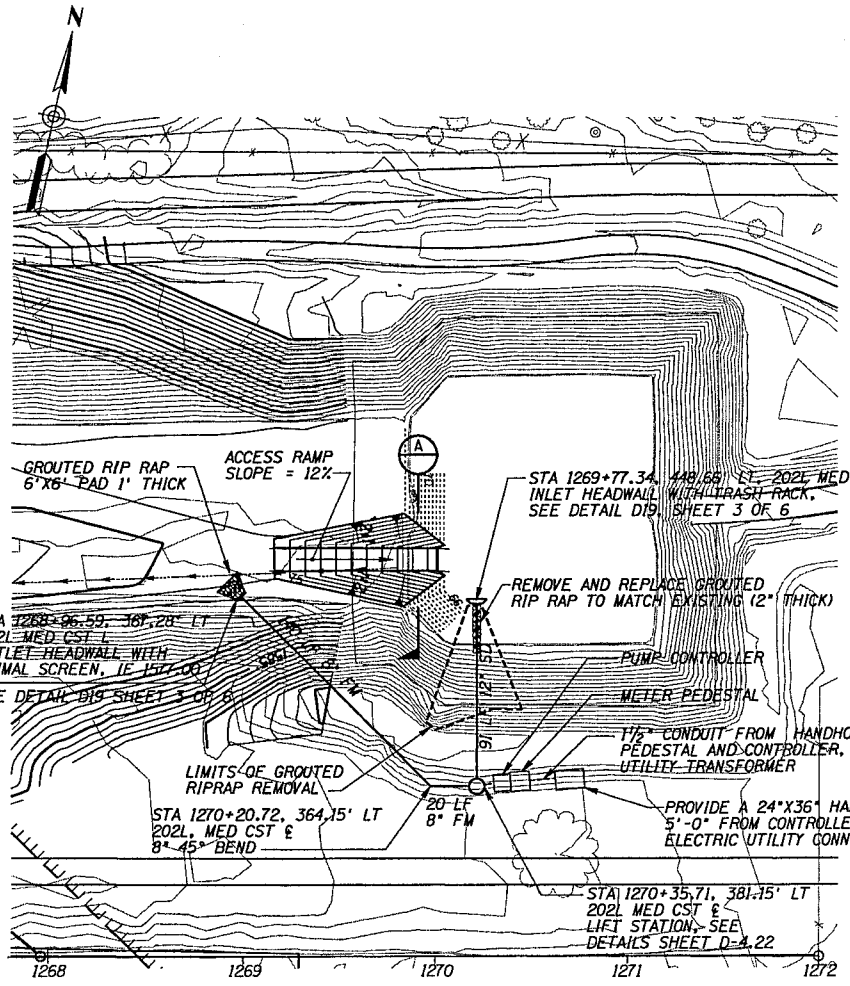

SIGNAL BUTTE ENERGY DISSIPATION BASIN
NTS

NOTES:

1. GROUTED RIPRAP SHALL HAVE A ROUGH SURFACE PER ADOT STD SPEC 913-3-.05.
2. FOR GROUTED RIPRAP SPECIFICATIONS SEE SPECIAL PROVISIONS.
3. CONCRETE SHALL BE CLASS B.
4. FOR ELECTRICAL DETAILS, SEE DETAIL D19 SHEETS 4, 5 & 6.
5. CONCRETE ACCESS RAMP SHALL BE PAID FOR AS CONCRETE CHANNEL LINING (6"), BID ITEM #9201006.

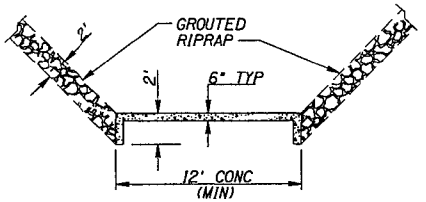

SECTION A
NTS

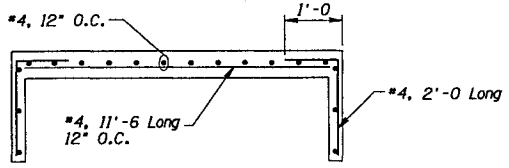

REINFORCING FOR CONCRETE ACCESS RAMP
NTS

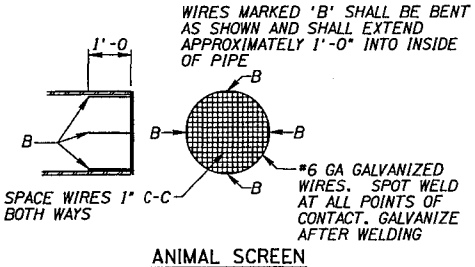

ANIMAL SCREEN
NTS

DETAIL D19

SHEET 1 OF 6

	NAME	DATE
DESIGN	CAD	07/05
DRAWN	JJO	07/05
CHECKED	RSR	07/05

Stanley Consultants inc. 1925 East Camelback Road, Suite 130 Phoenix, Arizona 85016 Phone: (602) 912-0220

ARIZONA DEPARTMENT OF TRANSPORTATION
INTERMODAL TRANSPORTATION DIVISION
ROADWAY DESIGN SERVICES

SIGNAL BUTTE
ENERGY DISSIPATION BASIN
LIFT STATION & DETAILS

THIS SHEET HAS BEEN SEALED

ROUTE	LOCATION	DWG NO. D-4.21
202L	RED MTN FWY, POWER ROAD - UNIVERSITY DRIVE	
TRACS NO. H 5782 01C	202-B(007)B	___ OF ___

08/16/2005 q:\17000\active\07-05-dwgs\04-drain\h5782dd20.dgn

F.A.H.A. REGION	STATE	PROJECT NO.	SHEET NO.	TOTAL SHEETS	AS BUILT
9	ARIZ.	202-B(007)B			
		202 MA 023			

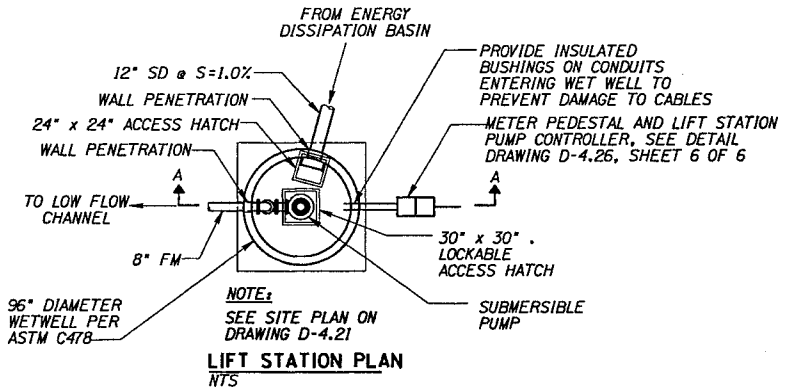

LIFT STATION PLAN
NTS

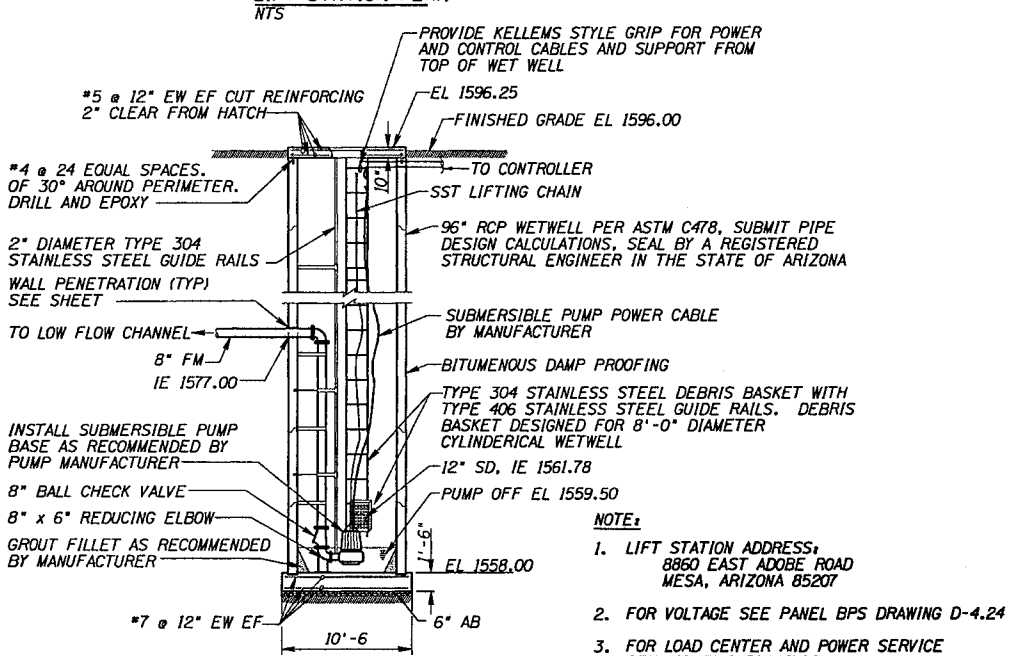

SECTION A-A
NTS

NOTE:

1. LIFT STATION ADDRESS:
   8860 EAST ADOBE ROAD
   MESA, ARIZONA 85207
2. FOR VOLTAGE SEE PANEL BPS DRAWING D-4.24
3. FOR LOAD CENTER AND POWER SERVICE SEE LIGHTING DRAWINGS

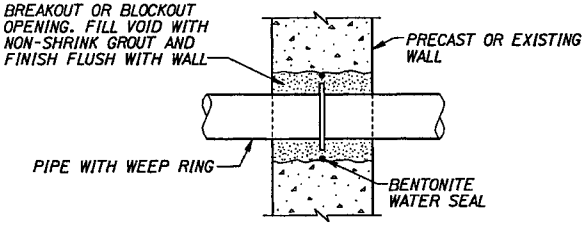

EXISTING OR PRECAST WALL PIPE PENETRATION
NTS

DETAIL D19

SHEET 2 OF 6

	NAME	DATE
DESIGN	FLR	07/05
DRAWN	JJD	07/05
CHECKED	FLR	07/05

Stanley Consultants Inc.
2501 East Camelback Road, Suite 120
Phoenix, Arizona 85016
Phone: (602) 52-0602

ARIZONA DEPARTMENT OF TRANSPORTATION
INTERMODAL TRANSPORTATION DIVISION
ROADWAY DESIGN SERVICES

SIGNAL BUTTE
ENERGY DISSIPATION
LIFT STATION

THIS SHEET HAS BEEN SEALED

ROUTE	LOCATION	DWG NO. D-4.22
202L	RED MTN FWY, POWER ROAD - UNIVERSITY DRIVE	
TRACS NO. H 5782 01C	202-B(007)B	___ OF ___

08/16/2005 q:\17000\active\07-05-dwgs\04-drain\h5782dd22.dgn

F.H.W.A. REGION	STATE	PROJECT NO.	SHEET NO.	TOTAL SHEETS	AS BUILT
9	ARIZ.	202-B(007)B			
		202 MA 023			

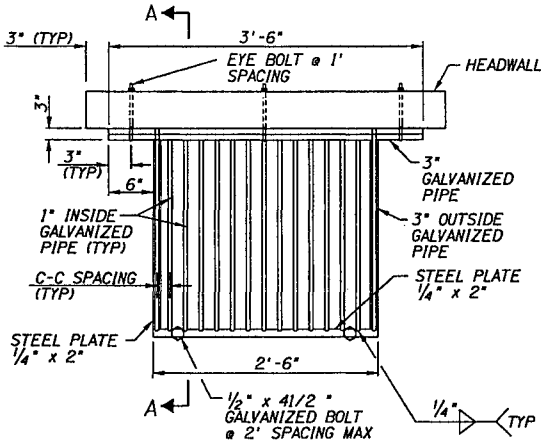

GRATE PLAN
NTS

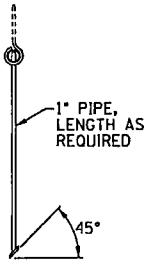

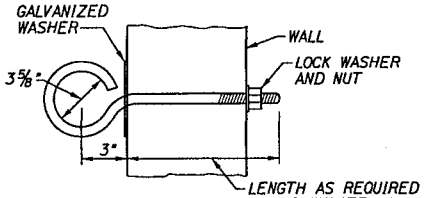

EYE BOLT
NTS

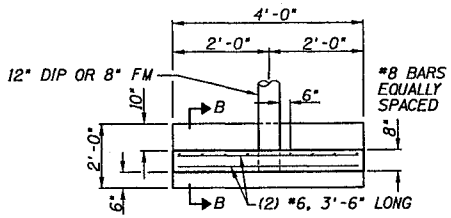

PLAN

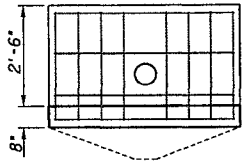

ELEVATION

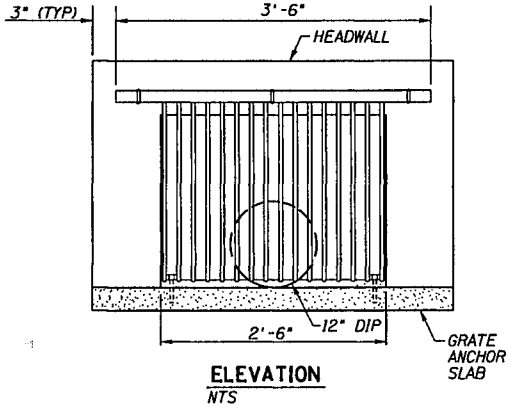

ELEVATION
NTS

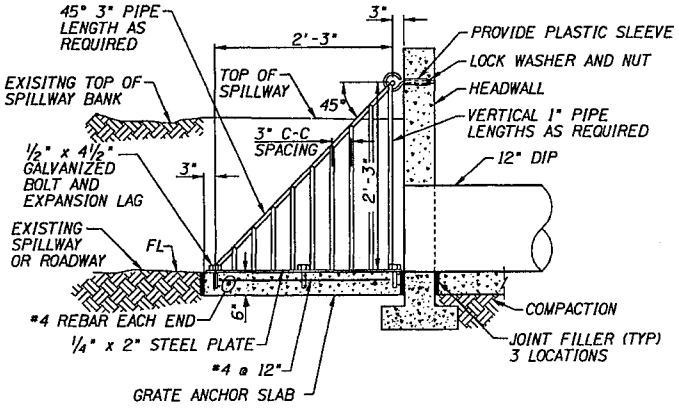

SECTION A-A
NTS

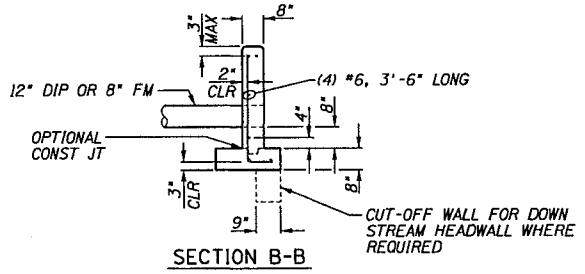

SECTION B-B

INLET AND OUTLET HEADWALL
NTS

NOTES:

1. ALL CONCRETE SHALL BE CLASS B
2. ALL STEEL SAHLL BE IN ACCORDANCE WITH ASTM A36
3. ALL UNGALVANIZED METAL SHALL BE PAINTED PER SECTION 610-3.05 OF THE ADOT STANDARD SPECIFICATIONS
4. REMOVE ALL SCALE FROM ALL STEEL SURFACES
5. SEE DETAILS D6 AND D7 FOR SPILLWAY DIMENSIONS
6. WHERE 5/8" EYE BOLTS CONFLICT WITH ANCHOR BOLTS (DETAILS D6 AND D7) USE EYE BOLTS TO SECURE STEEL PLATE AND RUBBER SHEET TO SOUND BARRIER WALL

TRASH RACK DETAILS

DETAIL D19

SHEET 3 OF 6

	NAME	DATE
DESIGN	CAD	07/05
DRAWN	JJD	07/05
CHECKED	RSR	07/05

Stanley Consultants INC. 2525 East Camelback Road, Suite 120 Phoenix, Arizona 85016 Phone (602) 522-6200

ARIZONA DEPARTMENT OF TRANSPORTATION
INTERMODAL TRANSPORTATION DIVISION
ROADWAY DESIGN SERVICES

SIGNAL BUTTE
ENERGY DISSIPATION BASIN
LIFT STATION & DETAILS

THIS SHEET HAS BEEN SEALED

ROUTE	LOCATION	DWG NO. D-4.23
202L	RED MTN FWY, POWER ROAD - UNIVERSITY DRIVE	
TRACS NO. H 5782 01C	202-B(007)B	___ OF ___

08/16/2005 g:\17000\active\07-05-dwgs\04-drain\h5782dd21.dgn

F.A.H.U.A. REGION	STATE	PROJECT NO.	SHEET NO.	TOTAL SHEETS	AS BUILT
9	ARIZ.	202-B(007)B			
		202 MA 023			

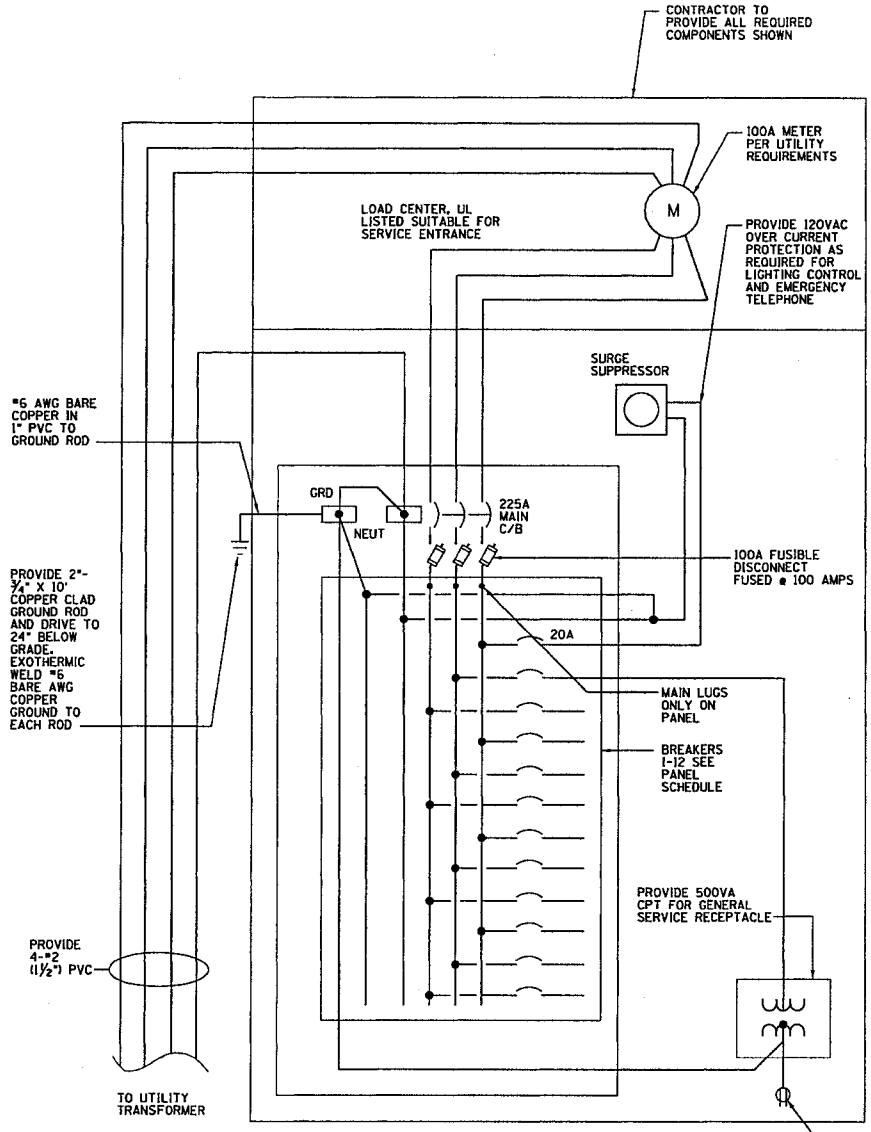

BUTTE LIFT PUMP STATION DIAGRAM

NO SCALE

PANEL NAME: BPS
SOURCE: LOCAL UTILITY TRANSFORMER

BRKR NO.	CKT DESCRIPTION	LOAD DESCRIPTION	BRKR RTG	PHASE (KVA) A	B	C	LOAD (KVA) LTG	RCPT	MTR	EQPT	LOAD FCTR	PANELBOARD RATINGS	
1	2#6W/#10GRD.1"C	LIFT STATION PUMP CONTROLLER	40A,3P	3.8					3.80		1.00	BUS AMPS:	100A
		10HP PUMP	1		3.8				3.80		1.00	SERVICE VOLTAGE:	480 Y/277
			1			3.8			3.80		1.00	FREQUENCY:	60 HZ
7	2#12W/#12GRD.3/4"C	CPT FOR SERVICE RECEPTACLE	20A,1P	0.5						0.50	1.00	MINIMUM AIC:	22,000
9		SPARE	20A,1P		0.0						1.00	NEMA TYPE:	3R
11		SPARE	20A,1P			0.0					1.00		
	N/A	N/A	N/A		0.0						1.00	MAIN LUG ONLY:	YES
			1			0.0					1.00	MAIN BRKR RATING:	N/A
			1	0.0							1.00		
			1		0.0						1.00	IG BUS:	N/A
			1			0.0					1.00	200% NEUTRAL:	N/A
			1			0.0					1.00		
			1								1.00	LUGS:	
			1								1.00	DOUBLE	N/A
			1								1.00	FEED THRU	N/A
			1								1.00		
			1								1.00	MOUNTING:	
			1								1.00	SURFACE	YES
			1								1.00	FLUSH	
			1								1.00		
			1								1.00	TVSS:	YES
2				0.0							1.00	CONNECTED LOAD	
4					0.0						1.00	LOAD TYPE	
6						0.0					1.00	LIGHTING:	
8				0.0							1.00	RECEPTACLE:	
10					0.0						1.00	MOTOR:	
12						0.0					1.00	EQUIPMENT:	
	N/A	N/A	N/A	0.0							1.00	TOTALS:	
			1		0.0						1.00		
			1			0.0					1.00	DEMAND LOAD	
			1	0.0							1.00	LOAD TYPE	
			1		0.0						1.00	LIGHTING:	
			1			0.0					1.00	RECEPTACLE:	
			1								1.00	MOTOR:	
			1								1.00	EQUIPMENT:	
			1								1.00	TOTALS:	
			1								1.00		
			1								1.00	MINIMUM CAPACITY	
			1								1.00	LOAD KVA	FACTOR / AMPS
			1								1.00	*REF½	1.25 / *REF½
			1								1.00	SPECIAL INSTRUCTIONS: THIS PANEL IS 12 CIRCUITS ONLY WITH 100A MAIN LUG CONNECTION.	

PHASE TOTALS			
*REF½	*REF	*REF½	KVA
*REF½	*REF	*REF½	AMPS

DETAIL D19

SHEET 4 OF 6

	NAME	DATE
DESIGN	FLR	07/05
DRAWN	JJD	07/05
CHECKED	FLR	07/05

ARIZONA DEPARTMENT OF TRANSPORTATION
INTERMODAL TRANSPORTATION DIVISION
ROADWAY DESIGN SERVICES

Stanley Consultants inc.

SIGNAL BUTTE
ENERGY DISSIPATION
LIFT STATION

THIS SHEET HAS BEEN SEALED

ROUTE	LOCATION	DWG NO. D-4.24
202L	RED MTN FWY, POWER ROAD - UNIVERSITY DRIVE	
TRACS NO. H 5782 01C		202-B(007)B

___ OF ___

08/16/2005 q:\7000\active\07-05-dwgs\10-pump\muse\h5782d423.dgn

F.A.H.U. REGION	STATE	PROJECT NO.	SHEET NO.	TOTAL SHEETS	AS BUILT
9	ARIZ.	202-B(007)B			
		202 MA 023			

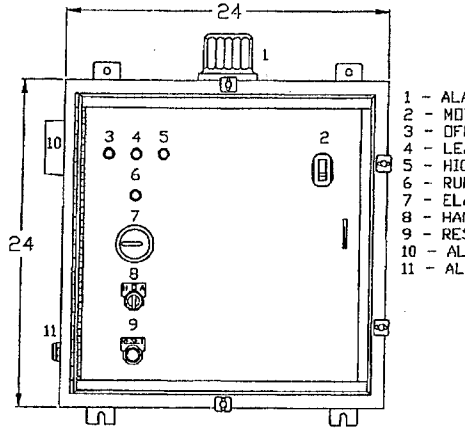

1 - ALARM LIGHT
2 - MOTOR BREAKER
3 - OFF
4 - LEAD
5 - HIGH
6 - RUN LIGHT
7 - ELAPSED TIME METER
8 - HAND OFF AUTO
9 - RESET MINI-CAS
10 - ALARM HORN
11 - ALARM SILENCE BUTTON

OUTER DOOR HAS BEEN REMOVED FOR CLARITY

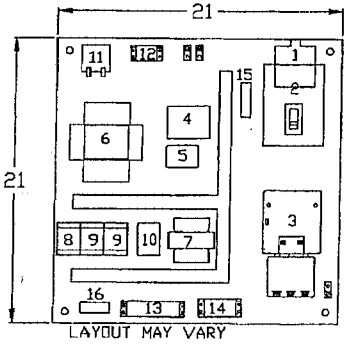

1 - LIGHTNING ARRESTOR
2 - MOTOR BREAKER
3 - MOTOR STARTER
4 - FUSE BLOCK
5 - PHASE MONITOR
6 - TRANSFORMER
7 - TRANSFORMER
8-9 - RELAY 1-3
10 - MINI-CAS
11 - FLASHER
12-14 - TERMINAL STRIP A-C
15 - THERMOSTAT
16 - HEATER

LAYOUT MAY VARY

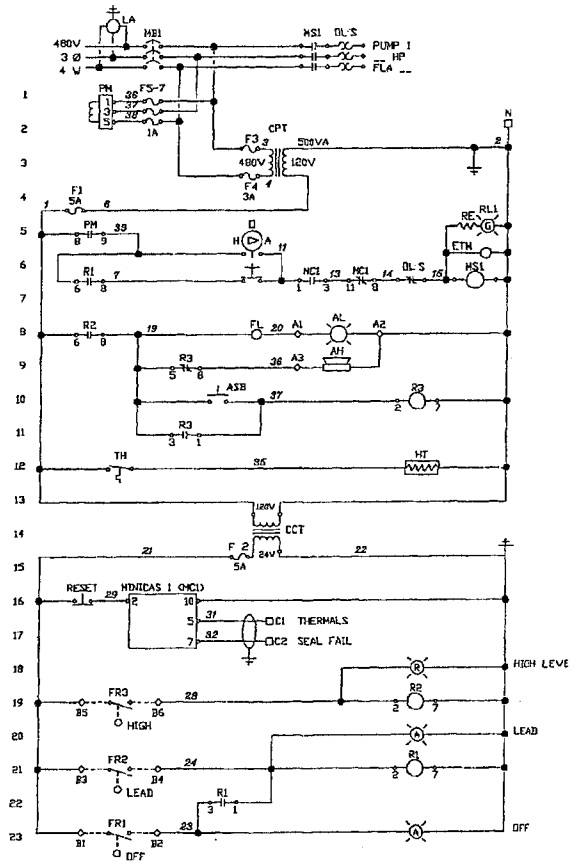

BASIS OF DESIGN TO BE FLYGT *RRC10.0AABACC

DETAIL D19

SHEET 5 OF 6

	NAME	DATE
DESIGN	FLR	07/05
DRAWN	JJO	07/05
CHECKED	FLR	07/05

Stanley Consultants inc.
1921 East Camelback Road, Suite 120
Phoenix, Arizona 85016
Phone (602) 957-4000

ARIZONA DEPARTMENT OF TRANSPORTATION
INTERMODAL TRANSPORTATION DIVISION
ROADWAY DESIGN SERVICES

SIGNAL BUTTE
LIFT STATION
PUMP SCHEMATIC

THIS SHEET HAS BEEN SEALED

ROUTE	LOCATION	DWG NO. D-4.25
202L	RED MTN FWY, POWER ROAD - UNIVERSITY DRIVE	
TRACS NO. H 5782 01C	202-B(007)B	___ OF ___

08/16/2005 a:\17000\active\07-05-dwgs\10-pump\muse\h5782d424.dgn

F.H.W.A. REGION	STATE	PROJECT NO.	SHEET NO.	TOTAL SHEETS	AS BUILT
9	ARIZ.	202-B(007)B			
		202 MA 023			

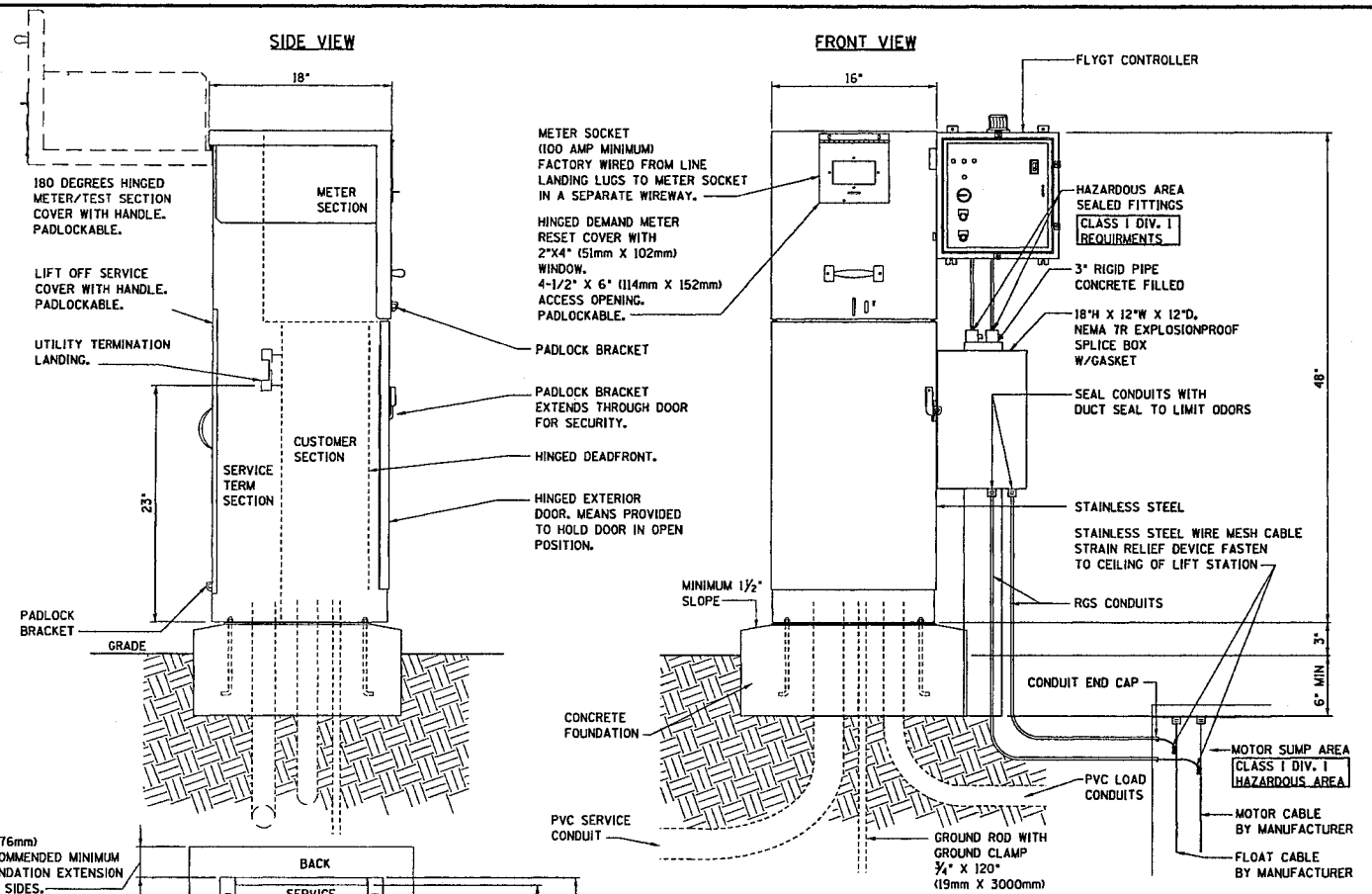

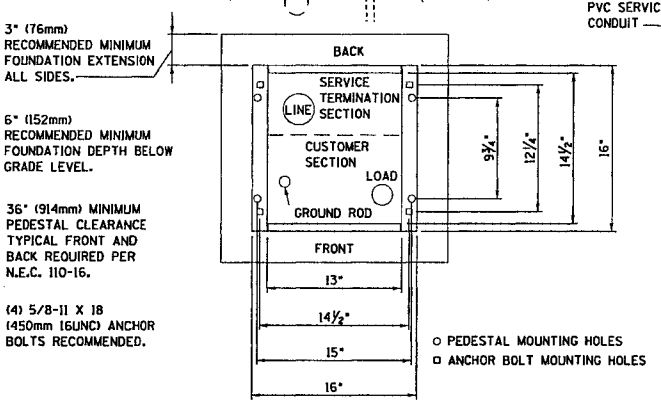

MOUNTING BASE DETAIL (TOP VIEW)

NOTES:

1. CONTROL CABINET SHALL BE U/L LISTED "INDUSTRIAL CONTROL PANEL" PER UL 508.
2. CONSTRUCTION SHALL BE NEMA 3R.
3. VOLTAGE RATINGS OF SERVICE EQUIPMENT SHALL CONFIRM TO THE SERVICE VOLTAGES INDICATED ON THE PLANS.
4. SERVICE EQUIPMENT ENCLOSURE AND METERING EQUIPMENT SHALL MEET THE REQUIREMENTS OF THE SERVING UTILITY. THE METER AREA SHALL HAVE A SEALABLE, LOCKABLE, RAINTIGHT COVER THAT CAN BE REMOVED WITHOUT THE USE OF TOOLS.
5. SERVICE EQUIPMENT SHALL BE FACTORY WIRED AND CONFIRM TO NEMA STANDARDS AND TO SECTION 86-2.11, "SERVICE" OF THE STANDARD SPECIFICATIONS.
6. THE EXTERIOR DOOR SHALL HAVE PROVISIONS FOR PADLOCKING. THE PADLOCK HOLE SHALL BE A MINIMUM DIAMETER OF 11mm.
7. ALL TERMINALS FOR INCOMING SERVICE CONDUCTORS SHALL BE COMPATIBLE WITH EITHER COPPER OR ALUMINUM CONDUCTORS SIZED TO SUIT THE CONDUCTORS SHOWN ON THE PLAN. TERMINAL LUGS SHALL BE COPPER OR TIN-PLATED ALUMINUM. SOLID NEUTRAL TERMINAL STRIP SHALL BE RATED 125A UNLESS OTHERWISE SPECIFIED AND FOR USE WITH COPPER OR ALUMINUM CONDUCTORS. THE TERMINAL SHOULD INCLUDE BUT NOT BE LIMITED TO:
   A) INCOMING TERMINALS (LANDING LUGS)
   B) NEUTRAL LUGS
   C) SOLID NEUTRAL TERMINAL STRIP.
   D) TERMINAL STRIPS FOR CONDUCTORS WITHIN THE ENCLOSURE.
8. PROVIDE SINGLE POLE BREAKERS (20mm NOMINAL) AS SHOWN ON PANEL SCHEDULES FOR BRANCH CIRCUITS. CIRCUIT BREAKER INTERIORS SHALL BE COPPER. INTERIORS SHALL ACCEPT PLUG-IN OR CABLE-IN/ CABLE-OUT CIRCUIT BREAKERS.
9. PLUG-IN CIRCUIT BREAKERS MAY BE MOUNTED IN THE VERTICAL OR HORIZONTAL POSITION. CABLE-IN/ CABLE-OUT CIRCUIT BREAKERS SHALL BE MOUNTED IN THE VERTICAL POSITION.
10. FASTENERS ON THE EXTERIOR OF THE ENCLOSURE SHALL BE VANDAL RESISTANT AND SHALL NOT BE REMOVABLE FROM THE EXTERIOR. ALL NUTS, BOLTS, SCREWS, WASHERS, AND HINGES SHALL BE STAINLESS STEEL.
11. PHENOLIC NAME PLATES SHALL BE PROVIDED AS REQUIRED.
12. A PLASTIC COVERED WIRING DIAGRAM SHALL BE ATTACHED TO THE INSIDE OF THE FRONT DOOR.
13. FOUNDATION SHALL EXTEND 50mm MINIMUM BEYOND EDGE OF ENCLOSURE.

DETAIL D19

SHEET 6 OF 6

	NAME	DATE
DESIGN	FLR	07/05
DRAWN	JJD	07/05
CHECKED	FLR	07/05

ARIZONA DEPARTMENT OF TRANSPORTATION
INTERMODAL TRANSPORTATION DIVISION
ROADWAY DESIGN SERVICES

Stanley Consultants inc.
2525 East Camelback Road, Suite 130
Phoenix, Arizona 85016
Phone: (602) 912-0500

SIGNAL BUTTE ENERGY DISSIPATION LIFT STATION

THIS SHEET HAS BEEN SEALED

ROUTE	LOCATION	DWG NO. D-4.26
202L	RED MTN FWY, POWER ROAD - UNIVERSITY DRIVE	
TRACS NO. H 5782 01C		202-B(007)B

___ OF ___

08/16/2005 q:\17000\active\07-05-dwgs\10-pump\musc\h5782d25.dgn

F.H.W.A. REGION	STATE	PROJECT NO.	SHEET NO.	TOTAL SHEETS	AS BUILT
9	ARIZ.	202-B(007)B			
		202 MA 023			

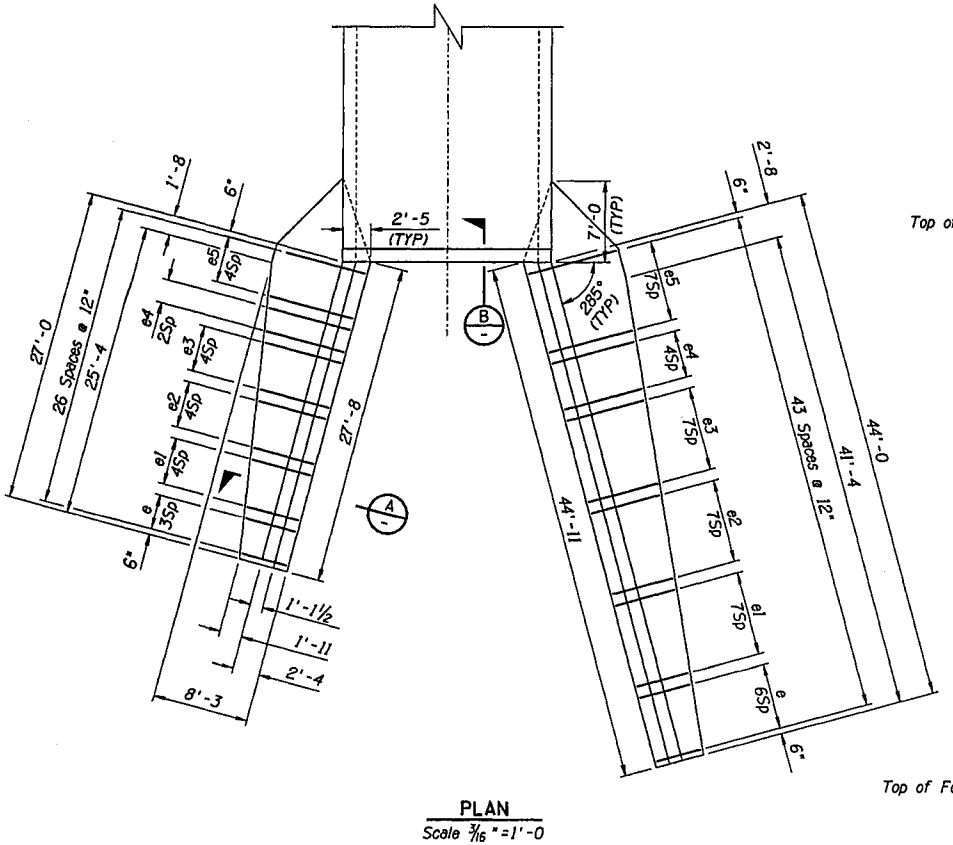

PLAN
Scale 3/16" = 1'-0

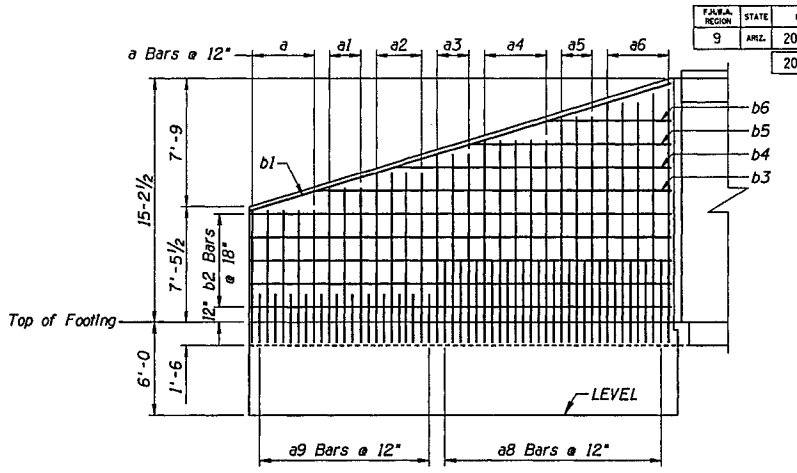

WING ELEVATION
(BACK FACE REINF.)
(SHORT WALL SHOWN, LONG WALL SIMILAR)
Scale 1/4" = 1'-0

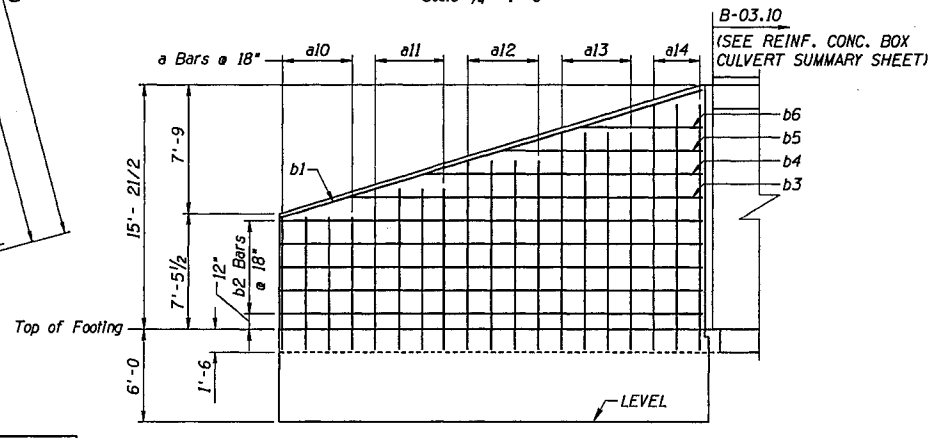

WING ELEVATION
(FRONT FACE REINF.)
(SHORT WALL SHOWN, LONG WALL SIMILAR)
Scale 1/4" = 1'-0

LOCATION SUMMARY

LOCATION	STATION	PLAN REF. NO.	REFERNCE DRAWINGS
McDowell Cst CL	16+51.17	2	D-1.22 & D-3.2
McDowell Cst CL	15+61.23	3	D-1.22 & D-3.1
McKellips Cst CL	34+28.60	4	D-1.24 & D-3.4
McKellips Cst CL	33+54.05	5	D-1.24 & D-3.3
BROWN Cst CL	21+86.03	6	D-1.27 & D-3.6
BROWN Cst CL	21+25.62	7	D-1.27 & D-3.5

(SEE DWG. NO. G-8.1, REINFORCED CONC BOX CULVERT SUMMARY SHEET FOR ADDITIONAL INFORMATION)

NOTE:
FOR GENERAL NOTES AND MISCELLANEOUS DETAILS SEE B-01.10

DETAIL D20

SHEET 1 OF 2

	NAME	DATE
DESIGN	JDJ	07/05
DRAWN	AEM	07/05
CHECKED	CAD	07/05

Stanley Consultants inc.
2525 East Camelback Road, Suite 130
Phoenix, Arizona 85016
Phone (602) 957-0555

ARIZONA DEPARTMENT OF TRANSPORTATION
INTERMODAL TRANSPORTATION DIVISION
ROADWAY DESIGN SERVICES

FLOOD POOL & TRAIL
RCB WINGWALL DETAILS

THIS SHEET HAS BEEN SEALED

ROUTE	LOCATION	DWG NO. D-4.27
202L	RED MTN FWY. POWER ROAD - UNIVERSITY DRIVE	
TRACS NO. H 5782 01C	202-B(007)B	___ OF ___

F.H.W.A. REGION	STATE	PROJECT NO.	SHEET NO.	TOTAL SHEETS	AS BUILT
9	ARIZ.	202-B(007)B			
		202 MA 023			

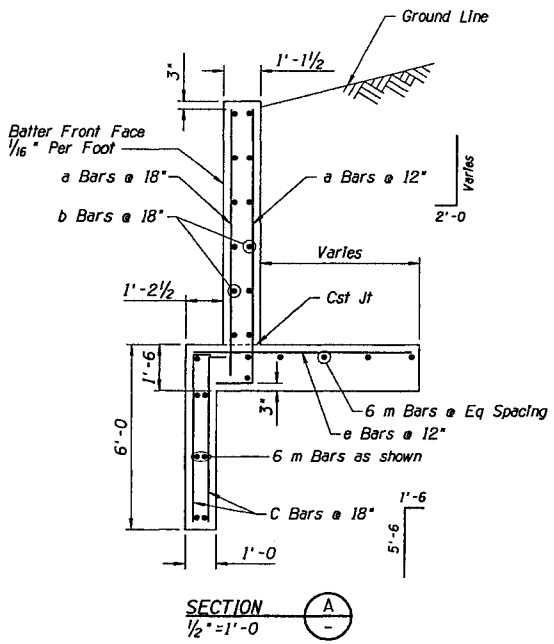

SECTION A
½"=1'-0

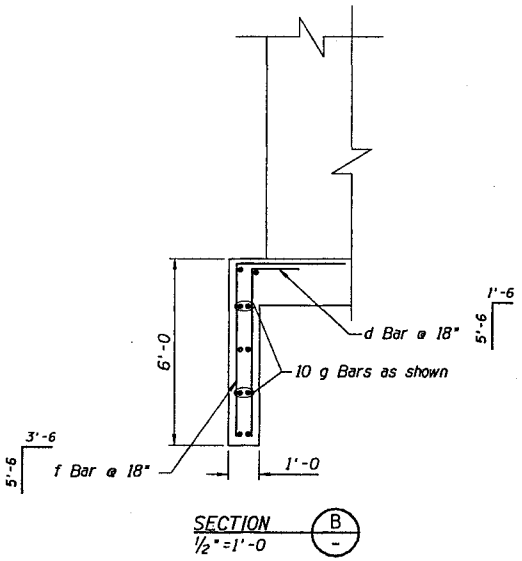

SECTION B
½"=1'-0

WING WALL & CUTOFF WALL STEEL LIST

Mark	Size	Number Short Wall	Number Long Wall	Lngth.	Mark	Size	Number Short Wall	Number Long Wall	Lngth.
a	#5	5	8	10'-9	b4	#4	2	--	17'-3
a1	#5	3	5	11'-9	b5	#4	2	--	12'-1
a2	#5	4	6	12'-9	b6	#4	2	--	6'-11
a3	#6	3	6	13'-9	b1	#6	--	2	44'-3
a4	#6	5	4	14'-9	b2	#4	--	10	43'-8
a5	#6	3	5	16'-0	b3	#4	--	2	36'-7
a6	#6	3	6	17'-0	b4	#4	--	2	28'-2
a7	#7	2	2	18'-3	b5	#4	--	2	19'-9
a8	#8	15	25	7'-3	b6	#4	--	2	11'-4
a9	#6	12	15	5'-3	c	#4	38	60	7'-0
a10	#4	4	8	8'-9	e	#5	4	7	4'-0
a11	#4	4	5	10'-3	e1	#5	5	8	4'-7
a12	#4	4	5	11'-9	e2	#6	5	8	5'-5
a13	#4	4	7	13'-3	e3	#7	5	8	6'-2
a14	#4	3	5	15'-0	e4	#8	3	5	7'-0
m	#4	12	--	28'-0	e5	#9	5	8	7'-6
m	#4	--	12	45'-8	Barrel Cutoff Wall				
b1	#6	2	--	27'-6	f	#4	7		9'-0
b2	#4	10	--	26'-7	d	#4	7		7'-0
b3	#4	2	--	22'-4	g	#4	10		11'-4

WING WALL & CUTOFF QUANTITES

Steel	5565 Lbs
Conc.	76.5 CY

DETAIL D20

SHEET 2 OF 2

	NAME	DATE
DESIGN	JDJ	07/05
DRAWN	AEM	07/05
CHECKED	CAD	07/05

Stanley Consultants inc.
2525 East Camelback Road, Suite 130
Phoenix, Arizona 85016
Phone (602) 957-1000

ARIZONA DEPARTMENT OF TRANSPORTATION
INTERMODAL TRANSPORTATION DIVISION
ROADWAY DESIGN SERVICES

FLOOD POOL & TRAIL
RCB WINGWALL DETAILS

THIS SHEET HAS BEEN SEALED

ROUTE	LOCATION	DWG NO. D-4.28
202L	RED MTN FWY, POWER ROAD - UNIVERSITY DRIVE	
TRACS NO. H 5782 01C	202-B(007)B	___ OF ___

08/16/2005 q:\17000\active\07-05-dwgs\04-drain\h5782d04v04.dgn

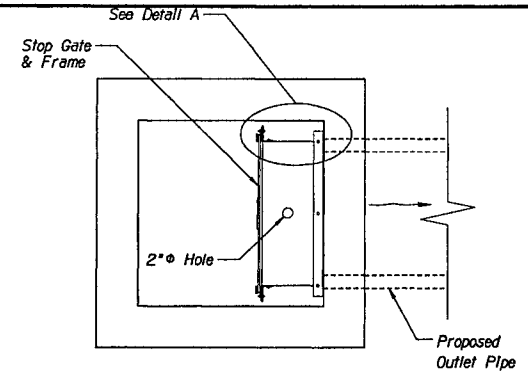

PLAN

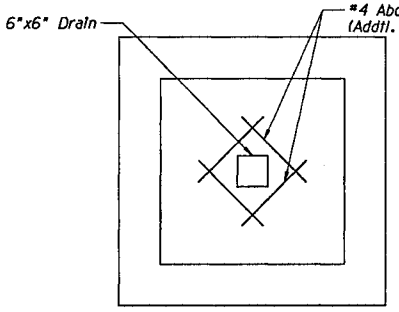

PLAN
(BOTTOM SLAB)

F.H.W.A. REGION	STATE	PROJECT NO.	SHEET NO.	TOTAL SHEETS	AS BUILT
9	ARIZ.	202-B(007)B			
		202 MA 023			

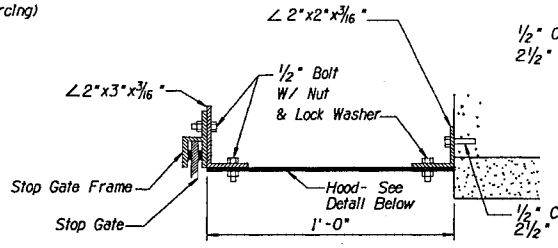

DETAIL A

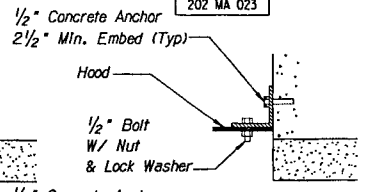

DETAIL B

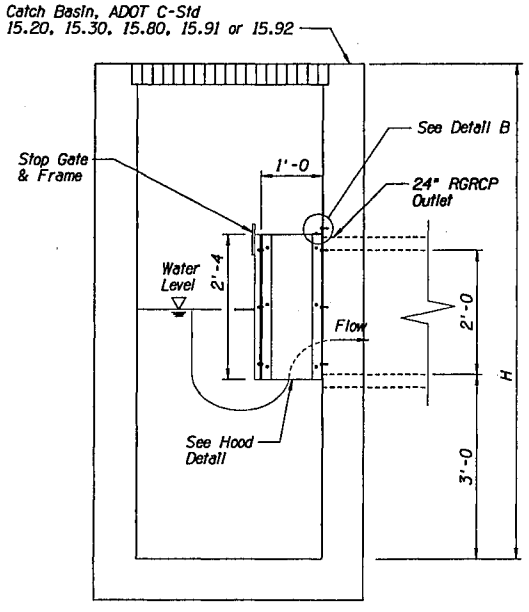

SIDE ELEVATION

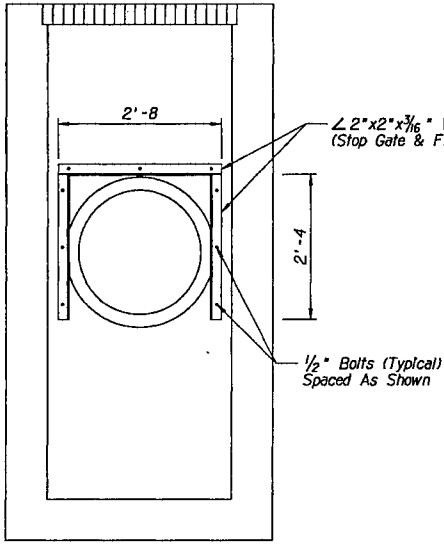

FRONT ELEVATION

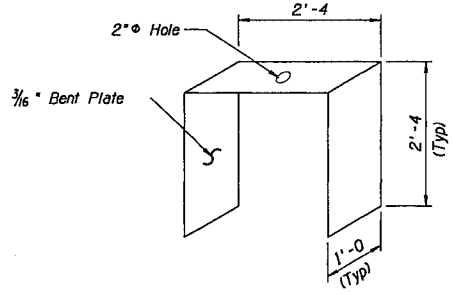

HOOD DETAIL

NOTES:

1. Plate, Frame, Angles, Lock Washers, Bolts & Nuts Shall be ASTM A36.
2. Reinforcing Steel shall Conform to ADOT Std Spec Section 1003-1, 1003-2, Grade 300
3. All hardware (frame, hood, and mounting assembly) shall be galvanized.
4. Stop Gate & Frame shall be Waterman Industries Stop Gate & Frame or Equivalent.
5. Provide Stop Gate and Pipe Hood over outlet pipes (only) for catch basins: 103, 105, 106, 188, 193, 204, 293, 303, 310, 315, 335, 341, 342, 389, 713, 766, and 858.
6. This Detail Shall be Considered Incidental to the Cost of ADOT C-Standards 15.20, 15.30, 15.80, 15.91 and 15.92.

DETAIL D21

	NAME	DATE
DESIGN	CAD	07/05
DRAWN	AEM	07/05
CHECKED	CAD	07/05

Stanley Consultants inc.
2525 East Camelback Road, Suite 130 Phoenix, Arizona 85016 Phone: (602) 952-6000

ARIZONA DEPARTMENT OF TRANSPORTATION
INTERMODAL TRANSPORTATION DIVISION
ROADWAY DESIGN SERVICES

CATCH BASIN DETAIL

THIS SHEET HAS BEEN SEALED

ROUTE	LOCATION	DWG NO. D-4.29
202L	RED MTN FWY, POWER ROAD - UNIVERSITY DRIVE	
TRACS NO. H 5782 01C	202-B(007)B	___ OF ___

F.A.H.A. REGION	STATE	PROJECT NO.	SHEET NO.	TOTAL SHEETS	AS BUILT
9	ARIZ.	202-B(007)B			

202 MA 023

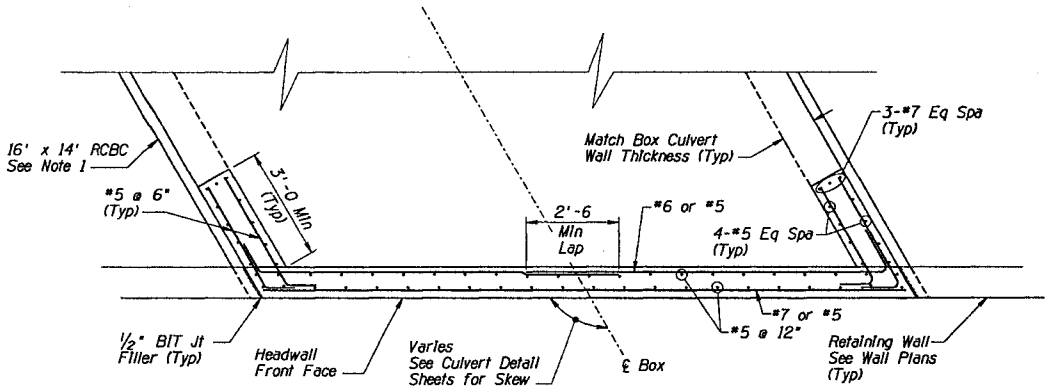

TYPE II HEADWALL PLAN

Headwall at Brown Rd RCBC (6)
Shown, Headwall at McKellips Rd
RCBC (4) Similar.

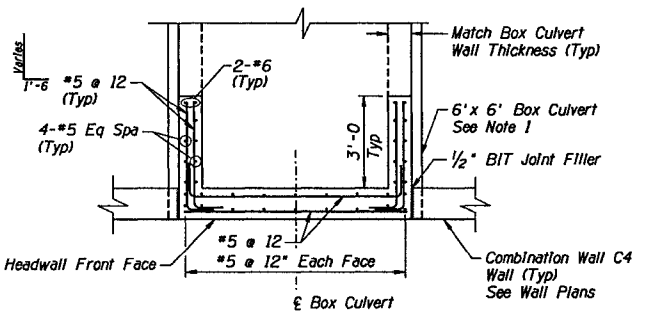

TYPE III HEADWALL PLAN

Notes:
1. Box Culvert Reinforcing not Shown for Clarity. See ADOT Standard B-03.10 and Box Culvert Plan & Elevation for Reinforcing and Dimensions.
2. See Wall Plans for Adjacent Retaining Wall Information and Top of Wall Elevations.

DETAIL D22

Sheet 1 of 2

	NAME	DATE
DESIGN	JML	07/05
DRAWN	AEM	07/05
CHECKED	DRS	07/05

Stanley Consultants Inc.

ARIZONA DEPARTMENT OF TRANSPORTATION
INTERMODAL TRANSPORTATION DIVISION
ROADWAY DESIGN SERVICES

RCBC CULVERT HEADWALL DETAILS

THIS SHEET HAS BEEN SEALED

ROUTE	LOCATION	DWG NO. D-4.30
202L	RED MTN FWY, POWER ROAD - UNIVERSITY DRIVE	
TRACS NO. H 5782 01C	202-B(007)B	___ OF ___

08/16/2005 q:\17000\active\07-05-dwgs\04-drain\h5782dd25.dgn

F.H.W.A. REGION	STATE	PROJECT NO.	SHEET NO.	TOTAL SHEETS	AS BUILT
9	ARIZ.	202-B(007)B			
		202 MA 023			

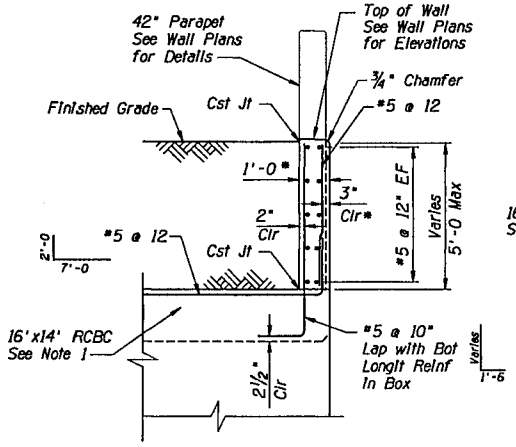

TYPE I HEADWALL - TYPICAL SECTION

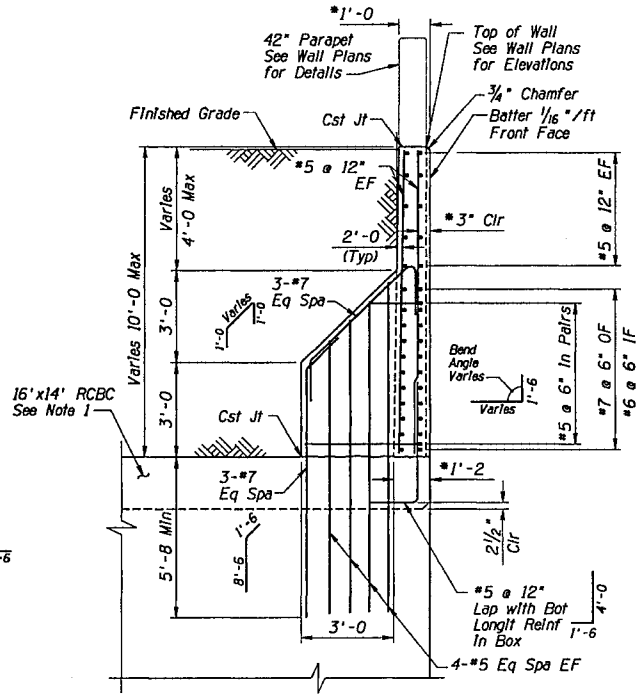

TYPE II HEADWALL - TYPICAL SECTION

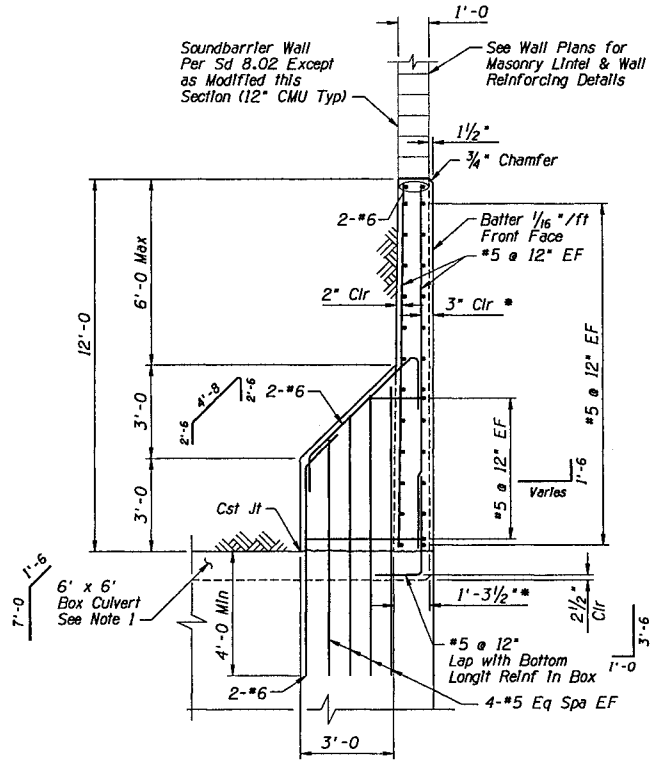

TYPE III HEADWALL - TYPICAL SECTION

Notes:
1. Box Culvert Reinforcing not Shown for Clarity. See ADOT Standard B-03.10 and Box Culvert Plan & Elevation for Reinforcing and Dimensions.
2. See Wall Plans for Adjacent Retaining Wall Information and Top of Wall Elevations.

* Includes 1 1/2" Allowance for Rustification

DETAIL D22

Sheet 2 of 2

	NAME	DATE
DESIGN	JML	07/05
DRAWN	AEM	07/05
CHECKED	DRS	07/05

Stanley Consultants Inc.
2525 East Camelback Road, Suite 130
Phoenix, Arizona 85016
Phone (602) 952-6500

ARIZONA DEPARTMENT OF TRANSPORTATION
INTERMODAL TRANSPORTATION DIVISION
ROADWAY DESIGN SERVICES

RCBC CULVERT HEADWALL DETAILS

THIS SHEET HAS BEEN SEALED

ROUTE	LOCATION	DWG NO. D-4.31
202L	RED MTN FWY, POWER ROAD - UNIVERSITY DRIVE	
TRACS NO. H 5782 01C	202-B(007)B	___ OF ___

F.H.W.A. REGION	STATE	PROJECT NO.	SHEET NO.	TOTAL SHEETS	AS BUILT
9	ARIZ.	202-B(007)B			

202 MA 023

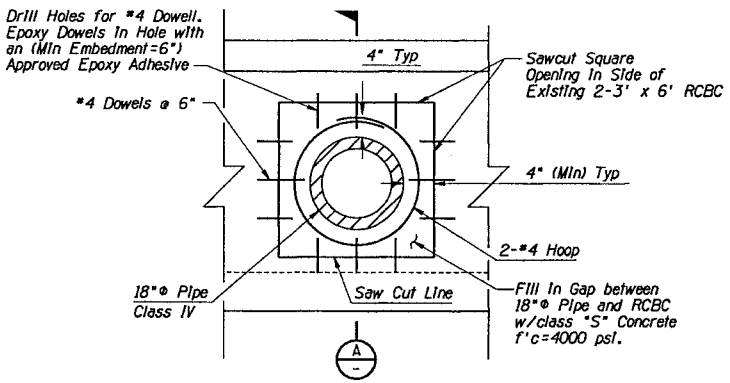

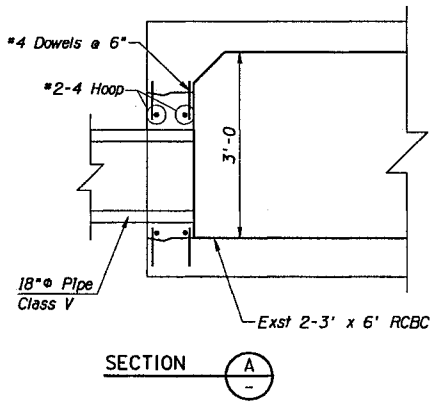

Note: Typical RCBC Reinforcing not Shown for Clarity.

NOTE:
This Detail Shall Be Considered Incidental To the Cost of the Pipe.

DETAIL D23

	NAME	DATE
DESIGN	RSR	07/05
DRAWN	AEM	07/05
CHECKED	CAD	07/05

ARIZONA DEPARTMENT OF TRANSPORTATION
INTERMODAL TRANSPORTATION DIVISION
ROADWAY DESIGN SERVICES

Stanley Consultants inc.
2525 East Camelback Road, Suite 130
Phoenix, Arizona 85016
Phone (602) 957-4200

MISCELLANEOUS DETAILS

THIS SHEET HAS BEEN SEALED

ROUTE	LOCATION	DWG NO.
202L	RED MTN FWY, POWER ROAD - UNIVERSITY DRIVE	D-4.32
TRACS NO. H 5782 01C	202-B(007)B	___ OF ___

08/16/2005 q:\17000\active\07-05-dwgs\04-drain\h5782dd27.dgn

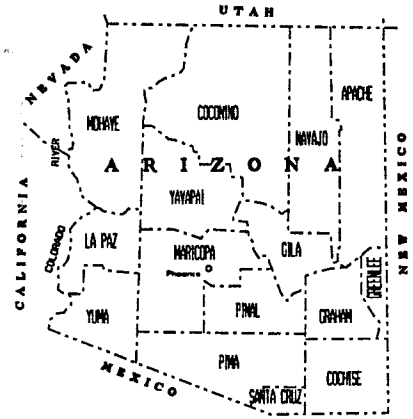

STATE OF ARIZONA
DEPARTMENT OF TRANSPORTATION
INTERMODAL TRANSPORTATION DIVISION

PLAN AND PROFILE OF PROPOSED
STATE HIGHWAY
202L MA 023

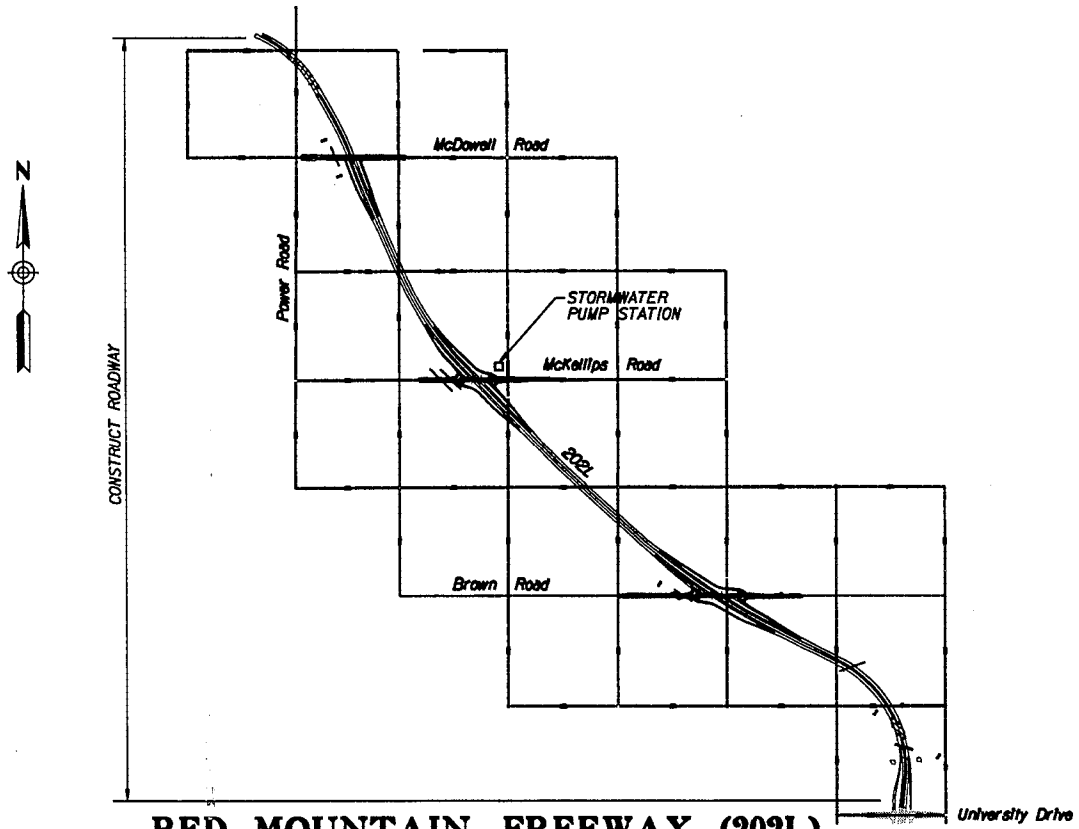

RED MOUNTAIN FREEWAY (202L)
POWER ROAD - UNIVERSITY DRIVE
STORMWATER PUMP STATION

ARIZONA DEPARTMENT OF TRANSPORTATION
INTERMODAL TRANSPORTATION DIVISION
APPROVED: BILL MISSING
STATE ENGINEER

APPROVED DATE

ASSISTANT STATE ENGINEER

4722/2885 q:\17668\active\87-85-dwgs\18-pump\h5782psgdl.dgn

F.H.W.A. REGION	STATE	PROJECT NO.	SHEET NO.	TOTAL SHEETS	AS BUILT
9	ARIZ.	202-B(007)B			

202 MA 023

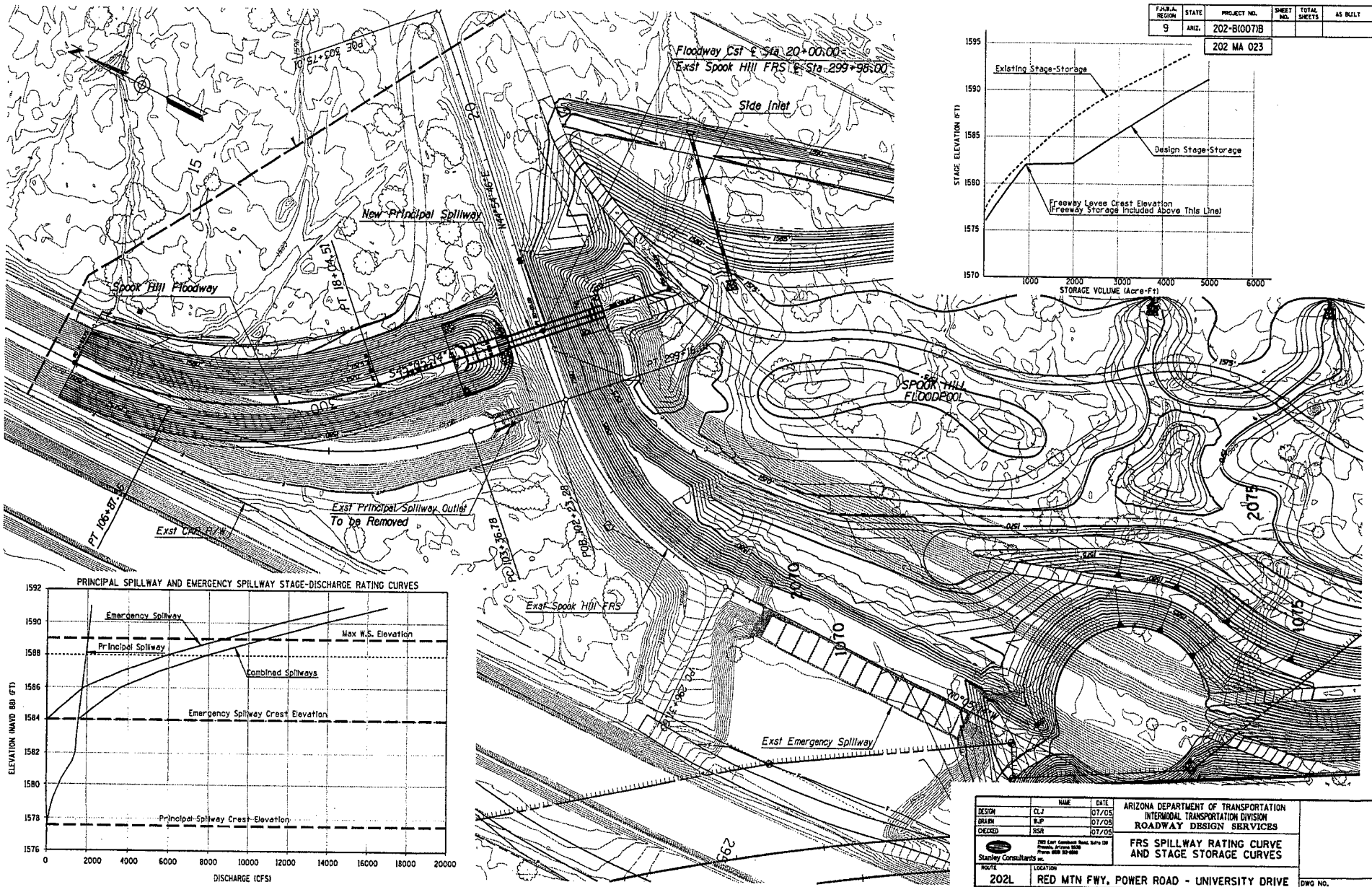

	NAME	DATE
DESIGN	C.L.J	07/05
DRAWN	W.J.P	07/05
CHECKED	R.S.R	07/05

ARIZONA DEPARTMENT OF TRANSPORTATION
INTERMODAL TRANSPORTATION DIVISION
ROADWAY DESIGN SERVICES

Stanley Consultants inc.

FRS SPILLWAY RATING CURVE AND STAGE STORAGE CURVES

ROUTE	LOCATION	DWG NO.
202L	RED MTN FWY, POWER ROAD - UNIVERSITY DRIVE	
TRACS NO. H 5782 01C	202-B(007)B	OF

F.A.H.U. REGION	STATE	PROJECT NO.	SHEET NO.	TOTAL SHEETS	AS BUILT
9	ARIZ.	202-B(007)B			
		202 MA 023			

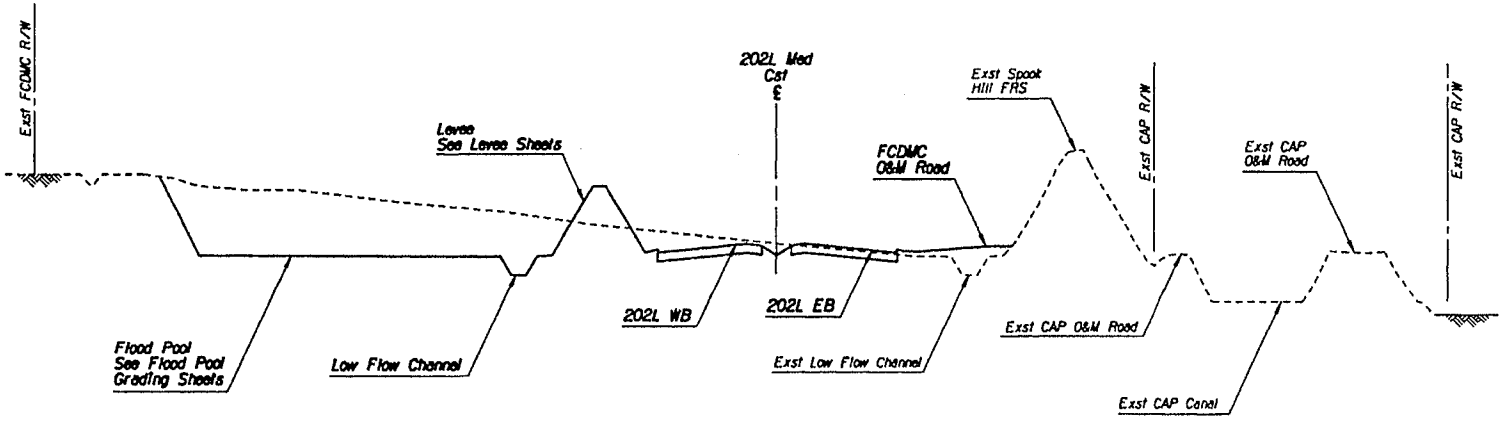

TYPICAL MAINLINE SECTION

Within Spook Hill FRS Flood Pool
202L Med Cst ℄ Sta 1067+00.00 to Sta 1270+00.00

	NAME	DATE
DESIGN	BTEH	4/05
DRAWN	CCS	4/05
CHECKED	GJM	4/05

Stanley Consultants Inc.

ARIZONA DEPARTMENT OF TRANSPORTATION
INTERMODAL TRANSPORTATION DIVISION
ROADWAY DESIGN SERVICES

202L
TYPICAL SECTIONS

PRELIMINARY
STAGE IV
95% Review
NOT FOR CONSTRUCTION OR RECORDING

ROUTE	LOCATION
202L	RED MTN FWY, POWER ROAD - UNIVERSITY DRIVE

DRG NO. G-5.2

TRACS NO. H 5782 01C | 202-B(007)B | ___ OF ___

472272885 q:\17808\active\87-85-dsgn\82-gen\h5782ds3e.dgn

FHWA REGION	STATE	PROJECT NO.	SHEET NO.	TOTAL SHEETS	AS BUILT
9	ARIZ.	202-B100718			
		202 MA 023			

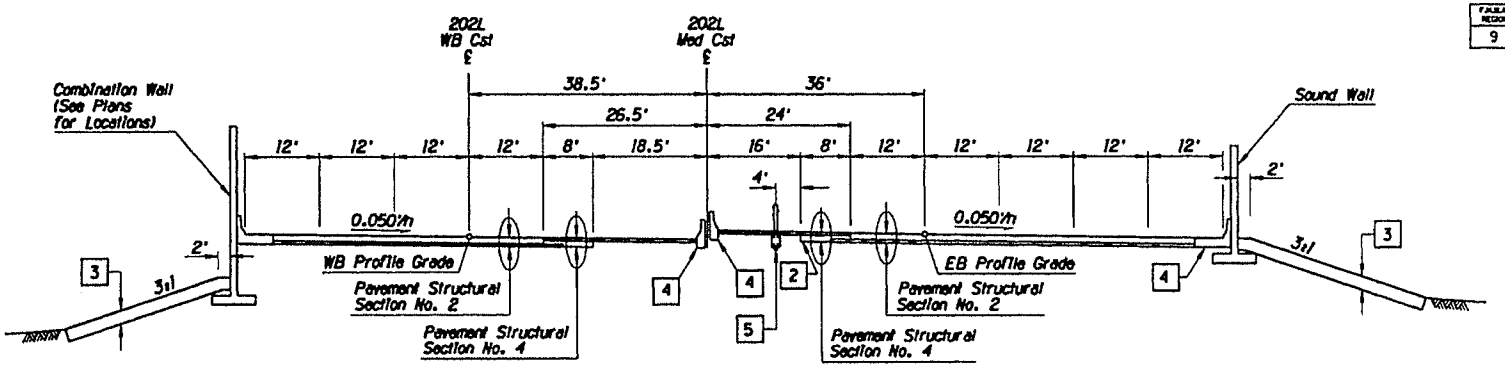

TYPICAL SECTION - 202L MAINLINE

(EB) 202L Med Cst ℄ Sta 1052+02.10 to Sta 1053+98.49
(WB) 202L Med Cst ℄ Sta 1053+52.72 to Sta 1053+98.49

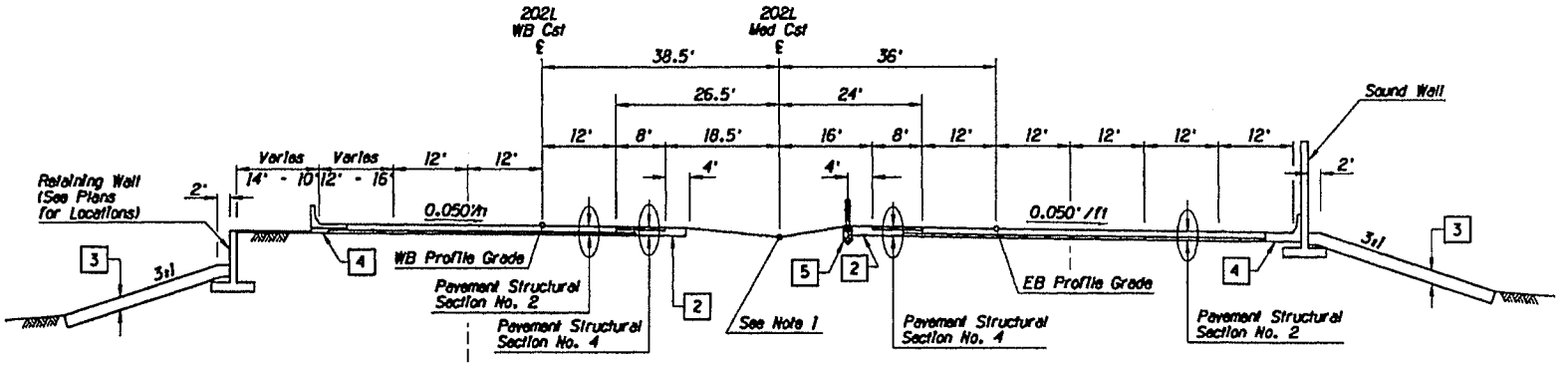

TYPICAL SECTION - 202L MAINLINE

(EB) 202L Med Cst ℄ Sta 1053+98.49 to Sta 1062+56.00
(WB) 202L Med Cst ℄ Sta 1053+98.49 to Sta 1055+07.45

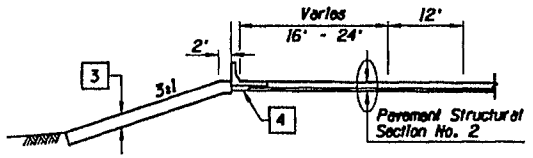

(WB) 202L Med Cst ℄ Sta 1055+07.45 to Sta 1061+74.50

NOTES:

1. See Drainage Plans for Ditch Control

1. Conc Curb & Gutter, (See Plans for Type & Location)
2. Shoulder Treatment, Detail A
3. 24" Thick Topsoil Plating
4. Conc Half Barrier, (See Plans for Type & Location)
5. Briton Median Barrier

	NAME	DATE
DESIGN	WEH	4/05
DRAWN	CCS	4/05
CHECKED	GJM	4/05

Stanley Consultants Inc.

ARIZONA DEPARTMENT OF TRANSPORTATION
INTERMODAL TRANSPORTATION DIVISION
ROADWAY DESIGN SERVICES

202L WB and EB
TYPICAL MAINLINE SECTION

PRELIMINARY
STAGE IV
95% Review
NOT FOR CONSTRUCTION OR RECORDING

ROUTE	LOCATION
202L	RED MTN FWY, POWER ROAD - UNIVERSITY DRIVE

DRG NO. C-3.3

TRACS NO. H 5782 01C | 202-B100718 | ___ OF ___

472272885 q:\17888\active\87-85-dngs\82-gen\h5782d36.dgn

F.H.W.A. REGION	STATE	PROJECT NO.	SHEET NO.	TOTAL SHEETS	AS BUILT
9	ARIZ.	202-B(007)B			
		202 MA 023			

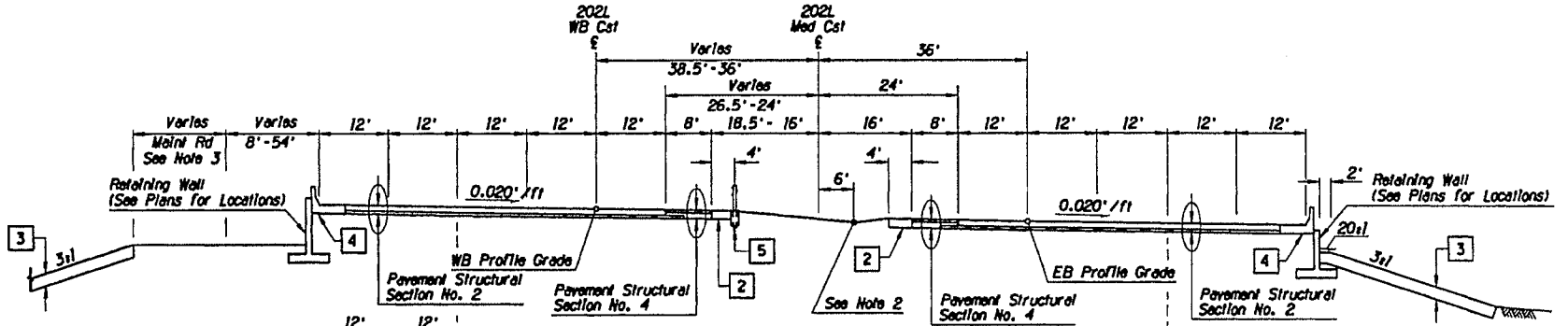

TYPICAL SECTION - 202L MAINLINE

(EB) 202L Med Csl ℄ Sta 1074+10.50 to Sta 1078+76.02
(WB) 202L Med Csl ℄ Sta 1072+35.50 to Sta 1078+00.19

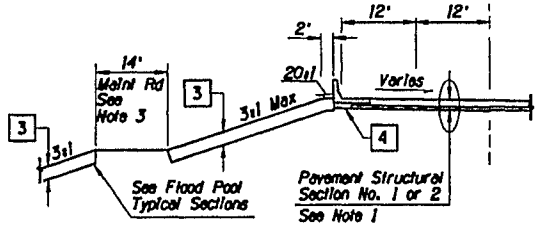

(WB) 202L Med Csl ℄ Sta 1078+00.19 to Sta 1092+50.00

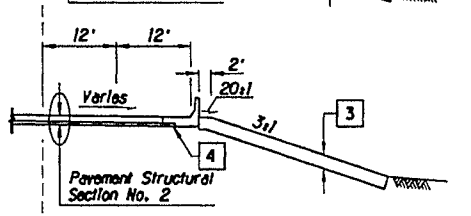

(EB) 202L Med Csl ℄ Sta 1078+76.02 to Sta 1080+15.00

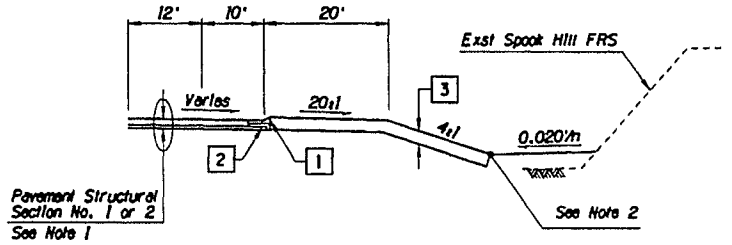

(EB) 202L Med Csl ℄ Sta 1080+15.00 to Sta 1092+50.00

NOTES:

1. Pavement Structural Section No. 1
   (EB) 202L Med Csl ℄ Sta 1089+50.00 to Sta 1092+50.00
   (WB) 202L Med Csl ℄ Sta 1089+50.00 to Sta 1092+50.00
   Pavement Structural Section No. 2
   (EB) 202L Med Csl ℄ Sta 1074+10.50 to Sta 1090+00.00
   (WB) 202L Med Csl ℄ Sta 1072+35.50 to Sta 1090+00.00
2. See Drainage Plans for Ditch Control
3. See Access Road Plans

1 Conc Curb & Gutter, (See Plans for Type & Location)
2 Shoulder Treatment, Detail A
3 24" Thick Topsoil Plating
4 Conc Half Barrier, (See Plans for Type & Location)
5 Briten Median Barrier

	NAME	DATE
DESIGN	WCH	4/05
DRAWN	CCS	4/05
CHECKED	GJM	4/05

Stanley Consultants Inc.

ARIZONA DEPARTMENT OF TRANSPORTATION
INTERMODAL TRANSPORTATION DIVISION
ROADWAY DESIGN SERVICES

202L WB and EB
TYPICAL MAINLINE SECTION

PRELIMINARY
STAGE IV
95% Review
NOT FOR CONSTRUCTION OR RECORDING

ROUTE	LOCATION	DWG NO. C-3.4
202L	RED MTN FWY, POWER ROAD - UNIVERSITY DRIVE	
TRACS NO. H 5782 01C		202-B(007)B ___ OF ___

F.A.P.M.A. RECORD	STATE	PROJECT NO.	SHEET NO.	TOTAL SHEETS	AS BUILT
9	ARIZ.	202-B(007)B			
		202 MA 023			

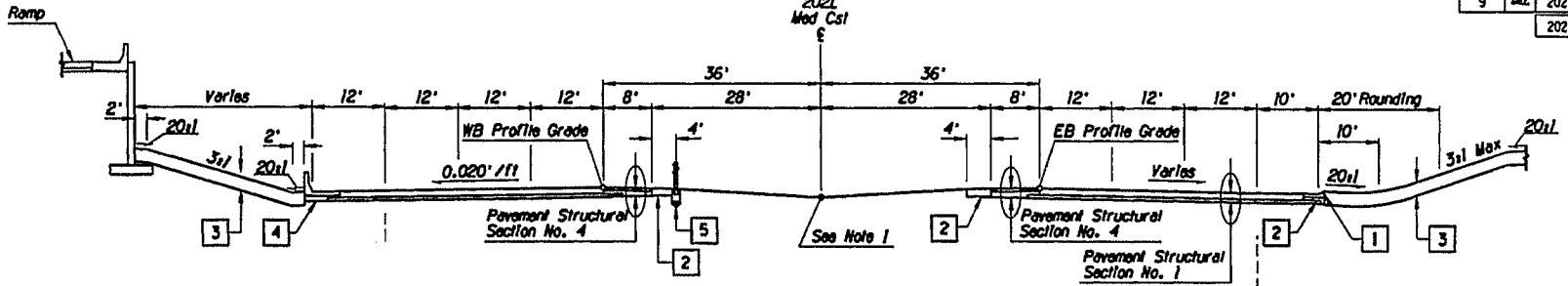

TYPICAL SECTION - 202L MAINLINE

(WB) 202L Med Cst ℄ Sta 1092+50.00 to Sta 1094+03.10
(EB) 202L Med Cst ℄ Sta 1092+50.00 to Sta 1106+24.07
(EB) 202L Med Cst ℄ Sta 1136+94.74 to Sta 1168+44.47
(EB) 202L Med Cst ℄ Sta 1216+35.67 to Sta 1247+94.47

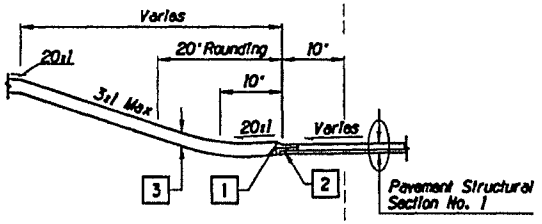

(WB) 202L Med Cst ℄ Sta 1094+03.10 to Sta 1105+52.79
(WB) 202L Med Cst ℄ Sta 1138+73.46 to Sta 1170+43.79
(WB) 202L Med Cst ℄ Sta 1216+16.10 to Sta 1253+15.85

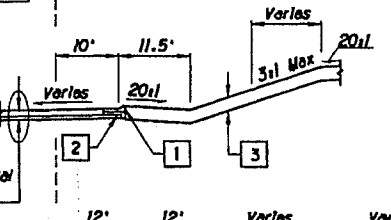

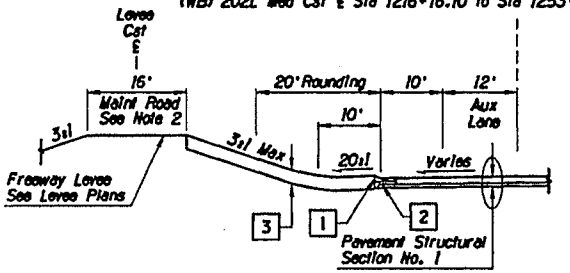

(WB) 202L Med Cst ℄ Sta 1114+10.97 to Sta 1129+96.61
(WB) 202L Med Cst ℄ Sta 1179+00.00 to Sta 1208+35.05

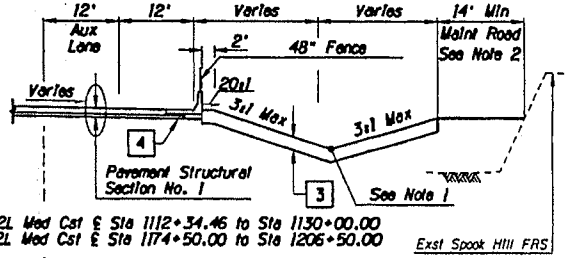

(EB) 202L Med Cst ℄ Sta 1112+34.46 to Sta 1130+00.00
(EB) 202L Med Cst ℄ Sta 1174+50.00 to Sta 1206+50.00

NOTES:

1. See Drainage Plans for Ditch Control
2. See Access Control Plans

1	Conc Curb & Gutter, (See Plans for Type & Location)
2	Shoulder Treatment, Detail A
3	24" Thick Topsoil Plating
4	Conc Half Barrier, (See Plans for Type & Location)
5	Briten Median Barrier See Plans for Locations

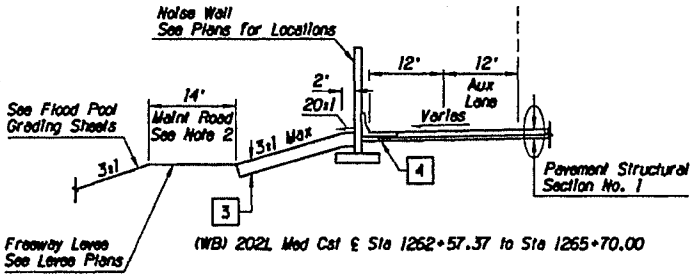

(WB) 202L Med Cst ℄ Sta 1262+57.37 to Sta 1265+70.00

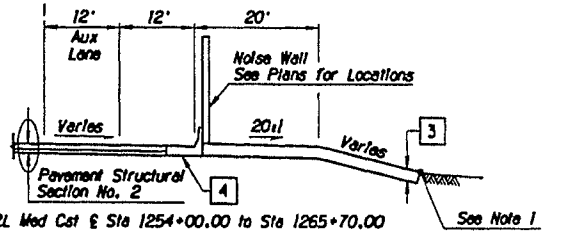

(EB) 202L Med Cst ℄ Sta 1254+00.00 to Sta 1265+70.00

	NAME	DATE
DESIGN	WCH	4/05
DRAWN	CCS	4/05
CHECKED	GJM	4/05

Stanley Consultants inc.

ARIZONA DEPARTMENT OF TRANSPORTATION
INTERMODAL TRANSPORTATION DIVISION
ROADWAY DESIGN SERVICES

2021 WB and EB
TYPICAL MAINLINE SECTION

PRELIMINARY
STAGE IV
95% Review
NOT FOR CONSTRUCTION OR RECORDING

ROUTE	LOCATION	DWG NO. G-3.5
202L	RED MTN FWY, POWER ROAD - UNIVERSITY DRIVE	
TRACS NO. H 5782 01C		202-B(007)B — OF —

4/22/2005 c:\17888\active\87-05-dwgs\82-gen\h5782d03c.dgn

F.A.P.M.A. NUMBER	STATE	PROJECT NO.	SHEET NO.	TOTAL SHEETS	AS BUILT
9	ARIZ.	202-B(007)I			
		202 MA 023			

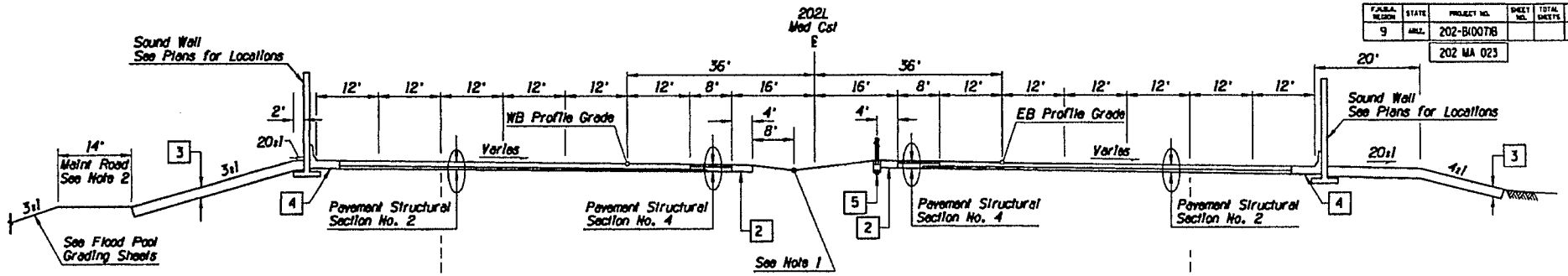

TYPICAL SECTION - 202L MAINLINE

(WB) 202L Mod Cst ℄ Sta 1265+70.00 to Sta 1286+56.03
(EB) 202L Mod Cst ℄ Sta 1265+70.00 to Sta 1284+95.00

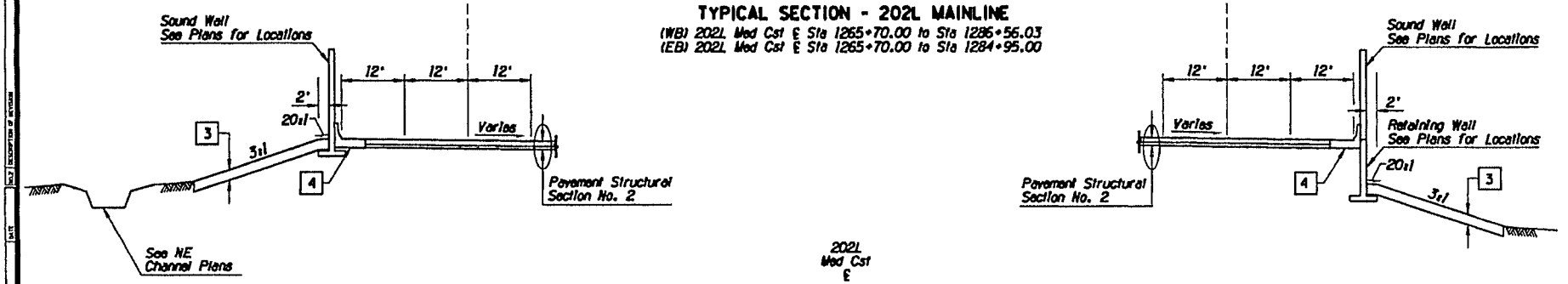

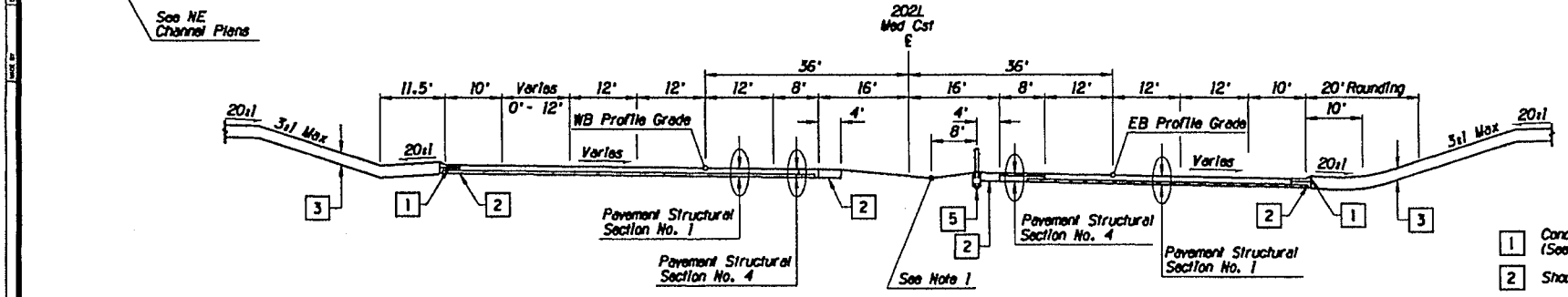

TYPICAL SECTION - 202L MAINLINE

(WB) 202L Mod Cst ℄ Sta 1296+62.46 to Sta 1307+34.45
(EB) 202L Mod Cst ℄ Sta 1293+97.32 to Sta 1307+34.45

1 Conc Curb & Gutter, (See Plans for Type & Location)
2 Shoulder Treatment, Detail A
3 24" Thick Topsoil Plating
4 Conc Half Barrier, (See Plans for Type & Location)
5 Brifen Median Barrier

NOTES:

1. See Drainage Plans for Ditch Control
2. See Access Road Plans

	NAME	DATE
DESIGN	WEH	4/05
DRAWN	CCS	4/05
CHECKED	GJM	4/05

Stanley Consultants Inc.

ARIZONA DEPARTMENT OF TRANSPORTATION
INTERMODAL TRANSPORTATION DIVISION
ROADWAY DESIGN SERVICES

202L WB and EB
TYPICAL MAINLINE SECTION

PRELIMINARY
STAGE IV
95% Review
NOT FOR CONSTRUCTION OR RECORDING

ROUTE	LOCATION	DRG NO. G-3.6
202L	RED MTN FWY, POWER ROAD - UNIVERSITY DRIVE	

TRACS NO. H 5782 01C | 202-B(007)I | ___ OF ___

472272005 q:\17000\active\87-05-dwgs\82-gen\h5782ds3d.dgn

F.A.P.M. REGION	STATE	PROJECT NO.	SHEET NO.	TOTAL SHEETS	AS BUILT
9	ARIZ.	202-B100718			
		202 MA 023			

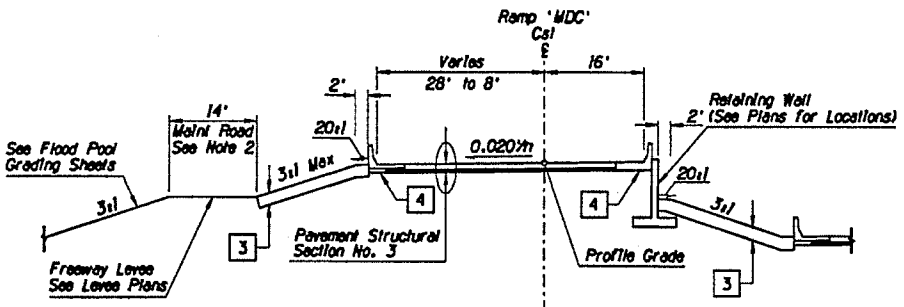

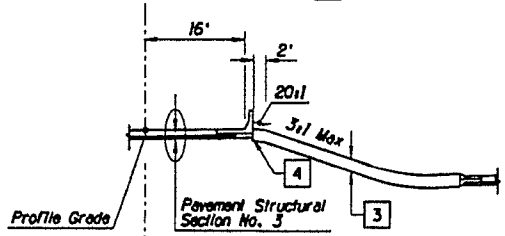

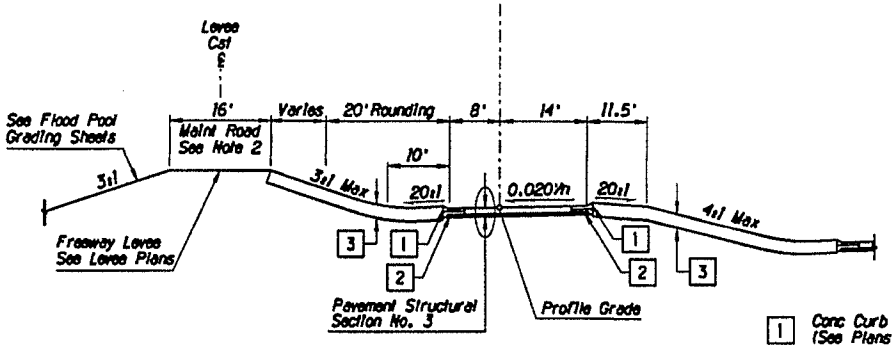

TYPICAL SECTION - RAMP 'MDC'
Sta 1+72.64 to Sta 13+47.85

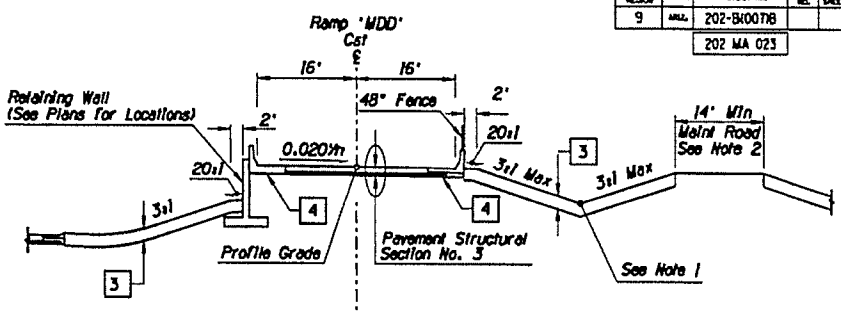

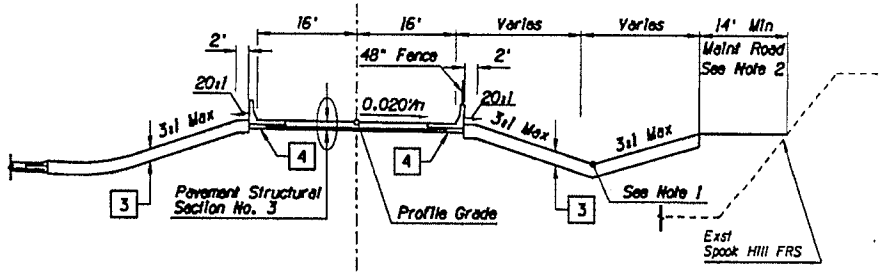

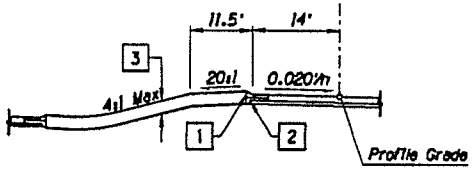

TYPICAL SECTION - RAMP 'MDD'
Sta 1+13.94 to Sta 15+59.02

1. Conc Curb & Gutter, (See Plans for Type & Location)
2. Shoulder Treatment, Detail A
3. 24" Thick Topsoil Plating
4. Conc Half Barrier, (See Plans for Type & Location)

NOTES:

1. See Drainage Plans for Ditch Control
2. See Access Road Plans

	NAME	DATE
DESIGN	WDK	4/05
DRAWN	CCS	4/05
CHECKED	GJM	4/05

Stanley Consultants inc.

ARIZONA DEPARTMENT OF TRANSPORTATION
INTERMODAL TRANSPORTATION DIVISION
ROADWAY DESIGN SERVICES

McDOWELL RD RAMPS 'MDC' & 'MDD'
TYPICAL SECTION

PRELIMINARY
STAGE IV
95% Review
NOT FOR CONSTRUCTION OR RECORDING

ROUTE	LOCATION
202L	RED MTN FWY, POWER ROAD - UNIVERSITY DRIVE

DWG NO. C-3.11

TRACS NO. H 5782 01C | 202-B100718 | ___ OF ___

4/22/2005 q:\17000\active\87-05-dwgs\82-gen\h5782ds3e.dgn

FUNCTIONAL DESIGN	STATE	PROJECT NO.	SHEET NO.	TOTAL SHEETS	AS BUILT
9	ARIZ.	202-B(007)B			
		202 MA 023			

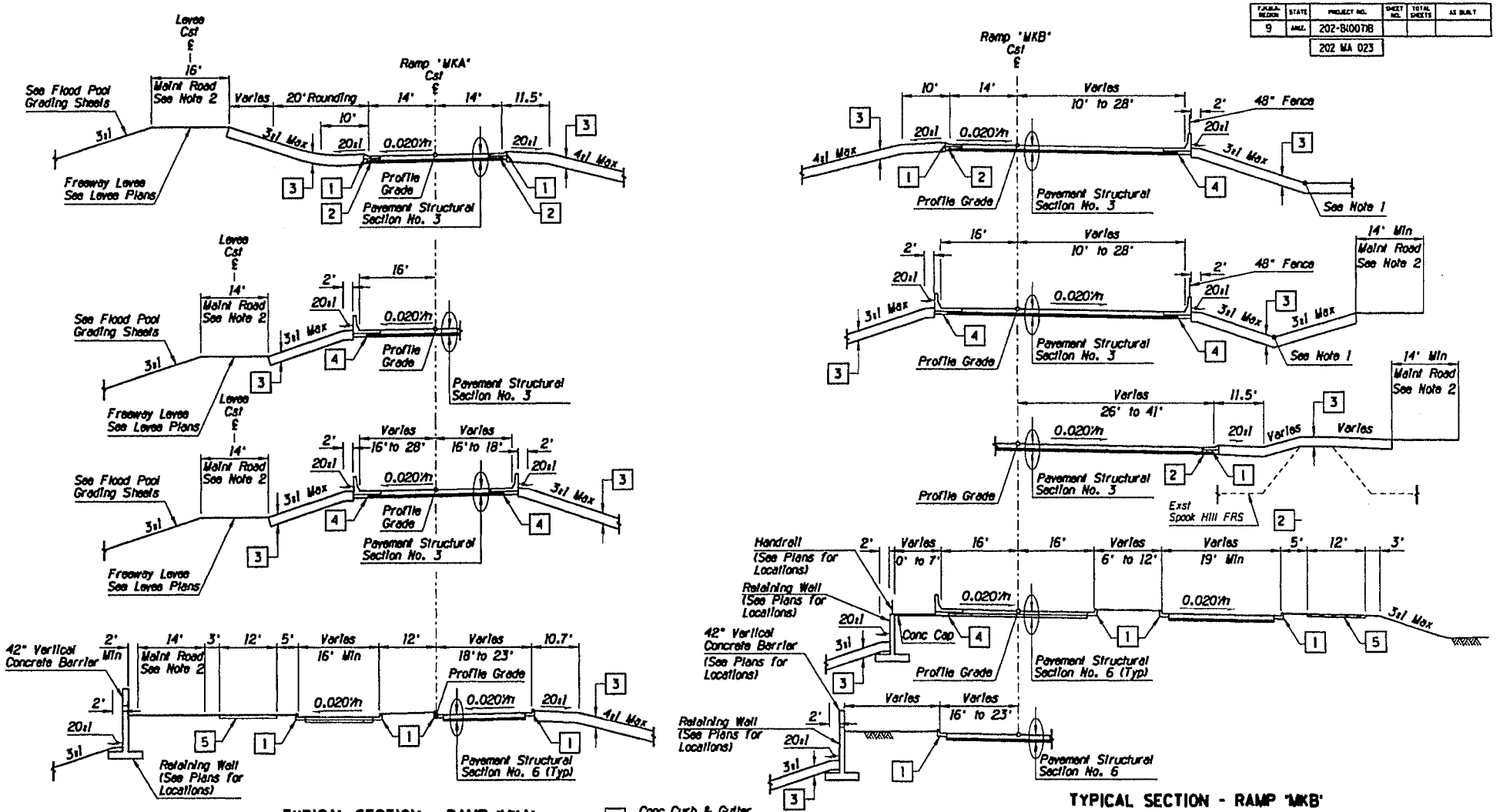

TYPICAL SECTION - RAMP 'MKA'

Sta 8+66.10 to Sta 26+45.90

TYPICAL SECTION - RAMP 'MKB'

Sta 7+03.27 to Sta 21+01.39

NOTES:

1. See Drainage Plans for Ditch Control
2. See Access Road Plans

1. Conc Curb & Gutter, (See Plans for Type & Location)
2. Shoulder Treatment, Detail A
3. 24" Thick Topsoil Plating
4. Conc Half Barrier, (See Plans for Type & Location)
5. Conc Sidewalk

	NAME	DATE
DESIGN	WCH	4/05
DRAWN	CCS	4/05
CHECKED	GJM	4/05

Stanley Consultants Inc.

ARIZONA DEPARTMENT OF TRANSPORTATION
INTERMODAL TRANSPORTATION DIVISION
ROADWAY DESIGN SERVICES

McKELLIPS RD RAMPS 'MKA' & 'MKB'
TYPICAL SECTION

PRELIMINARY
STAGE IV
95% Review
NOT FOR CONSTRUCTION OR RECORDING

ROUTE	LOCATION	DRG NO. G-3.12
202L	RED MTN FWY, POWER ROAD - UNIVERSITY DRIVE	
TRACS NO. H 5782 01C	202-B(007)B	___ OF ___

4/22/2005 cp\17000\active\87-00-dwgs\82-gen\h5782ds3f.dgn

F.H.W.A. REGION	STATE	PROJECT NO.	SHEET NO.	TOTAL SHEETS	AS BUILT
9	ARIZ.	202-B(007)I			
		202 MA 023			

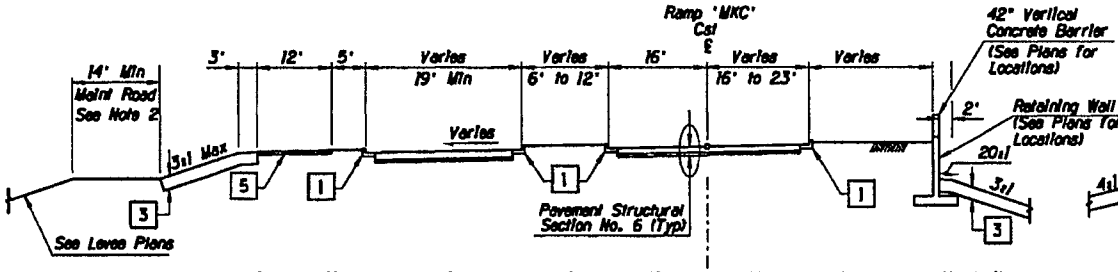

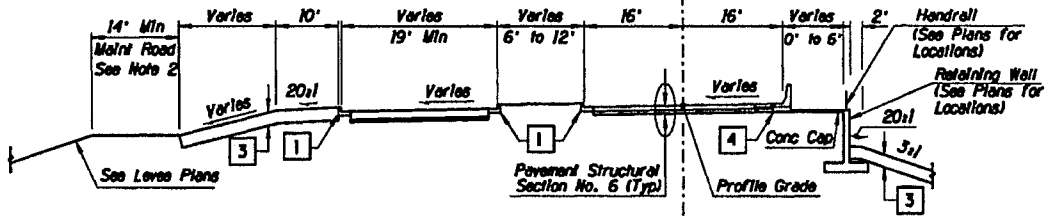

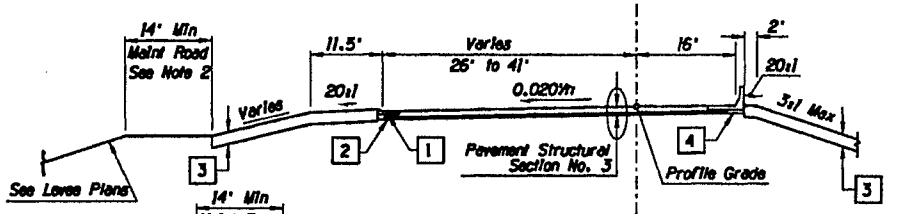

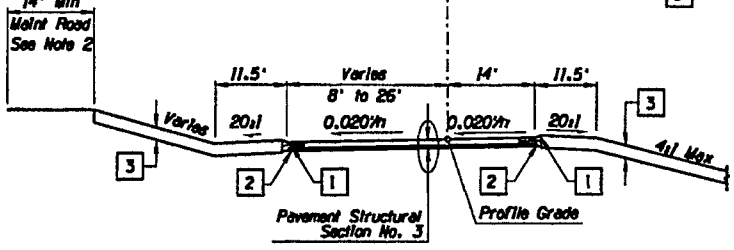

TYPICAL SECTION - RAMP 'MKC'
Sta 0+00.00 to Sta 13+53.67

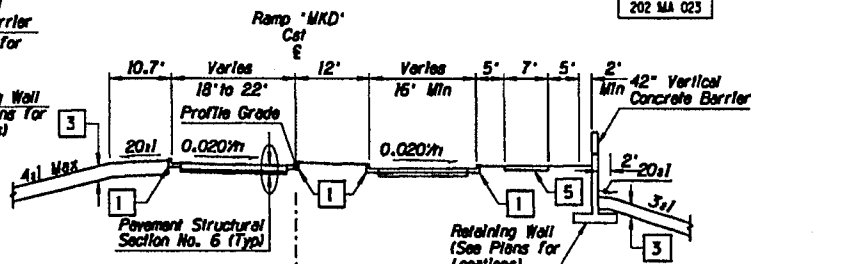

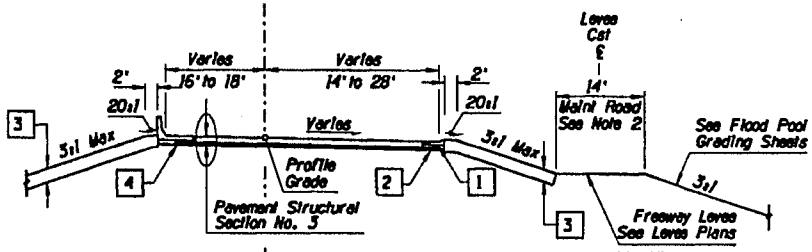

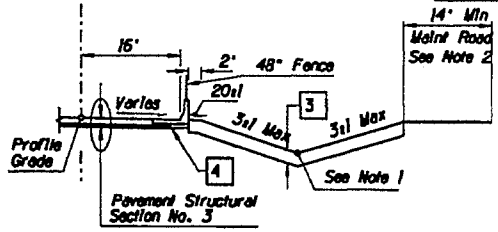

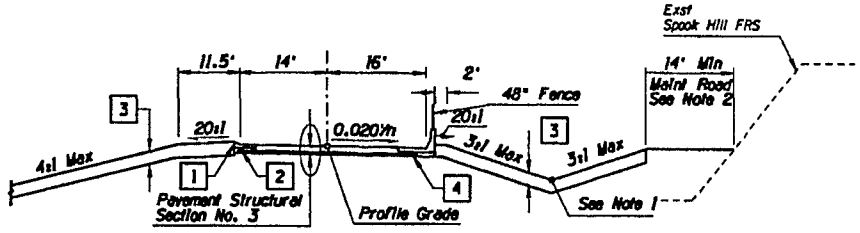

TYPICAL SECTION - RAMP 'MKD'
Sta 0+00.00 to Sta 17+58.75

1. Conc Curb & Gutter, (See Plans for Type & Location)
2. Shoulder Treatment, Detail A
3. 24" Thick Topsoil Platting
4. Conc Half Barrier, (See Plans for Type & Location)
5. Conc Sidewalk

NOTES:

1. See Drainage Plans for Ditch Control
2. See Access Road Plans

	NAME	DATE
DESIGN	MCH	4/05
DRAWN	CCS	4/05
CHECKED	GJM	4/05

Stanley Consultants Inc.

ARIZONA DEPARTMENT OF TRANSPORTATION
INTERMODAL TRANSPORTATION DIVISION
ROADWAY DESIGN SERVICES

McKELLIPS RD RAMPS 'MKC' & 'MKD'
TYPICAL SECTION

PRELIMINARY
STAGE IV
95% Review
NOT FOR CONSTRUCTION OR RECORDING
DWG NO. G-3.13

ROUTE	LOCATION
202L	RED MTN FWY, POWER ROAD - UNIVERSITY DRIVE

TRACS NO. H 5782 01C | 202-B(007)I | ___ OF ___

4/22/2005 c:\17888\active\87-85-dwgs\82-gen\05782d01.dgn

F.A.H.S. REGION	STATE	PROJECT NO.	SHEET NO.	TOTAL SHEETS	AS BUILT
9	ARIZ.	202-B(007)I			
		202 MA 023			

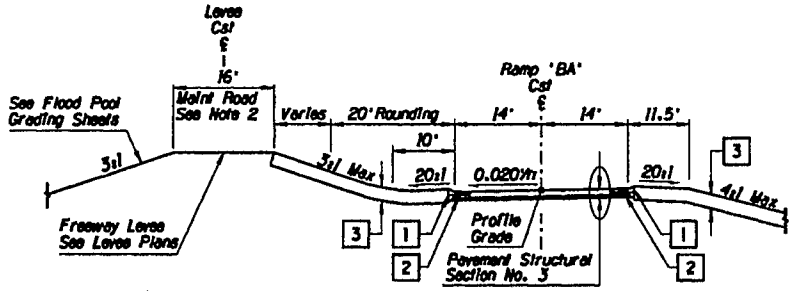

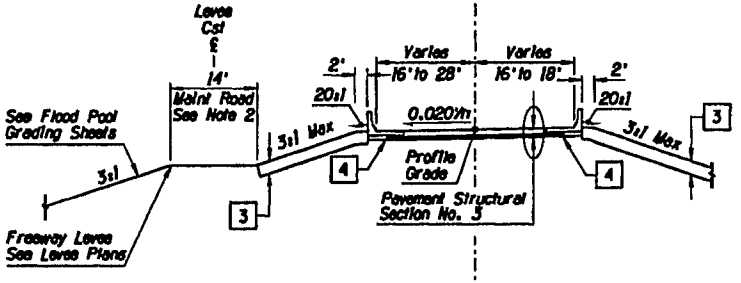

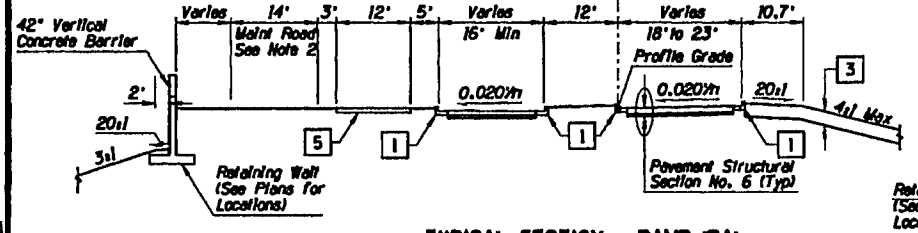

TYPICAL SECTION - RAMP 'BA'
Sta 6+24.27 to Sta 23+57.33

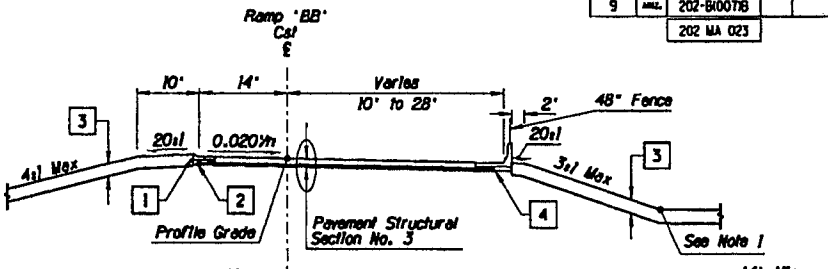

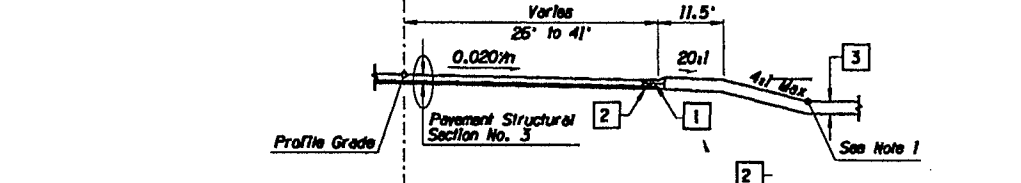

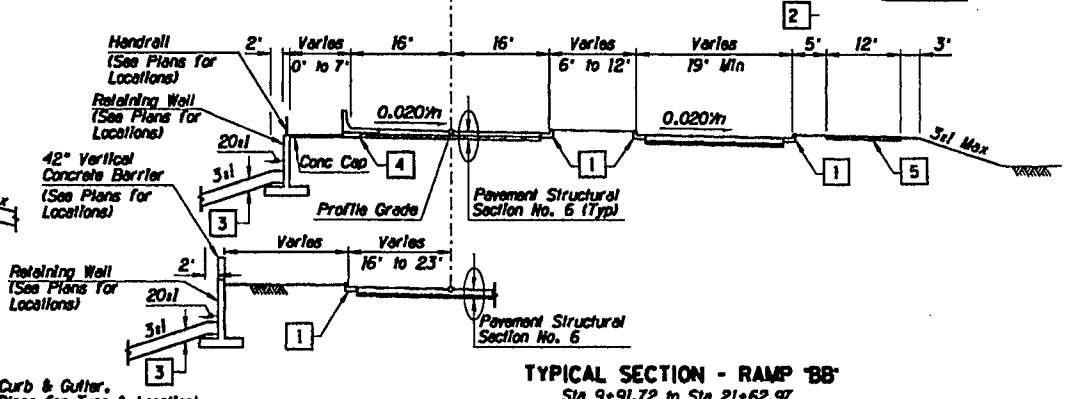

TYPICAL SECTION - RAMP 'BB'
Sta 9+91.72 to Sta 21+62.97

1. Conc Curb & Gutter, (See Plans for Type & Location)
2. Shoulder Treatment, Detail A
3. 24" Thick Topsoil Plating
4. Conc Half Barrier, (See Plans for Type & Location)
5. Conc Sidewalk

NOTES:

1. See Drainage Plans for Ditch Control
2. See Access Road Plans

	NAME	DATE
DESIGN	WDH	4/05
DRAWN	CGS	4/05
CHECKED	CJM	4/05

Stanley Consultants Inc.

ARIZONA DEPARTMENT OF TRANSPORTATION
INTERMODAL TRANSPORTATION DIVISION
ROADWAY DESIGN SERVICES

BROWN RD RAMPS 'BA' & 'BB'
TYPICAL SECTION

PRELIMINARY
STAGE IV
95% Review
NOT FOR
CONSTRUCTION
OR RECORDING

DATE: 2021 | LOCATION: RED MTN FWY, POWER ROAD - UNIVERSITY DRIVE

DWG NO. G-314

TRACS NO. H 5782 01C | 202-B(007)I | ___ OF ___

4/22/2005 q:\17888\Col Live\87-85-Engr\82-gen\h5782ds3c.dgn

F.A.P.A. REGION	STATE	PROJECT NO.	SHEET NO.	TOTAL SHEETS	AS BUILT
9	ARIZ.	202-B(007)B			
		202 MA 023			

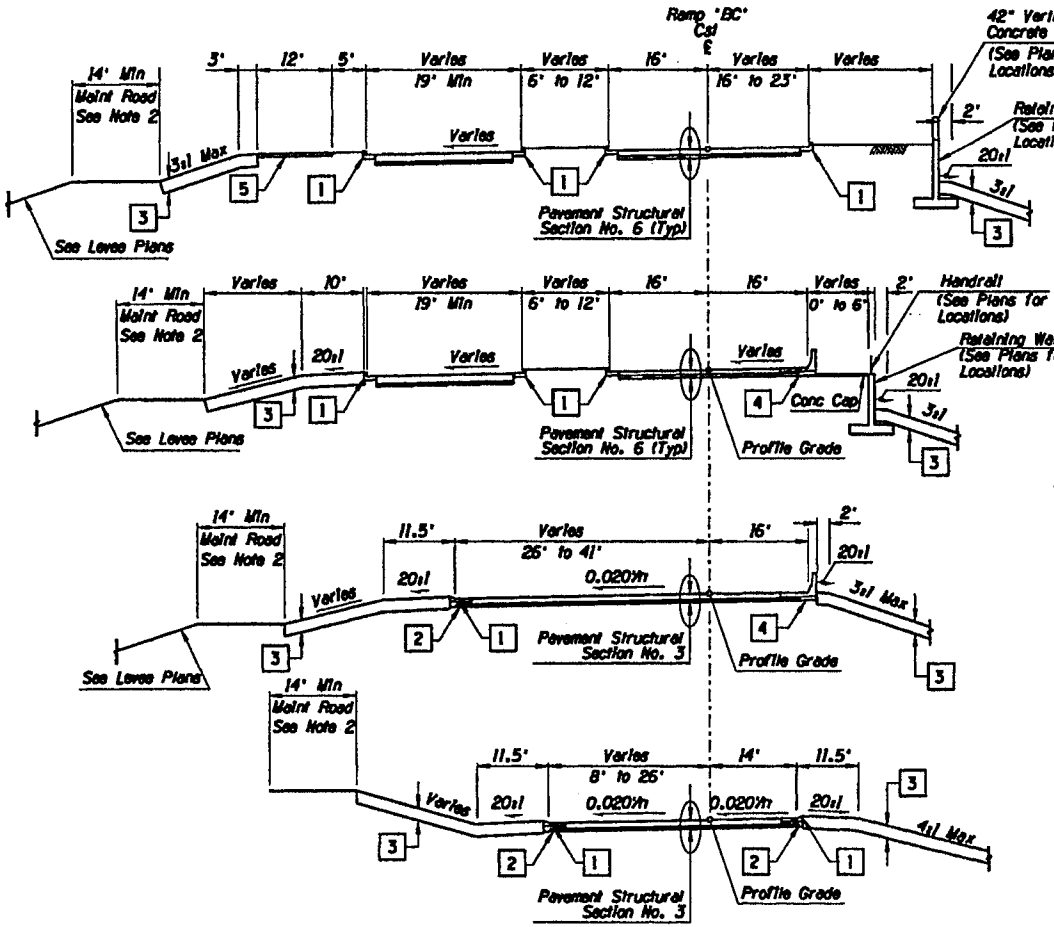

TYPICAL SECTION - RAMP "BC"
Sta 0+00.00 to Sta 15+28.60

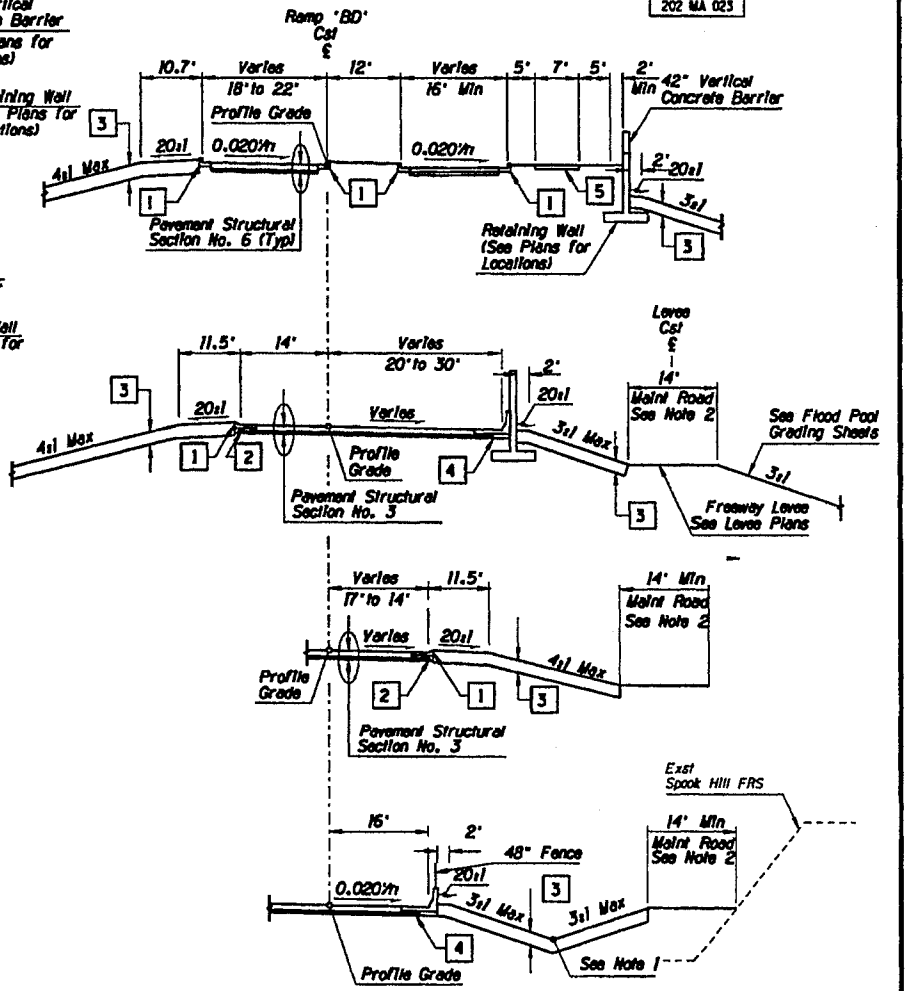

TYPICAL SECTION - RAMP "BD"
Sta 0+00.00 to Sta 20+22.55

1. Conc Curb & Gutter, (See Plans for Type & Location)
2. Shoulder Treatment, Detail A
3. 24" Thick Topsoil Planting
4. Conc Half Barrier, (See Plans for Type & Location)
5. Conc Sidewalk

NOTES:
1. See Drainage Plans for Ditch Control
2. See Access Road Plans

	NAME	DATE
DESIGN	BEH	4/05
DRAWN	CCS	4/05
CHECKED	GJM	4/05

ARIZONA DEPARTMENT OF TRANSPORTATION
INTERMODAL TRANSPORTATION DIVISION
ROADWAY DESIGN SERVICES

Stanley Consultants Inc.

BROWN RD RAMPS "BC" & "BD"
TYPICAL SECTION

PRELIMINARY
STAGE IV
95% Review
NOT FOR CONSTRUCTION OR RECORDING

ROUTE	LOCATION		
202L	RED MTN FWY, POWER ROAD - UNIVERSITY DRIVE		
TRACS NO. H 5782 01C		202-B(007)B	

ORIG. NO. G-3.15

___ OF ___

4/22/2005 cp\17888\active\87-BD-dwgs\BZ-gen\H5782ds31.dgn

F.A.H.A. REGION	STATE	PROJECT NO.	SHEET NO.	TOTAL SHEETS	AS BUILT
9	ARIZ.	202-B(007)B			
		202 MA 023			

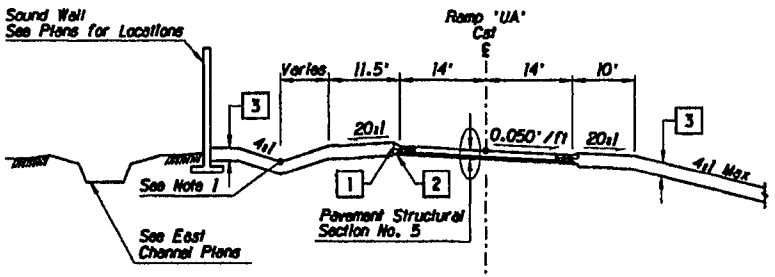

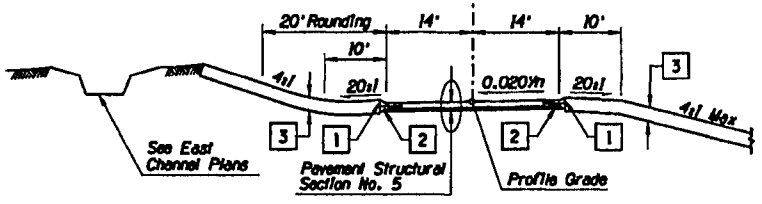

TYPICAL SECTION - RAMP 'UA'
7+83.54 to 19+00.20

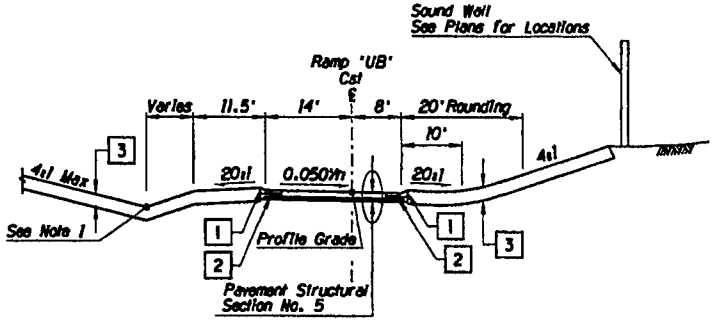

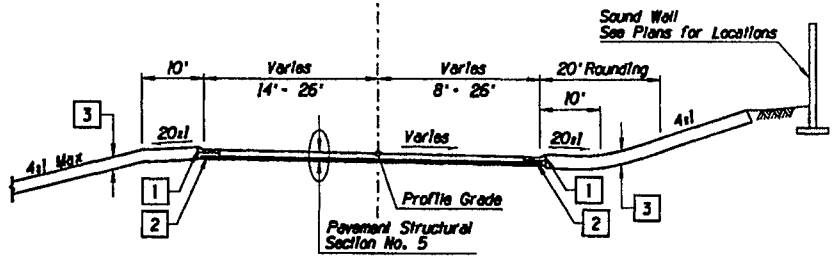

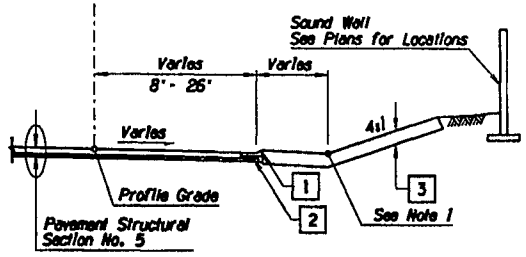

TYPICAL SECTION - RAMP 'UA'
7+25.67 to 21+15.97

NOTES:

1. See Drainage Plans for Ditch Control

[1] Conc Curb & Gutter, (See Plans for Type & Location)

[2] Shoulder Treatment, Detail A

[3] 24" Thick Topsoil Plating

	NAME	DATE
DESIGN	BEH	4/05
DRAWN	CCS	4/05
CHECKED	GAM	4/05

Stanley Consultants Inc.

ARIZONA DEPARTMENT OF TRANSPORTATION
INTERMODAL TRANSPORTATION DIVISION
ROADWAY DESIGN SERVICES

UNIVERSITY DR RAMPS 'UA' & 'UB'
TYPICAL SECTION

PRELIMINARY
STAGE IV
95% Review
NOT FOR CONSTRUCTION OR RECORDING

DWG NO. G-3.18

ROUTE	LOCATION
202L	RED MTN FWY, POWER ROAD - UNIVERSITY DRIVE

TRACS NO. H 5782 01C | 202-B(007)B | ___ OF ___

4/22/2005 q:\17000\active\87-05-dsgn\02-gen\h5782dn3.dgn

FUNCTIONAL DESIGN	STATE	PROJECT NO.	SHEET NO.	TOTAL SHEETS	AS BUILT
9	ARIZ.	202-B(007)B			
		202 MA 023			

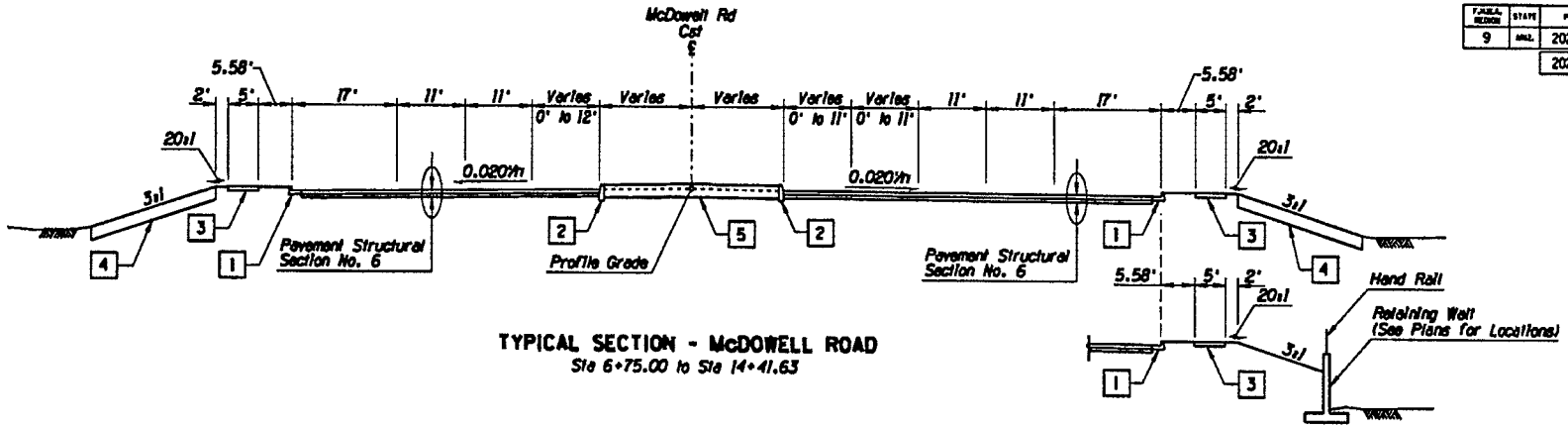

TYPICAL SECTION - McDOWELL ROAD
Sta 6+75.00 to Sta 14+41.63

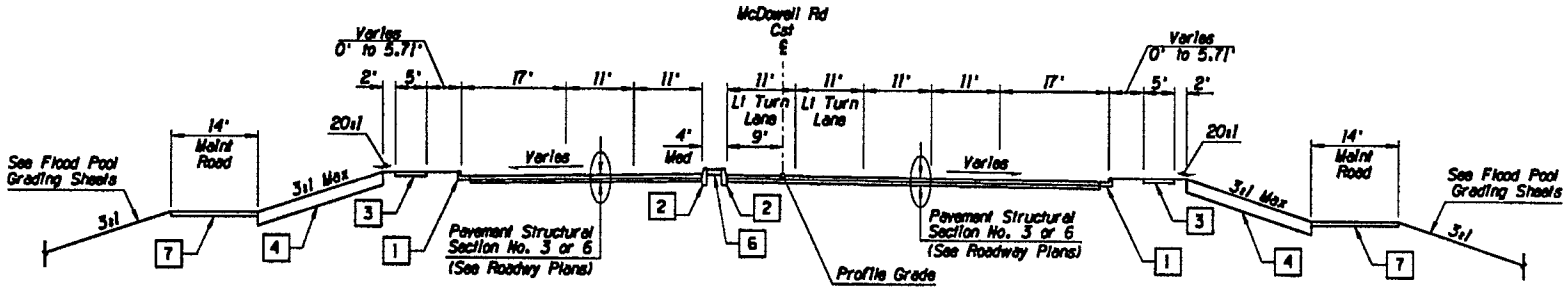

TYPICAL SECTION - McDOWELL ROAD
Sta 14+41.63 to Sta 21+65.00

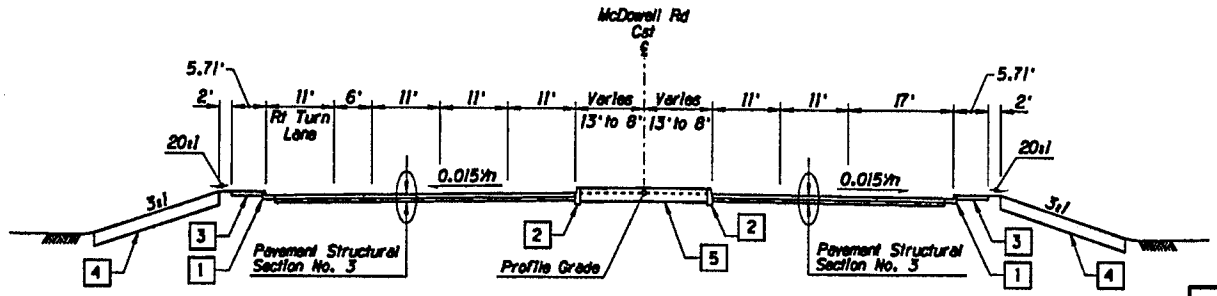

TYPICAL SECTION - McDOWELL ROAD
Sta 21+65.00 to Sta 25+32.71

1. Conc Curb & Gutter (See Plans for Type & Locations)
2. Conc Single Curb (See Plans for Type and Locations)
3. Conc Sidewalk (5')
4. 24" Thick Topsoil Plating
5. 24" Thick Topsoil Plating or Median Paving (See Plans for Median Paving Locations)
6. Median Paving (See Plans for Locations)
7. Maintenance Road 3" AB Class 2 (See Plans for Locations)

	NAME	DATE
DESIGN	ASF	4/05
DRAWN	CDS	4/05
CHECKED	DJM	4/05

Stanley Consultants Inc.

ARIZONA DEPARTMENT OF TRANSPORTATION
INTERMODAL TRANSPORTATION DIVISION
ROADWAY DESIGN SERVICES

McDOWELL ROAD
TYPICAL SECTION

PRELIMINARY
STAGE IV
95% Review
NOT FOR CONSTRUCTION OR RECORDING

DIST. 2021 | LOCATION: RED MTN FWY, POWER ROAD - UNIVERSITY DRIVE | DWG NO. G-3.17

TRACS NO. H 5782 01C | 202-B(007)B | ___ OF ___

F.A.R.A. DESIGN	STATE	PROJECT NO.	SHEET NO.	TOTAL SHEETS	AS BUILT
9	ARIZ.	202-B(007)B			
		202 MA 023			

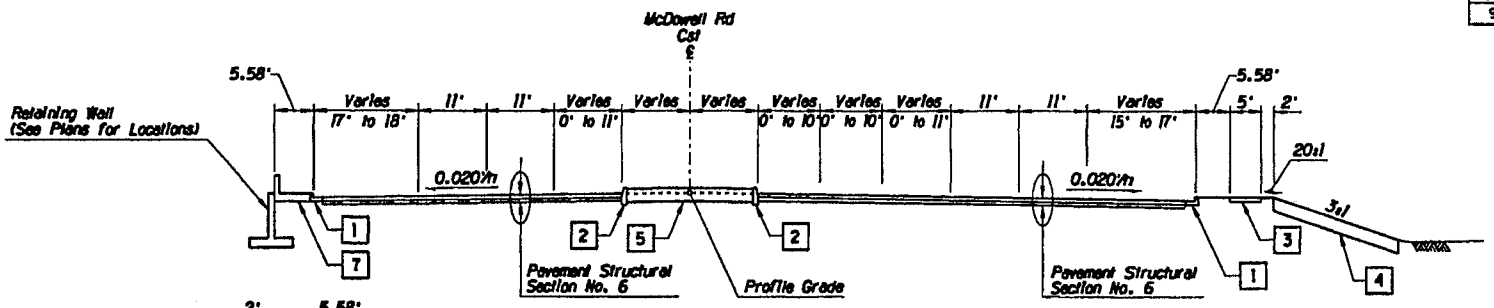

TYPICAL SECTION - McDOWELL ROAD
Sta 25+32.71 to Sta 29+78.07

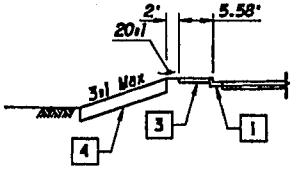

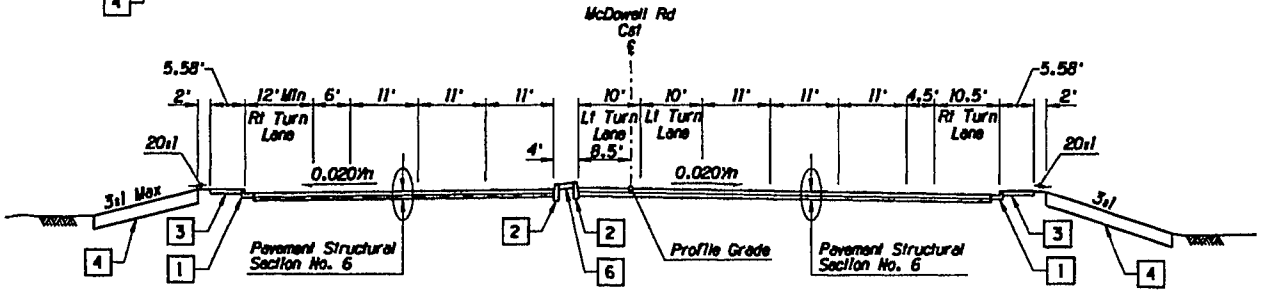

TYPICAL SECTION - McDOWELL ROAD
Sta 29+78.07 to Sta 32+38.57

1. Conc Curb & Gutter (See Plans for Type & Locations)
2. Conc Single Curb (See Plans for Type & Locations)
3. Conc Sidewalk (5')
4. 24" Thick Topsoil Plating
5. 24" Thick Topsoil Plating or Median Paving (See Plans for Median Paving Locations)
6. Median Paving (See Plans for Locations)
7. Conc Vertical Parapet Wall w/ Fence (See Detail K)

	NAME	DATE
DESIGN	ASF	4/05
DRAWN	CCS	4/05
CHECKED	GJN	4/05

Stanley Consultants Inc.

ARIZONA DEPARTMENT OF TRANSPORTATION
INTERMODAL TRANSPORTATION DIVISION
ROADWAY DESIGN SERVICES

McDOWELL ROAD
TYPICAL SECTION

PRELIMINARY
STAGE IV
95% Review
NOT FOR CONSTRUCTION OR RECORDING

ROUTE	LOCATION
202L	RED MTN FWY. POWER ROAD - UNIVERSITY DRIVE

DWG NO. G-3.18

TRACS NO. H 5782 01C | 202-B(007)B | ___ OF ___

4/22/2005 q:\1700\active\17-00-dgn\02-gen\h5782ds31.dgn

F.A.R.A. REGION	STATE	PROJECT NO.	SHEET NO.	TOTAL SHEETS	AS BUILT
9	ARIZ.	202-B(007)B			
		202 MA 023			

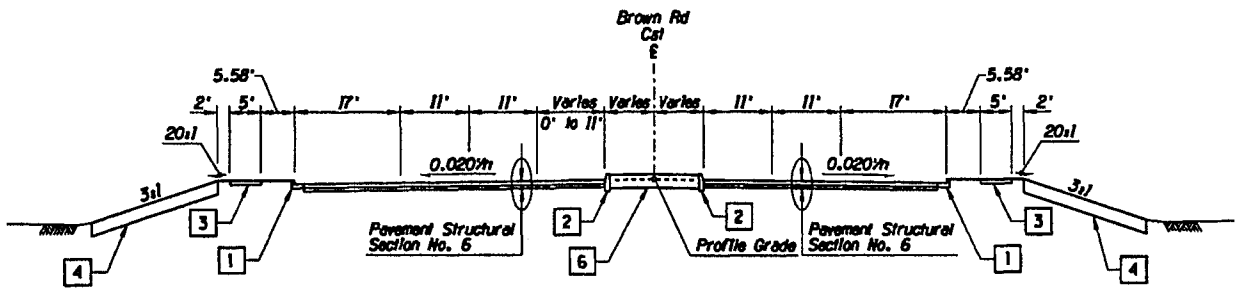

TYPICAL SECTION - BROWN ROAD
Sta 9+15.23 to Sta 20+00.00

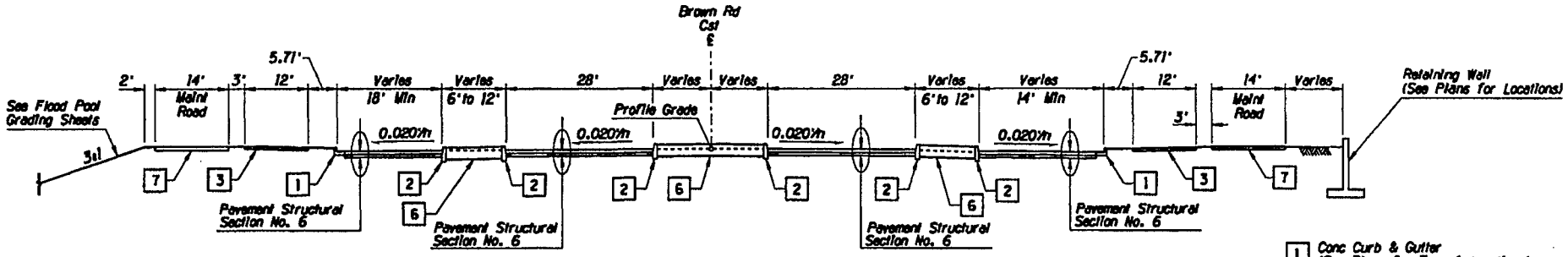

TYPICAL SECTION - BROWN ROAD
Sta 20+00.00 to Sta 23+25.92

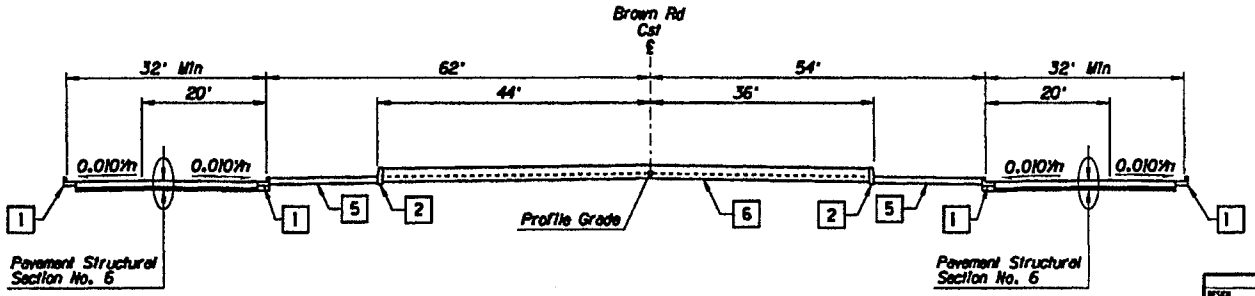

TYPICAL SECTION - BROWN ROAD
Sta 23+25.92 to Sta 25+03.73

1 Conc Curb & Gutter
(See Plans for Type & Locations)
(See Detail A for C-05.10 Curb & Gutter Shoulder Treatments)

2 Conc Single Curb
(See Plans for Type & Locations)

3 Conc Sidewalk (5' or 12')
(See Plans for Width & Locations)

4 24" Thick Topsoil Plating

5 Conc Apron Paving, Special Detail B, Type 3

6 24" Thick Topsoil Plating or Median Paving (See Plans for Median Paving Locations)

7 Maintenance Road
3" AB Class 2
(See Plans for Locations)

	NAME	DATE
DESIGN	ASF	4/05
DRAWN	CDS	4/05
CHECKED	GJM	4/05

Stanley Consultants Inc.

ARIZONA DEPARTMENT OF TRANSPORTATION
INTERMODAL TRANSPORTATION DIVISION
ROADWAY DESIGN SERVICES

BROWN ROAD
TYPICAL SECTION

PRELIMINARY
STAGE IV
95% Review
NOT FOR CONSTRUCTION OR RECORDING

ROUTE	LOCATION	DWG NO. C-3.21
202L	RED MTN FWY, POWER ROAD - UNIVERSITY DRIVE	
TRACS NO. H 5782 01C		202-B(007)B — OF —

4/22/2005 q:\17888\active\87-88-dsgn\82-gen\h5782d03sdgn

F.A.P. No.	STATE	PROJECT NO.	SHEET NO.	TOTAL SHEETS	AS BUILT
9	ARIZ.	202-B(007)B			
		202 MA 023			

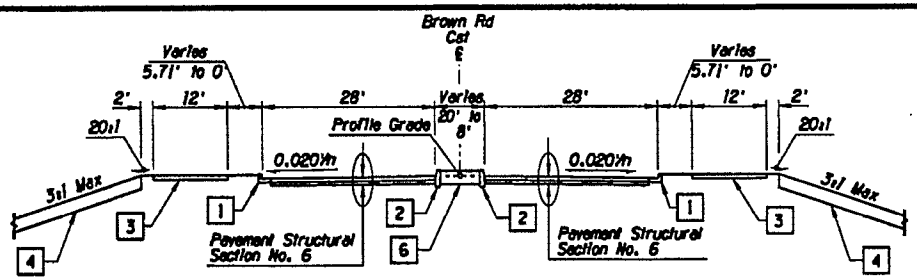

TYPICAL SECTION - BROWN ROAD
Sta 25+03.73 to Sta 33+95.99

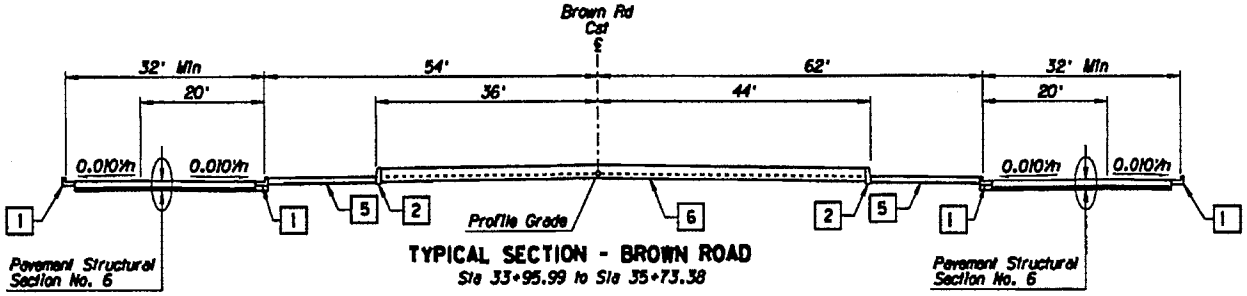

TYPICAL SECTION - BROWN ROAD
Sta 33+95.99 to Sta 35+73.38

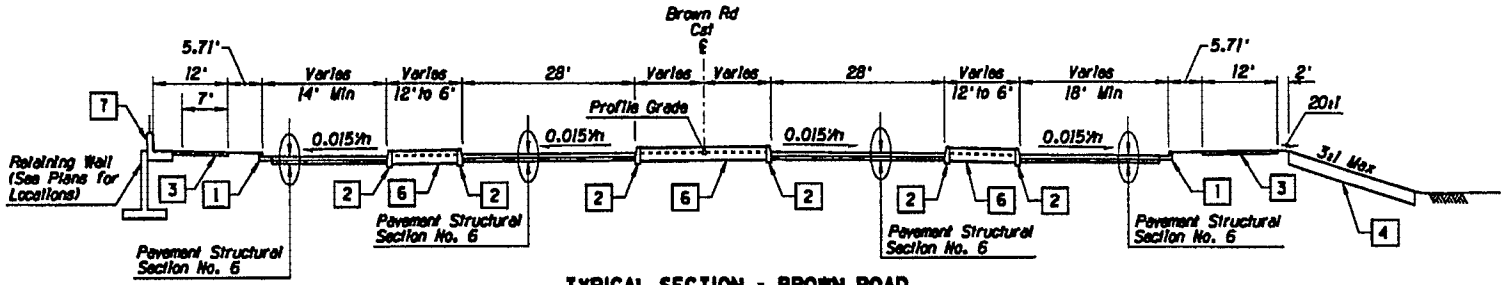

TYPICAL SECTION - BROWN ROAD
Sta 35+73.38 to Sta 37+46.47

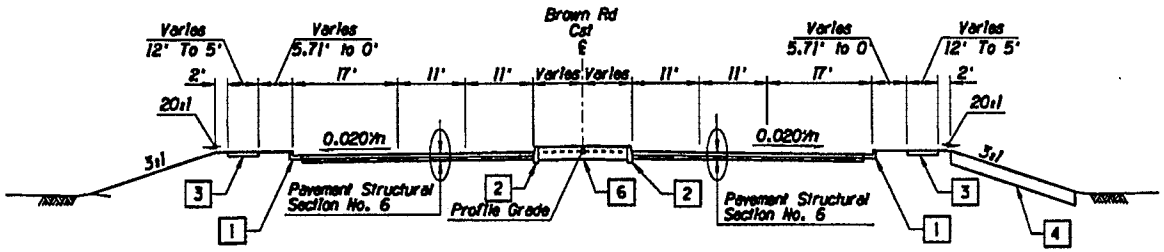

TYPICAL SECTION - BROWN ROAD
Sta 37+46.47 to Sta 53+59.79

1. Conc Curb & Gutter (See Plans for Type & Locations)
2. Conc Single Curb (See Plans for Type & Locations)
3. Conc Sidewalk (5', 7' or 12') (See Plans for Width & Locations)
4. 24" Thick Topsoil Plating
5. Conc Apron Paving, Special Detail B, Type 3
6. 24" Thick Topsoil Plating or Median Paving (See Plans for Median Paving Locations)
7. Conc Vertical Barrier Wall with Fence (See Detail K)

	NAME	DATE
DESIGN	ASF	4/05
DRAWN	CCS	4/05
CHECKED		4/05

Stanley Consultants Inc.

ARIZONA DEPARTMENT OF TRANSPORTATION
INTERMODAL TRANSPORTATION DIVISION
ROADWAY DESIGN SERVICES

BROWN ROAD
TYPICAL SECTION

PRELIMINARY
STAGE IV
95% Review
NOT FOR CONSTRUCTION OR RECORDING

DISTRICT	LOCATION
202L	RED MTN FWY, POWER ROAD - UNIVERSITY DRIVE

DWG NO. C-3.22

TRACS NO. H 5782 01C | 202-B(007)B | ___ OF ___

4/22/2005 q:\17000\active\87-85-dwgs\82-gen\5782ds3p.dgn

F.A.H.S. REGION	STATE	PROJECT NO.	SHEET NO.	TOTAL SHEETS	AS BUILT
9	ARIZ.	202-B(007)I			
		202 MA 023			

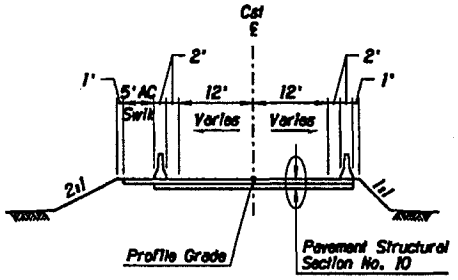

TYPICAL SECTION - McDOWELL ROAD STAGE 1 DETOUR

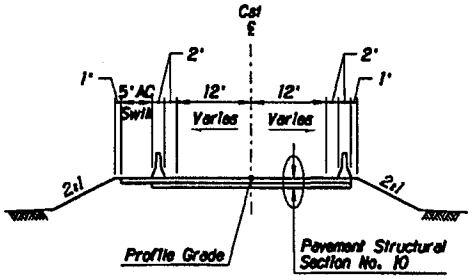

TYPICAL SECTION - McKELLIPS ROAD / BROWN ROAD DETOURS

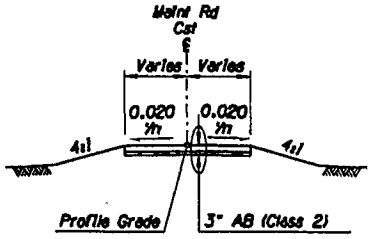

TYPICAL SECTION - MAINT ROAD

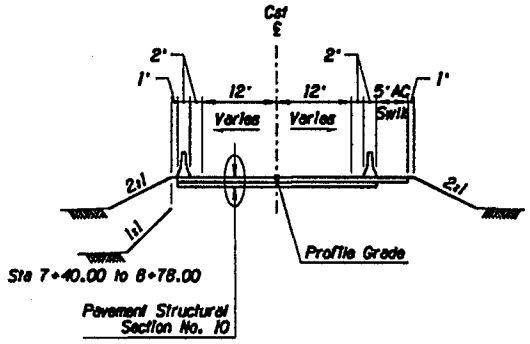

TYPICAL SECTION - McDOWELL ROAD STAGE 2 DETOUR

Sta 1+00.00 to 11+85.00
Sta 13+25.00 to 13+76.22

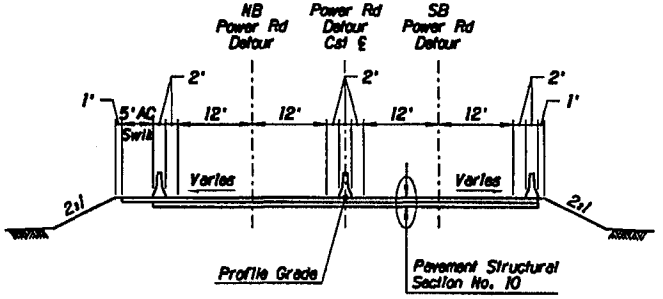

TYPICAL SECTION - POWER ROAD / CAP BRIDGE DETOUR

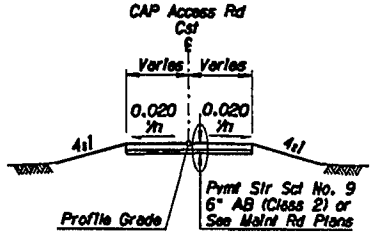

TYPICAL SECTION - CAP ACCESS ROAD

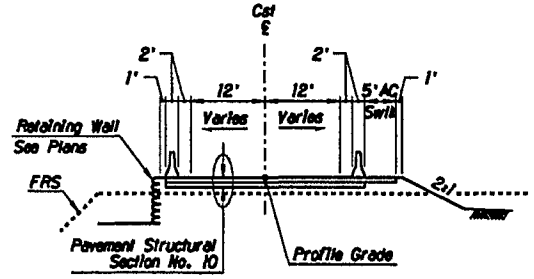

TYPICAL SECTION - McDOWELL ROAD STAGE 2 DETOUR

Sta 11+85.00 to 13+25.00

	NAME	DATE
DESIGN	ASF	4/05
DRAWN	CCS	4/05
CHECKED	GJM	4/05

Stanley Consultants Inc.

ARIZONA DEPARTMENT OF TRANSPORTATION
INTERMODAL TRANSPORTATION DIVISION
ROADWAY DESIGN SERVICES

CAP ACCESS RD, MAINT RD,
& DETOURS
TYPICAL SECTION

PRELIMINARY
STAGE IV
95% Review
NOT FOR
CONSTRUCTION
OR RECORDING

ROUTE	LOCATION
202L	RED MTN FWY, POWER ROAD - UNIVERSITY DRIVE

DWG NO. G-3.23

TRACS NO. H 5782 01C | 202-B(007)I | ___ OF ___

4/22/2005 q:\17888\acLive\87-85-dwgs\82-gen\h5782d03q.dgn

NOTE:
THE ZEROS IN PARENTHESIS (0, 0.0 & 0.00) IN THE HEADING OF SOME OF THE COLUMNS ARE THE RECOMMENDED PRECISION OF THE VALUE TO BE ENTERED IN THE COLUMN.

NOTE:
FOR PIPE CULVERT PLACEMENT SEE STANDARD DRAWING C-13.15

NOTE:
PIPE OPTIONS SELECTED ARE THOSE REQUIRED TO MEET MINIMUM SERVICE LIFE.
SHADED PIPE OPTION FIELDS ARE NOT ALLOWABLE ALTERNATES.

CSP - CORRUGATED STEEL PIPE
CAP - CORRUGATED ALUMINUM PIPE
RCP - REINFORCED CONCRETE PIPE
NRCP - NON-REINFORCED CONCRETE PIPE
NRCIPCP - NON-REINFORCED CAST-IN-PLACE CONCRETE PIPE
CHDPEPP - CORRUGATED HIGH DENSITY POLYETHYLENE PLASTIC PIPE

F.A.P./S.T.P. DESIGN	STATE	PROJECT NO.	SHEET NO.	TOTAL SHEETS	AS BUILT
9	ARIZ.	202-B(007)R			
		202 MA 023			

DESCRIPTION							CSP									CAP									RCP									NRCP	NRCIPCP	CHDPEPP	END TREATMENT																QUANTITIES	
				In.	In.	Ft.	Degree	In.	Coating								In.																			In.			Each																Cubic Yard	
																																					Ea										Ft.			Grate				
Station	Plan Ref No.	⊖ Controlling Fill Height Range	Size, Corrugated	Size, Smooth	Length (0)	Skew (0)	☑ Corrugation	Wall Thickness (0.00)	Zinc	Bit. Coated Zinc	Aluminum	Bit. Coated Aluminum	☑ Corrugation	Wall Thickness (0.00)	Uncoated	Bit. Coated	Class - Non Trench	Class - Trench	Class	Min Wall Thickness (0)	AASHTO M-294 Type C	AASHTO M-294 Type S	C-13.20 & C-13.25 Detail -	Size, (in) Manhole or	Standard or Detail	End Sec	S-Single / D-Double / T-Triple	Location	H (0.0)	L Wing (0.0)	L 18" Slotted Drn (0)	L 24" Slotted Drn (0)	Type	Elev. (0.00)	Depth	Inlet Depression L (0.0)	Pipe Exc (0)	Pipe Bkfl (0)	Drn Exc (0)	Berm/Dike Exc (0)	REMARKS
2021 Mod Sta 1090+85 94' Lt to	10	3		30	165											II	II	2		X			24	C-18.10				8.4					1578.45			201	41			MH10 to MH11
2021 Mod Sta 1092+50 94' Lt																																																							
2021 Mod Sta 1092+50 94' Lt to	11	2		30	160											II	II	1		X			24	C-18.10				6.7					1573.73			171	39			MH11 to MH12
2021 Mod Sta 1094+20 94' Lt																																																					
2021 Mod Sta 1094+20 94' Lt to	12	2		36	333											II	II	1		X			24	C-18.10				6.4					1571.33			498	98			MH12 to MH13
2021 Mod Sta 1097+42.90 92' Lt																																																					
2021 Mod Sta 1097+42.90 92' Lt to	13	3		60	405											II	II	6					24	C-18.10				9.9					1569.57			1338	268			MH13 to MH14
2021 Mod Sta 1101+50 92' Lt																																																					
2021 Mod Sta 1101+50 92' Lt to	14	4		60	396											III	III	6					24	C-18.10				11.4					1570.61			1473	262			MH14 to MH15
McD Ramp C Sta 13+37.49 18' Lt																																																					
McD Ramp C Sta 13+37.49 18' Lt to	15	4		66	332											III	III	5 1/2					24	C-18.10				12.7					1571.02			1499	244			MH15 to MH16
2021 Mod Sta 1108+75 114.98' Lt																																																					
2021 Mod Sta 1108+75 114.98' Lt to	16	4		72	356											III	III	7					24	C-18.10				14.7					1572.19			1904	288			MH16 to MH17
2021 Mod Sta 1112+30 104' Lt																																																					
2021 Mod Sta 1112+30 104' Lt to	17	4		72	395											III	III	7					24	C-18.10				15.8					1572.95			2166	320			MH17 to MH18
2021 Mod Sta 1116+25 104' Lt																																																					
2021 Mod Sta 1116+25 104' Lt to	18	4		72	325											III	III	7					24	C-18.10				15.5					1572.28			1738	263			MH18 to MH19
2021 Mod Sta 1119+50 104' Lt																																																					
Sheet Total																																																						

FILL HEIGHT RANGE TABLE (Ft.)													
RANGE NO.		1	2	3	4	5	6	7	8	9	10	11	12
FILL	>	1	3	5	8	11	15	20	25	30	40	55	70
HEIGHT (Ft.)	≤	3	5	8	11	15	20	25	30	40	55	70	90
⊖ SHOULD FIELD CONDITIONS VARY FROM THE RANGE INDICATED, CONTACT DESIGN FOR RE-EVALUATION OF PIPE DESIGN REQUIREMENTS.													

☑ PIPE CORRUGATION					
A	2⅔x½	D	6x2		
B	3x1	E	3x1 or 9x2½		
C	9x2½				

	NAME	DATE
DESIGN	RSR	4/05
DRAWN	BJP	4/05
CHECKED	CAD	4/05

Stanley Consultants inc.

ARIZONA DEPARTMENT OF TRANSPORTATION
INTERMODAL TRANSPORTATION DIVISION
ROADWAY DESIGN SERVICES

NEW PIPE SUMMARY SHEET

PRELIMINARY
STAGE IV
95% Review
NOT FOR CONSTRUCTION OR RECORDING

DATE	LOCATION
202L	RED MTN FWY, POWER ROAD - UNIVERSITY DRIVE

DWG NO. G-6.1

TRACS NO. H 5782 01C | 202-B(007)R | OF

REV. DATE: 01-05-2000

4/22/2005 q:\17000\active\87-85-dwgs\82-gen\H5782sp81.dgn

NOTE:
THE ZEROS IN PARENTHESIS (0, 0.0 & 0.00) IN THE HEADING OF SOME OF THE COLUMNS ARE THE RECOMMENDED PRECISION OF THE VALUE TO BE ENTERED IN THE COLUMN.

NOTE:
FOR PIPE CULVERT PLACEMENT SEE STANDARD DRAWING C-13.15

NOTE:
PIPE OPTIONS SELECTED ARE THOSE REQUIRED TO MEET MINIMUM SERVICE LIFE.
SHADED PIPE OPTION FIELDS ARE NOT ALLOWABLE ALTERNATES.

CSP - CORRUGATED STEEL PIPE
CAP - CORRUGATED ALUMINUM PIPE
RCP - REINFORCED CONCRETE PIPE
NRCP - NON-REINFORCED CONCRETE PIPE
NRCIPCP - NON-REINFORCED CAST-IN-PLACE CONCRETE PIPE
CHDPEPP - CORRUGATED HIGH DENSITY POLYETHYLENE PLASTIC PIPE

F.H.W.A. REGION	STATE	PROJECT NO.	SHEET NO.	TOTAL SHEETS	AS BUILT
9	ARIZ.	202-B(007)B			
		202 MA 023			

Column groups: DESCRIPTION (Station; Plan Ref No.; Controlling Fill Height Range; Size, Corrugated (In.); Size, Smooth (In.); Length (0) (Ft.); Skew (0) (Degree)) — CSP (Corrugation; Wall Thickness (0.000); Coating: Zinc, Bit. Coated Zinc, Aluminum, Bit. Coated Aluminum) — CAP (Corrugation; Wall Thickness (0.000); Uncoated; Bit. Coated) — RCP (Class - Non Trench; Class - Trench) — NRCP (Class; Min Wall Thickness (0)) — NRCIPCP (AASHTO M-294 Type C) — CHDPEPP (AASHTO M-294 Type S) — END TREATMENT (End Sec: C-13.20 & C-13.25, Detail -; Catch basin, Manhole, Headwall & Junction Structure: Size, (In) Manhole; Standard or Detail; S-Single / D-Double / T-Triple; Location; H (0.0); L Wing (0.0); L 18" Slotted Drn (0); L 24" Slotted Drn (0); Grate: Type, Elev. (0.00); Inlet Depression: Depth (In.), L (0.0) (Ft.)) — QUANTITIES, Cubic Yard (Pipe Exc (0); Pipe Bkfl (0); Drn Exc (0); Berm/Dike Emb (0)) — REMARKS

Station	Plan Ref No.	Controlling Fill Height Range	Size, Corrugated	Size, Smooth	Length (0)	Skew (0)	Class - Non Trench	Class - Trench	Min Wall Thickness (0)	Size, (In) Manhole	Standard or Detail	H (0.0)	Elev. (0.00)	Pipe Exc (0)	Pipe Bkfl (0)	REMARKS
202L Med Sta 1119+50 104' Lt	19	4		72	448		III	III	7	24	C-18.10	15.0	1571.47	2289	363	MH19 to MH20
202L Med Sta 1124+00 104' Lt																
202L Med Sta 1124+00 104' Lt to	20	3		72	395		II	II	7	24	C-18.10	14.1	1570.11	1938	320	MH20 to MH21
202L Med Sta 1128+00 104' Lt																
202L Med Sta 1128+00 104' Lt to	21	4		72	247		III	III	7	24	C-18.10	13.8	1569.43	1245	200	MH21 to MH22
202L Med Sta 1130+50 104' Lt																
202L Med Sta 1130+50 104' Lt to	22	4		78	337		III	III	7 1/2	24	C-18.10	14.9	1569.74	1941	299	MH22 to MH23
202L Med Sta 1133+91 106.87' Lt																
202L Med Sta 1133+91 106.87' Lt to	23	5		78	503		IV	IV	7 1/2	24	C-18.10	16.0	1570.52	3124	446	MH23 to MH24
McK Ramp A Sta 8+95 24' Lt																
McK Ramp A Sta 8+95 24' Lt to	24	5		78	396		IV	IV	7 1/2	24	C-18.10	17.4	1571.37	2717	351	MH24 to MH25
202L Med Sta 1143+00 92' Lt																
202L Med Sta 1143+00 92' Lt to	25	5		78	59		IV	IV	7 1/2	24	C-18.10	19.6	1573.15	429	52	MH25 to Jct25
202L Med Sta 1143+59.27 93.37' Lt											Dtl D11					
202L Med Sta 1155+00 92' Lt to	28	6		96	245		1795	1685	8 1/2	24	C-18.10	24.5	1576.40	2593	279	MH28 to Jct28
202L Med Sta 1152+55 92' Lt											Dtl D12					
202L Med Sta 1161+75 92' Lt to	29	6		96	675		1795	1685	8 1/2	24	C-18.10	23.4	1576.15	7029	768	MH29 to MH28
202L Med Sta 1155+00 92' Lt																
Sheet Total														23305	3078	

FILL HEIGHT RANGE TABLE (Ft.)													
RANGE NO.		1	2	3	4	5	6	7	8	9	10	11	12
FILL	>	1	3	5	8	11	15	20	25	30	40	55	70
HEIGHT (Ft.)	≤	3	5	8	11	15	20	25	30	40	55	70	90

SHOULD FIELD CONDITIONS VARY FROM THE RANGE INDICATED, CONTACT DESIGN FOR RE-EVALUATION OF PIPE DESIGN REQUIREMENTS.

PIPE CORRUGATION			
A	2⅔x½	D	6x2
B	3x1	E	3x1 or 9x2½
C	9x2½		

	NAME	DATE
DESIGN	RSR	4/05
DRAWN	BJP	4/05
CHECKED	CAD	4/05

Stanley Consultants INC.

ARIZONA DEPARTMENT OF TRANSPORTATION
INTERMODAL TRANSPORTATION DIVISION
ROADWAY DESIGN SERVICES

NEW PIPE SUMMARY SHEET

PRELIMINARY
STAGE IV
95% Review
NOT FOR CONSTRUCTION OR RECORDING

ROUTE 202L — LOCATION: RED MTN FWY, POWER ROAD - UNIVERSITY DRIVE — DWG NO. C-6.2

TRACS NO. H 5782 01C — 202-B(007)B — ____ OF ____

REV. DATE: 01-05-2000

4/22/2005 q:\17888\active\87-85-dwgs\82-gen\h5782sp82.dgn

NOTE:
THE ZEROS IN PARENTHESIS (0, 0.0 & 0.00) IN THE HEADING OF SOME OF THE COLUMNS ARE THE RECOMMENDED PRECISION OF THE VALUE TO BE ENTERED IN THE COLUMN.

NOTE:
FOR PIPE CULVERT PLACEMENT SEE STANDARD DRAWING C-13.15

NOTE:
PIPE OPTIONS SELECTED ARE THOSE REQUIRED TO MEET MINIMUM SERVICE LIFE.
SHADED PIPE OPTION FIELDS ARE NOT ALLOWABLE ALTERNATES.

CSP - CORRUGATED STEEL PIPE
CAP - CORRUGATED ALUMINUM PIPE
RCP - REINFORCED CONCRETE PIPE
NRCP - NON-REINFORCED CONCRETE PIPE
NRCIPCP - NON-REINFORCED CAST-IN-PLACE CONCRETE PIPE
CHDPEPP - CORRUGATED HIGH DENSITY POLYETHYLENE PLASTIC PIPE

F.A.H.U. REGION	STATE	PROJECT NO.	SHEET NO.	TOTAL SHEETS	AS BUILT
9	ARIZ.	202-B(007)B			
		202 MA 023			

DESCRIPTION							CSP			CAP		RCP	NRCP	NRCIPCP	CHDPEPP	END TREATMENT												QUANTITIES	
				in.	in.	Ft.	Degree	in.	Coating		in.			in.		Each				Ft.			Grate					Cubic Yard	
Station	Plan Ref No.	⊙ Controlling Fill Height Range	Size, Corrugated	Size, Smooth	Length (0)	Skew (0)	☑ Corrugation	Wall Thickness (0.00)	Zinc	Bit. Coated Zinc	Aluminum	Bit. Coated Aluminum	☑ Corrugation	Wall Thickness (0.00)	Uncoated	Bit. Coated	Class - Non Trench	Class - Trench	Class	Min Wall Thickness (0)	AASHTO M-294 Type S	AASHTO M-294 Type C	C-13.20 & C-13.25	Detail - Size, (in) Manhole or Detail	Standard End Sec	S-Single / D-Double / T-Triple	Location	H (0.0)	L Wing (0.0)	L 18" Spotted Drn (0)	L 24" Spotted Drn (0)	Type	Elev. (0.00)	Depth	Inlet Depression L (0.0)	Pipe Exc (0)	Pipe Bk-fl (0)	Drn Exc (0)	Berm/Dike End (0)	REMARKS
202L Med Sta 1168+27 52' Lt	30	5		96	652											III	III		B 1/2				24	C-18.10			21.1					1574.52		6318	741				MH30 to MH29
202L Med Sta 1161+75 52' Lt																																							
Mck Ramp C Sta 13+40 18' Lt to	31	5		96	210											III	III		B 1/2				24	C-18.10			19.9					1573.51		1878	239				MH31 to MH30
202L Med Sta 1168+27 52' Lt																																							
202L Med Sta 1175+67 106.85' Lt to	32	4		96	536											III	III		B 1/2				24	C-18.10			18.2					1572.37		4463	609				MH32 to MH31
Mck Ramp C Sta 13+40 18' Lt																																							
202L Med Sta 1182+00 104' Lt to	33	4		96	632											III	III		B 1/2				24	C-18.10			16.4					1571.16		4791	719				MH33 to MH32
202L Med Sta 1175+67 106.85' Lt																																							
202L Med Sta 1190+00 104' Lt to	34	3		96	797											II	II		B 1/2				24	C-18.10			17.3					1572.85		5890	906				MH34 to MH33
202L Med Sta 1182+00 104' Lt																																							
202L Med Sta 1198+00 104' Lt to	35	3		90	800											II	II		B				24	C-18.10			16.0					1572.85		5547	841				MH35 to MH34
202L Med Sta 1190+00 104' Lt																																							
202L Med Sta 1202+00 104' Lt to	36	3		90	401											II	II		B				24	C-18.10			14.6					1571.85		2562	422				MH36 to MH35
202L Med Sta 1198+00 104' Lt																																							
202L Med Sta 1206+00 104' Lt to	37	3		84	399											II	II		B				24	C-18.10			13.0					1571.16		2184	386				MH37 to MH36
202L Med Sta 1202+00 104' Lt																																							
202L Med Sta 1212+08 107.49' Lt to	38	3		78	604											II	II		7 1/2				24	C-18.10			13.0					1572.30		2945	536				MH38 to MH37
202L Med Sta 1206+00 104' Lt																																							
Sheet Total																																		36578	5399				

REV. DATE: 01-05-2000

FILL HEIGHT RANGE TABLE (Ft.)												
RANGE NO.	1	2	3	4	5	6	7	8	9	10	11	12
FILL HEIGHT (Ft.) >	1	3	5	8	11	15	20	25	30	40	55	70
FILL HEIGHT (Ft.) ≤	3	5	8	11	15	20	25	30	40	55	70	90

⊙ SHOULD FIELD CONDITIONS VARY FROM THE RANGE INDICATED, CONTACT DESIGN FOR RE-EVALUATION OF PIPE DESIGN REQUIREMENTS.

☑ PIPE CORRUGATION			
A	2⅔x½	D	6x2
B	5x1	E	3x1 or 9x2½
C	9x2½		

	NAME	DATE
DESIGN	RSR	4/05
DRAWN	R.JP	4/05
CHECKED	CAQ	4/05

Stanley Consultants Inc.

ARIZONA DEPARTMENT OF TRANSPORTATION
INTERMODAL TRANSPORTATION DIVISION
ROADWAY DESIGN SERVICES

NEW PIPE SUMMARY SHEET

PRELIMINARY
STAGE IV
95% Review
NOT FOR CONSTRUCTION OR RECORDING

ROUTE	LOCATION
202L	RED MTN FWY, POWER ROAD - UNIVERSITY DRIVE

TRACS NO. H 5782 01C | 202-B(007)B | DRG NO. C-6.3 | ___ OF ___

4/22/2005 q:\17888\active\87-185-dsgn\182-gen\h5782spl1.sdgn

NOTE:
THE ZEROS IN PARENTHESIS (0, 0.0 & 0.00) IN THE HEADING OF SOME OF THE COLUMNS ARE THE RECOMMENDED PRECISION OF THE VALUE TO BE ENTERED IN THE COLUMN.

NOTE:
FOR PIPE CULVERT PLACEMENT SEE STANDARD DRAWING C-13.15

NOTE:
PIPE OPTIONS SELECTED ARE THOSE REQUIRED TO MEET MINIMUM SERVICE LIFE.
SHADED PIPE OPTION FIELDS ARE NOT ALLOWABLE ALTERNATES.

CSP - CORRUGATED STEEL PIPE
CAP - CORRUGATED ALUMINUM PIPE
RCP - REINFORCED CONCRETE PIPE
NRCP - NON-REINFORCED CONCRETE PIPE
NRCIPCP - NON-REINFORCED CAST-IN-PLACE CONCRETE PIPE
CHDPEPP - CORRUGATED HIGH DENSTIY POLYETHYLENE PLASTIC PIPE

F.H.W.A. REGION	STATE	PROJECT NO.	SHEET NO.	TOTAL SHEETS	AS BUILT
9	ARIZ.	202-B(007)B			
		202 MA 023			

DESCRIPTION / CSP / CAP / RCP / NRCP / NRCIPCP / CHDPEPP

Station	Plan Ref No.	⊖ Controlling Fill Height Range	Size, Corrugated (In.)	Size, Smooth (In.)	Length (0) (Ft.)	Skew (0) (Degree)	CSP ☑ Corrugation	CSP Wall Thickness (0.00)	CSP Coating Zinc	CSP Coating Bit. Coated Zinc	CSP Coating Aluminum	CSP Coating Bit. Coated Aluminum	CAP ☑ Corrugation	CAP Wall Thickness (0.00)	CAP Uncoated	CAP Bit. Coated	RCP Class - Non Trench	RCP Class - Trench	NRCP Class	NRCIPCP Min Wall Thickness (0) (In.)	CHDPEPP AASHTO M-294 Type C	CHDPEPP AASHTO M-294 Type S
Brn Ramp A Sta 8+06 24' Lt to 202L Med Sta 1212+08 107.49' Lt	39	3		72	434												II	II		7		
202L Med Sta 1222+50 92' Lt to Brn Ramp A Sta 8+06 24' Lt	40	3		66	604												III	III		6 1/2		
202L Med Sta 1229+21.21 92' Lt to 202L Med Sta 1222+50 92' Lt to	41	2		66	668												II	II		6 1/2		
202L Med Sta 1232+00 90' Lt to 202L Med Sta 1229+21.21 92' Lt	42	1		60	278												II	II		6		
202L Med Sta 1236+00 90' Lt to 202L Med Sta 1232+00 90' Lt	43	2		54	398												II	II		6 1/2		
202L Med Sta 1238+00 92' Lt to 202L Med Sta 1236+00 90' Lt	44	2		48	199												II	II		5		
202L Med Sta 1242+00 92' Lt to 202L Med Sta 1238+00 92' Lt	45	3		48	398												II	II		5		
202L Med Sta 1245+00 92' Lt to 202L Med Sta 1242+00 92' Lt	46	3		42	299												II	II		4		
202L Med Sta 1247+95 92' Lt to 202L Med Sta 1245+00 92' Lt	47	3		42	295												II	II		4		
Sheet Total																						

END TREATMENT / QUANTITIES

Station	C-13.20 & C-13.25	Detail -	End Sec Size (In) (Each)	Catch basin, Manhole, Headwall & Junction Structure: Standard or Detail	S-Single / D-Double / T-Triple (Ea)	Location	H (0.0) (Ft.)	L Wing (0.0) (Ft.)	L 18" Slotted Drn (0) (Ft.)	L 24" Slotted Drn (0) (Ft.)	Grate Type	Grate Elev. (0.00) (Ft.)	Inlet Depression Depth (In.)	Inlet Depression L (0.0) (Ft.)	Pipe Exc (0) (Cubic Yard)	Pipe Bkfl (0) (Cubic Yard)	Drn Exc (0) (Cubic Yard)	Berm/Dike Emb (0) (Cubic Yard)	REMARKS
Brn Ramp A Sta 8+06 24' Lt to 202L Med Sta 1212+08 107.49' Lt			24	C-18.10			12.9					1573.12			1982	351			MH39 to MH38
202L Med Sta 1222+50 92' Lt to Brn Ramp A Sta 8+06 24' Lt			24	C-18.10			11.7					1572.96			2458	444			MH40 to MH39
202L Med Sta 1229+21.21 92' Lt to 202L Med Sta 1222+50 92' Lt to			24	C-18.10			9.6					1571.59			2368	491			MH41 to MH40
202L Med Sta 1232+00 90' Lt to 202L Med Sta 1229+21.21 92' Lt			24	C-18.10			9.2					1571.98			815	184			MH42 to MH41
202L Med Sta 1236+00 90' Lt to 202L Med Sta 1232+00 90' Lt			24	C-18.10			9.4					1573.61			1071	236			MH43 to MH42
202L Med Sta 1238+00 92' Lt to 202L Med Sta 1236+00 90' Lt			24	C-18.10			9.2					1574.43			494	104			MH44 to MH43
202L Med Sta 1242+00 92' Lt to 202L Med Sta 1238+00 92' Lt			24	C-18.10			9.8					1576.01			1007	209			MH45 to MH44
202L Med Sta 1245+00 92' Lt to 202L Med Sta 1242+00 92' Lt			24	C-18.10			9.7					1577.24			709	138			MH46 to MH45
202L Med Sta 1247+95 92' Lt to 202L Med Sta 1245+00 92' Lt			24	C-18.10			10.4					1578.63			720	136			MH47 to MH46
Sheet Total															11624	2293			

FILL HEIGHT RANGE TABLE (Ft.)													
RANGE NO.		1	2	3	4	5	6	7	8	9	10	11	12
FILL	>	1	3	5	8	11	15	20	25	30	40	55	70
HEIGHT (Ft.)	≤	3	5	8	11	15	20	25	30	40	55	70	90

⊖ SHOULD FIELD CONDITIONS VARY FROM THE RANGE INDICATED, CONTACT DESIGN FOR RE-EVALUATION OF PIPE DESIGN REQUIREMENTS.

☑ PIPE CORRUGATION			
A	2⅔x½	D	6x2
B	3x1	E	3x1 or 9x2½
C	9x2½		

	INITIAL	DATE
DESIGN	RSR	4/05
DRAWN	BJP	4/05
CHECKED	CAD	4/05

Stanley Consultants inc.

ARIZONA DEPARTMENT OF TRANSPORTATION
INTERMODAL TRANSPORTATION DIVISION
ROADWAY DESIGN SERVICES

NEW PIPE SUMMARY SHEET

PRELIMINARY
STAGE IV
95% Review
NOT FOR CONSTRUCTION OR RECORDING

ROUTE: 202L
LOCATION: RED MTN FWY, POWER ROAD - UNIVERSITY DRIVE

DWG NO. D-6.4

TRACS NO. H 5782 01C

202-B(007)B

___ OF ___

REV. DATE: 01-05-2000

NOTE:
THE ZEROS IN PARENTHESIS (0, 0.0 & 0.00) IN THE HEADING OF SOME OF THE COLUMNS ARE THE RECOMMENDED PRECISION OF THE VALUE TO BE ENTERED IN THE COLUMN.

NOTE:
FOR PIPE CULVERT PLACEMENT SEE STANDARD DRAWING C-15.15

NOTE:
PIPE OPTIONS SELECTED ARE THOSE REQUIRED TO MEET MINIMUM SERVICE LIFE.
SHADED PIPE OPTION FIELDS ARE NOT ALLOWABLE ALTERNATES.

CSP - CORRUGATED STEEL PIPE
CAP - CORRUGATED ALUMINUM PIPE
RCP - REINFORCED CONCRETE PIPE
NRCP - NON-REINFORCED CONCRETE PIPE
NRCIPCP - NON-REINFORCED CAST-IN-PLACE CONCRETE PIPE
CHDPEPP - CORRUGATED HIGH DENSITY POLYETHYLENE PLASTIC PIPE

FUNCTIONAL REGION	STATE	PROJECT NO.	SHEET NO.	TOTAL SHEETS	AS BUILT
9	ARIZ.	202-B(00718			
		202 MA 023			

Station	Plan Ref No.	⊙ Controlling Fill Height Range	Size, Corrugated	Size, Smooth	Length (1)	Skew (0)	DESCRIPTION: ☑ Corrugation	Wall Thickness (0.00)	CSP Coating: Zinc	Bit. Coated Zinc	Aluminum	Bit. Coated Aluminum	CAP ☑ Corrugation	Wall Thickness (0.00)	Uncoated	Bit. Coated	RCP Class - Non Trench	Class - Trench	Class	Min Wall Thickness (0)	AASHTO M-294 Type C	AASHTO M-294 Type S	C-13.20 & C-13.23 Detail -	Size, (in) Manhole	END TREATMENT: Each Standard or Detail	End Sec	Catch basin, Manhole, Headwall & Junction Structure: Ea S-Single / D-Double / T-Triple	Location	H (0.0)	Ft. L Wing (0.0)	L 18" Slotted Drn (0)	L 24" Slotted Drn (0)	Grate Type	Grate Elev. (0.00)	Inlet Depression Ft. In.	Depth	QUANTITIES Cubic Yard: L (0.0)	Pipe Exc (0)	Pipe Bkfl (0)	Drn Exc (0)	Berm/Dike Exc (0)	REMARKS
202L Med Sta 1060+67 4' Lt to	100	6		24	178											IV	IV							C-15.92				8.0		25			1588.84			294	36			CB100 to Jct100
202L Med Sta 1060+00.69 166.45' Lt																								Dtl D8																
202L Med Sta 1061+06 79.5' Rt to	101	3		24	94											II	II	2			X			C-15.92				5.7		25			1586.88			90	19			CB101 to CB100
202L Med Sta 1060+67 4' Lt																																								
202L Med Sta 1074+58 4' Lt to	102	2		24	363											II	II	1			X			C-15.92				5.5		10			1607.38			289	73			CB102 to CB103
202L Med Sta 1078+20 6' Rt																																								
202L Med Sta 1078+20 6' Rt to	103	6		24	265											IV	IV							C-15.80	S			5.8					1601.06			483	53			CB103 to Jct103, Detail D9
202L Med Sta 1078+20 259' Lt																								Dtl D8																
202L Med Sta 1078+20 79.5' Rt to	104	3		24	78											II	II	2			X			C-15.92				5.5		15			1600.86			62	16			CB104 to CB103
202L Med Sta 1078+20 6' Rt																																								
202L Med Sta 1081+90 6' Rt to	105	6		24	222											IV	IV							C-15.80	S			4.0					1596.01			415	45			CB105 to Jct105, Detail D9
202L Med Sta 1081+90 216' Lt																								Dtl D8																
202L Med Sta 1085+50 6' Rt to	106	5		24	196											IV	IV							C-15.80	S			6.1					1588.38			346	39			CB106 to Jct106, Detail D9
202L Med Sta 1085+50 190' Lt																								Dtl D8																
202L Med Sta 1085+50 79.5' Rt to	107	3		24	76											II	II	2			X			C-15.91				5.5		15			1588.07	1	25	62	15			CB107 to CB106
202L Med Sta 1085+50 6' Rt																																								
202L Med Sta 1089+57 6' Rt to	108	3		30	163											II	II	2			X			C-15.80	S			6.1					1576.89			191	40			CB108 to MH10
202L Med Sta 1090+85 94' Lt																																								
Sheet Total																														90				2232	336				

REV. DATE: 01-05-2000

FILL HEIGHT RANGE TABLE (Ft.)

RANGE NO.		1	2	3	4	5	6	7	8	9	10	11	12
FILL	>	1	3	5	8	11	15	20	25	30	40	55	70
HEIGHT (Ft.)	≤	3	5	8	11	15	20	25	30	40	55	70	90

⊙ SHOULD FIELD CONDITIONS VARY FROM THE RANGE INDICATED, CONTACT DESIGN FOR RE-EVALUATION OF PIPE DESIGN REQUIREMENTS.

☑ PIPE CORRUGATION			
A	2⅔x½	D	6x2
B	3x1	E	3x1 or 9x2½
C	9x2½		

	NAME	DATE
DESIGN	RSR	4/05
DRAWN	R.J.P	4/05
CHECKED	CAD	4/05

Stanley Consultants Inc.

ARIZONA DEPARTMENT OF TRANSPORTATION
INTERMODAL TRANSPORTATION DIVISION
ROADWAY DESIGN SERVICES

NEW PIPE SUMMARY SHEET

PRELIMINARY
STAGE IV
95% Review
NOT FOR CONSTRUCTION OR RECORDING

ROUTE: 202L | LOCATION: RED MTN FWY, POWER ROAD - UNIVERSITY DRIVE

DWG NO. C-8.5

TRACS NO. H 5782 01C | 202-B(00718 | ___ OF ___

4/22/2005 g:\17888\active\87-ids-dsgn\82-gen\h5782cp85.dgn

NOTE:
THE ZEROS IN PARENTHESIS (0, 0.0 & 0.00) IN THE HEADING OF SOME OF THE COLUMNS ARE THE RECOMMENDED PRECISION OF THE VALUE TO BE ENTERED IN THE COLUMN.

NOTE:
FOR PIPE CULVERT PLACEMENT SEE STANDARD DRAWING C-13.15

NOTE:
PIPE OPTIONS SELECTED ARE THOSE REQUIRED TO MEET MINIMUM SERVICE LIFE.
SHADED PIPE OPTION FIELDS ARE NOT ALLOWABLE ALTERNATES.

CSP - CORRUGATED STEEL PIPE
CAP - CORRUGATED ALUMINUM PIPE
RCP - REINFORCED CONCRETE PIPE
NRCP - NON-REINFORCED CONCRETE PIPE
NRCIPCP - NON-REINFORCED CAST-IN-PLACE CONCRETE PIPE
CHDPEPP - CORRUGATED HIGH DENSTIY POLYETHYLENE PLASTIC PIPE

F.A.S. REGION	STATE	PROJECT NO.	SHEET NO.	TOTAL SHEETS	AS BUILT
9	ARIZ.	202-B(007)B			
		202 MA 023			

DESCRIPTION: Station	Plan Ref No.	⊖ Controlling Fill Height Range	Size, Corrugated (In.)	Size, Smooth (In.)	Length (0) (Ft.)	Skew (0) (Degree)	CSP: ☒ Corrugation	CSP: Wall Thickness (0.00) (In.)	CSP: Zinc	CSP: Bit. Coated Zinc	CSP: Aluminum	CSP: Bit. Coated Aluminum	CAP: ☒ Corrugation	CAP: Wall Thickness (0.00) (In.)	CAP: Uncoated	CAP: Bit. Coated	RCP: Class - Non Trench	RCP: Class - Trench	NRCP: Class	NRCIPCP: Min Wall Thickness (0) (In.)	CHDPEPP: AASHTO M-294 Type C	CHDPEPP: AASHTO M-294 Type S	C-13.20 & C-13.25 Detail -	End Sec: Size, (in) (Each)	END TREATMENT: Catch basin, Manhole, Headwall & Junction Structure: Standard or Detail	S-Single / D-Double / T-Triple (Ea)	Location	H (0.0) (Ft.)	L Wing (0.0) (Ft.)	L 18" Slotted Drn (0) (Ft.)	L 24" Slotted Drn (0) (Ft.)	Grate: Type	Grate: Elev. (0.00) (Ft.)	Inlet Depression: Depth (In.)	Inlet Depression: L (0.0) (Ft.)	QUANTITIES (Cubic Yard): Pipe Exc (0)	Pipe Bkfl (0)	Drn Exc (0)	Berm/Dike Emb (0)	REMARKS
202L Med Sta 1089+34 104' Rt to	109	2		24	101												II	II	1		X				C-15.80	D		4.5					1576.33			76	20			CB109 to CB108
202L Med Sta 1089+57 6' Rt																									Dtl 06															
202L Med Sta 1092+50 79.5' Rt to	110	1		24	176												III	III	3		X				C-15.91			4.3		10			1571.89	1	20	137	35			CB110 to MH11
202L Med Sta 1092+50 94' Lt																																								
McD Ramp D Sta 4+20 11.5' Rt to	112	5		24	118												IV	IV							C-15.92			10.2		20			1592.33			128	24			CB112 to CB117
202L Med Sta 1095+64 79.5' Rt																																								
202L Med Sta 1096+41 79.5' Lt to	113	2		24	12												II	II	1		X				C-15.91			5.5		15			1569.47	1	25	10	2			CB113 to Jct113
202L Med Sta 1096+41 93.01' Lt																																								
202L Med Sta 1097+42.90 79.5' Lt to	114	3		30	11												II	II	2		X				C-15.91			7.4		5			1569.29	1	15	15	3			CB114 to MH13
202L Med Sta 1097+42.90 92' Lt																																								
202L Med Sta 1097+42.90 0' Rt to	115	3		30	82												II	II	2		X				C-15.80	S		5.5					1568.05			86	20			CB115 to CB114
202L Med Sta 1097+42.90 79.5' Lt																																								
202L Med Sta 1097+64 79.5' Rt to	116	3		30	85												II	II	2		X				C-15.91			6.5		10			1569.24	1	20	84	21			CB116 to CB115
202L Med Sta 1097+42.90 0' Rt																																								
202L Med Sta 1095+64 79.5' Rt to	117	2		30	101												II	II	1		X				C-15.91			5.5		10			1569.24	1	20	94	25			CB117 to CB118
202L Med Sta 1096+63.75 79.5' Rt																																								
202L Med Sta 1096+63.75 79.5' Rt to	118	2		30	101												II	II	1		X				C-15.91			5.8		10			1569.07	1	20	101	25			CB118 to CB116
202L Med Sta 1097+64 79.5' Rt																																								
Sheet Total																														80						731	175			

FILL HEIGHT RANGE TABLE (Ft.)													
RANGE NO.		1	2	3	4	5	6	7	8	9	10	11	12
FILL	>	1	3	5	8	11	15	20	25	30	40	55	70
HEIGHT (Ft.)	≤	3	5	8	11	15	20	25	30	40	55	70	90

⊖ SHOULD FIELD CONDITIONS VARY FROM THE RANGE INDICATED, CONTACT DESIGN FOR RE-EVALUATION OF PIPE DESIGN REQUIREMENTS.

☒ PIPE CORRUGATION			
A	2⅔x½	D	6x2
B	3x1	E	3x1 or 9x2½
C	9x2½		

	NAME	DATE
DESIGN	RSR	4/05
DRAWN	WJP	4/05
CHECKED	CAD	4/05

ARIZONA DEPARTMENT OF TRANSPORTATION
INTERMODAL TRANSPORTATION DIVISION
ROADWAY DESIGN SERVICES

Stanley Consultants inc.

NEW PIPE SUMMARY SHEET

PRELIMINARY
STAGE IV
95% Review
NOT FOR CONSTRUCTION OR RECORDING

ROUTE 202L
LOCATION RED MTN FWY, POWER ROAD - UNIVERSITY DRIVE
DWG NO. C-6.6

TRACS NO. H 5782 01C | 202-B(007)B | ___ OF ___

REV. DATE: 01-05-2000

4/22/2005

NOTE:
THE ZEROS IN PARENTHESIS (0, 0.0 & 0.00) IN THE HEADING OF SOME OF THE COLUMNS ARE THE RECOMMENDED PRECISION OF THE VALUE TO BE ENTERED IN THE COLUMN.

NOTE:
FOR PIPE CULVERT PLACEMENT SEE STANDARD DRAWING C-13.15

NOTE:
PIPE OPTIONS SELECTED ARE THOSE REQUIRED TO MEET MINIMUM SERVICE LIFE.
SHADED PIPE OPTION FIELDS ARE NOT ALLOWABLE ALTERNATES.

CSP - CORRUGATED STEEL PIPE
CAP - CORRUGATED ALUMINUM PIPE
RCP - REINFORCED CONCRETE PIPE
NRCP - NON-REINFORCED CONCRETE PIPE
NRCIPCP - NON-REINFORCED CAST-IN-PLACE CONCRETE PIPE
CHDPEPP - CORRUGATED HIGH DENSTIY POLYETHYLENE PLASTIC PIPE

F.H.W.A. REGION	STATE	PROJECT NO.	SHEET NO.	TOTAL SHEETS	AS BUILT
9	ARIZ.	202-B(007)B			
		202 MA 023			

DESCRIPTION: Station	Plan Ref No.	Controlling Fill Height Range	Size, Corrugated (In.)	Size, Smooth (In.)	Length (0) (Ft.)	Skew (0) (Degree)	CSP: Corrugation (In.)	CSP: Wall Thickness (0.00)	CSP Coating: Zinc	CSP Coating: Bit. Coated Zinc	CSP Coating: Aluminum	CSP Coating: Bit. Coated Aluminum	CAP: Corrugation (In.)	CAP: Wall Thickness (0.00)	CAP: Uncoated	CAP: Bit. Coated	RCP: Class - Non Trench	RCP: Class - Trench	NRCP: Class	NRCIPCP: Min Wall Thickness (0) (In.)	CHDPEPP: AASHTO M-294 Type C	CHDPEPP: AASHTO M-294 Type S	End Sec (Each): C-15.20 & C-15.25	End Sec (Each): Detail -	Size, (In) Manhole	Standard or Detail	S-Single / D-Double / T-Triple (Ea)	Location	H (0.0)	L Wing (0.0) (Ft.)	L 18" Slotted Drn (0) (Ft.)	L 24" Slotted Drn (0) (Ft.)	Grate: Type	Grate: Elev. (0.00) (Ft.)	Inlet Depression: Depth (In.)	Inlet Depression: L (0.0) (Ft.)	QUANTITIES (Cubic Yard): Pipe Exc (0)	Pipe Bkfl (0)	Drn Exc (0)	Berm/Dike Emb (0)	REMARKS
202L Med Sta 1098+45 79.5' Lt to	119	3		24	12												II	II	2			X				C-15.91			5.5		10			1569.46	1	20	11	2			CB119 to Jct119
202L Med Sta 1098+45 93.01' Lt																																									
McD Ramp C Sta 8+90 13.5' Lt to	120	3		24	87												II	II	2			X				C-15.92			5.5		25			1577.01			79	17			CB120 to MH14
202L Med Sta 1101+50 92' Lt																																									
202L Med Sta 1101+50 79.5' Lt to	121	3		24	11												II	II	2			X				C-15.91			7.4		5			1570.33	1	15	11	2			CB121 to MH14
202L Med Sta 1101+50 92' Lt																																									
202L Med Sta 1101+50 79.5' Rt to	122	1		24	164												III	III	3			X				C-15.91			5.8		10			1570.33	1	20	151	33			CB122 to CB121
202L Med Sta 1101+50 79.5' Lt																																									
McD Ramp D Sta 10+85 11.5' Lt to	123	2		24	48												II	II	1			X				C-15.91			5.5		20			1572.54	1	30	38	10			CB123 to CB122
202L Med Sta 1101+50 79.5' Rt																																									
McD Ramp C Sta 11+80 5.5' Lt to	124	4		24	17												III	III				X				C-15.91			5.8		10			1571.54	1	20	19	3			CB124 to Jct124
McD Ramp C Sta 11+82.87 8.96 Rt																																									
McD Ramp C Sta 12+77 5.5' Lt to	125	4		24	2												III	III				X				C-15.91			12.2					1570.86	1	10	1	0			CB125 to MH15
McD Ramp C Sta 12+77 7.45' Lt																																									
McD Ramp C Sta 13+37.49 5.5' Lt to	126	3		30	11												II	II	2			X				C-15.91			8.6		5			1570.74	1	15	14	3			CB126 to MH15
McD Ramp C Sta 13+37.49 18' Lt																																									
202L Med Sta 1105+40 0' Rt to	127	3		30	125												II	II	2			X				C-15.80	S		6.2					1569.20			149	31			CB127 to CB126
McD Ramp C Sta 13+37.49 5.5' Lt																																									
Sheet Total																															85						473	101			

FILL HEIGHT RANGE TABLE (Ft.)													
RANGE NO.		1	2	3	4	5	6	7	8	9	10	11	12
FILL	>	1	3	5	8	11	15	20	25	30	40	55	70
HEIGHT (Ft.)	≤	3	5	8	11	15	20	25	30	40	55	70	90

SHOULD FIELD CONDITIONS VARY FROM THE RANGE INDICATED, CONTACT DESIGN FOR RE-EVALUATION OF PIPE DESIGN REQUIREMENTS.

PIPE CORRUGATION			
A	2⅔x½	D	6x2
B	3x1	E	3x1 or 9x2½
C	9x2½		

	NAME	DATE
DESIGN	RSR	4/05
DRAWN	WJP	4/05
CHECKED	CAD	4/05

Stanley Consultants Inc.

ARIZONA DEPARTMENT OF TRANSPORTATION
INTERMODAL TRANSPORTATION DIVISION
ROADWAY DESIGN SERVICES

NEW PIPE SUMMARY SHEET

PRELIMINARY
STAGE IV
95% Review
NOT FOR CONSTRUCTION OR RECORDING

ROUTE: 202L
LOCATION: RED MTN FWY, POWER ROAD - UNIVERSITY DRIVE
DWG NO. G-6.7

TRACS NO. H 5782 01C
202-B(007)B
___ OF ___

REV. DATE: 01-05-2000

4/22/2005 q:\17808\active\87-86-dwgs\82-gen\h5782sp87.dgn

NOTE:
THE ZEROS IN PARENTHESIS (0.0 & 0.00) IN THE HEADING OF SOME OF THE COLUMNS ARE THE RECOMMENDED PRECISION OF THE VALUE TO BE ENTERED IN THE COLUMN.

NOTE:
FOR PIPE CULVERT PLACEMENT SEE STANDARD DRAWING C-13.15

NOTE:
PIPE OPTIONS SELECTED ARE THOSE REQUIRED TO MEET MINIMUM SERVICE LIFE.
SHADED PIPE OPTION FIELDS ARE NOT ALLOWABLE ALTERNATES.

CSP - CORRUGATED STEEL PIPE
CAP - CORRUGATED ALUMINUM PIPE
RCP - REINFORCED CONCRETE PIPE
NRCP - NON-REINFORCED CONCRETE PIPE
NRCIPCP - NON-REINFORCED CAST-IN-PLACE CONCRETE PIPE
CHDPEPP - CORRUGATED HIGH DENSITY POLYETHYLENE PLASTIC PIPE

F.A.R.S. NUMBER	STATE	PROJECT NO.	SHEET NO.	TOTAL SHEETS	AS BUILT
9	ARIZ.	202-B(007)I			
		202 MA 023			

DESCRIPTION							CSP			CAP			RCP			NRCP	NRCIPCP	CHDPEPP	END TREATMENT															QUANTITIES	
				In.	In.	Ft.	Degree	In.	Coating		In.						In.		Each	Ea	Catch basin, Manhole, Headwall & Junction Structure			Ft.		Grate	Ft.								Cubic Yard	
Station	Plan Ref No.	⬡ Controlling Fill Height Range	Size, Corrugated	Size, Smooth	Length (0)	Skew (0)	☑ Corrugation	Wall Thickness (0.00)	Zinc	Bit. Coated Zinc	Aluminum	Bit. Coated Aluminum	☑ Corrugation	Wall Thickness (0.00)	Uncoated	Bit. Coated	Class - Non Trench	Class - Trench	Class	Min Wall Thickness (0)	AASHTO M-294 Type C	AASHTO M-294 Type S	C-13.20 & C-13.25 Detail -	Size, (in) Manhole or Detail	Standard	End Sec	S-Single / D-Double / T-Triple	Location	H (0.0)	L Wing (0.0)	L 18" Slotted Drn (0)	L 24" Slotted Drn (0)	Type	Elev. (0.00)	Depth	L (0.0)	Inlet Depression	Pipe Exc (0)	Pipe Bkfl (0)	Drn Exc (0)	Berm/Dike Exc (0)	REMARKS
McD Ramp D Sta 15+66 11.32' Rt to	128	2		24	133										II	II	I		X				C-15.92					6.2		5			1570.93				116	27			CB128 to CB131
McD Ramp D Sta 14+33 11.5' Rt																																								
McD Ramp D Sta 12+82 11.5' Rt to	129	2		24	75										II	II	I		X				C-15.92					5.7					1570.38				61	15			CB129 to CB130
McD Ramp D Sta 13+57.01 11.5' Rt																																								
McD Ramp D Sta 13+57.01 11.5' Rt to	130	2		24	76										II	II	I		X				C-15.92					5.9		5			1570.21				65	15			CB130 to CB131
McD Ramp D Sta 14+33 11.5' Rt																																								
McD Ramp D Sta 14+33 11.5' Rt to	131	3		30	139										II	II	2		X				C-15.92					6.9					1570.38				148	34			CB131 to CB127
202L Med Sta 1105+40 0' Rt																																								
202L Med Sta 1107+88 105.27' Rt to	132	2		24	156										II	II	I		X				C-15.92					6.1		5			1571.63				134	31			CB132 to CB128
McD Ramp D Sta 15+66 11.32' Rt																																								
202L Med Sta 1109+37 95.30' Rt to	133	2		24	150										II	II	I		X				C-15.92					6.0		5			1572.24				127	30			CB133 to CB132
202L Med Sta 1107+88 105.27' Rt																																								
202L Med Sta 1110+57 91.56' Rt to	134	2		24	120										II	II	I		X				C-15.92					5.7		10			1572.55				99	24			CB134 to CB133
202L Med Sta 1109+37 95.30' Rt																																								
McD Ramp C Sta 13+98 5.5' Lt to	135	4		24	12										III	III			X				C-15.91					5.8		55			1570.86	1	65		13	2			CB135 to Jct135
McD Ramp C Sta 13+98 18.63' Lt																																								
McD Ramp C Sta 15+18 5.5' Lt to	137	4		24	12										III	III			X				C-15.91					5.7		80			1571.34	1	90		14	2			CB137 to Jct137
McD Ramp C Sta 15+18 19.32' Lt																																								
Sheet Total																															165							777	180			

REV. DATE: 01-05-2000

FILL HEIGHT RANGE TABLE (Ft.)												
RANGE NO.		1	2	3	4	5	6	7	8	9	10	11	12
FILL HEIGHT (Ft.)	>	1	3	5	8	11	15	20	25	30	40	55	70
	≤	3	5	8	11	15	20	25	30	40	55	70	90
⬡ SHOULD FIELD CONDITIONS VARY FROM THE RANGE INDICATED, CONTACT DESIGN FOR RE-EVALUATION OF PIPE DESIGN REQUIREMENTS.													

☑ PIPE CORRUGATION					
A	2 2/3x1/2	D	6x2		
B	3x1	E	3x1 or 9x2 1/2		
C	9x2 1/2				

	NAME	DATE
DESIGN	RSR	4/05
DRAWN	B.JP	4/05
CHECKED	CAD	4/05

Stanley Consultants Inc.

ARIZONA DEPARTMENT OF TRANSPORTATION
INTERMODAL TRANSPORTATION DIVISION
ROADWAY DESIGN SERVICES

NEW PIPE SUMMARY SHEET

PRELIMINARY
STAGE IV
95% Review
NOT FOR CONSTRUCTION OR RECORDING

ROUTE	LOCATION
202L	RED MTN FWY, POWER ROAD - UNIVERSITY DRIVE

TRACS NO. H 5782 01C | 202-B(007)I | DRG NO. C-6.8 | ___ OF ___

4/22/2005 q:\17888\active\87-05-dwgs\02-gen\h5782sp06.dgn

NOTE:
THE ZEROS IN PARENTHESIS (0, 0.0 & 0.00) IN THE HEADING OF SOME OF THE COLUMNS ARE THE RECOMMENDED PRECISION OF THE VALUE TO BE ENTERED IN THE COLUMN.

NOTE:
FOR PIPE CULVERT PLACEMENT SEE STANDARD DRAWING C-13.15

NOTE:
PIPE OPTIONS SELECTED ARE THOSE REQUIRED TO MEET MINIMUM SERVICE LIFE.
SHADED PIPE OPTION FIELDS ARE NOT ALLOWABLE ALTERNATES.

CSP - CORRUGATED STEEL PIPE
CAP - CORRUGATED ALUMINUM PIPE
RCP - REINFORCED CONCRETE PIPE
NRCP - NON-REINFORCED CONCRETE PIPE
NRCIPCP - NON-REINFORCED CAST-IN-PLACE CONCRETE PIPE
CHDPEPP - CORRUGATED HIGH DENSITY POLYETHYLENE PLASTIC PIPE

F.H.W.A. REGION	STATE	PROJECT NO.	SHEET NO.	TOTAL SHEETS	AS BUILT
9	ARIZ.	202-B(007)B			
		202 MA 023			

Station	Plan Ref No.	Controlling Fill Height Range	DESCRIPTION Size, Corrugated (In.)	Size, Smooth (In.)	Length (0) (Ft.)	Skew (0) (Degree)	CSP Corrugation	CSP Wall Thickness (0.000) (In.)	CSP Coating Zinc	CSP Bit. Coated Zinc	CSP Aluminum	CSP Bit. Coated Aluminum	CAP Corrugation	CAP Wall Thickness (0.000) (In.)	CAP Uncoated	CAP Bit. Coated	RCP Class - Non Trench	RCP Class - Trench	NRCP Class	NRCIPCP Min Wall Thickness (0) (In.)	CHDPEPP AASHTO M-294 Type C	CHDPEPP AASHTO M-294 Type S	END TREATMENT End Sec (Each) C-15.20 & C-15.25 Detail	Detail -	Size, (in) Manhole	Catch basin, Manhole, Headwall & Junction Structure (Ea) Standard or Detail	S-Single / D-Double / T-Triple	Location	H (0.0) (Ft.)	L Wing (0.0)	L 18" Slotted Drn (0)	L 24" Slotted Drn (0)	Grate Type	Elev. (0.00)	Inlet Depression Depth (In.)	Inlet Depression L (0.0) (Ft.)	QUANTITIES (Cubic Yard) Pipe Exc (0)	Pipe Bkfl (0)	Drn Exc (0)	Berm/Dike Emb (0)	REMARKS
202L Med Sta 1108+75 102.05' Lt to	139	4		24	11												III	III				X				C-15.91			5.8		80			1571.94	1	50	9	2			CB139 to MH16
202L Med Sta 1108+75 114.98' Lt																																									
202L Med Sta 1110+25 96.01' Lt to	141	5		24	13												IV	IV								C-15.91			5.8		5			1572.41	1	15	15	3			CB141 to Jct141
202L Med Sta 1110+25 110.34' Lt																																									
McD Ramp D Sta 13+57.01 22.5' Rt to	142	3		24	7												II	II	2			X				C-15.80	D		7.4		5			1571.50			9	1			CB142 to CB130
McD Ramp D Sta 13+57.01 11.5' Rt																										Dtl D6															
202L Med Sta 1116+25 91.5' Lt to	150	2		24	11												II	II	1			X				C-15.91			6.6		5			1572.01	1	15	10	2			CB150 to MH18
202L Med Sta 1116+25 104' Lt																																									
202L Med Sta 1116+25 91.5' Rt to	151	1		24	189												III	III	3			X				C-15.92			5.7		10			1572.01			163	38			CB151 to CB150
202L Med Sta 1116+25 91.5' Lt																																									
202L Med Sta 1119+50 91.5' Lt to	152	2		24	11												II	II	1			X				C-15.91			6.6		15			1571.20	1	25	10	2			CB152 to MH19
202L Med Sta 1119+50 104' Lt																																									
202L Med Sta 1119+50 0' Rt to	153	1		24	94												III	III	3			X				C-15.80	S		3.9					1569.20			70	19			CB153 to CB152
202L Med Sta 1119+50 91.5' Lt																																									
202L Med Sta 1119+50 91.5' Rt to	154	1		24	96												III	III	3			X				C-15.92			5.7		10			1571.20			66	19			CB154 to CB153
202L Med Sta 1119+50 0' Rt																																									
202L Med Sta 1118+75 117' Rt to	155	1		24	78												III	III	3			X				C-15.80	D		4.4					1570.56			56	16			CB155 to CB154
202L Med Sta 1119+50 91.5' Rt																										Dtl D6															
Sheet Total																															130						408	102			

FILL HEIGHT RANGE TABLE (Ft.)

RANGE NO.		1	2	3	4	5	6	7	8	9	10	11	12
FILL	>	1	3	5	8	11	15	20	25	30	40	55	70
HEIGHT (Ft.)	≤	3	5	8	11	15	20	25	30	40	55	70	90

SHOULD FIELD CONDITIONS VARY FROM THE RANGE INDICATED, CONTACT DESIGN FOR RE-EVALUATION OF PIPE DESIGN REQUIREMENTS.

PIPE CORRUGATION

A	2⅔x½	D	6x2
B	3x1	E	3x1 or 9x2½
C	9x2½		

	NAME	DATE
DESIGN	RSR	4/05
DRAWN	?.P	4/05
CHECKED	CAD	4/05

ARIZONA DEPARTMENT OF TRANSPORTATION
INTERMODAL TRANSPORTATION DIVISION
ROADWAY DESIGN SERVICES

Stanley Consultants inc.

NEW PIPE SUMMARY SHEET

ROUTE 202L
LOCATION RED MTN FWY, POWER ROAD - UNIVERSITY DRIVE

PRELIMINARY
STAGE IV
95% Review
NOT FOR CONSTRUCTION OR RECORDING

DWG NO. C-5.9

TRACS NO. H 5782 01C
202-B(007)B
___ OF ___

REV. DATE: 01-05-2000

NOTE:
THE ZEROS IN PARENTHESIS (0, 0.0 & 0.00) IN THE HEADING OF SOME OF THE COLUMNS ARE THE RECOMMENDED PRECISION OF THE VALUE TO BE ENTERED IN THE COLUMN.

NOTE:
FOR PIPE CULVERT PLACEMENT SEE STANDARD DRAWING C-13.18

NOTE:
PIPE OPTIONS SELECTED ARE THOSE REQUIRED TO MEET MINIMUM SERVICE LIFE.
SHADED PIPE OPTION FIELDS ARE NOT ALLOWABLE ALTERNATES.

NRCP NRCIPCP CHDPEPP

CSP - CORRUGATED STEEL PIPE
CAP - CORRUGATED ALUMINUM PIPE
RCP - REINFORCED CONCRETE PIPE
NRCP - NON-REINFORCED CONCRETE PIPE
NRCIPCP - NON-REINFORCED CAST-IN-PLACE CONCRETE PIPE
CHDPEPP - CORRUGATED HIGH DENSITY POLYETHYLENE PLASTIC PIPE

F.A.H.S. REGION	STATE	PROJECT NO.	SHEET NO.	TOTAL SHEETS	AS BUILT
9	ARIZ.	202-B(007)I			
		202 MA 023			

DESCRIPTION							CSP			CAP			RCP					END TREATMENT														QUANTITIES	
				In.	In.	Ft.	Degree	In.	Coating		In.						In.	Each	Ea	Catch basin, Manhole, Headwall & Junction Structure			Ft.		Grate	Ft.							Cubic Yard	
Station	Plan Ref No.	⬡ Controlling Fill Height Range	Size, Corrugated	Size, Smooth	Length (0)	Skew (0)	☑ Corrugation	Wall Thickness (0.00)	Zinc	Bit. Coated Aluminum	Bit. Coated Aluminum	☑ Corrugation	Wall Thickness (0.00)	Uncoated	Bit. Coated	Class - Non Trench	Class - Trench	Class	Min Wall Thickness (0)	AASHTO M-294 Type C	AASHTO M-294 Type S	C-13.20 & C-13.25 Detail -	Size, (in) Manhole Standard Detail	End Sec S-Single / D-Double / T-Triple	Location	H (0.0)	L Wing (0.0)	L 18" Slotted Drn (0)	L 24" Slotted Drn (0)	Type	Elev. (0.00)	Depth In.	Depth Ft.	Inlet Depression L (0.0)	Pipe Exc (0)	Pipe Bkfl (0)	Drn Exc (0)	Bore/Dike Emb (0)	REMARKS
202L Med Sta 1124+00 91.5' Lt to	156	2		24	11											II	II	I			X			C-15.91			6.5		10			1569.85	1	20	10	2			CB156 to MH20
202L Med Sta 1124+00 104' Lt																																						
202L Med Sta 1124+00 0' Rt to	157	1		24	94											III	III	3			X			C-15.80	S		4.0					1568.07			70	19			CB157 to CB156
202L Med Sta 1124+00 91.5' Lt																																						
202L Med Sta 1127+00 91.5' Lt to	158	4		24	13											III	III				X			C-15.91			5.8		10			1569.21	1	20	14	3			CB158 to Jct158
202L Med Sta 1127+00 105.94' Lt																																						
202L Med Sta 1128+00 91.5' Lt to	159	2		30	11											II	II	I			X			C-15.91			6.5		5			1569.16	1	15	11	3			CB159 to MH21
202L Med Sta 1128+00 104' Lt																																						
202L Med Sta 1128+00 0' Rt to	160	1		30	94											III	III	3			X			C-15.80	S		4.0					1567.38			81	23			CB160 to CB159
202L Med Sta 1128+00 91.5' Lt																																						
202L Med Sta 1128+00 117' Rt to	161	1		30	117											III	III	3			X			C-15.80	D		6.0					1570.00			97	29			CB161 to CB160
202L Med Sta 1128+00 0' Rt																								DH D6														
202L Med Sta 1129+00 91.5' Lt to	162	4		24	12											III	III				X			C-15.91			5.8		5			1569.21	1	15	13	2			CB162 to Jct162
202L Med Sta 1129+00 104.91' Lt																																						
202L Med Sta 1130+50 91.5' Lt to	163	2		24	11											II	II	I			X			C-15.91			6.5		5			1569.47	1	15	10	2			CB163 to MH22
202L Med Sta 1130+50 104' Lt																																						
202L Med Sta 1130+50 0' Rt to	164	1		24	94											III	III	3			X			C-15.80	S		4.0					1567.70			70	19			CB164 to CB163
202L Med Sta 1130+50 91.5' Lt																																						
Sheet Total																											35						376	102			

REV. DATE: 01-05-2000

FILL HEIGHT RANGE TABLE (Ft.)													
RANGE NO.		1	2	3	4	5	6	7	8	9	10	11	12
FILL	>	1	3	5	8	11	15	20	25	30	40	55	70
HEIGHT (Ft.)	≤	3	5	8	11	15	20	25	30	40	55	70	90

⬡ SHOULD FIELD CONDITIONS VARY FROM THE RANGE INDICATED, CONTACT DESIGN FOR RE-EVALUATION OF PIPE DESIGN REQUIREMENTS.

☑ PIPE CORRUGATION			
A	2⅔x½	D	6x2
B	3x1	E	3x1 or 9x2½
C	9x2½		

	NAME	DATE
DESIGN	RSR	4/05
DRAWN	B.J.P	4/05
CHECKED	CAD	4/05

Stanley Consultants Inc.

ARIZONA DEPARTMENT OF TRANSPORTATION
INTERMODAL TRANSPORTATION DIVISION
ROADWAY DESIGN SERVICES

NEW PIPE SUMMARY SHEET

PRELIMINARY
STAGE IV
95% Review
NOT FOR CONSTRUCTION OR RECORDING

ROUTE	LOCATION
202L	RED MTN FWY, POWER ROAD - UNIVERSITY DRIVE

DWG NO. C-5.10

TRACS NO. H 5782 01C | 202-B(007)I | ___ OF ___

4/22/2005 q:\17888\active\87-88-design\82-geo\h5782sp1l.dgn

NOTE:
THE ZEROS IN PARENTHESIS (0, 0.0 & 0.00) IN THE HEADING OF SOME OF THE COLUMNS ARE THE RECOMMENDED PRECISION OF THE VALUE TO BE ENTERED IN THE COLUMN.

NOTE:
FOR PIPE CULVERT PLACEMENT SEE STANDARD DRAWING C-13.15

NOTE:
PIPE OPTIONS SELECTED ARE THOSE REQUIRED TO MEET MINIMUM SERVICE LIFE.
SHADED PIPE OPTION FIELDS ARE NOT ALLOWABLE ALTERNATES.

CSP - CORRUGATED STEEL PIPE
CAP - CORRUGATED ALUMINUM PIPE
RCP - REINFORCED CONCRETE PIPE
NRCP - NON-REINFORCED CONCRETE PIPE
NRCIPCP - NON-REINFORCED CAST-IN-PLACE CONCRETE PIPE
CHDPEPP - CORRUGATED HIGH DENSTIY POLYETHYLENE PLASTIC PIPE

F.H.W.A. REGION	STATE	PROJECT NO.	SHEET NO.	TOTAL SHEETS	AS BUILT
9	ARIZ.	202-B(007)B			
		202 MA 023			

DESCRIPTION / CSP / CAP / RCP / NRCP / NRCIPCP / CHDPEPP

Station	Plan Ref No.	⊖ Controlling Fill Height Range	Size, Corrugated (In.)	Size, Smooth (In.)	Length (0) (Ft.)	Skew (0) (Degree)	CSP ☑ Corrugation	CSP Wall Thickness (0.00) (In.)	CSP Coating Zinc	CSP Coating Bit. Coated Zinc	CSP Coating Aluminum	CSP Coating Bit. Coated Aluminum	CAP ☑ Corrugation	CAP Wall Thickness (0.00) (In.)	CAP Uncoated	CAP Bit. Coated	RCP Class - Non Trench	RCP Class - Trench	NRCP Class	NRCIPCP Min Wall Thickness (0) (In.)	CHDPEPP AASHTO M-294 Type C	CHDPEPP AASHTO M-294 Type S
202L Med Sta 1132+71 91.86' Lt to 202L Med Sta 1132+70.95 107.57' Lt	165	5		24	14												IV	IV				
202L Med Sta 1133+91 94.37' Lt to 202L Med Sta 1133+91 106.87' Lt	166	2		24	11												II	II	I			X
202L Med Sta 1133+91 0' Rt to 202L Med Sta 1133+91 94.37' Lt	167	1		24	97												III	III	3			X
202L Med Sta 1135+62 99.5' Lt to 202L Med Sta 1135+62 119.58' Lt	168	5		24	19												IV	IV				
202L Med Sta 1136+93 107.1' Lt to 202L Med Sta 1136+93 126.75' Lt	169	5		24	18												IV	IV				
202L Med Sta 1137+13 92' Rt to 202L Med Sta 1136+93 107.1' Lt	170	1		24	203												III	III	3			X
McK Ramp B Sta 7+21 11.5' Lt to 202L Med Sta 1137+13 92' Rt	171	2		24	13												II	II	I			X
McK Ramp A Sta 8+95 11.5' Lt to McK Ramp A Sta 8+95 24' Lt	176	2		30	11												II	II	I			X
202L Med Sta 1138+92 79.5' Lt to McK Ramp A Sta 8+95 11.5' Lt	177	3		30	43												II	II	2			X
Sheet Total																						

END TREATMENT / QUANTITIES

Plan Ref No.	End Sec (Each) C-13.20 & C-13.25	End Sec Detail	End Sec Size (In.)	Manhole Standard or Detail	S-Single / D-Double / T-Triple (Ea)	Location	H (0.0)	L Wing (0.0) (Ft.)	L 18" Slotted Drn (0) (Ft.)	L 24" Slotted Drn (0) (Ft.)	Type	Elev. (0.00)	Inlet Depression Depth (In.)	Inlet Depression L (0.0) (Ft.)	Pipe Exc (0) (Cubic Yard)	Pipe Bkfl (0) (Cubic Yard)	Drn Exc (0) (Cubic Yard)	Berm/Dike Emb (0) (Cubic Yard)	REMARKS
165				C-15.91			5.8		65			1570.02	1	75	18	3			CB165 to Jct165
166				C-15.91			6.4		115			1570.26	1	125	10	2			CB166 to MH23
167				C-15.80	S		4.0					1568.55			72	19			CB167 to CB166
168				C-15.91			5.8		95			1570.56	1	105	24	4			CB168 to Jct168
169				C-15.91			6.5		155			1570.71	1	165	25	4			CB169 to Jct169
170				C-15.80	S		5.3					1573.57			168	41			CB170 to CB169
171				C-15.91			5.5		10			1574.22	1	20	10	3			CB171 to CB170
176				C-15.91			7.1		5			1571.13	1	15	12	3			CB176 to MH24
177				C-15.91			7.6		20			1571.87	1	30	51	10			CB177 to CB166
Sheet Total									465						390	89			

FILL HEIGHT RANGE TABLE (Ft.)													
RANGE NO.		1	2	3	4	5	6	7	8	9	10	11	12
FILL	>	1	3	5	8	11	15	20	25	30	40	55	70
HEIGHT (Ft.)	≤	3	5	8	11	15	20	25	30	40	55	70	90

⊖ SHOULD FIELD CONDITIONS VARY FROM THE RANGE INDICATED, CONTACT DESIGN FOR RE-EVALUATION OF PIPE DESIGN REQUIREMENTS.

☑ PIPE CORRUGATION			
A	2⅔x½	D	6x2
B	3x1	E	3x1 or 9x2½
C	9x2½		

	NAME	DATE
DESIGN	RSR	4/05
DRAWN	BJP	4/05
CHECKED	CAD	4/05

Stanley Consultants Inc.

ARIZONA DEPARTMENT OF TRANSPORTATION
INTERMODAL TRANSPORTATION DIVISION
ROADWAY DESIGN SERVICES

NEW PIPE SUMMARY SHEET

PRELIMINARY
STAGE IV
95% Review
NOT FOR CONSTRUCTION OR RECORDING

ROUTE: 202L
LOCATION: RED MTN FWY, POWER ROAD - UNIVERSITY DRIVE
DWG NO. C-6.11

TRACS NO. H 5782 01C | 202-B(007)B | ___ OF ___

REV. DATE: 01-05-2000

NOTE:
THE ZEROS IN PARENTHESIS (0, 0.0 & 0.00) IN THE HEADING OF SOME OF THE COLUMNS ARE THE RECOMMENDED PRECISION OF THE VALUE TO BE ENTERED IN THE COLUMN.

NOTE:
FOR PIPE CULVERT PLACEMENT SEE STANDARD DRAWING C-15.13

NOTE:
PIPE OPTIONS SELECTED ARE THOSE REQUIRED TO MEET MINIMUM SERVICE LIFE.
SHADED PIPE OPTION FIELDS ARE NOT ALLOWABLE ALTERNATES.

CSP - CORRUGATED STEEL PIPE
CAP - CORRUGATED ALUMINUM PIPE
RCP - REINFORCED CONCRETE PIPE
NRCP - NON-REINFORCED CONCRETE PIPE
NRCIPCP - NON-REINFORCED CAST-IN-PLACE CONCRETE PIPE
CHDPEPP - CORRUGATED HIGH DENSITY POLYETHYLENE PLASTIC PIPE

FAA/A REGION	STATE	PROJECT NO.	SHEET NO.	TOTAL SHEETS	AS BUILT
9	ARIZ.	202-B(007)8			
		202 MA 023			

DESCRIPTION						CSP									CAP										RCP	NRCP	NRCIPCP	CHDPEPP	END TREATMENT													QUANTITIES	
				In.	In.	Ft.	Degree	In.	Coating						In.											In.			Each	Each	Ea	Catch basin, Manhole, Headwall & Junction Structure												Cubic Yard	
Station	Plan Ref No.	Controlling Fill Height Range	Size, Corrugated	Size, Smooth	Length (0)	Skew (0)	Corrugation	Wall Thickness (0.00)	Zinc	Bit. Coated Zinc	Aluminum	Bit. Coated Aluminum	Corrugation	Wall Thickness (0.00)	Uncoated	Bit. Coated	Class - Non Trench	Class - Trench	Class	Min Wall Thickness (0)	AASHTO M-294 Type C	AASHTO M-294 Type S	C-15.20 & C-15.25	Detail -	Size, (In) Manhole	End Sec	Standard or Detail	S-Single / D-Double / T-Triple	Location	H (0.0)	L Wing (0.0)	L 18" Slotted Drn (0)	L 24" Slotted Drn (0)	Type	Elev. (0.00)	Inlet Depression Depth In.	Inlet Depression Depth Ft.	Inlet Depression L (0.0) Ft.	Pipe Enc (0)	Pipe Bkfl (0)	Drn Enc (0)	Berm/Dike End (0)	REMARKS
202L Med Sta 1138+92 0' Rt to	178	3		30	82			II	II	2										X				C-15.80	S			4.9					1569.80				83	20			CB178 to CB177
202L Med Sta 1138+92 79.5' Lt																																										
McK Ramp B Sta 10+75 11.5' Lt to	179	4		24	219			III	III											X				C-15.91				10.5		20			1576.34	1	10		232	44			CB179 to CB178
202L Med Sta 1138+92 0' Rt																																										
McK Ramp B Sta 10+90 41' Rt to	180	4		24	57			III	III											X				C-15.80	S			4.0					1570.30				57	11			CB180 to CB179
McK Ramp B Sta 10+75 11.5' Lt																																										
McK Ramp A Sta 11+00 11.5' Lt to	181	5		24	22			IV	IV															C-15.91				5.8		5			1571.64	1	15		30	4			CB181 to Jct181
McK Ramp A Sta 10+96.23 7.65' Rt																																										
McK Ramp A Sta 13+00 11.5' Lt to	182	2		24	61			II	II	1										X				C-15.91				5.8		5			1573.14	1	15		50	12			CB182 to MH25
202L Med Sta 1143+00 92' Lt																																										
202L Med Sta 1143+00 79.5' Lt to	183	2		24	11			II	II	1										X				C-15.91				6.7		5			1572.89	1	15		10	2			CB183 to MH25
202L Med Sta 1143+00 92' Lt																																										
202L Med Sta 1143+00 0' Rt to	184	1		24	82			III	III	3										X				C-15.80	S			4.0					1570.82				62	16			CB184 to CB183
202L Med Sta 1143+00 79.5' Lt																																										
202L Med Sta 1147+00 79.5' Lt to	185	2		24	11			II	II	1										X				C-15.91				6.7		5			1573.89	1	15		10	2			CB185 to MH405
202L Med Sta 1147+00 92' Lt																																										
202L Med Sta 1147+00 0' Rt to	186	1		24	82			III	III	3										X				C-15.80	S			4.0					1571.82				62	16			CB186 to CB185
202L Med Sta 1147+00 79.5' Lt																																										
Sheet Total																																40							596	127		

FILL HEIGHT RANGE TABLE (Ft.)												
RANGE NO.		1	2	3	4	5	6	7	8	9	10	11	12
FILL HEIGHT (Ft.)	>	1	3	5	8	11	15	20	25	30	40	55	70
	≤	3	5	8	11	15	20	25	30	40	55	70	90

Should field conditions vary from the range indicated, contact design for re-evaluation of pipe design requirements.

Corrugation			
A	2½x½	D	6x2
B	3x1	E	3x1 or 9x2½
C	9x2½		

	NAME	DATE
DESIGN	RSR	4/05
DRAWN	B.P	4/05
CHKD	CAD	4/05

Stanley Consultants Inc.

ARIZONA DEPARTMENT OF TRANSPORTATION
INTERMODAL TRANSPORTATION DIVISION
ROADWAY DESIGN SERVICES

NEW PIPE SUMMARY SHEET

PRELIMINARY
STAGE IV
95% Review
NOT FOR CONSTRUCTION OR RECORDING

ROUTE	LOCATION
202L	RED MTN FWY, POWER ROAD - UNIVERSITY DRIVE

DWG NO. C-6.12

TRACS NO. H 5782 01C | 202-B(007)8 | ___ OF ___

REV. DATE: 01-05-2000

4/22/2005 q:\17888\active\87-85-dsgn\82-gen\057826p12.dgn

NOTE:
THE ZEROS IN PARENTHESIS (0, 0.0 & 0.00) IN THE HEADING OF SOME OF THE COLUMNS ARE THE RECOMMENDED PRECISION OF THE VALUE TO BE ENTERED IN THE COLUMN.

NOTE:
FOR PIPE CULVERT PLACEMENT SEE STANDARD DRAWING C-13.15

NOTE:
PIPE OPTIONS SELECTED ARE THOSE REQUIRED TO MEET MINIMUM SERVICE LIFE.
SHADED PIPE OPTION FIELDS ARE NOT ALLOWABLE ALTERNATES.

NRCP NRCIPCP CHDPEPP

CSP - CORRUGATED STEEL PIPE
CAP - CORRUGATED ALUMINUM PIPE
RCP - REINFORCED CONCRETE PIPE
NRCP - NON-REINFORCED CONCRETE PIPE
NRCIPCP - NON-REINFORCED CAST-IN-PLACE CONCRETE PIPE
CHDPEPP - CORRUGATED HIGH DENSITY POLYETHYLENE PLASTIC PIPE

FHWA REGION	STATE	PROJECT NO.	SHEET NO.	TOTAL SHEETS	AS BUILT
9	ARIZ.	202-B(007)R			
		202 MA 023			

Station	Plan Ref No.	⬡ Controlling Fill Height Range	Size, Corrugated (in.)	Size, Smooth (in.)	Length (0) (Ft.)	Skew (0) (Degree)	DESCRIPTION: CSP: ☑ Corrugation	CSP: Wall Thickness (0.000) (in.)	CSP: Galv. Coating: Zinc	CSP: Galv. Coating: Bit. Coated Zinc	CSP: Galv. Coating: Aluminum	CAP: ☑ Corrugation	CAP: Wall Thickness (0.000) (in.)	CAP: Uncoated	CAP: Bit. Coated	RCP: Class - Non Trench	RCP: Class - Trench	RCP: Class	RCP: Min Wall Thickness (0) (in.)	NRCP: AASHTO M-170 Type C	NRCIPCP: AASHTO M-234 Type C	CHDPEPP: C-13.20 & C-13.23	CHDPEPP: Detail - Type S	END TREATMENT: Each: Size (in) Manhole or End Sec	Standard Detail	Ea: S-Single / D-Double / T-Triple	Location	H (0.0)	L Wing (0.0)	Ft.: L 18" Slotted Drn (0)	L 24" Slotted Drn (0)	Grate: Type	Elev. (0.00)	Inlet Depression: Depth (in.)	L (0.0) (Ft.)	QUANTITIES: Cubic Yard: Pipe Exc (0)	Pipe Bk Fl (0)	Drn Exc (0)	Berm/Dike Exc (0)	REMARKS
McK Ramp B Sta 17+20 23.5' Rt to	187	1		24	95							III	III	3				X				C-15.91				4.7		15			1590.90	1	25	47	19			CB187 to Jct187
McK Ramp B Sta 16+25.91 70.3' Rt																																							
McK Ramp A Sta 20+00 11.5' Lt to	188	1		24	85							III	III	3				X				C-15.92				7.1		15			1587.89			67	17			CB188 to Jct188, Detail D9
McK Ramp A Sta 19+93.71 100' Lt																						D1 D8																
2021 Med Sta 1150+32 73.5' Lt to	189	2		24	11							II	II	1				X				C-15.91				6.9		5			1574.89	1	15	10	2			CB189 to MH406
2021 Med Sta 1150+32 92' Lt																																							
2021 Med Sta 1150+34 0' Rt to	190	1		24	82							III	III	3				X				C-15.80	S			4.0					1572.66			63	16			CB190 to CB189
2021 Med Sta 1150+32 73.5' Lt																																							
2021 Med Sta 1151+16 73.5' Rt to	191	1		24	116							III	III	3				X				C-15.91				6.1		5			1575.10	1	15	83	23			CB191 to CB190
2021 Med Sta 1150+34 0' Rt																																							
2021 Med Sta 1153+15 73.5' Lt to	192	5		24	11							IV	IV									C-15.91				5.8		5			1575.60	1	15	17	2			CB192 to Jct192
2021 Med Sta 1153+15 92' Lt																																							
McK Ramp A Sta 23+45 73' Rt to	193	6		24	181							IV	IV									C-15.80	S			4.0					1589.53			328	36			CB193 to Jct193
McK Ramp A Sta 23+82.77 103.34' Lt																						D1 D8																
2021 Med Sta 1155+00 73.5' Rt to	194	1		24	174							III	III	3				X				C-15.91				6.6		15			1576.06	1	25	171	35			CB194 to Jct194
2021 Med Sta 1155+00 92' Lt																																							
2021 Med Sta 1153+70 200' Rt to	195	1		24	176							III	III	3				X				C-15.80	S			7.0					1596.00			167	35			CB195 to CB194
2021 Med Sta 1155+00 73.5' Rt																																							
Sheet Total																												60						953	185			

REV. DATE: 01-05-2000

FILL HEIGHT RANGE TABLE (Ft.)													
RANGE NO.		1	2	3	4	5	6	7	8	9	10	11	12
FILL HEIGHT (Ft.)	>	1	3	5	8	11	15	20	25	30	40	55	70
	≤	3	5	8	11	15	20	25	30	40	55	70	90

⬡ SHOULD FIELD CONDITIONS VARY FROM THE RANGE INDICATED, CONTACT DESIGN FOR RE-EVALUATION OF PIPE DESIGN REQUIREMENTS.

☑ PIPE CORRUGATION			
A	2⅔x½	D	6x2
B	3x1	E	3x1 or 9x2½
C	9x2½		

	NAME	DATE
DESIGN	RSR	4/05
DRAWN	BJP	4/05
CHECKED	CAD	4/05

Stanley Consultants Inc.

ARIZONA DEPARTMENT OF TRANSPORTATION
INTERMODAL TRANSPORTATION DIVISION
ROADWAY DESIGN SERVICES

NEW PIPE SUMMARY SHEET

PRELIMINARY
STAGE IV
95% Review
NOT FOR CONSTRUCTION OR RECORDING

YEAR	LOCATION
2021	RED MTN FWY, POWER ROAD - UNIVERSITY DRIVE

DWG NO. C-5.13

TRACS NO. H 5782 01C | 202-B(007)R | ___ OF ___

4/22/2005 g:\17888\active\07-05-design\02-gen\h5782sp13.dgn

NOTE:
THE ZEROS IN PARENTHESIS (0, 0.0 & 0.00) IN THE HEADING OF SOME OF THE COLUMNS ARE THE RECOMMENDED PRECISION OF THE VALUE TO BE ENTERED IN THE COLUMN.

NOTE:
FOR PIPE CULVERT PLACEMENT SEE STANDARD DRAWING C-13.15

NOTE:
PIPE OPTIONS SELECTED ARE THOSE REQUIRED TO MEET MINIMUM SERVICE LIFE.
SHADED PIPE OPTION FIELDS ARE NOT ALLOWABLE ALTERNATES.

CSP - CORRUGATED STEEL PIPE
CAP - CORRUGATED ALUMINUM PIPE
RCP - REINFORCED CONCRETE PIPE
NRCP - NON-REINFORCED CONCRETE PIPE
NRCIPCP - NON-REINFORCED CAST-IN-PLACE CONCRETE PIPE
CHDPEPP - CORRUGATED HIGH DENSITY POLYETHYLENE PLASTIC PIPE

F.H.W.A. REGION	STATE	PROJECT NO.	SHEET NO.	TOTAL SHEETS	AS BUILT
9	ARIZ.	202-B(007)I			
		202 MA 023			

DESCRIPTION							CSP			CAP			RCP	NRCP	NRCIPCP	CHDPEPP	END TREATMENT													QUANTITIES	
			in.	in.	Ft.	Degree	in.	Coating		in.					in.		Each	Catch Basin, Manhole, Headwall & Junction Structure												Cubic Yard	
Station	Plan Ref No.	⬡ Controlling Fill Height Range	Size, Corrugated	Size, Smooth	Length (0)	Skew (0)	☑ Corrugation	Wall Thickness (0.00)	Zinc	Bit. Coated Zinc	Aluminum	Bit. Coated Aluminum	☑ Corrugation	Wall Thickness (0.00)	Uncoated	Bit. Coated	Class - Non Trench	Class - Trench	Class	Min Wall Thickness (0)	AASHTO M-294 Type C	AASHTO M-294 Type S	C-13.20 & C-13.25	Detail -	Size, (in) Manhole or Standard Detail	End Sec	S-Single / D-Double / T-Triple	Location	H (0.0)	L Wing (0.0)	L 18" Slotted Drn (0)	L 24" Slotted Drn (0)	Type	Elev. (0.00)	Grate Depth	Grate Inlet Depression L (0.0)	Pipe Exc (0)	Pipe Bkfl (0)	Drn Exc (0)	Bars/Mesh End (0)	REMARKS
																										Ea		Ft.					Grate Ft.	In. Ft.					
202L Med Sta 1156+00 0' Rt to	196	1		24	100										III	III	3		X				C-15.80		S		4.0					1574.06			62	20			CB196 to Jct196
202L Med Sta 1155+00 0' Rt																																							
McK Ramp D Sta 10+00 11.5' Rt to	200	1		24	27										III	III	3		X				C-15.92				5.7		5			1582.41			17	6			CB200 to Jct200
McK Ramp D Sta 10+00 42.5' Rt																																							
202L Med Sta 1161+75 79.5' Lt to	201	2		24	11										II	II	1		X				C-15.91				6.9		10			1575.87	1	20	10	2			CB201 to MH29
202L Med Sta 1161+75 92' Lt																																							
202L Med Sta 1161+75 0' Rt to	202	1		24	82										III	III	3		X				C-15.80		S		4.0					1573.63			63	16			CB202 to CB201
202L Med Sta 1161+75 79.5' Lt																																							
202L Med Sta 1161+75 79.5' Rt to	203	1		24	82										III	III	3		X				C-15.91				6.1		10			1575.87	1	20	59	16			CB203 to CB202
202L Med Sta 1161+75 0' Rt																																							
McK Ramp C Sta 5+00 23.5' Lt to	204	1		24	98										III	III	3		X				C-15.91				5.6		20			1587.91	1	30	90	20			CB204 to Jct204, Detail D9
McK Ramp C Sta 5+00 123' Lt																							D91 D8																
202L Med Sta 1165+50 79.5' Lt to	205	2		24	11										II	II	1		X				C-15.91				7.0		5			1574.94	1	15	18	2			CB205 to Jct205
202L Med Sta 1165+50 92' Lt																																							
202L Med Sta 1165+50 79.5' Rt to	206	1		24	163										III	III	3		X				C-15.91				6.2		5			1574.94	1	15	150	33			CB206 to CB205
202L Med Sta 1165+50 79.5' Lt																																							
McK Ramp D Sta 14+61 11.5' Rt to	207	2		24	69										II	II	1		X				C-15.92				5.7		5			1574.77			57	14			CB207 to CB206
202L Med Sta 1165+50 79.5' Rt																																							
Sheet Total																														60						526	129		

FILL HEIGHT RANGE TABLE (Ft.)												
RANGE NO.		1	2	3	4	5	6	7	8	9	10	11	12
FILL	>	1	3	5	8	11	15	20	25	30	40	55	70
HEIGHT (Ft.)	≤	3	5	8	11	15	20	25	30	40	55	70	90
⬡ SHOULD FIELD CONDITIONS VARY FROM THE RANGE INDICATED, CONTACT DESIGN FOR RE-EVALUATION OF PIPE DESIGN REQUIREMENTS.													

☑ PIPE CORRUGATION			
A	2⅔x½	D	6x2
B	3x1	E	3x1 or 9x2½
C	9x2½		

	NAME	DATE
DESIGN	RSR	4/05
DRAWN	B.J.P	4/05
CHECKED	CAD	4/05

Stanley Consultants Inc.

ARIZONA DEPARTMENT OF TRANSPORTATION
INTERMODAL TRANSPORTATION DIVISION
ROADWAY DESIGN SERVICES

NEW PIPE SUMMARY SHEET

PRELIMINARY
STAGE IV
95% Review
NOT FOR CONSTRUCTION OR RECORDING

ROUTE	LOCATION
202L	RED MTN FWY, POWER ROAD - UNIVERSITY DRIVE

DWG NO. C-5.14

TRACS NO. H 5782 01C | 202-B(007)I | ___ OF ___

REV. DATE: 01-05-2000

4/22/2005 q:\17888\Cad Live\87-85-dsgn\82-gen\05782sp14.dgn

NOTE:
THE ZEROS IN PARENTHESIS (0, 0.0 & 0.00) IN THE HEADING OF SOME OF THE COLUMNS ARE THE RECOMMENDED PRECISION OF THE VALUE TO BE ENTERED IN THE COLUMN.

NOTE:
FOR PIPE CULVERT PLACEMENT SEE STANDARD DRAWING C-13.15

NOTE:
PIPE OPTIONS SELECTED ARE THOSE REQUIRED TO MEET MINIMUM SERVICE LIFE.
SHADED PIPE OPTION FIELDS ARE NOT ALLOWABLE ALTERNATES.

CSP - CORRUGATED STEEL PIPE
CAP - CORRUGATED ALUMINUM PIPE
RCP - REINFORCED CONCRETE PIPE
NRCP - NON-REINFORCED CONCRETE PIPE
NRCIPCP - NON-REINFORCED CAST-IN-PLACE CONCRETE PIPE
CHDPEPP - CORRUGATED HIGH DENSTIY POLYETHYLENE PLASTIC PIPE

F.H.W.A. REGION	STATE	PROJECT NO.	SHEET NO.	TOTAL SHEETS	AS BUILT
9	ARIZ.	202-B(007)B			
		202 MA 023			

Station	DESCRIPTION: Plan Ref No.	⬡ Controlling Fill Height Range	Size, Corrugated (In.)	Size, Smooth (In.)	Length (0) (Ft.)	Skew (0) (Degree)	CSP: ☐ Corrugation (In.)	CSP: Wall Thickness (0.00)	CSP Coating: Zinc	CSP Coating: Bit. Coated Zinc	CSP Coating: Aluminum	CSP Coating: Bit. Coated Aluminum	CAP: ☐ Corrugation	CAP: Wall Thickness (0.00) (In.)	CAP: Uncoated	CAP: Bit. Coated	RCP: Class - Non Trench	RCP: Class - Trench	NRCP: Class	NRCIPCP: Min Wall Thickness (0) (In.)	CHDPEPP: AASHTO M-294 Type C	CHDPEPP: AASHTO M-294 Type S
McK Ramp C Sta 10+00 7.5' Lt to 202L Med Sta 1166+92.81 92' Lt	208	5		24	62												IV	IV				
202L Med Sta 1168+27 79.5' Lt to 202L Med Sta 1168+27 92' Lt	209	4		36	11												II	II	2			X
202L Med Sta 1168+27 0' Rt to 202L Med Sta 1168+27 79.5' Lt	210	4		36	82												II	II	2			X
202L Med Sta 1168+27 79.5' Rt to 202L Med Sta 1168+27 0' Rt	211	4		36	82												II	II	2			X
McK Ramp D Sta 17+40 11.5' Rt to 202L Med Sta 1168+27 79.5' Rt	212	3		36	44												II	II	2			X
McK Ramp D Sta 18+15 10.33' Rt to McK Ramp D Sta 17+40 11.5' Rt	213	3		36	75												II	II	2			X
McK Ramp D Sta 18+75 9.14' Rt to McK Ramp D Sta 18+15 10.33' Rt	214	3		36	60												II	II	2			X
202L Med Sta 1170+15 104.48' Rt to McK Ramp D Sta 18+75 9.14' Rt	215	3		30	53												II	II	1			X
202L Med Sta 1170+70 100.44 Rt to 202L Med Sta 1170+15 104.48' Rt	216	3		30	56												II	II	1			X
Sheet Total																						

Station	END TREATMENT: End Sec (Each): C-13.20 & C-13.25 Detail -	End Sec: Size, (in)	Catch basin, Manhole, Headwall & Junction Structure: Standard or Detail	S-Single / D-Double / T-Triple (Ea)	Location	H (0.0) (Ft.)	L Wing (0.0) (Ft.)	L 18" Slotted Drn (0) (Ft.)	L 24" Slotted Drn (0) (Ft.)	Grate: Type	Grate: Elev. (0.00) (Ft.)	Inlet Depression: Depth (In.)	Inlet Depression: L (0.0) (Ft.)	QUANTITIES (Cubic Yard): Pipe Exc (0)	Pipe Bkfl (0)	Drn Exc (0)	Berm/Dike Emb (0)	REMARKS
McK Ramp C Sta 10+00 7.5' Lt to 202L Med Sta 1166+92.81 92' Lt			C-15.91			5.6		15			1576.00	1	25	98	12			CB208 to Jct208
202L Med Sta 1168+27 79.5' Lt to 202L Med Sta 1168+27 92' Lt			C-15.91 Dtl D6			11.0		5			1574.24	1	15	21	3			CB209 to MH30
202L Med Sta 1168+27 0' Rt to 202L Med Sta 1168+27 79.5' Lt			C-15.80 Dtl D6	S		8.1					1572.00			142	24			CB210 to CB209
202L Med Sta 1168+27 79.5' Rt to 202L Med Sta 1168+27 0' Rt			C-15.91 Dtl D6			10.2		15			1574.24	1	25	136	24			CB211 to CB210
McK Ramp D Sta 17+40 11.5' Rt to 202L Med Sta 1168+27 79.5' Rt			C-15.92 Dtl D6			9.4		5			1573.63			78	13			CB212 to CB211
McK Ramp D Sta 18+15 10.33' Rt to McK Ramp D Sta 17+40 11.5' Rt			C-15.92 Dtl D6			8.8		5			1573.46			124	22			CB213 to CB212
McK Ramp D Sta 18+75 9.14' Rt to McK Ramp D Sta 18+15 10.33' Rt			C-15.92 Dtl D6			8.4					1573.32			94	18			CB214 to CB213
202L Med Sta 1170+15 104.48' Rt to McK Ramp D Sta 18+75 9.14' Rt			C-15.92			7.5					1573.27			66	13			CB215 to CB214
202L Med Sta 1170+70 100.44 Rt to 202L Med Sta 1170+15 104.48' Rt			C-15.92			7.2					1573.22			67	14			CB216 to CB215
Sheet Total								45						826	143			

FILL HEIGHT RANGE TABLE (Ft.)

RANGE NO.		1	2	3	4	5	6	7	8	9	10	11	12
FILL	>	1	3	5	8	11	15	20	25	30	40	55	70
HEIGHT (Ft.)	≤	3	5	8	11	15	20	25	30	40	55	70	90

⬡ SHOULD FIELD CONDITIONS VARY FROM THE RANGE INDICATED, CONTACT DESIGN FOR RE-EVALUATION OF PIPE DESIGN REQUIREMENTS.

☐ PIPE CORRUGATION			
A	2⅔x½	D	6x2
B	3x1	E	3x1 or 9x2½
C	9x2½		

	NAME	DATE
DESIGN	RSR	4/05
DRAWN	WJP	4/05
CHECKED	CAD	4/05

Stanley Consultants inc.

ARIZONA DEPARTMENT OF TRANSPORTATION
INTERMODAL TRANSPORTATION DIVISION
ROADWAY DESIGN SERVICES

NEW PIPE SUMMARY SHEET

PRELIMINARY
STAGE IV
95% Review
NOT FOR CONSTRUCTION OR RECORDING

ROUTE 202L
LOCATION RED MTN FWY, POWER ROAD - UNIVERSITY DRIVE

DWG NO. G-6.15

TRACS NO. H 5782 01C

202-B(007)B

___ OF ___

REV. DATE: 01-05-2000

4/22/2005 q:\17888\active\87-05-dwgs\02-gen\h5782sp15.dgn

NOTE:
THE ZEROS IN PARENTHESIS (0, 0.0 & 0.00) IN THE HEADING OF SOME OF THE COLUMNS ARE THE RECOMMENDED PRECISION OF THE VALUE TO BE ENTERED IN THE COLUMN.

NOTE:
FOR PIPE CULVERT PLACEMENT SEE STANDARD DRAWING C-13.15

NOTE:
PIPE OPTIONS SELECTED ARE THOSE REQUIRED TO MEET MINIMUM SERVICE LIFE.
SHADED PIPE OPTION FIELDS ARE NOT ALLOWABLE ALTERNATES.

CSP - CORRUGATED STEEL PIPE
CAP - CORRUGATED ALUMINUM PIPE
RCP - REINFORCED CONCRETE PIPE
NRCP - NON-REINFORCED CONCRETE PIPE
NRCIPCP - NON-REINFORCED CAST-IN-PLACE CONCRETE PIPE
CHDPEPP - CORRUGATED HIGH DENSTIY POLYETHYLENE PLASTIC PIPE

F.H.W.A. REGION	STATE	PROJECT NO.	SHEET NO.	TOTAL SHEETS	AS BUILT
9	ARIZ.	202-B(007)B			
		202 MA 023			

Station	Plan Ref No.	⬡ Controlling Fill Height Range	Size, Corrugated (In.)	Size, Smooth (In.)	Length (0) (Ft.)	Skew (0) (Degree)	CSP ☐ Corrugation (In.)	CSP Wall Thickness (0.00)	CSP Coating: Zinc	CSP Coating: Bit. Coated Zinc	CSP Coating: Aluminum	CSP Coating: Bit. Coated Aluminum	CAP ☐ Corrugation (In.)	CAP Wall Thickness (0.00)	CAP Uncoated	CAP Bit. Coated	RCP Class - Non Trench	RCP Class - Trench	NRCP Class	NRCIPCP Min Wall Thickness (0)	CHDPEPP AASHTO M-294 Type C	CHDPEPP AASHTO M-294 Type S	C-13.20 & C-13.25	Detail -	End Sec Size, (In)	Catch basin, Manhole, Headwall & Junction Structure: Standard or Detail	S-Single / D-Double / T-Triple (Ea)	Location	H (0.0)	L Wing (0.0) (Ft.)	L 18" Slotted Drn (0)	L 24" Slotted Drn (0)	Grate Type	Grate Elev. (0.00)	Inlet Depression Depth (In.)	Inlet Depression L (0.0) (Ft.)	Pipe Exc (0) (Cubic Yard)	Pipe Bkfl (0)	Drn Exc (0)	Berm/Dike Emb (0)	REMARKS
202L Med Sta 1171+28 96.6' Rt to	217	2		30	59												II	II	1			X				C-15.92			6.9					1573.15			67	15			CB217 to CB216
202L Med Sta 1170+70 100.44 Rt																																									
202L Med Sta 1172+10 93.27' Rt to	218	2		30	83												II	II	1			X				C-15.92			6.3					1573.01			89	20			CB218 to CB217
202L Med Sta 1171+28 96.6' Rt																																									
202L Med Sta 1173+00 91.5' Rt to	219	2		30	90												II	II	1			X				C-15.92			5.7		5			1572.82			89	22			CB219 to CB218
202L Med Sta 1172+10 93.27' Rt																																									
McK Ramp C Sta 12+00 5.5' Lt to	220	5		24	30												IV	IV								C-15.91			5.7		5			1573.74	1	15	45	6			CB220 to Jct220
McK Ramp C Sta 12+08.20 20.51' Rt																																									
202L Med Sta 1170+24 79.5' Lt to	221	1		24	55												III	III	3			X				C-15.91			5.8		10			1573.75	1	20	44	11			CB221 to MH31
McK Ramp C Sta 13+40 18' Lt																																									
McK Ramp C Sta 14+48 5.5' Lt to	222	5		24	13												IV	IV								C-15.91			5.8		110			1572.90	1	120	16	3			CB222 to Jct222
McK Ramp C Sta 14+48 20.01' Lt																																									
202L Med Sta 1173+03 105.07' Lt to	223	4		24	14												III	III				X				C-15.91			5.8		110			1572.54	1	120	18	3			CB223 to Jct223
202L Med Sta 1173+03.74 120.68' Lt																																									
202L Med Sta 1174+24 99.4' Lt to	224	4		24	13												III	III				X				C-15.91			5.8		85			1572.35	1	95	16	3			CB224 to Jct224
202L Med Sta 1174+24.70 114.33 Lt																																									
202L Med Sta 1175+67 94.34' Lt to	225	2		24	11												II	II	1			X				C-15.91			5.8		100			1572.10	1	110	9	2			CB225 to MH32
202L Med Sta 1175+67 106.85' Lt																																									
Sheet Total																															425						393	85			

FILL HEIGHT RANGE TABLE (Ft.)													
RANGE NO.		1	2	3	4	5	6	7	8	9	10	11	12
FILL	>	1	3	5	8	11	15	20	25	30	40	55	70
HEIGHT (Ft.)	≤	3	5	8	11	15	20	25	30	40	55	70	90

⬡ SHOULD FIELD CONDITIONS VARY FROM THE RANGE INDICATED, CONTACT DESIGN FOR RE-EVALUATION OF PIPE DESIGN REQUIREMENTS.

☐ PIPE CORRUGATION			
A	2⅔x½	D	6x2
B	3x1	E	3x1 or 9x2½
C	9x2½		

	NAME	DATE
DESIGN	RSR	4/05
DRAWN	BJP	4/05
CHECKED	CAD	4/05

Stanley Consultants INC.

ARIZONA DEPARTMENT OF TRANSPORTATION
INTERMODAL TRANSPORTATION DIVISION
ROADWAY DESIGN SERVICES

NEW PIPE SUMMARY SHEET

PRELIMINARY
STAGE IV
95% Review
NOT FOR CONSTRUCTION OR RECORDING

ROUTE 202L
LOCATION RED MTN FWY, POWER ROAD - UNIVERSITY DRIVE
DWG NO. C-6.16

TRACS NO. H 5782 01C 202-B(007)B ____ OF ____

REV. DATE: 01-05-2000

4/22/2005 q:\17888\active\87-rd-dwgs\82-gen\h5782sp16.dgn

REV. DATE: 01-05-2000

F.H.A. REGION	STATE	PROJECT NO.	SHEET NO.	TOTAL SHEETS	AS BUILT
9	ARIZ.	202-B(007)B			

202 MA 023

NOTE:
THE ZEROS IN PARENTHESIS (0, 0.0 & 0.00) IN THE HEADING OF SOME OF THE COLUMNS ARE THE RECOMMENDED PRECISION OF THE VALUE TO BE ENTERED IN THE COLUMN.

NOTE:
FOR PIPE CULVERT PLACEMENT SEE STANDARD DRAWING C-13.15

NOTE:
PIPE OPTIONS SELECTED ARE THOSE REQUIRED TO MEET MINIMUM SERVICE LIFE.
SHADED PIPE OPTION FIELDS ARE NOT ALLOWABLE ALTERNATES.

CSP - CORRUGATED STEEL PIPE
CAP - CORRUGATED ALUMINUM PIPE
RCP - REINFORCED CONCRETE PIPE
NRCP - NON-REINFORCED CONCRETE PIPE
NRCIPCP - NON-REINFORCED CAST-IN-PLACE CONCRETE PIPE
CHDPEPP - CORRUGATED HIGH DENSTIY POLYETHYLENE PLASTIC PIPE

DESCRIPTION

Station	Plan Ref No.	⬡ Controlling Fill Height Range	Size, Corrugated (In.)	Size, Smooth (In.)	Length (0) (Ft.)	Skew (0) (Degree)
202L Med Sta 1176+70 91.81' Lt to	226	4		24	13	
202L Med Sta 1176+70.04 106.69' Lt						
202L Med Sta 1178+60 91.5' Lt to	227	4		24	13	
202L Med Sta 1178+60.05 106.41' Lt						
202L Med Sta 1178+60 0' Rt to	228	1		24	94	
202L Med Sta 1178+60 91.5' Lt						
202L Med Sta 1178+60 91.5' Rt to	229	1		24	96	
202L Med Sta 1178+60 0' Rt						
202L Med Sta 1180+75 91.5' Lt to	230	4		24	13	
202L Med Sta 1180+75.11 105.65' Lt						
202L Med Sta 1182+00 91.5' Lt to	231	2		36	11	
202L Med Sta 1182+00 104' Lt						
202L Med Sta 1182+00 0' Rt to	232	1		36	94	
202L Med Sta 1182+00 91.5' Lt						
202L Med Sta 1182+00 91.5' Rt to	233	1		36	96	
202L Med Sta 1182+00 0' Rt						
202L Med Sta 1182+00 117' Rt to	234	1		30	22	
202L Med Sta 1182+00 91.5' Rt						
Sheet Total						

CSP / CAP / RCP / NRCP / NRCIPCP / CHDPEPP

Plan Ref No.	CSP ☒ Corrugation	CSP Wall Thickness (0.000) (In.)	CSP Coating: Zinc	CSP Coating: Bit. Coated Zinc	CSP Coating: Aluminum	CSP Coating: Bit. Coated Aluminum	CAP ☒ Corrugation	CAP Wall Thickness (0.000) (In.)	CAP Uncoated	CAP Bit. Coated	RCP Class - Non Trench	RCP Class - Trench	NRCP Class	NRCIPCP Min Wall Thickness (0) (In.)	CHDPEPP AASHTO M-294 Type C	CHDPEPP AASHTO M-294 Type S
226											III	III				X
227											III	III				X
228											III	III	3			X
229											III	III	3			X
230											III	III				X
231											II	II	1			X
232											II	II	2			X
233											II	II	2			X
234											III	III	2			X
Sheet Total																

END TREATMENT / QUANTITIES

Plan Ref No.	End Sec (Each): C-13.20 & C-13.25	End Sec: Detail -	Size, (in) Manhole	Standard or Detail	S-Single / D-Double / T-Triple (Ea)	Location	H (0.0) (Ft.)	L Wing (0.0) (Ft.)	L 18" Slotted Drn (0) (Ft.)	L 24" Slotted Drn (0) (Ft.)	Grate Type	Grate Elev. (0.00) (Ft.)	Inlet Depression Depth (In.)	Inlet Depression L (0.0) (Ft.)	Pipe Exc (0) (Cubic Yard)	Pipe Bkfl (0) (Cubic Yard)	Drn Exc (0) (Cubic Yard)	Berm/Dike Emb (0) (Cubic Yard)	REMARKS
226				C-15.91			5.8		55			1571.89	1	65	16	3			CB226 to Jct226
227				C-15.91			6.7					1571.42	1	10	16	3			CB227 to Jct227
228				C-15.80	S		4.0					1569.42			71	19			CB228 to CB227
229				C-15.92			5.8		10			1571.42			67	19			CB229 to CB228
230				C-15.91			5.8		5			1570.96	1	15	16	3			CB230 to Jct230
231				C-15.91			7.7		5			1570.88	1	15	15	3			CB231 to MH33
				Dtl D6															
232				C-15.80	S		5.0					1568.88			111	28			CB232 to CB231
				Dtl D6															
233				C-15.92			6.8		5			1570.88			106	28			CB233 to CB232
				Dtl D6															
234				C-15.80	T		4.0					1568.97			18	5			CB234 to CB233
				Dtl D6															
Sheet Total									80						436	111			

FILL HEIGHT RANGE TABLE (Ft.)													
RANGE NO.		1	2	3	4	5	6	7	8	9	10	11	12
FILL	>	1	3	5	8	11	15	20	25	30	40	55	70
HEIGHT (Ft.)	≤	3	5	8	11	15	20	25	30	40	55	70	90

⬡ SHOULD FIELD CONDITIONS VARY FROM THE RANGE INDICATED, CONTACT DESIGN FOR RE-EVALUATION OF PIPE DESIGN REQUIREMENTS.

☒ PIPE CORRUGATION			
A	2⅔x½	D	6x2
B	3x1	E	3x1 or 9x2½
C	9x2½		

	NAME	DATE
DESIGN	RSR	4/05
DRAWN	BJP	4/05
CHECKED	CAD	4/05

Stanley Consultants inc.

ARIZONA DEPARTMENT OF TRANSPORTATION
INTERMODAL TRANSPORTATION DIVISION
ROADWAY DESIGN SERVICES

NEW PIPE SUMMARY SHEET

ROUTE: 202L
LOCATION: RED MTN FWY, POWER ROAD - UNIVERSITY DRIVE

PRELIMINARY
STAGE IV
95% Review
NOT FOR CONSTRUCTION OR RECORDING

DWG NO. C-8.17

TRACS NO. H 5782 01C

202-B(007)B

___ OF ___

4/22/2005

NOTE:
THE ZEROS IN PARENTHESIS (0, 0.0 & 0.00) IN THE HEADING OF SOME OF THE COLUMNS ARE THE RECOMMENDED PRECISION OF THE VALUE TO BE ENTERED IN THE COLUMN.

NOTE:
FOR PIPE CULVERT PLACEMENT SEE STANDARD DRAWING C-13.15

NOTE:
PIPE OPTIONS SELECTED ARE THOSE REQUIRED TO MEET MINIMUM SERVICE LIFE.
SHADED PIPE OPTION FIELDS ARE NOT ALLOWABLE ALTERNATES.

- CSP - CORRUGATED STEEL PIPE
- CAP - CORRUGATED ALUMINUM PIPE
- RCP - REINFORCED CONCRETE PIPE
- NRCP - NON-REINFORCED CONCRETE PIPE
- NRCIPCP - NON-REINFORCED CAST-IN-PLACE CONCRETE PIPE
- CHDPEPP - CORRUGATED HIGH DENSTIY POLYETHYLENE PLASTIC PIPE

F.H.W.A. REGION	STATE	PROJECT NO.	SHEET NO.	TOTAL SHEETS	AS BUILT
9	ARIZ.	202-B(007)B			
		202 MA 023			

Station	Plan Ref No.	Controlling Fill Height Range	Size, Corrugated	Size, Smooth (In.)	Length (0) (Ft.)	Skew (0) (Degree)	Class - Non Trench	Class - Trench	Class	Min Wall Thickness (0)	AASHTO M-294 Type C	AASHTO M-294 Type S	C-13.20 & C-13.25 Detail -	Size, (in) Manhole	Standard or Detail	S-Single / D-Double / T-Triple	Location	H (0.0)	L Wing (0.0)	L 18" Slotted Drn (0)	L 24" Slotted Drn (0)	Type	Elev. (0.00)	Inlet Depression Depth (In.)	Inlet Depression L (0.0) (Ft.)	Pipe Exc (0)	Pipe Bkfl (0)	Drn Exc (0)	Berm/Dike Emb (0)	REMARKS
202L Med Sta 1180+75 91.5' Rt to 202L Med Sta 1182+00 91.5' Rt	235	1		24	126		III	III	3			X			C-15.92			5.2	5				1570.96			97	25			CB235 to CB233
202L Med Sta 1183+25 91.5' Rt to 202L Med Sta 1182+00 91.5' Rt	236	1		24	126		III	III	3			X			C-15.92			5.2	5				1570.96			97	25			CB236 to CB233
202L Med Sta 1183+25 91.5' Lt to 202L Med Sta 1183+25 106.45' Lt	237	2		24	13		II	II	1			X			C-15.91			5.8	5				1570.96	1	15	15	3			CB237 to Jct237
202L Med Sta 1186+00 91.5' Lt to 202L Med Sta 1186+00 108.25' Lt	238	3		24	15		II	II	2			X			C-15.91			6.7	15				1571.57	1	25	19	3			CB238 to Jct238
202L Med Sta 1186+00 0' Rt to 202L Med Sta 1186+00 91.5' Lt	239	1		24	94		III	III	3			X			C-15.80	S		4.0					1569.57			71	19			CB239 to CB238
202L Med Sta 1186+00 91.5' Rt to 202L Med Sta 1168+00 0' Rt	240	1		24	96		III	III	3			X			C-15.92			5.8	10				1571.57			67	19			CB240 to CB239
202L Med Sta 1190+00 91.5' Lt to 202L Med Sta 1190+00 104' Lt	241	2		24	11		II	II	1			X			C-15.91			6.7	15				1572.57	1	25	10	2			CB241 to MH34
202L Med Sta 1190+00 91.5' Rt to 202L Med Sta 1190+00 91.5' Lt	242	1		24	189		III	III	3			X			C-15.92			5.8	10				1572.57			165	38			CB242 to CB241
202L Med Sta 1190+00 117' Rt to 202L Med Sta 1190+00 91.5' Rt	243	1		24	22		III	III	3			X			C-15.80 Dtl D6	D		4.6					1571.74			16	4			CB243 to CB242
Sheet Total																			65							557	138			

FILL HEIGHT RANGE TABLE (Ft.)

RANGE NO.		1	2	3	4	5	6	7	8	9	10	11	12
FILL	>	1	3	5	8	11	15	20	25	30	40	55	70
HEIGHT (Ft.)	≤	3	5	8	11	15	20	25	30	40	55	70	90

SHOULD FIELD CONDITIONS VARY FROM THE RANGE INDICATED, CONTACT DESIGN FOR RE-EVALUATION OF PIPE DESIGN REQUIREMENTS.

PIPE CORRUGATION

A	2⅔x½	D	6x2
B	3x1	E	3x1 or 9x2½
C	9x2½		

REV. DATE: 01-05-2000

	NAME	DATE
DESIGN	RSR	4/05
DRAWN	BJP	4/05
CHECKED	CAD	4/05

Stanley Consultants inc.

ARIZONA DEPARTMENT OF TRANSPORTATION
INTERMODAL TRANSPORTATION DIVISION
ROADWAY DESIGN SERVICES

NEW PIPE SUMMARY SHEET

PRELIMINARY STAGE IV
95% Review
NOT FOR CONSTRUCTION OR RECORDING

ROUTE 202L LOCATION RED MTN FWY, POWER ROAD - UNIVERSITY DRIVE

TRACS NO. H 5782 01C 202-B(007)B ____ OF ____

4/22/2005 q:\17888\active\07-05-dwgs\02-gen\h5782sp18.dgn

NOTE:
THE ZEROS IN PARENTHESIS (0, 0.0 & 0.00) IN THE HEADING OF SOME OF THE COLUMNS ARE THE RECOMMENDED PRECISION OF THE VALUE TO BE ENTERED IN THE COLUMN.

NOTE:
FOR PIPE CULVERT PLACEMENT SEE STANDARD DRAWING C-13.15

NOTE:
PIPE OPTIONS SELECTED ARE THOSE REQUIRED TO MEET MINIMUM SERVICE LIFE.
SHADED PIPE OPTION FIELDS ARE NOT ALLOWABLE ALTERNATES.

CSP - CORRUGATED STEEL PIPE
CAP - CORRUGATED ALUMINUM PIPE
RCP - REINFORCED CONCRETE PIPE
NRCP - NON-REINFORCED CONCRETE PIPE
NRCIPCP - NON-REINFORCED CAST-IN-PLACE CONCRETE PIPE
CHDPEPP - CORRUGATED HIGH DENSITY POLYETHYLENE PLASTIC PIPE

F.H.W.A. REGION	STATE	PROJECT NO.	SHEET NO.	TOTAL SHEETS	AS BUILT
9	ARIZ.	202-B(007)B			
		202 MA 023			

DESCRIPTION: Station	Plan Ref No.	Controlling Fill Height Range	Size, Corrugated (In.)	Size, Smooth (In.)	Length (0) (Ft.)	Skew (0) (Degree)	CSP: Corrugation	CSP: Wall Thickness (0.00) (In.)	CSP Coating: Zinc	CSP Coating: Bit. Coated Zinc	CSP Coating: Aluminum	CSP Coating: Bit. Coated Aluminum	CAP: Corrugation	CAP: Wall Thickness (0.00) (In.)	CAP: Uncoated	CAP: Bit. Coated	RCP: Class - Non Trench	RCP: Class - Trench	NRCP: Class	NRCIPCP: Min Wall Thickness (0) (In.)	CHDPEPP: AASHTO M-294 Type C	CHDPEPP: AASHTO M-294 Type S	END TREATMENT: End Sec (Each): C-13.20 & C-13.25	End Sec: Detail -	Size, (In) Manhole	Standard or Detail	S-Single / D-Double / T-Triple (Ea)	Location	H (0.0) (Ft.)	L Wing (0.0) (Ft.)	L 18" Slotted Drn (0) (Ft.)	L 24" Slotted Drn (0) (Ft.)	Grate: Type	Grate: Elev. (0.00) (Ft.)	Inlet Depression: Depth (In.)	Inlet Depression: L (0.00) (Ft.)	QUANTITIES (Cubic Yard): Pipe Exc (0)	Pipe Bkfl (0)	Drn Exc (0)	Berm/Dike Emb (0)	REMARKS
202L Med Sta 1198+00 91.5' Lt to	250	2		24	11												II	II	1			X				C-15.91			6.7		10			1572.57	1	20	10	2			CB250 to MH35
202L Med Sta 1198+00 104' Lt																																									
202L Med Sta 1198+00 91.5' Rt to	251	3		24	189												II	II	2			X				C-15.92			5.8		10			1572.57			165	38			CB251 to CB250
202L Med Sta 1198+00 91.5' Lt																																									
202L Med Sta 1202+00 91.5' Lt to	252	2		24	11												II	II	1			X				C-15.91			6.7		10			1571.57	1	20	10	2			CB252 to MH36
202L Med Sta 1202+00 104' Lt																																									
202L Med Sta 1202+00 0' Rt to	253	3		24	94												II	II	2			X				C-15.80	S		4.0					1569.57			71	19			CB253 to CB252
202L Med Sta 1202+00 91.5' Lt																																									
202L Med Sta 1202+00 91.5' Rt to	254	2		24	96												II	II	1			X				C-15.92			5.8		10			1571.57			67	19			CB254 to CB253
202L Med Sta 1202+00 0' Rt																																									
202L Med Sta 1204+75 91.5' Lt to	255	3		24	12												II	II	2			X				C-15.91			5.8		5			1570.96	1	15	13	2			CB255 to Jct255
202L Med Sta 1204+75 104.97' Lt																																									
202L Med Sta 1206+00 91.5' Lt to	256	3		36	11												II	II	2			X				C-15.91			8.2		5			1570.88	1	15	17	3			CB256 to MH37
202L Med Sta 1206+00 104' Lt																										Dtl D6															
202L Med Sta 1206+00 0' Rt to	257	1		36	94												II	II	2			X				C-15.80	S		5.5					1568.88			119	28			CB257 to CB256
202L Med Sta 1206+00 91.5' Lt																										Dtl D6															
202L Med Sta 1206+00 91.5' Rt to	258	1		36	96												II	II	2			X				C-15.92			7.2		5			1570.88			113	28			CB258 to CB257
202L Med Sta 1206+00 0' Rt																										Dtl D6															
Sheet Total																															55						585	141			

FILL HEIGHT RANGE TABLE (Ft.)

RANGE NO.		1	2	3	4	5	6	7	8	9	10	11	12
FILL	>	1	3	5	8	11	15	20	25	30	40	55	70
HEIGHT (Ft.)	≤	3	5	8	11	15	20	25	30	40	55	70	90

⊖ SHOULD FIELD CONDITIONS VARY FROM THE RANGE INDICATED, CONTACT DESIGN FOR RE-EVALUATION OF PIPE DESIGN REQUIREMENTS.

PIPE CORRUGATION			
A	2⅔x½	D	6x2
B	3x1	E	3x1 or 9x2½
C	9x2½		

	NAME	DATE
DESIGN	RSR	4/05
DRAWN	BJP	4/05
CHECKED	CAD	4/05

Stanley Consultants inc.

ARIZONA DEPARTMENT OF TRANSPORTATION
INTERMODAL TRANSPORTATION DIVISION
ROADWAY DESIGN SERVICES

NEW PIPE SUMMARY SHEET

PRELIMINARY
STAGE IV
95% Review
NOT FOR CONSTRUCTION OR RECORDING

ROUTE: 202L
LOCATION: RED MTN FWY, POWER ROAD - UNIVERSITY DRIVE
DWG NO. G-6.19

TRACS NO. H 5782 01C | 202-B(007)B | ___ OF ___

REV. DATE: 01-05-2000

NOTE:
THE ZEROS IN PARENTHESIS (0, 0.0 & 0.001 IN THE HEADING OF SOME OF THE COLUMNS ARE THE RECOMMENDED PRECISION OF THE VALUE TO BE ENTERED IN THE COLUMN.

NOTE:
FOR PIPE CULVERT PLACEMENT SEE STANDARD DRAWING C-15.15

NOTE:
PIPE OPTIONS SELECTED ARE THOSE REQUIRED TO MEET MINIMUM SERVICE LIFE.
SHADED PIPE OPTION FIELDS ARE NOT ALLOWABLE ALTERNATES.

NRCP NRCIPCP CHDPEPP

CSP - CORRUGATED STEEL PIPE
CAP - CORRUGATED ALUMINUM PIPE
RCP - REINFORCED CONCRETE PIPE
NRCP - NON-REINFORCED CONCRETE PIPE
NRCIPCP - NON-REINFORCED CAST-IN-PLACE CONCRETE PIPE
CHDPEPP - CORRUGATED HIGH DENSITY POLYETHYLENE PLASTIC PIPE

F.H.W.A. REGION	STATE	PROJECT NO.	SHEET NO.	TOTAL SHEETS	AS BUILT
9	ARIZ.	202-B(007)R			
		202 MA 023			

DESCRIPTION						CSP		CAP		RCP								END TREATMENT												QUANTITIES	
				in.	in.	Ft.	Degree	in.	Coating	in.							in.	Each		Catch basin, Manhole, Headwall & Junction Structure											Cubic Yard	
Station	Plan Ref No.	⊘ Controlling Fill Height Range	Size, Corrugated	Size, Smooth	Length (0)	Skew (0)	☑ Corrugation	Rail Thickness (0.00)	Zinc	Bit. Coated Zinc	Aluminum	Bit. Coated Aluminum	☑ Corrugation	Rail Thickness (0.00)	Uncoated	Bit. Coated	Class - Non Trench	Class - Trench	Class	Min Rail Thickness (0)	AASHTO M-294 Type C	AASHTO M-294 Type S	C-15.20 & C-15.25 Detail -	Size, (in) Manhole	Standard or Detail	End Sec	S-Single / D-Double / T-Triple	Location	H (0.0)	L Wing (0.0)	L 18" Slotted Drn (0)	L 24" Slotted Drn (0)	Type	Elev. (0.00)	Depth	Inlet Depression	Pipe Exc (0)	Pipe Bk fl (0)	Drn Exc (0)	Bore/Dike Exc (0)	REMARKS
																																		Ea	Grate	Ft.					
202L Med Sta 1206+00 117' Rt to	259	1		36	22												II	II	2		X			C-15.80	D			5.4				1569.40			25	6			CB259 to CB258
202L Med Sta 1206+00 91.5' Rt																								D11 D6															
202L Med Sta 1204+75 91.5' Rt to	260	2		24	126												II	II	1		X			C-15.92				5.7		5		1570.96			113	25			CB260 to CB258
202L Med Sta 1206+00 91.5' Rt																																								
202L Med Sta 1207+25 91.5' Rt to	261	2		24	126												II	II	1		X			C-15.92				5.7		5		1570.96			113	25			CB261 to CB258
202L Med Sta 1206+00 91.5' Rt																																								
202L Med Sta 1207+25 91.5' Lt to	262	3		24	14												II	II	2		X			C-15.91				5.8		5		1570.96	1	15	14	3			CB262 to Jct262
202L Med Sta 1207+25 106.58' Lt																																								
202L Med Sta 1210+00 91.5' Lt to	263	3		36	16												II	II	2		X			C-15.91				9.5		5		1571.57	1	15	28	5			CB263 to Jct263
202L Med Sta 1210+00 109' Lt																								D11 D6															
202L Med Sta 1210+00 0' Rt to	264	3		36	94												II	II	2		X			C-15.80	S			6.8				1569.57			140	28			CB264 to CB263
202L Med Sta 1210+00 91.5' Lt																								D11 D6															
202L Med Sta 1210+21 94.03' Rt to	265	3		36	101												II	II	2		X			C-15.92				8.5		5		1571.57			142	30			CB265 to CB264
202L Med Sta 1210+00 0' Rt																								D11 D6															
202L Med Sta 1211+25 96.93' Rt to	266	3		24	105												II	II	2		X			C-15.92				7.2		5		1571.77			106	21			CB266 to CB265
202L Med Sta 1210+21 94.03' Rt																																								
202L Med Sta 1212+25 100.39' Rt to	267	2		24	101												II	II	1		X			C-15.92				6.9		5		1571.95			99	20			CB267 to CB266
202L Med Sta 1211+25 96.93' Rt																																								
Sheet Total																														35						780	163			

FILL HEIGHT RANGE TABLE (Ft.)												
RANGE NO.		1	2	3	4	5	6	7	8	9	10	11	12
FILL HEIGHT (Ft.)	>	1	3	5	8	11	15	20	25	30	40	55	70
	≤	3	5	8	11	15	20	25	30	40	55	70	90
⊘ SHOULD FIELD CONDITIONS VARY FROM THE RANGE INDICATED, CONTACT DESIGN FOR RE-EVALUATION OF PIPE DESIGN REQUIREMENTS.													

☑ PIPE CORRUGATION			
A	2⅔x½	D	6x2
B	3x1	E	3x1 or 9x2½
C	9x2½		

REV. DATE: 01-05-2000

	NAME	DATE
DESIGN	RSR	4/05
DRAWN	B.P.	4/05
CHECKED	CAD	4/05

Stanley Consultants Inc.

ARIZONA DEPARTMENT OF TRANSPORTATION
INTERMODAL TRANSPORTATION DIVISION
ROADWAY DESIGN SERVICES

NEW PIPE SUMMARY SHEET

PRELIMINARY
STAGE IV
95% Review
NOT FOR CONSTRUCTION OR RECORDING

ROUTE: 202L
LOCATION: RED MTN FWY, POWER ROAD - UNIVERSITY DRIVE

TRACS NO. H 5782 01C | 202-B(007)R | DRG NO. C-6.20 | ___ OF ___

4/22/2005 g:\17888\active\87-85-dsgn\82-gen\05782dp28.dgn

NOTE:
THE ZEROS IN PARENTHESIS (0, 0.0 & 0.00) IN THE HEADING OF SOME OF THE COLUMNS ARE THE RECOMMENDED PRECISION OF THE VALUE TO BE ENTERED IN THE COLUMN.

NOTE:
FOR PIPE CULVERT PLACEMENT SEE STANDARD DRAWING C-13.15

NOTE:
PIPE OPTIONS SELECTED ARE THOSE REQUIRED TO MEET MINIMUM SERVICE LIFE.
SHADED PIPE OPTION FIELDS ARE NOT ALLOWABLE ALTERNATES.

CSP - CORRUGATED STEEL PIPE
CAP - CORRUGATED ALUMINUM PIPE
RCP - REINFORCED CONCRETE PIPE
NRCP - NON-REINFORCED CONCRETE PIPE
NRCIPCP - NON-REINFORCED CAST-IN-PLACE CONCRETE PIPE
CHDPEPP - CORRUGATED HIGH DENSTIY POLYETHYLENE PLASTIC PIPE

F.H.W.A. REGION	STATE	PROJECT NO.	SHEET NO.	TOTAL SHEETS	AS BUILT
9	ARIZ.	202-B(007)B			

202 MA 023

Station	Plan Ref No.	Controlling Fill Height Range	Size, Corrugated (in.)	Size, Smooth (in.)	Length (0) (Ft.)	Skew (0) (Degree)	RCP Class - Non Trench	RCP Class - Trench	NRCP Class	CHDPEPP Min Wall Thickness (0)	AASHTO M-294 Type C	AASHTO M-294 Type S	End Sec C-15.20 & C-15.25 (Ea)	Detail -	Size, (in) Manhole	Standard or Detail	S-Single / D-Double / T-Triple	Location	H (0.0)	L Wing (0.0)	L 18" Slotted Drn (0)	L 24" Slotted Drn (0)	Grate Type	Elev. (0.00)	Inlet Depression Depth (In.)	Inlet Depression L (0.0) (Ft.)	Pipe Exc (0)	Pipe Bkfl (0)	Drn Exc (0)	Berm/Dike Emb (0)	REMARKS
202L Med Sta 1213+15 104.07' Rt to	268	2		24	91		II	II	I			X				C-15.92			6.6		5			1572.11			85	18			CB268 to CB267
202L Med Sta 1212+25 100.39' Rt																															
202L Med Sta 1213+92 107.64' Rt to	269	2		24	78		II	II	I			X				C-15.92			6.3		5			1572.23			70	16			CB269 to CB268
202L Med Sta 1213+15 104.07' Rt																															
Brn Ramp B Sta 8+21 5.5' Rt to	270	2		24	75		II	II	I			X				C-15.92			6.1		5			1572.37			65	15			CB270 to CB269
202L Med Sta 1213+92 107.64' Rt																															
Brn Ramp B Sta 9+15 5.5' Rt to	271	2		24	94		II	II	I			X				C-15.92			5.9		5			1572.60			79	19			CB271 to CB270
Brn Ramp B Sta 8+21 5.5' Rt																															
Brn Ramp B Sta 10+00 5.5' Rt to	272	2		24	85		II	II	I			X				C-15.92			5.7					1572.82			69	17			CB272 to CB271
Brn Ramp B Sta 9+15 5.5' Rt																															
Brn Ramp B Sta 11+47 11.5' Lt to	273	2		24	149		II	II	I			X				C-15.91			5.6		5			1574.02	1	15	119	30			CB273 to CB272
Brn Ramp B Sta 10+00 5.5' Rt																															
202L Med Sta 1216+53 79.5' Rt to	274	2		24	46		II	II	I			X				C-15.91			5.8		5			1573.39	1	15	37	9			CB274 to CB272
Brn Ramp B Sta 10+00 5.5' Rt																															
202L Med Sta 1211+01 92.29' Lt to	275	3		24	15		II	II	2			X				C-15.91			5.8		55			1571.81	1	65	16	3			CB275 to Jct275
202L Med Sta 1211+01 108.61' Lt																															
202L Med Sta 1212+08 94.98' Lt to	276	3		24	11		II	II	2			X				C-15.91			5.8		100			1572.02	1	110	9	2			CB276 to MH38
202L Med Sta 1212+08 107.49' Lt																															
Sheet Total																					185						549	129			

FILL HEIGHT RANGE TABLE (Ft.)													
RANGE NO.		1	2	3	4	5	6	7	8	9	10	11	12
FILL	>	1	3	5	8	11	15	20	25	30	40	55	70
HEIGHT (Ft.)	≤	3	5	8	11	15	20	25	30	40	55	70	90

SHOULD FIELD CONDITIONS VARY FROM THE RANGE INDICATED, CONTACT DESIGN FOR RE-EVALUATION OF PIPE DESIGN REQUIREMENTS.

PIPE CORRUGATION			
A	2⅔x½	D	6x2
B	3x1	E	3x1 or 9x2½
C	9x2½		

	NAME	DATE
DESIGN	RSR	4/05
DRAWN	RJP	4/05
CHECKED	CAD	4/05

Stanley Consultants Inc.

ARIZONA DEPARTMENT OF TRANSPORTATION
INTERMODAL TRANSPORTATION DIVISION
ROADWAY DESIGN SERVICES

NEW PIPE SUMMARY SHEET

ROUTE 202L — LOCATION RED MTN FWY, POWER ROAD - UNIVERSITY DRIVE

TRACS NO. H 5782 01C — 202-B(007)B

PRELIMINARY
STAGE IV
95% Review
NOT FOR CONSTRUCTION OR RECORDING

DWG NO. 0-6.21

___ OF ___

REV. DATE: 01-05-2000

NOTE:
THE ZEROS IN PARENTHESIS (0), 0.0 & 0.000 IN THE HEADING OF SOME OF THE COLUMNS ARE THE RECOMMENDED PRECISION OF THE VALUE TO BE ENTERED IN THE COLUMN.

NOTE:
FOR PIPE CULVERT PLACEMENT SEE STANDARD DRAWING C-13.15

NOTE:
PIPE OPTIONS SELECTED ARE THOSE REQUIRED TO MEET MINIMUM SERVICE LIFE.
SHADED PIPE OPTION FIELDS ARE NOT ALLOWABLE ALTERNATES.

NRCP — NRCIPCP — CHDPEPP

CSP - CORRUGATED STEEL PIPE
CAP - CORRUGATED ALUMINUM PIPE
RCP - REINFORCED CONCRETE PIPE
NRCP - NON-REINFORCED CONCRETE PIPE
NRCIPCP - NON-REINFORCED CAST-IN-PLACE CONCRETE PIPE
CHDPEPP - CORRUGATED HIGH DENSITY POLYETHYLENE PLASTIC PIPE

FAP/A REGION	STATE	PROJECT NO.	SHEET NO.	TOTAL SHEETS	AS BUILT
9	ARIZ.	202-B(007)R			
		202 MA 023			

DESCRIPTION							CSP						CAP			RCP					END TREATMENT														QUANTITIES	
				In.	In.	Ft.	Degree	In.	Coating				In.								Each	Catch basin, Manhole, Headwall & Junction Structure														Cubic Yard	
Station	Plan Ref No.	Controlling Fill Height Range	Size, Corrugated	Size, Smooth	Length (0)	Skew (0)	Corrugation	Wall Thickness (0.000)	Zinc	Bit. Coated Zinc	Aluminum	Bit. Coated Aluminum	Corrugation	Wall Thickness (0.000)	Uncoated	Bit. Coated	Class - Non Trench	Class - Trench	Class	Min Wall Thickness (0)	AASHTO M-294 Type C	AASHTO M-294 Type S	C-13.20 & C-13.25 Detail -	Size, (in) Manhole	End Sec	Standard or Detail	S-Single / D-Double / T-Triple	Location	H (0.0)	L Wing (0.0)	L 18" Slotted Drn (0)	L 24" Slotted Drn (0)	Type	Elev. (0.00)	Grate Ft. Depth	Grate Ft. L (0.0)	Inlet Depression In. / Ft.	Pipe Exc (0)	Pipe Bk fl (0)	Drn Exc (0)	Berm/Dike Emb (0)	REMARKS
																									Ea				Ft.					Ft.						
202L Med Sta 1213+53 100.83' Lt to	277	3		24	15											II	II	2		X				C-15.91				5.8		115			1572.27	1	125	15	3			CB277 to Jct277
202L Med Sta 1213+52.03 117.56' Lt																																								
Brn Ramp A Sta 6+85 9.65' Lt to	278	3		24	14											II	II	2		X				C-15.91				5.8		60			1572.55	1	70	15	3			CB278 to Jct1278
Brn Ramp A Sta 6+85.10 25.08' Lt																																								
Brn Ramp A Sta 8+06 11.5' Lt to	279	2		24	11											II	II	1		X				C-15.91				5.8		5			1572.85	1	15	9	2			CB279 to MH39
Brn Ramp A Sta 8+06 24° Lt																																								
202L Med Sta 1216+34 73.5' Lt to	280	2		24	44											II	II	1		X				C-15.91				5.8		5			1573.36	1	15	36	9			CB280 to CB279
Brn Ramp A Sta 8+06 11.5' Lt																																								
202L Med Sta 1210+21 119.54' Rt to	281	2		30	22											II	II	1		X				C-15.80	T			5.5					1569.35			23	5			CB281 to CB265
202L Med Sta 1210+21 94.03' Rt																								D11 D6																
202L Med Sta 1234+89 219' Rt to	284	1		24	254											III	III	3		X				C-15.80	S			4.0					1597.50			182	51			CB284 to CB305
202L Med Sta 1234+00 73.5' Rt																																								
Brn Ramp A Sta 10+00 11.5' Rt to	285	3		24	15											II	II	2		X				C-15.91				5.8		5			1573.63	1	15	16	3			CB285 to Jct1285
Brn Ramp A Sta 9+97.98 0.63' Rt																																								
Brn Ramp B Sta 13+50 11.5' Lt to	286	1		24	55											III	III	3		X				C-15.92				4.4		20			1577.61			34	11			CB286 to Jct286
Brn Ramp B Sta 13+44.12 38.7' Lt																																								
Brn Ramp A Sta 13+05 11.5' Lt to	287	4		24	59											III	III			X				C-15.91				5.6		5			1576.41	1	15	69	12			CB287 to Jct287
202L Med Sta 1221+41.51 101.29' Lt																																								
Sheet Total																														215						399	99			

REV. DATE: 01-05-2000

FILL HEIGHT RANGE TABLE (Ft.)													
RANGE NO.		1	2	3	4	5	6	7	8	9	10	11	12
FILL HEIGHT (Ft.)	>	1	3	5	8	11	15	20	25	30	40	55	TO
	≤	3	5	8	11	15	20	25	30	40	55	70	90

Should field conditions vary from the range indicated, contact design for re-evaluation of pipe design requirements.

PIPE CORRUGATION			
A	2⅔x½	D	6x2
B	3x1	E	3x1 or 9x2½
C	9x2½		

	NAME	DATE
DESIGN	RSA	4/05
DRAWN	B.J.P.	4/05
CHECKED	CAD	4/05

Stanley Consultants Inc.

ARIZONA DEPARTMENT OF TRANSPORTATION
INTERMODAL TRANSPORTATION DIVISION
ROADWAY DESIGN SERVICES

NEW PIPE SUMMARY SHEET

PRELIMINARY
STAGE IV
95% Review
NOT FOR CONSTRUCTION OR RECORDING

ROUTE: 202L
LOCATION: RED MTN FWY, POWER ROAD - UNIVERSITY DRIVE
DWG NO. C-6.22

TRACS NO. H 5782 01C | 202-B(007)R | ___ OF ___

4/22/2005 q:\1788\active\87-85-design\82-geom\h5782sp22.dgn

NOTE:
THE ZEROS IN PARENTHESIS (0, 0.0 & 0.00) IN THE HEADING OF SOME OF THE COLUMNS ARE THE RECOMMENDED PRECISION OF THE VALUE TO BE ENTERED IN THE COLUMN.

NOTE:
FOR PIPE CULVERT PLACEMENT SEE STANDARD DRAWING C-13.15

NOTE:
PIPE OPTIONS SELECTED ARE THOSE REQUIRED TO MEET MINIMUM SERVICE LIFE.
SHADED PIPE OPTION FIELDS ARE NOT ALLOWABLE ALTERNATES.

CSP - CORRUGATED STEEL PIPE
CAP - CORRUGATED ALUMINUM PIPE
RCP - REINFORCED CONCRETE PIPE
NRCP - NON-REINFORCED CONCRETE PIPE
NRCIPCP - NON-REINFORCED CAST-IN-PLACE CONCRETE PIPE
CHDPEPP - CORRUGATED HIGH DENSITY POLYETHYLENE PLASTIC PIPE

FHWA REGION	STATE	PROJECT NO.	SHEET NO.	TOTAL SHEETS	AS BUILT
9	ARIZ.	202-B(007)B			
		202 MA 023			

DESCRIPTION								CSP			CAP		RCP	NRCP	NRCIPCP	CHDPEPP	END TREATMENT														QUANTITIES	
				In.	In.	Ft.	Degree	In.	Coating		In.		In.				Each			Ea	Ft.			Grate		Ft.					Cubic Yard	
Station	Plan Ref No.	⊙ Controlling Fill Height Range	Size, Corrugated	Size, Smooth	Length (0)	Skew (0)	☑ Corrugation	Wall Thickness (0.00)	Zinc	Bit. Coated Zinc	Aluminum	Bit. Coated Aluminum	☑ Corrugation	Wall Thickness (0.00)	Uncoated	Bit. Coated	Class - Non Trench	Class - Trench	Class	Min Wall Thickness (0)	AASHTO M-294 Type S	AASHTO M-294 Type C	C-13.20 & C-13.25 Detail -	Size, (in) Manhole Standard or Detail	End Sec	S-Single / D-Double / T-Triple	Location	H (0.0)	L Wing (0.0)	L 18" Slotted Drn (0)	L 24" Slotted Drn (0)	Type	Elev. (0.00)	Depth	L (0.0)	Pipe Exc (0)	Pipe Bk fl (0)	Drn Exc (0)	Bore/Pilot Exc (0)	REMARKS
202L Med Sta 1222+50 79.5' Lt to	288	2		24	11												II	II	I		X			C-15.91				6.9		15			1572.69	1	25	10	2			CB288 to MH40
202L Med Sta 1222+50 92' Lt																																								
202L Med Sta 1222+50 0' Rt to	289	1		24	82												III	III	3		X			C-15.80	S			4.0					1570.45			63	16			CB289 to CB288
202L Med Sta 1222+50 79.5' Lt																																								
202L Med Sta 1222+50 79.5' Rt to	290	1		24	82												III	III	3		X			C-15.91				6.1		10			1572.69	1	20	59	16			CB290 to CB289
202L Med Sta 1222+50 0' Rt																																								
Brn Ramp B Sta 17+34 27.2' Rt to	291	1		24	64												III	III	3		X			C-15.91				5.7		20			1588.78	1	30	48	13			CB291 to Jct291
Brn Ramp B Sta 17+31.45 93.19' Rt																																								
Brn Ramp B Sta 19+59 16' Rt to	292	1		24	110												III	III	3		X			C-15.20				5.5					1595.26	1	25	103	22			CB292 to Jct292
Brn Ramp B Sta 19+19.76 121.26' Rt																																								
Brn Ramp A Sta 18+00 11.5' Lt to	293	1		24	77												III	III	3		X			C-15.92				5.7		25			1582.96			64	15			CB293 to Jct293, Detail D9
Brn Ramp A Sta 18+00 92' Lt																								D11 D8																
202L Med Sta 1226+50 79.5' Lt to	294	2		24	15												II	II	I		X			C-15.91				6.6		5			1571.69	1	15	15	3			CB294 to Jct294
202L Med Sta 1226+50 95.53' Lt																																								
202L Med Sta 1226+50 79.5' Rt to	295	1		24	163												III	III	3		X			C-15.91				5.8		5			1571.69	1	15	142	33			CB295 to CB294
202L Med Sta 1226+50 79.5' Lt																																								
202L Med Sta 1228+21 79.5' Lt to	296	2		24	13												II	II	I		X			C-15.91				5.8		5			1571.37	1	15	12	3			CB296 to Jct296
202L Med Sta 1228+21 93.86' Lt																																								
Sheet Total																													85					516	123				

FILL HEIGHT RANGE TABLE (Ft.)												
RANGE NO.		1	2	3	4	5	6	7	8	9	10	11	12
FILL HEIGHT (Ft.)	≥	1	3	5	8	11	15	20	25	30	40	55	70
	≤	3	5	8	11	15	20	25	30	40	55	70	90

⊙ SHOULD FIELD CONDITIONS VARY FROM THE RANGE INDICATED, CONTACT DESIGN FOR RE-EVALUATION OF PIPE DESIGN REQUIREMENTS.

☑ PIPE CORRUGATION			
A	2⅔"x½"	D	6x2
B	3x1	E	3x1 or 9x2½
C	9x2½		

	NAME	DATE
DESIGN	RSR	4/05
DRAWN	BJP	4/05
CHECKED	CAD	4/05

Stanley Consultants Inc.

ARIZONA DEPARTMENT OF TRANSPORTATION
INTERMODAL TRANSPORTATION DIVISION
ROADWAY DESIGN SERVICES

NEW PIPE SUMMARY SHEET

PRELIMINARY
STAGE IV
95% Review
NOT FOR CONSTRUCTION OR RECORDING

ROUTE: 202L
LOCATION: RED MTN FWY, POWER ROAD - UNIVERSITY DRIVE

TRACS NO. H 5782 01C | 202-B(007)B | DWG NO. C-8.33 | ___ OF ___

REV. DATE: 01-05-2000

NOTE:
THE ZEROS IN PARENTHESIS (0, 0.0 & 0.00) IN THE HEADING OF SOME OF THE COLUMNS ARE THE RECOMMENDED PRECISION OF THE VALUE TO BE ENTERED IN THE COLUMN.

NOTE:
FOR PIPE CULVERT PLACEMENT SEE STANDARD DRAWING C-13.15

NOTE:
PIPE OPTIONS SELECTED ARE THOSE REQUIRED TO MEET MINIMUM SERVICE LIFE.
SHADED PIPE OPTION FIELDS ARE NOT ALLOWABLE ALTERNATES.

CSP - CORRUGATED STEEL PIPE
CAP - CORRUGATED ALUMINUM PIPE
RCP - REINFORCED CONCRETE PIPE
NRCP - NON-REINFORCED CONCRETE PIPE
NRCIPCP - NON-REINFORCED CAST-IN-PLACE CONCRETE PIPE
CHDPEPP - CORRUGATED HIGH DENSTIY POLYETHYLENE PLASTIC PIPE

F.H.W.A. REGION	STATE	PROJECT NO.	SHEET NO.	TOTAL SHEETS	AS BUILT
9	ARIZ.	202-B(007)B			
		202 MA 023			

DESCRIPTION / CSP / CAP / RCP / NRCP / NRCIPCP / CHDPEPP / END TREATMENT / QUANTITIES

Station	Plan Ref No.	Controlling Fill Height Range	Size, Corrugated (In.)	Size, Smooth (In.)	Length (0) (Ft.)	Skew (0) (Degree)	CSP Corrugation	CSP Wall Thickness (0.00)	Zinc	Bit. Coated Zinc	Aluminum	Bit. Coated Aluminum	CAP Corrugation	CAP Wall Thickness (0.00)	Uncoated	Bit. Coated	Class - Non Trench	Class - Trench	Class	Min Wall Thickness (0)	AASHTO M-294 Type C	AASHTO M-294 Type S	C-13.20 & C-13.25 Detail	Size (In)	End Sec Standard or Detail	Ea S-Single / D-Double / T-Triple	Location	H (0.0)	L Wing (0.0)	L 18" Slotted Drn (0)	L 24" Slotted Drn (0)	Type	Elev. (0.00)	Inlet Depression Depth (In.)	Inlet Depression L (0.0) (Ft.)	Pipe Exc (0)	Pipe Bkfl (0)	Drn Exc (0)	Berm/Dike Emb (0)	REMARKS
202L Med Sta 1229+21.21 79.5' Lt to	297	2		24	11												II	II	I		X				C-15.91			6.9		5			1571.31	1	15	10	2			CB297 to MH1
202L Med Sta 1229+21.21 92' Lt																																								
202L Med Sta 1229+21.21 0' Rt to	298	1		24	82												III	III	3		X				C-15.80	S		4.0					1569.08			63	16			CB298 to CB297
202L Med Sta 1229+21.21 79.5' Lt																																								
202L Med Sta 1229+21.21 79.5' Rt to	299	1		24	82												III	III	3		X				C-15.91			6.1		5			1571.31	1	15	59	16			CB299 to CB298
202L Med Sta 1229+21.21 0' Rt																																								
202L Med Sta 1228+21 79.5' Rt to	300	2		24	101												II	II	I		X				C-15.91			5.6		5			1571.37	1	15	83	20			CB300 to CB299
202L Med Sta 1229+21.21 79.5' Rt																																								
202L Med Sta 1230+46 79.5' Rt to	301	2		24	126												II	II	I		X				C-15.91			5.5		5			1571.39	1	15	103	25			CB301 to CB299
202L Med Sta 1229+21.21 79.5' Rt																																								
202L Med Sta 1230+46 79.5' Lt to	302	2		24	11												II	II	I		X				C-15.91			5.8		5			1571.39	1	15	10	2			CB302 to Jct302
202L Med Sta 1230+46 91.73' Lt																																								
Brn Ramp A Sta 24+20 77' Rt to	303	1		24	164												III	III	3		X				C-15.80	S		4.0					1585.31			236	33			CB303 to Jct303, Detail D9
Brn Ramp A Sta 24+20 93' Lt																									Dtl D8															
202L Med Sta 1234+00 79.5' Lt to	304	2		24	10												II	II	I		X				C-15.91			7.0		10			1572.45	1	20	10	2			CB304 to Jct304
202L Med Sta 1234+00 91.3' Lt																																								
202L Med Sta 1234+00 79.5' Rt to	305	1		24	163												III	III	3		X				C-15.91			6.1		15			1572.45	1	25	149	33			CB305 to CB304
202L Med Sta 1234+00 79.5' Lt																																								
Sheet Total																														50						723	149			

FILL HEIGHT RANGE TABLE (Ft.)

RANGE NO.		1	2	3	4	5	6	7	8	9	10	11	12
FILL	>	1	3	5	8	11	15	20	25	30	40	55	70
HEIGHT (Ft.)	≤	3	5	8	11	15	20	25	30	40	55	70	90

⊖ SHOULD FIELD CONDITIONS VARY FROM THE RANGE INDICATED, CONTACT DESIGN FOR RE-EVALUATION OF PIPE DESIGN REQUIREMENTS.

PIPE CORRUGATION			
A	2⅔x½	D	6x2
B	3x1	E	3x1 or 9x2½
C	9x2½		

	NAME	DATE
DESIGN	RSA	4/05
DRAWN	WJP	4/05
CHECKED	CAD	4/05

Stanley Consultants inc.

ARIZONA DEPARTMENT OF TRANSPORTATION
INTERMODAL TRANSPORTATION DIVISION
ROADWAY DESIGN SERVICES

NEW PIPE SUMMARY SHEET

PRELIMINARY
STAGE IV
95% Review
NOT FOR CONSTRUCTION OR RECORDING

ROUTE 202L | LOCATION RED MTN FWY, POWER ROAD - UNIVERSITY DRIVE | DWG NO. C-6.24

TRACS NO. H 5782 01C | 202-B(007)B | ____ OF ____

REV. DATE: 01-05-2000

472272885 q:\17888\active\87-85-dwgs\82-gen\h5782sp24.dgn

NOTE:
THE ZEROS IN PARENTHESIS (0, 0.0 & 0.001) IN THE HEADING OF SOME OF THE COLUMNS ARE THE RECOMMENDED PRECISION OF THE VALUE TO BE ENTERED IN THE COLUMN.

NOTE:
FOR PIPE CULVERT PLACEMENT SEE STANDARD DRAWING C-13.15

NOTE:
PIPE OPTIONS SELECTED ARE THOSE REQUIRED TO MEET MINIMUM SERVICE LIFE.
SHADED PIPE OPTION FIELDS ARE NOT ALLOWABLE ALTERNATES.

NRCP NRCIPCP CHDPEPP

CSP - CORRUGATED STEEL PIPE
CAP - CORRUGATED ALUMINUM PIPE
RCP - REINFORCED CONCRETE PIPE
NRCP - NON-REINFORCED CONCRETE PIPE
NRCIPCP - NON-REINFORCED CAST-IN-PLACE CONCRETE PIPE
CHDPEPP - CORRUGATED HIGH DENSITY POLYETHYLENE PLASTIC PIPE

F.A.H.U.S. REGION	STATE	PROJECT NO.	SHEET NO.	TOTAL SHEETS	AS BUILT
9	ARIZ.	202-B(007)B			
		202 MA 023			

DESCRIPTION							CSP					CAP			RCP			END TREATMENT											QUANTITIES	
			In.	In.	Ft.	Degree	In.	Coating				In.					In.	Each												Cubic Yard	
Station	Plan Ref No.	⊙ Controlling F'll Height Range	Size, Corrugated	Size, Smooth	Length (0)	Skew (0)	☑ Corrugation	Wall Thickness (0.00)	Zinc	Bit. Coated Zinc	Aluminum	Bit. Coated Aluminum	☑ Corrugation	Wall Thickness (0.00)	Uncoated	Bit. Coated	Class - Non Trench	Class - Trench	Class	Min Wall Thickness (0)	AASHTO M-294 Type C	AASHTO M-294 Type S	C-13.20 & C-13.25 Detail -	Size, (in) Manhole	End Sec Standard or Detail	S-Single / D-Double / T-Triple	Location	H (0.0)	L Wing (0.0)	L 18" Slotted Drn (0)	L 24" Slotted Drn (0)	Type	Elev. (0.00)	Depth In.	Depth Ft.	L (0.0)	Inlet Depression	Pipe Exc (0)	Pipe Bkfl (0)	Drn Exc (0)	Berm/Dike Exc (0)	REMARKS
																									Ea				Ft.			Grate Ft.								Catch basin, Manhole, Headwall & Junction Structure	
2021, Med Sta 1234+75.0' Rt to	306	1		24	75												III	III	3		X			C-15.80	S		4.0				1570.52				44	15			CB306 to Jct306
2021, Med Sta 1234+00.0' Rt																																							
Brn Ramp D Sta 9+18 11.5' Rt to	307	1		24	164												III	III	3		X			C-15.92			5.5	20			1588.36				166	33			CB307 to CB309
2021, Med Sta 1238+00 79.5' Rt																																							
2021, Med Sta 1238+00 79.5' Lt to	308	2		24	11												II	II	1		X			C-15.91			6.6	5			1574.09	1	15	10	2				CB308 to MH44
2021, Med Sta 1238+00 92' Lt																																							
2021, Med Sta 1238+00 79.5' Rt to	309	1		24	163												III	III	3		X			C-15.91			5.8	15			1574.09	1	25	142	33				CB309 to CB308
2021, Med Sta 1238+00 79.5' Lt																																							
Brn Ramp C Sta 1+92 16' Lt to	310	1		24	131												III	III	3		X			C-15.20			5.5				1593.06	1	29.5	161	26				CB310 to Jct310, Detail D9
Brn Ramp C Sta 2+70 122.6' Lt																								D+1 D8															
2021, Med Sta 1242+00 79.5' Lt to	311	2		24	11												II	II	1		X			C-15.91			7.8	10			1575.73	1	20	11	2				CB311 to MH45
2021, Med Sta 1242+00 92' Lt																																							
2021, Med Sta 1242+00 0' Rt to	312	1		24	82												III	III	3		X			C-15.80	S		4.9				1573.49			72	16				CB312 to CB311
2021, Med Sta 1242+00 79.5' Lt																																							
2021, Med Sta 1242+25 79.5' Rt to	313	1		24	86												III	III	3		X			C-15.91			7.1	15			1575.83	1	25	72	17				CB313 to CB312
2021, Med Sta 1242+00 0' Rt																																							
Brn Ramp D Sta 14+85 11.5' Lt to	314	2		24	82												II	II	1		X			C-15.91			9.9	5			1579.22	1	15	96	16				CB314 to CB313
2021, Med Sta 1242+25 79.5' Rt																																							
Sheet Total																													70						774	160			

FILL HEIGHT RANGE TABLE (Ft.)												
RANGE NO.		1	2	3	4	5	6	7	8	9	10	11	12
FILL HEIGHT (Ft.)	>	1	3	5	8	11	15	20	25	30	40	55	70
	≤	3	5	8	11	15	20	25	30	40	55	70	90

⊙ SHOULD FIELD CONDITIONS VARY FROM THE RANGE INDICATED, CONTACT DESIGN FOR RE-EVALUATION OF PIPE DESIGN REQUIREMENTS.

☑ PIPE CORRUGATION			
A	2⅔x½	D	6x2
B	3x1	E	3x1 OR 9x2½
C	9x2½		

	NAME	DATE
DESIGN	RSA	4/05
DRAWN	BJP	4/05
CHECKED	CAD	4/05

Stanley Consultants Inc.

ARIZONA DEPARTMENT OF TRANSPORTATION
INTERMODAL TRANSPORTATION DIVISION
ROADWAY DESIGN SERVICES

NEW PIPE SUMMARY SHEET

DISTRICT	LOCATION
2021	RED MTN FWY, POWER ROAD - UNIVERSITY DRIVE

TRACS NO. H 5782 01C | 202-B(007)B

PRELIMINARY
STAGE IV
95% Review
NOT FOR CONSTRUCTION OR RECORDING

DWG NO. C-5.25

___ OF ___

REV. DATE: 01-05-2000

4/22/2005 g:\17888\active\87-185-design\82-gen\05782sp25.dgn

NOTE:
THE ZEROS IN PARENTHESIS (0.0 & 0.00) IN THE HEADING OF SOME OF THE COLUMNS ARE THE RECOMMENDED PRECISION OF THE VALUE TO BE ENTERED IN THE COLUMN.

NOTE:
FOR PIPE CULVERT PLACEMENT SEE STANDARD DRAWING C-13.15

NOTE:
PIPE OPTIONS SELECTED ARE THOSE REQUIRED TO MEET MINIMUM SERVICE LIFE.
SHADED PIPE OPTION FIELDS ARE NOT ALLOWABLE ALTERNATES.

NRCP | NRCIPCP | CHDPEPP

CSP - CORRUGATED STEEL PIPE
CAP - CORRUGATED ALUMINUM PIPE
RCP - REINFORCED CONCRETE PIPE
NRCP - NON-REINFORCED CONCRETE PIPE
NRCIPCP - NON-REINFORCED CAST-IN-PLACE CONCRETE PIPE
CHDPEPP - CORRUGATED HIGH DENSITY POLYETHYLENE PLASTIC PIPE

F.H.W.A. REGION	STATE	PROJECT NO.	SHEET NO.	TOTAL SHEETS	AS BUILT
9	ARIZ.	202-B(007)I			
		202 MA 023			

DESCRIPTION							CSP			CAP			RCP				END TREATMENT														QUANTITIES	
				in.	in.	Ft.	Degree	in.	Coating		in.							Each														Cubic Yard	
																		Catch basin, Manhole, Headwall & Junction Structure														
																		End Sec	Ea			Ft.			Grate	Ft.	Inlet Depression					
Station	Plan Ref No.	⬡ Controlling Fill Height Range	Size, Corrugated	Size, Smooth	Length (0)	Skew (0)	☑ Corrugation	Wall Thickness (0.00)	Zinc	Bit. Coated Zinc	Aluminum	Bit. Coated Aluminum	☑ Corrugation	Wall Thickness (0.00)	Uncoated	Bit. Coated	Class - Non Trench	Class - Trench	Class	Min. Wall Thickness (0)	AASHTO M-294 Type C	AASHTO M-294 Type S	C-13.20 & C-13.25 Detail -	Size, (in) Manhole Standard or Detail	S-Single / D-Double / T-Triple	Location	H (0.0)	L Wing (0.0)	L 18" Slotted Drn (0)	L 24" Slotted Drn (0)	Type	Elev. (0.00)	Depth	L (0.0)	Pipe Enc (0)	Pipe Bkfl (0)	Drn Enc (0)	Berm/Dike Encb (0)	REMARKS
Brn Ramp C Sta 4+00 23.5' Lt to	315	1		24	89												III	III	3		X			C-15.91			5.6		15			1590.74	1	25	85	18			CB315 to Jct315, Detail D9
Brn Ramp C Sta 4+00 15' Lt																								D+1 D8														
Brn Ramp D Sta 16+97 11.5' Rt to	316	3		24	214												II	II	2		X			C-15.92			6.9		5			1577.14			247	43			CB316 to CB314
Brn Ramp D Sta 14+85 11.5' Rt																																						
Brn Ramp D Sta 18+18.36 11.5' Rt to	317	2		24	122												II	II	1		X			C-15.92			6.0		5			1576.85			110	24			CB317 to CB316
Brn Ramp D Sta 16+97 11.5' Rt																																						
Brn Ramp D Sta 19+40 11.5' Rt to	318	2		24	122												II	II	1		X			C-15.92			5.7		5			1577.14			100	24			CB318 to CB317
Brn Ramp D Sta 18+18.36 11.5' Rt																																						
Brn Ramp D Sta 20+31 11.29' Rt to	319	3		36	123												II	II	2		X			C-15.92			7.0		5			1577.73			146	36			CB319 to CB326
202L Med Sta 1247+95 0' Rt																								D+1 D6														
202L Med Sta 1249+50 105.65' Rt to	320	2		24	146												II	II	1		X			C-15.92			5.7		5			1578.89			119	29			CB320 to CB319
Brn Ramp D Sta 20+31 11.29' Rt																																						
202L Med Sta 1250+90 95.87' Rt to	321	2		24	141												II	II	1		X			C-15.92			5.6		5			1580.24			112	28			CB321 to CB320
202L Med Sta 1249+50 105.65' Rt																																						
202L Med Sta 1252+25 91.5' Rt to	322	2		24	136												II	II	1		X			C-15.92			5.7		15			1581.62			108	27			CB322 to CB321
202L Med Sta 1250+90 95.87' Rt																																						
Brn Ramp C Sta 7+00 23.5' Lt to	323	5		24	90												IV	IV						C-15.91			5.5		5			1586.92	1	15	155	18			CB323 to MH46
202L Med Sta 1245+00 92' Lt																																						
Sheet Total																												65						1186	247			

REV. DATE: 01-05-2000

FILL HEIGHT RANGE TABLE (Ft.)													
RANGE NO.		1	2	3	4	5	6	7	8	9	10	11	12
FILL HEIGHT (Ft.)	>	1	3	5	8	11	15	20	25	30	40	55	70
	≤	3	5	8	11	15	20	25	30	40	55	70	90

⬡ SHOULD FIELD CONDITIONS VARY FROM THE RANGE INDICATED, CONTACT DESIGN FOR RE-EVALUATION OF PIPE DESIGN REQUIREMENTS.

☑ PIPE CORRUGATION			
A	2⅔x½	D	6x2
B	3x1	E	3x1 or 9x2½
C	9x2½		

	MARK	DATE
DESIGN	RSH	4/00
DRAWN	B.J.P	4/00
CHECKED	CAD	4/00

Stanley Consultants Inc.

ARIZONA DEPARTMENT OF TRANSPORTATION
INTERMODAL TRANSPORTATION DIVISION
ROADWAY DESIGN SERVICES

NEW PIPE SUMMARY SHEET

PRELIMINARY
STAGE IV
95% Review
NOT FOR CONSTRUCTION OR RECORDING

ROUTE	LOCATION	DWG NO. C-5.26
202L	RED MTN FWY, POWER ROAD - UNIVERSITY DRIVE	
TRACS NO. H 5782 01C		202-B(007)I — OF —

4/27/2000 q:\17888\acad\ve\87-85-dwgs\82-gen\087824p26.dgn

NOTE:
THE ZEROS IN PARENTHESIS (0, 0.0 & 0.00) IN THE HEADING OF SOME OF THE COLUMNS ARE THE RECOMMENDED PRECISION OF THE VALUE TO BE ENTERED IN THE COLUMN.

NOTE:
FOR PIPE CULVERT PLACEMENT SEE STANDARD DRAWING C-13.15

NOTE:
PIPE OPTIONS SELECTED ARE THOSE REQUIRED TO MEET MINIMUM SERVICE LIFE.
SHADED PIPE OPTION FIELDS ARE NOT ALLOWABLE ALTERNATES.

CSP - CORRUGATED STEEL PIPE
CAP - CORRUGATED ALUMINUM PIPE
RCP - REINFORCED CONCRETE PIPE
NRCP - NON-REINFORCED CONCRETE PIPE
NRCIPCP - NON-REINFORCED CAST-IN-PLACE CONCRETE PIPE
CHDPEPP - CORRUGATED HIGH DENSITY POLYETHYLENE PLASTIC PIPE

F.H.W.A. REGION	STATE	PROJECT NO.	SHEET NO.	TOTAL SHEETS	AS BUILT
9	ARIZ.	202-B(007)B			

202 MA 023

DESCRIPTION / CSP / CAP / RCP / NRCP / NRCIPCP / CHDPEPP

Station	Plan Ref No.	Controlling Fill Height Range	Size, Corrugated (In.)	Size, Smooth (In.)	Length (0) (Ft.)	Skew (0) (Degree)	CSP Corrugation	CSP Wall Thickness (0.00) (In.)	Zinc	Bit. Coated Zinc	Aluminum	Bit. Coated Aluminum	CAP Corrugation	CAP Wall Thickness (0.00) (In.)	Uncoated	Bit. Coated	RCP Class - Non Trench	RCP Class - Trench	NRCP Class	NRCIPCP Min Wall Thickness (0) (In.)	CHDPEPP AASHTO M-294 Type C	CHDPEPP AASHTO M-294 Type S
202L Med Sta 1247+00 79.5' Lt to	324	3		24	11												II	II	2			X
202L Med Sta 1247+00 92.25' Lt																						
Brn Ramp C Sta 10+00 14.5' Lt to	325	4		24	67												III	III				X
202L Med Sta 1247+95 92' Lt																						
202L Med Sta 1247+95 0' Rt to	326	3		36	92												II	II	2			X
202L Med Sta 1247+95 92' Lt																						
Brn Ramp D Sta 20+31 37' Rt to	327	1		30	22												III	III	2			X
Brn Ramp D Sta 20+31 11.29' Rt																						
Brn Ramp C Sta 12+00 6.5' Lt to	328	1		24	22												III	III	2			X
Brn Ramp C Sta 12+03.82 12.3' Rt																						
Brn Ramp C Sta 13+09.02 5.5' Lt to	329	3		24	306												II	II	2			X
202L Med Sta 1247+95 92' Lt																						
Brn Ramp C Sta 14+18 5.5' Lt to	330	2		24	109												II	II	1			X
Brn Ramp C Sta 13+09.02 5.5' Lt																						
Brn Ramp C Sta 15+33 5.5' Lt to	331	2		24	115												II	II	1			X
Brn Ramp C Sta 14+18 5.5' Lt																						
Brn Ramp C Sta 16+08 5.5' Lt to	332	2		24	75												II	II	1			X
Brn Ramp C Sta 15+33 5.5' Lt																						
Sheet Total																						

END TREATMENT / QUANTITIES

Station	C-13.20 & C-13.25 (Each)	Detail - End Sec (Each)	Size, (in) Manhole	Standard or Detail	S-Single / D-Double / T-Triple (Ea)	Location	H (0.0) (Ft.)	L Wing (0.0) (Ft.)	L 18" Slotted Drn (0) (Ft.)	L 24" Slotted Drn (0) (Ft.)	Grate Type	Grate Elev. (0.00) (Ft.)	Inlet Depression Depth (In.)	Inlet Depression L (0.0) (Ft.)	Pipe Exc (0) (Cubic Yard)	Pipe Bkfl (0) (Cubic Yard)	Drn Exc (0) (Cubic Yard)	Berm/Dike Emb (0) (Cubic Yard)	REMARKS
202L Med Sta 1247+00 79.5' Lt to				C-15.91			5.8		15			1577.83	1	25	11	2			CB324 to Jct324
202L Med Sta 1247+00 92.25' Lt																			
Brn Ramp C Sta 10+00 14.5' Lt to				C-15.91			5.6		15			1583.26	1	25	62	13			CB325 to MH47
202L Med Sta 1247+95 92' Lt																			
202L Med Sta 1247+95 0' Rt to				C-15.80	S		5.7					1576.12			122	27			CB326 to MH47
202L Med Sta 1247+95 92' Lt				Dtl D6															
Brn Ramp D Sta 20+31 37' Rt to				C-15.80	T		4.0					1576.33			19	5			CB327 to CB319
Brn Ramp D Sta 20+31 11.29' Rt				Dtl D6															
Brn Ramp C Sta 12+00 6.5' Lt to				C-15.91			5.6		5			1581.42	1	15	20	4			CB328 to Jct328
Brn Ramp C Sta 12+03.82 12.3' Rt																			
Brn Ramp C Sta 13+09.02 5.5' Lt to				C-15.91			6.6		10			1581.14	1	20	258	61			CB329 to MH47
202L Med Sta 1247+95 92' Lt																			
Brn Ramp C Sta 14+18 5.5' Lt to				C-15.91			6.3		5			1581.44	1	15	98	22			CB330 to CB329
Brn Ramp C Sta 13+09.02 5.5' Lt																			
Brn Ramp C Sta 15+33 5.5' Lt to				C-15.91			5.8		5			1582.38	1	15	98	23			CB331 to CB330
Brn Ramp C Sta 14+18 5.5' Lt																			
Brn Ramp C Sta 16+08 5.5' Lt to				C-15.91			5.8		5			1583.27	1	15	61	15			CB332 to CB331
Brn Ramp C Sta 15+33 5.5' Lt																			
Sheet Total									60						749	172			

FILL HEIGHT RANGE TABLE (Ft.)

RANGE NO.		1	2	3	4	5	6	7	8	9	10	11	12
FILL	>	1	3	5	8	11	15	20	25	30	40	55	70
HEIGHT (Ft.)	≤	3	5	8	11	15	20	25	30	40	55	70	90

SHOULD FIELD CONDITIONS VARY FROM THE RANGE INDICATED, CONTACT DESIGN FOR RE-EVALUATION OF PIPE DESIGN REQUIREMENTS.

PIPE CORRUGATION

A	2⅔x½	D	6x2
B	3x1	E	3x1 or 9x2½
C	9x2½		

	NAME	DATE
DESIGN	RSR	4/05
DRAWN	BJP	4/05
CHECKED	CAD	4/05

Stanley Consultants inc.

ARIZONA DEPARTMENT OF TRANSPORTATION
INTERMODAL TRANSPORTATION DIVISION
ROADWAY DESIGN SERVICES

NEW PIPE SUMMARY SHEET

PRELIMINARY STAGE IV 95% Review
NOT FOR CONSTRUCTION OR RECORDING

ROUTE 202L — LOCATION RED MTN FWY, POWER ROAD - UNIVERSITY DRIVE

DWG NO. C-6.27

TRACS NO. H 5782 01C — 202-B(007)B — ___ OF ___

REV. DATE: 01-05-2000

4/22/2005 q:\17008\active\87-05-dwgs\02-gen\h5782sp27.dgn

NOTE:
THE ZEROS IN PARENTHESIS (0.0 & 0.00) IN THE HEADING OF SOME OF THE COLUMNS ARE THE RECOMMENDED PRECISION OF THE VALUE TO BE ENTERED IN THE COLUMN.

NOTE:
FOR PIPE CULVERT PLACEMENT SEE STANDARD DRAWING C-13.19

NOTE:
PIPE OPTIONS SELECTED ARE THOSE REQUIRED TO MEET MINIMUM SERVICE LIFE.
SHADED PIPE OPTION FIELDS ARE NOT ALLOWABLE ALTERNATES.

NRCP NRCIPCP CHDPEPP

CSP - CORRUGATED STEEL PIPE
CAP - CORRUGATED ALUMINUM PIPE
RCP - REINFORCED CONCRETE PIPE
NRCP - NON-REINFORCED CONCRETE PIPE
NRCIPCP - NON-REINFORCED CAST-IN-PLACE CONCRETE PIPE
CHDPEPP - CORRUGATED HIGH DENSITY POLYETHYLENE PLASTIC PIPE

F.A.H.U. REGION	STATE	PROJECT NO.	SHEET NO.	TOTAL SHEETS	AS BUILT
9	ARIZ.	202-B(007)I			
		202 MA 023			

DESCRIPTION							CSP				CAP			RCP	NRCP	NRCIPCP	CHDPEPP	END TREATMENT												QUANTITIES	
				In.	In.	Ft.	Degree	In.	Coating			In.					In.	Each	Ea	Catch basin, Manhole, Headwall & Junction Structure			Ft.		Grate	Ft.					Cubic Yard	
Station	Plan Ref No.	⬡ Controlling Fill Height Range	Size, Corrugated	Size, Smooth	Length (0)	Skew (0)	☑ Corrugation	Wall Thickness (0.00)	Zinc	Bit. Coated Zinc	Aluminum	Bit. Coated Aluminum	☑ Corrugation	Wall Thickness (0.00)	Uncoated	Bit. Coated	Class - Non Trench	Class - Trench	Class	Min. Wall Thickness (0)	AASHTO M-294 Type C	AASHTO M-294 Type S	C-13.20 & C-13.25 Detail -	Size, (In) Manhole or Standard Detail	End Sec S-Single / D-Double / T-Triple	Location	H (0.0)	L Wing (0.0)	L 18" Slotted Drn (0)	L 24" Slotted Drn (0)	Type	Elev. (0.00)	Depth In.	Depth Ft.	L (0.0)	Inlet Depression Pipe Exc (0)	Pipe Bk Fl (0)	Drn Exc (0)	Bar-Dike Emb (0)	REMARKS
Brn Ramp C Sta 16+88 5.5' Lt to	333	2		24	80			II	II	I		X					C-15.91				5.7		5			1584.22	1	8	65	16			CB333 to CB332
Brn Ramp C Sta 16+08 5.5' Lt																																					
202L Med Sta 1253+16 0' Rt to	334	1		24	124			III	III	3		X					C-15.80	S			3.5					1580.60			83	25			CB334 to CB331
Brn Ramp C Sta 15+33 5.5' Lt																																					
202L Med Sta 1255+66 109.5' Lt to	335	1		24	79			III	III	3		X					C-15.92				6.2		25			1585.20			71	16			CB335 to Jct335, Detail D9
202L Med Sta 1255+66 132' Lt																	DH D8																			
202L Med Sta 1255+66 91.5' Rt to	336	1		24	209			III	III	3		X					C-15.92				5.5		25			1585.56			172	42			CB336 to CB335
202L Med Sta 1255+66 109.5' Lt																																					
202L Med Sta 1257+25 101.88' Lt to	337	2		24	160			II	II	I		X					C-15.92				6.5		5			1587.26			142	32			CB337 to CB335
202L Med Sta 1255+66 109.5' Lt																																					
202L Med Sta 1258+58 96.47' Lt to	338	2		24	134			II	II	I		X					C-15.92				6.6		5			1588.95			122	27			CB338 to CB337
202L Med Sta 1257+25 101.88' Lt																																					
202L Med Sta 1259+75 92.58' Lt to	339	1		24	118			III	III	3		X					C-15.92				5.5		20			1590.33			100	24			CB339 to CB338
202L Med Sta 1258+58 96.47' Lt																																					
202L Med Sta 1258+58 0' Rt to	340	1		24	101			III	III	3		X					C-15.80	S			4.0					1587.05			76	20			CB340 to CB338
202L Med Sta 1258+58 96.47' Lt																																					
202L Med Sta 1263+50 0' Rt to	341	4		24	194			III	III								C-15.80	S			4.0					1591.84			280	39			CB341 to Jct341, Detail D9
202L Med Sta 1263+50 194' Lt																	Dtl D8																			
Sheet Total																							85						1111	241							

REV. DATE: 01-05-2000

FILL HEIGHT RANGE TABLE (Ft.)

RANGE NO.		1	2	3	4	5	6	7	8	9	10	11	12
FILL	≥	1	3	5	8	11	15	20	25	30	40	55	70
HEIGHT (Ft.)	≤	3	5	8	11	15	20	25	30	40	55	70	90

⬡ SHOULD FIELD CONDITIONS VARY FROM THE RANGE INDICATED, CONTACT DESIGN FOR RE-EVALUATION OF PIPE DESIGN REQUIREMENTS.

☑ PIPE CORRUGATION			
A	2⅔x½	D	6x2
B	3x1	E	3x1 or 9x2½
C	9x2½		

	NAME	DATE
DESIGN	RSR	4/05
DRAWN	BJP	4/05
CHECKED	CAD	4/05

Stanley Consultants inc.

ARIZONA DEPARTMENT OF TRANSPORTATION
INTERMODAL TRANSPORTATION DIVISION
ROADWAY DESIGN SERVICES

NEW PIPE SUMMARY SHEET

PRELIMINARY
STAGE IV
95% Review
NOT FOR CONSTRUCTION OR RECORDING

DATE: 2021 LOCATION: RED MTN FWY, POWER ROAD - UNIVERSITY DRIVE

TRACS NO. H 5782 01C | 202-B(007)I | DWG NO. C-6.21 | ___ OF ___

4/22/2005 d:\17888\cad files\87-85-dsgn\82-gen\h5782sp26.dgn

REV. DATE: 01-05-2000

F.H.W.A. REGION	STATE	PROJECT NO.	SHEET NO.	TOTAL SHEETS	AS BUILT
9	ARIZ.	202-B(007)B			

202 MA 023

NOTE:
THE ZEROS IN PARENTHESIS (0, 0.0 & 0.00) IN THE HEADING OF SOME OF THE COLUMNS ARE THE RECOMMENDED PRECISION OF THE VALUE TO BE ENTERED IN THE COLUMN.

NOTE:
FOR PIPE CULVERT PLACEMENT SEE STANDARD DRAWING C-13.15

NOTE:
PIPE OPTIONS SELECTED ARE THOSE REQUIRED TO MEET MINIMUM SERVICE LIFE.
SHADED PIPE OPTION FIELDS ARE NOT ALLOWABLE ALTERNATES.

CSP - CORRUGATED STEEL PIPE
CAP - CORRUGATED ALUMINUM PIPE
RCP - REINFORCED CONCRETE PIPE
NRCP - NON-REINFORCED CONCRETE PIPE
NRCIPCP - NON-REINFORCED CAST-IN-PLACE CONCRETE PIPE
CHDPEPP - CORRUGATED HIGH DENSTIY POLYETHYLENE PLASTIC PIPE

DESCRIPTION / CSP / CAP / RCP / NRCP / NRCIPCP / CHDPEPP

Station	Plan Ref No.	Controlling Fill Height Range	Size, Corrugated (In.)	Size, Smooth (In.)	Length (0) (Ft.)	Skew (0) (Degree)	CSP Corrugation	CSP Wall Thickness (0.00) (In.)	Zinc	Bit. Coated Zinc	Aluminum	Bit. Coated Aluminum	CAP Corrugation	CAP Wall Thickness (0.00) (In.)	Uncoated	Bit. Coated	Class - Non Trench	Class - Trench	Class	Min Wall Thickness (0) (In.)	AASHTO M-294 Type C	AASHTO M-294 Type S
202L Med Sta 1266+98 8' Lt to	342	5		24	200												IV	IV				
202L Med Sta 1266+98 208' Lt																						
202L Med Sta 1266+10 91.5' Rt to	343	1		24	136												III	III	3			X
202L Med Sta 1266+98 8' Lt																						
202L Med Sta 1269+50 8' Lt to	344	1		24	104												III	III	3			X
202L Med Sta 1269+50 91.5' Rt																						
202L Med Sta 1269+50 91.5' Rt to	345	1		24	95												III	III	3			X
202L Med Sta 1269+50 190.5' Rt																						
202L Med Sta 1272+50 8' Lt to	346	4		24	207												III	III				
202L Med Sta 1272+50 199' Rt																						
202L Med Sta 1279+50 4' Rt to	347	1		24	92												III	III	3			X
202L Med Sta 1279+50 91.5' Rt																						
202L Med Sta 1279+50 91.5' Rt to	348	1		24	100												III	III	3			X
202L Med Sta 1279+50 195.5' Rt																						
202L Med Sta 1282+00 4' Rt to	349	1		24	175												III	III	3			X
202L Med Sta 1283+15 4' Rt																						
202L Med Sta 1283+15 4' Rt to	350	6		24	70												IV	IV				
202L Med Sta 1284+44.42 5' Rt																						
Sheet Total																						

END TREATMENT / QUANTITIES

Station	End Sec C-15.20 & C-15.25 (Each)	Detail -	Size, (in) Manhole	Standard or Detail	S-Single / D-Double / T-Triple	Location	H (0.0) (Ft.)	L Wing (0.0) (Ft.)	L 18" Slotted Drn (0) (Ft.)	L 24" Slotted Drn (0) (Ft.)	Grate Type	Grate Elev. (0.00) (Ft.)	Inlet Depression Depth (In.)	Inlet Depression L (0.0) (Ft.)	Pipe Exc (0) (Cubic Yard)	Pipe Bkfl (0) (Cubic Yard)	Drn Exc (0) (Cubic Yard)	Berm/Dike Emb (0) (Cubic Yard)	REMARKS
202L Med Sta 1266+98 8' Lt to				C-15.80	S		7.0					1595.53			346	40			CB342 to Jct342, Detail D9
202L Med Sta 1266+98 208' Lt				Dtl D8															
202L Med Sta 1266+10 91.5' Rt to				C-15.92			5.5		100			1594.48			119	27			CB343 to CB342
202L Med Sta 1266+98 8' Lt																			
202L Med Sta 1269+50 8' Lt to				C-15.80	S		6.2					1597.11			86	21			CB344 to CB345
202L Med Sta 1269+50 91.5' Rt																			
202L Med Sta 1269+50 91.5' Rt to				C-15.92			5.5		10			1595.66			78	19			CB345 to Jct345
202L Med Sta 1269+50 190.5' Rt																			
202L Med Sta 1272+50 8' Lt to				C-15.80	S		5.0					1598.92			277	42			CB346 to Jct346
202L Med Sta 1272+50 199' Rt																			
202L Med Sta 1279+50 4' Rt to				C-15.80	S		7.8					1597.58			85	18			CB347 to CB348
202L Med Sta 1279+50 91.5' Rt																			
202L Med Sta 1279+50 91.5' Rt to				C-15.92			5.5		15			1594.58			102	20			CB348 to Jct348, Detail D9
202L Med Sta 1279+50 195.5' Rt				Dtl D8															
202L Med Sta 1282+00 4' Rt to				C-15.80	S		5.0					1294.21			125	35			CB349 to CB350
202L Med Sta 1283+15 4' Rt																			
202L Med Sta 1283+15 4' Rt to				C-15.80	S		5.0					1591.07			121	14			CB350 to Jct350
202L Med Sta 1284+44.42 5' Rt				Dtl D5															
Sheet Total									125						1339	236			

FILL HEIGHT RANGE TABLE (Ft.)

RANGE NO.		1	2	3	4	5	6	7	8	9	10	11	12
FILL	>	1	3	5	8	11	15	20	25	30	40	55	70
HEIGHT (Ft.)	≤	3	5	8	11	15	20	25	30	40	55	70	90

⊖ SHOULD FIELD CONDITIONS VARY FROM THE RANGE INDICATED, CONTACT DESIGN FOR RE-EVALUATION OF PIPE DESIGN REQUIREMENTS.

PIPE CORRUGATION

A	2⅔x½	D	6x2
B	3x1	E	3x1 or 9x2½
C	9x2½		

	NAME	DATE
DESIGN	RSR	4/05
DRAWN	SJP	4/05
CHECKED	CAD	4/05

Stanley Consultants Inc.

ARIZONA DEPARTMENT OF TRANSPORTATION
INTERMODAL TRANSPORTATION DIVISION
ROADWAY DESIGN SERVICES

NEW PIPE SUMMARY SHEET

PRELIMINARY
STAGE IV
95% Review
NOT FOR CONSTRUCTION OR RECORDING

ROUTE: 202L
LOCATION: RED MTN FWY, POWER ROAD - UNIVERSITY DRIVE

DWG NO. G-6.29

TRACS NO. H 5782 01C

202-B(007)B

___ OF ___

REV. DATE: 01-05-2000

NOTE:
THE ZEROS IN PARENTHESIS (0, 0.0 & 0.00) IN THE HEADING OF SOME OF THE COLUMNS ARE THE RECOMMENDED PRECISION OF THE VALUE TO BE ENTERED IN THE COLUMN.

NOTE:
FOR PIPE CULVERT PLACEMENT SEE STANDARD DRAWING C-13.15

NOTE:
PIPE OPTIONS SELECTED ARE THOSE REQUIRED TO MEET MINIMUM SERVICE LIFE.
SHADED PIPE OPTION FIELDS ARE NOT ALLOWABLE ALTERNATES.

CSP - CORRUGATED STEEL PIPE
CAP - CORRUGATED ALUMINUM PIPE
RCP - REINFORCED CONCRETE PIPE
NRCP - NON-REINFORCED CONCRETE PIPE
NRCIPCP - NON-REINFORCED CAST-IN-PLACE CONCRETE PIPE
CHDPEPP - CORRUGATED HIGH DENSTIY POLYETHYLENE PLASTIC PIPE

F.H.W.A. REGION	STATE	PROJECT NO.	SHEET NO.	TOTAL SHEETS	AS BUILT
9	ARIZ.	202-B(007)B			
		202 MA 023			

DESCRIPTION							CSP						CAP				RCP		NRCP	NRCIPCP	CHDPEPP	
Station	Plan Ref No.	Controlling Fill Height Range	Size, Corrugated (In.)	Size, Smooth (In.)	Length (0) (Ft.)	Skew (0) (Degree)	Corrugation	Wall Thickness (0.00) (In.)	Zinc (Coating)	Bit. Coated Zinc	Aluminum	Bit. Coated Aluminum	Corrugation	Wall Thickness (0.00) (In.)	Uncoated	Bit. Coated	Class - Non Trench	Class - Trench	Class	Min Wall Thickness (0) (In.)	AASHTO M-294 Type C	AASHTO M-294 Type S
202L Med Sta 1294+30 91.5' Rt to	351	5		24	39												IV	IV				
202L Med Sta 1294+50.41 95.78' Rt																						
202L Med Sta 1286+51 2' Lt to	352	5		24	179												IV	IV				
202L Med Sta 1286+51 178.06' Lt																						
202L Med Sta 1290+95 155' Rt to	353	1		24	34												III	III	3			X
202L Med Sta 1291+30 150' Rt																						
202L Med Sta 1291+30 150' Rt	354	7		24	70												V	V				
CAP Up Sta 58+50 16.75' Rt																						
CAP Up Sta 58+50 16.75' Rt to	355	7		24	318												V	V				
202L Med Sta 1295+30 92' Rt																						
202L Med Sta 1293+70 8' Rt to	356	6		24	112												IV	IV				
202L Med Sta 1293+87.77 117.66' Rt																						
Uni Ramp B Sta 8+51 5.5' Rt to	357	1		24	32												III	III	3			X
202L Med Sta 1295+30 92' Rt																						
202L Med Sta 1296+62 8' Rt to	358	5		24	88												IV	IV				
202L Med Sta 1296+61.4 95.78' Rt																						
202L Med Sta 1298+00 10' Rt to	360	1		24	31												III	III	3			X
202L Med Sta 1298+30 92' Rt																						
Sheet Total																						

	END TREATMENT															QUANTITIES				
	End Sec (Each)		Catch basin, Manhole, Headwall & Junction Structure											Grate		Cubic Yard				
Station	C-13.20 & C-13.25	Detail	Size, (In) Manhole	Standard or Detail	S-Single / D-Double / T-Triple (Ea)	Location	H (0.0) (Ft.)	L Wing (0.0) (Ft.)	L 18" Slotted Drn (0) (Ft.)	L 24" Slotted Drn (0) (Ft.)	Type	Elev. (0.00)	Depth (Ft.)	Inlet Depression (In.)	L (0.0) (Ft.)	Pipe Exc (0)	Pipe Bkfl (0)	Drn Exc (0)	Berm/Dike Emb (0)	REMARKS
202L Med Sta 1294+30 91.5' Rt to				C-15.92			5.5		20			1585.63				56	8			CB351 to Jct351
202L Med Sta 1294+50.41 95.78' Rt				Dtl D5																
202L Med Sta 1286+51 2' Lt to				C-15.92			5.6		20			1586.76				260	36			CB352 to Jct352
202L Med Sta 1286+51 178.06' Lt																				
202L Med Sta 1290+95 155' Rt to				C-15.80	S		4.0					1561.00				33	7			CB353 to MH354
202L Med Sta 1291+30 150' Rt				Dtl D4																
202L Med Sta 1291+30 150' Rt			24	C-18.10			25.6					1567.00				50	14			MH354 to CB355
CAP Up Sta 58+50 16.75' Rt																				
CAP Up Sta 58+50 16.75' Rt to				C-15.80	S		5.0					1546.26				864	64			CB355 to MH400
202L Med Sta 1295+30 92' Rt				Dtl D4																
202L Med Sta 1293+70 8' Rt to				C-15.80	S		4.0					1563.74				172	22			CB356 to Jct356
202L Med Sta 1293+87.77 117.66' Rt																				
Uni Ramp B Sta 8+51 5.5' Rt to				C-15.91			5.8		5			1555.12		1	10	29	6			CB357 to MH400
202L Med Sta 1295+30 92' Rt																				
202L Med Sta 1296+62 8' Rt to				C-15.80	S		5.5					1555.10				114	18			CB358 to Jct358
202L Med Sta 1296+61.4 95.78' Rt																				
202L Med Sta 1298+00 10' Rt to				C-15.80	S		4.0					1548.50				20	6			CB360 to MH401
202L Med Sta 1298+30 92' Rt																				
Sheet Total									45							1598	181			

FILL HEIGHT RANGE TABLE (Ft.)

RANGE NO.		1	2	3	4	5	6	7	8	9	10	11	12
FILL	>	1	3	5	8	11	15	20	25	30	40	55	70
HEIGHT (Ft.)	≤	3	5	8	11	15	20	25	30	40	55	70	90

SHOULD FIELD CONDITIONS VARY FROM THE RANGE INDICATED, CONTACT DESIGN FOR RE-EVALUATION OF PIPE DESIGN REQUIREMENTS.

PIPE CORRUGATION			
A	2⅔x½	D	6x2
B	3x1	E	3x1 or 9x2½
C	9x2½		

	NAME	DATE
DESIGN	RSR	4/05
DRAWN	WJP	4/05
CHECKED	CAD	4/05

Stanley Consultants Inc.

ARIZONA DEPARTMENT OF TRANSPORTATION
INTERMODAL TRANSPORTATION DIVISION
ROADWAY DESIGN SERVICES

NEW PIPE SUMMARY SHEET

ROUTE: 202L
LOCATION: RED MTN FWY, POWER ROAD - UNIVERSITY DRIVE

TRACS NO. H 5782 01C | 202-B(007)B

PRELIMINARY
STAGE IV
95% Review
NOT FOR CONSTRUCTION OR RECORDING

DWG NO. G-6.30

___ OF ___

4/22/2005

NOTE:
THE ZEROS IN PARENTHESIS (0, 0.0 & 0.00) IN THE HEADING OF SOME OF THE COLUMNS ARE THE RECOMMENDED PRECISION OF THE VALUE TO BE ENTERED IN THE COLUMN.

NOTE:
FOR PIPE CULVERT PLACEMENT SEE STANDARD DRAWING C-15.15

NOTE:
PIPE OPTIONS SELECTED ARE THOSE REQUIRED TO MEET MINIMUM SERVICE LIFE.
SHADED PIPE OPTION FIELDS ARE NOT ALLOWABLE ALTERNATES.

CSP - CORRUGATED STEEL PIPE
CAP - CORRUGATED ALUMINUM PIPE
RCP - REINFORCED CONCRETE PIPE
NRCP - NON-REINFORCED CONCRETE PIPE
NRCIPCP - NON-REINFORCED CAST-IN-PLACE CONCRETE PIPE
CHDPEPP - CORRUGATED HIGH DENSITY POLYETHYLENE PLASTIC PIPE

F.A.H.U.A. REGION	STATE	PROJECT NO.	SHEET NO.	TOTAL SHEETS	AS BUILT
9	ARIZ.	202-B(007)I			
		202 MA 023			

Station	Plan Ref No.	⊙ Controlling Fill Height Range	Size, Corrugated	Size, Smooth	Length (0)	Skew (0)	DESCRIPTION	CSP							CAP				RCP	NRCP	NRCIPCP	CHDPEPP	END TREATMENT														QUANTITIES	REMARKS
			In.	In.	Ft.	Degree	☑ Corrugation	Wall Thickness (0.000)	Zinc	Bit. Coated Zinc	Aluminum	Bit. Coated Aluminum	☑ Corrugation	Wall Thickness (0.000)	Uncoated	Bit. Coated	Class - Non Trench	Class - Trench	Class	Min Wall Thickness (0)	AASHTO M-294 Type C	AASHTO M-294 Type S	C-15.20 & C-15.25 Detail -	Size, (In) Manhole	Standard or Detail	End Sec	Each	Ea	5'-Single / D-Double / 1:1-Triple	Location	H (0.0)	L Wing (0.0)	L 18" Slotted Drn (0)	L 24" Slotted Drn (0)	Type	Elev. (0.00)	Depth In.	Grate Ft.	Inlet Depression In.	Inlet Depression Ft.	Pipe Exc (0)	Pipe Bk'fl (0)	Drn Exc (0)	Berm/Dike Exc (0)	Cubic Yard	
Uni Ramp B Sta 12+65 9.59' Rt to	361	1		24	104										III	III	3		X			C-15.91					5.5		5			1546.10	1	15	81	21				CB361 to CB362
Uni Ramp B Sta 13+49 13.74' Rt																																						
Uni Ramp B Sta 13+49 13.74' Rt to	362	1		24	79										III	III	3		X			C-15.91					5.5		5			1545.17	1	15	62	16				CB362 to CB363
Uni Ramp B Sta 14+27 16.86' Rt																																						
Uni Ramp B Sta 14+27 16.86' Rt to	363	2		24	117										II	II	1		X			C-15.91					5.7		5			1544.97	1	15	105	23				CB363 to MH402
2021 Med Sta 1301+30 52' Rt																																						
Uni Ramp B Sta 14+27 29.37' Rt to	364	2		24	11										II	II	1		X			C-15.80	S				5.4		15			1545.00			9	2				CB364 to CB363
Uni Ramp B Sta 14+27 16.86' Rt																																						
Uni Ramp A Sta 12+48 24' Lt to	365	1		24	38										III	III	3		X			C-15.80	S				4.0					1551.13			26	8				CB365 to CB366
Uni Ramp A Sta 12+48 11.5' Rt																																						
Uni Ramp A Sta 12+48 11.5' Rt to	366	1		24	169										III	III	3		X			C-15.91					5.6		15			1551.23	1	25	127	34				CB366 to CB367
2021 Med Sta 1300+00 8' Rt																																						
2021 Med Sta 1300+00 8' Rt to	367	3		24	88										II	II	2		X			C-15.80	S				5.0					1545.09			83	18				CB367 to Jct367
2021 Med Sta 1300+00.82 95.5' Rt																																						
2021 Med Sta 1301+30 67.5' Rt to	368	2		24	23										II	II	1		X			C-15.91					5.8		5			1540.26	1	15	21	5				CB368 to MH402
2021 Med Sta 1301+30 52' Rt																																						
Uni Ramp A Sta 14+40 11.5' Lt to	369	1		24	82										III	III	3		X			C-15.91					7.2		5			1549.28	1	15	65	16				CB369 to CB370
2021 Med Sta 1302+85 85.09' Lt																																						
Sheet Total																																55				579	143			

FILL HEIGHT RANGE TABLE (Ft.)												
RANGE NO.	1	2	3	4	5	6	7	8	9	10	11	12
FILL HEIGHT (Ft.)	>	1	3	5	8	11	15	20	25	30	40	55	70
	≤	3	5	8	11	15	20	25	30	40	55	70	90

⊙ SHOULD FIELD CONDITIONS VARY FROM THE RANGE INDICATED, CONTACT DESIGN FOR RE-EVALUATION OF PIPE DESIGN REQUIREMENTS.

☑ PIPE CORRUGATION			
A	2⅔x½	D	6x2
B	3x1	E	3x1 or 9x2½
C	9x2½		

	NAME	DATE
DESIGN	RSR	4/05
DRAWN	BJP	4/05
CHECKED	CAD	4/05

Stanley Consultants Inc.

ARIZONA DEPARTMENT OF TRANSPORTATION
INTERMODAL TRANSPORTATION DIVISION
ROADWAY DESIGN SERVICES

NEW PIPE SUMMARY SHEET

ROUTE: 202L
LOCATION: RED MTN FWY, POWER ROAD - UNIVERSITY DRIVE

TRACS NO. H 5782 01C | 202-B(007)I

PRELIMINARY
STAGE IV
95% Review
NOT FOR CONSTRUCTION OR RECORDING

DWG NO. C-6.31
___ OF ___

REV. DATE: 01-05-2000

4/22/2005 g:\17888\active\87-85-dsgn\82-gen\05782sp31.dgn

NOTE:
THE ZEROS IN PARENTHESIS (0, 0.0 & 0.00) IN THE HEADING OF SOME OF THE COLUMNS ARE THE RECOMMENDED PRECISION OF THE VALUE TO BE ENTERED IN THE COLUMN.

NOTE:
FOR PIPE CULVERT PLACEMENT SEE STANDARD DRAWING C-13.15

NOTE:
PIPE OPTIONS SELECTED ARE THOSE REQUIRED TO MEET MINIMUM SERVICE LIFE.
SHADED PIPE OPTION FIELDS ARE NOT ALLOWABLE ALTERNATES.

NRCP NRCPCP CHDPEPP

CSP - CORRUGATED STEEL PIPE
CAP - CORRUGATED ALUMINUM PIPE
RCP - REINFORCED CONCRETE PIPE
NRCP - NON-REINFORCED CONCRETE PIPE
NRCPCP - NON-REINFORCED CAST-IN-PLACE CONCRETE PIPE
CHDPEPP - CORRUGATED HIGH DENSITY POLYETHYLENE PLASTIC PIPE

FED.AID.PROJ. NO.	STATE	PROJECT NO.	SHEET NO.	TOTAL SHEETS	AS BUILT
9	ARIZ.	202-B(007)B			
		202 MA 023			

DESCRIPTION								CSP		CAP			RCP						END TREATMENT													QUANTITIES	
Station	Plan Ref No.	⊙ Controlling Fill Height Range	Size, Corrugated in.	Size, Smooth in.	Length (0) Ft.	Skew (0) Degree	☑ Corrugation	Wall Thickness (0.00)	Zinc	Bit. Coated Zinc	Aluminum	Bit. Coated Aluminum	☑ Corrugation	Wall Thickness (0.00)	Uncoated	Bit. Coated	Class - Non Trench	Class - Trench	Class	Min. Wall Thickness (0)	AASHTO M-294 Type C	AASHTO M-294 Type S	C-13.20 & C-13.25	Detail -	Size, (In) Manhole Standard or Detail	End Sec S-Single / D-Double / T-Triple	Location	H (0.0)	L Wing (0.0)	L 18° Slotted Drn (0)	L 24° Slotted Drn (0)	Type	Elev. (0.000)	Depth in.	Depth Ft.	L (0.0)	Inlet Depression Pipe Exc (0)	Pipe Bkfl (0)	Drn Exc (0)	Berm/Dike Exc (0)	REMARKS
																									Each	Ea		Ft.			Crate	Ft.							Catch basin, Manhole, Headwall & Junction Structure							Cubic Yard	
202L Med Sta 1302+85 85.09' Lt to	370	1		24	94											III	III	3		X			C-15.80	S			4.0				1540.28			55	19			CB370 to CB371
202L Med Sta 1302+85 8' Rt																																								
202L Med Sta 1302+85 8' Rt to	371	1		24	85											III	III	3		X			C-15.80	S			4.0				1236.83			74	17			CB371 to Jct371
202L Med Sta 1302+87.5 52' Rt																																								
Uni Ramp A Sta 15+54.65 11.5' Lt to	372	2		24	115											II	II	1		X			C-15.91				6.3	5			1548.98	1	15	108	23			CB372 to CB369
Uni Ramp A Sta 14+40 11.5' Lt																																								
Uni Ramp A Sta 16+69 11.5' Lt to	373	2		24	115											II	II	1		X			C-15.91				6.0	25			1549.28	1	15	99	23			CB373 to CB372
Uni Ramp A Sta 15+54.65 11.5' Lt																																								
Uni Ramp B Sta 17+00 23.5' Lt to	374	3		24	106											II	II	2		X			C-15.91				6.4	15			1544.79	1	15	106	21			CB374 to MH403
202L Med Sta 1304+30 52' Rt																																								
202L Med Sta 1305+91 67.5' Rt to	375	2		24	42											II	II	1		X			C-15.91				5.8	25			1531.04	1	15	34	8			CB375 to CB376
202L Med Sta 1306+33 67.5' Rt																																								
202L Med Sta 1306+33 67.5' Rt to	376	3		24	23											II	II	2		X			C-15.91				5.8	5			1530.64	1	15	25	5			CB376 to Jct376
202L Med Sta 1306+32.93 91.33' Rt																																								
202L Med Sta 1307+31 79.5' Lt to	377	1		24	74											III	III	3		X			C-15.91				5.8	25			1527.49	1	15	62	15			CB377 to CB378
202L Med Sta 1307+31 8' Lt																																								
202L Med Sta 1307+31 8' Lt to	378	4		24	100											III	III			X			C-15.80				6.2				1527.81			124	20			CB378 to MH404
202L Med Sta 1307+34.45 91.90' Rt																																								
Sheet Total																													100						687	151			

REV. DATE: 01-05-2000

FILL HEIGHT RANGE TABLE (Ft.)													
RANGE NO.		1	2	3	4	5	6	7	8	9	10	11	12
FILL HEIGHT (Ft.)	>	1	3	5	8	11	15	20	25	30	40	55	70
	≤	3	5	8	11	15	20	25	30	40	55	70	90

⊙ SHOULD FIELD CONDITIONS VARY FROM THE RANGE INDICATED, CONTACT DESIGN FOR RE-EVALUATION OF PIPE DESIGN REQUIREMENTS.

☑ PIPE CORRUGATION			
A	2½x½	D	6x2
B	3x1	E	3x1 or 9x2½
C	9x2½		

	NAME	DATE
DESIGN	RSA	4/05
DRAWN	B.P.	4/05
CHECKED	CAD	4/05

Stanley Consultants Inc.

ARIZONA DEPARTMENT OF TRANSPORTATION
INTERMODAL TRANSPORTATION DIVISION
ROADWAY DESIGN SERVICES

NEW PIPE SUMMARY SHEET

PRELIMINARY
STAGE IV
95% Review
NOT FOR CONSTRUCTION OR RECORDING

ROUTE	LOCATION
202L	RED MTN FWY, POWER ROAD - UNIVERSITY DRIVE

DWG NO. C-8.32

TRACS NO. H 5782 01C | 202-B(007)B | ___ OF ___

4/22/2005 q:\17000\active\07-ids-design\02-geom\h5782sp32.dgn

NOTE:
THE ZEROS IN PARENTHESIS (0, 0.0 & 0.001 IN THE HEADING OF SOME OF THE COLUMNS ARE THE RECOMMENDED PRECISION OF THE VALUE TO BE ENTERED IN THE COLUMN.

NOTE:
FOR PIPE CULVERT PLACEMENT SEE STANDARD DRAWING C-13.15

NOTE:
PIPE OPTIONS SELECTED ARE THOSE REQUIRED TO MEET MINIMUM SERVICE LIFE.
SHADED PIPE OPTION FIELDS ARE NOT ALLOWABLE ALTERNATES.

CSP - CORRUGATED STEEL PIPE
CAP - CORRUGATED ALUMINUM PIPE
RCP - REINFORCED CONCRETE PIPE
NRCP - NON-REINFORCED CONCRETE PIPE
NRCIPCP - NON-REINFORCED CAST-IN-PLACE CONCRETE PIPE
CHDPEPP - CORRUGATED HIGH DENSITY POLYETHYLENE PLASTIC PIPE

FAP/A.R.A. REGION	STATE	PROJECT NO.	SHEET NO.	TOTAL SHEETS	AS BUILT
9	ARIZ.	202-B(007)I			
		202 MA 023			

DESCRIPTION							CSP			CAP			RCP	NRCP	NRCIPCP	CHDPEPP	END TREATMENT												QUANTITIES	
			In.	In.	Ft.	Degree	In.	Coating		In.					In.	Each	Each	Catch basin, Manhole, Headwall & Junction Structure											Cubic Yard	
Station	Plan Ref No.	⊙ Controlling Fill Height Range	Size, Corrugated	Size, Smooth	Length (0)	Skew (0)	☑ Corrugation	Wall Thickness (0.000)	Zinc	Bit. Coated Zinc	Aluminum	Bit. Coated Aluminum	☑ Corrugation	Wall Thickness (0.000)	Uncoated	Bit. Coated	Class - Non Trench	Class - Trench	Class	Min Wall Thickness (0)	AASHTO M-294 Type C	AASHTO M-294 Type S	C-13.20 & C-13.25	Detail -	Size, (w) Manhole	Standard or Detail	End Sec	Ea	S-Single / D-Double / T-Triple	Location	H (0.0)	L Wing (0.0)	L 18" Slotted Drn (0)	L 24" Slotted Drn (0)	Type	Elev. (0.00)	Depth	Inlet Depression	Pipe Exc (0)	Pipe Bkfl (0)	Drn Exc (0)	Bore/Jack Exc (0)	REMARKS
																													Ft.							In.	Ft.					
Unl Ramp B Sta 20+98 73.5' Rt to	379	5		24	154											IV	IV						C-15.91				5.6		10				1549.58	1	20	259	31			CB379 to MH404
202L Med Sta 1301+34.45 96.50' Rt																																									
202L Med Sta 1280+33.35 229.8' Rt to	380	1		24	27											III	III	3		X			D11 D8				-						-			13	5			Jct380 to Jct381
202L Med Sta 1281+20.32 220.52' Rt																																									
76th St Sta 13+84.90 79.94' Lt to	382	4		90	244											III	III						C-18.10				11.7						1592.50			1830	256			MH382 to Jct382, Details
76th St Sta 13+84.56 322.37' Lt																							B-12.50																		C-13.75, D3, D15 & D16
76th St Sta 13+65.58 78.91' Lt to	383	2		90	20											II	II						D11_				-						-			103	21			Jct383 to MH382
76th St Sta 13+84.90 79.94' Lt																																									
76th St Sta 13+84.69 226.8' Lt to	384	5		24	10											IV	IV						C-15.60	S			3.9						1591.69			12	2			CB384 to Jct384
76th St Sta 13+84.69 226.8' Lt																																									
202L Med Sta 1292+95 139' Lt to	385	1		24	160											III	III	3		X			C-15.60	S			4.0						1568.00			106	32			CB385 to CB386
202L Med Sta 1292+25 8' Rt																																									
202L Med Sta 1292+25 8' Rt to	386	1		24	108											III	III	3		X			C-15.60	S			5.2						1568.28			74	22			CB386 to CB387
202L Med Sta 1291+71 97.63' Rt																																									
202L Med Sta 1291+71 97.63' Rt	387	1		24	81											III	III	3		X			C-15.92				4.3		25				1566.50			59	16			CB387 to Jct387
202L Med Sta 1291+03.11 148.58' Rt																																									
202L Med Sta 1290+68 4' Lt to	388	1		24	145											III	III	3		X			C-15.92				5.5		25				1574.79			102	29			CB388 to CB387
202L Med Sta 1291+71 97.63' Rt																																									
Sheet Total																																50					2558	414			

REV. DATE: 01-05-2000

FILL HEIGHT RANGE TABLE (Ft.)												
RANGE NO.	1	2	3	4	5	6	7	8	9	10	11	12
FILL HEIGHT (Ft.)	>	1	3	5	8	11	15	20	25	30	40	55	70
	≤	3	5	8	11	15	20	25	30	40	55	70	90
⊙ SHOULD FIELD CONDITIONS VARY FROM THE RANGE INDICATED, CONTACT DESIGN FOR RE-EVALUATION OF PIPE DESIGN REQUIREMENTS.												

☑ PIPE CORRUGATION			
A	2⅔x½	D	6x2
B	3x1	E	3x1 or 9x2½
C	9x2½		

	NAME	DATE
DESIGN	RSR	4/05
DRAWN	BJP	4/05
CHECKED	CAD	4/05

Stanley Consultants Inc.

ARIZONA DEPARTMENT OF TRANSPORTATION
INTERMODAL TRANSPORTATION DIVISION
ROADWAY DESIGN SERVICES

NEW PIPE SUMMARY SHEET

ROUTE	LOCATION
202L	RED MTN FWY, POWER ROAD - UNIVERSITY DRIVE

TRACS NO. H 5782 01C | 202-B(007)I

PRELIMINARY
STAGE IV
95% Review
NOT FOR CONSTRUCTION OR RECORDING

DWG NO. C-6.35

___ OF ___

4/22/2005 d:\17888\active\87-05-dwgs\82-gen\h5782sp3.dgn

NOTE:
THE ZEROS IN PARENTHESIS (0.0 & 0.00) IN THE HEADING OF SOME OF THE COLUMNS ARE THE RECOMMENDED PRECISION OF THE VALUE TO BE ENTERED IN THE COLUMN.

NOTE:
FOR PIPE CULVERT PLACEMENT SEE STANDARD DRAWING C-13.15

NOTE:
PIPE OPTIONS SELECTED ARE THOSE REQUIRED TO MEET MINIMUM SERVICE LIFE.
SHADED PIPE OPTION FIELDS ARE NOT ALLOWABLE ALTERNATES.

CSP - CORRUGATED STEEL PIPE
CAP - CORRUGATED ALUMINUM PIPE
RCP - REINFORCED CONCRETE PIPE
NRCP - NON-REINFORCED CONCRETE PIPE
NRCIPCP - NON-REINFORCED CAST-IN-PLACE CONCRETE PIPE
CHDPEPP - CORRUGATED HIGH DENSITY POLYETHYLENE PLASTIC PIPE

T.R.A.N. SECTION	STATE	PROJECT NO.	SHEET NO.	TOTAL SHEETS	AS BUILT
9	ARIZ.	202-B(007)I			
		202 MA 023			

Station	Plan Ref No.	⬡ Controlling Fill Height Range	Size, Corrugated	Size, Smooth	Length (0)	Skew (0)	CSP ☑ Corrugation	CSP Wall Thickness (0.000)	CSP Zinc	CSP Bit. Coated Zinc	CSP Aluminum	CAP Bit. Coated Aluminum	CAP ☑ Corrugation	CAP Wall Thickness (0.00)	CAP Uncoated	CAP Bit. Coated	RCP Class - Non Trench	RCP Class - Trench	RCP Class	RCP Min Wall Thickness (0)	NRCIPCP AASHTO M-294 Type C	NRCIPCP AASHTO M-294 Type S	CHDPEPP C-13.20 & C-13.25	CHDPEPP Detail -	End Sec Size, Unl Manhole Standard or Detail	End Sec S-Single / D-Double / T-Triple	End Sec Location	End Sec H (0.0)	End Sec L Wing (0.0)	End Sec L 18" Slotted Drn (0)	End Sec L 24" Slotted Drn (0)	End Sec Type	End Sec Elev. (0.00)	Grate Inlet Depression In.	Grate Inlet Depression Ft.	Pipe Exc (0)	Pipe Bkfl (0)	Drn Exc (0)	Bore/Jack End (0)	REMARKS
				In.	In.	Ft.	Degree																			Each	Ea		Ft.					Grate Ft.							
																																							Catch basin, Manhole, Headwall & Junction Structure						Cubic Yard	
McD Ramp C Sta 5+00 23.5' Lt to	389	1		24	89												III	III	3	X					C-15.92			5.5		10			1591.65			74	18			CB389 to Jct389, Detail D9
McD Ramp C Sta 5+00 116' Lt																									D1 D8															
Ind Ramp B Sta 16+25 23.5' Lt to	390	1		24	74												III	III	3	X					C-15.91			5.5		25			1544.24	1	35	62	15			CB390 to CB374
Ind Ramp B Sta 17+00 23.5' Lt																																								
Mck Rd Detour Sta 40+66.18	391	2	108		160	40° Lt	B	0.11	X		X	B	0.14	X																							312	211			Temporary Culvert
Mck Rd Sta 40+75.85	392	7	108		216	0°	B	0.11	X		X	B	0.14	X																							1327	285			Temporary Culvert
Brn Rd Detour Sta 49+65.57	393	2	108		188	52° Lt	B	0.11	X		X	B	0.14	X																							3556	248			Temporary Culvert
Brn Rd Sta 30+91.22	394	7	108		338	51° Lt	B	0.11	X		X	B	0.14	X																							1164	445			Temporary Culvert
202L Med Sta 1173+00 17' Rt to	395	1		30	22												III	III	2	X					C-15.80	D		4.6					1572.07			23	8			CB395 to CB219
202L Med Sta 1173+00 91.5' Rt																									D1 D6															
McD Rd Detour Sta 8+94.63	396	2	108		125	25° Lt	B	0.11	X		X	B	0.14	X																							737	253			Temporary Culvert
McD Rd Sta 19+34.50	397	7	108		263	21° Lt	B	0.11	X		X	B	0.14	X																							1608	346			Temporary Culvert
Sheet Total																													35						8863	1829			

FILL HEIGHT RANGE TABLE (Ft.)												
RANGE NO.		1	2	3	4	5	6	7	8	9	10	11	12
FILL	>	1	3	5	8	11	15	20	25	30	40	55	70
HEIGHT (Ft.)	≤	3	5	8	11	15	20	25	30	40	55	70	90
⬡ SHOULD FIELD CONDITIONS VARY FROM THE RANGE INDICATED, CONTACT DESIGN FOR RE-EVALUATION OF PIPE DESIGN REQUIREMENTS.													

☑ PIPE CORRUGATION			
A	2⅔x½	D	6x2
B	3x1	E	3x1 or 9x2½
C	9x2½		

	NAME	DATE
DESIGN	RSR	4/05
DRAWN	B.JF	4/05
CHECKED	CAD	4/05

Stanley Consultants inc.

ARIZONA DEPARTMENT OF TRANSPORTATION
INTERMODAL TRANSPORTATION DIVISION
ROADWAY DESIGN SERVICES

NEW PIPE SUMMARY SHEET

PRELIMINARY
STAGE IV
95% Review
NOT FOR CONSTRUCTION OR RECORDING

ROUTE: 202L
LOCATION: RED MTN FWY, POWER ROAD - UNIVERSITY DRIVE

TRACS NO. H 5782 01C | 202-B(007)I | DWG NO. C-6.34 | ___ OF ___

REV. DATE: 01-05-2000

4/22/2005 q:\17868\active\87-85-design\82-gen\h5782sp34.dgn

NOTE:
THE ZEROS IN PARENTHESIS (0, 0.0 & 0.00) IN THE HEADING OF SOME OF THE COLUMNS ARE THE RECOMMENDED PRECISION OF THE VALUE TO BE ENTERED IN THE COLUMN.

NOTE:
FOR PIPE CULVERT PLACEMENT SEE STANDARD DRAWING C-15.15

NOTE:
PIPE OPTIONS SELECTED ARE THOSE REQUIRED TO MEET MINIMUM SERVICE LIFE.
SHADED PIPE OPTION FIELDS ARE NOT ALLOWABLE ALTERNATES.

NRCP NRCIPCP CHDPEPP

CSP - CORRUGATED STEEL PIPE
CAP - CORRUGATED ALUMINUM PIPE
RCP - REINFORCED CONCRETE PIPE
NRCP - NON-REINFORCED CONCRETE PIPE
NRCIPCP - NON-REINFORCED CAST-IN-PLACE CONCRETE PIPE
CHDPEPP - CORRUGATED HIGH DENSITY POLYETHYLENE PLASTIC PIPE

FHWA REGION	STATE	PROJECT NO.	SHEET NO.	TOTAL SHEETS	AS BUILT
9	ARIZ.	202-B(007)B			
		202 MA 023			

DESCRIPTION							CSP					CAP			RCP						END TREATMENT														QUANTITIES	
			in.	in.	Ft.	Degree	in.	Coating				in.									Each	Catch basin, Manhole, Headwall & Junction Structure													Cubic Yard	
																					Ea		Ft.			Grate	Ft.									
Station	Plan Ref No.	⊙ Controlling Fill Height Range	Size, Corrugated	Size, Smooth	Length (0)	Skew (0)	☑ Corrugation	Wall Thickness (0.00)	Zinc	Bit. Coated Zinc	Aluminum	Bit. Coated Aluminum	☑ Corrugation	Wall Thickness (0.00)	Uncoated	Bit. Coated	Class - Non Trench	Class - Trench	Class	Min Wall Thickness (0)	AASHTO M-294 Type C	AASHTO M-294 Type S	C-15.20 & C-15.25 Detail -	Size, (in) Manhole or Detail	Standard or Detail	End Sec	S-Single / D-Double / T-Triple	Location	H (0.0)	L Wing (0.0)	L 18" Slotted Drn (0)	L 24" Slotted Drn (0)	Type	Elev. (0.00)	Depth	Inlet Depression	Pipe Enc (0)	Pipe Bk fl (0)	Drn Enc (0)	Berm/Dike Emb (0)	REMARKS
																																		In.	Ft.					
2021, Med Sta 1295+30 92' Rt to	400	5		24	291										IV	IV							24	C-18.10			15.6					1556.07			511	58			MH400 to MH401
2021, Med Sta 1298+30 92' Rt																																								
2021, Med Sta 1298+30 92' Rt to	401	3		24	292										II	II	2			X			24	C-18.10			9.7					1549.44			365	59			MH401 to MH402
2021, Med Sta 1301+30 92' Rt																																								
2021, Med Sta 1301+30 92' Rt to	402	3		30	300										II	II	2	3		X			24	C-18.10			8.6					1541.88			411	74			MH402 to MH403
2021, Med Sta 1304+30 92' Rt																																								
2021, Med Sta 1304+30 92' Rt to	403	4		30	305										III	III		3		X			24	C-18.10			8.5					1535.77			494	75			MH403 to MH404
2021, Med Sta 1307+34.45 91.9' Rt																																								
2021, Med Sta 1307+34.45 91.9' Rt	-	-		-	-																		24	C-18.10			-					1533.00							MH404, Detail D13
2021, Med Sta 1147+00 92' Lt	-	-		-	-																		24	C-18.10			-					1574.15							MH405, Detail D13
2021, Med Sta 1150+32 92' Lt	-	-		-	-																		24	C-18.10			-					1575.17							MH406, Detail D13
2021, Med Sta 1152+50 92' Lt	-	-		-	-																		24	C-18.10			-					1575.71							MH407, Detail D13
2021, Med Sta 1152+50 345.39' Lt	-	-		-	-																		24	C-18.10			-					1573.12							MH408, Detail D13
Sheet Total																																			1781	266				

FILL HEIGHT RANGE TABLE (Ft.)													
RANGE NO.		1	2	3	4	5	6	7	8	9	10	11	12
FILL HEIGHT (Ft.)	≥	1	3	5	8	11	15	20	25	30	40	55	70
	≤	3	5	8	11	15	20	25	30	40	55	70	90
⊙ SHOULD FIELD CONDITIONS VARY FROM THE RANGE INDICATED, CONTACT DESIGN FOR RE-EVALUATION OF PIPE DESIGN REQUIREMENTS.													

☑ PIPE CORRUGATION			
A	2⅔x½	D	6x2
B	3x1	E	3x1 or 9x2½
C	9x2½		

	NAME	MM
DESIGN	RSR	4/05
DRAWN	S.P	4/05
CHECKED	CAD	4/05

Stanley Consultants inc.

ARIZONA DEPARTMENT OF TRANSPORTATION
INTERMODAL TRANSPORTATION DIVISION
ROADWAY DESIGN SERVICES

NEW PIPE SUMMARY SHEET

PRELIMINARY
STAGE IV
95% Review
NOT FOR CONSTRUCTION OR RECORDING

ROUTE	LOCATION
202L	RED MTN FWY, POWER ROAD - UNIVERSITY DRIVE

DWG NO. C-6.35

TRACS NO. H 5782 01C | 202-B(007)B | ___ OF ___

4/22/2005 d:\17888\active\87-85-dsgn\82-gen\h5782sp35.dgn

REV. DATE: 01-05-2000

NOTE:
THE ZEROS IN PARENTHESIS (0, 0.0 & 0.00) IN THE HEADING OF SOME OF THE COLUMNS ARE THE RECOMMENDED PRECISION OF THE VALUE TO BE ENTERED IN THE COLUMN.

NOTE:
FOR PIPE CULVERT PLACEMENT SEE STANDARD DRAWING C-13.15

NOTE:
PIPE OPTIONS SELECTED ARE THOSE REQUIRED TO MEET MINIMUM SERVICE LIFE.
SHADED PIPE OPTION FIELDS ARE NOT ALLOWABLE ALTERNATES.

CSP - CORRUGATED STEEL PIPE
CAP - CORRUGATED ALUMINUM PIPE
RCP - REINFORCED CONCRETE PIPE
NRCP - NON-REINFORCED CONCRETE PIPE
NRCIPCP - NON-REINFORCED CAST-IN-PLACE CONCRETE PIPE
CHDPEPP - CORRUGATED HIGH DENSTIY POLYETHYLENE PLASTIC PIPE

F.H.W.A. REGION	STATE	PROJECT NO.	SHEET NO.	TOTAL SHEETS	AS BUILT
9	ARIZ.	202-B(007)B			
		202 MA 023			

DESCRIPTION | CSP | CAP | RCP | NRCP | NRCIPCP | CHDPEPP | END TREATMENT | QUANTITIES

Station	Plan Ref No.	Controlling Fill Height Range	Size, Corrugated (In.)	Size, Smooth (In.)	Length (0) (Ft.)	Skew (0) (Degree)	Class - Non Trench	Class - Trench	Class	AASHTO M-294 Type S	Size, (in)	Standard or Detail	H (0.0)	L Wing (0.0)	Elev. (0.00)	Depth (In.)	L (0.0) (Ft.)	REMARKS
McD Rd Sta Rd Sta 13+35 70' Rt	701	4		24	75		III	III	3	X	24	C-18.10	10.2		1,601.38			MH 701 to JCT 701
to McD Rd Sta Rd Sta 12+97.83 134.83' Rt																		
McD Rd Sta 12+50 53.33' Rt	702	4		24	87		III	III	3	X	24	C-18.10	10.2		1,601.85			MH 702 to MH 701
to McD Rd Sta 13+35 70' Rt																		
McD Rd Sta 10+16 45.5' Rt	703	4		24	234		III	III	3	X		C-15.20	6.9	11.5	1,599.22	1	12	CB 703 to MH 702
to McD Rd Sta 12+50 53.33' Rt																		
McD Rd Sta 9+64 45.5' Rt	704	2		24	52		II	II	1	X		C-15.20	6.5		1,599.12	1	4	CB 704 to CB 703
to McD Rd Sta 10+16 45.5' Rt																		
McD Rd Sta 9+12 45.5' Rt	705	1		24	52		III	III	3	X		C-15.20	5.7	7.5	1,599.22	1	8	CB 705 to CB 704
to McD Rd Sta 9+64 45.5' Rt																		
McD Rd Sta 7+40 45.5' Rt	706	1		24	172		III	III	3	X		C-15.20	5.1	19.5	1,601.02	1	16	CB 706 to CB 705
to McD Rd Sta 9+12 45.5' Rt																		
McD Rd Sta 13+35 50.5' Rt	707	1		24	16		III	III	3	X		C-15.20	5.6	11.5	1,602.14	1	12	CB 707 to MH 701
to McD Rd Sta 13+35 70' Rt																		
McD Rd Sta 13+35 50.5' Lt	708	1		24	108		III	III	3	X		C-15.20	5.1	11.5	1,602.14	1	12	CB 708 to CB 707
to McD Rd Sta 13+35 50.5' Rt																		
McD Rd Sta 9+64 45.5' Lt	709	2		24	98		II	II	1	X		C-15.20	6.0		1,599.12	1	4	CB 709 to CB 704
to McD Rd Sta 9+64 45.5' Rt																		
Sheet Total																		

FILL HEIGHT RANGE TABLE (Ft.)													
RANGE NO.		1	2	3	4	5	6	7	8	9	10	11	12
FILL	>	1	3	5	8	11	15	20	25	30	40	55	70
HEIGHT (Ft.)	≤	3	5	8	11	15	20	25	30	40	55	70	90

SHOULD FIELD CONDITIONS VARY FROM THE RANGE INDICATED, CONTACT DESIGN FOR RE-EVALUATION OF PIPE DESIGN REQUIREMENTS.

PIPE CORRUGATION			
A	2⅔x½	D	6x2
B	3x1	E	3x1 or 9x2½
C	9x2½		

REV. DATE: 01-05-2000

	NAME	DATE
DESIGN	DJO	4/05
DRAWN	WJP	4/05
CHECKED	CAD	4/05

Stanley Consultants inc.

ARIZONA DEPARTMENT OF TRANSPORTATION
INTERMODAL TRANSPORTATION DIVISION
ROADWAY DESIGN SERVICES

NEW PIPE SUMMARY SHEET

PRELIMINARY
STAGE IV
95% Review
NOT FOR CONSTRUCTION OR RECORDING

ROUTE 202L
LOCATION RED MTN FWY, POWER ROAD - UNIVERSITY DRIVE
DWG NO. G-6J01
TRACS NO. H 5782 01C
202-B(007)B
___ OF ___

NOTE:
THE ZEROS IN PARENTHESIS (0, 0.0 & 0.000) IN THE HEADING OF SOME OF THE COLUMNS ARE THE RECOMMENDED PRECISION OF THE VALUE TO BE ENTERED IN THE COLUMN.

NOTE:
FOR PIPE CULVERT PLACEMENT SEE STANDARD DRAWING C-15.15

NOTE:
PIPE OPTIONS SELECTED ARE THOSE REQUIRED TO MEET MINIMUM SERVICE LIFE.
SHADED PIPE OPTION FIELDS ARE NOT ALLOWABLE ALTERNATES.

NRCP | NRCIPCP | CHDPEPP

CSP - CORRUGATED STEEL PIPE
CAP - CORRUGATED ALUMINUM PIPE
RCP - REINFORCED CONCRETE PIPE
NRCP - NON-REINFORCED CONCRETE PIPE
NRCIPCP - NON-REINFORCED CAST-IN-PLACE CONCRETE PIPE
CHDPEPP - CORRUGATED HIGH DENSITY POLYETHYLENE PLASTIC PIPE

FHWA REGION	STATE	PROJECT NO.	SHEET NO.	TOTAL SHEETS	AS BUILT
9	ARIZ.	202-B(007)R			
		202 MA 023			

DESCRIPTION							CSP			CAP			RCP					END TREATMENT											QUANTITIES	
Station	Plan Ref No.	⬡ Controlling F/H Height Range	Size, Corrugated	Size, Smooth	Length (ft)	Skew (0)	☑ Corrugation	Wall Thickness (0.000)	Zinc	Bit. Coated Zinc	Aluminum	Bit. Coated Aluminum	☑ Corrugation	Wall Thickness (0.000)	Uncoated	Bit. Coated	Class - Non Trench	Class - Trench	Class	Min Wall Thickness (0)	AASHTO M-294 Type C	AASHTO M-294 Type S	C-15.20 & C-15.25 Detail -	Size, (in) Manhole	Standard or Detail	End Spc	S-Single / D-Double / T-Triple	Location	H (0.0)	L Wing (0.0)	L 18" Slotted Drn (0)	L 24" Slotted Drn (0)	Type	Elev. (0.00)	Inlet Depression Depth	Inlet Depression L (0.0)	Pipe Exc (0)	Pipe Bkfl (0)	Drn Exc (0)	Berm/Dike Exc (0)	REMARKS
			In.	In.	Ft.	Degree																				Each	Ea		Ft.			Grate		Ft.					Cubic Yard	
McD Rd Sta 9+12 45.5' Lt	710	2		24	52											II	II	I			X			C-15.20				5.9	7.5				1,599.22	1	8					CB 710 to CB 709
to McD Rd Sta 9+64 45.5' Lt																																							
McD Rd Sta 8+49.61 68.88' Lt	711	2		24	65											II	II	I			X			C-15.20				5.3					1,599.40							MH 711 to CB 710
to McD Rd Sta 9+12 45.5' Lt																																							
McD Rd Sta 10+16 45.5' Lt	712	1		24	52											III	III	3			X			C-15.20				5.1	11.5				1,599.22	1	12					CB 712 to CB 709
to McD Rd Sta 9+64 45.5' Lt																																							
McD Rd Sta 18+75 59' Rt	713	6		24	126											IV	IV							C-15.30				22.4					1,604.20	1	4					CB 713 to JCT 713
to McD Rd 18+75.0 117' Rt																								C-13.25															
McD Rd Sta 22+50.0 63.5' Rt	714	4		24	118											III	III	3					24	C-18.10				11.3					1,595.64							MH 714 to CB 109
to 202L Med Sta 1089+34.0 104' Rt																																							
McD Rd Sta 23+85 60' Rt	715	4		24	135											III	III	3			X		24	C-18.10				5.1					1,590.15							MH 715 to MH 714
to McD Rd Sta 22+50.0 63.5' Rt																																							
McD Rd Sta 22+50 48.41' Rt	716	1		24	14											III	III	3			X			C-15.30				4.6					1,595.21	1	4					CB 716 to MH 714
to McD Rd Sta 22+50.0 63.5' Rt																																							
McD Rd Sta 21+10 52' Lt	717	1		24	173											III	III	3			X			C-15.30				4.6					1,599.62	1	4					CB 717 to CB 716
to McD Rd Sta 22+50 48.41' Rt																																							
McD Rd Sta 23+85 45.2' Rt	718	1		24	14											III	III	3			X			C-15.30				4.6					1,589.51	1	4					CB 718 to MH 715
to McD Rd Sta 23+85 60' Rt																																							
Sheet Total																																							

REV. DATE: 01-05-2000

FILL HEIGHT RANGE TABLE (Ft.)													
RANGE NO.		1	2	3	4	5	6	7	8	9	10	11	12
FILL HEIGHT (Ft.)	>	1	3	5	8	11	15	20	25	30	40	55	70
	≤	3	5	8	11	15	20	25	30	40	55	70	90

⬡ SHOULD FIELD CONDITIONS VARY FROM THE RANGE INDICATED, CONTACT DESIGN FOR RE-EVALUATION OF PIPE DESIGN REQUIREMENTS.

☑ PIPE CORRUGATION				
A	2⅔x½	D	6x2	
B	3x1	E	3x1 or 9x2½	
C	9x2½			

	NAME	DATE
DESIGN	DJO	4/05
DRAWN	BJP	4/05
CHECKED	CAD	4/05

Stanley Consultants inc.

ARIZONA DEPARTMENT OF TRANSPORTATION
INTERMODAL TRANSPORTATION DIVISION
ROADWAY DESIGN SERVICES

NEW PIPE SUMMARY SHEET

ROUTE	LOCATION
202L	RED MTN FWY, POWER ROAD - UNIVERSITY DRIVE

TRACS NO. H 5782 01C | 202-B(007)R

PRELIMINARY
STAGE IV
95% Review
NOT FOR CONSTRUCTION OR RECORDING

DWG NO. C-6.102

___ OF ___

4/22/2005 q:\17888\active\87-85-dsgn\82-gen\h5782sps82.dgn

NOTE:
THE ZEROS IN PARENTHESIS (0, 0.0 & 0.00) IN THE HEADING OF SOME OF THE COLUMNS ARE THE RECOMMENDED PRECISION OF THE VALUE TO BE ENTERED IN THE COLUMN.

NOTE:
FOR PIPE CULVERT PLACEMENT SEE STANDARD DRAWING C-13.15

NOTE:
PIPE OPTIONS SELECTED ARE THOSE REQUIRED TO MEET MINIMUM SERVICE LIFE.
SHADED PIPE OPTION FIELDS ARE NOT ALLOWABLE ALTERNATES.

CSP - CORRUGATED STEEL PIPE
CAP - CORRUGATED ALUMINUM PIPE
RCP - REINFORCED CONCRETE PIPE
NRCP - NON-REINFORCED CONCRETE PIPE
NRCIPCP - NON-REINFORCED CAST-IN-PLACE CONCRETE PIPE
CHDPEPP - CORRUGATED HIGH DENSTIY POLYETHYLENE PLASTIC PIPE

F.H.W.A. REGION	STATE	PROJECT NO.	SHEET NO.	TOTAL SHEETS	AS BUILT
9	ARIZ.	202-B(007)B			
		202 MA 023			

DESCRIPTION: Station	Plan Ref No.	Controlling Fill Height Range	Size, Corrugated (In.)	Size, Smooth (In.)	Length (0) (Ft.)	Skew (0) (Degree)	RCP: Class - Non Trench	RCP: Class - Trench	NRCP: Class	AASHTO M-294 Type S	END TREATMENT: Standard or Detail	H (0.0)	L Wing (0.0)	Elev. (0.00)	Depth (In.)	L (0.0) (Ft.)	REMARKS
McD Rd Sta 23+40 51.22' Lt	719	1		24	114		III	III	3	X	C-15.30	4.6		1,591.39	1	4	CB 719 to CB 718
to McD Rd Sta 23+85 45.7' Rt																	
McK Rd Sta 33+00 54.55' Rt	750	6		24	139		IV	IV			C-15.20	8.2	19.5	1591.42	1	12.3	CB 750 to JCT 750
to McK Rd Sta 33+98 158' Rt											C-13.75						
McK Rd Sta 33+00 51.49' Lt	751	3		24	115		II	II	2	X	C-15.20	7.7	19.5	1591.49	1	12	CB 751 to CB 750
to McK Rd Sta 33+00 54.55' Rt																	
McK Rd Sta 31+84 46.2' Lt	752	2		24	116		II	II	1	X	C-15.20	6.1	11.5	1590.52	1	8	CB 752 to CB 751
to McK Rd Sta 33+00 51.49' Lt																	
McK Rd Sta 31+44 44.2' Lt	753	2		24	40		II	II	1	X	C-15.20	5.8		1590.46	1	4	CB 753 to CB 752
to McK Rd Sta 31+84 46.2' Lt																	
McK Rd Sta 31+37 51.64' Rt	754	1		24	103		III	III	3	X	C-15.20	5.2	3.5	1590.30	1	4	CB 754 to CB 753
to McK Rd Sta 31+44 44.2' Lt																	
McK Rd Sta 31+37 79' Rt	755	1		24	20		III	III	3	X	C-15.80	4.9		1590.60			CB 755 to CB 754
to McK Rd Sta 31+37 51.64' Rt																	
McK Rd Sta 30+79 46.35' Lt	756	1		24	65		III	III	3	X	C-15.20	5.0	7.5	1590.52	1	8	CB 756 to CB 753
to McK Rd Sta 31+44 44.2' Lt																	
McK Rd Sta 30+89 50.68' Rt	757	1		24	48		III	III	3	X	C-15.20	5.0	19.5	1590.40	1	15	CB 757 to CB 754
to McK Rd Sta 31+37 51.64' Rt																	
Sheet Total																	

FILL HEIGHT RANGE TABLE (Ft.)													
RANGE NO.		1	2	3	4	5	6	7	8	9	10	11	12
FILL	>	1	3	5	8	11	15	20	25	30	40	55	70
HEIGHT (Ft.)	≤	3	5	8	11	15	20	25	30	40	55	70	90

SHOULD FIELD CONDITIONS VARY FROM THE RANGE INDICATED, CONTACT DESIGN FOR RE-EVALUATION OF PIPE DESIGN REQUIREMENTS.

PIPE CORRUGATION			
A	2⅔x½	D	6x2
B	3x1	E	3x1 or 9x2½
C	9x2½		

	NAME	DATE
DESIGN	DJO	4/05
DRAWN	BJP	4/05
CHECKED	CAD	4/05

Stanley Consultants inc.

ARIZONA DEPARTMENT OF TRANSPORTATION
INTERMODAL TRANSPORTATION DIVISION
ROADWAY DESIGN SERVICES

NEW PIPE SUMMARY SHEET

PRELIMINARY
STAGE IV
95% Review
NOT FOR CONSTRUCTION OR RECORDING

ROUTE 202L
LOCATION RED MTN FWY, POWER ROAD - UNIVERSITY DRIVE
DWG NO. G-L105
TRACS NO. H 5782 01C
202-B(007)B
___ OF ___

REV. DATE: 01-05-2000

NOTE:
THE ZEROS IN PARENTHESIS (0, 0.0 & 0.00) IN THE HEADING OF SOME OF THE COLUMNS ARE THE RECOMMENDED PRECISION OF THE VALUE TO BE ENTERED IN THE COLUMN.

NOTE:
FOR PIPE CULVERT PLACEMENT SEE STANDARD DRAWING C-13.15

NOTE:
PIPE OPTIONS SELECTED ARE THOSE REQUIRED TO MEET MINIMUM SERVICE LIFE.
SHADED PIPE OPTION FIELDS ARE NOT ALLOWABLE ALTERNATES.

CSP - CORRUGATED STEEL PIPE
CAP - CORRUGATED ALUMINUM PIPE
RCP - REINFORCED CONCRETE PIPE
NRCP - NON-REINFORCED CONCRETE PIPE
NRCIPCP - NON-REINFORCED CAST-IN-PLACE CONCRETE PIPE
CHDPEPP - CORRUGATED HIGH DENSTIY POLYETHYLENE PLASTIC PIPE

F.H.W.A. REGION	STATE	PROJECT NO.	SHEET NO.	TOTAL SHEETS	AS BUILT
9	ARIZ.	202-B(007)B			
		202 MA 023			

DESCRIPTION / CSP / CAP / RCP / NRCP / NRCIPCP / CHDPEPP

Station	Plan Ref No.	⬡ Controlling Fill Height Range	Size, Corrugated (In.)	Size, Smooth (In.)	Length (0) (Ft.)	Skew (0) (Degree)	CSP ☑ Corrugation	CSP Wall Thickness (0.00) (In.)	CSP Zinc	CSP Bit. Coated Zinc	CSP Aluminum	CSP Bit. Coated Aluminum	CAP ☑ Corrugation	CAP Wall Thickness (0.00) (In.)	CAP Uncoated	CAP Bit. Coated	Class - Non Trench	Class - Trench	Class	Min Wall Thickness (0) (In.)	AASHTO M-294 Type C	AASHTO M-294 Type S
76th St Sta 11+98 23.5' Lt	758	5		24	141												IV	IV				
to 76th St Sta 11+98 16.8' Lt																						
76th St Sta 11+98 23.5' Rt	759	1		24	54												III	III	3			X
to 76th St Sta 11+98 23.5' Lt																						
76th St Sta 11+72 23.5' Lt	760	1		24	26												III	III	3			X
to 76th St Sta 11+98 23.5' Lt																						
76th St Sta 12+35 23.5' Lt	761	1		24	37												III	III	3			X
to 76th St Sta 11+98 23.5' Lt																						
76th St Sta 11+72 23.5' Rt	762	1		24	26												III	III	3			X
to 76th St Sta 11+98 23.5' Rt																						
76th St Sta 12+25 23.5' Rt	763	1		24	27												III	III	3			X
to 76th St Sta 11+98 23.5' Rt																						
McK Rd Sta 34+15 31.94' Rt	764	1		24	19												III	III	3			X
to McK Rd Sta 34+31.66 25.60' Rt																						
McK Rd Sta 34+28 37.3' Lt	765	1		24	8												III	III	3			X
to McK Rd Sta 34+21.33 34.17' Lt																						
McK Rd Sta 36+45 80.82' Rt	766	7		24	97												V	V				
to McK Rd Sta 36+05 11.7' Rt																						
Sheet Total																						

END TREATMENT / QUANTITIES

Station	C-13.20 & C-13.25 Detail	Detail -	Size (in) Manhole	Standard or Detail	S-Single / D-Double / T-Triple (Each / Ea)	Location	H (0.0) (Ft.)	L Wing (0.0)	L 18" Slotted Drn (0)	L 24" Slotted Drn (0)	Grate Type	Grate Elev. (0.00) (Ft.)	Inlet Depression Depth (In.)	Inlet Depression L (0.0) (Ft.)	Pipe Exc (0) (Cubic Yard)	Pipe Bkfl (0)	Drn Exc (0)	Berm/Dike Emb (0)	REMARKS
76th St Sta 11+98 23.5' Lt				C-15.20			4.5					1588.35	1	4					CB 758 to JCT 758
to 76th St Sta 11+98 16.8' Lt				C-13.75															
76th St Sta 11+98 23.5' Rt				C-15.20			4.2					1588.35	1	4					CB 759 to CB 758
to 76th St Sta 11+98 23.5' Lt																			
76th St Sta 11+72 23.5' Lt				C-15.20			4.2	3.5				1588.43	1	4					CB 760 to CB 758
to 76th St Sta 11+98 23.5' Lt																			
76th St Sta 12+35 23.5' Lt				C-15.20			4.3	3.5				1588.49	1	4					CB 761 to CB 758
to 76th St Sta 11+98 23.5' Lt																			
76th St Sta 11+72 23.5' Rt				C-15.20			4.2	3.5				1588.43	1	4					CB 762 to CB 759
to 76th St Sta 11+98 23.5' Rt																			
76th St Sta 12+25 23.5' Rt				C-15.20			4.2	3.5				1588.43	1	4					CB 763 to CB 759
to 76th St Sta 11+98 23.5' Rt																			
McK Rd Sta 34+15 31.94' Rt				C-15.20			5.3	3.5				1593.88±	1	4					CB 764 to JCT 764
to McK Rd Sta 34+31.66 25.60' Rt																			
McK Rd Sta 34+28 37.3' Lt				C-15.20			5.8	3.5				1594.01±	1	4					CB 765 to JCT 765
to McK Rd Sta 34+21.33 34.17' Lt																			
McK Rd Sta 36+45 80.82' Rt				C-15.20			7.8	7.5				1597.92±	1	8					CB 766 to JCT 766
to McK Rd Sta 36+05 11.7' Rt				C-13.75															
Sheet Total																			

FILL HEIGHT RANGE TABLE (Ft.)													
RANGE NO.		1	2	3	4	5	6	7	8	9	10	11	12
FILL	>	1	3	5	8	11	15	20	25	30	40	55	70
HEIGHT (Ft.)	≤	3	5	8	11	15	20	25	30	40	55	70	90

⬡ SHOULD FIELD CONDITIONS VARY FROM THE RANGE INDICATED, CONTACT DESIGN FOR RE-EVALUATION OF PIPE DESIGN REQUIREMENTS.

☑ PIPE CORRUGATION			
A	$2\frac{2}{3}$x$\frac{1}{2}$	D	6x2
B	3x1	E	3x1 or 9x2$\frac{1}{2}$
C	9x2$\frac{1}{2}$		

	NAME	DATE
DESIGN	DJO	4/05
DRAWN	BJP	4/05
CHECKED	CAD	4/05

ARIZONA DEPARTMENT OF TRANSPORTATION
INTERMODAL TRANSPORTATION DIVISION
ROADWAY DESIGN SERVICES

Stanley Consultants inc.

NEW PIPE SUMMARY SHEET

PRELIMINARY
STAGE IV
95% Review
NOT FOR CONSTRUCTION OR RECORDING

ROUTE: 202L
LOCATION: RED MTN FWY, POWER ROAD - UNIVERSITY DRIVE
DWG NO. C-5.04

TRACS NO. H 5782 01C | 202-B(007)B | ___ OF ___

REV. DATE: 01-05-2000

4/22/2005 g:\17888\active\87-85-dwgs\82-gen\h5782spsh04.dgn

NOTE:
THE ZEROS IN PARENTHESIS (0, 0.0 & 0.00) IN THE HEADING OF SOME OF THE COLUMNS ARE THE RECOMMENDED PRECISION OF THE VALUE TO BE ENTERED IN THE COLUMN.

NOTE:
FOR PIPE CULVERT PLACEMENT SEE STANDARD DRAWING C-13.15

NOTE:
PIPE OPTIONS SELECTED ARE THOSE REQUIRED TO MEET MINIMUM SERVICE LIFE.
SHADED PIPE OPTION FIELDS ARE NOT ALLOWABLE ALTERNATES.

CSP - CORRUGATED STEEL PIPE
CAP - CORRUGATED ALUMINUM PIPE
RCP - REINFORCED CONCRETE PIPE
NRCP - NON-REINFORCED CONCRETE PIPE
NRCIPCP - NON-REINFORCED CAST-IN-PLACE CONCRETE PIPE
CHDPEPP - CORRUGATED HIGH DENSTIY POLYETHYLENE PLASTIC PIPE

F.H.W.A. REGION	STATE	PROJECT NO.	SHEET NO.	TOTAL SHEETS	AS BUILT
9	ARIZ.	202-B(007)B			
		202 MA 023			

Station	Plan Ref No.	Controlling Fill Height Range	Size, Corrugated (In.)	Size, Smooth (In.)	Length (0) (Ft.)	Skew (0) (Degree)	CSP: Corrugation	CSP: Wall Thickness (0.00)	CSP Coating: Zinc	CSP Coating: Bit. Coated Zinc	CSP Coating: Aluminum	CSP Coating: Bit. Coated Aluminum	CAP: Corrugation	CAP: Wall Thickness (0.00)	CAP: Uncoated	CAP: Bit. Coated	RCP: Class - Non Trench	RCP: Class - Trench	NRCP: Class	NRCIPCP: Min Wall Thickness (0)	CHDPEPP: AASHTO M-294 Type C	CHDPEPP: AASHTO M-294 Type S	End Sec (Each): C-13.20 & C-13.25	End Sec (Each): Detail -	Size (in) Manhole	Standard or Detail	S-Single / D-Double / T-Triple (Ea)	Location	H (0.0) (Ft.)	L Wing (0.0) (Ft.)	L 18" Slotted Drn (0) (Ft.)	L 24" Slotted Drn (0) (Ft.)	Grate Type	Elev. (0.00)	Inlet Depression Depth (In.)	Inlet Depression L (0.0) (Ft.)	Pipe Exc (0) (Cubic Yard)	Pipe Bkfl (0) (Cubic Yard)	Drn Exc (0) (Cubic Yard)	Berm/Dike Emb (0) (Cubic Yard)	REMARKS
McK Rd Sta 37+70 30' Rt	767	3		24	135												II	II	2			X				C-15.20			9.5	7.5				1600.27±	1	8.3					CB 767 to CB 766
to McK Rd Sta 36+45 80.82' Rt																																									
McK Rd Sta 37+65 30' Lt	768	3		24	69												II	II	2			X				C-15.20			9.1	7.5				1600.2±	1	8.3					CB 768 to CB 767
to McK Rd Sta 37+70 30' Rt																																									
McK Rd Sta 36+11 93.63' Lt	769	1		24	167												III	III	3			X				C-15.20			5.2	7.5				1597.17±	1	8					CB 769 to CB 768
to McK Rd Sta 37+65 30' Lt																																									
McK Rd Sta 42+25 30' Lt	770	5		24	127												II	II	2			X				C-15.30			10.3					1599.95	1	4					CB 770 to CB 195
to 202L Med Sta 1503+70, 200' Rt																																									
McK Rd Sta 42+25 30' Lt	771	5		24	31												IV	IV							24	C-18.10			11.3					1601.20							MH 771 to CB 770
to McK Rd Sta 42+25 0' Rt																																									
McK Rd Sta 42+30 30' Rt	772	4		24	31												III	III	3			X				C-15.30			9.2					1599.90	1	4					CB-772 to MH 771
to McK Rd Sta 42+25 0' Rt																																									
McK Rd Sta 43+67 142'Rt	773	1		24	177												III	III	3			X				C-15.80			4.0					1595.60							CB 773 to CB 772
to McK Rd Sta 42+30 30' Rt																																									
McK Rd Sta 44+32.7 0' Rt	774	4		24	208												III	III	3			X			24	C-18.10			4.3					1595.10							MH 771 to CB 774
to McK Rd Sta 42+25 0'Rt																																									
McK Rd Sta 43+50.4 83.5' Lt																										Dtl D10								1597.30							SCUPPER 780
Sheet Total																																									

FILL HEIGHT RANGE TABLE (Ft.)													
RANGE NO.		1	2	3	4	5	6	7	8	9	10	11	12
FILL	>	1	3	5	8	11	15	20	25	30	40	55	70
HEIGHT (Ft.)	≤	3	5	8	11	15	20	25	30	40	55	70	90

SHOULD FIELD CONDITIONS VARY FROM THE RANGE INDICATED, CONTACT DESIGN FOR RE-EVALUATION OF PIPE DESIGN REQUIREMENTS.

PIPE CORRUGATION			
A	2⅔x½	D	6x2
B	3x1	E	3x1 or 9x2½
C	9x2½		

	NAME	DATE
DESIGN	DJO	4/05
DRAWN	BJP	4/05
CHECKED	CAD	4/05

Stanley Consultants INC.

ARIZONA DEPARTMENT OF TRANSPORTATION
INTERMODAL TRANSPORTATION DIVISION
ROADWAY DESIGN SERVICES

NEW PIPE SUMMARY SHEET

ROUTE 202L
LOCATION RED MTN FWY, POWER ROAD - UNIVERSITY DRIVE

PRELIMINARY
STAGE IV
85% Review
NOT FOR CONSTRUCTION OR RECORDING

DWG NO. G-6.105

TRACS NO. H 5782 01C

202-B(007)B

___ OF ___

REV. DATE: 01-05-2000

4/22/2005

NOTE:
THE ZEROS IN PARENTHESIS (0, 0.0 & 0.00) IN THE HEADING OF SOME OF THE COLUMNS ARE THE RECOMMENDED PRECISION OF THE VALUE TO BE ENTERED IN THE COLUMN.

NOTE:
FOR PIPE CULVERT PLACEMENT SEE STANDARD DRAWING C-13.15

NOTE:
PIPE OPTIONS SELECTED ARE THOSE REQUIRED TO MEET MINIMUM SERVICE LIFE.
SHADED PIPE OPTION FIELDS ARE NOT ALLOWABLE ALTERNATES.

NRCP NRCIPCP CHDPEPP

CSP - CORRUGATED STEEL PIPE
CAP - CORRUGATED ALUMINUM PIPE
RCP - REINFORCED CONCRETE PIPE
NRCP - NON-REINFORCED CONCRETE PIPE
NRCIPCP - NON-REINFORCED CAST-IN-PLACE CONCRETE PIPE
CHDPEPP - CORRUGATED HIGH DENSITY POLYETHYLENE PLASTIC PIPE

FHWA REGION	STATE	PROJECT NO.	SHEET NO.	TOTAL SHEETS	AS BUILT
9	ARIZ.	202-B(007)B			
		202 MA 023			

DESCRIPTION								CSP		CAP			RCP				END TREATMENT													QUANTITIES	
			in.	in.	Ft.	Degree		in.	Coating	in.							Each	Ea	Ft.			Grate	Ft.							Cubic Yard	
Station	Plan Ref No.	⊙ Controlling Fill Height Range	Size, Corrugated	Size, Smooth	Length (0)	Skew (0)	☑ Corrugation	Wall Thickness (0.00)	Zinc	Bit. Coated Zinc	Aluminum	Bit. Coated Aluminum	☑ Corrugation	Wall Thickness (0.00)	Uncoated	Bit. Coated	Class - Non Trench	Class - Trench	Class	Min Wall Thickness (0)	AASHTO M-294 Type S	AASHTO M-294 Type C	C-13.20 & C-13.25	Detail -	Size, (in) Manhole Standard or Detail	End Sec S-Single / D-Double / T-Triple	Location	H (0.0)	L Wing (0.0)	L 18" Slotted Drn (0)	L 24" Slotted Drn (0)	Type	Elev. (0.00)	Depth	L (0.0)	Inlet Depression	Pipe Exc (0)	Pipe Bkfl (0)	Drn Exc (0)	Berm/Dike Emb (0)	REMARKS
McK Rd Sta 43+88.3 94.8' Lt																								D11 D10							1596.40								SCUPPER 781
Brn Rd Sta 13+68 45.5' Rt	850	1		24	15												III	III	3		X			C-15.20			5.1	11.5				1,599.81	1	12						CB 850 to JCT 850
to Brn Rd Sta 13+84 46.26' Rt																																							
Brn Rd Sta 13+90 45.5' Lt	851	1		24	35												III	III	3		X			C-15.20			5.0	11.5				1,599.71	1	12						CB 851 to JCT 851
to Brn Rd Sta 14+24.57 44.66' Lt																																							
Brn Rd Sta 17+90 45.5' Lt	852	1		24	106												III	III	3					C-15.20			5.6	11.5				1,596.97	1	12						CB 852 to JCT 852
to Brn Rd Sta 17+90 155' Lt																								C-13.25															
Brn Rd Sta 17+90 45.5' Rt	853	1		24	98												III	III	3		X			C-15.20			5.1	11.5				1,596.97	1	12						CB 853 to CB 852
to Brn Rd Sta 17+90 45.5' Lt																																							
Brn Rd Sta 22+24 51.22' Rt	854	1		24	4												III	III	3		X			C-15.20			5.9	3.5				1594.09±	1	8						CB 854 to JCT 854
to Brn Rd Sta 22+21.38 52.86' Rt																																							
Brn Rd Sta 22+24 30.83' Rt	855	1		24	23												III	III	3		X			C-15.20			6.2	3.5				1594.4±	1	8						CB 855 to CB 854
to Brn Rd Sta 22+24 51.22' Rt																																							
Brn Rd Sta 22+24 38.18' Lt	856	1		24	67												III	III	3		X			C-15.20			5.8	3.5				1594.38±	1	8						CB 856 to CB 855
to Brn Rd Sta 22+24 30.83' Rt																																							
Brn Rd Sta 22+24 63.36' Lt	857	1		24	34												III	III	3		X			C-15.20			5.1					1593.9±	1							CB 857 to CB 856
to Brn Rd Sta 22+24 38.18' Lt																																							
Sheet Total																																							

FILL HEIGHT RANGE TABLE (Ft.)												
RANGE NO.		1	2	3	4	5	6	7	8	9	10	11	12
FILL HEIGHT (F+J)	>	1	3	5	8	11	15	20	25	30	40	55	70
	≤	3	5	8	11	15	20	25	30	40	55	70	90

⊙ SHOULD FIELD CONDITIONS VARY FROM THE RANGE INDICATED, CONTACT DESIGN FOR RE-EVALUATION OF PIPE DESIGN REQUIREMENTS.

☑ PIPE CORRUGATION					
A	2⅔x½	D	6x2		
B	3x1	E	3x1 or 9x2½		
C	9x2½				

REV. DATE: 01-05-2000

	NAME	DATE
DESIGN	DJC	4/05
DRAWN	RJP	4/05
CHECKED	CAD	4/05

Stanley Consultants Inc.

ARIZONA DEPARTMENT OF TRANSPORTATION
INTERMODAL TRANSPORTATION DIVISION
ROADWAY DESIGN SERVICES

NEW PIPE SUMMARY SHEET

PRELIMINARY
STAGE IV
95% Review
NOT FOR CONSTRUCTION OR RECORDING

ROUTE: 202L
LOCATION: RED MTN FWY, POWER ROAD - UNIVERSITY DRIVE
DWG NO. C-6.106

TRACS NO. H 5782 01C | 202-B(007)B | ___ OF ___

4/22/2005 d:\17888\active\87-85-design\82-gen\h5782sp1.dgn

NOTE:
THE ZEROS IN PARENTHESIS (0, 0.0 & 0.00) IN THE HEADING OF SOME OF THE COLUMNS ARE THE RECOMMENDED PRECISION OF THE VALUE TO BE ENTERED IN THE COLUMN.

NOTE:
FOR PIPE CULVERT PLACEMENT SEE STANDARD DRAWING C-13.15

NOTE:
PIPE OPTIONS SELECTED ARE THOSE REQUIRED TO MEET MINIMUM SERVICE LIFE.
SHADED PIPE OPTION FIELDS ARE NOT ALLOWABLE ALTERNATES.

NRCP NRCIPCP CHDPEPP

CSP - CORRUGATED STEEL PIPE
CAP - CORRUGATED ALUMINUM PIPE
RCP - REINFORCED CONCRETE PIPE
NRCP - NON-REINFORCED CONCRETE PIPE
NRCIPCP - NON-REINFORCED CAST-IN-PLACE CONCRETE PIPE
CHDPEPP - CORRUGATED HIGH DENSITY POLYETHYLENE PLASTIC PIPE

F.H.W.A. REGION	STATE	PROJECT NO.	SHEET NO.	TOTAL SHEETS	AS BUILT
9	ARIZ.	202-B(007)B			
		202 MA 023			

DESCRIPTION							CSP			CAP			RCP			END TREATMENT														QUANTITIES	
				in.	in.	Ft.	Degree	in.	Coating	in.						in.	Each		Ea	Catch basin, Manhole, Headwall & Junction Structure		Ft.		Grate	Ft.							Cubic Yard	
Station	Plan Ref No.	⬡ Controlling Fill Height Range	Size, Corrugated	Size, Smooth	Length (0)	Skew (0)	☑ Corrugation	Wall Thickness (0.00)	Zinc	Bit. Coated Zinc	Aluminum	Bit. Coated Aluminum	☑ Corrugation	Wall Thickness (0.00)	Uncoated	Bit. Coated	Class - Non Trench	Class - Trench	Class	Min. Wall Thickness (0)	AASHTO M-294 Type C	AASHTO M-294 Type S	C-13.20 & C-13.25	Detail -	Size, (In) Manhole	End Sec Standard or Detail	S-Single / D-Double / T-Triple	Location	H (0.0)	L Wing (0.0)	L 18" Slotted Drn (0)	L 24" Slotted Drn (0)	Type	Elev. (0.00)	Depth In.	L Ft. (0.0)	Inlet Depression	Pipe Exc (0)	Pipe Bkfl (0)	Drn Exc (0)	Bore/Dike Exc (0)	REMARKS
Brn Rd Sta 24+38.73 80.66' Rt	858	5		24	146										IV	IV								C-15.20				6.6	7.5				1595.56±	1	8						CB 858 to JCT 858
to Brn Rd Sta 23+94.36 223.46' Rt																								C-13.15																	
Brn Rd Sta 23+96.07 92.75' Lt	859	1		24	187										III	III	3					X		C-15.20				5.0	7.5				1594.9±	1	8						CB 859 to CB 858
to Brn Rd Sta 24+38.73 80.66' Rt																																									
Brn Rd Sta 24+10 154' Lt	860	1		24	59										III	III	3					X		C-15.80				4.4					1594.97±								CB 860 to CB 859
to Brn Rd Sta 23+96.07 92.75' Lt																																									
Brn Rd Sta 25+60 30' Rt	861	1		24	132										III	III	3					X		C-15.20				5.5	11.5				1598.07±	1	12						CB 861 to CB 858
to Brn Rd Sta 24+38.73 80.66' Rt																																									
Brn Rd Sta 25+55 30' Lt	862	1		24	69										III	III	3					X		C-15.20				5.0	11.5				1598.01±	1	12						CB 862 to CB 861
to Brn Rd Sta 25+60 30' Rt																																									
Brn Rd Sta 335+00 148' Rt	863	1		24	53										III	III	3					X		C-15.80				4.6					1598.44±								CB 863 to CB 864
to Brn Rd Sta 35+12 58.17' Rt																																									
Brn Rd Sta 35+12 58.17' Rt	864	1		24	190										III	III	3					X		C-15.20				5.5	7.5				1598.52±	1	8						CB 864 to CB 867
to Brn Rd Sta 36+88 55.17' Rt																																									
Brn Rd Sta 33+44 30' Rt	865	1		24	179										III	III	3					X		C-15.20				5.4	7.5				1601.17±	1	8						CB 865 to CB 864
to Brn Rd Sta 35+12 58.17' Rt																																									
Brn Rd Sta 33+38 30' Lt	866	1		24	69										III	III	3					X		C-15.20				5.1	7.5				1601.2±	1	8						CB 866 to CB 865
to Brn Rd Sta 33+44 30' Rt																																									
Sheet Total																																									

REV. DATE: 01-05-2000

FILL HEIGHT RANGE TABLE (Ft.)													
RANGE NO.		1	2	3	4	5	6	7	8	9	10	11	12
FILL HEIGHT (Ft.)	>	1	3	5	8	11	15	20	25	30	40	55	70
	≤	3	5	8	11	15	20	25	30	40	55	70	90
⬡ SHOULD FIELD CONDITIONS VARY FROM THE RANGE INDICATED, CONTACT DESIGN FOR RE-EVALUATION OF PIPE DESIGN REQUIREMENTS.													

☑ PIPE CORRUGATION			
A	2⅔x½	D	6x2
B	3x1	E	3x1 or 9x2½
C	9x2½		

		DATE
DESIGNED	OJO	4/05
DRAWN	B.JP	4/05
CHECKED	CAD	4/05

Stanley Consultants Inc.

ARIZONA DEPARTMENT OF TRANSPORTATION
INTERMODAL TRANSPORTATION DIVISION
ROADWAY DESIGN SERVICES

NEW PIPE SUMMARY SHEET

PRELIMINARY
STAGE IV
95% Review
NOT FOR CONSTRUCTION OR RECORDING

DESIGN	LOCATION
2021	RED MTN FWY, POWER ROAD - UNIVERSITY DRIVE

DRG NO. C-8.107

TRACS NO. H 5782 01C | 202-B(007)B | ___ OF ___

4/22/2005 q:\1788\active\87-85-dsgn\82-gen\h5782sp87.dgn

NOTE:
THE ZEROS IN PARENTHESIS (0, 0.0 & 0.00) IN THE HEADING OF SOME OF THE COLUMNS ARE THE RECOMMENDED PRECISION OF THE VALUE TO BE ENTERED IN THE COLUMN.

NOTE:
FOR PIPE CULVERT PLACEMENT SEE STANDARD DRAWING C-13.15

NOTE:
PIPE OPTIONS SELECTED ARE THOSE REQUIRED TO MEET MINIMUM SERVICE LIFE. SHADED PIPE OPTION FIELDS ARE NOT ALLOWABLE ALTERNATES.

CSP - CORRUGATED STEEL PIPE
CAP - CORRUGATED ALUMINUM PIPE
RCP - REINFORCED CONCRETE PIPE
NRCP - NON-REINFORCED CONCRETE PIPE
NRCIPCP - NON-REINFORCED CAST-IN-PLACE CONCRETE PIPE
CHDPEPP - CORRUGATED HIGH DENSITY POLYETHYLENE PLASTIC PIPE

F.H.W.A. REGION	STATE	PROJECT NO.	SHEET NO.	TOTAL SHEETS	AS BUILT
9	ARIZ.	202-B(007)8			
		202 MA 023			

DESCRIPTION							CSP		CAP		RCP	NRCP	NRCIPCP	CHDPEPP	END TREATMENT														QUANTITIES	
				in.	in.	Ft.	Degree	in.	Coating	in.				in.	Each	Ea	Catch basin, Manhole, Headwall & Junction Structure												Cubic Yard	
Station	Plan Ref No.	⊙ Controlling Fill Height Range	Size, Corrugated	Size, Smooth	Length (0)	Skew (0)	☑ Corrugation	Wall Thickness (0.00)	Zinc	Bit. Coated Zinc	Aluminum	Bit. Coated Aluminum	☑ Corrugation	Wall Thickness (0.00)	Uncoated	Bit. Coated	Class - Non Trench	Class - Trench	Class	Min Wall Thickness (0)	AASHTO M-294 Type C	AASHTO M-294 Type S	C-13.20 & C-13.25	Detail -	Size, Inst Manhole	End Sec Standard or Detail	S-Single / D-Double / T-Triple	Location	H (0.0)	L Wing (0.0)	L 18" Slotted Drn (0)	L 24" Slotted Drn (0)	Type	Elev. (0.00)	Grate Depth	Grate L (0.0)	Inlet Depression	Pipe Exc (0)	Pipe Bkfl (0)	Drn Exc (0)	Berm/Dike Exc (0)	REMARKS
																																		Ft.							
																																		In.	Ft.						
Brn Rd Sta 36+98 55.17' Rt	867	1		24	85			III	III	3													C-15.20				5.4	3.5				1595.16±	1						CB 867 to JCT 867
to Brn Rd Sta 37+13.49 142.88' Rt																							C-13.25																	
Brn Rd Sta 36+98 32' Rt	868	1		24	25			III	III	3											X		C-15.20				5.6	7.5				1595.51±	1	8					CB 868 to CB 867
to Brn Rd Sta 36+98 55.17' Rt																																								
Brn Rd Sta 36+70 29.82' Lt	869	1		24	72			III	III	3											X		C-15.20				5.9	11.5				1596.2±	1	12					CB 869 to CB 868
to Brn Rd Sta 36+98 32' Rt																																								
Brn Rd Sta 36+70 54.6' Lt	870	1		24	24			III	III	3											X		C-15.20				5.5	7.5				1595.87±	1	8					CB 870 to CB 869
to Brn Rd Sta 36+70 29.82' Lt																																								
Brn Rd Sta 34+60 80.55' Lt	871	1		24	212			III	III	3											X		C-15.20				5.0	7.5				1599.33±	1	8					CB 871 to CB 870
to Brn Rd Sta 36+70 54.6' Lt																																								
Brn Rd Sta 49+50 45.5' Lt	876	1		18	365			III	III	3													C-15.20				2.8	19.5				1,558.70	1	29.5					CB 876 to CB 878
to Brn Rd Sta 53+15, 15.51 t																																								
Brn Rd Sta 49+50 45.5' Rt	877	1		15	98			IV	IV														C-15.20				2.5	19.5				1,558.70	1	29.5					CB 877 to CB 876
to Brn Rd Sta 49+50 45.5' Lt																																								
Brn Rd Sta 53+15 45.5' Lt	878	1		18	33			III	III	3													C-15.20				3.0					1,555.25	1	10					CB 878 to MH EXST
to Brn Rd Sta 55+28.89 20' Lt																																								
Sheet Total																																								

REV. DATE: 01-05-2000

FILL HEIGHT RANGE TABLE (Ft.)												
RANGE NO.		1	2	3	4	5	6	7	8	9	10	11	12
FILL HEIGHT (Ft.)	>	1	3	5	8	11	15	20	25	30	40	55	70
	≤	3	5	8	11	15	20	25	30	40	55	70	90

⊙ SHOULD FIELD CONDITIONS VARY FROM THE RANGE INDICATED, CONTACT DESIGN FOR RE-EVALUATION OF PIPE DESIGN REQUIREMENTS.

☑ PIPE CORRUGATION			
A	2⅔x½	D	6x2
B	3x1	E	3x1 or 9x2½
C	9x2½		

	NAME	DATE
DESIGN	DJO	4/05
DRAWN	B.JP	4/05
CHECKED	CAD	4/05

Stanley Consultants Inc.

ARIZONA DEPARTMENT OF TRANSPORTATION
INTERMODAL TRANSPORTATION DIVISION
ROADWAY DESIGN SERVICES

NEW PIPE SUMMARY SHEET

PRELIMINARY
STAGE IV
90% Review
NOT FOR CONSTRUCTION OR RECORDING

ROUTE: 202L | LOCATION: RED MTN FWY, POWER ROAD - UNIVERSITY DRIVE

TRACS NO. H 5782 01C | 202-B(007)8 | DWG NO. C-5.108 | ___ OF ___

4/22/2005 q:\17888\active\87-85-dsgn\82-gen\05782sp1.dgn

REV. DATE: 01-05-2000

NOTE:
THE ZEROS IN PARENTHESIS (0, 0.0 & 0.00) IN THE HEADING OF SOME OF THE COLUMNS ARE THE RECOMMENDED PRECISION OF THE VALUE TO BE ENTERED IN THE COLUMN.

NOTE:
FOR PIPE CULVERT PLACEMENT SEE STANDARD DRAWING C-13.15

NOTE:
PIPE OPTIONS SELECTED ARE THOSE REQUIRED TO MEET MINIMUM SERVICE LIFE.
SHADED PIPE OPTION FIELDS ARE NOT ALLOWABLE ALTERNATES.

CSP - CORRUGATED STEEL PIPE
CAP - CORRUGATED ALUMINUM PIPE
RCP - REINFORCED CONCRETE PIPE
NRCP - NON-REINFORCED CONCRETE PIPE
NRCIPCP - NON-REINFORCED CASY-IN-PLACE CONCRETE PIPE
CHDPEPP - CORRUGATED HIGH DENSTIY POLYETHYLENE PLASTIC PIPE

F.H.W.A. REGION	STATE	PROJECT NO.	SHEET NO.	TOTAL SHEETS	AS BUILT
9	ARIZ.	202-B(007)B			

202 MA 023

DESCRIPTION							CSP						CAP			RCP		NRCP	NRCIPCP	CHDPEPP		END TREATMENT														QUANTITIES				REMARKS
			In.	In.	Ft.	Degree	In.		Coating				In.						In.			Each	Catch basin, Manhole, Headwall & Junction Structure													Cubic Yard				
																					End Sec		Ea			Ft.				Grate	Ft.			Inlet Depression						
																																	In.	Ft.						
Station	Plan Ref No.	⬡ Controlling Fill Height Range	Size, Corrugated	Size, Smooth	Length (0)	Skew (0)	☐ Corrugation	Wall Thickness (0.00)	Zinc	Bit. Coated Zinc	Aluminum	Bit. Coated Aluminum	☐ Corrugation	Wall Thickness (0.00)	Uncoated	Bit. Coated	Class - Non Trench	Class - Trench	Class	Min Wall Thickness (0)	AASHTO M-294 Type C	AASHTO M-294 Type S	C-13.20 & C-13.25	Detail -	Size, (in) Manhole	Standard or Detail	S-Single / D-Double / T-Triple	Location	H (0.0)	L Wing (0.0)	L 18" Slotted Drn (0)	L 24" Slotted Drn (0)	Type	Elev. (0.00)	Depth	L (0.0)	Pipe Exc (0)	Pipe Bkfl (0)	Drn Exc (0)	Berm/Dike Emb (0)
Sheet Total																																								

FILL HEIGHT RANGE TABLE (Ft.)													
RANGE NO.		1	2	3	4	5	6	7	8	9	10	11	12
FILL	>	1	3	5	8	11	15	20	25	30	40	55	70
HEIGHT (Ft.)	≤	3	5	8	11	15	20	25	30	40	55	70	90

⬡ SHOULD FIELD CONDITIONS VARY FROM THE RANGE INDICATED, CONTACT DESIGN FOR RE-EVALUATION OF PIPE DESIGN REQUIREMENTS.

☐ PIPE CORRUGATION			
A	2⅔x½	D	6x2
B	3x1	E	3x1 or 9x2½
C	9x2½		

	NAME	DATE
DESIGN	DJO	4/05
DRAWN	RJP	4/05
CHECKED	CAD	4/05

Stanley Consultants Inc.

ARIZONA DEPARTMENT OF TRANSPORTATION
INTERMODAL TRANSPORTATION DIVISION
ROADWAY DESIGN SERVICES

NEW PIPE SUMMARY SHEET

PRELIMINARY
STAGE IV
95% Review
NOT FOR CONSTRUCTION OR RECORDING

ROUTE 202L
LOCATION RED MTN FWY, POWER ROAD - UNIVERSITY DRIVE

DWG NO. G-6109

TRACS NO. H 5782 01C | 202-B(007)B | ___ OF ___

F.A.U.A. REGION	STATE	PROJECT NO.	SHEET NO.	TOTAL SHEETS	AS BUILT
9	ARIZ.	202-B(007)B			
		202 MA 023			

DESCRIPTION

Plan Ref No. ◯ & (#)	Structure No.	New	Extend	No. of Barrels	Barrel Span (0.0)	Barrel Height (0.0)	Culvert Length (0.0)	Skew (Degree) (0)	B-01.10 Misc Details	B-01.11 Ext Details	☑ Standard or Detail	Station	Existing
1		X		1	12	8	90	0			B-02.10	19+57.75 to 20+50.00	Spook Hill Floodway ℄
2		X		1	16	14	320	25			B-03.10	16+51.17	McDowell Cst ℄
3		X		1	16	14	300	25			B-03.10	15+61.23	McDowell Cst ℄
4		X		1	16	14	260	25			B-03.10	34+28.60	McKellips Cst ℄
5		X		1	16	14	272	25			B-03.10	33+54.05	McKellips Cst ℄
6		X		1	16	14	232	25			B-03.10	21+86.03	Brown Cst ℄
7		X		1	16	14	225	25			B-03.10	21+25.62	Brown Cst ℄
8		X		1	6	6	283	0			B-02.10	1284+47.43	202L Med Cst ℄
9		X		1	10	10	1540					1143+59.27 93.31' Lt to 1155+28.48 635.79' Lt	202L Med Cst ℄

END TREATMENT

Plan Ref No.	▲ Location	WINGS: Inlet Wings	WINGS: Outlet Wings	☑ Standard or Detail	APRONS: Apron	☑ Standard or Detail	Scour/Bank Protection	☑ Standard or Detail	MISC: Energy Dissipators	Detail
1	Inlet									
1	Outlet								X	
2	Inlet	X		D20						
2	Outlet		X	D20						
3	Left	X		D20						
3	Right		X	D20						
4	Left	X		D20						
4	Right									
5	Left	X		D20						
5	Right									
6	Left	X		D20						
6	Right									
7	Left	X		D20						
7	Right									
8	Left	X		B-04.30						
8	Right						X			
9	Inlet									
9	Outlet									
	Left									
	Right									
	Left									
	Right									

LENGTH OF BARREL & BARREL EXTENSIONS

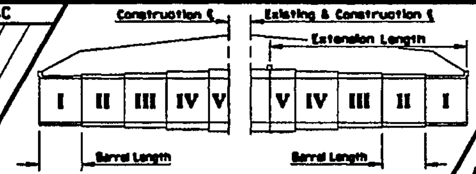

APPROXIMATE QUANTITIES

Plan Ref No.	Location	Linear Feet (0.0) ▲ Left of ℄ I	Left II	Left III	Left IV	Left V	▲ Right of ℄ V	Right IV	Right III	Right II	Right I	Lbs./Ea ⊙ Reinforcing Steel (0)	⊙ Place Dowels	Cubic Yards ⊙ Class S Conc f'c=3,000 psi	⊙ Remove Str Conc (0)	⊙ Str Exc (0)	⊙ Structure Backfill (0)	Berm Exc (0)	Dike Exc (0)	Drainage Exc (0)	REMARKS
1	Inlet	19	13	10								12259		84							Summary Sheet Qtys for Standard
1	Outlet								16	13	27	13853		94							Culvert Section Only. For Details
1	Box Culvert Total											26113		178		1980	1506				See DWG No. F1.1 thru F-1.9
2	Inlet	15	15	33	91							88334		609							Inv = 1569.32
2	Outlet							98	17	35	16	95404		644							Inv = 1569.28
2	Box Culvert Total											183738		1253		3919	5980				
3	Left	31	15	15	79							79272		541							Inv = 1573.22
3	Right							84	23	37	16	91572		616							Inv = 1571.75
3	Box Culvert Total											170844		1157		3272	5590				
4	Left	15	118									75324		448							Inv = 1570.22
4	Right									127		68707		391							Inv = 1570.18
4	Box Culvert Total											144031		839		3339	4758				
5	Left	114										54650		351							Inv = 1574.49
5	Right										158	68888		425							Inv = 1573.15
5	Box Culvert Total											123538		776		2756	4668				
6	Left	16	114									73596		438							Inv = 1571.69
6	Right										102	55182		314							Inv = 1571.65
6	Box Culvert Total											128778		752		3020	4304				
7	Left	116										55522		356							Inv = 1575.68
7	Right										99	43164		267							Inv = 1574.62
7	Box Culvert Total											98686		623		2307	3766				
8	Left	40	20	123								26201		154							Inv = 1568.20
8	Right								36	64		13165		75							Inv = 1567.90
8	Box Culvert Total											39366		229		1043	1180				
9	Inlet		1229.3	62.7	75.5	172.5						587009		2712		17302	14408				
9	Outlet																				
9	Box Culvert Total											587009		2712		17302	14408				
	Left																				
	Right																				
	Box Culvert Total																				
	Left																				
	Right																				
	Box Culvert Total																				
	Sheet Total																				

NOTE:
FOR STRUCTURAL EXCAVATION, STRUCTURE BACKFILL PLACEMENT AND MEASUREMENT, SEE STANDARD DRAWING B-19.50

NOTE:
THE ZEROS IN PARENTHESIS (0, 0.0 & 0.00) IN THE HEADING OF SOME OF THE COLUMNS ARE THE RECOMMENDED PRECISION OF THE VALUE TO BE ENTERED IN THE COLUMN.

⊙ TOTALS SHOWN FOR THE BOX CULVERT INCLUDE THE QUANTITIES FOR HEADWALLS, WINGS, APRONS, CURBS, CUT-OFF WALLS AND LAPS AT CONSTRUCTION JOINTS.

☑ STRUCTURES SECTION STANDARD DRAWINGS JUNE, 1992 (PUBLICATION NO. 31-002) (ENGLISH EDITION)

▲ Construction ℄ Looking Ahead

REV. DATE: 01-05-2000

	NAME	DATE
DESIGN	CJ	4/05
DRAWN	RJP	4/05
CHECKED	CAD	4/05

Stanley Consultants inc.

ARIZONA DEPARTMENT OF TRANSPORTATION
INTERMODAL TRANSPORTATION DIVISION
ROADWAY DESIGN SERVICES

REINFORCED CONC BOX CULVERT AND BOX CULVERT EXTENSION SUMMARY SHEET

PRELIMINARY
STAGE IV
95% Review
NOT FOR CONSTRUCTION OR RECORDING

ROUTE 202L — LOCATION RED MTN FWY, POWER ROAD - UNIVERSITY DRIVE

DWG NO. C-8.1

TRACS NO. H 5782 01C | 202-B(007)B | ___ OF ___

F.H.W.A. REGION	STATE	PROJECT NO.	SHEET NO.	TOTAL SHEETS	AS BUILT
9	ARIZ.	202-B(007)B			

202 MA 023

GENERAL NOTES

1. The information on these drawings concerning the type, size and location of utilities has been shown based on the best information available. The Contractor shall be responsible for the determination of exact location of all existing utility facilities prior to construction. It is the Contractor's responsibility to protect all existing utilities, in place, unless otherwise noted or specified.

2. The Contractor shall contact Blue Stake a minimum of two (2) working days prior to start of digging to locate and flag all underground utilities. It shall further be the Contractor's responsibility to contact Blue Stake in sufficient time to allow flagging to be completed so as not to impede construction.

3. The Contractor shall be responsible to brace and support all existing utilities during construction with either permanent pipe supports or temporary pipe supports in accordance with Std. C-22.20, Sheets 1-3. Pipe supports shall not be a pay item.

4. Limits of grading are indicated by top of cut slopes and toe of fill slopes except where proposed contours are shown.

5. Dimensions shall not be scaled from the drawings.

6. The Contractor shall remove all structures and obstructions within the project right-of-way and temporary construction easements, unless specified otherwise.

7. Concrete lined channel exposed surfaces shall be finished with skateboard/rollerblading surface treatment, except for vertical walls.

8. Water courses that have been determined as Jurisdictional Waters of the United States, by the U.S. Army Corps of Engineers, shall not be blocked or impeded before, during or after construction. Temporary by-pass facilities may need to be constructed.

9. For erosion control, refer to the Erosion Control Plans, Series "E" Drawings.

10. Catch basins with 30" connecting pipes shall have an 8" concrete wall thickness.

11. Non-reinforced cast-in-place concrete pipe, (NRCIPCP), shall not be used for pipe diameters less than 30 inches nor shall it be used for culverts or non-trench conditions.

12. For use of NRCIPCP, the contractor shall review the boring and test pit logs presented in the Final Geotechnical Investigation Report.

13. See Detail D7 for Storm Drain to Catch Basin Connection Detail.

	NAME	DATE
DESIGN	RSR	4/05
DRAWN	COS	4/05
CHECKED	CAD	4/05

Stanley Consultants inc.

ARIZONA DEPARTMENT OF TRANSPORTATION
INTERMODAL TRANSPORTATION DIVISION
ROADWAY DESIGN SERVICES

STORM DRAIN NOTES

PRELIMINARY
STAGE IV
95% Review
NOT FOR CONSTRUCTION OR RECORDING

ROUTE: 202L
LOCATION: RED MTN FWY, POWER ROAD - UNIVERSITY DRIVE

DWG NO. D-L1

TRACS NO. H 5782 01C | 202-B(007)B | ___ OF ___

4/22/2005 q:\17988\active\07-95-dwgs\04-drain\h5782sdn1.dgn

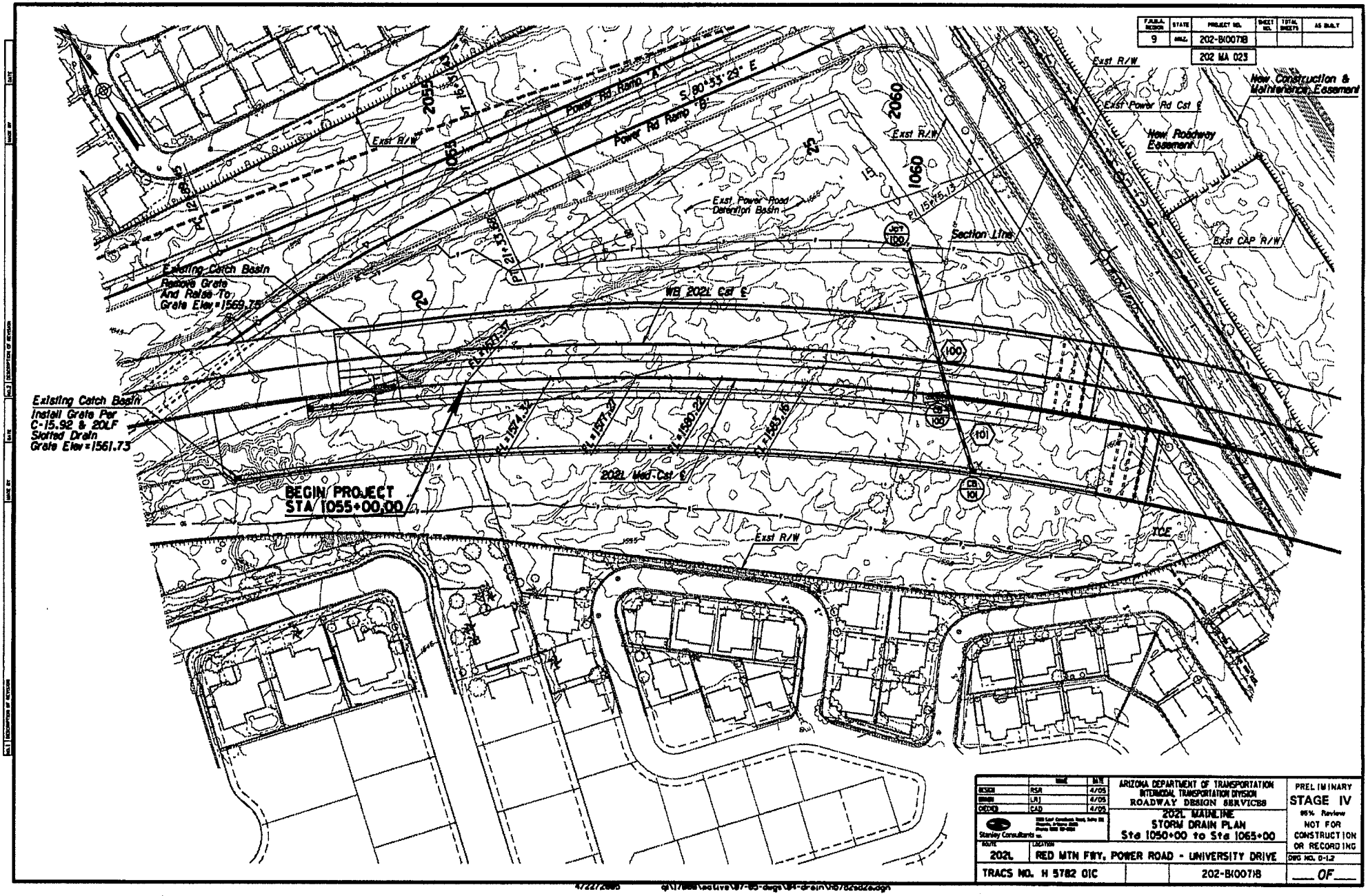

F.A.P.M.A. REGION	STATE	PROJECT NO.	SHEET NO.	TOTAL SHEETS	AS BUILT
9	ARIZ.	202-B(007)B			
		202 MA 023			

	NAME	DATE
DESIGN	RSA	4/05
DRAWN	LRJ	4/05
CHECKED	CAD	4/05

Stanley Consultants Inc.

ARIZONA DEPARTMENT OF TRANSPORTATION
INTERMODAL TRANSPORTATION DIVISION
ROADWAY DESIGN SERVICES

202L MAINE TRE
STORM DRAIN PLAN
Sta 1050+00 to Sta 1065+00

ROUTE	LOCATION
202L	RED MTN FWY, POWER ROAD - UNIVERSITY DRIVE

TRACS NO. H 5782 01C | 202-B(007)B

PRELIMINARY
STAGE IV
95% Review
NOT FOR
CONSTRUCTION
OR RECORDING

DWG NO. D-1.7

___ OF ___

4/22/2005 d:\17888\active\07-80-dwgs\04-drain\05782d22d.dgn

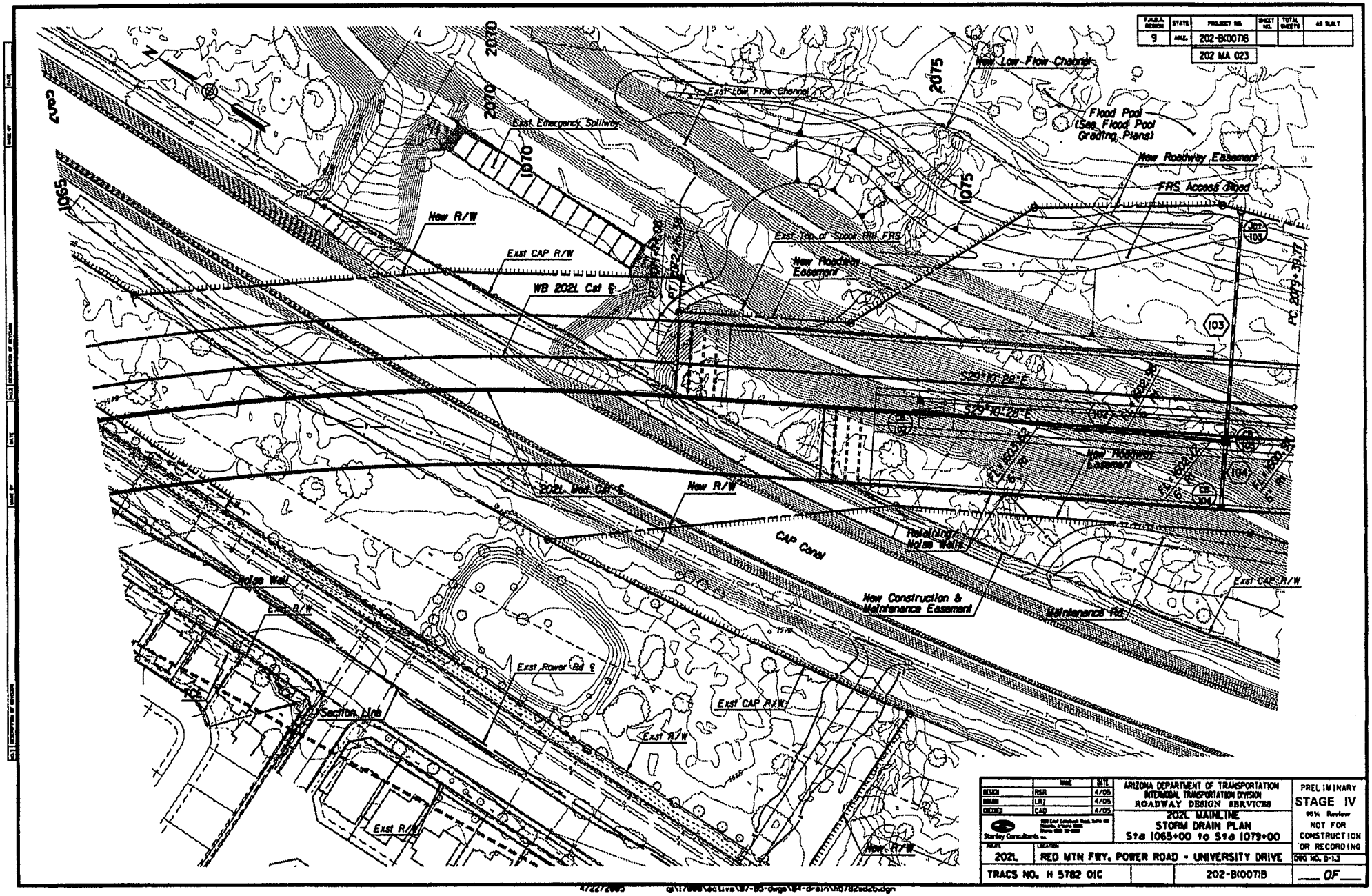

F.A.P.M. REGION	STATE	PROJECT NO.	SHEET NO.	TOTAL SHEETS	AS BUILT
9	ARIZ.	202-B(007)I			
		202 MA 023			

	MADE	DATE
DESIGN	RSR	4/05
DRAWN	LRT	4/05
CHECKED	CAD	4/05

Stanley Consultants Inc.

ARIZONA DEPARTMENT OF TRANSPORTATION
INTERMODAL TRANSPORTATION DIVISION
ROADWAY DESIGN SERVICES

202L MAINLINE
STORM DRAIN PLAN
Sta 1065+00 to Sta 1079+00

ROUTE: 202L
LOCATION: RED MTN FWY, POWER ROAD - UNIVERSITY DRIVE

TRACS NO. H 5782 01C | 202-B(007)B

PRELIMINARY
STAGE IV
95% Review
NOT FOR CONSTRUCTION OR RECORDING

DWG NO. D-1.3

___ OF ___

4/22/2005 @\\17888\active\87-85-dsgn\84-drain\05782d26.dgn

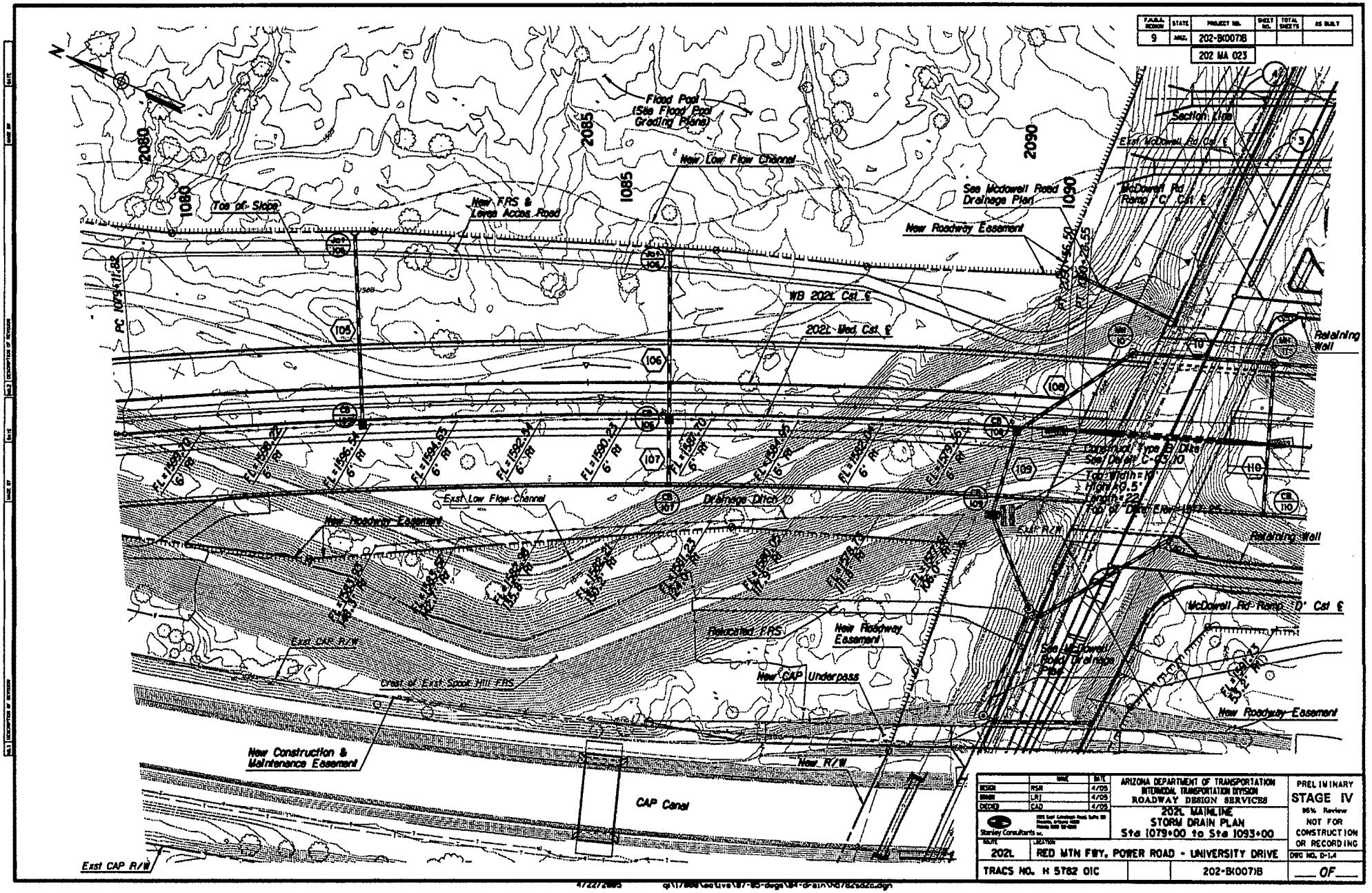

FAP/A. SEQUENCE	STATE	PROJECT NO.	SHEET NO.	TOTAL SHEETS	AS BUILT
9	ARIZ.	202-B(007)I			
		202 MA 023			

	NAME	DATE
DESIGN	MSR	4/05
DRAWN	LRJ	4/05
CHECKED	CAD	4/05

Stanley Consultants Inc.

ARIZONA DEPARTMENT OF TRANSPORTATION
INTERMODAL TRANSPORTATION DIVISION
ROADWAY DESIGN SERVICES

202L MAINLINE
STORM DRAIN PLAN
Sta 1079+00 to Sta 1093+00

PRELIMINARY
STAGE IV
95% Review
NOT FOR CONSTRUCTION OR RECORDING

ROUTE	LOCATION	DWG NO. D-1.4
202L	RED MTN FWY, POWER ROAD - UNIVERSITY DRIVE	
TRACS NO. H 5782 01C	202-B(007)I	OF

4/22/2005 g:\17888\cadd\civil\87-85-dwgs\84-drain\0878dtl02.dgn

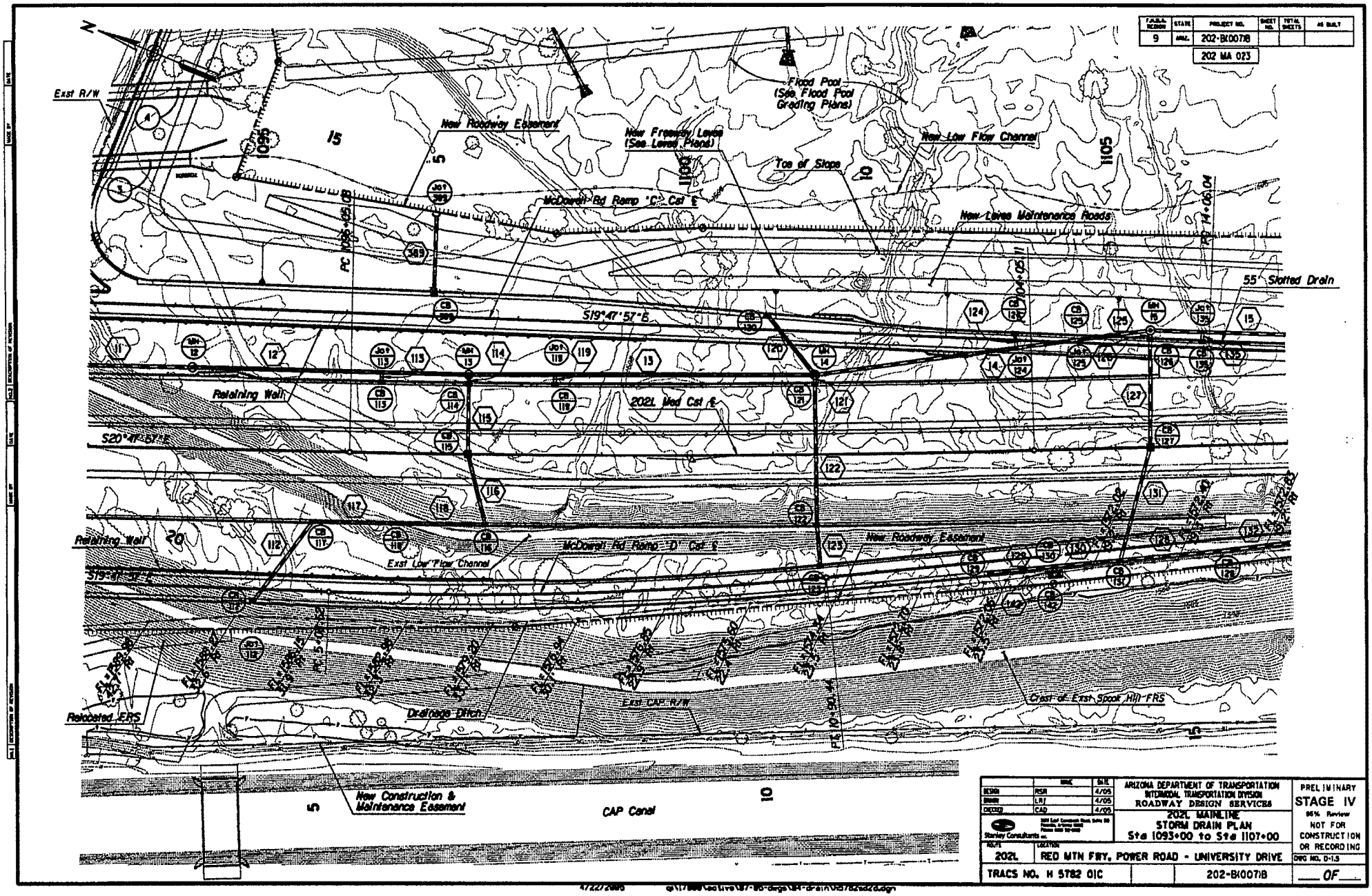

F.A.P.M. REGION	STATE	PROJECT NO.	SHEET NO.	TOTAL SHEETS	AS BUILT
9	ARIZ.	202-B(007)I			

202 MA 023

DESIGN	RSR	4/05	ARIZONA DEPARTMENT OF TRANSPORTATION INTERMODAL TRANSPORTATION DIVISION ROADWAY DESIGN SERVICES
DRAWN	LRT	4/05	
CHECKED	CAD	4/05	
Stanley Consultants Inc.			202L MAINLINE STORM DRAIN PLAN Sta 1093+00 to Sta 1107+00
ROUTE	LOCATION		
202L	RED MTN FWY, POWER ROAD - UNIVERSITY DRIVE		

PRELIMINARY
STAGE IV
95% Review
NOT FOR CONSTRUCTION OR RECORDING

DWG NO. D-1.3

TRACS NO. H 5782 01C | 202-B(007)I | ___ OF ___

4/22/2005 @\\17888\active\87-85-design\84-drain\05782sd2d.dgn

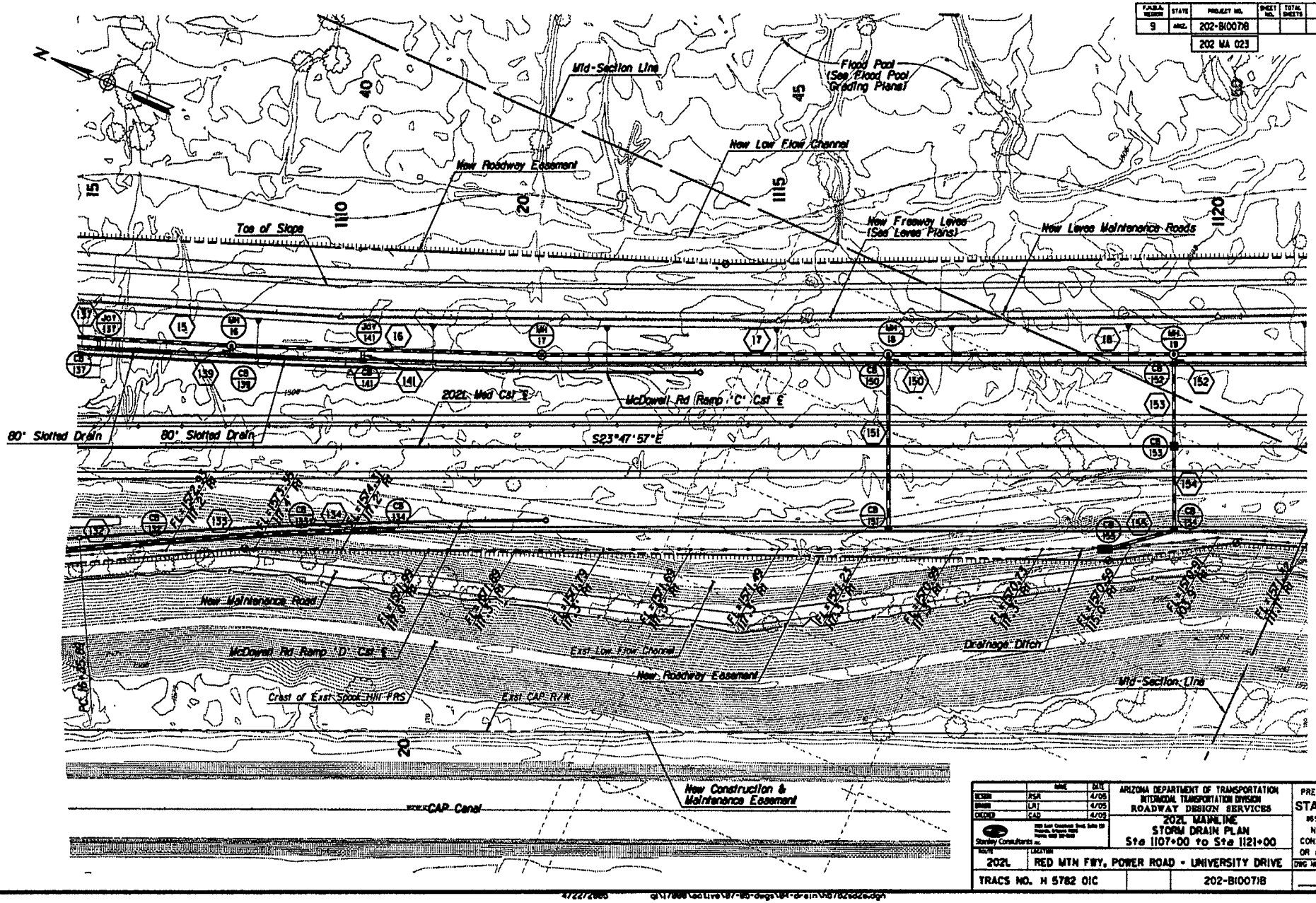

F.A.H.S.R. REGION	STATE	PROJECT NO.	SHEET NO.	TOTAL SHEETS	AS BUILT
9	ARIZ.	202-B(007)8			
		202 MA 023			

	NAME	DATE
DESIGN	RSR	4/05
DRAWN	LRT	4/05
CHECKED	CAD	4/05

Stanley Consultants Inc.

ARIZONA DEPARTMENT OF TRANSPORTATION
INTERMODAL TRANSPORTATION DIVISION
ROADWAY DESIGN SERVICES

202L MAINLINE
STORM DRAIN PLAN
Sta 1107+00 to Sta 1121+00

PRELIMINARY
STAGE IV
95% Review
NOT FOR CONSTRUCTION OR RECORDING

ROUTE	LOCATION	DWG NO. D-1.A
202L	RED MTN FWY, POWER ROAD - UNIVERSITY DRIVE	
TRACS NO. H 5782 01C	202-B(007)8	___ OF ___

4/22/2005 g:\17988\active\07-05-dwgs\04-drain\h5782d02e.dgn

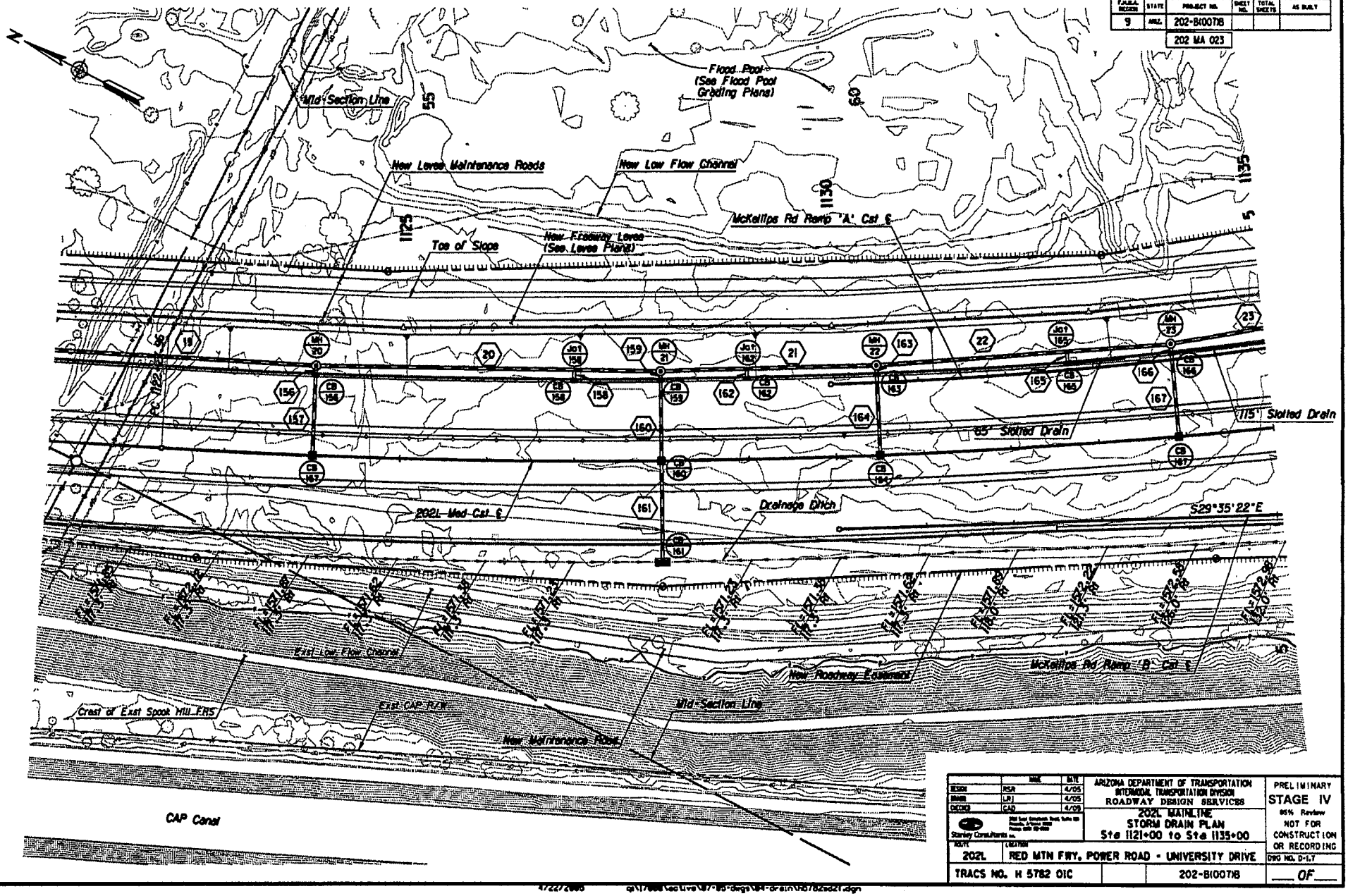

F.A.R.A. REGION	STATE	PROJECT NO.	SHEET NO.	TOTAL SHEETS	AS BUILT
9	ARIZ.	202-B(00)T8			
		202 MA 023			

	BY	DATE
DESIGN	PDR	4/05
DRAWN	LRJ	4/05
CHECKED	CAD	4/05

Stanley Consultants Inc.

ARIZONA DEPARTMENT OF TRANSPORTATION
INTERMODAL TRANSPORTATION DIVISION
ROADWAY DESIGN SERVICES

202L MAINLINE
STORM DRAIN PLAN
Sta 1121+00 to Sta 1135+00

PRELIMINARY
STAGE IV
95% Review
NOT FOR CONSTRUCTION OR RECORDING

ROUTE	LOCATION	DWG NO. D-L7
202L	RED MTN FWY. POWER ROAD - UNIVERSITY DRIVE	
TRACS NO. H 5782 01C		202-B(00)T8 ___ OF ___

4/22/2005 g:\17888\active\87-85-dsgn\84-drain\h5782sd21.dgn

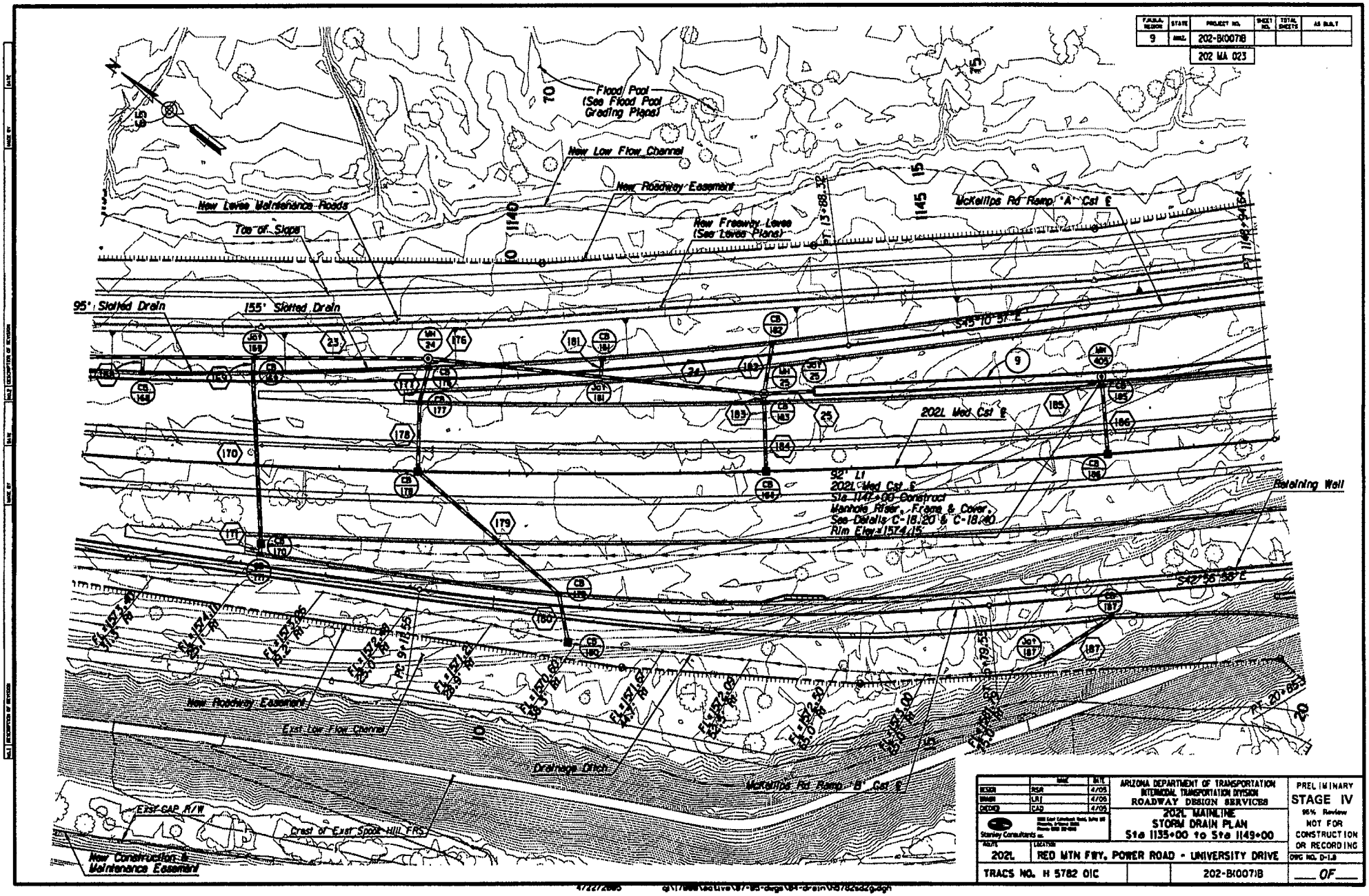

FHWA REGION	STATE	PROJECT NO.	SHEET NO.	TOTAL SHEETS	AS BUILT
9	ARIZ.	202-B(007)I			
		202 MA 023			

	NAME	DATE
DESIGN	RSR	4/05
DRAWN	LAJ	4/05
CHECKED	CAD	4/05

Stanley Consultants Inc.

ARIZONA DEPARTMENT OF TRANSPORTATION
INTERMODAL TRANSPORTATION DIVISION
ROADWAY DESIGN SERVICES

202L MAINLINE
STORM DRAIN PLAN
Sta 1135+00 to Sta 1149+00

PRELIMINARY
STAGE IV
95% Review
NOT FOR CONSTRUCTION OR RECORDING

ROUTE	LOCATION	DWG NO. D-1.8
202L	RED MTN FWY, POWER ROAD - UNIVERSITY DRIVE	
TRACS NO. H 5782 01C	202-B(007)I	OF

4/27/2005 @\17888\active\87-88-dwgs\84-drain\05782d22.dgn

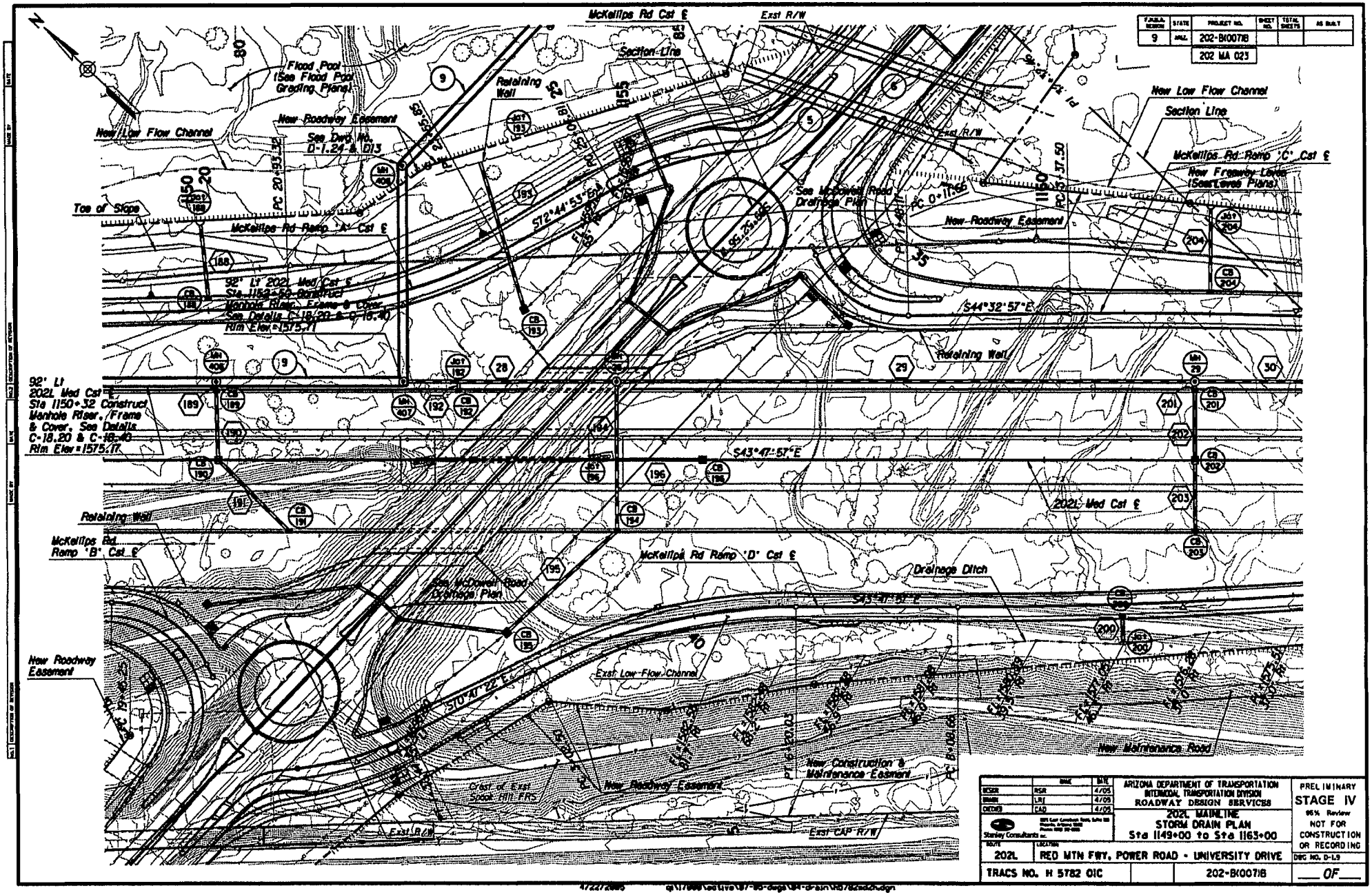

F.A.P. No.	STATE	PROJECT NO.	SHEET NO.	TOTAL SHEETS	AS BUILT
9	ARIZ.	202-B(007)I			
		202 MA 023			

	NAME	DATE
DESIGN	RSR	4/05
DRAWN	LRJ	4/05
CHECKED	CAD	4/05

Stanley Consultants Inc.

ARIZONA DEPARTMENT OF TRANSPORTATION
INTERMODAL TRANSPORTATION DIVISION
ROADWAY DESIGN SERVICES

202L MAINLINE
STORM DRAIN PLAN
Sta 1149+00 to Sta 1163+00

PRELIMINARY
STAGE IV
95% Review
NOT FOR CONSTRUCTION OR RECORDING

ROUTE	LOCATION
202L	RED MTN FWY, POWER ROAD - UNIVERSITY DRIVE

DWG NO. D-1.9

TRACS NO. H 5782 01C | 202-B(007)I | ___ OF ___

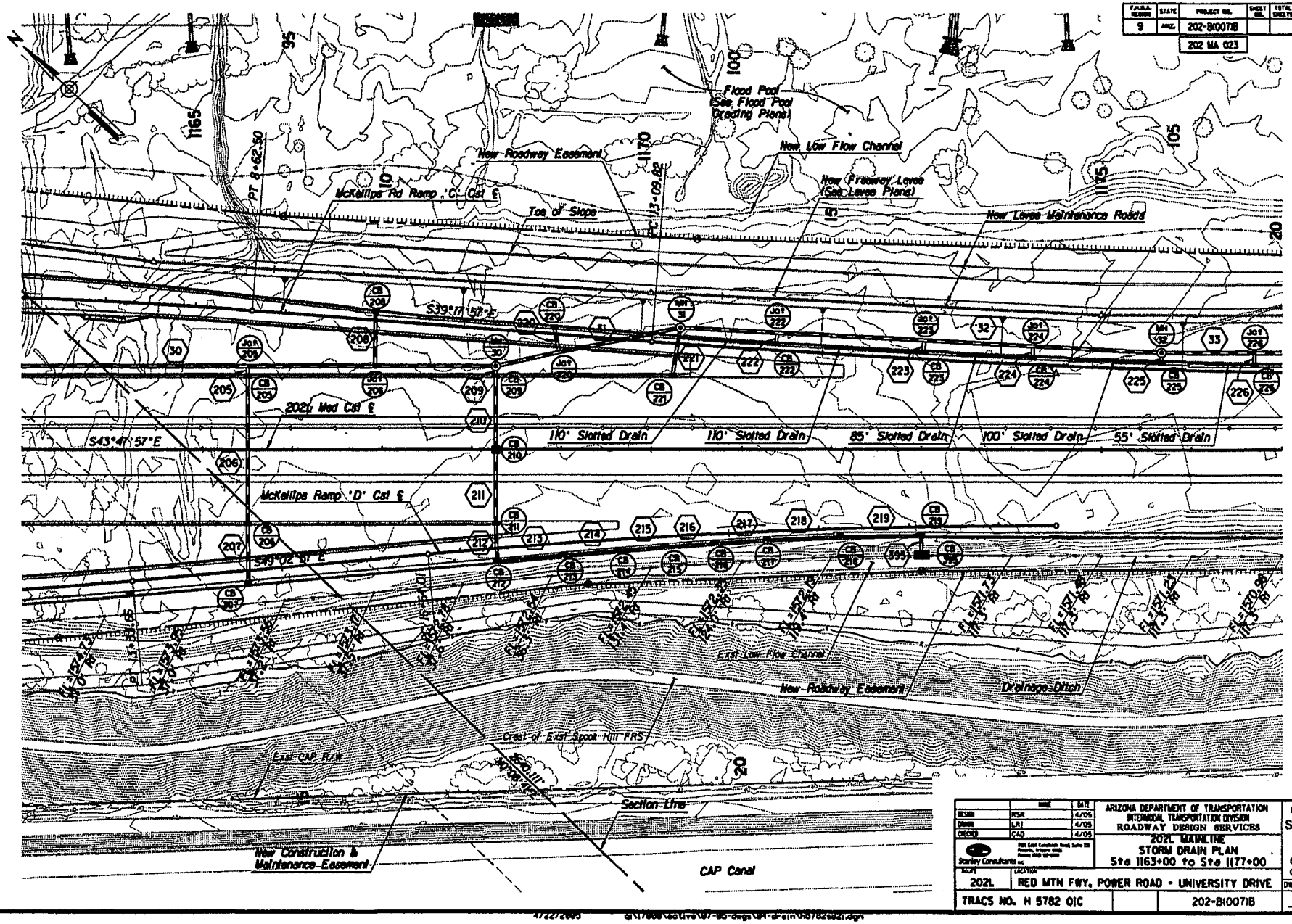

F.A.P. No.	STATE	PROJECT NO.	SHEET NO.	TOTAL SHEETS	AS BUILT
9	ARIZ.	202-B(007)B			
		202 MA 023			

		DATE
DESIGN	RSR	4/05
DRAWN	LRJ	4/05
CHECKED	CAD	4/05

Stanley Consultants Inc.

ARIZONA DEPARTMENT OF TRANSPORTATION
INTERMODAL TRANSPORTATION DIVISION
ROADWAY DESIGN SERVICES

202L MAINLINE
STORM DRAIN PLAN
Sta 1163+00 to Sta 1177+00

ROUTE 202L
LOCATION RED MTN FWY, POWER ROAD - UNIVERSITY DRIVE

TRACS NO. H 5782 01C | 202-B(007)B

PRELIMINARY
STAGE IV
95% Review
NOT FOR CONSTRUCTION OR RECORDING

DWG NO. D-1.10

___ OF ___

4/22/2005 q:\17000\active\07-85-dogs\04-drain\05782d21.dgn

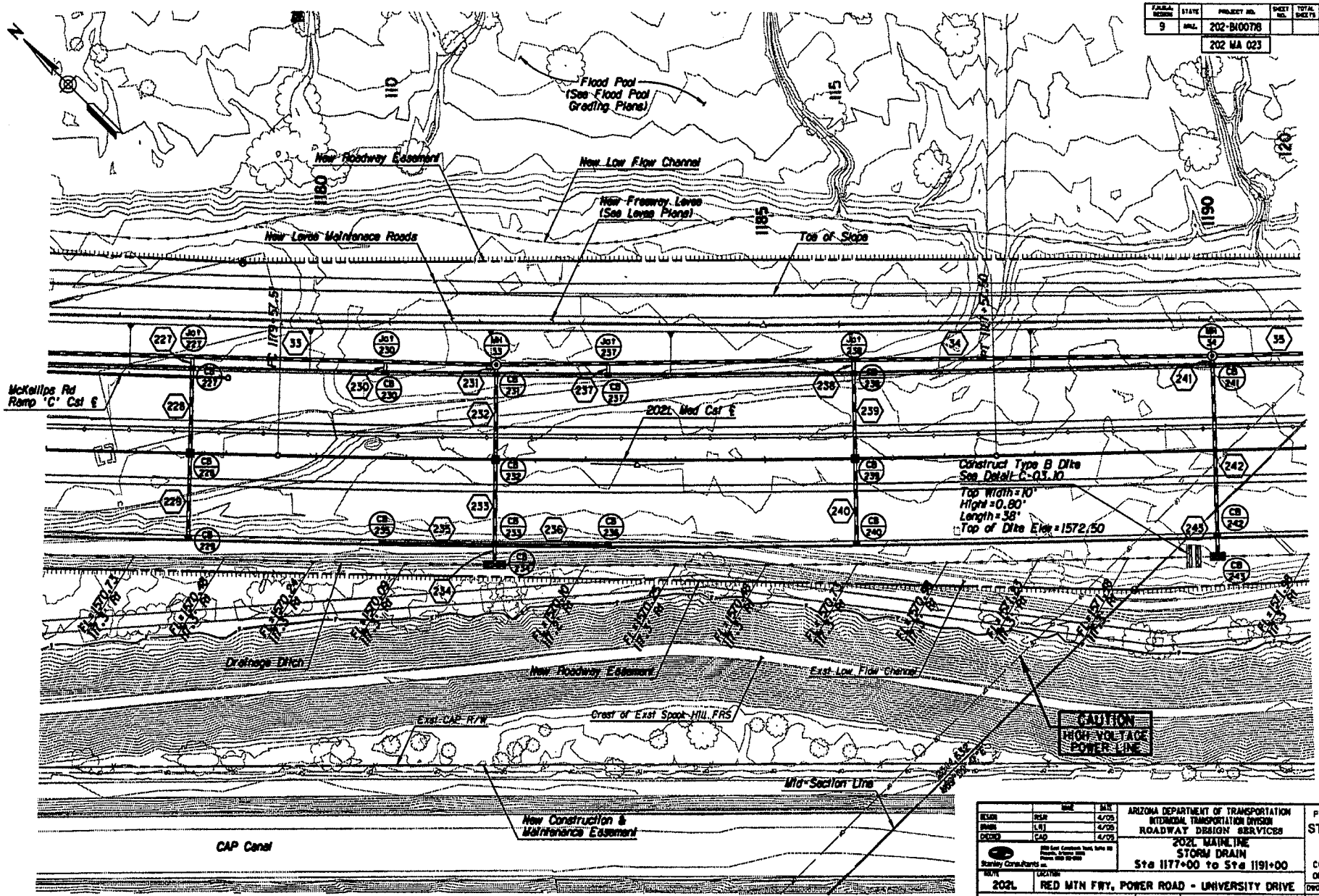

F.A.R.S. SECTION	STATE	PROJECT NO.	SHEET NO.	TOTAL SHEETS	AS BUILT
9	ARIZ.	202-B100718			
		202 MA 023			

	BY	DATE
DESIGN	RSR	4/05
DRAWN	LRJ	4/05
CHECKED	CAD	4/05

Stanley Consultants Inc.

ARIZONA DEPARTMENT OF TRANSPORTATION
INTERMODAL TRANSPORTATION DIVISION
ROADWAY DESIGN SERVICES

202L MAINLINE
STORM DRAIN
Sta 1177+00 to Sta 1191+00

ROUTE: 202L
LOCATION: RED MTN FWY, POWER ROAD - UNIVERSITY DRIVE

PRELIMINARY
STAGE IV
95% Review
NOT FOR CONSTRUCTION OR RECORDING

DWG NO. D-1-11

TRACS NO. H 5782 01C | 202-B100718 | ___ OF ___

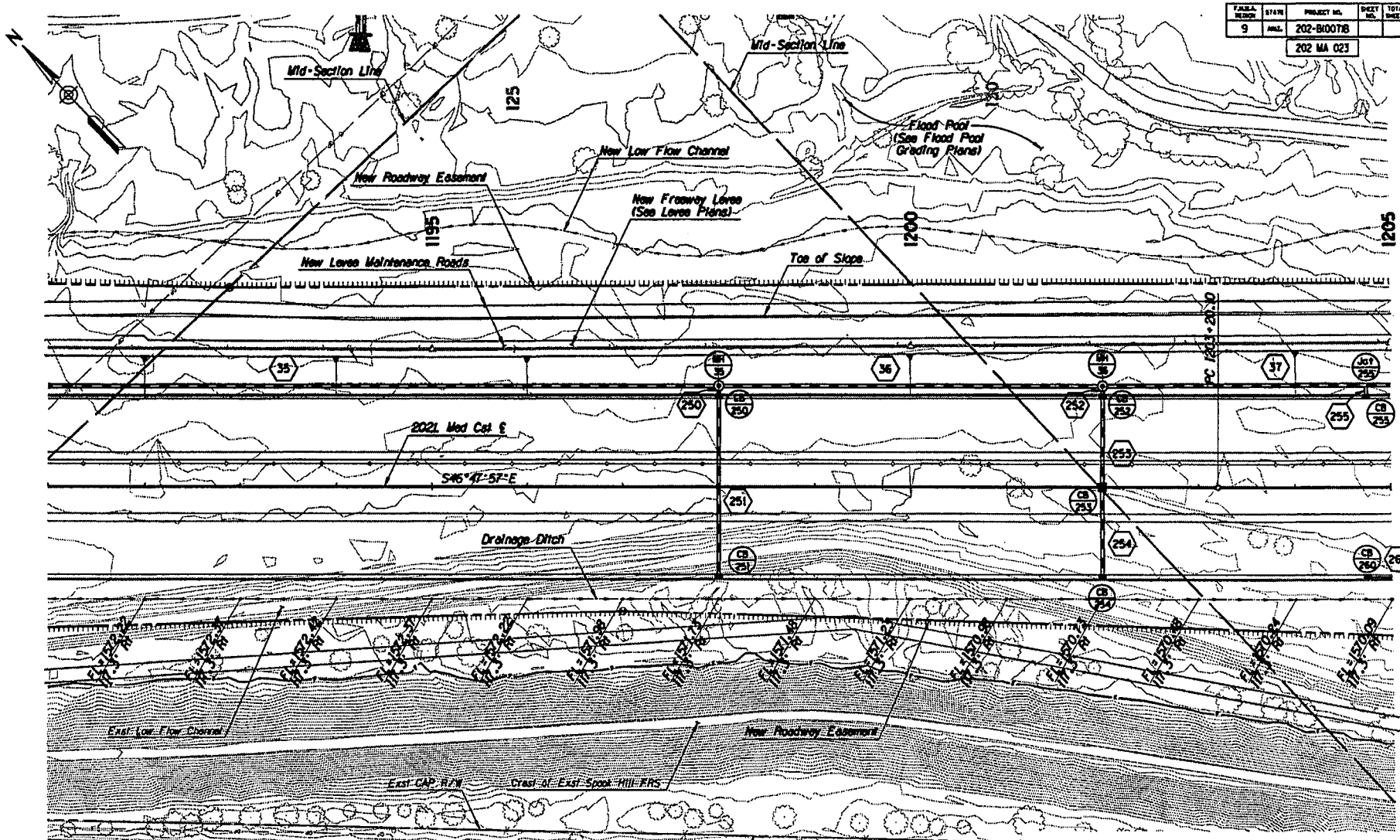

FAP/S.A. NUMBER	STATE	PROJECT NO.	SHEET NO.	TOTAL SHEETS	AS BUILT
9	ARIZ.	202-B(007)8			

202 MA 023

	NAME	DATE
DESIGN	PSR	4/05
DRAWN	LRJ	4/05
CHECKED	CAD	4/05

Stanley Consultants Inc.

ARIZONA DEPARTMENT OF TRANSPORTATION
INTERMODAL TRANSPORTATION DIVISION
ROADWAY DESIGN SERVICES

202L MAINLINE
STORM DRAIN PLAN
Sta 1191+00 to Sta 1205+00

ROUTE: 202L
LOCATION: RED MTN FWY, POWER ROAD - UNIVERSITY DRIVE

TRACS NO. H 5782 01C | 202-B(007)8

PRELIMINARY
STAGE IV
95% Review
NOT FOR CONSTRUCTION OR RECORDING

DRG NO. D-1.12

___ OF ___

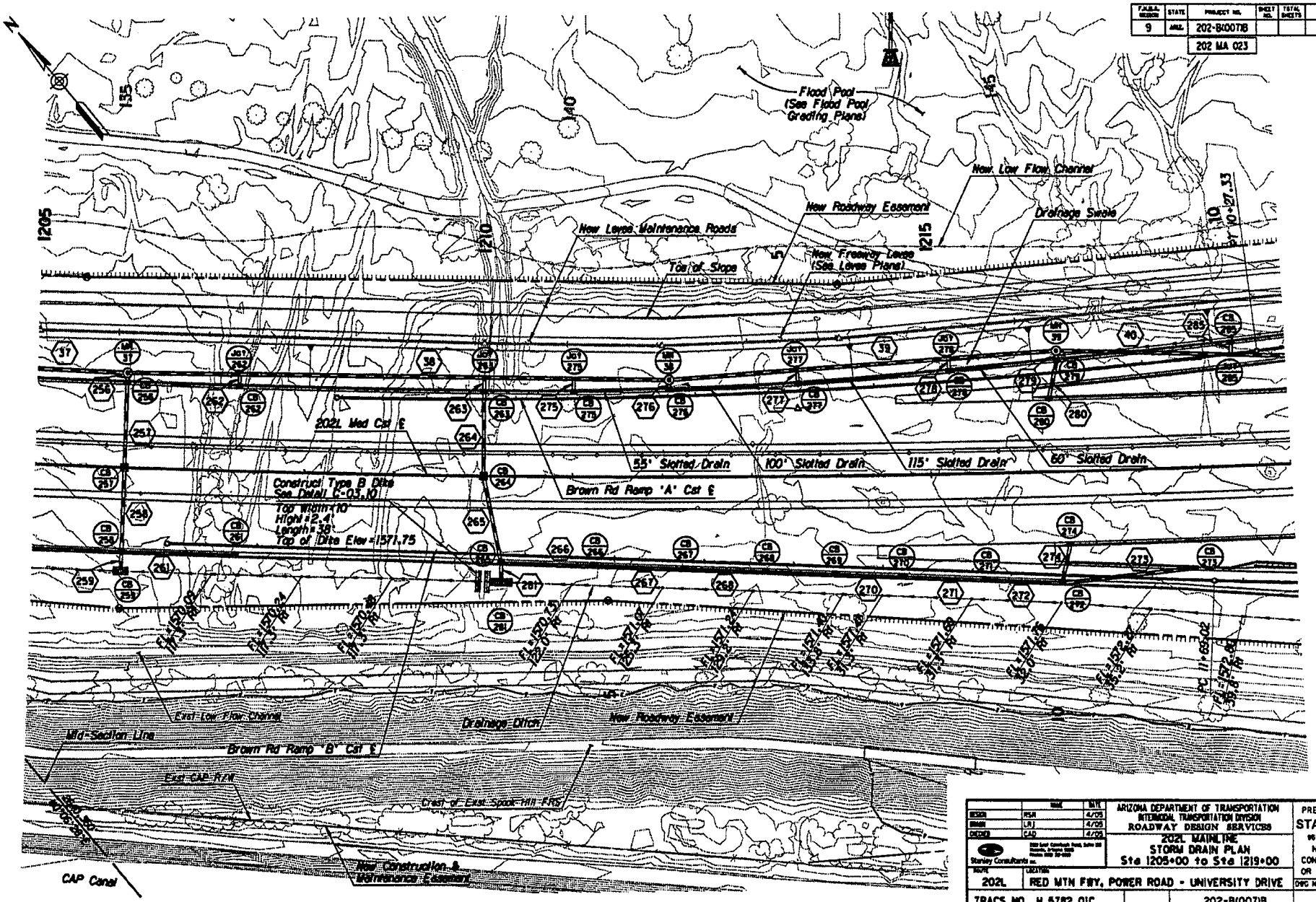

F.A.P. NO.	STATE	PROJECT NO.	SHEET NO.	TOTAL SHEETS	AS BUILT
9	ARIZ.	202-B(007)B			
		202 MA 023			

	NAME	DATE
DESIGN	PSR	4/05
DRAWN	LRJ	4/05
CHECKED	CAD	4/05

Stanley Consultants Inc.

ARIZONA DEPARTMENT OF TRANSPORTATION
INTERMODAL TRANSPORTATION DIVISION
ROADWAY DESIGN SERVICES

202L MAINLINE
STORM DRAIN PLAN
Sta 1205+00 to Sta 1219+00

ROUTE	LOCATION
202L	RED MTN FWY, POWER ROAD - UNIVERSITY DRIVE

TRACS NO. H 5782 01C | 202-B(007)B | ___ OF ___

PRELIMINARY
STAGE IV
95% Review
NOT FOR CONSTRUCTION OR RECORDING

DWG NO. D-1.13

4/22/2005 g:\17000\acad\re\97-85-dwgs\84-drain\h5782d21.dgn

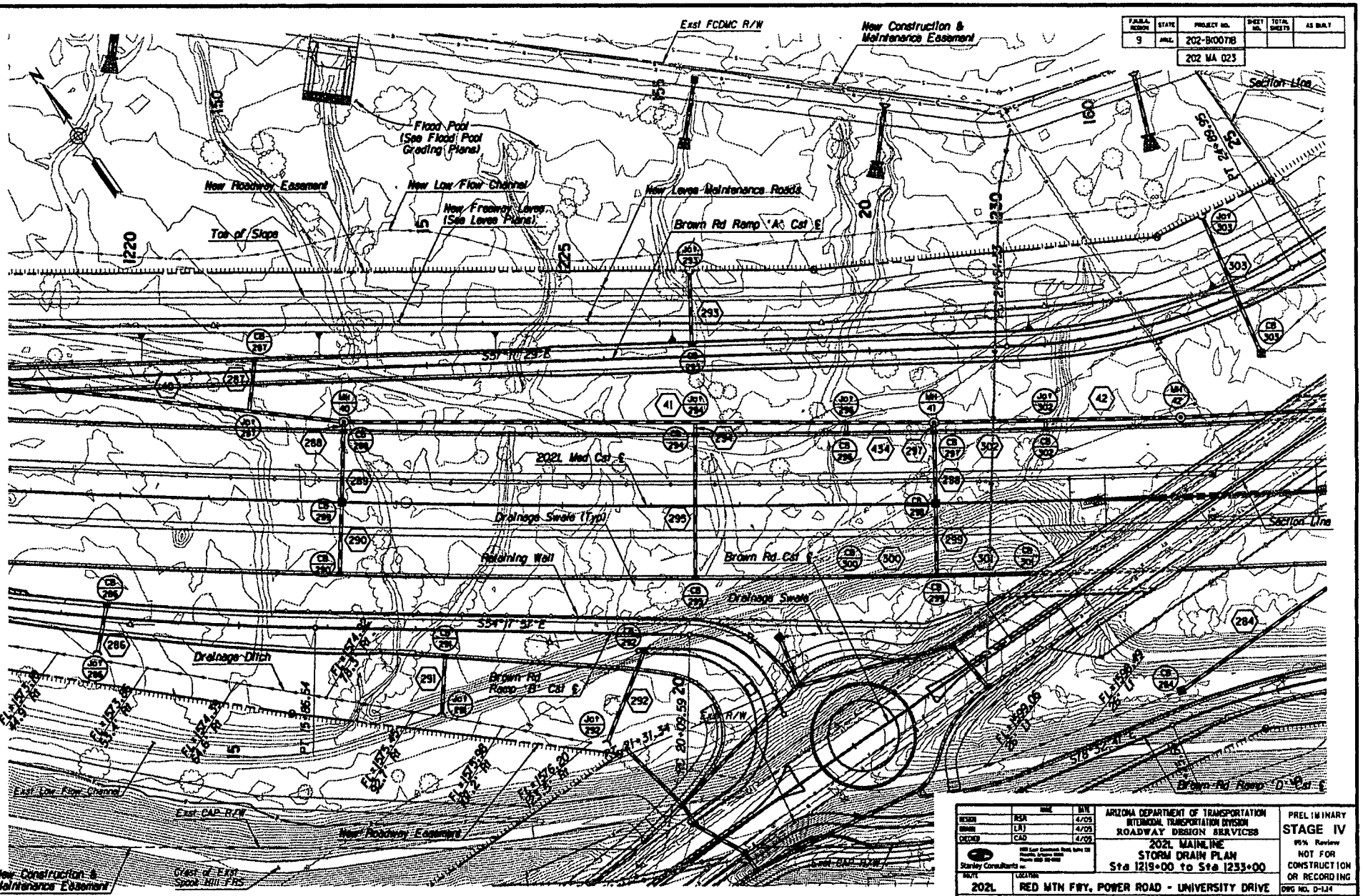
Exist FCDMC R/W
New Construction & Maintenance Easement
Section Line
Flood Pool (See Flood Pool Grading Plans)
New Roadway Easement
New Low Flow Channel
New Freeway Levee (See Levee Plans)
New Levee Maintenance Roads
Toe of Slope
Brown Rd Ramp 'A' Cal ℄
202L Med Cal ℄
Drainage Swale (Typ)
Retaining Wall
Brown Rd Cal ℄
Drainage Swale
Drainage Ditch
Brown Rd Ramp 'B' Cal ℄
Exist Low Flow Channel
Exist CAP R/W
New Roadway Easement
New Construction & Maintenance Easement
Crest of Exist Spook Hill FRS
Brown Rd Ramp 'D' Cal ℄
S55°11'29"E
S54°11'51"E
S78°52'41"E
1220
1225
1230
1235
1240
1245
1250
1255
1260
1265
1270
1275
1280
1285
1290
1295
1300
1305
1310
1315
1320
1325
1330
1335
1340
1345
1350
1355
1360
1365
1370
1375
1380
1385
1390
1395
1400
1405
1410
1415

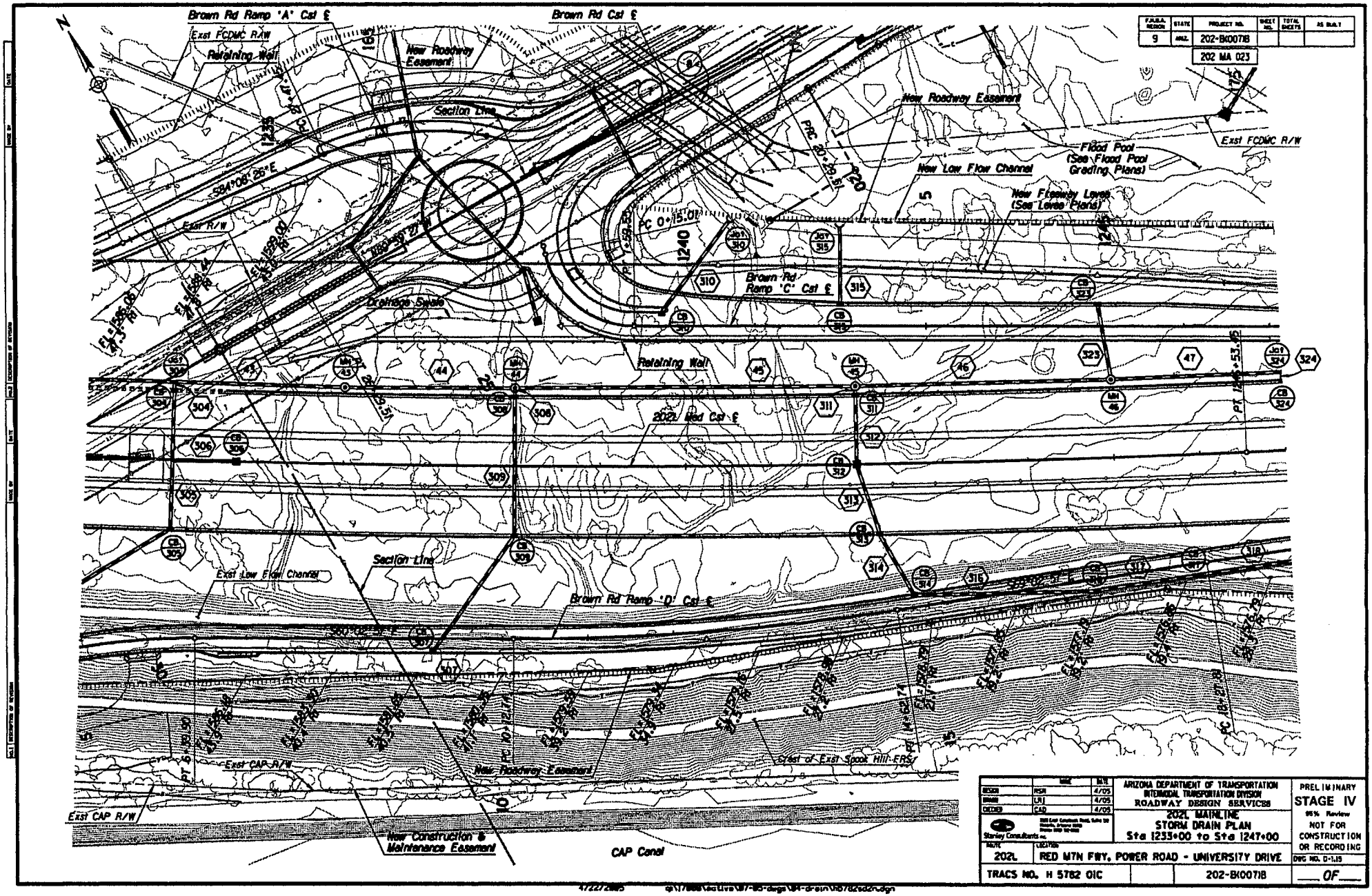

F.A.P. OR S.A.P. NUMBER	STATE	PROJECT NO.	SHEET NO.	TOTAL SHEETS	AS BUILT
9	ARIZ.	202-B(007)I			

	NAME	DATE
DESIGN	RSH	4/05
DRAWN	LRJ	4/05
CHECKED	CAD	4/05

Stanley Consultants Inc.

ARIZONA DEPARTMENT OF TRANSPORTATION
INTERMODAL TRANSPORTATION DIVISION
ROADWAY DESIGN SERVICES

202L MAINLINE
STORM DRAIN PLAN
Sta 1233+00 to Sta 1247+00

PRELIMINARY
STAGE IV
95% Review
NOT FOR CONSTRUCTION OR RECORDING

ROUTE NO.	LOCATION
202L	RED MTN FWY, POWER ROAD - UNIVERSITY DRIVE

TRACS NO. H 5782 01C | 202-B(007)I | DWG NO. D-1.15 | ___ OF ___

4/22/2005 q:\17888\active\87-85-dngn\84-drain\h5782sd2r.dgn

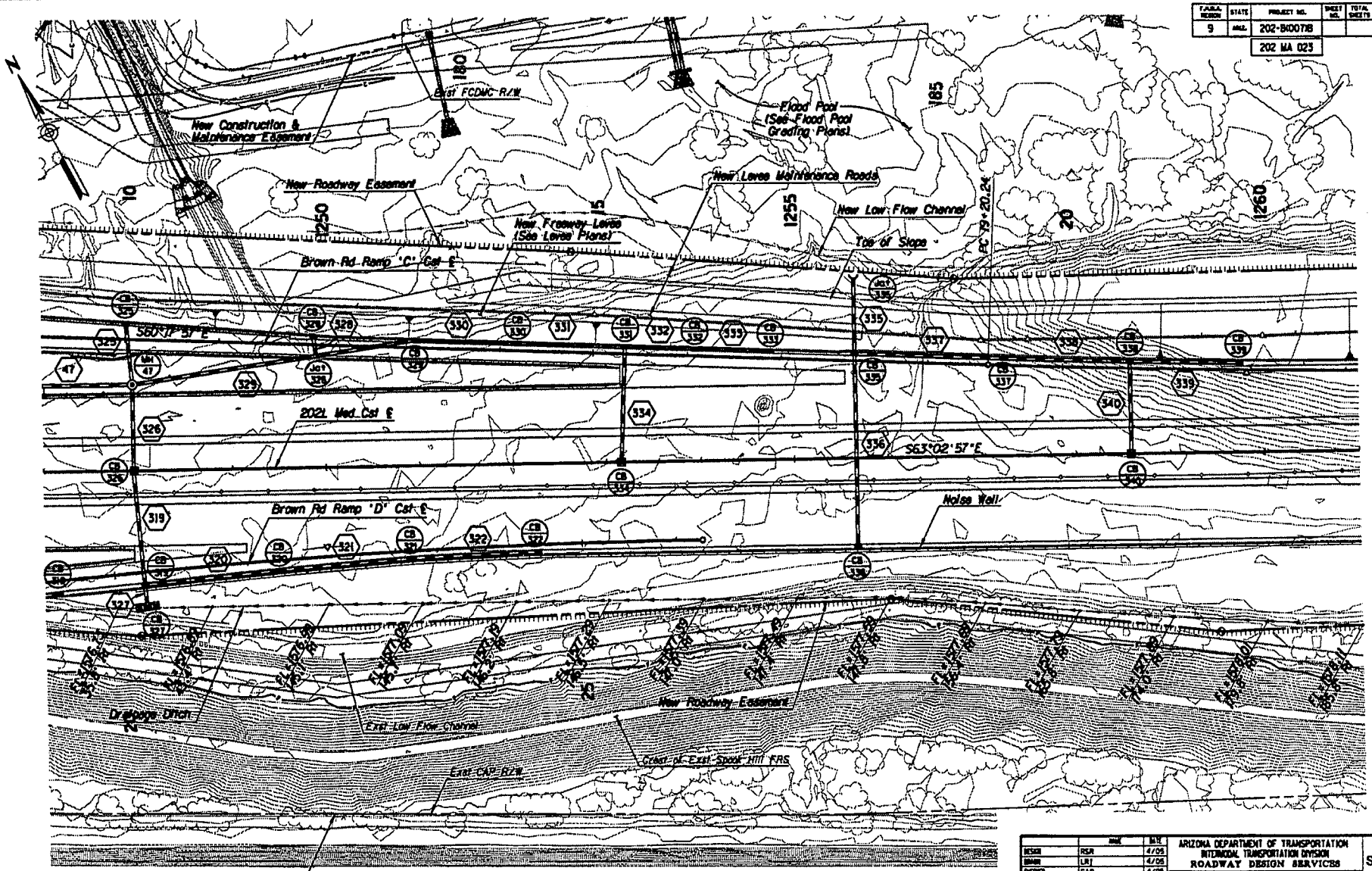

F.A.P.M. REGION	STATE	PROJECT NO.	SHEET NO.	TOTAL SHEETS	AS BUILT
9	ARIZ.	202-B(00)718			

202 MA 023

	NAME	DATE
DESIGN	RSR	4/05
DRAWN	LRJ	4/05
CHECKED	CAG	4/05

Stanley Consultants Inc.

ARIZONA DEPARTMENT OF TRANSPORTATION
INTERMODAL TRANSPORTATION DIVISION
ROADWAY DESIGN SERVICES

202L MAINLINE
STORM DRAIN PLAN
Sta 1247+00 to Sta 1261+00

ROUTE: 202L
LOCATION: RED MTN FWY, POWER ROAD - UNIVERSITY DRIVE

TRACS NO. H 5782 01C | 202-B(00)718

PRELIMINARY
STAGE IV
95% Review
NOT FOR CONSTRUCTION OR RECORDING

DWG NO. D-1.16

OF

472272885 q:\17888\active\87-85-dwgs\84-drain\D5782sd2o.dgn

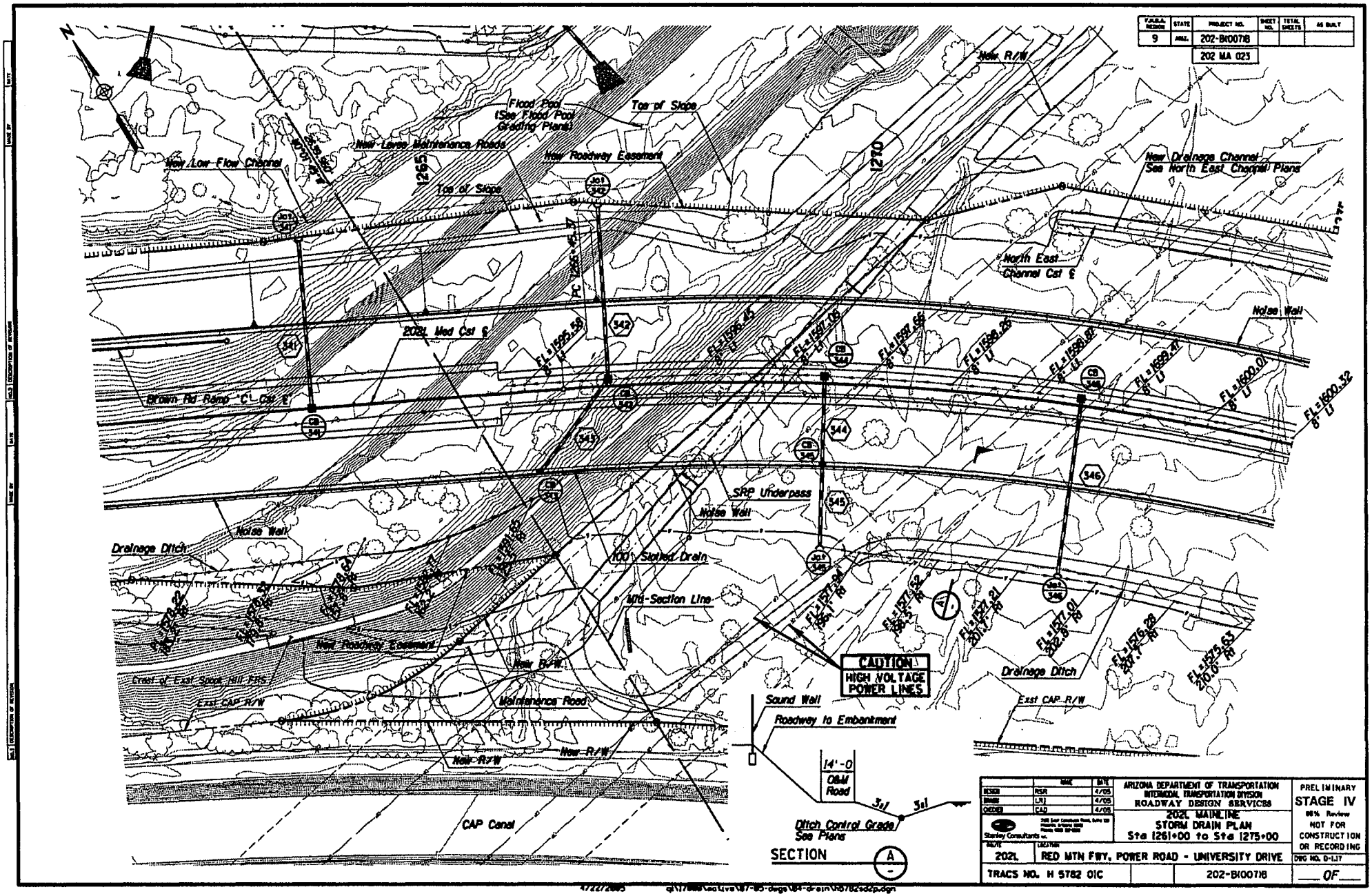

F.A.H.S. REGION	STATE	PROJECT NO.	SHEET NO.	TOTAL SHEETS	AS BUILT
9	ARIZ.	202-B(007)I			
		202 MA 023			

	NAME	DATE
DESIGN	PSR	4/05
DRAWN	LRJ	4/05
CHECKED	CAD	4/05

Stanley Consultants Inc.

ARIZONA DEPARTMENT OF TRANSPORTATION
INTERMODAL TRANSPORTATION DIVISION
ROADWAY DESIGN SERVICES

202L MAINLINE
STORM DRAIN PLAN
Sta 1261+00 to Sta 1275+00

RED MTN FWY, POWER ROAD - UNIVERSITY DRIVE

TRACS NO. H 5782 01C | 202-B(007)I

PRELIMINARY
STAGE IV
95% Review
NOT FOR CONSTRUCTION OR RECORDING

DWG NO. D-L17

___ OF ___

4/22/2005 q:\17888\active\87-85-dsgn\84-drain\h5782sddp.dgn

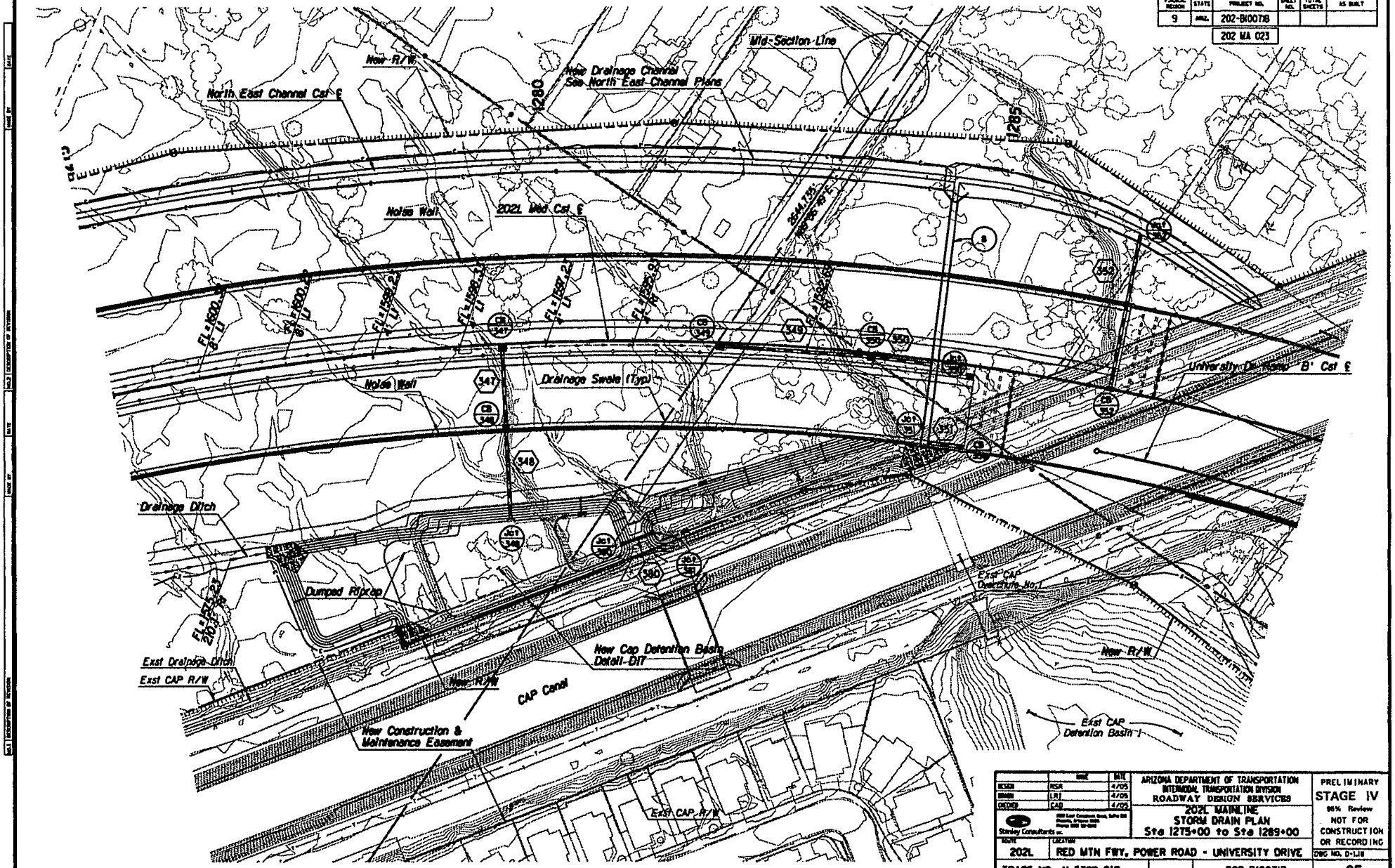

F.A.P.A. REGION	STATE	PROJECT NO.	SHEET NO.	TOTAL SHEETS	AS BUILT
9	ARIZ.	202-B(007)I			
		202 MA 023			

	NAME	DATE
DESIGN	RSR	4/05
DRAWN	LRJ	4/05
CHECKED	CAD	4/05

Stanley Consultants Inc.

ARIZONA DEPARTMENT OF TRANSPORTATION
INTERMODAL TRANSPORTATION DIVISION
ROADWAY DESIGN SERVICES

202L MAINLINE
STORM DRAIN PLAN
Sta 1275+00 to Sta 1289+00

PRELIMINARY
STAGE IV
95% Review
NOT FOR CONSTRUCTION OR RECORDING

ROUTE	LOCATION
202L	RED MTN FWY, POWER ROAD - UNIVERSITY DRIVE

DWG NO. D-1.18

TRACS NO. H 5782 01C | 202-B(007)I | ___ OF ___

4/22/2005 q:\17888\active\87-85-dwgs\84-drain\h5782d2q.dgn

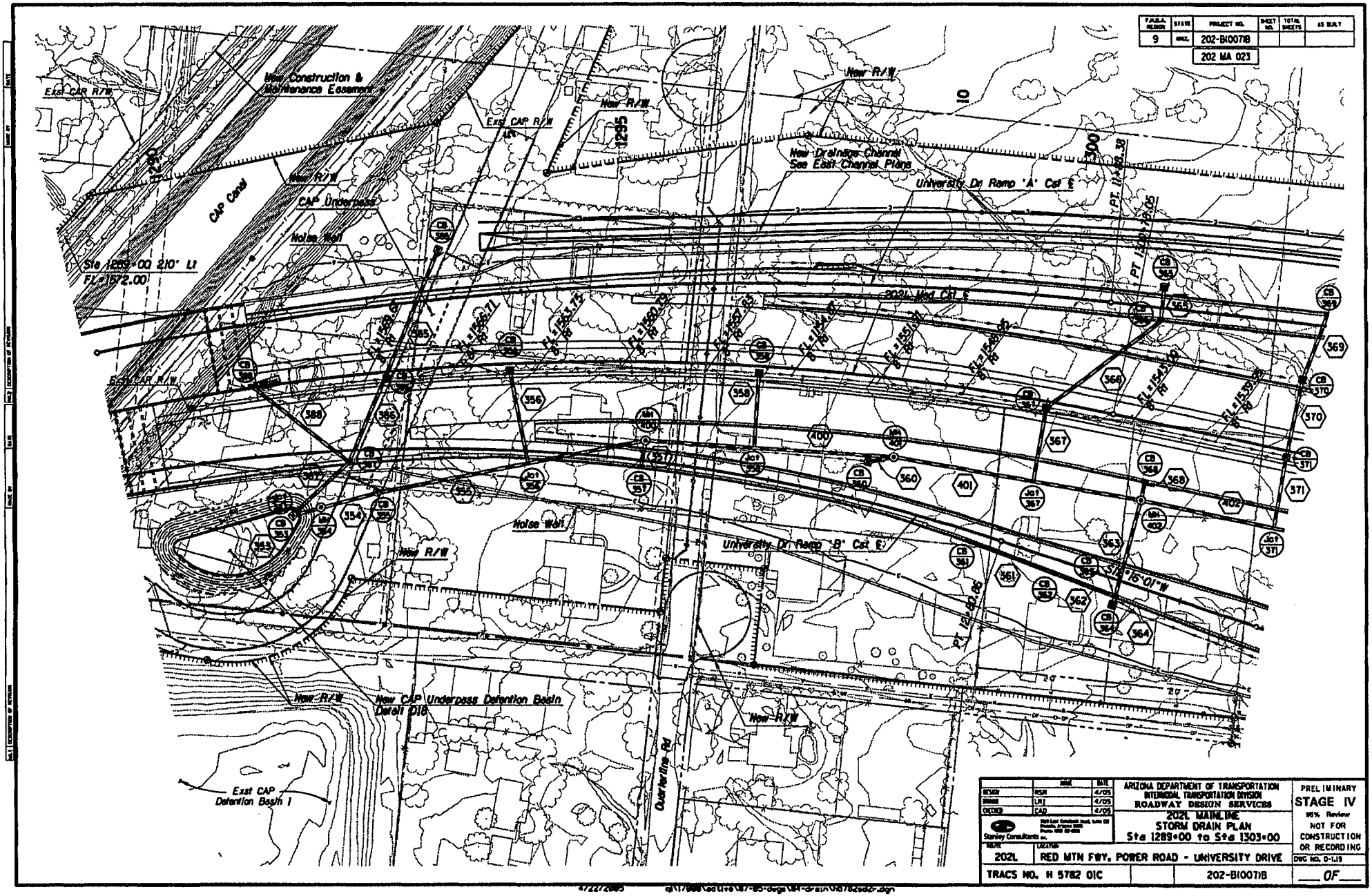

F.A.P. NUMBER	STATE	PROJECT NO.	SHEET NO.	TOTAL SHEETS	AS BUILT
9	ARIZ.	202-B(007)B			
		202 MA 023			

	NAME	DATE
DESIGN	PSR	4/05
DRAWN	LNJ	4/05
CHECKED	CAD	4/05

Stanley Consultants Inc.

ARIZONA DEPARTMENT OF TRANSPORTATION
INTERMODAL TRANSPORTATION DIVISION
ROADWAY DESIGN SERVICES

202L MAINLINE
STORM DRAIN PLAN
Sta 1289+00 to Sta 1303+00

ROUTE	LOCATION
202L	RED MTN FWY, POWER ROAD - UNIVERSITY DRIVE

TRACS NO. H 5782 01C | 202-B(007)B | ___ OF ___

PRELIMINARY
STAGE IV
95% Review
NOT FOR CONSTRUCTION OR RECORDING

DWG NO. D-L19

4/22/2005 q:\17868\roadway\87-85-design\04-drain\h5782d02.dgn

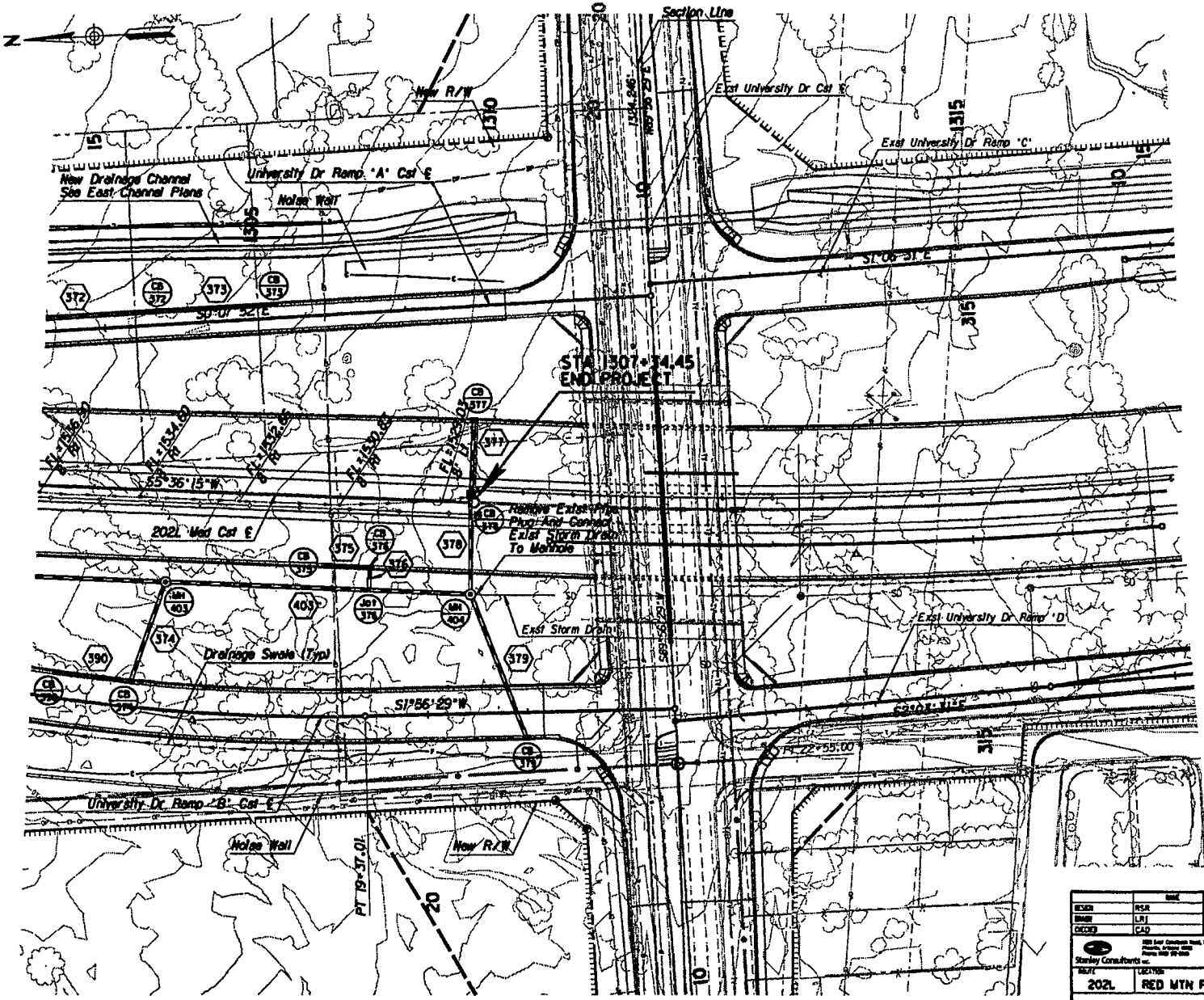

F.A.H.A. REGION	STATE	PROJECT NO.	SHEET NO.	TOTAL SHEETS	AS BUILT
9	ARIZ.	202-B(007)B			
		202 MA 023			

	NAME	DATE
DESIGN	RSR	4/05
DRAWN	LRJ	4/05
CHECKED	CAD	4/05

Stanley Consultants Inc.

ARIZONA DEPARTMENT OF TRANSPORTATION
INTERMODAL TRANSPORTATION DIVISION
ROADWAY DESIGN SERVICES

202L MAINLINE
STORM DRAIN PLAN
Sta 1303+00 to Sta 1317+00

PRELIMINARY
STAGE IV
95% Review
NOT FOR CONSTRUCTION OR RECORDING

ROUTE	LOCATION	DWG NO. D-1-20
202L	RED MTN FWY, POWER ROAD - UNIVERSITY DRIVE	
TRACS NO. H 5782 01C		202-B(007)B

___ OF ___

4/22/2005 q:\17888\active\07-05-design\SH-drain\05782sd2.dgn

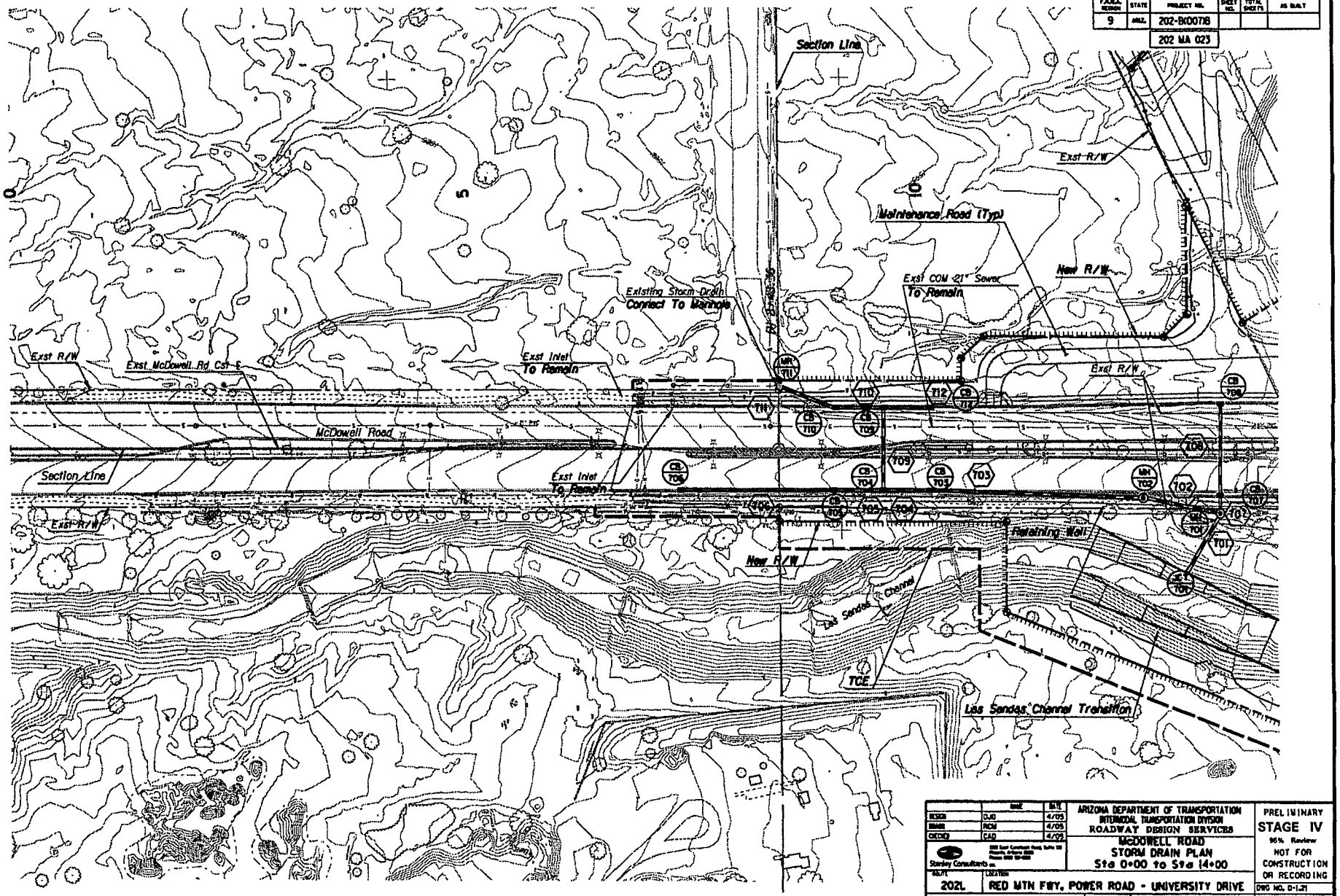

FARA Design	State	Project No.	Sheet No.	Total Sheets	As Built
9	ARIZ.	202-B(007)I			
		202 MA 023			

	Name	Date
Design	DJO	4/05
Drawn	RDM	4/05
Checked	CAD	4/05

Stanley Consultants Inc.

ARIZONA DEPARTMENT OF TRANSPORTATION
INTERMODAL TRANSPORTATION DIVISION
ROADWAY DESIGN SERVICES

McDOWELL ROAD
STORM DRAIN PLAN
Sta 0+00 to Sta 14+00

PRELIMINARY
STAGE IV
95% Review
NOT FOR CONSTRUCTION OR RECORDING

Mi./Pt.	Location	DWG NO. D-1-21
202L	RED MTN FWY, POWER ROAD - UNIVERSITY DRIVE	
TRACS NO. H 5782 01C		202-B(007)I ___ OF ___

4/22/2005 q:\17000\active\87-80-design\84-drain\05782sdde.dgn

F.H.W.A. REGION	STATE	PROJECT NO.	SHEET NO.	TOTAL SHEETS	AS BUILT
9	ARIZ.	202-B(007)B			

202 MA 023

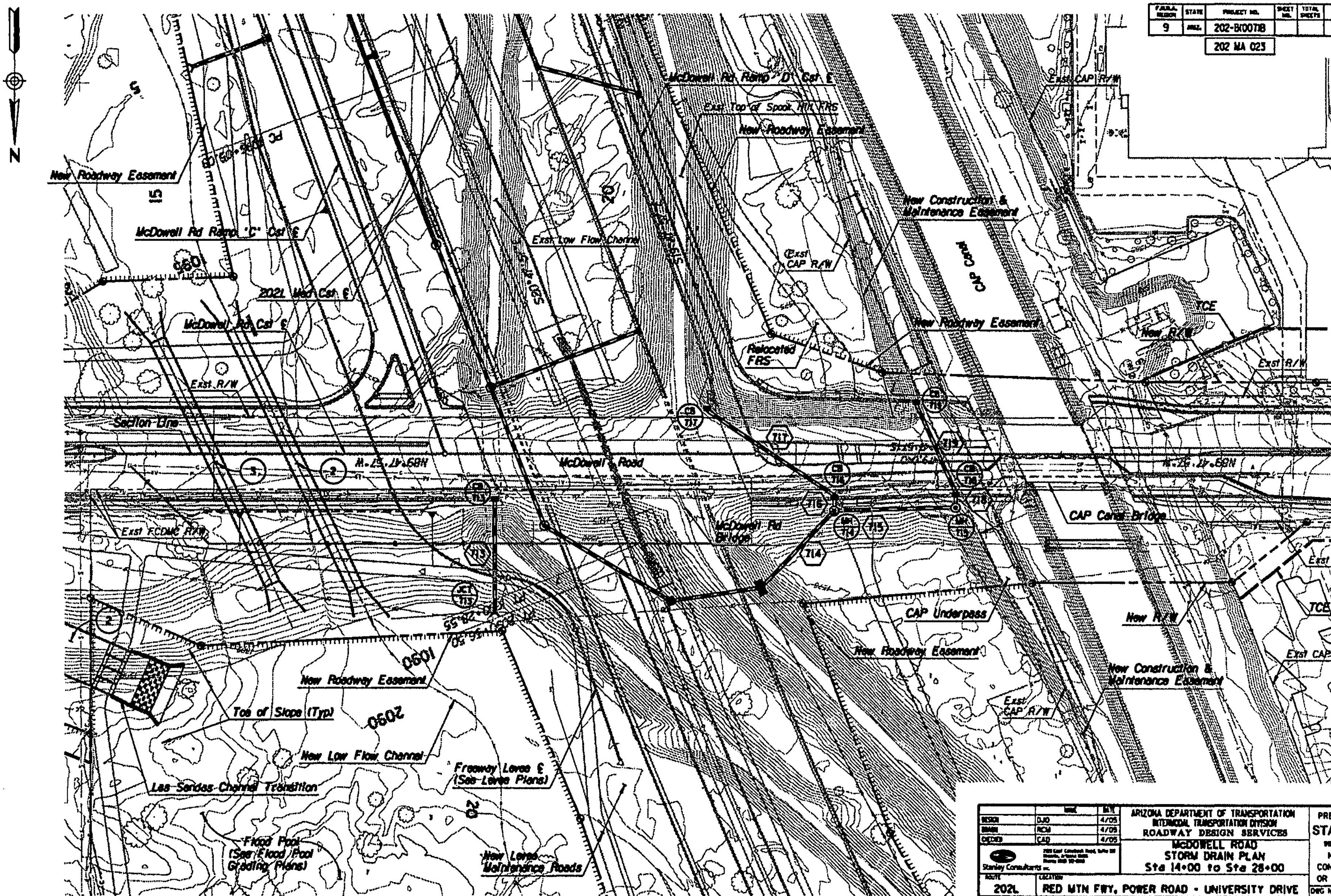

	NAME	DATE
DESIGN	DJO	4/05
DRAWN	RCM	4/05
CHECKED	CAD	4/05

Stanley Consultants INC.

ARIZONA DEPARTMENT OF TRANSPORTATION
INTERMODAL TRANSPORTATION DIVISION
ROADWAY DESIGN SERVICES

McDOWELL ROAD
STORM DRAIN PLAN
Sta 14+00 to Sta 28+00

PRELIMINARY
STAGE IV
95% Review
NOT FOR CONSTRUCTION OR RECORDING

ROUTE: 202L
LOCATION: RED MTN FWY, POWER ROAD - UNIVERSITY DRIVE
DWG NO. D-1.22

TRACS NO. H 5782 01C | 202-B(007)B | ___ OF ___

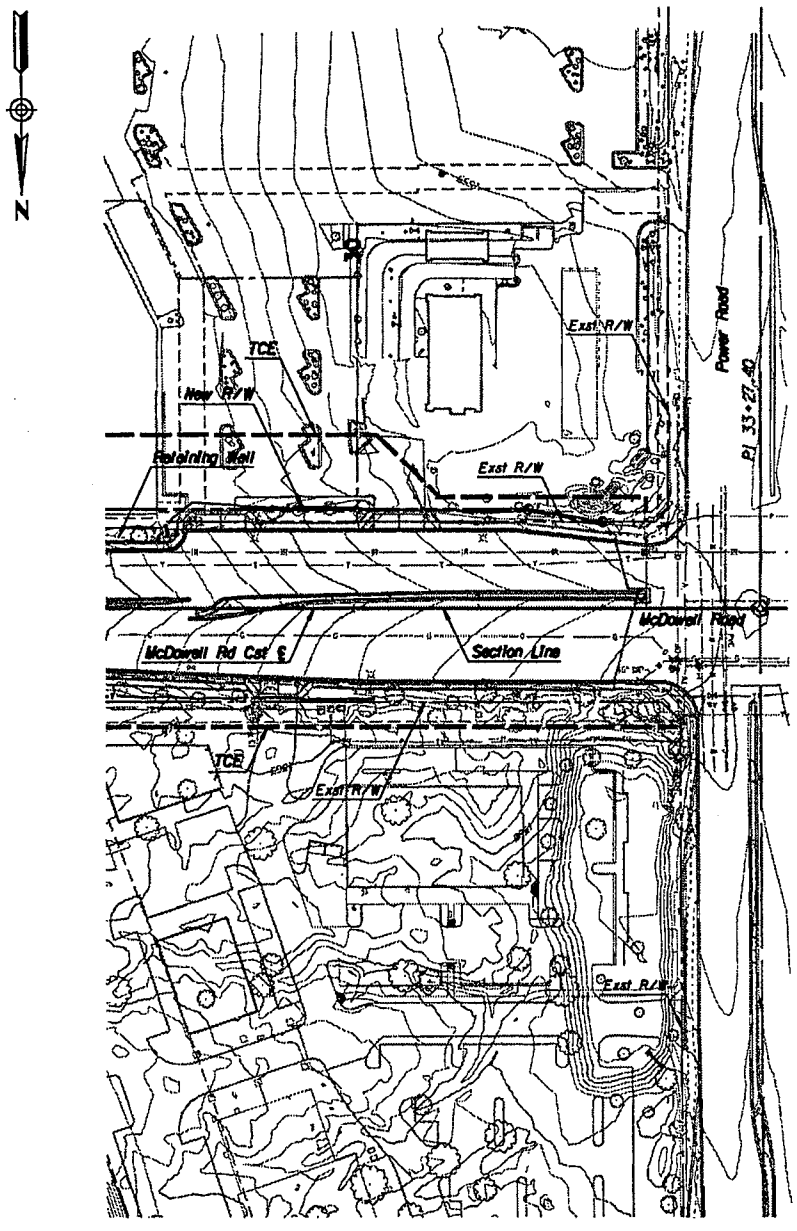

P.A.M.A. REGION	STATE	PROJECT NO.	SHEET NO.	TOTAL SHEETS	AS BUILT
9	ARIZ.	202-B(007)B			
		202 MA 023			

	NAME	DATE
DESIGN	DJO	4/05
DRAWN	RDM	4/05
CHECKED	CAD	4/05

Stanley Consultants Inc.

ARIZONA DEPARTMENT OF TRANSPORTATION
INTERMODAL TRANSPORTATION DIVISION
ROADWAY DESIGN SERVICES

McDOWELL ROAD
STORM DRAIN PLAN
Sta 28+00 to Sta 33+50

PRELIMINARY
STAGE IV
95% Review
NOT FOR CONSTRUCTION OR RECORDING

ROUTE	LOCATION	DWG NO. D-123
202L	RED MTN FWY, POWER ROAD - UNIVERSITY DRIVE	
TRACS NO. H 5782 01C	202-B(007)B	___ OF ___

4/22/2005 q:\17888\active\87-85-dwgs\04-drain\h5782d36.dgn

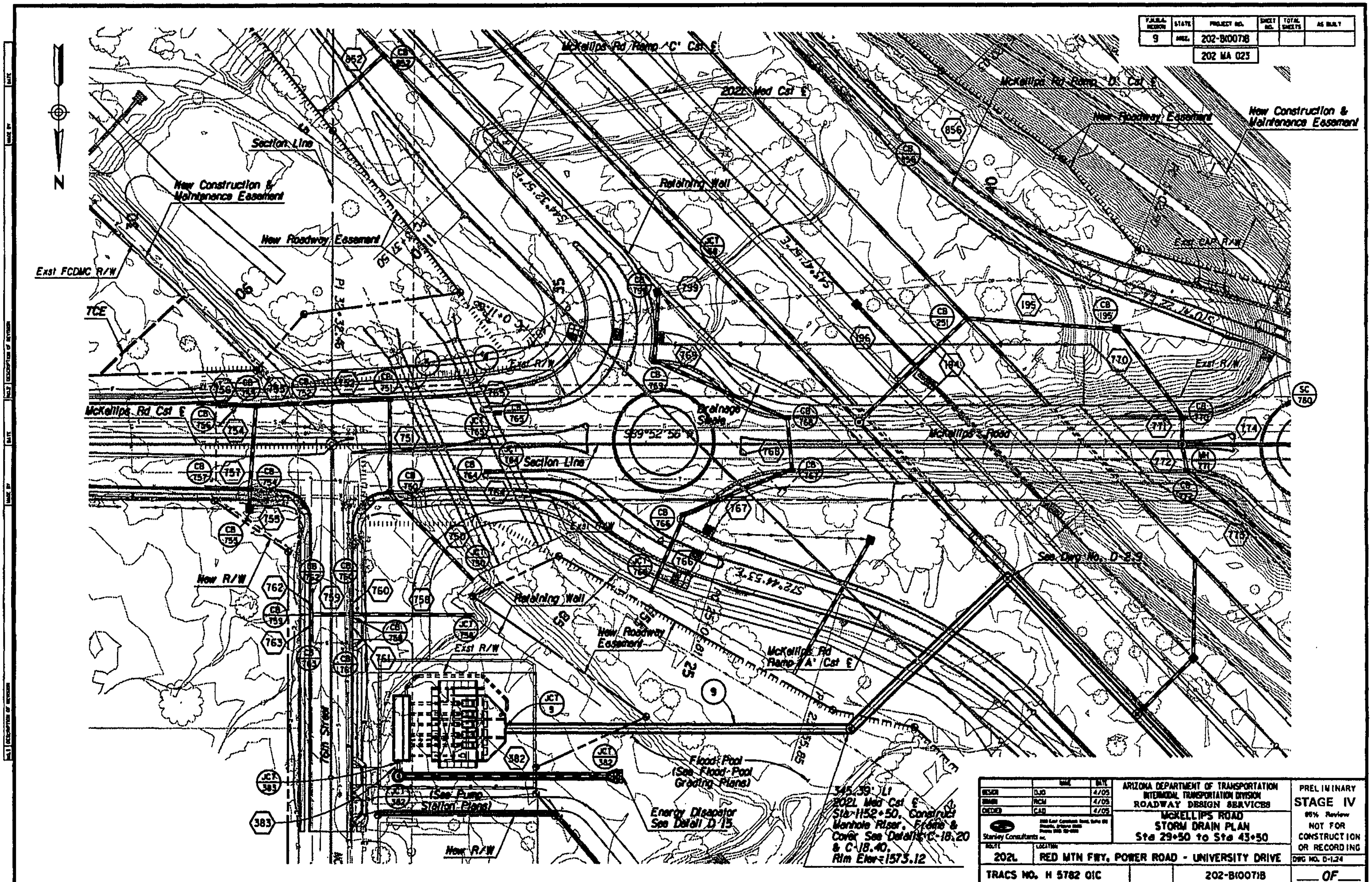

N
McKellips Rd Ramp 'C' Cst ℄
202L Med Cst ℄
McKellips Rd Ramp 'D' Cst ℄
New Roadway Easement
New Construction & Maintenance Easement
Section Line
Retaining Wall
New Roadway Easement
Exst FCDMC R/W
TCE
Exst CAP R/W
Exst R/W
McKellips Rd Cst ℄
Drainage Swale
McKellips Road
Section Line
New R/W
See Dwg No. D-2.9
Retaining Wall
Exst R/W
New Roadway Easement
McKellips Rd Ramp 'A' Cst ℄
Flood Pool (See Flood Pool Grading Plans)
(See Pump Station Plans)
Energy Dissipator See Detail D-15
New R/W
345.39' Lt 202L Med Cst ℄ Sta 1152+50, Construct Manhole Riser, Frame & Cover See Details C-18.20 & C-18.40. Rim Elev=1573.12
9
202-B(007)B
202 MA 023
ARIZONA DEPARTMENT OF TRANSPORTATION
INTERMODAL TRANSPORTATION DIVISION
ROADWAY DESIGN SERVICES
McKELLIPS ROAD
STORM DRAIN PLAN
Sta 29+50 to Sta 43+50
PRELIMINARY
STAGE IV
95% Review
NOT FOR CONSTRUCTION OR RECORDING
Stanley Consultants inc.
202L
RED MTN FWY, POWER ROAD - UNIVERSITY DRIVE
DWG NO. D-1.24
TRACS NO. H 5782 01C
202-B(007)B
___ OF ___

F.H.W.A. REGION	STATE	PROJECT NO.	SHEET NO.	TOTAL SHEETS	AS BUILT
9	ARIZ.	202-B(007)B			
		202 MA 023			

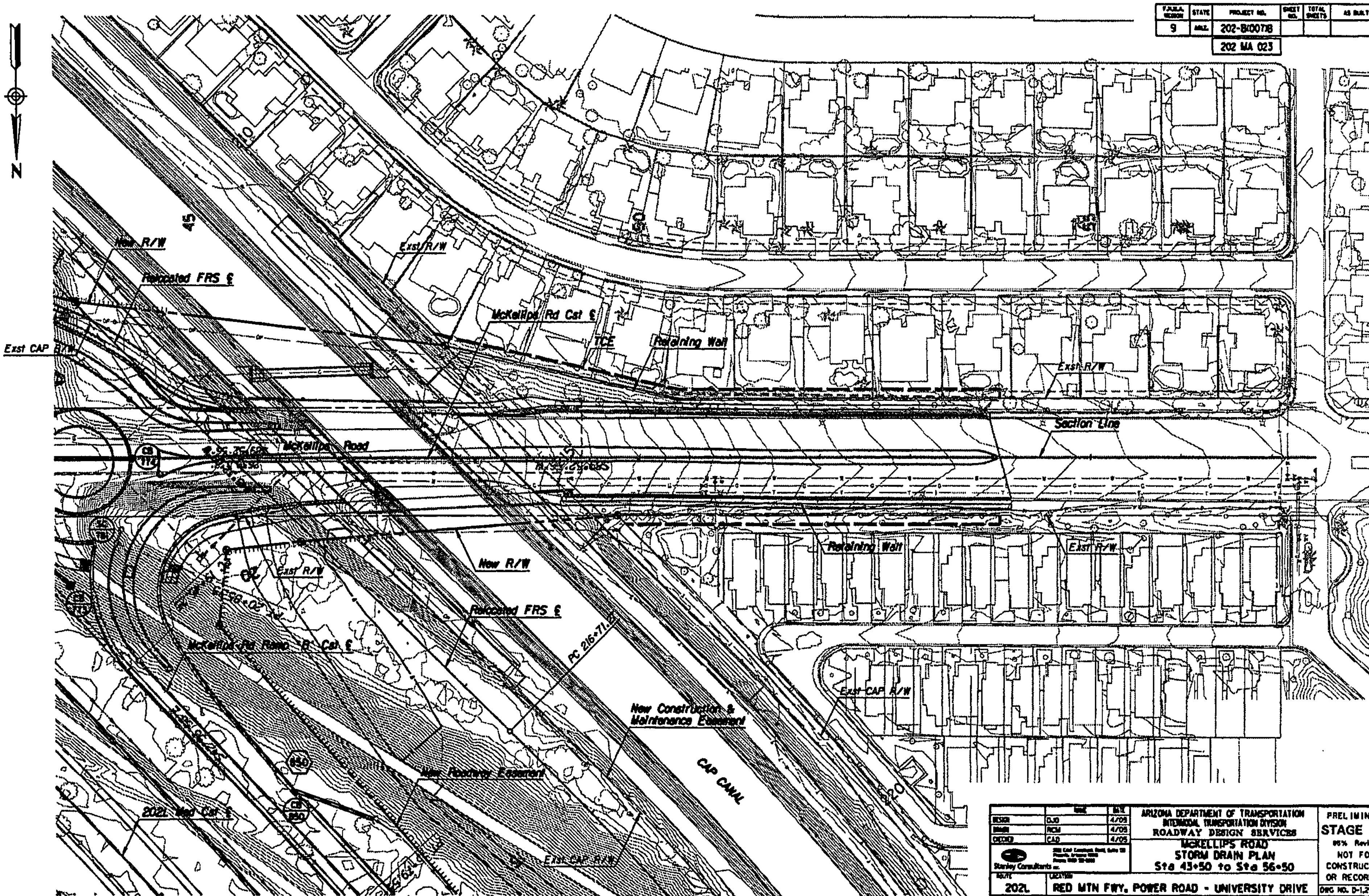

	NAME	DATE
DESIGN	DJO	4/05
DRAWN	RCM	4/05
CHECKED	CAD	4/05

Stanley Consultants inc.

ARIZONA DEPARTMENT OF TRANSPORTATION
INTERMODAL TRANSPORTATION DIVISION
ROADWAY DESIGN SERVICES

McKELLIPS ROAD
STORM DRAIN PLAN
Sta 43+50 to Sta 56+50

PRELIMINARY
STAGE IV
95% Review
NOT FOR CONSTRUCTION OR RECORDING

ROUTE: 202L
LOCATION: RED MTN FWY, POWER ROAD - UNIVERSITY DRIVE

DWG NO. D-1.29

TRACS NO. H 5782 01C | 202-B(007)B | ___ OF ___

4/22/2005 g:\17888\active\07-05-dwgs\04-drain\h5782sd4b.dgn

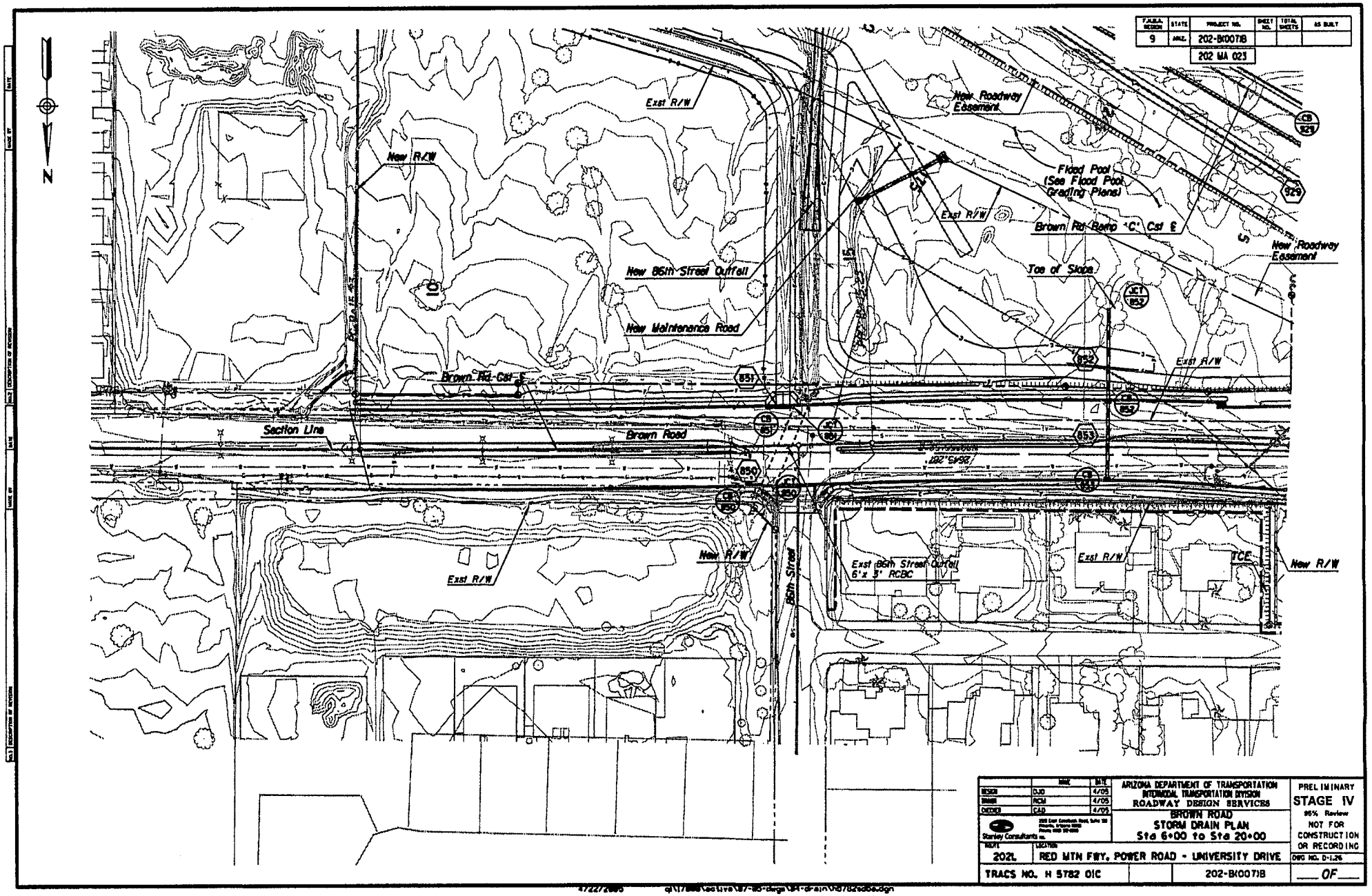

F.A.H.S. SECTION	STATE	PROJECT NO.	SHEET NO.	TOTAL SHEETS	AS BUILT
9	ARIZ.	202-B(007)I			
		202 MA 023			

	NAME	DATE
DESIGN	DJO	4/05
DRAWN	RCM	4/05
CHECKED	CAD	4/05

Stanley Consultants Inc.

ARIZONA DEPARTMENT OF TRANSPORTATION
INTERMODAL TRANSPORTATION DIVISION
ROADWAY DESIGN SERVICES

BROWN ROAD
STORM DRAIN PLAN
Sta 6+00 to Sta 20+00

PRELIMINARY
STAGE IV
95% Review
NOT FOR CONSTRUCTION OR RECORDING

DIST.	LOCATION	
202L	RED MTN FWY, POWER ROAD - UNIVERSITY DRIVE	DWG NO. D-1.26

TRACS NO. H 5782 01C | 202-B(007)I | ___ OF ___

4/22/2005 q:\17888\active\87-85-dwgs\84-drain\h5782sd6a.dgn

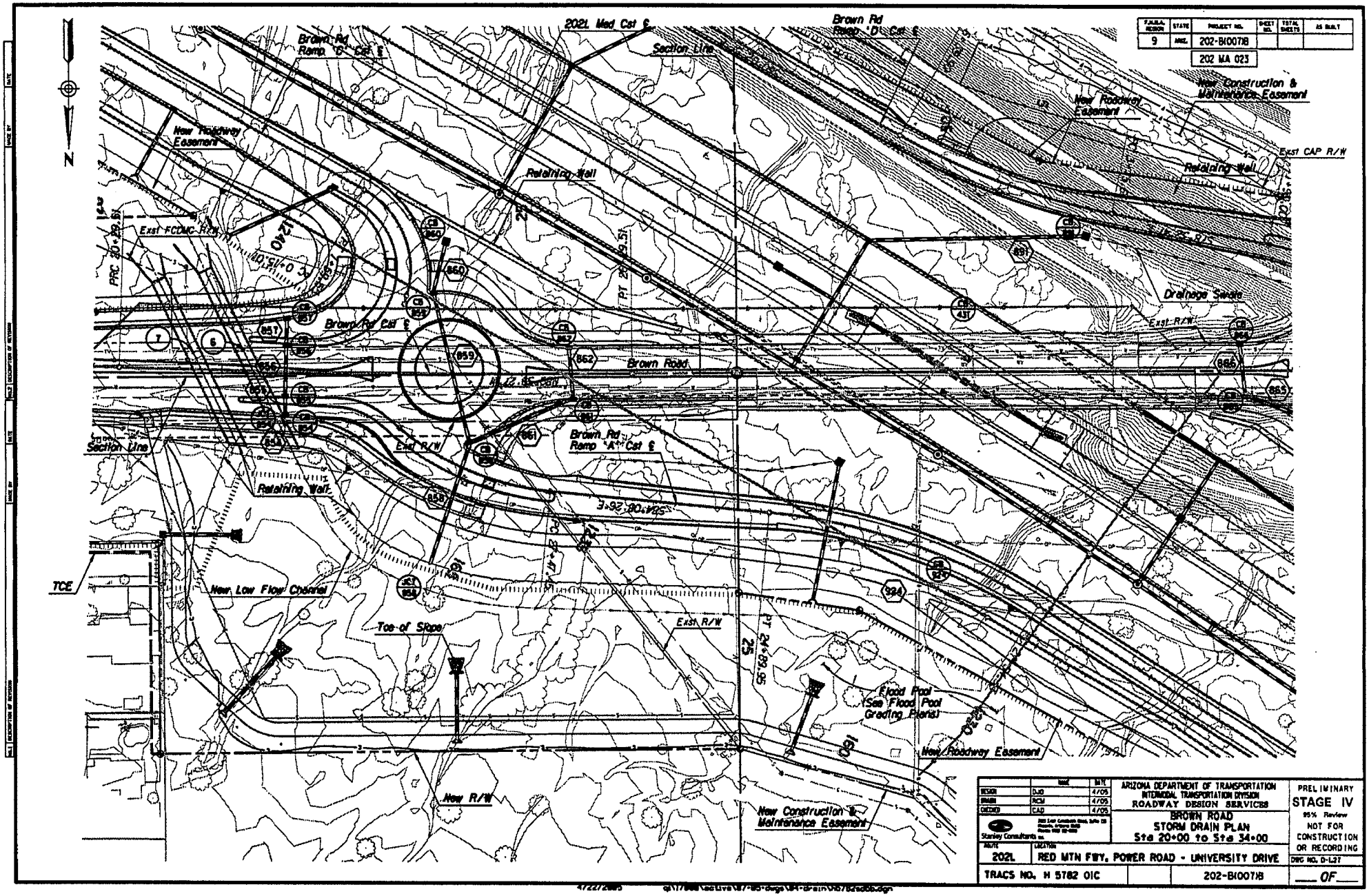

FEDERAL REGION	STATE	PROJECT NO.	SHEET NO.	TOTAL SHEETS	AS BUILT
9	ARIZ.	202-B(007)B			
		202 MA 023			

	NAME	DATE
DESIGN	DJD	4/05
DRAWN	RCM	4/05
CHECKED	CAD	4/05

Stanley Consultants Inc.

ARIZONA DEPARTMENT OF TRANSPORTATION
INTERMODAL TRANSPORTATION DIVISION
ROADWAY DESIGN SERVICES

BROWN ROAD
STORM DRAIN PLAN
Sta 20+00 to Sta 34+00

YEAR	LOCATION
2021	RED MTN FWY, POWER ROAD - UNIVERSITY DRIVE

PRELIMINARY
STAGE IV
95% Review
NOT FOR CONSTRUCTION OR RECORDING

DRG NO. D-L27

TRACS NO. H 5782 01C | 202-B(007)B | ___ OF ___

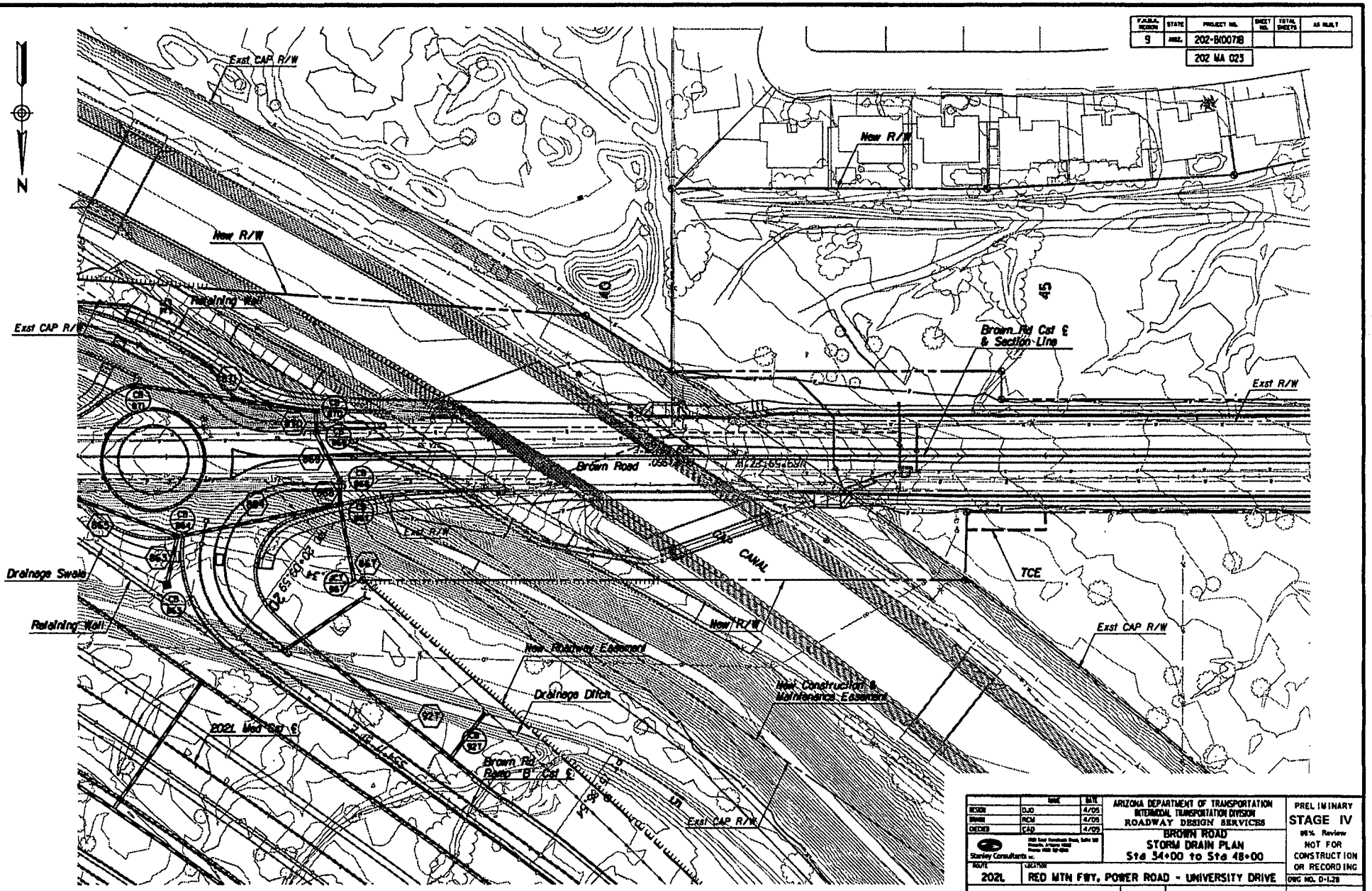

F.A.R.A. REGION	STATE	PROJECT NO.	SHEET NO.	TOTAL SHEETS	AS BUILT
9	ARIZ.	202-B(007)B			

202 MA 025

	NAME	DATE
DESIGN	DJD	4/05
DRAWN	RCM	4/05
CHECKED	CAD	4/05

Stanley Consultants Inc.

ARIZONA DEPARTMENT OF TRANSPORTATION
INTERMODAL TRANSPORTATION DIVISION
ROADWAY DESIGN SERVICES

BROWN ROAD
STORM DRAIN PLAN
Sta 34+00 to Sta 48+00

PRELIMINARY
STAGE IV
95% Review
NOT FOR CONSTRUCTION OR RECORDING

ROUTE	LOCATION	DWG NO. D-1.28
202L	RED MTN FWY, POWER ROAD - UNIVERSITY DRIVE	

TRACS NO. H 5782 01C | 202-B(007)B | ___ OF ___

4/22/2005 g:\17888\active\87-88-design\84-drain\05782adoc.dgn

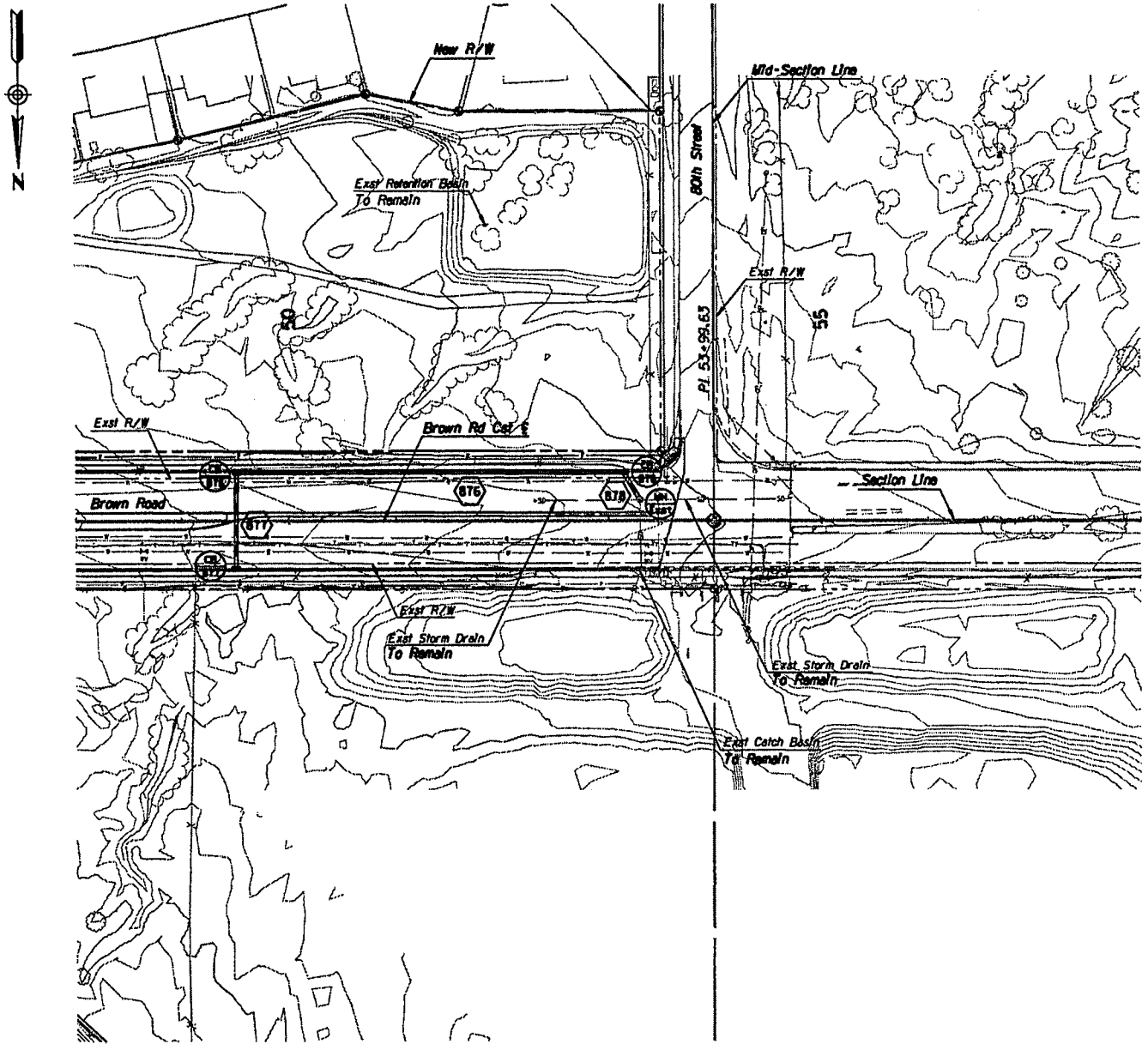

F.A.R.A. REGION	STATE	PROJECT NO.	SHEET NO.	TOTAL SHEETS	AS BUILT
9	ARIZ.	202-B(007)I			

202 MA 023

	NAME	DATE
DESIGN	DJO	4/05
DRAWN	RCM	4/05
CHECKED	CAD	4/05

Stanley Consultants Inc.

ARIZONA DEPARTMENT OF TRANSPORTATION
INTERMODAL TRANSPORTATION DIVISION
ROADWAY DESIGN SERVICES

BROWN ROAD
STORM DRAIN PLAN
Sta 48+00 to Sta 58+00

PRELIMINARY
STAGE IV
95% Review
NOT FOR CONSTRUCTION OR RECORDING

ROUTE	LOCATION
202L	RED MTN FWY, POWER ROAD - UNIVERSITY DRIVE

DWG NO. D-1.29

TRACS NO. H 5782 01C | 202-B(007)I | ___ OF ___

4/22/2005 q:\17000\active\87-05-dsgn\DR-drain\h5782d06d.dgn

F.H.W.A. REGION	STATE	PROJECT NO.	SHEET NO.	TOTAL SHEETS	AS BUILT
9	ARIZ.	202-B(007)B			
		202 MA 023			

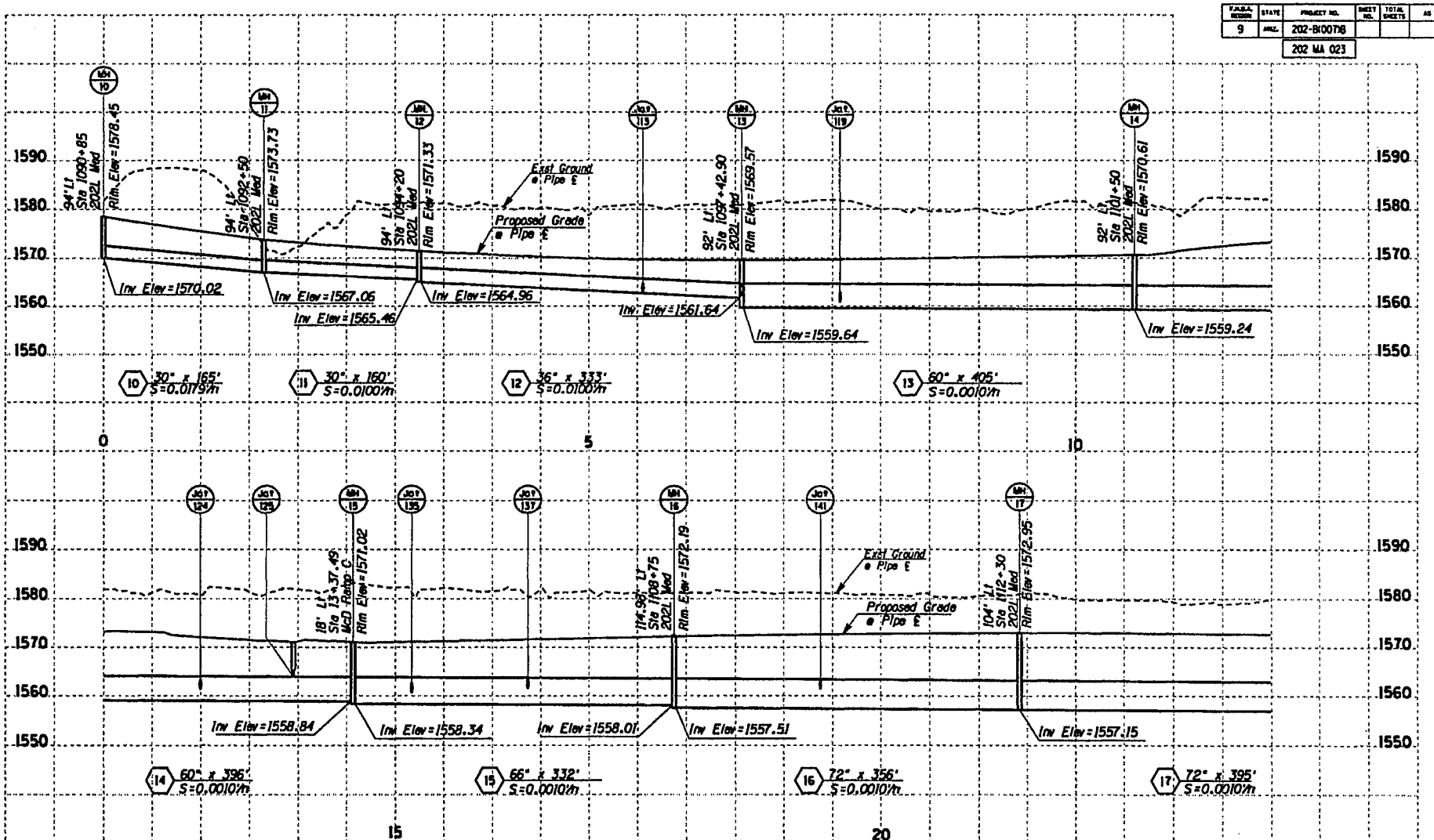

	NAME	DATE
DESIGN	RSR	4/05
DRAWN	B.J.P	4/05
CHECKED	CAD	4/05

Stanley Consultants Inc.

ARIZONA DEPARTMENT OF TRANSPORTATION
INTERMODAL TRANSPORTATION DIVISION
ROADWAY DESIGN SERVICES

STORM DRAIN PROFILES

PRELIMINARY
STAGE IV
95% Review
NOT FOR CONSTRUCTION OR RECORDING

ROUTE	LOCATION
202L	RED MTN FWY, POWER ROAD - UNIVERSITY DRIVE

DWG NO. D-2.1

TRACS NO. H 5782 01C | 202-B(007)B | ___ OF ___

4/22/2005 @\17888\active\87-95-design\84-drain\h5782sdpf1.dgn

F.A.P.No.	STATE	PROJECT NO.	SHEET NO.	TOTAL SHEETS	AS BUILT
9	ARIZ.	202-B(007)R			
		202 MA 023			

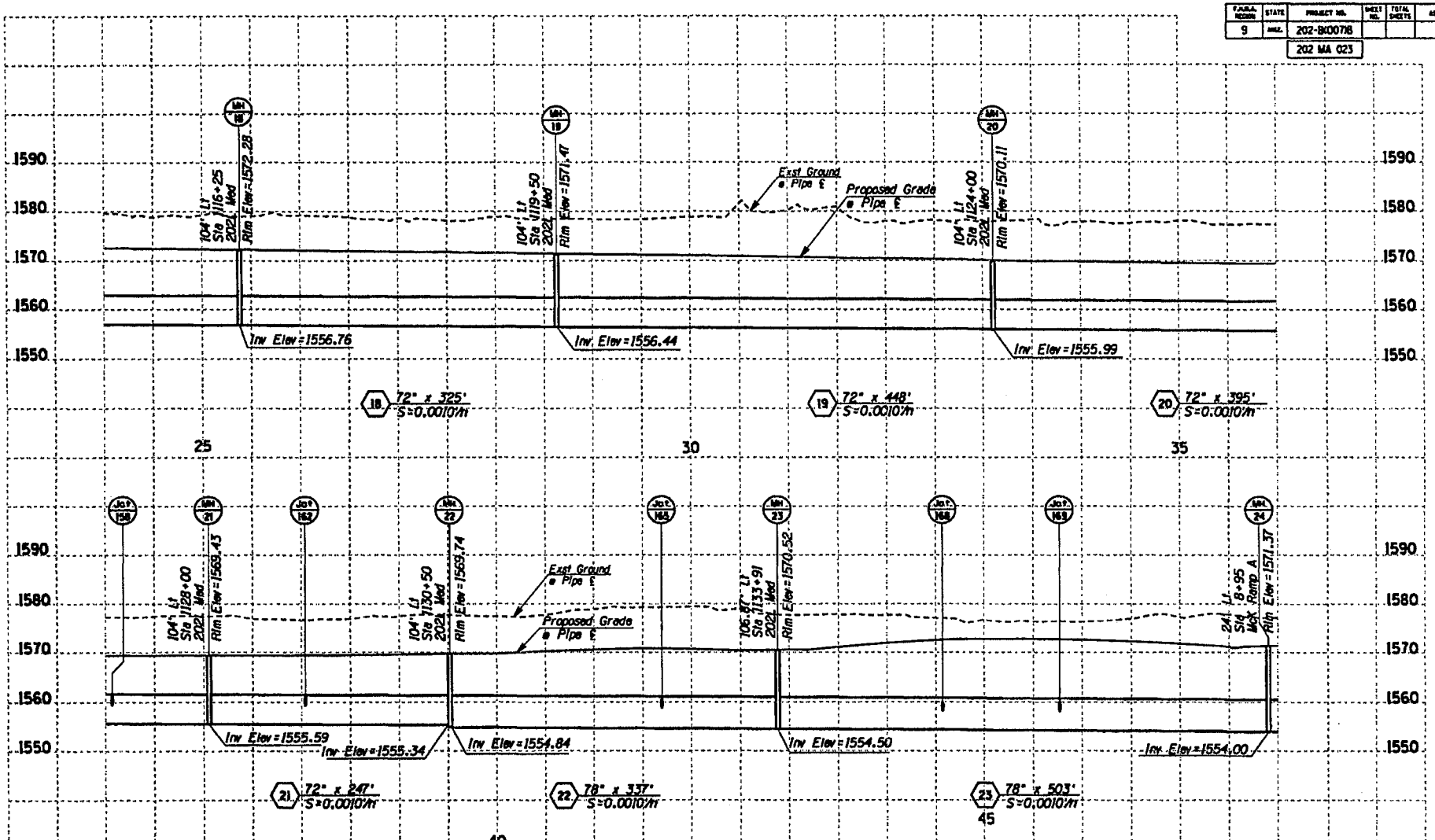

	NAME	DATE
DESIGN	RSH	4/05
DRAWN	B.JP	4/05
CHECKED	CAD	4/05

Stanley Consultants Inc.

ARIZONA DEPARTMENT OF TRANSPORTATION
INTERMODAL TRANSPORTATION DIVISION
ROADWAY DESIGN SERVICES

STORM DRAIN PROFILES

PRELIMINARY
STAGE IV
95% Review
NOT FOR CONSTRUCTION OR RECORDING

DWG NO. D-2.2

DISTRICT	LOCATION		
202L	RED MTN FWY, POWER ROAD - UNIVERSITY DRIVE		
TRACS NO. H 5782 01C		202-B(007)R	___ OF ___

F.A.P. or S.P.R. No.	STATE	PROJECT NO.	SHEET NO.	TOTAL SHEETS	AS BUILT
9	ARIZ.	202-B(007)R			
		202 MA 023			

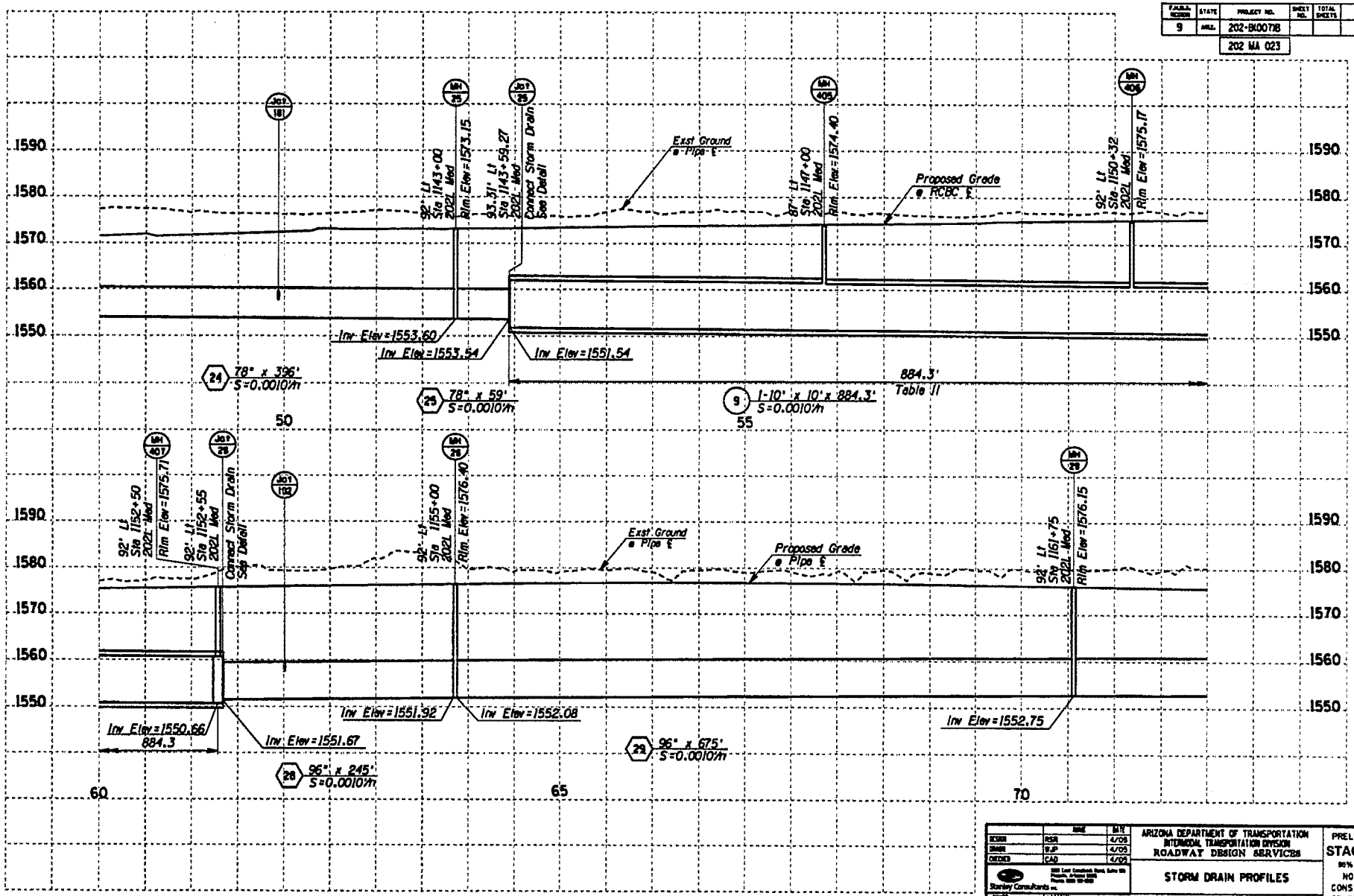

	NAME	DATE
DESIGN	RSR	4/05
DRAWN	WJP	4/05
CHECKED	CAD	4/05

Stanley Consultants

ARIZONA DEPARTMENT OF TRANSPORTATION
INTERMODAL TRANSPORTATION DIVISION
ROADWAY DESIGN SERVICES

STORM DRAIN PROFILES

PRELIMINARY
STAGE IV
95% Review
NOT FOR CONSTRUCTION OR RECORDING

DWG NO. D-2.3

YEAR	LOCATION
2021	RED MTN FWY, POWER ROAD - UNIVERSITY DRIVE

TRACS NO. H 5782 01C | 202-B(007)R | ___ OF ___

4/22/2005 q:\1788\active\87-95-dwgs\84-drain\h5782sdp03.dgn

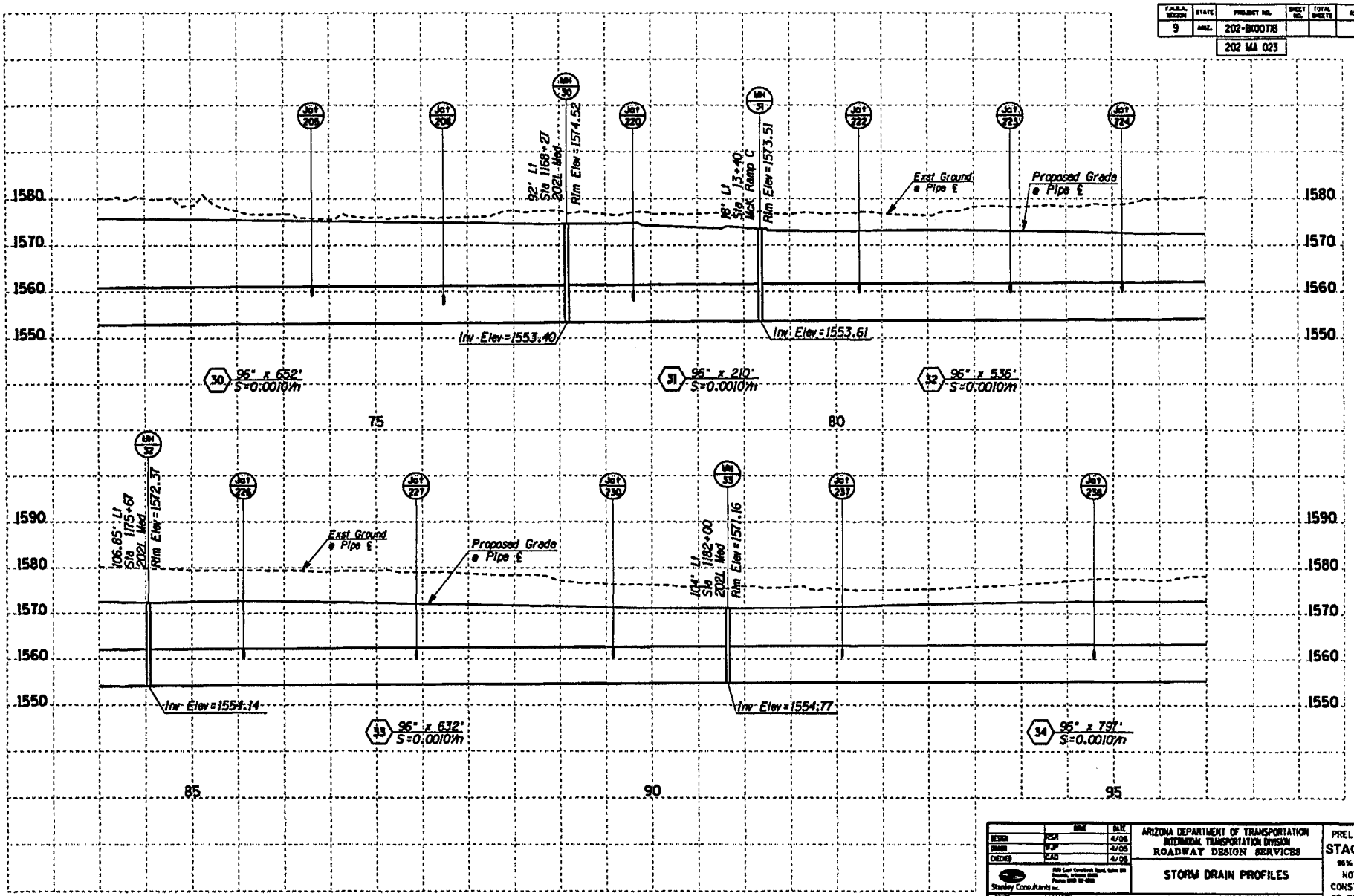
F.A.R.S. REGION 9
STATE ARIZ.
PROJECT NO. 202-B(007)I
SHEET NO.
TOTAL SHEETS
AS BUILT
202 MA 023
JCT 205
JCT 206
MH 30
JCT 220
MH 31
JCT 222
JCT 223
JCT 224
32' LT Sta 1168+27 2021 Med
Rim Elev=1574.52
48' LT Sta 13+40 Nor. Ramp C
Rim Elev=1573.51
Exst Ground @ Pipe ℄
Proposed Grade @ Pipe ℄
1580
1570
1560
1550
Inv Elev=1553.40
Inv Elev=1553.61
30 96" x 652' S=0.0010/ft
31 96" x 210' S=0.0010/ft
32 96" x 536' S=0.0010/ft
75
80
MH 32
JCT 226
JCT 227
JCT 230
MH 33
JCT 237
JCT 238
106.85' LT Sta 1175+67 2021 Med
Rim Elev=1572.37
Exst Ground @ Pipe ℄
Proposed Grade @ Pipe ℄
104' LT Sta 1182+00 2021 Med
Rim Elev=1571.16
1590
1580
1570
1560
1550
Inv Elev=1554.14
Inv Elev=1554.77
33 96" x 632' S=0.0010/ft
34 96" x 797' S=0.0010/ft
85
90
95
DATE
MADE BY
NO. DESCRIPTION OF REVISION
DATE
MADE BY
NO. DESCRIPTION OF REVISION
DESIGN RSH 4/05
DRAWN MJP 4/05
CHECKED KAD 4/05
Stanley Consultants Inc.
ARIZONA DEPARTMENT OF TRANSPORTATION
INTERMODAL TRANSPORTATION DIVISION
ROADWAY DESIGN SERVICES
STORM DRAIN PROFILES
ROUTE 202L
LOCATION RED MTN FWY, POWER ROAD - UNIVERSITY DRIVE
TRACS NO. H 5782 01C
202-B(007)I
PRELIMINARY
STAGE IV
95% Review
NOT FOR CONSTRUCTION OR RECORDING
DWG NO. D-2.4
___ OF ___

F.A.P.M. REGION	STATE	PROJECT NO.	SHEET NO.	TOTAL SHEETS	AS BUILT
9	ARIZ.	202-B(007)B			
		202 MA 023			

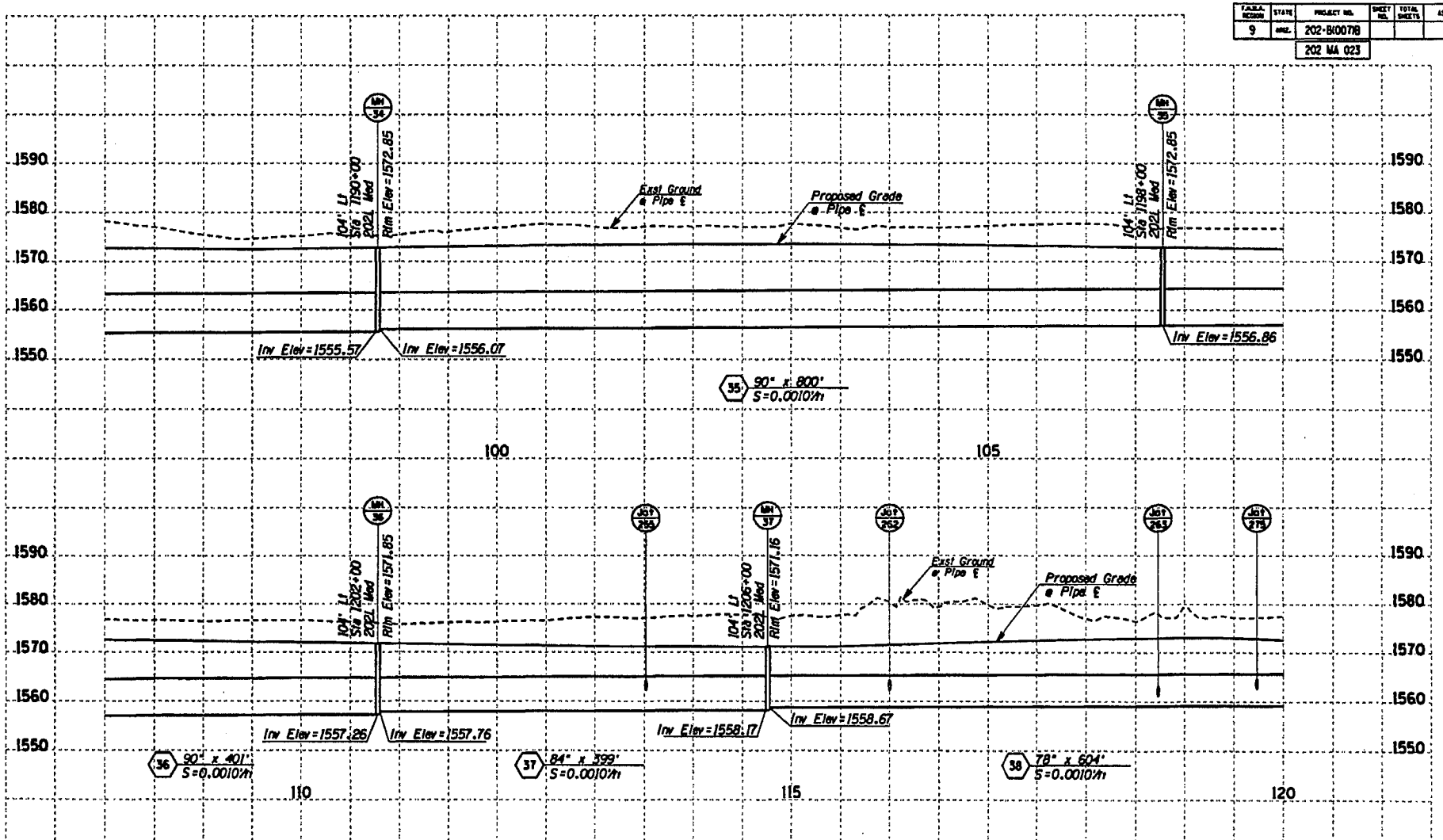

	NAME	DATE
DESIGN	RSR	4/05
DRAWN	R.J.P	4/05
CHECKED	CAD	4/05

Stanley Consultants Inc.

ARIZONA DEPARTMENT OF TRANSPORTATION
INTERMODAL TRANSPORTATION DIVISION
ROADWAY DESIGN SERVICES

STORM DRAIN PROFILES

PRELIMINARY
STAGE IV
95% Review
NOT FOR CONSTRUCTION OR RECORDING

YEAR	LOCATION	DWG NO. D-2.5
2021	RED MTN FWY, POWER ROAD - UNIVERSITY DRIVE	
TRACS NO. H 5782 01C		202-B(007)B — OF —

4/22/2005 q:\17000\active\07-05-design\04-drain\h5782sdp05.dgn

F.H.W.A. REGION	STATE	PROJECT NO.	SHEET NO.	TOTAL SHEETS	AS BUILT
9	ARIZ.	202-B(007)B			
		202 MA 023			

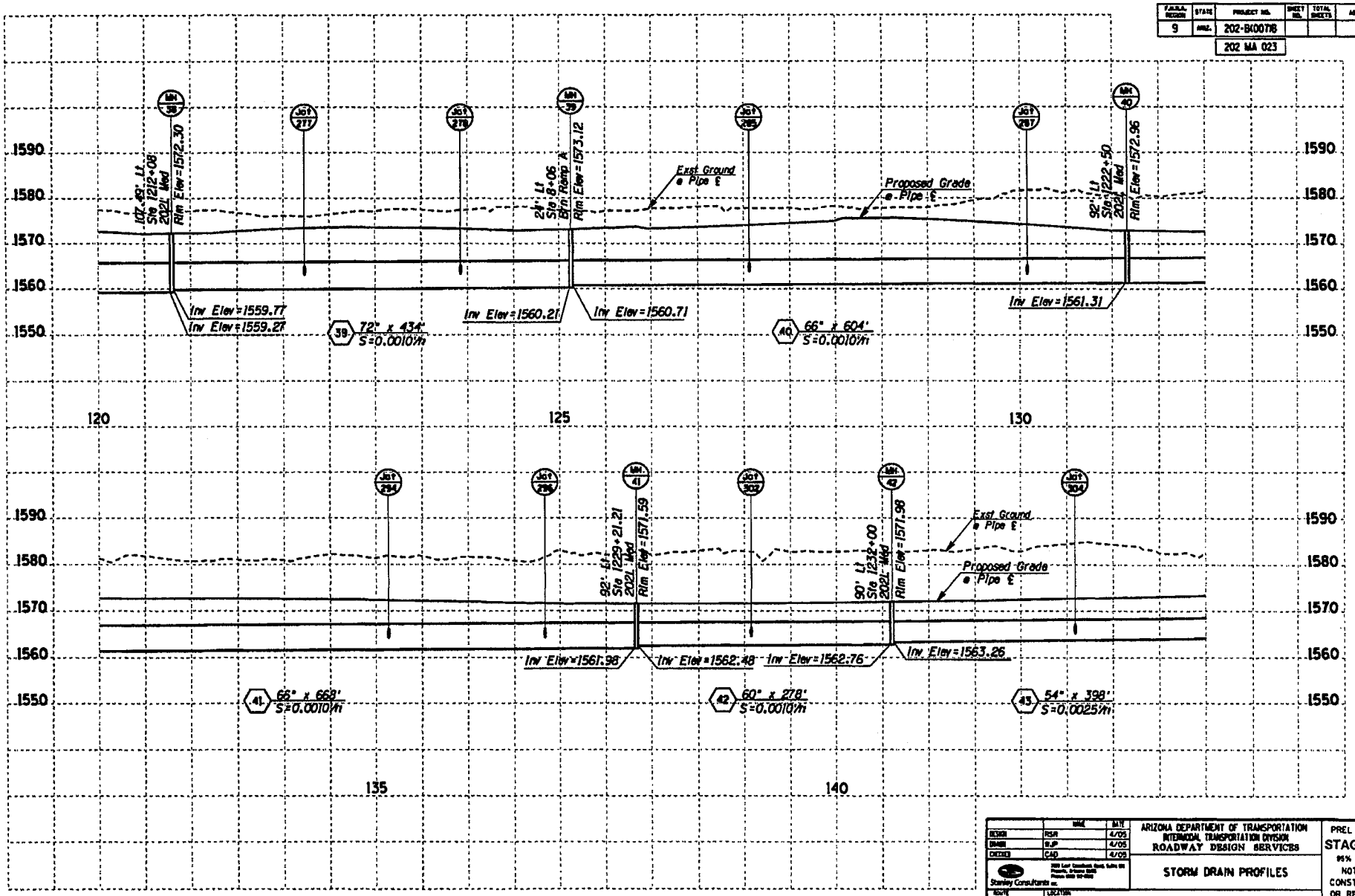

		MM	M/Y
DESIGN	RSR		4/05
DRAWN	BJP		4/05
CHECKED	CAD		4/05

Stanley Consultants Inc.

ARIZONA DEPARTMENT OF TRANSPORTATION
INTERMODAL TRANSPORTATION DIVISION
ROADWAY DESIGN SERVICES

STORM DRAIN PROFILES

PRELIMINARY
STAGE IV
95% Review
NOT FOR CONSTRUCTION OR RECORDING

DRG NO. D-2.6

ROUTE	LOCATION		
202L	RED MTN FWY, POWER ROAD - UNIVERSITY DRIVE		
TRACS NO. H 5782 01C		202-B(007)B	___ OF ___

4/22/2005 c:\17888\active\07-05-dwgs\04-drain\h5782sdp06.dgn

F.A.P.A. REGION	STATE	PROJECT NO.	SHEET NO.	TOTAL SHEETS	AS BUILT
9	ARIZ.	202-B(007)I			
		202 MA 023			

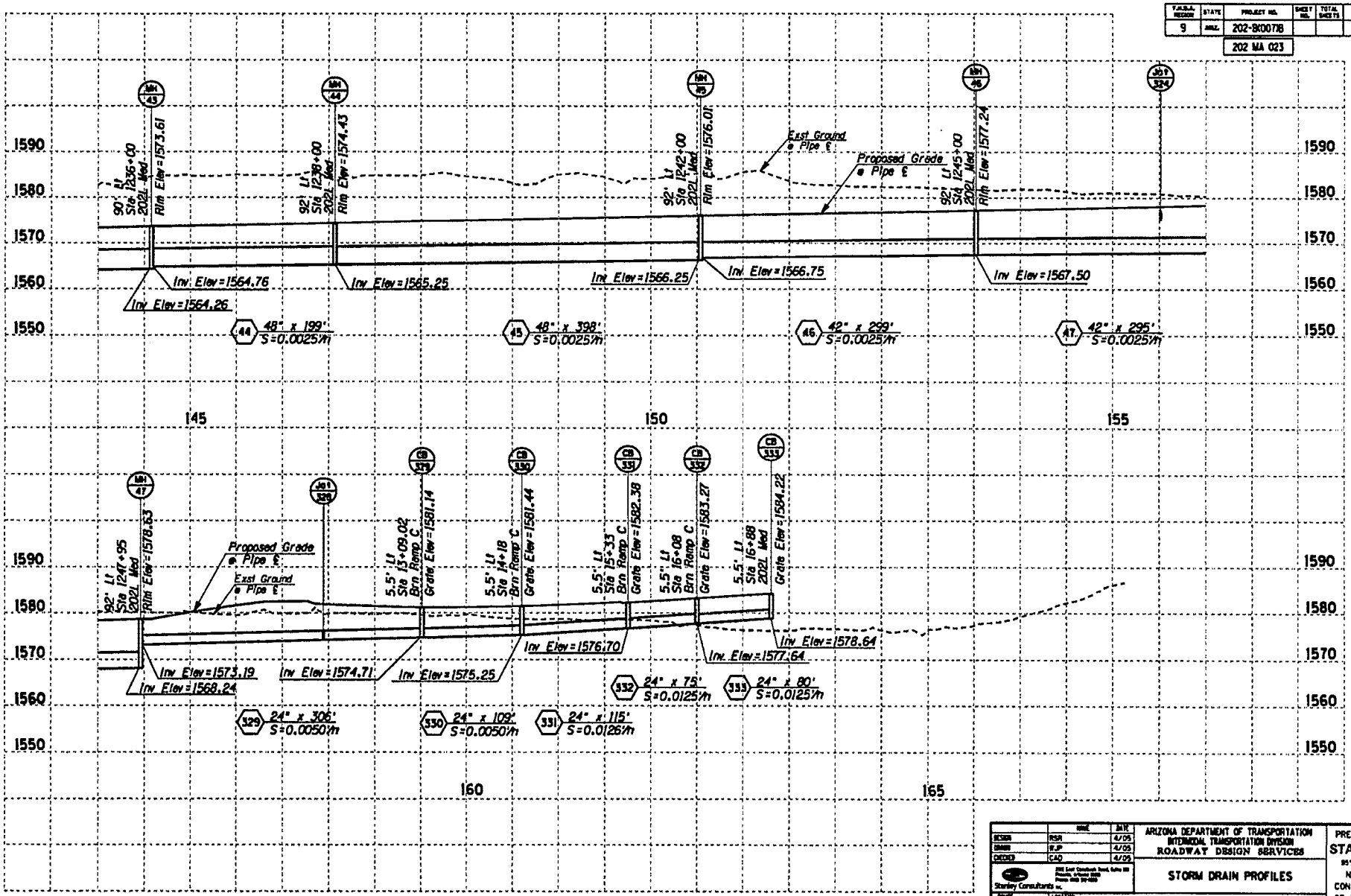

	NAME	DATE
DESIGN	RSR	4/05
DRAWN	R.J.P	4/05
CHECKED	CAD	4/05

Stanley Consultants Inc.

ARIZONA DEPARTMENT OF TRANSPORTATION
INTERMODAL TRANSPORTATION DIVISION
ROADWAY DESIGN SERVICES

STORM DRAIN PROFILES

PRELIMINARY
STAGE IV
95% Review
NOT FOR CONSTRUCTION OR RECORDING

YEAR	LOCATION
2021	RED MTN FWY, POWER ROAD - UNIVERSITY DRIVE

DWG NO. D-2.7

TRACS NO. H 5782 01C | 202-B(007)I | ___ OF ___

4/22/2005 G:\17888\Active\87-85-Design\84-Drain\H5782sdp87.dgn

P.A.R.A. REGION	STATE	PROJECT NO.	SHEET NO.	TOTAL SHEETS	AS BUILT
9	ARIZ.	202-B(007)I			
		202 MA 023			

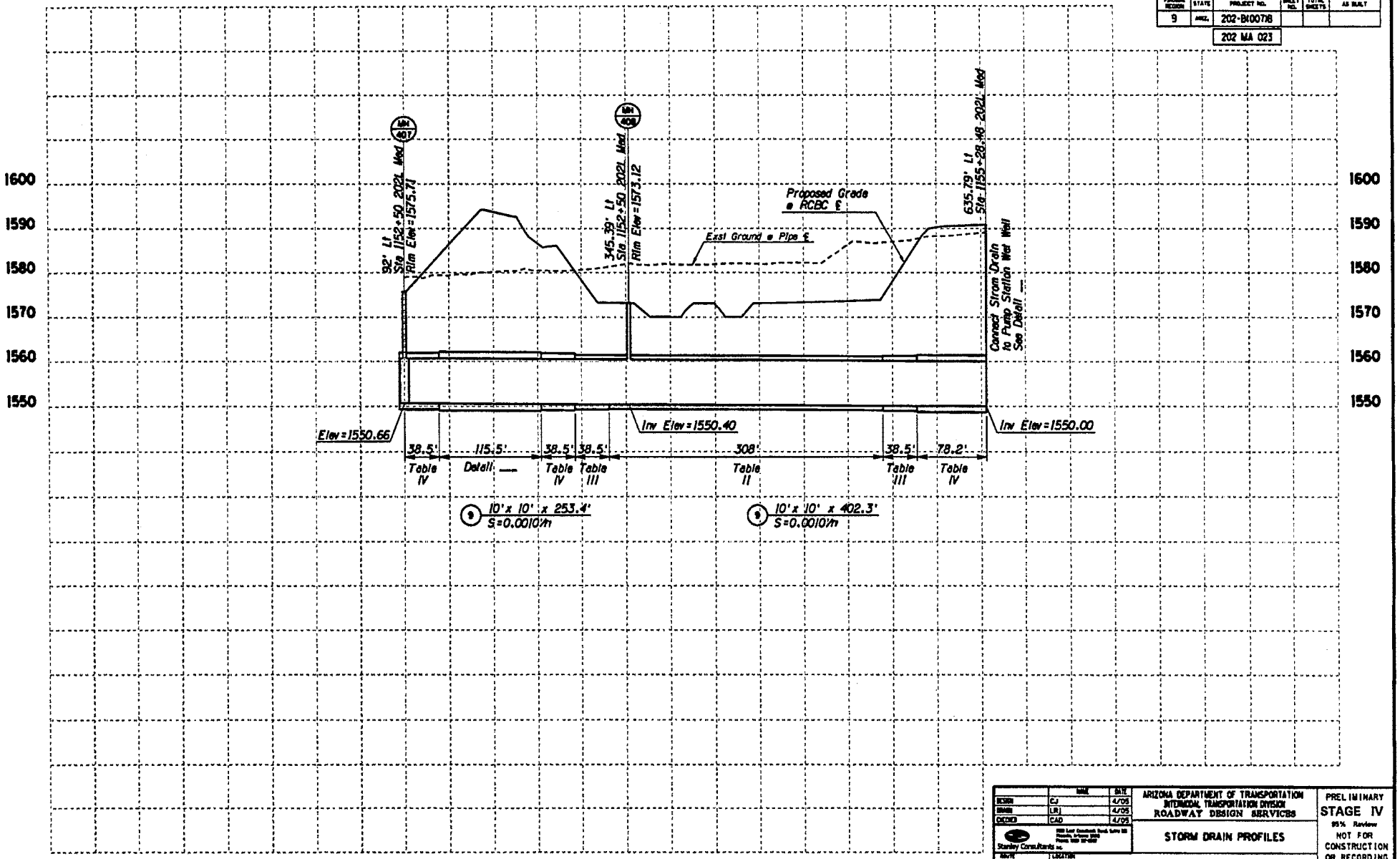

	NAME	DATE
DESIGN	CJ	4/05
DRAWN	LRJ	4/05
CHECKED	CAD	4/05

Stanley Consultants Inc.

ARIZONA DEPARTMENT OF TRANSPORTATION
INTERMODAL TRANSPORTATION DIVISION
ROADWAY DESIGN SERVICES

STORM DRAIN PROFILES

PRELIMINARY
STAGE IV
95% Review
NOT FOR CONSTRUCTION OR RECORDING

STATE	LOCATION	DWG NO. D-2.8
202L	RED MTN FWY, POWER ROAD - UNIVERSITY DRIVE	
TRACS NO. H 5782 01C	202-B(007)I	___ OF ___

4/22/2005 c:\17888\active\87-95-design\84-drain\D5782sdp88.dgn

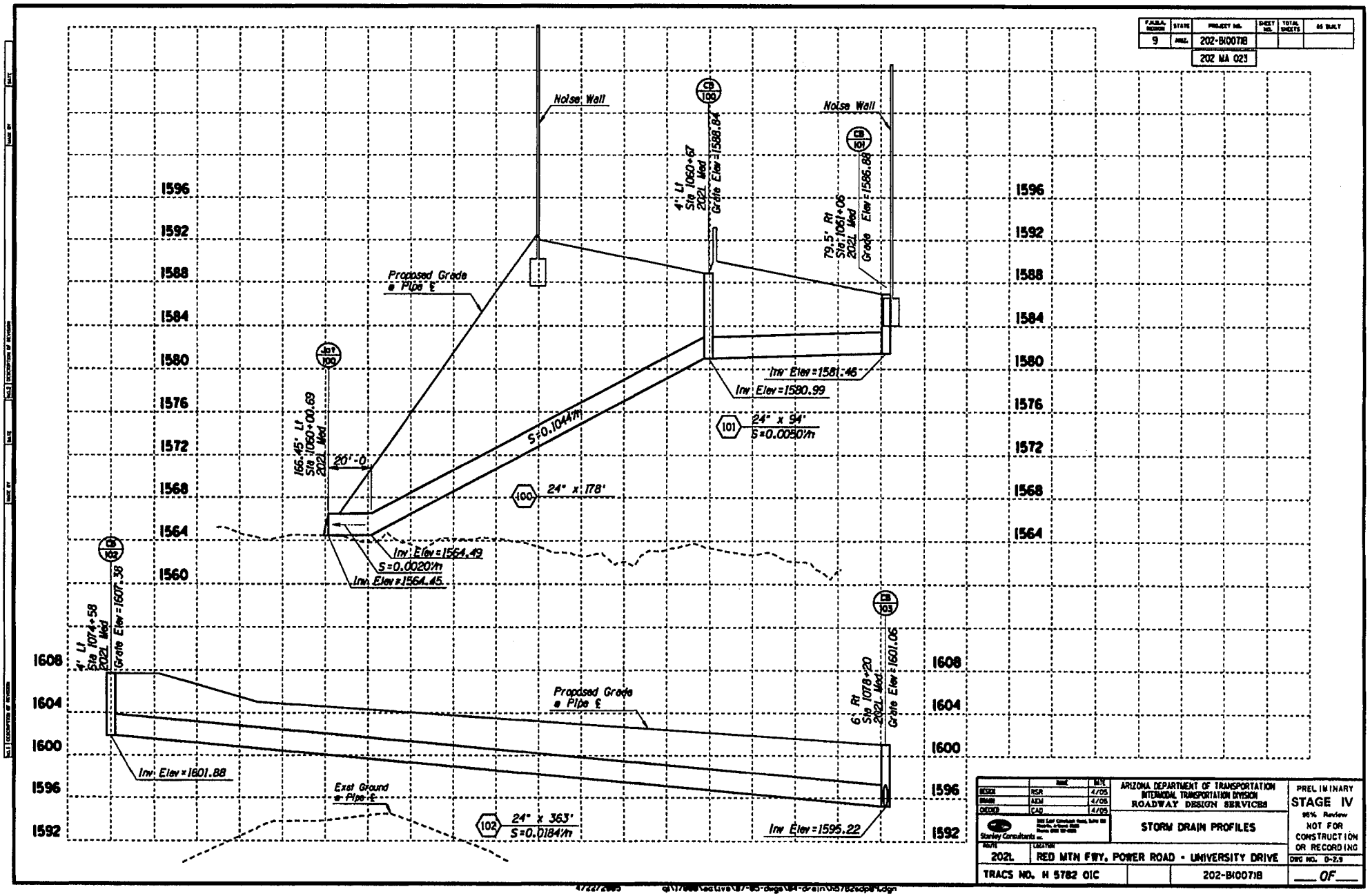

F.A.H.U.A. REGION	STATE	PROJECT NO.	SHEET NO.	TOTAL SHEETS	AS BUILT
9	ARIZ.	202-B(007)B			
		202 MA 023			

	NAME	DATE
DESIGN	RSR	4/05
DRAWN	AEM	4/05
CHECKED	CAD	4/05

Stanley Consultants Inc.

ARIZONA DEPARTMENT OF TRANSPORTATION
INTERMODAL TRANSPORTATION DIVISION
ROADWAY DESIGN SERVICES

STORM DRAIN PROFILES

PRELIMINARY
STAGE IV
95% Review
NOT FOR CONSTRUCTION OR RECORDING

DWG NO. D-2.9

YEAR	LOCATION
2021	RED MTN FWY, POWER ROAD - UNIVERSITY DRIVE

TRACS NO. H 5782 01C | 202-B(007)B | ___ OF ___

4/22/2005 q:\17888\acLive\87-85-dwgs\84-drain\h5782sdp8.dgn

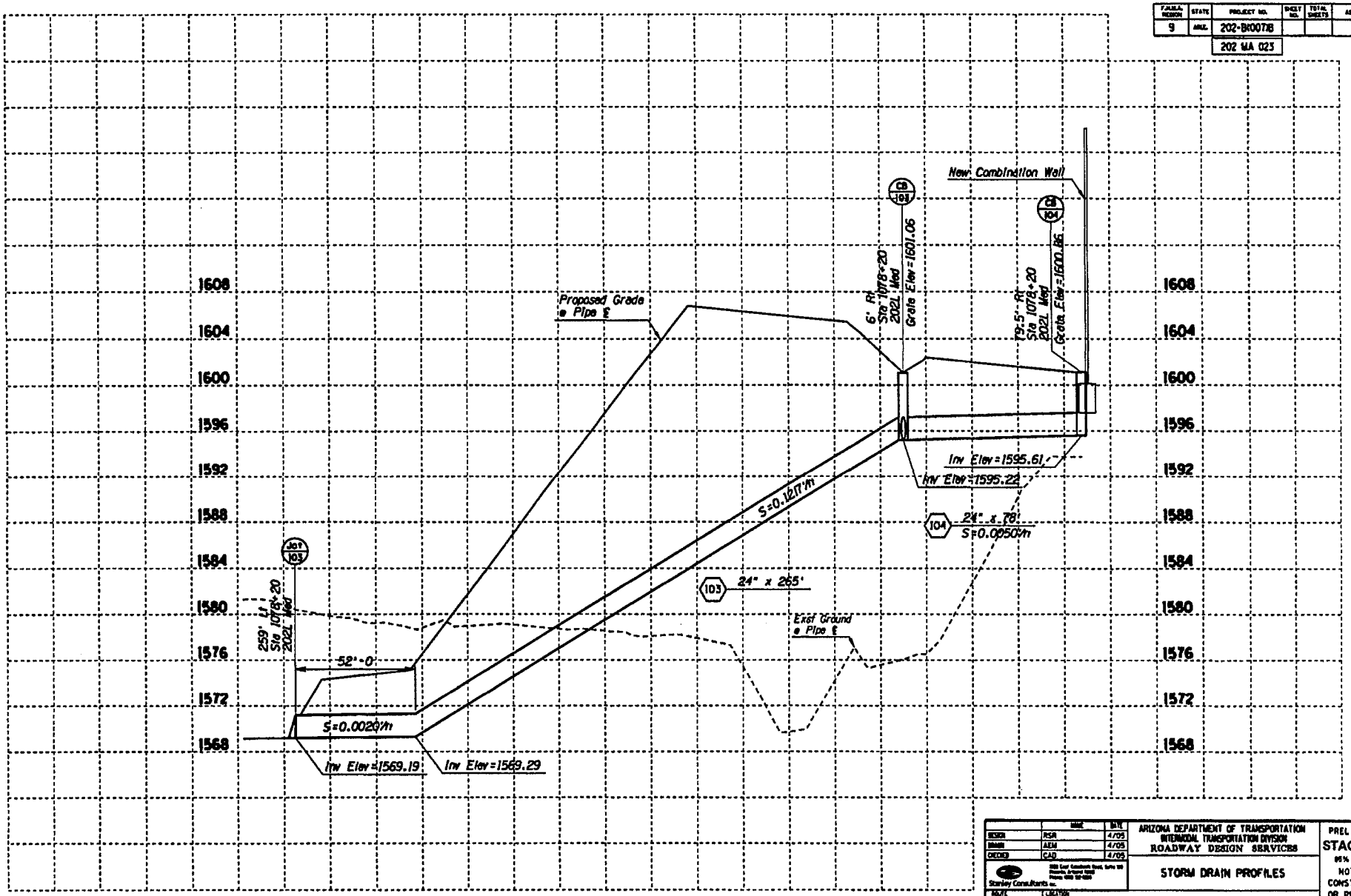

F.A.H.S.A. REGION	STATE	PROJECT NO.	SHEET NO.	TOTAL SHEETS	AS BUILT
9	ARIZ.	202-B(007)B			
		202 MA 023			

	NAME	DATE
DESIGN	RSR	4/05
DRAWN	AEM	4/05
CHECKED	CAD	4/05

Stanley Consultants Inc.

ARIZONA DEPARTMENT OF TRANSPORTATION
INTERMODAL TRANSPORTATION DIVISION
ROADWAY DESIGN SERVICES

STORM DRAIN PROFILES

PRELIMINARY
STAGE IV
95% Review
NOT FOR CONSTRUCTION OR RECORDING

DWG NO. D-2.10

DATE	LOCATION		
2021	RED MTN FWY, POWER ROAD - UNIVERSITY DRIVE		
TRACS NO. H 5782 01C		202-B(007)B	___ OF ___

4/22/2005 q:\17888\active\87-80-dsgn\84-drain\h5782sdpl8.dgn

F.A.P. NO.	STATE	PROJECT NO.	SHEET NO.	TOTAL SHEETS	AS BUILT
9	ARIZ.	202-B(007)B			
		202 MA 025			

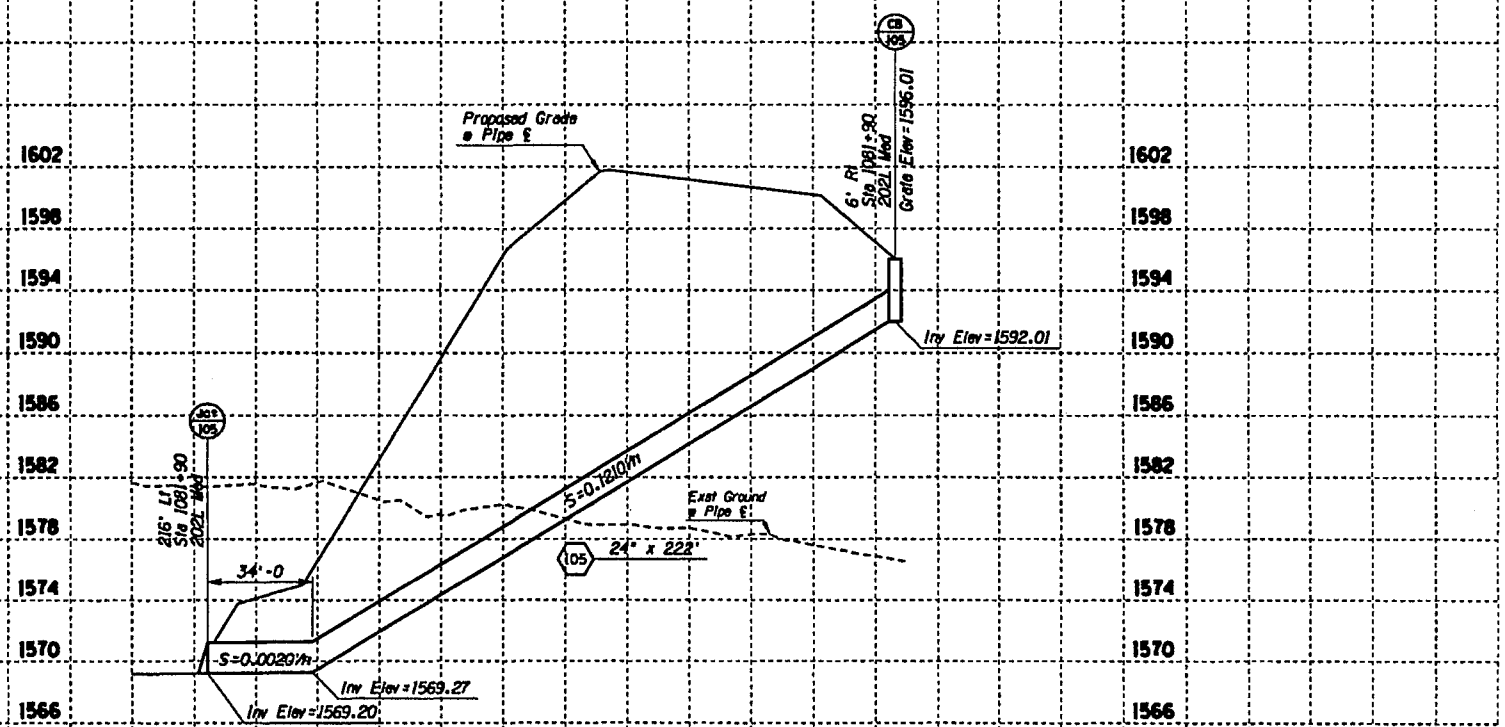

	NAME	DATE
DESIGN	RSR	4/05
DRAWN	AEM	4/05
CHECKED	CAD	4/05

Stanley Consultants Inc.

ARIZONA DEPARTMENT OF TRANSPORTATION
INTERMODAL TRANSPORTATION DIVISION
ROADWAY DESIGN SERVICES

STORM DRAIN PROFILES

PRELIMINARY
STAGE IV
95% Review
NOT FOR CONSTRUCTION OR RECORDING

DRG NO. D-2.11

ROUTE: 202L
LOCATION: RED MTN FWY, POWER ROAD - UNIVERSITY DRIVE

TRACS NO. H 5782 01C | 202-B(007)B | ___ OF ___

472272665 c:\17888\active\87-85-dwgs\84-drain\h5782sdp11.dgn

F.A.H.U. REGION	STATE	PROJECT NO.	SHEET NO.	TOTAL SHEETS	AS BUILT
9	ARIZ.	202-B(007)I			
		202 MA 023			

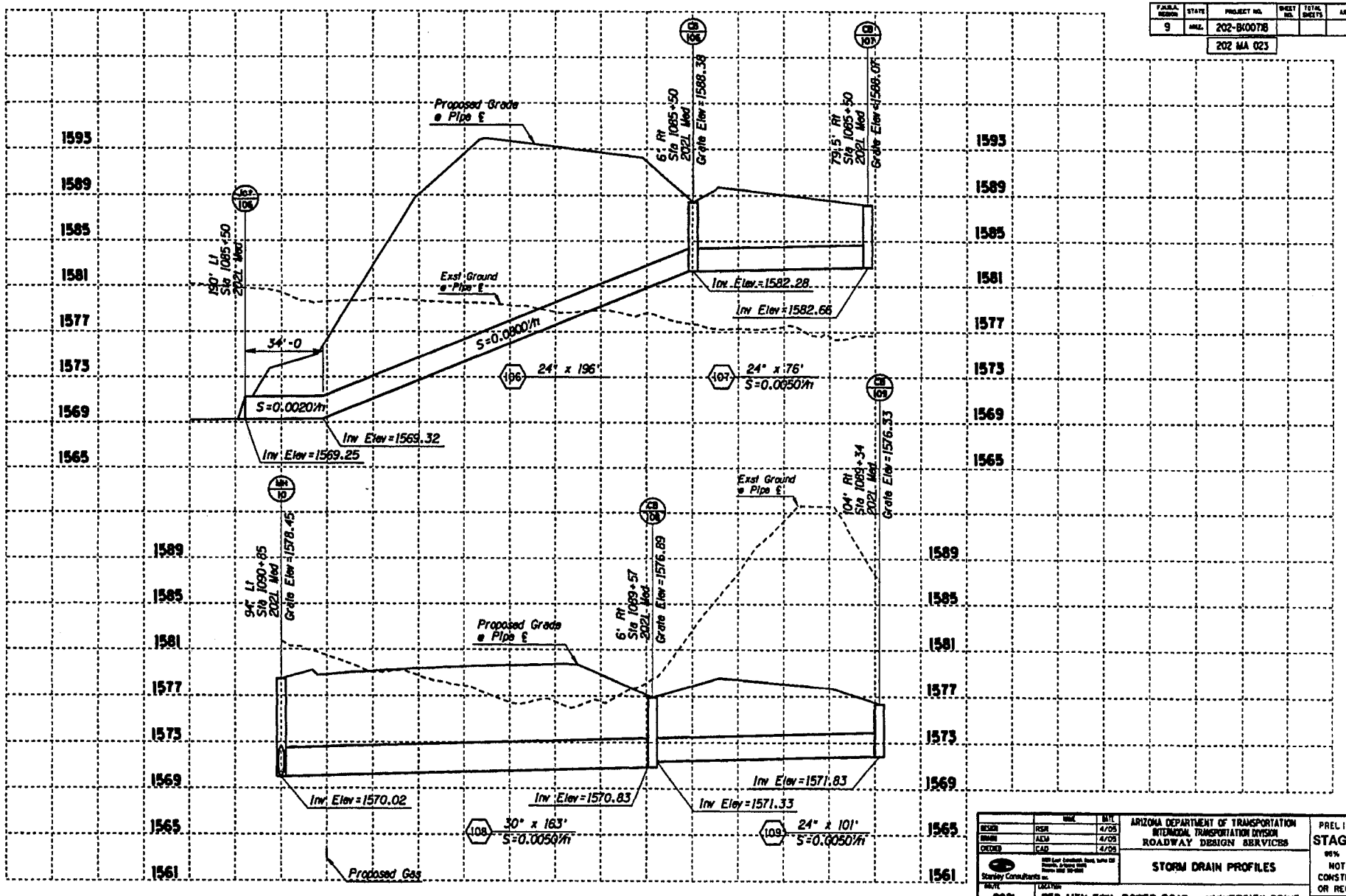

	BY	DATE
DESIGN	RSH	4/05
DRAWN	ALM	4/05
CHECKED	CAD	4/05

ARIZONA DEPARTMENT OF TRANSPORTATION
INTERMODAL TRANSPORTATION DIVISION
ROADWAY DESIGN SERVICES

Stanley Consultants Inc.

STORM DRAIN PROFILES

PRELIMINARY
STAGE IV
95% Review
NOT FOR CONSTRUCTION OR RECORDING

DWG NO. D-2.12

DESIGN YR.	LOCATION		
2021	RED MTN FWY, POWER ROAD - UNIVERSITY DRIVE		
TRACS NO. H 5782 01C		202-B(007)I	OF

4/22/2005 g:\17888\active\87-85-dwgs\04-drain\h5782sdp12.dgn

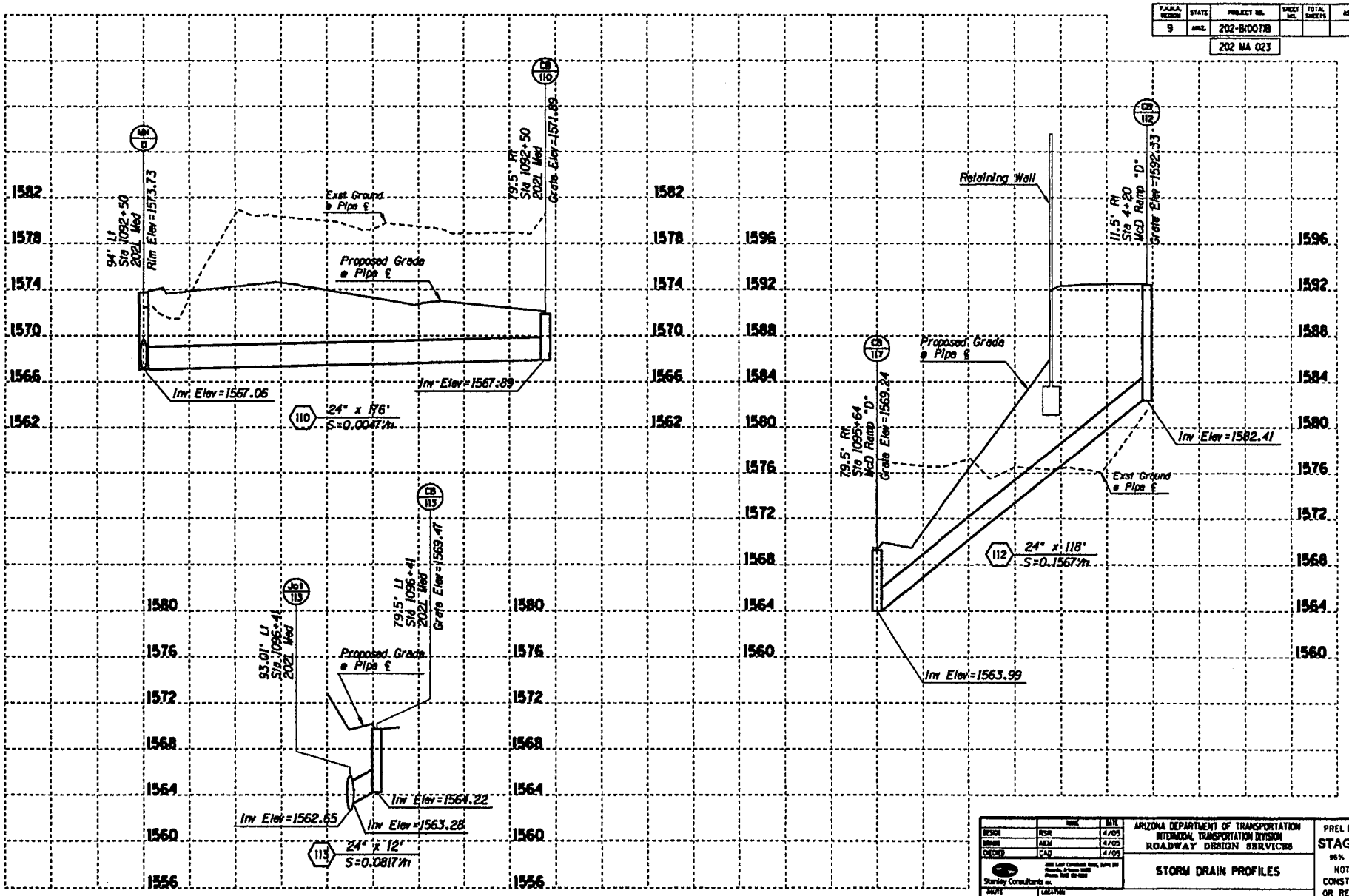

F.A.R.A. REGION	STATE	PROJECT NO.	SHEET NO.	TOTAL SHEETS	AS BUILT
9	ARIZ.	202-B(007)B			
		202 MA 023			

	NAME	DATE
DESIGN	RSR	4/05
DRAWN	AEM	4/05
CHECKED	CAD	4/05

Stanley Consultants Inc.

ARIZONA DEPARTMENT OF TRANSPORTATION
INTERMODAL TRANSPORTATION DIVISION
ROADWAY DESIGN SERVICES

STORM DRAIN PROFILES

PRELIMINARY
STAGE IV
95% Review
NOT FOR CONSTRUCTION OR RECORDING

DATE: 202L
LOCATION: RED MTN FWY, POWER ROAD - UNIVERSITY DRIVE
DWG NO. D-2.13

TRACS NO. H 5782 01C | 202-B(007)B | ___ OF ___

4/22/2005 q:\17888\active\87-85-design\84-drain\05782sdpl1.dgn

F.H.W.A. REGION	STATE	PROJECT NO.	SHEET NO.	TOTAL SHEETS	AS BUILT
9	ARIZ.	202-B(007)I			
		202 MA 023			

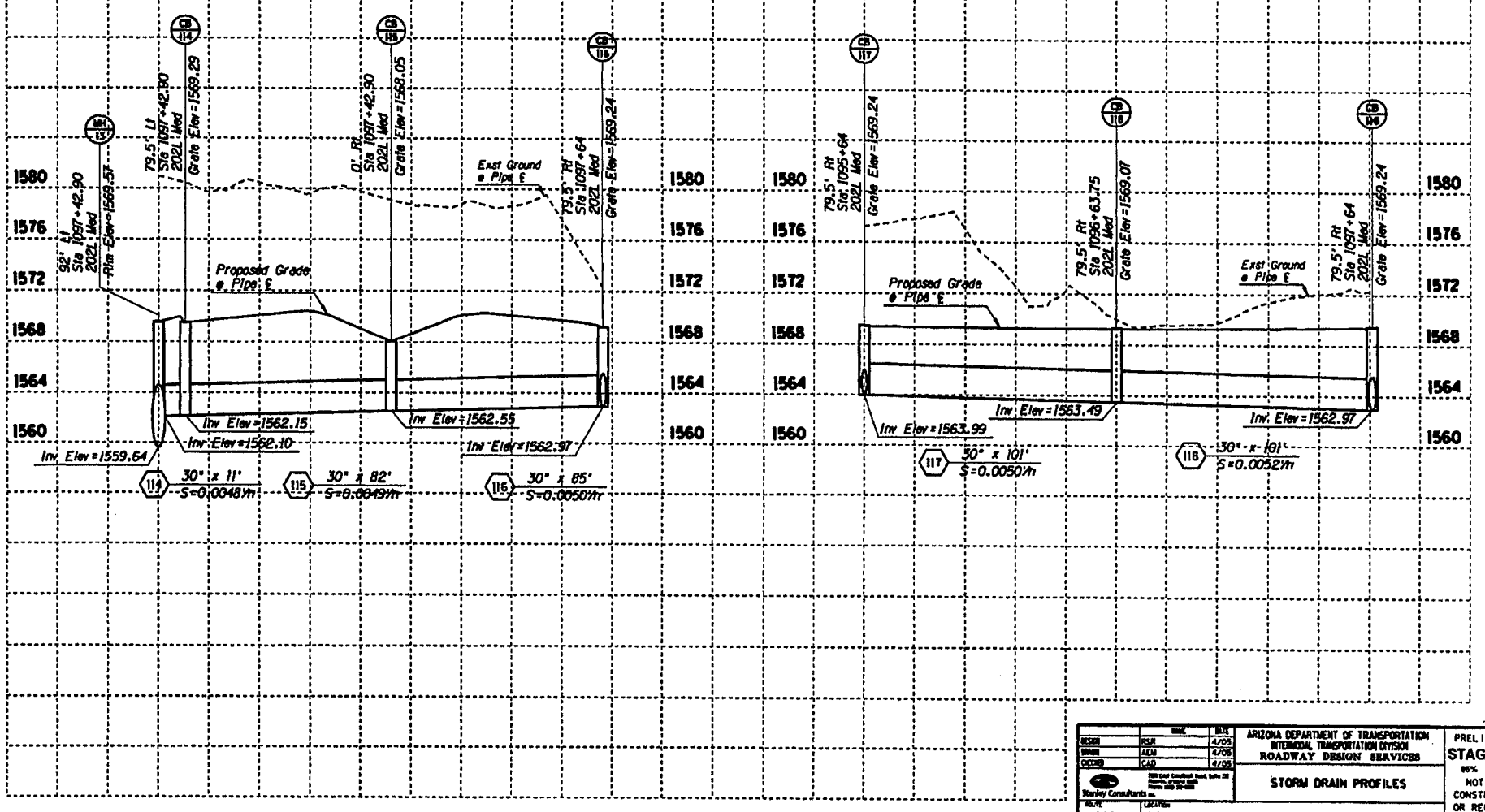

DESIGN	PSR	4/05	ARIZONA DEPARTMENT OF TRANSPORTATION INTERMODAL TRANSPORTATION DIVISION ROADWAY DESIGN SERVICES
DRAWN	AEM	4/05	
CHECKED	CAD	4/05	
Stanley Consultants Inc.			STORM DRAIN PROFILES
RS/YR 202L	LOCATION RED MTN FWY, POWER ROAD - UNIVERSITY DRIVE		
TRACS NO. H 5782 01C		202-B(007)I	

PRELIMINARY
STAGE IV
95% Review
NOT FOR CONSTRUCTION OR RECORDING

DWG NO. D-2.14

___ OF ___

FAI/AIA REGION	STATE	PROJECT NO.	SHEET NO.	TOTAL SHEETS	AS BUILT
9	ARIZ.	202-B(007)I			
		202 MA 023			

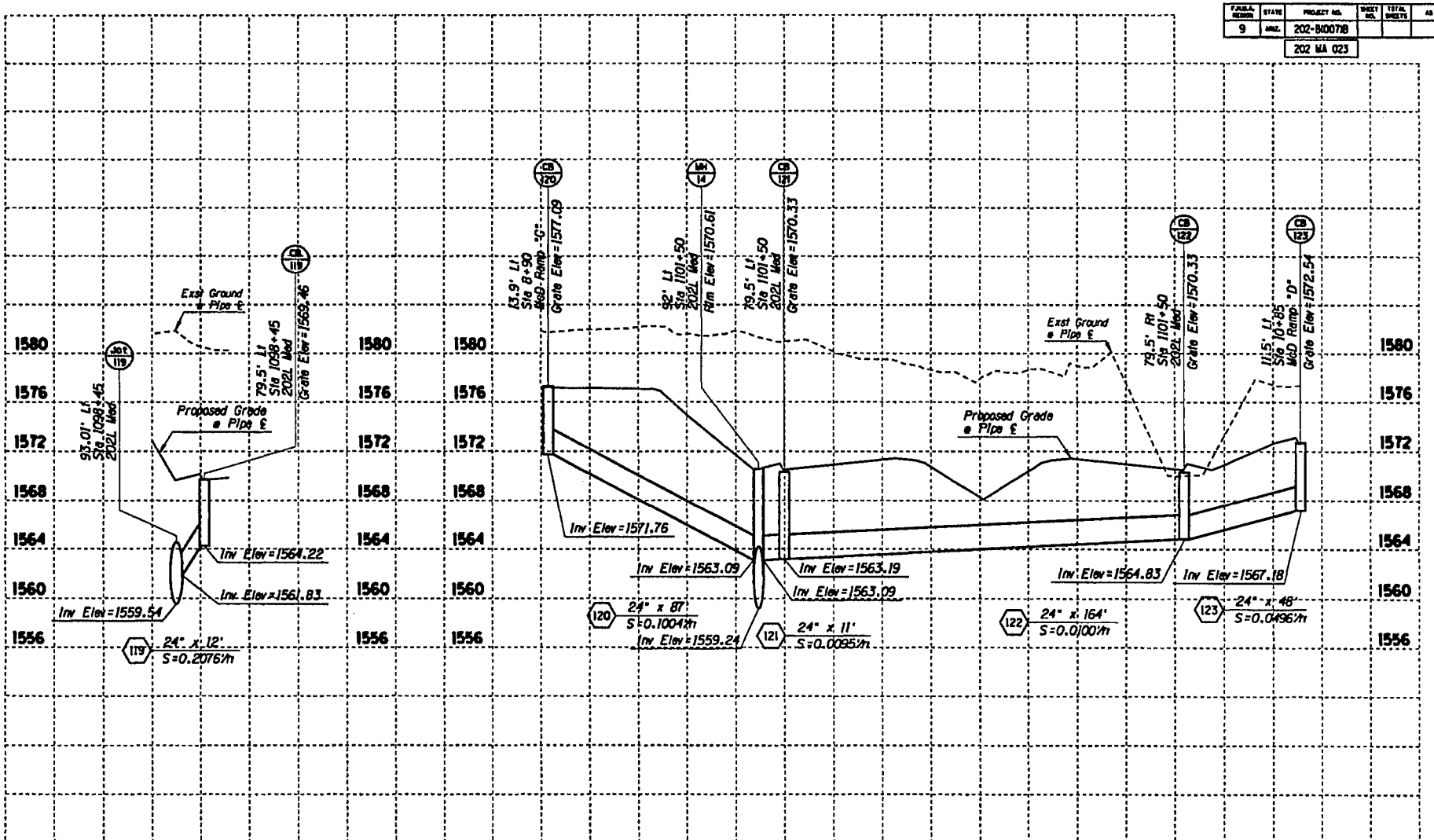

	NAME	DATE
DESIGN	RSR	4/05
DRAWN	AEM	4/05
CHECKED	CAD	4/05

Stanley Consultants Inc.

ARIZONA DEPARTMENT OF TRANSPORTATION
INTERMODAL TRANSPORTATION DIVISION
ROADWAY DESIGN SERVICES

STORM DRAIN PROFILES

PRELIMINARY
STAGE IV
95% Review
NOT FOR CONSTRUCTION OR RECORDING

ROUTE	LOCATION	DWG NO. D-2.15
202L	RED MTN FWY, POWER ROAD - UNIVERSITY DRIVE	
TRACS NO. H 5782 01C		202-B(007)I

___ OF ___

472272885 q:\17MM\active\87-85-dwgs\84-drain\05782sdpl5.dgn

FAP/A PROJECT	STATE	PROJECT NO.	SHEET NO.	TOTAL SHEETS	AS BUILT
9	ARIZ.	202-B(007)B			
		202 MA 023			

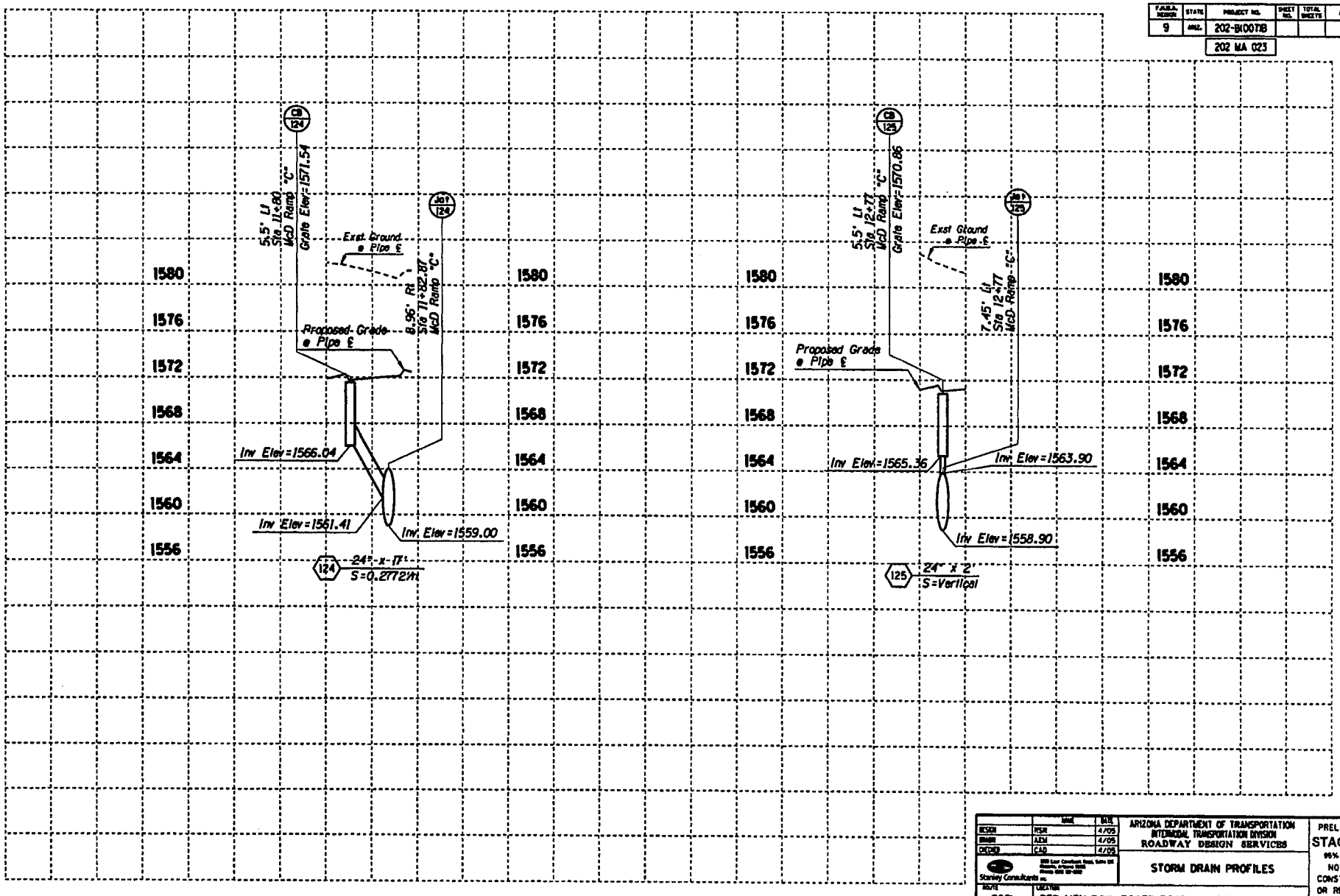

		DATE
DESIGN	PSR	4/05
DRAWN	AEM	4/05
CHECKED	CAD	4/05

Stanley Consultants Inc.

ARIZONA DEPARTMENT OF TRANSPORTATION
INTERMODAL TRANSPORTATION DIVISION
ROADWAY DESIGN SERVICES

STORM DRAIN PROFILES

PRELIMINARY
STAGE IV
95% Review
NOT FOR CONSTRUCTION OR RECORDING

ROUTE	LOCATION	DRG NO. D-2.16
202L	RED MTN FWY, POWER ROAD - UNIVERSITY DRIVE	
TRACS NO. H 5782 01C	202-B(007)B	___ OF ___

4/22/2005 q:\17888\active\87-95-dgn\84-drain\h5782sdp15.dgn

FHWA REGION	STATE	PROJECT NO.	SHEET NO.	TOTAL SHEETS	AS BUILT
9	ARIZ.	202-B(007)B			
		202 MA 023			

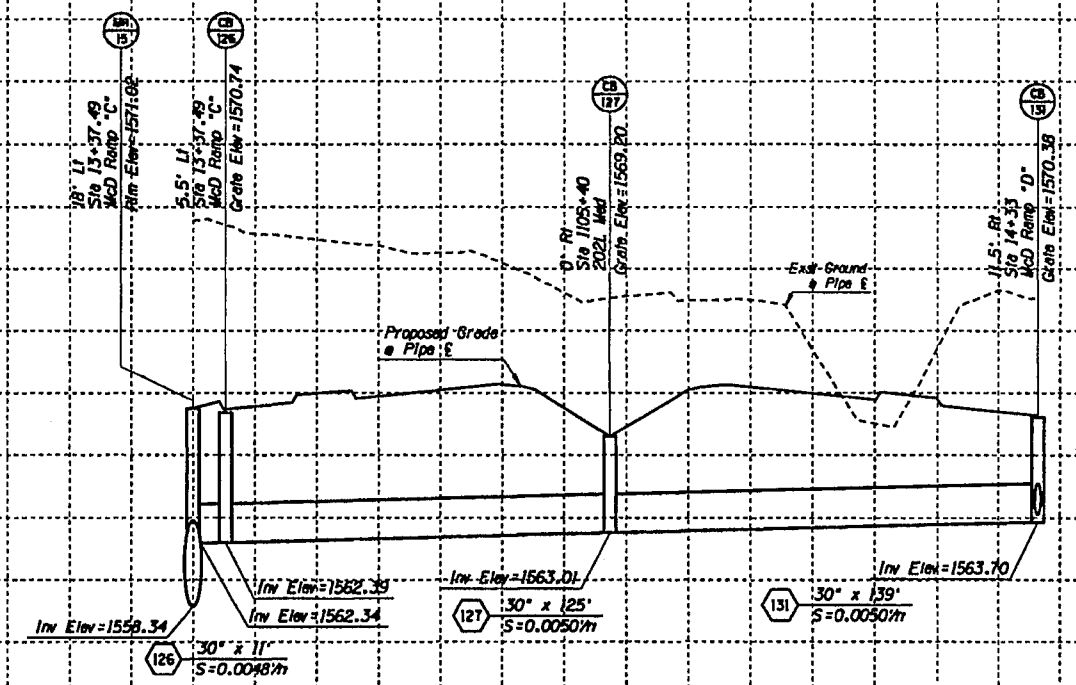

	NAME	DATE
DESIGN	PSR	4/05
DRAWN	AEM	4/05
CHECKED	CAD	4/05

Stanley Consultants Inc.

ARIZONA DEPARTMENT OF TRANSPORTATION
INTERMODAL TRANSPORTATION DIVISION
ROADWAY DESIGN SERVICES

STORM DRAIN PROFILES

PRELIMINARY
STAGE IV
95% Review
NOT FOR CONSTRUCTION OR RECORDING

ROUTE	LOCATION
202L	RED MTN FWY, POWER ROAD - UNIVERSITY DRIVE

DWG NO. D-2.17

TRACS NO. H 5782 01C | 202-B(007)B | ___ OF ___

4/22/2005 dp\17888\Secure\87-85-dwgs\84-drain\h5782sdpl7.dgn

FHWA REGION	STATE	PROJECT NO.	SHEET NO.	TOTAL SHEETS	AS BUILT
9	ARIZ.	202-B(007)B			
		202 MA 023			

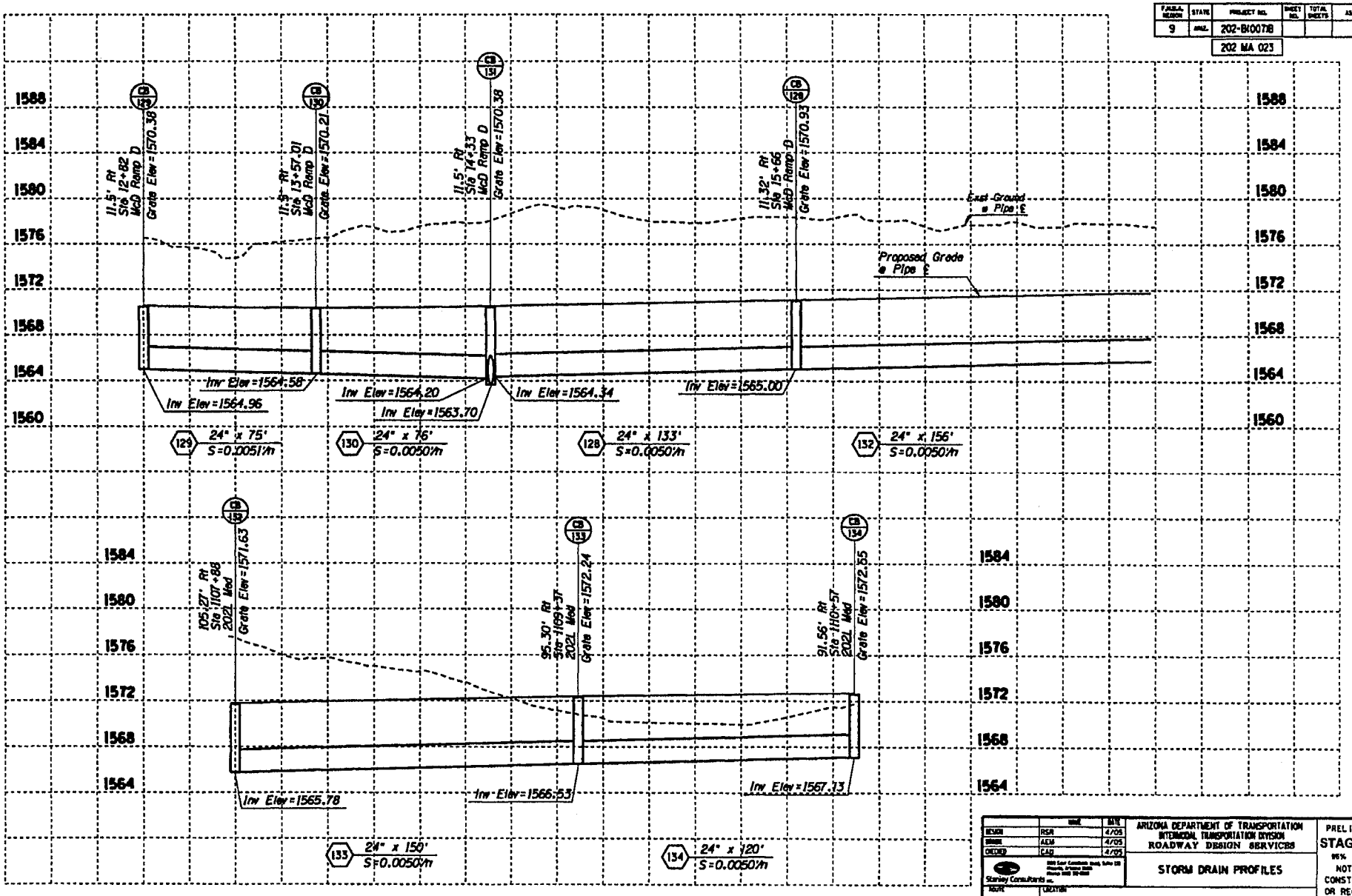

	NAME	DATE
DESIGN	RSR	4/05
DRAWN	ACM	4/05
CHECKED	CAD	4/05

Stanley Consultants inc.

ARIZONA DEPARTMENT OF TRANSPORTATION
INTERMODAL TRANSPORTATION DIVISION
ROADWAY DESIGN SERVICES

STORM DRAIN PROFILES

PRELIMINARY
STAGE IV
95% Review
NOT FOR CONSTRUCTION OR RECORDING

ROUTE	LOCATION	DWG NO. D-2.18
202L	RED MTN FWY, POWER ROAD - UNIVERSITY DRIVE	
TRACS NO. H 5782 01C	202-B(007)B	___ OF ___

4722728805 q:\17field\active\87-85-dwgs\84-drain\05782sddp18.dgn

F.A.H.S. REGION	STATE	PROJECT NO.	SHEET NO.	TOTAL SHEETS	AS BUILT
9	ARIZ.	202-B(007)B			
		202 MA 023			

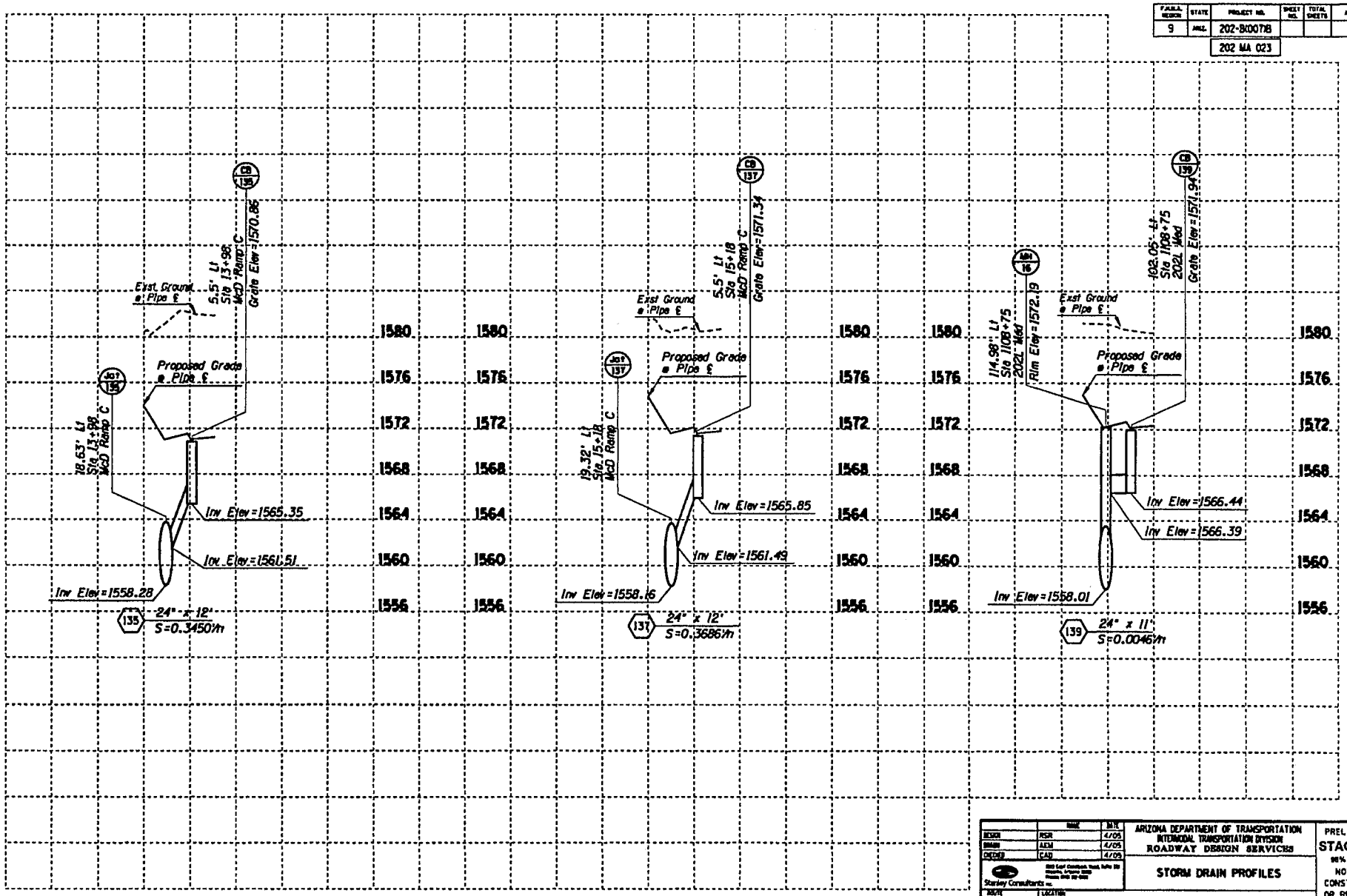

	NAME	DATE
DESIGN	RSR	4/05
DRAWN	AEM	4/05
CHECKED	CAD	4/05

Stanley Consultants Inc.

ARIZONA DEPARTMENT OF TRANSPORTATION
INTERMODAL TRANSPORTATION DIVISION
ROADWAY DESIGN SERVICES

STORM DRAIN PROFILES

PRELIMINARY
STAGE IV
95% Review
NOT FOR CONSTRUCTION OR RECORDING

ROUTE	LOCATION	DWG NO. D-2.19
202L	RED MTN FWY, POWER ROAD - UNIVERSITY DRIVE	
TRACS NO. H 5782 01C	202-B(007)B	___ OF ___

4/22/2005 q:\17000\active\07-05-dwgs\04-drain\05782sdp1.dgn

F.A.P.M. REGION	STATE	PROJECT NO.	SHEET NO.	TOTAL SHEETS	AS BUILT
9	ARIZ.	202-B(007)B			
		202 MA 023			

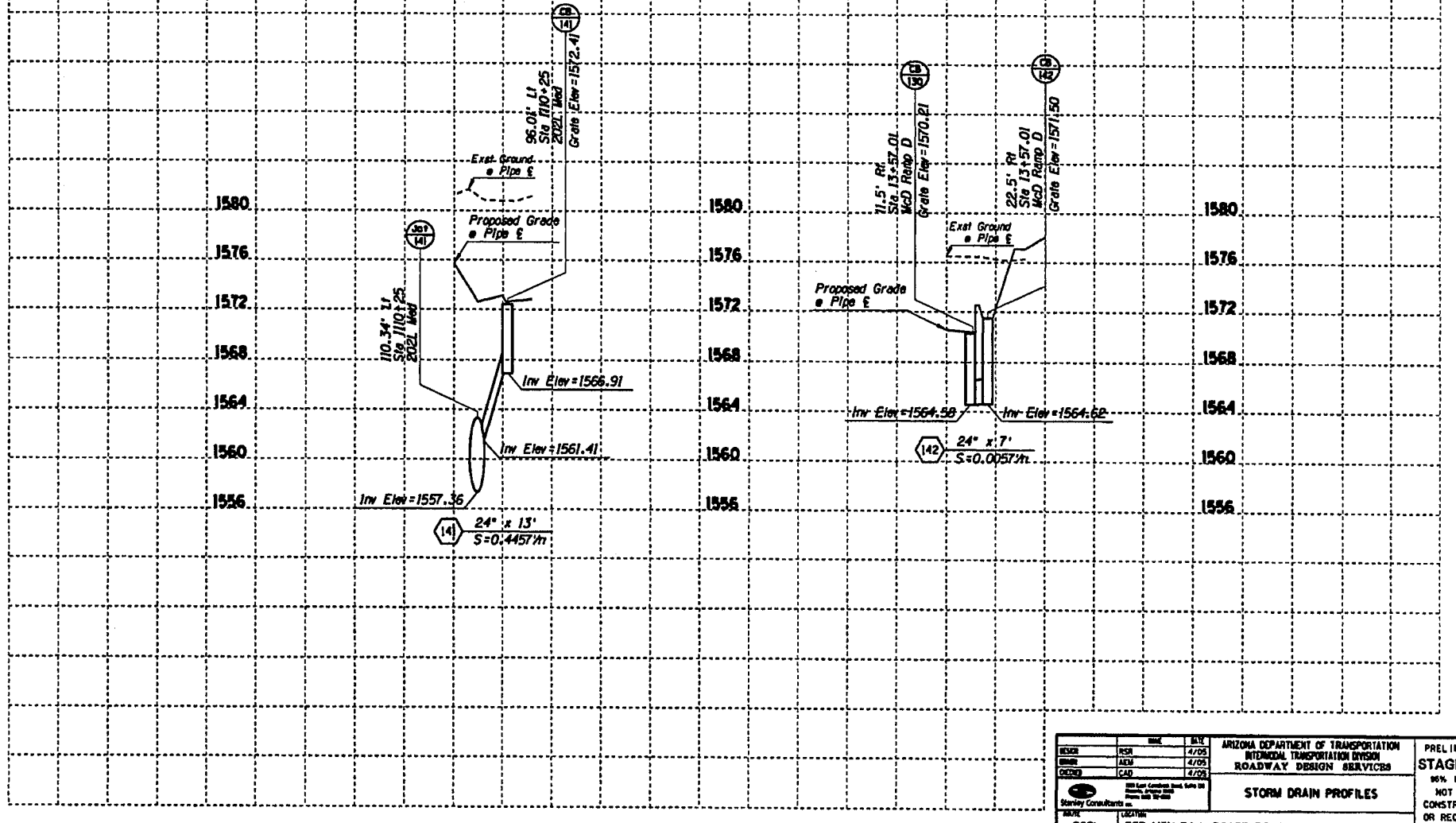

	NAME	DATE
DESIGN	RSR	4/05
DRAWN	MCM	4/05
CHECKED	CAD	4/05

Stanley Consultants Inc.

ARIZONA DEPARTMENT OF TRANSPORTATION
INTERMODAL TRANSPORTATION DIVISION
ROADWAY DESIGN SERVICES

STORM DRAIN PROFILES

PRELIMINARY
STAGE IV
95% Review
NOT FOR CONSTRUCTION OR RECORDING

ROUTE	LOCATION	ORG NO. 0-2.20
202L	RED MTN FWY, POWER ROAD - UNIVERSITY DRIVE	
TRACS NO. H 5782 01C		202-B(007)B

___ OF ___

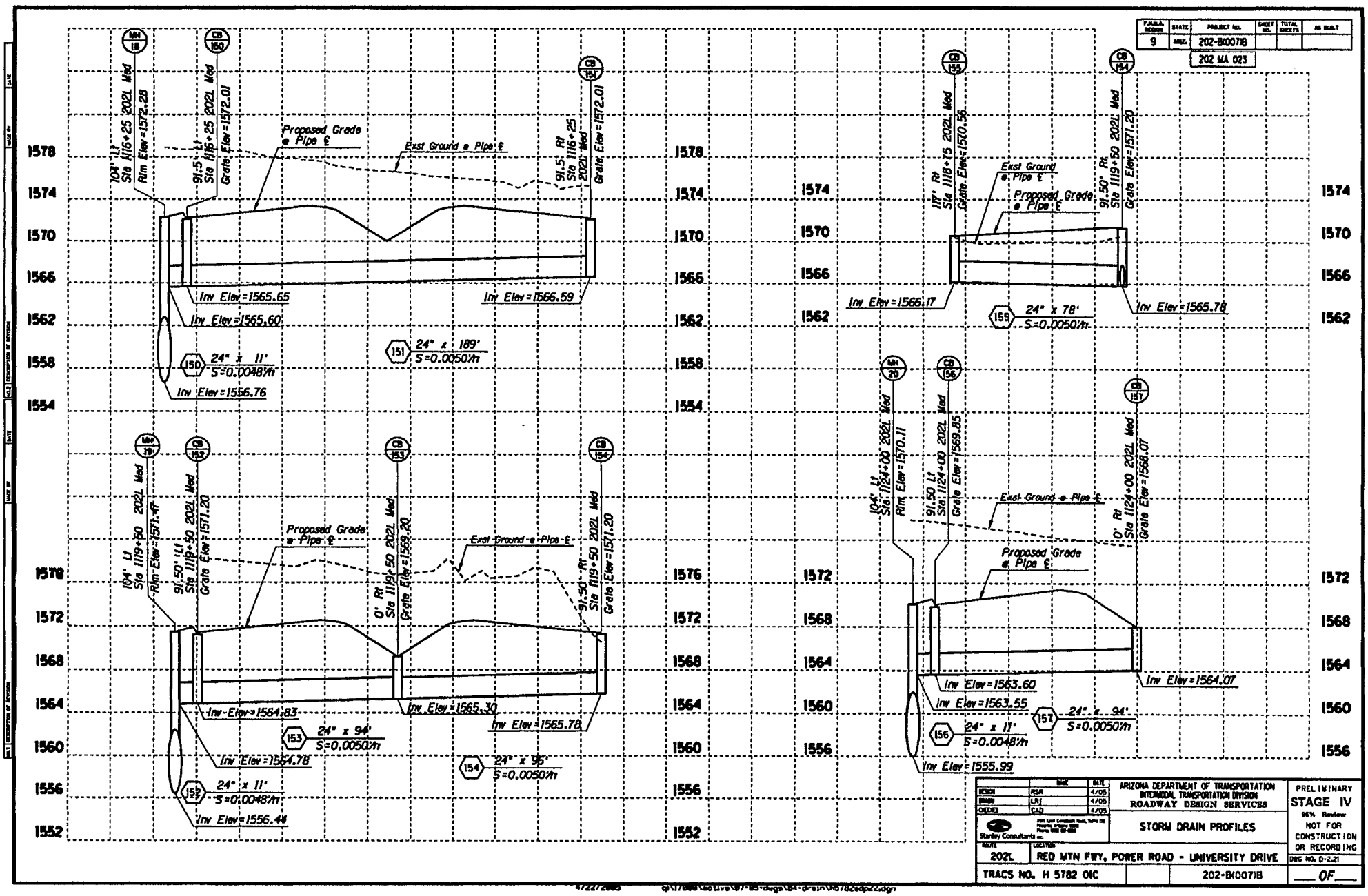

F.A.H.U. REGION	STATE	PROJECT NO.	SHEET NO.	TOTAL SHEETS	AS BUILT
9	ARIZ.	202-B(007)I			
		202 MA 023			

	NAME	DATE
DESIGN	PSR	4/05
DRAWN	LRJ	4/05
CHECKED	CAD	4/05

Stanley Consultants Inc.

ARIZONA DEPARTMENT OF TRANSPORTATION
INTERMODAL TRANSPORTATION DIVISION
ROADWAY DESIGN SERVICES

STORM DRAIN PROFILES

PRELIMINARY
STAGE IV
95% Review
NOT FOR CONSTRUCTION OR RECORDING

ROUTE	LOCATION	
202L	RED MTN FWY, POWER ROAD - UNIVERSITY DRIVE	DWG NO. D-2.21
TRACS NO. H 5782 01C		202-B(007)I

OF

4/22/2005 g:\17888\active\87-85-dwgs\84-drain\h5782sdp22.dgn

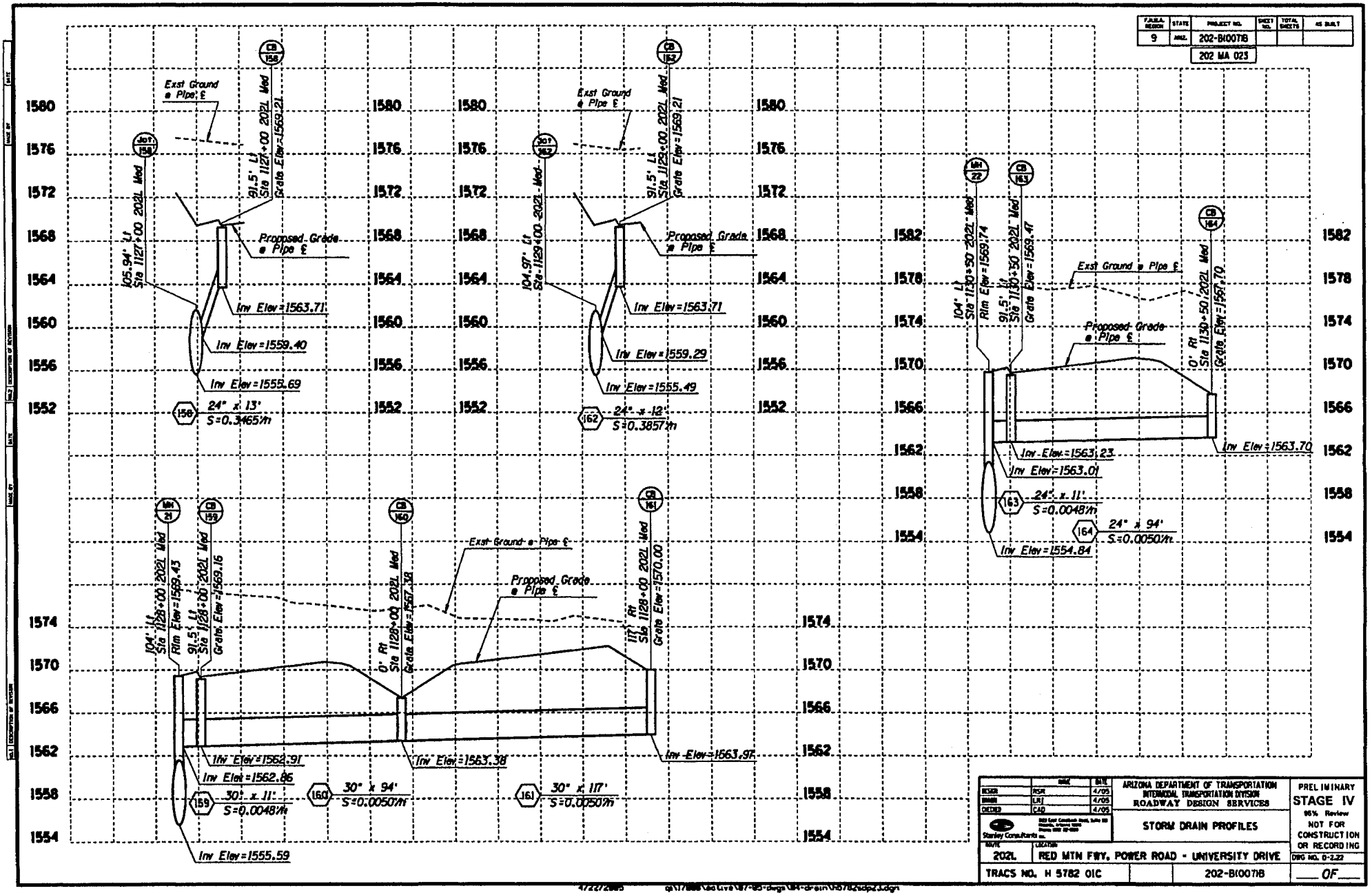

F.A.H.U. REGION	STATE	PROJECT NO.	SHEET NO.	TOTAL SHEETS	AS BUILT
9	ARIZ.	202-B(007)B			
		202 MA 023			

	NAME	DATE
DESIGN	RSR	4/05
DRAWN	LKJ	4/05
CHECKED	CAD	4/05

Stanley Consultants Inc.

ARIZONA DEPARTMENT OF TRANSPORTATION
INTERMODAL TRANSPORTATION DIVISION
ROADWAY DESIGN SERVICES

STORM DRAIN PROFILES

PRELIMINARY
STAGE IV
95% Review
NOT FOR CONSTRUCTION OR RECORDING

ROUTE	LOCATION	DRG NO. D-2.22
202L	RED MTN FWY, POWER ROAD - UNIVERSITY DRIVE	
TRACS NO. H 5782 01C		202-B(007)B

___ OF ___

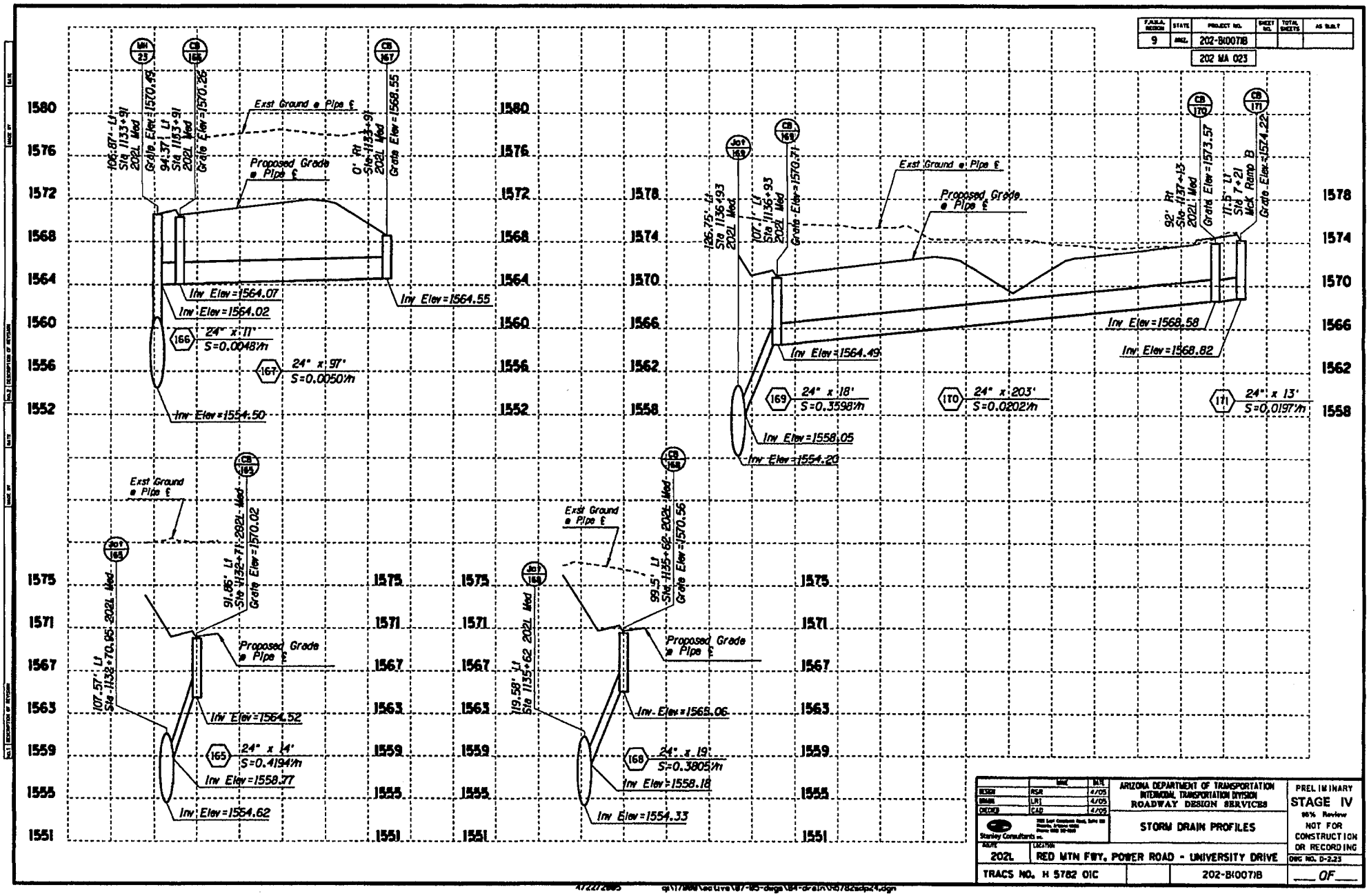

F.A.H.U. DIVISION	STATE	PROJECT NO.	SHEET NO.	TOTAL SHEETS	AS BUILT
9	ARIZ.	202-B(007)B			
		202 MA 023			

	NAME	DATE
DESIGN	RSR	4/05
DRAWN	LR1	4/05
CHECKED	CAD	4/05

Stanley Consultants Inc.

ARIZONA DEPARTMENT OF TRANSPORTATION
INTERMODAL TRANSPORTATION DIVISION
ROADWAY DESIGN SERVICES

STORM DRAIN PROFILES

PRELIMINARY
STAGE IV
95% Review
NOT FOR CONSTRUCTION OR RECORDING

ROUTE: 202L
LOCATION: RED MTN FWY, POWER ROAD - UNIVERSITY DRIVE

TRACS NO. H 5782 01C

202-B(007)B

DWG NO. D-2.23

___ OF ___

4/22/2005 cp:\17000\active\87-05-dwgs\84-drain\h5782sdp24.dgn

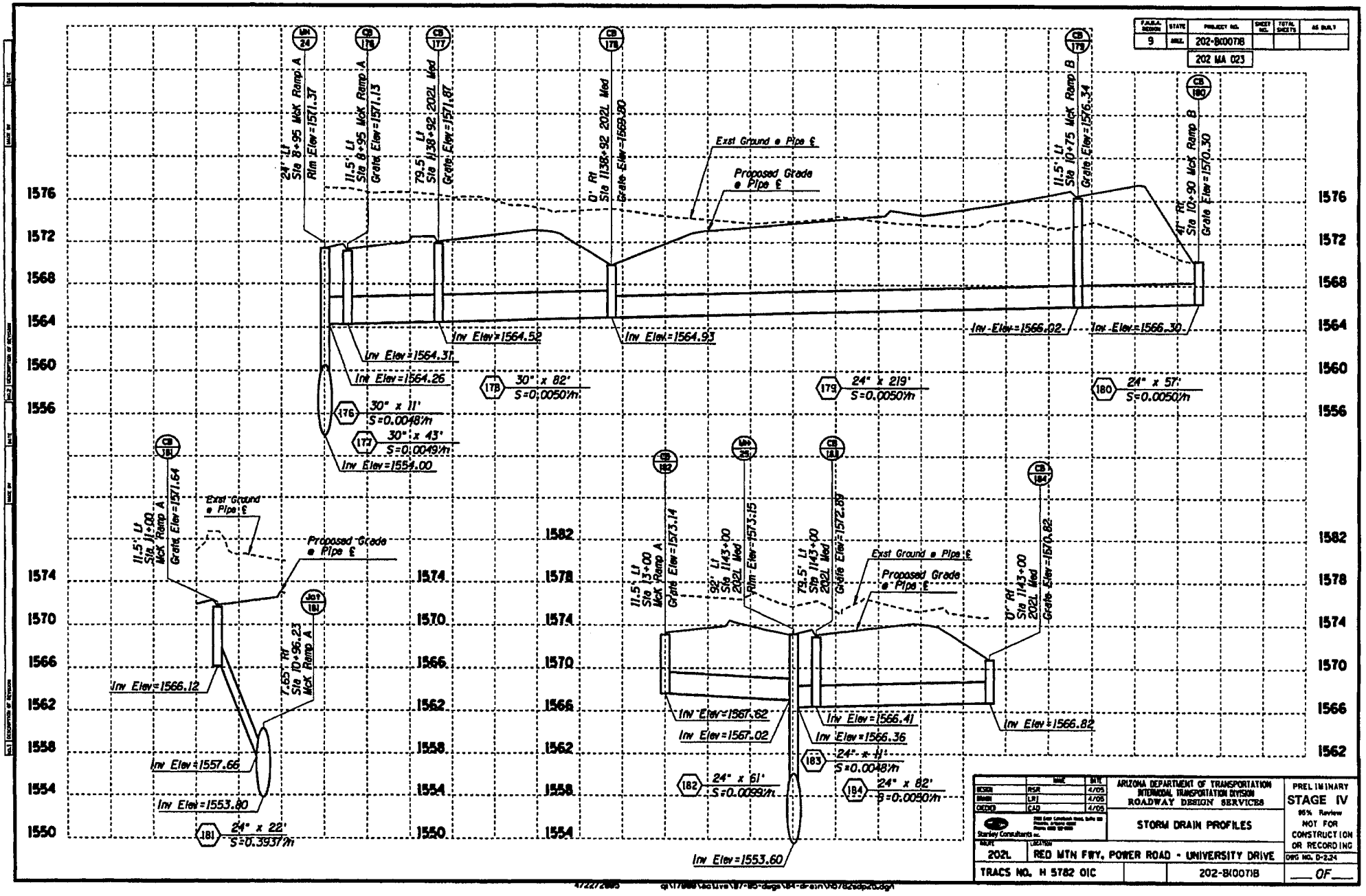

F.A.P.No.	STATE	PROJECT NO.	SHEET NO.	TOTAL SHEETS	AS BUILT
9	ARIZ.	202-B(007)I			
		202 MA 023			

	NAME	DATE
DESIGN	RSR	4/05
DRAWN	LBJ	4/05
CHECKED	CAD	4/05

Stanley Consultants Inc.

ARIZONA DEPARTMENT OF TRANSPORTATION
INTERMODAL TRANSPORTATION DIVISION
ROADWAY DESIGN SERVICES

STORM DRAIN PROFILES

PRELIMINARY
STAGE IV
95% Review
NOT FOR CONSTRUCTION OR RECORDING

HWY	LOCATION	DRG NO. D-2.24
202L	RED MTN FWY. POWER ROAD - UNIVERSITY DRIVE	
TRACS NO. H 5782 01C		202-B(007)I

OF

F.A.P. NUMBER	STATE	PROJECT NO.	SHEET NO.	TOTAL SHEETS	AS BUILT
9	ARIZ.	202-B(007)B			
		202 MA 023			

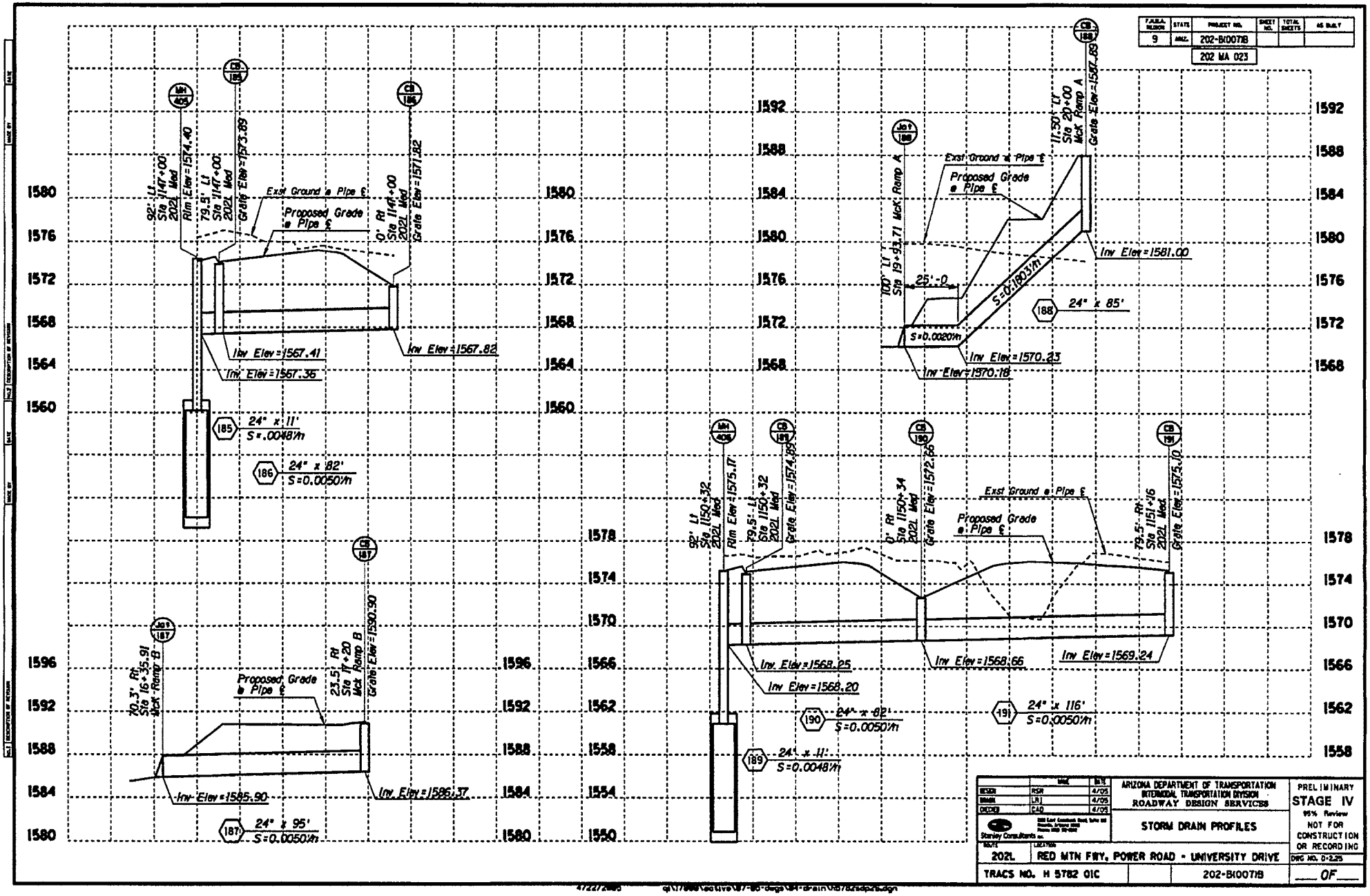

		DATE
DESIGN	RSH	4/05
DRAWN	LRJ	4/05
CHECKED	CAD	4/05

Stanley Consultants Inc.

ARIZONA DEPARTMENT OF TRANSPORTATION
INTERMODAL TRANSPORTATION DIVISION
ROADWAY DESIGN SERVICES

STORM DRAIN PROFILES

PRELIMINARY
STAGE IV
95% Review
NOT FOR CONSTRUCTION OR RECORDING

ROUTE	LOCATION	DWG NO. D-2.25
202L	RED MTN FWY, POWER ROAD - UNIVERSITY DRIVE	
TRACS NO. H 5782 01C	202-B(007)B	___ OF ___

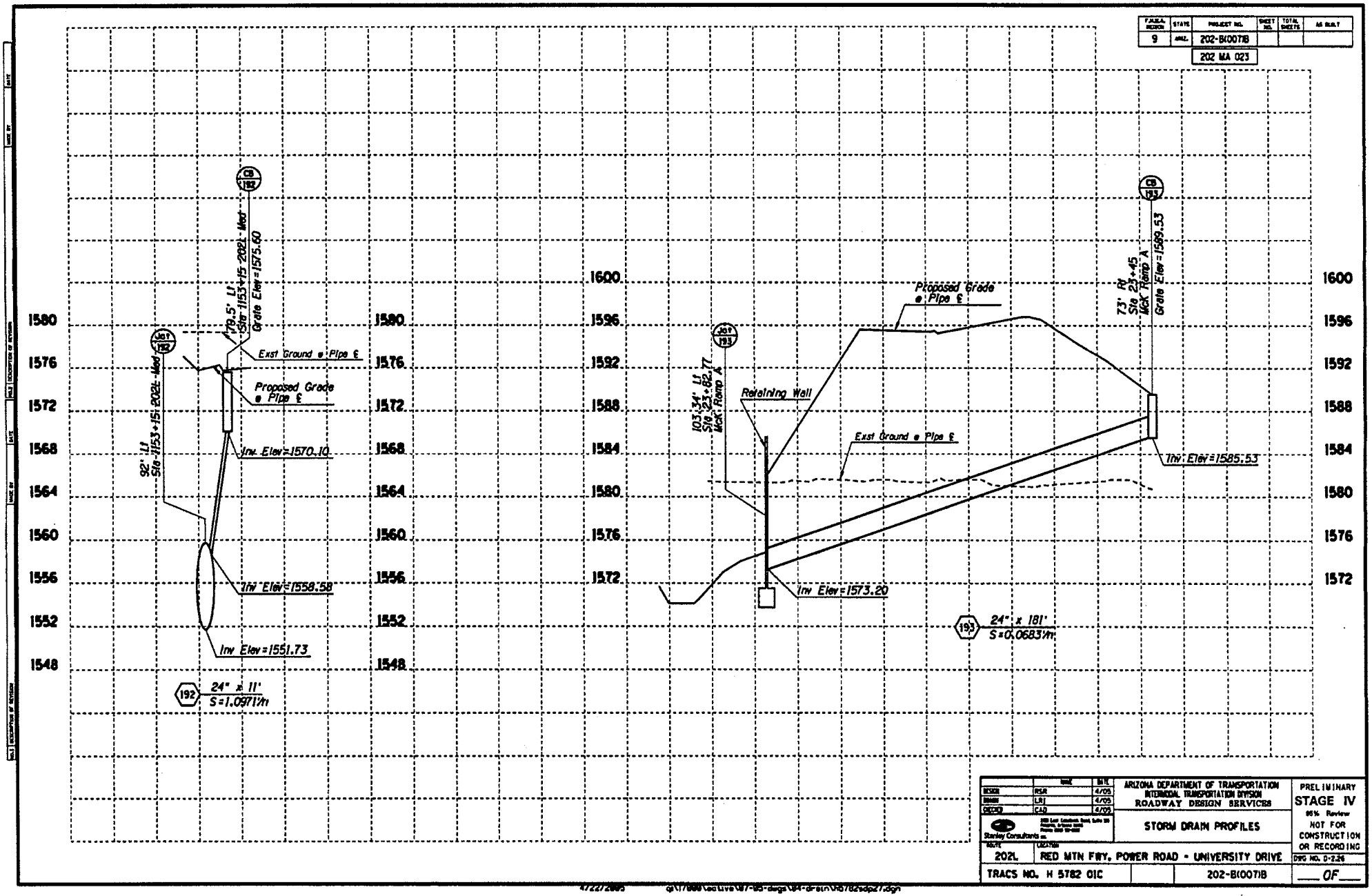

F.A.H.S.A. REGION	STATE	PROJECT NO.	SHEET NO.	TOTAL SHEETS	AS BUILT
9	ARIZ.	202-B(007)I			
		202 MA 023			

	NAME	DATE
DESIGN	RSR	4/05
DRAWN	LRJ	4/05
CHECKED	CAD	4/05

Stanley Consultants Inc.

ARIZONA DEPARTMENT OF TRANSPORTATION
INTERMODAL TRANSPORTATION DIVISION
ROADWAY DESIGN SERVICES

STORM DRAIN PROFILES

PRELIMINARY
STAGE IV
95% Review
NOT FOR CONSTRUCTION OR RECORDING

ROUTE: 202L
LOCATION: RED MTN FWY, POWER ROAD - UNIVERSITY DRIVE
DWG NO. D-2.26

TRACS NO. H 5782 01C | 202-B(007)I | ___ OF ___

4/22/2005 g:\17000\active\97-95-dwgs\04-design\h5782sdp27.dgn

F.A.H.U. REGION	STATE	PROJECT NO.	SHEET NO.	TOTAL SHEETS	AS BUILT
9	ARIZ.	202-B(007)R			
		202 MA 023			

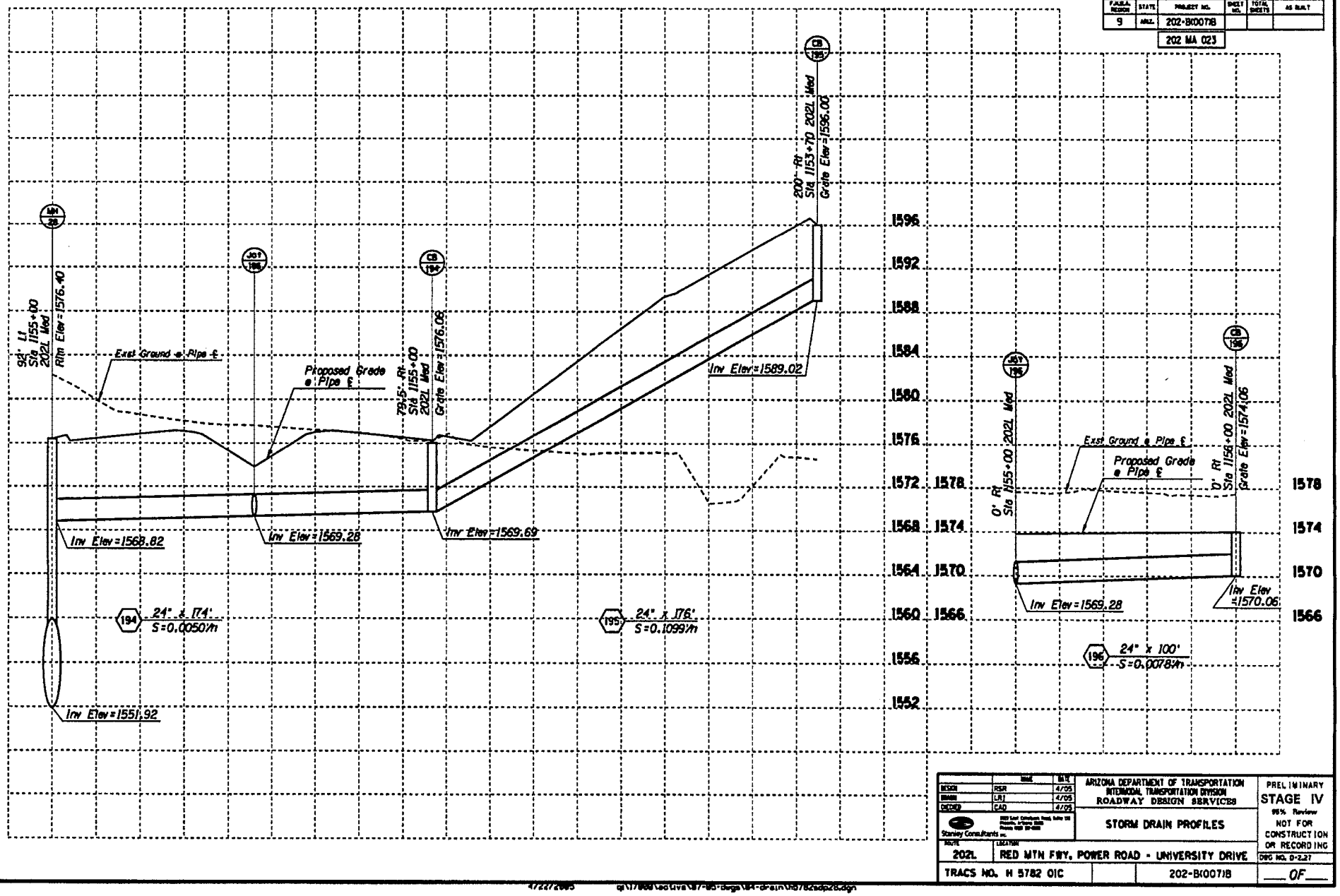

	NAME	DATE
DESIGN	RSR	4/05
DRAWN	LRJ	4/05
CHECKED	CAD	4/05

Stanley Consultants Inc.

ARIZONA DEPARTMENT OF TRANSPORTATION
INTERMODAL TRANSPORTATION DIVISION
ROADWAY DESIGN SERVICES

STORM DRAIN PROFILES

PRELIMINARY
STAGE IV
95% Review
NOT FOR CONSTRUCTION OR RECORDING

ROUTE	LOCATION	DRG NO. D-2.27
202L	RED MTN FWY, POWER ROAD - UNIVERSITY DRIVE	
TRACS NO. H 5782 01C		202-B(007)R

OF

4/22/2005 q:\17888\active\87-RD-Design\84-drain\h5782sdp26.dgn

F.A.H.S. REGION	STATE	PROJECT NO.	SHEET NO.	TOTAL SHEETS	AS BUILT
9	ARIZ.	202-B(007)I			
		202 MA 023			

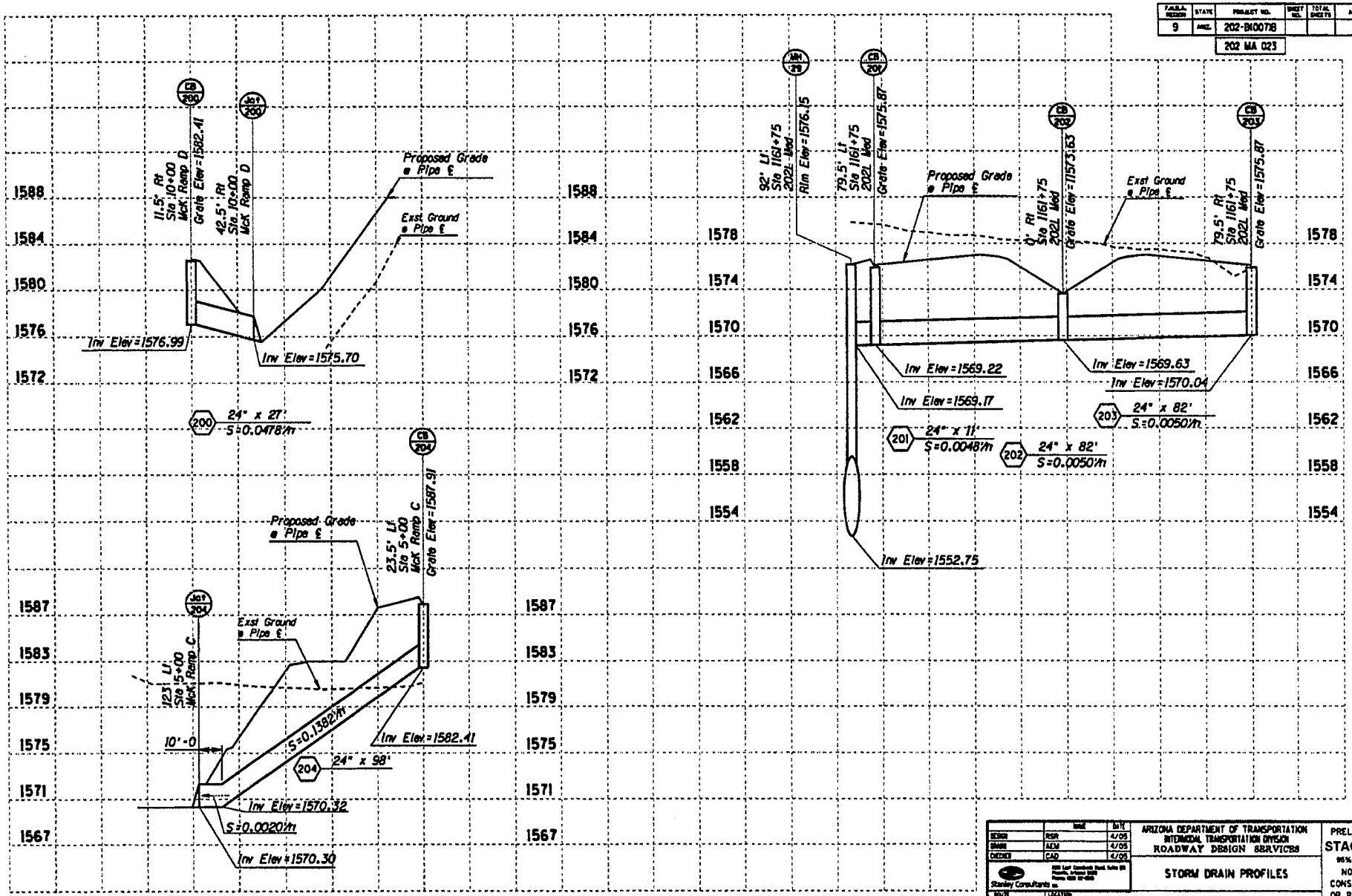

	NAME	DATE
DESIGN	RSR	4/05
DRAWN	AEM	4/05
CHECKED	CAD	4/05

Stanley Consultants Inc.

ARIZONA DEPARTMENT OF TRANSPORTATION
INTERMODAL TRANSPORTATION DIVISION
ROADWAY DESIGN SERVICES

STORM DRAIN PROFILES

PRELIMINARY
STAGE IV
95% Review
NOT FOR CONSTRUCTION OR RECORDING

ROUTE	LOCATION
202L	RED MTN FWY, POWER ROAD - UNIVERSITY DRIVE

DWG NO. D-2.29

TRACS NO. H 5782 01C | 202-B(007)I | ___ OF ___

4/22/2005 d:\17888\active\87-85-design\84-drain\h5782sdp2.dgn

F.A.P.# REGION	STATE	PROJECT NO.	SHEET NO.	TOTAL SHEETS	AS BUILT
9	ARIZ.	202-B(007)B			
		202 MA 023			

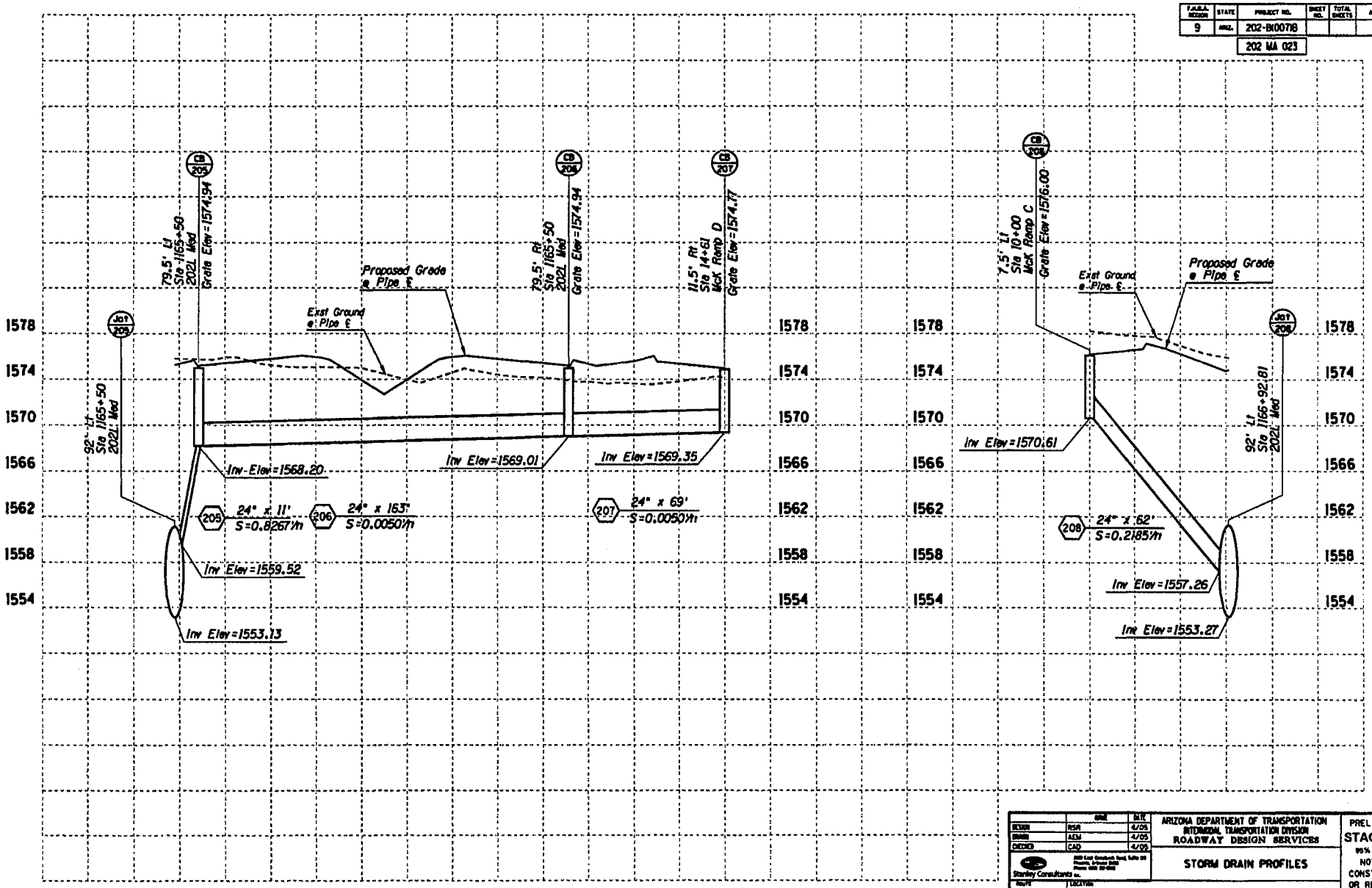

	NAME	DATE
DESIGN	RGH	4/05
DRAWN	AEM	4/05
CHECKED	CAD	4/05

Stanley Consultants Inc.

ARIZONA DEPARTMENT OF TRANSPORTATION
INTERMODAL TRANSPORTATION DIVISION
ROADWAY DESIGN SERVICES

STORM DRAIN PROFILES

PRELIMINARY
STAGE IV
95% Review
NOT FOR CONSTRUCTION OR RECORDING

ROUTE	LOCATION	DWG NO. D-2.29
202L	RED MTN FWY, POWER ROAD - UNIVERSITY DRIVE	
TRACS NO. H 5782 01C	202-B(007)B	___ OF ___

4/22/2005 d:\17888\active\87-85-design\84-drain\05782sdp38.dgn

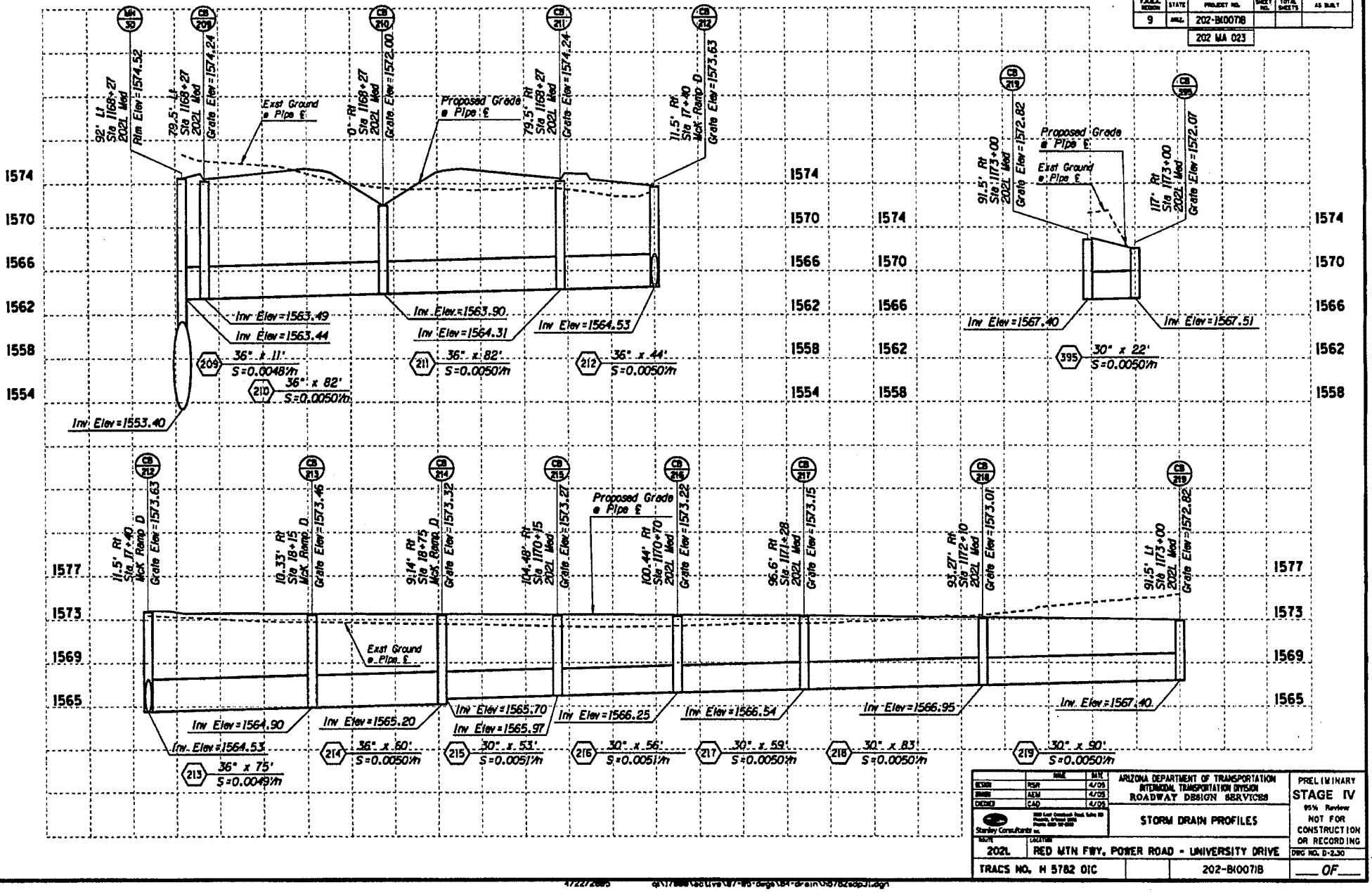

F.A.P.# REGION	STATE	PROJECT NO.	SHEET NO.	TOTAL SHEETS	AS BUILT
9	ARIZ.	202-B(007)I			
		202 MA 023			

	NAME	DATE
DESIGN	PSR	4/05
DRAWN	AEM	4/05
CHECKED	CAD	4/05

Stanley Consultants Inc.

ARIZONA DEPARTMENT OF TRANSPORTATION
INTERMODAL TRANSPORTATION DIVISION
ROADWAY DESIGN SERVICES

STORM DRAIN PROFILES

PRELIMINARY
STAGE IV
95% Review
NOT FOR CONSTRUCTION OR RECORDING

ROUTE	LOCATION	DRG NO. D-2.30
202L	RED MTN FWY, POWER ROAD - UNIVERSITY DRIVE	
TRACS NO. H 5782 01C		202-B(007)I

___ OF ___

F.A.P.U. DESIGN	STATE	PROJECT NO.	SHEET NO.	TOTAL SHEETS	AS BUILT
9	ARIZ.	202-B(007)B			
		202 MA 023			

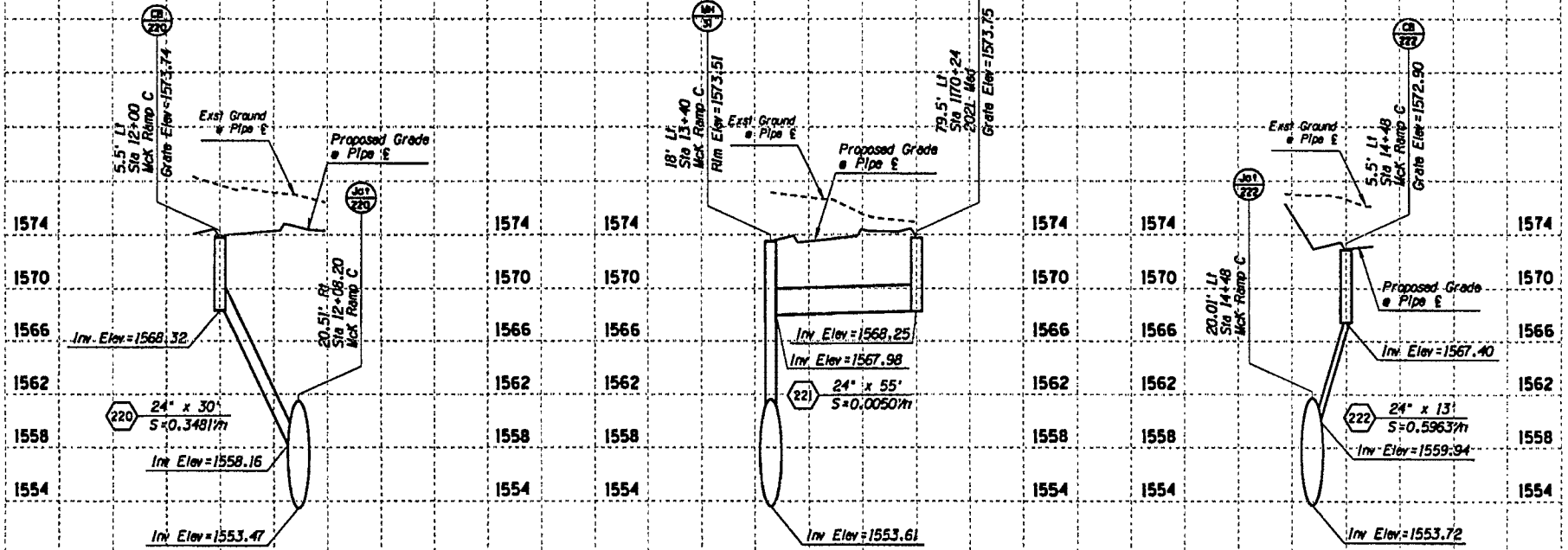

	NAME	DATE
DESIGN	RSR	4/05
DRAWN	AEM	4/05
CHECKED	EAD	4/05

Stanley Consultants Inc.

ARIZONA DEPARTMENT OF TRANSPORTATION
INTERMODAL TRANSPORTATION DIVISION
ROADWAY DESIGN SERVICES

STORM DRAIN PROFILES

202L | RED MTN FWY, POWER ROAD - UNIVERSITY DRIVE

TRACS NO. H 5782 01C | 202-B(007)B

PRELIMINARY
STAGE IV
95% Review
NOT FOR CONSTRUCTION OR RECORDING

DWG NO. D-2.31

___ OF ___

4/22/2005 d:\17888\active\87-85-dwgs\84-drain\h5782sdp12.dgn

FAA/A. REGION	STATE	PROJECT NO.	SHEET NO.	TOTAL SHEETS	AS BUILT
9	ARIZ.	202-B100718			
		202 MA 023			

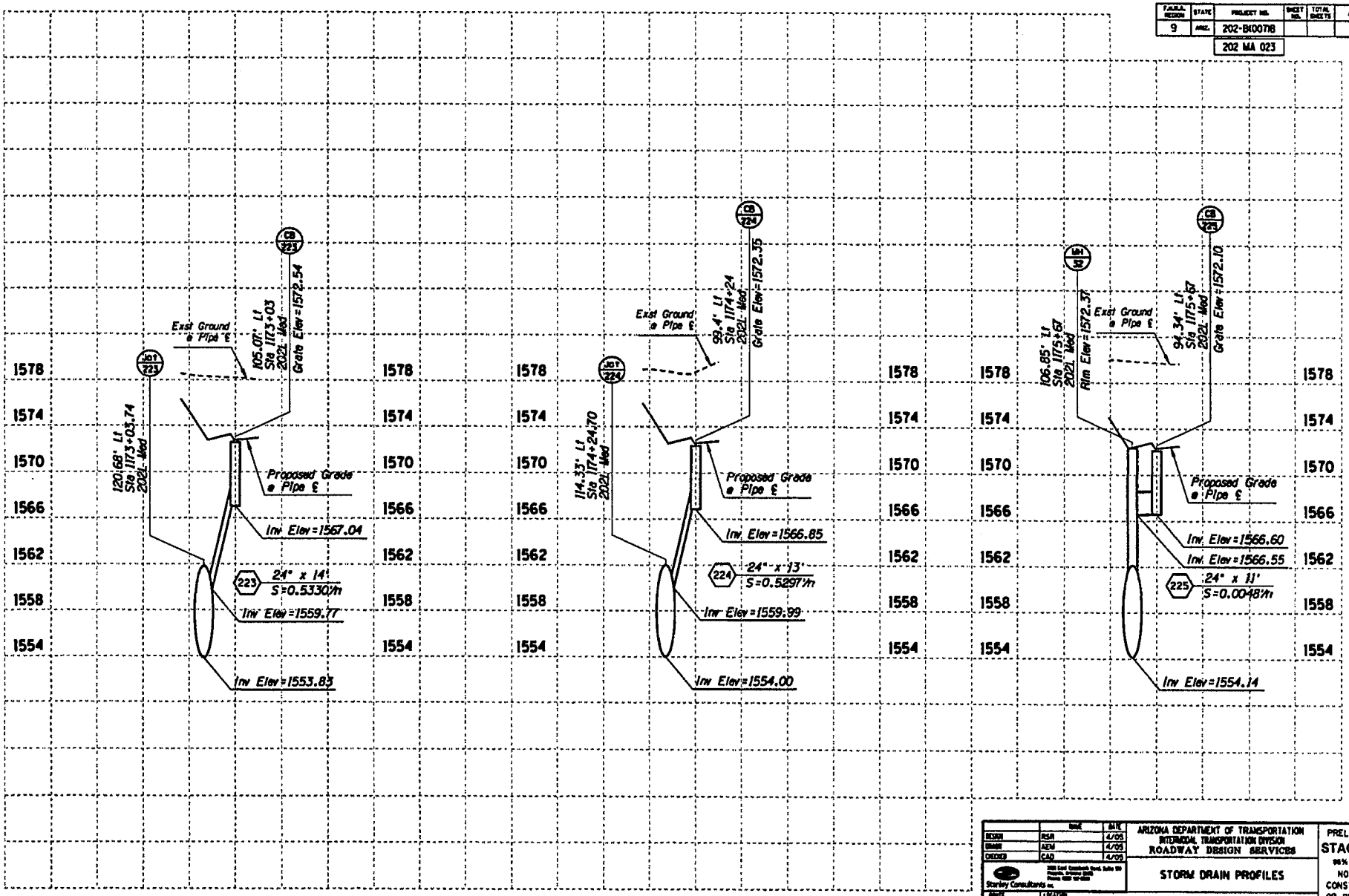

	NAME	DATE
DESIGN	RSR	4/05
DRAWN	AEM	4/05
CHECKED	CAD	4/05

Stanley Consultants Inc.

ARIZONA DEPARTMENT OF TRANSPORTATION
INTERMODAL TRANSPORTATION DIVISION
ROADWAY DESIGN SERVICES

STORM DRAIN PROFILES

PRELIMINARY
STAGE IV
95% Review
NOT FOR CONSTRUCTION OR RECORDING

DWG NO. D-2.32

DATE	LOCATION
2021	RED MTN FWY, POWER ROAD - UNIVERSITY DRIVE

TRACS NO. H 5782 01C | 202-B100718 | ___ OF ___

4/22/2005 d:\17888\active\87-85-dsgn\84-drain\587dzsdp32.dgn

F.A.H.S. REGION	STATE	PROJECT NO.	SHEET NO.	TOTAL SHEETS	AS BUILT
9	ARIZ.	202-B(007)B			
		202 MA 023			

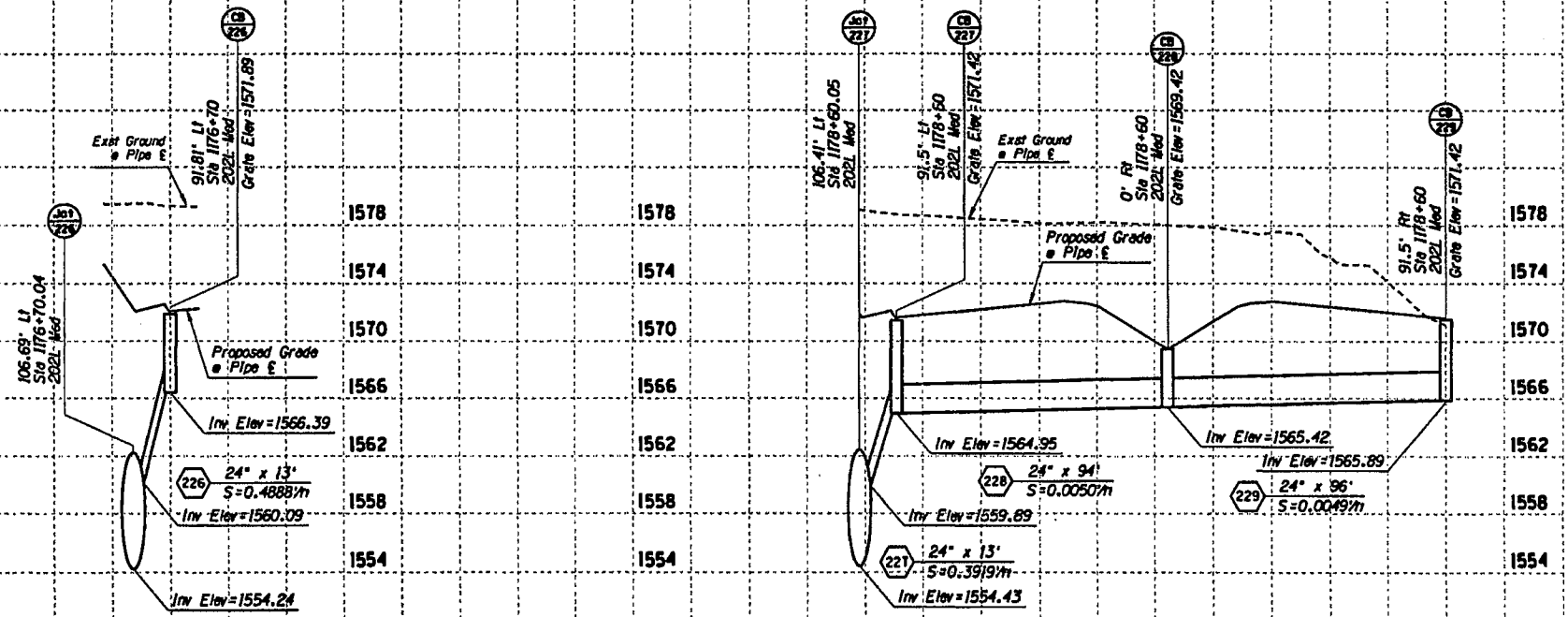

	NAME	DATE
DESIGN	RSR	4/05
DRAWN	AEM	4/05
CHECKED	CAD	4/05

Stanley Consultants Inc.

ARIZONA DEPARTMENT OF TRANSPORTATION
INTERMODAL TRANSPORTATION DIVISION
ROADWAY DESIGN SERVICES

STORM DRAIN PROFILES

ROUTE	LOCATION
202L	RED MTN FWY, POWER ROAD - UNIVERSITY DRIVE

TRACS NO. H 5782 01C | 202-B(007)B

PRELIMINARY
STAGE IV
95% Review
NOT FOR CONSTRUCTION OR RECORDING

DWG NO. B-2.33

___ OF ___

4/22/2005 q:\17888\active\07-85-design\04-drain\h5782sdp34.dgn

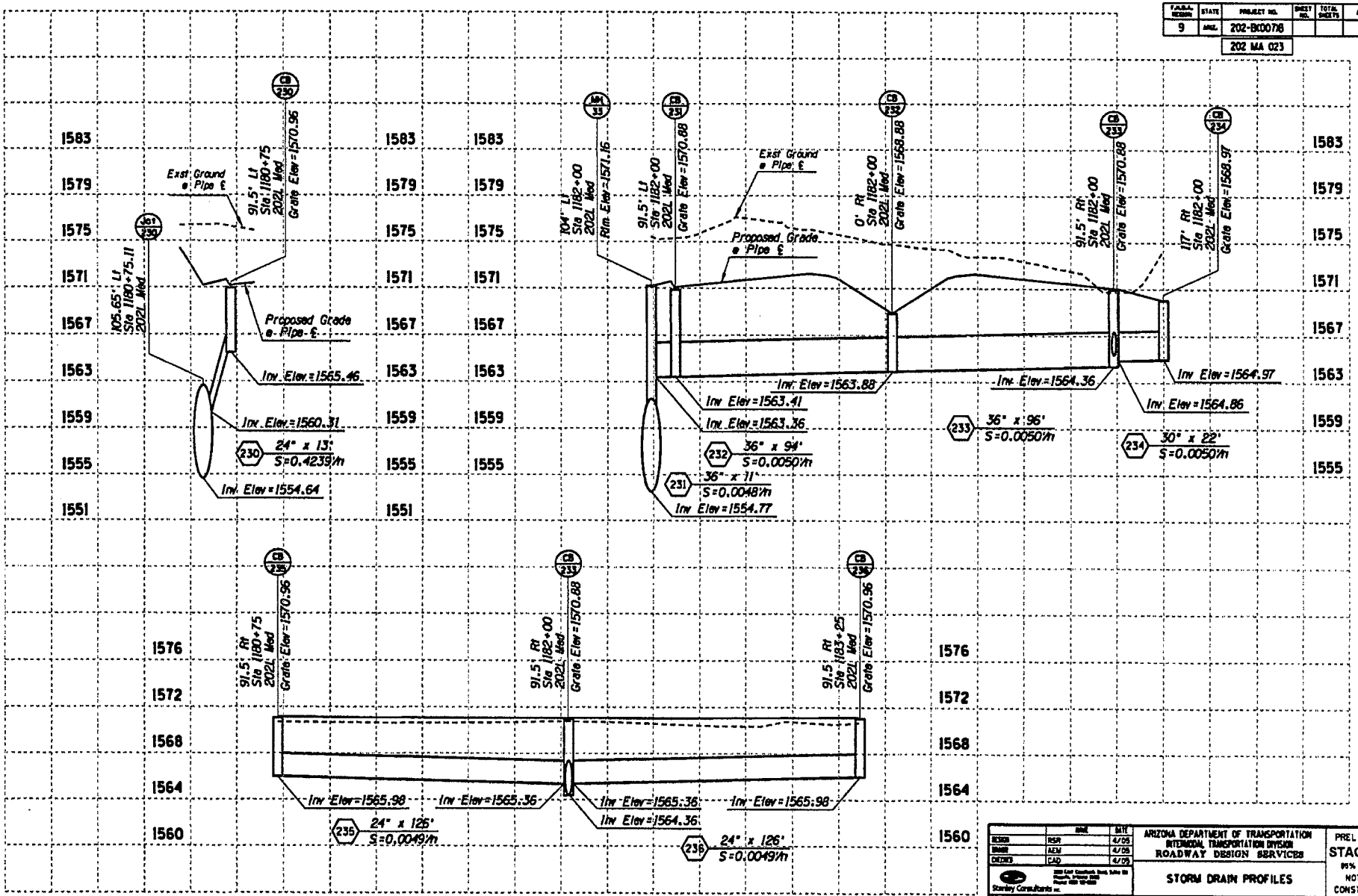

F.A.P.M. DESIGN	STATE	PROJECT NO.	SHEET NO.	TOTAL SHEETS	AS BUILT
9	ARIZ.	202-B100718			
		202 MA 023			

		DATE
DESIGN	RSR	4/05
DRAWN	AEM	4/05
CHECKED	CAD	4/05

Stanley Consultants Inc.

ARIZONA DEPARTMENT OF TRANSPORTATION
INTERMODAL TRANSPORTATION DIVISION
ROADWAY DESIGN SERVICES

STORM DRAIN PROFILES

PRELIMINARY
STAGE IV
95% Review
NOT FOR CONSTRUCTION OR RECORDING

ROUTE	LOCATION
202L	RED MTN FWY, POWER ROAD - UNIVERSITY DRIVE

DRG NO. D-2.34

TRACS NO. H 5782 01C | 202-B100718 | ___ OF ___

F.A.P. NO.	STATE	PROJECT NO.	SHEET NO.	TOTAL SHEETS	AS BUILT
9	ARIZ.	202-B(007)B			
		202 MA 023			

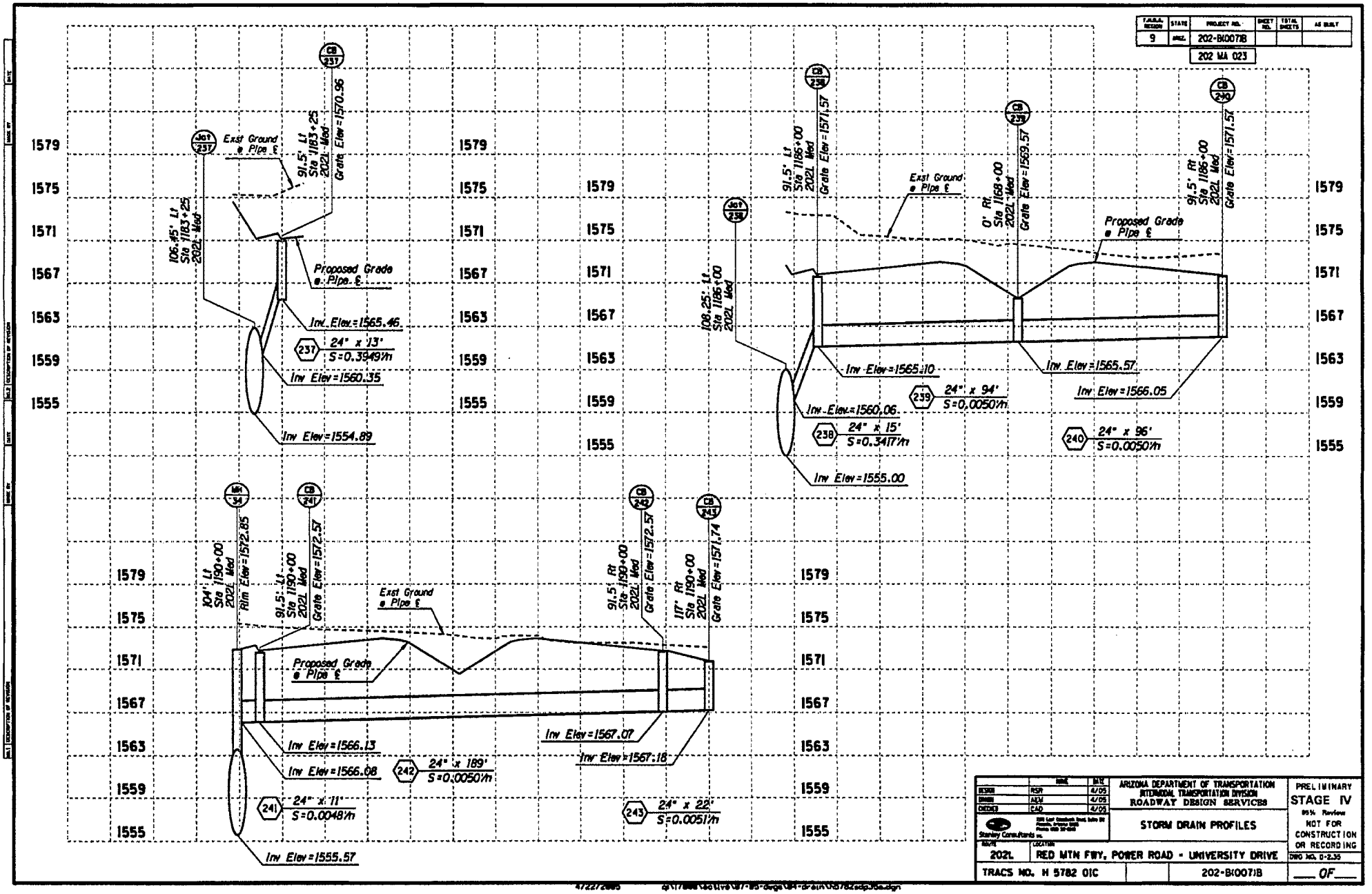

	NAME	DATE
DESIGN	RSR	4/05
DRAWN	AEM	4/05
CHECKED	CAD	4/05

Stanley Consultants Inc.

ARIZONA DEPARTMENT OF TRANSPORTATION
INTERMODAL TRANSPORTATION DIVISION
ROADWAY DESIGN SERVICES

STORM DRAIN PROFILES

PRELIMINARY
STAGE IV
95% Review
NOT FOR CONSTRUCTION OR RECORDING

DATE	LOCATION	DWG NO. D-2.35
2021	RED MTN FWY, POWER ROAD - UNIVERSITY DRIVE	
TRACS NO. H 5782 01C		202-B(007)B

___ OF ___

472272885 d:\17\888\Geotive\87-85-design\84-drain\h5782sdp35e.dgn

F.A.P. NO.	STATE	PROJECT NO.	SHEET NO.	TOTAL SHEETS	AS BUILT
9	ARIZ.	202-B(00)T			
		202 MA 023			

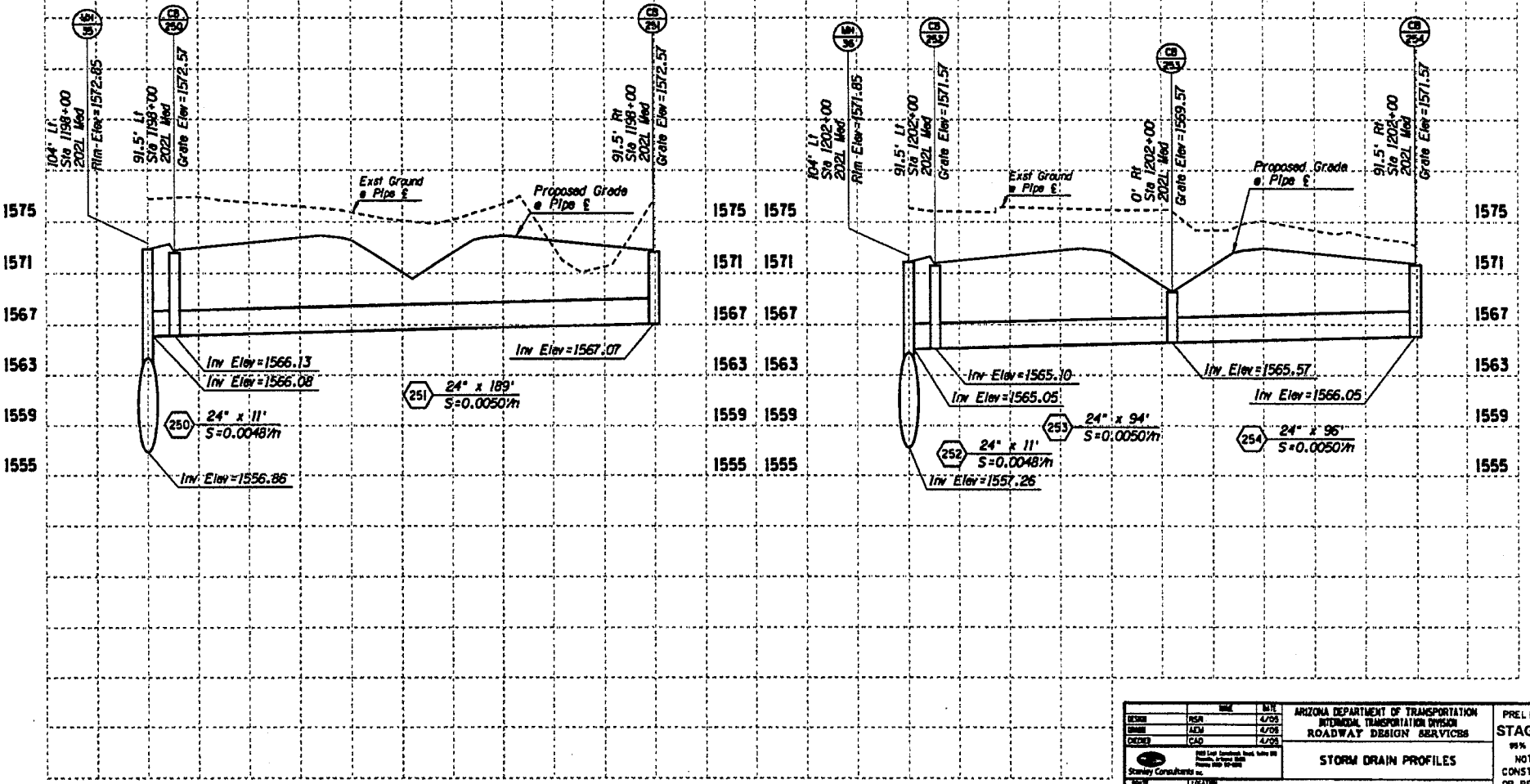

	NAME	DATE
DESIGN	RSR	4/05
DRAWN	AEM	4/05
CHECKED	CAD	4/05

Stanley Consultants Inc.

ARIZONA DEPARTMENT OF TRANSPORTATION
INTERMODAL TRANSPORTATION DIVISION
ROADWAY DESIGN SERVICES

STORM DRAIN PROFILES

PRELIMINARY
STAGE IV
95% Review
NOT FOR CONSTRUCTION OR RECORDING

YEAR 2021 | LOCATION RED MTN FWY, POWER ROAD - UNIVERSITY DRIVE

DWG NO. D-2.36

TRACS NO. H 5782 01C | 202-B(00)T | ___ OF ___

4/22/2005 @\17888\active\87-85-dsgn\84-drain\h5782dsp36.dgn

F.A.U.S. RECORD	STATE	PROJECT NO.	SHEET NO.	TOTAL SHEETS	AS BUILT
9	ARIZ.	202-B(007)B			
		202 MA 023			

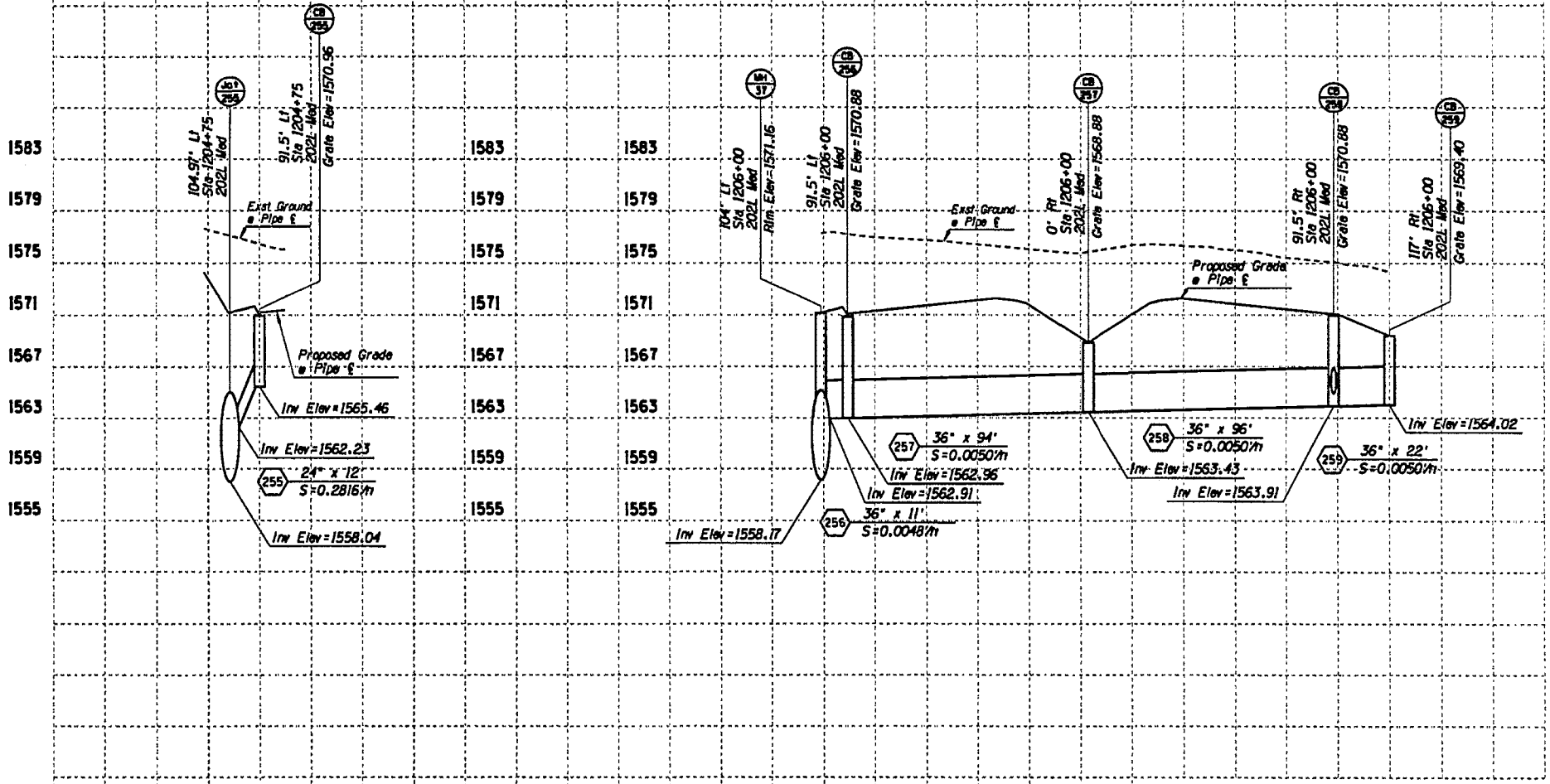

		DATE
DESIGN	RSR	4/05
DRAWN	AEM	4/05
CHECKED	CAD	4/05

Stanley Consultants Inc.

ARIZONA DEPARTMENT OF TRANSPORTATION
INTERMODAL TRANSPORTATION DIVISION
ROADWAY DESIGN SERVICES

STORM DRAIN PROFILES

PRELIMINARY
STAGE IV
95% Review
NOT FOR CONSTRUCTION OR RECORDING

ROUTE	LOCATION	DWG NO. D-237
202L	RED MTN FWY, POWER ROAD - UNIVERSITY DRIVE	
TRACS NO. H 5782 01C	202-B(007)B	OF

472272865 dp\17888\active\87-05-dwgs\84-drain\h5782sdp37.dgn

F.A.P.M. REGION	STATE	PROJECT NO.	SHEET NO.	TOTAL SHEETS	AS BUILT
9	ARIZ.	202-B(007)B			
		202 MA 023			

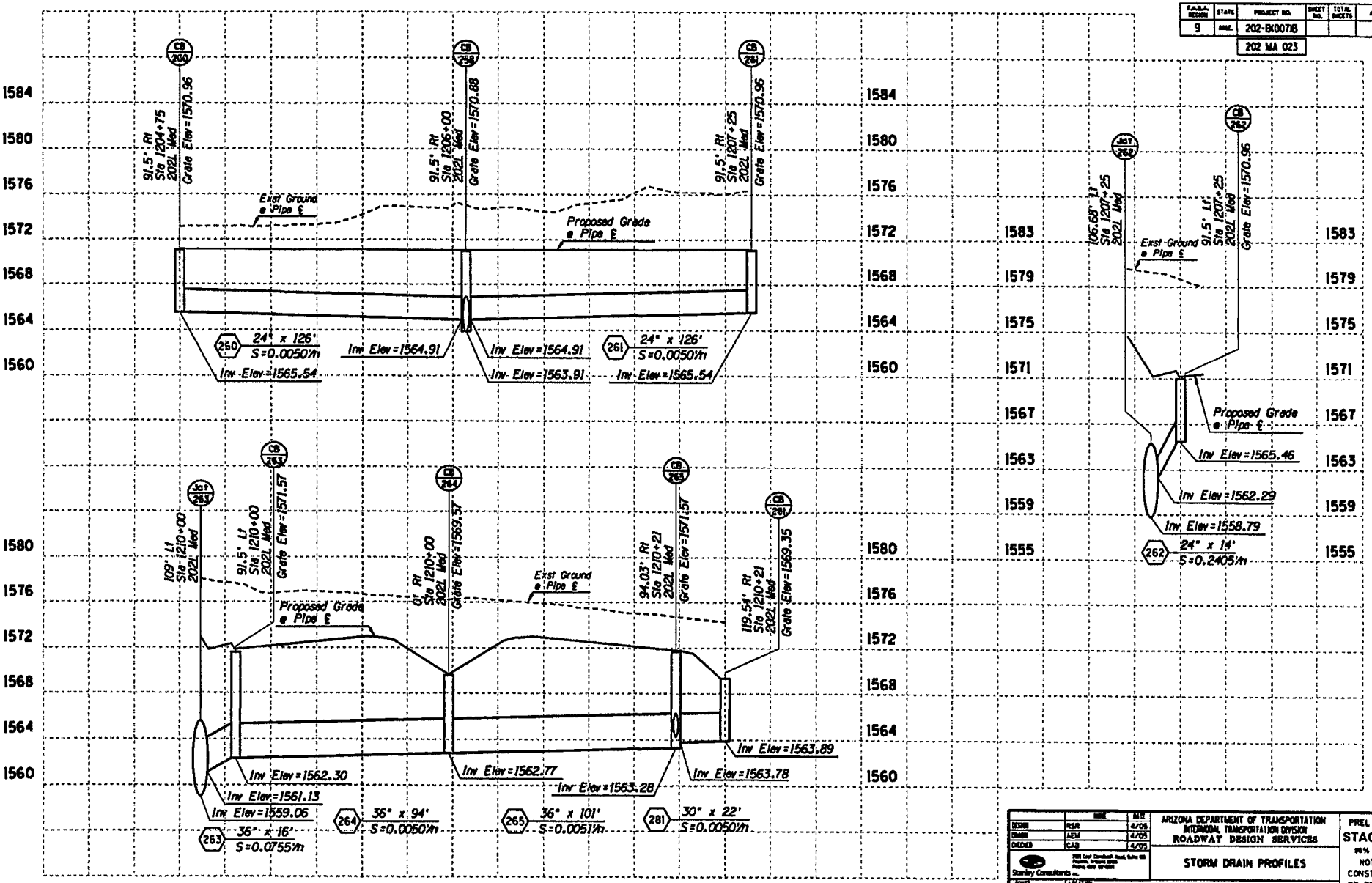

	NAME	DATE
DESIGNED	RSR	4/05
DRAWN	AEM	4/05
CHECKED	CAD	4/05

Stanley Consultants Inc.

ARIZONA DEPARTMENT OF TRANSPORTATION
INTERMODAL TRANSPORTATION DIVISION
ROADWAY DESIGN SERVICES

STORM DRAIN PROFILES

PRELIMINARY
STAGE IV
95% Review
NOT FOR CONSTRUCTION OR RECORDING

YEAR	LOCATION	DWG NO. D-2.38
2021	RED MTN FWY, POWER ROAD - UNIVERSITY DRIVE	
TRACS NO. H 5782 01C	202-B(007)B	___ OF ___

4/22/2005 g:\17888\active\87-85-dage\84-drain\h5782sdp38.dgn

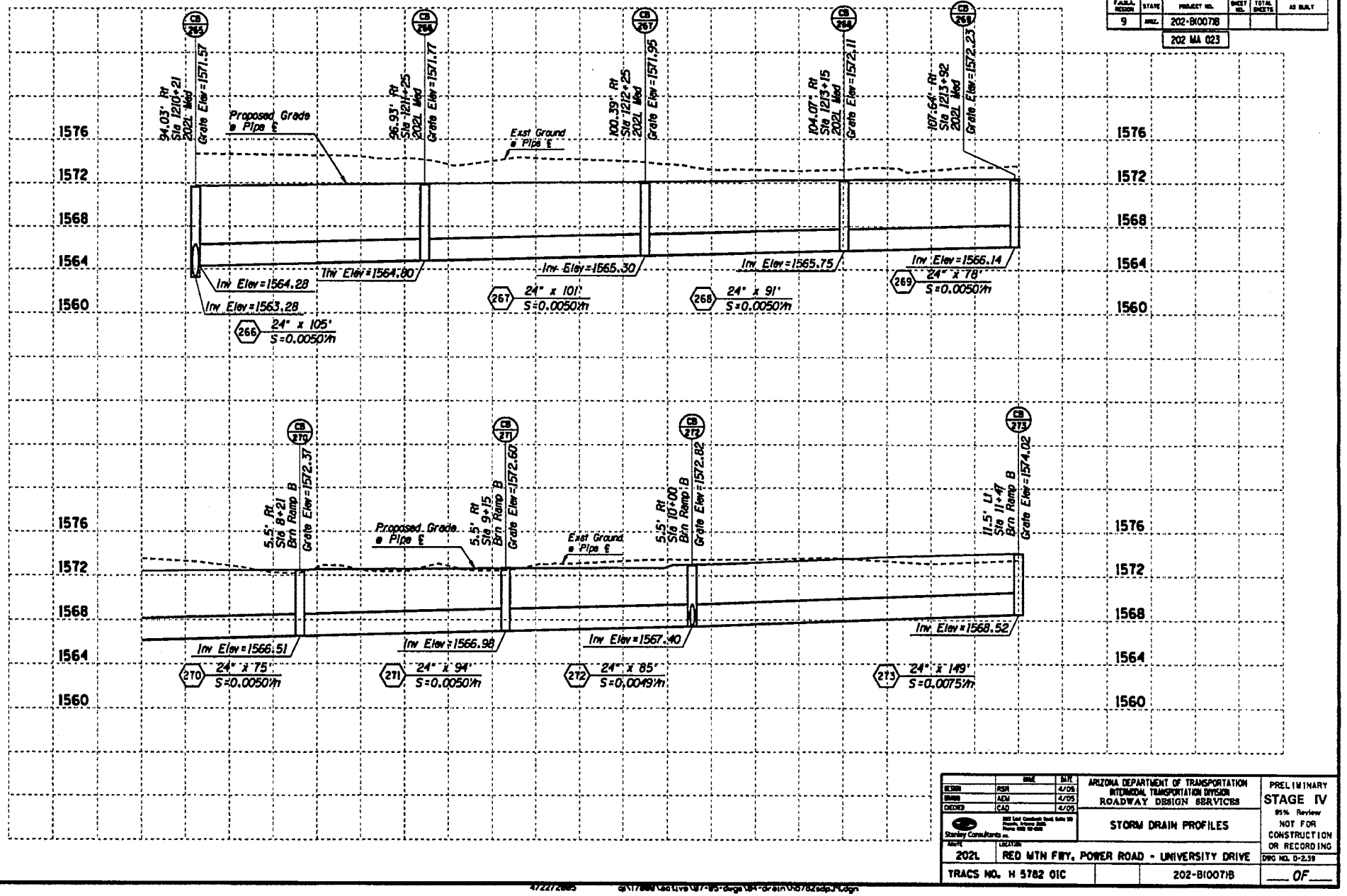

F.A.P.M. REGION	STATE	PROJECT NO.	SHEET NO.	TOTAL SHEETS	AS BUILT
9	ARIZ.	202-B100718			
		202 MA 023			

	NAME	DATE
DESIGN	PSR	4/05
DRAWN	ADV	4/05
CHECKED	CAD	4/05

Stanley Consultants inc.
333 East Osborn Road, Suite 99
Phoenix, Arizona 85012
Phone: (602) 957-4888

ARIZONA DEPARTMENT OF TRANSPORTATION
INTERMODAL TRANSPORTATION DIVISION
ROADWAY DESIGN SERVICES

STORM DRAIN PROFILES

PRELIMINARY
STAGE IV
95% Review
NOT FOR CONSTRUCTION OR RECORDING

DATE: 2021
LOCATION: RED MTN FWY, POWER ROAD - UNIVERSITY DRIVE

DRG NO. D-2.39

TRACS NO. H 5782 01C | 202-B1007\B | ___ OF ___

4/22/2005 q:\17888\Cad Live\87-85-Design\84-Drain\5782sdp3.dgn

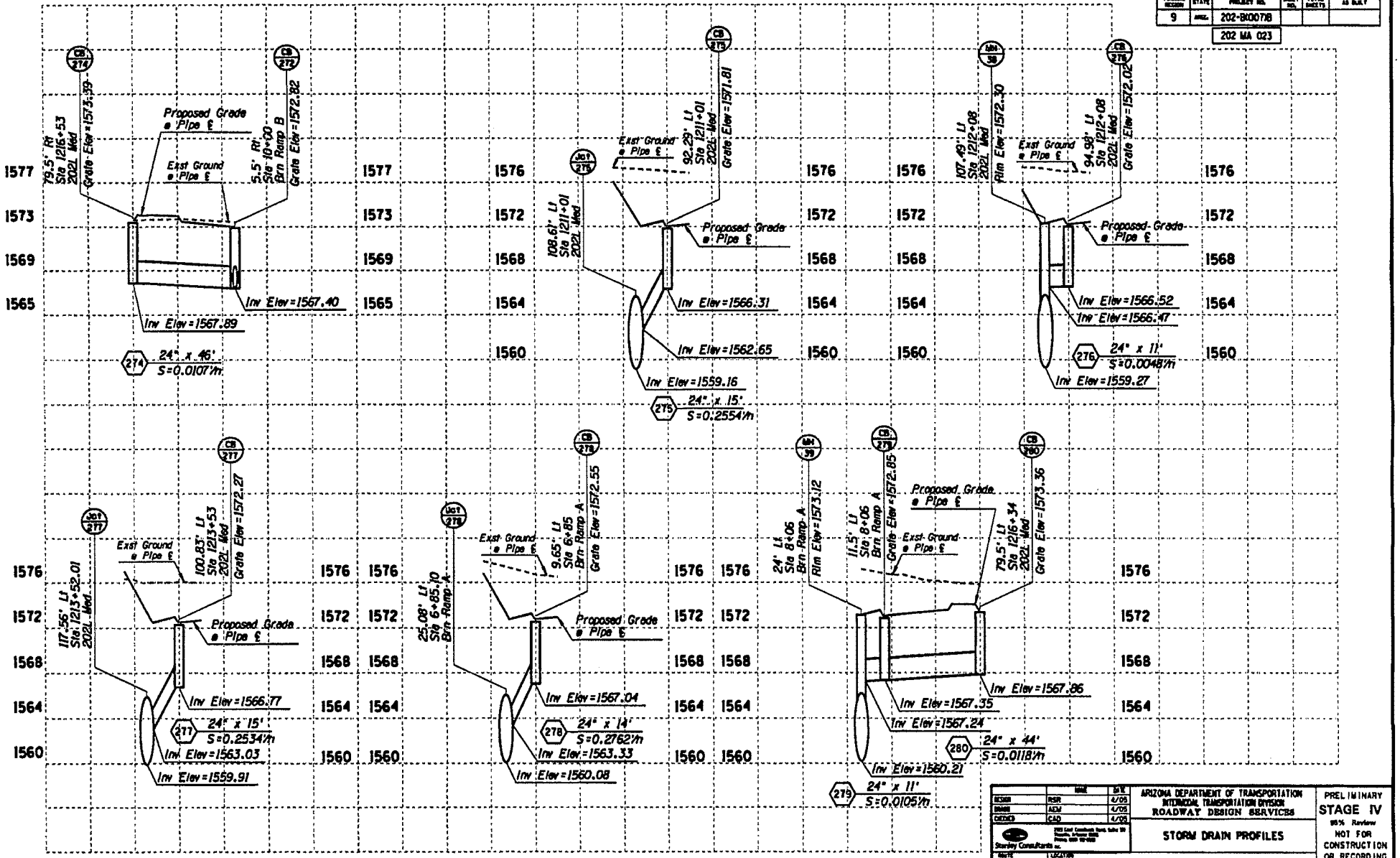

FAP/FA/RAM REGION	STATE	PROJECT NO.	SHEET NO.	TOTAL SHEETS	AS BUILT
9	ARIZ.	202-B100718			
		202 MA 023			

	NAME	DATE
DESIGN	RSR	4/05
DRAWN	ACM	4/05
CHECKED	CAD	4/05

Stanley Consultants Inc.

ARIZONA DEPARTMENT OF TRANSPORTATION
INTERMODAL TRANSPORTATION DIVISION
ROADWAY DESIGN SERVICES

STORM DRAIN PROFILES

PRELIMINARY
STAGE IV
95% Review
NOT FOR CONSTRUCTION OR RECORDING

DATE: 2021
LOCATION: RED MTN FWY, POWER ROAD - UNIVERSITY DRIVE

DWG NO. D-2.40

TRACS NO. H 5782 01C | 202-B100718 | ___ OF ___

4722726B5 q:\17888\active\87-lib-dept\84-drain\h5782sdp18.dgn

F.A.P.No.	STATE	PROJECT NO.	SHEET NO.	TOTAL SHEETS	AS BUILT
9	ARIZ.	202-B(007)B			
		202 MA 023			

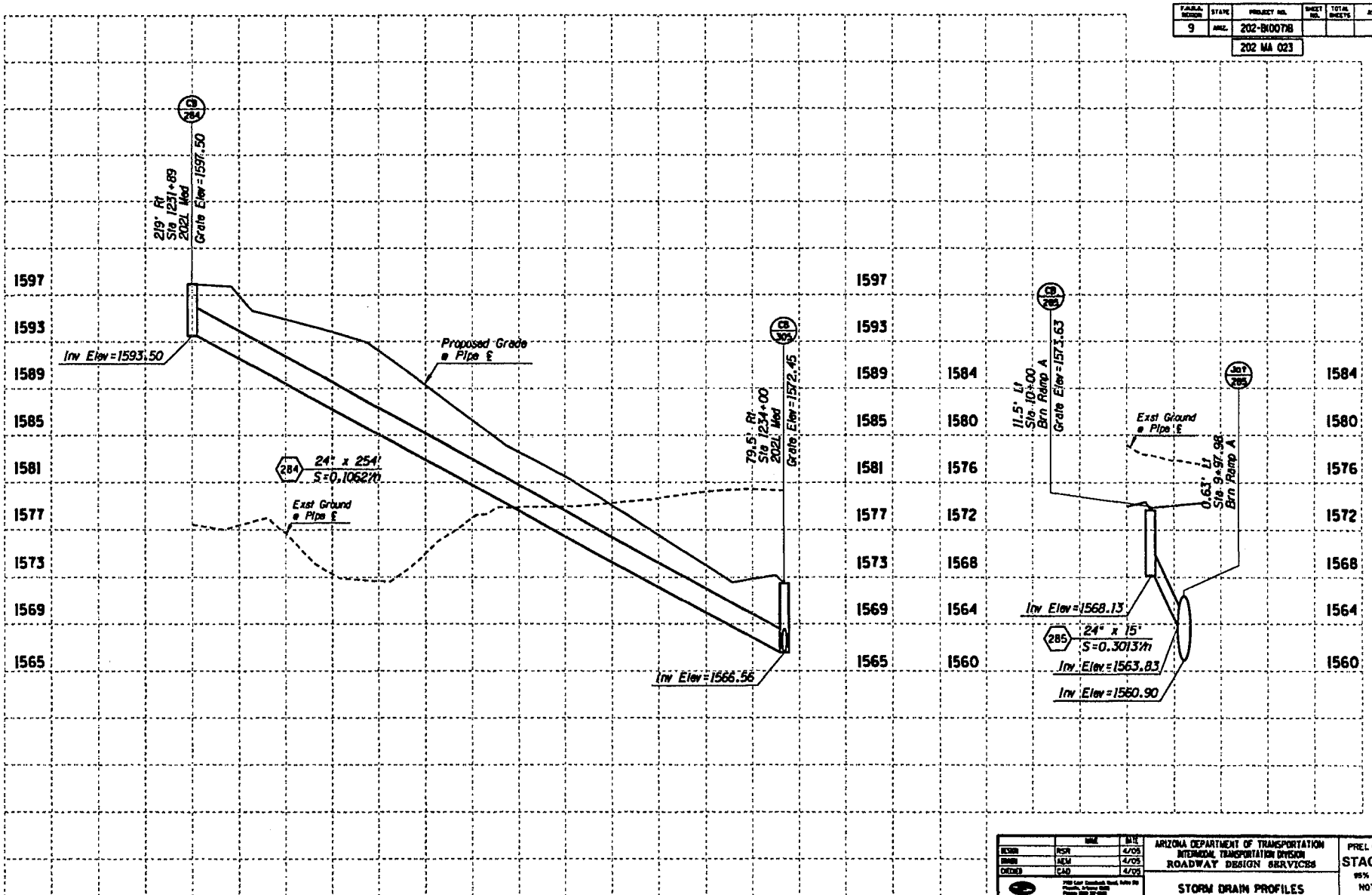

	NAME	DATE
DESIGNED	PSR	4/05
DRAWN	AEM	4/05
CHECKED	CAD	4/05

Stanley Consultants Inc.

ARIZONA DEPARTMENT OF TRANSPORTATION
INTERMODAL TRANSPORTATION DIVISION
ROADWAY DESIGN SERVICES

STORM DRAIN PROFILES

PRELIMINARY
STAGE IV
95% Review
NOT FOR CONSTRUCTION OR RECORDING

ROUTE	LOCATION	DWG NO. D-2.41
202L	RED MTN FWY, POWER ROAD - UNIVERSITY DRIVE	
TRACS NO. H 5782 01C		202-B(007)B

___ OF ___

F.A.P. No.	STATE	PROJECT NO.	SHEET NO.	TOTAL SHEETS	AS BUILT
9	ARIZ.	202-B(007)B			
		202 MA 023			

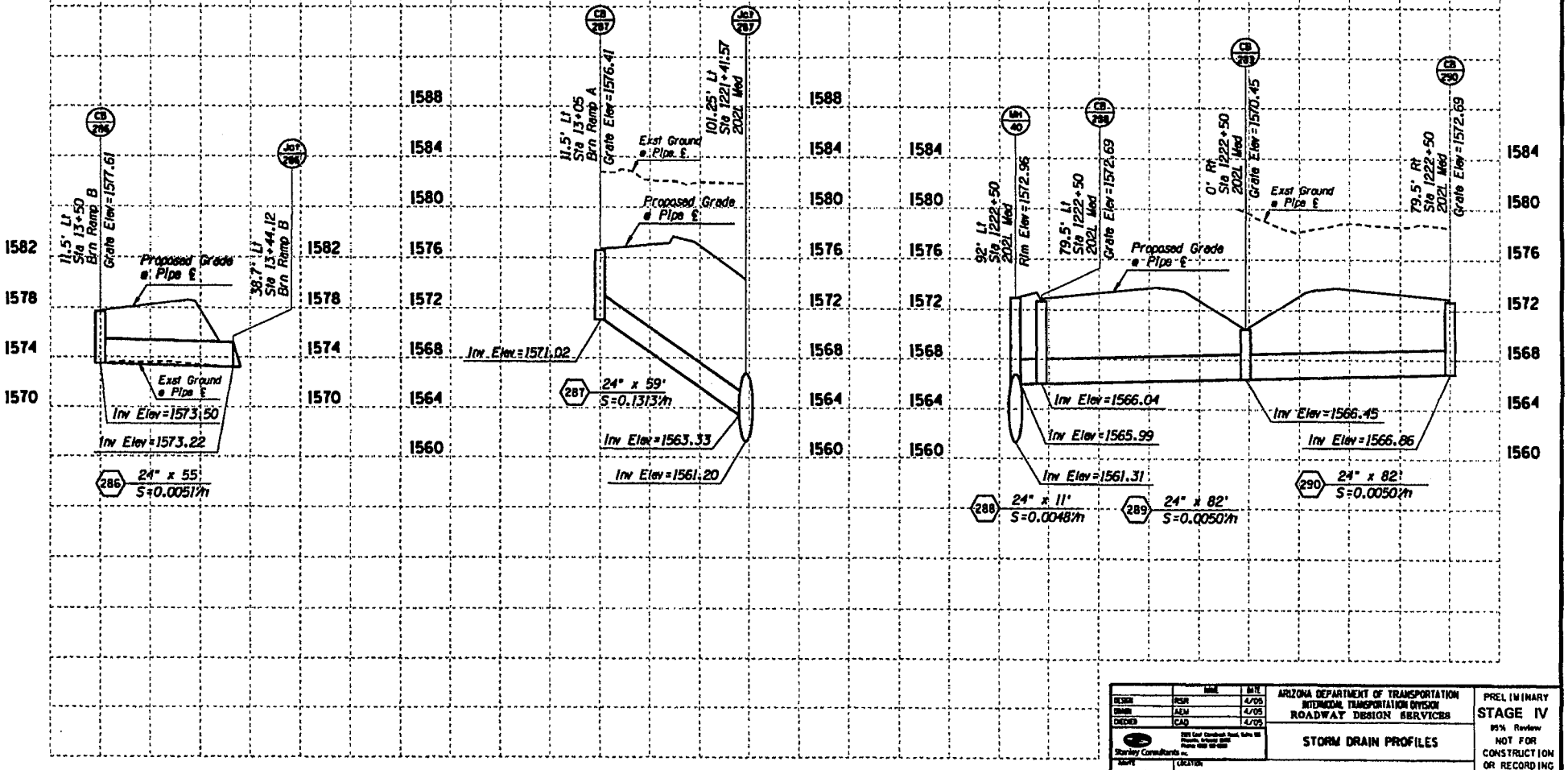

	NAME	MTN.
DESIGN	PSR	4/05
DRAWN	AEM	4/05
CHECKED	CAD	4/05

Stanley Consultants Inc.

ARIZONA DEPARTMENT OF TRANSPORTATION
INTERMODAL TRANSPORTATION DIVISION
ROADWAY DESIGN SERVICES

STORM DRAIN PROFILES

PRELIMINARY
STAGE IV
95% Review
NOT FOR CONSTRUCTION OR RECORDING

DRG NO. D-2.42

202L	RED MTN FWY, POWER ROAD - UNIVERSITY DRIVE		
TRACS NO. H 5782 01C		202-B(007)B	___ OF ___

F.A.H.S. NUMBER	STATE	PROJECT NO.	SHEET NO.	TOTAL SHEETS	AS BUILT
9	ARIZ.	202-B(007)B			
		202 MA 023			

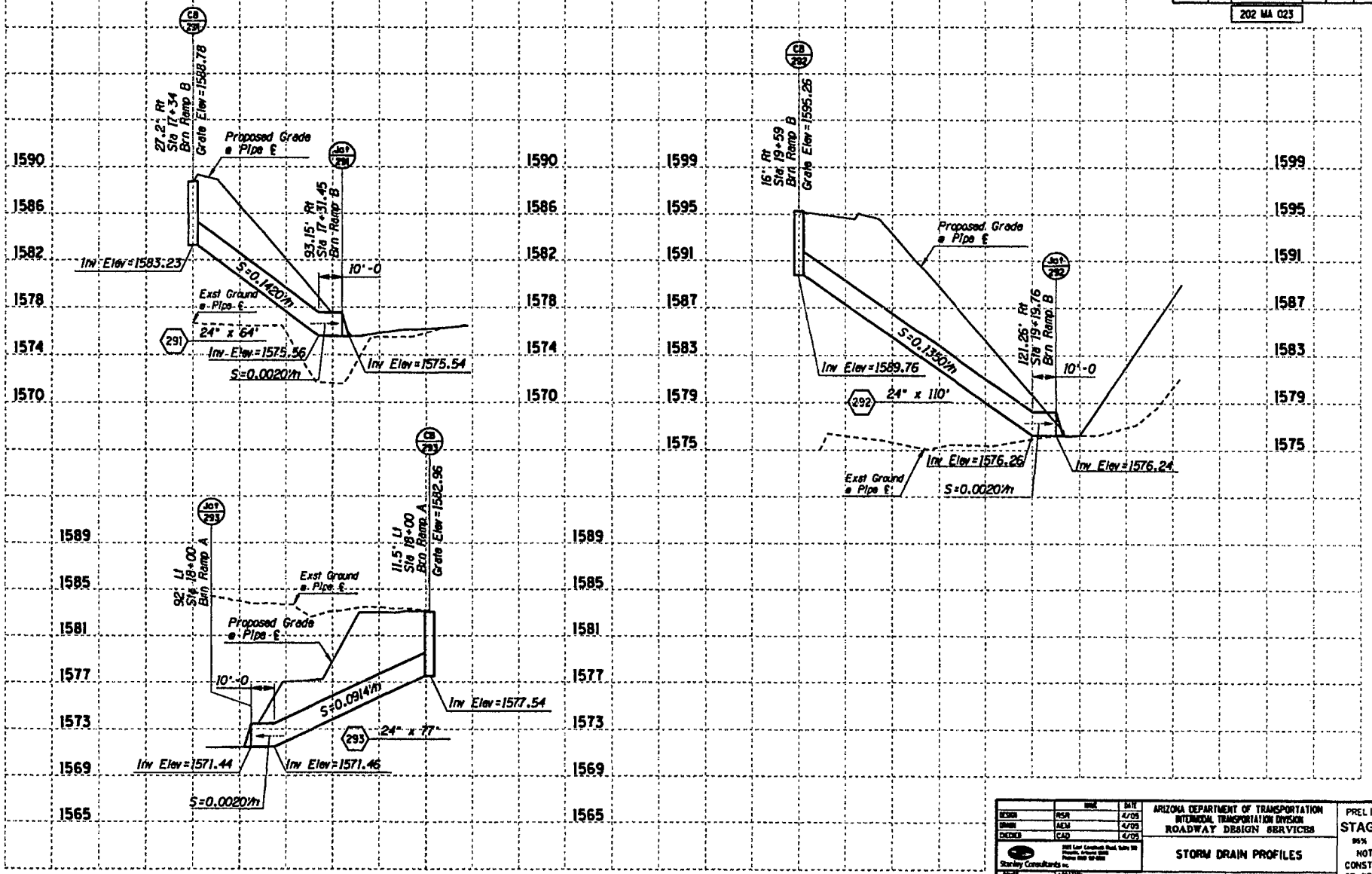

	NAME	DATE
DESIGN	RSR	4/05
DRAWN	AEM	4/05
CHECKED	CAD	4/05

Stanley Consultants Inc.

ARIZONA DEPARTMENT OF TRANSPORTATION
INTERMODAL TRANSPORTATION DIVISION
ROADWAY DESIGN SERVICES

STORM DRAIN PROFILES

PRELIMINARY
STAGE IV
95% Review
NOT FOR CONSTRUCTION OR RECORDING

ROUTE	LOCATION
202L	RED MTN FWY, POWER ROAD - UNIVERSITY DRIVE

DWG NO. D-2.43

TRACS NO. H 5782 01C | 202-B(007)B | ___ OF ___

4/22/2005 G:\17888\active\87-85-design\84-drain\h5782sdpf3.dgn

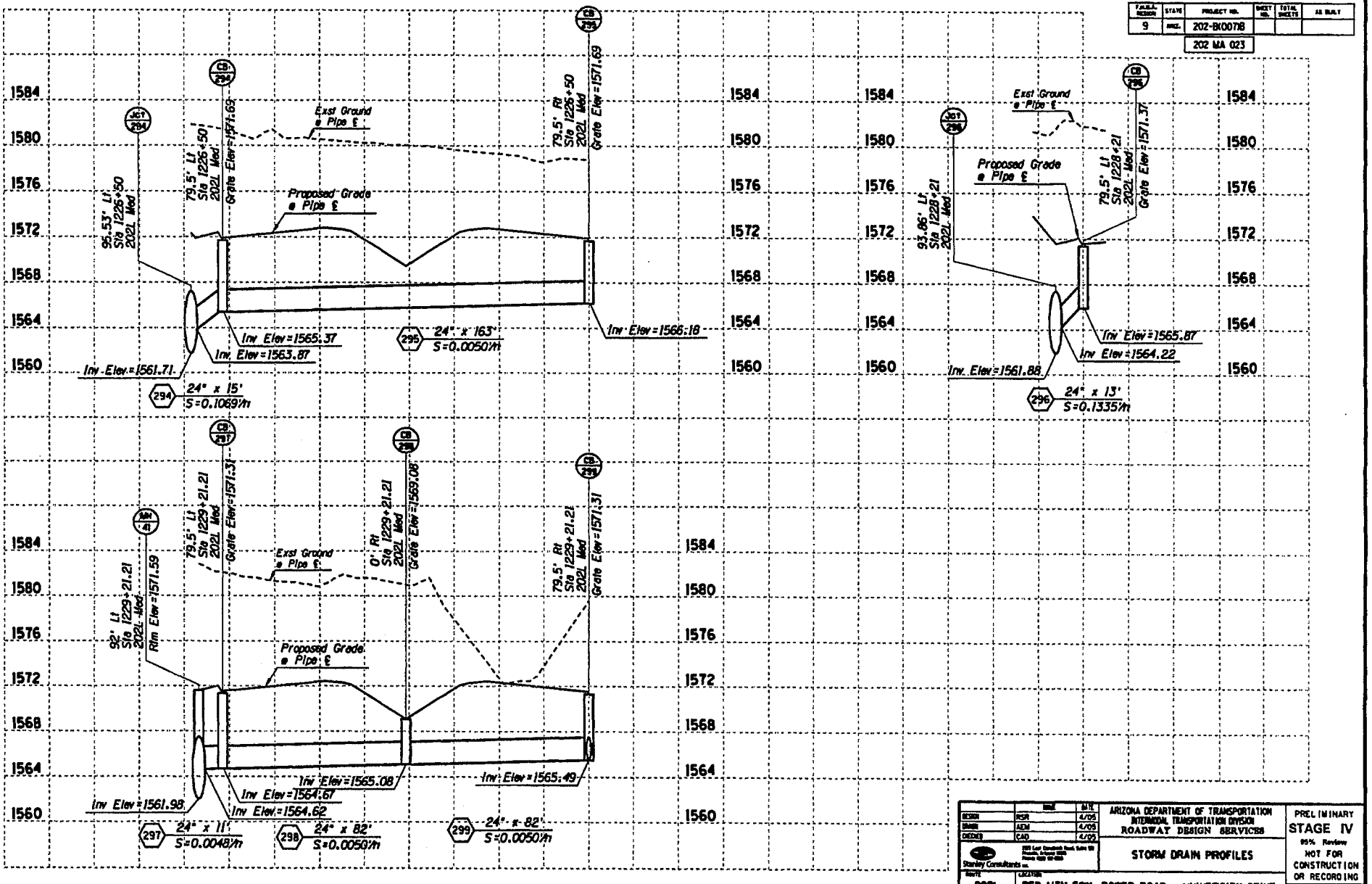

F.A.P. REGION	STATE	PROJECT NO.	SHEET NO.	TOTAL SHEETS	AS BUILT
9	ARIZ.	202-B(007)B			
		202 MA 023			

		DATE
DESIGN	RSR	4/05
DRAWN	AEM	4/05
CHECKED	CAD	4/05

ARIZONA DEPARTMENT OF TRANSPORTATION
INTERMODAL TRANSPORTATION DIVISION
ROADWAY DESIGN SERVICES

Stanley Consultants Inc.

STORM DRAIN PROFILES

PRELIMINARY
STAGE IV
95% Review
NOT FOR CONSTRUCTION OR RECORDING

DESIGN NO.	LOCATION	DWG NO.
202L	RED MTN FWY, POWER ROAD - UNIVERSITY DRIVE	D-2.44
TRACS NO. H 5782 01C		202-B(007)B

___ OF ___

F.A.P. No.	STATE	PROJECT NO.	SHEET NO.	TOTAL SHEETS	AS BUILT
9	ARIZ.	202-B(007)B			
		202 MA 023			

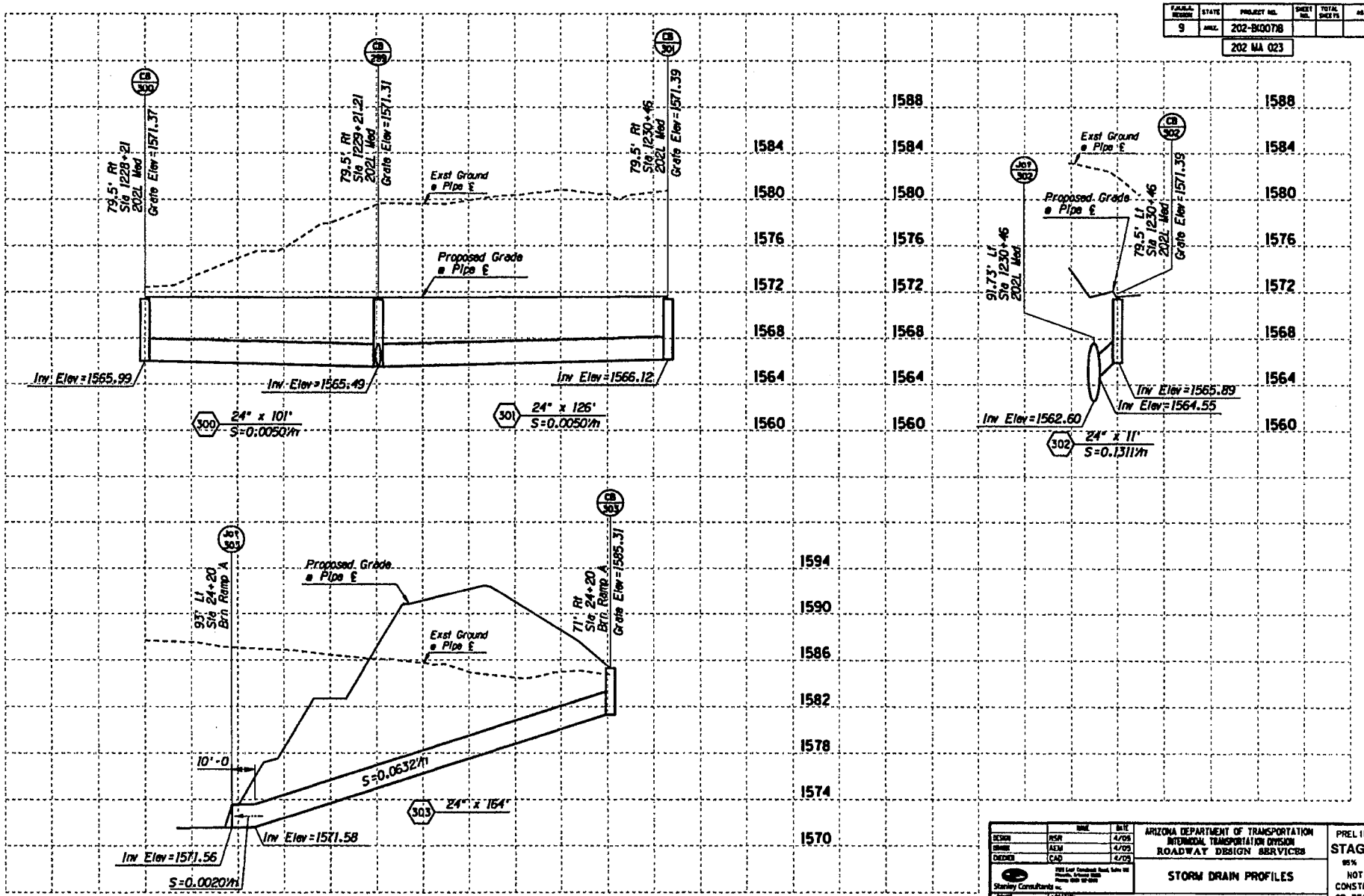

	NAME	DATE
DESIGN	RSR	4/09
DRAWN	AEM	4/09
CHECKED	CAD	4/09

Stanley Consultants Inc.

ARIZONA DEPARTMENT OF TRANSPORTATION
INTERMODAL TRANSPORTATION DIVISION
ROADWAY DESIGN SERVICES

STORM DRAIN PROFILES

PRELIMINARY
STAGE IV
95% Review
NOT FOR CONSTRUCTION OR RECORDING

DIST. 2021 | LOCATION: RED MTN FWY, POWER ROAD - UNIVERSITY DRIVE

DRG NO. D-2.45

TRACS NO. H 5782 01C | 202-B(007)B | ___ OF ___

472272885 q:\17888\active\87-85-dsgn\84-drain\h5782sdp45.dgn

F.A.P. NUMBER	STATE	PROJECT NO.	SHEET NO.	TOTAL SHEETS	AS BUILT
9	ARIZ.	202-B(007)I			
		202 MA 023			

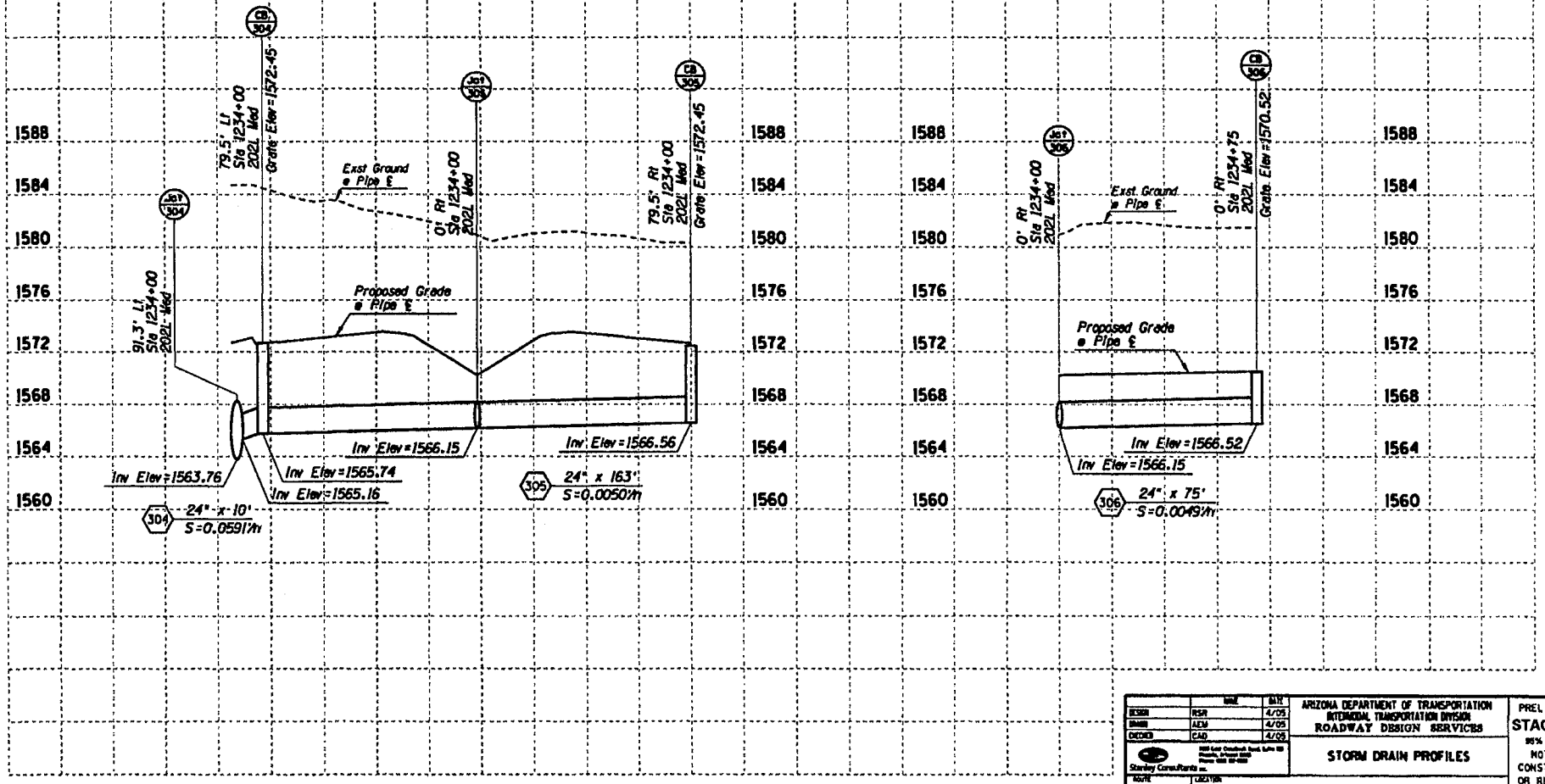

		DATE
DESIGN	RSR	4/05
DRAWN	AEM	4/05
CHECKED	CAD	4/05

Stanley Consultants Inc.

ARIZONA DEPARTMENT OF TRANSPORTATION
INTERMODAL TRANSPORTATION DIVISION
ROADWAY DESIGN SERVICES

STORM DRAIN PROFILES

PRELIMINARY
STAGE IV
95% Review
NOT FOR CONSTRUCTION OR RECORDING

ROUTE	LOCATION	DWG NO. D-2.46
202L	RED MTN FWY, POWER ROAD - UNIVERSITY DRIVE	
TRACS NO. H 5782 01C		202-B(007)I

___ OF ___

4/22/2005 d:\17888\active\87-85-dwgs\84-drain\h5782sdp45.dgn

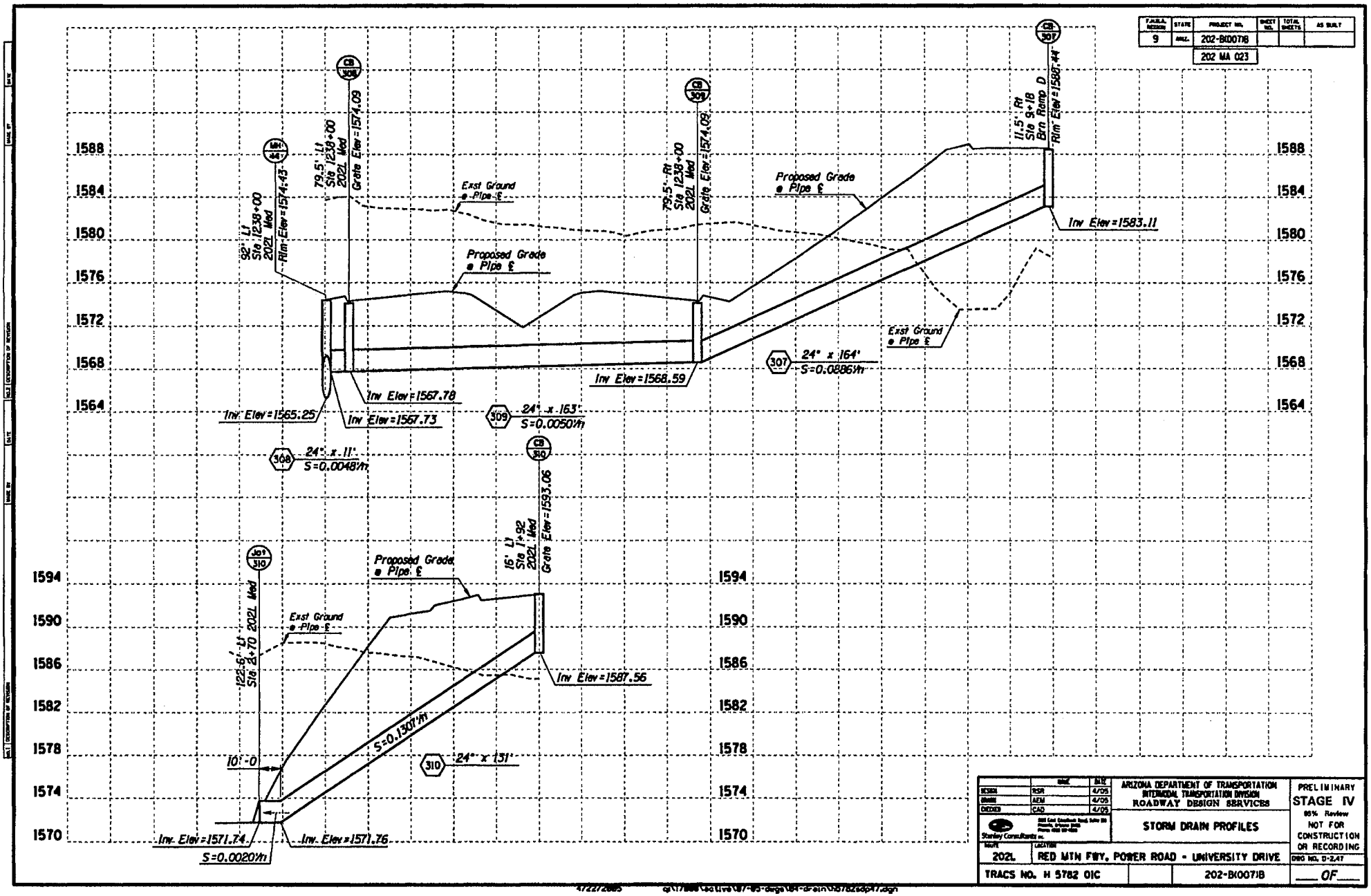

F.A.H.U. REGION	STATE	PROJECT NO.	SHEET NO.	TOTAL SHEETS	AS BUILT
9	ARIZ.	202-B(007)B			
		202 MA 023			

	NAME	DATE
DESIGN	RSR	4/05
DRAWN	AEM	4/05
CHECKED	CAD	4/05

Stanley Consultants Inc.

ARIZONA DEPARTMENT OF TRANSPORTATION
INTERMODAL TRANSPORTATION DIVISION
ROADWAY DESIGN SERVICES

STORM DRAIN PROFILES

PRELIMINARY
STAGE IV
95% Review
NOT FOR CONSTRUCTION OR RECORDING

ROUTE: 202L
LOCATION: RED MTN FWY, POWER ROAD - UNIVERSITY DRIVE

DWG NO. D-2.47

TRACS NO. H 5782 01C | 202-B(007)B | ___ OF ___

472272885 q:\1788\active\87-85-design\84-drain\h5782sdp47.dgn

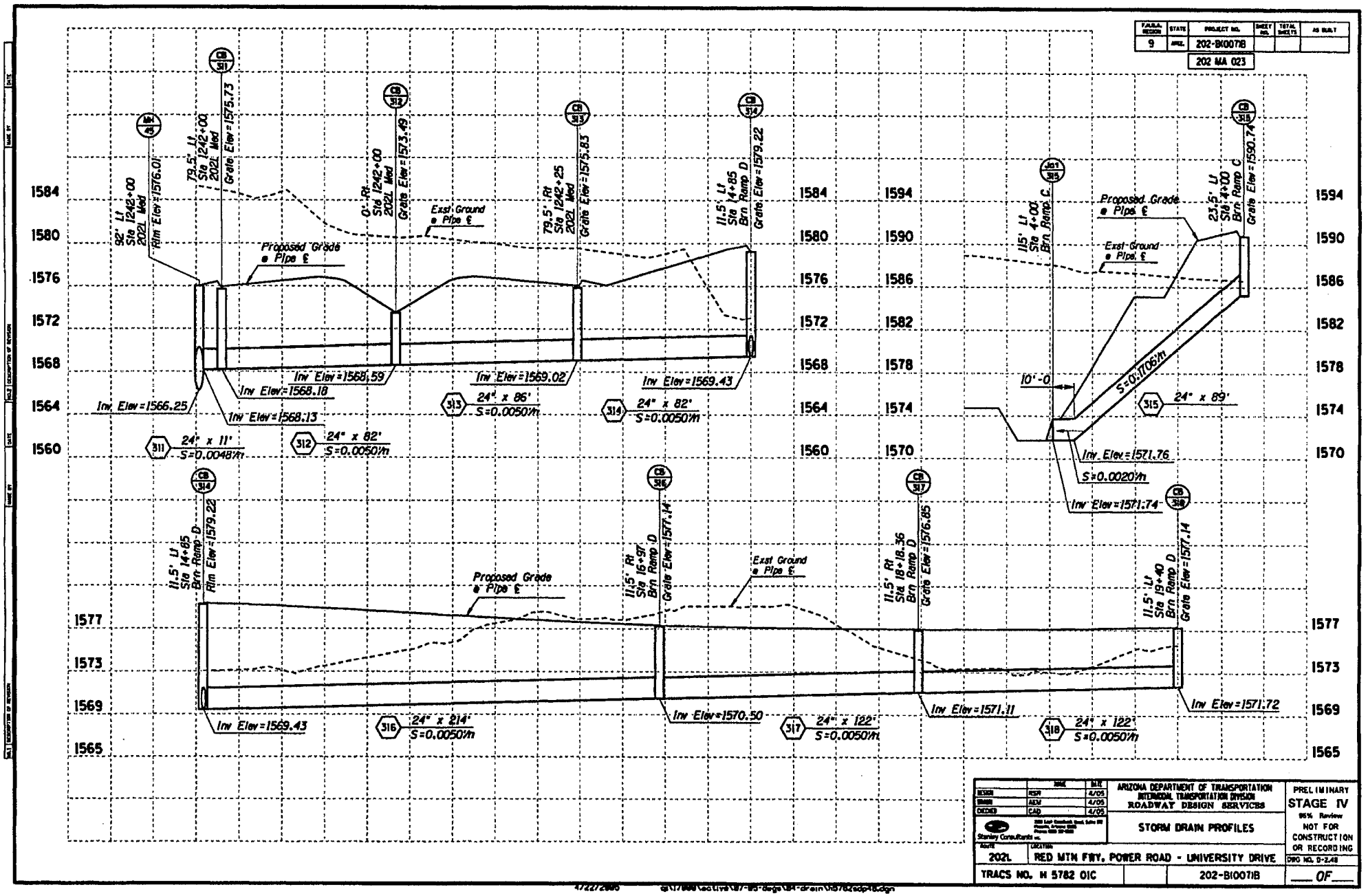

FAP/A REGION	STATE	PROJECT NO.	SHEET NO.	TOTAL SHEETS	AS BUILT
9	ARIZ.	202-B(007)B			
		202 MA 023			

		DATE
DESIGN	RSH	4/05
DRAWN	AEM	4/05
CHECKED	CAD	4/05

Stanley Consultants Inc.

ARIZONA DEPARTMENT OF TRANSPORTATION
INTERMODAL TRANSPORTATION DIVISION
ROADWAY DESIGN SERVICES

STORM DRAIN PROFILES

PRELIMINARY
STAGE IV
95% Review
NOT FOR CONSTRUCTION OR RECORDING

DRG NO. D-2.48

202L	RED MTN FWY, POWER ROAD - UNIVERSITY DRIVE	
TRACS NO. H 5782 01C	202-B(007)B	___ OF ___

4/22/2005 q:\17888\acad\civil\07-sds-dsgn\04-drain\h5782sdp48.dgn

F.A.R.A. REGION	STATE	PROJECT NO.	SHEET NO.	TOTAL SHEETS	AS BUILT
9	ARIZ.	202-B(007)B			
		202 MA 023			

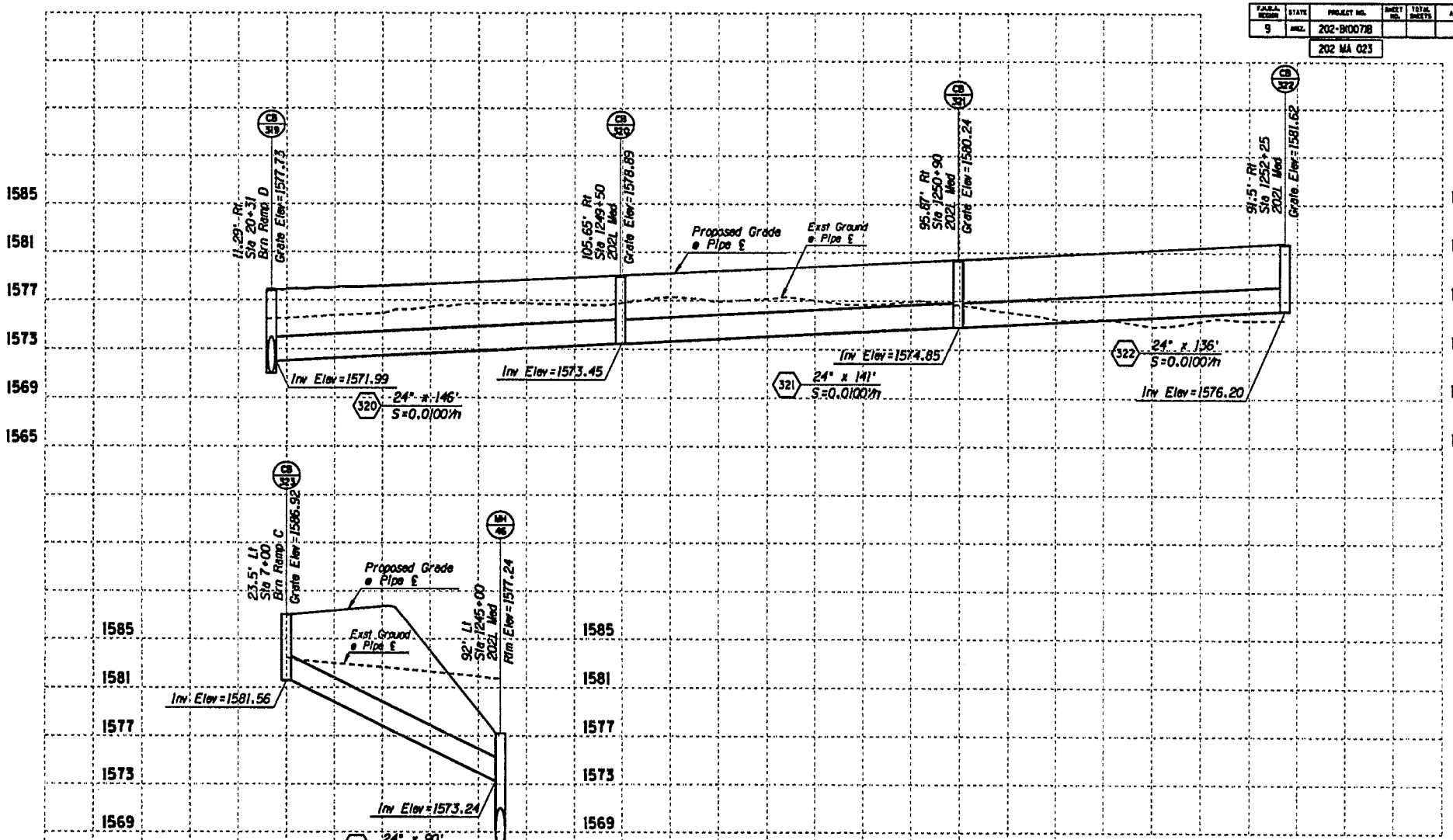

	NAME	DATE
DESIGN	RSR	4/05
DRAWN	AEM	4/05
CHECKED	CAD	4/05

Stanley Consultants Inc.

ARIZONA DEPARTMENT OF TRANSPORTATION
INTERMODAL TRANSPORTATION DIVISION
ROADWAY DESIGN SERVICES

STORM DRAIN PROFILES

PRELIMINARY
STAGE IV
95% Review
NOT FOR CONSTRUCTION OR RECORDING

STATE PROJECT	LOCATION
202L	RED MTN FWY, POWER ROAD - UNIVERSITY DRIVE

DWG NO. D-2.49

TRACS NO. H 5782 01C | 202-B(007)B | ___ OF ___

4/22/2005 d:\17888\active\87-85-dsgn\84-drain\h5782dp4.dgn

F.A.P. REGION	STATE	PROJECT NO.	SHEET NO.	TOTAL SHEETS	AS BUILT
9	ARIZ.	202-B(007)I			
		202 MA 023			

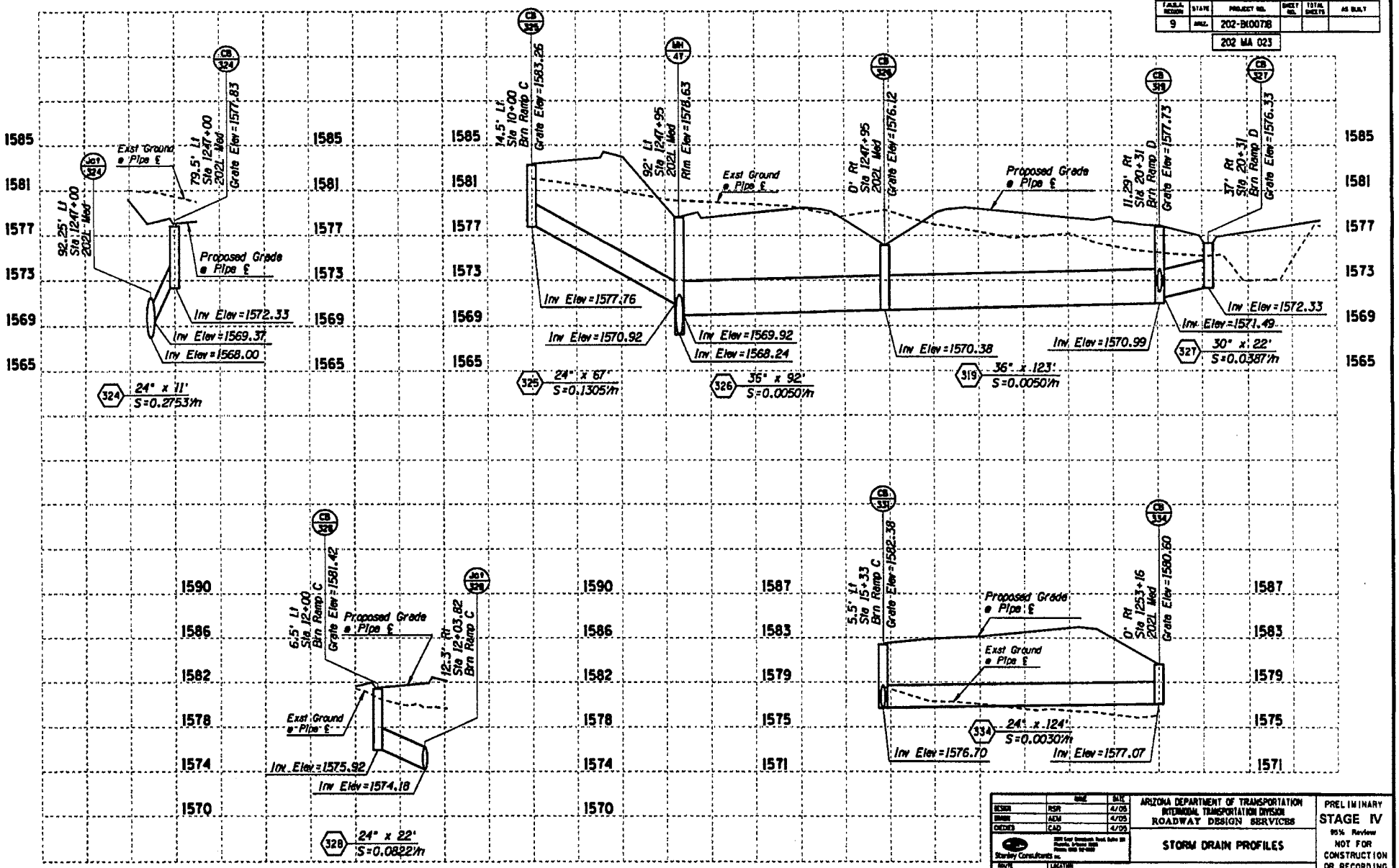

		DATE
DESIGN	RSR	4/05
DRAWN	ADM	4/05
CHECKED	CAD	4/05

Stanley Consultants Inc.

ARIZONA DEPARTMENT OF TRANSPORTATION
INTERMODAL TRANSPORTATION DIVISION
ROADWAY DESIGN SERVICES

STORM DRAIN PROFILES

PRELIMINARY
STAGE IV
95% Review
NOT FOR CONSTRUCTION OR RECORDING

YEAR: 2021
LOCATION: RED MTN FWY, POWER ROAD - UNIVERSITY DRIVE
DWG NO. D-230

TRACS NO. H 5782 01C
202-B(007)I
___ OF ___

4/22/2005 g:\17888\active\87-95-dsgn\84-drain\h5782sdp08.dgn

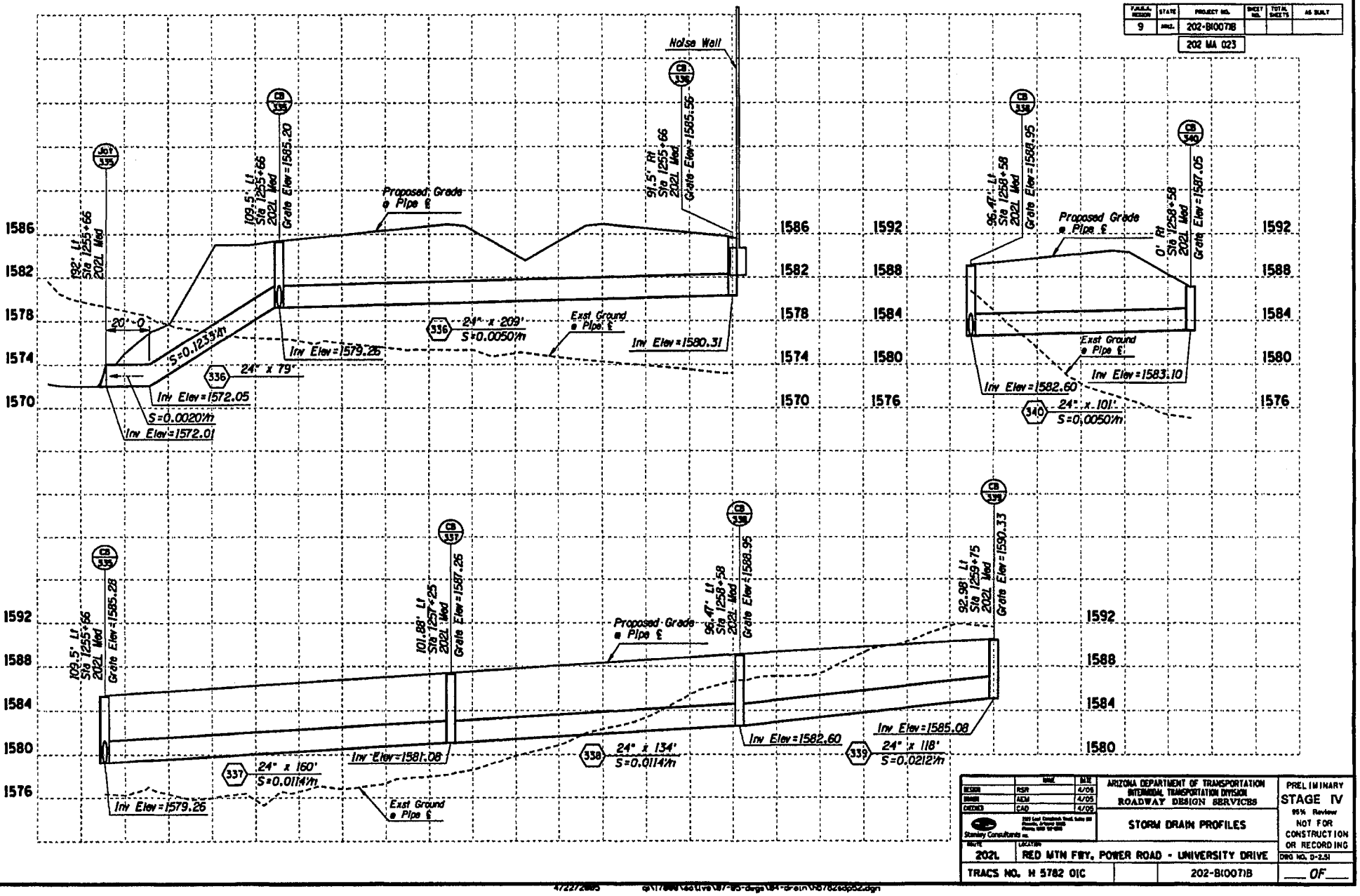

F.A.H.S.A. REGION	STATE	PROJECT NO.	SHEET NO.	TOTAL SHEETS	AS BUILT
9	ARIZ.	202-B(007)T			
		202 MA 023			

	NAME	DATE
DESIGN	RSR	4/05
DRAWN	AEM	4/05
CHECKED	CAD	4/05

Stanley Consultants Inc.

ARIZONA DEPARTMENT OF TRANSPORTATION
INTERMODAL TRANSPORTATION DIVISION
ROADWAY DESIGN SERVICES

STORM DRAIN PROFILES

PRELIMINARY
STAGE IV
95% Review
NOT FOR CONSTRUCTION OR RECORDING

DRG NO. D-2.51

DATE	LOCATION
2021	RED MTN FWY, POWER ROAD - UNIVERSITY DRIVE

TRACS NO. H 5782 01C | 202-B(007)B | ___ OF ___

4/22/2005 q:\17888\active\87-85-design\84-drain\h5782sdp52.dgn

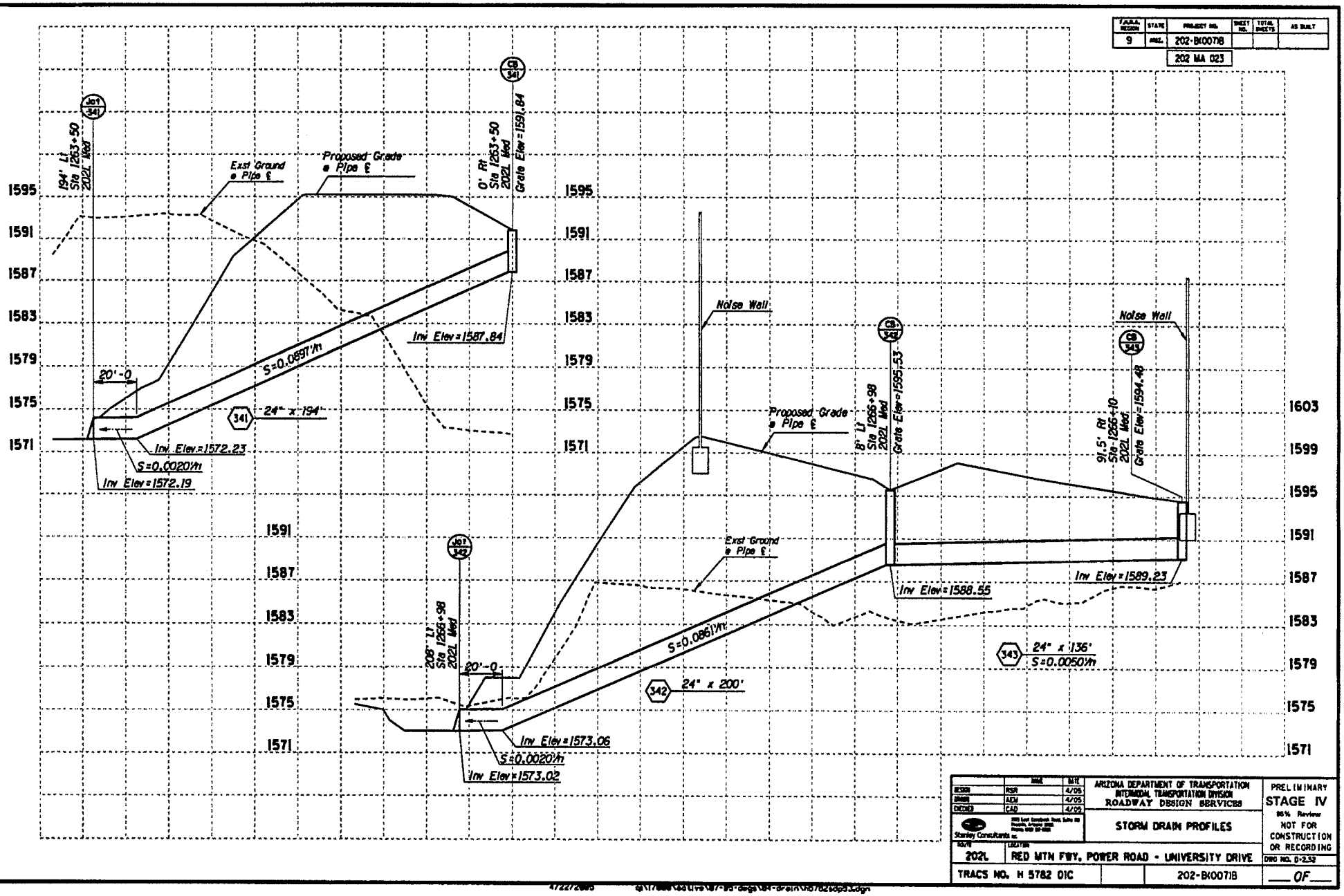

F.A.P.M. REGION	STATE	PROJECT NO.	SHEET NO.	TOTAL SHEETS	AS BUILT
9	ARIZ.	202-B(007)I			
		202 MA 023			

	NAME	DATE
DESIGN	RSR	4/05
DRAWN	AEM	4/05
CHECKED	CAD	4/05

Stanley Consultants Inc.

ARIZONA DEPARTMENT OF TRANSPORTATION
INTERMODAL TRANSPORTATION DIVISION
ROADWAY DESIGN SERVICES

STORM DRAIN PROFILES

PRELIMINARY
STAGE IV
95% Review
NOT FOR CONSTRUCTION OR RECORDING

DRG NO. D-2.53

DISTRICT	LOCATION
202L	RED MTN FWY, POWER ROAD - UNIVERSITY DRIVE

TRACS NO. H 5782 01C		202-B(007)I	___ OF ___

F.A.P.M.A. REGION	STATE	PROJECT NO.	SHEET NO.	TOTAL SHEETS	AS BUILT
9	ARIZ.	202-B(007)B			
		202 MA 023			

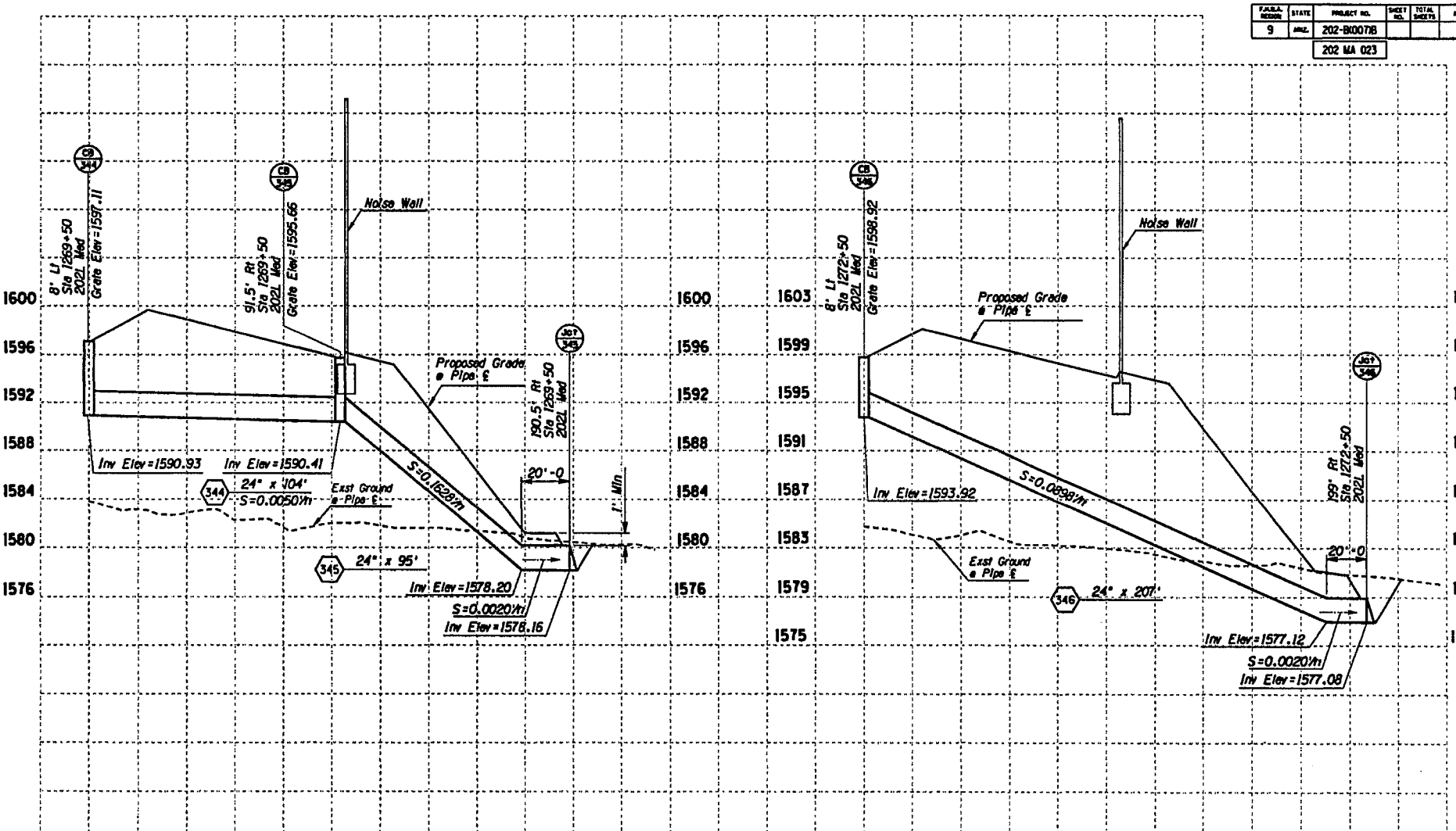

	NAME	DATE
DESIGN	PSR	4/05
DRAWN	AEM	4/05
CHECKED	CAD	4/05

Stanley Consultants inc.

ARIZONA DEPARTMENT OF TRANSPORTATION
INTERMODAL TRANSPORTATION DIVISION
ROADWAY DESIGN SERVICES

STORM DRAIN PROFILES

PRELIMINARY
STAGE IV
95% Review
NOT FOR CONSTRUCTION OR RECORDING

ROUTE	LOCATION	DWG NO. D-2.53
202L	RED MTN FWY, POWER ROAD - UNIVERSITY DRIVE	
TRACS NO. H 5782 01C		202-B(007)B

___ OF ___

4722728B5 dgn\17888\act\re\87-85-dsgn\84-drain\h5782sdp54.dgn

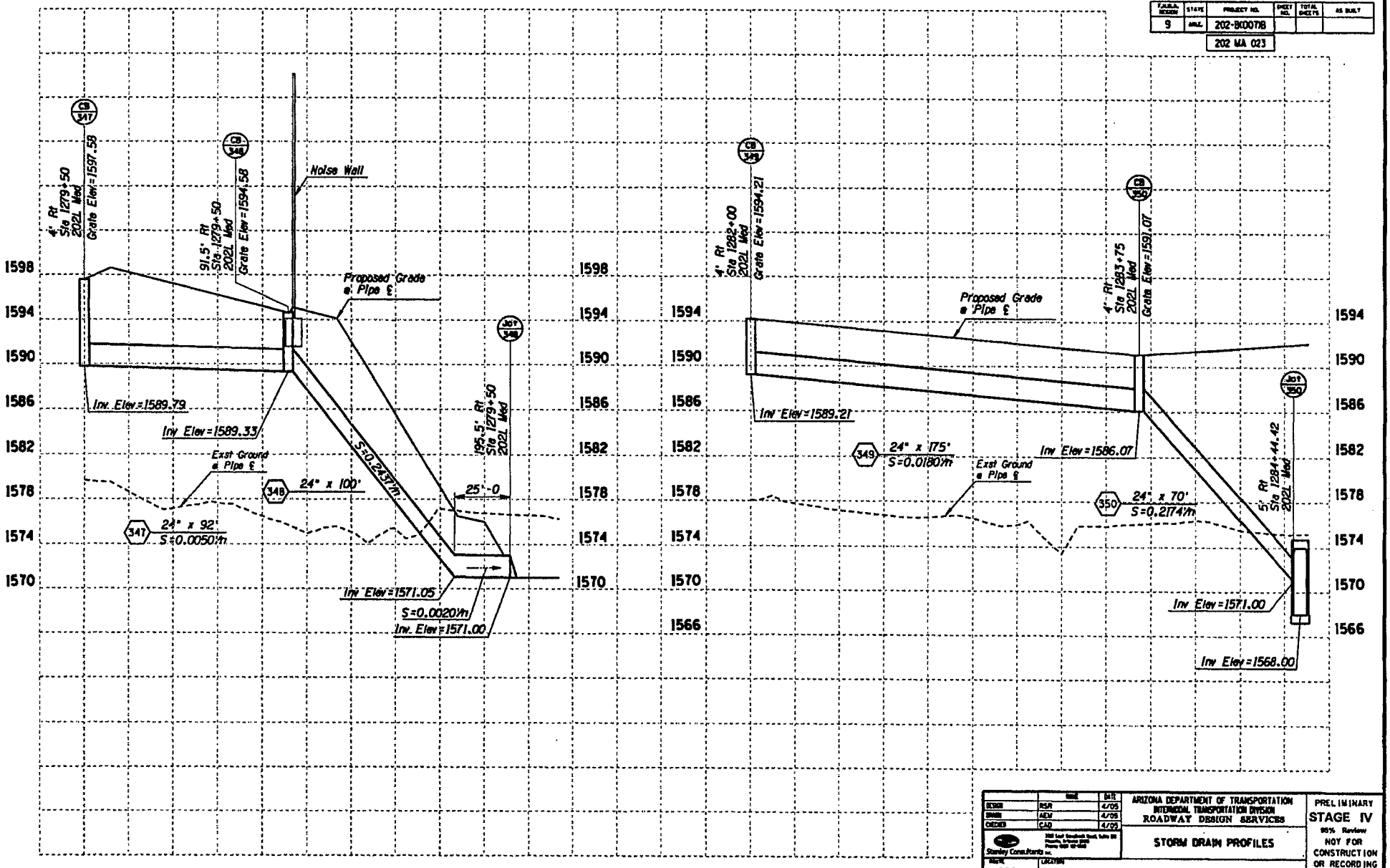

F.A.P.No. REVISION	STATE	PROJECT NO.	SHEET NO.	TOTAL SHEETS	AS BUILT
9	ARIZ.	202-B(007)I			
		202 MA 023			

		DATE
DESIGN	RSR	4/05
DRAWN	AEM	4/05
CHECKED	CAD	4/05

Stanley Consultants Inc.

ARIZONA DEPARTMENT OF TRANSPORTATION
INTERMODAL TRANSPORTATION DIVISION
ROADWAY DESIGN SERVICES

STORM DRAIN PROFILES

PRELIMINARY
STAGE IV
95% Review
NOT FOR CONSTRUCTION OR RECORDING

SCALE	LOCATION
202L	RED MTN FWY, POWER ROAD - UNIVERSITY DRIVE

DWG NO. D-2.54

TRACS NO. H 5782 01C | 202-B(007)I | ___ OF ___

4/22/2005 G:\17888\Sd\Line 187-95-dgn\84-drain\5782sdp05.dgn

FUNCTIONAL SECTION	STATE	PROJECT NO.	SHEET NO.	TOTAL SHEETS	AS BUILT
9	ARIZ.	202-B(007)B			
		202 MA 023			

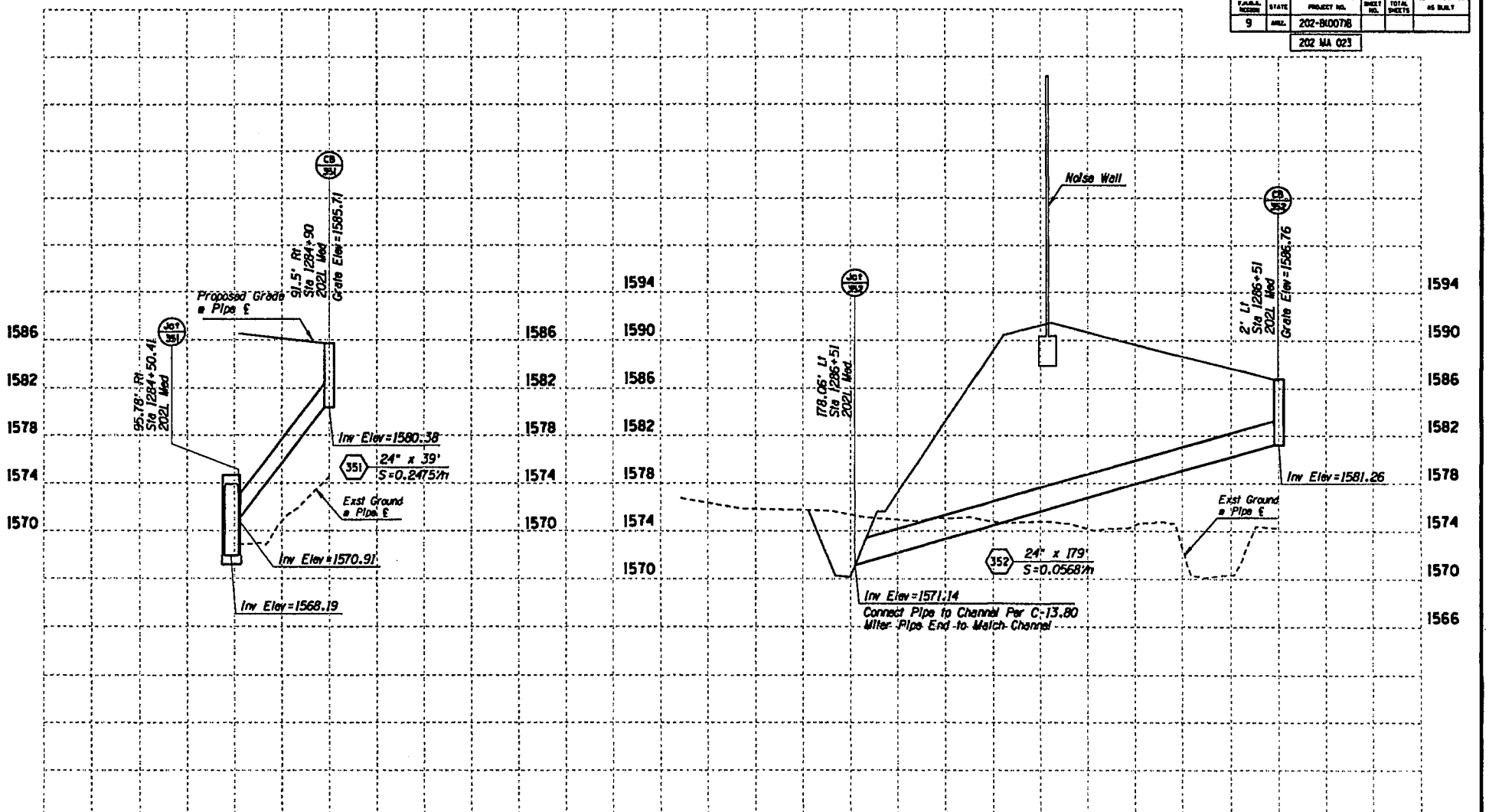

		BY	DATE
DESIGN	RSR		4/05
DRAWN	AEM		4/05
CHECKED	CAD		4/05

Stanley Consultants Inc.

ARIZONA DEPARTMENT OF TRANSPORTATION
INTERMODAL TRANSPORTATION DIVISION
ROADWAY DESIGN SERVICES

STORM DRAIN PROFILES

PRELIMINARY
STAGE IV
95% Review
NOT FOR CONSTRUCTION OR RECORDING

ROUTE	LOCATION
202L	RED MTN FWY. POWER ROAD - UNIVERSITY DRIVE

DRG NO. D-2.55

TRACS NO. H 5782 01C | 202-B(007)B | ___ OF ___

4/22/2005 d:\17888\active\87-85-dsgn\84-drain\h5782dp06.dgn

F.A.H.U. REGION	STATE	PROJECT NO.	SHEET NO.	TOTAL SHEETS	AS BUILT
9	ARIZ.	202-B(007)B			
		202 MA 023			

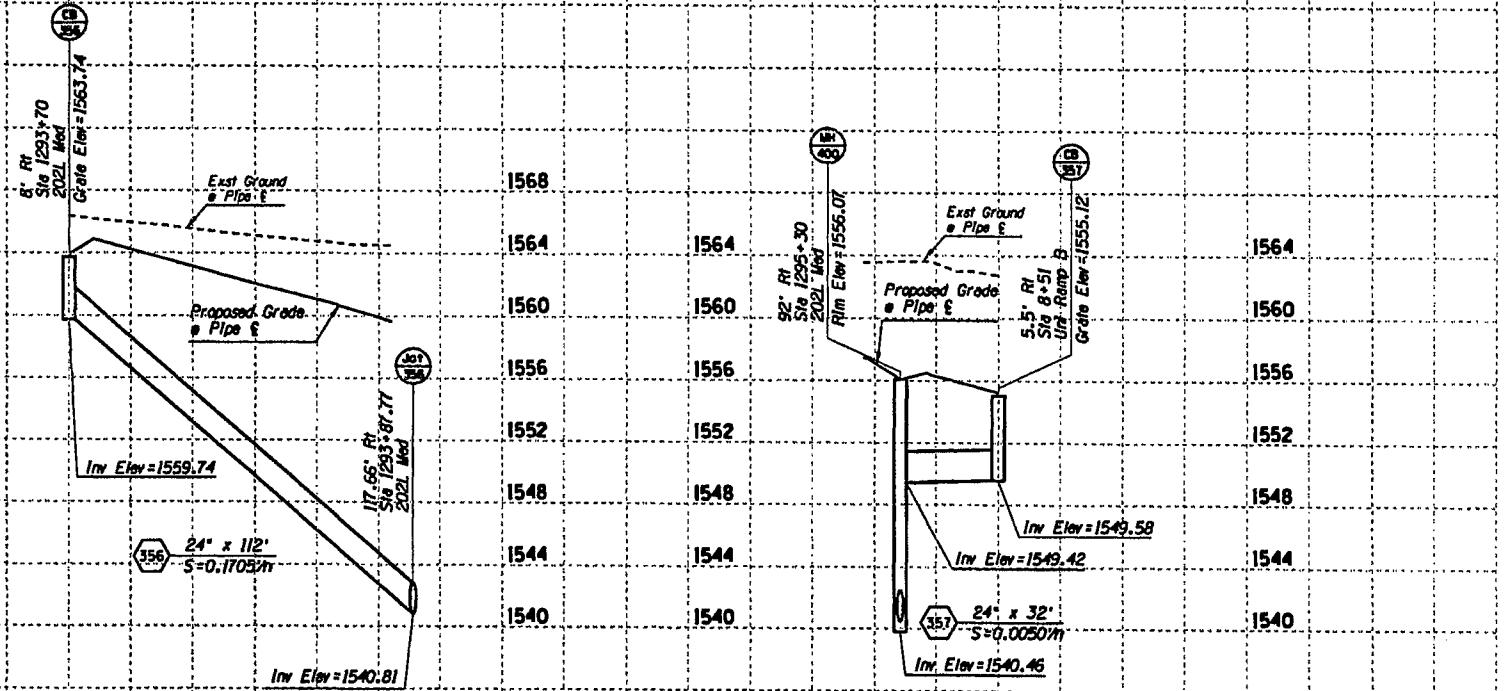

	NAME	DATE
DESIGN	RSR	4/05
DRAWN	ABM	4/05
CHECKED	CAD	4/05

Stanley Consultants Inc.

ARIZONA DEPARTMENT OF TRANSPORTATION
INTERMODAL TRANSPORTATION DIVISION
ROADWAY DESIGN SERVICES

STORM DRAIN PROFILES

PRELIMINARY
STAGE IV
95% Review
NOT FOR CONSTRUCTION OR RECORDING

YEAR	LOCATION	DRG NO. D-2.56
202L	RED MTN FWY, POWER ROAD - UNIVERSITY DRIVE	
TRACS NO. H 5782 01C	202-B(007)B	___ OF ___

4/22/2005 c:\17888\active\87-85-design\84-drain\h5782sdp07.dgn

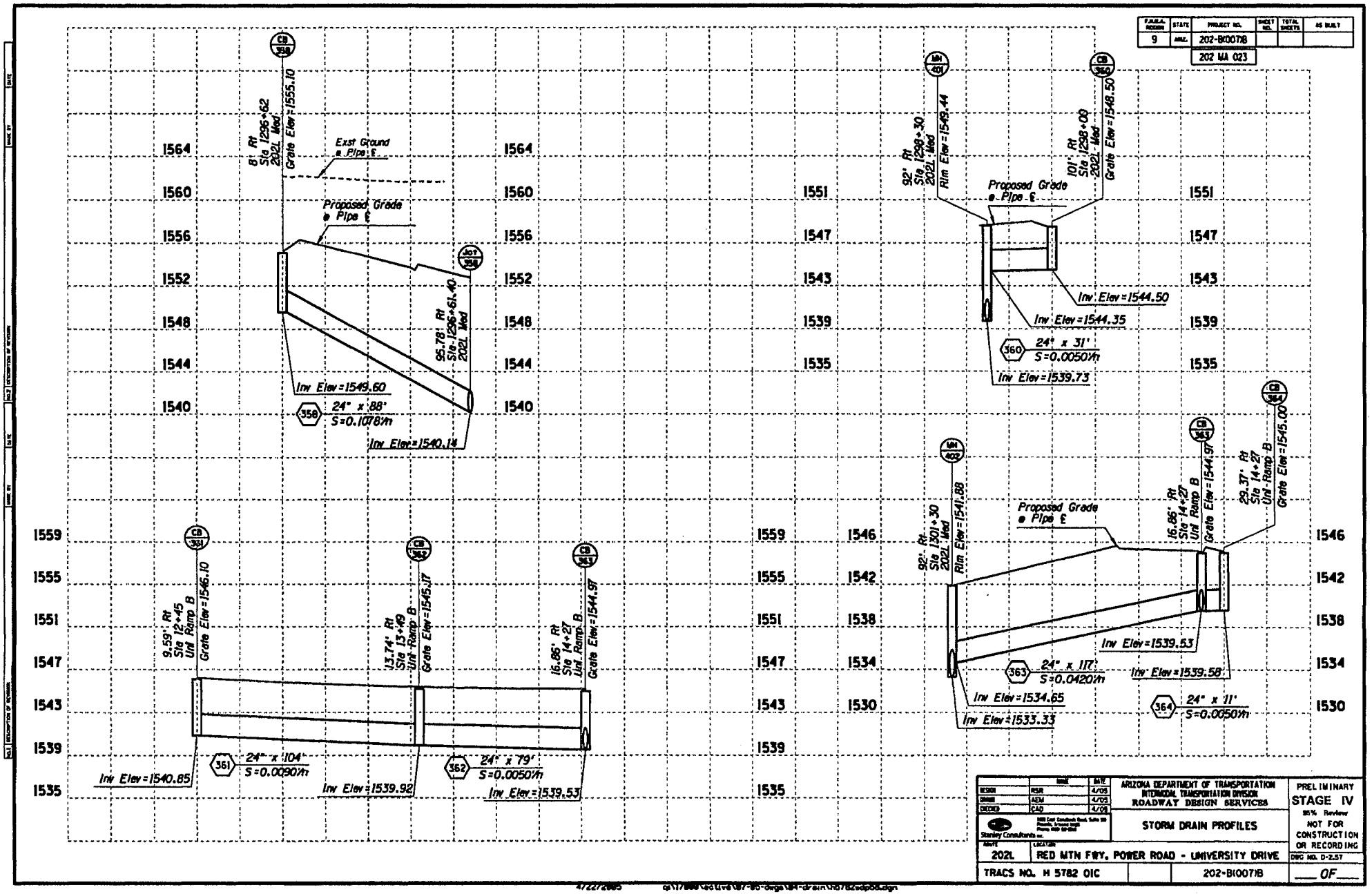

F.A.H.U. REGION	STATE	PROJECT NO.	SHEET NO.	TOTAL SHEETS	AS BUILT
9	ARIZ.	202-B(007)B			
		202 MA 023			

	NAME	DATE
DESIGN	RSR	4/05
DRAWN	AEM	4/05
CHECKED	CAD	4/05

Stanley Consultants Inc.

ARIZONA DEPARTMENT OF TRANSPORTATION
INTERMODAL TRANSPORTATION DIVISION
ROADWAY DESIGN SERVICES

STORM DRAIN PROFILES

PRELIMINARY
STAGE IV
95% Review
NOT FOR CONSTRUCTION OR RECORDING

ROUTE	LOCATION
202L	RED MTN FWY, POWER ROAD - UNIVERSITY DRIVE

DWG NO. D-2.57

TRACS NO. H 5782 01C | 202-B(007)B | ___ OF ___

4/22/2005 c:\17888\Cadd\e8\87-80-dwgs\84-drain\h5782sdp58.dgn

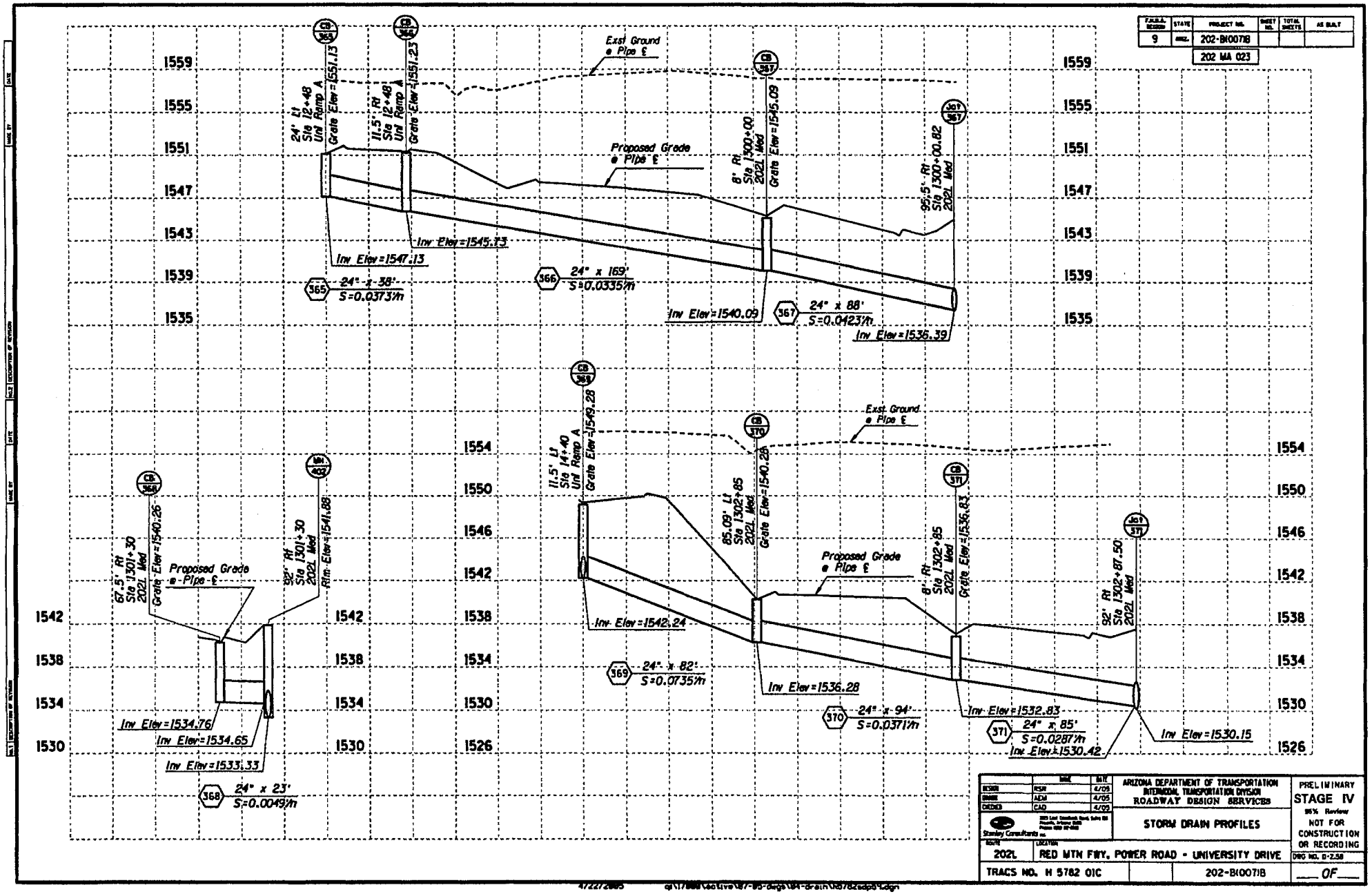

F.A.H.S. DESIGN	STATE	PROJECT NO.	SHEET NO.	TOTAL SHEETS	AS BUILT
9	ARIZ.	202-B(007)B			
		202 MA 023			

		DATE	INIT.
DESIGN	RSH		4/05
DRAWN	AEM		4/05
CHECKED	CAD		4/05

Stanley Consultants Inc.

ARIZONA DEPARTMENT OF TRANSPORTATION
INTERMODAL TRANSPORTATION DIVISION
ROADWAY DESIGN SERVICES

STORM DRAIN PROFILES

PRELIMINARY
STAGE IV
95% Review
NOT FOR CONSTRUCTION OR RECORDING

YEAR	LOCATION	DRG NO. D-2.58
2021	RED MTN FWY, POWER ROAD - UNIVERSITY DRIVE	
TRACS NO. H 5782 01C		202-B(007)B

___ OF ___

F.A.P.No. REVISION	STATE	PROJECT NO.	SHEET NO.	TOTAL SHEETS	AS BUILT
9	ARIZ.	202-B(00)7B			
		202 MA 023			

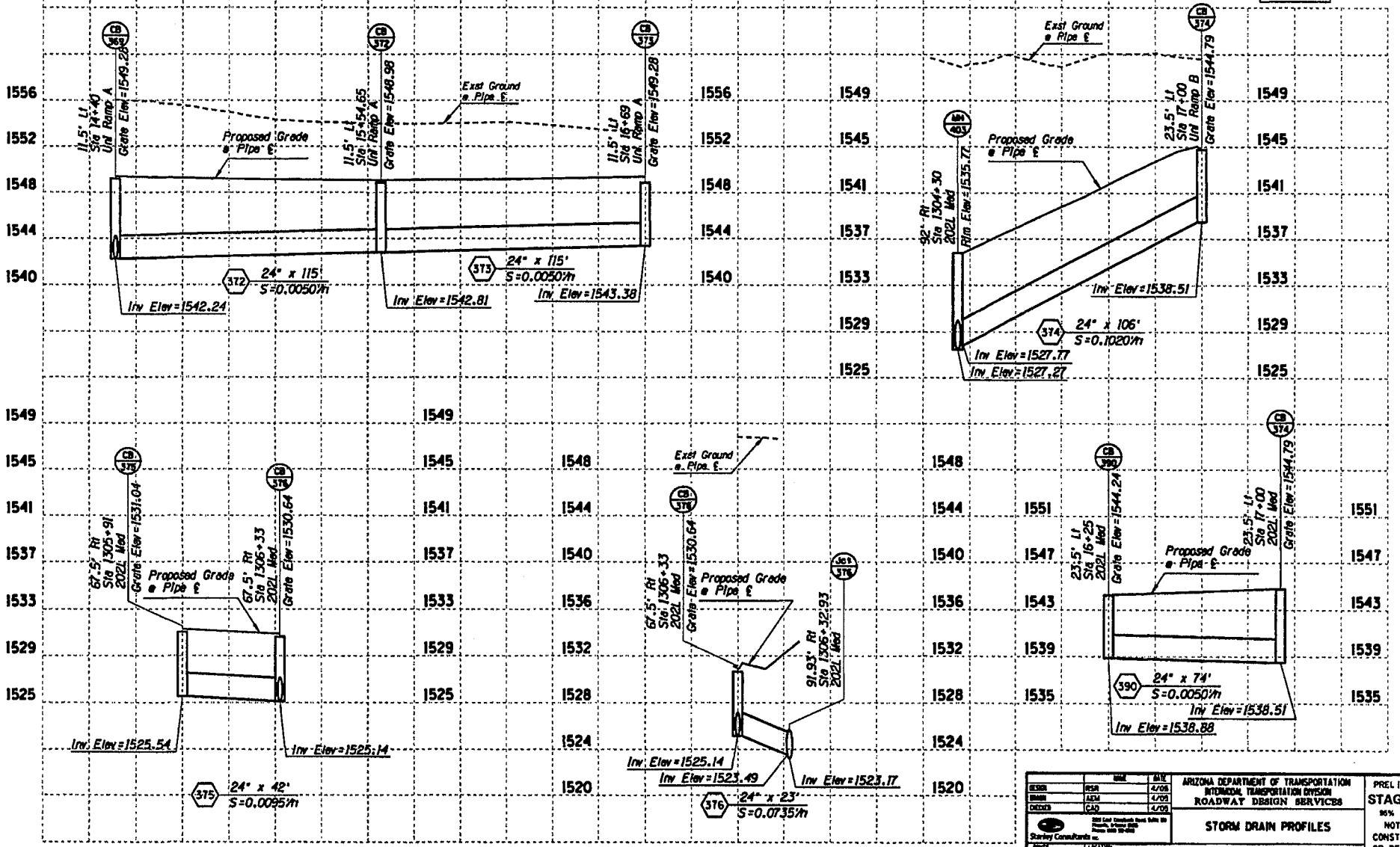

	NAME	DATE
DESIGN	PSR	4/08
DRAWN	AEM	4/08
CHECKED	CAD	4/08

Stanley Consultants Inc.

ARIZONA DEPARTMENT OF TRANSPORTATION
INTERMODAL TRANSPORTATION DIVISION
ROADWAY DESIGN SERVICES

STORM DRAIN PROFILES

PRELIMINARY
STAGE IV
95% Review
NOT FOR CONSTRUCTION OR RECORDING

DWG NO. D-2.59

DISTRICT	LOCATION
202L	RED MTN FWY, POWER ROAD - UNIVERSITY DRIVE

TRACS NO.		
H 5782 01C		202-B(007)B

___ OF ___

FAP/AC/RESTON	STATE	PROJECT NO.	SHEET NO.	TOTAL SHEETS	AS BUILT
9	ARIZ.	202-B(007)B			
		202 MA 023			

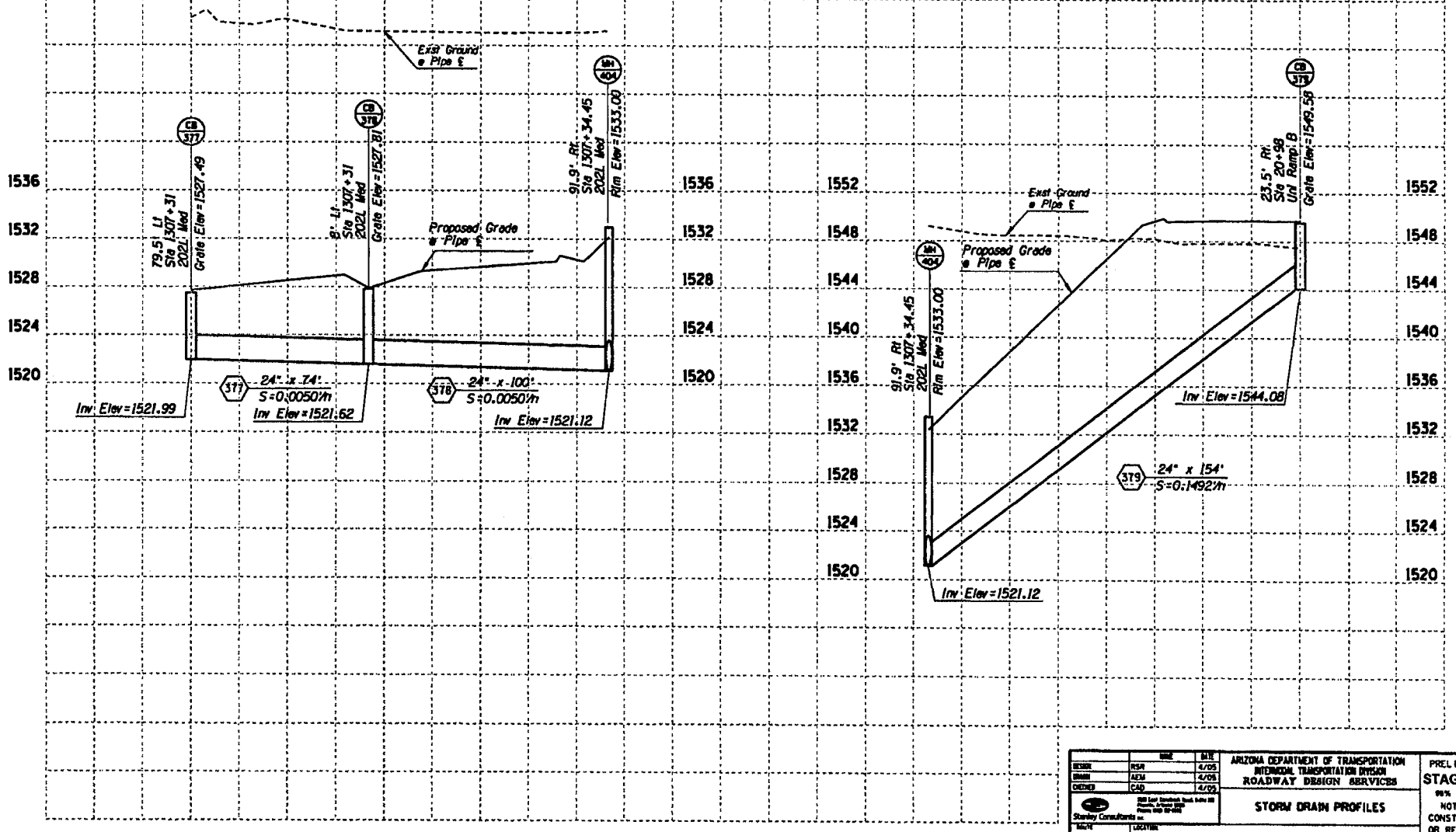

		DATE
DESIGN	RSH	4/05
DRAWN	AEM	4/05
CHECKED	CAD	4/05

Stanley Consultants Inc.

ARIZONA DEPARTMENT OF TRANSPORTATION
INTERMODAL TRANSPORTATION DIVISION
ROADWAY DESIGN SERVICES

STORM DRAIN PROFILES

PRELIMINARY
STAGE IV
95% Review
NOT FOR CONSTRUCTION OR RECORDING

DRG NO. D-2.60

YEAR	LOCATION
2021	RED MTN FWY, POWER ROAD - UNIVERSITY DRIVE

TRACS NO. H 5782 01C | 202-B(007)B | ___ OF ___

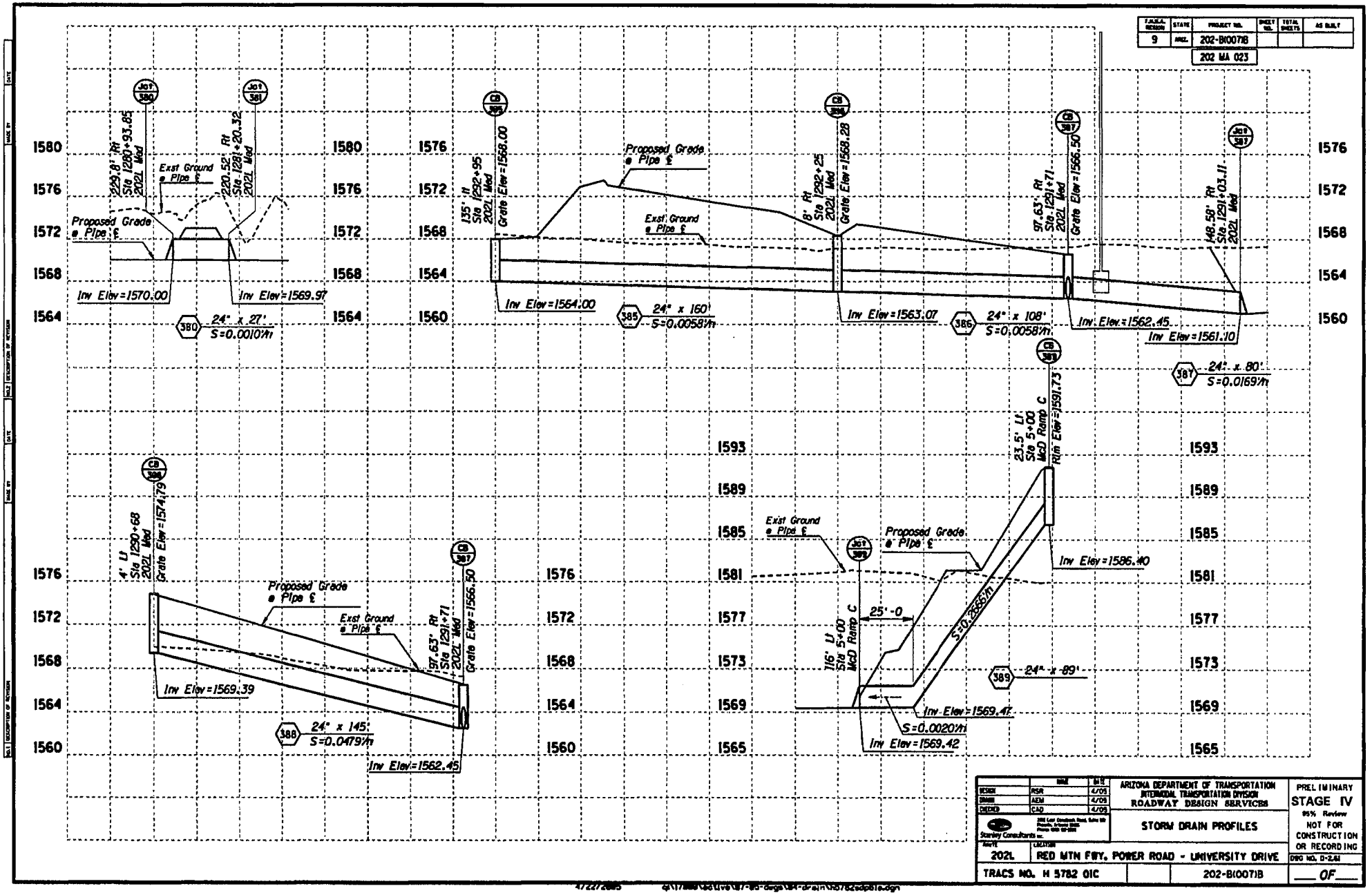

F.A.P.# REVISION	STATE	PROJECT NO.	SHEET NO.	TOTAL SHEETS	AS BUILT
9	ARIZ.	202-B(007)B			
		202 MA 023			

	NAME	DATE
DESIGN	PSR	4/05
DRAWN	AEM	4/05
CHECKED	CAD	4/05

Stanley Consultants Inc.

ARIZONA DEPARTMENT OF TRANSPORTATION
INTERMODAL TRANSPORTATION DIVISION
ROADWAY DESIGN SERVICES

STORM DRAIN PROFILES

PRELIMINARY
STAGE IV
95% Review
NOT FOR CONSTRUCTION OR RECORDING

DRG NO. D-2.61

YEAR	LOCATION
2021	RED MTN FWY, POWER ROAD - UNIVERSITY DRIVE

TRACS NO. H 5782 01C | 202-B(007)B | ___ OF ___

4722726B5 d:\17\mes\ed\live\07-05-dwgs\04-drain\h5782edp01e.dgn

F.H.W.A. REGION	STATE	PROJECT NO.	SHEET NO.	TOTAL SHEETS	AS BUILT
9	ARIZ.	202-B(007)B			

202 MA 023

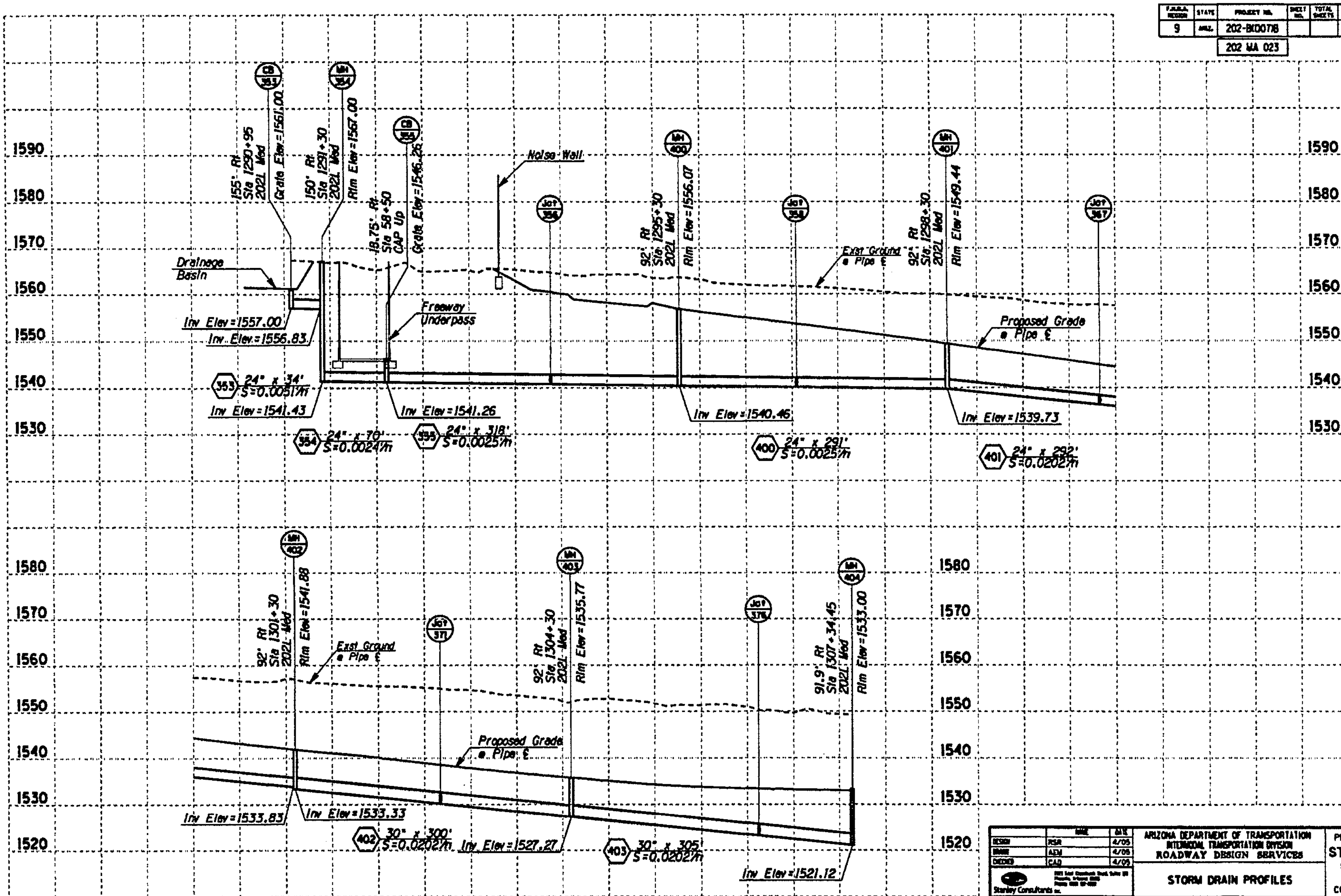

	NAME	DATE	ARIZONA DEPARTMENT OF TRANSPORTATION INTERMODAL TRANSPORTATION DIVISION ROADWAY DESIGN SERVICES
DESIGN	RSR	4/05	
DRAWN	AEM	4/05	
CHECKED	CAD	4/05	
Stanley Consultants inc.			STORM DRAIN PROFILES
ROUTE 202L	LOCATION RED MTN FWY, POWER ROAD - UNIVERSITY DRIVE		DWG NO. D-2.63
TRACS NO. H 5782 01C		202-B(007)B	___ OF ___

PRELIMINARY
STAGE IV
95% Review
NOT FOR CONSTRUCTION OR RECORDING

472272005 q:\17888\active\87-85-dsgs\04-drain\h5782sdp62.dgn

FAP/ALA DESIGN	STATE	PROJECT NO.	SHEET NO.	TOTAL SHEETS	AS BUILT
9	ARIZ.	202-B(007)B			
		202 MA 023			

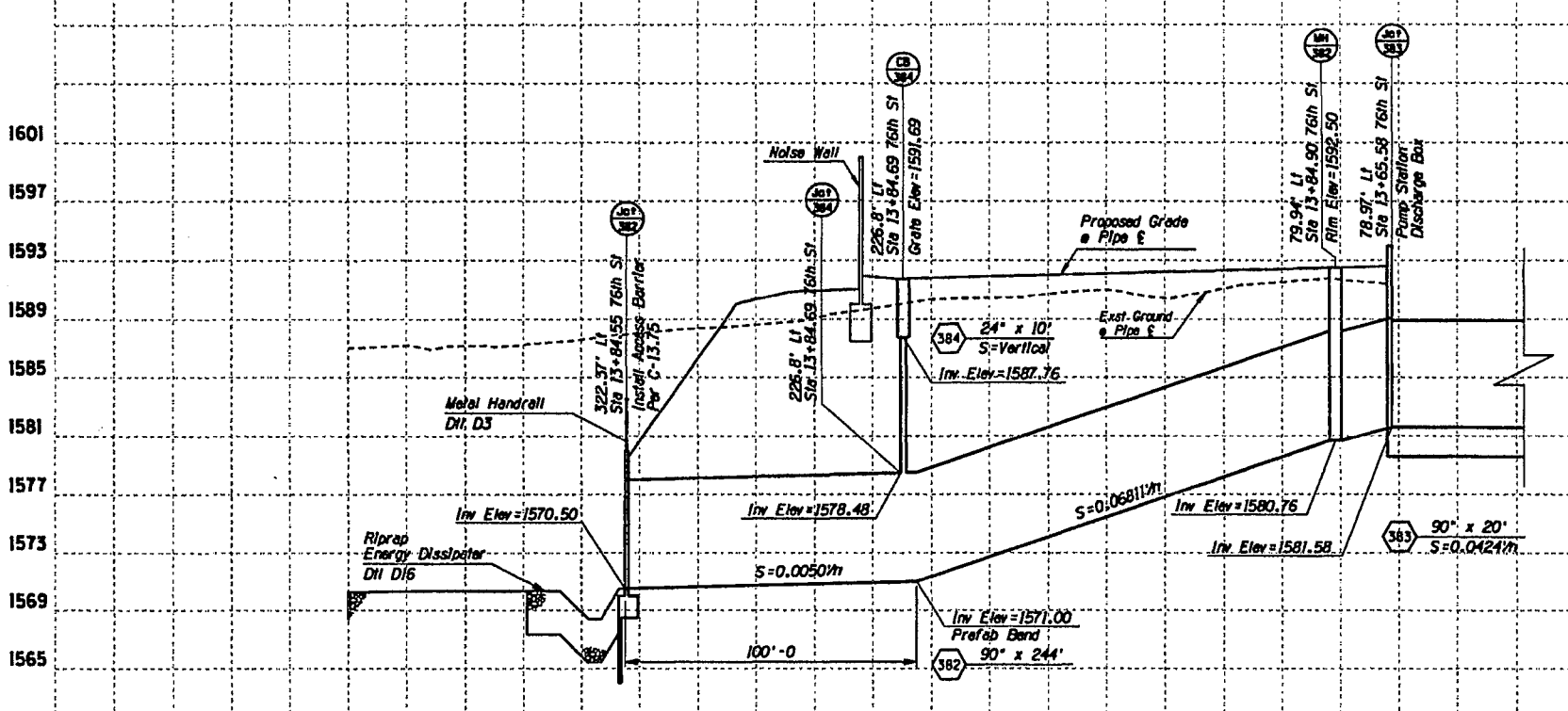

	BY	DATE
DESIGN	PSR	4/05
DRAWN	AEM	4/05
CHECKED	CAD	4/05

Stanley Consultants Inc.

ARIZONA DEPARTMENT OF TRANSPORTATION
INTERMODAL TRANSPORTATION DIVISION
ROADWAY DESIGN SERVICES

STORM DRAIN PROFILES

PRELIMINARY
STAGE IV
95% Review
NOT FOR CONSTRUCTION OR RECORDING

ROUTE	LOCATION
202L	RED MTN FWY, POWER ROAD - UNIVERSITY DRIVE

DWG NO. D-2.62

TRACS NO. H 5782 01C | 202-B(007)B | ___ OF ___

472272885 g:\17888\cadd\xs\87-85-dwgs\84-drain\h5782sdp03.dgn

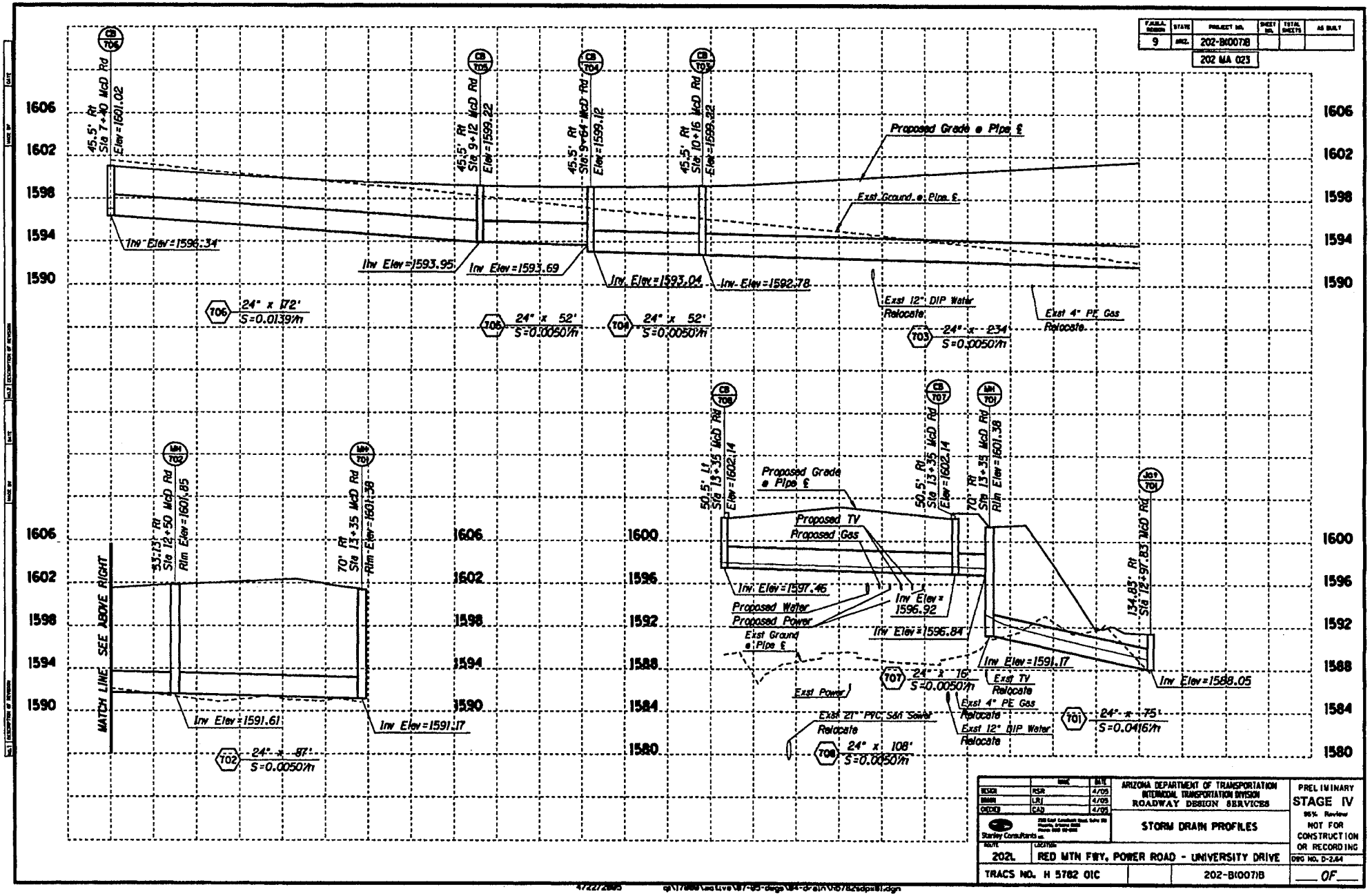

FAP/A.I. REGION	STATE	PROJECT NO.	SHEET NO.	TOTAL SHEETS	AS BUILT
9	ARIZ.	202-B(007)B			
		202 MA 023			

	NAME	DATE
DESIGN	PSR	4/05
DRAWN	LRJ	4/05
CHECKED	CAD	4/05

Stanley Consultants Inc.

ARIZONA DEPARTMENT OF TRANSPORTATION
INTERMODAL TRANSPORTATION DIVISION
ROADWAY DESIGN SERVICES

STORM DRAIN PROFILES

PRELIMINARY
STAGE IV
95% Review
NOT FOR CONSTRUCTION OR RECORDING

ROUTE	LOCATION
202L	RED MTN FWY, POWER ROAD - UNIVERSITY DRIVE

DWG NO. D-2.64

TRACS NO. H 5782 01C | 202-B(007)B | ___ OF ___

4/22/2005 g:\17888\Lead Live\87-95-design\84-drain\05782sdpr81.dgn

F.A.H.P.A. REGION	STATE	PROJECT NO.	SHEET NO.	TOTAL SHEETS	AS BUILT
9	ARIZ.	202-B(007)B			
		202 MA 023			

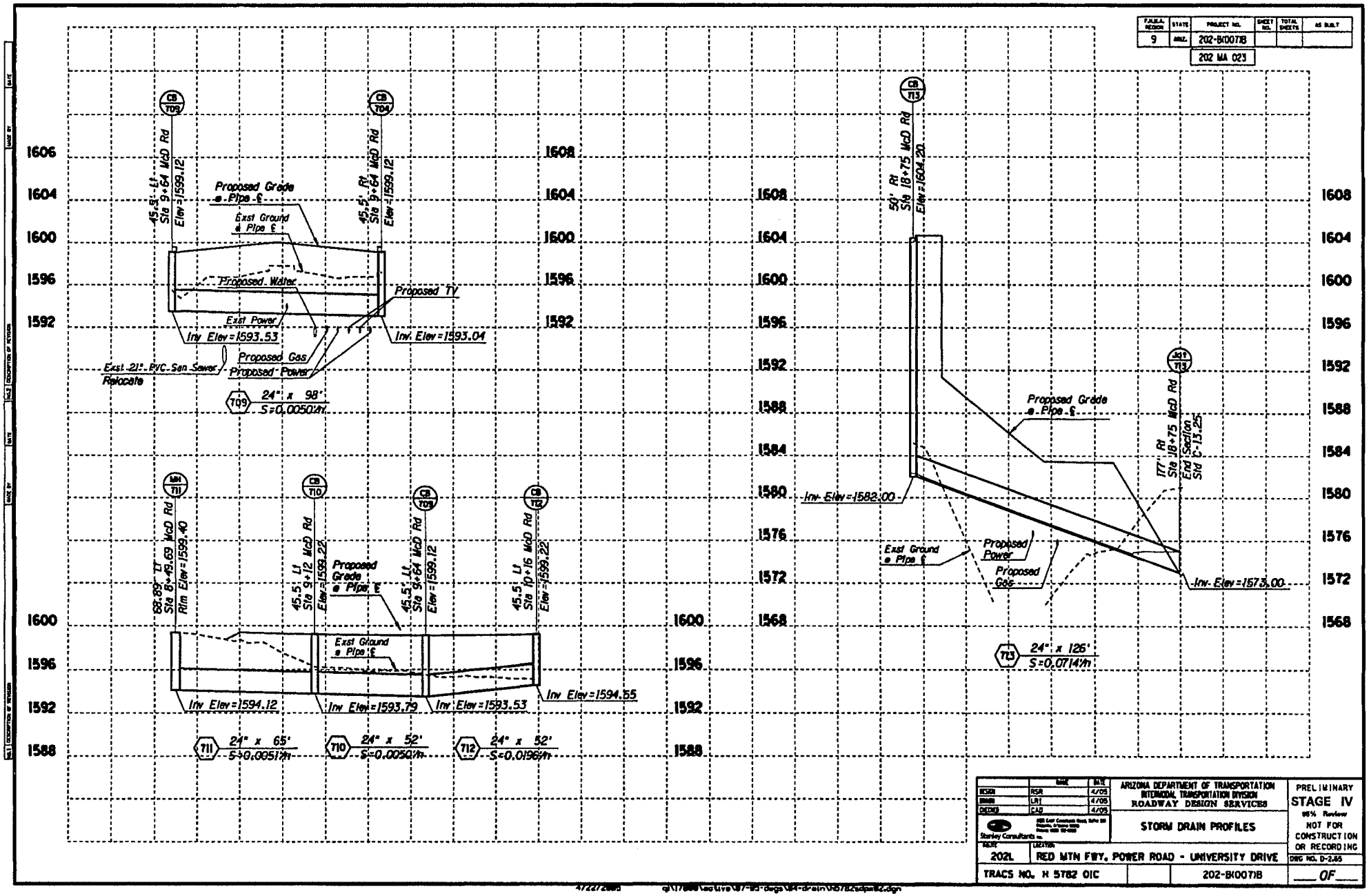

	NAME	DATE
DESIGN	RSR	4/05
DRAWN	LRT	4/05
CHECKED	CAD	4/05

Stanley Consultants Inc.

ARIZONA DEPARTMENT OF TRANSPORTATION
INTERMODAL TRANSPORTATION DIVISION
ROADWAY DESIGN SERVICES

STORM DRAIN PROFILES

PRELIMINARY
STAGE IV
95% Review
NOT FOR CONSTRUCTION OR RECORDING

ROUTE	LOCATION	DRG NO. D-2.65
202L	RED MTN FWY, POWER ROAD - UNIVERSITY DRIVE	
TRACS NO. H 5762 01C		202-B(007)B

OF

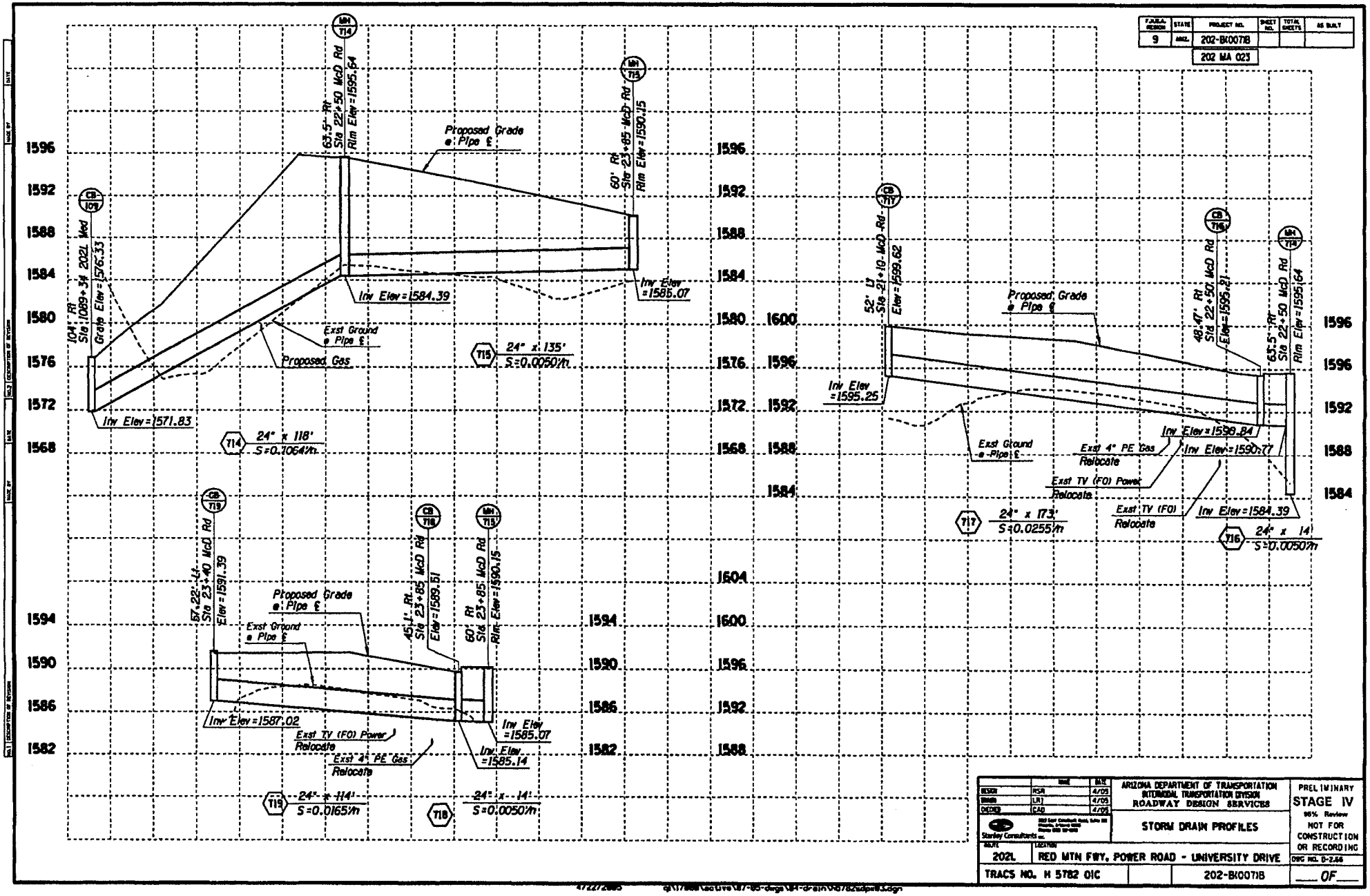

F.A.H.S. REGION	STATE	PROJECT NO.	SHEET NO.	TOTAL SHEETS	AS BUILT
9	ARIZ.	202-B(007)B			
		202 MA 023			

			DATE
DESIGN	RSR		4/05
DRAWN	LRJ		4/05
CHECKED	CAD		4/05

Stanley Consultants Inc.

ARIZONA DEPARTMENT OF TRANSPORTATION
INTERMODAL TRANSPORTATION DIVISION
ROADWAY DESIGN SERVICES

STORM DRAIN PROFILES

PRELIMINARY
STAGE IV
95% Review
NOT FOR CONSTRUCTION OR RECORDING

DWG NO. D-2.66

ROUTE	LOCATION
202L	RED MTN FWY, POWER ROAD - UNIVERSITY DRIVE

TRACS NO. H 5782 01C | 202-B(007)B | ___ OF ___

47227.2005 d:\17868\active\87-05-dwgs\04-drain\05782sdpall.dgn

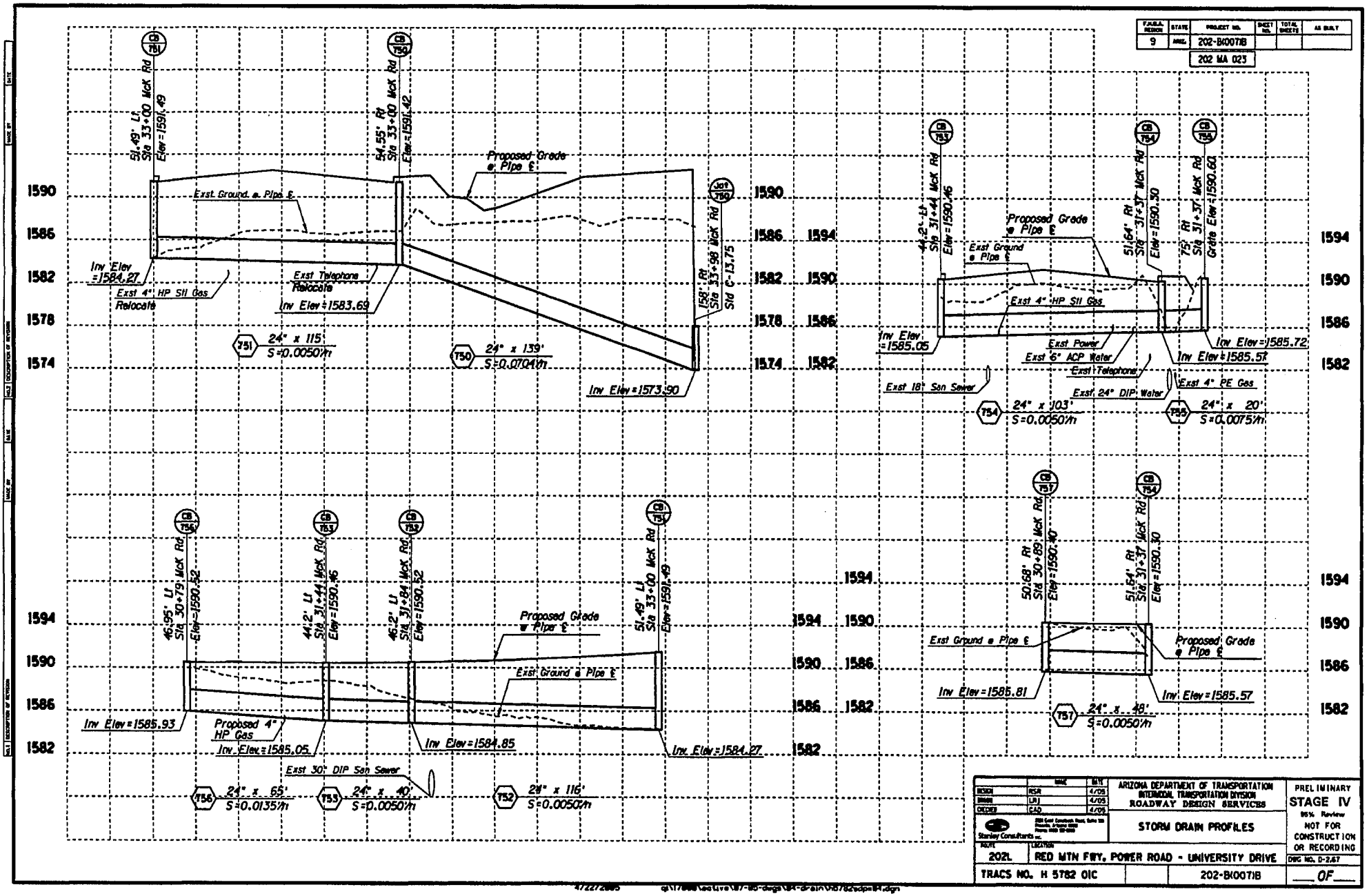

F.A.H.A. REGION	STATE	PROJECT NO.	SHEET NO.	TOTAL SHEETS	AS BUILT
9	ARIZ.	202-B(007)B			
		202 MA 023			

	NAME	DATE
DESIGN	RSR	4/05
DRAWN	LRJ	4/05
CHECKED	CAD	4/05

Stanley Consultants Inc.

ARIZONA DEPARTMENT OF TRANSPORTATION
INTERMODAL TRANSPORTATION DIVISION
ROADWAY DESIGN SERVICES

STORM DRAIN PROFILES

PRELIMINARY
STAGE IV
95% Review
NOT FOR CONSTRUCTION OR RECORDING

ROUTE	LOCATION
202L	RED MTN FWY, POWER ROAD - UNIVERSITY DRIVE

DWG NO. D-2.67

TRACS NO. H 5782 01C | 202-B(007)B | ___ OF ___

4/22/2005 q:\17888\active\87-00-design\84-drain\h5782sdp84.dgn

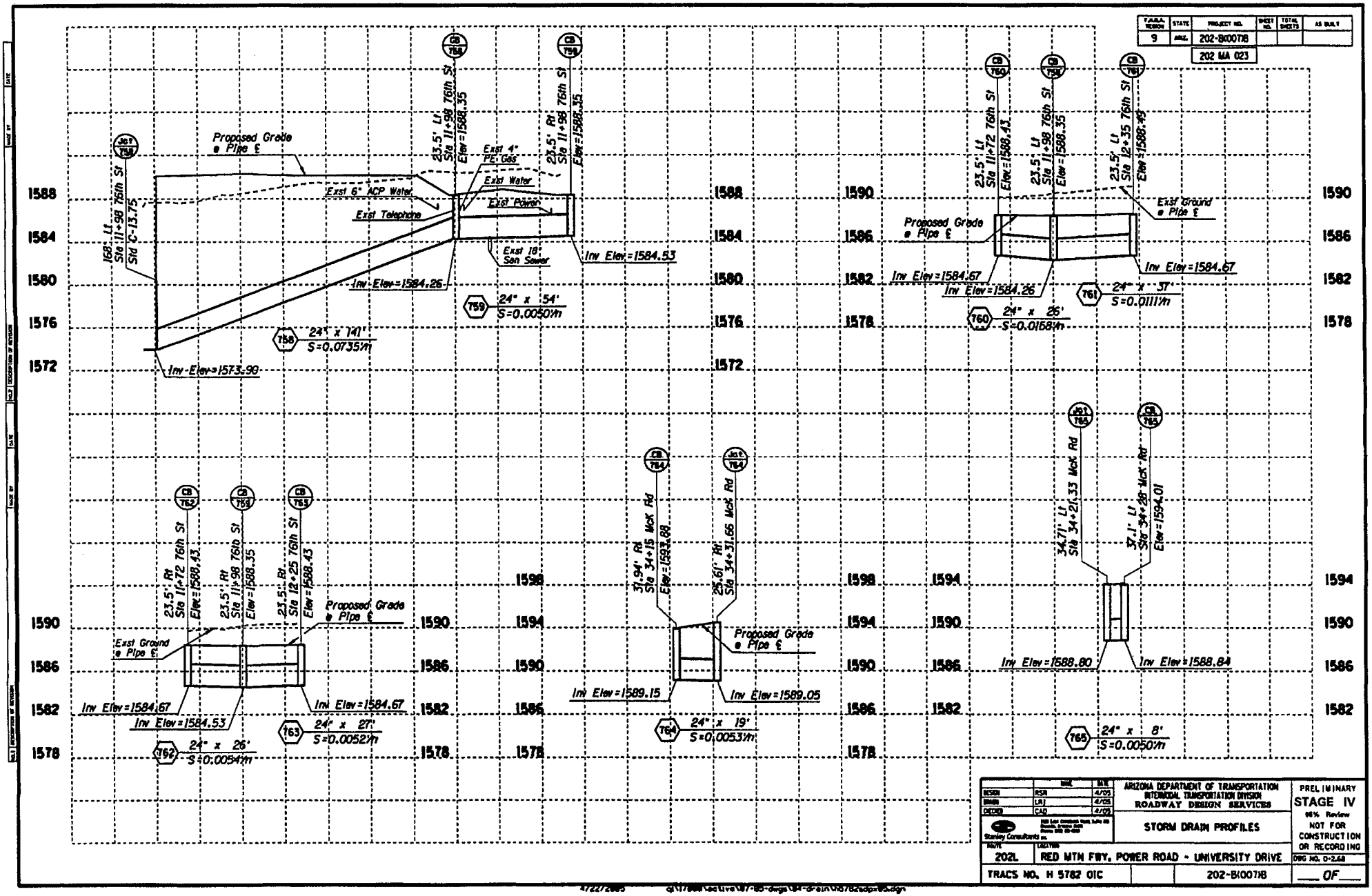

T.A.R.A. VERSION	STATE	PROJECT NO.	SHEET NO.	TOTAL SHEETS	AS BUILT
9	ARIZ.	202-B(007)R			

202 MA 023

	NAME	DATE
DESIGN	RSR	4/05
DRAWN	LAJ	4/05
CHECKED	CAD	4/05

Stanley Consultants Inc.

ARIZONA DEPARTMENT OF TRANSPORTATION
INTERMODAL TRANSPORTATION DIVISION
ROADWAY DESIGN SERVICES

STORM DRAIN PROFILES

PRELIMINARY
STAGE IV
95% Review
NOT FOR CONSTRUCTION OR RECORDING

DWG NO. D-2.68

ROUTE 202L	RED MTN FWY, POWER ROAD - UNIVERSITY DRIVE	
TRACS NO. H 5782 01C	202-B(007)R	OF

4/22/2005 q:\17888\active\87-85-dwgs\84-drain\h5782sdp-85.dgn

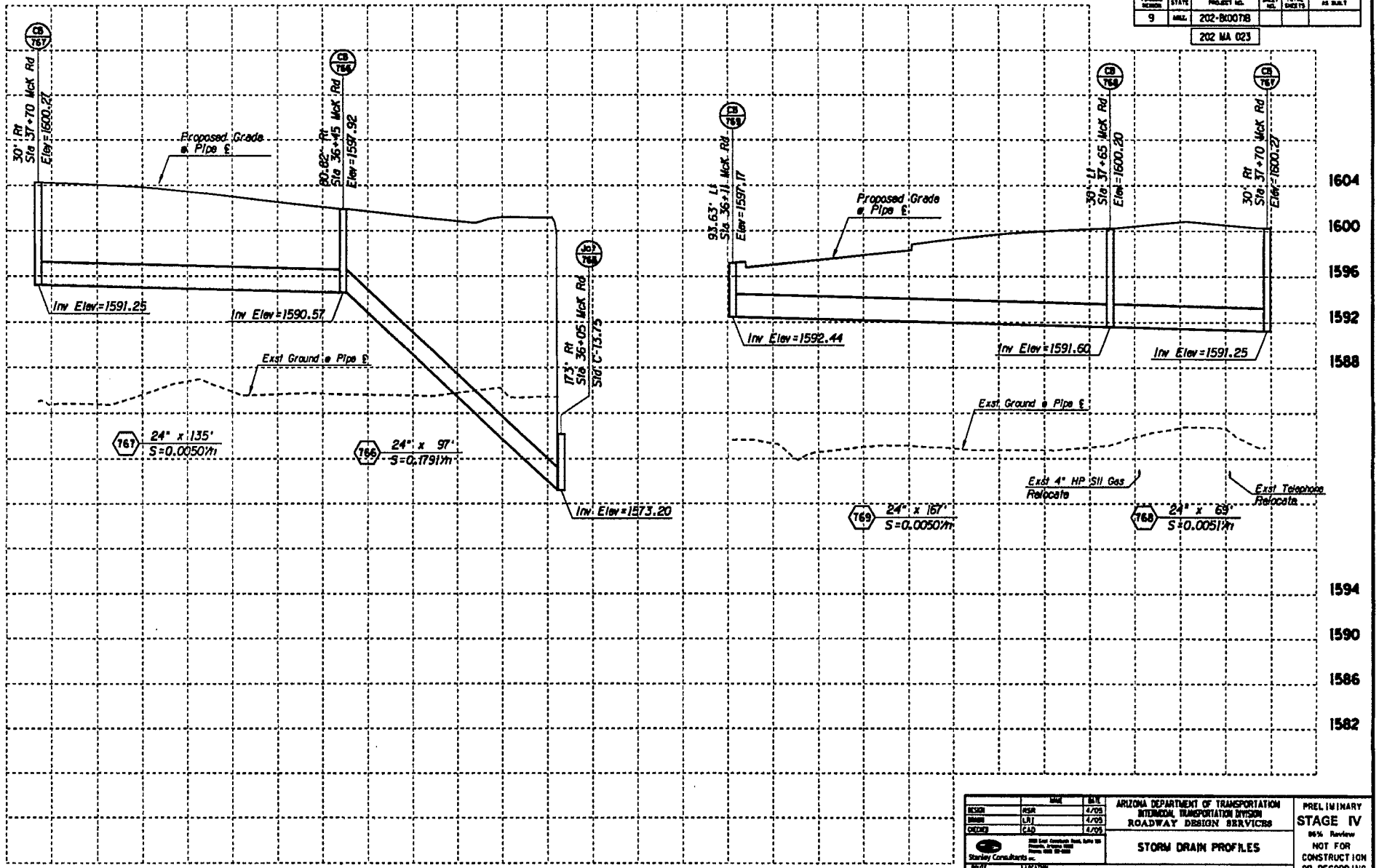

FEDERAL NUMBER	STATE	PROJECT NO.	SHEET NO.	TOTAL SHEETS	AS BUILT
9	ARIZ.	202-B(007)B			
		202 MA 023			

	NAME	DATE
DESIGN	RSR	4/05
DRAWN	LRJ	4/05
CHECKED	CAD	4/05

Stanley Consultants Inc.

ARIZONA DEPARTMENT OF TRANSPORTATION
INTERMODAL TRANSPORTATION DIVISION
ROADWAY DESIGN SERVICES

STORM DRAIN PROFILES

PRELIMINARY
STAGE IV
95% Review
NOT FOR CONSTRUCTION OR RECORDING

ROUTE	LOCATION
202L	RED MTN FWY, POWER ROAD - UNIVERSITY DRIVE

DWG NO. D-2.69

TRACS NO. H 5782 01C | 202-B(007)B | ___ OF ___

47227.2885 q:\17888\active\87-85-dsgn\84-drain\h5782sdpro01.dgn

FAP/A. REGION	STATE	PROJECT NO.	SHEET NO.	TOTAL SHEETS	AS BUILT
9	ARIZ.	202-B(007)R			
		202 MA 023			

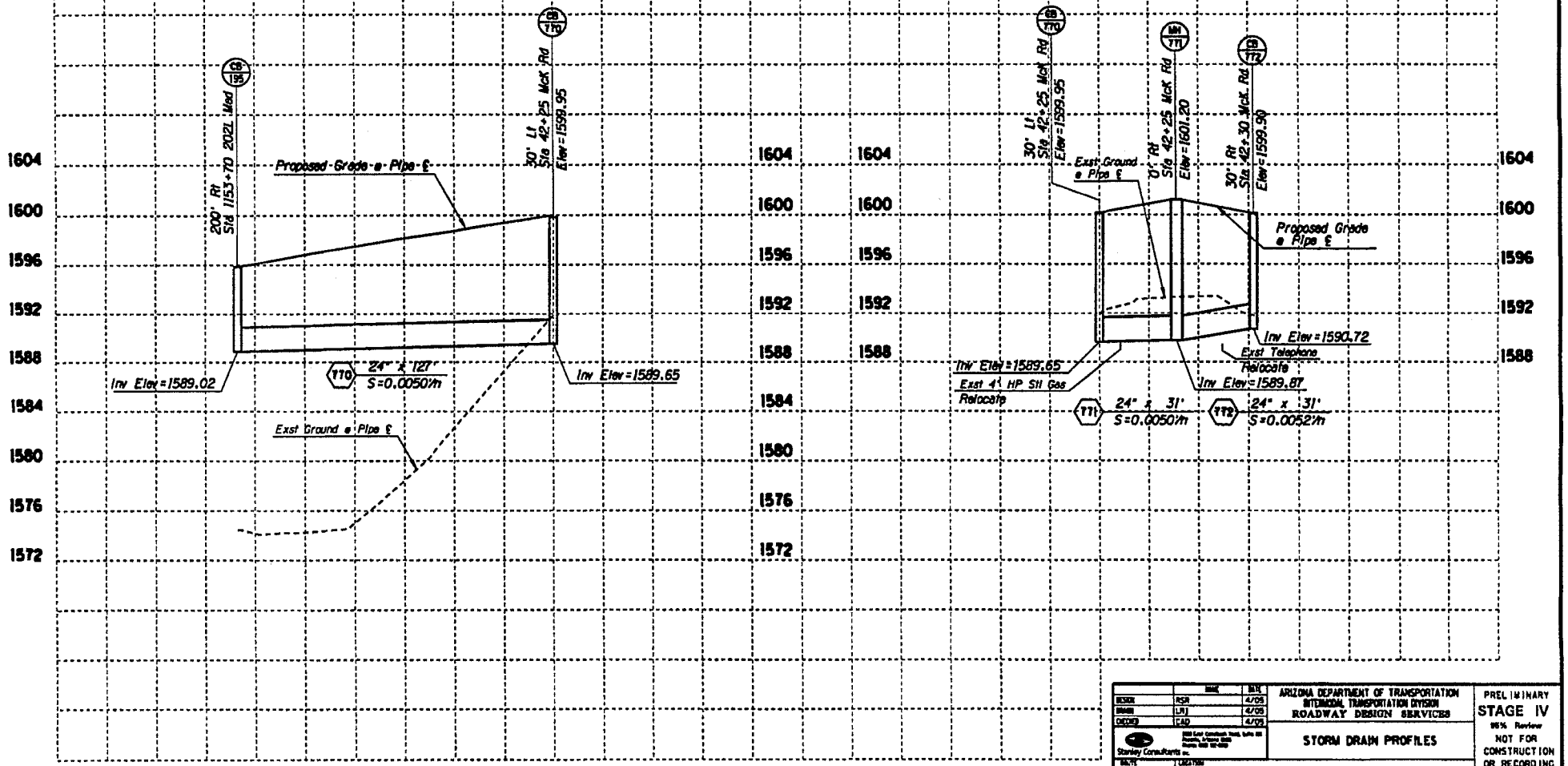

	NAME	DATE
DESIGN	RSR	4/09
DRAWN	LNJ	4/09
CHECKED	CAD	4/09

Stanley Consultants Inc.

ARIZONA DEPARTMENT OF TRANSPORTATION
INTERMODAL TRANSPORTATION DIVISION
ROADWAY DESIGN SERVICES

STORM DRAIN PROFILES

PRELIMINARY
STAGE IV
95% Review
NOT FOR CONSTRUCTION OR RECORDING

DATE	LOCATION	DWG NO. D-2.70
202L	RED MTN FWY, POWER ROAD - UNIVERSITY DRIVE	
TRACS NO. H 5782 01C		202-B(007)R ___ OF ___

4/22/2009 q:\17888\Lab Live\07-RD-dwgs\04-drain\h57821dps07.dgn

F.H.W.A. REGION	STATE	PROJECT NO.	SHEET NO.	TOTAL SHEETS	AS BUILT
9	ARIZ.	202-B(007)B			

202 MA 023

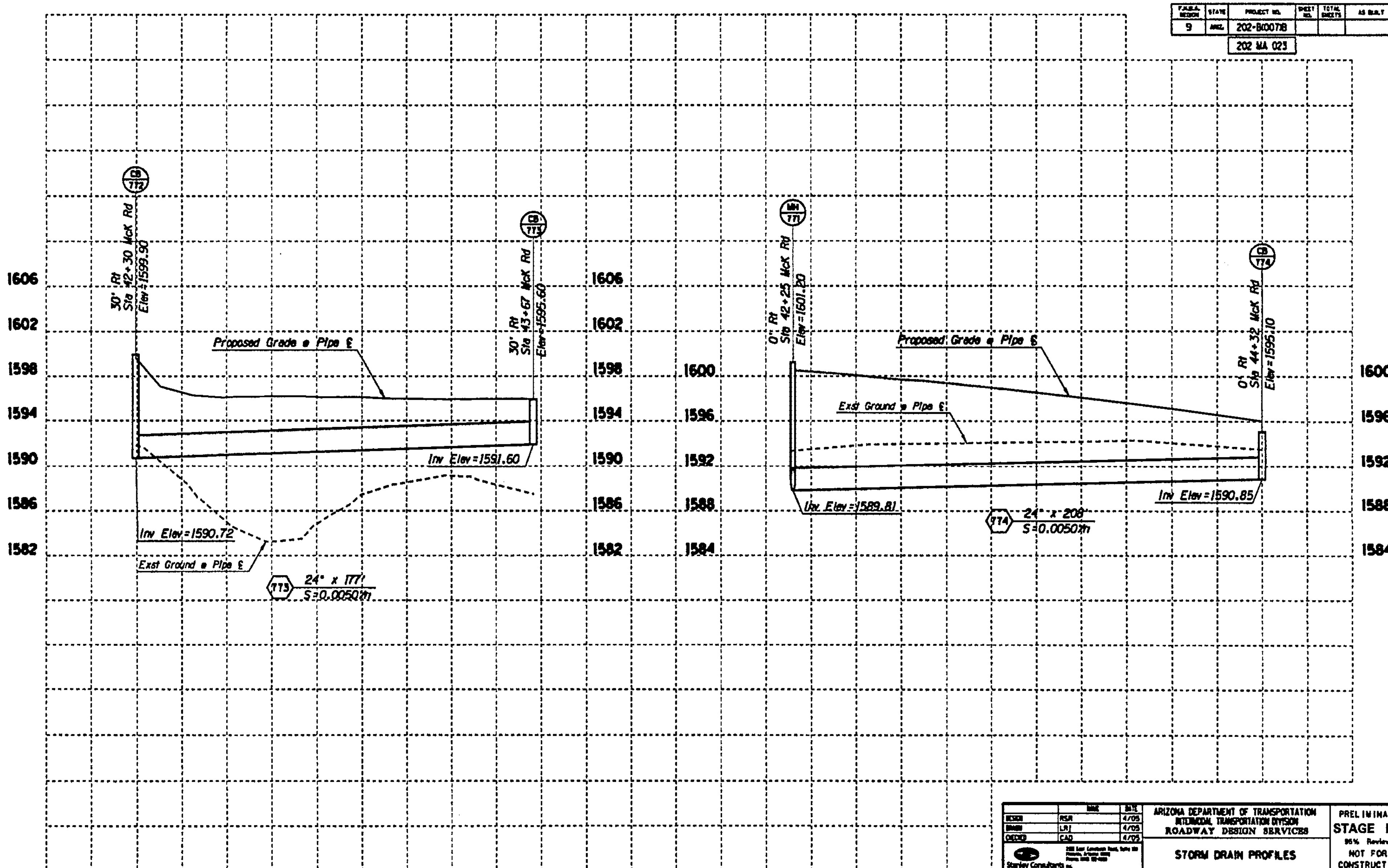

	NAME	DATE
DESIGN	RSR	4/05
DRAWN	LRJ	4/05
CHECKED	CAD	4/05

Stanley Consultants Inc.

ARIZONA DEPARTMENT OF TRANSPORTATION
INTERMODAL TRANSPORTATION DIVISION
ROADWAY DESIGN SERVICES

STORM DRAIN PROFILES

PRELIMINARY
STAGE IV
95% Review
NOT FOR CONSTRUCTION OR RECORDING

ROUTE: 202L — LOCATION: RED MTN FWY, POWER ROAD - UNIVERSITY DRIVE

DWG NO. D-2.71

TRACS NO. H 5782 01C | 202-B(007)B | ___ OF ___

4/22/2005

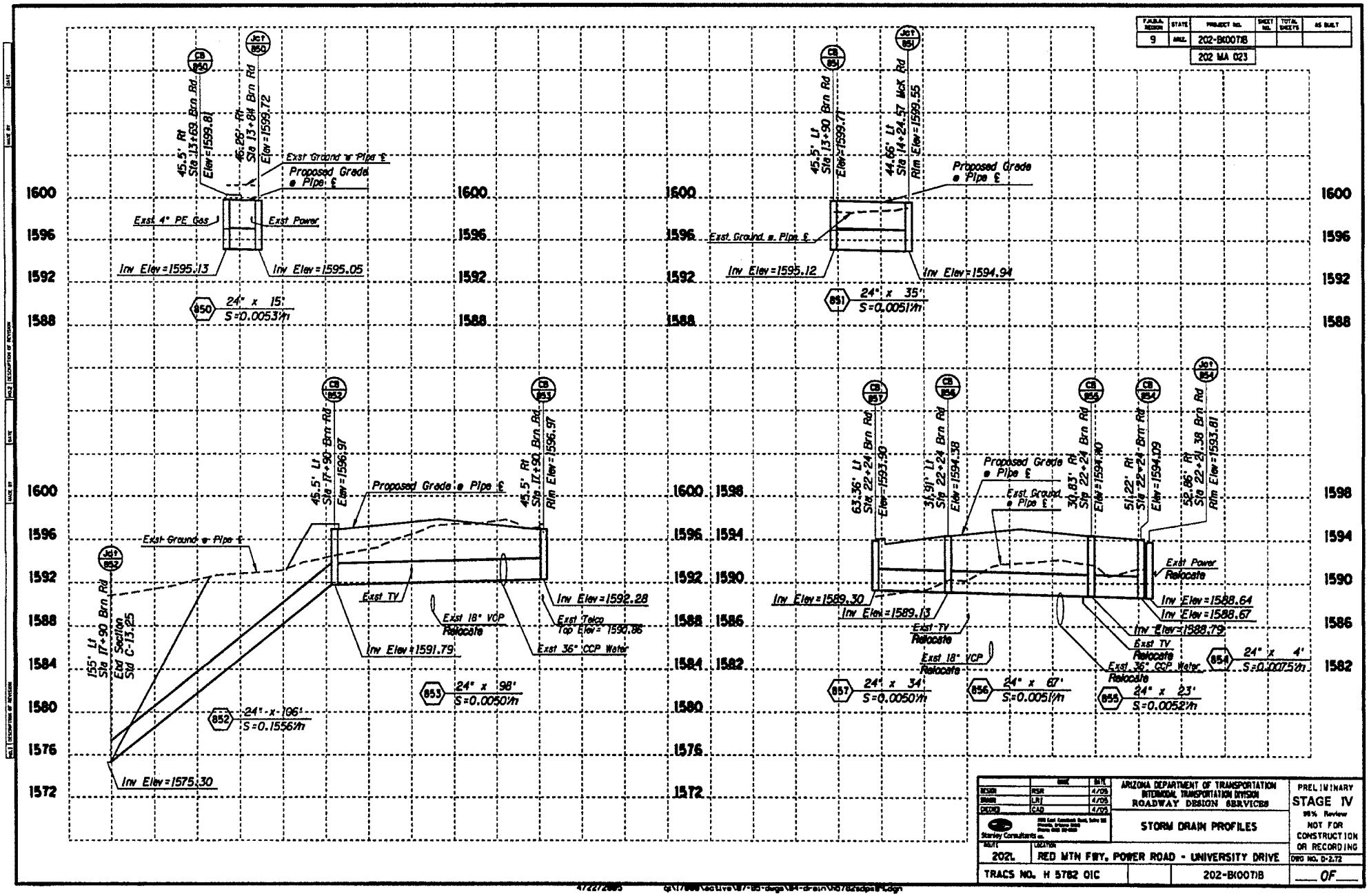

F.A.H.U. REGION	STATE	PROJECT NO.	SHEET NO.	TOTAL SHEETS	AS BUILT
9	ARIZ.	202-B(007)B			
		202 MA 023			

	NAME	INIT.
DESIGN	RSM	4/05
DRAWN	LRJ	4/05
CHECKED	CAD	4/05

Stanley Consultants Inc.

ARIZONA DEPARTMENT OF TRANSPORTATION
INTERMODAL TRANSPORTATION DIVISION
ROADWAY DESIGN SERVICES

STORM DRAIN PROFILES

PRELIMINARY
STAGE IV
95% Review
NOT FOR CONSTRUCTION OR RECORDING

DATE: 2021
LOCATION: RED MTN FWY, POWER ROAD - UNIVERSITY DRIVE
DRG NO. D-2.72

TRACS NO. H 5782 01C | 202-B(007)B | ___ OF ___

472272005 G:\17888\Active\87-05-design\04-drain\587dr02sht.dgn

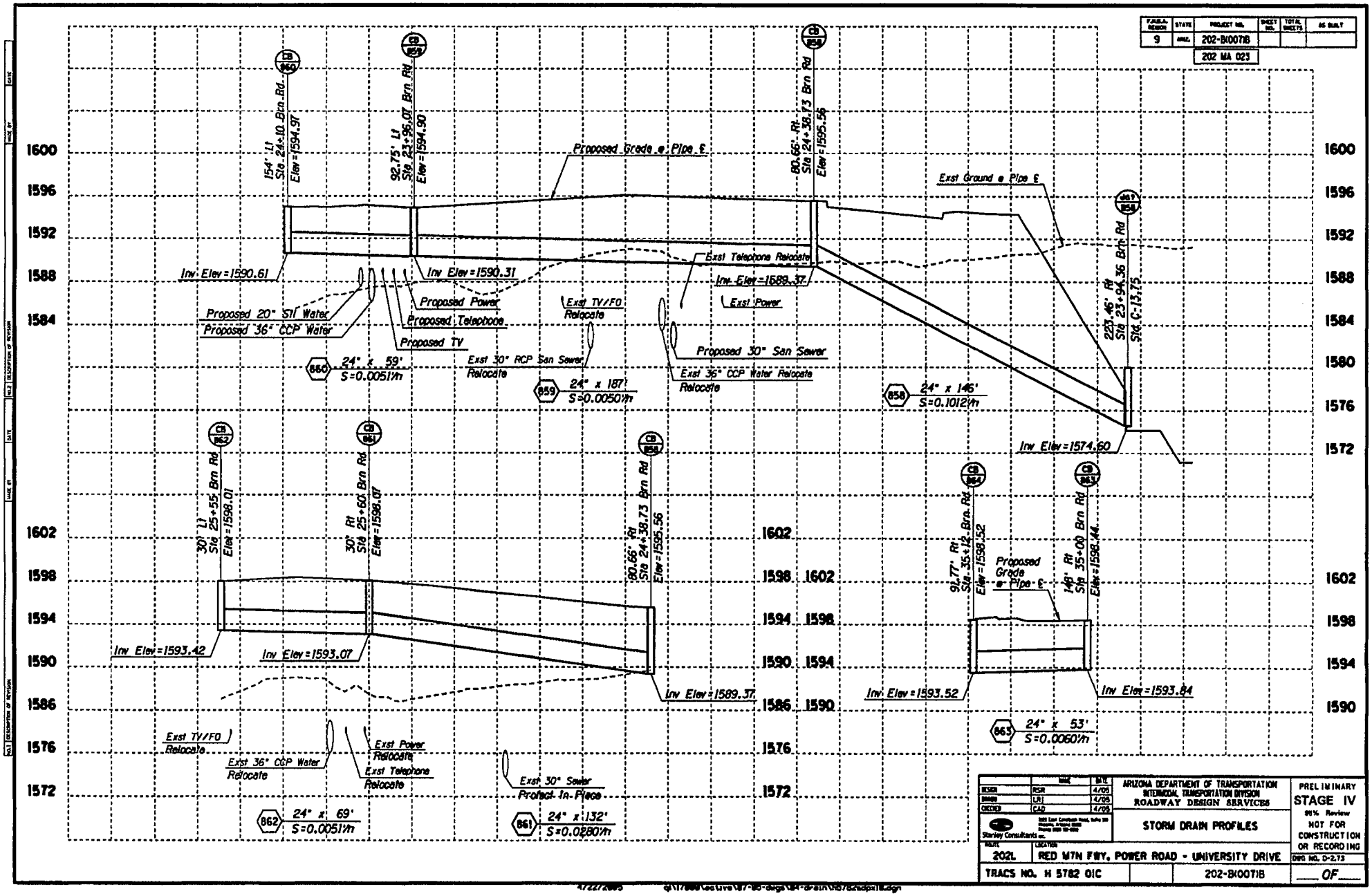

F.A.P.G.A. REGION	STATE	PROJECT NO.	SHEET NO.	TOTAL SHEETS	AS BUILT
9	ARIZ.	202-B(007)B			
		202 MA 023			

	NAME	DATE
DESIGN	RSR	4/09
DRAWN	LRJ	4/09
CHECKED	CAD	4/09

Stanley Consultants Inc.

ARIZONA DEPARTMENT OF TRANSPORTATION
INTERMODAL TRANSPORTATION DIVISION
ROADWAY DESIGN SERVICES

STORM DRAIN PROFILES

PRELIMINARY
STAGE IV
95% Review
NOT FOR CONSTRUCTION OR RECORDING

ROUTE	LOCATION	DWG NO. D-2.73
202L	RED MTN FWY, POWER ROAD - UNIVERSITY DRIVE	
TRACS NO. H 5782 01C		202-B(007)B

OF

4/22/2009 q:\17888\active\87-86-dwgs\84-drain\h5782sdpall.dgn

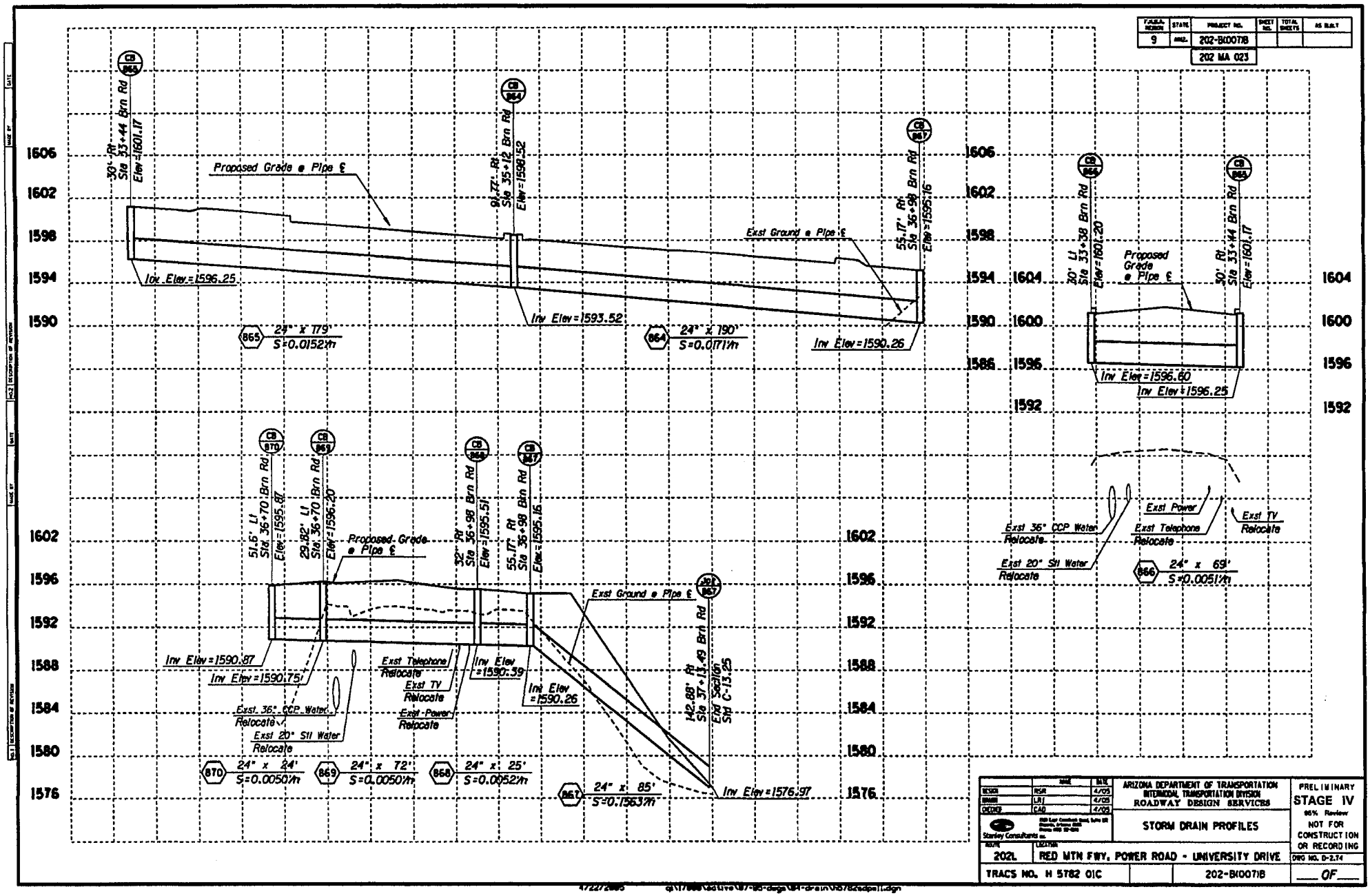

F.A.P.# REGION	STATE	PROJECT NO.	SHEET NO.	TOTAL SHEETS	AS BUILT
9	ARIZ.	202-B(007)I			
		202 MA 023			

	NAME	DATE
DESIGN	MSR	4/05
DRAWN	LRT	4/05
CHECKED	CAD	4/05

Stanley Consultants Inc.

ARIZONA DEPARTMENT OF TRANSPORTATION
INTERMODAL TRANSPORTATION DIVISION
ROADWAY DESIGN SERVICES

STORM DRAIN PROFILES

PRELIMINARY
STAGE IV
95% Review
NOT FOR CONSTRUCTION OR RECORDING

ROUTE: 202L
LOCATION: RED MTN FWY, POWER ROAD - UNIVERSITY DRIVE
DRG NO. D-2.74

TRACS NO. H 5782 01C | 202-B(007)I | ___ OF ___

472272885 c:\17888\active\87-85-design\84-drain\05782sdpp11.dgn

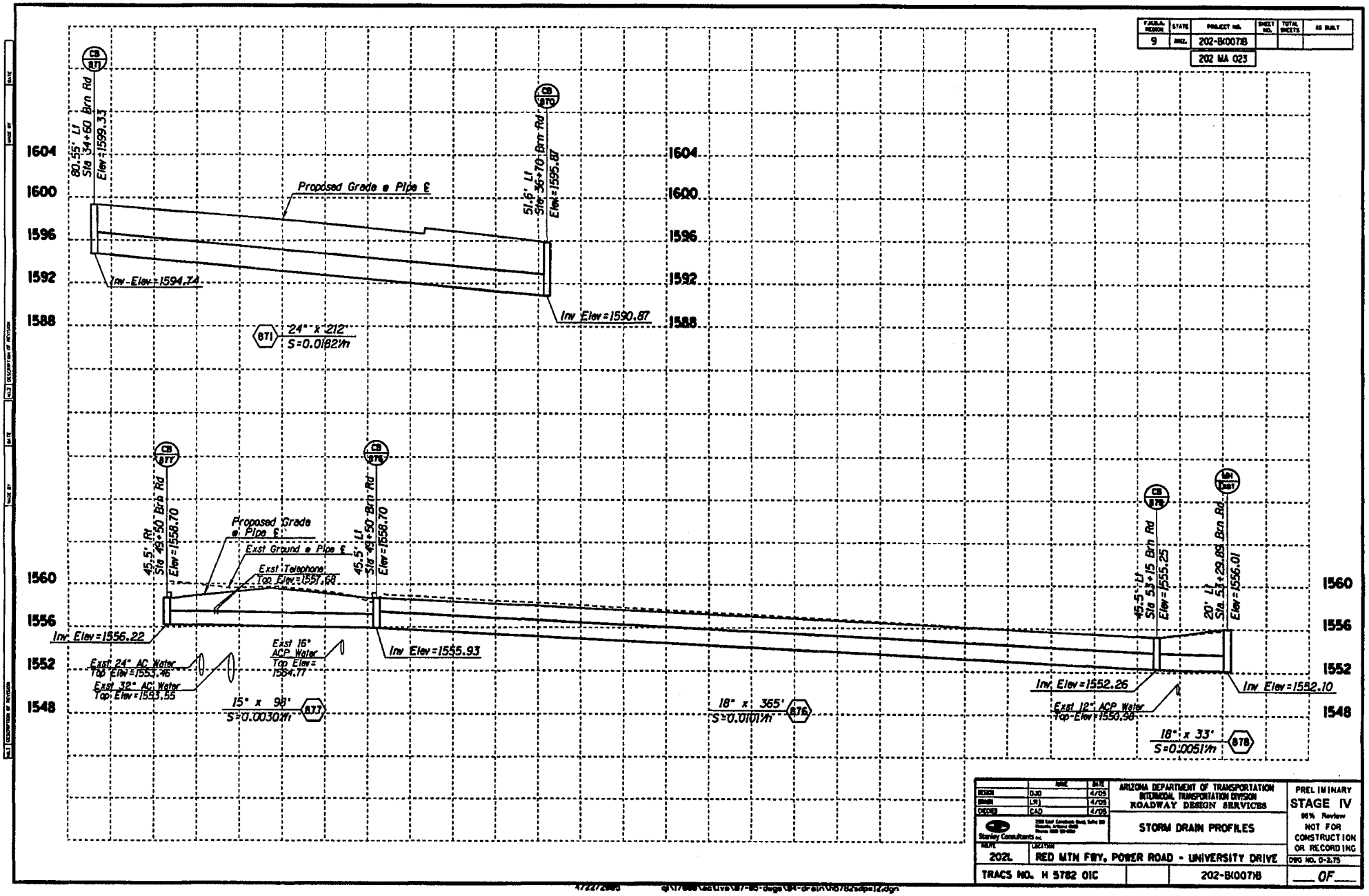

FAI/BLA REGION	STATE	PROJECT NO.	SHEET NO.	TOTAL SHEETS	AS BUILT
9	ARIZ.	202-B(007)I			
		202 MA 023			

	NAME	DATE
DESIGN	DJG	4/05
DRAWN	LRJ	4/05
CHECKED	CAD	4/05

Stanley Consultants Inc.

ARIZONA DEPARTMENT OF TRANSPORTATION
INTERMODAL TRANSPORTATION DIVISION
ROADWAY DESIGN SERVICES

STORM DRAIN PROFILES

PRELIMINARY
STAGE IV
90% Review
NOT FOR CONSTRUCTION OR RECORDING

ROUTE	LOCATION	DWG NO. 0-2.75
202L	RED MTN FWY, POWER ROAD - UNIVERSITY DRIVE	
TRACS NO. H 5782 01C		202-B(007)I

___ OF ___

FAP/FA REVISION	STATE	PROJECT NO.	SHEET NO.	TOTAL SHEETS	AS BUILT
9	ARIZ.	202-B(007)B			
		202 MA 023			

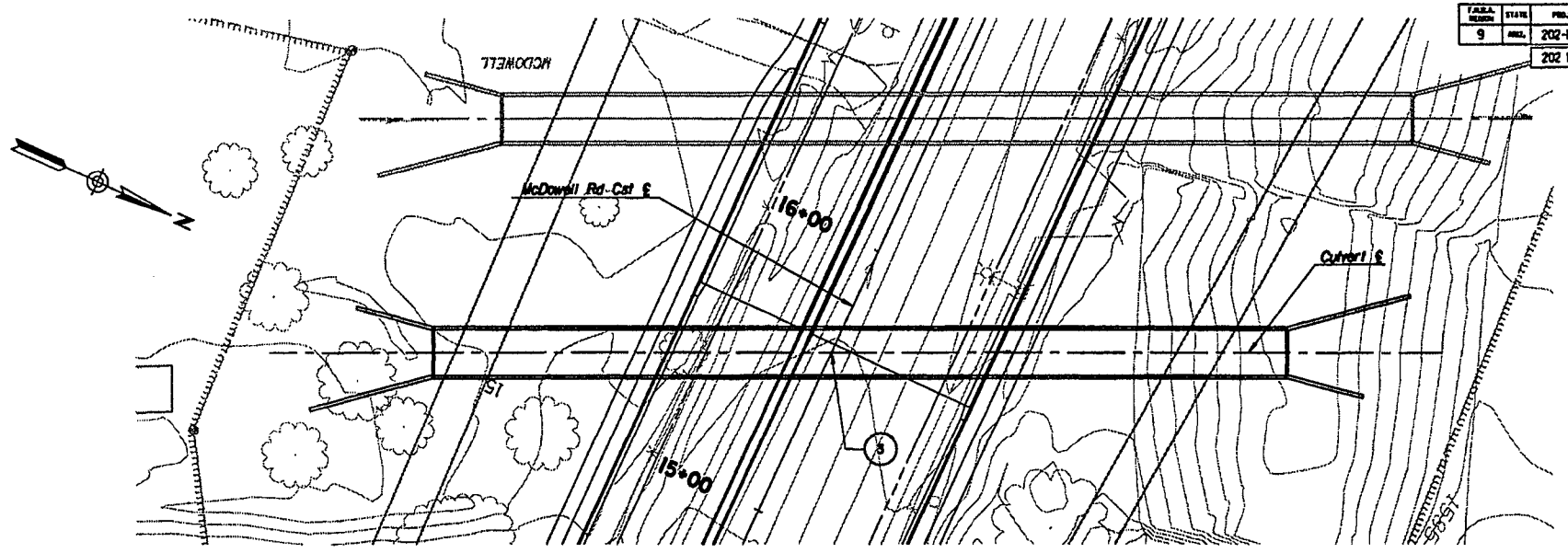

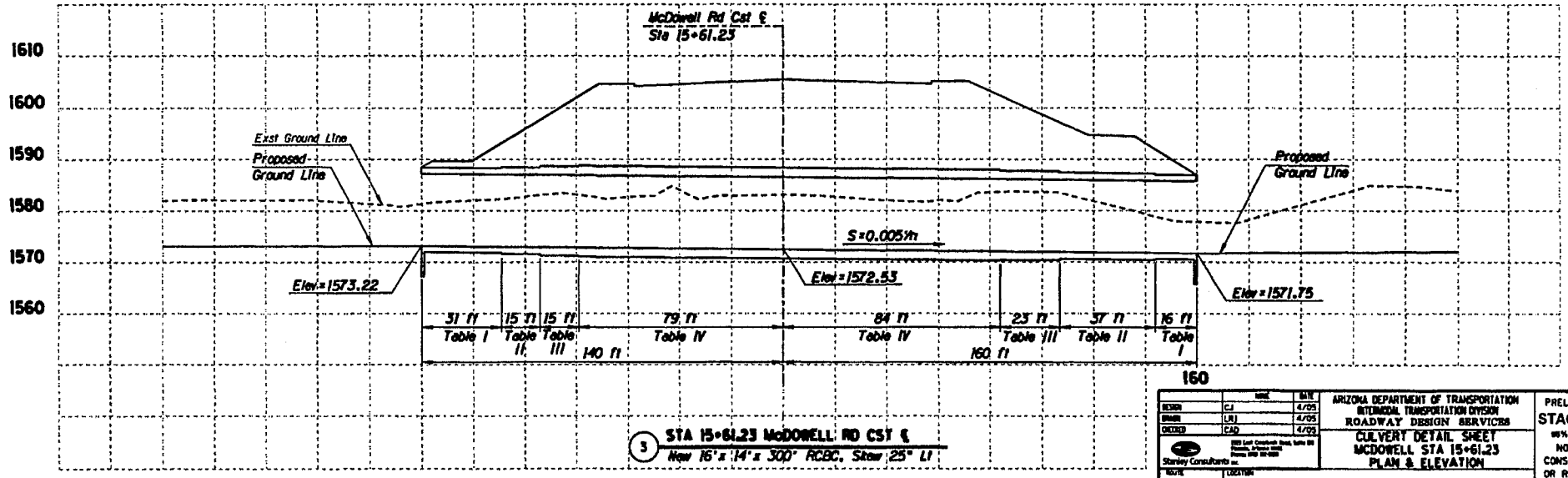

3 STA 15+61.23 McDONNELL RD CST ℄
New 16'x 14'x 300' RCBC, Skew 25° LT

	NAME	DATE
DESIGN	CJ	4/05
DRAWN	LRJ	4/05
CHECKED	CAD	4/05

Stanley Consultants Inc.

ARIZONA DEPARTMENT OF TRANSPORTATION
INTERMODAL TRANSPORTATION DIVISION
ROADWAY DESIGN SERVICES

CULVERT DETAIL SHEET
McDOWELL STA 15+61.23
PLAN & ELEVATION

PRELIMINARY
STAGE IV
95% Review
NOT FOR CONSTRUCTION OR RECORDING

DISTRICT	LOCATION	DWG NO. D-5.1
202L	RED MTN FWY, POWER ROAD - UNIVERSITY DRIVE	
TRACS NO. H 5782 01C		202-B(007)B

OF

F.H.W.A. REGION	STATE	PROJECT NO.	SHEET NO.	TOTAL SHEETS	AS BUILT
9	ARIZ.	202-B(007)B			

202 MA 023

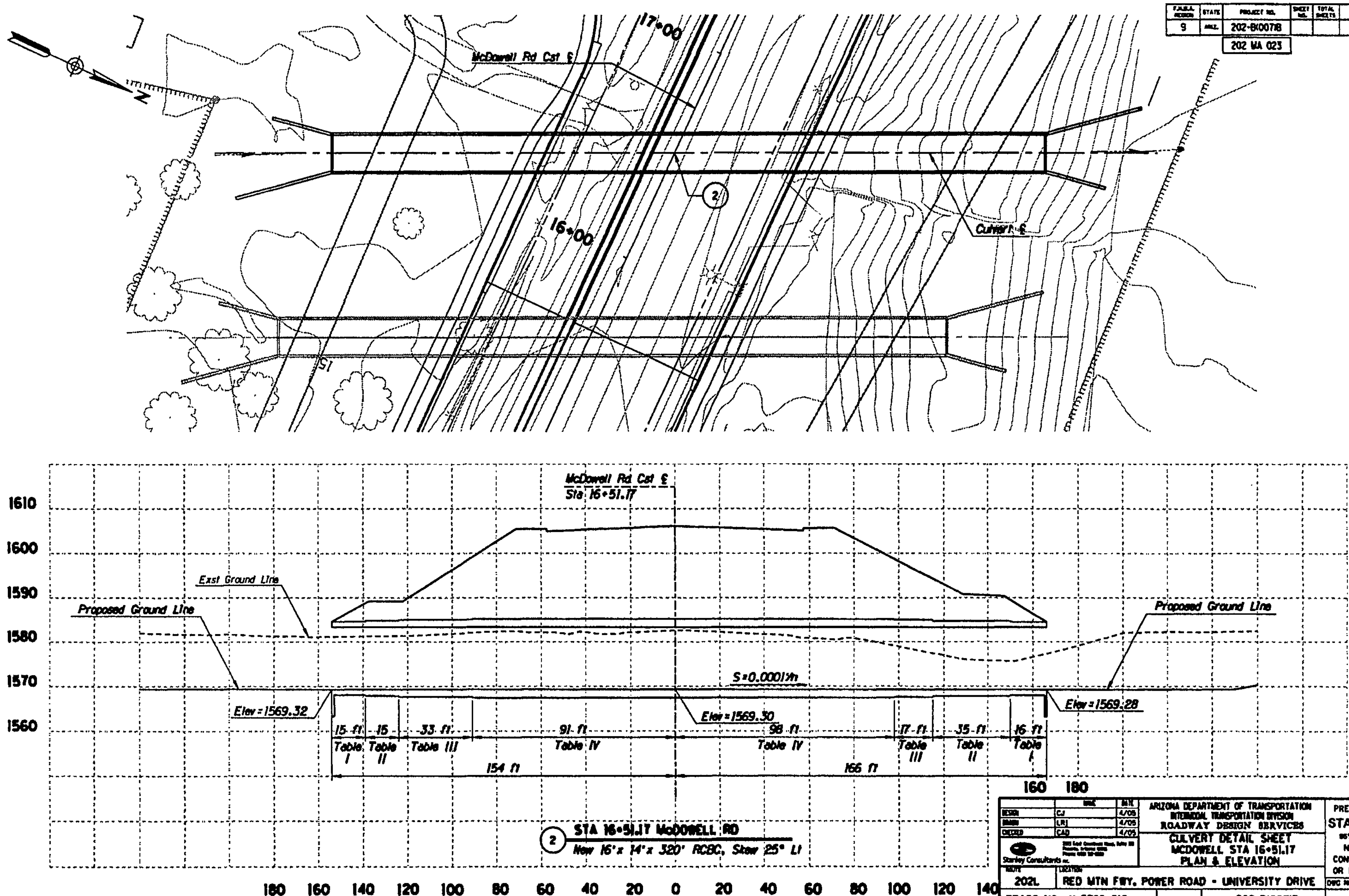

	NAME	DATE
DESIGN	CJ	4/05
DRAWN	LRJ	4/05
CHECKED	CAD	4/05

Stanley Consultants INC.

ARIZONA DEPARTMENT OF TRANSPORTATION
INTERMODAL TRANSPORTATION DIVISION
ROADWAY DESIGN SERVICES

CULVERT DETAIL SHEET
MCDOWELL STA 16+51.17
PLAN & ELEVATION

PRELIMINARY
STAGE IV
95% Review
NOT FOR CONSTRUCTION OR RECORDING

ROUTE: 202L | LOCATION: RED MTN FWY, POWER ROAD - UNIVERSITY DRIVE | DWG NO. D-3.2

TRACS NO. H 5782 01C | 202-B(007)B | ____ OF ____

4/22/2005

F.H.W.A. REGION	STATE	PROJECT NO.	SHEET NO.	TOTAL SHEETS	AS BUILT
9	ARIZ.	202-B(007)B			
		202 MA 023			

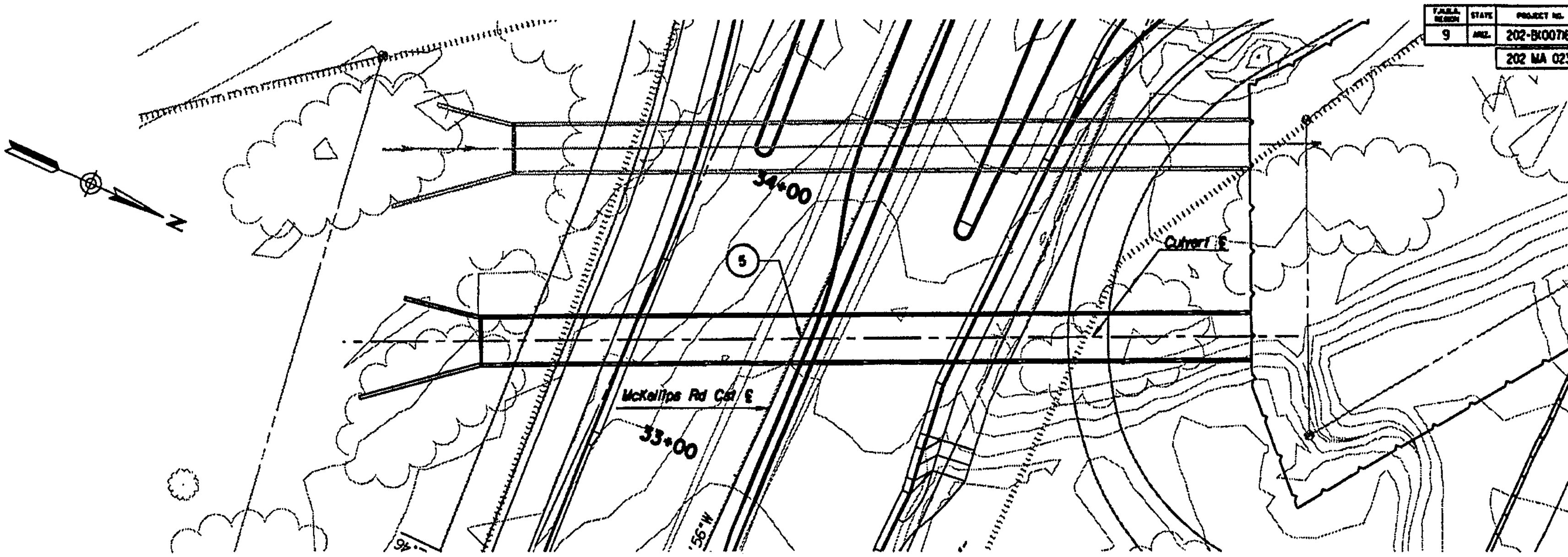

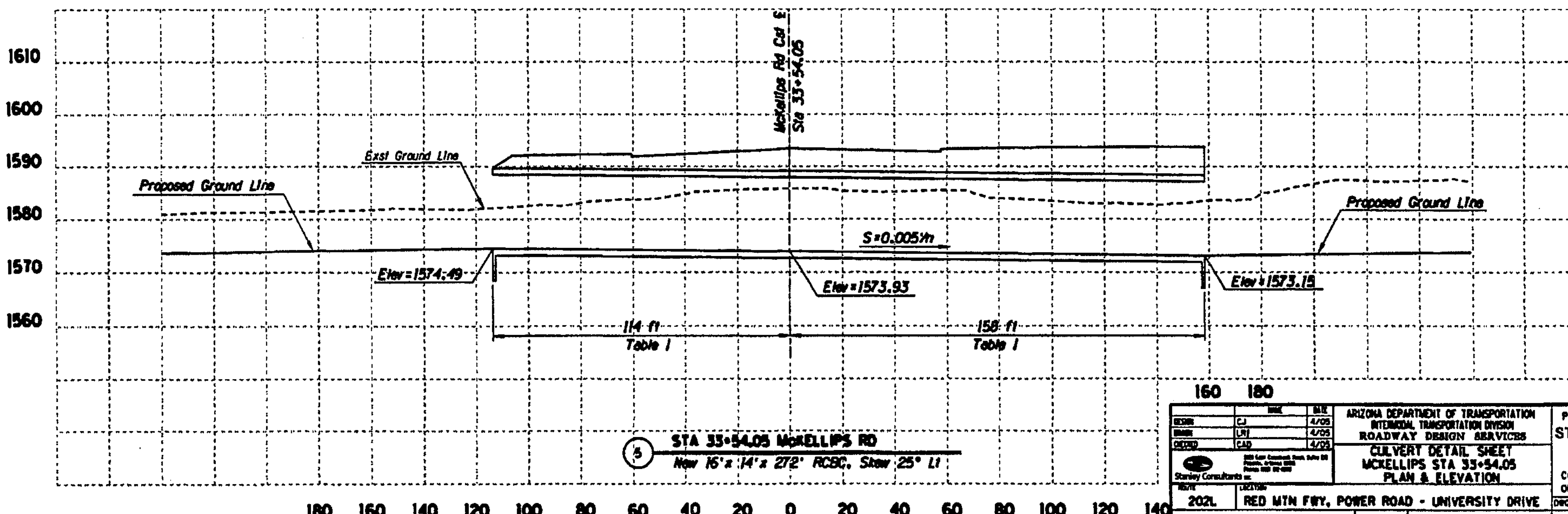

(5) STA 33+54.05 McKELLIPS RD
New 16' x 14' x 272' RCBC, Skew 25° Lt

	NAME	DATE
DESIGN	CJ	4/05
DRAWN	LRJ	4/05
CHECKED	CAD	4/05

Stanley Consultants

ARIZONA DEPARTMENT OF TRANSPORTATION
INTERMODAL TRANSPORTATION DIVISION
ROADWAY DESIGN SERVICES

CULVERT DETAIL SHEET
McKELLIPS STA 33+54.05
PLAN & ELEVATION

PRELIMINARY
STAGE IV
95% Review
NOT FOR CONSTRUCTION OR RECORDING

ROUTE: 202L | LOCATION: RED MTN FWY, POWER ROAD - UNIVERSITY DRIVE | DWG NO. D-3.3

TRACS NO. H 5782 01C | 202-B(007)B | ____ OF ____

4/22/2005

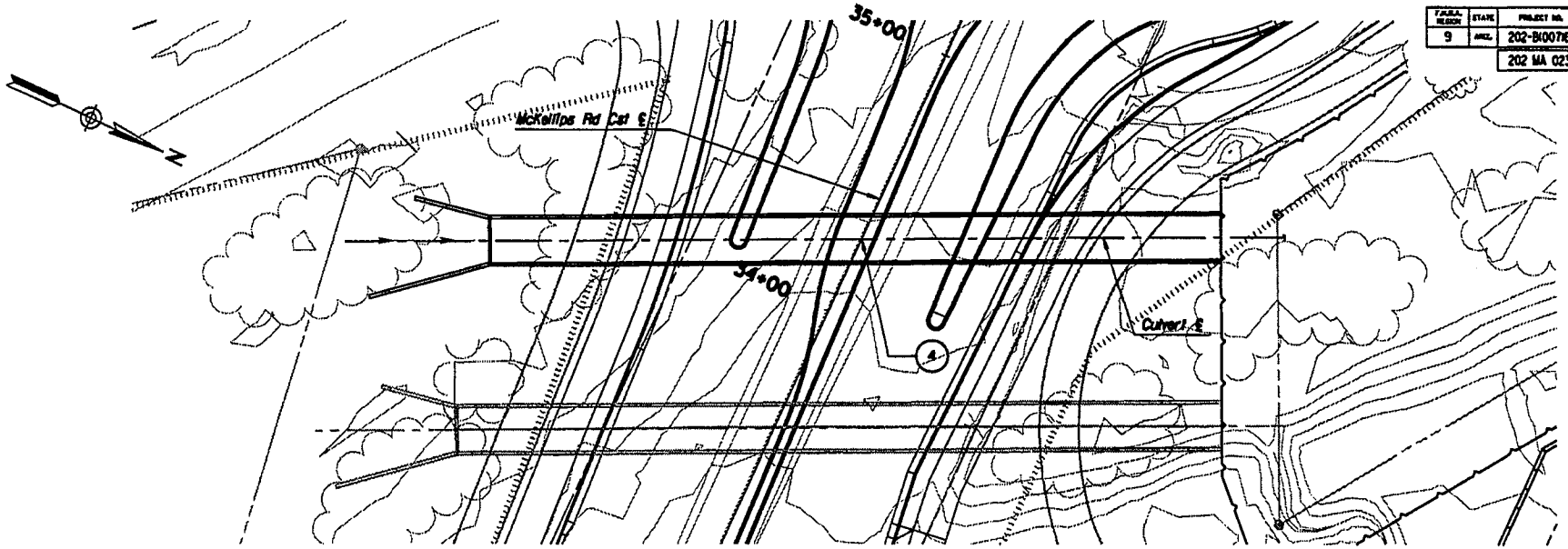

FAP/ALA REGION	STATE	PROJECT NO.	SHEET NO.	TOTAL SHEETS	AS BUILT
9	ARIZ.	202-B(007)I			
		202 MA 023			

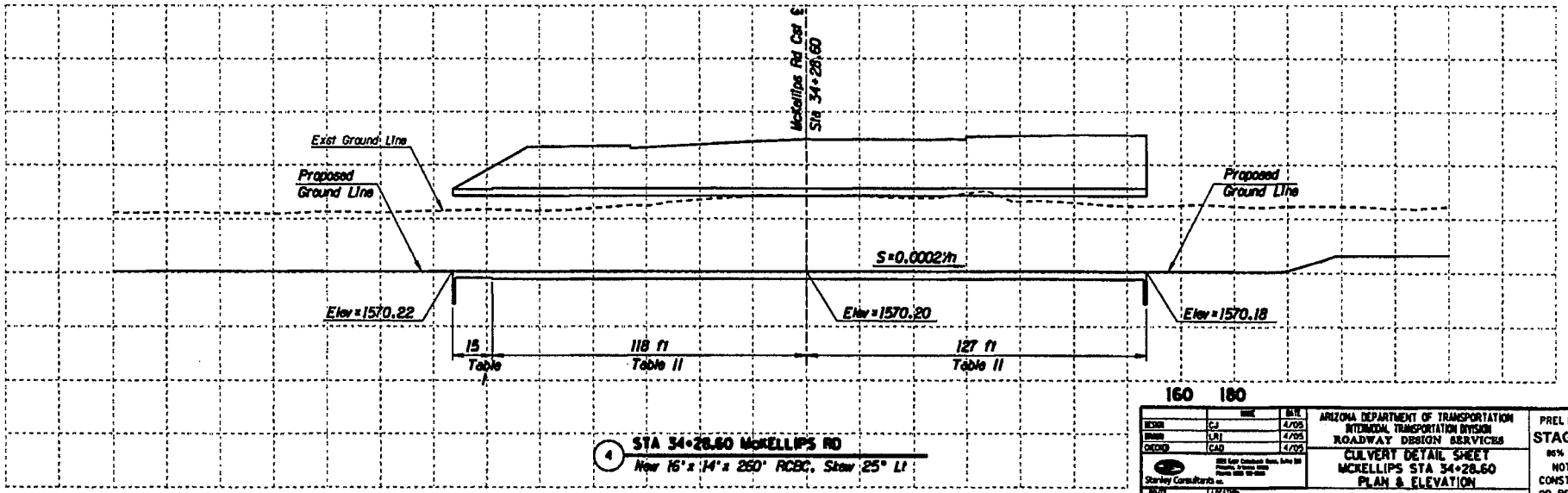

	NAME	DATE
DESIGN	CJ	4/05
DRAWN	LRJ	4/05
CHECKED	CAD	4/05

Stanley Consultants Inc.

ARIZONA DEPARTMENT OF TRANSPORTATION
INTERMODAL TRANSPORTATION DIVISION
ROADWAY DESIGN SERVICES

CULVERT DETAIL SHEET
McKELLIPS STA 34+28.60
PLAN & ELEVATION

PRELIMINARY
STAGE IV
95% Review
NOT FOR CONSTRUCTION OR RECORDING

ROUTE	LOCATION	DWG NO. D-3.4
202L	RED MTN FWY, POWER ROAD - UNIVERSITY DRIVE	
TRACS NO. H 5782 01C		202-B(007)I

___ OF ___

4/22/2005 q:\17888\cadd\civil\07-80-dwgs\04-drain\h5782d01e04.dgn

F.A.P. NO.	STATE	PROJECT NO.	SHEET NO.	TOTAL SHEETS	AS BUILT
9	ARIZ.	202-B(007)I			
		202 MA 023			

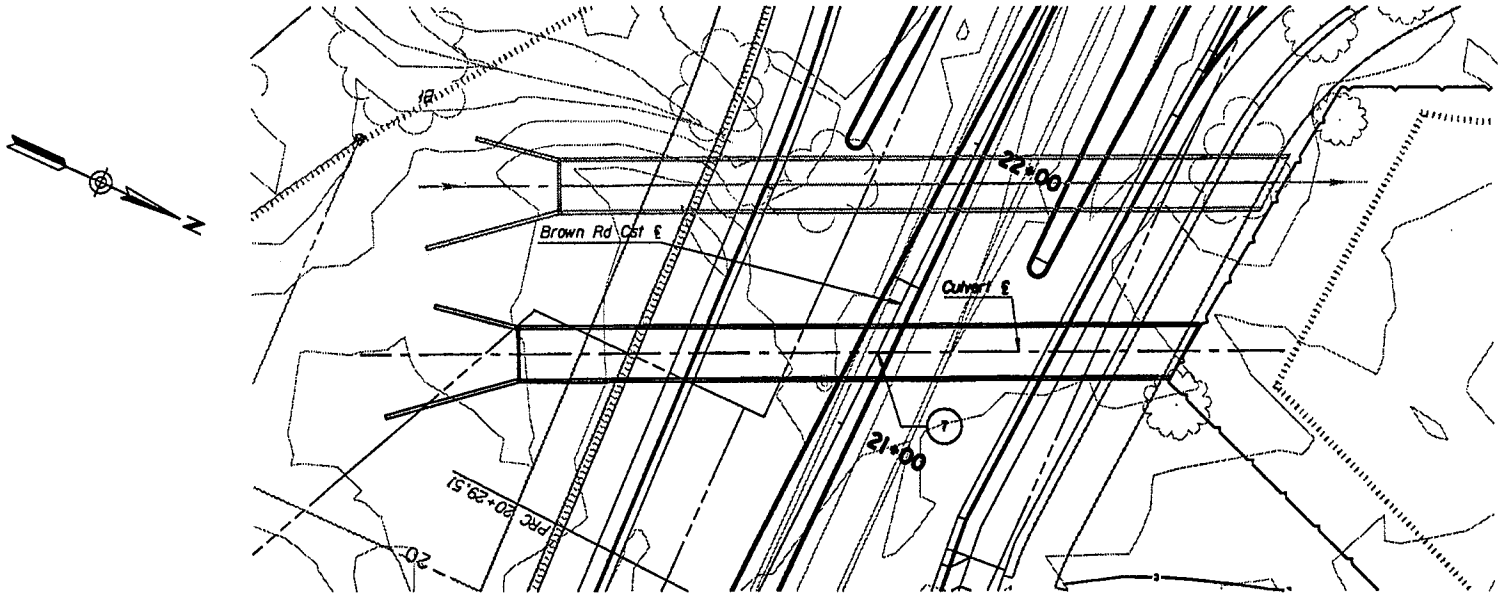

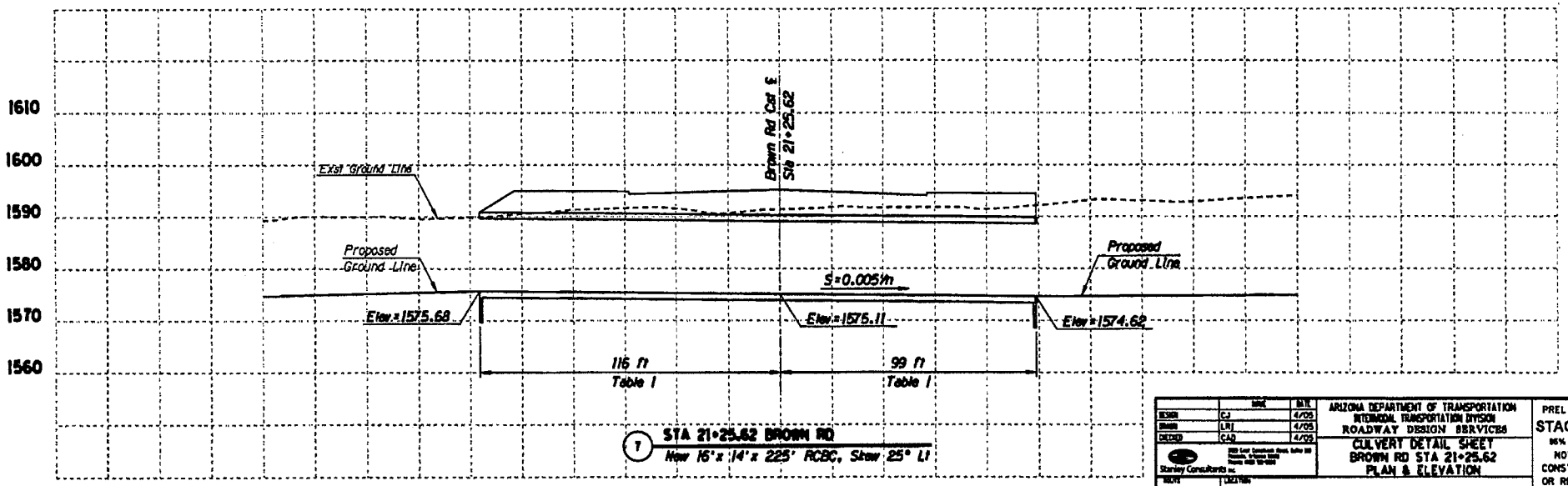

(7) STA 21+25.62 BROWN RD
New 15'x 14'x 225' RCBC, Skew 25° LT

	NAME	DATE
DESIGN	CJ	4/05
DRAWN	LRJ	4/05
CHECKED	CAD	4/05

Stanley Consultants Inc.

ARIZONA DEPARTMENT OF TRANSPORTATION
INTERMODAL TRANSPORTATION DIVISION
ROADWAY DESIGN SERVICES

CULVERT DETAIL SHEET
BROWN RD STA 21+25.62
PLAN & ELEVATION

PRELIMINARY
STAGE IV
95% Review
NOT FOR CONSTRUCTION OR RECORDING

ROUTE	LOCATION
202L	RED MTN FWY, POWER ROAD - UNIVERSITY DRIVE

DRG NO. D-3.5

TRACS NO. H 5782 01C | 202-B(007)I | ___ OF ___

4/22/2005 q:\17888\cad\civil\87-90-dwgs\84-draln\h5782d01.dgn

FAI/AA REGION	STATE	PROJECT NO.	SHEET NO.	TOTAL SHEETS	AS BUILT
9	ARIZ.	202-B(007)B			
		202 MA 023			

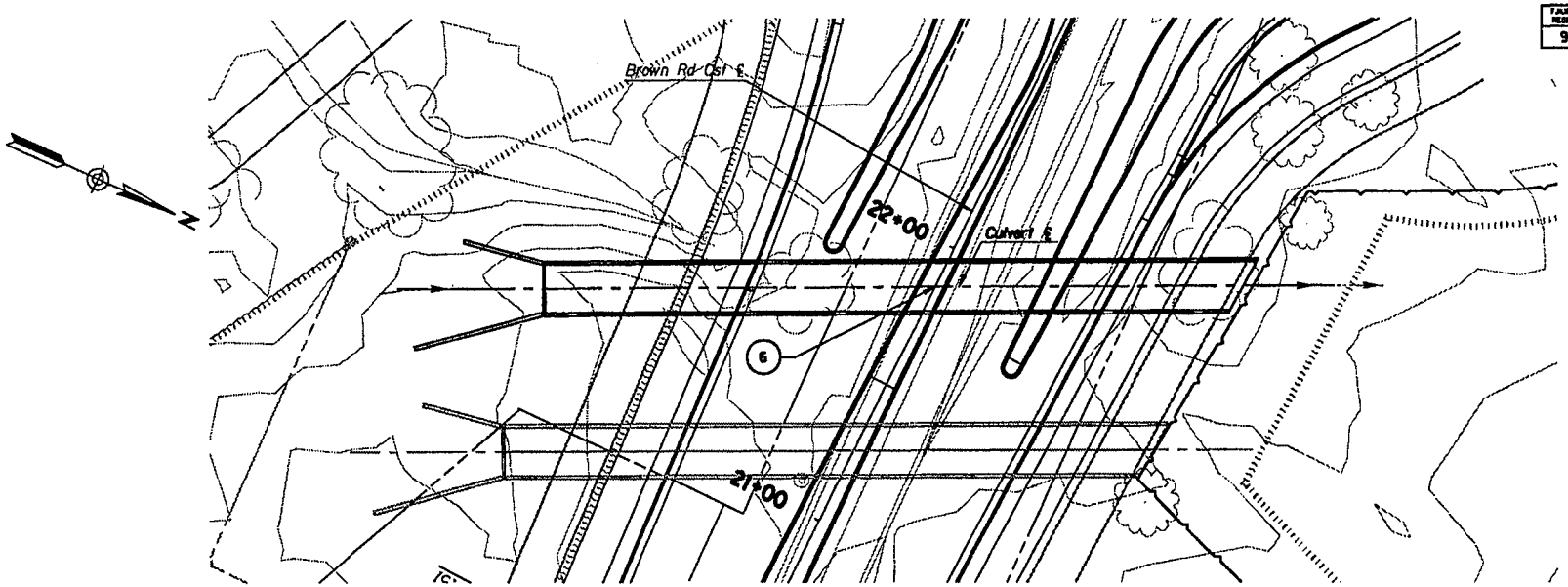

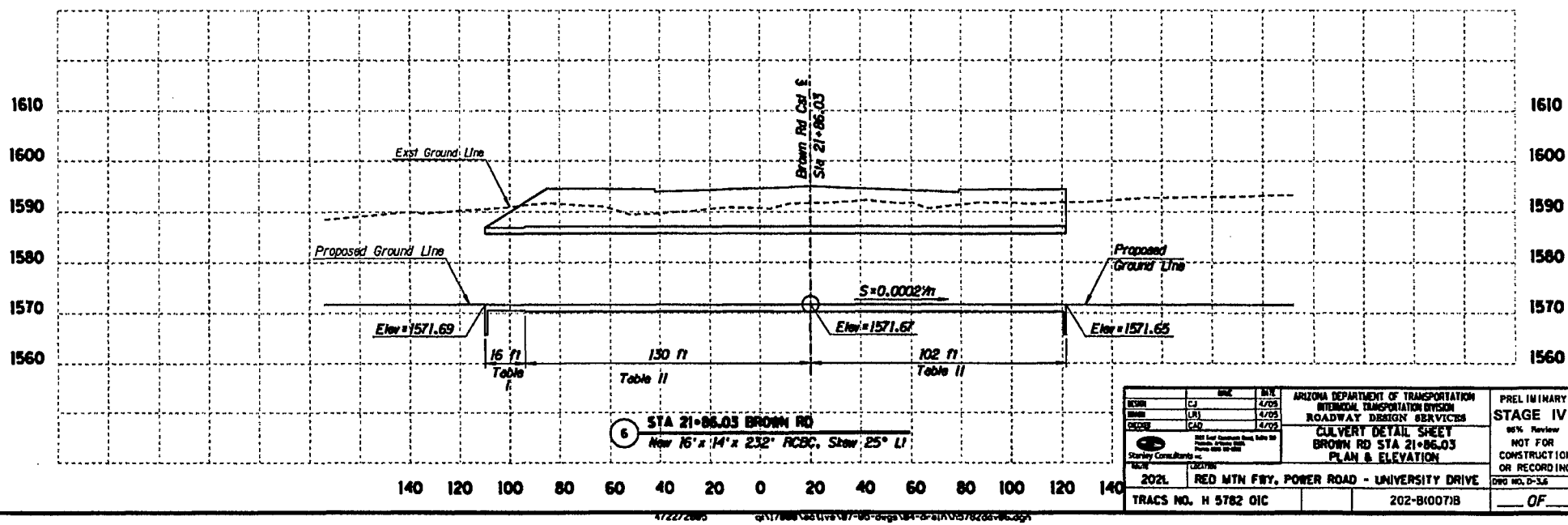

	BY	DATE
DESIGN	CJ	4/05
DRAWN	LRJ	4/05
CHECKED	CAD	4/05

Stanley Consultants Inc.

ARIZONA DEPARTMENT OF TRANSPORTATION
INTERMODAL TRANSPORTATION DIVISION
ROADWAY DESIGN SERVICES

CULVERT DETAIL SHEET
BROWN RD STA 21+86.03
PLAN & ELEVATION

PRELIMINARY
STAGE IV
95% Review
NOT FOR CONSTRUCTION OR RECORDING

ROUTE	LOCATION
202L	RED MTN FWY, POWER ROAD - UNIVERSITY DRIVE

DWG NO. D-3.6

TRACS NO. H 5782 01C | 202-B(007)B | ___ OF ___

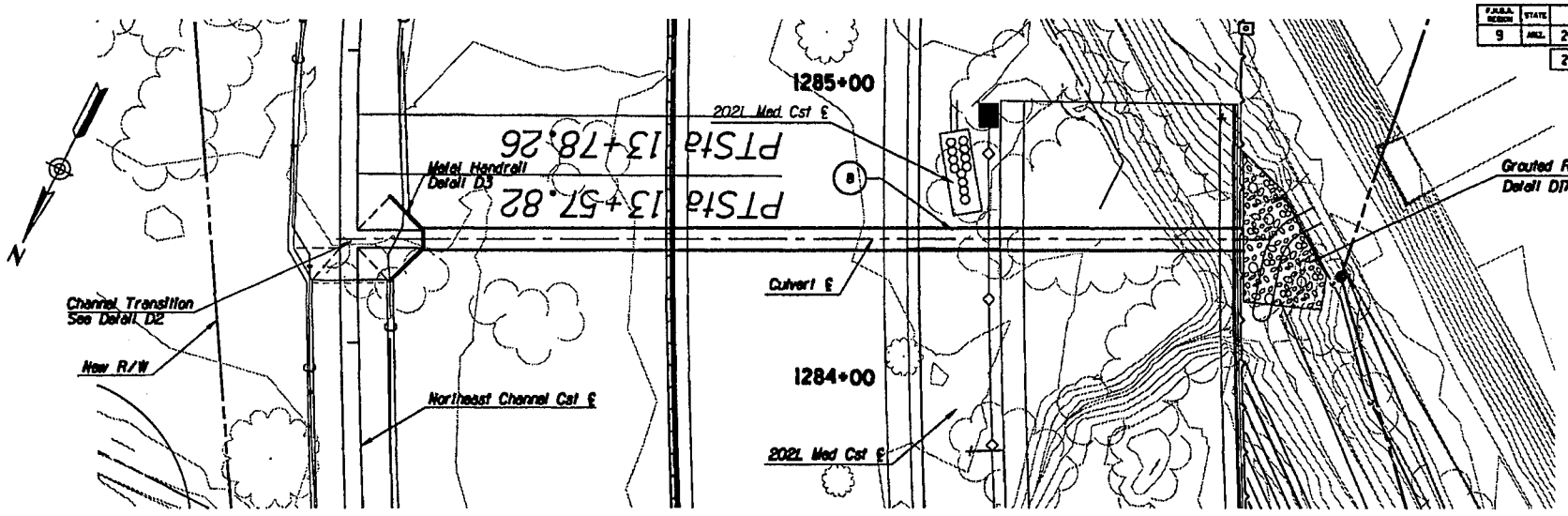

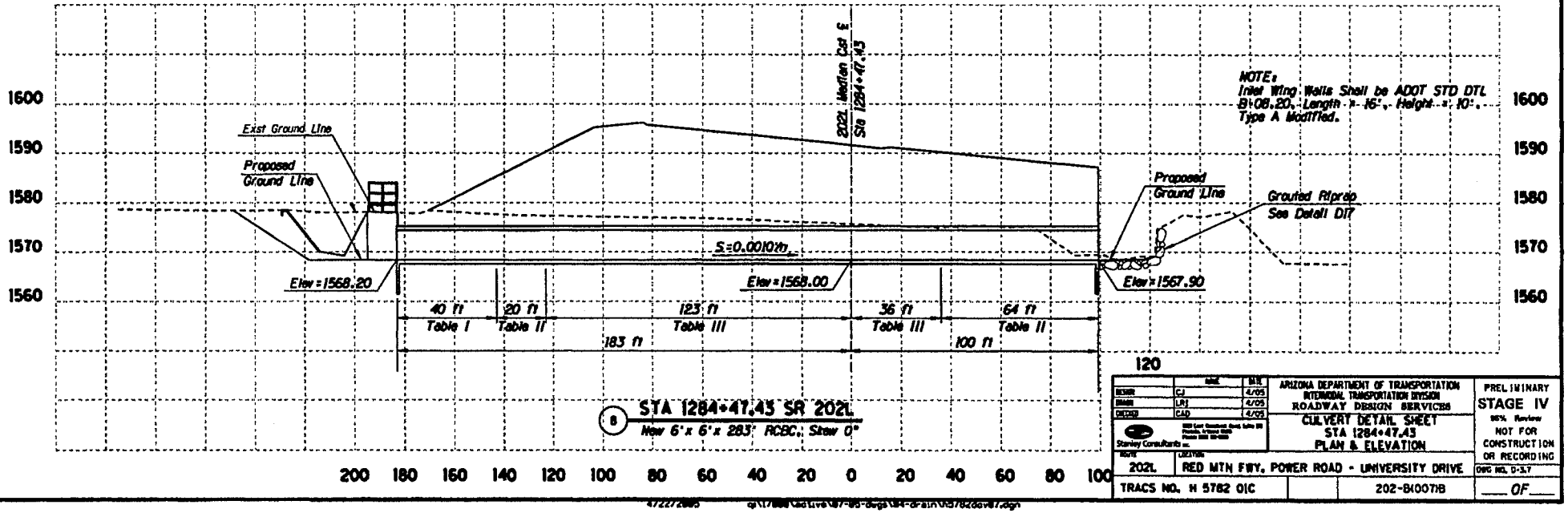

NOTE:
Inlet Wing Walls Shall be ADOT STD DTL B-08.20, Length = 16', Height = 10', Type A Modified.

STA 1284+47.43 SR 202L
New 6'x 6'x 283' RCBC, Skew 0°

F.A.P.A. REGION	STATE	PROJECT NO.	SHEET NO.	TOTAL SHEETS	AS BUILT
9	ARIZ.	202-B(007)B			
		202 MA 023			

	NAME	DATE
DESIGN	CJ	4/05
DRAWN	LRJ	4/05
CHECKED	CAD	4/05

Stanley Consultants Inc.

ARIZONA DEPARTMENT OF TRANSPORTATION
INTERMODAL TRANSPORTATION DIVISION
ROADWAY DESIGN SERVICES

CULVERT DETAIL SHEET
STA 1284+47.43
PLAN & ELEVATION

PRELIMINARY
STAGE IV
95% Review
NOT FOR CONSTRUCTION OR RECORDING

ROUTE: 202L
LOCATION: RED MTN FWY, POWER ROAD - UNIVERSITY DRIVE

TRACS NO. H 5782 01C

202-B(007)B

DWG NO. D-3.7

___ OF ___

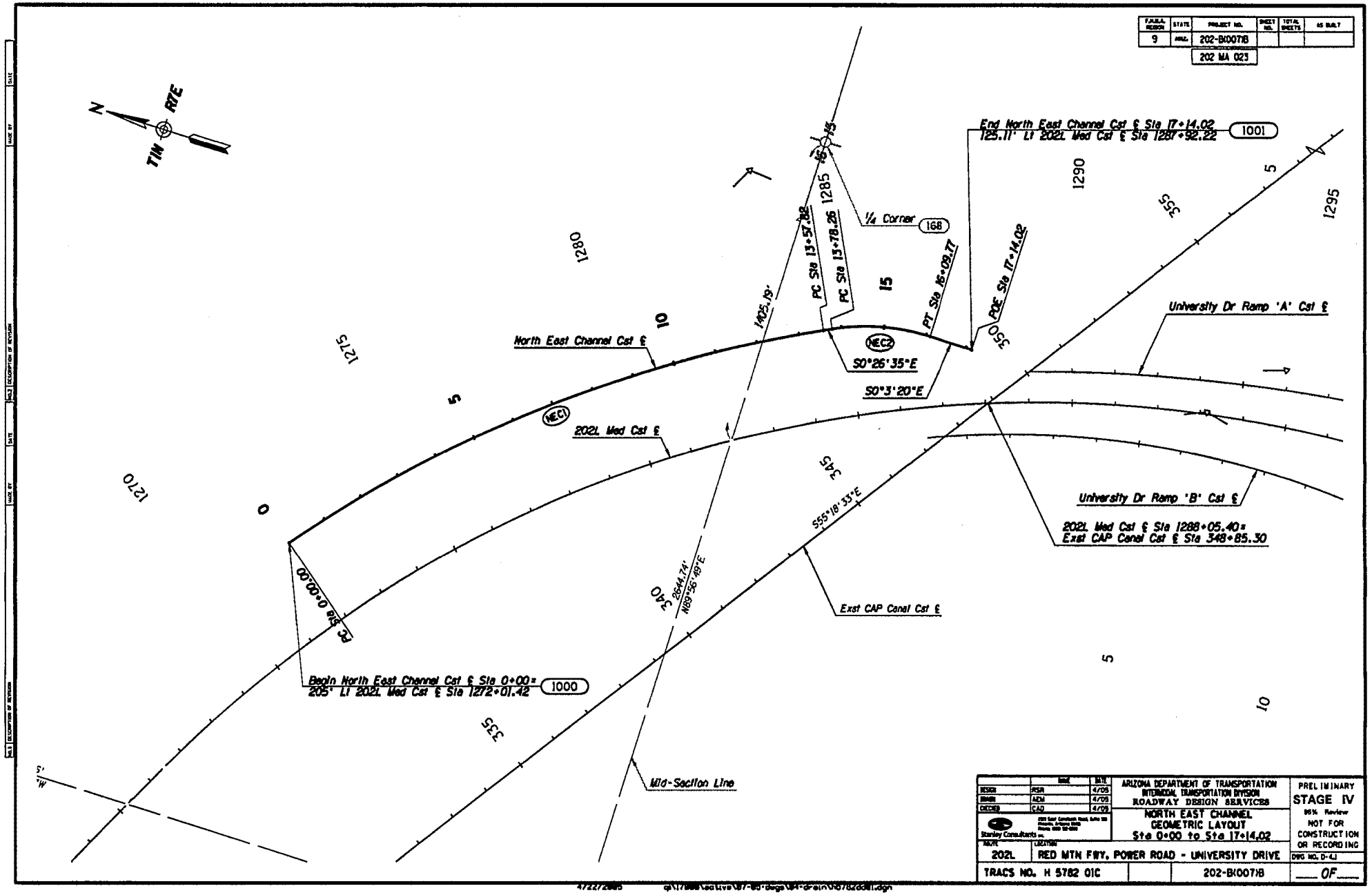

F.A.H.S. REGION	STATE	PROJECT NO.	SHEET NO.	TOTAL SHEETS	AS BUILT
9	ARIZ.	202-B(007)I			

202 MA 023

	Initial	DATE
DESIGN	RSR	4/05
DRAWN	AEM	4/05
CHECKED	CAD	4/05

Stanley Consultants Inc.

ARIZONA DEPARTMENT OF TRANSPORTATION
INTERMODAL TRANSPORTATION DIVISION
ROADWAY DESIGN SERVICES

NORTH EAST CHANNEL
GEOMETRIC LAYOUT
Sta 0+00 to Sta 17+14.02

PRELIMINARY
STAGE IV
95% Review
NOT FOR CONSTRUCTION OR RECORDING

ROUTE	LOCATION
202L	RED MTN FWY, POWER ROAD - UNIVERSITY DRIVE

DWG NO. D-4.1

TRACS NO. H 5782 01C | 202-B(007)I | ___ OF ___

4/22/2005 c:\17888\active\87-85\dgn\84-dsn\h5782d01.dgn

F.A.P.A. REGION	STATE	PROJECT NO.	SHEET NO.	TOTAL SHEETS	AS BUILT
9	ARIZ.	202-B(007)I			

202 MA 023

PLAN REF NO	LOCATION	P.I./P.O.T. STATION	COORDINATES		All Coordinates Are Ground Coordinates And All Bearings Are Grid Bearings G.A.F. = 1.00016								
1000	North East Channel Cst ℄ POT	0+00.00	N=884997.31	E=784831.92	SIMPLE	Δ=25°20'35"	D=1°51'39"	R=3069.79	T=690.20	L=1357.82	Ext=76.63		
NEC1	North East Channel Cst ℄ PI	6+90.20	N=884571.70	E=785375.27									
NEC2	North East Channel Cst ℄ PI	14+96.13	N=883830.79	E=785746.06	SIMPLE	Δ=26°31'48"	D=11°27'33"	R=500.00	T=117.87	L=231.52	Ext=13.71		
1001	North East Channel Cst ℄ POT	17+14.02	N=883608.67	E=785746.27									

CURVE DATA TABLE

NOTE:

McDowell Rd Ramp C = Ramp 'MDC'
McDowell Rd Ramp D = Ramp 'MDD'
McKellips Rd Ramp A = Ramp 'MKA'
McKellips Rd Ramp B = Ramp 'MKB'
McKellips Rd Ramp C = Ramp 'MKC'
McKellips Rd Ramp D = Ramp 'MKD'

Brown Rd Ramp A = Ramp 'BA'
Brown Rd Ramp B = Ramp 'BB'
Brown Rd Ramp C = Ramp 'BC'
Brown Rd Ramp D = Ramp 'BD'
University Dr Ramp A = Ramp 'UA'
University Dr Ramp B = Ramp 'UB'

	NAME	INIT.
DESIGN	RSR	4/09
DRAWN	S.P.	4/09
CHKD	CAD	4/09

Stanley Consultants Inc.

ARIZONA DEPARTMENT OF TRANSPORTATION
INTERMODAL TRANSPORTATION DIVISION
ROADWAY DESIGN SERVICES

NORTH EAST CHANNEL
GEOMETRIC DATA

PRELIMINARY
STAGE IV
95% Review
NOT FOR CONSTRUCTION OR RECORDING

DATE: 2021
LOCATION: RED MTN FWY, POWER ROAD - UNIVERSITY DRIVE

TRACS NO. H 5782 01C | 202-B(007)I

DRG NO. D-4.2

___ OF ___

4/22/2021 q:\1788\active\87-85-dwgs\84-design\h5782d882.dgn

F.A.H.P.A. REGION	STATE	PROJECT NO.	SHEET NO.	TOTAL SHEETS	AS BUILT
9	ARIZ.	202-B(007)B			
		202 MA 023			

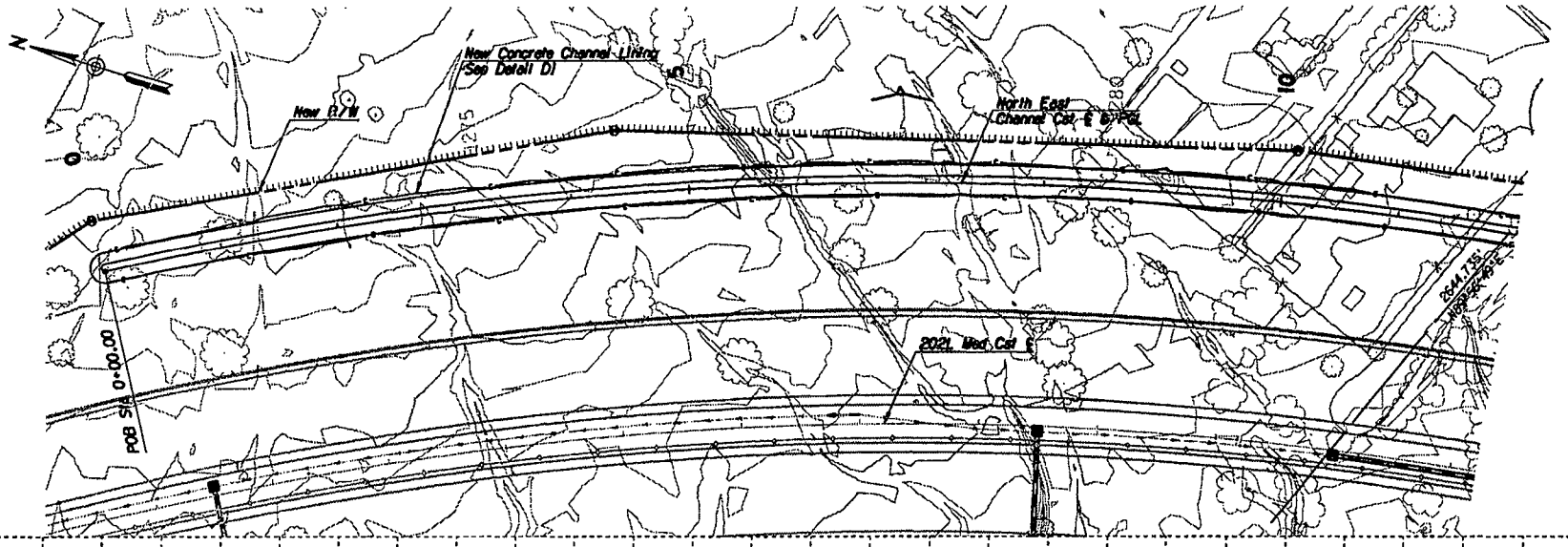

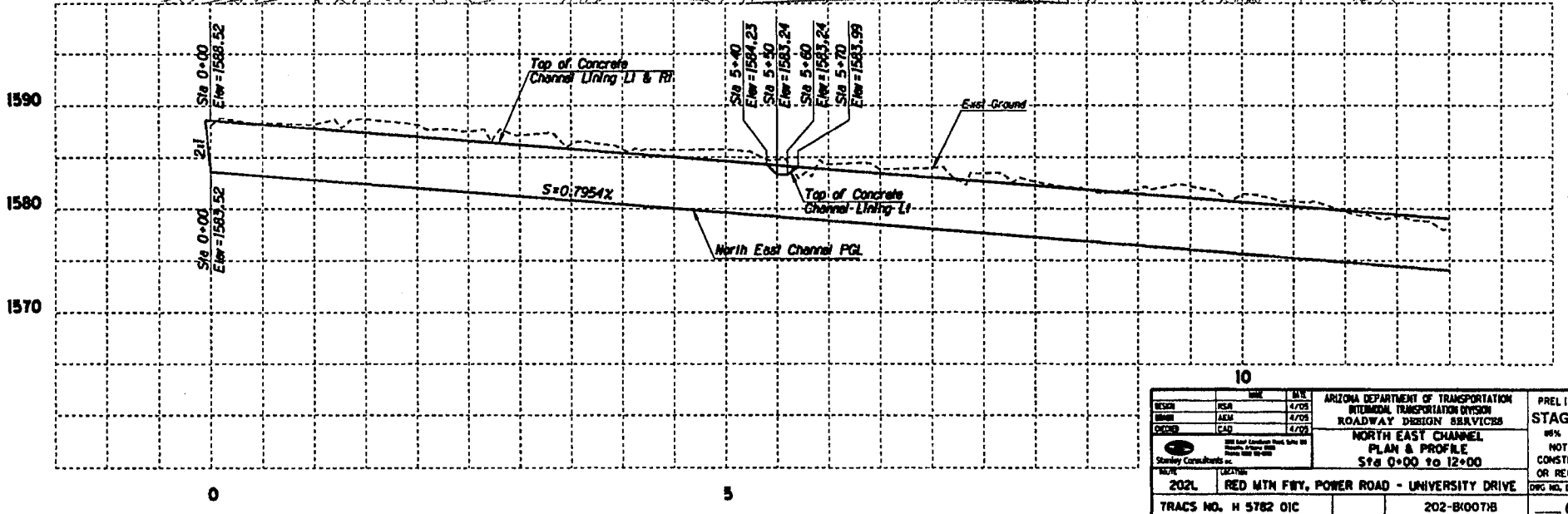

	NAME	DATE
DESIGN	RSA	4/05
DRAWN	AEM	4/05
CHECKED	CAD	4/05

Stanley Consultants Inc.

ARIZONA DEPARTMENT OF TRANSPORTATION
INTERMODAL TRANSPORTATION DIVISION
ROADWAY DESIGN SERVICES

NORTH EAST CHANNEL
PLAN & PROFILE
Sta 0+00 to 12+00

PRELIMINARY
STAGE IV
95% Review
NOT FOR CONSTRUCTION OR RECORDING

ROUTE	LOCATION	DWG NO. D-4.3
202L	RED MTN FWY, POWER ROAD - UNIVERSITY DRIVE	
TRACS NO. H 5782 01C		202-B(007)B — OF —

4/22/2005 q:\17888\active\87-86-dwgs\84-d-sht\h5782d03.dgn

F.A.P. NO.	STATE	PROJECT NO.	SHEET NO.	TOTAL SHEETS	AS BUILT
9	ARIZ.	202-B(007)I			

202 MA 023

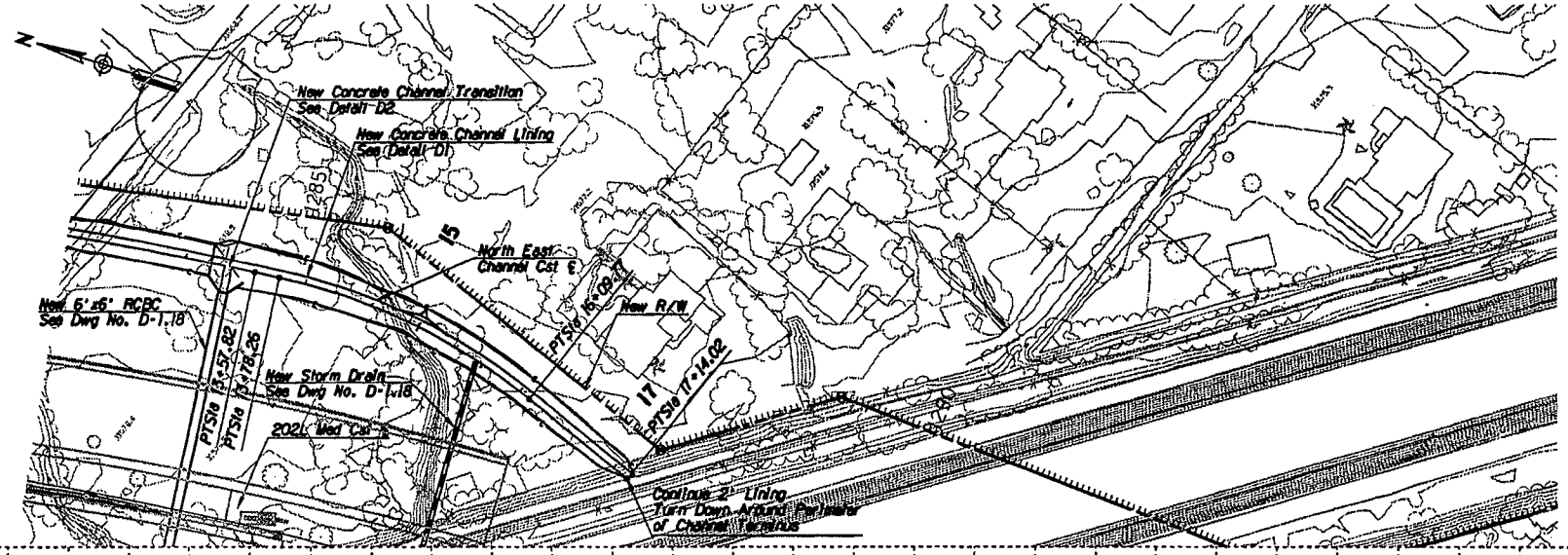

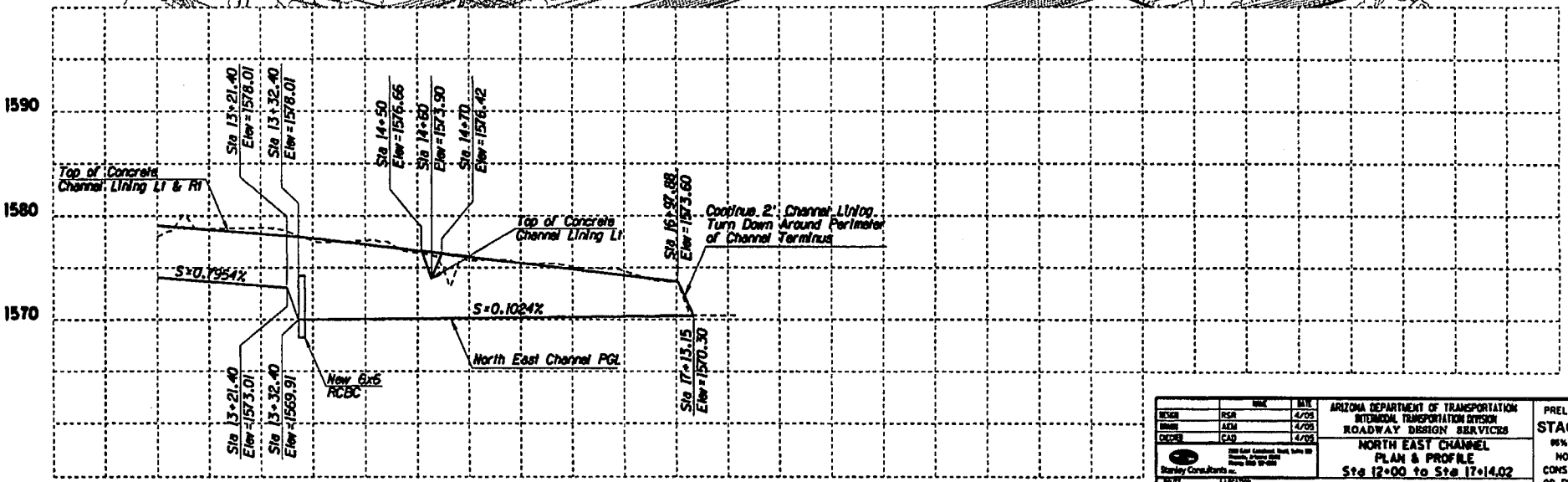

15

	NAME	DATE
DESIGN	RSR	4/05
DRAWN	AEM	4/05
CHECKED	CAD	4/05

Stanley Consultants Inc.

ARIZONA DEPARTMENT OF TRANSPORTATION
INTERMODAL TRANSPORTATION DIVISION
ROADWAY DESIGN SERVICES

NORTH EAST CHANNEL
PLAN & PROFILE
Sta 12+00 to Sta 17+14.02

PRELIMINARY
STAGE IV
95% Review
NOT FOR CONSTRUCTION OR RECORDING

DWG NO. D-4.4

ROUTE	LOCATION		
202L	RED MTN FWY, POWER ROAD - UNIVERSITY DRIVE		
TRACS NO. H 5782 01C		202-B(007)I	___ OF ___

4/22/2005 q:\17\data\active\87-ad-design\84-drain\h5782d04d4.dgn

F.H.W.A. REGION	STATE	PROJECT NO.	SHEET NO.	TOTAL SHEETS	AS BUILT
9	ARIZ.	202-B(007)B			

202 MA 023

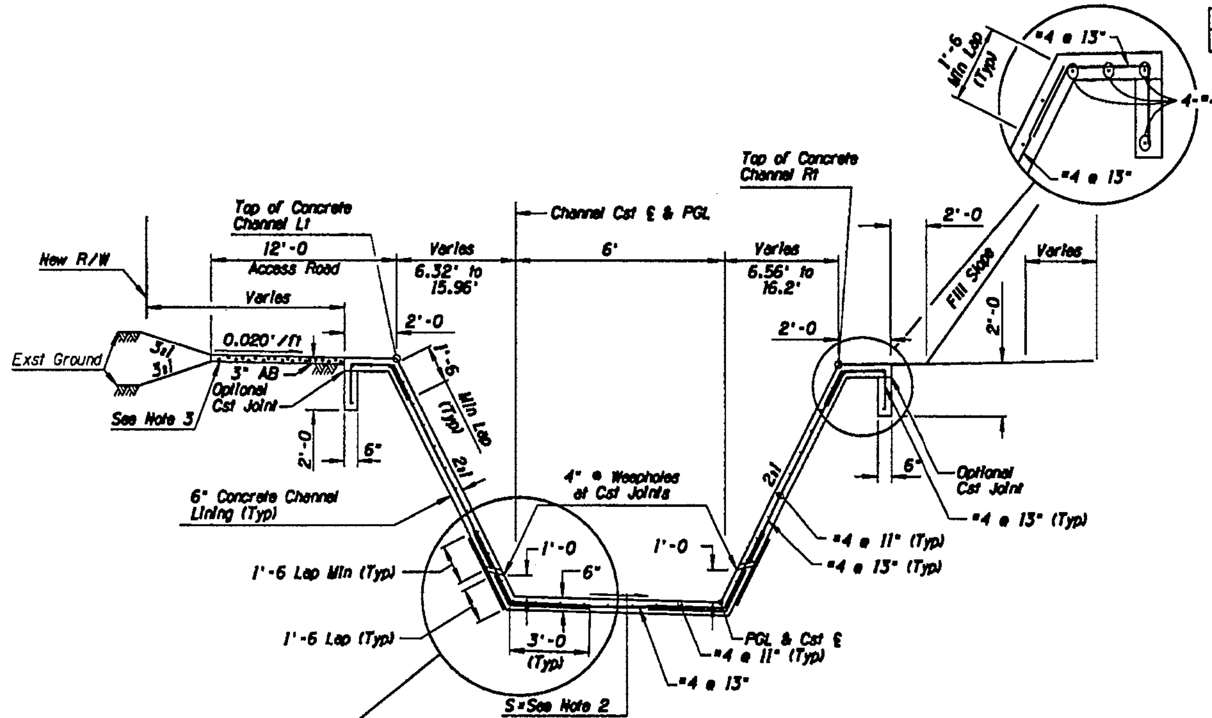

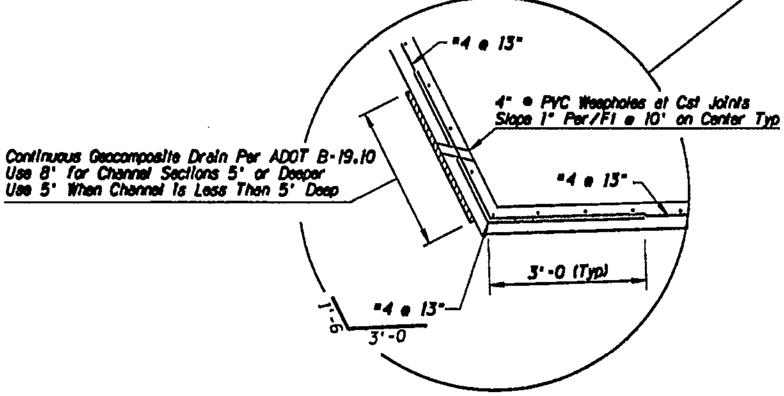

TYPICAL NORTH EAST CHANNEL

Notes:

1. Top of channel lining Lt is to be a minimum of 6" below existing ground, at R/W line.
2. Drop in elevation across the channel bottom shall be 2%.
3. Top 2 ft of earth under the maintenance road shall be material compacted 95% of maximum dry density.
4. All concrete shall be Class S (f'_c=3000 psi).
5. All reinforced steel shall conform to ASTM A615/A615M-96a, Grade 60.
6. All reinforcing steel shall have a minimum 2" clear cover to grade and 2" to exposed surfaces unless otherwise noted.
7. Channel lining shall be continuously reinforced without expansion or tooled joints except as follows: Construction joints shall be located at the end of a day's pour or when concrete placement stops for more than forty-five (45) minutes and between longitudinal paving strips. Longitudinal construction joints shall be located one foot up each side slope. Reinforcing steel shall be continuous through lining construction joints and through joints with box culverts and other hydraulic structures unless noted otherwise.

DETAIL D1

	NAME	DATE
DESIGN	RSR	4/05
DRAWN	AEM	4/05
CHECKED	CAD	4/05

Stanley Consultants inc.

ARIZONA DEPARTMENT OF TRANSPORTATION
INTERMODAL TRANSPORTATION DIVISION
ROADWAY DESIGN SERVICES

TYPICAL NORTH EAST CHANNEL SECTION

PRELIMINARY
STAGE IV
95% Review
NOT FOR CONSTRUCTION OR RECORDING

ROUTE 202L
LOCATION RED MTN FWY, POWER ROAD - UNIVERSITY DRIVE

DWG NO. D-4.3

TRACS NO. H 5782 01C | 202-B(007)B | ___ OF ___

F.H.W.A. REGION	STATE	PROJECT NO.	SHEET NO.	TOTAL SHEETS	AS BUILT
9	ARIZ.	202-B(007)B			
		202 MA 023			

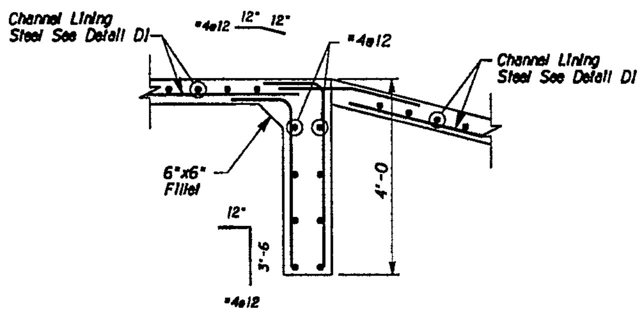

SECTION (A) Cutoff Wall

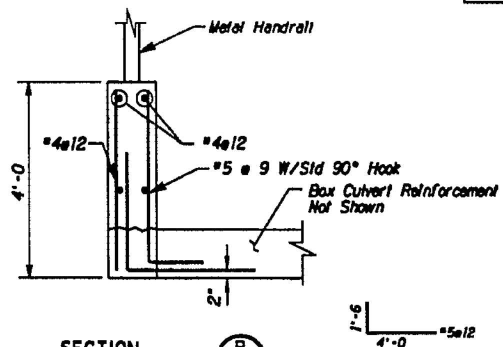

SECTION (B) Headwall

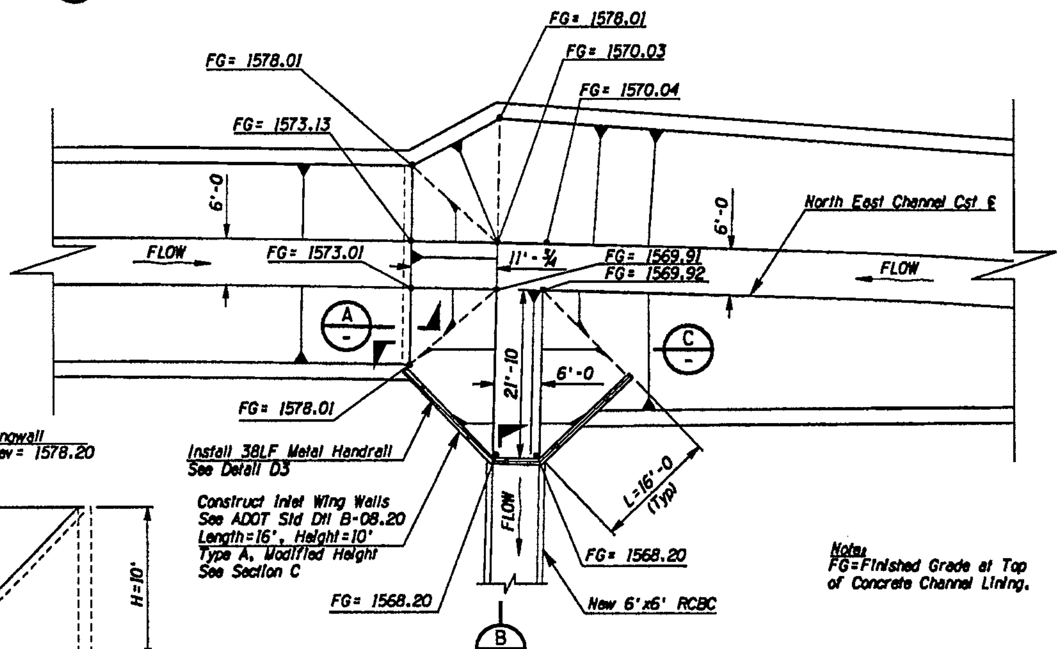

PLAN-CHANNEL TRANSITION

Notes:
FG=Finished Grade at Top of Concrete Channel Lining.

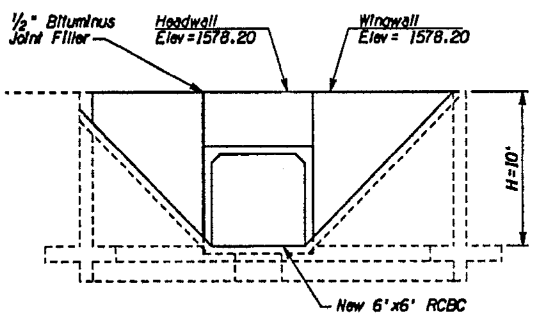

SECTION (C) 6'x6' RCBC Inlet

DETAIL D2

	NAME	DATE
DESIGN	RSR	4/05
DRAWN	AEM	4/05
CHECKED	CAD	4/05

ARIZONA DEPARTMENT OF TRANSPORTATION
INTERMODAL TRANSPORTATION DIVISION
ROADWAY DESIGN SERVICES

Stanley Consultants inc.

CHANNEL TRANSITION

PRELIMINARY
STAGE IV
95% Review
NOT FOR CONSTRUCTION OR RECORDING

ROUTE 202L | LOCATION RED MTN FWY, POWER ROAD - UNIVERSITY DRIVE | DWG NO. D-4.6

TRACS NO. H 5782 01C | 202-B(007)B | ____ OF ____

4/22/2005 q:\17860\active\87-86-dwgs\84-drain\h5782dd86.dgn

FAP/S.A. REGION	STATE	PROJECT NO.	SHEET NO.	TOTAL SHEETS	AS BUILT
9	ARIZ.	202-B(007)B			
		202 MA 023			

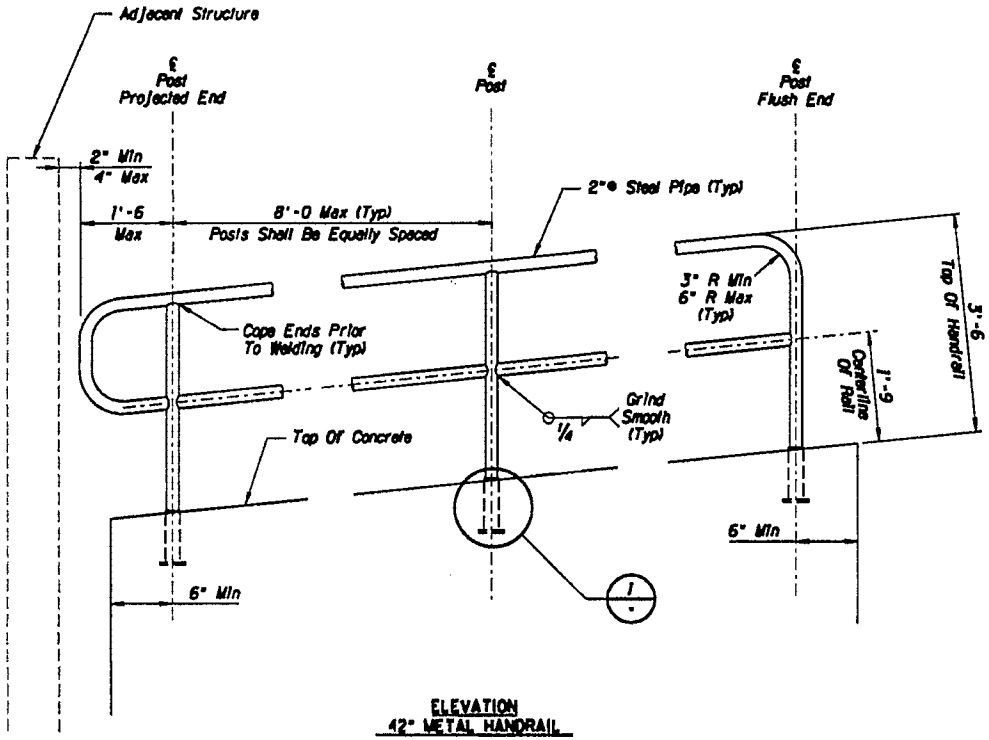

ELEVATION
42" METAL HANDRAIL
N.T.S.

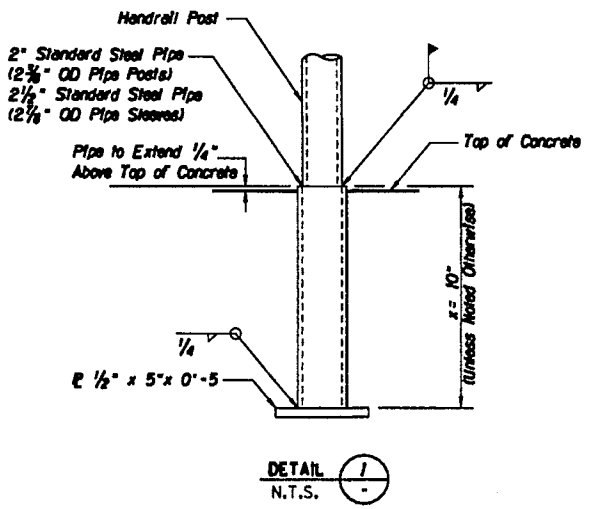

DETAIL 1
N.T.S.

Notes:

1. All Posts Shall Be Vertical & Rails Shall Be Parllel To Top of Concrete.
2. HandRail Shall Be Continous At Construction Joints & Expansion Sleeves Shall Be Used At Expansion Joints.
3. All Structural Steel Shall Be ASTM A36 Or ASTM A572. All Pipe Shall Be ASTM A53 Grade B, Standard Weight.
4. All Handrail Shall Be Galvanized In Accordance With ASTM A153.
5. Field Welds Shall Be Treated With A Zinc Rich Compound After Welding In Accordance With The Manufacturer's Instructions.
6. All Portions Of The Handrail And Connections Shall Be Painted In Accordance With The Special Provisions.
7. Any Paint That Has Been Damaged Due To Handling, Transporting Or Welding Shall Be Repaired By The Contractor At No Cost To The State.

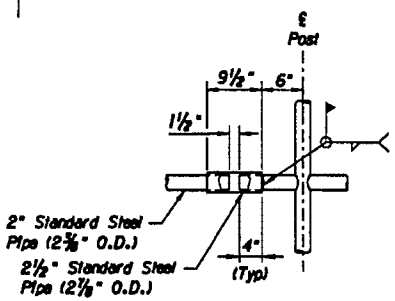

EXPANSION SLEEVE
N.T.S.

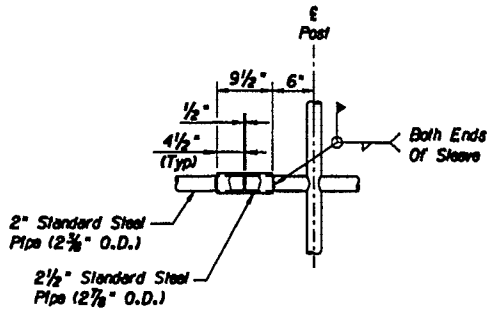

RAIL SPLICE
N.T.S.

RAIL DETAIL

DETAIL D3

	NAME	DATE
DESIGN	RSR	4/05
DRAWN	ADM	4/05
CHECKED	CAD	4/05

Stanley Consultants Inc.

ARIZONA DEPARTMENT OF TRANSPORTATION
INTERMODAL TRANSPORTATION DIVISION
ROADWAY DESIGN SERVICES

METAL HANDRAIL DETAIL

PRELIMINARY
STAGE IV
95% Review
NOT FOR CONSTRUCTION OR RECORDING

ROUTE	LOCATION
202L	RED MTN FWY, POWER ROAD - UNIVERSITY DRIVE

DGN NO. D-4.7

TRACS NO. H 5782 01C | 202-B(007)B | ___ OF ___

4/22/2005 q:\17888\active\87-85-dwgs\84-drain\h5782d3d7.dgn

F.A.H.S. REGION	STATE	PROJECT NO.	SHEET NO.	TOTAL SHEETS	AS BUILT
9	ARIZ.	202-B(007)I			
		202 MA 023			

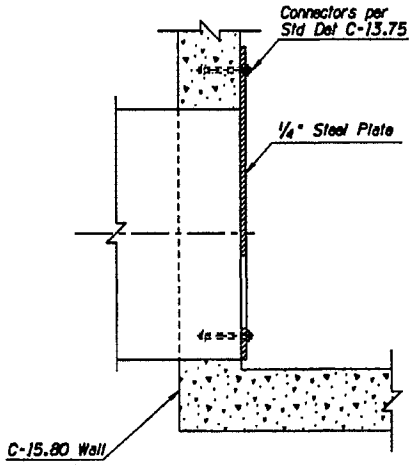

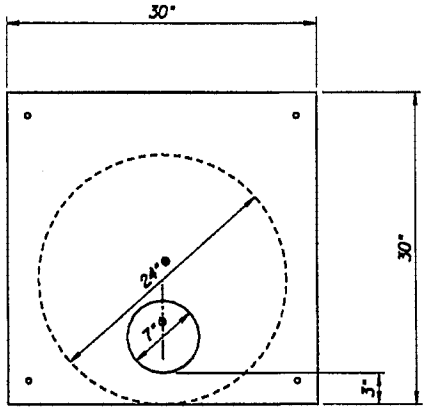

CATCH BASIN ID'S
CB 353
CB 355

DETAIL D4
ORIFICE PLATE

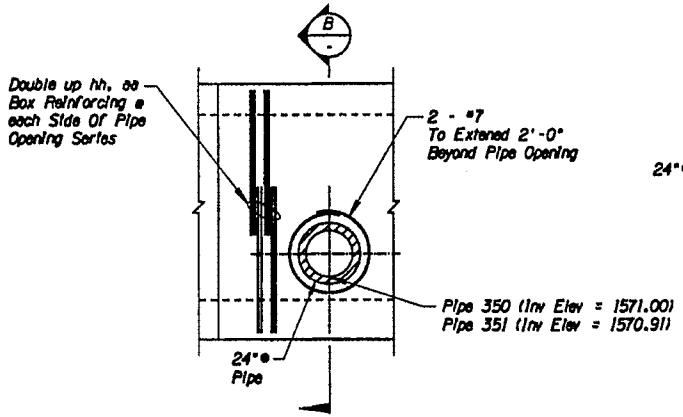

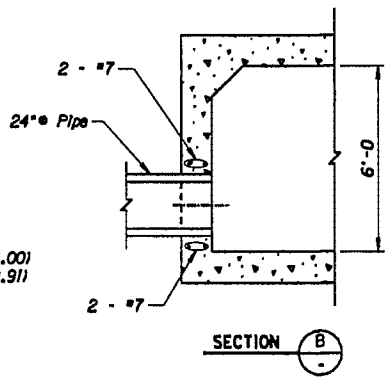

Notes:
1. #5 hoop or bent bar set with 1'-6" overlap may be substituted for straight bars. Typical at each face.

DETAIL D5
PIPE CONNECTION

	NAME	DATE
DESIGN	RSR	4/05
DRAWN	ASM	4/05
CHECKED	CAD	4/05

Stanley Consultants Inc.

ARIZONA DEPARTMENT OF TRANSPORTATION
INTERMODAL TRANSPORTATION DIVISION
ROADWAY DESIGN SERVICES

MISC. DETAILS

PRELIMINARY
STAGE IV
95% Review
NOT FOR CONSTRUCTION OR RECORDING

DIST.	LOCATION	DRG NO. D-4.8
2021	RED MTN FWY, POWER ROAD - UNIVERSITY DRIVE	
TRACS NO. H 5782 01C		202-B(007)I ___ OF ___

4722/2005 g:\17888\active\87-85-dwgs\04-drain\h5782d04d.dgn

F.A.P.R.A. REGION	STATE	PROJECT NO.	SHEET NO.	TOTAL SHEETS	AS BUILT
9	ARIZ.	202-B(007)B			
		202 MA 023			

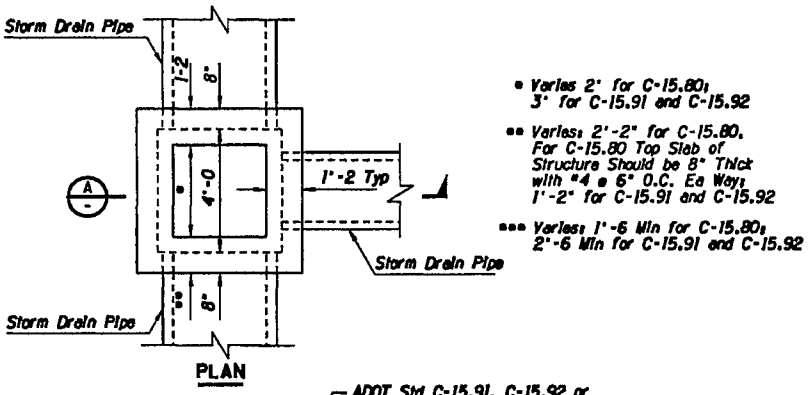

PLAN

• Varies 2" for C-15.80, 3" for C-15.91 and C-15.92

•• Varies 2'-2" for C-15.80. For C-15.80 Top Slab of Structure Should be 8" Thick with #4 @ 6" O.C. Ea Way, 1'-2" for C-15.91 and C-15.92

••• Varies 1'-6 Min for C-15.80, 2'-6 Min for C-15.91 and C-15.92

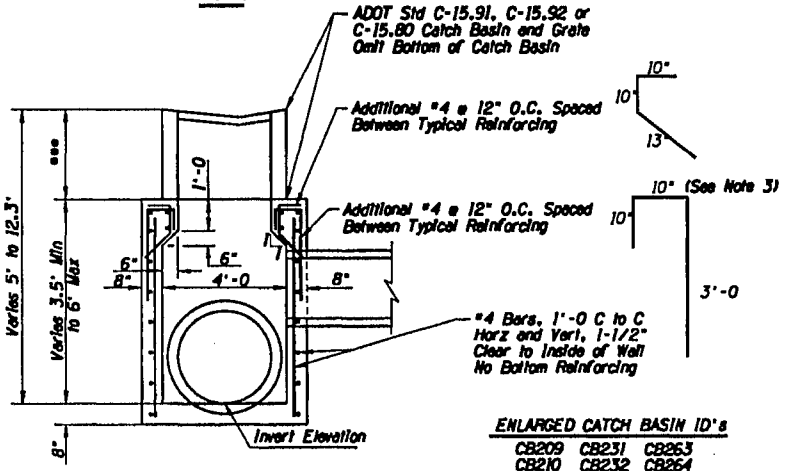

SECTION

ENLARGED CATCH BASIN ID's

CB209	CB231	CB253
CB210	CB232	CB264
CB211	CB233	CB265
CB212	CB256	CB319
CB213	CB257	CB326
CB214	CB258	

NOTES:

1. Catch basin materials per ADOT Std C-15.80, C-15.91, and C-15.92.
2. Dimensions, reinforcing, and items not shown per ADOT Std C-15.80, C-15.91, and C-15.92.
3. Use 22" for C-15.80

ENLARGED CATCH BASIN DETAIL

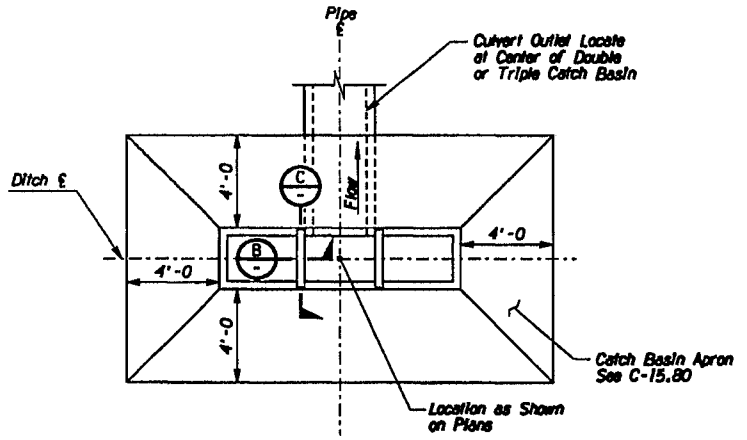

PLAN

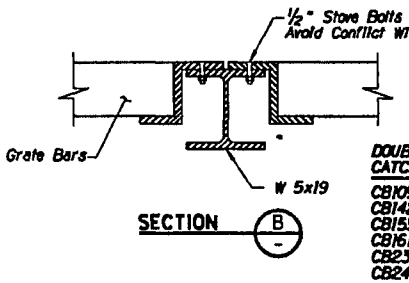

SECTION

DOUBLE AND TRIPLE CATCH BASIN INSTALLATIONS

CB109	CB259
CB142	CB281
CB155	CB327
CB161	CB395
CB234	
CB243	

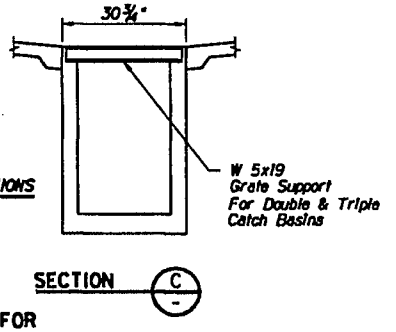

SECTION

MODIFIED C-15.80 FOR DOUBLE AND TRIPLE INSTALLATIONS

Notes:
For Catch Basin Grates and Details Not Shown See Detail C-15.80.

DETAIL D6

	NAME	DATE
DESIGN	RSR	4/05
DRAWN	AEM	4/05
CHECKED	CAD	4/05

Stanley Consultants Inc.

ARIZONA DEPARTMENT OF TRANSPORTATION
INTERMODAL TRANSPORTATION DIVISION
ROADWAY DESIGN SERVICES

SPECIAL CATCH BASINS

PRELIMINARY
STAGE IV
95% Review
NOT FOR CONSTRUCTION OR RECORDING

ROUTE	LOCATION
202L	RED MTN FWY, POWER ROAD - UNIVERSITY DRIVE

DWG NO. D-4.9

TRACS NO. H 5782 01C | 202-B(007)B | ___ OF ___

4/22/2005 q:\17888\active\87-80-dwgs\84-drain\h5782d06.dgn

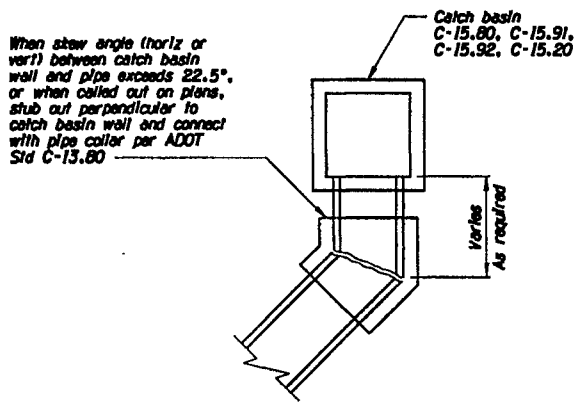

PLAN VIEW
PIPE TO CATCH BASIN CONNECTION

DETAIL D7

CATCH BASIN CONNECTION

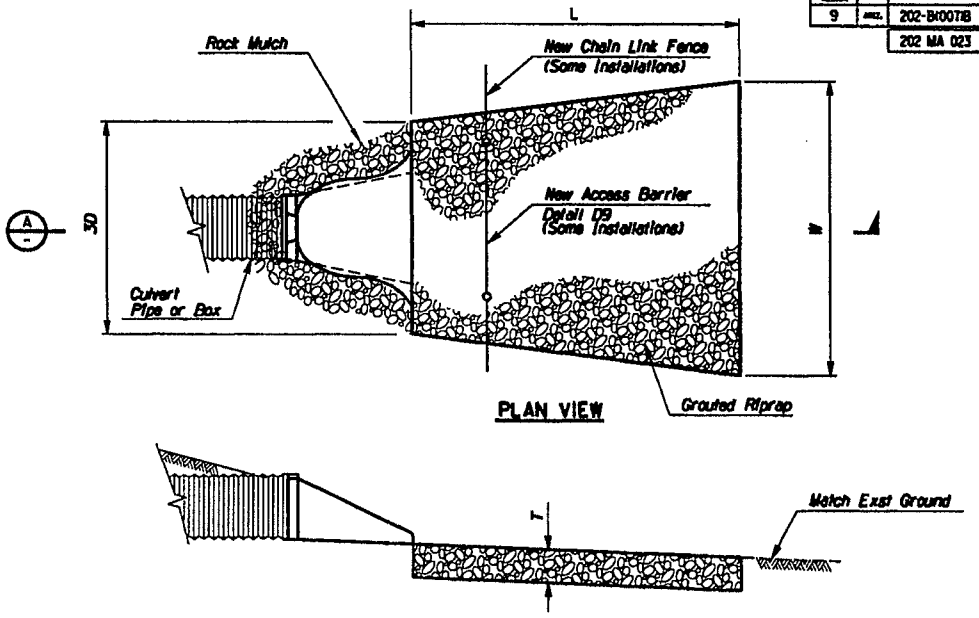

GROUTED RIPRAP APRON

Outlet ID	L (ft)	W (ft)	T (ft)	D_{50} (in)	Riprap Qty (cy)
Jct 100	10	10	1	6	3
Jct 103	10	10	1	6	3
Jct 105	10	10	1	6	3
Jct 106	10	10	1	6	3
Jct 389	10	10	1	6	3
Jct 188	10	10	1	6	3
Jct 193	10	10	1	6	3
Jct 204	10	10	1	6	3
Jct 293	10	10	1	6	3
Jct 303	10	10	1	6	3
Jct 310	10	10	1	6	3
Jct 315	10	10	1	6	3
Jct 335	10	10	1	6	3
Jct 341	10	10	1	6	3
Jct 342	10	10	1	6	3
Jct 348	10	10	1	6	3
Jct 381	10	10	1	6	3
Jct 713	10	10	1	6	3
Jct 852	10	10	1	6	3
Jct 867	10	10	1	6	3

Design Gradations for Riprap Classifications (D_{50})						
Gradation		Riprap Classification (D_{50})				
% Passing	Size	6"	8"	12"	18"	24"
100-90	$2.0D_{50}$	12	16	24	36	48
85-70	$1.5D_{50}$	9	12	18	24	36
50-30	$1.0D_{50}$	6	8	12	18	24
15-5	$0.67D_{50}$	4	5	8	12	12
5-0	$0.33D_{50}$	2	3	4	6	8

F.A.H.A. REGION	STATE	PROJECT NO.	SHEET NO.	TOTAL SHEETS	AS BUILT
9	ARIZ.	202-B(007)I			
		202 MA 023			

DETAIL D8

GROUTED RIPRAP APRON

	NAME	DATE
DESIGN	RSH	4/05
DRAWN	AEM	4/05
CHECKED	CAD	4/05

Stanley Consultants Inc.

ARIZONA DEPARTMENT OF TRANSPORTATION
INTERMODAL TRANSPORTATION DIVISION
ROADWAY DESIGN SERVICES

GROUTED RIPRAP APRON & CATCH BASIN CONNECTION

PRELIMINARY
STAGE IV
95% Review
NOT FOR CONSTRUCTION OR RECORDING

M.P.	LOCATION
202L	RED MTN FWY, POWER ROAD - UNIVERSITY DRIVE

DRG NO. D4.10

TRACS NO. H 5782 01C | 202-B(007)I | ___ OF ___

4/22/2005 g:\17888\acad\ve\97-80-dwgs\04-drain\h5782d08.dgn

F.A.H.A. REGION	STATE	PROJECT NO.	SHEET NO.	TOTAL SHEETS	AS BUILT
9	ARIZ.	202-B(007)B			
		202 MA 023			

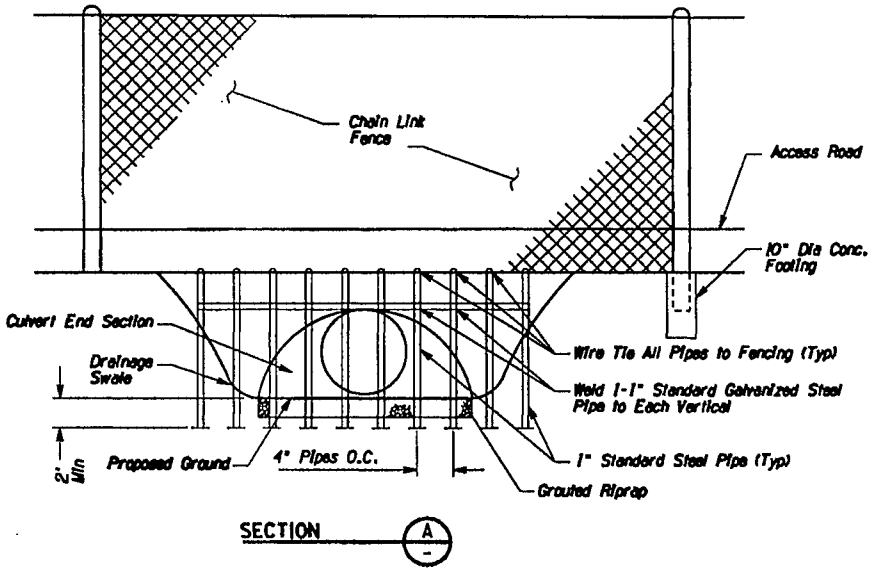

SECTION A

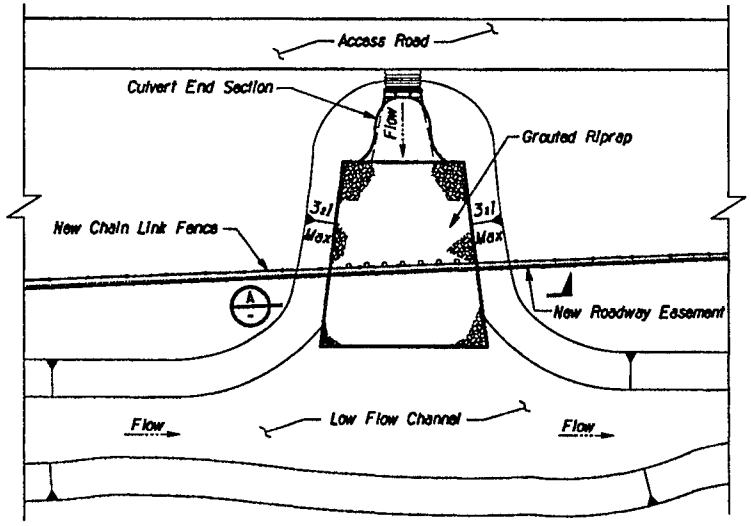

PLAN VIEW

End Section Id's

Jct 103	Jct 293
Jct 105	Jct 303
Jct 106	Jct 310
Jct 389	Jct 315
Jct 188	Jct 335
Jct 193	Jct 341
Jct 204	Jct 342
	Jct 389

DETAIL D9

	NAME	DATE
DESIGN	RSR	4/05
DRAWN	AEM	4/05
CHECKED	CAD	4/05

Stanley Consultants Inc.

ARIZONA DEPARTMENT OF TRANSPORTATION
INTERMODAL TRANSPORTATION DIVISION
ROADWAY DESIGN SERVICES

PIPE ACCESS BARRIER

PRELIMINARY
STAGE IV
95% Review
NOT FOR CONSTRUCTION OR RECORDING

ROUTE	LOCATION
202L	RED MTN FWY, POWER ROAD - UNIVERSITY DRIVE

DWG NO. D-411

TRACS NO. H 5782 01C | 202-B(007)B | OF

4/22/2005 q:\17888\active\87-05-dwgs\04-drain\h5782ddt1.dgn

FHWA REGION	STATE	PROJECT NO.	SHEET NO.	TOTAL SHEETS	AS BUILT
9	ARIZ.	202-B(007)B			
		202 MA 023			

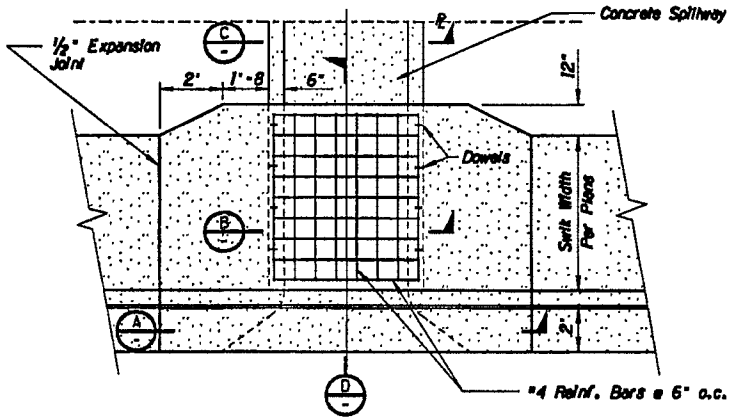

SCUPPER PLAN VIEW

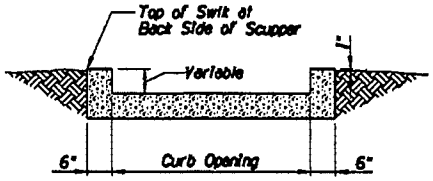

SECTION C

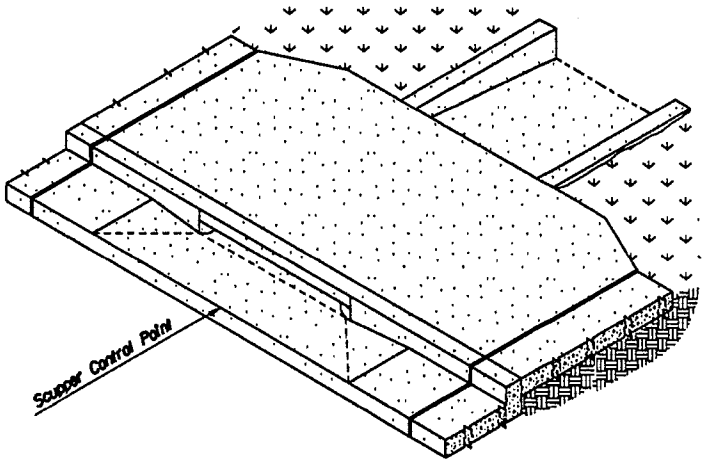

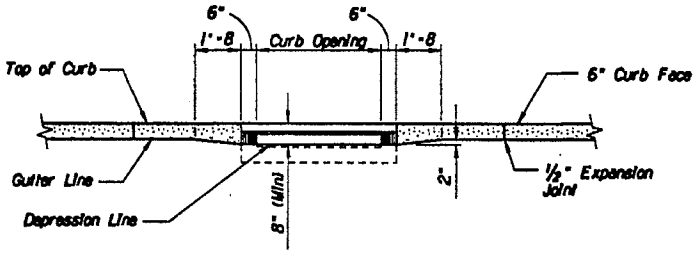

SECTION A

SCUPPER SUMMARY (SC)

Ref No.	Control Point	Curb Opening (ft)	Elev 1	L (ft)
780		4	1596.92	10
781		4	1596.02	10

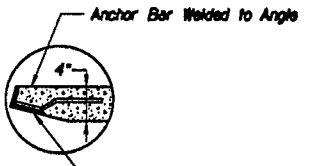

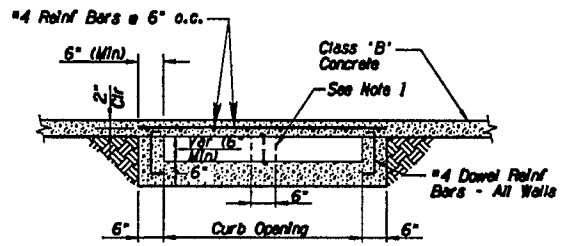

SECTION B

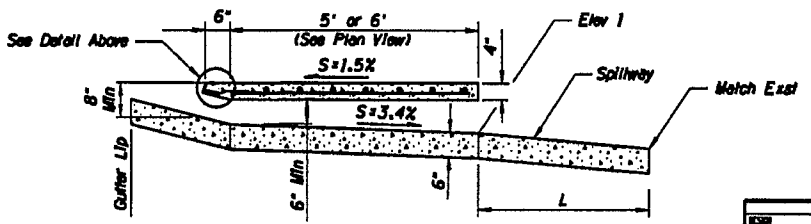

SECTION D

NOTE:

1. A Center Wall Shall be Installed in Scuppers Wider than 48".

DETAIL D10

	NAME	DATE
DESIGN	RSH	4/05
DRAWN	ACM	4/05
CHECKED	CAD	4/05

Stanley Consultants Inc.

ARIZONA DEPARTMENT OF TRANSPORTATION
INTERMODAL TRANSPORTATION DIVISION
ROADWAY DESIGN SERVICES

CONCRETE SCUPPER DETAILS

PRELIMINARY
STAGE IV
95% Review
NOT FOR CONSTRUCTION OR RECORDING

DATE: 2021 LOCATION: RED MTN FWY, POWER ROAD - UNIVERSITY DRIVE

DWG NO. D-4.13

TRACS NO. H 5782 01C | 202-B(007)B | ___ OF ___

4/22/2005 cp:\17688\active\87-85-design\84-drain\h5782d012.dgn

F.H.W.A. REGION	STATE	PROJECT NO.	SHEET NO.	TOTAL SHEETS	AS BUILT
9	ARIZ.	202-B(007)B			
		202 MA 023			

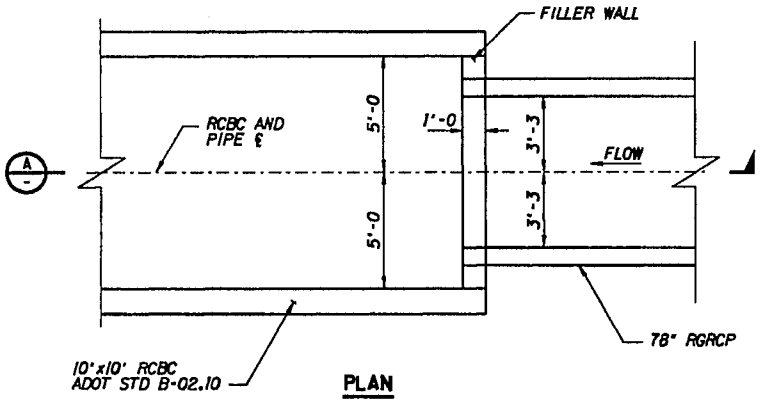

PLAN

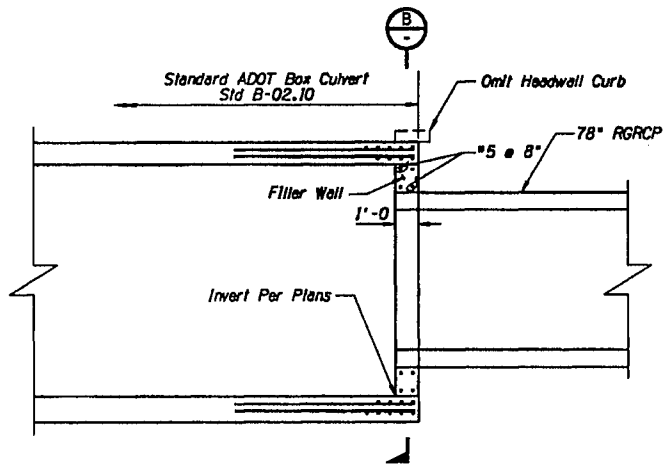

SECTION A

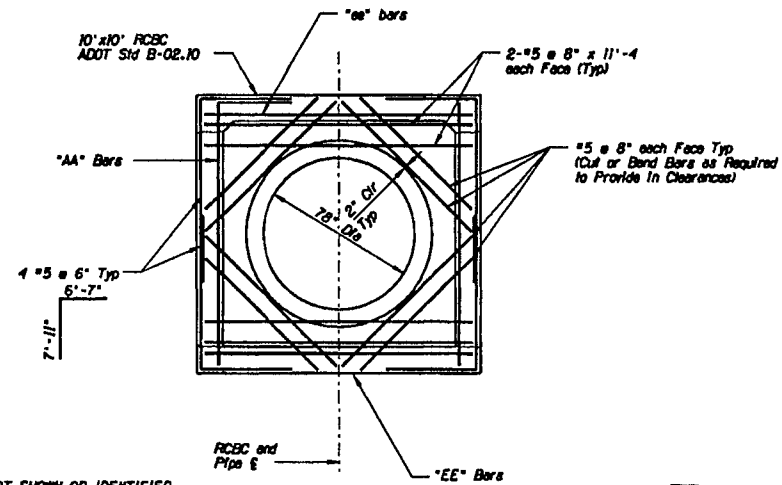

SECTION B

NOTES:

FOR REINFORCING NOT SHOWN OR IDENTIFIED, SEE ADOT STANDARD BOX CULVERT B-02.01.

"F" DIMENSION REFERS TO BEND DIMENSION FOR hh BARS STD B-02.10.

FOR PLAN LOCATION AND PROFILE, SEE DWG NO's D-2.4 AND D-2.12

STANDARD 10'x10' BOX CULVERT TO 96" RCP TRANSITION DETAIL

DETAIL D11

	NAME	DATE
DESIGN	RSR	4/05
DRAWN	AEM	4/05
CHECKED	CAD	4/05

Stanley Consultants Inc.

ARIZONA DEPARTMENT OF TRANSPORTATION
INTERMODAL TRANSPORTATION DIVISION
ROADWAY DESIGN SERVICES

RCBC
JUNCTION STRUCTURE

PRELIMINARY
STAGE IV
95% Review
NOT FOR CONSTRUCTION OR RECORDING

ROUTE	LOCATION
202L	RED MTN FWY, POWER ROAD - UNIVERSITY DRIVE

DWG NO. D-4.13

TRACS NO. H 5782 01C | 202-B(007)B | ___ OF ___

4/22/2005 cp:\17888\active\87-85-dwgs\84-drain\h5782d11.dgn

F.A.H.S. DESIGN	STATE	PROJECT NO.	SHEET NO.	TOTAL SHEETS	AS BUILT
9	ARIZ.	202-B(007)I			
		202 MA 023			

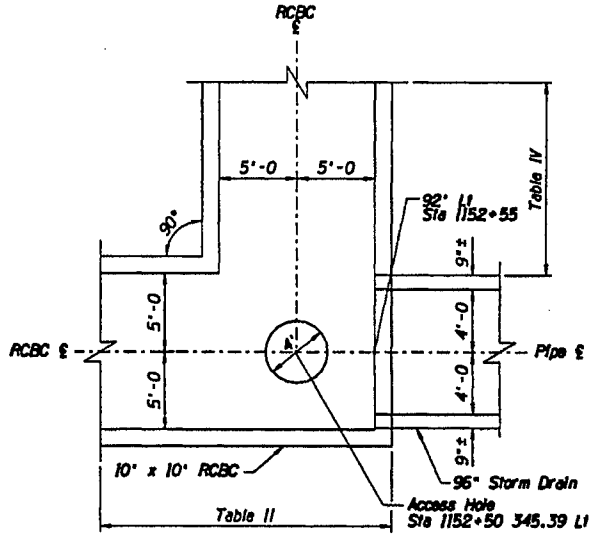

DETAIL D12
JUNCTION STRUCTURE

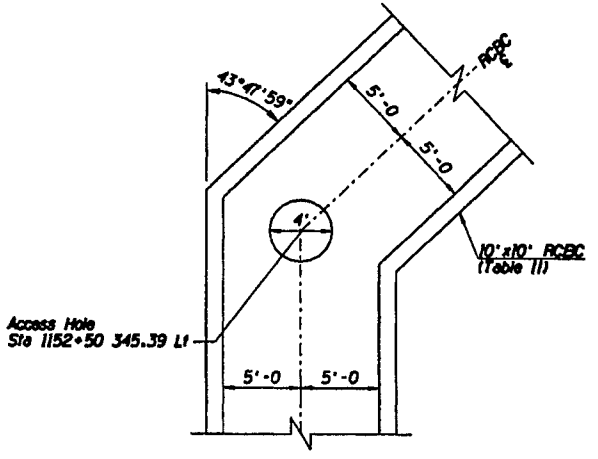

DETAIL D13
ACCESS HOLE

	NAME	DATE
DESIGN	RSR	4/05
DRAWN	ACM	4/05
CHECKED	CAD	4/05

Stanley Consultants Inc.

ARIZONA DEPARTMENT OF TRANSPORTATION
INTERMODAL TRANSPORTATION DIVISION
ROADWAY DESIGN SERVICES

RCBC
JUNCTION STRUCTURE/
ACCESS HOLE

PRELIMINARY
STAGE IV
95% Review
NOT FOR CONSTRUCTION OR RECORDING

ROUTE	LOCATION	DRG NO. D-4.14
202L	RED MTN FWY, POWER ROAD - UNIVERSITY DRIVE	
TRACS NO. H 5782 01C		202-B(007)I

SHEET OF

4/22/2005 c:\17868\active\87-85-dwgs\SH-drain\h5782dd14.dgn

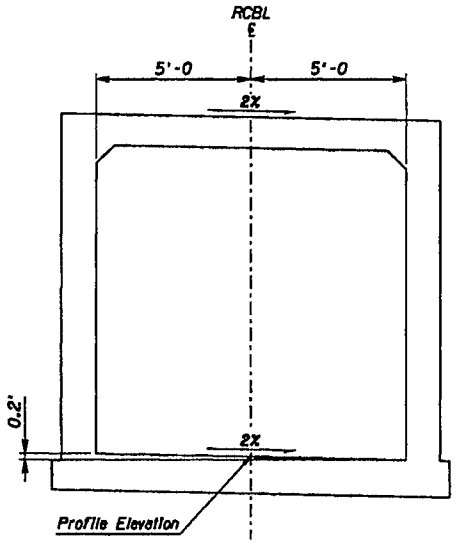

SECTION LOOKING DOWN STREAM

10' x 10' RCBC Sta 1143+59.27 93.31' Lt to Sta 1155+28.48 635.79' Lt

DETAIL D14

BOX CULVERT CROSS SLOPE

F.H.W.A. REGION	STATE	PROJECT NO.	SHEET NO.	TOTAL SHEETS	AS BUILT
9	ARIZ.	202-B(007)B			
		202 MA 023			

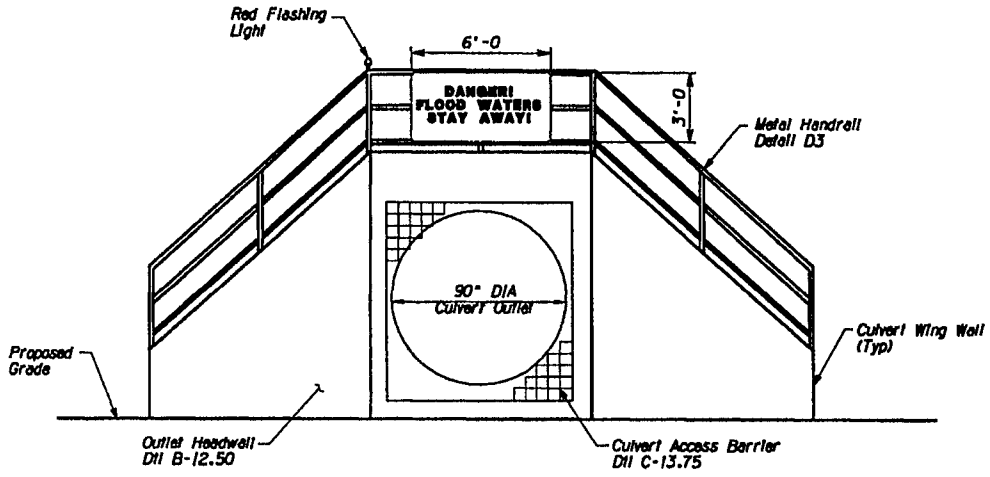

PUMP STATION OUTLET WARNING SYSTEM

DETAIL D15

PUMP STATION OUTLET WARNING SYSTEM

	NAME	DATE
DESIGN	RSR	4/05
DRAWN	AEM	4/05
CHECKED	CAD	4/05

Stanley Consultants Inc.

ARIZONA DEPARTMENT OF TRANSPORTATION
INTERMODAL TRANSPORTATION DIVISION
ROADWAY DESIGN SERVICES

MISC DETAILS

PRELIMINARY
STAGE IV
95% Review
NOT FOR CONSTRUCTION OR RECORDING

DIST. 202L | LOCATION: RED MTN FWY, POWER ROAD - UNIVERSITY DRIVE

DRG NO. D-4.15

TRACS NO. H 5782 01C | 202-B(007)B | ___ OF ___

472272885 cp\17888\active\07-ITS-dsgn\04-drain\05782ddt15.dgn

F.H.W.A. REGION	STATE	PROJECT NO.	SHEET NO.	TOTAL SHEETS	AS BUILT
9	ARIZ.	202-B(007)B			
		202 MA 023			

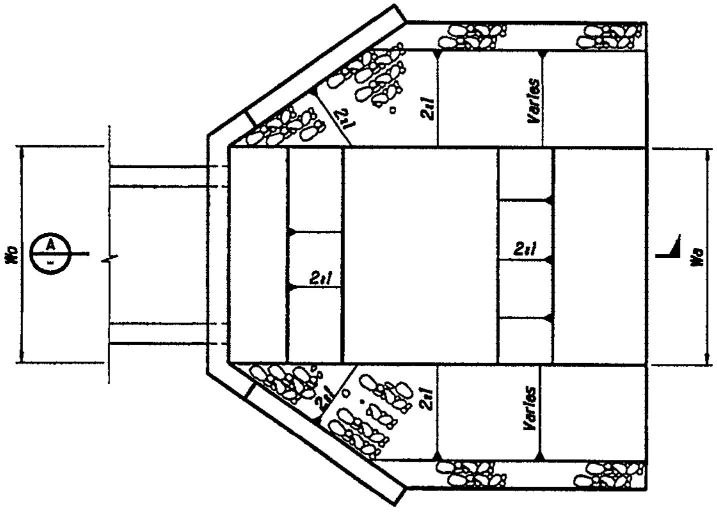

PLAN VIEW

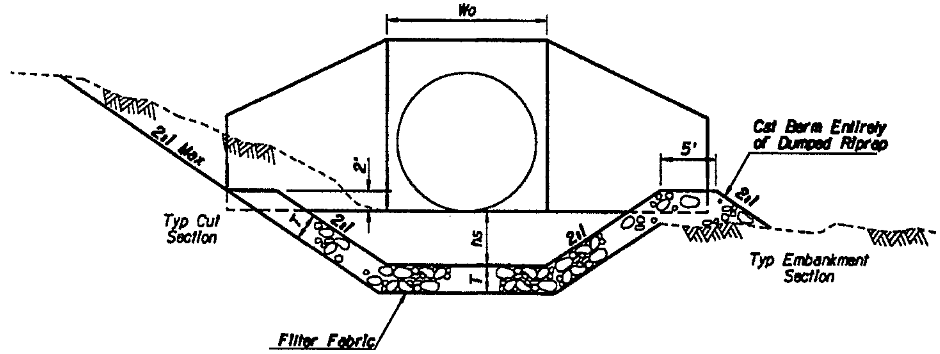

SECTION B

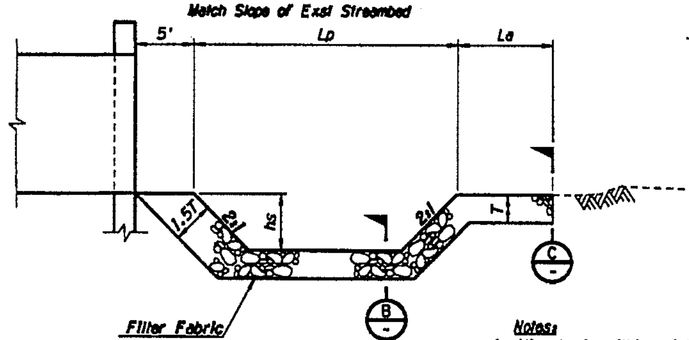

SECTION A

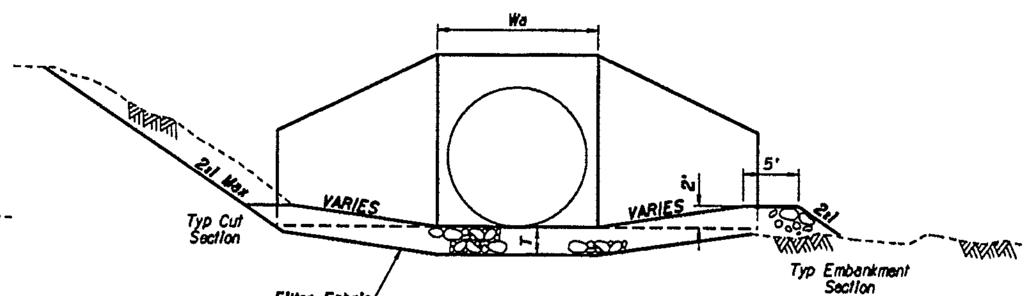

SECTION C

Notes:

1. *Align basin within existing wash so that the culvert discharges into the plunge pool and the downstream edge of the apron is perpendicular to the flow line of the existing channel.*
2. *Warp basin to conform to natural stream channel. Top of riprap in floor of basin should be at the same elevation or lower than natural channel bottom.*

DETAIL D16

RIPRAP BASIN TABLE

Culvert No./Dil	Sta @ Clv ℄	Culvert Dia (in)	Riprap Size D_{50}(in)	T (in)	hs (ft)	Lp (ft)	La (ft)	Wo (ft)	Wa (ft)	Riprap Qty (cy)
409	13+84.55	90"	12"	36	2.3	23	11.5	9.5	9.5	---

	NAME	DATE
DESIGN	RSR	4/05
DRAWN	AEM	4/05
CHECKED	CAD	4/05

Stanley Consultants inc.

ARIZONA DEPARTMENT OF TRANSPORTATION
INTERMODAL TRANSPORTATION DIVISION
ROADWAY DESIGN SERVICES

CULVERT OUTLET
ENERGY DISSIPATER

PRELIMINARY
STAGE IV
95% Review
NOT FOR CONSTRUCTION OR RECORDING

ROUTE: 202L
LOCATION: RED MTN FWY, POWER ROAD - UNIVERSITY DRIVE

DWG NO. D-4.16

TRACS NO. H 5782 01C | 202-B(007)B | ___ OF ___

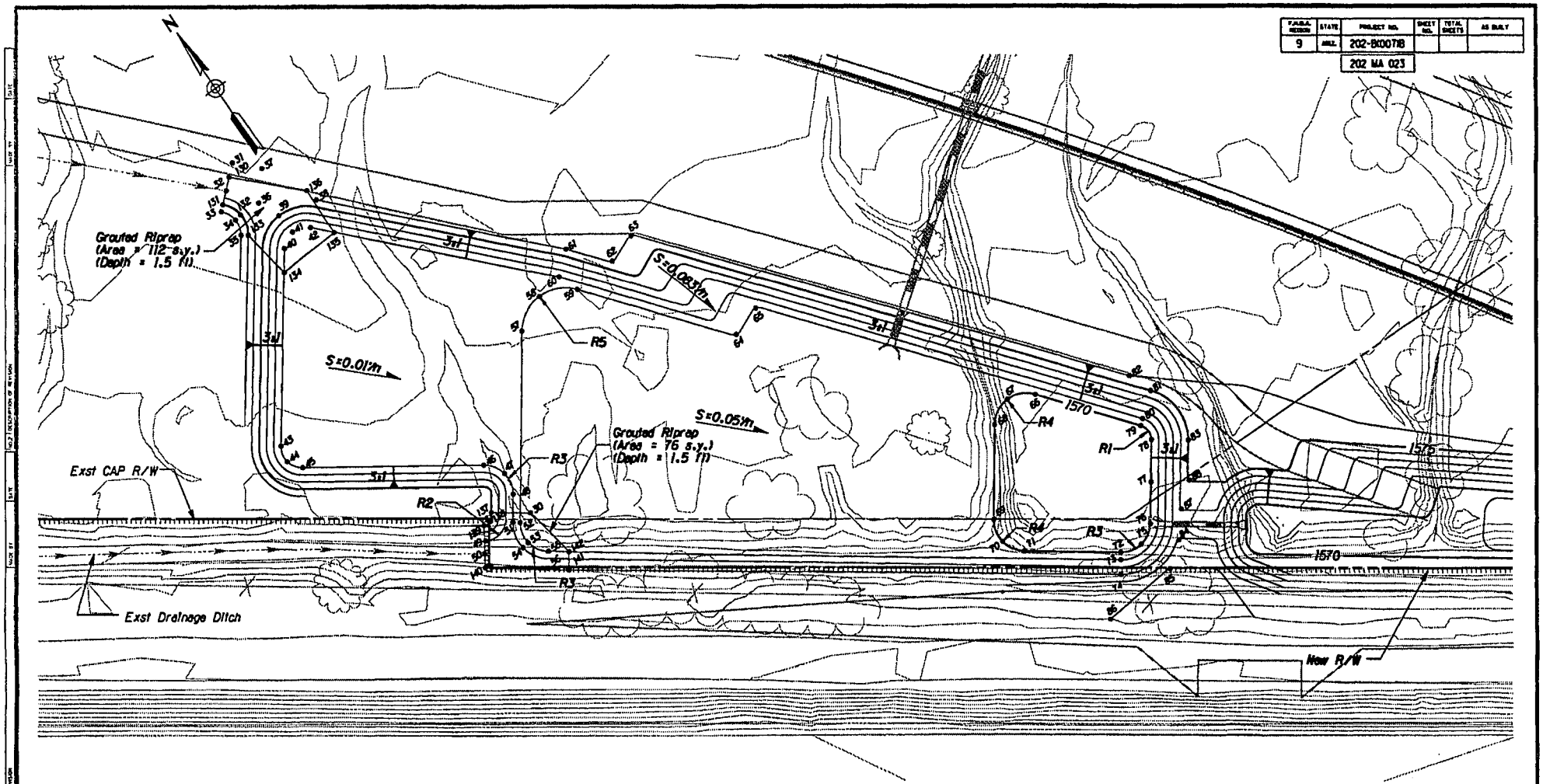

F.A.H.S.A. REVISION	STATE	PROJECT NO.	SHEET NO.	TOTAL SHEETS	AS BUILT
9	ARIZ.	202-B(007)I			
		202 MA 023			

DETAIL D17

SHEET 1 OF 3

	NAME	DATE
DESIGN	C.J.	4/05
DRAWN	A.E.M.	4/05
CHECKED	C.A.D.	4/05

Stanley Consultants Inc.

ARIZONA DEPARTMENT OF TRANSPORTATION
INTERMODAL TRANSPORTATION DIVISION
ROADWAY DESIGN SERVICES

202L MAINLINE
RETENTION BASIN

PRELIMINARY
STAGE IV
95% Review
NOT FOR CONSTRUCTION OR RECORDING

ROUTE	LOCATION
202L	RED MTN FWY, POWER ROAD - UNIVERSITY DRIVE

DRG NO. D-4.17

TRACS NO. H 5782 01C		202-B(007)I	OF

4/22/2005 cp:\7888\active\87-95-dwgs\84-drain\h5782d17.dgn

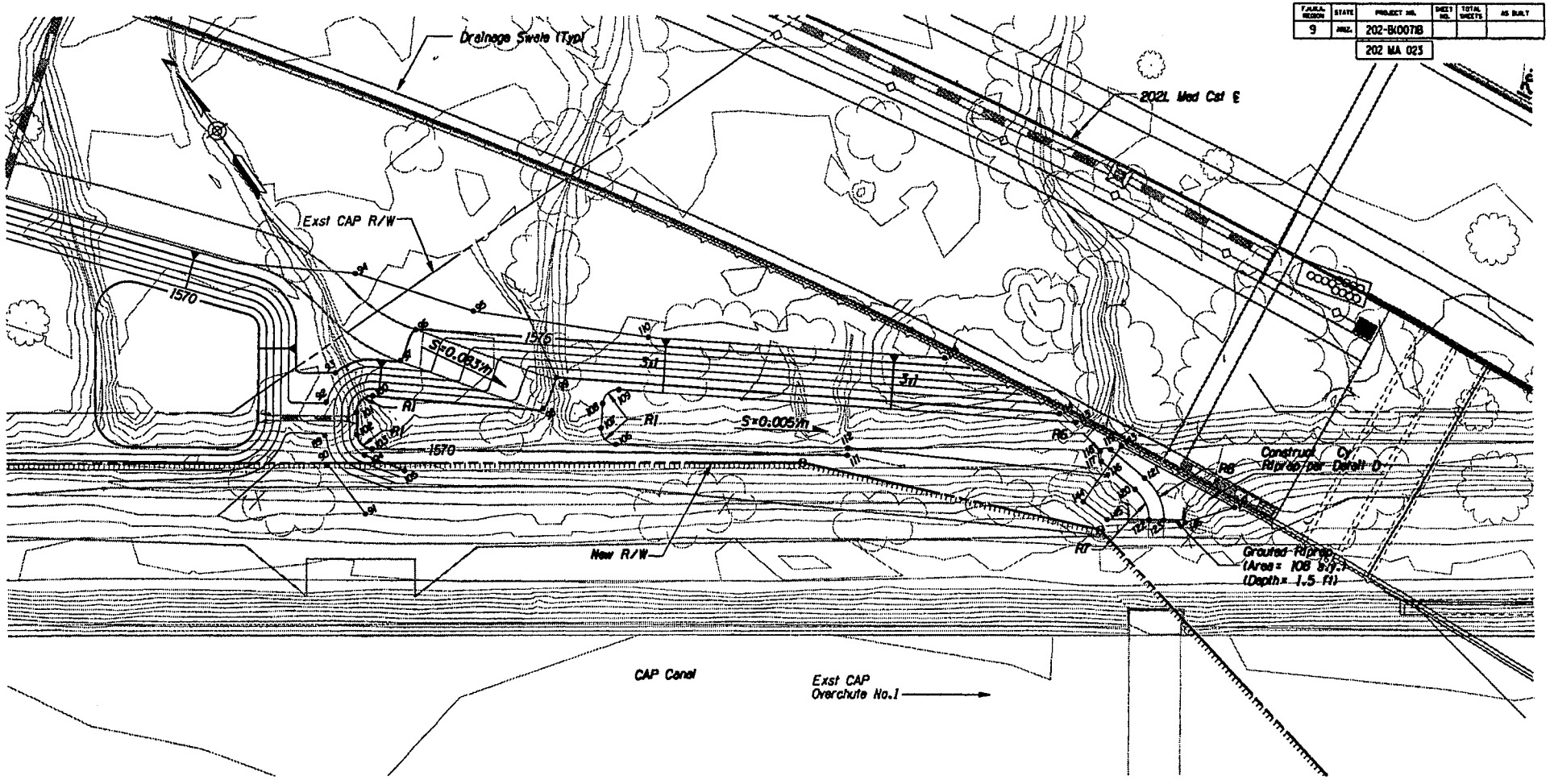

FAHUA NUMBER	STATE	PROJECT NO.	SHEET NO.	TOTAL SHEETS	AS BUILT
9	ARIZ.	202-B(007)8			
		202 MA 023			

DETAIL D17

SHEET 2 OF 3

	NAME	DATE
DESIGN	CJ	4/09
DRAWN	AEM	4/09
CHECKED	CAD	4/09

Stanley Consultants Inc.

ARIZONA DEPARTMENT OF TRANSPORTATION
INTERMODAL TRANSPORTATION DIVISION
ROADWAY DESIGN SERVICES

202L MAINLINE
RETENTION BASIN

PRELIMINARY
STAGE IV
95% Review
NOT FOR CONSTRUCTION OR RECORDING

ROUTE	LOCATION	DRG NO. D-4.18
202L	RED MTN FWY, POWER ROAD - UNIVERSITY DRIVE	
TRACS NO. H 5782 01C	202-B(007)8	___ OF ___

4/22/2009 q:\17888\active\07-85-dwgs\84-drain\h5782d018.dgn

F.A.H.S.R. REGION	STATE	PROJECT NO.	SHEET NO.	TOTAL SHEETS	AS BUILT
9	ARIZ.	202-B(007)B			
		202 MA 023			

PT. NO	NORTHING	EASTING	ELEV
30	884211.75	784906.67	1571.0
31	884402.14	784888.16	1578.9
32	884393.86	784879.30	1576.6
33	884387.85	784872.73	1578.0
34	884381.62	784875.52	1578.0
35	884375.04	784873.66	1578.0
36	884382.10	784887.48	1576.4
37	884393.24	784896.75	1578.8
38	884369.61	784907.65	1576.0
39	884373.00	784891.25	1575.0
40	884360.31	784885.22	1572.0
41	884364.02	784891.89	1572.0
42	884361.28	784899.01	1572.0
43	884293.95	784837.34	1572.0
44	884287.10	784835.78	1572.0
45	884281.21	784839.62	1572.0
46	884239.19	784902.15	1572.0
47	884231.39	784907.26	1572.0
48	884222.29	784905.24	1572.0
49	884212.46	784884.55	1573.0
50	884208.29	784881.29	1573.0
51	884212.50	784898.30	1572.0
52	884210.77	784900.75	1571.0
53	884201.86	784898.70	1571.0
54	884201.37	784895.74	1572.0
55	884194.09	784903.52	1571.0
56	884188.31	784899.49	1572.9
57	884275.63	784946.75	1571.0
58	884283.21	784960.85	1571.0
59	884276.57	784975.41	1571.0
60	884285.29	784972.19	1572.0
61	884293.25	784981.18	1576.0
62	884278.07	784994.32	1576.0
63	884282.36	785006.69	1576.0
64	884223.52	785019.31	1571.0
65	884227.97	785032.03	1571.0
66	884132.76	785106.70	1570.0
67	884137.53	785096.19	1570.0
68	884132.06	785086.03	1570.0
69	884099.73	785063.10	1570.0
70	884090.03	785060.89	1570.0
71	884081.60	785066.18	1570.0
72	884058.36	785098.96	1570.0

PT. NO	NORTHING	EASTING	ELEV
73	884055.91	785097.22	1571.0
74	884051.02	785093.75	1573.0
75	884056.31	785107.91	1570.0
76	884061.20	785115.69	1570.0
77	884075.53	785125.85	1570.0
78	884089.88	785136.02	1570.0
79	884097.14	785135.77	1570.0
80	884099.04	785138.10	1571.0
81	884106.62	785147.40	1575.0
82	884116.77	785143.74	1576.0
83	884081.19	785148.26	1575.0
84	884049.08	785121.45	1574.0
85	884041.42	785111.78	1575.0
86	884038.34	785079.74	1575.0
87	884059.29	785129.75	1574.0
88	884067.37	785139.17	1575.0
89	884040.2	785133.4	1574.0
90	884030.1	785127.3	1575.0
91	884005.4	785128.8	1575.0
92	884050.8	785141.4	1573.9
93	884058.2	785151.0	1575.0
94	884086.3	785180.2	1576.0
95	884047.0	785210.4	1576.0
96	884054.1	785187.0	1575.0
97	884047.7	785175.2	1575.0
98	883999.1	785211.3	1570.0
99	884006.3	785222.8	1570.2
100	884042.2	785157.9	1570.0
101	884040.8	785149.0	1570.0
102	884033.1	785144.2	1570.0
103	884025.1	785145.8	1570.0
104	884024.9	785141.9	1571.0
105	884010.8	785151.6	1571.0
106	883970.9	785227.2	1569.0
107	883979.5	785226.0	1569.0
108	883987.2	785232.2	1569.0
109	883988.1	785240.6	1569.0
110	883998.4	785262.0	1576.0
111	883914.6	785300.7	1570.0
112	883917.0	785302.5	1569.0
113	883873.3	785383.5	1569.0
114	883880.0	785379.9	1570.0
115	883924.3	785354.8	1576.0

PT. NO	NORTHING	EASTING	ELEV
116	883849.1	785381.9	1569.0
117	883854.9	785382.9	1568.0
118	883858.6	785385.0	1568.0
119	883856.5	785388.7	1568.0
120	883838.0	785387.6	1568.0
121	883839.6	785393.4	1568.0
122	883825.0	785385.3	1568.0
123	883821.4	785390.1	1568.0

RIPRAP AREAS

PT. NO	NORTHING	EASTING	ELEV
130	884397.92	784883.57	
131	884389.94	784874.88	
132	884382.26	784878.47	
133	884373.28	784876.09	
134	884352.20	784879.37	
135	884353.98	784905.84	
136	884374.99	784906.57	
137	884221.15	784893.41	
138	884218.10	784890.81	
139	884218.25	784887.73	
140	884203.51	784878.19	
141	884182.97	784906.11	
142	884189.11	784910.43	
143	883855.26	785392.97	
144	883845.69	785367.86	
145	883834.50	785371.60	
146	883815.83	785396.48	
147	883809.66	785416.13	

DETAIL D17

SHEET 3 OF 3

	NAME	DATE
DESIGN	CJ	4/05
DRAWN	B.JP	4/05
CHECKED	CAD	4/05

Stanley Consultants Inc.

ARIZONA DEPARTMENT OF TRANSPORTATION
INTERMODAL TRANSPORTATION DIVISION
ROADWAY DESIGN SERVICES

202L MAINLINE
RETENTION BASIN

PRELIMINARY
STAGE IV
95% Review
NOT FOR CONSTRUCTION OR RECORDING

ROUTE	LOCATION	DWG NO. D-4.19
202L	RED MTN FWY, POWER ROAD - UNIVERSITY DRIVE	
TRACS NO. H 5782 01C		202-B(007)B ___ OF ___

4/22/2005 c:\17888\active\87-85-dwgs\84-drain\h5782d18e.dgn

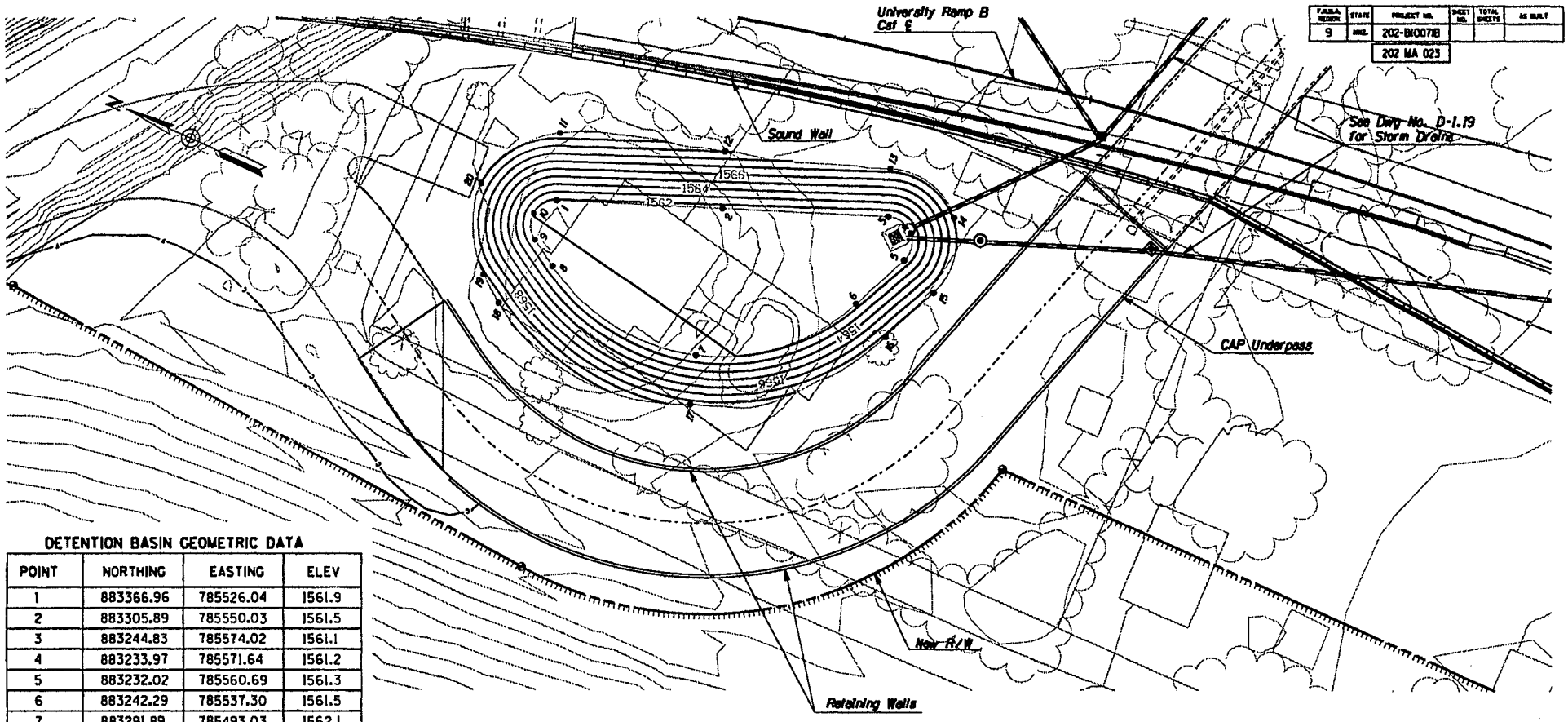

FHWA REGION	STATE	PROJECT NO.	SHEET NO.	TOTAL SHEETS	AS BUILT
9	ARIZ.	202-B(007)I			
		202 MA 023			

DETENTION BASIN GEOMETRIC DATA

POINT	NORTHING	EASTING	ELEV
1	883366.96	785526.04	1561.9
2	883305.89	785550.03	1561.5
3	883244.83	785574.02	1561.1
4	883233.97	785571.64	1561.2
5	883232.02	785560.69	1561.3
6	883242.29	785537.30	1561.5
7	883291.89	785493.03	1562.1
8	883357.84	785501.55	1562.1
9	883368.59	785508.25	1562.1
10	883373.26	785517.65	1562.0
11	883376.61	785550.62	1570.7
12	883314.13	785570.99	1569.0
13	883251.69	785591.47	1567.4
14	883220.98	785584.13	1567.2
15	883216.31	785553.80	1567.0
16	883226.45	785530.35	1567.3
17	883286.15	785474.48	1568.6
18	883371.52	785479.58	1570.8
19	883381.61	785487.34	1570.3
20	883397.20	785519.84	1570.0

DETAIL D18

	NAME	MTN.
DESIGN	RSR	4/05
DRAWN	AKM	4/05
CHECKED	CAD	4/05

Stanley Consultants Inc.

ARIZONA DEPARTMENT OF TRANSPORTATION
INTERMODAL TRANSPORTATION DIVISION
ROADWAY DESIGN SERVICES

CAP UNDERPASS
DETENTION BASIN

PRELIMINARY
STAGE IV
95% Review
NOT FOR CONSTRUCTION OR RECORDING

DWG NO. D-4.20

DIST.	LOCATION
202L	RED MTN FWY, POWER ROAD - UNIVERSITY DRIVE

TRACS NO. H 5782 01C | 202-B(007)I | ___ OF ___

4/22/2005 q:\17868\active\87-85-dwgs\84-drain\h5782ddl19.dgn

F.H.W.A. REGION	STATE	PROJECT NO.	SHEET NO.	TOTAL SHEETS	AS BUILT
9	ARIZ.	202-B(007)B			
		202 MA 023			

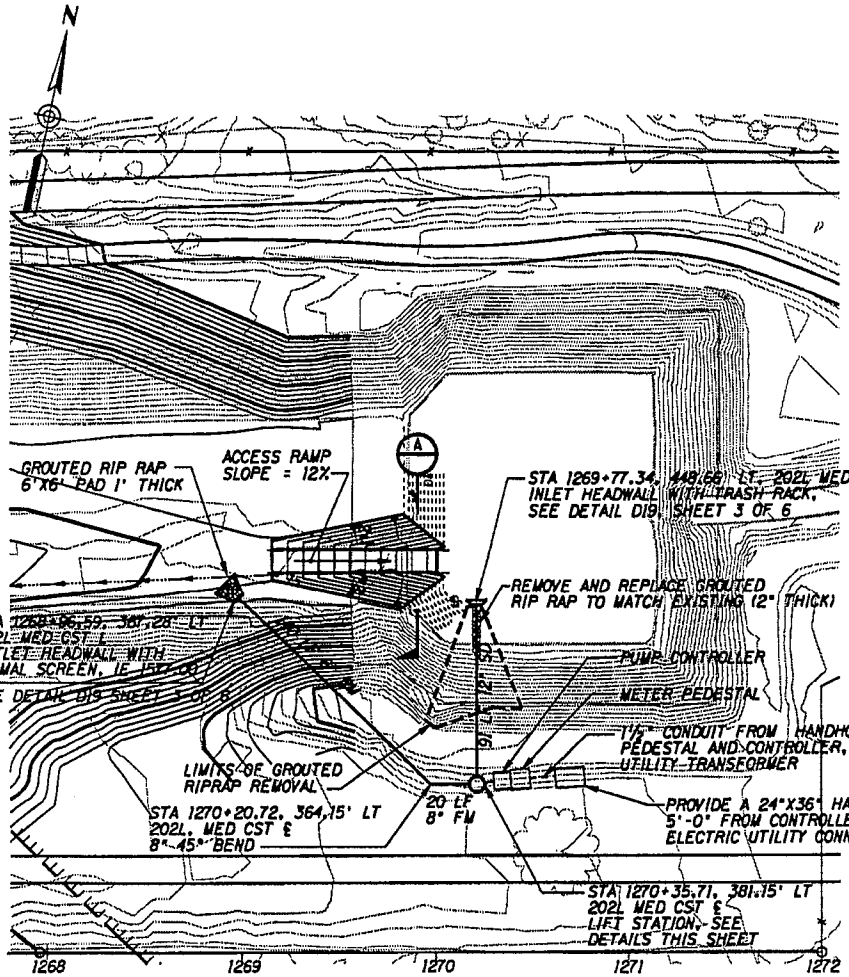

SIGNAL BUTTE ENERGY DISSIPATION BASIN
NTS

NOTES:

1. GROUTED RIPRAP SHALL HAVE A ROUGH SURFACE PER ADOT STD SPEC 913-3-.05.
2. FOR GROUTED RIPRAP SPECIFICATIONS SEE SPECIAL PROVISIONS.
3. CONCRETE SHALL BE CLASS B.
4. FOR ELECTRICAL DETAILS, SEE DETAIL D19 SHEETS 4, 5 & 6.

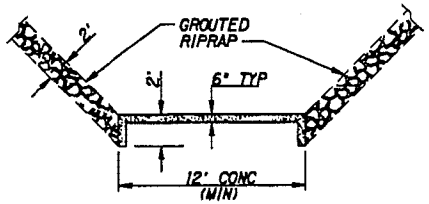

SECTION (A)
NTS

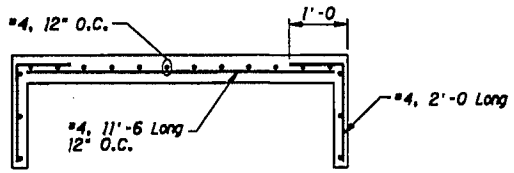

REINFORCING FOR CONCRETE ACCESS RAMP
NTS

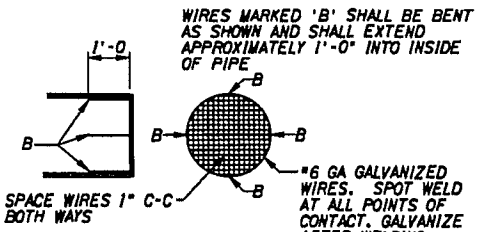

ANIMAL SCREEN
NTS

DETAIL D19

SHEET 1 OF 6

	NAME	M.N.
DESIGN	CAD	4/09
DRAWN	JJO	4/09
CHECKED	RSR	4/09

Stanley Consultants inc.

ARIZONA DEPARTMENT OF TRANSPORTATION
INTERMODAL TRANSPORTATION DIVISION
ROADWAY DESIGN SERVICES

SIGNAL BUTTE
ENERGY DISSIPATION BASIN
LIFT STATION & DETAILS

PRELIMINARY
STAGE IV
95% Review
NOT FOR CONSTRUCTION OR RECORDING

ROUTE	LOCATION	DRG NO. D-4.21
202L	RED MTN FWY, POWER ROAD - UNIVERSITY DRIVE	
TRACS NO. H 5782 01C	202-B(007)B	___ OF ___

4/22/2009 q:\17888\acad\civil\07-80-dwgs\04-drain\h5782d02d.dgn

F.A.S.A. REGION	STATE	PROJECT NO.	SHEET NO.	TOTAL SHEETS	AS BUILT
9	ARIZ.	202-B(007)B			

202 MA 023

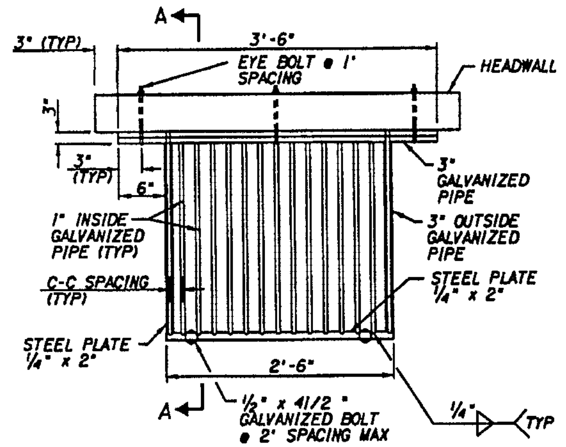

GRATE PLAN
NTS

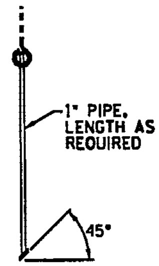

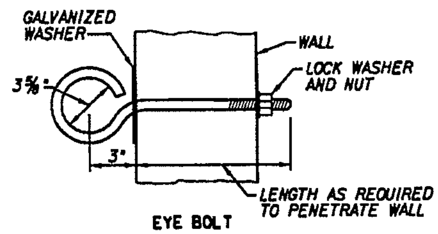

EYE BOLT
NTS

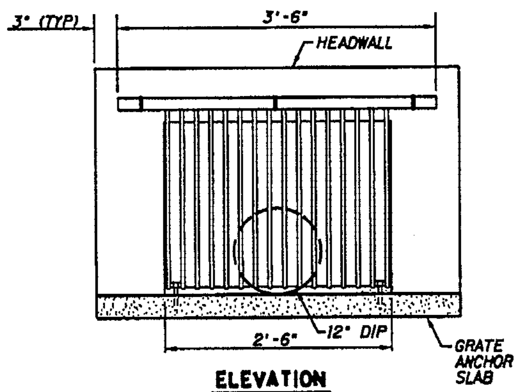

ELEVATION
NTS

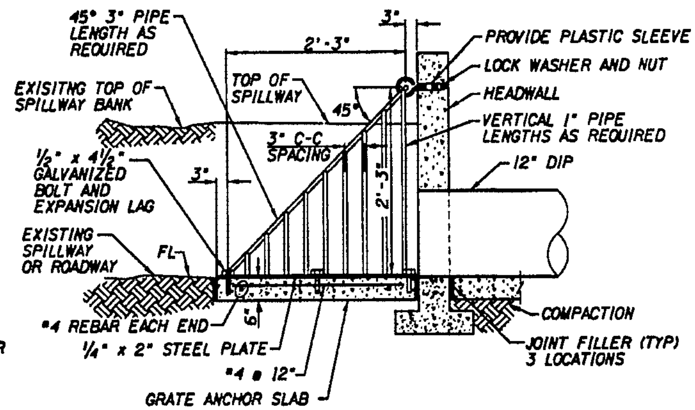

SECTION A-A
NTS

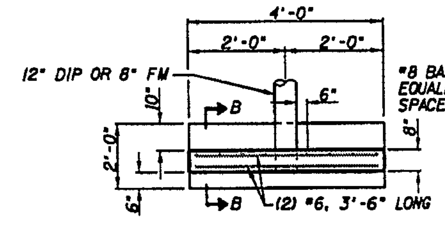

PLAN

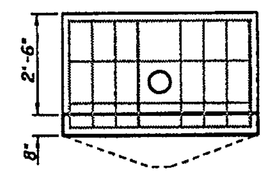

ELEVATION

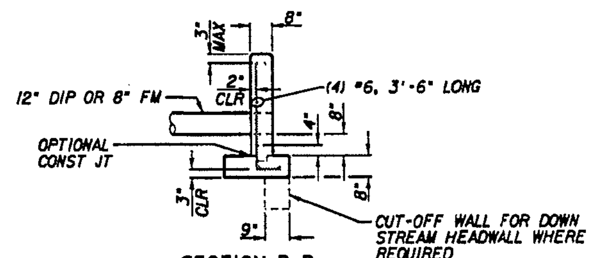

SECTION B-B

INLET AND OUTLET HEADWALL
NTS

NOTES:

1. ALL CONCRETE SHALL BE CLASS B
2. ALL STEEL SAHLL BE IN ACCORDANCE WITH ASTM A36
3. ALL UNGALVANIZED METAL SHALL BE PAINTED PER SECTION 610-3.05 OF THE ADOT STANDARD SPECIFICATIONS
4. REMOVE ALL SCALE FROM ALL STEEL SURFACES
5. SEE DETAILS D6 AND D7 FOR SPILLWAY DIMENSIONS
6. WHERE ⅝" EYE BOLTS CONFLICT WITH ANCHOR BOLTS (DETAILS D6 AND D7) USE EYE BOLTS TO SECURE STEEL PLATE AND RUBBER SHEET TO SOUND BARRIER WALL

TRASH RACK DETAILS

DETAIL D19

SHEET 3 OF 6

	NAME	DATE
DESIGN	CJO	4/05
DRAWN	JJB	4/05
CHECKED	RSE	4/05

ARIZONA DEPARTMENT OF TRANSPORTATION
INTERMODAL TRANSPORTATION DIVISION
ROADWAY DESIGN SERVICES

SIGNAL BUTTE
ENERGY DISSIPATION BASIN
LIFT STATION & DETAILS

Stanley Consultants inc.

PRELIMINARY
STAGE IV
95% Review
NOT FOR CONSTRUCTION OR RECORDING

ROUTE 202L | LOCATION RED MTN FWY, POWER ROAD - UNIVERSITY DRIVE | DWG NO. D-4.23

TRACS NO. H 5782 01C | 202-B(007)B | ___ OF ___

4/22/2005 q:\17000\active\07-05-dwgs\BR-drain\h5782dd21.dgn

F.A.P.No. REGION	STATE	PROJECT NO.	SHEET NO.	TOTAL SHEETS	AS BUILT
9	ARIZ.	202-B(007)B			
		202 MA 023			

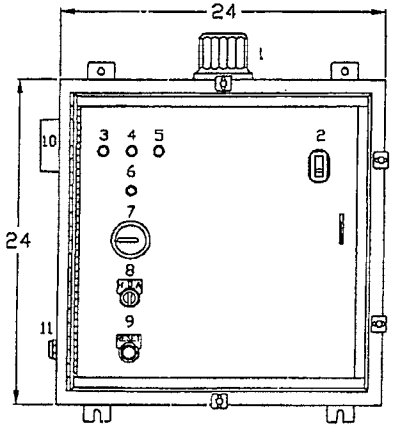

1 - ALARM LIGHT
2 - MOTOR BREAKER
3 - OFF
4 - LEAD
5 - HIGH
6 - RUN LIGHT
7 - ELAPSED TIME METER
8 - HAND OFF AUTO
9 - RESET MINI-CAS
10 - ALARM HORN
11 - ALARM SILENCE BUTTON

OUTER DOOR HAS BEEN REMOVED FOR CLARITY

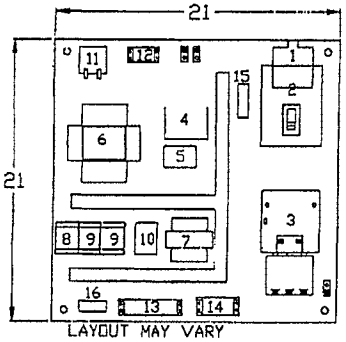

1 - LIGHTNING ARRESTOR
2 - MOTOR BREAKER
3 - MOTOR STARTER
4 - FUSE BLOCK
5 - PHASE MONITOR
6 - TRANSFORMER
7 - TRANSFORMER
8-9 - RELAY 1-3
10 - MINI-CAS
11 - FLASHER
12-14 - TERMINAL STRIP A-C
15 - THERMOSTAT
16 - HEATER

LAYOUT MAY VARY

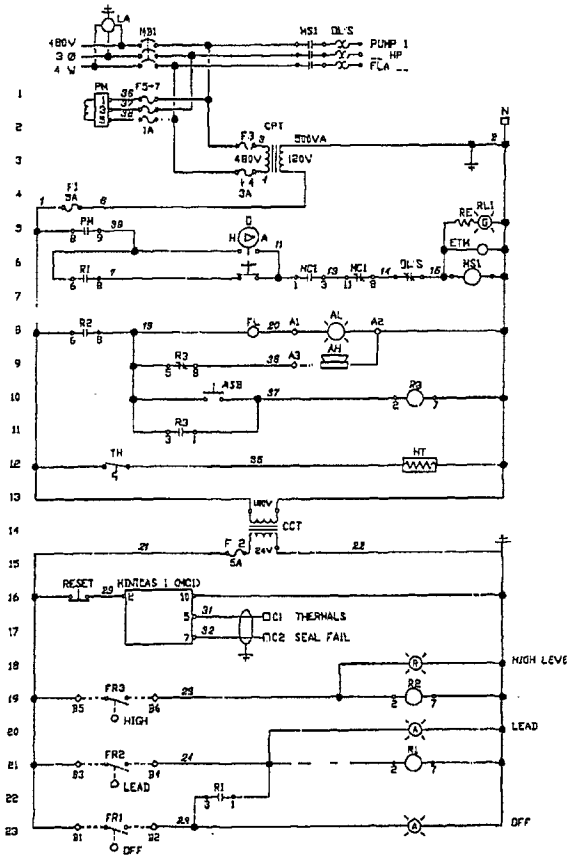

BASIS OF DESIGN TO BE FLYGT *RRC10.0AABACC

DETAIL D19

SHEET 5 OF 6

	NAME	DATE
DESIGN	FLB	4/05
DRAWN	JJD	4/05
CHECKED	FLB	4/05

Stanley Consultants inc.

ARIZONA DEPARTMENT OF TRANSPORTATION
INTERMODAL TRANSPORTATION DIVISION
ROADWAY DESIGN SERVICES

SIGNAL BUTTE
LIFT STATION
PUMP SCHEMATIC

PRELIMINARY
STAGE IV
95% Review
NOT FOR CONSTRUCTION OR RECORDING

ROUTE	LOCATION
202L	RED MTN FWY, POWER ROAD - UNIVERSITY DRIVE

DWG NO. D-4.25

TRACS NO. H 5782 01C | 202-B(007)B | OF

4/22/2005 q:\17888\active\87-85-design\18-pump\muso\h5782d424.dgn

F.H.W.A. REGION	STATE	PROJECT NO.	SHEET NO.	TOTAL SHEETS	AS BUILT
9	ARIZ.	202-B(007)B			

202 MA 023

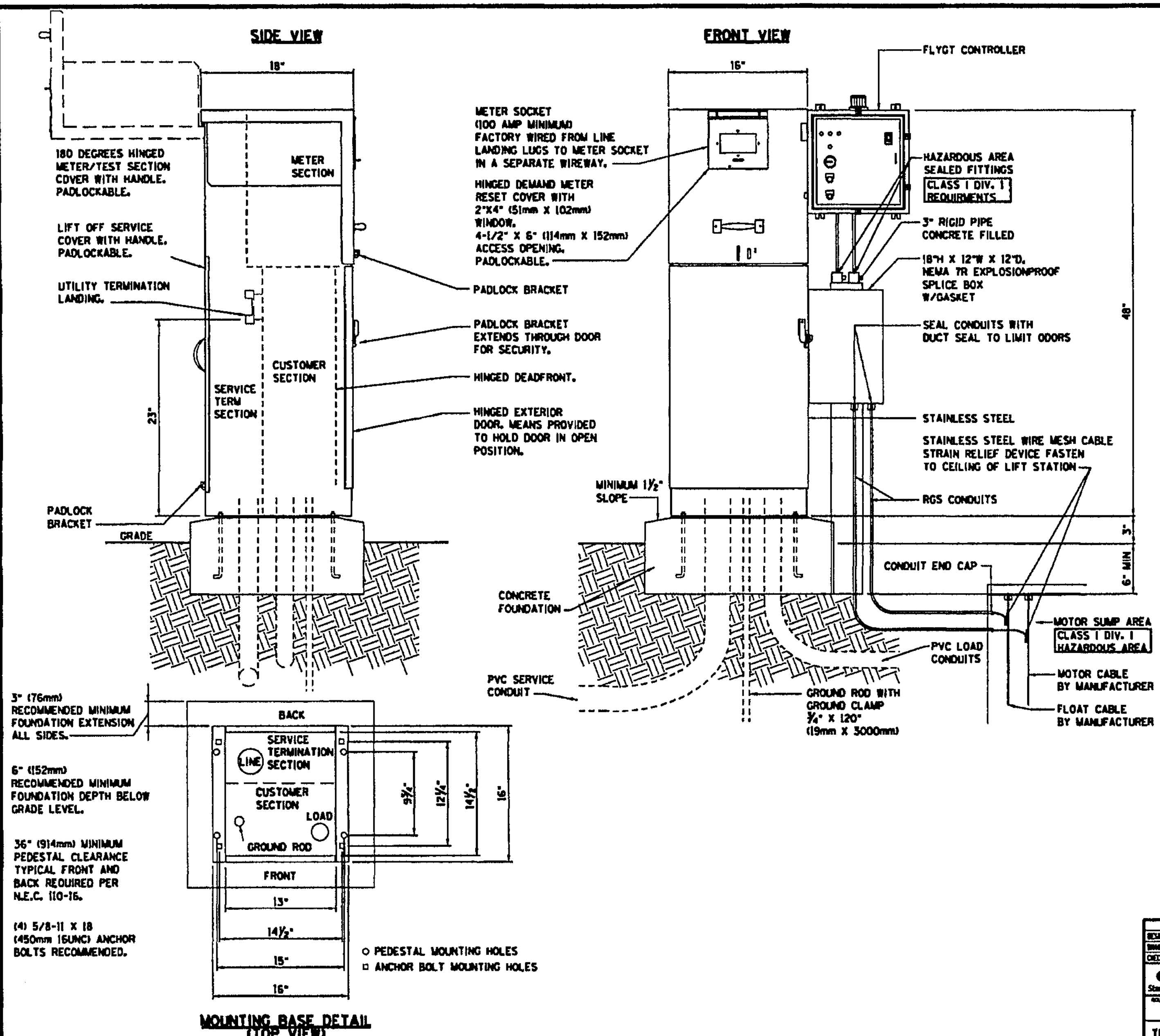

NOTES:

1. CONTROL CABINET SHALL BE U/L LISTED "INDUSTRIAL CONTROL PANEL" PER UL 508.
2. CONSTRUCTION SHALL BE NEMA 3R.
3. VOLTAGE RATINGS OF SERVICE EQUIPMENT SHALL CONFIRM TO THE SERVICE VOLTAGES INDICATED ON THE PLANS.
4. SERVICE EQUIPMENT ENCLOSURE AND METERING EQUIPMENT SHALL MEET THE REQUIREMENTS OF THE SERVING UTILITY. THE METER AREA SHALL HAVE A SEALABLE, LOCKABLE, RAINTIGHT COVER THAT CAN BE REMOVED WITHOUT THE USE OF TOOLS.
5. SERVICE EQUIPMENT SHALL BE FACTORY WIRED AND CONFIRM TO NEMA STANDARDS AND TO SECTION 86-2.11, "SERVICE" OF THE STANDARD SPECIFICATIONS.
6. THE EXTERIOR DOOR SHALL HAVE PROVISIONS FOR PADLOCKING. THE PADLOCK HOLE SHALL BE A MINIMUM DIAMETER OF 11mm.
7. ALL TERMINALS FOR INCOMING SERVICE CONDUCTORS SHALL BE COMPATIBLE WITH EITHER COPPER OR ALUMINUM CONDUCTORS SIZED TO SUIT THE CONDUCTORS SHOWN ON THE PLAN. TERMINAL LUGS SHALL BE COPPER OR TIN-PLATED ALUMINUM. SOLID NEUTRAL TERMINAL STRIP SHALL BE RATED 125A UNLESS OTHERWISE SPECIFIED AND FOR USE WITH COPPER OR ALUMINUM CONDUCTORS. THE TERMINAL SHOULD INCLUDE BUT NOT BE LIMITED TO:
   A) INCOMING TERMINALS (LANDING LUGS)
   B) NEUTRAL LUGS
   C) SOLID NEUTRAL TERMINAL STRIP.
   D) TERMINAL STRIPS FOR CONDUCTORS WITHIN THE ENCLOSURE.
8. PROVIDE SINGLE POLE BREAKERS (20mm NOMINAL) AS SHOWN ON PANEL SCHEDULES FOR BRANCH CIRCUITS. CIRCUIT BREAKER INTERIORS SHALL BE COPPER. INTERIORS SHALL ACCEPT PLUG-IN OR CABLE-IN/ CABLE-OUT CIRCUIT BREAKERS.
9. PLUG-IN CIRCUIT BREAKERS MAY BE MOUNTED IN THE VERTICAL OR HORIZONTAL POSITION. CABLE-IN/ CABLE-OUT CIRCUIT BREAKERS SHALL BE MOUNTED IN THE VERTICAL POSITION.
10. FASTENERS ON THE EXTERIOR OF THE ENCLOSURE SHALL BE VANDAL RESISTANT AND SHALL NOT BE REMOVABLE FROM THE EXTERIOR. ALL NUTS, BOLTS, SCREWS, WASHERS, AND HINGES SHALL BE STAINLESS STEEL.
11. PHENOLIC NAME PLATES SHALL BE PROVIDED AS REQUIRED.
12. A PLASTIC COVERED WIRING DIAGRAM SHALL BE ATTACHED TO THE INSIDE OF THE FRONT DOOR.
13. FOUNDATION SHALL EXTEND 50mm MINIMUM BEYOND EDGE OF ENCLOSURE.

DETAIL D19

SHEET 6 OF 6

	NAME	DATE
DESIGN	FLB	4/05
DRAWN	AJD	4/05
CHECKED	FLB	4/05

Stanley Consultants Inc.

ARIZONA DEPARTMENT OF TRANSPORTATION
INTERMODAL TRANSPORTATION DIVISION
ROADWAY DESIGN SERVICES

SIGNAL BUTTE
ENERGY DISSIPATION
LIFT STATION

PRELIMINARY
STAGE IV
95% Review
NOT FOR CONSTRUCTION OR RECORDING

ROUTE 202L | LOCATION RED MTN FWY, POWER ROAD - UNIVERSITY DRIVE | DWG NO. D-4.26

TRACS NO. H 5782 01C | 202-B(007)B | ___ OF ___

F.A.H.S. REGION	STATE	PROJECT NO.	SHEET NO.	TOTAL SHEETS	AS BUILT
9	ARIZ.	202-B(007)B			
		202 MA 023			

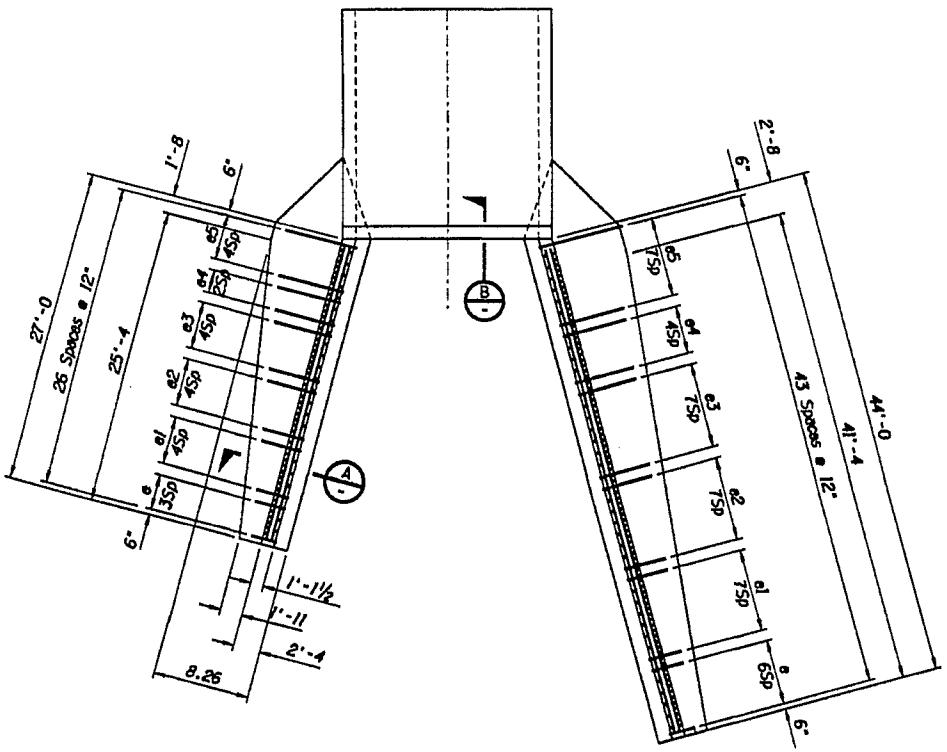

PLAN

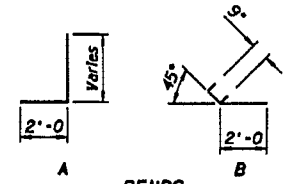

BENDS

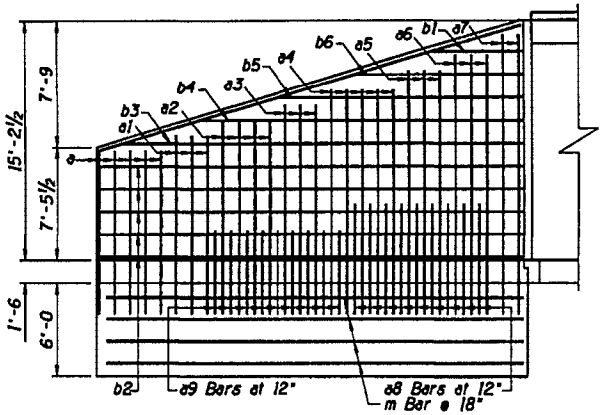

WING ELEVATION
(BACK FACE REINF.)
(SHORT WALL SHOWN, LONG WALL SIMILAR)

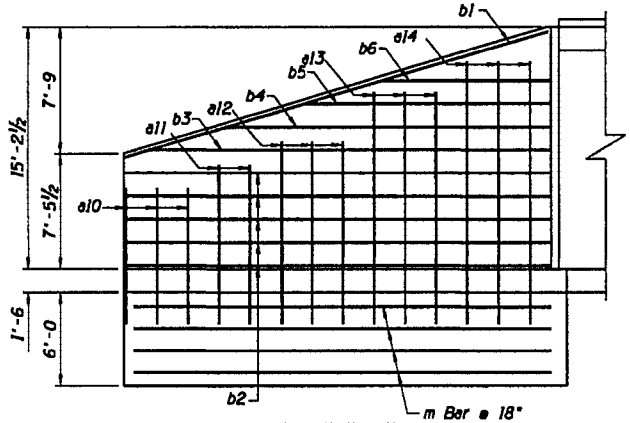

WING ELEVATION
(FRONT FACE REINF.)
(SHORT WALL SHOWN, LONG WALL SIMILAR)

DETAIL D20

SHEET 1 OF 2

	NAME	DATE
DESIGN	DJ	4/05
DRAWN	AEM	4/05
CHECKED	CAD	4/05

Stanley Consultants Inc.

ARIZONA DEPARTMENT OF TRANSPORTATION
INTERMODAL TRANSPORTATION DIVISION
ROADWAY DESIGN SERVICES

FLOOD POOL & TRAIL
RCB WINGWALL DETAILS

PRELIMINARY
STAGE IV
95% Review
NOT FOR CONSTRUCTION OR RECORDING

ROUTE	LOCATION	DWG NO. D-427
202L	RED MTN FWY, POWER ROAD - UNIVERSITY DRIVE	
TRACS NO. H 5782 01C		202-B(007)B — OF —

4/22/2005 q:\17888\active\07-85-dwgs\04-drain\h5782d0v08.dgn

F.H.W.A. REGION	STATE	PROJECT NO.	SHEET NO.	TOTAL SHEETS	AS BUILT
9	ARIZ.	202-B(007)B			

202 MA 023

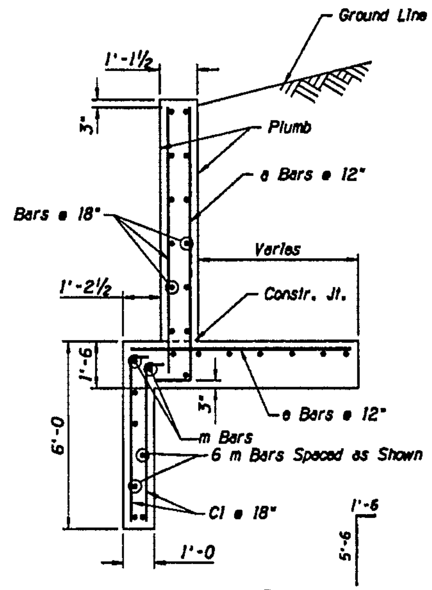

SECTION (A)

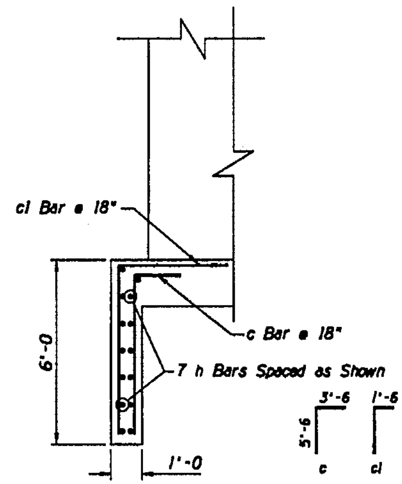

SECTION (B)

WING WALL & CUTOFF WALL STEEL LIST											
			Number						Number		
Mark	Bend	Size	Short Wall	Long Wall	Lngth.	Mark	Bend	Size	Short Wall	Long Wall	Lngth.
a	A	#5	5	8	10'-9	b4	str.	#6	2	--	20'-6
a1	A	#5	3	5	11'-9	b5	str.	#4	2	--	15'-3
a2	A	#5	4	6	12'-9	b6	str.	#4	2	--	10'-3
a3	A	#6	3	6	13'-9	b11	str.	#4	--	2	44'-3
a4	A	#6	5	4	14'-9	b12	str.	#4	--	10	43'-9
a5	A	#6	3	5	16'-0	b13	str.	#4	--	2	42'-3
a6	A	#6	3	6	17'-0	b14	str.	#4	--	2	33'-9
a7	A	#7	2	2	18'-3	b15	str.	#4	--	2	25'-3
a8	str.	#8	15	25	7'-3	b16	str.	#4	--	2	16'-9
a9	str.	#6	10	15	5'-3	cl	Cl	#4	38	60	7'-0
a10	str.	#4	4	8	8'-9	e	str.	#5	4	7	3'-9
a11	str.	#4	4	5	10'-3	e1	str.	#5	5	8	4'-6
a12	str.	#4	4	5	11'-9	e2	str.	#6	5	8	5'-3
a13	str.	#4	3	7	13'-3	e3	str.	#7	5	8	6'-0
a14	str.	#4	3	5	15'-0	e4	str.	#8	3	5	6'-9
m	str.	#4	4	--	26'-6	e5	str.	#9	5	8	7'-3
m1	str.	#4	--	4	43'-6	Barrel Cutoff Wall					
b	str.	#4	10	10	2'-9	h	str.	#8	14		17'-6
b1	str.	#6	2	--	27'-6	c	C	#4	13		9'-0
b2	str.	#4	10	--	26'-9	cl	Cl	#4	13		7'-0
b3	str.	#4	2	--	25'-9						
WING WALL & CUTOFF QUANTITES											
Steel											5905 Lbs
Conc.											60.4 CY

DETAIL D20

SHEET 2 OF 2

	NAME	DATE
DESIGN	DJ	4/05
DRAWN	AEM	4/05
CHECKED	CAD	4/05

Stanley Consultants inc.

ARIZONA DEPARTMENT OF TRANSPORTATION
INTERMODAL TRANSPORTATION DIVISION
ROADWAY DESIGN SERVICES

FLOOD POOL & TRAIL
RCB WINGWALL DETAILS

PRELIMINARY
STAGE IV
95% Review
NOT FOR CONSTRUCTION OR RECORDING

ROUTE 202L | LOCATION RED MTN FWY, POWER ROAD - UNIVERSITY DRIVE

DWG NO. 0-4.28

TRACS NO. H 5782 01C | 202-B(007)B | ___ OF ___

F.A.S.A. NUMBER	STATE	PROJECT NO.	SHEET NO.	TOTAL SHEETS	AS BUILT
9	ARIZ.	202-B(007)I			
		202 MA 023			

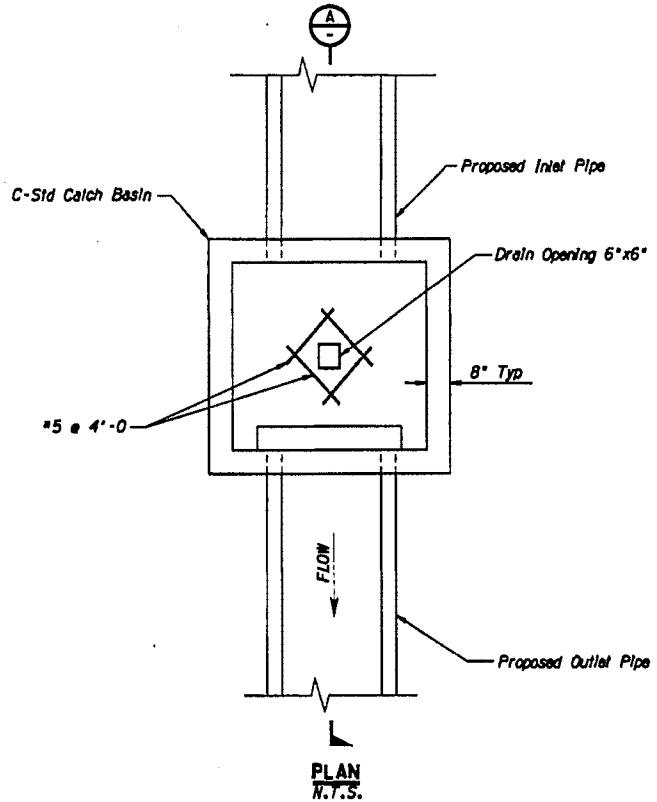

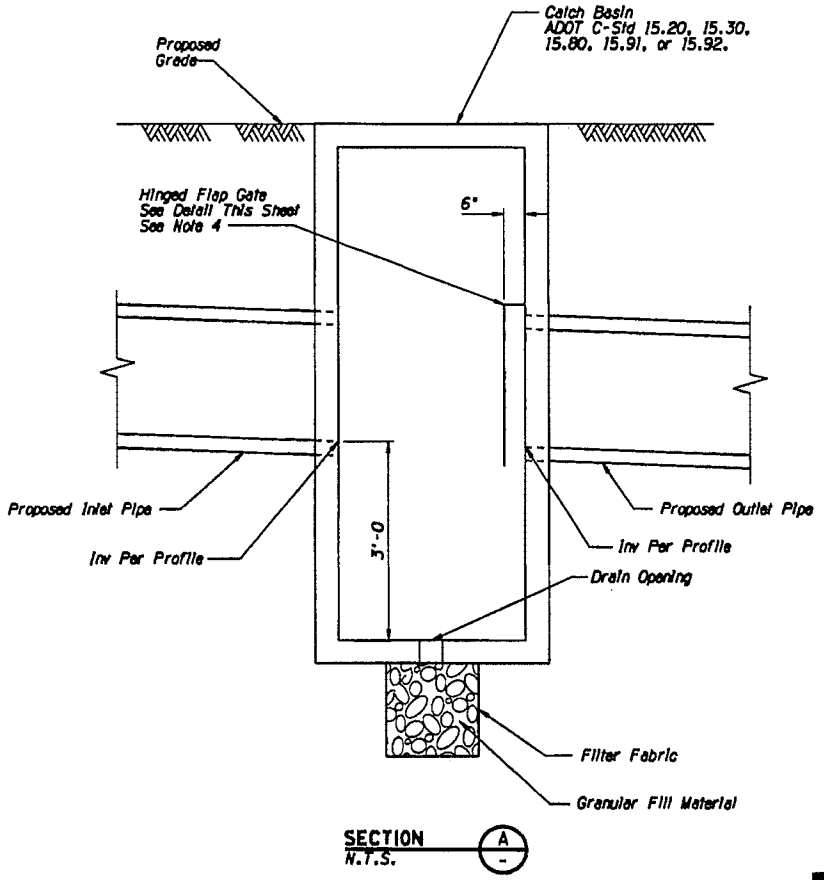

DETAIL D21

NOTES:

1. All concrete shall be Class B.
2. All reinforcing steel shall conform to 1003-1, 1003-2, Grade 300.
3. Provide Hinged Flap Gate over outlet pipes for only catch basins: 103, 105, 106, 188, 193, 204, 293, 310, 315, 335, 341, 342, 389, 713, 766, and 858.
4. This Detail Shall be Considered Incidental to the Cost to ADOT C-Std Catch Basins 15.20, 15.30, 15.80, 15.91, and 15.92.

	NAME	DATE
DESIGN	CAD	4/05
DRAWN	AEM	4/05
CHECKED	CAD	4/05

Stanley Consultants Inc.

ARIZONA DEPARTMENT OF TRANSPORTATION
INTERMODAL TRANSPORTATION DIVISION
ROADWAY DESIGN SERVICES

CATCH BASIN DETAIL

PRELIMINARY
STAGE IV
95% Review
NOT FOR CONSTRUCTION OR RECORDING

ROUTE	LOCATION	DRG NO. D-4.26
202L	RED MTN FWY, POWER ROAD - UNIVERSITY DRIVE	
TRACS NO. H 5782 01C		202-B(007)B

___ OF ___

4/25/2005 D:\17888\Active\87-00-Dsgn\04-Drain\H5782D23.dgn

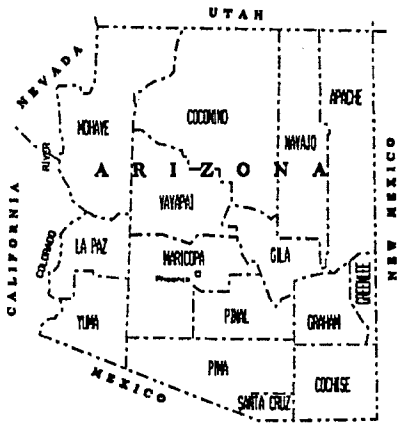

STATE OF ARIZONA
DEPARTMENT OF TRANSPORTATION
INTERMODAL TRANSPORTATION DIVISION

PLAN AND PROFILE OF PROPOSED
STATE HIGHWAY
202L MA 023

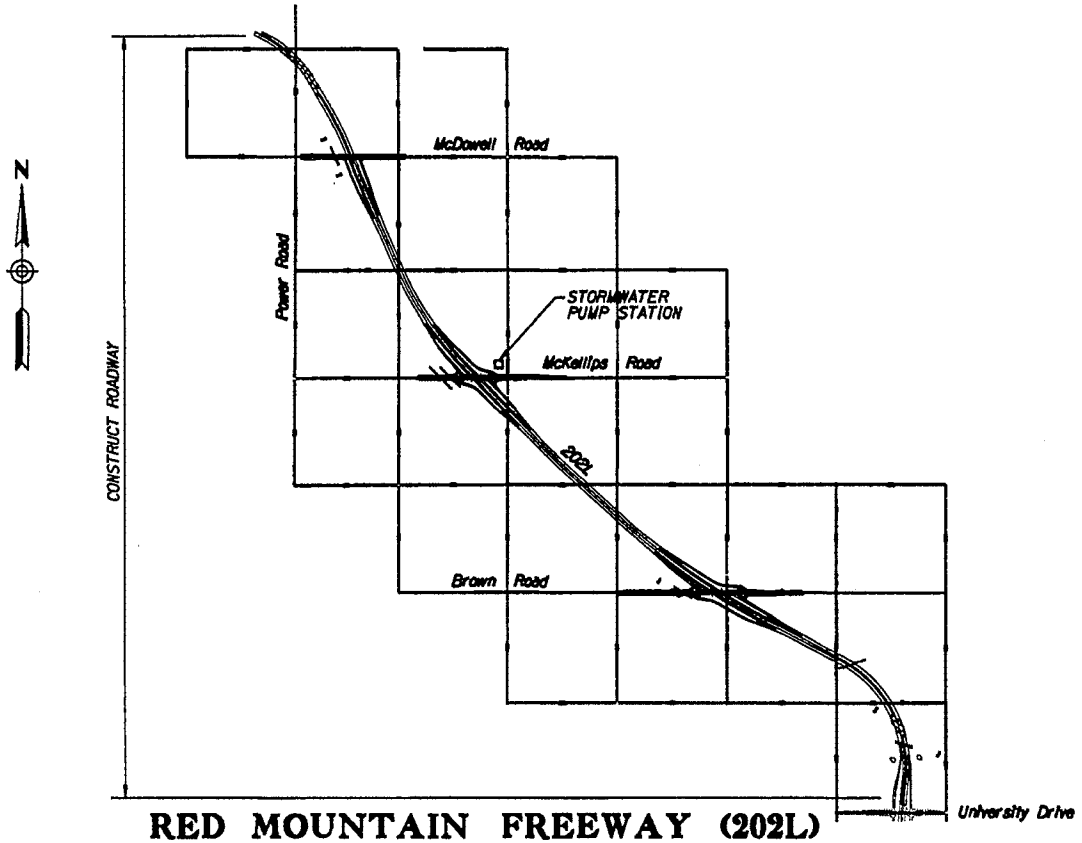

RED MOUNTAIN FREEWAY (202L)
POWER ROAD - UNIVERSITY DRIVE
STORMWATER PUMP STATION

ARIZONA DEPARTMENT OF TRANSPORTATION
INTERMODAL TRANSPORTATION DIVISION
APPROVED
STATE ENGINEER

APPROVED DATE
ASSISTANT STATE ENGINEER

4/22/2005 q:\17888\active\87-85-dega\18-pump\h5762pag01.dgn

INDEX OF DRAWINGS

DRAWING NO.	SHEET TITLE
	GENERAL
P-G.1	COVER SHEET
P-G.2	INDEX OF DRAWINGS AND GENERAL NOTES
P-G.3	PUMP STATION ABBREVIATIONS
	CIVIL
P-C.1	PUMP STATION SITE PLAN
P-C.2	PUMP STATION FLOOR PLAN ELEVATION 1593.00
P-C.3	PUMP STATION FLOOR PLAN ELEVATION 1581.50
P-C.4	PUMP STATION FLOOR PLAN ELEVATION 1570.00
P-C.5	PUMP STATION FLOOR PLAN ELEVATION 1543.00
P-C.6	PUMP STATION SECTION A-A
P-C.7	PUMP STATION SECTION B-B
P-C.8	PUMP STATION GATE DETAILS
P-C.9	PUMP STATION BAR SCREEN DETAILS, SHEET NO. 1
P-C.10	PUMP STATION BAR SCREEN DETAILS, SHEET NO. 2
P-C.11	PUMP STATION HANDRAIL, LADDER, SHAFT COUPLING GUARD AND FLAP GATE DETAILS
P-C.12	PUMP STATION PIPE SUPPORTS AND DETAILS
P-C.13	PUMP STATION DETAIL NO. PC1
P-C.14	PUMP STATION DETAIL NO. PC1
P-C.15	PUMP STATION MISCELLANEOUS DETAILS
P-C.16	PUMP STATION PUMP DISCHARGE/ENGINE DRIVE SECTION
P-C.17	4" & 2" SERVICE WATER LINE PROFILE (NOT INCLUDED)
P-C.18	6" FIRE SERVICE WATER LINE PROFILE (NOT INCLUDED)
P-C.19	PRIVATE FIRE SERVICE MAIN - DOUBLE CHECK ASSEMBLY BACKFLOW PREVENTION ASSEMBLY
	ARCHITECTURAL
P-A.1	PUMP STATION FLOOR PLAN
P-A.2	PUMP STATION BUILDING ELEVATIONS
P-A.3	PUMP STATION BUILDING ELEVATIONS AND BUILDING SECTION
P-A.4	PUMP STATION ROOF PLAN
P-A.5	PUMP STATION WALL SECTIONS
P-A.6	PUMP STATION OPENING SCHEDULE AND ROOM FINISH SCHEDULE AND DETAILS
P-A.7	PUMP STATION ARCHITECTURAL DETAILS-SHEET 1
P-A.8	PUMP STATION ARCHITECTURAL DETAILS-SHEET 2

DRAWING NO.	SHEET TITLE
	STRUCTURAL
P-S.1A	STRUCTURAL NOTES AND DRAWING INDEX
P-S.1B	STRUCTURAL NOTES
P-S.2A	FOUNDATION DATA 1 OF 2 (NOT INCLUDED)
P-S.2B	FOUNDATION DATA 2 OF 2 (NOT INCLUDED)
P-S.3	STRUCTURAL EXCAVATION AND BACKFILL LIMITS
P-S.4	FLOOR PLAN ELEVATION 1543.00 & 1550.00
P-S.5	FLOOR PLAN ELEVATION 1570.00
P-S.6	FLOOR PLAN ELEVATION 1581.50
P-S.7	FLOOR PLAN ELEVATION 1593.00
P-S.8	LONGITUDINAL SECTION A-A
P-S.9	TRAVERSE SECTION B-B
P-S.10	ROOF FRAMING PLANS
P-S.11	BUILDING SECTIONS
P-S.12	STRUCTURAL DETAILS-SHEET 1
P-S.13	STRUCTURAL DETAILS-SHEET 2
P-S.14	STRUCTURAL DETAILS-SHEET 3
P-S.15	SECTIONS AND DETAILS
P-S.16	SECTIONS AND DETAILS
P-S.17	SECTIONS AND DETAILS
P-S.18	SECTIONS AND DETAILS
P-S.19	SECTION AND DETAILS
P-S.20	STAIR PLAN, SECTION AND DETAIL
P-S.21	MISCELLANEOUS DETAILS
P-S.22	PLATFORM DETAILS
P-S.23	DISCHARGE BOX PLAN AND SECTIONS
P-S.24	DISCHARGE BOX SECTIONS AND DETAILS
P-S.25	DISCHARGE BOX SECTIONS AND DETAILS
	MECHANICAL
P-HV.1	PUMP STATION LEGEND, MECHANICAL EQUIPMENT SCHEDULES AND DETAILS
P-HV.2	PUMP STATION HVAC AND PIPING PLANS @ EL 1543.00 AND EL 1570.00
P-HV.3	PUMP STATION HVAC AND PIPING PLANS @ EL 1581.50 AND EL 1593.00
P-HV.4	PUMP STATION ROOF HVAC PLAN
P-HV.5	PUMP STATION MECHANICAL SECTION-SHEET 1
P-HV.6	PUMP STATION MECHANICAL SECTION-SHEET 2

DRAWING NO.	SHEET TITLE
	ELECTRICAL
P-E.1	PUMP STATION ELECTRICAL LEGEND
P-E.2	PUMP STATION ELECTRICAL SITE PLAN
P-E.3	PUMP STATION ELECTRICAL ONE-LINE DIAGRAM
P-E.4	PUMP STATION POWER AND LIGHTING PLANS @ EL 1543.00 AND EL 1570.00
P-E.5	PUMP STATION POWER PLANS @ EL 1581.50 AND EL 1593.00
P-E.6	PUMP STATION ROOF POWER PLAN AND ELECTRICAL CONTROL ROOM PLAN
P-E.7	PUMP STATION LIGHTING PLANS @ EL 1581.50 AND EL 1593.00
P-E.8	PUMP STATION ELECTRICAL DETAILS
P-E.9	PUMP STATION ELECTRICAL SCHEDULES
P-E.10	PUMP STATION CONTROL AND WIRING SCHEMATIC-SHEET 1
P-E.11	PUMP STATION CONTROL AND WIRING SCHEMATIC-SHEET 2
P-E.12	PUMP STATION CONTROL AND WIRING SCHEMATIC-SHEET 3
P-E.13	PUMP STATION CONTROL AND ALARM SCHEMATIC DIAGRAM-SHEET 1
P-E.14	PUMP STATION CONTROL AND ALARM SCHEMATIC DIAGROM-SHEET 2

F.A.H.U.A. REGION	STATE	PROJECT NO.	SHEET NO.	TOTAL SHEETS	AS BUILT
9	ARIZ.	202-B100718			
		202 MA 023			

GENERAL NOTES:

1. DATUM 1929 NATIONAL GEODETIC VERTICAL DATUM
2. A THOROUGH ATTEMPT HAS BEEN MADE TO SHOW THE LOCATIONS OF ALL UNDERGROUND OBSTRUCTIONS AND UTILITY LINES IN THE WORK AREA. HOWEVER, THE CONTRACTOR SHALL BE RESPONSIBLE FOR ANY DAMAGE TO OBSTRUCTIONS AND UTILITY LINES ENCOUNTERED DURING CONSTRUCTION AND SHALL DETERMINE THE EXACT LOCATION OF UTILITIES IN ADVANCE OF EXCAVATION AND TRENCHING
3. THE ENGINEER WILL NOT BE RESPONSIBLE FOR CONSTRUCTION MEANS, METHODS, TECHNIQUES, SEQUENCES OR PROCEDURES OR FOR SAFETY PRECAUTIONS OR PROGRAMS UTILIZED IN CONNECTION WITH THE WORK, AND WILL NOT BE RESPONSIBLE FOR THE CONTRACTOR'S FAILURE TO CARRY OUT THE WORK
4. FOR STRUCTURAL CRITERIA AND NOTES, SEE DRAWING P-S.1
5. FOR MECHANICAL LEGEND, MECHANICAL EQUIPMENT SCHEDULES AND DETAILS, SEE DRAWING P-HV.1
6. FOR ELECTRICAL LEGEND, ABBREVIATIONS AND NOTES, SEE DRAWING P-E.1
7. IN ACCORDANCE WITH AAC R18-4-119, ALL MATERIALS WHICH MAY COME INTO CONTACT WITH DRINKING WATER SHALL CONFORM TO NATIONAL SANITATION FOUNDATION STANDARD 60 AND 61

	NAME	DATE
DESIGN	F.L.R	4/05
DRAWN	J.J.O	4/05
CHECKED		4/05

Stanley Consultants Inc.

ARIZONA DEPARTMENT OF TRANSPORTATION
INTERMODAL TRANSPORTATION DIVISION
ROADWAY DESIGN SERVICES

INDEX OF DRAWINGS AND GENERAL NOTES

PRELIMINARY
STAGE IV
95% Review
NOT FOR CONSTRUCTION OR RECORDING

ROUTE	LOCATION	DRG NO. P-G.2
202L	RED MTN FWY. POWER ROAD - UNIVERSITY DRIVE	
TRACS NO. H 5782 01C		202-B100718 ___ OF ___

4/22/2005 q:\17888\active\87-88-dwgs\18-pump\h5782pg02.dgn

F.H.W.A. REGION	STATE	PROJECT NO.	SHEET NO.	TOTAL SHEETS	AS BUILT
9	ARIZ.	202-B(007)B			

202 MA 023

A/E	ARCHITECT/ENGINEER
AB	ANCHOR BOLT
ABC	AGGREGATE BASE COURSE
ABS	ACRYLONITRILE-BUTADIENE-STYRENE PIPE
AC	ASPHALT CONCRETE
AC	ALTERNATING CURRENT
ACC	ACCUMULATOR
ACCESS	ACCESSORY; ACCESSORIES
ACP	ASBESTOS CEMENT PIPE
ADD	ADDITION; ADDITIONAL
ADJ	ADJUST; ADJUSTABLE
AGGR	AGGREGATE
AHU	AIR HANDLING UNIT
AIR COND OR AC	AIR CONDITIONING
AL	ALUMINUM
ALIGN	ALIGNMENT
ALLOW	ALLOWANCE
ALM	ALARM
ALTN	ALTERNATE
AMP OR A	AMPERE
ANN	ANNUNCIATOR
ANSI	AMERICAN NATIONAL STANDARDS INSTITUTE
APPROX	APPROXIMATE
ARCH	ARCHITECT; ARCHITECTURE
AS OR ASPLY	AIR SUPPLY
ASPH	ASPHALT
ASTM	AMERICAN SOCIETY FOR TESTING & MATERIALS
ATC	ACOUSTICAL TILE CEILING
ATS	AUTOMATIC TRANSFER SWITCH
AUTO	AUTOMATIC
AUX	AUXILIARY
AVG	AVERAGE
AWG	AMERICAN WIRE GAGE
B/M	BILL OF MATERIAL
B TO B	BACK TO BACK
BAF	BAFFLE
BC	BOLT CIRCLE
BC	BEGINNING OF CURVE
BCR	BEGINNING OF CURB RETURN
BE	BELL END
BEG	BEGINNING
BEV	BEVEL
BF	BOTTOM FACE; BUTTERFLY
BHP	BRAKE HORSEPOWER
BL	BUILDING LINE
BL	BASE LINE
BLDG	BUILDING
BLWDN	BLOWDOWN
BM	BENCHMARK
BO	BLOWOFF
BOC	BACK OF CURB
BOD	BOTTOM OF DUCT
BOG	BOTTOM OF GRILLE
BOT	BOTTOM
BP	BASE PLATE
BRG	BEARING
BRK	BRICK
BRKR	BREAKER
BTRY	BATTERY
BTU	BRITISH THERMAL UNITS
BTWLD	BUTT WELD
C TO C OR CC OR C/C	CENTER TO CENTER
C/S	CYCLE PER SECOND
C	CURB OR CONCRETE
CA	COLD AIR
CAB	CABINET
CALC	CALCULATE
CAP	CAPACITY
CARP	CARPET
CAT OR CTGRY	CATEGORY
CB	CATCH BASIN
CB	CIRCUIT BREAKER
CD	CEILING DIFFUSER
CEM	CEMENT
CF	CURB FACE
CFM	CUBIC FEET PER MINUTE
CFS	CUBIC FEET PER SECOND
CGU	CERAMIC GLAZED UNITS
CHAM	CHAMFER
CHAN	CHANNEL
CHBD	CHALKBOARD
CHEM FD	CHEMICAL FEED
CHK	CHECK
CIP	CAST-IRON PIPE
CIRC	CIRCULAR
CISP	CAST-IRON SOIL PIPE
CJ	CONSTRUCTION JOINT
CKT	CIRCUIT
CL	CLEARANCE OR CLASS
CL OR C	CENTER LINE
CL	CHLORINE GAS/SOLUTION
CLG	CEILING
CLJ	CONTROL JOINT
CLKG	CAULKING
CLO	CLOSET
CLR	COOLER
CLR	CLEAR
CMP	CORRUGATED METAL PIPE
CMU	CONCRETE MASONRY UNIT
CND	CONDUIT
CO	CLEANOUT
CO	CHANGE ORDER
COL	COLUMN
COLL	COLLECTOR
COMB	COMBINATION
CONC	CONCRETE
CONN	CONNECTION
CONST OR CONSTR	CONSTRUCT/CONSTRUCTION
CONT	CONTINUOUS
CONT	CONTINUE OR CONTINUE
CONTR	CONTRACT/CONTRACTOR
CORP	CORPORATION
CORR	CORRIDOR
CPLG	COUPLING
CPRSR	COMPRESSOR
CS	CARBON STEEL
CSMT	CASEMENT
CT	CERAMIC TILE
CT	CURRENT TRANSFORMER
CTR	CENTER
CU FT OR CF	CUBIC FOOT
CU	CUBIC OR COPPER PIPE
CU YD OR CY	CUBIC YARD
CULV	CULVERT
CV	CONTROL VALVE; CHECK VALVE
CW	COLD WATER
CYL	CYLINDER
DBL	DOUBLE
DC	DIRECT CURRENT
DEG OR (°)	DEGREE
DEL OR DLVR	DELIVER
DET	DETAIL
DF	DRINKING FOUNTAIN
DG	DECOMPOSED GRANITE
DIA	DIAMETER
DIAPH	DIAPHRAGM
DIFF	DIFFERENTIAL OR DIFFUSER
DIM	DIMENSION
DIP	DUCTILE IRON PIPE
DIR	DIRECTIONAL OR DIRECT
DISC	DISCONNECT
DISCH	DISCHARGE
DIST	DISTANCE
DIV	DIVIDE, DIVISION
DMPR	DAMPER
DN	DOWN
DO	DOOR OPENING
DOZ	DOZEN
DPDT	DOUBLE-POLE DOUBLE-THROW
DPP	DISTRIBUTION POWER PANEL
DPST	DOUBLE-POLE SINGLE-THROW
DR	DOOR OR DRIVE OR DRAIN
DRWG	DRAWING
DS	DRAINS AND SUMPS
DSGN	DESIGN
DW	DEMINERALIZED WATER
EA	EACH
EASE	EASEMENT
ECC	ECCENTRIC
EF	EACH FACE
EFL	EFFLUENT
EJCTR	EJECTOR
EL OR ELEV	ELEVATION
ELEC	ELECTRIC
ELEM	ELEMENT
EMER	EMERGENCY
EMT	ELECTRICAL METALLIC TUBING
ENCL	ENCLOSURE
ENG	ENGINE
ENGR	ENGINEER
ENTR	ENTRANCE
EP	EXPLOSION-PROOF
EQL OR =	EQUALS
EQPT	EQUIPMENT
ES	EMERGENCY SHOWER OR EACH SIDE
EST	ESTIMATE
EW	EACH WAY
EWH	ELECTRIC WATER HEATER
EX OR EXIST	EXISTING
EXC	EXCAVATE
EXP	EXPOSED
EXP JT	EXPANSION JOINT
EXT	EXTERIOR
F TO F	FACE TO FACE
F	FAHRENHEIT
FA	FIRE ALARM
FAB	FABRICATE
FBO	FURNISHED BY OWNER
FC	FACE OF CURB
FD	FLOOR DRAIN
FDN	FOUNDATION
FE	FLANGED END; IRON
FEXT	FIRE EXTINGUISHER
FF	FINISH FLOOR
FH	FIRE HYDRANT
FI	FAIL INTERMEDIATE
FIG	FIGURE
FIT	FLOW INDICATING TRANSMITTER
FL	FLOW LINE OR FLUSH OR FLASHING
FLD VER	FIELD VERIFY
FL EL	FLOOR ELEVATION
FLEX	FLEXIBLE
FLG	FLANGE
FLOCC	FLOCCULATOR
FLR	FLOOR
FLRG	FLOORING
FLTR	FILTER
FLUOR	FLUORESCENT
FNSH	FINISH
FP	FINISH PAD
FPS	FEET PER SECOND
FPT	FEMALE PIPE THREAD
FR	FRAME
FRP	FIBERGLASS REINFORCED PIPE
FS	FINISHED SURFACE
FT OR (')	FOOT OR FEET OR FLOW TRANSMITTER
FTG	FOOTING
FURN	FURNISH OR FURNITURE
FW	FILTERED WATER
FXTR	FIXTURE
GA	GAGE (OR GAUGE)
GAL	GALLON
GALV	GALVANIZED
GAS	GASOLINE
GB	GRADE BREAK
GEN	GENERATOR
GL	GLASS
GND	GROUND
GPM	GALLON PER MINUTE
GR	GREASE OR GRADE
GRTG	GRATING
GSKT	GASKET
GV	GATE VALVE
GVL	GRAVEL
GWB	GYPSUM WALLBOARD
H	HIGH OR HEIGHT
HC	HOLLOW CORE
HDR	HEADER
HDW	HARDWARE
HDWL	HEADWALL
HGT	HEIGHT
HM	HOLLOW METAL
HOA	HAND-OFF-AUTO SWITCH
HORIZ	HORIZONTAL
HP	HORSEPOWER
HP	HIGH PRESSURE
HR	HOUR
HS	HIGH STRENGTH
HTR	HEATER
HVAC	HEATING, VENTILATING & AIR CONDITIONING
HVY	HEAVY
HW	HOT WATER
HWH	HOT-WATER HEATER
HWY	HIGHWAY
HYD	HYDRANT
HYDR	HYDRAULIC
HZ	HERTZ
I/O	INPUT/OUTPUT
IA	INSTRUMENT AIR
IC	INTERCOM
ID	INSIDE DIAMETER
IDENT	IDENTIFICATION
IE OR INV EL	INVERT ELEVATION
IN OR (")	INCH
INCAND	INCANDESCENT
INCL	INCLUDE
IND	INDICATE
INIT	INITIAL
INJ	INJECTION
INL	INLET
INSP	INSPECT
INSTL	INSTALL INSTALLATION
INSTR	INSTRUMENT
INSUL	INSULATION
INTL	INTERNAL
INTR	INTERIOR
INV	INVERT
IPT	INTERNAL PIPE THREAD
JB	JUNCTION BOX
JCT	JUNCTION
JST	JOIST
JT	JOINT
KVA	KILOVOLT AMPERES
KW	KILOWATT
KWH	KILOWATT-HOUR
L	LENGTH OR LOW
LAB	LABORATORY
LAD	LADDER
LAV	LAVATORY
LB OR (#)	POUND
LC	LOAD CENTER
LCL	LOCAL
LCV	LEVEL CONTROL VALVE
LF	LINEAR FEET
LH	LEFT-HAND
LHR	LEFT-HAND REVERSE
LIM	LIMIT
LIM SW	LIMIT SWITCH
LIN	LINEAR; LINEAL
LIQ	LIQUID
LIRS	LEVEL INDICATOR/RECORDING SWITCH
LKR	LOCKER
LL	LOW LOW OR LOW LEVEL
LOC OR LCTN	LOCATION
LP	LOW PRESSURE
LS	LEVEL SWITCH
LT	LEFT OR LEVEL TRANSMITTER
LTG	LIGHTING
LUB	LUBRICATE
LV	LOW VOLTAGE
LVR	LOUVER
MAG	MARICOPA ASSOCIATION OF GOVERNMENTS
MAINT	MAINTENANCE
MAX	MAXIMUM
MCC	MOTOR CONTROL CENTER
MECH	MECHANICAL
MED	MEDIUM
MFR	MANUFACTURE
MGD	MILLION GALLONS PER DAY
MGR	MANAGER
MH	MANHOLE
MIN	MINIMUM
MIN OR (')	MINUTE; MINUTES
MISC	MISCELLANEOUS
MLDG	MOLDING
MO	MONTH OR MASONRY OPENING
MOD	MODIFICATION
MOV	MOTOR-OPERATED VALVE
MSNRY	MASONRY
MTD	MOUNTED
MTG	MOUNTING
NAT	NATURAL OR NATIONAL
NC	NATIONAL COARSE (THREAD)
NC	NORMALLY CLOSED
NEC	NATIONAL ELECTRICAL CODE
NEG OR (-)	NEGATIVE
NEMA	NATIONAL ELECTRICAL MANUFACTURERS ASSOCIATION
NF	NATIONAL FINE (THREAD)
NG	NATURAL GROUND
NIC	NOT IN CONTRACT
NO	NORMALLY OPEN
NO OR (#)	NUMBER
NOM	NOMINAL
NONSTD	NONSTANDARD
NORM	NORMAL
NPSH	NET POSITIVE SUCTION HEAD
NPT	NATIONAL PIPE (THREAD)
NPW	NONPOTABLE WATER
NTS	NOT TO SCALE
OC	ON CENTER
OD	OUTSIDE DIAMETER
OFCE	OFFICE
OPNG	OPENING
OPP	OPPOSITE
ORF	ORIFICE
ORIG	ORIGINAL
OUT	OUTLET
OVFL	OVERFLOW
P	POWER LINE (ELECTRICAL) OR PAVEMENT
P & ID	PROCESS & INSTRUMENTATION DIAGRAM
PA	PUBLIC ADDRESS OR PLANT AIR
PB	POLYBUTYLENE PIPE
PB	PUSH BUTTON
PBE	PLAIN BOTH ENDS
PCC	PORTLAND CEMENT CONCRETE
PE	POLYMER
PERF	PERFORATED
PERM	PERMANENT
PERP OR (⊥)	PERPENDICULAR
P/S	PRESSURE INDICATOR SWITCH
PL	PLUG OR PLATE OR PROPERTY LINE
PLATF	PLATFORM
PLMB	PLUMBING
PLYWD	PLYWOOD
PNEU	PNEUMATIC
PNL	PANEL
PNT	PAINT
POS(+)	POSITIVE
POSN	POSITION
POTW	POTABLE WATER
PP	POWER POLE
PPM	PART PER MILLION
PR	PAIR OR PIPE RESTRAINT
PRCS	PROCESS
PRELIM	PRELIMINARY
PREP	PREPARE
PRESS	PRESSURE
PROD	PRODUCTION; PRODUCED
PROP	PROPOSED OR PROPERTY
PROT	PROTECTIVE
PRV	PRESSURE-REDUCING VALVE
PS	PIPE SUPPORT OR PULL SWITCH
PSI	POUND PER SQUARE INCH
PSIG	POUND PER SQUARE INCH GAGE
PSL	PIPE SLEEVE
PT	POINT
PTFE	POLYTETRAFLUOROETHYLENE
PTN	PARTITION
PVC	POLYVINYL CHLORIDE PIPE
PVMT	PAVEMENT
Q	RATE OF FLOW
QTR	QUARTER
QTY	QUANTITY
QUAL	QUALITY
R	RADIUS
R/W	RIGHT-OF-WAY
RA	RETURN AIR
RC	REINFORCED CONCRETE
RCDR	RECORDER
RCP	REINFORCED CONCRETE PIPE
RCPT	RECEPTACLE
RD	ROOF DRAIN; ROOF DRAIN LINE
RD	ROAD
REC	RECESS
RECT	RECTANGULAR
RED	REDUCING OR REDUCER
REF	REFERENCE
REINF	REINFORCE OR REINFORCING
RELOC	RELOCATED
REM	REMOVABLE
REQD	REQUIRED
REQT	REQUIREMENT
RES	RESERVOIR
RESTR	RESTRAINT
RET WALL	RETAINING WALL
REV	REVISION
RF	RETURN FAN
RFG	ROOFING
RH	RIGHT-HAND
RM	ROOM
RMT MAN SW	REMOTE MANUAL SWITCH
RMT MAN CNTRL	REMOTE MANUAL CONTROL
RMT	REMOTE
RND	ROUND
RO	ROUGH OPENING
RPM	REVOLUTION PER MINUTE
RT	RIGHT
RW	RAW WATER OR RETURN WALL REGISTER
SCCP	STEEL CYLINDER CONCRETE PIPE
SCH	SCHEDULE
SCHEM	SCHEMATIC
SCR	SILICON CONTROLLED RECTIFIER OR SCREW
SD	STORM DRAIN
SEC OR S	SECOND
SECT	SECTION
SEL	SELECTOR
SEP	SEPARATE OR SEPARATOR
SH	SHOWER
SHT	SHEET
SIM	SIMILAR
SK	SINK OR SKETCH
SLTD	SLOTTED
SLV	SLEEVE
SMPL	SAMPLE
SOL	SOLENOID
SOLN	SOLUTION
SOV	SHUTOFF VALVE
SP	SPACE
SP GR	SPECIFIC GRAVITY
SPEC	SPECIFICATION
SPKR	SPEAKER
SPLY	SUPPLY
SPRT	SUPPORT
SPST	SINGLE-POLE SINGLE-THROW
SPT	SET POINT
SQ YD	SQUARE YARD
SQ IN	SQUARE INCH
SQ	SQUARE
SQ FT	SQUARE FOOT
SQRT CONV	SQUARE ROOT CONVERTER
SS	STAINLESS STEEL; STAINLESS STEEL PIPE
STA	STATION
STD	STANDARD
STL	STEEL; STEEL PIPE
STR OR STRUCT	STRUCTURAL; STRUCTURE
STR	STRAIGHT OR STRAINER
SUB	SUBCONTRACTOR
SUBST	SUBSTITUTE
SUBSTA	SUBSTATION
SUCT	SUCTION
SURF	SURFACE
SW	SWITCH OR SERVICE/SEAL WATER OR SIDEWALK
SYM	SYMBOL
SYMM	SYMMETRICAL
SYS	SYSTEM
T	TIME, TOILET OR TRAP
TBM	TEMPORARY BENCH MARK
TC	TOP OF CURB
TDH	TOTAL DYNAMIC HEAD
TECH	TECHNICAL
TEL	TELEPHONE
TEMP	TEMPERATURE OR TEMPORARY
TERM	TERMINAL
TF	TOP OF FLOOR
THERMO	THERMOSTAT
THK	THICK
THKNS	THICKNESS
TOPO	TOPOGRAPHY
TOT	TOTAL
TOW	TOP OF WALL
TP	TOILET PARTITION
TRSW	TEMPERATURE RECORDER SWITCH
TW	TREATED WATER OR TOP OF WALL
TYP	TYPICAL
UG OR UGND	UNDERGROUND
UON	UNLESS OTHERWISE NOTED
UPS	UNINTERRUPTED POWER SYSTEM
UR	URINAL
USG	UNITED STATES GAGE
UTIL	UTILITY
UTL	ULTIMATE
V	VELOCITY OF FLOW OR VALVE OR VOLT
VA	VOLT-AMPERE
VAC	VOLT - ALTERNATING CURRENT
VAR	VARIABLE
VCP	VITRIFIED CLAY PIPE
VENT	VENTILATION
VERT	VERTICAL
VEST	VESTIBULE
VIN	VINYL
VG	VALLEY GUTTER
VOL	VOLUME
VP	VENT PIPE
VTD	VENTED
VTR	VENT THROUGH ROOF
W/	WITH (COMB FORM)
W	WATT OR WATER LINE
W/O	WITHOUT
W	WASTE OR WIRE
WC	WATER CLOSET
WD OR W	WIDTH
WF	WIDE FLANGE
WH	WALL HYDRANT WATER HEATER
WLD	WELDED
WS	WATER SURFACE
WSHR	WASHER
WT	WEIGHT
WTR	WATER
WWF	WELDED WIRE FABRIC
XFMR	TRANSFORMER
XMTR	TRANSMITTER
XSECT	CROSS SECTION
XX HVY	DOUBLE EXTRA HEAVY
XX STR	DOUBLE EXTRA STRONG
YD	YARD
YR	YEAR

LEGEND:

LETTER OR NUMBER DENOTING SECTION OR DETAIL

DRAWING NO. WHERE SECTION OR DETAIL IS SHOWN OR REFERRED, BLANK IF SHOWN ON SAME SHEET

NOTES:

1. FOR MECHANICAL SYMBOLS SEE DWG NO. P-HV.1
2. FOR ELECTRICAL ABBREVIATIONS & SYMBOLS SEE SHEET P-E.1
3. PUMP STATION DRAWINGS ARE IN ENGLISH UNITS UNLESS OTHERWISE INDICATED

	NAME	DATE
DESIGN	FLR	4/05
DRAWN	JJO	4/05
CHECKED		4/05

Stanley Consultants inc.

ARIZONA DEPARTMENT OF TRANSPORTATION
INTERMODAL TRANSPORTATION DIVISION
ROADWAY DESIGN SERVICES

PUMP STATION ABBREVIATIONS

PRELIMINARY
STAGE IV
95% Review
NOT FOR CONSTRUCTION OR RECORDING

ROUTE: 202L
LOCATION: RED MTN FWY, POWER ROAD - UNIVERSITY DRIVE

DWG NO. P-C.3

TRACS NO. H 5782 01C | 202-B(007)B | ___ OF ___

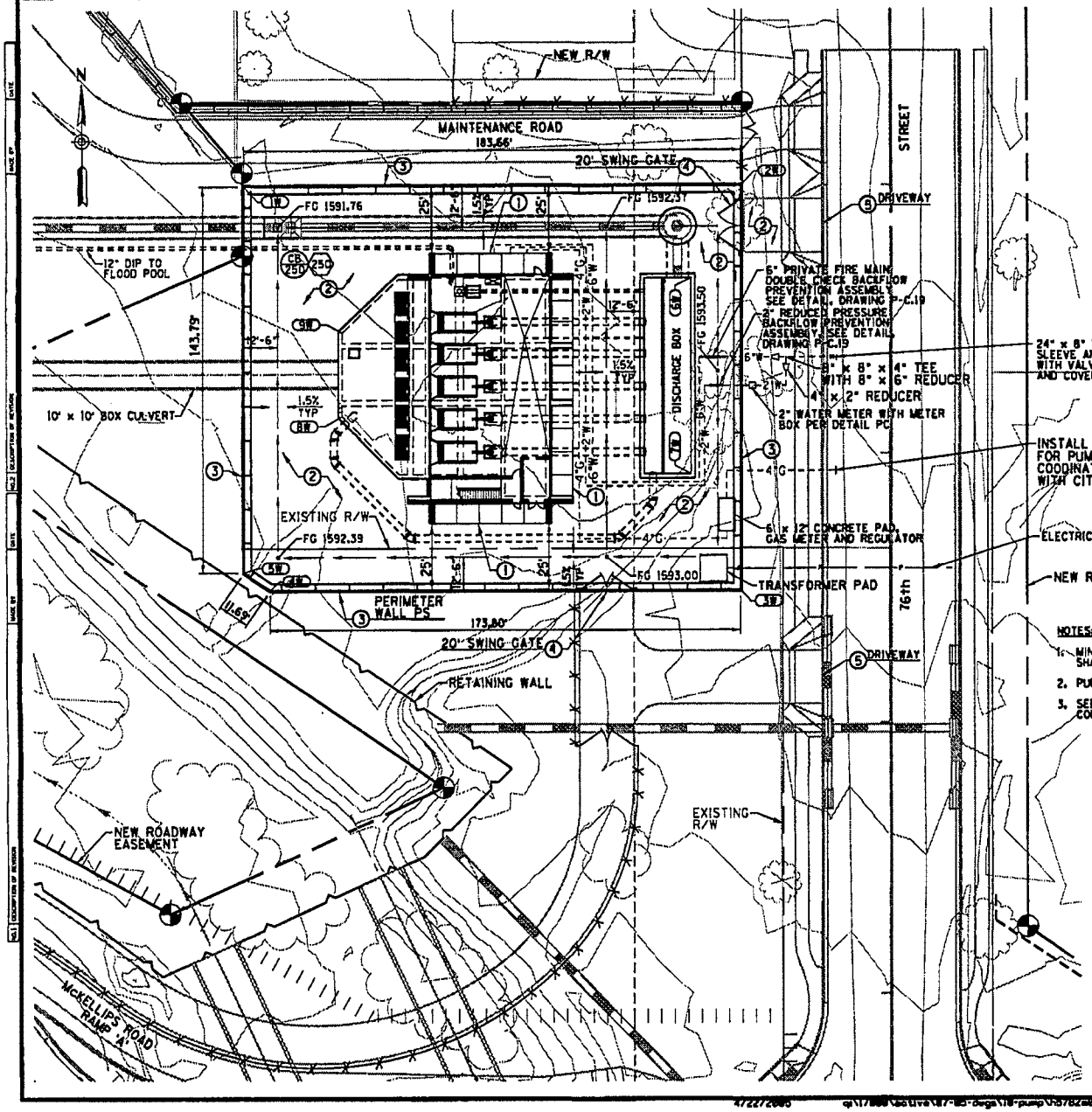

4" ASPHALT

9" ABC

ASPHALT PAVEMENT DETAIL

NTS

FHWA REGION	STATE	PROJECT NO.	SHEET NO.	TOTAL SHEETS	AS BUILT
9	ARIZ.	202-B(007)B			
		202 MA 023			

LEGEND:

1. 7'-11" SIDEWALK PER STD DTL C-05.20
2. ASPHALT PAVEMENT PER DETAIL THIS SHEET
3. PERIMETER WALL PS PER STD DTL 8.02, SEE DWG NO. P-S.25 AND P-S.26 FOR WALL ELEVATION
4. SWING GATES PER DETAIL B ON DWG NO. P-C.8
5. DRIVEWAY PER ADOT STANDARD DETAIL C-05.20 FOR DETACHED SIDEWALK

CONTROL COORDINATES (INSIDE FACE OF WALL)

CORNER	NORTHING	EASTING
1W	892,415.39	775,962.39
2W	892,415.39	776,146.05
3W	892,264.98	776,145.83
4W	892,264.98	775,972.03
5W	892,271.60	775,962.39
6W	892,381.06	776,127.70
7W	892,308.06	776,127.70
8W	892,323.06	775,998.62
9W	892,360.06	775,998.62

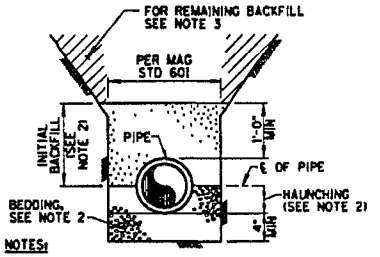

NOTES:

1. FOR ALLOWABLE TRENCH WIDTH, SEE SPECIFICATIONS
2. BEDDING MATERIAL, HAUNCHING AND INITIAL BACKFILL SHALL BE "ABC" PER MAG STANDARD SPECIFICATIONS 702, COMPACT TO 95% MAXIMUM DENSITY, ASTM D698
3. CAREFULLY PLACED BACKFILL SHALL BE FINELY DIVIDED, JOB EXCAVATED MATERIAL, FREE FROM DEBRIS, STONES LARGER THAN 1½", ORGANIC MATTER, FROZEN MATERIAL, AND COMPACTED IN 6" LAYERS TO 95% MAXIMUM DENSITY, ASTM D698. SELECT BACKFILL MAY BE SUBSTITUTED FOR JOB EXCAVATED MATERIAL AND SHALL BE USED WHERE REMAINING BACKFILL IS SPECIFIED TO BE SELECT BACKFILL MATERIAL.

TYPICAL TYPE I PIPE BEDDING TRENCH CROSS-SECTION

NTS

NOTES:

1. MINIMUM DEPTH OF WATER LINES SHALL BE 3'-0"
2. PUMP STATION ADDRESS:
3. SEE ELECTRICAL DRAWING FOR CONDUIT DETAILS

	NAME	DATE
DESIGN	FLK	4/05
DRAWN	JJB	4/05
CHECKED		4/05

Stanley Consultants Inc.

ARIZONA DEPARTMENT OF TRANSPORTATION
INTERMODAL TRANSPORTATION DIVISION
ROADWAY DESIGN SERVICES

MCKELLIPS ROAD PUMP STATION

PRELIMINARY
STAGE IV
95% Review
NOT FOR CONSTRUCTION OR RECORDING

ROUTE	LOCATION	DWG NO.
202L	RED MTN FWY, POWER ROAD - UNIVERSITY DRIVE	P-C.1
TRACS NO. H 5782 01C		202-B(007)B — OF —

4/27/2005 q:\1788\active\87-MD-Dega\18-pump\h5782a01.dgn

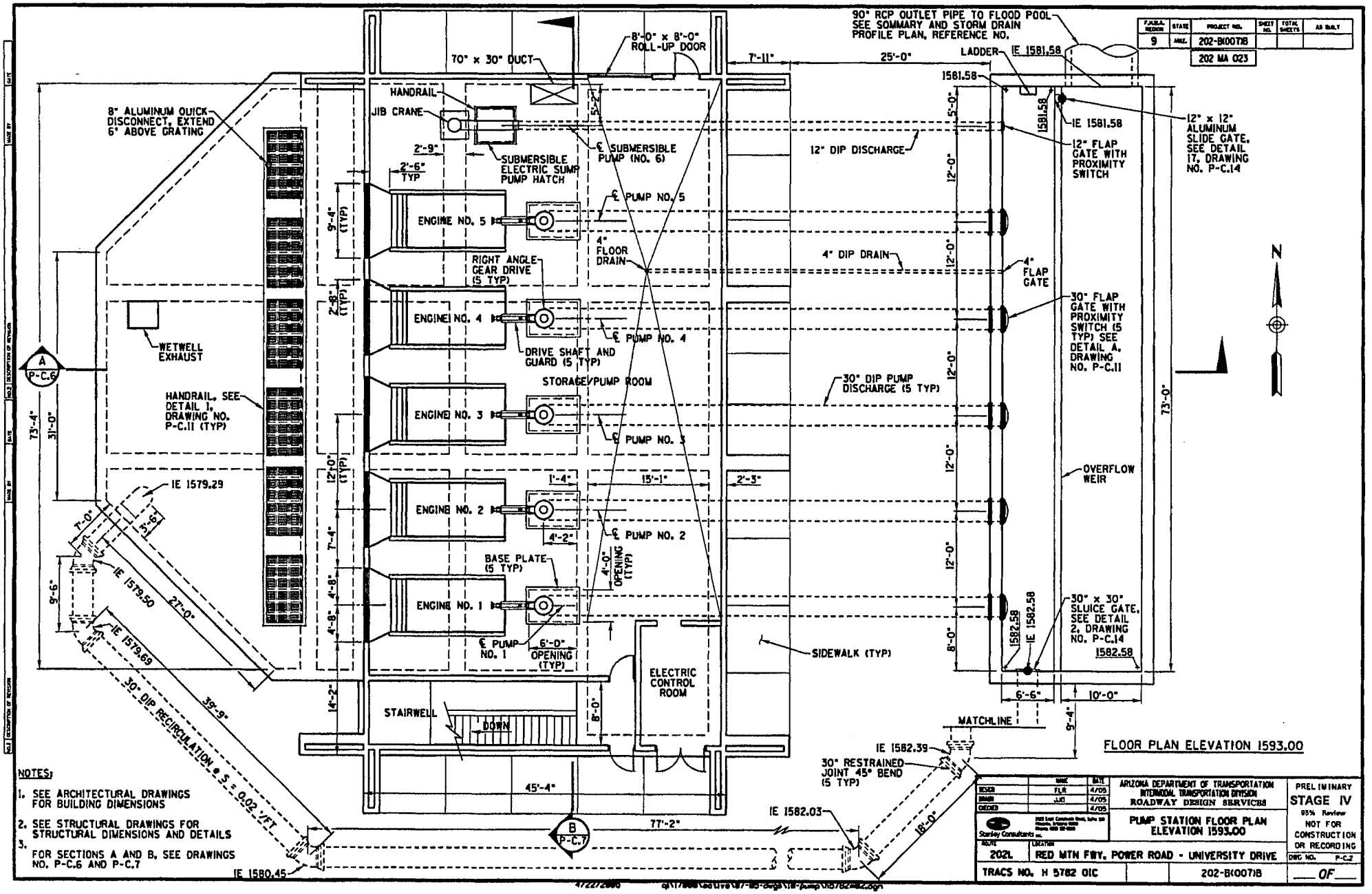

NOTES:

1. SEE ARCHITECTURAL DRAWINGS FOR BUILDING DIMENSIONS
2. SEE STRUCTURAL DRAWINGS FOR STRUCTURAL DIMENSIONS AND DETAILS
3. FOR SECTIONS A AND B, SEE DRAWINGS NO. P-C.6 AND P-C.7

F.A.H.U. REGION	STATE	PROJECT NO.	SHEET NO.	TOTAL SHEETS	AS BUILT
9	ARIZ.	202-B(007)I			
		202 MA 023			

	NAME	DATE
DESIGN	FLR	4/05
DRAWN	JJC	4/05
CHECKED		4/05

Stanley Consultants Inc.

ARIZONA DEPARTMENT OF TRANSPORTATION
INTERMODAL TRANSPORTATION DIVISION
ROADWAY DESIGN SERVICES

PUMP STATION FLOOR PLAN ELEVATION 1593.00

PRELIMINARY
STAGE IV
95% Review
NOT FOR CONSTRUCTION OR RECORDING

ROUTE	LOCATION
202L	RED MTN FWY, POWER ROAD - UNIVERSITY DRIVE

DWG NO. P-C.2

TRACS NO. H 5782 01C | 202-B(007)I | ___ OF ___

F.A.R.S. REGION	STATE	PROJECT NO.	SHEET NO.	TOTAL SHEETS	AS BUILT
9	ARIZ.	202-B100718			
		202 MA 023			

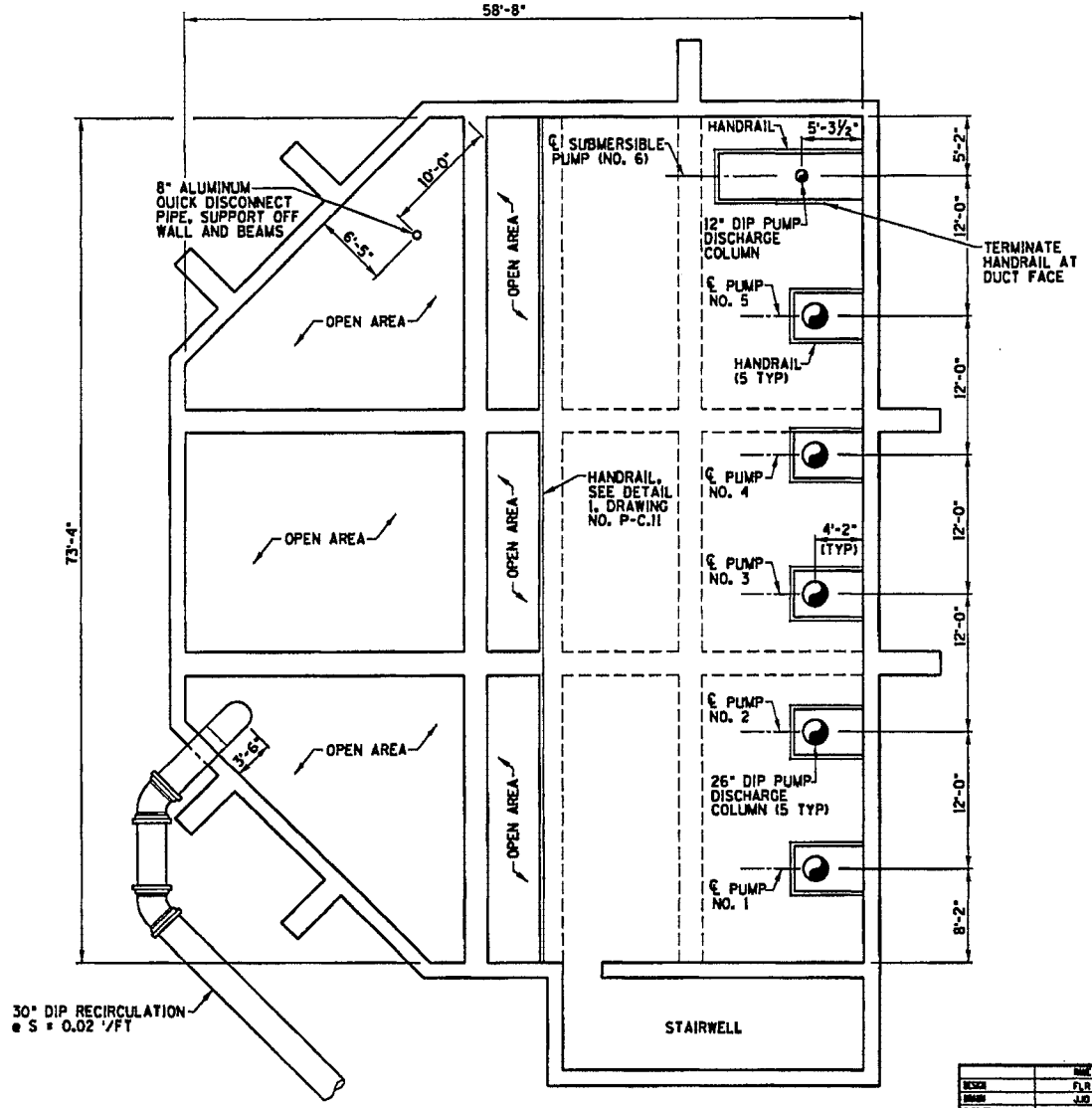

FLOOR PLAN ELEVATION 1581.50

N

NOTES:

1. SEE STRUCTURAL DRAWINGS FOR DIMENSIONS AND DETAILS
2. SEE P-HV.3 FOR DUCT WORK AT ELEVATION 1581.50

	NAME	DATE
DESIGN	F.L.R	4/05
DRAWN	J.J.O	4/05
CHECKED		4/05

Stanley Consultants Inc.

ARIZONA DEPARTMENT OF TRANSPORTATION
INTERMODAL TRANSPORTATION DIVISION
ROADWAY DESIGN SERVICES

PUMP STATION FLOOR PLAN
ELEVATION 1581.50

PRELIMINARY
STAGE IV
95% Review
NOT FOR CONSTRUCTION OR RECORDING

DWG NO. P-C.3

ADOT	LOCATION
202L	RED MTN FWY, POWER ROAD - UNIVERSITY DRIVE

TRACS NO. H 5782 01C | 202-B100718 | ___ OF ___

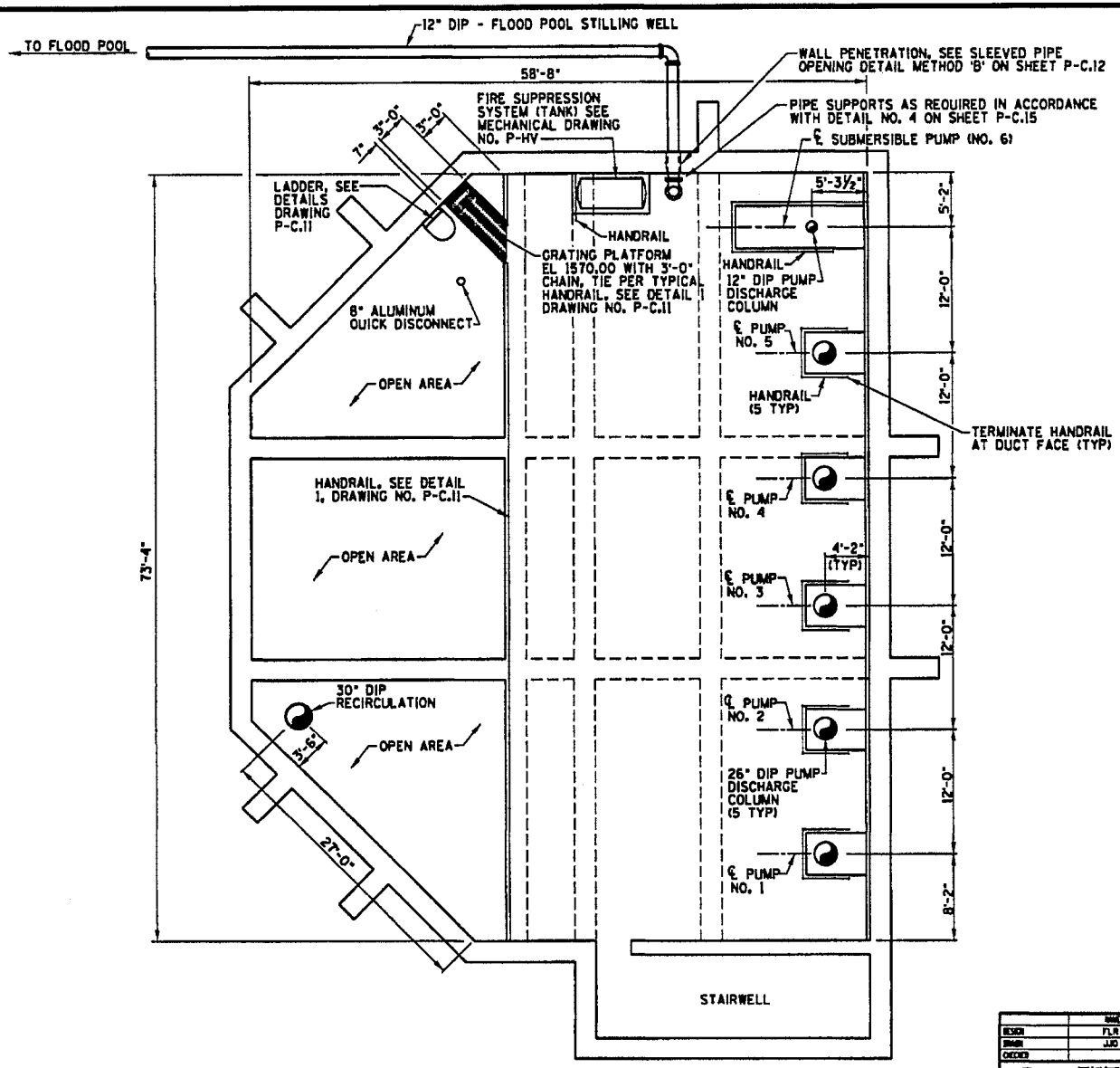

FLOOR PLAN ELEVATION 1570.00

NOTES:

1. SEE STRUCTURAL DRAWINGS FOR DIMENSIONS AND DETAILS
2. SEE P-HV.2 FOR DUCT WORK AT ELEVATION 1570.00

F.H.W.A. REGION	STATE	PROJECT NO.	SHEET NO.	TOTAL SHEETS	AS BUILT
9	ARIZ.	202-B(007)B			
		202 MA 023			

	BY	DATE
DESIGN	FLR	4/05
DRAWN	JJO	4/05
CHECKED		4/05

Stanley Consultants Inc.

ARIZONA DEPARTMENT OF TRANSPORTATION
INTERMODAL TRANSPORTATION DIVISION
ROADWAY DESIGN SERVICES

PUMP STATION FLOOR PLAN ELEVATION 1570.00

PRELIMINARY
STAGE IV
95% Review
NOT FOR CONSTRUCTION OR RECORDING

DATE: 2021. LOCATION: RED MTN FWY, POWER ROAD - UNIVERSITY DRIVE

DRG NO. P-C.4

TRACS NO. H 5782 01C | 202-B(007)B | ___ OF ___

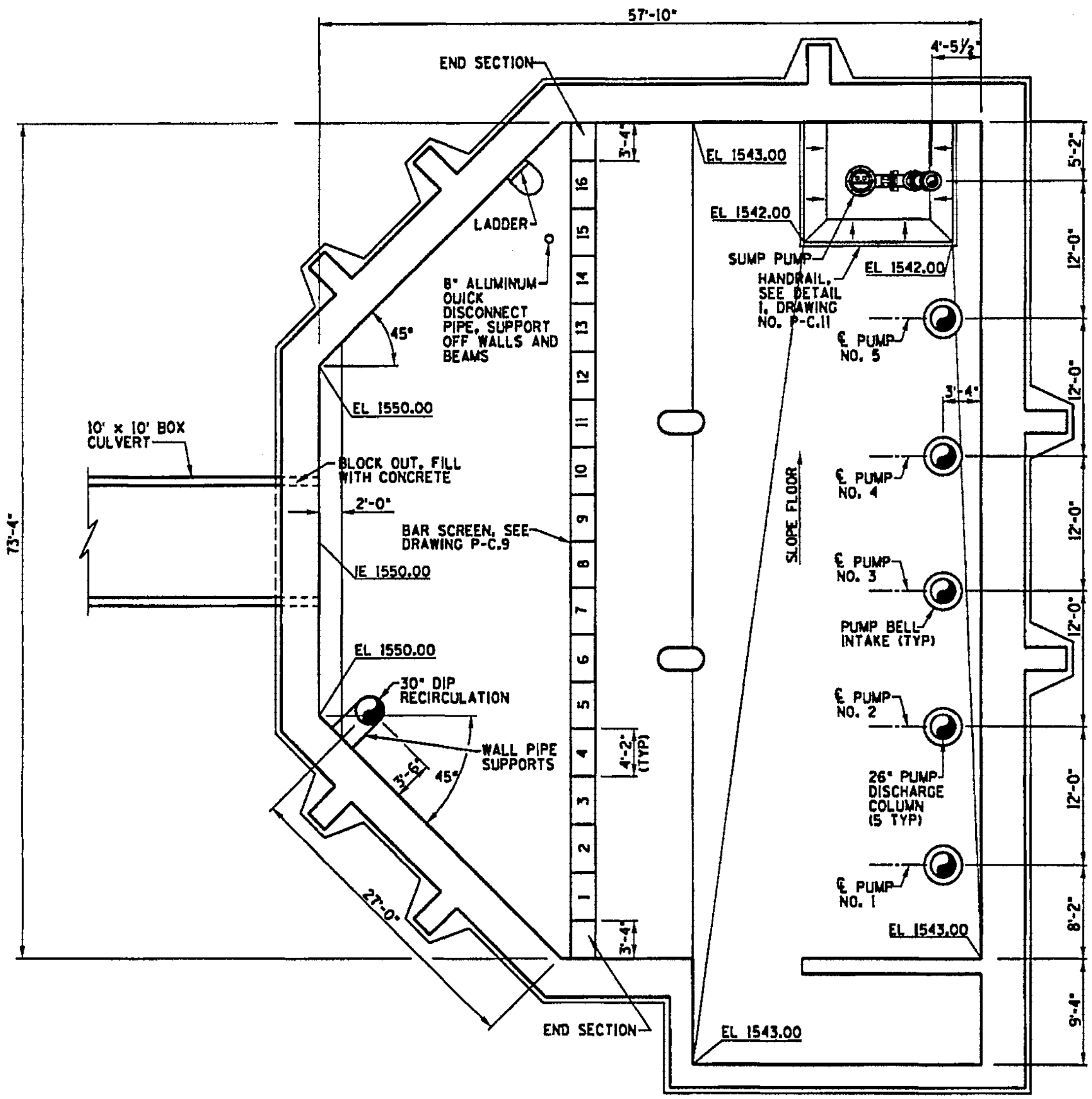

FLOOR PLAN ELEVATION 1543.00

NOTE:
SEE STRUCTURAL DRAWINGS FOR DIMENSIONS AND DETAILS

F.H.W.A. REGION	STATE	PROJECT NO.	SHEET NO.	TOTAL SHEETS	AS BUILT
9	ARIZ.	202-B(007)B			

202 MA 023

	NAME	DATE
DESIGN	FLR	4/05
DRAWN	JJO	4/05
CHECKED		4/05

ARIZONA DEPARTMENT OF TRANSPORTATION
INTERMODAL TRANSPORTATION DIVISION
ROADWAY DESIGN SERVICES

Stanley Consultants inc.

PUMP STATION FLOOR PLAN
ELEVATION 1543.00

PRELIMINARY
STAGE IV
95% Review
NOT FOR CONSTRUCTION OR RECORDING

ROUTE 202L
LOCATION RED MTN FWY, POWER ROAD - UNIVERSITY DRIVE
DWG NO. P-C.5

TRACS NO. H 5782 01C | 202-B(007)B | ___ OF ___

4/22/2005 q:\17866\active\87-ms-dwgs\18-pump\h5782m05.dgn

T.R.A.C.S. NUMBER	STATE	PROJECT NO.	SHEET NO.	TOTAL SHEETS	AS BUILT
9	ARIZ.	202-B(007)8			
		202 MA 023			

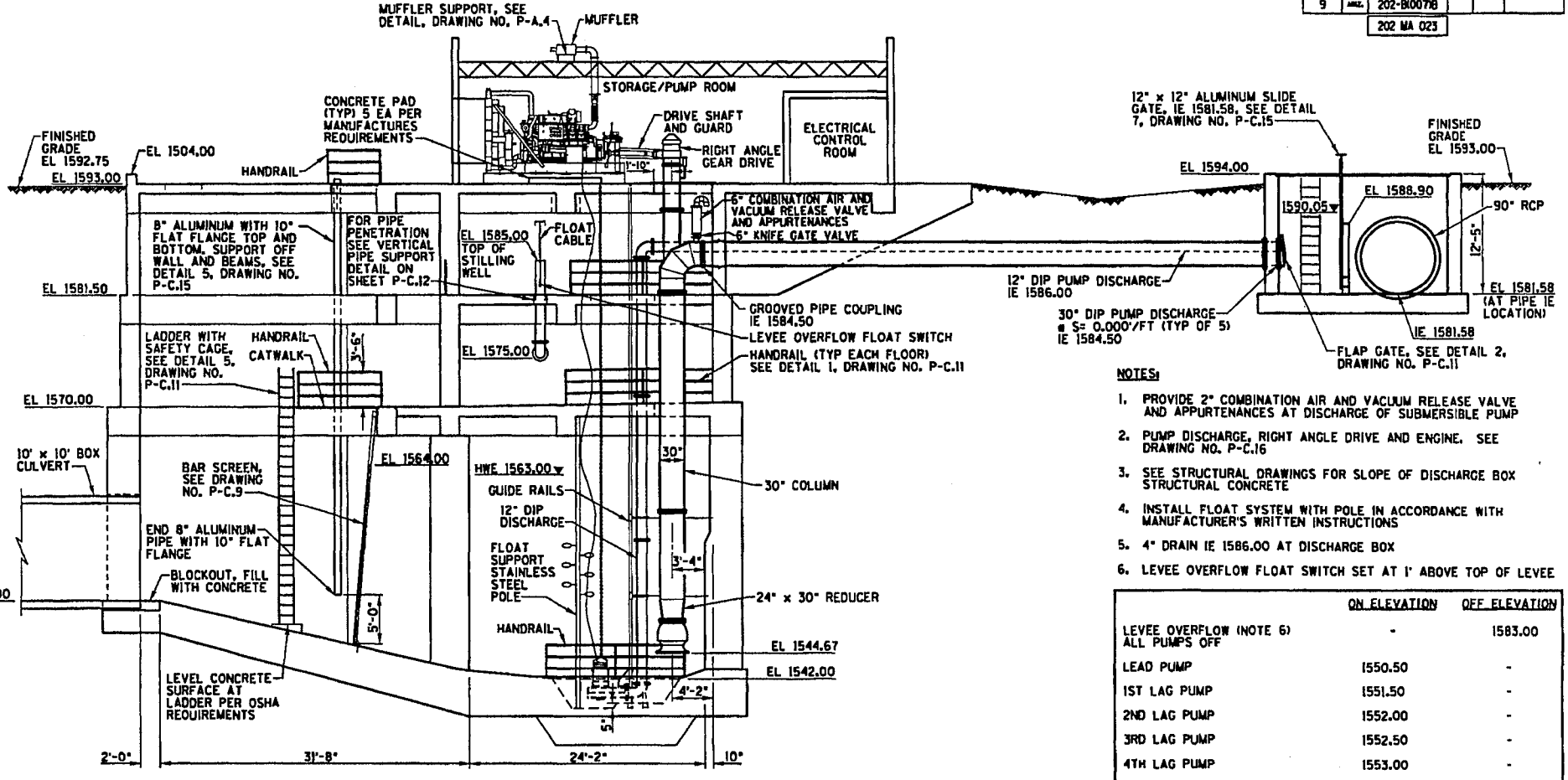

SECTION A / P-C.2

NOTES:

1. PROVIDE 2" COMBINATION AIR AND VACUUM RELEASE VALVE AND APPURTENANCES AT DISCHARGE OF SUBMERSIBLE PUMP
2. PUMP DISCHARGE, RIGHT ANGLE DRIVE AND ENGINE. SEE DRAWING NO. P-C.16
3. SEE STRUCTURAL DRAWINGS FOR SLOPE OF DISCHARGE BOX STRUCTURAL CONCRETE
4. INSTALL FLOAT SYSTEM WITH POLE IN ACCORDANCE WITH MANUFACTURER'S WRITTEN INSTRUCTIONS
5. 4" DRAIN IE 1586.00 AT DISCHARGE BOX
6. LEVEE OVERFLOW FLOAT SWITCH SET AT 1' ABOVE TOP OF LEVEE

	ON ELEVATION	OFF ELEVATION
LEVEE OVERFLOW (NOTE 6) ALL PUMPS OFF	-	1583.00
LEAD PUMP	1550.50	-
1ST LAG PUMP	1551.50	-
2ND LAG PUMP	1552.00	-
3RD LAG PUMP	1552.50	-
4TH LAG PUMP	1553.00	-
MAXIMUM WATER ELEV	1561.00	-
HIGH WATER ALARM MINIMUM THREE (3) PUMPS ON	1563.00	-
ALL PUMPS OFF	-	1548.67

	NAME	DATE
DESIGN	FLR	4/05
DRAWN	JJD	4/05
CHECKED		4/05

Stanley Consultants Inc.

ARIZONA DEPARTMENT OF TRANSPORTATION
INTERMODAL TRANSPORTATION DIVISION
ROADWAY DESIGN SERVICES

PUMP STATION
SECTION A-A

PRELIMINARY
STAGE IV
95% Review
NOT FOR CONSTRUCTION OR RECORDING

ROUTE	LOCATION
202L	RED MTN FWY, POWER ROAD - UNIVERSITY DRIVE

DWG NO. P-C.6

TRACS NO. H 5782 01C | 202-B(007)8 | ___ OF ___

4/22/2005 q:\17888\Cad Live\07-05-Design\18-pump\H5782c01.dgn

F.A.H.A. REGION	STATE	PROJECT NO.	SHEET NO.	TOTAL SHEETS	AS BUILT
9	ARIZ.	202-B(007)B			
		202 MA 023			

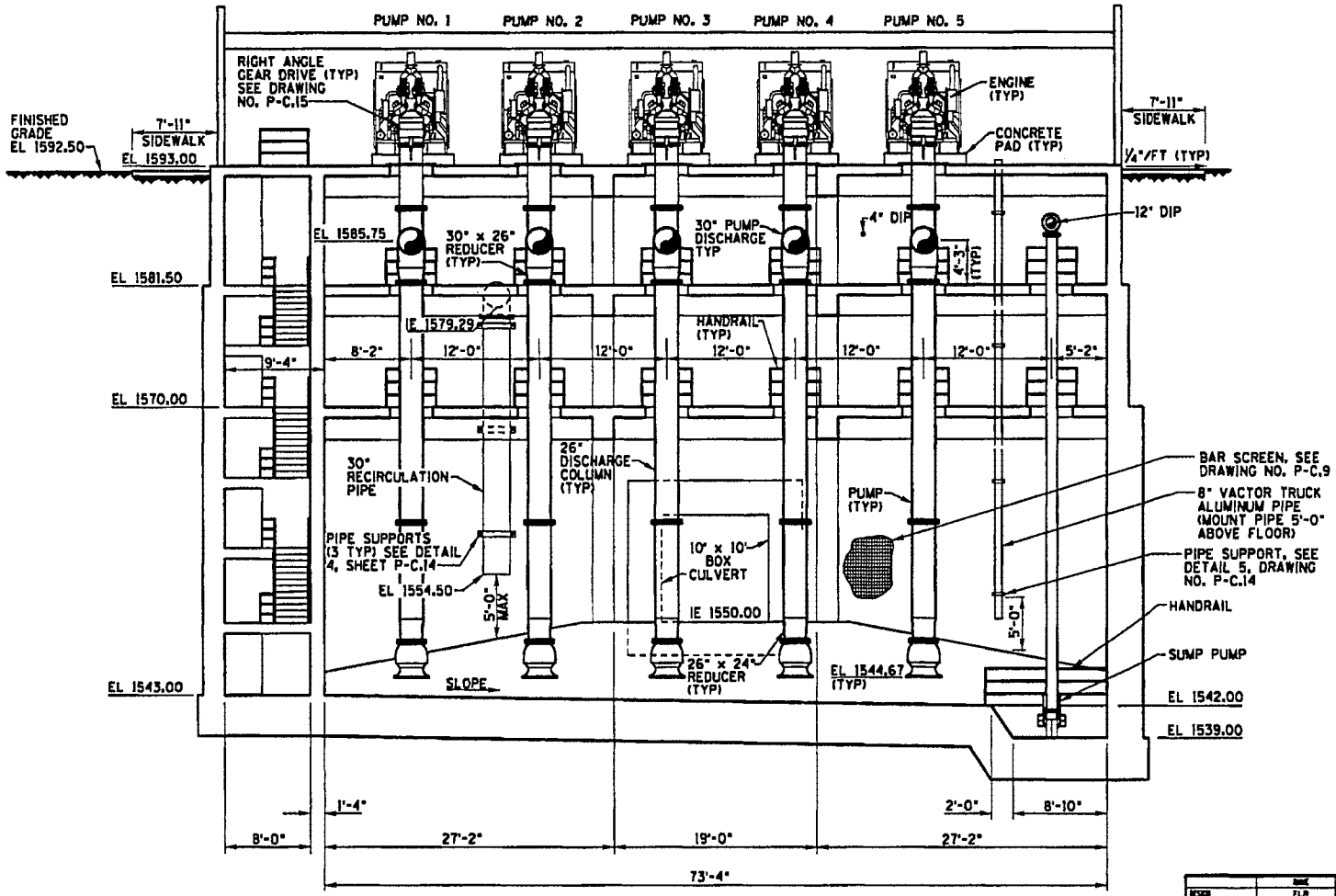

SECTION B-B

		BY	DATE
DESIGN		FLR	4/05
DRAWN		JJO	4/05
CHECKED			4/05

Stanley Consultants Inc.

ARIZONA DEPARTMENT OF TRANSPORTATION
INTERMODAL TRANSPORTATION DIVISION
ROADWAY DESIGN SERVICES

PUMP STATION
SECTION B-B

PRELIMINARY
STAGE IV
95% Review
NOT FOR CONSTRUCTION OR RECORDING

ROUTE	LOCATION	DWG NO.
202L	RED MTN FWY, POWER ROAD - UNIVERSITY DRIVE	P-C.7

TRACS NO. H 5782 01C | 202-B(007)B | ___ OF ___

4/27/2005 q:\17888\active\87-96-dsgn\18-pump\h5782a87.dgn

FHWA REGION	STATE	PROJECT NO.	SHEET NO.	TOTAL SHEETS	AS BUILT
9	ARIZ.	202-B(007)B			
		202 MA 023			

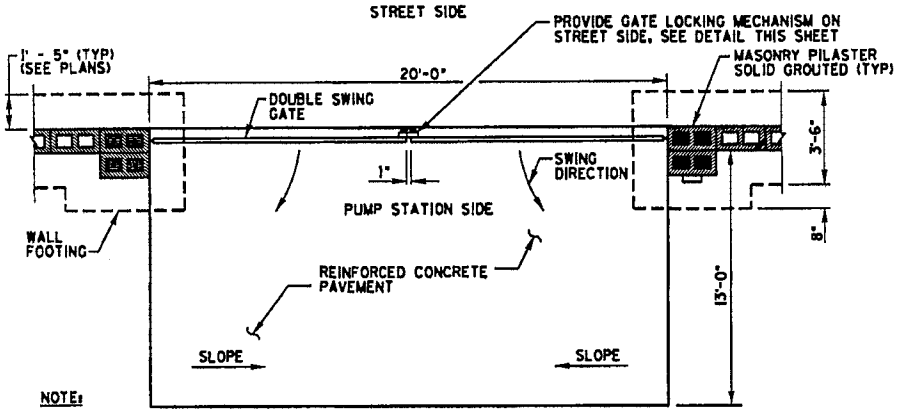

NOTE:
1. GATE SHALL SWING INSIDE
2. SLOPE PAD TO MATCH SITE DRAINAGE

SWING GATE PLAN (CONCRETE SLAB)
NTS

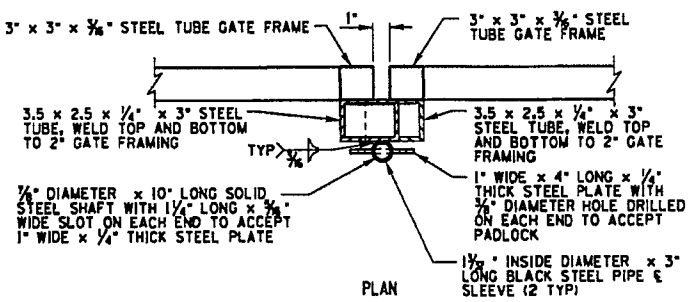

PLAN

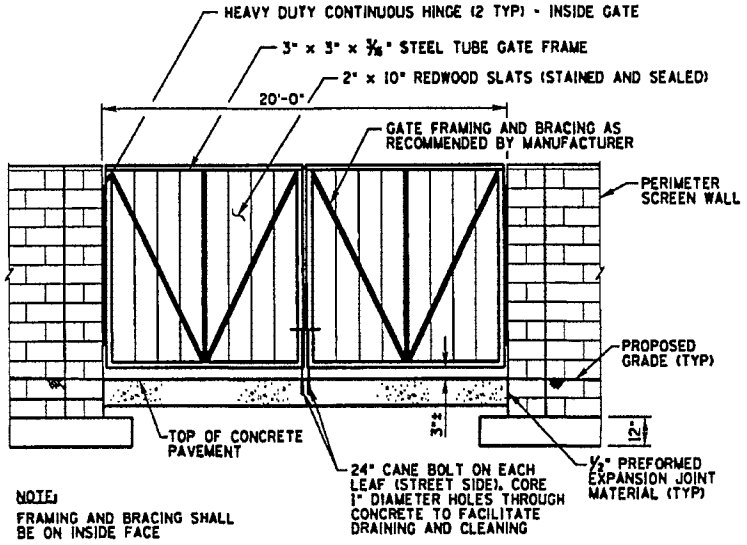

NOTE:
FRAMING AND BRACING SHALL BE ON INSIDE FACE

GATE DETAIL
NTS

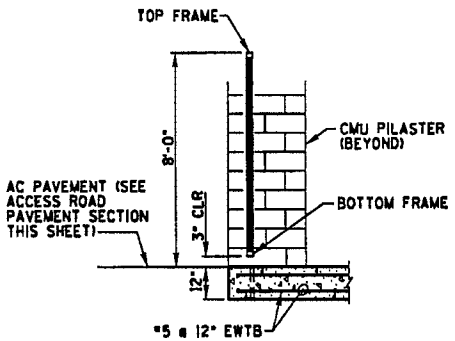

SWING GATE SECTION AND REINFORCED CONCRETE PAVEMENT SECTION
NTS

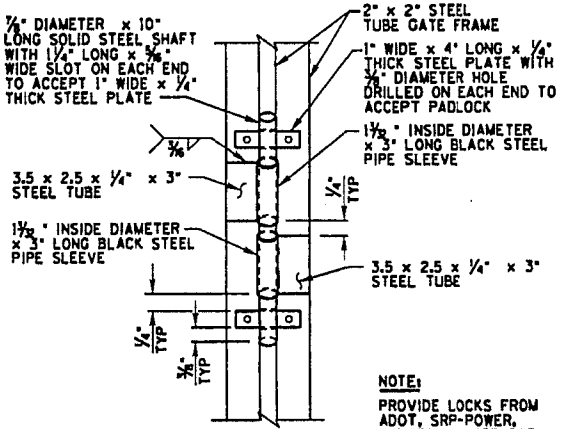

NOTE:
PROVIDE LOCKS FROM ADOT, SRP-POWER, AND SOUTHWEST GAS

ELEVATION

GATE LOCKING MECHANISM DETAIL
NTS

	NAME	DATE
DESIGN	FLR	4/05
DRAWN	JJO	4/05
CHECKED		4/05

Stanley Consultants Inc.

ARIZONA DEPARTMENT OF TRANSPORTATION
INTERMODAL TRANSPORTATION DIVISION
ROADWAY DESIGN SERVICES

GATE DETAILS

PRELIMINARY
STAGE IV
95% Review
NOT FOR CONSTRUCTION OR RECORDING

ROUTE	LOCATION	DRG NO. P-C.8
202L	RED MTN FWY, POWER ROAD - UNIVERSITY DRIVE	
TRACS NO. H 5782 01C	202-B(007)B	___ OF ___

4/22/2005 q:\1788\active\87-88-dsgn\18-pump\h5782pac8d.dgn

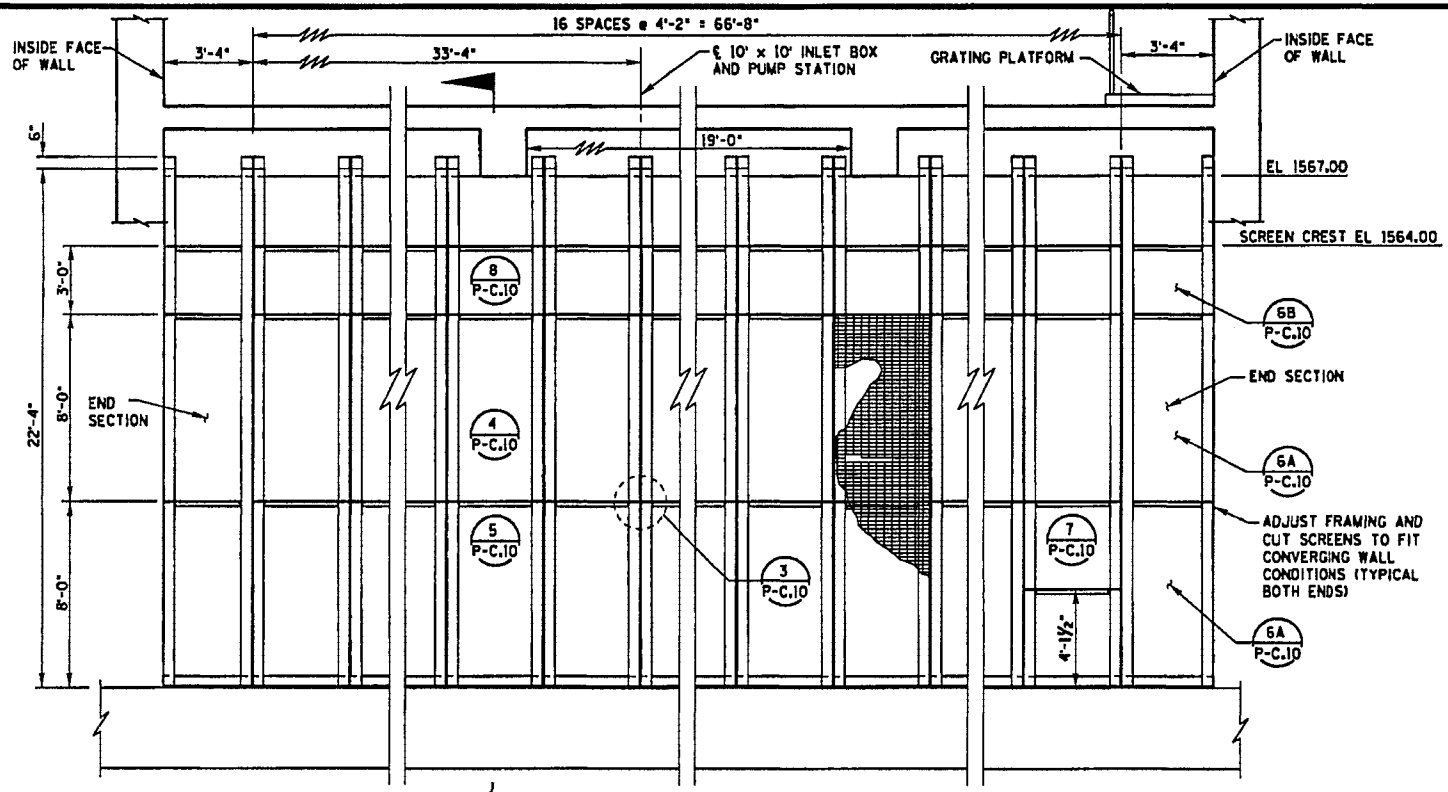

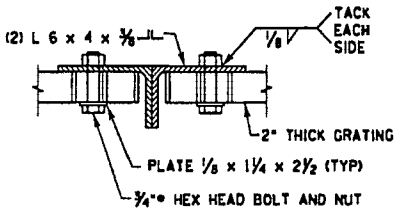

SECTION C

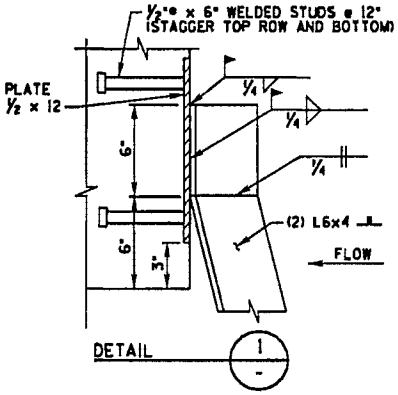

DETAIL 1

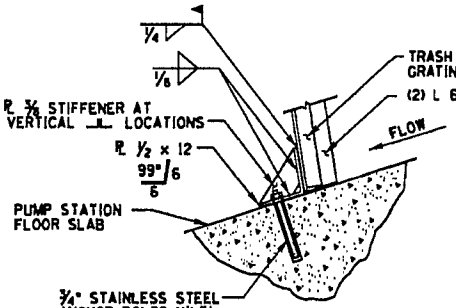

DETAIL 2

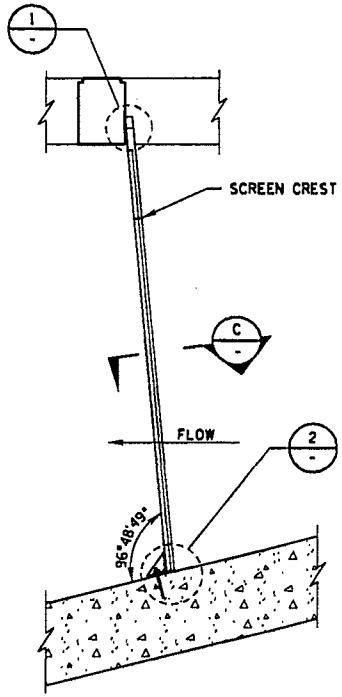

SECTION B NTS

F.A.H.U.A. REGION	STATE	PROJECT NO.	SHEET NO.	TOTAL SHEETS	AS BUILT
9	ARIZ.	202-B(007)I			
		202 MA 023			

	NAME	DATE
DESIGN	FLR	4/05
DRAWN	JJO	4/05
CHECKED		4/05

Stanley Consultants Inc.

ARIZONA DEPARTMENT OF TRANSPORTATION
INTERMODAL TRANSPORTATION DIVISION
ROADWAY DESIGN SERVICES

PRELIMINARY
STAGE IV
95% Review
NOT FOR CONSTRUCTION OR RECORDING

PUMP STATION
BAR SCREEN DETAILS, SHEET NO. 1

ROUTE	LOCATION	DRG NO. P-C.9
202L	RED MTN FWY, POWER ROAD - UNIVERSITY DRIVE	
TRACS NO. H 5782 01C		202-B(007)I ___ OF ___

4/22/2005 q:\17888\active\87-86-dwgs\18-pump\h5782psa04.dgn

F.H.W.A. REGION	STATE	PROJECT NO.	SHEET NO.	TOTAL SHEETS	AS BUILT
9	ARIZ.	202-B(007)B			

202 MA 023

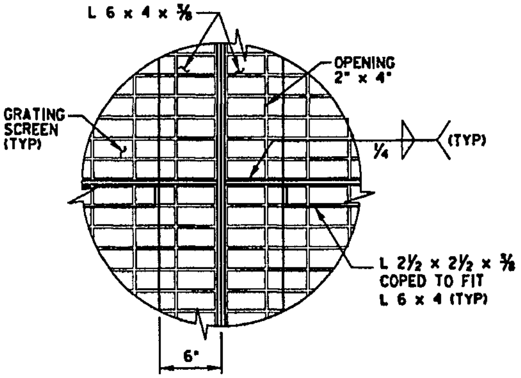

DETAIL 3 / P-C.9
NTS

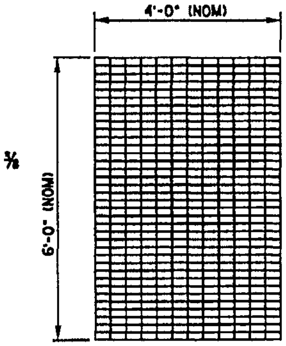

(16 INTERMEDIATE PANELS)

DETAIL 4 / P-C.9
NTS

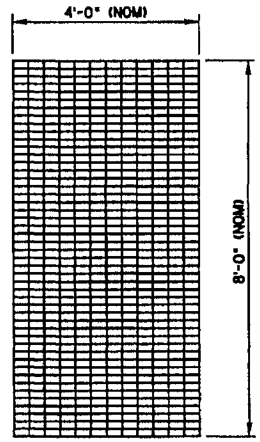

(16 LOWER PANELS)

DETAIL 5 / P-C.9
NTS

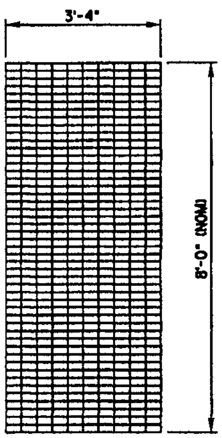

(4 END PANELS)

DETAIL 6A / P-C.9
NTS

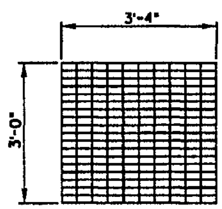

(2 TOP END PANELS)

DETAIL 6B / P-C.9
NTS

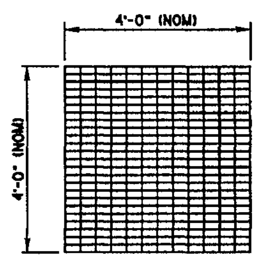

(2 MAN ACCESS PANELS)

DETAIL 7 / P-C.9
NTS

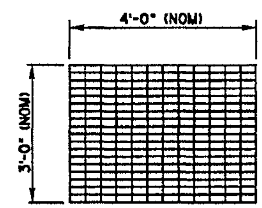

(16 TOP PANELS)

DETAIL 8 / P-C.9
NTS

	NAME	DATE
DESIGN	FLR	4/05
DRAWN	JJO	4/05
CHECKED		4/05

Stanley Consultants INC.

ARIZONA DEPARTMENT OF TRANSPORTATION
INTERMODAL TRANSPORTATION DIVISION
ROADWAY DESIGN SERVICES

PUMP STATION
BAR SCREEN DETAILS, SHEET NO. 2

PRELIMINARY
STAGE IV
95% Review
NOT FOR CONSTRUCTION OR RECORDING

ROUTE 202L | LOCATION RED MTN FWY, POWER ROAD - UNIVERSITY DRIVE | DWG NO. P-C.10

TRACS NO. H 5782 01C | 202-B(007)B | ___ OF ___

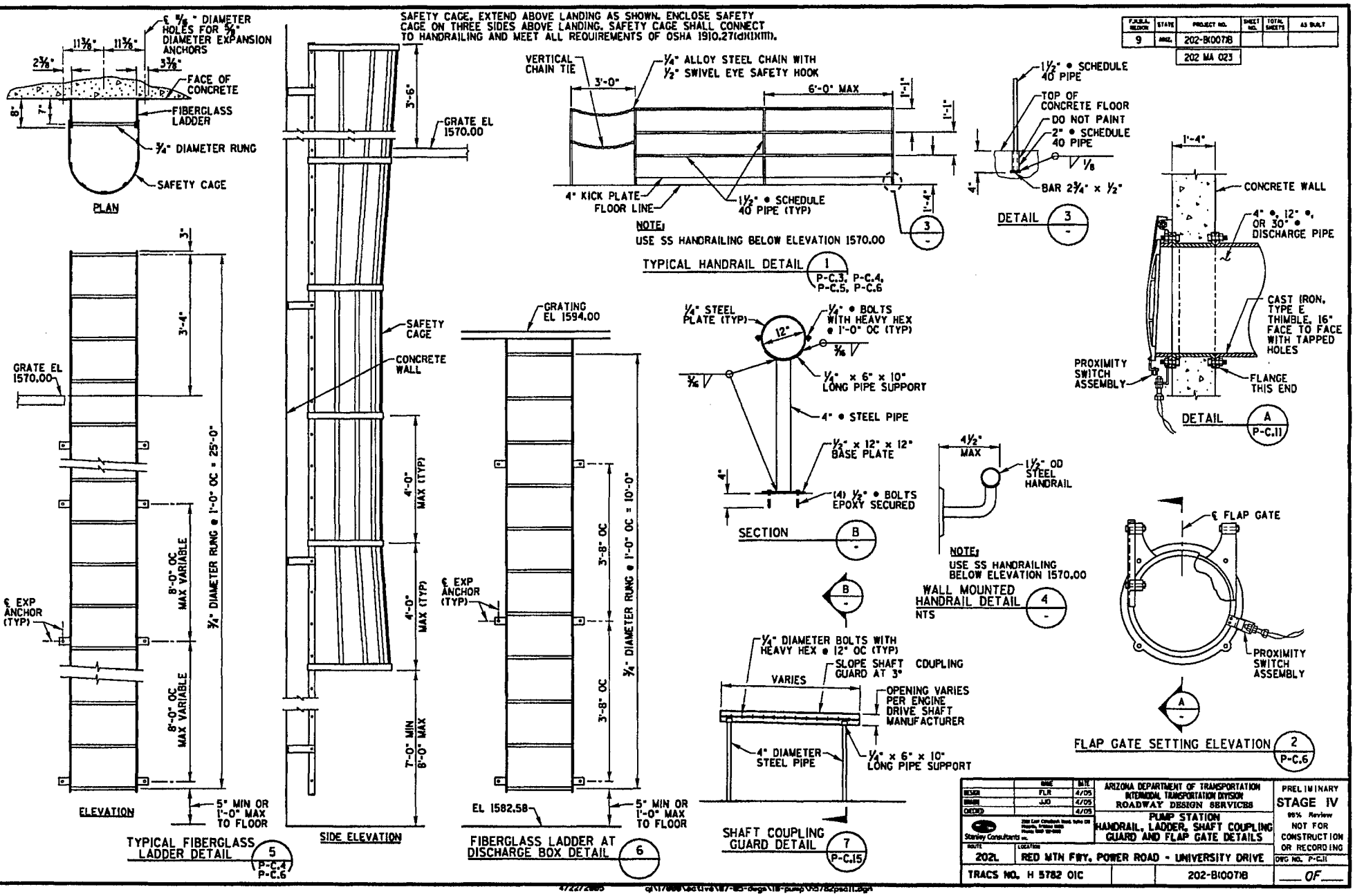
PLAN
ELEVATION
SIDE ELEVATION
SAFETY CAGE, EXTEND ABOVE LANDING AS SHOWN. ENCLOSE SAFETY CAGE ON THREE SIDES ABOVE LANDING. SAFETY CAGE SHALL CONNECT TO HANDRAILING AND MEET ALL REQUIREMENTS OF OSHA 1910.27(d)(1)(iii).
TYPICAL HANDRAIL DETAIL 1 P-C.3, P-C.4, P-C.5, P-C.6
NOTE: USE SS HANDRAILING BELOW ELEVATION 1570.00
DETAIL 3
DETAIL A P-C.11
SECTION B
WALL MOUNTED HANDRAIL DETAIL 4 NTS
NOTE: USE SS HANDRAILING BELOW ELEVATION 1570.00
FLAP GATE SETTING ELEVATION 2 P-C.6
TYPICAL FIBERGLASS LADDER DETAIL 5 P-C.4 P-C.6
FIBERGLASS LADDER AT DISCHARGE BOX DETAIL 6
SHAFT COUPLING GUARD DETAIL 7 P-C.15
GRATE EL 1570.00
SAFETY CAGE
CONCRETE WALL
GRATING EL 1594.00
EL 1582.58
FACE OF CONCRETE
FIBERGLASS LADDER
¾" DIAMETER RUNG
¢ EXP ANCHOR (TYP)
5" MIN OR 1'-0" MAX TO FLOOR
VERTICAL CHAIN TIE
¼" ALLOY STEEL CHAIN WITH ½" SWIVEL EYE SAFETY HOOK
4" KICK PLATE
FLOOR LINE
1½" • SCHEDULE 40 PIPE (TYP)
1½" • SCHEDULE 40 PIPE
TOP OF CONCRETE FLOOR
DO NOT PAINT
2" • SCHEDULE 40 PIPE
BAR 2¾" x ½"
CONCRETE WALL
4" •, 12" •, OR 30" • DISCHARGE PIPE
CAST IRON, TYPE E THIMBLE, 16" FACE TO FACE WITH TAPPED HOLES
PROXIMITY SWITCH ASSEMBLY
FLANGE THIS END
¼" STEEL PLATE (TYP)
½" • BOLTS WITH HEAVY HEX • 1'-0" OC (TYP)
¼" x 6" x 10" LONG PIPE SUPPORT
4" • STEEL PIPE
½" x 12" x 12" BASE PLATE
(4) ½" • BOLTS EPOXY SECURED
1½" OD STEEL HANDRAIL
¢ FLAP GATE
PROXIMITY SWITCH ASSEMBLY
¼" DIAMETER BOLTS WITH HEAVY HEX • 12" OC (TYP)
SLOPE SHAFT GUARD AT 3°
VARIES
OPENING VARIES PER ENGINE DRIVE SHAFT MANUFACTURER
4" DIAMETER STEEL PIPE
¼" x 6" x 10" LONG PIPE SUPPORT
¾" DIAMETER RUNG • 1'-0" OC = 25'-0"
¾" DIAMETER RUNG • 1'-0" OC = 10'-0"
8'-0" OC MAX VARIABLE
4'-0" MAX (TYP)
7'-0" MIN 8'-0" MAX
3'-8" OC
ARIZONA DEPARTMENT OF TRANSPORTATION
INTERMODAL TRANSPORTATION DIVISION
ROADWAY DESIGN SERVICES
PUMP STATION
HANDRAIL, LADDER, SHAFT COUPLING GUARD AND FLAP GATE DETAILS
PRELIMINARY
STAGE IV
95% Review
NOT FOR CONSTRUCTION OR RECORDING
Stanley Consultants
ROUTE 202L
LOCATION RED MTN FWY, POWER ROAD - UNIVERSITY DRIVE
DWG NO. P-C.11
TRACS NO. H 5782 01C
202-B100718
OF

F.A.P. NO.	STATE	PROJECT NO.	SHEET NO.	TOTAL SHEETS	AS BUILT
9	ARIZ.	202-B(007)B			
		202 MA 023			

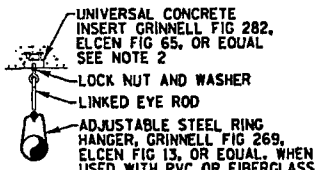

FOR HANGER RODS 3/4" DIAMETER AND SMALLER

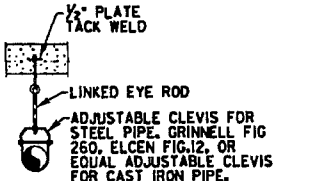

FOR HANGER RODS 7/8" DIAMETER AND LARGER, AND MIN 8" THICK CONCRETE

PIPE HANGER RODS & SUPPORT SPACING			
PIPE DIA (INCHES)	ROD DIA (INCHES)	MAX SUPPORT SPACING (FEET)	
		STEEL PIPE	CAST IRON PIPE
1 & SMALLER	3/8	6	5
1 1/4 TO 2	3/8	9	5
2 1/2 TO 3 1/2	1/2	12	5
4 TO 5	5/8	14	5
6, 8	3/4	16	5
10, 12	7/8	18	
14, 16	1	20	

NOTES:

1. GALVANIZE ALL PARTS AFTER FABRICATION
2. WHERE PRE-CAST ROOF EXISTS, THE PRE-CAST MANUFACTURER, SHALL SUBMIT SHOP DRAWINGS FOR RECOMMENDED ATTACHMENT

PIPE HANGER
NTS

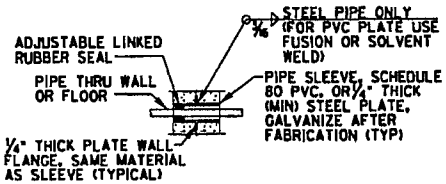

METHOD "A"
NTS

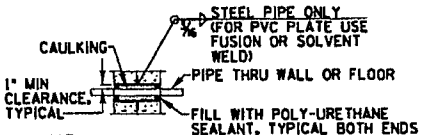

NOTE:
THESE SLEEVED PIPE DETAILS ARE TO BE USED IN DRY WALLS ONLY

METHOD "B"

SLEEVED PIPE OPENING
NTS

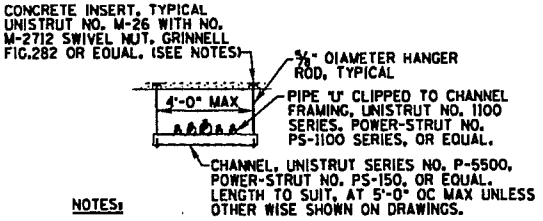

NOTES:

1. WHEN USED WITH PVC OR FIBERGLASS PIPE AT CLIP WITH LOOSE FIT. WRAP COPPER TUBES WITH 2" STRIP OF RUBBER FABRIC
2. WHERE PRE-CAST ROOF EXISTS THE PRE-CAST MANUFACTURER SHALL SUBMIT SHOP DRAWINGS FOR RECOMMENDED PIPE, PROVIDE STEEL SHIELD AROUND ATTACHMENT

TRAPEZE PIPE HANGER
NTS

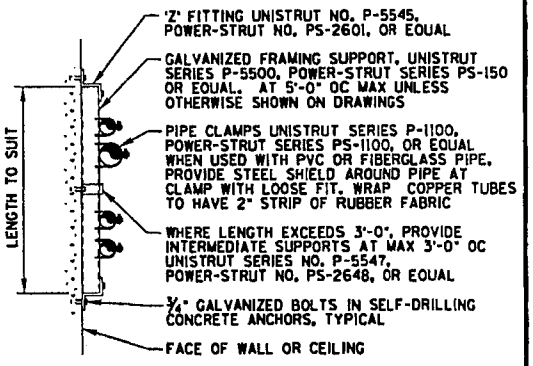

FLUSH MOUNTED PIPE SUPPORT
NTS

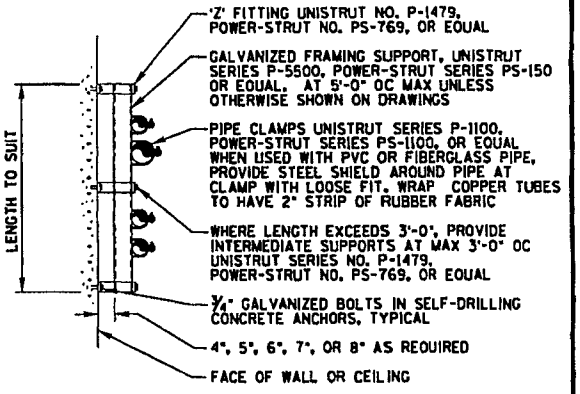

EXTENDED PIPE SUPPORT
NTS

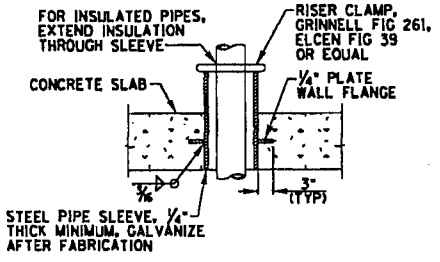

NOTE:
ID = PIPE OD + 1" MIN (UNINSULATED PIPES)
ID = INSULATION OD + 1" MIN (INSULATED PIPES)

VERTICAL PIPE SUPPORT SLEEVE
NTS

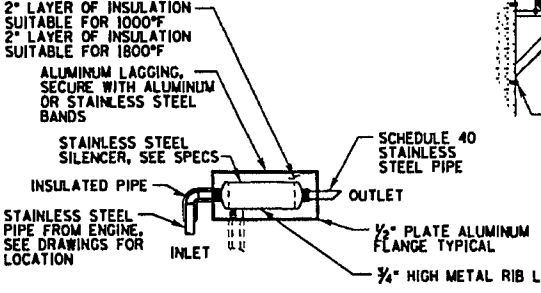

ENGINE SILENCER ASSEMBLY
NTS

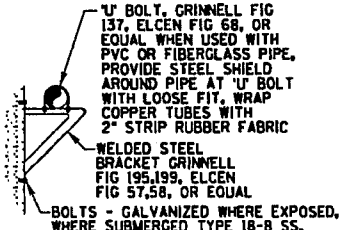

PIPE BRACKET
NTS

	NAME	DATE
DESIGN	FLR	4/05
DRAWN	JJD	4/05
CHECKED		4/05

Stanley Consultants Inc.

ARIZONA DEPARTMENT OF TRANSPORTATION
INTERMODAL TRANSPORTATION DIVISION
ROADWAY DESIGN SERVICES

PUMP STATION
PIPE SUPPORTS AND DETAILS

PRELIMINARY
STAGE IV
95% Review
NOT FOR CONSTRUCTION OR RECORDING

DISTRICT: 202L
LOCATION: RED MTN FWY, POWER ROAD - UNIVERSITY DRIVE
DWG NO. P-C12
TRACS NO. H 5782 01C
202-B(007)B
SHEET OF

4/22/2005 q:\17000\cadd\rw\87-185-dsgn\18-pump\h5782psc12.dgn

FAP/A. REGION	STATE	PROJECT NO.	SHEET NO.	TOTAL SHEETS	AS BUILT
9	ARIZ.	202-B(007)B			
		202 MA 023			

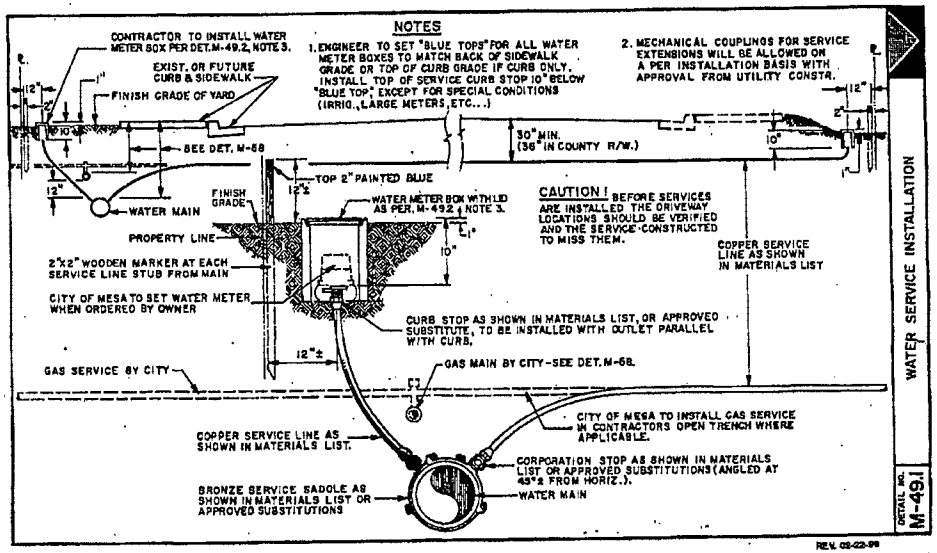

WATER SERVICE INSTALLATION

DETAIL NO. M-49.1

REV. 02-22-99

Materials List	Service Line Sizes			
	3/4"	1"	1 1/2"	2"
Service Saddle ⚠	Ford 101B/102B Jones J-975/J-979 Mueller H-16000 single/double strap		Jones J-979 (I.P. Threads)	Jones J-979 (I.P. Threads)
Corporation Stop	Ford F-1100 Jones J-3403 Mueller H-15028	Ford F-1100 Jones J-3403 Mueller H-15028	Ford FB-1100 Jones J-1935 Mueller H-15023	Ford FB-1100 Jones J-1935 Mueller H-15023
Curb Stop with Locking Wings	Ford KV43-332W Jones J-4201 Mueller H-14258	Ford KV43-444W Jones J-4201 Mueller H-14258	Ford FV43-666W Jones J-1975W Mueller H-14277	Ford FV43-777W Jones J-1975W Mueller H-14277
Service Line	Copper (Type K-Soft)	Copper (Type K-Soft)	Copper ⚠ (Type K-Hard)	Copper ⚠ (Type K-Hard)

⚠ Single-strap service saddles are permitted on water mains 8" and smaller. Double-strap service saddles are required on water mains larger than 8". Service saddles shall be all-brass and have I.P. threads. Contractor shall submit any proposed alternate service saddle for review and approval prior to installation.

⚠ All joints shall be silver soldered per A.S.T.M. B 32. The silver content of the solder shall not be less than 14.5%.

1. City of Mesa does not allow flared-type connections on the City side of the meter.
2. NO tapped couplings will be allowed.
3. Water meter box and lid:
   A. Inverted plastic water meter box and lid may be used for 5/8", 3/4", and 1" meters. Manufactured by: International Diversified Industries Brooks Plastics - 1017 Series Amatek-Plymouth Super Flexon®
   B. Concrete water meter box with cast iron lid as per M.A.G. Std. Detail 320, or steel lids per Mesa Standard Detail M-49.4.
4. See M-29 for 1 1/2" and 2" water meters.
5. Branches before the meter are not allowed; i.e. only one meter per service tap.
6. For 3/4" and 1" services, a minimum of 1 1/2 feet copper "pigtail" on customer's side of meter before changing to other material. For 1 1/2" & 2" services, a minimum of 4 feet copper "pigtail" on customer's side before changing to other material.

WATER SERVICE INSTALLATION MATERIALS LIST

DETAIL NO. M-49.2

REV. 02-22-99

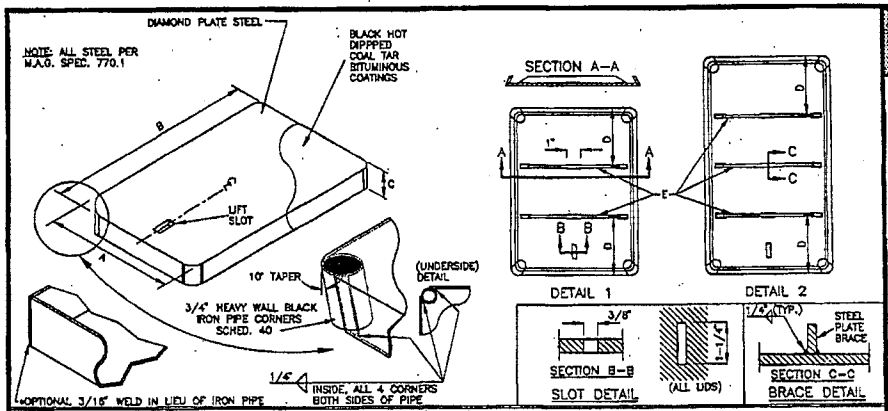

STEEL WATER METER BOX COVER

DETAIL NO. M-49.4

SPECIFICATIONS

NO.	A	B	C	D	E	BRACES	WEIGHT	MATERIAL
1	9"	15 7/8"	1 3/8"	NONE	NONE	NONE	5 1/4 LBS.	14 GAGE
2	14 1/8"	21 3/4"	1 1/2"	8 1/2"	3/16" x 1 1/4" x 13 1/8"	DETAIL 1	12 3/4 LBS.	12 GAGE
3	15 1/4"	26 1/4"	1 1/2"	8 1/4"	3/16" x 1 1/4" x 14 1/4"	DETAIL 1	19 1/4 LBS.	12 GAGE
4	19 1/2"	30"	1 1/2"	7 1/8"	3/16" x 1 1/4" x 18 3/4"	DETAIL 2	33 LBS.	11 GAGE

EFF. 7-1-97

DETAIL PC1

SHEET 1 OF 2

	NAME	DATE
DESIGN	FLR	4/05
DRAWN	JJD	4/05
CHECKED		4/05

Stanley Consultants Inc.

ARIZONA DEPARTMENT OF TRANSPORTATION
INTERMODAL TRANSPORTATION DIVISION
ROADWAY DESIGN SERVICES

PUMP STATION DETAIL NO. PC1

PRELIMINARY
STAGE IV
95% Review
NOT FOR CONSTRUCTION OR RECORDING

DIST.	LOCATION
202L	RED MTN FWY, POWER ROAD - UNIVERSITY DRIVE

DWG NO. P-C.13

TRACS NO. H 5782 01C		202-B(007)B	___ OF ___

4/22/2005 q:\17888\active\87-85-dsgn\11-pump\h5782psd1.dgn

F.A.P.N. REGION	STATE	PROJECT NO.	SHEET NO.	TOTAL SHEETS	AS BUILT
9	ARIZ.	202-B(007)B			
		202 MA 023			

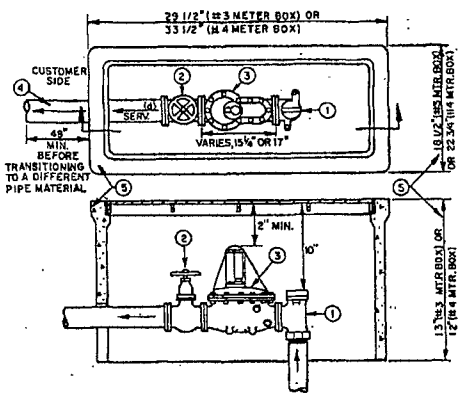

LIST OF MATERIALS

1. 1 1/2" OR 2" ANGLE METER VALVE (LOCKING TYPE) - CITY SIDE OF INLET SERVICE LINE. (SEE DETAIL M-49.2)
2. 1 1/2" OR 2" GATE VALVE - CUSTOMER SIDE OF SERVICE - FLANGED.
3. C.O.M. APPROVED WATER METERS

	2"	1 1/2"
PRECISION	PMDI-3F-LL17"	PMDI-15DF-LL13"
HERSEY	MCT II LL 17"	MHD-LL 13"
SENSUS*	SRCH LL 19 1/4"	SR-LL 13"

* FORMERLY ROCKWELL

4. TYPE "K" COPPER (SEE M-49.2)
5. CONCRETE WATER METER BOX WITH CAST IRON COVER PER MAG STD. DETAIL 320 OR STEEL LID PER DETAIL M-49.4.

WATER METER SIZE	METER BOX NUMBER
1 1/2"	#3
2"	#4

NOTES:

1. TOP OF WATER METER SHALL BE A MINIMUM OF 2" BELOW UNDERSIDE OF CAST IRON COVER.
2. METERS SHALL NOT BE INSTALLED IN DRIVEWAYS OR IN A LOCATION INACCESSIBLE FOR MAINTENANCE.
3. ALL METERS SHALL BE PURCHASED FROM THE CITY OF MESA.
4. SEE DETAIL M-49.1 THROUGH M-49.4 FOR INSTALLATION.

1 1/2" & 2" APPROVED WATER METERS

DETAIL NO. M-29

REV. 02-22-99

NOTES

1. GAS PIPE SHALL HAVE A MINIMUM OF 30" COVER AS MEASURED FROM WHICHEVER IS LOWER, FINISHED GRADE OF PAVEMENT OR NATURAL GROUND, UNLESS OTHERWISE NOTED. "BLUE BOY" MAY BE REVERTED TO "COPPY COND" AS REQUIRED PER NOTE 1 OF M-49.1.
2. AFTER THE WATER MAIN HAS BEEN INSTALLED, THE CONTRACTOR SHALL INSTALL BRAKING MARKING TO PROVIDE A LONG, LASTING BEARING SURFACE FOR THE INSTALLATION OF THE GAS PIPE. THE CITY OF MESA OR ITS GAS LINE CONTRACTOR WILL FURNISH AND INSTALL THE GAS PIPE AND TRACER WIRE AFTER THE WATER MAIN HAS BEEN INSTALLED.
3. BRAKING MARKING ARRANGEMENT TO THE CITY OF MESA GAS PIPE SHALL BE SELECT SHOOT TYPE SIZE, FREE OF ROCKS OR LUMPS THAT WILL PASS THROUGH A 3/8" SCREEN AS INSPECTED AND APPROVED BY CITY OF MESA GAS INSPECTION PERSONNEL. CITY OF MESA SHALL FURNISH ALL BRAKING MATERIAL WHICH NECESSARY, AND INSTALL THE BRAKING MATERIAL FROM THE BOTTOM OF THE GAS PIPE TO 6" ABOVE THE TOP OF THE GAS PIPE.
4. SEE CONSTRUCTION PLANS FOR WATER MAIN AND GAS PIPE SIZES.
5. WHERE WATER AND GAS ARE INSTALLED IN A JOINT TRENCH, THE CONTRACTOR SHALL ADJUST BOTH WATER AND GAS VALVE HOUSING BOXES TO FINISHED GRADE ACCORDING TO THE APPLICABLE STANDARD DETAIL. ALSO, THE CONTRACTOR SHALL FURNISH, INSTALL AND MAINTAIN ALL NECESSARY BARRICADING, SIGNS, FLARES AND TRENCH SHORING REQUIRED DURING GAS INSTALLATION.
6. CONTRACTOR SHALL COMPLETE ALL BACKFILL TO FINISHED GRADE AFTER THE GAS PIPE INSTALLATION IS COMPLETED.
7. A MINIMUM OF 12" OF SEPARATION SHALL BE MAINTAINED BETWEEN GAS PIPE, WATER MAIN AND OTHER UNDERGROUND FACILITIES UNDER CROSSINGS OR UNDERCROSSING.
8. CITY MAY SPECIFY TRENCH DETAIL TO BE USED. IF NOT, CONTRACTOR HAS THE OPTION OF INSTALLING TRENCH DETAIL 'A' OR 'B', UNLESS OTHERWISE NOTED. RESTRAINED INSTALLATION IS TRENCH DETAIL 'A'.
9. ALL WATER MAINS IN MAJOR STREETS SHALL HAVE A MINIMUM COVER OF 48-INCHES OVER THE TOP OF THE PIPE. WATER MAINS IN OTHER LOCATIONS SHALL HAVE A MINIMUM COVER OVER THE TOP OF THE PIPE AS FOLLOWS:
   (a) 36-INCHES FOR MAINS SMALLER THAN 12-INCHES
   (b) 48-INCHES FOR MAINS 12-INCH AND LARGER.

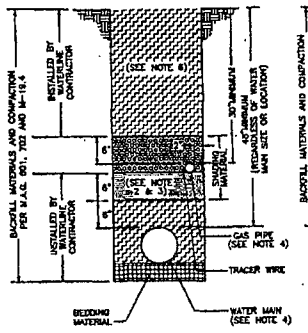

TRENCH DETAIL 'A'

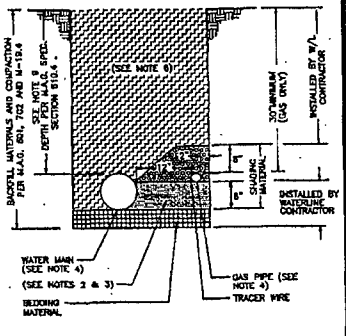

TRENCH DETAIL 'B'

LEGEND

INSTALLED BY THE CITY OR ITS GAS LINE CONTRACTOR

JOINT USE WATER AND GAS TRENCH DETAIL

DETAIL NO. M-58

REV. 07-25-97

DETAIL PC1

SHEET 2 OF 2

	NAME	DATE
DESIGN	FLR	4/05
DRAWN	JJO	4/05
CHECKED		4/05

Stanley Consultants Inc.

ARIZONA DEPARTMENT OF TRANSPORTATION
INTERMODAL TRANSPORTATION DIVISION
ROADWAY DESIGN SERVICES

PUMP STATION DETAIL NO. PC1

PRELIMINARY
STAGE IV
95% Review
NOT FOR CONSTRUCTION OR RECORDING

ROUTE	LOCATION	DWG NO.
202L	RED MTN FWY, POWER ROAD - UNIVERSITY DRIVE	P-C14
TRACS NO. H 5782 01C	202-B(007)B	___ OF ___

4/22/2005 c:\17888\acLive\87-85-dsgn\18-pump\h5782psd1.dgn

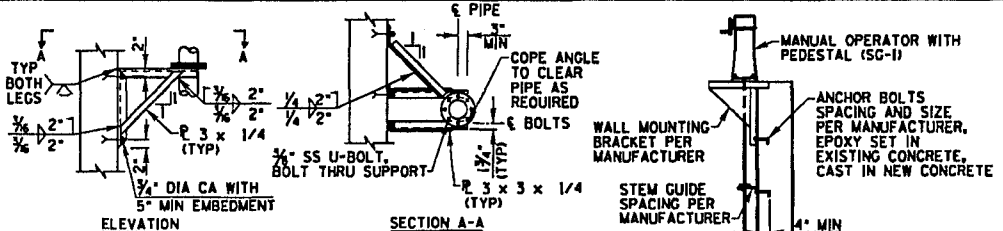

RECIRCULATION PIPE SUPPORT DETAIL 4 P-C.7
NTS

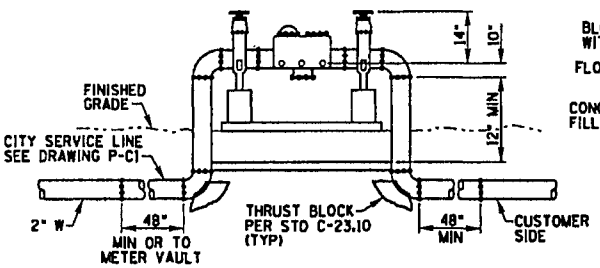

REDUCED PRESSURE PRINCIPLE BACKFLOW DEVICE 1 P-C.1
NTS

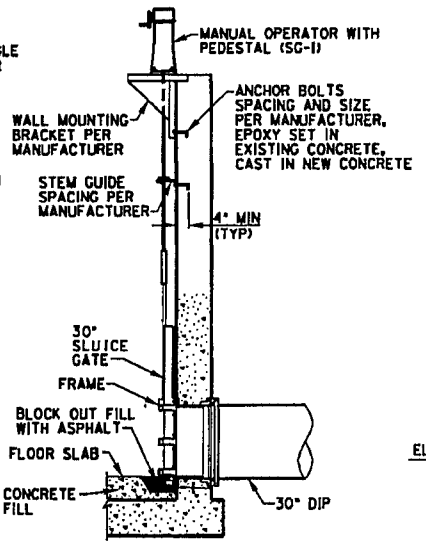

SLUICE GATE DETAIL 2 P-C.2
NTS

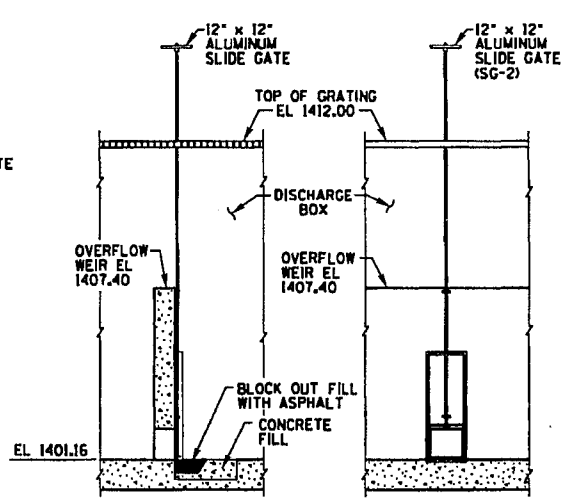

SLIDE GATE DETAIL 7 P-C.2 P-C.6
NTS

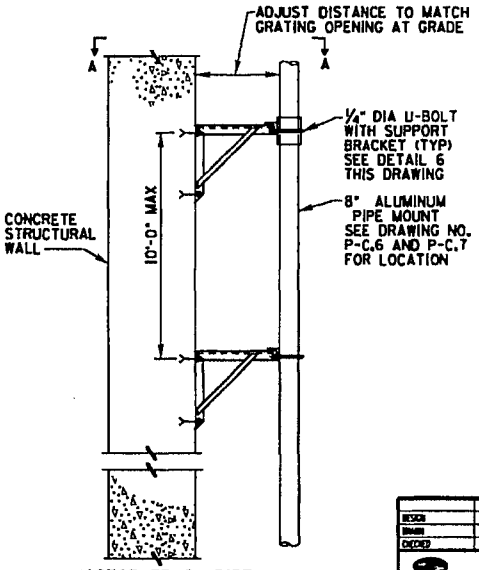

VACTOR TRUCK PIPE WALL MOUNTING DETAIL 5 P-C.6 P-C.7
NTS

F.A.H.U.A. REGION	STATE	PROJECT NO.	SHEET NO.	TOTAL SHEETS	AS BUILT
9	ARIZ.	202-B(007)B			
		202 MA 023			

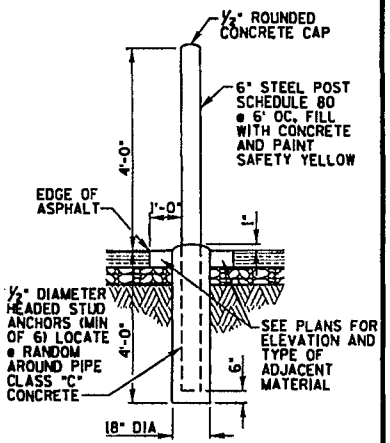

BOLLARD DETAIL 3 P-C.1
NTS

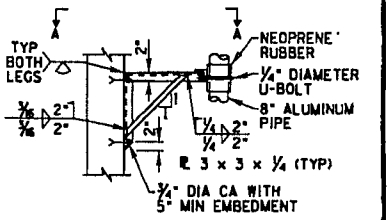

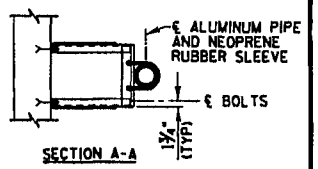

PIPE SUPPORT DETAIL 6 -
NTS

GENERAL NOTES:

1. ASSEMBLY SHALL BE APPROVED BY USC FOUNDATION FOR CROSS CONNECTION AND HYDRAULIC RESEARCH
2. CONTACT CITY OF CHANDLER PUBLIC WORKS DEPARTMENT FOR A LIST OF APPROVED BACKFLOW PREVENTION ASSEMBLIES
3. FOUR (4) TEST COCKS TO BE INSTALLED PER USC
4. COPPER FITTINGS SHALL BE CONNECTED WITH LEAD-FREE SOLDER JOINTS
5. FINISHED GRADE BELOW BACKFLOW PREVENTER SHALL BE 95% COMPACTION
6. ASSEMBLY MAY BE PAINTED TO BLEND WITH LANDSCAPE SURFACE TREATMENT OR ON-SITE STRUCTURES
7. THE ASSEMBLY MAY ALSO BE SCREENED WITH SHRUBBERY OR BE ENCLOSED WITHIN A WALL TYPE STRUCTURE. ADEQUATE DRAINAGE FOR SURFACE WATER IS REQUIRED
8. ANY SCREENING/ENCLOSURE MUST PROVIDE A MINIMUM 18" ACCESS OPENING (UNSECURED GATES ARE ACCEPTABLE) AND SIDE WALLS OR SHRUBBERY MUST BE A MINIMUM OF 24" FROM THE OUTSIDE FACE OF ANY PORTION OF THE BACKFLOW PREVENTION DEVICE
9. ASSEMBLY MAY BE PROTECTED BY GUARD POSTS (MODIFY P-1359, HYDRANT GUARDS, PHOENIX SUPPLEMENT TO MAG)

GATE SCHEDULE

GATE NO.	LOCATION	SERVICE	TYPE	HEAD		SIZE	OPERATION	REMARKS
				SEATING	UNSEATING			
SG-1	DISCHARGE BOX	RECIRCULATION	SLUICE GATE	6'-6"	N/A	30"	MANUAL	FLUSH BOTTOM
SG-2	DISCHARGE BOX	DRAIN	SLIDE GATE	7'-6"	6'-3"	12"	MANUAL	UPWARD OPENING

DESIGN	FLR	4/05
DRAWN	JJO	4/05
CHECKED		4/05

Stanley Consultants Inc.

ARIZONA DEPARTMENT OF TRANSPORTATION
INTERMODAL TRANSPORTATION DIVISION
ROADWAY DESIGN SERVICES

PUMP STATION MISCELLANEOUS DETAILS

PRELIMINARY
STAGE IV
95% Review
NOT FOR CONSTRUCTION OR RECORDING

ROUTE: 202L
LOCATION: RED MTN FWY, POWER ROAD - UNIVERSITY DRIVE
DWG NO. P-C.15

TRACS NO. H 5782 01C | 202-B(007)B | ___ OF ___

4/22/2005 q:\1788\active\87-88-dega\18-pump\h5782psd14.dgn

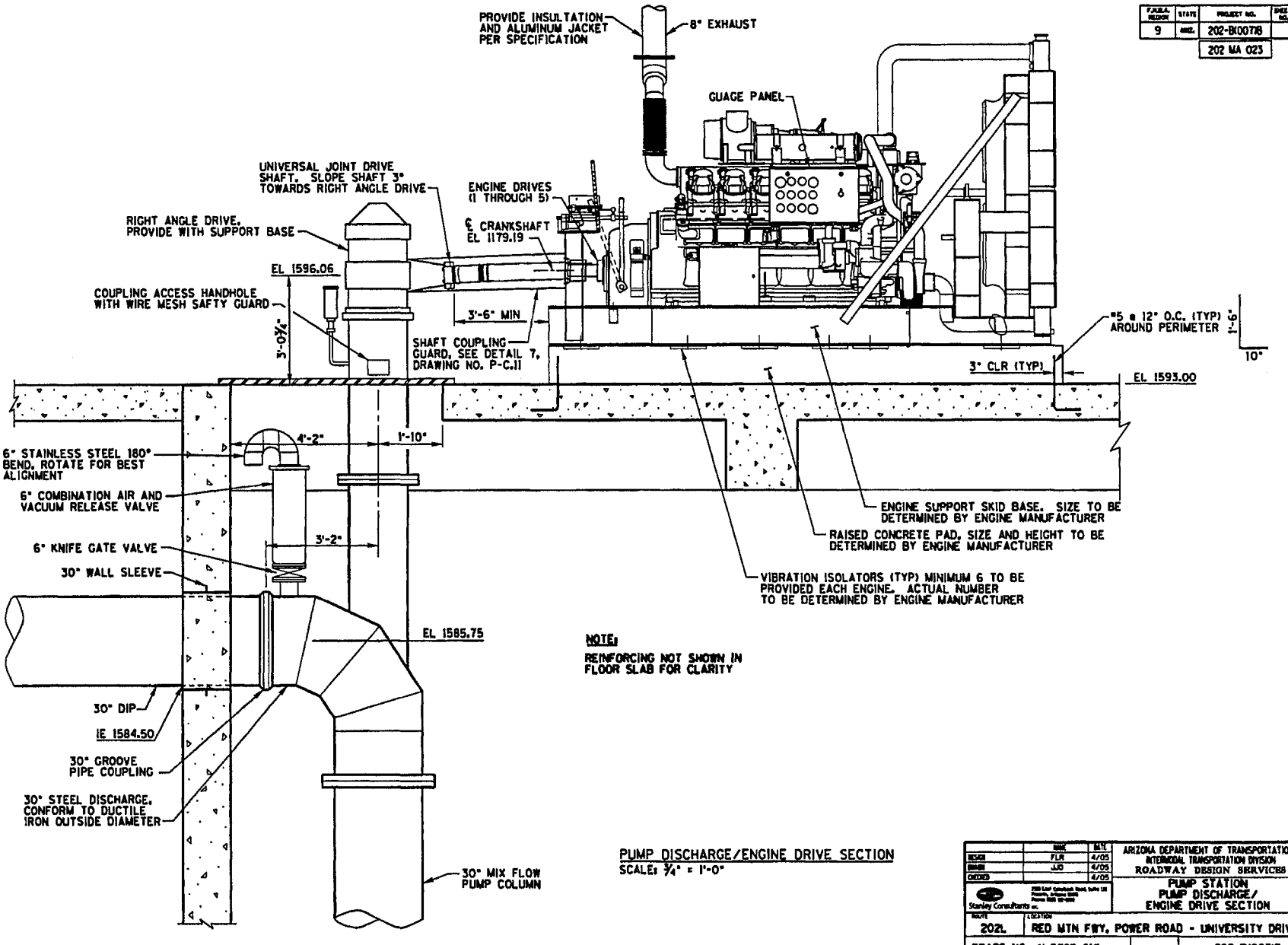

PUMP DISCHARGE/ENGINE DRIVE SECTION
SCALE: ¾" = 1'-0"

F.A.P./S.A. REVISION	STATE	PROJECT NO.	SHEET NO.	TOTAL SHEETS	AS BUILT
9	ARIZ.	202-B(007)I			
		202 MA 023			

	NAME	DATE
DESIGN	FLR	4/05
DRAWN	JJO	4/05
CHECKED		4/05

Stanley Consultants Inc.

ARIZONA DEPARTMENT OF TRANSPORTATION
INTERMODAL TRANSPORTATION DIVISION
ROADWAY DESIGN SERVICES

PUMP STATION
PUMP DISCHARGE/
ENGINE DRIVE SECTION

PRELIMINARY
STAGE IV
95% Review
NOT FOR CONSTRUCTION OR RECORDING

ROUTE	LOCATION	DWG NO. P-C.16
202L	RED MTN FWY, POWER ROAD - UNIVERSITY DRIVE	
TRACS NO. H 5782 01C		202-B(007)I — OF —

4/22/2005

F.A.U.S. REGION	STATE	PROJECT NO.	SHEET NO.	TOTAL SHEETS	AS BUILT
9	ARIZ.	202-B(007)B			
		202 MA 023			

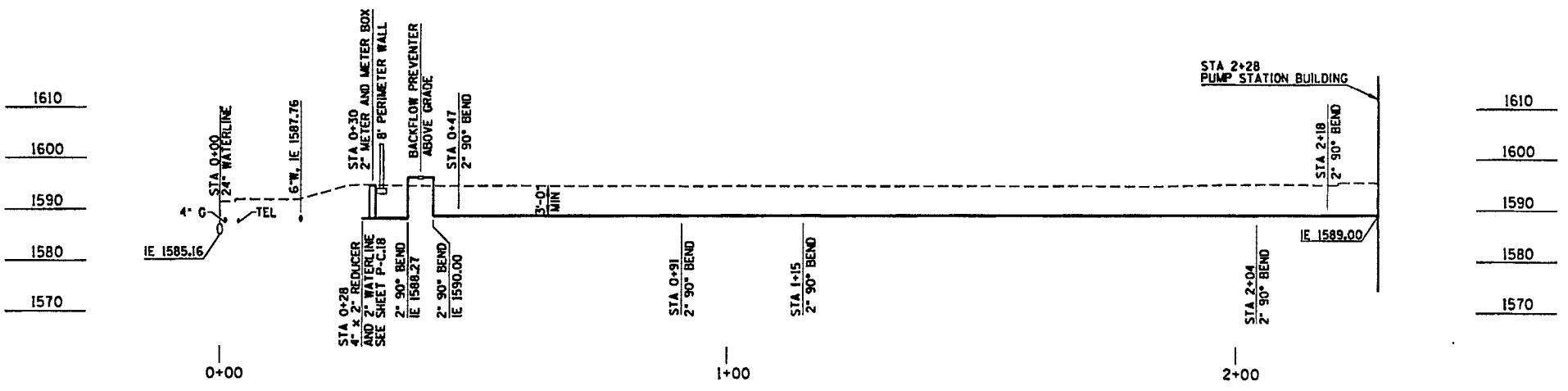

2" SERVICE - WATER LINE PROFILE

	NAME	DATE
DESIGN	FLR	4/05
DRAWN	JJO	4/05
CHECKED	DPM	4/05

Stanley Consultants Inc.

ARIZONA DEPARTMENT OF TRANSPORTATION
INTERMODAL TRANSPORTATION DIVISION
ROADWAY DESIGN SERVICES

2" SERVICE
WATER LINE PROFILE

PRELIMINARY
STAGE IV
95% Review
NOT FOR CONSTRUCTION OR RECORDING

ROUTE	LOCATION	DWG NO. P-C.17
202L	RED MTN FWY, POWER ROAD - UNIVERSITY DRIVE	
TRACS NO. H 5782 01C		202-B(007)B — OF —

4/22/2005 dp\17888\active\87-BS-dwgs\18-pump\h5782psd17.dgn

F.A.B.A. REGION	STATE	PROJECT NO.	SHEET NO.	TOTAL SHEETS	AS BUILT
9	ARIZ.	202-B(007)B			

202 MA 023

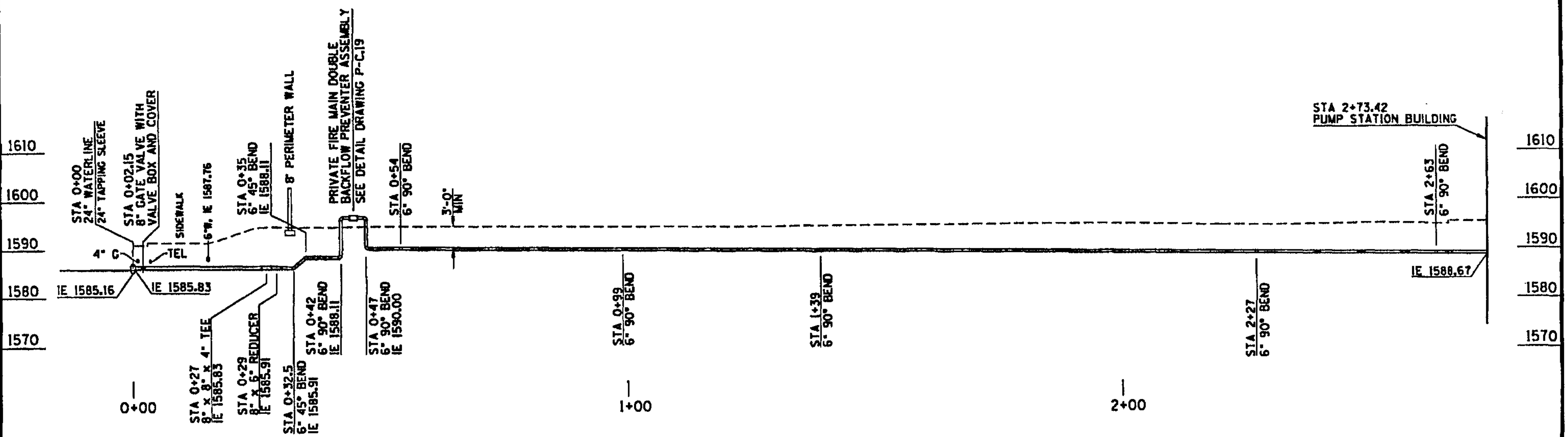

8" AND 6" FIRE SERVICE - WATER LINE PROFILE

	NAME	DATE
DESIGN	FLR	4/05
DRAWN	JJO	4/05
CHECKED	DPW	4/05

Stanley Consultants inc.

ARIZONA DEPARTMENT OF TRANSPORTATION
INTERMODAL TRANSPORTATION DIVISION
ROADWAY DESIGN SERVICES

8" AND 6" FIRE SERVICE
WATER LINE PROFILE

PRELIMINARY
STAGE IV
95% Review
NOT FOR
CONSTRUCTION
OR RECORDING

ROUTE 202L | LOCATION RED MTN FWY, POWER ROAD - UNIVERSITY DRIVE | DWG NO. P-C.18

TRACS NO. H 5782 01C | 202-B(007)B | ___ OF ___

4/22/2005 q:\17888\active\87-85-dwgs\18-pump\h5782psol8.dgn

F.A.P.A. REGION	STATE	PROJECT NO.	SHEET NO.	TOTAL SHEETS	AS BUILT
9	ARIZ.	202-B(007)B			
		202 MA 023			

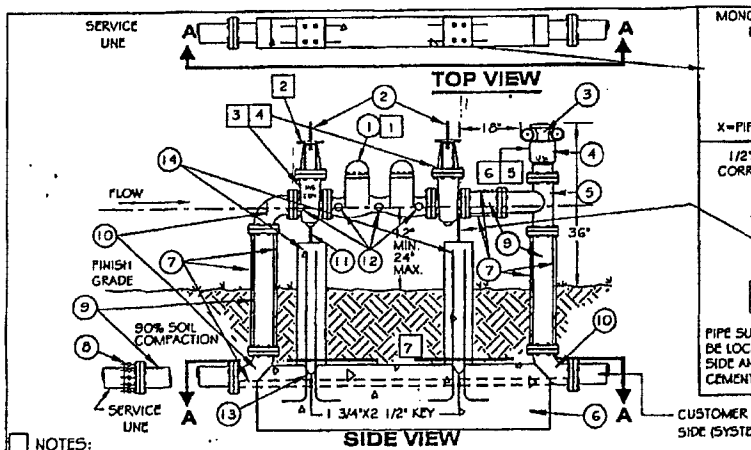

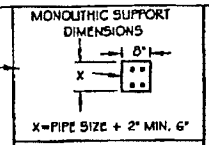

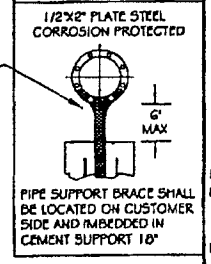

LIST OF MATERIALS

1. APPROVED DOUBLE CHECK VALVE BACKFLOW PREVENTION ASSEMBLY.
2. O.S. & Y. GATE VALVES.
3. FIRE DEPARTMENT SIAMESE CONNECTION. (FDC)
4. VERTICAL SWING CHECK VALVE.
5. FLANGED TEE.
6. THRUSTBLOCK INSTALLED PER N.F.P.A. #24, MIN. 16".
7. 3/4" ZINC COATED THREADED ROD, BOLTED TO FLANGES, BOTH SIDES TYPICAL EQUAL TENSION MINIMUM FOUR RODS, EVENLY SPACED.
8. FLANGED ADAPTER. (WHEN REQUIRED).
9. PIPE SPOOL. (FLANGED D.I.P.)
10. 90° ELL. (FLANGED D.I.P.)
11. ADJUSTABLE PIPE SUPPORT, PERMANENTLY ATTACHED TO BASE, 6" MAX. HEIGHT.
12. TEST COCKS, (4 REQUIRED), WITH BRASS PLUGS USING ONLY TEFLON TAPE.
13. CONSTRUCTION JOINT KEY TO BE 1 3/4" X 2 1/2".
14. #6 REINFORCING STEEL, DEFORMED BAR, 4' APART, EVENLY SPACED.

NOTES:

1. DOUBLE CHECK VALVE ASSEMBLY SHALL BE UL LISTED OR FM APPROVED FOR FIRE PROTECTION USE AND SHALL BE AS APPROVED BY U.S.C. FOUNDATION FOR CROSS-CONNECTION CONTROL AND HYDRAULIC RESEARCH. THIS ASSEMBLY IS TO BE USED FOR POLLUTION HAZARDS ONLY AS PER RECOMMENDED IN THE AWWA-M14 MANUAL.
2. ALL PIPING, VALVES, FITTINGS AND APPURTENANCES DOWNSTREAM OF THE SERVICE LINE SIDE O.S.& Y. VALVE SHALL BE APPROVED FOR FIRE PROTECTION USE AND INSTALLED PER N.F.P.A. #24.
3. ON SINGLE RISER SYSTEMS THE O.S.+Y. VALVE ASSEMBLY SHALL BE SIGNED AS A RISER CONTROL VALVE WITH 2" LETTERS IN A COLOR CONTRASTING WITH THE BACKGROUND. ON MULTIPLE RISER SYSTEMS ADDITIONAL F.I.V.'S MAY BE REQUIRED TO BE INSTALLED AS RISER CONTROL VALVES.
4. THE ENTIRE ASSEMBLY SHALL BE SUPERVISED PER N.F.P.A. #13.
5. FDC'S SERVICING SINGLE BUILDINGS SHALL BE SIGNED WITH PREMISE ADDRESS ON THE CHECK VALVE OF THE FDC. FDC'S SHALL BE RED IN COLOR WITH 2 INCHES HIGH WHITE LETTERS AND NUMBERS.
6. FDC'S SHALL BE LOCATED SO THAT THEY ARE WITHIN 150 FEET OF A FIRE HYDRANT.
7. A REGISTERED STRUCTURAL ENGINEER SHALL SEAL THE DESIGN OF THRUST BLOCKS, SUPPORTS AND TIE ROD ASSEMBLIES.

SCREENING METHOD

1. SCREEN WALLS, PLANT MATERIAL, BERMING AND/OR BUILDING ORIENTATION SHALL BE SUBMITTED TO DEVELOPMENT SERVICES FOR REVIEW AND APPROVAL PRIOR TO START OF CONSTRUCTION.
2. METHOD OF SCREENING USED MAY REQUIRE FDC'S TO BE REMOTELY LOCATED. FDC LOCATION AND METHOD OF INSTALLATION SHALL BE INCLUDED ON SCREENING PLAN SUBMITTED TO DEVELOPMENT SERVICES FOR REVIEW AND APPROVAL.

DOUBLE CHECK VALVE BACKFLOW PREVENTION ASSEMBLY (PRIVATE FIRE SERVICE MAIN)

	NAME	DATE
DESIGN	FLR	4/05
DRAWN	LJD	4/05
CHECKED		4/05

Stanley Consultants Inc.

ARIZONA DEPARTMENT OF TRANSPORTATION
INTERMODAL TRANSPORTATION DIVISION
ROADWAY DESIGN SERVICES

DOUBLE CHECK VALVE BACKFLOW PREVENTION ASSEMBLY

PRELIMINARY
STAGE IV
95% Review
NOT FOR CONSTRUCTION OR RECORDING

ROUTE	LOCATION	DWG NO.
202L	RED MTN FWY, POWER ROAD - UNIVERSITY DRIVE	P-C.19

TRACS NO. H 5782 01C | 202-B(007)B | ___ OF ___

4/22/2005 q:\17888\acLive\87-85-dwgs\18-pump\h5782psc1-t.dgn

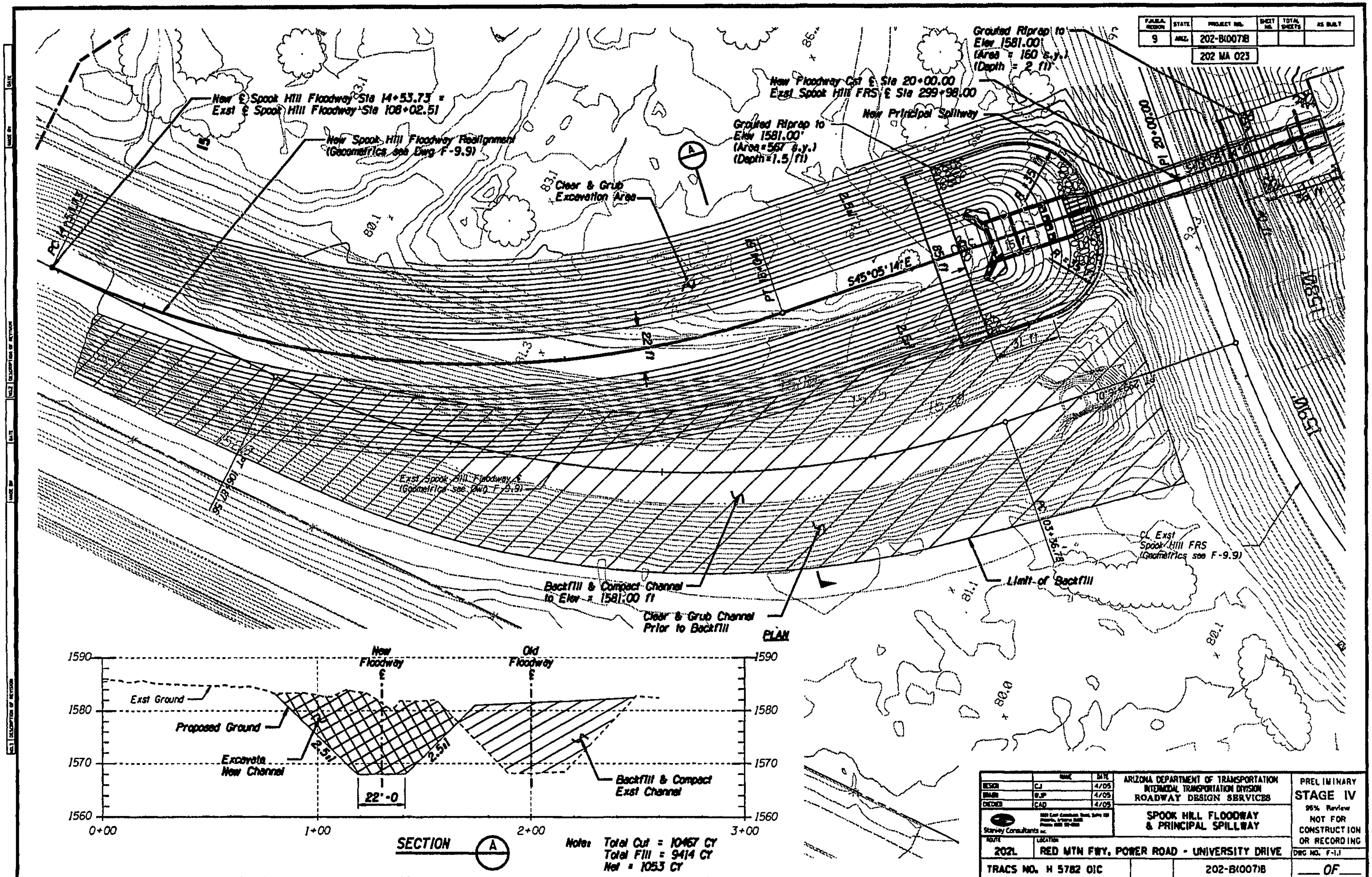

New ℄ Spook Hill Floodway Sta 14+53.73 = Exst ℄ Spook Hill Floodway Sta 108+02.51
New Spook Hill Floodway Realignment (Geometrics see Dwg F-9.9)
Clear & Grub Excavation Area
Grouted Riprap to Elev 1581.00' (Area = 567 s.y.) (Depth = 1.5 ft)
Grouted Riprap to Elev 1581.00' (Area = 160 s.y.) (Depth = 2 ft)
New Floodway Cst ℄ Sta 20+00.00 = Exst Spook Hill FRS ℄ Sta 299+98.00
New Principal Spillway
PI 20+00.00
S45°05'14"E
85 ft
22 ft
Exst Spook Hill Floodway ℄ (Geometrics see Dwg F-9.9)
CL Exst Spook Hill FRS (Geometrics see F-9.9)
Limit of Backfill
Backfill & Compact Channel to Elev = 1581.00 ft
Clear & Grub Channel Prior to Backfill
PLAN
New Floodway ℄
Old Floodway ℄
Exst Ground
Proposed Ground
Excavate New Channel
2.5:1
22'-0
Backfill & Compact Exst Channel
1590
1580
1570
1560
0+00
1+00
2+00
3+00
SECTION A
Note: Total Cut = 10467 CY
Total Fill = 9414 CY
Net = 1053 CY
9
ARIZ.
202-B(007)B
202 MA 023
ARIZONA DEPARTMENT OF TRANSPORTATION
INTERMODAL TRANSPORTATION DIVISION
ROADWAY DESIGN SERVICES
CJ 4/05
WJP 4/05
CAD 4/05
Stanley Consultants inc.
SPOOK HILL FLOODWAY & PRINCIPAL SPILLWAY
PRELIMINARY
STAGE IV
95% Review
NOT FOR CONSTRUCTION OR RECORDING
202L
RED MTN FWY, POWER ROAD - UNIVERSITY DRIVE
DWG NO. F-1.1
TRACS NO. H 5782 01C
202-B(007)B
___ OF ___

F.H.W.A. REGION	STATE	PROJECT NO.	SHEET NO.	TOTAL SHEETS	AS BUILT
9	ARIZ	202-B(007)B			

202 MA 023

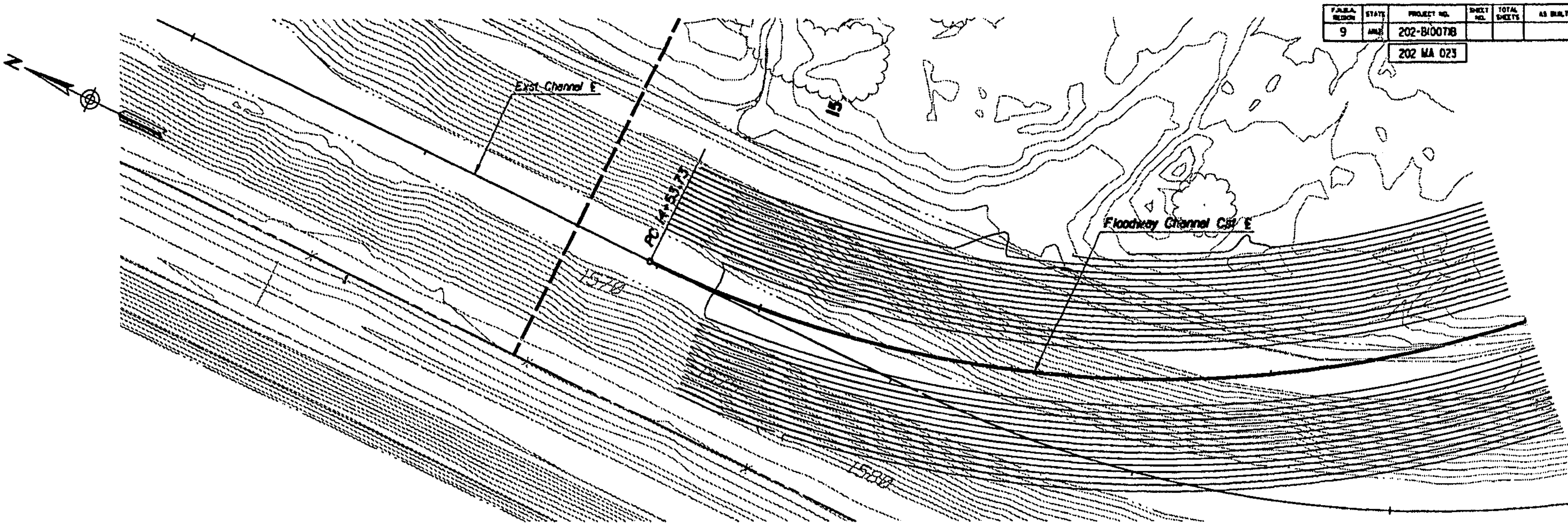

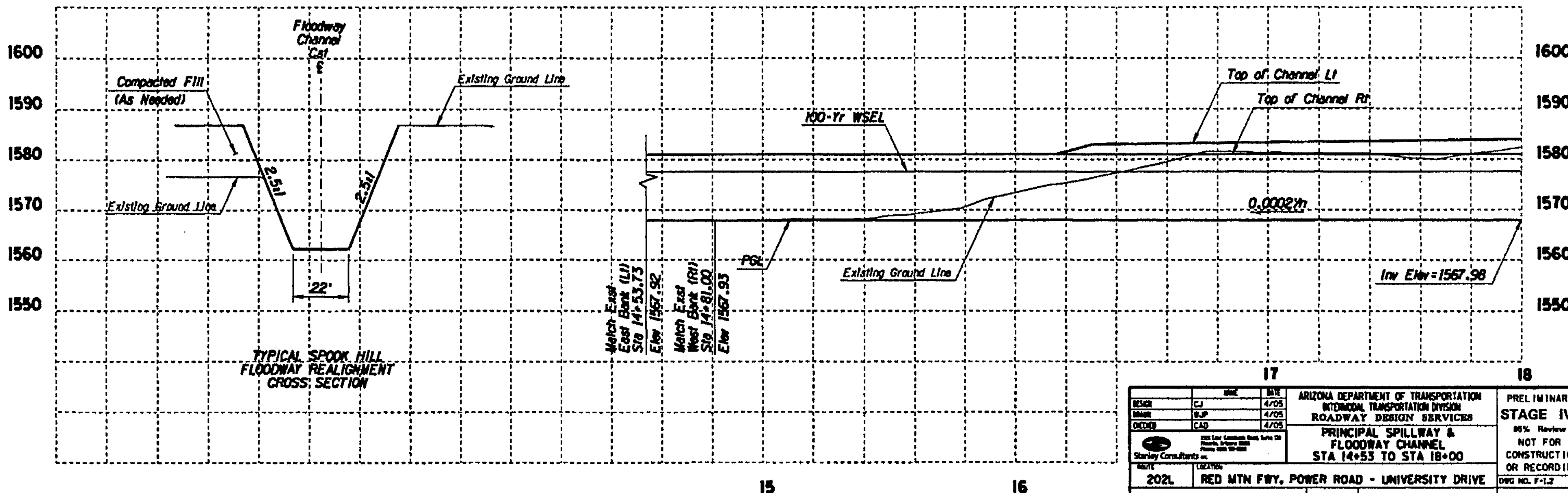

	NAME	DATE
DESIGN	CJ	4/05
DRAWN	BJP	4/05
CHECKED	CAD	4/05

Stanley Consultants inc.

ARIZONA DEPARTMENT OF TRANSPORTATION
INTERMODAL TRANSPORTATION DIVISION
ROADWAY DESIGN SERVICES

PRINCIPAL SPILLWAY & FLOODWAY CHANNEL
STA 14+53 TO STA 18+00

PRELIMINARY
STAGE IV
95% Review
NOT FOR CONSTRUCTION OR RECORDING

ROUTE: 202L
LOCATION: RED MTN FWY, POWER ROAD - UNIVERSITY DRIVE
DWG NO. F-1.2

TRACS NO. H 5782 01C | 202-B(007)B | ___ OF ___

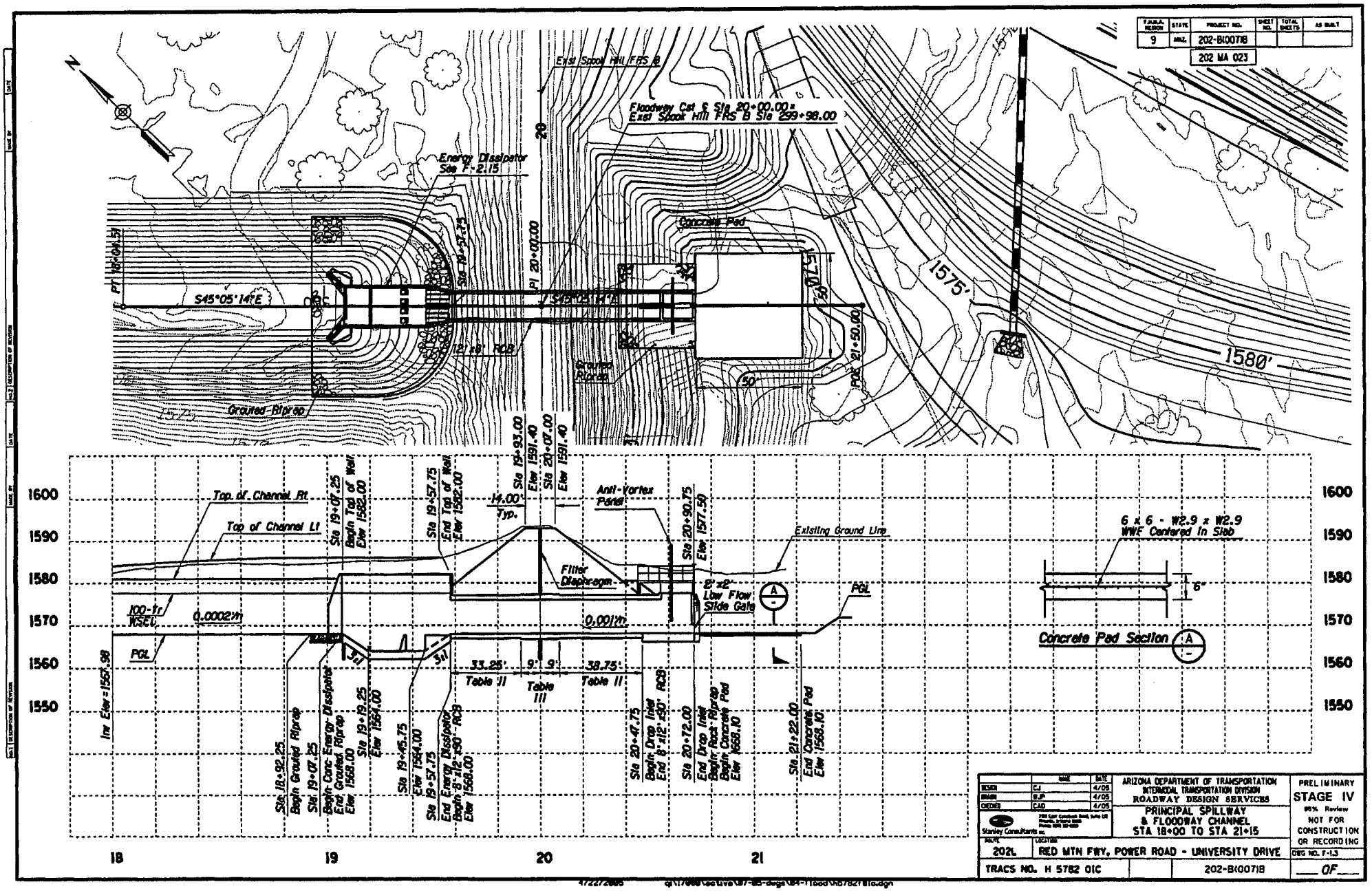

T.R.A.N.S. REGION	STATE	PROJECT NO.	SHEET NO.	TOTAL SHEETS	AS BUILT
9	ARIZ.	202-B(007)8			
		202 MA 023			

	NAME	DATE
DESIGN	CJ	4/05
DRAWN	BJP	4/05
CHECKED	CAD	4/05

Stanley Consultants Inc.

ARIZONA DEPARTMENT OF TRANSPORTATION
INTERMODAL TRANSPORTATION DIVISION
ROADWAY DESIGN SERVICES

PRINCIPAL SPILLWAY
& FLOODWAY CHANNEL
STA 18+00 TO STA 21+15

PRELIMINARY
STAGE IV
95% Review
NOT FOR
CONSTRUCTION
OR RECORDING

ROUTE	LOCATION	DWG NO. F-1.3
202L	RED MTN FWY, POWER ROAD - UNIVERSITY DRIVE	
TRACS NO. H 5782 01C	202-B(007)8	___ OF ___

4/22/2005 q:\17000\acad\rw\87-85-dsgn\84-11aad\h5782f11a.dgn

F.A.H.S. REGION	STATE	PROJECT NO.	SHEET NO.	TOTAL SHEETS	AS BUILT
9	ARIZ.	202-B(007)B			
		202 MA 023			

GENERAL NOTES:

Construction Specification -
Arizona Department of Transportation Standard Specifications for Road and Bridge Construction, edition of 2000 and Special Provisions.

Design Specifications -
AASHTO Standard Specifications for Highway Bridges, 17th edition, 2002.

All concrete shall be class "S" unless noted otherwise.

Reinforcing steel shall conform to ASTM Specification A615/A615M-96A (AASHTO M31). All reinforcing steel shall be furnished as grade 60.

All bends and hooks shall meet the requirements of AASHTO article 8.23.
All bend dimensions for reinforcing steel shall be out-to-out of bars.
All placement dimensions for reinforcing steel shall be to center of bars unless noted otherwise.

All reinforcing steel shall have 2 inches clear cover unless noted otherwise.

All mechanical splices shall conform to the requirements for mechanical connections in section 605-3.02 of the standard specifications.

STRESSES:

Concrete	f'c = 3000 psi
Grade 40 reinforcing steel	fs = 20,000 psi
Grade 60 reinforcing steel	fs = 24,000 psi

Chamfer all exposed corners ¾" unless noted otherwise.

Dimensions shall not be scaled from drawings.

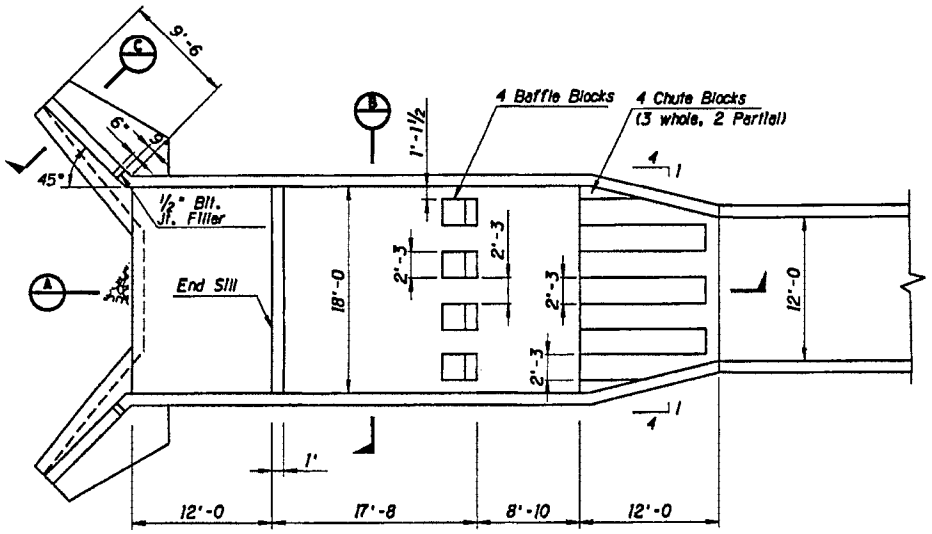

PLAN

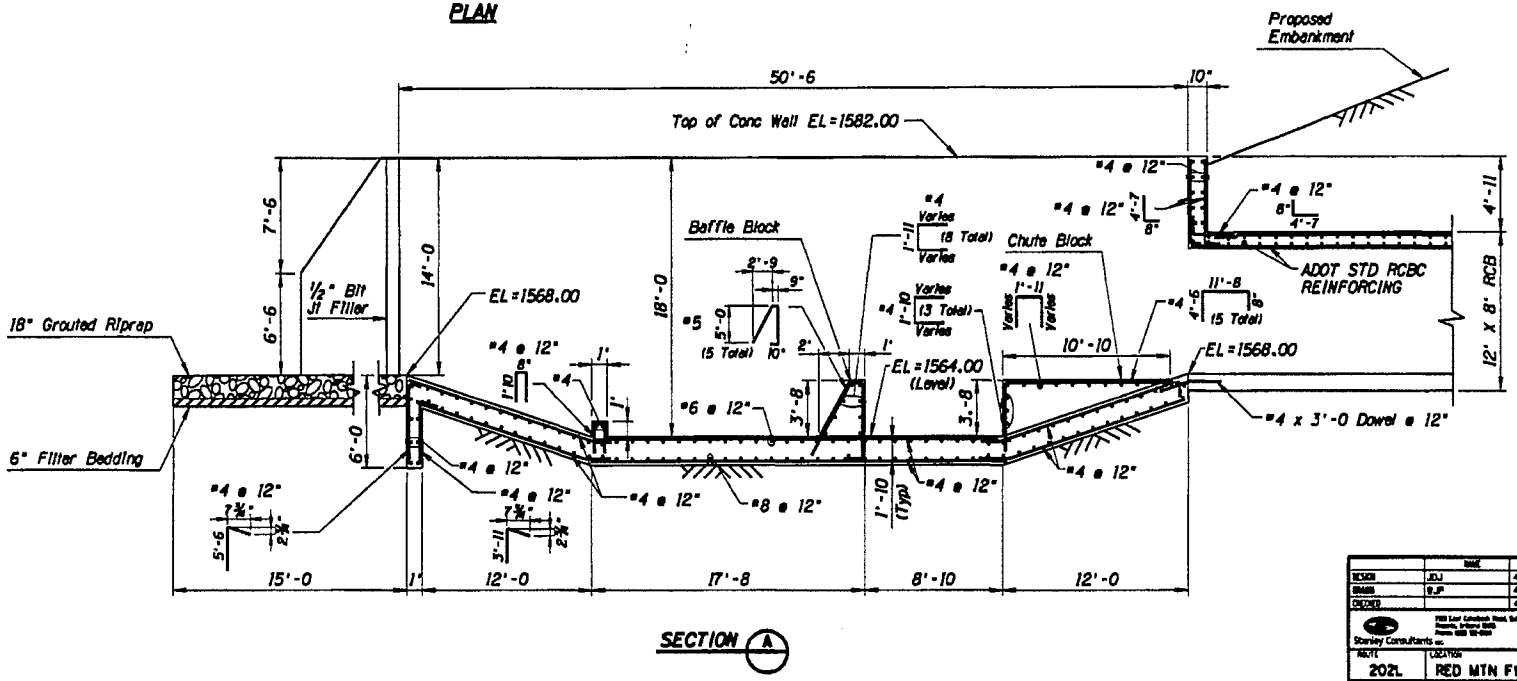

SECTION A

	NAME	DATE
DESIGN	JDJ	4/05
DRAWN	BJP	4/05
CHECKED		4/05

Stanley Consultants Inc.

ARIZONA DEPARTMENT OF TRANSPORTATION
INTERMODAL TRANSPORTATION DIVISION
ROADWAY DESIGN SERVICES

PRINCIPAL SPILLWAY ENERGY DISSIPATOR DETAILS

PRELIMINARY
STAGE IV
95% Review
NOT FOR CONSTRUCTION OR RECORDING

ROUTE	LOCATION		
202L	RED MTN FWY, POWER ROAD - UNIVERSITY DRIVE		DWG NO. F-1.4
TRACS NO. H 5782 01C		202-B(007)B	OF

4/22/2005 q:\17888\active\87-85-dwgs\84-flood\h5782f811.dgn

F.A.H.R. REGION	STATE	PROJECT NO.	SHEET NO.	TOTAL SHEETS	AS BUILT
9	ARIZ.	202-B(007)B			
		202 MA 023			

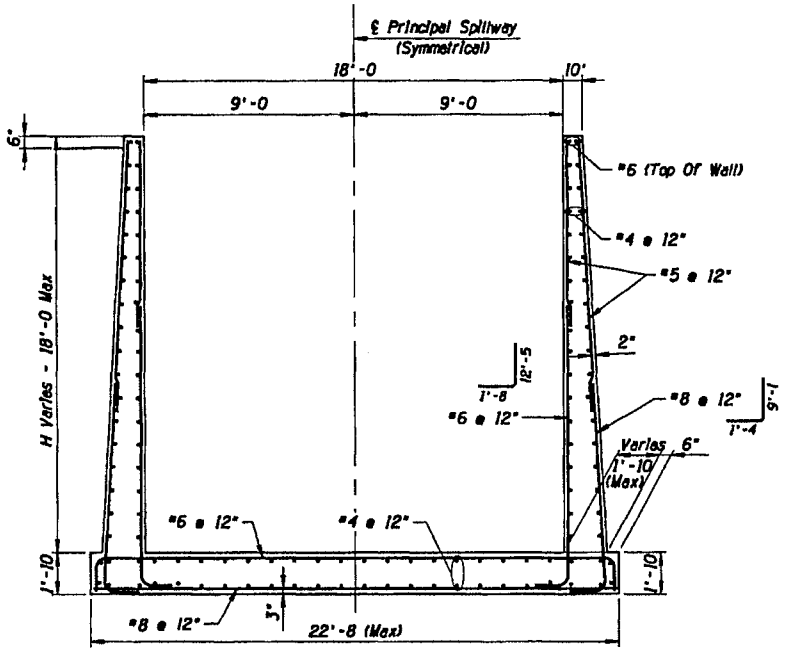

SECTION B-B

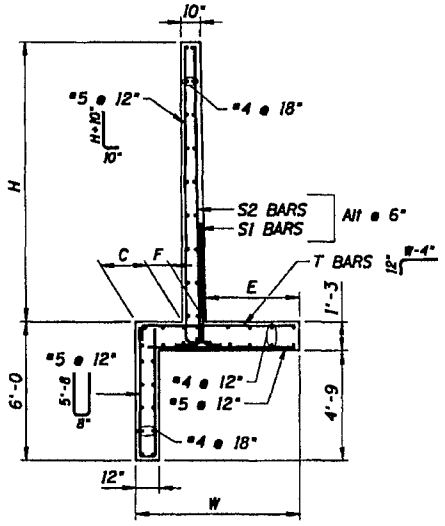

SECTION C-C

Dimensions					Steel List							
					S1			S2			T	
H	W	C	F	E	Bar Size	Spacing	Length	Bar Size	Spacing	Length	Bar Size	Spacing
4'	3'-0	10'	10'	1'-4"	5	12"	5'-6				5	12"
5'	3'-6	1'-0	10'	1'-8	5	12"	6'-6				5	12"
6'	4'-0	1'-2	10'	2'-0	5	12"	7'-6				5	12"
7'	4'-6	1'-4	10'	2'-4	5	12"	8'-6				5	12"
8'	5'-0	1'-6	10'	2'-8	5	12"	9'-9				5	12"
9'	5'-6	1'-9	1'-0	2'-9	5	12"	10'-9				5	12"
10'	6'-0	1'-9	1'-0	3'-3	6	12"	11'-9				6	12"
11'	6'-6	2'-0	1'-0	3'-6	5	12"	4'-3	5	12"	12'-9	5	12"
12'	7'-0	2'-0	1'-0	4'-0	6	12"	5'-3	5	12"	13'-9	6	12"
13'	7'-6	2'-3	1'-0	4'-3	7	12"	6'-6	5	12"	14'-9	6	9"
14'	8'-0	2'-3	1'-2	4'-7	7	12"	7'-0	5	12"	15'-9	7	12"

Bar Size	Dim. A
5	1'-0
6	1'-0
7	1'-2
8	1'-4
9	1'-8
10	1'-10
11	2'-0

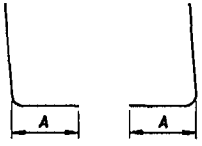

S1 Bar S2 Bar

	NAME	DATE
DESIGN	JDJ	4/05
DRAWN	W.JP	4/05
CHECKED		4/05

Stanley Consultants Inc.

ARIZONA DEPARTMENT OF TRANSPORTATION
INTERMODAL TRANSPORTATION DIVISION
ROADWAY DESIGN SERVICES

PRINCIPAL SPILLWAY ENERGY DISSIPATOR DETAILS

PRELIMINARY
STAGE IV
95% Review
NOT FOR CONSTRUCTION OR RECORDING

DISTRICT	LOCATION
202L	RED MTN FWY, POWER ROAD - UNIVERSITY DRIVE

DWG NO. F-1.5

TRACS NO. H 5782 01C | 202-B(007)B | ___ OF ___

4/22/2005 q:\1760\active\87-85-dega\84-11ood\h5782f01g.dgn

FISCAL YEAR	STATE	PROJECT NO.	SHEET NO.	TOTAL SHEETS	AS BUILT
9	ARIZ.	202-B(007)B			
		202 MA 023			

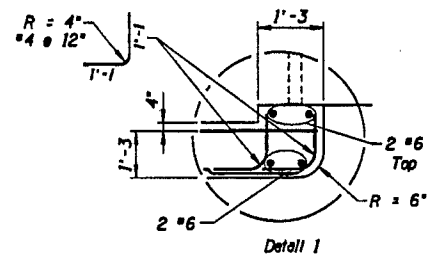

Detail 1

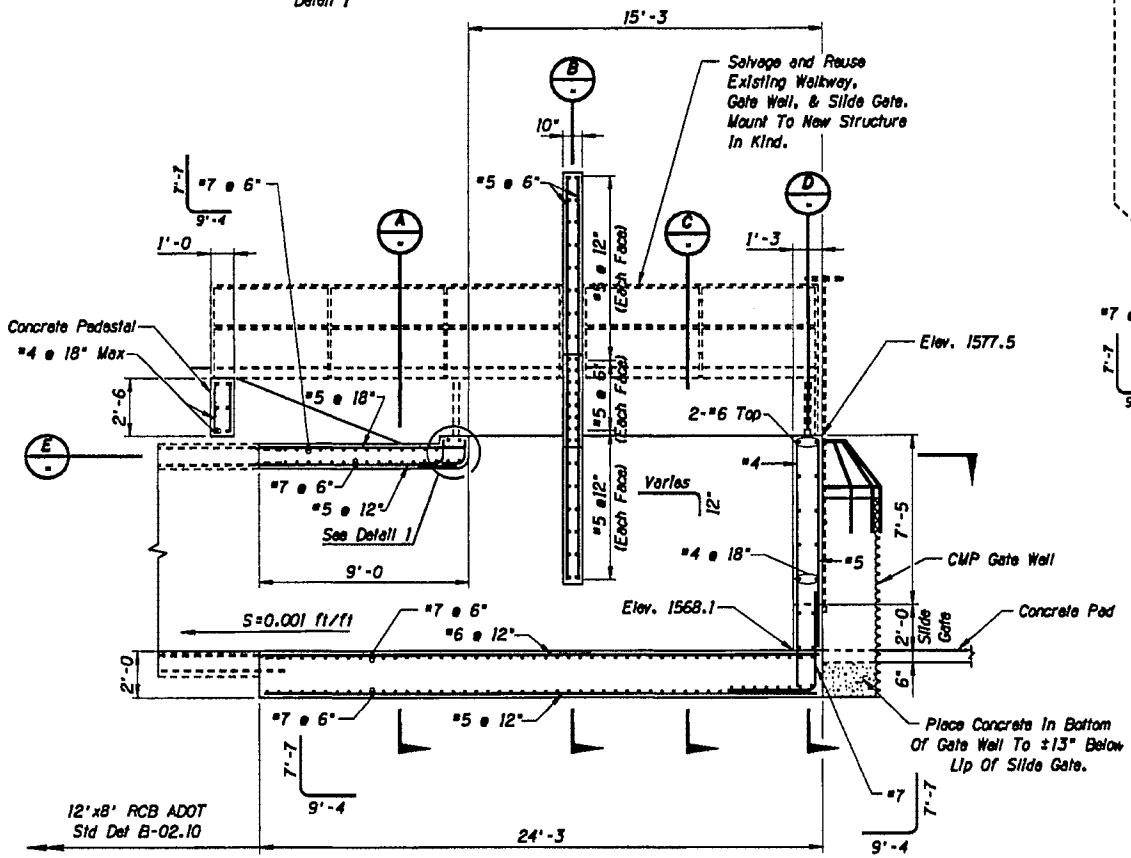

SECTIONAL ELEVATION

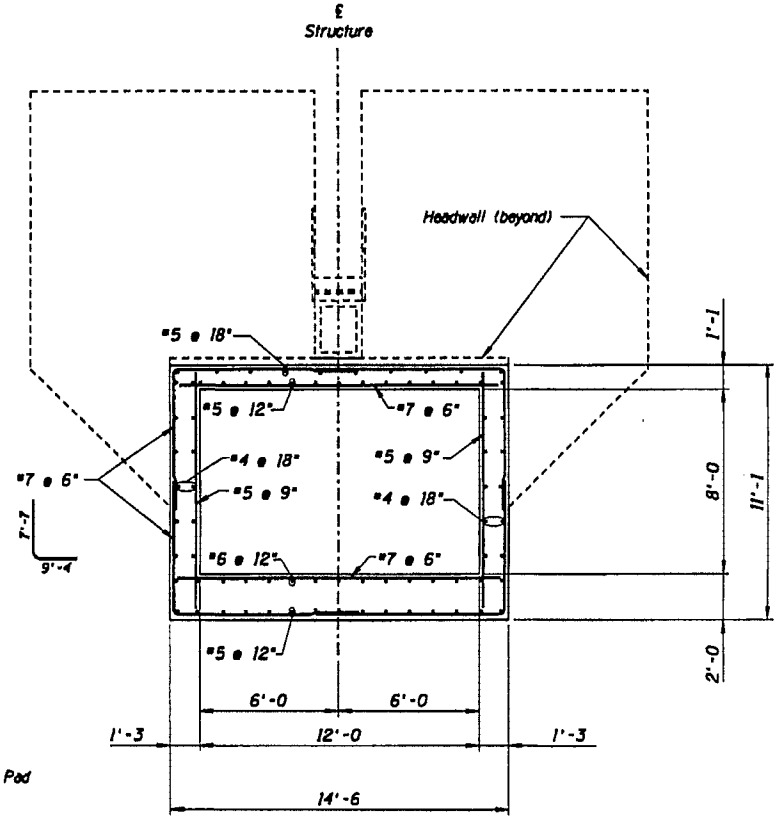

SECTION A

	NAME	DATE
DESIGN	JDJ	4/05
DRAWN	B.J.P	4/05
CHECKED		4/05

Stanley Consultants Inc.

ARIZONA DEPARTMENT OF TRANSPORTATION
INTERMODAL TRANSPORTATION DIVISION
ROADWAY DESIGN SERVICES

PRINCIPAL SPILLWAY ENERGY INLET DETAILS

PRELIMINARY
STAGE IV
95% Review
NOT FOR CONSTRUCTION OR RECORDING

DISTRICT	LOCATION	DWG NO.
202L	RED MTN FWY. POWER ROAD - UNIVERSITY DRIVE	F-1.6

TRACS NO. H 5782 01C | 202-B(007)B | ___ OF ___

4/22/2005 q:\17888\Active\07-05-dwgs\04-Hydro\h5782f1fh.dgn

F.A.H.A. REGION	STATE	PROJECT NO.	SHEET NO.	TOTAL SHEETS	AS BUILT
9	ARIZ.	202-B(007)B			
		202 MA 023			

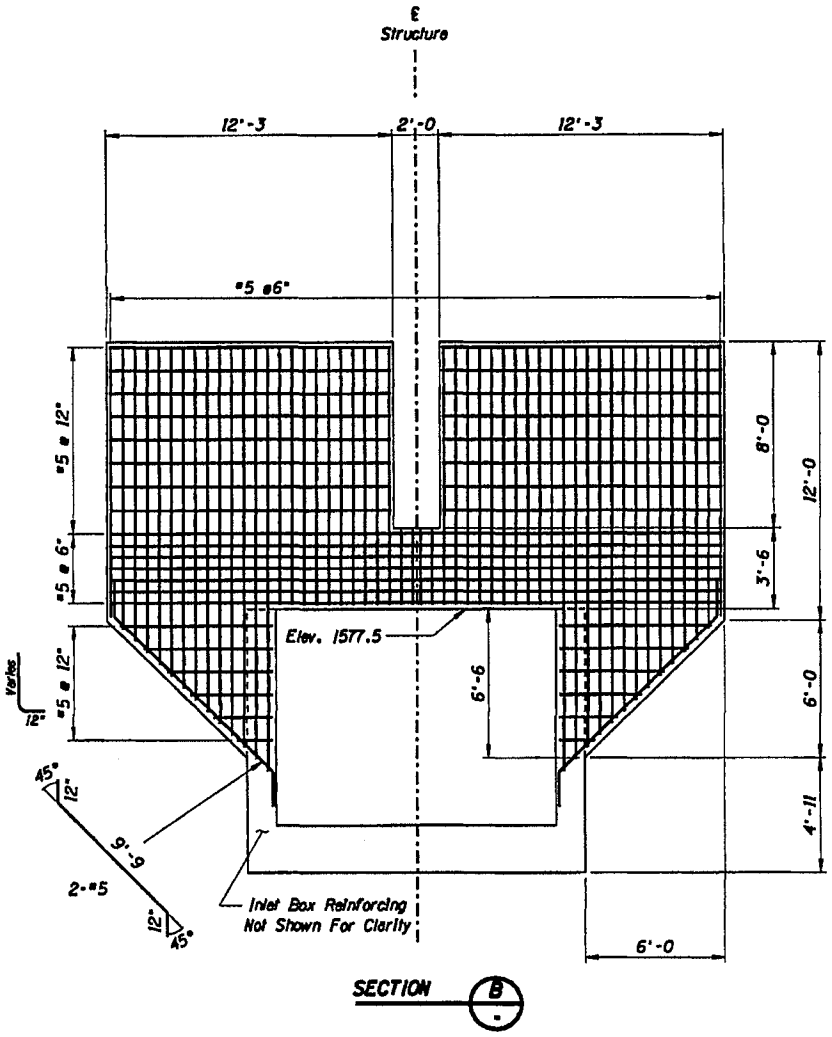

SECTION B

(Front Face Shown, Back Face Similar)

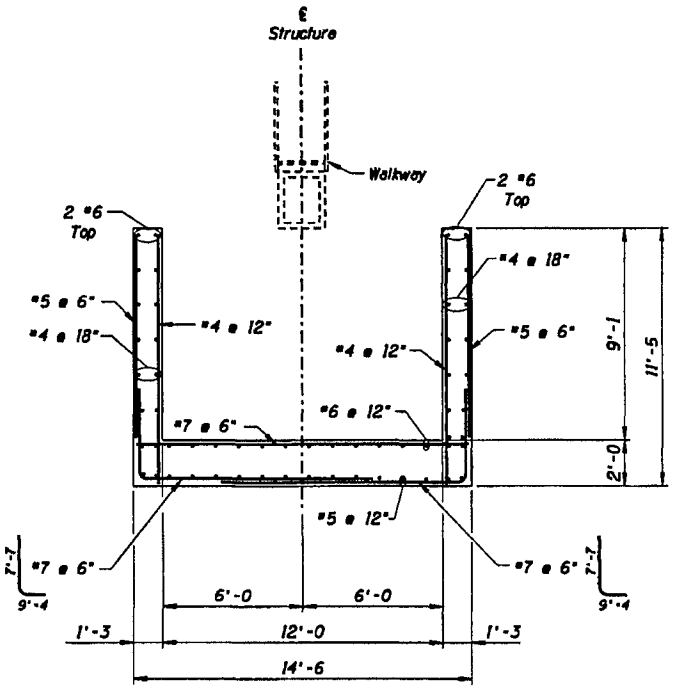

SECTION C

	NAME	DATE
DESIGN	JDJ	4/05
DRAWN	BJP	4/05
CHECKED		4/05

Stanley Consultants Inc.

ARIZONA DEPARTMENT OF TRANSPORTATION
INTERMODAL TRANSPORTATION DIVISION
ROADWAY DESIGN SERVICES

PRINCIPAL SPILLWAY ENERGY INLET DETAILS

PRELIMINARY
STAGE IV
95% Review
NOT FOR CONSTRUCTION OR RECORDING

ROUTE	LOCATION
202L	RED MTN FWY, POWER ROAD - UNIVERSITY DRIVE

DRG NO. F-1.7

TRACS NO. H 5782 01C | 202-B(007)B | ___ OF ___

4/22/2005 q:\17868\active\87-85-dwgs\84-11cad\h5782f11.dgn

F.H.W.A. REGION	STATE	PROJECT NO.	SHEET NO.	TOTAL SHEETS	AS BUILT
9	ARIZ.	202-B(007)B			

202 MA 023

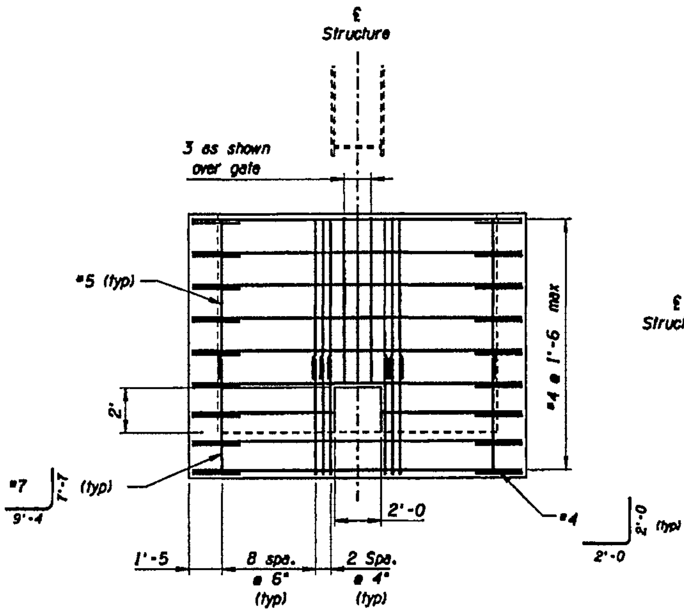

SECTION D
(Front face shown, back face similar)

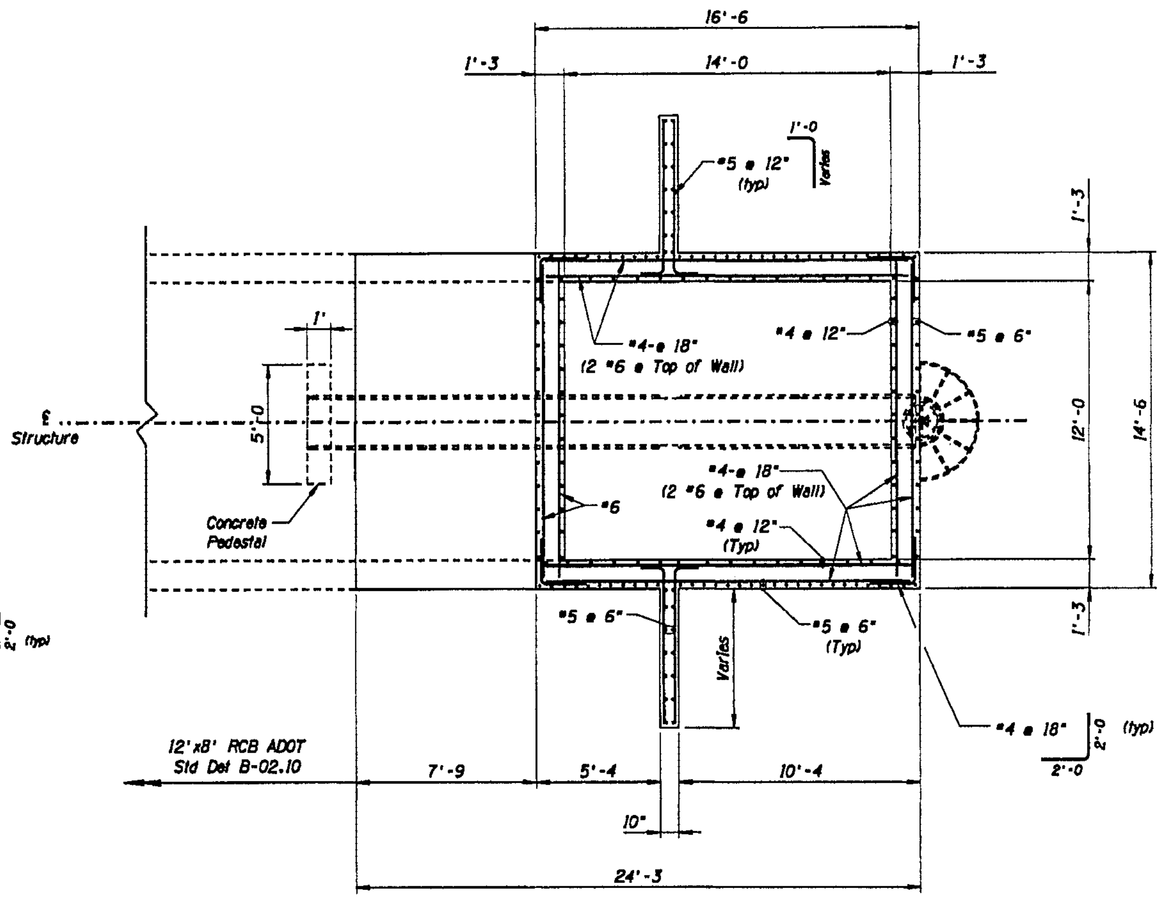

SECTION E

	NAME	DATE	ARIZONA DEPARTMENT OF TRANSPORTATION INTERMODAL TRANSPORTATION DIVISION ROADWAY DESIGN SERVICES	PRELIMINARY STAGE IV 95% Review NOT FOR CONSTRUCTION OR RECORDING
DESIGN	JDJ	4/05		
DRAWN	BJP	4/05		
CHECKED		4/05		
Stanley Consultants inc.			PRINCIPAL SPILLWAY ENERGY INLET DETAILS	
ROUTE 202L	LOCATION RED MTN FWY, POWER ROAD - UNIVERSITY DRIVE			DWG NO. F-1.8
TRACS NO. H 5782 01C		202-B(007)B		___ OF ___

F.A.P. OR L.R.D. NO.	STATE	PROJECT NO.	SHEET NO.	TOTAL SHEETS	AS BUILT
9	ARIZ.	202-B(007)B			
		202 MA 023			

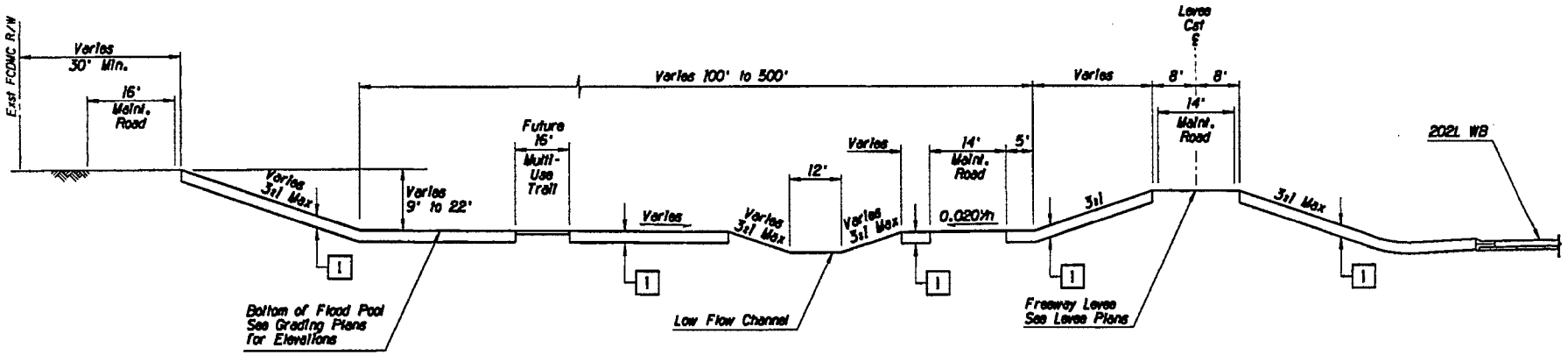

TYPICAL SECTION
Flood Pool

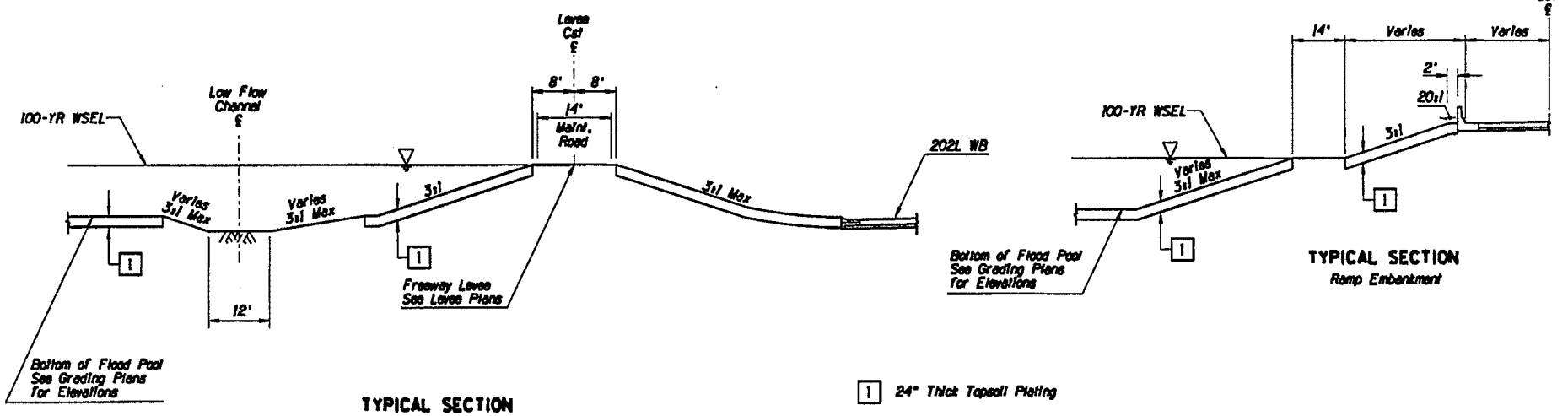

TYPICAL SECTION
Levee And Low Flow Channel

TYPICAL SECTION
Ramp Embankment

[1] 24" Thick Topsoil Plating

		DATE
DESIGN		4/05
DRAWN		4/05
CHECKED		4/05

Stanley Consultants Inc.

ARIZONA DEPARTMENT OF TRANSPORTATION
INTERMODAL TRANSPORTATION DIVISION
ROADWAY DESIGN SERVICES

FLOOD POOL
TYPICAL SECTIONS

PRELIMINARY
STAGE IV
95% Review
NOT FOR
CONSTRUCTION
OR RECORDING

ROUTE	LOCATION
202L	RED MTN FWY, POWER ROAD - UNIVERSITY DRIVE

DWG NO. F-3J

TRACS NO. H 5782 01C | 202-B(007)B | ___ OF ___

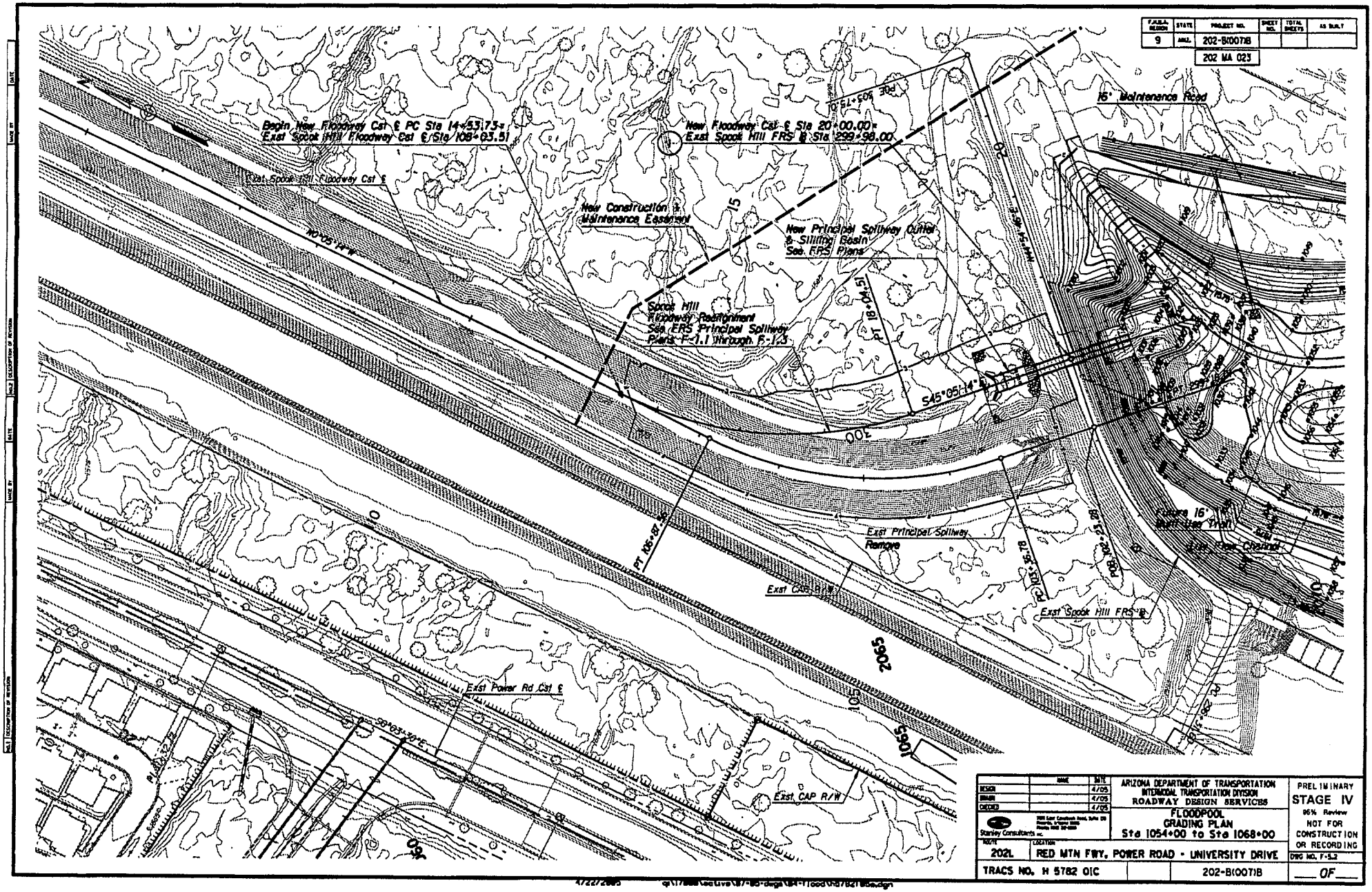

F.A.P. No.	STATE	PROJECT NO.	SHEET NO.	TOTAL SHEETS	AS BUILT
9	ARIZ.	202-B(007)B			
		202 MA 023			

	NAME	DATE
DESIGN		4/05
DRAWN		4/05
CHECKED		4/05

Stanley Consultants Inc.

ARIZONA DEPARTMENT OF TRANSPORTATION
INTERMODAL TRANSPORTATION DIVISION
ROADWAY DESIGN SERVICES

FLOODPOOL
GRADING PLAN
Sta 1054+00 to Sta 1068+00

PRELIMINARY
STAGE IV
95% Review
NOT FOR
CONSTRUCTION
OR RECORDING

ROUTE	LOCATION
202L	RED MTN FWY, POWER ROAD - UNIVERSITY DRIVE

DWG NO. F-5.2

TRACS NO. H 5782 01C | 202-B(007)B | ___ OF ___

4/22/2005 q:\17888\active\87-85-dsgn\84-flood\h5782f5.dgn

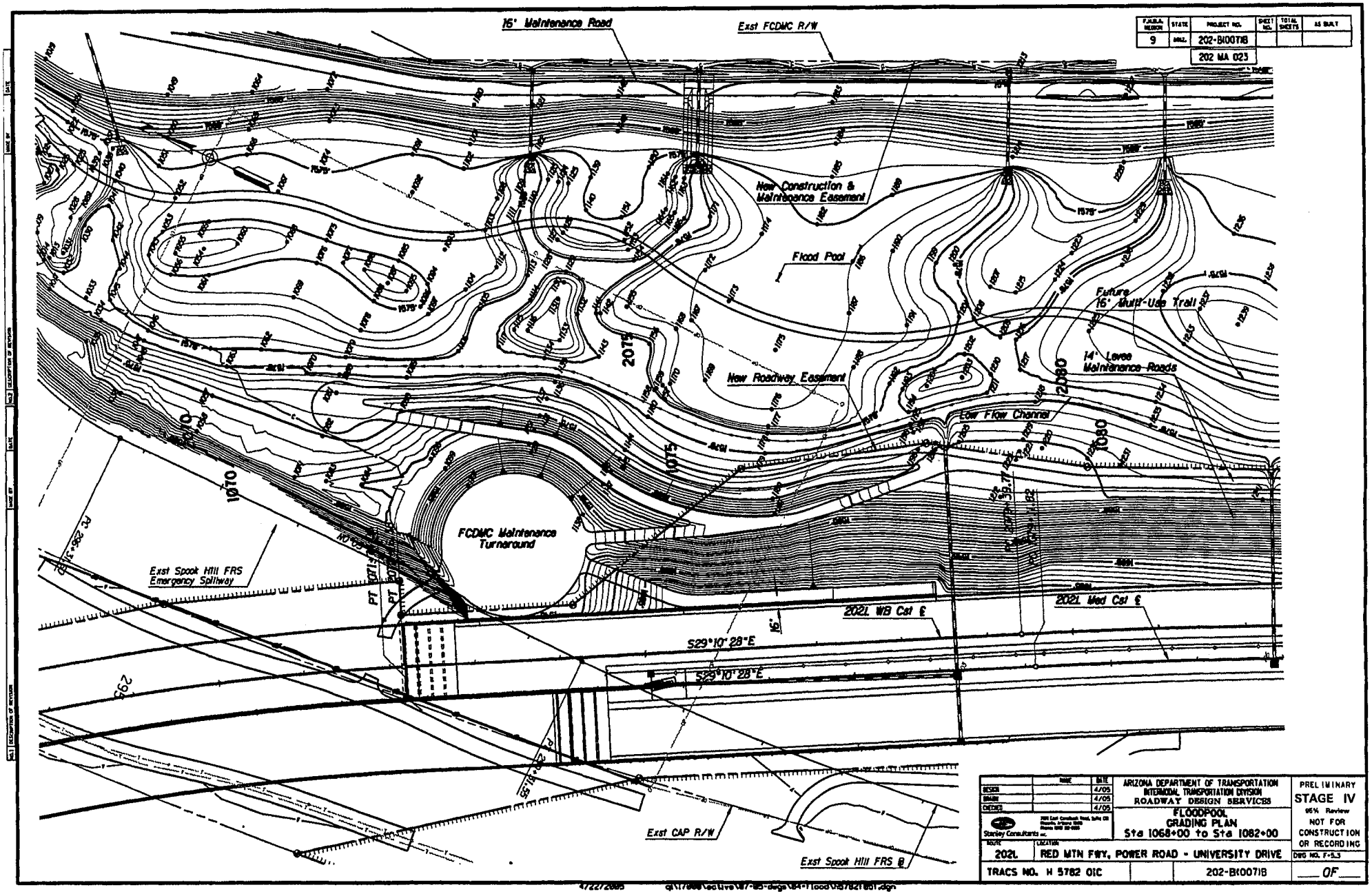

F.A.P.M.A. NUMBER	STATE	PROJECT NO.	SHEET NO.	TOTAL SHEETS	AS BUILT
9	ARIZ.	202-B(007)B			
		202 MA 023			

	NAME	DATE
DESIGN		4/05
DRAWN		4/05
CHECKED		4/05

Stanley Consultants Inc.

ARIZONA DEPARTMENT OF TRANSPORTATION
INTERMODAL TRANSPORTATION DIVISION
ROADWAY DESIGN SERVICES

FLOODPOOL
GRADING PLAN
Sta 1068+00 to Sta 1082+00

PRELIMINARY
STAGE IV
95% Review
NOT FOR CONSTRUCTION OR RECORDING

ROUTE	LOCATION
202L	RED MTN FWY, POWER ROAD - UNIVERSITY DRIVE

DWG NO. F-5.3

TRACS NO. H 5782 01C | 202-B(007)B | ___ OF ___

4/22/2005 g:\17888\active\87-85-design\84-Flood\05782B01.dgn

F.H.W.A. REGION	STATE	PROJECT NO.	SHEET NO.	TOTAL SHEETS	AS BUILT
9	ARIZ.	202-B(007)B			

202 MA 023

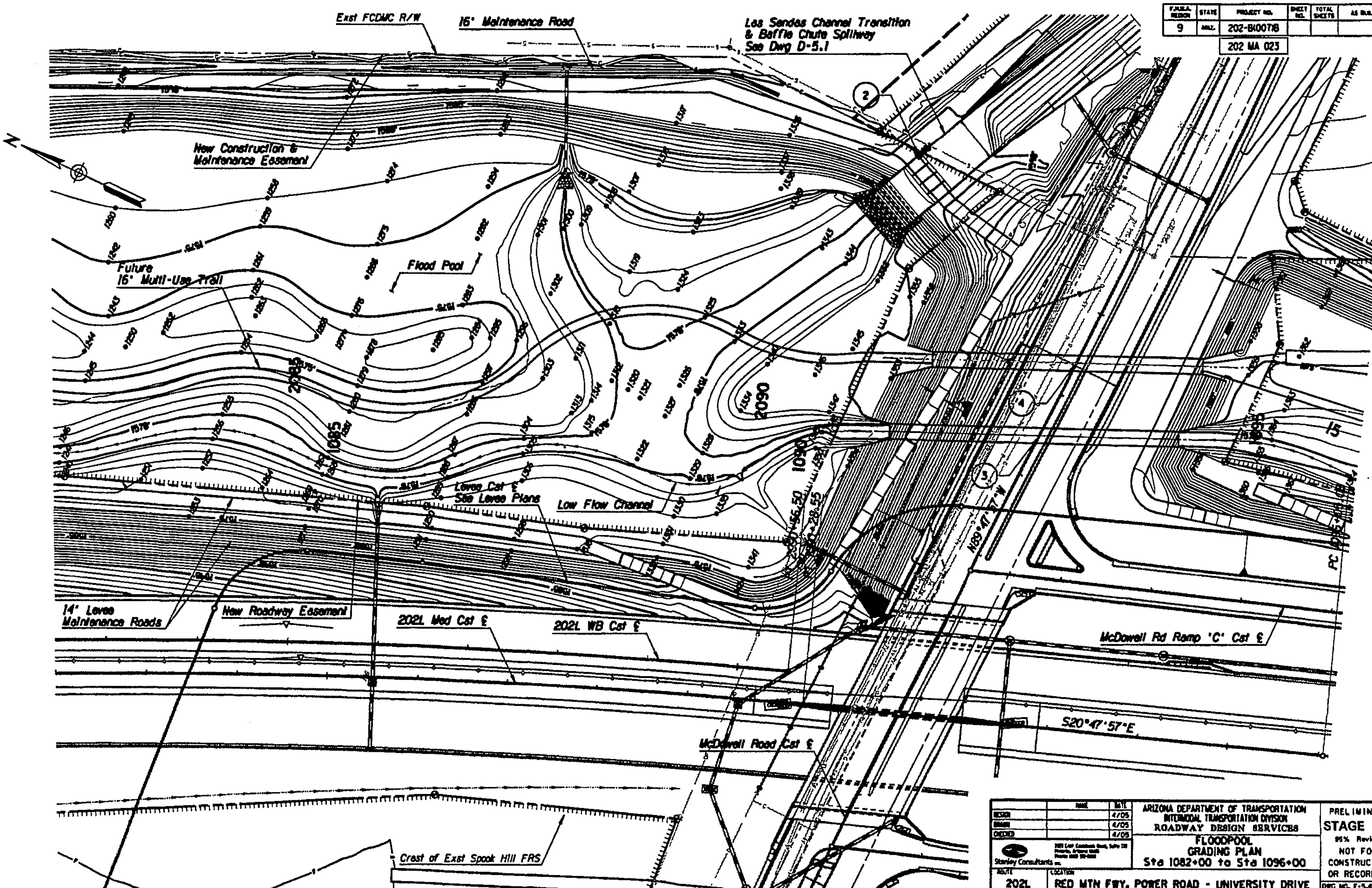

	NAME	DATE	ARIZONA DEPARTMENT OF TRANSPORTATION INTERMODAL TRANSPORTATION DIVISION ROADWAY DESIGN SERVICES	PRELIMINARY STAGE IV 95% Review NOT FOR CONSTRUCTION OR RECORDING
DESIGN		4/05	FLOODPOOL GRADING PLAN	
DRAWN		4/05	Sta 1082+00 to Sta 1096+00	
CHECKED		4/05		
Stanley Consultants				
ROUTE 202L	LOCATION		RED MTN FWY, POWER ROAD - UNIVERSITY DRIVE	DWG NO. F-5.4
TRACS NO. H 5782 01C			202-B(007)B	___ OF ___

4/22/2005 q:\17900\active\87-05-8sgs\04-flood\h5782f05g.dgn

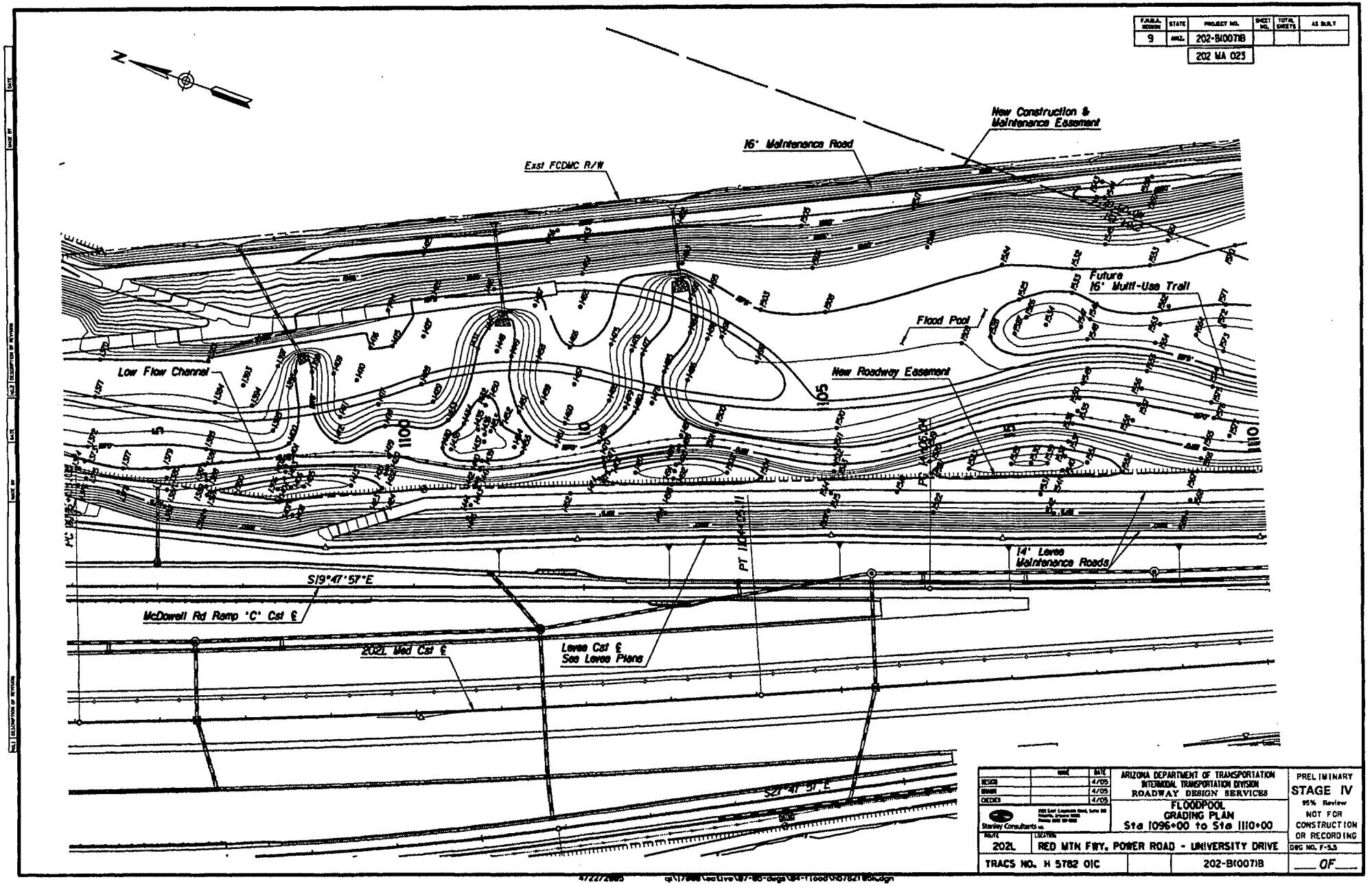

F.H.W.A. REGION	STATE	PROJECT NO.	SHEET NO.	TOTAL SHEETS	AS B.U.T.
9	ARIZ.	202-B(007)B			
		202 MA 023			

	NAME	DATE
DESIGN		4/05
DRAWN		4/05
CHECKED		4/05

Stanley Consultants Inc.

ARIZONA DEPARTMENT OF TRANSPORTATION
INTERMODAL TRANSPORTATION DIVISION
ROADWAY DESIGN SERVICES

FLOODPOOL
GRADING PLAN
Sta 1096+00 to Sta 1110+00

PRELIMINARY
STAGE IV
95% Review
NOT FOR CONSTRUCTION OR RECORDING

ROUTE	LOCATION
202L	RED MTN FWY, POWER ROAD - UNIVERSITY DRIVE

DWG NO. F-5.5

TRACS NO. H 5782 01C | 202-B(007)B | ___ OF ___

4/22/2005 g:\17888\active\87-85-dwgs\84-floods\h5782 01c.dgn

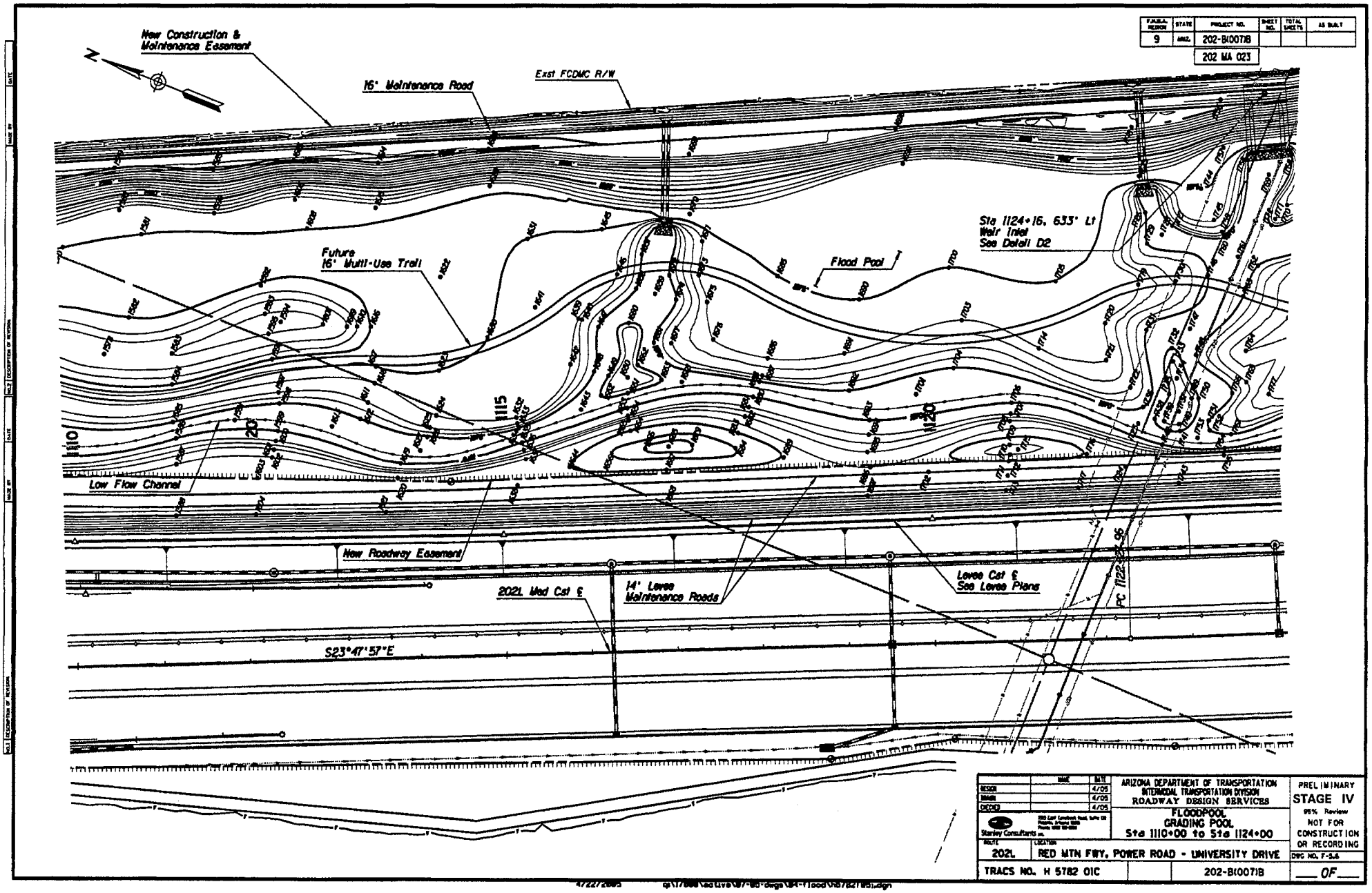

F.A.R.S. REGION	STATE	PROJECT NO.	SHEET NO.	TOTAL SHEETS	AS BUILT
9	ARIZ.	202-B(007)B			
		202 MA 023			

	NAME	DATE
DESIGN		4/05
DRAWN		4/05
CHECKED		4/05

Stanley Consultants Inc.

ARIZONA DEPARTMENT OF TRANSPORTATION
INTERMODAL TRANSPORTATION DIVISION
ROADWAY DESIGN SERVICES

FLOODPOOL
GRADING POOL
Sta 1110+00 to Sta 1124+00

PRELIMINARY
STAGE IV
95% Review
NOT FOR CONSTRUCTION OR RECORDING

ROUTE	LOCATION
202L	RED MTN FWY, POWER ROAD - UNIVERSITY DRIVE

DWG NO. F-3.6

TRACS NO. H 5782 01C | 202-B(007)B | ___ OF ___

4/22/2005 q:\17888\active\07-00-dwgs\04-Flood\H5782101.dgn

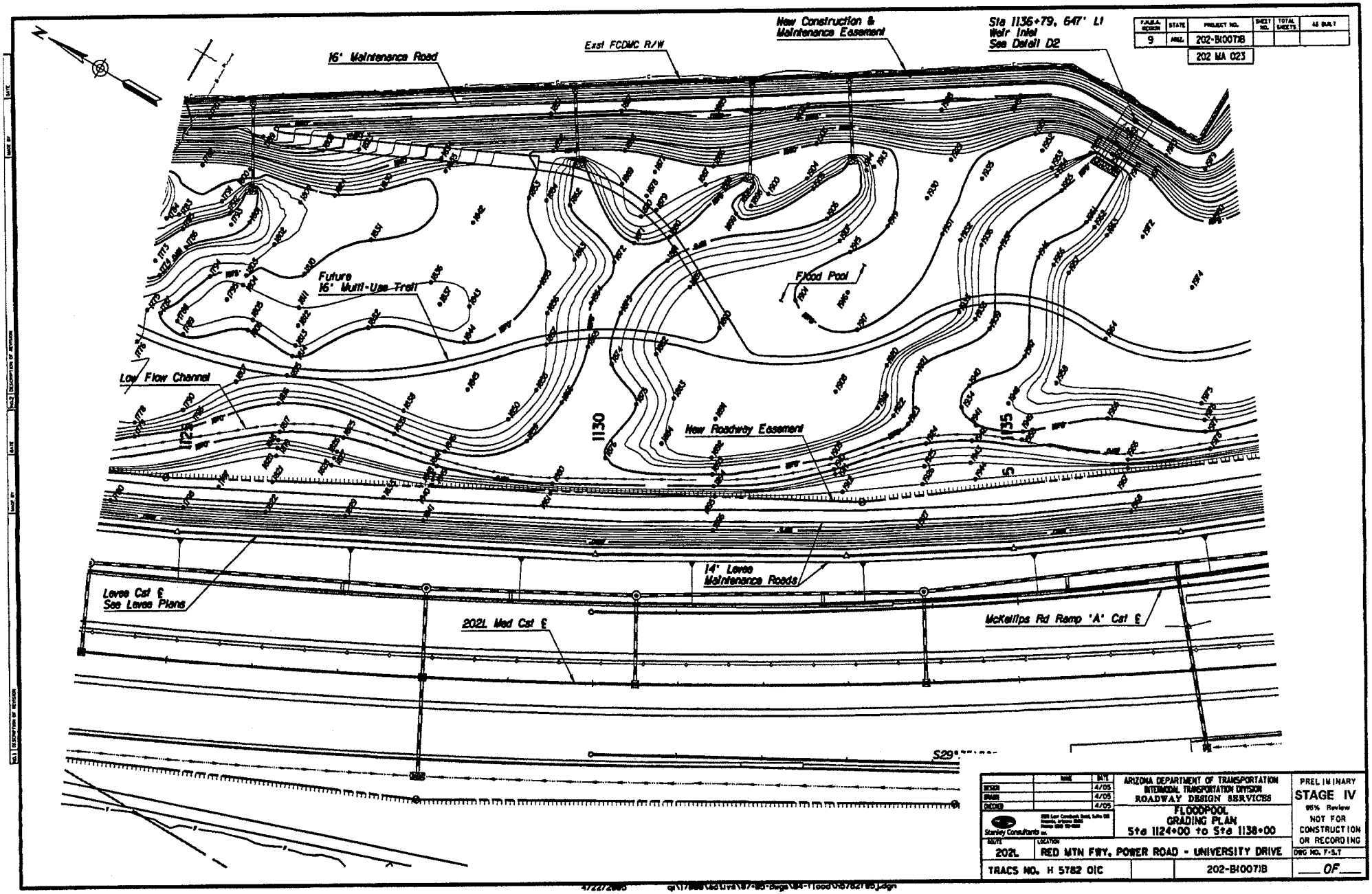

F.A.H.S. REGION	STATE	PROJECT NO.	SHEET NO.	TOTAL SHEETS	AS BUILT
9	ARIZ.	202-B(007)B			
		202 MA 023			

	NAME	DATE
DESIGN		4/05
DRAWN		4/05
CHECKED		4/05

Stanley Consultants Inc.

ARIZONA DEPARTMENT OF TRANSPORTATION
INTERMODAL TRANSPORTATION DIVISION
ROADWAY DESIGN SERVICES

FLOODPOOL
GRADING PLAN
Sta 1124+00 to Sta 1138+00

PRELIMINARY
STAGE IV
95% Review
NOT FOR CONSTRUCTION OR RECORDING

HIGHWAY	LOCATION
202L	RED MTN FWY, POWER ROAD - UNIVERSITY DRIVE

TRACS NO. H 5782 01C		202-B(007)B	DRG NO. F-5.7
			OF

472272865 q:\17888\Cadd\civil\87-88-Bridge\04-Flood\H578201C.dgn

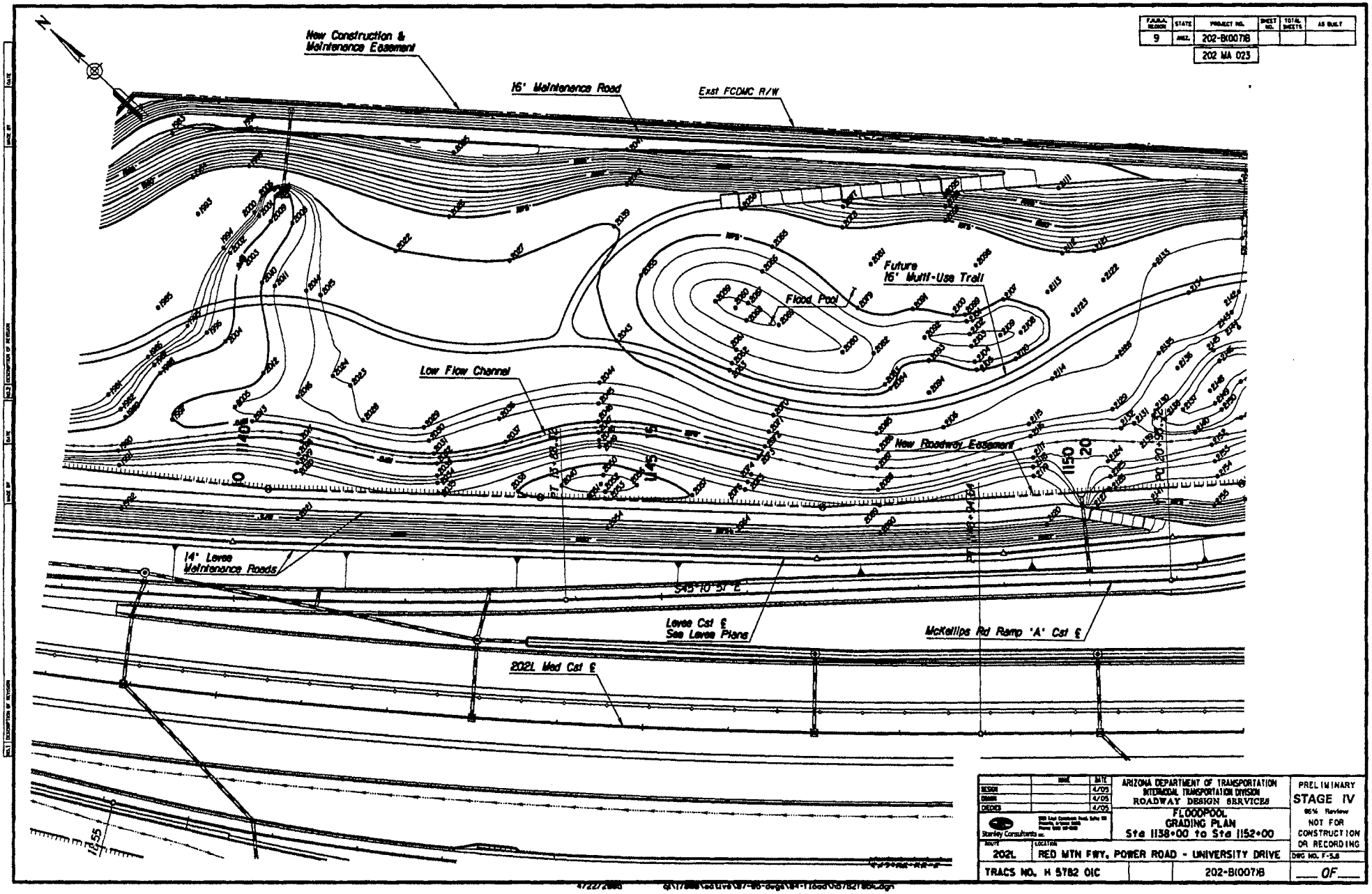

F.A.P.R.A. REGION	STATE	PROJECT NO.	SHEET NO.	TOTAL SHEETS	AS BUILT
9	ARIZ.	202-B(007)8			
		202 MA 023			

	MARK	DATE
DESIGN		4/05
DRAWN		4/05
CHECKED		4/05

Stanley Consultants Inc.

ARIZONA DEPARTMENT OF TRANSPORTATION
INTERMODAL TRANSPORTATION DIVISION
ROADWAY DESIGN SERVICES

FLOODPOOL
GRADING PLAN
Sta 1138+00 to Sta 1152+00

PRELIMINARY
STAGE IV
95% Review
NOT FOR CONSTRUCTION OR RECORDING

ROUTE	LOCATION	DWG NO. F-5.8
202L	RED MTN FWY, POWER ROAD - UNIVERSITY DRIVE	
TRACS NO. H 5782 01C	202-B(007)8	___ OF ___

4/22/2005

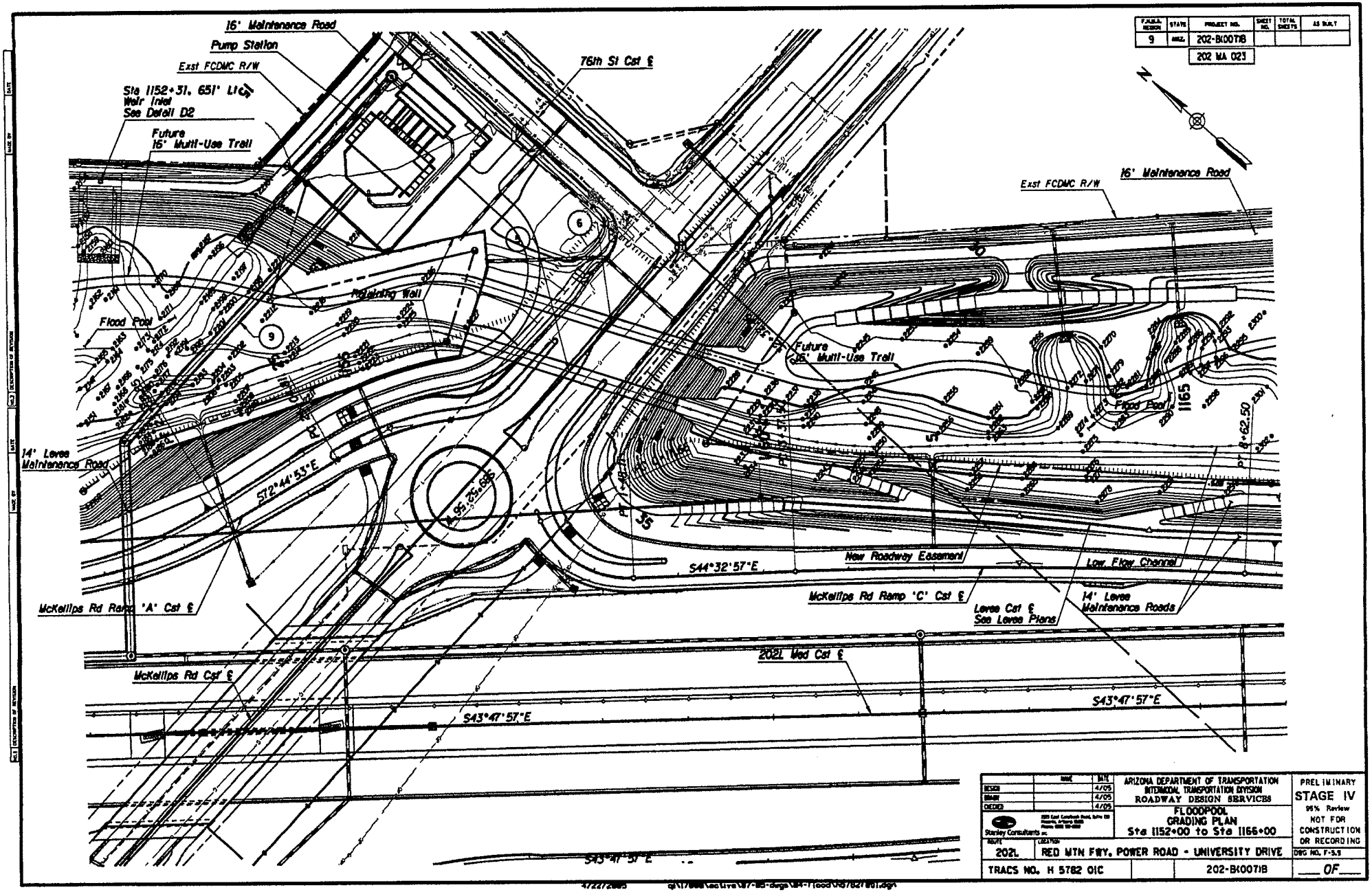

F.A.H.U. REVISION	STATE	PROJECT NO.	SHEET NO.	TOTAL SHEETS	AS BUILT
9	ARIZ.	202-B(007)B			

	MADE	DATE
DESIGN		4/05
DRAWN		4/05
CHECKED		4/05

Stanley Consultants Inc.

ARIZONA DEPARTMENT OF TRANSPORTATION
INTERMODAL TRANSPORTATION DIVISION
ROADWAY DESIGN SERVICES

FLOODPOOL
GRADING PLAN
Sta 1152+00 to Sta 1166+00

PRELIMINARY
STAGE IV
95% Review
NOT FOR
CONSTRUCTION
OR RECORDING

ROUTE	LOCATION	DWG NO. F-5.9
202L	RED MTN FWY, POWER ROAD - UNIVERSITY DRIVE	
TRACS NO. H 5782 01C		202-B(007)B

___ OF ___

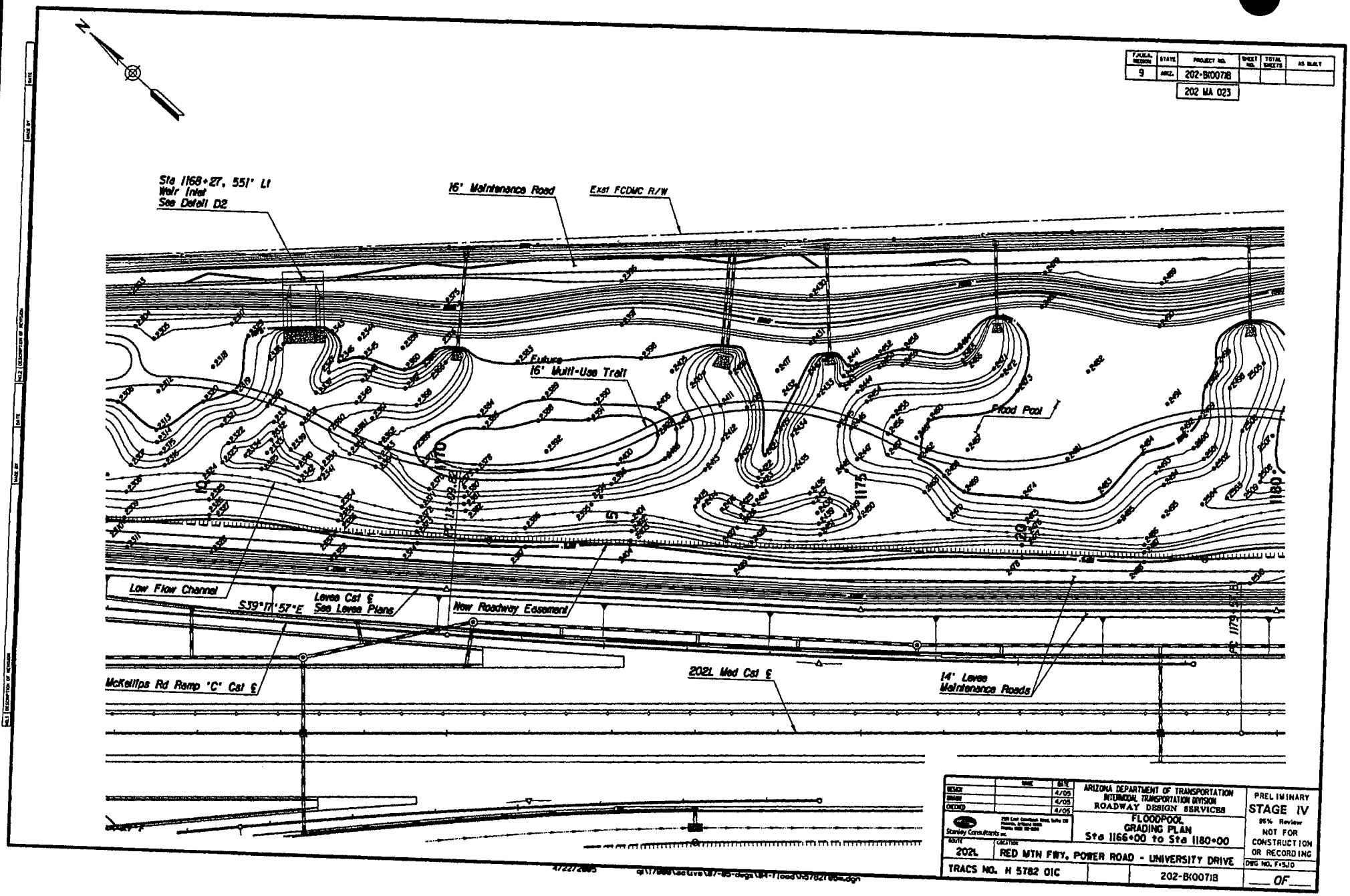

FHWA REGION	STATE	PROJECT NO.	SHEET NO.	TOTAL SHEETS	AS BUILT
9	ARIZ.	202-B(007)B			

202 MA 023

	NAME	DATE
DESIGN		4/05
DRAWN		4/05
CHECKED		4/05

Stanley Consultants Inc.

ARIZONA DEPARTMENT OF TRANSPORTATION
INTERMODAL TRANSPORTATION DIVISION
ROADWAY DESIGN SERVICES

FLOODPOOL
GRADING PLAN
Sta 1166+00 to Sta 1180+00

PRELIMINARY
STAGE IV
95% Review
NOT FOR CONSTRUCTION OR RECORDING

ROUTE	LOCATION	
202L	RED MTN FWY, POWER ROAD - UNIVERSITY DRIVE	DWG NO. F-5.10
TRACS NO. H 5782 01C		202-B(007)B — OF —

4722728B5 g:\17888\active\87-85-dsgn\BR-Flood\05782f85.dgn

F.A.H.U.A. REGION	STATE	PROJECT NO.	SHEET NO.	TOTAL SHEETS	AS BUILT
9	ARIZ.	202-B(007)B			
		202 MA 023			

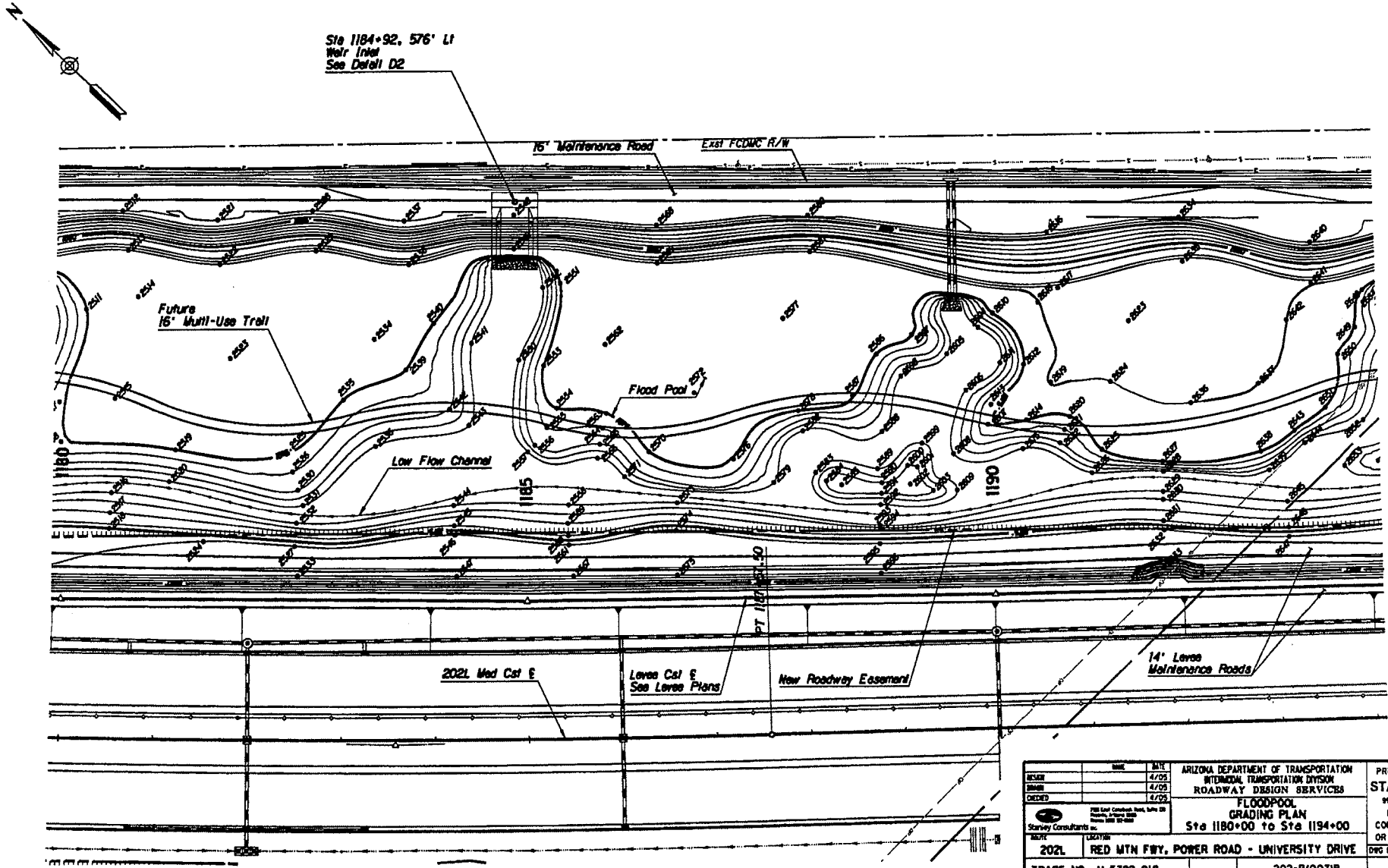

	NAME	DATE
DESIGNED		4/05
DRAWN		4/05
CHECKED		4/05

Stanley Consultants Inc.

ARIZONA DEPARTMENT OF TRANSPORTATION
INTERMODAL TRANSPORTATION DIVISION
ROADWAY DESIGN SERVICES

FLOODPOOL
GRADING PLAN
Sta 1180+00 to Sta 1194+00

PRELIMINARY
STAGE IV
95% Review
NOT FOR CONSTRUCTION OR RECORDING

ROUTE	LOCATION	DWG NO. F-5.11
202L	RED MTN FWY, POWER ROAD - UNIVERSITY DRIVE	
TRACS NO. H 5782 01C		202-B(007)B ___ OF ___

4/22/2005 q:\17888\Cad Live\87-85-dwgs\84-Flood\h5782185n.dgn

F.H.W.A. REGION	STATE	PROJECT NO.	SHEET NO.	TOTAL SHEETS	AS BUILT
9	ARIZ.	202-B(007)B			
		202 MA 023			

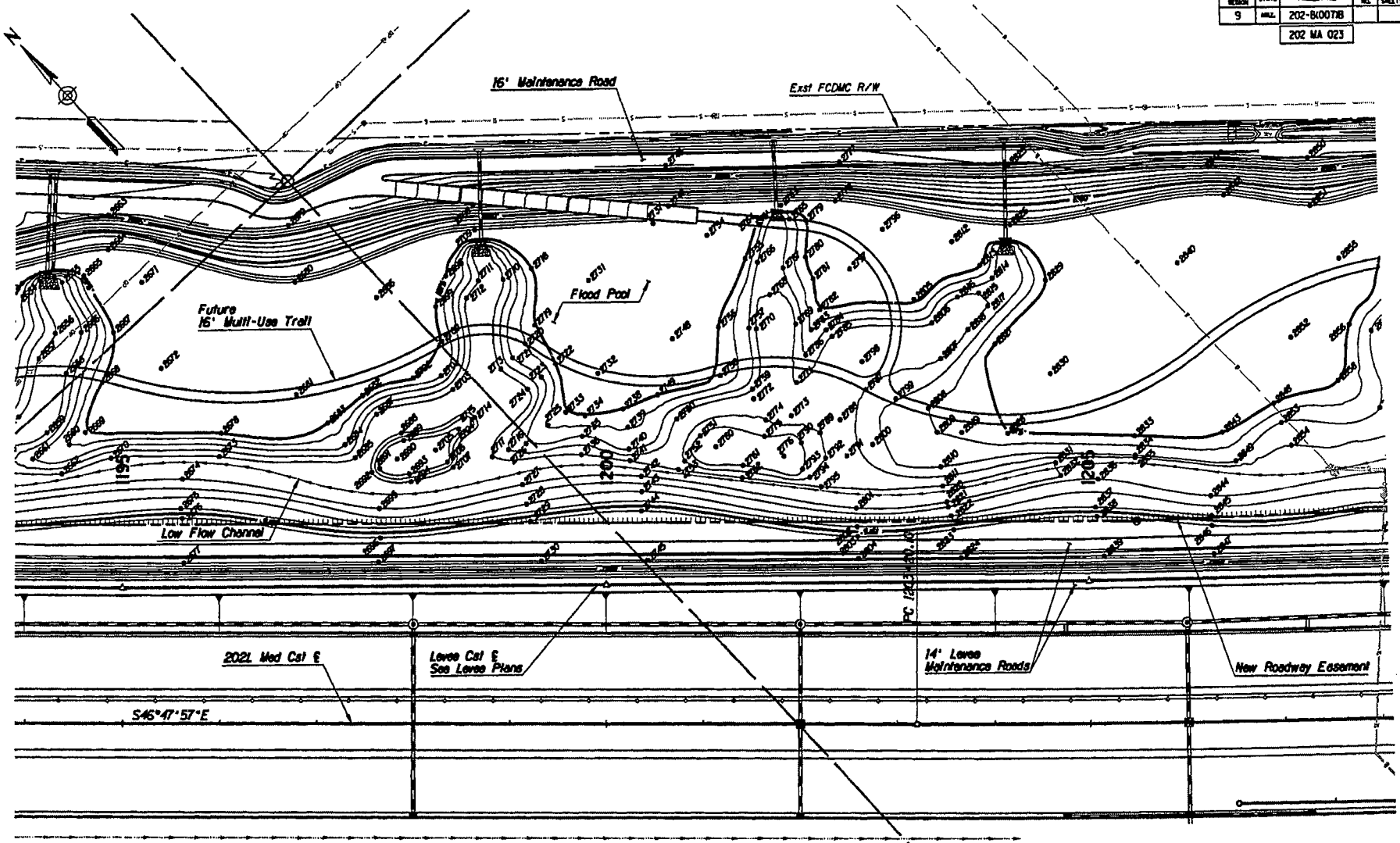

		DATE	BY
DESIGN			4/05
DRAWN			4/05
CHECKED			4/05

Stanley Consultants Inc.

ARIZONA DEPARTMENT OF TRANSPORTATION
INTERMODAL TRANSPORTATION DIVISION
ROADWAY DESIGN SERVICES

FLOODPOOL
GRADING PLAN
Sta 1194+00 to Sta 1208+00

PRELIMINARY
STAGE IV
95% Review
NOT FOR CONSTRUCTION OR RECORDING

ROUTE	LOCATION	DWG NO. F-5J2
202L	RED MTN FWY, POWER ROAD - UNIVERSITY DRIVE	
TRACS NO. H 5782 01C	202-B(007)B	___ OF ___

4/22/2005 cp:\17888\active\87-88-dwgs\84-flood\h5782f85a.dgn

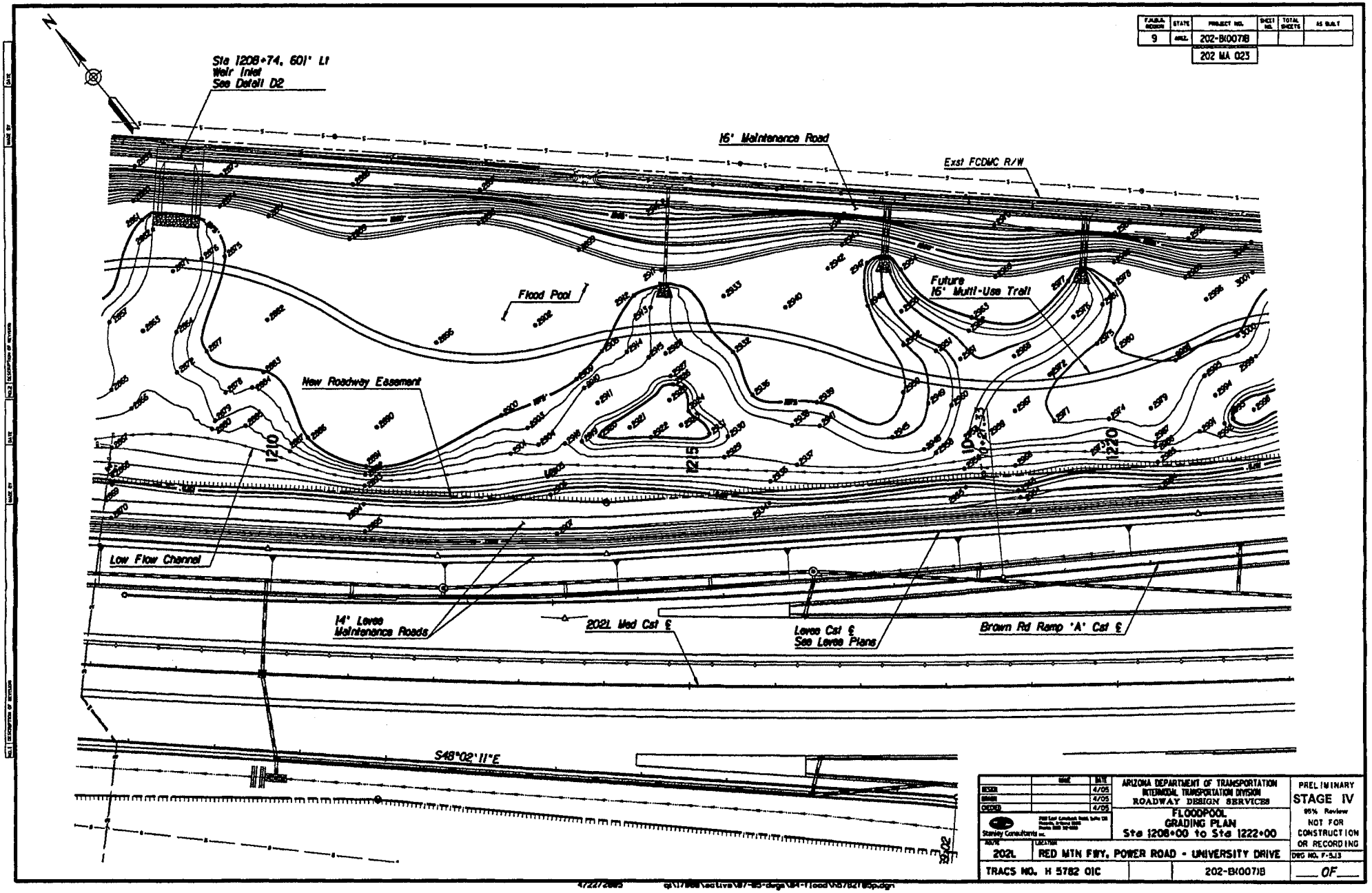

F.A.P./S.P. NUMBER	STATE	PROJECT NO.	SHEET NO.	TOTAL SHEETS	AS BUILT
9	ARIZ.	202-B(007)B			
		202 MA 023			

	NAME	DATE
DESIGN		4/05
DRAWN		4/05
CHECKED		4/05

Stanley Consultants Inc.

ARIZONA DEPARTMENT OF TRANSPORTATION
INTERMODAL TRANSPORTATION DIVISION
ROADWAY DESIGN SERVICES

FLOODPOOL
GRADING PLAN
Sta 1208+00 to Sta 1222+00

PRELIMINARY
STAGE IV
95% Review
NOT FOR CONSTRUCTION OR RECORDING

ROUTE	LOCATION		
202L	RED MTN FWY, POWER ROAD - UNIVERSITY DRIVE		DWG NO. F-5.13
TRACS NO. H 5782 01C		202-B(007)B	___ OF ___

F.H.W.A. REGION	STATE	PROJECT NO.	SHEET NO.	TOTAL SHEETS	AS BUILT
9	ARIZ.	202-B(007)B			

202 MA 023

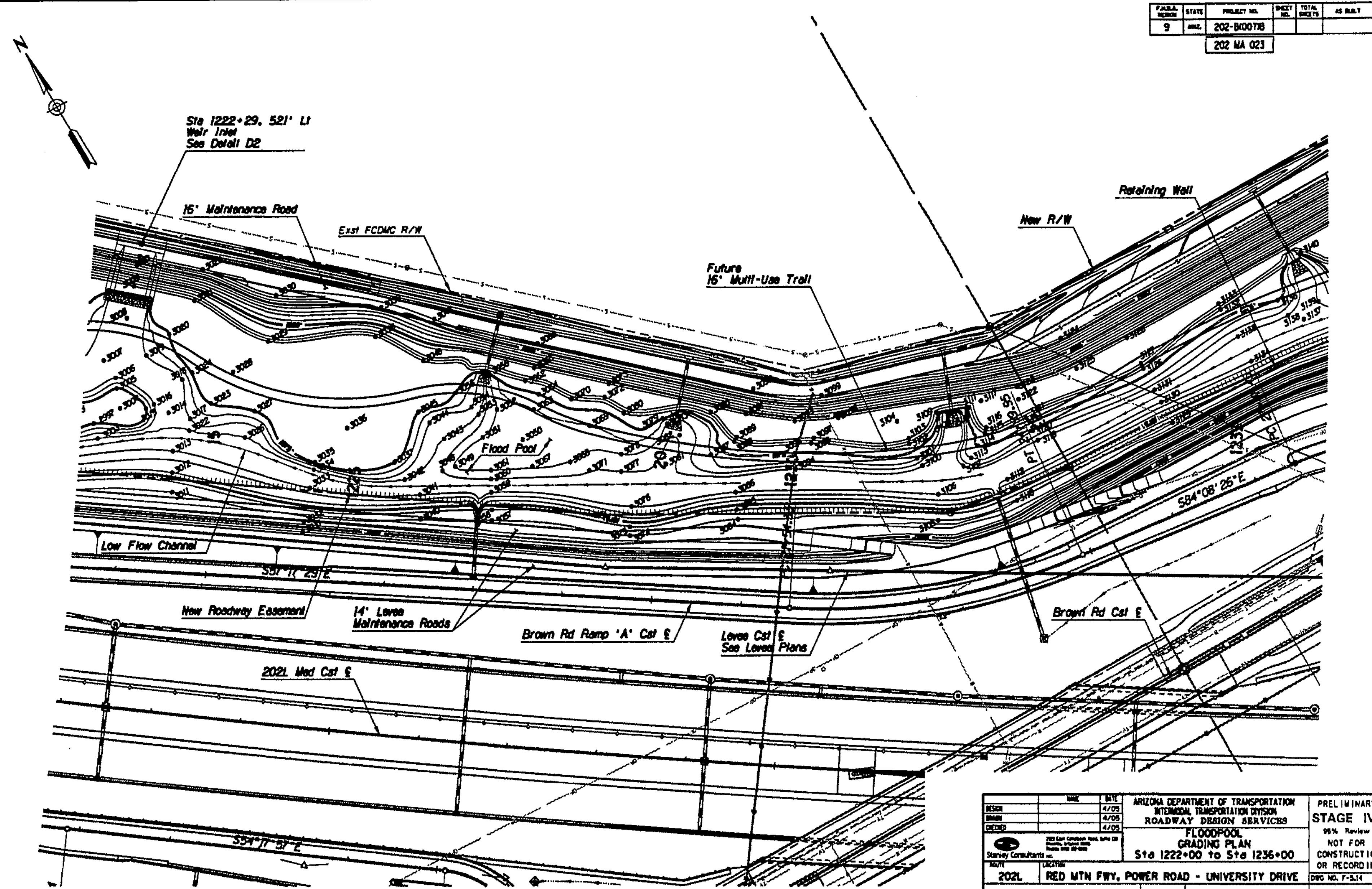

	NAME	DATE
DESIGN		4/05
DRAWN		4/05
CHECKED		4/05

Stanley Consultants inc.

ARIZONA DEPARTMENT OF TRANSPORTATION
INTERMODAL TRANSPORTATION DIVISION
ROADWAY DESIGN SERVICES

FLOODPOOL
GRADING PLAN
Sta 1222+00 to Sta 1236+00

PRELIMINARY
STAGE IV
95% Review
NOT FOR CONSTRUCTION OR RECORDING

ROUTE: 202L — LOCATION: RED MTN FWY, POWER ROAD - UNIVERSITY DRIVE — DWG NO. F-5.14

TRACS NO. H 5782 01C — 202-B(007)B — ___ OF ___

4/22/2005 q:\17986\active\07-00-dwgs\04-flood\h5782f05q.dgn

F.H.W.A. REGION	STATE	PROJECT NO.	SHEET NO.	TOTAL SHEETS	AS BUILT
9	ARIZ.	202-B(007)B			
		202 MA 023			

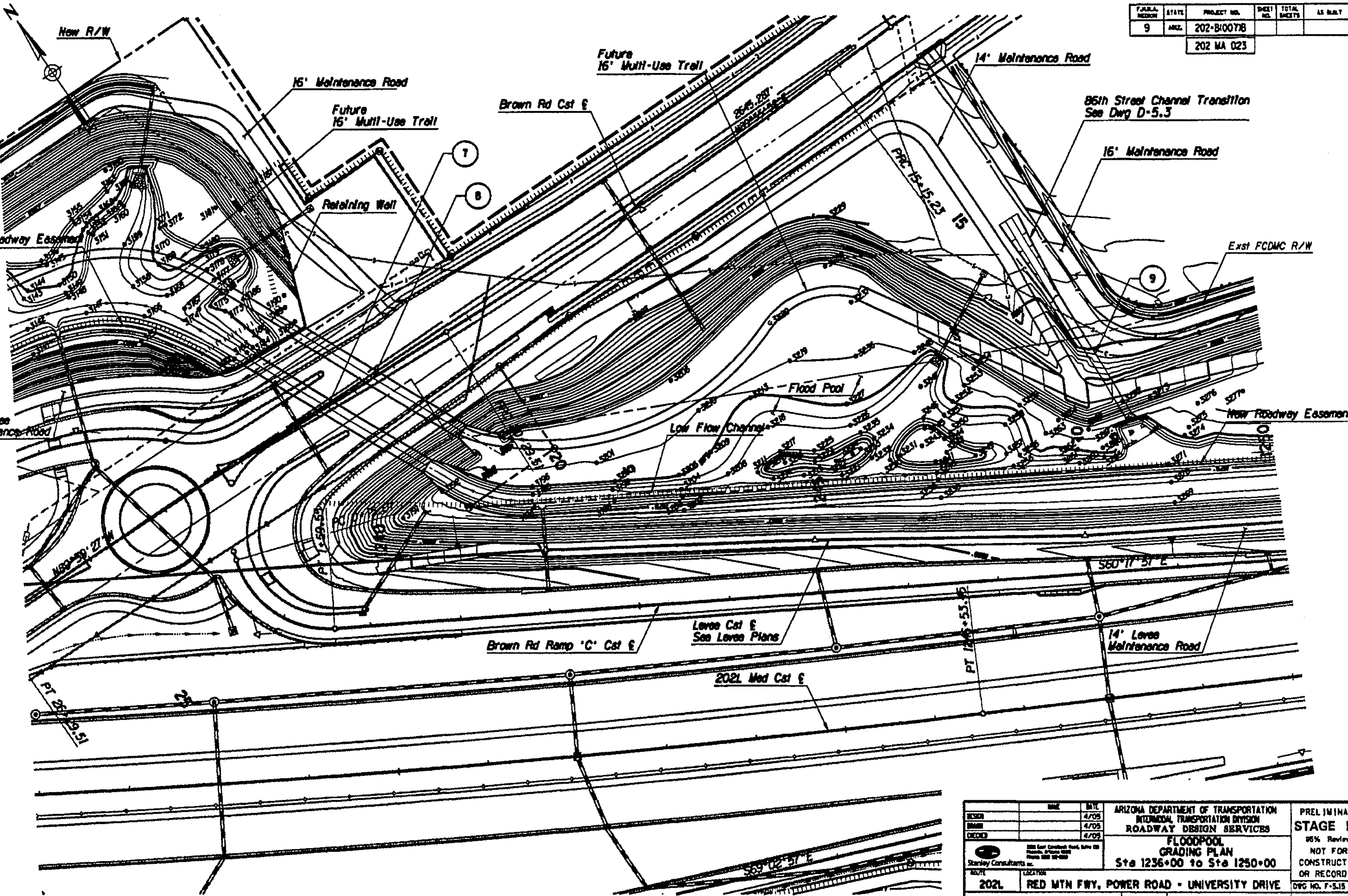

	NAME	DATE
DESIGN		4/05
DRAWN		4/05
CHECKED		4/05

Stanley Consultants inc.

ARIZONA DEPARTMENT OF TRANSPORTATION
INTERMODAL TRANSPORTATION DIVISION
ROADWAY DESIGN SERVICES

FLOODPOOL
GRADING PLAN
Sta 1236+00 to Sta 1250+00

PRELIMINARY
STAGE IV
95% Review
NOT FOR CONSTRUCTION OR RECORDING

ROUTE: 202L
LOCATION: RED MTN FWY, POWER ROAD - UNIVERSITY DRIVE
DWG NO. F-5.15

TRACS NO. H 5782 01C | 202-B(007)B | ___ OF ___

4/22/2005

F.H.W.A. REGION	STATE	PROJECT NO.	SHEET NO.	TOTAL SHEETS	AS BUILT
9	ARIZ.	202-B(007)B			
		202 MA 023			

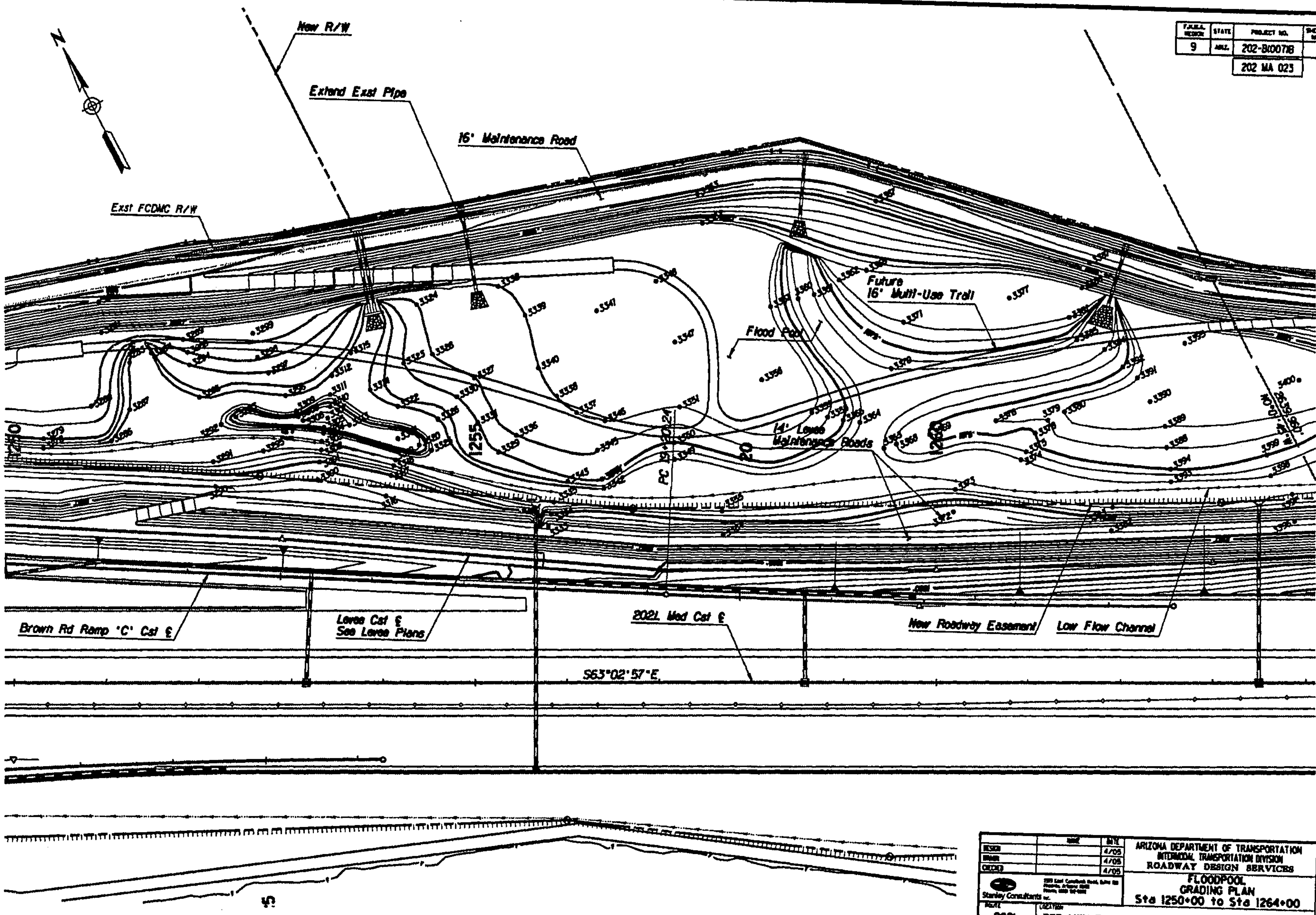

ARIZONA DEPARTMENT OF TRANSPORTATION
INTERMODAL TRANSPORTATION DIVISION
ROADWAY DESIGN SERVICES

	NAME	DATE
DESIGN		4/05
DRAWN		4/05
CHECKED		4/05

Stanley Consultants inc.

FLOODPOOL GRADING PLAN
Sta 1250+00 to Sta 1264+00

PRELIMINARY
STAGE IV
95% Review
NOT FOR CONSTRUCTION OR RECORDING

ROUTE: 202L
LOCATION: RED MTN FWY, POWER ROAD - UNIVERSITY DRIVE

DWG NO. F-5.16

TRACS NO. H 5782 01C | 202-B(007)B | ___ OF ___

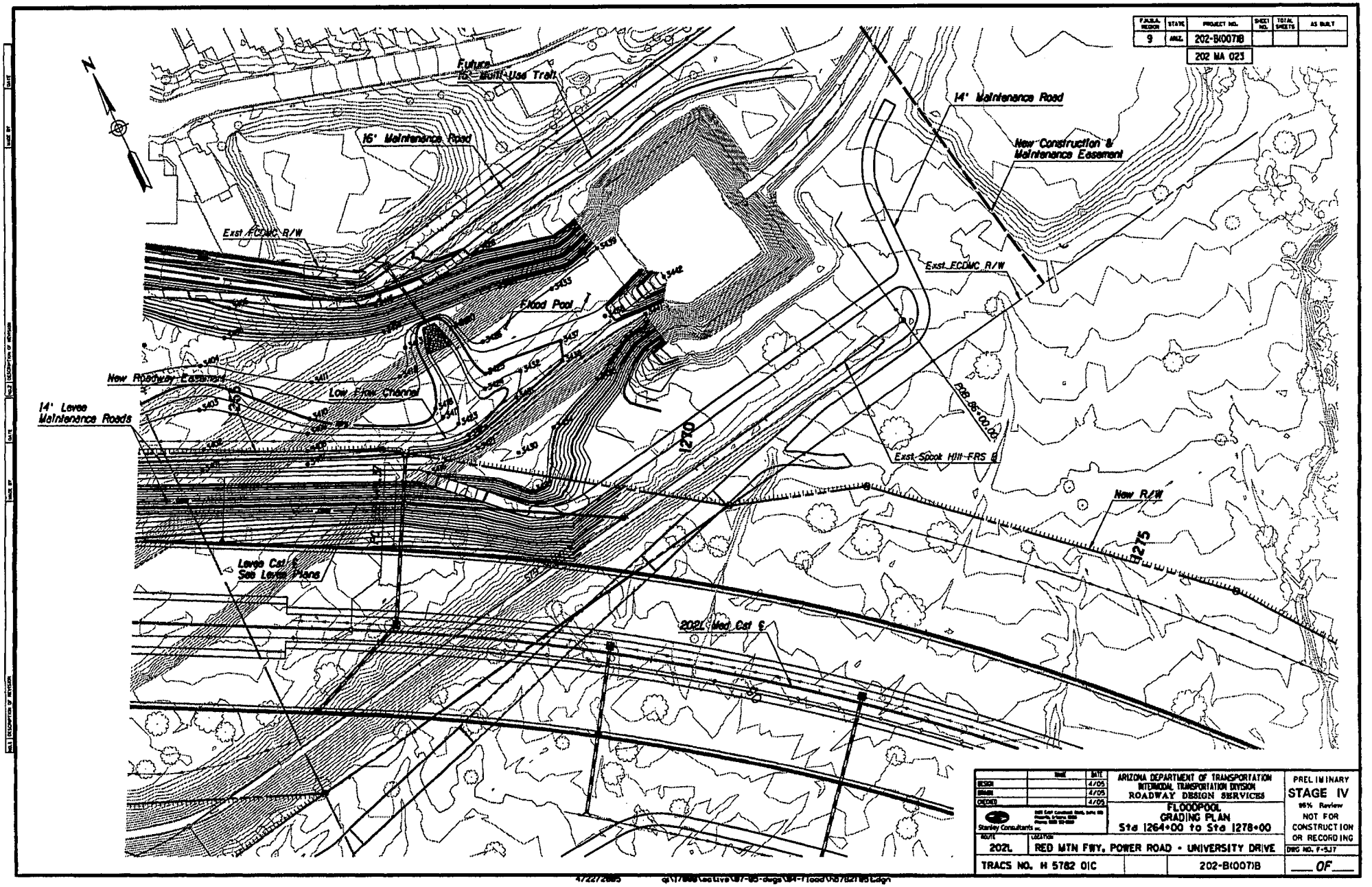
Future
16' Multi-Use Trail
16' Maintenance Road
14' Maintenance Road
New Construction &
Maintenance Easement
Exst FCDMC R/W
Exst FCDMC R/W
Flood Pool
New Roadway Easement
Low Flow Channel
14' Levee
Maintenance Roads
Levee Ctrl &
See Levee Plans
202L Med Ctrl &
PRB 85+00.00
Exst Spook Hill FRS &
New R/W
I-10
I-215
202L
RED MTN FWY, POWER ROAD - UNIVERSITY DRIVE
FLOODPOOL
GRADING PLAN
Sta 1264+00 to Sta 1278+00
ARIZONA DEPARTMENT OF TRANSPORTATION
INTERMODAL TRANSPORTATION DIVISION
ROADWAY DESIGN SERVICES
Stanley Consultants Inc.
PRELIMINARY
STAGE IV
95% Review
NOT FOR
CONSTRUCTION
OR RECORDING
TRACS NO. H 5782 01C
202-B(007)B
DWG NO. F-5317

F.A.P.U.A. DESIGN	STATE	PROJECT NO.	SHEET NO.	TOTAL SHEETS	AS BUILT
9	ARIZ.	202-B(007)B			

202 MA 023

PT. NO	NORTHING	EASTING	ELEV
1000	899957.0	771913.4	1587.0
1001	899889.6	771978.8	1575.0
1002	899914.5	771951.1	1587.0
1003	899880.5	771961.2	1575.0
1004	899849.7	771946.9	1568.0
1005	899885.1	771911.4	1568.0
1006	899839.6	771884.3	1572.0
1007	899849.6	771875.9	1568.0
1008	899816.6	771886.1	1572.0
1009	899796.0	771855.0	1572.0
1010	899805.4	771847.0	1568.0
1011	899811.8	771840.4	1568.0
1012	899816.5	771835.7	1570.0
1013	899769.9	771834.3	1572.0
1014	899775.0	771829.0	1569.0
1015	899781.0	771820.6	1569.0
1016	899784.8	771813.0	1570.0
1017	899753.3	771800.7	1570.0
1018	899759.5	771769.9	1581.0
1019	899875.2	772042.7	1589.0
1020	899878.1	771999.5	1575.0
1021	899820.9	772002.7	1577.0
1022	899820.9	771988.6	1575.0
1023	899850.5	771958.1	1572.0
1024	899822.9	771944.0	1572.0
1025	899792.7	771946.5	1572.0
1026	899807.0	771932.5	1570.0
1027	899814.1	771911.5	1568.0
1028	899768.6	771888.1	1574.0
1029	899757.7	771891.3	1574.0
1030	899750.4	771887.3	1570.0
1031	899758.1	771846.0	1574.0
1032	899747.2	771825.3	1570.0
1033	899710.6	771809.6	1569.5
1034	899683.2	771793.5	1570.0
1035	899688.0	771763.0	1580.0
1036	899625.7	771727.1	1580.0
1037	899760.8	771995.8	1575.0
1038	899759.6	771983.1	1573.0
1039	899771.0	771971.3	1574.0
1040	899740.7	771950.0	1572.0
1041	899735.0	771920.0	1570.0
1042	899712.7	771885.7	1569.8

PT. NO	NORTHING	EASTING	ELEV
1043	899667.0	771887.7	1575.0
1044	899690.3	771858.2	1570.0
1045	899684.1	771819.7	1570.0
1046	899628.6	771806.4	1570.0
1047	899627.9	771793.2	1570.0
1048	899623.0	771759.5	1575.0
1049	899729.9	772067.6	1589.0
1050	899707.9	772022.4	1577.0
1051	899702.9	771987.7	1575.0
1052	899669.2	771961.7	1574.0
1053	899664.9	771919.6	1574.0
1054	899613.0	771922.0	1577.5
1055	899640.3	771903.0	1577.0
1056	899633.9	771877.8	1575.0
1057	899529.1	771771.0	1575.0
1058	899526.9	771726.2	1578.0
1059	899622.1	771954.3	1575.0
1060	899580.6	771945.0	1577.0
1061	899594.4	771896.4	1575.0
1062	899500.9	771843.6	1570.0
1063	899528.3	771808.6	1570.0
1064	899643.1	772113.5	1589.0
1065	899627.6	772072.5	1577.0
1066	899616.5	772044.6	1575.0
1067	899565.1	772020.9	1574.5
1068	899529.5	771972.4	1576.0
1069	899493.6	771915.8	1574.0
1070	899441.4	771843.0	1575.0
1071	899400.7	771727.1	1574.0
1072	899565.7	772154.0	1583.0
1073	899547.3	772122.4	1577.0
1074	899532.7	772063.4	1575.0
1075	899489.0	771994.3	1575.0
1076	899487.2	771964.7	1575.0
1077	899460.1	771978.6	1576.0
1078	899406.5	771915.3	1574.0
1079	899408.5	771879.0	1570.0
1080	899406.0	771858.0	1570.0
1081	899400.3	771837.7	1573.0
1082	899392.8	771785.1	1575.0
1083	899365.8	771738.7	1579.0
1084	899326.9	771753.5	1580.0
1085	899402.8	772008.8	1575.0

PT. NO	NORTHING	EASTING	ELEV
1086	899434.0	771982.0	1577.0
1087	899402.8	771979.6	1577.5
1088	899407.7	771952.7	1575.0
1089	899334.1	771889.3	1570.0
1090	899323.6	771851.9	1575.0
1091	899443.1	772128.8	1575.0
1092	899424.0	772088.6	1575.5
1093	899360.3	772044.6	1574.3
1094	899360.6	771998.7	1575.0
1095	899378.7	771980.2	1577.0
1096	899356.0	771970.9	1575.0
1097	899344.0	771966.6	1574.0
1098	899267.2	771815.9	1581.0
1099	899247.3	771813.5	1583.0
1100	899404.0	772213.1	1589.0
1101	899388.4	772169.9	1577.0
1102	899382.1	772140.0	1575.0
1103	899328.1	772086.4	1574.0
1104	899317.5	772012.5	1574.0
1105	899292.8	771999.2	1570.0
1106	899293.3	771942.9	1570.0
1107	899214.2	771806.8	1593.0
1108	899331.6	772125.8	1574.0
1109	899304.0	772139.2	1571.0
1110	899302.1	772140.1	1570.0
1111	899302.5	772109.7	1571.0
1112	899296.4	772052.3	1574.0
1113	899259.5	772059.7	1570.0
1114	899243.7	772034.1	1570.0
1115	899245.4	771994.6	1573.0
1116	899230.6	772000.9	1574.0
1117	899252.8	771968.4	1570.0
1118	899174.7	771918.3	1575.0
1119	899173.4	771900.2	1581.0
1120	899171.9	771882.9	1583.0
1121	899341.6	772243.2	1589.0
1122	899322.8	772200.5	1577.0
1123	899287.1	772171.7	1571.0
1124	899275.3	772174.8	1572.0
1125	899264.0	772178.1	1574.0
1126	899244.5	772123.5	1574.0
1127	899246.4	772113.4	1572.0
1128	899248.8	772096.6	1570.0

PT. NO	NORTHING	EASTING	ELEV
1129	899220.7	772083.3	1570.0
1130	899217.7	772070.9	1573.0
1131	899215.2	772049.8	1574.0
1132	899186.9	772043.3	1570.0
1133	899192.0	772006.8	1574.0
1134	899198.9	771980.2	1570.0
1135	899175.0	771968.6	1570.0
1136	899175.8	771960.9	1573.0
1137	899176.0	771939.6	1574.0
1138	899078.1	771835.4	1593.0
1139	899243.6	772196.1	1575.0
1140	899231.9	772159.3	1575.0
1141	899167.7	772054.0	1570.0
1142	899163.2	772056.3	1571.0
1143	899142.6	772009.8	1570.0
1144	899068.1	771925.9	1574.0
1145	899068.5	771913.3	1575.0
1146	899071.6	771895.2	1581.0
1147	899073.0	771878.0	1582.0
1148	899256.7	772296.2	1590.0
1149	899238.8	772259.2	1577.0
1150	899187.6	772236.6	1575.0
1151	899191.1	772169.9	1575.0
1152	899175.7	772147.5	1574.0
1153	899167.0	772138.8	1572.0
1154	899155.1	772130.2	1570.0
1155	899138.8	772076.8	1573.0
1156	899096.0	772049.3	1570.0
1157	899060.8	772012.9	1572.0
1158	899066.2	772006.5	1571.0
1159	899067.3	772004.0	1570.0
1160	899060.5	771972.5	1570.0
1161	899164.4	772239.5	1574.0
1162	899154.7	772240.0	1572.0
1163	899144.6	772242.7	1571.0
1164	899148.0	772200.5	1574.0
1165	899137.4	772201.5	1572.0
1166	899124.4	772200.5	1571.0
1167	899063.7	772095.3	1574.0
1168	899075.4	772078.5	1573.0
1169	899019.0	772039.8	1574.0
1170	899054.0	772018.5	1573.0
1171	899098.3	772215.8	1570.0

	NAME	DATE
DESIGN	TEC	4/09
DRAWN	RJP	4/09
CHECKED	CAD	4/09

Stanley Consultants Inc.

ARIZONA DEPARTMENT OF TRANSPORTATION
INTERMODAL TRANSPORTATION DIVISION
ROADWAY DESIGN SERVICES

FLOOD POOL
GRADING POINTS

PRELIMINARY
STAGE IV
95% Review
NOT FOR
CONSTRUCTION
OR RECORDING

MAP NO.	LOCATION	DRG NO. F-5.18
202L	RED MTN FWY. POWER ROAD - UNIVERSITY DRIVE	
TRACS NO. H 5782 01C		202-B(007)B

___ OF ___

4/22/2009 q:\17888\active\87-85-dugo\84-flood\h5782188d.dgn

F.A.P.M. REVISION	STATE	PROJECT NO.	SHEET NO.	TOTAL SHEETS	AS BUILT
9	ARIZ.	202-B(007)B			
		202 MA 023			

PT. NO	NORTHING	EASTING	ELEV
1172	899075.4	772156.0	1574.0
1173	899034.7	772135.2	1574.8
1174	899035.2	772224.0	1574.0
1175	898960.7	772106.9	1574.5
1176	898934.7	772043.6	1574.0
1177	898930.0	772024.2	1573.0
1178	898927.0	772016.2	1570.0
1179	898919.4	771993.8	1570.0
1180	898887.2	771949.4	1575.0
1181	898877.1	771934.0	1581.0
1182	898982.1	772262.4	1575.0
1183	899028.1	772398.7	1589.0
1184	899003.5	772357.5	1577.0
1185	898990.2	772319.9	1576.0
1186	898925.1	772241.1	1574.0
1187	898902.1	772184.0	1574.0
1188	898869.8	772129.7	1573.0
1189	898917.8	772332.0	1575.0
1190	898888.2	772273.2	1573.0
1191	898834.7	772201.0	1573.0
1192	898823.3	772131.0	1570.0
1193	898806.9	772132.1	1570.0
1194	898789.0	772111.2	1570.0
1195	898781.1	772099.8	1570.0
1196	898778.1	772095.9	1572.0
1197	898773.6	772092.4	1573.0
1198	898760.3	772076.6	1574.0
1199	898836.4	772282.3	1570.0
1200	898815.7	772289.7	1570.0
1201	898784.7	772236.4	1570.0
1202	898759.9	772200.1	1570.0
1203	898750.7	772174.8	1572.3
1204	898783.3	772147.8	1572.3
1205	898721.2	772105.5	1575.0
1206	898744.7	772092.4	1574.0
1207	898767.9	772284.5	1573.0
1208	898768.5	772242.5	1570.0
1209	898731.4	772236.4	1571.0
1210	898722.6	772192.6	1570.0
1211	898717.1	772171.9	1570.0
1212	898649.4	772068.4	1575.0
1213	898853.2	772515.3	1590.0
1214	898810.8	772433.4	1577.0

PT. NO	NORTHING	EASTING	ELEV
1215	898738.1	772291.3	1572.0
1216	898713.5	772241.6	1573.0
1217	898693.6	772212.4	1573.0
1218	898661.8	772186.8	1570.0
1219	898655.4	772140.9	1575.0
1220	898631.0	772141.5	1575.5
1221	898653.1	772126.7	1575.0
1222	898652.5	772115.7	1574.0
1223	898699.6	772362.4	1572.0
1224	898703.4	772325.5	1571.0
1225	898641.2	772288.3	1573.0
1226	898578.1	772154.1	1575.0
1227	898723.2	772556.5	1591.0
1228	898691.3	772484.7	1577.0
1229	898649.4	772429.2	1573.0
1230	898640.2	772375.5	1571.0
1231	898539.8	772164.0	1574.0
1232	898584.3	772368.4	1575.0
1233	898535.6	772323.0	1575.0
1234	898535.2	772248.4	1570.0
1235	898528.9	772221.6	1570.0
1236	898540.4	772465.7	1575.0
1237	898536.8	772368.2	1577.0
1238	898483.7	772429.7	1575.0
1239	898489.5	772371.1	1577.5
1240	898365.6	772243.2	1573.0
1241	898374.0	772200.0	1575.0
1242	898423.3	772481.3	1575.0
1243	898396.6	772428.3	1575.0
1244	898403.0	772381.6	1577.0
1245	898387.6	772352.9	1575.0
1246	898379.3	772273.8	1570.0
1247	898372.0	772257.2	1570.0
1248	898501.4	772663.3	1591.0
1249	898473.4	772620.7	1577.0
1250	898364.5	772405.9	1576.5
1251	898283.0	772279.7	1574.0
1252	898334.6	772439.0	1577.0
1253	898217.0	772266.0	1575.0
1254	898247.7	772457.1	1575.0
1255	898235.7	772386.2	1570.0
1256	898232.9	772356.8	1570.0
1257	898227.8	772321.8	1574.0

PT. NO	NORTHING	EASTING	ELEV
1258	898297.5	772623.5	1576.0
1259	898290.4	772591.6	1575.0
1260	898442.8	772538.8	1576.0
1261	898276.2	772544.7	1575.0
1262	898264.2	772517.1	1577.0
1263	898251.5	772500.6	1577.5
1264	898158.8	772330.9	1574.0
1265	898180.4	772510.3	1577.0
1266	898159.6	772593.4	1574.5
1267	898108.5	772394.2	1570.0
1268	898105.8	772374.1	1570.0
1269	898104.3	772353.3	1573.0
1270	898101.7	772332.9	1574.0
1271	898096.3	772313.3	1575.0
1272	898268.5	772763.6	1590.0
1273	898242.1	772712.5	1577.0
1274	898187.0	772699.6	1576.0
1275	898165.5	772631.5	1575.0
1276	898155.8	772548.4	1575.0
1277	898154.7	772528.9	1576.0
1278	898120.5	772513.7	1577.0
1279	898115.8	772481.3	1575.0
1280	898111.0	772451.5	1574.0
1281	898109.4	772420.4	1573.0
1282	898069.1	772686.5	1575.0
1283	898051.0	772613.4	1575.0
1284	898026.0	772585.4	1577.0
1285	898058.1	772553.8	1577.5
1286	897993.0	772506.5	1573.0
1287	897984.5	772459.8	1570.0
1288	897980.3	772432.8	1570.0
1289	897976.2	772408.6	1573.0
1290	897970.3	772374.0	1574.0
1291	897970.3	772359.8	1575.0
1292	898122.4	772844.0	1590.0
1293	898097.6	772802.6	1577.0
1294	898084.2	772743.9	1576.0
1295	898006.9	772594.2	1576.0
1296	897979.3	772605.3	1574.5
1297	897993.1	772545.9	1575.0
1298	897882.5	772404.3	1574.0
1299	897879.6	772391.1	1575.0
1300	897988.0	772738.5	1574.0

PT. NO	NORTHING	EASTING	ELEV
1301	898010.3	772719.7	1574.0
1302	897968.3	772668.0	1575.0
1303	897934.7	772579.7	1573.0
1304	897923.4	772510.9	1570.0
1305	897916.5	772494.8	1570.0
1306	897903.9	772466.5	1573.0
1307	897940.8	772808.0	1574.0
1308	897956.0	772782.3	1574.0
1309	897971.7	772751.5	1574.0
1310	897894.9	772667.3	1574.0
1311	897911.5	772616.0	1575.0
1312	897865.1	772611.5	1571.0
1313	897888.7	772559.3	1572.0
1314	897875.3	772581.7	1571.0
1315	897858.9	772549.5	1570.0
1316	897814.6	772425.2	1574.0
1317	897928.1	772899.3	1588.0
1318	897924.9	772849.2	1577.0
1319	897900.8	772728.6	1575.0
1320	897844.5	772610.9	1570.0
1321	897828.3	772608.1	1570.0
1322	897800.5	772545.0	1570.5
1323	897857.4	772798.8	1573.0
1324	897844.3	772734.3	1571.0
1325	897803.9	772720.3	1570.0
1326	897795.2	772639.8	1575.0
1327	897794.5	772602.2	1570.0
1328	897738.5	772583.3	1570.0
1329	897738.1	772550.9	1570.0
1330	897735.0	772505.1	1573.0
1331	897732.0	772472.3	1574.0
1332	897731.2	772456.1	1575.0
1333	897762.6	772710.9	1570.0
1334	897722.1	772644.7	1574.0
1335	897693.9	772529.0	1573.0
1336	897809.3	772943.0	1589.0
1337	897798.8	772902.3	1577.0
1338	897791.3	772885.6	1576.0
1339	897771.1	772872.2	1573.0
1340	897718.2	772704.3	1574.0
1341	897635.9	772491.6	1574.0
1342	897635.3	772476.0	1575.0
1343	897721.1	772846.3	1570.0

	NAME	DATE
DESIGN	TEC	4/05
DRAWN	W.P	4/05
CHECKED	CAD	4/05

Stanley Consultants Inc.

ARIZONA DEPARTMENT OF TRANSPORTATION
INTERMODAL TRANSPORTATION DIVISION
ROADWAY DESIGN SERVICES

FLOOD POOL
GRADING POINTS

PRELIMINARY
STAGE IV
95% Review
NOT FOR CONSTRUCTION OR RECORDING

ROUTE	LOCATION
202L	RED MTN FWY. POWER ROAD - UNIVERSITY DRIVE

DWG NO. F-5.19

TRACS NO. H 5782 01C | 202-B(007)B | ___ OF ___

4/22/2005 q:\17000\active\87-05-dwgs\84-Flood\h5782f05.dgn

NO. | DESCRIPTION OF REVISION | DRWN BY | DATE | CHKD BY | DATE

F.H.W.A. REGION	STATE	PROJECT NO.	SHEET NO.	TOTAL SHEETS	AS BUILT
9	ARIZ.	202-B(007)B			

202 MA 023

PT. NO	NORTHING	EASTING	ELEV
1344	897690.7	772842.4	1570.0
1345	897641.4	772761.2	1575.0
1346	897666.1	772717.0	1574.5
1347	897633.5	772686.8	1574.0
1348	897631.8	772669.6	1570.0
1349	897630.4	772663.5	1570.0
1350	897628.4	772643.9	1573.0
1351	897583.8	772533.9	1575.0
1352	897650.4	772841.2	1574.0
1353	897589.2	772750.2	1576.0
1354	897587.7	772641.5	1575.0
1355	897610.1	772840.9	1575.0
1356	897593.8	772842.4	1576.0
1357	897244.0	772807.5	1580.0
1358	897251.3	772964.0	1576.0
1359	897236.9	772928.8	1575.0
1360	897177.4	772805.6	1575.0
1361	897252.2	773028.5	1575.5
1362	897196.2	772972.1	1575.0
1363	897184.1	772911.8	1574.0
1364	897181.2	772876.2	1570.0
1365	897179.7	772856.2	1570.0
1366	897178.3	772835.9	1574.0
1367	897141.0	772827.6	1575.0
1368	897200.7	773071.2	1589.0
1369	897199.0	773032.6	1576.0
1370	897097.7	772995.7	1575.0
1371	897087.8	772951.9	1574.0
1372	897075.7	772893.9	1570.0
1373	897073.5	772876.3	1570.0
1374	897076.9	772866.1	1571.0
1375	897065.8	772858.0	1574.0
1376	897071.2	772847.2	1575.0
1377	897028.4	772883.8	1570.0
1378	897024.7	772856.4	1575.0
1379	896978.8	772902.1	1570.0
1380	896976.7	772890.5	1571.0
1381	896971.5	772877.7	1574.0
1382	896967.9	772858.9	1575.0
1383	896978.0	773036.9	1575.0
1384	896953.6	772993.4	1574.0
1385	896944.5	772938.2	1570.0
1386	896940.1	772920.4	1570.0

PT. NO	NORTHING	EASTING	ELEV
1387	896935.7	772910.0	1571.0
1388	896932.2	772903.9	1573.0
1389	896929.6	772896.8	1574.0
1390	896894.9	772900.9	1576.0
1391	896925.7	772887.9	1575.0
1392	896922.6	772870.0	1575.0
1393	896929.9	773023.7	1574.5
1394	896911.5	773004.4	1574.0
1395	896878.6	772985.7	1572.0
1396	896850.1	772922.6	1577.0
1397	896899.6	773059.0	1574.0
1398	896878.1	773060.2	1570.0
1399	896859.9	773066.4	1570.0
1400	896855.9	772977.7	1570.0
1401	896851.7	772961.2	1570.0
1402	896850.3	772951.0	1571.0
1403	896848.6	772944.8	1574.0
1404	896847.2	772936.7	1575.0
1405	896822.1	772936.2	1577.0
1406	896836.0	772929.5	1577.3
1407	896831.9	772914.7	1575.0
1408	896823.8	772900.2	1575.0
1409	896835.4	773073.2	1574.0
1410	896807.1	773074.9	1574.5
1411	896810.3	773027.4	1574.0
1412	896805.5	772998.0	1570.0
1413	896771.2	772955.8	1576.0
1414	896801.3	773166.6	1576.0
1415	896781.8	773127.6	1575.0
1416	896805.2	773116.5	1575.0
1417	896773.7	773056.6	1574.0
1418	896757.6	773035.3	1570.0
1419	896740.3	773002.7	1570.0
1420	896738.5	772991.7	1571.0
1421	896738.1	772987.2	1573.0
1422	896737.7	772982.3	1574.0
1423	896735.9	772965.3	1575.0
1424	896725.9	772943.0	1575.0
1425	896785.2	773245.2	1588.0
1426	896757.9	773199.1	1575.0
1427	896751.4	773151.4	1574.3
1428	896734.2	773096.4	1574.5
1429	896714.2	773081.0	1574.0

PT. NO	NORTHING	EASTING	ELEV
1430	896685.4	773033.9	1570.0
1431	896686.5	773158.9	1570.0
1432	896654.9	773098.4	1571.0
1433	896690.1	773066.9	1570.0
1434	896671.5	773069.7	1570.0
1435	896653.2	773069.0	1571.0
1436	896644.3	773065.9	1571.5
1437	896642.0	773057.7	1571.0
1438	896675.1	773035.6	1571.0
1439	896636.6	773035.5	1570.0
1440	896635.6	773024.9	1570.0
1441	896634.5	773014.4	1571.0
1442	896634.6	773009.7	1573.0
1443	896634.5	773004.8	1574.0
1444	896631.6	772982.5	1574.5
1445	896630.1	772967.3	1575.0
1446	896693.0	773233.3	1575.0
1447	896676.8	773199.2	1570.0
1448	896664.3	773163.7	1569.5
1449	896646.3	773163.6	1570.0
1450	896655.0	773109.2	1570.0
1451	896615.1	773104.6	1570.0
1452	896630.1	773084.7	1570.0
1453	896638.9	773072.4	1571.0
1454	896606.4	773063.9	1571.0
1455	896595.2	773060.6	1570.0
1456	896646.3	773324.7	1590.0
1457	896640.7	773231.0	1575.0
1458	896615.6	773167.8	1574.0
1459	896593.3	773124.4	1574.0
1460	896559.9	773110.7	1574.0
1461	896560.7	773082.2	1570.0
1462	896525.8	773035.2	1575.5
1463	896620.2	773324.3	1589.0
1464	896601.4	773285.9	1576.0
1465	896590.1	773247.5	1575.8
1466	896585.3	773197.2	1575.0
1467	896565.3	773157.9	1574.5
1468	896520.4	773153.5	1574.0
1469	896514.7	773103.8	1570.0
1470	896503.7	773088.1	1570.0
1471	896501.2	773083.9	1571.0
1472	896500.2	773082.4	1573.0

PT. NO	NORTHING	EASTING	ELEV
1473	896498.4	773078.4	1574.0
1474	896499.9	773063.0	1575.0
1475	896540.7	773217.6	1574.0
1476	896515.4	773218.3	1571.0
1477	896502.1	773218.8	1570.0
1478	896471.6	773167.9	1569.5
1479	896499.3	773151.8	1571.0
1480	896487.1	773150.5	1570.0
1481	896461.9	773084.2	1576.0
1482	896514.9	773378.1	1590.0
1483	896495.3	773337.6	1575.0
1484	896458.8	773262.7	1570.0
1485	896470.8	773207.6	1570.0
1486	896441.7	773207.9	1573.0
1487	896426.5	773144.0	1569.5
1488	896424.7	773131.6	1570.0
1489	896423.8	773126.9	1571.0
1490	896420.7	773109.2	1576.0
1491	896419.6	773101.4	1576.8
1492	896417.7	773092.9	1576.0
1493	896417.3	773085.5	1575.0
1494	896413.2	773052.2	1575.0
1495	896453.8	773316.7	1574.0
1496	896471.8	773300.5	1570.0
1497	896422.4	773270.1	1574.0
1498	896436.9	773262.1	1573.0
1499	896373.7	773255.5	1574.0
1500	896391.9	773170.9	1573.0
1501	896392.0	773161.2	1570.0
1502	896361.7	773120.7	1576.0
1503	896390.5	773316.5	1575.0
1504	896322.0	773129.8	1575.0
1505	896379.7	773427.4	1590.0
1506	896350.2	773384.4	1576.0
1507	896234.6	773119.8	1575.0
1508	896318.0	773339.6	1575.0
1509	896154.7	773359.1	1574.0
1510	896258.3	773214.8	1573.0
1511	896252.3	773192.1	1570.0
1512	896246.4	773173.1	1570.0
1513	896244.0	773165.1	1571.0
1514	896243.1	773157.0	1574.0
1515	896238.5	773140.0	1574.3

	NAME	DATE
DESIGN	TEC	4/05
DRAWN	WJP	4/05
CHECKED	CAD	4/05

Stanley Consultants inc.

ARIZONA DEPARTMENT OF TRANSPORTATION
INTERMODAL TRANSPORTATION DIVISION
ROADWAY DESIGN SERVICES

FLOOD POOL
GRADING POINTS

PRELIMINARY
STAGE IV
95% Review
NOT FOR CONSTRUCTION OR RECORDING

ROUTE 202L LOCATION RED MTN FWY, POWER ROAD - UNIVERSITY DRIVE

DRG NO. F-5.20

TRACS NO. H 5782 01C 202-B(007)B ___ OF ___

F.A.P.No. REVISION	STATE	PROJECT NO.	SHEET NO.	TOTAL SHEETS	AS BUILT
9	ARIZ.	202-B(007)I			
		202 MA 023			

PT. NO	NORTHING	EASTING	ELEV
1516	896165.7	773168.0	1574.5
1517	896262.7	773491.6	1590.0
1518	896231.9	773453.7	1575.0
1519	896152.0	773227.8	1570.0
1520	896142.2	773214.6	1574.0
1521	896136.1	773202.4	1575.0
1522	896118.2	773160.2	1575.0
1523	896096.4	773222.5	1576.0
1524	896142.8	773463.7	1575.3
1525	896109.5	773431.7	1575.0
1526	896094.1	773414.7	1577.0
1527	896100.8	773391.4	1577.0
1528	896125.9	773378.0	1575.0
1529	896051.6	773244.7	1577.0
1530	896029.8	773253.6	1577.3
1531	896007.1	773223.4	1574.5
1532	896063.0	773487.4	1575.0
1533	896053.7	773460.4	1575.0
1534	896069.6	773413.9	1577.5
1535	895999.5	773330.2	1569.5
1536	895999.6	773314.5	1570.0
1537	895997.6	773292.9	1574.0
1538	895995.2	773275.0	1576.0
1539	896012.0	773260.3	1577.0
1540	895992.4	773258.5	1576.0
1541	895991.6	773251.2	1575.0
1542	895985.4	773207.5	1575.0
1543	896065.1	773596.5	1591.0
1544	896056.3	773580.3	1590.0
1545	896036.7	773528.3	1576.0
1546	896023.0	773438.0	1576.0
1547	896029.8	773426.0	1577.0
1548	896017.6	773414.1	1576.0
1549	896005.3	773363.1	1572.0
1550	896002.6	773344.9	1570.0
1551	895968.2	773277.0	1576.0
1552	895925.4	773280.5	1575.0
1553	895979.5	773522.1	1575.0
1554	895941.8	773437.2	1576.0
1555	895939.6	773402.1	1573.0
1556	895938.3	773380.7	1572.0
1557	895935.1	773361.6	1570.0
1558	895935.3	773342.1	1569.5

PT. NO	NORTHING	EASTING	ELEV
1559	896012.1	773621.8	1591.0
1560	896002.6	773607.6	1590.0
1561	895970.1	773557.7	1576.0
1562	895942.3	773483.8	1575.0
1563	895944.6	773460.2	1576.0
1564	895900.7	773462.2	1577.0
1565	895845.2	773339.8	1570.0
1566	895845.5	773326.7	1571.0
1567	895844.3	773311.4	1574.0
1568	895840.6	773276.5	1574.5
1569	895839.8	773261.4	1575.0
1570	895894.7	773578.5	1575.0
1571	895880.1	773508.2	1575.0
1572	895872.6	773483.9	1577.0
1573	895864.0	773454.8	1577.0
1574	895861.5	773411.6	1573.0
1575	895856.6	773393.1	1572.0
1576	895847.3	773377.1	1570.0
1577	895823.4	773363.6	1569.5
1578	895801.4	773478.4	1577.3
1579	895874.5	773687.8	1591.0
1580	895850.6	773644.1	1575.0
1581	895816.3	773627.2	1575.0
1582	895791.6	773529.8	1575.0
1583	895729.4	773508.8	1578.0
1584	895715.4	773475.7	1575.0
1585	895698.2	773436.2	1570.0
1586	895687.9	773420.0	1570.0
1587	895675.7	773392.5	1574.0
1588	895653.3	773336.7	1575.0
1589	895768.0	773728.7	1590.0
1590	895747.6	773682.2	1576.0
1591	895632.3	773465.4	1569.5
1592	895664.3	773622.8	1575.0
1593	895646.9	773593.5	1578.0
1594	895626.0	773591.7	1578.5
1595	895633.9	773572.9	1578.0
1596	895618.4	773546.8	1575.0
1597	895597.0	773514.0	1572.0
1598	895591.0	773502.4	1570.0
1599	895580.8	773472.9	1570.0
1600	895578.8	773461.3	1571.0
1601	895577.2	773451.1	1573.0

PT. NO	NORTHING	EASTING	ELEV
1602	895575.5	773442.0	1574.0
1603	895582.2	773413.3	1574.5
1604	895567.7	773373.4	1575.0
1605	895684.6	773774.9	1590.0
1606	895666.3	773732.4	1575.0
1607	895579.5	773607.7	1578.0
1608	895639.8	773706.4	1575.0
1609	895552.2	773615.7	1577.0
1610	895541.6	773620.4	1576.0
1611	895496.0	773542.6	1572.0
1612	895497.2	773522.3	1570.0
1613	895524.4	773502.0	1569.5
1614	895592.6	773809.2	1590.0
1615	895575.3	773759.2	1575.0
1616	895526.4	773626.4	1575.0
1617	895503.1	773584.9	1574.0
1618	895497.1	773566.3	1573.0
1619	895433.8	773492.5	1570.0
1620	895430.6	773475.1	1574.0
1621	895428.3	773433.1	1575.0
1622	895473.8	773711.7	1574.5
1623	895433.2	773608.3	1574.0
1624	895416.4	773559.5	1572.0
1625	895418.2	773543.6	1572.0
1626	895416.8	773532.5	1570.0
1627	895418.5	773514.9	1569.5
1628	895478.9	773873.3	1590.0
1629	895461.0	773833.5	1575.0
1630	895395.0	773666.0	1574.0
1631	895396.2	773792.8	1574.0
1632	895328.3	773592.7	1573.0
1633	895324.6	773587.1	1572.0
1634	895321.3	773582.8	1570.0
1635	895311.1	773568.6	1570.0
1636	895306.1	773561.5	1571.0
1637	895299.9	773552.4	1574.0
1638	895297.1	773520.3	1574.8
1639	895305.1	773727.0	1573.0
1640	895300.8	773727.4	1572.0
1641	895356.8	773719.9	1573.5
1642	895293.0	773673.6	1574.0
1643	895261.5	773629.8	1569.5
1644	895248.7	773563.2	1575.0

PT. NO	NORTHING	EASTING	ELEV
1645	895320.3	773835.8	1574.0
1646	895283.2	773792.4	1573.0
1647	895279.6	773726.6	1570.0
1648	895264.3	773676.3	1570.0
1649	895246.9	773678.1	1570.0
1650	895225.6	773684.6	1571.5
1651	895218.7	773667.9	1570.0
1652	895246.4	773653.7	1570.0
1653	895212.6	773651.4	1570.0
1654	895208.4	773643.4	1571.0
1655	895205.8	773639.5	1573.0
1656	895209.7	773596.8	1576.0
1657	895265.9	773825.5	1572.0
1658	895256.3	773785.1	1570.0
1659	895233.4	773787.6	1569.5
1660	895248.7	773744.3	1570.0
1661	895212.4	773733.5	1570.0
1662	895220.2	773702.4	1570.0
1663	895187.9	773696.8	1570.0
1664	895199.4	773629.1	1575.0
1665	895151.1	773628.8	1577.5
1666	895175.3	773616.0	1577.0
1667	895142.9	773602.7	1575.0
1668	895127.7	773566.0	1575.0
1669	895259.3	773955.7	1590.0
1670	895232.0	773890.9	1575.0
1671	895206.4	773866.6	1574.0
1672	895226.3	773814.2	1570.0
1673	895194.6	773827.2	1574.0
1674	895208.3	773790.5	1570.0
1675	895173.5	773801.5	1574.0
1676	895149.6	773763.5	1574.0
1677	895193.5	773740.6	1572.0
1678	895164.9	773703.6	1569.5
1679	895126.6	773640.9	1577.0
1680	895081.3	773719.3	1570.0
1681	895081.5	773706.3	1571.0
1682	895081.5	773694.6	1573.0
1683	895082.1	773674.1	1575.0
1684	895078.0	773656.5	1576.0
1685	895109.0	773861.0	1575.0
1686	895082.5	773767.0	1574.0
1687	895080.8	773746.1	1572.0

	NAME	DATE
DESIGN	T.E.C.	4/05
DRAWN	W.J.P.	4/05
CHECKED	C.A.D.	4/05

Stanley Consultants Inc.

ARIZONA DEPARTMENT OF TRANSPORTATION
INTERMODAL TRANSPORTATION DIVISION
ROADWAY DESIGN SERVICES

FLOOD POOL
GRADING POINTS

PRELIMINARY
STAGE IV
95% Review
NOT FOR CONSTRUCTION OR RECORDING

ROUTE: 202L
LOCATION: RED MTN FWY, POWER ROAD - UNIVERSITY DRIVE
DWG NO. F-5.21

TRACS NO. H 5782 01C
202-B(007)I
___ OF ___

4/22/2005 q:\17888\active\07-05-drngs\04-Flood\h5782f05d.dgn

F.H.W.A. REGION	STATE	PROJECT NO.	SHEET NO.	TOTAL SHEETS	AS BUILT
9	ARIZ.	202-B(007)B			

202 MA 023

PT. NO	NORTHING	EASTING	ELEV
1688	895081.1	773738.6	1570.0
1689	895022.2	773668.1	1575.0
1690	895010.2	773871.6	1575.0
1691	895001.9	773806.0	1574.0
1692	894980.5	773768.6	1570.0
1693	894945.6	773745.9	1570.0
1694	894940.2	773730.1	1571.0
1695	894934.2	773710.9	1573.0
1696	894923.8	773695.3	1574.0
1697	894914.1	773663.4	1575.0
1698	895047.3	774074.2	1589.0
1699	895024.0	774039.7	1575.0
1700	894928.2	773946.1	1575.0
1701	894906.4	773794.1	1569.5
1702	894859.6	773715.8	1574.5
1703	894890.1	773894.2	1574.0
1704	894878.1	773838.7	1570.0
1705	894806.6	773977.9	1575.0
1706	894800.1	773827.1	1570.0
1707	894795.9	773814.8	1571.0
1708	894794.0	773807.1	1573.0
1709	894783.4	773781.3	1576.0
1710	894779.0	773771.2	1576.0
1711	894777.2	773763.3	1575.0
1712	894771.7	773747.3	1574.5
1713	894767.1	773730.5	1575.0
1714	894794.5	773897.6	1574.0
1715	894772.5	773780.0	1576.5
1716	894696.3	773805.2	1575.0
1717	894690.2	773765.1	1575.0
1718	894793.5	774180.2	1590.0
1719	894715.9	774011.0	1574.0
1720	894734.2	773954.2	1574.0
1721	894716.5	773914.3	1574.0
1722	894678.7	773896.0	1572.0
1723	894654.3	773861.0	1569.3
1724	894648.5	773808.4	1574.5
1725	894764.0	774130.2	1575.0
1726	894740.9	774093.3	1570.0
1727	894706.2	774090.8	1570.0
1728	894713.3	774076.2	1569.5
1729	894724.9	774060.2	1570.0
1730	894677.6	774030.9	1572.0

PT. NO	NORTHING	EASTING	ELEV
1731	894686.6	773965.2	1570.0
1732	894651.5	773956.4	1570.0
1733	894644.6	773942.6	1571.0
1734	894632.9	773926.2	1571.5
1735	894634.3	773906.0	1570.0
1736	894656.4	773880.4	1570.0
1737	894616.3	773891.3	1571.8
1738	894638.7	773872.9	1570.0
1739	894627.7	773874.9	1571.0
1740	894610.5	773878.4	1571.0
1741	894606.5	773871.1	1570.0
1742	894619.6	773848.6	1570.0
1743	894584.7	773814.1	1575.0
1744	894692.0	774143.5	1574.8
1745	894664.0	774114.8	1574.0
1746	894645.3	774051.3	1570.0
1747	894640.8	773985.4	1569.3
1748	894622.6	773959.5	1570.0
1749	894608.5	773911.1	1571.0
1750	894601.1	773914.2	1570.0
1751	894580.2	773894.9	1570.0
1752	894575.0	773884.9	1570.0
1753	894584.7	773871.3	1569.3
1754	894550.9	773872.0	1570.0
1755	894548.7	773864.5	1574.0
1756	894710.1	774248.5	1592.0
1757	894686.1	774197.8	1575.0
1758	894656.7	774200.5	1570.0
1759	894650.1	774105.5	1572.0
1760	894645.5	774100.9	1570.0
1761	894621.8	774084.9	1569.3
1762	894595.9	774084.2	1570.0
1763	894598.1	774043.9	1570.0
1764	894570.7	773985.9	1574.0
1765	894556.5	773952.6	1572.0
1766	894567.1	773934.5	1570.0
1767	894550.3	773890.1	1570.0
1768	894613.1	774223.9	1570.0
1769	894625.3	774188.4	1569.5
1770	894592.1	774163.3	1573.0
1771	894598.8	774143.0	1572.0
1772	894600.1	774134.8	1570.0
1773	894570.5	774131.7	1569.5

PT. NO	NORTHING	EASTING	ELEV
1774	894557.3	774119.8	1570.0
1775	894548.9	774077.1	1574.0
1776	894540.4	774040.1	1574.0
1777	894527.2	773949.8	1574.0
1778	894495.2	773958.6	1574.0
1779	894486.9	773945.1	1570.0
1780	894472.3	773865.8	1575.0
1781	894604.1	774312.7	1594.0
1782	894582.3	774259.3	1575.0
1783	894575.3	774193.8	1574.0
1784	894585.4	774182.7	1574.0
1785	894562.4	774181.2	1570.0
1786	894547.9	774164.4	1570.0
1787	894533.4	774081.9	1575.0
1788	894511.9	774084.3	1576.0
1789	894498.8	774074.8	1575.0
1790	894453.9	774000.3	1574.0
1791	894540.3	774232.8	1574.0
1792	894524.9	774225.1	1570.0
1793	894517.0	774214.8	1569.5
1794	894506.2	774148.6	1575.0
1795	894475.3	774135.3	1576.5
1796	894436.3	773987.5	1570.0
1797	894372.1	773944.3	1574.5
1798	894395.1	773902.3	1575.0
1799	894539.1	774324.4	1588.0
1800	894532.2	774283.2	1575.0
1801	894499.8	774228.1	1570.0
1802	894461.4	774219.9	1574.0
1803	894470.4	774171.1	1575.0
1804	894467.7	774159.4	1576.0
1805	894437.4	774130.6	1576.0
1806	894436.4	774117.7	1575.0
1807	894417.8	774059.8	1574.0
1808	894470.7	774345.4	1585.0
1809	894461.3	774278.8	1574.0
1810	894413.0	774207.4	1575.0
1811	894398.3	774170.5	1576.0
1812	894388.7	774152.1	1576.5
1813	894379.7	774130.9	1576.0
1814	894376.6	774118.5	1575.0
1815	894370.7	774096.2	1574.0
1816	894362.6	774063.4	1570.0

PT. NO	NORTHING	EASTING	ELEV
1817	894344.0	774036.2	1570.0
1818	894340.9	774026.8	1571.0
1819	894336.9	774018.5	1573.0
1820	894333.2	774010.1	1574.0
1821	894321.4	773981.3	1574.8
1822	894309.7	773946.7	1575.0
1823	894434.6	774368.4	1584.0
1824	894431.0	774306.2	1575.0
1825	894276.8	774068.6	1570.0
1826	894275.0	774050.5	1571.0
1827	894274.0	774042.4	1573.0
1828	894272.3	774033.5	1574.0
1829	894227.3	773990.2	1575.0
1830	894388.2	774339.3	1580.0
1831	894367.3	774283.1	1575.5
1832	894317.1	774192.3	1575.0
1833	894200.1	774032.5	1574.5
1834	894346.3	774408.8	1579.0
1835	894334.6	774398.5	1575.0
1836	894281.0	774275.2	1576.0
1837	894259.0	774258.8	1576.8
1838	894232.4	774131.7	1574.0
1839	894228.2	774102.9	1570.0
1840	894159.5	774073.9	1574.0
1841	894146.2	774033.1	1575.0
1842	894275.2	774361.9	1575.8
1843	894228.0	774274.2	1576.0
1844	894212.2	774235.4	1575.0
1845	894180.9	774191.2	1574.8
1846	894166.7	774115.7	1570.0
1847	894165.8	774096.4	1570.0
1848	894163.6	774086.6	1571.0
1849	894161.7	774080.1	1573.0
1850	894122.4	774186.0	1574.0
1851	894263.0	774520.3	1590.0
1852	894238.2	774483.2	1575.0
1853	894234.2	774420.4	1575.0
1854	894214.8	774428.8	1574.0
1855	894169.0	774336.1	1575.0
1856	894145.4	774314.5	1574.0
1857	894128.1	774282.9	1574.0
1858	894111.4	774232.0	1574.0
1859	894090.3	774175.7	1570.0

	NAME	DATE
DESIGN	TEC	4/05
DRAWN	BJP	4/05
CHECKED	CAD	4/05

Stanley Consultants Inc.

ARIZONA DEPARTMENT OF TRANSPORTATION
INTERMODAL TRANSPORTATION DIVISION
ROADWAY DESIGN SERVICES

FLOOD POOL
GRADING POINTS

PRELIMINARY
STAGE IV
95% Review
NOT FOR
CONSTRUCTION
OR RECORDING

ROUTE 202L LOCATION RED MTN FWY, POWER ROAD - UNIVERSITY DRIVE

DWG NO. F-5.22

TRACS NO. H 5782 01C 202-B(007)B ___ OF ___

F.A.R.S. REGION	STATE	PROJECT NO.	SHEET NO.	TOTAL SHEETS	AS BUILT
9	ARIZ.	202-B(007)B			
		202 MA 023			

PT. NO	NORTHING	EASTING	ELEV
1860	894038.8	774148.0	1570.0
1861	894034.5	774136.7	1574.0
1862	894188.2	774438.1	1570.0
1863	894150.1	774384.9	1574.0
1864	894106.9	774350.9	1570.0
1865	894084.6	774305.5	1570.0
1866	894078.3	774234.9	1570.0
1867	894193.2	774565.6	1590.0
1868	894165.7	774527.1	1575.0
1869	894148.4	774491.1	1574.0
1870	894109.7	774469.3	1574.0
1871	894100.2	774438.1	1570.0
1872	894108.2	774406.3	1570.0
1873	894071.2	774359.1	1570.0
1874	894050.6	774303.2	1570.0
1875	894001.8	774278.2	1570.0
1876	894000.5	774206.0	1570.0
1877	894122.8	774523.5	1574.7
1878	894116.4	774493.7	1574.3
1879	894098.0	774485.0	1574.0
1880	894068.2	774465.4	1570.0
1881	894055.6	774439.7	1570.0
1882	894011.5	774339.9	1574.0
1883	893967.8	774306.8	1574.0
1884	893952.6	774254.2	1574.0
1885	894096.1	774616.6	1590.0
1886	894067.8	774564.2	1575.0
1887	894064.3	774540.3	1574.0
1888	894043.8	774537.7	1570.0
1889	894017.5	774426.4	1574.0
1890	893963.8	774403.4	1574.5
1891	893913.9	774311.2	1574.8
1892	893894.3	774269.9	1574.0
1893	893883.3	774253.4	1570.0
1894	893874.8	774242.3	1570.0
1895	893867.9	774232.6	1574.0
1896	893848.9	774197.1	1575.0
1897	894016.4	774565.7	1570.0
1898	894005.6	774546.0	1574.0
1899	894015.9	774529.0	1570.0
1900	893995.9	774568.7	1575.0
1901	893903.5	774476.8	1575.0
1902	894009.6	774684.0	1590.0

PT. NO	NORTHING	EASTING	ELEV
1903	893977.4	774648.9	1575.0
1904	893965.9	774608.1	1574.0
1905	893953.3	774601.3	1570.0
1906	893921.5	774579.1	1570.0
1907	893894.6	774563.9	1574.0
1908	893809.2	774410.9	1574.5
1909	893773.6	774341.2	1570.0
1910	893763.6	774332.0	1570.0
1911	893759.8	774327.9	1571.0
1912	893741.5	774314.4	1574.0
1913	893905.5	774660.3	1574.0
1914	893911.1	774652.1	1575.0
1915	893877.4	774558.7	1575.0
1916	893855.7	774516.3	1574.3
1917	893823.9	774485.4	1575.0
1918	893757.2	774419.9	1574.0
1919	893855.6	774607.7	1575.0
1920	893773.4	774467.5	1574.0
1921	893739.0	774478.2	1570.0
1922	893736.7	774421.6	1571.0
1923	893716.9	774422.1	1570.0
1924	893687.2	774413.2	1570.0
1925	893675.1	774389.4	1573.0
1926	893666.1	774370.2	1574.0
1927	893644.9	774323.8	1575.0
1928	893872.0	774758.5	1584.0
1929	893832.4	774713.1	1575.0
1930	893833.3	774660.0	1574.5
1931	893795.8	774632.3	1575.0
1932	893774.0	774637.4	1574.0
1933	893732.1	774564.0	1574.0
1934	893673.6	774470.7	1570.0
1935	893790.0	774713.0	1574.8
1936	893749.9	774644.7	1571.0
1937	893729.1	774652.8	1570.0
1938	893711.7	774566.5	1571.0
1939	893691.8	774565.8	1570.0
1940	893678.4	774497.3	1570.0
1941	893648.1	774461.6	1570.0
1942	893642.7	774443.8	1570.0
1943	893630.6	774420.6	1573.0
1944	893616.1	774407.1	1574.0
1945	893800.9	774820.4	1590.0

PT. NO	NORTHING	EASTING	ELEV
1946	893685.3	774666.2	1570.0
1947	893640.1	774559.3	1570.0
1948	893628.5	774503.0	1571.0
1949	893597.1	774483.7	1570.0
1950	893593.3	774474.9	1570.0
1951	893762.7	774790.4	1575.0
1952	893746.0	774777.5	1574.5
1953	893726.2	774765.8	1574.0
1954	893716.6	774760.6	1571.0
1955	893702.5	774748.3	1570.0
1956	893665.3	774668.1	1571.0
1957	893645.3	774669.3	1574.0
1958	893592.6	774552.5	1574.0
1959	893696.0	774804.3	1574.0
1960	893674.1	774815.5	1575.0
1961	893658.3	774731.3	1570.0
1962	893647.1	774731.2	1571.0
1963	893629.8	774730.3	1574.0
1964	893569.2	774625.7	1574.3
1965	893520.1	774547.6	1570.0
1966	893474.9	774518.5	1570.0
1967	893469.6	774509.9	1574.0
1968	893440.4	774468.5	1575.0
1969	893673.2	774850.2	1589.0
1970	893641.3	774801.8	1574.0
1971	893620.1	774813.9	1575.0
1972	893593.2	774750.5	1574.5
1973	893619.1	774846.3	1589.0
1974	893513.3	774728.5	1574.8
1975	893435.3	774618.9	1574.0
1976	893422.3	774604.3	1571.0
1977	893414.7	774592.8	1570.0
1978	893399.3	774578.9	1570.0
1979	893572.0	774856.7	1589.0
1980	893532.3	774807.8	1575.0
1981	893374.3	774690.6	1574.0
1982	893352.4	774687.9	1571.0
1983	893531.4	774964.1	1589.0
1984	893478.2	774942.4	1575.0
1985	893403.5	774804.3	1574.3
1986	893372.2	774754.4	1574.0
1987	893360.7	774752.5	1571.0
1988	893348.6	774750.4	1570.0

PT. NO	NORTHING	EASTING	ELEV
1989	893342.0	774685.0	1570.0
1990	893320.4	774650.1	1570.0
1991	893307.8	774638.5	1574.0
1992	893272.1	774603.9	1575.0
1993	893444.4	774915.1	1574.5
1994	893395.8	774907.1	1574.0
1995	893363.7	774812.2	1574.0
1996	893341.9	774821.5	1571.0
1997	893300.6	774719.6	1570.0
1998	893469.6	775031.3	1589.0
1999	893439.5	774997.0	1575.0
2000	893397.8	774961.4	1574.0
2001	893390.6	774962.3	1571.0
2002	893386.0	774908.2	1571.0
2003	893372.6	774912.7	1570.0
2004	893318.8	774828.9	1570.0
2005	893257.7	774780.6	1571.0
2006	893399.1	774996.8	1571.0
2007	893392.4	774991.6	1570.0
2008	893357.0	774982.6	1570.0
2009	893376.5	774967.3	1570.0
2010	893335.0	774908.6	1570.0
2011	893321.7	774915.9	1571.0
2012	893261.0	774832.9	1570.0
2013	893231.5	774782.4	1570.0
2014	893291.1	774937.1	1572.0
2015	893275.7	774944.9	1573.0
2016	893212.5	774839.2	1572.0
2017	893173.4	774804.1	1570.0
2018	893165.1	774790.9	1570.0
2019	893159.5	774783.0	1572.0
2020	893153.7	774774.0	1573.0
2021	893115.2	774736.2	1575.0
2022	893247.7	775041.9	1574.0
2023	893177.2	774891.5	1573.0
2024	893199.9	774885.7	1573.0
2025	893276.7	775172.3	1589.0
2026	893228.8	775114.0	1575.0
2027	893142.3	775125.2	1574.0
2028	893138.6	774871.7	1573.0
2029	893080.9	774914.4	1573.0
2030	893066.0	774907.1	1571.0
2031	893051.2	774899.8	1570.0

NO.	DESCRIPTION OF REVISION	DATE
NO.1		
NO.2		
NO.3		
NO.4		

	NAME	DATE
DESIGN	TEC	4/05
DRAWN	WJP	4/05
CHECKED	CAD	4/05

Stanley Consultants Inc.

ARIZONA DEPARTMENT OF TRANSPORTATION
INTERMODAL TRANSPORTATION DIVISION
ROADWAY DESIGN SERVICES

FLOOD POOL
GRADING POINTS

PRELIMINARY
STAGE IV
95% Review
NOT FOR CONSTRUCTION OR RECORDING

ROUTE	LOCATION	DWG NO. F-5.23
202L	RED MTN FWY, POWER ROAD - UNIVERSITY DRIVE	
TRACS NO. H 5782 01C	202-B(007)B	OF

4/22/2005 q:\17000\Cad Live\87-85-dwgs\84-Flood\h5782f001.dgn

F.A.P.M. REGION	STATE	PROJECT NO.	SHEET NO.	TOTAL SHEETS	AS BUILT
9	ARIZ.	202-B(007)B			
		202 MA 023			

PT. NO	NORTHING	EASTING	ELEV
2032	893040.6	774893.9	1570.0
2033	893030.5	774883.7	1571.0
2034	893024.6	774877.9	1573.0
2035	893015.8	774869.9	1574.0
2036	893023.7	774982.8	1571.0
2037	892999.3	774967.8	1570.0
2038	892949.2	774936.0	1575.0
2039	893080.6	775237.9	1574.0
2040	892916.6	774975.5	1576.0
2041	893131.4	775313.7	1589.0
2042	893103.2	775283.6	1575.0
2043	892986.8	775142.9	1574.0
2044	892967.4	775093.8	1573.0
2045	892951.2	775074.9	1571.0
2046	892937.1	775059.3	1570.0
2047	892927.9	775050.2	1570.0
2048	892921.1	775044.0	1571.0
2049	892915.6	775039.1	1573.0
2050	892889.4	775017.7	1576.0
2051	892884.3	775008.1	1576.5
2052	892874.6	775005.2	1576.0
2053	892868.9	774999.5	1575.0
2054	892844.4	774976.6	1575.0
2055	893018.3	775218.1	1575.0
2056	892853.0	775035.9	1576.0
2057	892798.1	775072.0	1575.0
2058	892986.4	775354.1	1575.0
2059	892934.5	775255.2	1579.0
2060	892912.3	775266.0	1579.5
2061	892877.7	775230.7	1577.0
2062	892870.6	775216.0	1576.0
2063	892867.0	775208.3	1575.0
2064	892735.4	775072.4	1575.0
2065	892930.0	775347.1	1575.0
2066	892918.5	775318.0	1577.0
2067	892905.2	775279.8	1579.0
2068	892892.9	775263.9	1579.0
2069	892861.7	775286.0	1579.0
2070	892793.4	775204.7	1574.0
2071	892784.0	775187.1	1573.0
2072	892775.4	775171.3	1571.0
2073	892772.4	775157.9	1570.0
2074	892764.6	775136.4	1571.0

PT. NO	NORTHING	EASTING	ELEV
2075	892761.4	775127.2	1573.0
2076	892757.7	775118.8	1574.0
2077	892901.7	775437.5	1579.0
2078	892885.8	775419.4	1575.0
2079	892808.2	775363.5	1575.0
2080	892785.4	775313.7	1578.0
2081	892832.4	775411.1	1575.5
2082	892758.0	775337.5	1577.0
2083	892723.5	775320.8	1576.0
2084	892715.5	775321.4	1575.0
2085	892691.1	775271.9	1574.0
2086	892676.3	775258.6	1573.0
2087	892662.9	775243.1	1571.0
2088	892644.6	775225.3	1571.0
2089	892630.8	775213.5	1574.0
2090	892608.0	775190.1	1575.0
2091	892760.5	775406.8	1575.0
2092	892727.6	775391.8	1577.0
2093	892705.6	775375.3	1575.0
2094	892679.8	775348.4	1574.5
2095	892823.5	775526.9	1584.0
2096	892815.4	775518.7	1580.0
2097	892804.3	775506.6	1575.0
2098	892742.3	775494.1	1574.3
2099	892711.6	775443.8	1575.0
2100	892722.4	775432.8	1575.0
2101	892705.1	775439.2	1576.0
2102	892692.1	775430.8	1577.0
2103	892680.7	775421.9	1577.0
2104	892665.5	775411.4	1576.0
2105	892657.6	775406.3	1575.0
2106	892640.1	775330.3	1574.0
2107	892691.6	775486.9	1575.0
2108	892650.1	775473.1	1577.0
2109	892665.3	775454.3	1577.5
2110	892633.2	775446.3	1575.0
2111	892733.6	775625.5	1589.0
2112	892678.2	775573.4	1575.0
2113	892659.9	775528.6	1575.0
2114	892586.5	775459.2	1574.0
2115	892569.8	775401.7	1573.0
2116	892558.3	775392.7	1571.0
2117	892538.9	775376.5	1571.0

PT. NO	NORTHING	EASTING	ELEV
2118	892531.4	775368.5	1573.0
2119	892523.6	775361.1	1574.0
2120	892474.0	775331.0	1575.0
2121	892653.8	775600.9	1575.0
2122	892622.0	775583.6	1575.0
2123	892620.1	775529.8	1575.0
2124	892472.6	775432.8	1571.0
2125	892458.4	775422.3	1573.0
2126	892449.6	775411.1	1574.0
2127	892448.2	775381.0	1575.0
2128	892549.0	775528.9	1574.0
2129	892510.6	775481.0	1573.0
2130	892471.8	775507.9	1572.0
2131	892481.2	775486.5	1571.0
2132	892488.4	775471.8	1571.0
2133	892591.5	775636.5	1574.0
2134	892540.5	775640.2	1573.8
2135	892516.9	775565.0	1573.0
2136	892489.5	775567.2	1571.0
2137	892451.5	775536.2	1574.0
2138	892458.9	775514.0	1573.0
2139	892455.3	775495.9	1571.0
2140	892423.1	775526.6	1571.0
2141	892398.5	775437.8	1575.0
2142	892498.5	775680.8	1573.0
2143	892488.2	775657.6	1573.0
2144	892470.0	775650.8	1571.0
2145	892473.0	775610.9	1572.0
2146	892459.3	775606.4	1574.0
2147	892424.9	775606.7	1573.0
2148	892443.9	775574.0	1574.8
2149	892429.4	775567.4	1574.0
2150	892418.6	775567.2	1573.0
2151	892396.3	775575.8	1571.0
2152	892399.0	775529.4	1571.0
2153	892383.0	775517.9	1573.0
2154	892368.6	775507.1	1574.0
2155	892348.4	775480.0	1575.0
2156	892586.3	775775.7	1589.0
2157	892554.6	775745.9	1575.0
2158	892538.8	775729.5	1574.0
2159	892529.7	775729.5	1573.0
2160	892513.1	775737.6	1571.0

PT. NO	NORTHING	EASTING	ELEV
2161	892473.0	775704.6	1571.0
2162	892480.0	775686.1	1571.0
2163	892428.4	775667.0	1572.0
2164	892422.3	775651.4	1573.0
2165	892430.8	775637.8	1574.0
2166	892393.3	775637.5	1571.0
2167	892401.6	775612.2	1571.0
2168	892383.0	775620.3	1571.0
2169	892326.9	775510.0	1575.0
2170	892442.3	775754.0	1575.0
2171	892410.9	775730.9	1574.0
2172	892398.2	775706.1	1573.0
2173	892408.0	775685.5	1571.0
2174	892396.4	775693.2	1572.0
2175	892391.9	775670.3	1571.5
2176	892369.6	775675.4	1572.0
2177	892360.8	775670.9	1574.0
2178	892358.4	775662.9	1574.5
2179	892350.5	775667.4	1574.0
2180	892365.5	775646.7	1574.0
2181	892374.5	775631.9	1572.0
2182	892362.4	775624.6	1571.0
2183	892335.0	775630.8	1571.0
2184	892327.4	775627.1	1573.0
2185	892318.3	775622.9	1574.0
2186	892310.2	775603.6	1575.0
2187	892431.9	775819.9	1575.0
2188	892422.0	775755.0	1575.0
2189	892387.5	775776.5	1572.0
2190	892363.9	775725.3	1573.0
2191	892369.2	775713.2	1572.0
2192	892374.4	775704.1	1571.0
2193	892330.0	775698.2	1574.0
2194	892338.0	775661.2	1571.0
2195	892406.9	775862.2	1575.0
2196	892415.6	775822.7	1574.0
2197	892378.8	775822.8	1571.0
2198	892355.5	775822.6	1573.0
2199	892372.5	775780.0	1572.0
2200	892362.9	775783.1	1573.0
2201	892356.1	775757.1	1573.0
2202	892319.4	775750.4	1571.0
2203	892311.3	775722.4	1572.0

NO.	DESCRIPTION OF REVISION	MADE BY	DATE

	NAME	DATE
DESIGN	TEC	4/05
DRAWN	B.P	4/05
CHECKED	CAD	4/05

Stanley Consultants Inc.

ARIZONA DEPARTMENT OF TRANSPORTATION
INTERMODAL TRANSPORTATION DIVISION
ROADWAY DESIGN SERVICES

FLOOD POOL
GRADING POINTS

PRELIMINARY
STAGE IV
95% Review
NOT FOR CONSTRUCTION OR RECORDING

ROUTE: 202L
LOCATION: RED MTN FWY. POWER ROAD - UNIVERSITY DRIVE

DRG NO. F-5.24

TRACS NO. H 5782 01C

202-B(007)B

___ OF ___

4/22/2005 q:\17000\active\87-85-dngs\84-Flood\h5782f80g.dgn

F.A.R.S. REGION	STATE	PROJECT NO.	SHEET NO.	TOTAL SHEETS	AS BUILT
9	ARIZ.	202-B(007)8			
		202 MA 023			

PT. NO	NORTHING	EASTING	ELEV
2204	892314.6	775717.0	1573.0
2205	892301.8	775724.3	1571.0
2206	892306.4	775715.0	1571.0
2207	892280.5	775717.5	1571.0
2208	892271.4	775713.1	1573.0
2209	892265.5	775710.2	1574.0
2210	892424.3	775911.8	1590.0
2211	892354.3	775858.2	1574.0
2212	892321.3	775808.4	1573.8
2213	892276.5	775797.8	1573.0
2214	892267.3	775791.8	1572.0
2215	892319.0	775885.5	1575.0
2216	892285.0	775853.6	1574.0
2217	892220.7	775767.0	1575.0
2218	892307.1	775942.0	1590.0
2219	892253.1	775864.1	1574.0
2220	892239.8	775860.6	1572.0
2221	892212.9	775850.2	1571.0
2222	892203.6	775847.3	1573.0
2223	892196.1	775844.7	1574.0
2224	892205.1	775917.9	1574.0
2225	892198.1	775911.6	1572.0
2226	892212.9	775964.0	1574.0
2227	892140.5	775962.2	1574.0
2228	891866.8	776114.0	1575.0
2229	891819.1	776127.1	1574.0
2230	891814.0	776117.4	1573.0
2231	891810.0	776111.2	1571.0
2232	891803.1	776095.8	1571.0
2233	891794.6	776079.2	1575.0
2234	891787.7	776061.6	1576.0
2235	891881.1	776228.2	1576.0
2236	891824.1	776137.1	1575.0
2237	891803.8	776148.3	1575.0
2238	891782.4	776161.5	1575.0
2239	891774.7	776148.4	1572.0
2240	891768.2	776142.8	1571.0
2241	891885.3	776302.8	1587.0
2242	891852.1	776284.9	1577.0
2243	891716.0	776105.2	1576.0
2244	891686.2	776131.8	1576.0
2245	891783.0	776248.7	1576.0
2246	891746.8	776223.8	1575.0

PT. NO	NORTHING	EASTING	ELEV
2247	891735.3	776211.3	1573.0
2248	891716.0	776194.0	1571.0
2249	891701.9	776184.6	1570.5
2250	891688.0	776173.0	1571.0
2251	891690.4	776143.2	1576.0
2252	891673.4	776153.9	1577.0
2253	891750.9	776295.8	1576.0
2254	891708.0	776324.2	1576.0
2255	891665.7	776272.1	1575.0
2256	891646.2	776242.9	1571.0
2257	891585.8	776232.5	1575.0
2258	891576.7	776216.7	1576.0
2259	891673.6	776342.9	1576.0
2260	891614.7	776344.7	1576.0
2261	891614.6	776296.0	1575.0
2262	891603.7	776283.5	1573.0
2263	891598.7	776278.9	1571.0
2264	891537.8	776269.6	1575.0
2265	891524.5	776255.8	1576.0
2266	891627.5	776391.4	1576.0
2267	891589.1	776344.5	1576.0
2268	891579.4	776342.9	1575.0
2269	891546.4	776341.7	1571.0
2270	891571.8	776445.1	1576.0
2271	891558.6	776404.4	1571.0
2272	891569.5	776384.0	1571.0
2273	891525.5	776379.2	1571.0
2274	891521.1	776354.0	1570.5
2275	891506.3	776341.1	1571.0
2276	891483.7	776321.8	1574.0
2277	891479.9	776318.5	1575.0
2278	891454.6	776307.8	1576.0
2279	891542.6	776426.6	1576.0
2280	891502.7	776447.5	1575.0
2281	891518.7	776431.7	1576.0
2282	891520.1	776414.5	1575.0
2283	891497.5	776384.9	1571.0
2284	891535.0	776495.2	1576.0
2285	891511.0	776507.5	1571.0
2286	891495.6	776513.5	1571.0
2287	891522.6	776472.4	1576.0
2288	891504.9	776483.8	1571.0
2289	891474.6	776493.3	1571.0

PT. NO	NORTHING	EASTING	ELEV
2290	891464.1	776449.8	1571.0
2291	891407.7	776365.8	1576.0
2292	891482.4	776553.9	1575.0
2293	891478.5	776539.9	1574.0
2294	891483.7	776523.4	1573.0
2295	891459.5	776545.4	1575.0
2296	891464.2	776526.3	1574.0
2297	891471.5	776508.2	1573.0
2298	891436.9	776475.4	1570.5
2299	891349.5	776411.3	1576.0
2300	891458.7	776602.6	1575.3
2301	891398.3	776541.4	1571.0
2302	891355.6	776502.4	1571.3
2303	891486.8	776677.7	1583.0
2304	891454.9	776654.5	1576.0
2305	891428.5	776658.7	1576.0
2306	891407.0	776574.1	1575.0
2307	891343.3	776530.1	1571.0
2308	891324.4	776502.6	1571.0
2309	891304.0	776477.9	1574.0
2310	891300.7	776474.3	1575.0
2311	891276.9	776454.5	1576.0
2312	891381.1	776616.6	1575.8
2313	891351.1	776581.7	1575.0
2314	891340.0	776571.8	1574.0
2315	891327.1	776564.9	1573.0
2316	891314.2	776557.9	1571.0
2317	891373.5	776736.6	1576.0
2318	891353.7	776683.6	1575.5
2319	891312.3	776680.6	1575.0
2320	891333.4	776644.8	1575.0
2321	891297.7	776640.4	1571.0
2322	891276.8	776630.2	1571.0
2323	891265.9	776608.4	1571.0
2324	891261.9	776579.7	1571.0
2325	891246.1	776564.4	1573.0
2326	891232.6	776550.8	1574.0
2327	891229.1	776547.3	1575.0
2328	891199.3	776520.1	1576.0
2329	891348.8	776739.6	1575.0
2330	891273.9	776694.6	1571.0
2331	891255.3	776686.5	1571.0
2332	891242.3	776669.0	1573.0

PT. NO	NORTHING	EASTING	ELEV
2333	891235.3	776654.0	1573.5
2334	891251.5	776633.6	1573.0
2335	891226.4	776635.1	1571.0
2336	891311.5	776761.5	1571.0
2337	891242.5	776746.5	1571.0
2338	891229.7	776708.1	1571.0
2339	891217.5	776676.5	1571.0
2340	891196.4	776666.3	1573.0
2341	891167.6	776674.9	1571.0
2342	891183.7	776656.1	1571.0
2343	891281.6	776802.5	1571.0
2344	891249.6	776830.0	1575.3
2345	891230.7	776815.8	1575.0
2346	891248.4	776793.0	1575.0
2347	891248.4	776775.2	1574.0
2348	891212.3	776796.1	1571.0
2349	891199.2	776771.8	1571.0
2350	891199.7	776725.6	1572.0
2351	891175.2	776741.4	1573.0
2352	891162.8	776721.7	1572.0
2353	891174.2	776686.3	1571.0
2354	891123.8	776667.9	1571.0
2355	891115.9	776653.3	1573.0
2356	891109.3	776641.3	1574.0
2357	891106.9	776636.9	1575.0
2358	891088.7	776613.8	1576.0
2359	891204.4	776858.3	1575.8
2360	891184.5	776840.5	1575.0
2361	891172.7	776771.5	1573.0
2362	891144.9	776756.6	1574.0
2363	891133.7	776743.6	1573.0
2364	891129.2	776732.0	1571.0
2365	891173.5	776883.8	1575.0
2366	891154.9	776880.8	1571.0
2367	891168.3	776824.9	1571.0
2368	891144.8	776819.7	1571.0
2369	891110.7	776781.7	1575.0
2370	891063.4	776757.3	1574.0
2371	891055.2	776735.6	1571.0
2372	891045.4	776718.2	1571.0
2373	891037.9	776709.2	1573.0
2374	891027.9	776699.1	1575.0
2375	891192.7	776945.2	1587.0

	NAME	DATE
DESIGN	TEC	4/05
DRAWN	W.P	4/05
CHECKED	CAD	4/05

Stanley Consultants Inc.

ARIZONA DEPARTMENT OF TRANSPORTATION
INTERMODAL TRANSPORTATION DIVISION
ROADWAY DESIGN SERVICES

FLOOD POOL
GRADING POINTS

PRELIMINARY
STAGE IV
95% Review
NOT FOR CONSTRUCTION OR RECORDING

ROUTE	LOCATION
202L	RED MTN FWY, POWER ROAD - UNIVERSITY DRIVE

DWG NO. F-5.25

TRACS NO. H 5782 01C | 202-B(007)8 | ___ OF ___

4/22/2005 g:\17888\active\87-85-dega\84-11ood\h5782188f.dgn

F.A.R.S. REGION	STATE	PROJECT NO.	SHEET NO.	TOTAL SHEETS	AS BUILT
9	ARIZ.	202-B(007)B			
		202 MA 023			

PT. NO	NORTHING	EASTING	ELEV
2376	891165.1	776913.0	1576.0
2377	891091.5	776795.5	1576.0
2378	891037.8	776814.0	1576.0
2379	891034.0	776788.5	1575.0
2380	891026.3	776779.7	1574.0
2381	891020.5	776773.1	1572.0
2382	891013.1	776768.3	1571.0
2383	891091.9	776941.9	1575.5
2384	891081.3	776862.6	1575.0
2385	891067.2	776856.6	1576.0
2386	890946.3	776803.0	1571.0
2387	890930.5	776786.5	1575.0
2388	891025.3	776908.0	1576.0
2389	891039.2	776932.0	1575.0
2390	890989.1	776969.8	1575.0
2391	890982.1	776951.2	1576.0
2392	890992.4	776888.4	1576.4
2393	890908.4	776914.0	1574.0
2394	890906.3	776893.7	1572.0
2395	890908.4	776879.3	1571.0
2396	891069.3	777099.3	1589.0
2397	891032.2	777061.4	1576.0
2398	890987.2	777048.1	1575.0
2399	890909.2	776995.3	1575.0
2400	890919.7	776936.5	1576.0
2401	890858.3	776898.6	1571.0
2402	890850.7	776889.1	1573.0
2403	890843.7	776879.8	1574.0
2404	890840.4	776876.1	1575.0
2405	890949.5	777062.2	1575.0
2406	890933.2	777016.1	1575.0
2407	890898.0	777015.8	1575.0
2408	890883.3	776980.9	1575.0
2409	890897.9	777109.3	1571.0
2410	890920.7	777087.1	1571.0
2411	890879.2	777073.0	1571.0
2412	890849.1	777045.4	1571.0
2413	890839.0	777004.4	1571.0
2414	890810.0	776971.6	1572.0
2415	890816.5	776963.5	1571.0
2416	890790.7	776983.3	1573.0
2417	890858.0	777150.5	1575.5
2418	890854.3	777093.2	1571.0

PT. NO	NORTHING	EASTING	ELEV
2419	890808.5	777096.1	1575.0
2420	890819.3	777039.4	1571.0
2421	890799.3	777067.0	1575.0
2422	890785.7	777042.0	1573.0
2423	890779.3	777033.0	1571.0
2424	890766.6	777013.8	1571.0
2425	890770.9	777001.1	1572.0
2426	890769.2	776994.0	1573.0
2427	890761.8	776980.1	1571.0
2428	890757.2	776979.6	1571.0
2429	890725.9	776963.8	1575.0
2430	890892.0	777244.6	1587.0
2431	890852.5	777202.6	1576.0
2432	890827.5	777153.4	1575.0
2433	890801.8	777163.6	1571.0
2434	890791.8	777107.2	1571.0
2435	890761.9	777077.8	1571.0
2436	890727.7	777071.4	1571.0
2437	890716.5	777066.1	1573.0
2438	890704.3	777060.1	1573.5
2439	890694.1	777052.0	1573.0
2440	890827.0	777198.3	1571.0
2441	890800.9	777214.7	1575.0
2442	890795.9	777201.0	1573.0
2443	890791.7	777190.2	1571.0
2444	890771.0	777199.2	1571.0
2445	890759.0	777154.2	1571.0
2446	890746.4	777161.8	1573.0
2447	890715.3	777140.5	1573.0
2448	890715.0	777121.3	1571.0
2449	890678.5	777081.0	1573.0
2450	890663.8	777091.2	1571.0
2451	890683.8	777043.7	1571.0
2452	890783.6	777246.4	1575.0
2453	890772.6	777238.8	1571.0
2454	890754.9	777198.1	1573.0
2455	890719.6	777207.4	1574.0
2456	890709.8	777188.4	1574.0
2457	890692.4	777169.6	1574.0
2458	890767.4	777273.8	1575.0
2459	890754.4	777260.0	1571.0
2460	890686.3	777233.6	1575.0
2461	890682.2	777208.1	1575.0

PT. NO	NORTHING	EASTING	ELEV
2462	890662.6	777192.6	1575.0
2463	890629.6	777167.3	1571.0
2464	890720.2	777318.4	1575.0
2465	890706.1	777314.5	1573.0
2466	890700.3	777313.3	1571.0
2467	890627.2	777240.6	1575.8
2468	890625.4	777198.4	1575.0
2469	890594.8	777201.1	1575.0
2470	890585.3	777164.0	1571.0
2471	890671.6	777333.5	1571.0
2472	890658.6	777333.8	1573.0
2473	890632.5	777333.9	1575.0
2474	890539.6	777244.5	1575.0
2475	890514.8	777218.9	1571.0
2476	890506.6	777209.2	1571.0
2477	890499.2	777202.6	1573.0
2478	890488.5	777191.6	1575.0
2479	890707.8	777460.1	1589.0
2480	890681.5	777427.0	1576.0
2481	890532.8	777315.9	1575.8
2482	890587.8	777409.0	1575.3
2483	890471.7	777312.8	1575.0
2484	890472.4	777382.1	1575.0
2485	890435.6	777303.5	1571.0
2486	890394.0	777303.8	1571.0
2487	890387.6	777297.5	1573.0
2488	890380.0	777288.7	1575.0
2489	890598.3	777546.6	1589.0
2490	890564.1	777507.2	1576.0
2491	890492.2	777446.0	1575.8
2492	890449.4	777433.4	1575.0
2493	890445.1	777376.8	1573.0
2494	890427.6	777372.7	1571.0
2495	890401.6	777344.7	1570.3
2496	890483.6	777522.9	1575.0
2497	890473.1	777493.9	1575.0
2498	890450.2	777511.9	1571.0
2499	890451.9	777461.7	1575.0
2500	890432.4	777429.7	1574.0
2501	890414.7	777429.0	1573.0
2502	890397.5	777429.1	1571.0
2503	890361.2	777414.2	1572.0
2504	890377.6	777388.0	1571.0

PT. NO	NORTHING	EASTING	ELEV
2505	890442.9	777561.7	1571.0
2506	890404.3	777485.3	1571.0
2507	890374.4	777505.8	1575.0
2508	890343.0	777475.7	1575.0
2509	890346.4	777455.5	1574.0
2510	890269.9	777358.3	1576.0
2511	890424.3	777595.1	1575.0
2512	890471.1	777696.7	1589.0
2513	890437.1	777671.2	1581.0
2514	890394.8	777643.6	1575.5
2515	890335.2	777549.8	1575.8
2516	890265.7	777474.6	1571.0
2517	890251.2	777458.2	1573.0
2518	890239.7	777445.5	1575.0
2519	890251.1	777555.2	1575.0
2520	890231.2	777526.3	1571.0
2521	890393.9	777760.4	1589.0
2522	890358.8	777728.6	1576.0
2523	890280.2	777665.7	1575.3
2524	890159.9	777505.8	1576.0
2525	890165.0	777634.9	1575.0
2526	890146.8	777625.8	1574.0
2527	890088.3	777570.6	1576.0
2528	890329.7	777838.6	1589.0
2529	890296.9	777810.9	1576.0
2530	890128.7	777616.0	1573.0
2531	890112.9	777608.1	1571.0
2532	890104.2	777589.6	1571.0
2533	890063.9	777550.8	1577.0
2534	890187.1	777788.5	1575.8
2535	890163.9	777719.5	1575.0
2536	890104.1	777707.7	1571.0
2537	890253.8	777899.7	1589.0
2538	890217.1	777870.3	1576.0
2539	890140.2	777789.2	1575.0
2540	890154.8	777844.6	1575.0
2541	890111.3	777858.5	1571.0
2542	890077.7	777792.3	1573.0
2543	890050.5	777794.3	1571.0
2544	890000.6	777721.2	1571.0
2545	889984.4	777706.1	1574.0
2546	889977.1	777699.3	1576.0
2547	889944.4	777669.9	1577.0

	NAME	DATE
DESIGN	TEC	4/05
DRAWN	W.P	4/05
CHECKED	CAD	4/05

Stanley Consultants Inc.

ARIZONA DEPARTMENT OF TRANSPORTATION
INTERMODAL TRANSPORTATION DIVISION
ROADWAY DESIGN SERVICES

FLOOD POOL
GRADING POINTS

PRELIMINARY
STAGE IV
95% Review
NOT FOR CONSTRUCTION OR RECORDING

ROUTE	LOCATION	DWG NO. F-5.26
202L	RED MTN FWY, POWER ROAD - UNIVERSITY DRIVE	
TRACS NO. H 5782 01C	202-B(007)B	OF

4/22/2005 q:\17888\active\87-85-dwgs\84-flood\h5782f88i.dgn

F.A.H.S. REGION	STATE	PROJECT NO.	SHEET NO.	TOTAL SHEETS	AS BUILT
9	ARIZ.	202-B(00)T			

202 MA 023

PT. NO	NORTHING	EASTING	ELEV
2548	890176.0	777986.7	1588.0
2549	890150.5	777961.3	1576.0
2550	890062.8	777881.4	1571.0
2551	890089.6	777970.5	1575.0
2552	890099.4	777954.2	1571.0
2553	890039.8	777896.2	1575.0
2554	889997.7	777874.0	1575.0
2555	889989.9	777851.4	1574.0
2556	889985.4	777828.7	1573.0
2557	889985.7	777818.3	1571.0
2558	889914.2	777808.8	1571.0
2559	889900.6	777794.1	1573.0
2560	889890.9	777785.3	1574.0
2561	889883.6	777778.5	1576.0
2562	890010.0	777958.7	1575.8
2563	889956.2	777907.1	1575.0
2564	889947.3	777893.0	1574.0
2565	889937.4	777878.6	1573.0
2566	889928.4	777866.4	1575.5
2567	889856.6	777758.9	1577.0
2568	890061.3	778086.8	1587.0
2569	890032.1	778058.7	1576.0
2570	889895.1	777909.8	1575.0
2571	889894.2	777872.8	1571.0
2572	889906.6	777988.8	1575.5
2573	889834.7	777892.2	1571.0
2574	889814.2	777870.2	1576.0
2575	889779.6	777837.7	1577.0
2576	889826.3	777967.9	1575.0
2577	889896.6	778111.4	1575.8
2578	889815.1	778053.1	1575.0
2579	889778.3	777980.1	1571.0
2580	889955.4	778207.6	1588.0
2581	889926.4	778181.5	1576.0
2582	889795.9	778041.2	1571.0
2583	889754.6	778019.4	1571.0
2584	889739.9	778021.2	1573.0
2585	889725.6	778029.6	1573.5
2586	889799.6	778154.9	1575.0
2587	889785.8	778105.8	1575.0
2588	889736.1	778100.2	1571.0
2589	889711.2	778068.8	1571.0
2590	889697.1	778061.6	1573.0

PT. NO	NORTHING	EASTING	ELEV
2591	889689.1	778052.9	1573.0
2592	889681.1	778043.9	1571.0
2593	889665.6	778027.7	1571.0
2594	889663.4	778026.0	1572.0
2595	889652.0	778013.7	1576.0
2596	889628.9	777992.5	1577.0
2597	889788.0	778196.7	1575.0
2598	889764.7	778156.8	1571.0
2599	889697.1	778121.9	1571.0
2600	889690.9	778094.0	1573.0
2601	889682.6	778100.3	1573.0
2602	889674.7	778081.9	1573.5
2603	889652.5	778094.4	1573.0
2604	889743.7	778252.0	1571.0
2605	889746.8	778208.6	1571.0
2606	889704.9	778195.1	1571.0
2607	889662.1	778185.8	1575.0
2608	889665.3	778137.7	1571.0
2609	889635.1	778112.8	1571.0
2610	889743.1	778273.4	1575.0
2611	889700.5	778241.7	1571.0
2612	889681.6	778258.3	1575.0
2613	889675.2	778203.4	1575.0
2614	889636.7	778218.2	1572.0
2615	889617.2	778193.8	1571.0
2616	889763.9	778374.9	1587.0
2617	889713.9	778341.3	1576.0
2618	889717.8	778315.5	1576.0
2619	889648.0	778265.1	1576.0
2620	889606.7	778253.3	1575.0
2621	889600.9	778239.3	1574.0
2622	889594.0	778225.7	1573.0
2623	889636.4	778369.9	1576.8
2624	889603.8	778310.6	1576.0
2625	889558.0	778252.3	1575.0
2626	889547.8	778227.4	1571.0
2627	889503.2	778289.0	1575.0
2628	889495.6	778282.1	1571.0
2629	889480.4	778266.5	1571.0
2630	889474.1	778260.3	1572.0
2631	889457.5	778244.6	1574.0
2632	889450.3	778237.6	1576.0
2633	889422.5	778210.5	1577.0

PT. NO	NORTHING	EASTING	ELEV
2634	889676.7	778485.1	1588.0
2635	889640.7	778454.8	1576.0
2636	889527.4	778354.7	1576.0
2637	889492.0	778419.6	1576.0
2638	889438.2	778370.2	1575.0
2639	889417.9	778362.6	1571.0
2640	889561.0	778564.0	1587.0
2641	889529.2	778534.0	1576.0
2642	889519.3	778488.7	1575.8
2643	889428.8	778411.2	1575.0
2644	889412.2	778409.6	1571.0
2645	889380.2	778352.2	1571.0
2646	889359.7	778333.5	1574.0
2647	889352.4	778326.6	1576.0
2648	889485.3	778567.9	1575.0
2649	889462.9	778534.4	1575.0
2650	889455.7	778500.7	1575.0
2651	889424.3	778451.3	1575.0
2652	889386.1	778470.3	1571.0
2653	889365.3	778422.3	1571.0
2654	889474.4	778583.2	1571.0
2655	889458.3	778598.5	1571.0
2656	889424.1	778557.6	1571.0
2657	889416.6	778527.3	1571.0
2658	889386.2	778537.4	1571.0
2659	889354.0	778480.1	1571.0
2660	889329.2	778488.3	1574.0
2661	889343.9	778451.1	1573.0
2662	889312.5	778462.2	1571.0
2663	889476.3	778680.9	1587.0
2664	889450.5	778656.4	1576.0
2665	889448.0	778619.3	1575.0
2666	889406.8	778577.8	1571.0
2667	889384.3	778601.6	1575.0
2668	889354.3	778557.3	1575.0
2669	889327.4	778509.0	1575.0
2670	889289.8	778510.1	1571.0
2671	889402.5	778658.4	1575.8
2672	889323.7	778612.0	1575.5
2673	889214.8	778592.5	1571.0
2674	889223.9	778548.9	1571.0
2675	889202.3	778526.4	1574.0
2676	889194.1	778520.5	1576.0

PT. NO	NORTHING	EASTING	ELEV
2677	889159.1	778490.2	1577.0
2678	889231.3	778610.3	1575.0
2679	889342.0	778808.3	1588.0
2680	889284.5	778773.5	1576.0
2681	889207.7	778694.5	1575.5
2682	889160.3	778743.7	1575.0
2683	889163.8	778697.9	1575.0
2684	889135.3	778695.3	1573.0
2685	889118.1	778693.7	1571.0
2686	889225.3	778824.3	1575.8
2687	889136.1	778741.0	1571.0
2688	889104.2	778746.3	1571.0
2689	889097.0	778742.7	1573.0
2690	889087.5	778724.8	1573.8
2691	889092.4	778704.6	1573.0
2692	889095.3	778696.2	1571.0
2693	889067.6	778723.3	1573.0
2694	889060.7	778719.2	1571.0
2695	889062.5	778676.1	1571.0
2696	889039.6	778656.0	1576.0
2697	889022.7	778637.6	1577.0
2698	889192.4	778891.4	1575.0
2699	889176.6	778862.5	1575.0
2700	889145.7	778842.3	1575.0
2701	889119.9	778817.4	1574.0
2702	889138.0	778794.5	1575.0
2703	889101.0	778816.0	1571.0
2704	889066.9	778792.3	1573.0
2705	889067.2	778759.9	1573.5
2706	889049.8	778760.4	1573.0
2707	889041.8	778761.0	1571.0
2708	889227.0	778962.2	1584.0
2709	889206.8	778945.7	1576.0
2710	889149.3	778932.0	1571.0
2711	889165.9	778912.7	1571.0
2712	889161.2	778891.6	1571.0
2713	889082.9	778866.8	1571.0
2714	889064.4	778812.9	1571.0
2715	889064.9	778809.1	1572.0
2716	889016.0	778815.3	1572.0
2717	889022.0	778798.0	1571.0
2718	889137.4	778961.4	1575.0
2719	889091.9	778924.0	1575.0

	NAME	DATE
DESIGN	TEC	4/05
DRAWN	WJP	4/05
CHECKED	CAD	4/05

Stanley Consultants Inc.

ARIZONA DEPARTMENT OF TRANSPORTATION
INTERMODAL TRANSPORTATION DIVISION
ROADWAY DESIGN SERVICES

FLOOD POOL
GRADING POINTS

PRELIMINARY
STAGE IV
95% Review
NOT FOR CONSTRUCTION OR RECORDING

ROUTE	LOCATION
202L	RED MTN FWY, POWER ROAD - UNIVERSITY DRIVE

DWG NO. F-5.37

TRACS NO. H 5782 01C | 202-B(00T)B | ___ OF ___

4/22/2005 g:\7868\active\87-05-design\84-flood\h5782f01d.dgn

F.A.P. REVISION	STATE	PROJECT NO.	SHEET NO.	TOTAL SHEETS	AS BUILT
9	ARIZ.	202-B(007)B			

202 MA 023

PT. NO	NORTHING	EASTING	ELEV
2720	889085.1	778903.6	1574.0
2721	889083.4	778884.4	1573.0
2722	889048.5	778912.3	1575.0
2723	889048.3	778891.8	1573.0
2724	889048.3	778872.8	1571.0
2725	889006.4	778862.4	1574.0
2726	889007.9	778832.9	1573.0
2727	888979.4	778801.2	1571.0
2728	888961.7	778790.3	1573.0
2729	888946.1	778780.8	1576.0
2730	888908.2	778761.2	1577.0
2731	889087.8	778996.1	1575.3
2732	889010.3	778937.4	1575.8
2733	889003.7	778885.3	1575.0
2734	888987.3	778897.8	1575.0
2735	888973.5	778880.7	1573.0
2736	888960.3	778866.9	1571.0
2737	889085.3	779085.0	1576.0
2738	888965.7	778931.0	1575.0
2739	888948.3	778921.3	1574.0
2740	888930.6	778906.9	1573.0
2741	888921.2	778899.3	1571.0
2742	888901.7	778896.8	1571.0
2743	888889.8	778886.3	1573.0
2744	888875.1	778872.3	1576.0
2745	888833.4	778842.1	1577.0
2746	889119.8	779135.4	1589.0
2747	889087.8	779108.8	1576.0
2748	888984.4	779018.4	1575.5
2749	888951.9	778966.9	1575.0
2750	888920.0	778964.0	1573.0
2751	888890.8	778969.5	1573.0
2752	888882.8	778940.1	1572.0
2753	888880.5	778929.3	1571.0
2754	889038.4	779117.0	1575.8
2755	888993.9	779129.5	1575.0
2756	888960.9	779060.5	1575.0
2757	888938.7	779083.1	1573.0
2758	888922.6	779027.6	1575.0
2759	888889.4	779042.3	1573.0
2760	888871.6	778973.7	1574.0
2761	888838.1	778980.9	1573.0
2762	888829.4	778971.5	1571.0

PT. NO	NORTHING	EASTING	ELEV
2763	889009.1	779194.0	1576.0
2764	889016.7	779167.2	1575.0
2765	888992.1	779190.6	1574.0
2766	888982.5	779135.9	1573.0
2767	888959.8	779151.3	1571.0
2768	888949.4	779122.4	1573.0
2769	888908.6	779121.1	1573.0
2770	888932.6	779087.7	1573.0
2771	888863.1	779080.0	1572.0
2772	888881.3	779036.2	1571.0
2773	888841.8	779052.7	1571.0
2774	888856.6	779030.2	1572.0
2775	888845.1	779017.4	1573.0
2776	888816.7	779018.2	1573.8
2777	888999.6	779268.5	1589.0
2778	888973.8	779238.1	1576.0
2779	888979.5	779202.0	1575.0
2780	888952.3	779176.0	1575.0
2781	888930.6	779166.0	1575.0
2782	888902.4	779149.3	1575.0
2783	888893.0	779128.8	1574.0
2784	888882.4	779139.5	1573.0
2785	888873.4	779139.9	1573.0
2786	888877.9	779106.5	1573.0
2787	888808.5	779127.2	1573.0
2788	888804.4	779086.3	1571.0
2789	888808.2	779061.8	1572.0
2790	888814.0	779040.7	1573.0
2791	888772.2	779066.0	1571.0
2792	888785.5	779048.4	1572.0
2793	888793.5	779023.2	1573.0
2794	888782.0	779023.0	1572.0
2795	888766.6	779024.3	1571.0
2796	888919.0	779253.6	1575.3
2797	888911.9	779200.8	1575.8
2798	888833.0	779144.5	1571.0
2799	888780.8	779143.5	1573.0
2800	888762.2	779093.6	1573.0
2801	888725.7	779036.1	1571.0
2802	888710.8	779023.3	1574.0
2803	888703.1	779016.9	1576.0
2804	888685.8	779001.9	1577.0
2805	888843.8	779227.5	1575.0

PT. NO	NORTHING	EASTING	ELEV
2806	888813.4	779224.1	1573.0
2807	888780.2	779205.8	1573.0
2808	888750.8	779161.0	1574.0
2809	888726.2	779150.3	1574.0
2810	888697.8	779128.8	1573.0
2811	888681.7	779116.4	1571.0
2812	888861.1	779296.7	1575.8
2813	888823.8	779300.3	1575.0
2814	888805.3	779300.9	1573.0
2815	888803.5	779280.0	1572.0
2816	888814.9	779261.7	1573.0
2817	888787.3	779277.7	1572.0
2818	888782.8	779246.8	1573.0
2819	888709.0	779168.9	1574.0
2820	888666.7	779108.1	1571.0
2821	888662.1	779105.9	1572.0
2822	888652.9	779101.2	1573.0
2823	888640.7	779093.7	1576.0
2824	888614.4	779079.2	1577.0
2825	888878.6	779393.3	1589.0
2826	888832.4	779352.1	1576.0
2827	888753.3	779256.4	1575.0
2828	888676.3	779202.3	1575.0
2829	888765.3	779340.0	1575.0
2830	888690.7	779277.3	1575.5
2831	888619.7	779218.4	1571.0
2832	888606.3	779213.2	1571.0
2833	888584.5	779296.9	1575.0
2834	888569.6	779283.6	1573.0
2835	888567.9	779261.5	1572.0
2836	888577.2	779238.9	1572.0
2837	888557.4	779217.0	1574.0
2838	888549.3	779211.0	1576.0
2839	888514.5	779188.7	1577.0
2840	888686.0	779451.1	1575.8
2841	888738.8	779561.8	1590.0
2842	888704.9	779533.7	1576.0
2843	888526.0	779364.6	1575.0
2844	888486.0	779310.6	1572.0
2845	888470.2	779297.0	1574.0
2846	888462.5	779290.5	1576.0
2847	888439.4	779272.0	1577.0
2848	888512.0	779424.1	1575.0

PT. NO	NORTHING	EASTING	ELEV
2849	888495.1	779354.5	1573.0
2850	888673.3	779622.7	1589.0
2851	888635.9	779591.4	1576.0
2852	888549.8	779483.9	1575.5
2853	888491.7	779416.1	1573.0
2854	888467.6	779407.7	1572.0
2855	888575.6	779575.5	1575.8
2856	888518.4	779536.7	1575.0
2857	888498.6	779548.6	1573.0
2858	888483.5	779488.4	1575.0
2859	888624.1	779685.4	1589.0
2860	888594.3	779659.3	1576.0
2861	888570.0	779653.0	1575.0
2862	888553.3	779656.3	1573.0
2863	888466.4	779572.8	1572.0
2864	888441.1	779602.4	1573.0
2865	888434.2	779500.3	1573.0
2866	888402.7	779505.4	1572.0
2867	888381.4	779459.7	1572.0
2868	888355.2	779440.0	1574.0
2869	888347.8	779433.3	1576.0
2870	888317.8	779408.2	1577.0
2871	888500.3	779644.0	1572.0
2872	888402.8	779573.5	1573.0
2873	888554.0	779757.5	1588.0
2874	888527.1	779734.3	1576.0
2875	888476.8	779701.7	1575.0
2876	888491.3	779679.1	1573.0
2877	888401.5	779615.3	1575.0
2878	888349.4	779603.0	1574.0
2879	888332.1	779573.7	1573.0
2880	888326.9	779565.0	1572.0
2881	888482.8	779771.3	1576.0
2882	888387.3	779694.4	1575.5
2883	888341.1	779652.3	1575.0
2884	888334.8	779630.7	1574.0
2885	888305.6	779598.0	1572.0
2886	888249.7	779646.5	1575.0
2887	888249.8	779620.3	1572.0
2888	888450.4	779871.3	1588.0
2889	888403.2	779829.3	1576.0
2890	888209.3	779717.0	1575.3
2891	888181.2	779678.9	1575.0

	NAME	DATE
DESIGN	TEC	4/05
DRAWN	WJP	4/05
CHECKED	CAD	4/05

Stanley Consultants inc.

ARIZONA DEPARTMENT OF TRANSPORTATION
INTERMODAL TRANSPORTATION DIVISION
ROADWAY DESIGN SERVICES

FLOOD POOL
GRADING POINTS

PRELIMINARY
STAGE IV
95% Review
NOT FOR
CONSTRUCTION
OR RECORDING

ROUTE	LOCATION	DWG NO. F-5.28
202L	RED MTN FWY. POWER ROAD - UNIVERSITY DRIVE	
TRACS NO. H 5782 01C		202-B(007)B

___ OF ___

4/27/2005 q:\1700\active\87-85-dwgs\84-flood\h5782f88c.dgn

F.A.H.A. REGION	STATE	PROJECT NO.	SHEET NO.	TOTAL SHEETS	AS BUILT
9	ARIZ.	202-B(007)B			
		202 MA 023			

PT. NO	NORTHING	EASTING	ELEV
2892	888174.5	779672.2	1572.0
2893	888164.5	779663.6	1572.0
2894	888148.5	779649.4	1576.0
2895	888122.0	779630.9	1577.0
2896	888243.8	779832.4	1575.5
2897	888353.9	779983.9	1589.0
2898	888324.4	779958.6	1576.0
2899	888227.1	780031.7	1576.0
2900	888130.1	779839.6	1575.0
2901	888088.5	779821.0	1572.0
2902	888188.7	779936.5	1575.5
2903	888100.2	779855.6	1574.0
2904	888076.7	779853.3	1573.0
2905	888040.5	779838.5	1573.0
2906	888022.1	779828.3	1576.0
2907	887981.4	779806.0	1577.0
2908	888115.7	779978.6	1575.0
2909	888108.5	779935.1	1575.0
2910	888095.0	779935.7	1573.0
2911	888071.2	779937.7	1572.0
2912	888144.7	780048.9	1575.0
2913	888121.5	780055.3	1573.0
2914	888097.0	780001.0	1574.0
2915	888076.1	780017.1	1573.0
2916	888211.3	780144.6	1589.0
2917	888148.2	780092.4	1576.0
2918	888058.6	779878.5	1572.0
2919	888048.2	779895.8	1573.0
2920	888040.3	779916.1	1580.0
2921	888026.2	779949.5	1575.3
2922	888002.0	779962.3	1580.0
2923	887991.2	779998.7	1575.5
2924	887998.2	780015.1	1580.0
2925	888022.0	780005.8	1575.8
2926	888033.8	780020.1	1580.0
2927	888043.3	780023.9	1573.0
2928	888067.6	780035.5	1572.0
2929	887930.7	780014.8	1572.0
2930	887947.3	780033.4	1573.0
2931	887963.0	780018.2	1580.0
2932	888020.5	780098.4	1575.0
2933	888079.2	780131.0	1575.3
2934	887856.0	780022.7	1576.0

PT. NO	NORTHING	EASTING	ELEV
2935	887875.4	780039.6	1572.0
2936	887967.1	780085.1	1575.0
2937	887871.2	780076.1	1572.0
2938	887911.3	780100.2	1573.0
2939	887913.6	780139.2	1575.0
2940	888024.5	780179.2	1575.8
2941	887891.0	780125.2	1573.0
2942	888029.9	780246.6	1575.3
2943	888041.8	780277.4	1576.0
2944	888068.6	780301.6	1588.0
2945	887827.9	780184.1	1574.0
2946	887966.5	780256.4	1575.0
2947	888006.6	780287.1	1575.0
2948	887793.7	780204.4	1573.0
2949	887832.3	780241.0	1574.0
2950	887860.7	780225.8	1575.0
2951	887874.7	780285.8	1573.0
2952	887903.7	780260.7	1574.0
2953	887936.8	780283.4	1572.0
2954	887976.3	780313.1	1575.0
2955	887728.6	780215.0	1576.0
2956	887746.8	780227.1	1572.0
2957	887762.2	780250.9	1572.0
2958	887781.9	780213.0	1572.0
2959	887761.7	780268.3	1573.0
2960	887814.2	780260.9	1573.0
2961	887849.8	780302.2	1572.0
2962	887870.1	780330.7	1573.0
2963	887880.2	780343.1	1575.0
2964	887679.9	780257.9	1577.0
2965	887687.9	780260.9	1576.0
2966	887712.9	780276.2	1572.0
2967	887763.0	780315.1	1573.8
2968	887813.6	780353.4	1571.0
2969	887900.9	780394.3	1576.0
2970	887949.9	780431.3	1588.0
2971	887725.9	780344.0	1574.0
2972	887771.1	780373.0	1574.0
2973	887670.0	780378.5	1572.0
2974	887688.2	780395.6	1574.0
2975	887765.5	780439.1	1574.0
2976	887807.3	780437.3	1571.0
2977	887844.4	780458.5	1575.0

PT. NO	NORTHING	EASTING	ELEV
2978	887808.0	780498.0	1575.0
2979	887667.7	780441.9	1575.0
2980	887747.0	780454.2	1575.0
2981	887797.9	780472.7	1573.0
2982	887828.9	780514.2	1576.0
2983	887855.3	780536.8	1588.0
2984	887588.7	780392.9	1577.0
2985	887613.5	780409.2	1572.0
2986	887629.6	780418.5	1572.0
2987	887633.7	780421.9	1573.0
2988	887693.9	780498.8	1575.0
2989	887763.5	780567.9	1576.0
2990	887797.4	780599.7	1588.0
2991	887611.8	780469.9	1572.0
2992	887601.6	780498.1	1573.0
2993	887599.7	780509.1	1575.0
2994	887633.5	780509.8	1572.0
2995	887658.9	780514.0	1573.0
2996	887728.2	780571.4	1575.0
2997	887573.4	780557.9	1575.0
2998	887593.0	780534.0	1575.3
2999	887640.1	780574.1	1573.0
3000	887673.0	780572.9	1575.0
3001	887720.5	780632.0	1576.0
3002	887749.6	780653.5	1588.0
3003	887557.0	780553.3	1572.0
3004	887573.5	780591.1	1575.8
3005	887594.8	780598.8	1575.0
3006	887605.6	780603.6	1573.0
3007	887628.3	780601.7	1572.0
3008	887657.5	780647.5	1572.0
3009	887685.1	780672.1	1576.0
3010	887712.5	780694.6	1583.0
3011	887463.4	780595.2	1577.0
3012	887482.8	780606.1	1574.0
3013	887503.6	780618.7	1572.0
3014	887542.9	780635.3	1572.0
3015	887559.0	780615.8	1575.0
3016	887558.9	780625.8	1573.0
3017	887525.1	780653.4	1573.0
3018	887567.6	780666.9	1573.0
3019	887610.1	780645.4	1573.0
3020	887618.6	780679.4	1575.0

PT. NO	NORTHING	EASTING	ELEV
3021	887637.8	780722.4	1576.0
3022	887514.7	780645.9	1572.0
3023	887528.7	780681.5	1575.0
3024	887568.6	780680.5	1575.0
3025	887664.5	780747.8	1588.0
3026	887477.3	780696.1	1572.0
3027	887497.2	780719.7	1575.0
3028	887546.9	780720.5	1575.5
3029	887557.5	780771.7	1576.0
3030	887598.0	780805.0	1588.0
3031	887351.1	780700.0	1582.0
3032	887360.6	780706.5	1578.0
3033	887391.5	780731.8	1572.0
3034	887407.6	780745.7	1572.0
3035	887414.4	780751.0	1575.0
3036	887430.1	780800.9	1575.8
3037	887370.6	780828.1	1575.0
3038	887502.9	780878.5	1576.0
3039	887528.2	780900.4	1588.0
3040	887299.0	780821.5	1577.0
3041	887324.1	780834.6	1572.0
3042	887347.7	780828.4	1572.0
3043	887365.9	780889.3	1572.0
3044	887389.5	780884.0	1573.0
3045	887405.8	780878.5	1575.5
3046	887452.8	780911.4	1576.0
3047	887487.7	780945.7	1588.0
3048	887335.4	780870.1	1572.0
3049	887332.8	780884.7	1573.0
3050	887321.7	780966.0	1573.5
3051	887346.0	780928.0	1573.0
3052	887365.0	780957.3	1573.0
3053	887370.3	780936.2	1572.0
3054	887381.1	780933.2	1573.0
3055	887404.0	780925.3	1575.0
3056	887403.6	780963.6	1572.0
3057	887258.6	780891.1	1578.0
3058	887269.4	780897.0	1577.0
3059	887287.1	780906.3	1572.0
3060	887300.5	780913.5	1572.0
3061	887309.2	780918.2	1573.0
3062	887376.9	781000.4	1576.0
3063	887344.3	780993.2	1574.0

	NAME	DATE
DESIGN	TEC	4/05
DRAWN	WJP	4/05
CHECKED	CAD	4/05

Stanley Consultants Inc.

ARIZONA DEPARTMENT OF TRANSPORTATION
INTERMODAL TRANSPORTATION DIVISION
ROADWAY DESIGN SERVICES

FLOOD POOL
GRADING POINTS

PRELIMINARY
STAGE IV
95% Review
NOT FOR CONSTRUCTION OR RECORDING

AHJPE	LOCATION
202L	RED MTN FWY, POWER ROAD - UNIVERSITY DRIVE

DRG NO. F-5.29

TRACS NO. H 9782 01C | 202-B(007)B | ___ OF ___

4/22/2005 q:\17868\acLive\87-85-dwgs\84-11cad\h9782701c.dgn

FHWA REGION	STATE	PROJECT NO.	SHEET NO.	TOTAL SHEETS	AS BUILT
9	ARIZ.	202-B(007)I			
		202 MA 023			

PT. NO	NORTHING	EASTING	ELEV
3064	887356.5	781006.5	1575.0
3065	887384.7	781016.4	1579.0
3066	887406.7	781033.2	1588.0
3067	887290.0	780960.8	1572.0
3068	887273.4	780999.9	1573.0
3069	887298.6	781038.4	1574.0
3070	887333.9	781035.4	1576.0
3071	887254.5	781013.7	1572.0
3072	887317.4	781068.8	1578.0
3073	887328.3	781079.9	1579.0
3074	887167.0	781016.7	1577.0
3075	887176.0	781021.4	1576.0
3076	887195.4	781034.4	1572.0
3077	887236.0	781043.8	1572.0
3078	887253.3	781053.3	1573.0
3079	887264.7	781113.3	1575.0
3080	887291.4	781078.3	1576.0
3081	887218.4	781091.3	1572.0
3082	887239.6	781120.4	1572.0
3083	887257.5	781114.7	1573.0
3084	887124.0	781130.8	1577.0
3085	887134.3	781135.1	1576.0
3086	887152.5	781143.6	1572.0
3087	887202.9	781140.5	1574.0
3088	887203.0	781170.3	1576.0
3089	887206.3	781175.4	1578.0
3090	887244.6	781163.5	1578.0
3091	887223.5	781196.6	1579.0
3092	887243.9	781217.9	1589.0
3093	887189.8	781240.2	1579.0
3094	887142.2	781214.7	1572.0
3095	887158.2	781222.9	1575.0
3096	887159.1	781244.0	1576.0
3097	887162.8	781249.7	1578.0
3098	887168.8	781284.4	1579.0
3099	887199.7	781280.4	1588.0
3100	887075.7	781339.8	1572.0
3101	887085.6	781339.0	1574.0
3102	887104.1	781339.0	1576.0
3103	887109.8	781341.7	1578.0
3104	887133.2	781339.5	1577.0
3105	887013.2	781324.5	1577.0
3106	887039.0	781339.0	1572.0

PT. NO	NORTHING	EASTING	ELEV
3107	887052.6	781380.0	1572.0
3108	887111.1	781391.9	1572.0
3109	887119.3	781382.3	1576.0
3110	887106.3	781405.9	1572.0
3111	887106.4	781416.0	1576.0
3112	887015.5	781414.6	1572.0
3113	887056.4	781391.7	1574.0
3114	887065.0	781404.8	1575.0
3115	887073.6	781418.5	1576.0
3116	887078.1	781423.0	1578.0
3117	887106.5	781432.4	1577.0
3118	886989.2	781412.5	1577.0
3119	887037.4	781465.6	1572.0
3120	887049.6	781466.0	1573.0
3121	887065.5	781466.6	1576.0
3122	887087.5	781469.5	1577.0
3123	887100.3	781475.1	1579.0
3124	887124.3	781544.1	1591.0
3125	887085.7	781542.6	1578.0
3126	887049.0	781607.5	1576.0
3127	887055.2	781607.9	1578.0
3128	887087.9	781608.3	1579.0
3129	886980.5	781606.0	1577.0
3130	887006.4	781606.2	1572.0
3131	887022.1	781606.6	1572.0
3132	887064.1	781715.1	1576.0
3133	887070.8	781716.1	1578.0
3134	886996.9	781715.9	1572.0
3135	887028.4	781716.7	1572.0
3136	887042.0	781775.2	1575.0
3137	887009.4	781790.0	1571.0
3138	887021.9	781776.6	1572.0
3139	887018.4	781814.0	1572.0
3140	887076.9	781824.0	1578.0
3141	886959.5	781810.1	1578.0
3142	886985.9	781820.4	1572.0
3143	887016.3	781835.6	1574.0
3144	887020.9	781844.4	1575.0
3145	887032.6	781877.7	1576.0
3146	887040.0	781875.1	1578.0
3147	886964.3	781884.2	1572.0
3148	886989.8	781877.8	1572.0
3149	886995.5	781877.9	1574.0

PT. NO	NORTHING	EASTING	ELEV
3150	887006.8	781877.0	1575.0
3151	887031.7	781938.9	1572.0
3152	887036.7	781935.7	1574.0
3153	887042.5	781932.8	1575.0
3154	887052.8	781929.1	1576.0
3155	887059.2	781928.7	1578.0
3156	887137.6	781993.2	1596.0
3157	886905.2	781917.9	1578.0
3158	886959.6	781943.9	1572.0
3159	887003.8	781962.2	1572.0
3160	887038.9	781985.2	1572.0
3161	887044.8	781983.8	1574.0
3162	887050.7	781981.9	1575.0
3163	887062.9	781979.1	1576.0
3164	887054.6	782007.2	1572.0
3165	887083.6	781990.8	1578.0
3166	886925.1	781935.7	1572.0
3167	886907.4	781977.5	1572.0
3168	886930.3	781969.6	1572.0
3169	886964.0	781980.7	1575.0
3170	886979.3	781983.1	1575.0
3171	886997.0	782004.5	1576.0
3172	886995.7	782011.5	1578.0
3173	886880.2	782013.3	1575.0
3174	886897.9	781990.2	1573.0
3175	886893.7	782002.7	1575.0
3176	886898.6	782020.7	1575.0
3177	886915.3	782022.4	1572.0
3178	886929.5	782021.9	1572.0
3179	886946.4	782025.6	1575.0
3180	886953.4	782032.0	1578.0
3181	886980.8	782068.4	1578.0
3182	886831.0	781992.2	1572.0
3183	886828.7	782007.3	1572.0
3184	886829.8	782016.1	1574.0
3185	886835.3	782039.2	1576.0
3186	886879.9	782036.9	1576.0
3187	886979.4	782122.0	1596.0
3188	886827.2	782070.7	1577.0
3189	886846.4	782070.4	1577.0
3190	886858.0	782077.1	1577.0
3191	886577.7	782047.9	1578.0
3192	886578.0	782100.3	1575.0

PT. NO	NORTHING	EASTING	ELEV
3193	886573.4	782154.1	1576.0
3194	886506.4	782176.2	1572.0
3195	886518.7	782182.3	1572.0
3196	886526.5	782187.0	1575.0
3197	886585.1	782198.0	1577.0
3198	886461.6	782253.8	1572.0
3199	886473.6	782259.4	1572.0
3200	886480.0	782267.1	1575.0
3201	886508.9	782261.8	1576.0
3202	886410.7	782312.6	1576.0
3203	886424.0	782319.1	1572.0
3204	886431.7	782322.9	1572.0
3205	886446.3	782329.5	1575.0
3206	886539.6	782381.5	1577.0
3207	886619.7	782381.6	1595.0
3208	886417.0	782375.1	1577.0
3209	886448.4	782373.5	1575.0
3210	886494.8	782388.4	1576.0
3211	886400.3	782404.2	1573.0
3212	886398.2	782416.8	1576.0
3213	886474.5	782444.2	1575.0
3214	886384.1	782414.4	1573.0
3215	886368.7	782445.2	1573.0
3216	886392.3	782435.3	1576.8
3217	886405.9	782438.1	1573.0
3218	886436.1	782442.0	1573.0
3219	886483.5	782503.4	1576.0
3220	886530.7	782508.7	1576.8
3221	886344.9	782480.5	1573.0
3222	886362.2	782484.0	1577.0
3223	886374.8	782464.3	1576.0
3224	886358.2	782503.5	1577.3
3225	886385.2	782470.2	1573.0
3226	886386.4	782519.7	1572.0
3227	886408.4	782529.4	1575.0
3228	886548.8	782595.3	1577.0
3229	886592.2	782627.3	1595.0
3230	886329.3	782534.5	1573.0
3231	886327.2	782546.4	1576.0
3232	886342.7	782519.0	1573.0
3233	886358.0	782514.2	1577.0
3234	886359.4	782533.8	1573.0
3235	886373.3	782524.4	1573.0

	NAME	DATE
DESIGN	TEC	4/05
DRAWN	BJP	4/05
CHECKED	CAD	4/05

Stanley Consultants Inc.

ARIZONA DEPARTMENT OF TRANSPORTATION
INTERMODAL TRANSPORTATION DIVISION
ROADWAY DESIGN SERVICES

FLOOD POOL
GRADING POINTS

PRELIMINARY
STAGE IV
95% Review
NOT FOR CONSTRUCTION OR RECORDING

DATE: 2021 | LOCATION: RED MTN FWY. POWER ROAD - UNIVERSITY DRIVE

DRG NO. F-5.30

TRACS NO. H 5782 01C | 202-B(007)I | ___ OF ___

4/22/2005 q:\17988\active\87-85-dwgs\84-flood\h5782f85m.dgn

NO. | DESCRIPTION OF REVISION | MADE BY | DATE

F.A.H.A. REGION	STATE	PROJECT NO.	SHEET NO.	TOTAL SHEETS	AS BUILT
9	ARIZ.	202-B(007)I			
		202 MA 023			

PT. NO	NORTHING	EASTING	ELEV
3236	886446.7	782567.5	1576.0
3237	886499.3	782596.9	1576.5
3238	886262.6	782557.7	1577.0
3239	886281.5	782566.4	1572.0
3240	886288.5	782569.5	1572.0
3241	886300.1	782575.2	1576.0
3242	886301.5	782591.3	1576.5
3243	886323.1	782572.6	1577.0
3244	886315.9	782597.8	1576.0
3245	886337.8	782586.2	1576.0
3246	886347.8	782591.1	1573.0
3247	886379.1	782608.3	1572.0
3248	886414.1	782623.6	1576.0
3249	886280.7	782615.7	1576.0
3250	886318.6	782607.7	1573.0
3251	886337.9	782612.3	1573.0
3252	886345.4	782628.5	1575.0
3253	886353.1	782649.3	1576.0
3254	886362.4	782668.2	1577.0
3255	886247.0	782644.6	1572.0
3256	886254.0	782657.4	1573.0
3257	886263.1	782645.6	1573.0
3258	886291.3	782662.9	1573.0
3259	886300.3	782688.5	1576.0
3260	886209.1	782707.5	1572.0
3261	886222.9	782714.3	1575.0
3262	886231.4	782721.2	1576.0
3263	886257.9	782695.0	1576.0
3264	886262.3	782714.9	1577.0
3265	886199.8	782733.9	1572.0
3266	886209.1	782738.3	1575.0
3267	886214.1	782753.2	1576.0
3268	886235.1	782736.9	1577.0
3269	886113.9	782769.8	1578.0
3270	886134.9	782779.5	1577.0
3271	886153.3	782788.6	1572.0
3272	886240.0	782785.5	1578.0
3273	886226.5	782813.3	1576.0
3274	886170.1	782821.2	1572.0
3275	886175.4	782830.2	1575.0
3276	886191.7	782853.3	1577.0
3277	886175.6	782901.4	1577.3
3278	886094.9	782915.5	1572.0

PT. NO	NORTHING	EASTING	ELEV
3279	886103.9	782920.4	1575.0
3280	886111.8	782982.1	1577.0
3281	886179.4	783029.1	1578.0
3282	886210.1	783041.5	1589.0
3283	886135.9	783040.9	1573.0
3284	886134.7	783066.7	1573.0
3285	886067.5	783090.9	1573.0
3286	886068.6	782984.8	1573.0
3287	886089.7	783017.4	1573.0
3288	886117.4	783102.1	1576.0
3289	886132.6	783104.4	1577.0
3290	885972.5	783062.6	1577.0
3291	885998.2	783072.5	1572.0
3292	886030.7	783098.2	1573.0
3293	886030.3	783116.0	1576.0
3294	886103.9	783097.5	1575.0
3295	885984.4	783125.9	1572.0
3296	886027.2	783174.4	1573.0
3297	886057.2	783169.3	1574.0
3298	886078.2	783166.4	1575.0
3299	886104.1	783174.2	1577.0
3300	885929.3	783164.4	1577.0
3301	885945.6	783175.0	1575.0
3302	885956.7	783182.4	1572.0
3303	885964.7	783187.2	1572.0
3304	885971.7	783192.9	1573.0
3305	885977.0	783196.0	1576.0
3306	885994.0	783179.1	1577.0
3307	885984.0	783204.4	1577.5
3308	886000.1	783176.6	1576.0
3309	886006.4	783177.0	1573.0
3310	885993.9	783212.5	1576.0
3311	886005.6	783218.2	1573.0
3312	886023.4	783229.4	1573.0
3313	885966.8	783222.0	1577.0
3314	885990.7	783260.1	1573.0
3315	886036.5	783259.3	1573.0
3316	885879.0	783222.8	1577.0
3317	885897.1	783238.1	1575.0
3318	885905.5	783245.3	1572.0
3319	885910.2	783249.8	1572.0
3320	885913.2	783280.2	1576.0
3321	885929.8	783262.7	1576.5

PT. NO	NORTHING	EASTING	ELEV
3322	885960.8	783278.3	1573.0
3323	886000.1	783305.6	1575.0
3324	886050.9	783347.2	1576.0
3325	885902.1	783289.5	1573.0
3326	885928.7	783311.1	1573.0
3327	885950.8	783366.7	1576.0
3328	885994.7	783338.1	1576.0
3329	885867.2	783353.3	1575.0
3330	885941.1	783340.5	1575.0
3331	885906.0	783347.8	1575.0
3332	886028.5	783435.0	1577.0
3333	885770.0	783365.2	1577.0
3334	885780.2	783374.3	1575.0
3335	885790.6	783382.4	1572.0
3336	885874.5	783379.0	1576.0
3337	885866.3	783448.4	1577.0
3338	885892.7	783437.5	1576.0
3339	885987.3	783446.9	1577.0
3340	885928.8	783433.6	1576.0
3341	885955.7	783518.7	1577.5
3342	885779.2	783437.9	1573.0
3343	885804.4	783406.5	1573.0
3344	885789.6	783440.7	1575.0
3345	885819.7	783450.5	1576.0
3346	885844.4	783472.2	1577.0
3347	885887.0	783578.7	1577.5
3348	885954.9	783590.6	1577.3
3349	885773.0	783520.2	1573.0
3350	885789.4	783527.9	1575.0
3351	885821.0	783550.9	1577.0
3352	885988.3	783663.4	1578.0
3353	886018.2	783673.1	1587.0
3354	885675.5	783529.9	1577.0
3355	885699.1	783540.5	1573.0
3356	885807.0	783643.5	1577.8
3357	885874.1	783688.7	1577.0
3358	885738.2	783689.0	1576.0
3359	885750.5	783675.8	1577.0
3360	885868.3	783719.1	1573.0
3361	885864.2	783736.6	1573.0
3362	885866.1	783767.9	1577.0
3363	885680.8	783728.1	1573.0
3364	885717.2	783717.7	1573.0

PT. NO	NORTHING	EASTING	ELEV
3365	885727.3	783702.6	1575.0
3366	885861.8	783799.1	1578.0
3367	885924.0	783842.3	1587.0
3368	885678.5	783742.2	1574.0
3369	885671.3	783778.9	1575.0
3370	885754.2	783774.4	1573.0
3371	885793.3	783809.6	1577.0
3372	885584.6	783763.3	1577.0
3373	885605.9	783776.1	1573.0
3374	885602.1	783855.2	1573.0
3375	885607.3	783864.0	1574.0
3376	885651.7	783850.2	1576.0
3377	885764.2	783924.1	1577.8
3378	885620.4	783881.9	1575.0
3379	885626.7	783900.5	1576.0
3380	885626.9	783920.7	1577.0
3381	885716.4	783971.7	1577.0
3382	885488.5	783906.5	1577.0
3383	885510.9	783919.2	1573.0
3384	885668.5	783989.9	1573.0
3385	885691.2	783968.1	1573.0
3386	885738.8	783998.3	1578.0
3387	885759.9	784018.3	1588.0
3388	885542.8	784000.8	1576.0
3389	885564.0	784009.8	1577.0
3390	885595.3	784007.6	1577.8
3391	885624.7	784007.1	1577.0
3392	885642.5	783998.8	1575.0
3393	885507.7	783988.5	1573.0
3394	885520.2	783994.1	1575.0
3395	885635.3	784070.0	1577.3
3396	885407.9	784087.8	1577.0
3397	885435.9	784098.8	1573.0
3398	885464.6	784087.8	1573.0
3399	885486.6	784094.0	1575.0
3400	885543.1	784161.5	1577.5
3401	885380.3	784160.2	1577.0
3402	885402.4	784171.8	1573.0
3403	885445.8	784186.8	1573.0
3404	885492.8	784209.8	1577.0
3405	885511.5	784250.0	1578.0
3406	885540.9	784270.4	1585.0
3407	885334.8	784275.2	1577.0

	NAME	DATE
DESIGN	TEC	4/05
DRAWN	B.P.	4/05
CHECKED	CAD	4/05

Stanley Consultants Inc.

ARIZONA DEPARTMENT OF TRANSPORTATION
INTERMODAL TRANSPORTATION DIVISION
ROADWAY DESIGN SERVICES

FLOOD POOL
GRADING POINTS

PRELIMINARY
STAGE IV
95% Review
NOT FOR CONSTRUCTION OR RECORDING

ROUTE	LOCATION	DWG NO. F-5.31
202L	RED MTN FWY. POWER ROAD - UNIVERSITY DRIVE	
TRACS NO. H 5782 01C		202-B(007)I — OF —

4/22/2005 q:\17868\tec live\87-80-design\04-flood\h5782101.dgn

F.A.H.S. REGION	STATE	PROJECT NO.	SHEET NO.	TOTAL SHEETS	AS BUILT
9	ARIZ.	202-B(007)I			

202 MA 023

PT. NO	NORTHING	EASTING	ELEV
3408	885348.9	784281.6	1573.0
3409	885367.3	784290.5	1573.0
3410	885382.0	784299.9	1575.0
3411	885420.0	784320.1	1577.0
3412	885383.0	784416.2	1577.0
3413	885411.4	784436.6	1577.0
3414	885439.5	784421.9	1578.0
3415	885472.1	784426.9	1589.0
3416	885265.3	784398.6	1579.0
3417	885317.8	784441.8	1574.0
3418	885330.5	784438.1	1575.0
3419	885410.3	784495.0	1575.0
3420	885411.0	784502.5	1577.0
3421	885267.9	784464.2	1578.0
3422	885286.4	784461.0	1573.0
3423	885303.5	784455.4	1573.0
3424	885326.9	784500.9	1574.0
3425	885343.5	784509.0	1575.0
3426	885379.1	784522.5	1577.0
3427	885429.9	784569.0	1578.0
3428	885481.6	784562.4	1596.0
3429	885194.6	784502.0	1579.0
3430	885242.6	784505.3	1578.5
3431	885302.3	784530.1	1574.0
3432	885328.7	784548.3	1574.0
3433	885402.3	784623.3	1577.0
3434	885252.2	784555.6	1579.0
3435	885282.9	784625.5	1579.0
3436	885318.8	784597.7	1575.0
3437	885341.1	784605.8	1575.0
3438	885346.1	784665.7	1575.9
3439	885423.4	784691.5	1577.0
3440	885313.4	784678.1	1579.0
3441	885328.6	784709.5	1577.0
3442	885359.7	784748.1	1566.0

PT. NO	NORTHING	EASTING	ELEV

PT. NO	NORTHING	EASTING	ELEV

PT. NO	NORTHING	EASTING	ELEV

	NAME	DATE
DESIGN	TEC	4/05
DRAWN	W.P	4/05
CHECKED	CAD	4/05

Stanley Consultants Inc.

ARIZONA DEPARTMENT OF TRANSPORTATION
INTERMODAL TRANSPORTATION DIVISION
ROADWAY DESIGN SERVICES

FLOOD POOL
GRADING POINTS

PRELIMINARY
STAGE IV
95% Review
NOT FOR
CONSTRUCTION
OR RECORDING

DRG NO. F-5.32

YEAR	LOCATION
2021	RED MTN FWY, POWER ROAD - UNIVERSITY DRIVE

TRACS NO. H 5782 01C | 202-B(007)I | ___ OF ___

4/22/2005 q:\17000\active\07-85-dwgs\BR-Flood\h5782f85a.dgn

FHWA REGION	STATE	PROJECT NO.	SHEET NO.	TOTAL SHEETS	AS BUILT
9	ARIZ.	202-B(007)B			
		202 MA 023			

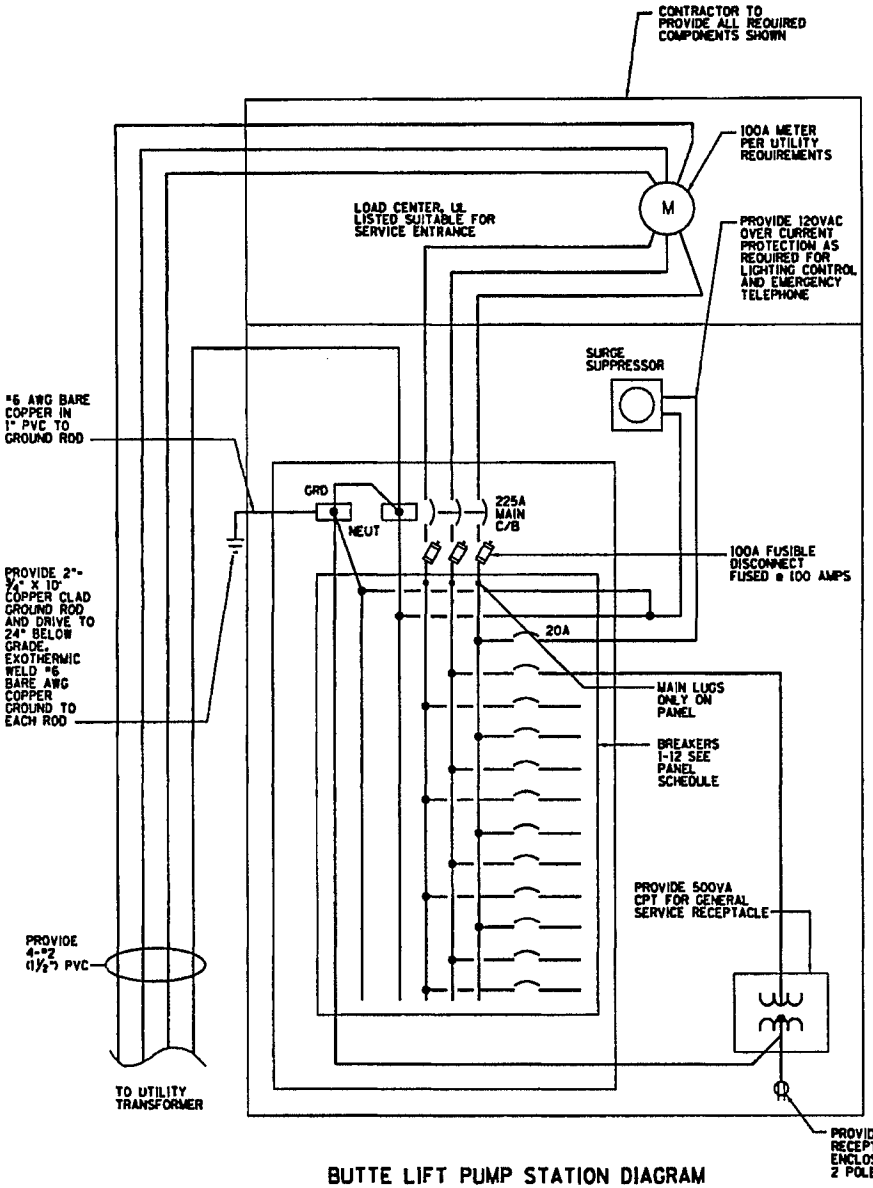

BUTTE LIFT PUMP STATION DIAGRAM

NO SCALE

PANEL NAME: BPS

SOURCE: LOCAL UTILITY TRANSFORMER

BRKR NO.	CKT DESCRIPTION	LOAD DESCRIPTION	BRKR RTG	PHASE (KVA) A	B	C	LOAD (KVA) LTG	RCPT	MTR	EQPT	LOAD FCTR	PANELBOARD RATINGS	
1	2"6W/"10GRD,1"C	LIFT STATION PUMP CONTROLLER	40A,3P	3.8					3.80		1.00	BUS AMPS:	100A
		10HP PUMP	"		3.8				3.80		1.00	SERVICE VOLTAGE:	480 Y/277
		"	"			3.8			3.80		1.00	FREQUENCY:	60 HZ
7	2"12W/"12GRD,3/4"C	CPT FOR SERVICE RECEPTACLE	20A,1P	0.5						0.50	1.00	MINIMUM AIC:	22,000
9		SPARE	20A,1P		0.0						1.00	NEMA TYPE:	3R
11		SPARE	20A,1P			0.0					1.00		
	N/A	N/A	N/A		0.0						1.00	MAIN LUG ONLY:	YES
	"	"	"			0.0					1.00	MAIN BRKR RATING:	N/A
	"	"	"	0.0							1.00		
	"	"	"		0.0						1.00	IC BUS:	N/A
	"	"	"			0.0					1.00	200% NEUTRAL:	N/A
	"	"	"			0.0					1.00		
	"	"	"								1.00	LUGS:	
	"	"	"								1.00	DOUBLE	N/A
	"	"	"								1.00	FEED THRU	N/A
	"	"	"								1.00		
	"	"	"								1.00	MOUNTING:	
	"	"	"								1.00	SURFACE	YES
	"	"	"								1.00	FLUSH	
	"	"	"								1.00		
	"	"	"								1.00	TVSS:	YES
2				0.0							1.00	CONNECTED LOAD	
4					0.0						1.00	LOAD TYPE	
6						0.0					1.00	LIGHTING:	
8				0.0							1.00	RECEPTACLE:	
10					0.0						1.00	MOTOR:	
12						0.0					1.00	EQUIPMENT:	
	N/A	N/A	N/A	0.0							1.00	TOTALS:	
	"	"	"		0.0						1.00		
	"	"	"			0.0					1.00	DEMAND LOAD	
	"	"	"	0.0							1.00	LOAD TYPE	
	"	"	"		0.0						1.00	LIGHTING:	
	"	"	"			0.0					1.00	RECEPTACLE:	
	"	"	"								1.00	MOTOR:	
	"	"	"								1.00	EQUIPMENT:	
	"	"	"								1.00	TOTALS:	
	"	"	"								1.00		
	"	"	"								1.00	MINIMUM CAPACITY	
	"	"	"								1.00	LOAD KVA FACTOR	AMPS
	"	"	"								1.00	*REF ½ 1.25	*REF ½
	"	"	"								1.00	SPECIAL INSTRUCTIONS:	THIS PANEL IS 12 CIRCUITS ONLY WITH 100A MAIN LUG CONNECTION.

PHASE TOTALS			
*REF ½	*REF	*REF ½	KVA
*REF ½	*REF	*REF ½	AMPS

DETAIL D19

SHEET 4 OF 6

	NAME	DATE
DESIGN	FLB	4/05
DRAWN	JJB	4/05
CHECKED	FLB	4/05

Stanley Consultants inc.

ARIZONA DEPARTMENT OF TRANSPORTATION
INTERMODAL TRANSPORTATION DIVISION
ROADWAY DESIGN SERVICES

SIGNAL BUTTE
ENERGY DISSIPATION
LIFT STATION

PRELIMINARY
STAGE IV
95% Review
NOT FOR CONSTRUCTION OR RECORDING

DATE: 2021 | LOCATION: REO MTN FWY, POWER ROAD - UNIVERSITY DRIVE

DRG NO. D-4.24

TRACS NO. H 5782 01C | 202-B(007)B | ___ OF ___

472272885 cp\17888\active\87-85-dwgs\lift-pump\muse\h578201c.dgn

RED MOUNTAIN FREEWAY (202L)
POWER ROAD - UNIVERSITY DRIVE

202 MA 023 H5782 01C
202-B(007)B

FINAL DRAINAGE REPORT
for the
East Channel Extension and Collector Channel Systems

Prepared for:

STANLEY CONSULTANTS, INC. AND

ARIZONA DEPARTMENT OF TRANSPORTATION

ADOT

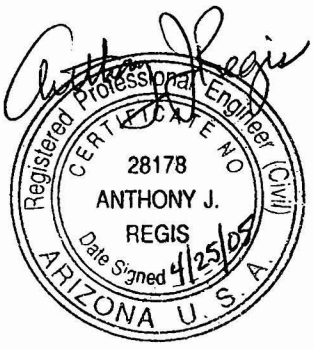

Prepared by:

J2 Engineering and Environmental Design, LLC

4649 E. Cotton Gin Loop, Suite B2

Phoenix, AZ 85040

April 2005

TABLE OF CONTENTS

I. INTRODUCTION 1

II. HYDROLOGIC ANALYSIS 1
Southern end of flood pool to Brown Road 1
Brown Road to McKellips Road 2
McKellips Road to McDowell Road 2
McDowell Road to the northern end of flood pool 2

III. DESIGN OF THE COLLECTOR CHANNEL SYSTEM 5

IV. DESIGN OF THE EAST CHANNEL EXTENSION 7

V. HYDRAULIC CALCULATIONS 7
Collector Channel Inlets 7
Downdrain Pipe Analysis 8
Hanging Baffle Impact Basin Energy Dissipaters 8
Baffle Chute Drop Structure 9
Weir Spillways 9
Channel Hydraulics 9

APPENDICES

APPENDIX A: Hydrologic Analysis
Rational Method Calculations
Drainage Area Map

APPENDIX B: HEC-RAS Output
East Channel
Las Sendas Channel
86th Street Channel

APPENDIX C: Collector Channel Hydraulic Calculations
Inlet Hydraulics
Culvert Analyses
Baffle Chute Spillway
Impact Basin Energy Dissipaters
Weir Spillways

APPENDIX D: 95% (Stage IV) Drainage Plan Sheets

I. INTRODUCTION

J2 Engineering and Environmental Design performed the design of the East Channel extension, the Collector Channel and its associated inlet structures and pipes draining into the flood pool, and the Las Sendas Channel and the 86th Street Channel inlets into the flood pool.

This report documents the hydrologic analysis and hydraulic design of those features.

The report prepared as part of the 30 percent design, *Red Mountain Freeway (202L), Initial Drainage Report (Stage II Design), Power Road to University Drive* (May 2004), was used as the basis of the final design. Modifications that were made are noted in the following paragraphs.

II. HYDROLOGIC ANALYSIS

The terrain in the study area generally slopes from the northeast to the southwest. Portions just upstream of the proposed flood pool have been developed, and at these locations collection facilities associated with the developments have been constructed that concentrate the flows that will direct them into the flood pool. At locations upstream of the flood pool where no development has occurred, offsite runoff generally sheet flows to the flood pool. At these locations the sheet flow will enter the collector channel and then be directed to the bottom of the flood pool by pipes or weir spillways. A pipe or spillway has been designed for each location where swales enter the proposed flood pool. The offsite hydrology can be divided into four distinct watersheds. The first is the watershed from the southern end of the flood pool to Brown Road. The second is Brown Road to McKellips Road, the third is McKellips Road to McDowell Road, and the fourth is McDowell Road to the northern end of the flood pool.

Southern end of flood pool to Brown Road

The entire length of this segment has been developed, and facilities are in place to collect and concentrate the flows at several locations. The existing 86th Avenue channel located near collector channel station 191+00 and an existing grouted rip rap channel concentrate flows within this reach. Additionally, several retention basins collect local flows and drain into the flood pool through existing pipes which will be extended to the bottom of the flood pool. The undeveloped parcel located just southeast of Brown Road and the flood pool drains to the flood pool, but it is anticipated that when this parcel is developed retention will be provided. Additionally, the church immediately to the east of the undeveloped parcel has a retention basin for onsite flows that overflows into the flood pool.

Brown Road to McKellips Road

The southern portion of this segment has been developed, while the northern portion of this segment is undeveloped desert. Several drainage areas were re-delineated from the 30% drainage report based on recent development just north of Brown Road. The newly delineated areas (OF-C6 through OF-C1) are shown on the Drainage Area Map in Appendix A. Runoff originating north of McKellips Road pond behind McKellips Road passes through several 30-inch and 36-inch pipes. Flows in excess of the culvert capacities gradually flow west until they pond behind an elevated maintenance road. There flows overtop McKellips Road and continue to sheet flow towards the flood pool.

The existing swales in this area are generally poorly defined, and the washes will likely meander with time. For this reason, the collector channel inlets 979 and 980 have been designed with some redundancy to provide a factor of safety for possible future meandering of the washes. The design flow at these inlets (169 cfs) was calculated by the following method: 1) using one quarter of the sum of the flows at the adjacent weir spillways: (990 + 630) * 0.25 = 405 cfs; then 2) subtracting the 30% drainage report flow of 68 cfs at CB 978, or 405 – 68 = 337 cfs; then finally 3) dividing 337 by 2 to get 169 cfs.

McKellips Road to McDowell Road

The segment from McKellips Road to McDowell Road is primarily developed, with several collection channels upstream of the proposed flood pool that collect the offsite runoff and concentrate it at the flood pool. The existing collection facilities include a collection channel and outlets at stations 81+25 and 96+00. A third outlet at station 69+50 serves as the outfall for two residential retention basins and collection systems.

McDowell Road to the northern end of flood pool

The La Sendas Development north of McDowell Road and upstream of the flood pool constructed the La Sendas Channel to collect and convey offsite flows. Flows generated within the development drain to a retention basin that overflows into the La Sendas Channel. Therefore, the only flow that enters the flood pool besides the La Sendas Channel within this reach is the local runoff between the flood pool and Red Mountain street. J2 revised the 30 percent hydrologic analysis in this area by delineating six new drainage areas (OF-A6 through OF-A1). Runoff from these drainage areas was calculated using the Rational Method.

The following Table 1 is a summary of peak 100-year discharges used in the design of the collector channel system.

Hydrologic analyses including Rational Method calculations and a drainage area map showing the J2-delineated drainage areas can be found in Appendix A.

Table 1: Summary of Peak 100-year Design Discharges

Inlet/Pipe Number	Collector Channel Station	100-Year Peak Design Q (cfs)	Source of Data	Comments
950	12+84	52	J2 (OF-A6)	Rational method
951	18+20	22	30% report	
952	20+10	21	J2 (OF-A4)	Rational method
953	23+78	23	J2 (OF-A3)	Rational method
954	25+62	49	J2 (OF-A2)	Rational method
955	32+58	43	J2 (OF-A1)	Rational method
Las Sendas		1507	30% report	
956	43+80	12	30% report	
957	46+81	28	30% report	
958	48+91	34	30% report	
959	62+55	93	30% report	
960	68+06	187	30% report	
Weir Inlet	69+50	303	30% report	
961	70+73	4	30% report	
962	74+50	20	30% report	
963	76+58	7	30% report	
964	77+72	10	30% report	
Weir Inlet	81+30	200	30% report	
965	84+62	3	30% report	
Weir Inlet	96+00	464	30% report	
966	107+21	14	30% report	
967	108+61	21	30% report	
Weir Inlet	112+00	760	30% report	
968	114+00	7	30% report	
969	117+15	130	30% report	
970	118+38	25	30% report	
971	120+40	23	30% report	
972	123+45	12	30% report	
Weir Inlet	128+50	310	30% report	
973	133+10	144	30% report	
974	137+75	112	30% report	
975	142+27	56	30% report	
976	144+65	6	30% report	
977	147+70	40	30% report	
Weir Inlet	152+30	990	30% report	
978	157+78	68	30% report	
979	160+44	169	J2	See text
980	162+78	169	J2	See text
Weir Inlet	165+30	630	30% report	
981	169+33	11	J2 (OF-C6)	Rational method
982	171+48	64	J2 (OF-C5)	Rational method

Inlet/Pipe Number	Collector Channel Station	100-Year Peak Design Q (cfs)	Source of Data	Comments
983	174+36	45	J2 (OF-C4)	Rational method
984	178+28	56	J2 (OF-C3)	Rational method
985	181+13	29	J2 (OF-C2)	Rational method
986	183+39	35	J2 (OF-C1)	Rational method
987	193+70	4	30% report	
86th St.		460	30% report	
988	197+45	15	J2 (OF-D1)	Rational method
989	200+05	160	30% report	
990	205+00	2	J2 (ON-990)	Rational method

III. DESIGN OF THE COLLECTOR CHANNEL SYSTEM

The purpose of the proposed collector channel system is to intercept offsite flow approaching the flood pool from the northeast, and to then direct it into inlets and weir spillways that convey it into the flood pool. The channel does not carry flow for long distances parallel to the contours of the natural terrain. It is graded in a series of sumps, in the bottoms of which are inlets and weir spillways that carry flows into the flood pool. The offsite flows arrive at the collector channel in both concentrated and sheet flow forms.

Concrete lining is proposed for most of the length of the collector channel in order to prevent headcutting as offsite flow spills into the channel. J2 performed several field visits to confirm locations of concentrated inflow into the channel. In areas where no significant offsite flow is expected to spill into the channel, an earth-lined channel configuration is proposed. This occurs only in two locations, between channel stations 87+00 and 93+10 and between 203+00 and 213+30; both locations are adjacent to residential areas with block walls.

Throughout most of its length, the configuration of the collector channel system consists of a channel along the eastern right-of-way line and a 16-foot wide maintenance road along the west top of channel, adjacent to the flood pool. This layout allows flows to enter the channel without spilling over the maintenance road. The channel depth on the west side (adjacent to the flood pool) was set at three feet in most locations. The profile of the west bank was set to follow the existing ground as closely as possible, so that if the channel capacity was exceeded (by an event greater than the design event), water surface elevations in existing washes would not increase at any location as a result of the project. The east bank of the channel is notched to accommodate existing washes as they enter the channel, varying from a height of 0 to 3 feet depending on the depth of the incoming wash.

The channel lining typical section includes a 2 foot turndown on the upstream (east) bank to prevent undermining of the channel as flows spill into the channel from the east. On the west top of bank, a 1-foot turndown depth is used.

Between stations 150+03 and 181+20, the channel and maintenance roads are reversed so that the channel lining does not lie above the City of Mesa water line. Within this reach of the channel, offsite flows will pass over the maintenance road; although this is not desirable, conversations with the City of Mesa indicated that it would be less desirable to have channel lining directly over the water line.

There is also a City of Mesa sewer line in the same general location as the water line. There are several locations where sewer manholes will be in the channel lining. The channel alignment was set so that the manhole would be in the side slope of the channel rather than in the bottom of the channel.

Catch basin inlets, downdrain pipe culverts, and outlet structures are located at the low points in the channel profile to carry the flows into the flood pool. The catch basins consist of ADOT standard C-15.81 median type inlets for locations with the lowest discharges. For higher flows, the ADOT standard C-15.75 drop inlets with access barrier grates are used.

The crests in the channel flowline profile in between the sumps are not high enough to contain the entire design flow at any given inlet; therefore some inflow from a particular wash may enter the flood pool through more than one inlet. This scheme of mixing flows helps to evenly distribute inflows, which of course may not occur in the same proportions shown by the hydrologic analysis.

J2 used corrugated metal downdrain culvert pipes as opposed to smooth materials because the increased roughness helps to decrease flow velocities due to the steep grades of the pipes.

Energy dissipater structures are proposed at the outlets of the pipes because the flow velocities are typically on the order of 15 feet per second at the pipe outlets. The energy dissipaters consist of the US Bureau of Reclamation (USBR) hanging baffle impact basins. The design is based on methods outlined in the the USBR publication *Design of Small Canal Structures.*

At several locations, weir inlets and spillways are used to carry flows from existing washes into the flood pool. This approach is used for locations with the largest discharges. The weir configuration includes concrete lining on the maintenance road, grouted riprap outside of the maintenance road, and a grouted riprap spillway. The length of the weir/spillways are based on a flow depth of 3 feet, which matches existing ground upstream of the collector channel.

The elevations of weir inlet crests were set lower than adjacent inlets in the collector channel so that they could serve as emergency "positive drainage" locations in case the catch basin inlets become clogged with debris.

The longitudinal grades of the collector channel flowline were set to match the existing terrain as closely as possible. The sumps are generally located at or near points where existing washes enter the channel. Inflows enter directly into the channel sumps and do not have to travel long distances in the channel. The channel therefore does not function as a conveyance facility, but rather as a series of ponds with drains at the bottoms of those ponds. Therefore the capacity of the channel system is controlled mostly by the sump inlet and weir headwater capacities rather than by the conveyance capacity of the channel.

At several locations near the south end of the collector channel, there are existing outlet pipes from residential detention basins. These pipes will be extended using the same pipe size and material into the flood pool.

The existing Las Sendas Channel will be modified to carry flows into the flood pool. The existing channel consists of a soil cement lined portion and an earth lined portion. The entire soil cement lined portion will be removed as part of this project. A vertical wall transition (sometimes called the "ACDC" type transition) is used to transition from the earth lined trapezoidal cross section portion of the channel to a vertical channel configuration. Then flow passes under the maintenance road through a 4-barrel 12' x 8' reinforced concrete box culvert (RCBC) before dropping down into the flood pool in a USBR baffle chute energy dissipater.

The baffle chute drop structure design is based on concepts depicted in the USBR publications *Design of Small Dams* and *Design of Small Canal Structures.* The design procedure in these publications outlines the derivation of baffle block sizes and spacing, as well as the overall spillway dimensions. These structures are very effective in reducing flow velocities in steep drops such as this.

The existing 86th Street channel is a concrete lined channel that will also be modified to enter the flood pool. At this location, a vertical wall transition is used to vary from a trapezoidal cross section to a vertical or U-channel section. The proposed channel includes a steep drop section, after which flow then enters a single barrel 8' x 8' RCBC passing under the maintenance road, then exits into the flood pool. A hanging baffle impact basin energy dissipater is proposed at this location to reduce velocities as flows enter the flood pool. The 30 percent design included a riprap basin at the outlet of the RCBC for energy dissipation, but hydraulic calculations indicate that flow velocities are too high (> 20 fps) for a riprap basin energy dissipater.

IV. DESIGN OF THE EAST CHANNEL EXTENSION

The East Channel designed as part of the Red Mountain Freeway (RMF), University to Southern segment will be extended to the north as part of the RMF, Power Road to University Drive segment. The same cross section that was used on the RMFUS segment is maintained and an end terminus consisting of a 10:1 slope is proposed at the north end of the channel extension.

The temporary dumped riprap grade control structures constructed as part of the RMFUS project are to be removed as part of this project.

V. HYDRAULIC CALCULATIONS

Collector Channel Inlets

The capacities of inlets in the collector channel were calculated using methods outlined in the FHWA publications *HDS-5* and *HY-22*. J2 developed headwater-discharge rating curves for each type of inlet used: the ADOT standard C-15.81 inlet with a 24-inch outlet pipe; and the ADOT standard C-15.75 drop inlet with outlet pipes ranging in size from 24-inch to 48-inch sizes. For the C-15.81 inlets, rating curves for both weir flow and orifice flow were developed. The governing (lowest) discharge for each headwater elevation was retained as the overall capacity of the inlet. For the C-15.75 inlets, only

orifice discharge calculations were performed because the design of the inlets calls for the springline of the pipe to be below the channel flowline. A spreadsheet tabulating the capacities of the various inlet configurations is included in Appendix C.

The allowable headwater depth at each inlet location was determined by measuring the depth from the inlet grate elevation up to the top of the banks of the incoming wash. The implicit assumption in this approach is that during the 100-year storm event, the incoming washes will be flowing at least at bank-full depths.

In the capacity calculations, a 50 percent clogging factor was used on the C-15.81 inlets because the grate openings are small and are prone to clog with debris. The C-15.75 drop inlets include an access barrier grate at the inlets to the pipes, but the bar spacing on these grates is large in comparison to the C-15.81 grates. Therefore no clogging factor was used in developing the C-15.75 rating curves.

Downdrain Pipe Analysis

The inlets and downdrain pipes were then checked using Haestad FlowMaster software, which employs the FHWA culvert equations. The purpose of these calculations was twofold: 1) to verify that the headwater elevations at the inlets would not be limited by the capacities of the pipes and 2) to compute the outlet velocities and depths for use in computing the size of the impact basin energy dissipaters as discussed below.

The downdrain culvert profiles are characterized by a steep segment at their upstream ends leading from the collector channel inlets, and a relatively flat 10- to 20-foot long segment at their outlet ends. This configuration is intended to change the flow to a more horizontal direction so it will squarely impact the hanging baffles in the energy dissipaters rather than pass under them.

To evaluate the culverts, J2 analyzed only the steep portion of the pipes. This approach is conservative because it would be expected to give higher velocities than if the flat portions were modeled along with the steep portions. This conservative approach was used since the outlet velocities and depths were used for sizing the impact basin energy dissipaters.

Hanging Baffle Impact Basin Energy Dissipaters

At the exits of the downdrain pipes, hanging baffle impact basin energy dissipaters are proposed. The design of these structures is based on methods described in the USBR publication *Design of Small Canal Structures.* This publication outlines procedures for sizing the various elements of the structures based on hydraulic parameters. J2 has created a spreadsheet to assist in performing these calculations. This spreadsheet is included in Appendix C.

Rather than create a separate energy dissipater design for each individual pipe, J2 developed a design for each individual pipe size and number of pipes. For example, the hydraulic data for all single 24 inch pipes were compiled and the most severe hydraulic conditions (highest velocity and lowest depth) were used in the energy dissipater

spreadsheet to size the appropriate structure. The same method was then used for single 30 inch pipes, single 36 inch pipes, double 36 inch pipes, and so on.

Baffle Chute Drop Structure

The existing Las Sendas Channel carries a 100-year peak discharge of 1507 cfs and will spill into the flood pool via a proposed 4-barrel 12' x 8' concrete box culvert and a proposed baffle chute drop structure. As with the hanging baffle energy dissipaters, the baffle chute was designed using methods outlined in the USBR publication *Design of Small Canal Structures.* J2 developed a spreadsheet that aids in the sizing of the chute and the baffle blocks. See Appendix C for a printout of that worksheet.

Weir Spillways

At several locations along the collector channel weir spillways are proposed to carry larger discharges into the flood pool. The spillways also serve as a positive drainage outlet in case one or more grated inlets in the collector channel become clogged with debris. The spillways have a trapezoidal weir cross section. J2 sized the weirs such that the headwater depth would be less than or equal to the available depth of flow in the incoming wash east of the collector channel. A worksheet for the hydraulic sizing of the weir spillways is provided in Appendix C.

Channel Hydraulics

The East Channel extension, the Las Sendas and the 86th Street Channels were analyzed using the U.S. Army Corps of Engineers HEC-RAS program. HEC-RAS output is provided in Appendix B.

APPENDICES

Appendix A: Hydrologic Analysis

- Rational Method Calculations
- Drainage area map

Rational Runoff Method
FCDMC Rational Method

Project:	Red Mountain Freeway: Power to University	By:	JCF
		Date:	11/17/2004
Basin:	OF-A6	Checked:	AJR
		Project No.:	H578201D (4.0031)

Storm	2-Year	5-Year	10-Year	25-Year	50-Year	100-Year	
Q =	15	21	26	36	45	52	cfs

Note:

Runoff Coefficient, C and Basin Area, A

Min Tc : 10 min (5 or 10 minutes)

Watershed Classification: LDR

	Phx	Specific	
P10-Yr 6-Hour Precipitation:	2.07	1.89	inches

Subarea	Area, A acres	Land Use/ Classification	% Cover	2-Year C	5-Year C	10-Year C	25-Year C	50-Year C	100-Year C
1	10.16	NDR	100%	0.40	0.40	0.40	0.44	0.48	0.50
2	3.5	C2	100%	0.85	0.85	0.85	0.94	0.95	0.95
3				0.00	0.00		0.00	0.00	0.00
4				0.00	0.00		0.00	0.00	0.00
5				0.00	0.00		0.00	0.00	0.00
6				0.00	0.00		0.00	0.00	0.00
7				0.00	0.00		0.00	0.00	0.00
Total:	13.6								

	2-Year	5-Year	10-Year	25-Year	50-Year	100-Year
Weighted C =	0.51	0.51	0.51	0.57	0.60	0.61

Time of Concentration, Tc / Rainfall intensity, i

Note: Minimum Tc = 10 min

	2-Year	5-Year	10-Year	25-Year	50-Year	100-Year	
Rainfall intensity for Tc = 10 minutes =	2.55	3.53	4.18	5.10	5.80	6.50	in/hour

Tc is a function of intensity and vice-versa thus solution is iterative.

1) Longest flowpath length: L, and slope, S

Segment	Length, d, ft	Elevation, ft High Pt.	Low Pt.	Change, H	Slope, ft/ft	(d^3/H)^1/2
1	926	123.0	100.0	23.0	0.025	5876
2				0.0		0
3				0.0		0
4				0.0		0
5				0.0		0
d_T =	926		Sum =	23		j = 5876

L, miles = d_T/5280 = 0.175 miles

S, ft/mi = 5280(d_T/j)^2 = 131.1 ft/mi 0.0248 ft/ft

Corr. S, ft/mi = 5280(d_T/j)^2 = 131.1 ft/mi (See Figure 5.4)

2) Roughness Coefficient, Kb (Table 3.1)

Landform: Undeveloped desert

Runoff Character: Medium to high

Type C A-D Refer to Table 3.1

m -0.025

b 0.15

Kb = 0.1216

User Specified Kb = _____ (If a number is used this overrides the calculated value in calculations)

A=Min rough
B=Mod rough
C=Mod high rough
D=Max rough

3) Tc / i iteration:

	2-Year	5-Year	10-Year	25-Year	50-Year	100-Year	
Assume Tc:	16.03	13.85	12.83	11.75	11.10	10.59	minutes
Try i:	2.07	3.04	3.71	4.68	5.44	6.15	inches/hour
Calc Tc:	0.27	0.23	0.21	0.20	0.18	0.18	hours
Calc Tc:	16.03	13.85	12.83	11.75	11.10	10.59	minutes
Min Tc :	10	10	10	10	10	10	
Final i =	**2.07**	**3.04**	**3.71**	**4.68**	**5.44**	**6.15**	inches/hour

Note: ** If Calculated Tc was less than 5 minutes use 5-minute rainfall intensity

Discharge Q

	2-Year	5-Year	10-Year	25-Year	50-Year	100-Year	
C	0.51	0.51	0.51	0.57	0.60	0.61	
i	2.07	3.04	3.71	4.68	5.44	6.15	inches/hour
A	13.6	13.6	13.6	13.6	13.6	13.6	acre
Add. Q							
Q = CiA	**14.5**	**21.3**	**26.1**	**36.1**	**44.5**	**51.6**	cfs
Q/A ratio =	1.1	1.6	1.9	2.6	3.3	3.8	cfs/ac

Rational Runoff Method
FCDMC Rational Method

Project:	Red Mountain Freeway: Power to University	By:	DVD
		Date:	11/15/2004
Basin:	OF-A5	Checked:	AJR
		Project No.:	H578201D (4.0031)

Storm	2-Year	5-Year	10-Year	25-Year	50-Year	100-Year	
Q =	12	17	21	29	35	40	cfs

Note:

Runoff Coefficient, C and Basin Area, A

Min Tc : 10 min (5 or 10 minutes)

Watershed Classification: LDR

	Phx	Specific	
P10-Yr 6-Hour Precipitation:	2.07	1.89	inches

Subarea	Area, A acres	Land Use/ Classification	% Cover	2-Year C	5-Year C	10-Year C	25-Year C	50-Year C	100-Year C
1	2.81	NDR	100%	0.40	0.40	0.40	0.44	0.48	0.50
2	5.7	C2	100%	0.85	0.85	0.85	0.94	0.95	0.95
3				0.00	0.00		0.00	0.00	0.00
4				0.00	0.00		0.00	0.00	0.00
5				0.00	0.00		0.00	0.00	0.00
6				0.00	0.00		0.00	0.00	0.00
7				0.00	0.00		0.00	0.00	0.00
Total:	8.5								

	2-Year	5-Year	10-Year	25-Year	50-Year	100-Year
Weighted C =	0.70	0.70	0.70	0.77	0.79	0.80

Time of Concentration, Tc / Rainfall intensity, i

Note: Minimum Tc = 10 min

	2-Year	5-Year	10-Year	25-Year	50-Year	100-Year	
Rainfall intensity for Tc = 10 minutes =	2.55	3.53	4.18	5.10	5.80	6.50	in/hour

Tc is a function of intensity and vice-versa thus solution is iterative.

1) Longest flowpath length: L, and slope, S

Segment	Length, d, ft	Elevation, ft High Pt.	Elevation, ft Low Pt.	Change, H	Slope, ft/ft	(d^3/H)^1/2
1	1035	124.0	100.0	24.0	0.023	6797
2				0.0		0
3				0.0		0
4				0.0		0
5				0.0		0
d_T =	1035		Sum =	24		j = 6797

L, miles = d_T/5280 = 0.196 miles

S, ft/mi = 5280(d_T/j)^2 = 122.4 ft/mi 0.0232 ft/ft

Corr. S, ft/mi = 5280(d_T/j)^2 = 122.4 ft/mi (See Figure 5.4)

2) Roughness Coefficient, Kb (Table 3.1)

Landform: Undeveloped desert

Runoff Character: Medium to high

Type C A-D Refer to Table 3.1

m -0.025

b 0.15

Kb = 0.1268

User Specified Kb = (If a number is used this overrides the calculated value in calculations)

A=Min rough
B=Mod rough
C=Mod high rough
D=Max rough

3) Tc / i iteration:

	2-Year	5-Year	10-Year	25-Year	50-Year	100-Year	
Assume Tc:	18.16	15.61	14.44	13.22	12.48	11.89	minutes
Try i:	1.93	2.87	3.52	4.45	5.18	5.87	inches/hour
Calc Tc:	0.30	0.26	0.24	0.22	0.21	0.20	hours
Calc Tc:	18.16	15.61	14.44	13.22	12.48	11.89	minutes
Min Tc :	10	10	10	10	10	10	
Final i =	**1.93**	**2.87**	**3.52**	**4.45**	**5.18**	**5.87**	inches/hour

Note: ** If Calculated Tc was less than 5 minutes use 5-minute rainfall intensity

Discharge Q

	2-Year	5-Year	10-Year	25-Year	50-Year	100-Year	
C	0.70	0.70	0.70	0.77	0.79	0.80	
i	1.93	2.87	3.52	4.45	5.18	5.87	inches/hour
A	8.5	8.5	8.5	8.5	8.5	8.5	acre
Add. Q							
Q = CiA	**11.5**	**17.1**	**21.0**	**29.2**	**35.0**	**40.1**	cfs
Q/A ratio =	1.4	2.0	2.5	3.4	4.1	4.7	cfs/ac

Rational Runoff Method
FCDMC Rational Method

Project: Red Mountain Freeway: Power to University
By: DVD
Date: 11/15/2004
Basin: OF-A4
Checked: AJR
Project No.: H578201D (4.0031)

Storm	2-Year	5-Year	10-Year	25-Year	50-Year	100-Year	
Q =	6	9	11	15	18	21	cfs

Note:

Runoff Coefficient, C and Basin Area, A

Min Tc : 10 min (5 or 10 minutes)
Watershed Classification: LDR

	Phx	Specific	
P10-Yr 6-Hour Precipitation:	2.07	1.89	inches

Subarea	Area, A acres	Land Use/ Classification	% Cover	2-Year C	5-Year C	10-Year C	25-Year C	50-Year C	100-Year C
1	1.54	NDR	100%	0.40	0.40	0.40	0.44	0.48	0.50
2	3.0	C2	100%	0.85	0.85	0.85	0.94	0.95	0.95
3				0.00	0.00		0.00	0.00	0.00
4				0.00	0.00		0.00	0.00	0.00
5				0.00	0.00		0.00	0.00	0.00
6				0.00	0.00		0.00	0.00	0.00
7				0.00	0.00		0.00	0.00	0.00
Total:	4.5								

	2-Year	5-Year	10-Year	25-Year	50-Year	100-Year
Weighted **C** =	**0.70**	**0.70**	**0.70**	**0.77**	**0.79**	**0.80**

Time of Concentration, Tc / Rainfall intensity, i

Note:		2-Year	5-Year	10-Year	25-Year	50-Year	100-Year	
	Minimum Tc = 10 min							
	Rainfall intensity for Tc = 10 minutes =	**2.55**	**3.53**	**4.18**	**5.10**	**5.80**	**6.50**	in/hour

Tc is a function of intensity and vice-versa thus solution is iterative.

1) Longest flowpath length: L, and slope, S

Segment	Length, d, ft	Elevation, ft			Slope, ft/ft	(d^3/H)^1/2
		High Pt.	Low Pt.	Change, H		
1	1050	124.0	100.0	24.0	0.023	6945
2				0.0		0
3				0.0		0
4				0.0		0
5				0.0		0
d_T =	1050		Sum =	24		j = 6945

L, miles = d_T/5280 = 0.199 miles
S, ft/mi = 5280(d_T/j)^2 = 120.7 ft/mi 0.0229 ft/ft
Corr. S, ft/mi = 5280(d_T/j)^2 = 120.7 ft/mi (See Figure 5.4)

2) Roughness Coefficient, Kb (Table 3.1)

Landform: Undeveloped desert
Runoff Character: Medium to high

Type C A-D Refer to Table 3.1
m -0.025
b 0.15
Kb = 0.1337
User Specified Kb = (If a number is used this overrides the calculated value in calculations)

A=Min rough
B=Mod rough
C=Mod high rough
D=Max rough

3) Tc / i iteration:

	2-Year	5-Year	10-Year	25-Year	50-Year	100-Year	
Assume Tc:	19.09	16.39	15.14	13.86	13.08	12.46	minutes
Try i:	1.88	2.80	3.45	4.36	5.07	5.76	inches/hour
Calc Tc:	0.32	0.27	0.25	0.23	0.22	0.21	hours
Calc Tc:	19.09	16.39	15.14	13.86	13.08	12.46	minutes
Min Tc :	10	10	10	10	10	10	
Final **i** =	**1.88**	**2.80**	**3.45**	**4.36**	**5.07**	**5.76**	inches/hour

Note: ** If Calculated Tc was less than 5 minutes use 5-minute rainfall intensity

Discharge Q

	2-Year	5-Year	10-Year	25-Year	50-Year	100-Year	
C	0.70	0.70	0.70	0.77	0.79	0.80	
i	1.88	2.80	3.45	4.36	5.07	5.76	inches/hour
A	4.5	4.5	4.5	4.5	4.5	4.5	acre
Add. Q							
Q = CiA	**5.9**	**8.8**	**10.8**	**15.0**	**18.0**	**20.6**	cfs
Q/A ratio =	1.3	2.0	2.4	3.3	4.0	4.6	cfs/ac

Rational Runoff Method
FCDMC Rational Method

Project:	Red Mountain Freeway: Power to University	By:	DVD
		Date:	11/15/2004
Basin:	OF-A3	Checked:	AJR
		Project No.:	H578201D (4.0031)

Storm	2-Year	5-Year	10-Year	25-Year	50-Year	100-Year	
Q =	6	9	11	15	20	23	cfs

Note:

Runoff Coefficient, C and Basin Area, A

Min Tc : 10 min (5 or 10 minutes)

Watershed Classification: LDR

	Phx	Specific	
P10-Yr 6-Hour Precipitation:	2.07	1.89	inches

Subarea	Area, A acres	Land Use/ Classification	% Cover	2-Year C	5-Year C	10-Year C	25-Year C	50-Year C	100-Year C
1	8.03	NDR	100%	0.40	0.40	0.40	0.44	0.48	0.50
2				0.00	0.00		0.00	0.00	0.00
3				0.00	0.00		0.00	0.00	0.00
4				0.00	0.00		0.00	0.00	0.00
5				0.00	0.00		0.00	0.00	0.00
6				0.00	0.00		0.00	0.00	0.00
7				0.00	0.00		0.00	0.00	0.00
Total:	8.0								

	2-Year	5-Year	10-Year	25-Year	50-Year	100-Year
Weighted **C** =	0.40	0.40	0.40	0.44	0.48	0.50

Time of Concentration, Tc / Rainfall intensity, i

Note: Minimum Tc = 10 min

	2-Year	5-Year	10-Year	25-Year	50-Year	100-Year	
Rainfall intensity for Tc = 10 minutes =	2.55	3.53	4.18	5.10	5.80	6.50	in/hour

Tc is a function of intensity and vice-versa thus solution is iterative.

1) Longest flowpath length: L, and slope, S

Segment	Length, d, ft	Elevation, ft High Pt.	Low Pt.	Change, H	Slope, ft/ft	(d^3/H)^1/2
1	1115	126.0	100.0	26.0	0.023	7302
2				0.0		0
3				0.0		0
4				0.0		0
5				0.0		0
d_T =	1115		Sum =	26		j = 7302

L, miles = d_T/5280 = 0.211 miles

S, ft/mi = 5280(d_T/j)^2 = 123.1 ft/mi 0.0233 ft/ft

Corr. S, ft/mi = 5280(d_T/j)^2 = 123.1 ft/mi (See Figure 5.4)

2) Roughness Coefficient, Kb (Table 3.1)

Landform: Undeveloped desert

Runoff Character: Medium to high

Type C A-D Refer to Table 3.1

m -0.025

b 0.15

Kb = 0.1274

User Specified Kb = (If a number is used this overrides the calculated value in calculations)

A=Min rough
B=Mod rough
C=Mod high rough
D=Max rough

3) Tc / i iteration:

	2-Year	5-Year	10-Year	25-Year	50-Year	100-Year	
Assume Tc:	19.06	16.36	15.12	13.84	13.06	12.44	minutes
Try i:	1.88	2.81	3.45	4.36	5.07	5.77	inches/hour
Calc Tc:	0.32	0.27	0.25	0.23	0.22	0.21	hours
Calc Tc:	19.06	16.36	15.12	13.84	13.06	12.44	minutes
Min Tc :	10	10	10	10	10	10	
Final **i** =	**1.88**	**2.81**	**3.45**	**4.36**	**5.07**	**5.77**	inches/hour

Note: ** If Calculated Tc was less than 5 minutes use 5-minute rainfall intensity

Discharge Q

	2-Year	5-Year	10-Year	25-Year	50-Year	100-Year	
C	0.40	0.40	0.40	0.44	0.48	0.50	
i	1.88	2.81	3.45	4.36	5.07	5.77	inches/hour
A	8.0	8.0	8.0	8.0	8.0	8.0	acre
Add. Q							
Q = CiA	**6.0**	**9.0**	**11.1**	**15.4**	**19.6**	**23.2**	cfs
Q/A ratio =	0.8	1.1	1.4	1.9	2.4	2.9	cfs/ac

Rational Runoff Method
FCDMC Rational Method

Project:	Red Mountain Freeway: Power to University	By:	DVD
		Date:	11/15/2004
Basin:	OF-A2	Checked:	AJR
		Project No.:	H578201D (4.0031)

Storm	2-Year	5-Year	10-Year	25-Year	50-Year	100-Year	
Q =	13	19	23	32	41	49	cfs

Note:

Runoff Coefficient, C and Basin Area, A

Min Tc : 10 min (5 or 10 minutes)

Watershed Classification: LDR

	Phx	Specific	
P10-Yr 6-Hour Precipitation:	2.07	1.89	inches

Subarea	Area, A acres	Land Use/ Classification	% Cover	2-Year C	5-Year C	10-Year C	25-Year C	50-Year C	100-Year C
1	17.50	NDR	100%	0.40	0.40	0.40	0.44	0.48	0.50
2				0.00	0.00		0.00	0.00	0.00
3				0.00	0.00		0.00	0.00	0.00
4				0.00	0.00		0.00	0.00	0.00
5				0.00	0.00		0.00	0.00	0.00
6				0.00	0.00		0.00	0.00	0.00
7				0.00	0.00		0.00	0.00	0.00
Total:	**17.5**								

	2-Year	5-Year	10-Year	25-Year	50-Year	100-Year
Weighted C =	**0.40**	**0.40**	**0.40**	**0.44**	**0.48**	**0.50**

Time of Concentration, Tc / Rainfall intensity, i

Note: Minimum Tc = 10 min

	2-Year	5-Year	10-Year	25-Year	50-Year	100-Year	
Rainfall intensity for Tc = 10 minutes =	**2.55**	**3.53**	**4.18**	**5.10**	**5.80**	**6.50**	in/hour

Tc is a function of intensity and vice-versa thus solution is iterative.

1) Longest flowpath length: L, and slope, S

Segment	Length, d, ft	Elevation, ft			Slope, ft/ft	(d^3/H)^1/2
		High Pt.	Low Pt.	Change, H		
1	1420	136.0	100.0	36.0	0.025	8918
2				0.0		0
3				0.0		0
4				0.0		0
5				0.0		0
d_T =	1420		Sum =	36		j = 8918

L, miles = $d_T/5280$ = 0.269 miles

S, ft/mi = $5280(d_T/j)^2$ = 133.9 ft/mi 0.0254 ft/ft

Corr. S, ft/mi = $5280(d_T/j)^2$ = 133.9 ft/mi (See Figure 5.4)

2) Roughness Coefficient, Kb (Table 3.1)

Landform: Undeveloped desert

Runoff Character: Medium to high

Type C A-D Refer to Table 3.1

m -0.025

b 0.15

Kb = 0.1189

User Specified Kb = _____ (If a number is used this overrides the calculated value in calculations)

A=Min rough
B=Mod rough
C=Mod high rough
D=Max rough

3) Tc / i iteration:

	2-Year	5-Year	10-Year	25-Year	50-Year	100-Year	
Assume Tc:	20.57	17.61	16.26	14.87	14.03	13.35	minutes
Try i:	1.80	2.70	3.33	4.22	4.91	5.60	inches/hour
Calc Tc:	0.34	0.29	0.27	0.25	0.23	0.22	hours
Calc Tc:	20.57	17.61	16.26	14.87	14.03	13.35	minutes
Min Tc :	10	10	10	10	10	10	
Final **i** =	**1.80**	**2.70**	**3.33**	**4.22**	**4.91**	**5.60**	inches/hour

Note: ** If Calculated Tc was less than 5 minutes use 5-minute rainfall intensity

Discharge Q

	2-Year	5-Year	10-Year	25-Year	50-Year	100-Year	
C	0.40	0.40	0.40	0.44	0.48	0.50	
i	1.80	2.70	3.33	4.22	4.91	5.60	inches/hour
A	17.5	17.5	17.5	17.5	17.5	17.5	acre
Add. Q							
Q = CiA	**12.6**	**18.9**	**23.3**	**32.5**	**41.3**	**49.0**	cfs
Q/A ratio =	0.7	1.1	1.3	1.9	2.4	2.8	cfs/ac

Rational Runoff Method
FCDMC Rational Method

Project:	Red Mountain Freeway: Power to University	By:	DVD
		Date:	11/15/2004
Basin:	OF-A1	Checked:	AJR
		Project No.:	H578201D (4.0031)

Storm	2-Year	5-Year	10-Year	25-Year	50-Year	100-Year	
Q =	11	16	20	28	36	43	cfs

Note:

Runoff Coefficient, C and Basin Area, A

Min Tc : 10 min (5 or 10 minutes)

Watershed Classification: LDR

	Phx	Specific	
P10-Yr 6-Hour Precipitation:	2.07	1.89	inches

Subarea	Area, A acres	Land Use/ Classification	% Cover	2-Year C	5-Year C	10-Year C	25-Year C	50-Year C	100-Year C
1	16.04	NDR	100%	0.40	0.40	0.40	0.44	0.48	0.50
2				0.00	0.00		0.00	0.00	0.00
3				0.00	0.00		0.00	0.00	0.00
4				0.00	0.00		0.00	0.00	0.00
5				0.00	0.00		0.00	0.00	0.00
6				0.00	0.00		0.00	0.00	0.00
7				0.00	0.00		0.00	0.00	0.00
Total:	16.0								

	2-Year	5-Year	10-Year	25-Year	50-Year	100-Year
Weighted C =	0.40	0.40	0.40	0.44	0.48	0.50

Time of Concentration, Tc / Rainfall intensity, i

Note: Minimum Tc = 10 min

	2-Year	5-Year	10-Year	25-Year	50-Year	100-Year	
Rainfall intensity for Tc = 10 minutes =	2.55	3.53	4.18	5.10	5.80	6.50	in/hour

Tc is a function of intensity and vice-versa thus solution is iterative.

1) Longest flowpath length: L, and slope, S

Segment	Length, d, ft	Elevation, ft High Pt.	Low Pt.	Change, H	Slope, ft/ft	(d^3/H)^1/2
1	1710	144.0	100.0	44.0	0.026	10660
2				0.0		0
3				0.0		0
4				0.0		0
5				0.0		0
d_T =	1710		Sum =	44		j = 10660

L, miles = d_T/5280 = 0.324 miles

S, ft/mi = 5280(d_T/j)^2 = 135.9 ft/mi 0.0257 ft/ft

Corr. S, ft/mi = 5280(d_T/j)^2 = 135.9 ft/mi (See Figure 5.4)

2) Roughness Coefficient, Kb (Table 3.1)

Landform: Undeveloped desert

Runoff Character: Medium to high

Type C A-D Refer to Table 3.1

m -0.025

b 0.15

Kb = 0.1199

User Specified Kb = (If a number is used this overrides the calculated value in calculations)

A=Min rough
B=Mod rough
C=Mod high rough
D=Max rough

3) Tc / i iteration:

	2-Year	5-Year	10-Year	25-Year	50-Year	100-Year	
Assume Tc:	23.18	19.77	18.22	16.64	15.70	14.91	minutes
Try i:	1.67	2.54	3.15	4.00	4.66	5.34	inches/hour
Calc Tc:	0.39	0.33	0.30	0.28	0.26	0.25	hours
Calc Tc:	23.18	19.77	18.22	16.64	15.70	14.91	minutes
Min Tc :	10	10	10	10	10	10	
Final **i** =	**1.67**	**2.54**	**3.15**	**4.00**	**4.66**	**5.34**	inches/hour

Note: ** If Calculated Tc was less than 5 minutes use 5-minute rainfall intensity

Discharge Q

	2-Year	5-Year	10-Year	25-Year	50-Year	100-Year	
C	0.40	0.40	0.40	0.44	0.48	0.50	
i	1.67	2.54	3.15	4.00	4.66	5.34	inches/hour
A	16.0	16.0	16.0	16.0	16.0	16.0	acre
Add. Q							
Q = CiA	**10.7**	**16.3**	**20.2**	**28.2**	**35.9**	**42.8**	cfs
Q/A ratio =	0.7	1.0	1.3	1.8	2.2	2.7	cfs/ac

Rational Runoff Method
FCDMC Rational Method

Project:	Red Mountain Freeway: Power to University	By:	DVD
		Date:	11/15/2004
Basin:	OF-C6	Checked:	AJR
		Project No.:	H578201D (4.0031)

Storm	2-Year	5-Year	10-Year	25-Year	50-Year	100-Year	
Q =	3	4	5	7	9	11	cfs

Note:

Runoff Coefficient, C and Basin Area, A

Min Tc: 10 min (5 or 10 minutes)

Watershed Classification: NDR

	Phx	Specific	
P10-Yr 6-Hour Precipitation:	2.07	1.89	inches

Subarea	Area, A acres	Land Use/ Classification	% Cover	2-Year C	5-Year C	10-Year C	25-Year C	50-Year C	100-Year C
1	3.68	NDR	100%	0.40	0.40	0.40	0.44	0.48	0.50
2				0.00	0.00		0.00	0.00	0.00
3				0.00	0.00		0.00	0.00	0.00
4				0.00	0.00		0.00	0.00	0.00
5				0.00	0.00		0.00	0.00	0.00
6				0.00	0.00		0.00	0.00	0.00
7				0.00	0.00		0.00	0.00	0.00
Total:	3.7								

	2-Year	5-Year	10-Year	25-Year	50-Year	100-Year
Weighted C =	0.40	0.40	0.40	0.44	0.48	0.50

Time of Concentration, Tc / Rainfall intensity, i

Note: Minimum Tc = 10 min

	2-Year	5-Year	10-Year	25-Year	50-Year	100-Year	
Rainfall intensity for Tc = 10 minutes =	2.55	3.53	4.18	5.10	5.80	6.50	in/hour

Tc is a function of intensity and vice-versa thus solution is iterative.

1) Longest flowpath length: L, and slope, S

Segment	Length, d, ft	Elevation, ft			Slope, ft/ft	(d^3/H)^1/2
		High Pt.	Low Pt.	Change, H		
1	775	114.0	100.0	14.0	0.018	5766
2				0.0		0
3				0.0		0
4				0.0		0
5				0.0		0
d_T =	775		Sum =	14		j = 5766

L, miles = d_T/5280 = 0.147 miles

S, ft/mi = 5280(d_T/j)^2 = 95.4 ft/mi 0.0181 ft/ft

Corr. S, ft/mi = 5280(d_T/j)^2 = 95.4 ft/mi (See Figure 5.4)

2) Roughness Coefficient, Kb (Table 3.1)

Landform: Undeveloped desert

Runoff Character: Medium to high

Type C A-D Refer to Table 3.1

m -0.025

b 0.15

Kb = 0.1359

User Specified Kb = (If a number is used this overrides the calculated value in calculations)

A=Min rough
B=Mod rough
C=Mod high rough
D=Max rough

3) Tc / i iteration:

	2-Year	5-Year	10-Year	25-Year	50-Year	100-Year	
Assume Tc:	17.45	15.03	13.91	12.73	12.02	11.46	minutes
Try i:	1.97	2.92	3.59	4.52	5.26	5.96	inches/hour
Calc Tc:	0.29	0.25	0.23	0.21	0.20	0.19	hours
Calc Tc:	17.45	15.03	13.91	12.73	12.02	11.46	minutes
Min Tc:	10	10	10	10	10	10	
Final i =	**1.97**	**2.92**	**3.59**	**4.52**	**5.26**	**5.96**	inches/hour

Note: ** If Calculated Tc was less than 5 minutes use 5-minute rainfall intensity

Discharge Q

	2-Year	5-Year	10-Year	25-Year	50-Year	100-Year	
C	0.40	0.40	0.40	0.44	0.48	0.50	
i	1.97	2.92	3.59	4.52	5.26	5.96	inches/hour
A	3.7	3.7	3.7	3.7	3.7	3.7	acre
Add. Q							
Q = CiA	**2.9**	**4.3**	**5.3**	**7.3**	**9.3**	**11.0**	cfs
Q/A ratio =	0.8	1.2	1.4	2.0	2.5	3.0	cfs/ac

Rational Runoff Method
FCDMC Rational Method

Project:	Red Mountain Freeway: Power to University	By:	DVD
		Date:	11/15/2004
Basin:	OF-C5	Checked:	AJR
		Project No.:	H578201D (4.0031)

Storm	2-Year	5-Year	10-Year	25-Year	50-Year	100-Year	
Q =	14	22	28	40	52	64	cfs

Note:

Runoff Coefficient, C and Basin Area, A

Min Tc : 10 min (5 or 10 minutes)

Watershed Classification: NDR

	Phx	Specific	
P10-Yr 6-Hour Precipitation:	2.07	1.89	inches

Subarea	Area, A acres	Land Use/ Classification	% Cover	2-Year C	5-Year C	10-Year C	25-Year C	50-Year C	100-Year C
1	34.84	NDR	100%	0.40	0.40	0.40	0.44	0.48	0.50
2				0.00	0.00		0.00	0.00	0.00
3				0.00	0.00		0.00	0.00	0.00
4				0.00	0.00		0.00	0.00	0.00
5				0.00	0.00		0.00	0.00	0.00
6				0.00	0.00		0.00	0.00	0.00
7				0.00	0.00		0.00	0.00	0.00
Total:	**34.8**								

	2-Year	5-Year	10-Year	25-Year	50-Year	100-Year
Weighted **C** =	**0.40**	**0.40**	**0.40**	**0.44**	**0.48**	**0.50**

Time of Concentration, Tc / Rainfall intensity, i

Note: Minimum Tc = 10 min

	2-Year	5-Year	10-Year	25-Year	50-Year	100-Year	
Rainfall intensity for Tc = 10 minutes =	**2.55**	**3.53**	**4.18**	**5.10**	**5.80**	**6.50**	in/hour

Tc is a function of intensity and vice-versa thus solution is iterative.

1) Longest flowpath length: L, and slope, S

Segment	Length, d, ft	Elevation, ft			Slope, ft/ft	(d^3/H)^1/2
		High Pt.	Low Pt.	Change, H		
1	4890	200.0	100.0	100.0	0.020	34195
2				0.0		0
3				0.0		0
4				0.0		0
5				0.0		0
d_T =	4890		Sum =	100		j = 34195

L, miles = d_T/5280 = 0.926 miles

S, ft/mi = 5280(d_T/j)^2 = 108.0 ft/mi 0.0204 ft/ft

Corr. S, ft/mi = 5280(d_T/j)^2 = 108.0 ft/mi (See Figure 5.4)

2) Roughness Coefficient, Kb (Table 3.1)

Landform: Undeveloped desert

Runoff Character: Medium to high

Type C A-D Refer to Table 3.1

m -0.025

b 0.15

Kb = 0.1114

User Specified Kb = _____ (If a number is used this overrides the calculated value in calculations)

A=Min rough
B=Mod rough
C=Mod high rough
D=Max rough

3) Tc / i iteration:

	2-Year	5-Year	10-Year	25-Year	50-Year	100-Year	
Assume Tc:	49.53	41.30	37.66	34.07	31.95	30.05	minutes
Try i:	0.99	1.59	2.03	2.64	3.13	3.67	inches/hour
Calc Tc:	0.83	0.69	0.63	0.57	0.53	0.50	hours
Calc Tc:	49.53	41.30	37.66	34.07	31.95	30.05	minutes
Min Tc :	10	10	10	10	10	10	
Final **i** =	**0.99**	**1.59**	**2.03**	**2.64**	**3.13**	**3.67**	inches/hour

Note: ** If Calculated Tc was less than 5 minutes use 5-minute rainfall intensity

Discharge Q

	2-Year	5-Year	10-Year	25-Year	50-Year	100-Year	
C	0.40	0.40	0.40	0.44	0.48	0.50	
i	0.99	1.59	2.03	2.64	3.13	3.67	inches/hour
A	34.8	34.8	34.8	34.8	34.8	34.8	acre
Add. Q							
Q = CiA	**13.7**	**22.2**	**28.3**	**40.5**	**52.3**	**64.0**	cfs
Q/A ratio =	0.4	0.6	0.8	1.2	1.5	1.8	cfs/ac

Rational Runoff Method
FCDMC Rational Method

Project:	Red Mountain Freeway: Power to University	By:	DVD
		Date:	11/15/2004
Basin:	OF-C4	Checked:	AJR
		Project No.:	H578201D (4.0031)

Storm	2-Year	5-Year	10-Year	25-Year	50-Year	100-Year	
Q =	11	17	21	30	38	45	cfs

Note:

Runoff Coefficient, C and Basin Area, A

Min Tc: 10 min (5 or 10 minutes)

Watershed Classification: VLDR

	Phx	Specific	
P10-Yr 6-Hour Precipitation:	2.07	1.89	inches

Subarea	Area, A acres	Land Use/ Classification	% Cover	2-Year C	5-Year C	10-Year C	25-Year C	50-Year C	100-Year C
1	5.03	MDR	100%	0.65	0.65	0.65	0.72	0.78	0.81
2	10.05	NDR	100%	0.40	0.40	0.40	0.44	0.48	0.50
3				0.00	0.00		0.00	0.00	0.00
4				0.00	0.00		0.00	0.00	0.00
5				0.00	0.00		0.00	0.00	0.00
6				0.00	0.00		0.00	0.00	0.00
7				0.00	0.00		0.00	0.00	0.00
Total:	**15.1**								

	2-Year	5-Year	10-Year	25-Year	50-Year	100-Year
Weighted **C** =	**0.48**	**0.48**	**0.48**	**0.53**	**0.58**	**0.60**

Time of Concentration, Tc / Rainfall intensity, i

Note: Minimum Tc = 10 min

	2-Year	5-Year	10-Year	25-Year	50-Year	100-Year	
Rainfall intensity for Tc = 10 minutes =	**2.55**	**3.53**	**4.18**	**5.10**	**5.80**	**6.50**	in/hour

Tc is a function of intensity and vice-versa thus solution is iterative.

1) Longest flowpath length: L, and slope, S

Segment	Length, d, ft	Elevation, ft			Slope, ft/ft	(d^3/H)^1/2
		High Pt.	Low Pt.	Change, H		
1	1880	138.0	100.0	38.0	0.020	13223
2				0.0		0
3				0.0		0
4				0.0		0
5				0.0		0
d_T =	1880		Sum =	38		j = 13223

L, miles = $d_T/5280$ = 0.356 miles

S, ft/mi = $5280(d_T/j)^2$ = 106.7 ft/mi 0.0202 ft/ft

Corr. S, ft/mi = $5280(d_T/j)^2$ = 106.7 ft/mi (See Figure 5.4)

2) Roughness Coefficient, Kb (Table 3.1)

Landform: Undeveloped Desert

Runoff Character: Medium to high

Type C A-D Refer to Table 3.1

m -0.025

b 0.15

Kb = 0.1205

User Specified Kb = _____ (If a number is used this overrides the calculated value in calculations)

A=Min rough
B=Mod rough
C=Mod high rough
D=Max rough

3) Tc / i iteration:

	2-Year	5-Year	10-Year	25-Year	50-Year	100-Year	
Assume Tc:	27.34	23.18	21.31	19.44	18.32	17.36	minutes
Try i:	1.51	2.32	2.90	3.69	4.31	4.98	inches/hour
Calc Tc:	0.46	0.39	0.36	0.32	0.31	0.29	hours
Calc Tc:	27.34	23.18	21.31	19.44	18.32	17.36	minutes
Min Tc:	10	10	10	10	10	10	
Final **i** =	**1.51**	**2.32**	**2.90**	**3.69**	**4.31**	**4.98**	inches/hour

Note: ** If Calculated Tc was less than 5 minutes use 5-minute rainfall intensity

Discharge Q

	2-Year	5-Year	10-Year	25-Year	50-Year	100-Year	
C	0.48	0.48	0.48	0.53	0.58	0.60	
i	1.51	2.32	2.90	3.69	4.31	4.98	inches/hour
A	15.1	15.1	15.1	15.1	15.1	15.1	acre
Add. Q							
Q = CIA	**11.0**	**16.9**	**21.1**	**29.6**	**37.7**	**45.3**	cfs
Q/A ratio =	0.7	1.1	1.4	2.0	2.5	3.0	cfs/ac

Rational Runoff Method
FCDMC Rational Method

Project:	Red Mountain Freeway: Power to University	By:	DVD
		Date:	11/15/2004
Basin:	OF-C3	Checked:	AJR
		Project No.:	H578201D (4.0031)

Storm	2-Year	5-Year	10-Year	25-Year	50-Year	100-Year	
Q =	18	25	29	39	48	56	cfs

Note:

Runoff Coefficient, C and Basin Area, A

Min Tc : 10 min (5 or 10 minutes)

Watershed Classification: VLDR

	Phx	Specific	
P10-Yr 6-Hour Precipitation:	2.07	1.89	inches

Subarea	Area, A acres	Land Use/ Classification	% Cover	2-Year C	5-Year C	10-Year C	25-Year C	50-Year C	100-Year C
1	7.56	MDR	100%	0.65	0.65	0.65	0.72	0.78	0.81
2	5.4	NDR	100%	0.40	0.40	0.40	0.44	0.48	0.50
3				0.00	0.00		0.00	0.00	0.00
4				0.00	0.00		0.00	0.00	0.00
5				0.00	0.00		0.00	0.00	0.00
6				0.00	0.00		0.00	0.00	0.00
7				0.00	0.00		0.00	0.00	0.00
Total:	13.0								

	2-Year	5-Year	10-Year	25-Year	50-Year	100-Year
Weighted C =	0.55	0.55	0.55	0.60	0.66	0.68

Time of Concentration, Tc / Rainfall intensity, i

Note: Minimum Tc = 10 min

	2-Year	5-Year	10-Year	25-Year	50-Year	100-Year	
Rainfall intensity for Tc = 10 minutes =	2.55	3.53	4.18	5.10	5.80	6.50	in/hour

Tc is a function of intensity and vice-versa thus solution is iterative.

1) Longest flowpath length: L, and slope, S

Segment	Length, d, ft	Elevation, ft High Pt.	Low Pt.	Change, H	Slope, ft/ft	(d^3/H)^1/2
1	1430	128.0	100.0	28.0	0.020	10219
2				0.0		0
3				0.0		0
4				0.0		0
5				0.0		0
d_T =	1430		Sum =	28		j = 10219

L, miles = $d_T/5280$ = 0.271 miles

S, ft/mi = $5280(d_T/j)^2$ = 103.4 ft/mi 0.0196 ft/ft

Corr. S, ft/mi = $5280(d_T/j)^2$ = 103.4 ft/mi (See Figure 5.4)

2) Roughness Coefficient, Kb (Table 3.1)

Landform: Low Density Residential

Runoff Character: Low

Type A A-D Refer to Table 3.1

A=Min rough
B=Mod rough
C=Mod high rough
D=Max rough

m -0.00625

b 0.04

Kb = 0.0330

User Specified Kb = (If a number is used this overrides the calculated value in calculations)

3) Tc / i iteration:

	2-Year	5-Year	10-Year	25-Year	50-Year	100-Year	
Assume Tc:	10.00	10.00	10.00	10.00	10.00	10.00	minutes
Try i:	2.61	3.50	4.11	5.00	5.68	6.29	inches/hour
Calc Tc:	0.17	0.17	0.17	0.17	0.17	0.17	hours
Calc Tc:	10.00	10.00	10.00	10.00	10.00	10.00	minutes
Min Tc :	10	10	10	10	10	10	
Final i =	**2.61**	**3.50**	**4.11**	**5.00**	**5.68**	**6.29**	inches/hour

Note: ** If Calculated Tc was less than 5 minutes use 5-minute rainfall intensity

Discharge Q

	2-Year	5-Year	10-Year	25-Year	50-Year	100-Year	
C	0.55	0.55	0.55	0.60	0.66	0.68	
i	2.61	3.50	4.11	5.00	5.68	6.29	inches/hour
A	13.0	13.0	13.0	13.0	13.0	13.0	acre
Add. Q							
Q = CiA	**18.4**	**24.7**	**29.1**	**38.9**	**48.1**	**55.6**	cfs
Q/A ratio =	1.4	1.9	2.2	3.0	3.7	4.3	cfs/ac

Rational Runoff Method
FCDMC Rational Method

Project: Red Mountain Freeway: Power to University
Basin: OF-C2

By: DVD
Date: 11/15/2004
Checked: AJR
Project No.: H578201D (4.0031)

Storm	2-Year	5-Year	10-Year	25-Year	50-Year	100-Year	
Q =	10	13	15	20	25	29	cfs

Note:

Runoff Coefficient, C and Basin Area, A

Min Tc : 10 min (5 or 10 minutes)
Watershed Classification: LDR

	Phx	Specific	
P10-Yr 6-Hour Precipitation:	2.07	1.89	inches

Subarea	Area, A acres	Land Use/ Classification	% Cover	2-Year C	5-Year C	10-Year C	25-Year C	50-Year C	100-Year C
1	5.70	MDR	100%	0.65	0.65	0.65	0.72	0.78	0.81
2				0.00	0.00		0.00	0.00	0.00
3				0.00	0.00		0.00	0.00	0.00
4				0.00	0.00		0.00	0.00	0.00
5				0.00	0.00		0.00	0.00	0.00
6				0.00	0.00		0.00	0.00	0.00
7				0.00	0.00		0.00	0.00	0.00
Total:	5.7								

	2-Year	5-Year	10-Year	25-Year	50-Year	100-Year
Weighted C =	0.65	0.65	0.65	0.72	0.78	0.81

Time of Concentration, Tc / Rainfall intensity, i

Note: Minimum Tc = 10 min

	2-Year	5-Year	10-Year	25-Year	50-Year	100-Year	
Rainfall intensity for Tc = 10 minutes =	2.55	3.53	4.18	5.10	5.80	6.50	in/hour

Tc is a function of intensity and vice-versa thus solution is iterative.

1) Longest flowpath length: L, and slope, S

Segment	Length, d, ft	Elevation, ft			Slope, ft/ft	(d^3/H)^1/2
		High Pt.	Low Pt.	Change, H		
1	620	116.0	100.0	16.0	0.026	3859
2				0.0		0
3				0.0		0
4				0.0		0
5				0.0		0
d_T =	620		Sum =	16		j = 3859

L, miles = d_T/5280 = 0.117 miles
S, ft/mi = 5280(d_T/j)^2 = 136.3 ft/mi 0.0258 ft/ft
Corr. S, ft/mi = 5280(d_T/j)^2 = 136.3 ft/mi (See Figure 5.4)

2) Roughness Coefficient, Kb (Table 3.1)

Landform: Low Density Residential
Runoff Character: Low

Type A A-D Refer to Table 3.1
m -0.00625
b 0.04
Kb = 0.0353
User Specified Kb = (If a number is used this overrides the calculated value in calculations)

A=Min rough
B=Mod rough
C=Mod high rough
D=Max rough

3) Tc / i iteration:

	2-Year	5-Year	10-Year	25-Year	50-Year	100-Year	
Assume Tc:	10.00	10.00	10.00	10.00	10.00	10.00	minutes
Try i:	2.61	3.50	4.11	5.00	5.68	6.29	inches/hour
Calc Tc:	0.17	0.17	0.17	0.17	0.17	0.17	hours
Calc Tc:	10.00	10.00	10.00	10.00	10.00	10.00	minutes
Min Tc :	10	10	10	10	10	10	
Final i =	**2.61**	**3.50**	**4.11**	**5.00**	**5.68**	**6.29**	inches/hour

Note: ** If Calculated Tc was less than 5 minutes use 5-minute rainfall intensity

Discharge Q

	2-Year	5-Year	10-Year	25-Year	50-Year	100-Year	
C	0.65	0.65	0.65	0.72	0.78	0.81	
i	2.61	3.50	4.11	5.00	5.68	6.29	inches/hour
A	5.7	5.7	5.7	5.7	5.7	5.7	acre
Add. Q							
Q = CiA	**9.7**	**13.0**	**15.2**	**20.4**	**25.2**	**29.1**	cfs
Q/A ratio =	1.7	2.3	2.7	3.6	4.4	5.1	cfs/ac

Rational Runoff Method
FCDMC Rational Method

Project:	Red Mountain Freeway: Power to University	By:	DVD
		Date:	11/15/2004
Basin:	OF-C1	Checked:	AJR
		Project No.:	H578201D (4.0031)

Storm	2-Year	5-Year	10-Year	25-Year	50-Year	100-Year	
Q =	12	16	18	25	30	35	cfs

Note:

Runoff Coefficient, C and Basin Area, A

Min Tc : 10 min (5 or 10 minutes)

Watershed Classification: LDR

	Phx	Specific	
P10-Yr 6-Hour Precipitation:	2.07	1.89	inches

Subarea	Area, A acres	Land Use/ Classification	% Cover	2-Year C	5-Year C	10-Year C	25-Year C	50-Year C	100-Year C
1	6.86	MDR	100%	0.65	0.65	0.65	0.72	0.78	0.81
2				0.00	0.00		0.00	0.00	0.00
3				0.00	0.00		0.00	0.00	0.00
4				0.00	0.00		0.00	0.00	0.00
5				0.00	0.00		0.00	0.00	0.00
6				0.00	0.00		0.00	0.00	0.00
7				0.00	0.00		0.00	0.00	0.00
Total:	6.9								

	2-Year	5-Year	10-Year	25-Year	50-Year	100-Year
Weighted C =	0.65	0.65	0.65	0.72	0.78	0.81

Time of Concentration, Tc / Rainfall intensity, i

Note: Minimum Tc = 10 min

	2-Year	5-Year	10-Year	25-Year	50-Year	100-Year	
Rainfall intensity for Tc = 10 minutes =	2.55	3.53	4.18	5.10	5.80	6.50	in/hour

Tc is a function of intensity and vice-versa thus solution is iterative.

1) Longest flowpath length: L, and slope, S

Segment	Length, d, ft	Elevation, ft			Slope, ft/ft	(d^3/H)^1/2
		High Pt.	Low Pt.	Change, H		
1	750	116.0	100.0	16.0	0.021	5135
2				0.0		0
3				0.0		0
4				0.0		0
5				0.0		0
d_T =	750		Sum =	16		j = 5135

L, miles = d_T/5280 = 0.142 miles

S, ft/mi = 5280(d_T/j)^2 = 112.6 ft/mi 0.0213 ft/ft

Corr. S, ft/mi = 5280(d_T/j)^2 = 112.6 ft/mi (See Figure 5.4)

2) Roughness Coefficient, Kb (Table 3.1)

Landform: Low Density Residential

Runoff Character: Low

Type A A-D Refer to Table 3.1

m -0.00625

b 0.04

Kb = 0.0348

User Specified Kb = (If a number is used this overrides the calculated value in calculations)

A=Min rough
B=Mod rough
C=Mod high rough
D=Max rough

3) Tc / i iteration:

	2-Year	5-Year	10-Year	25-Year	50-Year	100-Year	
Assume Tc:	10.00	10.00	10.00	10.00	10.00	10.00	minutes
Try i:	2.61	3.50	4.11	5.00	5.68	6.29	inches/hour
Calc Tc:	0.17	0.17	0.17	0.17	0.17	0.17	hours
Calc Tc:	10.00	10.00	10.00	10.00	10.00	10.00	minutes
Min Tc :	10	10	10	10	10	10	
Final i =	**2.61**	**3.50**	**4.11**	**5.00**	**5.68**	**6.29**	inches/hour

Note: ** If Calculated Tc was less than 5 minutes use 5-minute rainfall intensity

Discharge Q

	2-Year	5-Year	10-Year	25-Year	50-Year	100-Year	
C	0.65	0.65	0.65	0.72	0.78	0.81	
i	2.61	3.50	4.11	5.00	5.68	6.29	inches/hour
A	6.9	6.9	6.9	6.9	6.9	6.9	acre
Add. Q							
Q = CiA	**11.6**	**15.6**	**18.3**	**24.5**	**30.4**	**35.0**	cfs
Q/A ratio =	1.7	2.3	2.7	3.6	4.4	5.1	cfs/ac

Rational Runoff Method
FCDMC Rational Method

Project: Red Mountain Freeway: Power to University
By: DVD
Date: 11/15/2004
Basin: OF-D1
Checked: AJR
Project No.: H578201D (4.0031)

Storm	2-Year	5-Year	10-Year	25-Year	50-Year	100-Year	
Q =	5	6	8	11	13	15	cfs

Note:

Runoff Coefficient, C and Basin Area, A

Min Tc: 10 min (5 or 10 minutes)
Watershed Classification: NDR

	Phx	Specific	
P10-Yr 6-Hour Precipitation:	2.07	1.89	inches

Subarea	Area, A acres	Land Use/ Classification	% Cover	2-Year C	5-Year C	10-Year C	25-Year C	50-Year C	100-Year C
1	4.85	NDR	100%	0.40	0.40	0.40	0.44	0.48	0.50
2				0.00	0.00		0.00	0.00	0.00
3				0.00	0.00		0.00	0.00	0.00
4				0.00	0.00		0.00	0.00	0.00
5				0.00	0.00		0.00	0.00	0.00
6				0.00	0.00		0.00	0.00	0.00
7				0.00	0.00		0.00	0.00	0.00
Total:	4.9								

	2-Year	5-Year	10-Year	25-Year	50-Year	100-Year
Weighted C =	0.40	0.40	0.40	0.44	0.48	0.50

Time of Concentration, Tc / Rainfall intensity, i

Note: Minimum Tc = 10 min

	2-Year	5-Year	10-Year	25-Year	50-Year	100-Year	
Rainfall intensity for Tc = 10 minutes =	2.55	3.53	4.18	5.10	5.80	6.50	in/hour

Tc is a function of intensity and vice-versa thus solution is iterative.

1) Longest flowpath length: L, and slope, S

Segment	Length, d, ft	Elevation, ft			Slope, ft/ft	(d^3/H)^1/2
		High Pt.	Low Pt.	Change, H		
1	510	110.0	100.0	10.0	0.020	3642
2				0.0		0
3				0.0		0
4				0.0		0
5				0.0		0
d_T =	510		Sum =	10		j = 3642

L, miles = $d_T/5280$ = 0.097 miles
S, ft/mi = $5280(d_T/j)^2$ = 103.5 ft/mi 0.0196 ft/ft
Corr. S, ft/mi = $5280(d_T/j)^2$ = 103.5 ft/mi (See Figure 5.4)

2) Roughness Coefficient, Kb (Table 3.1)

Landform: Undeveloped desert
Runoff Character: Medium to high

Type C A-D Refer to Table 3.1
m -0.025
b 0.15
Kb = 0.1329
User Specified Kb = (If a number is used this overrides the calculated value in calculations)

A=Min rough
B=Mod rough
C=Mod high rough
D=Max rough

3) Tc / i iteration:

	2-Year	5-Year	10-Year	25-Year	50-Year	100-Year	
Assume Tc:	12.83	11.17	10.38	10.00	10.00	10.00	minutes
Try i:	2.32	3.34	4.05	5.00	5.68	6.29	inches/hour
Calc Tc:	0.21	0.19	0.17	0.17	0.17	0.17	hours
Calc Tc:	12.83	11.17	10.38	10.00	10.00	10.00	minutes
Min Tc:	10	10	10	10	10	10	
Final **i** =	**2.32**	**3.34**	**4.05**	**5.00**	**5.68**	**6.29**	inches/hour

Note: ** If Calculated Tc was less than 5 minutes use 5-minute rainfall intensity

Discharge Q

	2-Year	5-Year	10-Year	25-Year	50-Year	100-Year	
C	0.40	0.40	0.40	0.44	0.48	0.50	
i	2.32	3.34	4.05	5.00	5.68	6.29	inches/hour
A	4.9	4.9	4.9	4.9	4.9	4.9	acre
Add. Q							
Q = CiA	**4.5**	**6.5**	**7.9**	**10.7**	**13.2**	**15.3**	cfs
Q/A ratio =	0.9	1.3	1.6	2.2	2.7	3.1	cfs/ac

Rational Runoff Method
FCDMC Rational Method

Project:	Red Mountain Freeway: Power to University	By:	AJR
		Date:	12/6/2004
Basin:	ON - 990	Checked:	DVD
		Project No.:	H578201D (4.0031)

Storm	2-Year	5-Year	10-Year	25-Year	50-Year	100-Year	
Q =	0	1	1	1	1	2	cfs

Note:

Runoff Coefficient, C and Basin Area, A

Min Tc : 10 min (5 or 10 minutes)

Watershed Classification: Bare Ground

	Phx	Specific	
P10-Yr 6-Hour Precipitation:	2.07	1.89	inches

Subarea	Area, A acres	Land Use/ Classification	% Cover	2-Year C	5-Year C	10-Year C	25-Year C	50-Year C	100-Year C
1	0.72	Bare Ground	0%	0.30	0.30	0.30	0.33	0.36	0.38
2				0.00	0.00		0.00	0.00	0.00
3				0.00	0.00		0.00	0.00	0.00
4				0.00	0.00		0.00	0.00	0.00
5				0.00	0.00		0.00	0.00	0.00
6				0.00	0.00		0.00	0.00	0.00
7				0.00	0.00		0.00	0.00	0.00
Total:	0.7								

	2-Year	5-Year	10-Year	25-Year	50-Year	100-Year
Weighted C =	0.30	0.30	0.30	0.33	0.36	0.38

Time of Concentration, Tc / Rainfall intensity, i

Note: Minimum Tc = 10 min

	2-Year	5-Year	10-Year	25-Year	50-Year	100-Year	
Rainfall intensity for Tc = 10 minutes =	2.55	3.53	4.18	5.10	5.80	6.50	in/hour

Tc is a function of intensity and vice-versa thus solution is iterative.

1) Longest flowpath length: L, and slope, S

Segment	Length, d, ft	Elevation, ft			Slope, ft/ft	(d^3/H)^1/2
		High Pt.	Low Pt.	Change, H		
1	495	1586.8	1585.3	1.5	0.003	9022
2				0.0		0
3				0.0		0
4				0.0		0
5				0.0		0
d_T =	495		Sum =	1		j = 9022

L, miles = $d_T/5280$ = 0.094 miles

S, ft/mi = $5280(d_T/j)^2$ = 15.9 ft/mi 0.003 ft/ft

Corr. S, ft/mi = $5280(d_T/j)^2$ = 15.9 ft/mi (See Figure 5.4)

2) Roughness Coefficient, Kb (Table 3.1)

Landform: Undeveloped desert

Runoff Character: Medium to high

Type B A-D Refer to Table 3.1

m -0.01375

b 0.08

Kb = 0.0820

User Specified Kb = (If a number is used this overrides the calculated value in calculations)

A=Min rough
B=Mod rough
C=Mod high rough
D=Max rough

3) Tc / i iteration:

	2-Year	5-Year	10-Year	25-Year	50-Year	100-Year	
Assume Tc:	19.04	16.35	15.11	13.83	13.05	12.43	minutes
Try i:	1.88	2.81	3.45	4.36	5.07	5.77	inches/hour
Calc Tc:	0.32	0.27	0.25	0.23	0.22	0.21	hours
Calc Tc:	19.04	16.35	15.11	13.83	13.05	12.43	minutes
Min Tc :	10	10	10	10	10	10	
Final **i** =	**1.88**	**2.81**	**3.45**	**4.36**	**5.07**	**5.77**	inches/hour

Note: ** If Calculated Tc was less than 5 minutes use 5-minute rainfall intensity

Discharge Q

	2-Year	5-Year	10-Year	25-Year	50-Year	100-Year	
C	0.30	0.30	0.30	0.33	0.36	0.38	
i	1.88	2.81	3.45	4.36	5.07	5.77	inches/hour
A	0.7	0.7	0.7	0.7	0.7	0.7	acre
Add. Q							
Q = CIA	**0.4**	**0.6**	**0.7**	**1.0**	**1.3**	**1.6**	cfs
Q/A ratio =	0.6	0.8	1.0	1.4	1.8	2.2	cfs/ac

F.H.W.A. REGION	STATE	PROJECT NO.	SHEET NO.	TOTAL SHEETS	AS BUILT
9	ARIZ.	202-B(007)B			
		202L MA 023			

NO.	DESCRIPTION OF REVISION	MADE BY	DATE
NO.1			
NO.2			

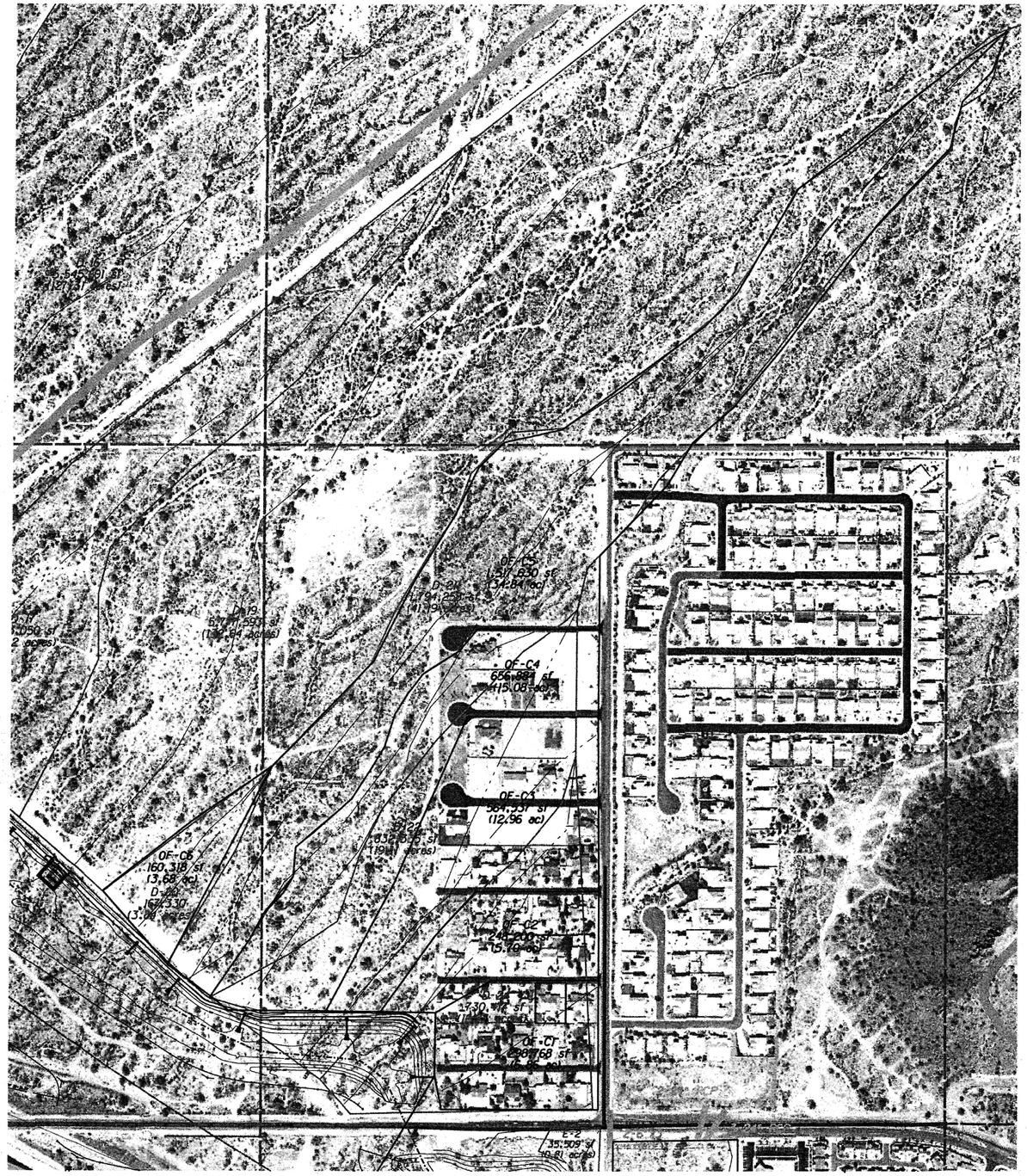

	NAME	DATE
DESIGN	DVD	4/05
DRAWN	MRT	4/05
CHECKED	AJR	4/05

J2 engineering and environmental design
8222 south 48th street, suite 135
phoenix, arizona 85044
phone 602.438.2221
www.j2design.us

ARIZONA DEPARTMENT OF TRANSPORTATION
INTERMODAL TRANSPORTATION DIVISION
ROADWAY DESIGN SERVICES

DRAINAGE AREA MAP

ROUTE: 202L

LOCATION: RED MTN FWY, POWER ROAD - UNIVERSITY DRIVE

TRACS NO. H 5782 01C

202-B(007)B

PRELIMINARY
STAGE IV
95% Review
NOT FOR CONSTRUCTION OR RECORDING

DWG NO.

___ OF ___

$USER$ $FILE$ $DATE$ $TIME$

Appendix B: HEC-RAS output

- East Channel
- Las Sendas Channel
- 86th Street Channel

HEC-RAS Version 3.1.2 April 2004
U.S. Army Corp of Engineers
Hydrologic Engineering Center
609 Second Street
Davis, California

```
X     X  XXXXXX    XXXX        XXXX       XX      XXXX
X     X  X        X    X       X   X     X  X    X
X     X  X        X            X   X    X    X   X
XXXXXXX  XXXX     X       XXX  XXXX     XXXXXX    XXXX
X     X  X        X            X  X     X    X        X
X     X  X        X    X       X   X    X    X        X
X     X  XXXXXX    XXXX        X    X   X    X   XXXXX
```

PROJECT DATA
Project Title: RMFUP East Channel
Project File : RMFUPeast.prj
Run Date and Time: 4/21/2005 1:56:30 PM

Project in English units

Project Description:
Red Mountain Freeway (202L) - University Drive to Southern Avenue

PLAN DATA

Plan Title: RMFUP East Channel 95%
Plan File : p:\040031\Eng\Calcs\Hydraulics\HEC-RAS\RMFUPeast.p05

Geometry Title: RMFUP East Channel 95%
Geometry File : p:\040031\Eng\Calcs\Hydraulics\HEC-RAS\RMFUPeast.g04

Flow Title : RMFUP East Channel
Flow File : p:\040031\Eng\Calcs\Hydraulics\HEC-RAS\RMFUPeast.f02

Plan Summary Information:

Number of:	Cross Sections	= 8	Multiple Openings	=	0
	Culverts	= 0	Inline Structures	=	0
	Bridges	= 0	Lateral Structures	=	0

Computational Information
Water surface calculation tolerance = 0.01
Critical depth calculation tolerance = 0.01
Maximum number of iterations = 20
Maximum difference tolerance = 0.3
Flow tolerance factor = 0.001

Computation Options
Critical depth computed only where necessary
Conveyance Calculation Method: At breaks in n values only
Friction Slope Method: Average Conveyance
Computational Flow Regime: Mixed Flow

FLOW DATA

Flow Title: RMFUP East Channel
Flow File : p:\040031\Eng\Calcs\Hydraulics\HEC-RAS\RMFUPeast.f02

Flow Data (cfs)

River	Reach	RS	PF 1
RM12-U	E-Chan Upper	12400	96

Boundary Conditions

River	Reach	Profile	Upstream	Downstream
RM12-U	E-Chan Upper	PF 1	Normal S = 0.0111	Known WS = 1550.03

GEOMETRY DATA

Geometry Title: RMFUP East Channel 95%
Geometry File : p:\040031\Eng\Calcs\Hydraulics\HEC-RAS\RMFUPeast.g04

CROSS SECTION

RIVER: RM12-U
REACH: E-Chan Upper RS: 12400

INPUT
Description:
Station Elevation Data num= 16

Sta	Elev	Sta	Elev	Sta	Elev	Sta	Elev	Sta	Elev
0	1566.77	53.65	1566.57	53.68	1566.56	54.98	1566.13	60.17	1566.02
66.98	1565.89	74.99	1561.89	75	1561.89	75.01	1561.89	79.01	1561.97
86.84	1565.88	86.85	1565.89	90.45	1565.96	94.84	1566.05	95.07	1566.12
150	1565.52								

Manning's n Values num= 3

Sta	n Val	Sta	n Val	Sta	n Val
0	.04	66.98	.016	86.84	.04

Bank Sta: Left	Right	Lengths: Left Channel	Right	Coeff Contr.	Expan.
66.98	86.84	178.66	178.66	.1	.3

CROSS SECTION

RIVER: RM12-U
REACH: E-Chan Upper RS: 12228.5*

INPUT
Description:
Station Elevation Data num= 16

Sta	Elev	Sta	Elev	Sta	Elev	Sta	Elev	Sta	Elev
0	1564.87	53.65	1564.67	53.68	1564.66	54.98	1564.23	60.17	1564.12
66.98	1563.99	74.99	1559.99	75	1559.99	75.01	1559.99	79.01	1560.07
86.84	1563.98	86.85	1563.99	90.45	1564.06	94.84	1564.15	95.07	1564.22
150	1563.62								

Manning's n Values num= 3

Sta	n Val	Sta	n Val	Sta	n Val
0	.04	66.98	.016	86.84	.04

Bank Sta: Left	Right	Lengths: Left Channel	Right	Coeff Contr.	Expan.
66.98	86.84	178.66	178.66	.1	.3

CROSS SECTION

RIVER: RM12-U
REACH: E-Chan Upper RS: 12057.1*

INPUT

```
Description:
Station Elevation Data    num=      16
     Sta     Elev      Sta     Elev      Sta     Elev      Sta     Elev      Sta     Elev
       0 1562.96    53.65 1562.76    53.68 1562.75    54.98 1562.32    60.17 1562.21
   66.98 1562.08    74.99 1558.08       75 1558.08    75.01 1558.08    79.01 1558.16
   86.84 1562.07    86.85 1562.08    90.45 1562.15    94.84 1562.24    95.07 1562.31
     150 1561.71

Manning's n Values        num=       3
     Sta   n Val      Sta   n Val      Sta   n Val
       0     .04    66.98    .016    86.84     .04

Bank Sta: Left   Right    Lengths: Left Channel   Right     Coeff Contr.   Expan.
         66.98   86.84            178.66  178.66  178.66             .1      .3

CROSS SECTION


RIVER: RM12-U
REACH: E-Chan Upper       RS: 11885.7*

INPUT
Description:
Station Elevation Data    num=      16
     Sta     Elev      Sta     Elev      Sta     Elev      Sta     Elev      Sta     Elev
       0 1561.06    53.65 1560.86    53.68 1560.85    54.98 1560.42    60.17 1560.31
   66.98 1560.18    74.99 1556.18       75 1556.18    75.01 1556.18    79.01 1556.26
   86.84 1560.17    86.85 1560.18    90.45 1560.25    94.84 1560.34    95.07 1560.41
     150 1559.81

Manning's n Values        num=       3
     Sta   n Val      Sta   n Val      Sta   n Val
       0     .04    66.98    .016    86.84     .04

Bank Sta: Left   Right    Lengths: Left Channel   Right     Coeff Contr.   Expan.
         66.98   86.84            178.66  178.66  178.66             .1      .3

CROSS SECTION


RIVER: RM12-U
REACH: E-Chan Upper       RS: 11714.2*

INPUT
Description:
Station Elevation Data    num=      16
     Sta     Elev      Sta     Elev      Sta     Elev      Sta     Elev      Sta     Elev
       0 1559.16    53.65 1558.96    53.68 1558.95    54.98 1558.52    60.17 1558.41
   66.98 1558.28    74.99 1554.28       75 1554.28    75.01 1554.28    79.01 1554.36
   86.84 1558.27    86.85 1558.28    90.45 1558.35    94.84 1558.44    95.07 1558.51
     150 1557.91

Manning's n Values        num=       3
     Sta   n Val      Sta   n Val      Sta   n Val
       0     .04    66.98    .016    86.84     .04

Bank Sta: Left   Right    Lengths: Left Channel   Right     Coeff Contr.   Expan.
         66.98   86.84            178.66  178.66  178.66             .1      .3

CROSS SECTION


RIVER: RM12-U
REACH: E-Chan Upper       RS: 11542.8*

INPUT
Description:
Station Elevation Data    num=      16
     Sta     Elev      Sta     Elev      Sta     Elev      Sta     Elev      Sta     Elev
       0 1557.26    53.65 1557.06    53.68 1557.05    54.98 1556.62    60.17 1556.51
```

```
   66.98 1556.38   74.99 1552.38      75 1552.38   75.01 1552.38   79.01 1552.46
   86.84 1556.37   86.85 1556.38   90.45 1556.45   94.84 1556.54   95.07 1556.61
     150 1556.01

Manning's n Values         num=       3
     Sta   n Val      Sta   n Val      Sta   n Val
       0     .04    66.98    .016    86.84     .04

Bank Sta: Left   Right    Lengths: Left Channel   Right     Coeff Contr.   Expan.
         66.98   86.84           178.66  178.66  178.66            .1       .3

CROSS SECTION


RIVER: RM12-U
REACH: E-Chan Upper       RS: 11371.4*

INPUT
Description:
Station Elevation Data    num=      16
     Sta    Elev      Sta    Elev      Sta    Elev      Sta    Elev      Sta    Elev
       0 1555.35   53.65 1555.15   53.68 1555.14   54.98 1554.71   60.17  1554.6
   66.98 1554.47   74.99 1550.47      75 1550.47   75.01 1550.47   79.01 1550.55
   86.84 1554.46   86.85 1554.47   90.45 1554.54   94.84 1554.63   95.07  1554.7
     150  1554.1

Manning's n Values         num=       3
     Sta   n Val      Sta   n Val      Sta   n Val
       0     .04    66.98    .016    86.84     .04

Bank Sta: Left   Right    Lengths: Left Channel   Right     Coeff Contr.   Expan.
         66.98   86.84           178.66  178.66  178.66            .1       .3

CROSS SECTION


RIVER: RM12-U
REACH: E-Chan Upper       RS: 11200.00

INPUT
Description:
Station Elevation Data    num=      16
     Sta    Elev      Sta    Elev      Sta    Elev      Sta    Elev      Sta    Elev
       0 1553.45   53.65 1553.25   53.68 1553.24   54.98 1552.81   60.17  1552.7
   66.98 1552.57   74.99 1548.57      75 1548.57   75.01 1548.57   79.01 1548.65
   86.84 1552.56   86.85 1552.57   90.45 1552.64   94.84 1552.73   95.07  1552.8
     150  1552.2

Manning's n Values         num=       3
     Sta   n Val      Sta   n Val      Sta   n Val
       0     .04    66.98    .016    86.84     .04

Bank Sta: Left   Right    Lengths: Left Channel   Right     Coeff Contr.   Expan.
         66.98   86.84                 0       0       0            .1       .3


SUMMARY OF MANNING'S N VALUES

River:RM12-U

      Reach          River Sta.       n1        n2        n3

 E-Chan Upper         12400             .04       .016      .04
 E-Chan Upper         12228.5*          .04       .016      .04
 E-Chan Upper         12057.1*          .04       .016      .04
 E-Chan Upper         11885.7*          .04       .016      .04
 E-Chan Upper         11714.2*          .04       .016      .04
 E-Chan Upper         11542.8*          .04       .016      .04
 E-Chan Upper         11371.4*          .04       .016      .04
```

E-Chan Upper	11200.00	.04	.016	.04

SUMMARY OF REACH LENGTHS

River: RM12-U

Reach	River Sta.	Left	Channel	Right
E-Chan Upper	12400	178.66	178.66	178.66
E-Chan Upper	12228.5*	178.66	178.66	178.66
E-Chan Upper	12057.1*	178.66	178.66	178.66
E-Chan Upper	11885.7*	178.66	178.66	178.66
E-Chan Upper	11714.2*	178.66	178.66	178.66
E-Chan Upper	11542.8*	178.66	178.66	178.66
E-Chan Upper	11371.4*	178.66	178.66	178.66
E-Chan Upper	11200.00	0	0	0

SUMMARY OF CONTRACTION AND EXPANSION COEFFICIENTS
River: RM12-U

Reach	River Sta.	Contr.	Expan.
E-Chan Upper	12400	.1	.3
E-Chan Upper	12228.5*	.1	.3
E-Chan Upper	12057.1*	.1	.3
E-Chan Upper	11885.7*	.1	.3
E-Chan Upper	11714.2*	.1	.3
E-Chan Upper	11542.8*	.1	.3
E-Chan Upper	11371.4*	.1	.3
E-Chan Upper	11200.00	.1	.3

Profile Output Table - Standard Table 1

Reach	River Sta	Profile	Q Total (cfs)	Min Ch El (ft)	W.S. Elev (ft)	Crit W.S. (ft)	E.G. Elev (ft)	E.G. Slope (ft/ft)	Vel Chnl (ft/s)	Flow Area (sq ft)	Top Width (ft)	Froude # Chl
E-Chan Upper	12400	PF 1	96.00	1561.89	1563.39	1563.83	1564.79	0.011103	9.51	10.09	9.85	1.66
E-Chan Upper	12228.5*	PF 1	96.00	1559.99	1561.51	1561.93	1562.85	0.010410	9.29	10.33	9.94	1.61
E-Chan Upper	12057.1*	PF 1	96.00	1558.08	1559.59	1560.02	1560.96	0.010699	9.38	10.23	9.90	1.63
E-Chan Upper	11885.7*	PF 1	96.00	1556.18	1557.69	1558.12	1559.05	0.010618	9.36	10.26	9.91	1.62
E-Chan Upper	11714.2*	PF 1	96.00	1554.28	1555.79	1556.22	1557.15	0.010618	9.36	10.26	9.91	1.62
E-Chan Upper	11542.8*	PF 1	96.00	1552.38	1553.89	1554.32	1555.25	0.010645	9.37	10.25	9.91	1.62
E-Chan Upper	11371.4*	PF 1	96.00	1550.47	1551.98	1552.41	1553.35	0.010734	9.39	10.22	9.90	1.63
E-Chan Upper	11200.00	PF 1	96.00	1548.57	1550.08	1550.51	1551.44	0.010654	9.37	10.25	9.91	1.62

ERRORS WARNINGS AND NOTES
Errors Warnings and Notes for Plan : RMFUP 95%

River: RM12-U Reach: E-Chan Upper RS: 12228.5* Profile: PF 1
Warning:The energy loss was greater than 1.0 ft (0.3 m). between the current and previous cross section. This may indicate the need for additional cross sections.
River: RM12-U Reach: E-Chan Upper RS: 12057.1* Profile: PF 1
Warning:The energy loss was greater than 1.0 ft (0.3 m). between the current and previous cross section. This may indicate the need for additional cross sections.
River: RM12-U Reach: E-Chan Upper RS: 11885.7* Profile: PF 1
Warning:The energy loss was greater than 1.0 ft (0.3 m). between the current and previous cross section. This may indicate the need for additional cross sections.
River: RM12-U Reach: E-Chan Upper RS: 11714.2* Profile: PF 1
Warning:The energy loss was greater than 1.0 ft (0.3 m). between the current and previous cross section. This may indicate

```
            the need for additional cross sections.
River: RM12-U  Reach: E-Chan Upper     RS: 11542.8*     Profile: PF 1
     Warning:The energy loss was greater than 1.0 ft (0.3 m). between the current and previous cross section.  This may indicate
            the need for additional cross sections.
River: RM12-U  Reach: E-Chan Upper     RS: 11371.4*     Profile: PF 1
     Warning:The energy loss was greater than 1.0 ft (0.3 m). between the current and previous cross section.  This may indicate
            the need for additional cross sections.
River: RM12-U  Reach: E-Chan Upper     RS: 11200.00     Profile: PF 1
     Warning:The energy loss was greater than 1.0 ft (0.3 m). between the current and previous cross section.  This may indicate
            the need for additional cross sections.
```

HEC-RAS Plan: RMFUP 95% River: RM12-U Reach: E-Chan Upper Profile: PF 1

Reach	River Sta	Profile	Q Total	Min Ch El	W.S. Elev	Crit W.S.	E.G. Elev	E.G. Slope	Vel Chnl	Flow Area	Top Width	Froude # Chl
			(cfs)	(ft)	(ft)	(ft)	(ft)	(ft/ft)	(ft/s)	(sq ft)	(ft)	
E-Chan Upper	12400	PF 1	96.00	1561.89	1563.39	1563.83	1564.79	0.011103	9.51	10.09	9.85	1.66
E-Chan Upper	12228.5*	PF 1	96.00	1559.99	1561.51	1561.93	1562.85	0.010410	9.29	10.33	9.94	1.61
E-Chan Upper	12057.1*	PF 1	96.00	1558.08	1559.59	1560.02	1560.96	0.010699	9.38	10.23	9.90	1.63
E-Chan Upper	11885.7*	PF 1	96.00	1556.18	1557.69	1558.12	1559.05	0.010618	9.36	10.26	9.91	1.62
E-Chan Upper	11714.2*	PF 1	96.00	1554.28	1555.79	1556.22	1557.15	0.010618	9.36	10.26	9.91	1.62
E-Chan Upper	11542.8*	PF 1	96.00	1552.38	1553.89	1554.32	1555.25	0.010645	9.37	10.25	9.91	1.62
E-Chan Upper	11371.4*	PF 1	96.00	1550.47	1551.98	1552.41	1553.35	0.010734	9.39	10.22	9.90	1.63
E-Chan Upper	11200.00	PF 1	96.00	1548.57	1550.08	1550.51	1551.44	0.010654	9.37	10.25	9.91	1.62

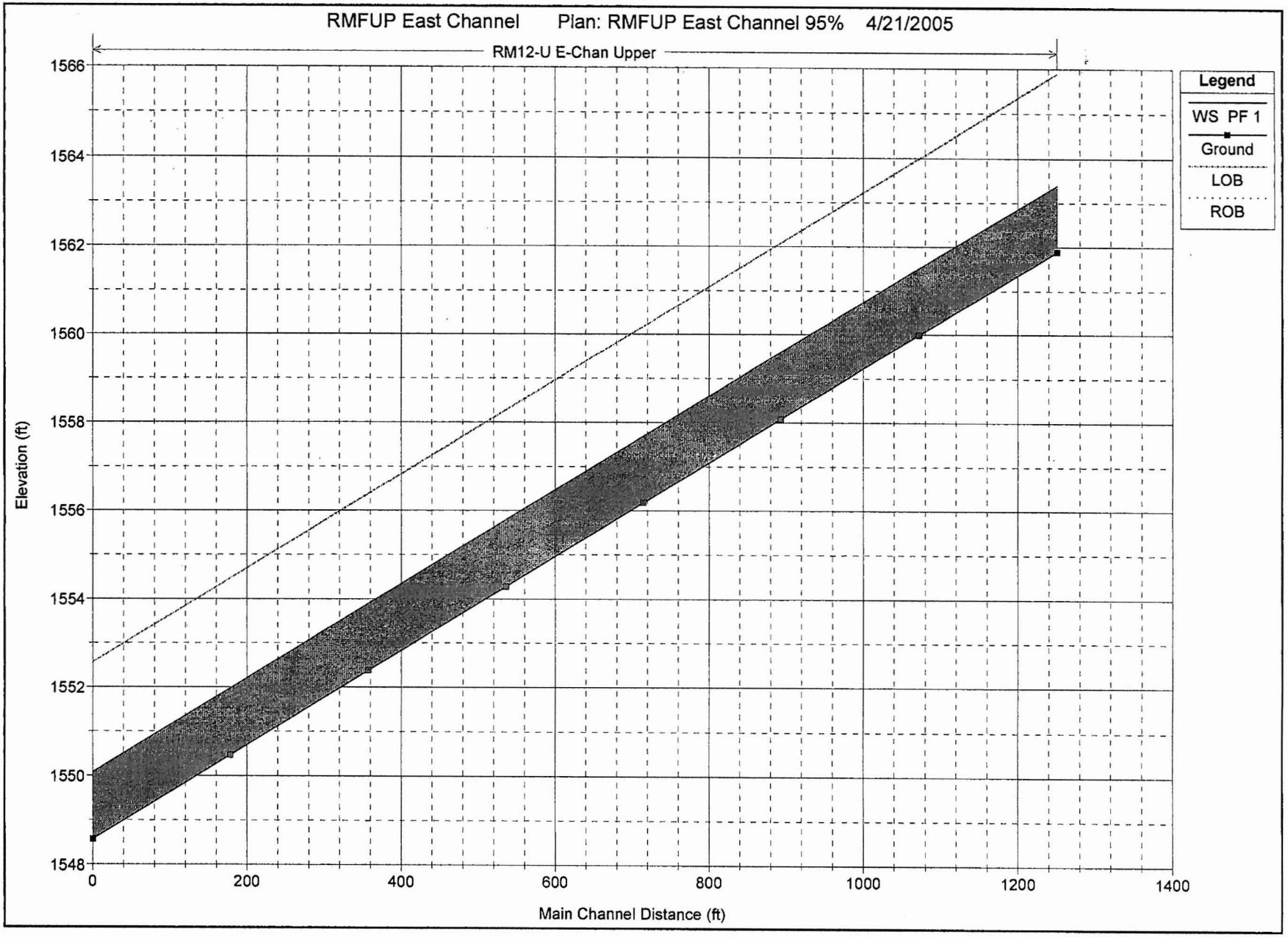
RMFUP East Channel Plan: RMFUP East Channel 95% 4/21/2005
RM12-U E-Chan Upper
Legend
WS PF 1
Ground
LOB
ROB
Elevation (ft)
1566
1564
1562
1560
1558
1556
1554
1552
1550
1548
0
200
400
600
800
1000
1200
1400
Main Channel Distance (ft)

Channel Freeboard Check
per ADOT freeboard requirements, RDG Chapter 600 4/25/2005

East Channel

			A		B	C	
River Station	Min Chan Elevation	W.S. Elevation	Flow Depth, ft	Velocity, fps	Required FB, ft	Act. Chan. Depth, ft	Check: A+B<C?
12400	1561.89	1563.39	1.5	9.5	0.58	5.00	yes
12228.5	1559.99	1561.51	1.5	9.3	0.57	5.00	yes
12057.1	1558.08	1559.59	1.5	9.4	0.58	5.00	yes
11885.7	1556.18	1557.69	1.5	9.4	0.57	5.00	yes
11714.2	1554.28	1555.79	1.5	9.4	0.57	5.00	yes
11542.8	1552.38	1553.89	1.5	9.4	0.57	5.00	yes
11371.4	1550.47	1551.98	1.5	9.4	0.58	5.00	yes
11200	1548.57	1550.08	1.5	9.4	0.57	18.44	yes

HEC-RAS Version 3.1.2 April 2004
U.S. Army Corp of Engineers
Hydrologic Engineering Center
609 Second Street
Davis, California

```
X     X  XXXXXX    XXXX        XXXX       XX      XXXX
X     X  X        X    X       X   X     X  X    X
X     X  X        X            X   X    X    X   X
XXXXXXX  XXXX     X       XXX  XXXX     XXXXXX    XXXX
X     X  X        X            X  X     X    X       X
X     X  X        X    X       X   X    X    X       X
X     X  XXXXXX    XXXX        X    X   X    X   XXXXX
```

PROJECT DATA
Project Title: RMFUP Las Sendas Channel
Project File : RMFUPLS.prj
Run Date and Time: 4/21/2005 2:37:49 PM

Project in English units

PLAN DATA

Plan Title: RMFUP Las Sendas Channel
Plan File : p:\040031\Eng\Calcs\Hydraulics\HEC-RAS\RMFUPLS.p01

Geometry Title: RMFUP Las Sendas Channel
Geometry File : p:\040031\Eng\Calcs\Hydraulics\HEC-RAS\RMFUPLS.g01

Flow Title : RMFUP Las Sendas Channel
Flow File : p:\040031\Eng\Calcs\Hydraulics\HEC-RAS\RMFUPLS.f01

Plan Summary Information:
Number of: Cross Sections = 18 Multiple Openings = 0
Culverts = 1 Inline Structures = 0
Bridges = 0 Lateral Structures = 0

Computational Information
Water surface calculation tolerance = 0.01
Critical depth calculation tolerance = 0.01
Maximum number of iterations = 20
Maximum difference tolerance = 0.3
Flow tolerance factor = 0.001

Computation Options
Critical depth computed only where necessary
Conveyance Calculation Method: At breaks in n values only
Friction Slope Method: Average Conveyance
Computational Flow Regime: Mixed Flow

FLOW DATA

Flow Title: RMFUP Las Sendas Channel
Flow File : p:\040031\Eng\Calcs\Hydraulics\HEC-RAS\RMFUPLS.f01

Flow Data (cfs)

River	Reach	RS	with tailwater	w/o tailwater
Las Sendas Chann	Outfall	455.00	1507	1507

Boundary Conditions

River	Reach	Profile	Upstream	Downstream
Las Sendas Chann	Outfall	with tailwater	Normal S = 0.015	Known WS = 1580.35
Las Sendas Chann	Outfall	w/o tailwater	Normal S = 0.015	Normal S = 0.001

GEOMETRY DATA

Geometry Title: RMFUP Las Sendas Channel
Geometry File : p:\040031\Eng\Calcs\Hydraulics\HEC-RAS\RMFUPLS.g01

CROSS SECTION

RIVER: Las Sendas Chann
REACH: Outfall RS: 455.00

INPUT
Description: Upstream end of transition
Station Elevation Data num= 5

Sta	Elev	Sta	Elev	Sta	Elev	Sta	Elev	Sta	Elev
0	1592	28	1585	52	1585	80	1592	80.01	1594

Manning's n Values num= 3

Sta	n Val	Sta	n Val	Sta	n Val
0	.013	0	.013	80.01	.013

Bank Sta: Left	Right	Lengths: Left Channel	Right	Coeff Contr.	Expan.
0	80.01	18.27	18.27	.1	.3

CROSS SECTION

RIVER: Las Sendas Chann
REACH: Outfall RS: 436.726*

INPUT
Description:
Station Elevation Data num= 6

Sta	Elev	Sta	Elev	Sta	Elev	Sta	Elev	Sta	Elev
0	1591.89	0	1591.15	25.67	1584.73	51.94	1584.73	77.6	1591.15
77.61	1593.73								

Manning's n Values num= 3

Sta	n Val	Sta	n Val	Sta	n Val
0	.013	0	.013	77.61	.013

Bank Sta: Left	Right	Lengths: Left Channel	Right	Coeff Contr.	Expan.
0	77.61	18.27	18.27	.1	.3

CROSS SECTION

RIVER: Las Sendas Chann
REACH: Outfall RS: 418.453*

INPUT
Description:
Station Elevation Data num= 6

Sta	Elev	Sta	Elev	Sta	Elev	Sta	Elev	Sta	Elev
0	1591.78	0	1590.29	23.33	1584.46	51.88	1584.46	75.21	1590.29
75.22	1593.46								

Manning's n Values num= 3

Sta	n Val	Sta	n Val	Sta	n Val

```
       0    .013       0    .013   75.22    .013

Bank Sta: Left   Right    Lengths: Left Channel   Right     Coeff Contr.   Expan.
             0   75.22             18.27   18.27   18.27             .1      .3

CROSS SECTION


RIVER: Las Sendas Chann
REACH: Outfall            RS: 400.18*

INPUT
Description:
Station Elevation Data    num=       6
     Sta    Elev     Sta    Elev     Sta    Elev     Sta    Elev     Sta    Elev
       0 1591.67        0 1589.44      21 1584.19   51.81 1584.19   72.81 1589.44
   72.82 1593.19

Manning's n Values        num=       3
     Sta   n Val     Sta   n Val     Sta   n Val
       0    .013       0    .013   72.82    .013

Bank Sta: Left   Right    Lengths: Left Channel   Right     Coeff Contr.   Expan.
             0   72.82             18.27   18.27   18.27             .1      .3

CROSS SECTION


RIVER: Las Sendas Chann
REACH: Outfall            RS: 381.906*

INPUT
Description:
Station Elevation Data    num=       6
     Sta    Elev     Sta    Elev     Sta    Elev     Sta    Elev     Sta    Elev
       0 1591.55      .01 1588.59   18.67 1583.92   51.75 1583.92   70.42 1588.59
   70.42 1592.92

Manning's n Values        num=       3
     Sta   n Val     Sta   n Val     Sta   n Val
       0    .013       0    .013   70.42    .013

Bank Sta: Left   Right    Lengths: Left Channel   Right     Coeff Contr.   Expan.
             0   70.42             18.27   18.27   18.27             .1      .3

CROSS SECTION


RIVER: Las Sendas Chann
REACH: Outfall            RS: 363.633*

INPUT
Description:
Station Elevation Data    num=       6
     Sta    Elev     Sta    Elev     Sta    Elev     Sta    Elev     Sta    Elev
       0 1591.44      .01 1587.73   16.33 1583.65   51.69 1583.65   68.02 1587.73
   68.02 1592.65

Manning's n Values        num=       3
     Sta   n Val     Sta   n Val     Sta   n Val
       0    .013       0    .013   68.02    .013

Bank Sta: Left   Right    Lengths: Left Channel   Right     Coeff Contr.   Expan.
             0   68.02             18.27   18.27   18.27             .1      .3

CROSS SECTION


RIVER: Las Sendas Chann
REACH: Outfall            RS: 345.36
```

```
INPUT
Description: Midpoint of transition
Station Elevation Data    num=       6
     Sta    Elev     Sta    Elev     Sta    Elev     Sta    Elev     Sta    Elev
       0 1591.33     .01 1586.88      14 1583.38  51.625 1583.38  65.625 1586.88
  65.626 1592.38

Manning's n Values        num=       3
     Sta   n Val     Sta   n Val     Sta   n Val
       0    .013       0    .013  65.626    .013

Bank Sta: Left   Right    Lengths: Left Channel   Right     Coeff Contr.   Expan.
             0  65.626            18.27   18.27   18.27             .1      .3

CROSS SECTION


RIVER: Las Sendas Chann
REACH: Outfall            RS: 327.086*

INPUT
Description:
Station Elevation Data    num=       6
     Sta    Elev     Sta    Elev     Sta    Elev     Sta    Elev     Sta    Elev
       0 1591.23     .01 1586.03   11.67 1583.11   51.56 1583.11   63.23 1586.03
   63.23 1592.11

Manning's n Values        num=       3
     Sta   n Val     Sta   n Val     Sta   n Val
       0    .013       0    .013   63.23    .013

Bank Sta: Left   Right    Lengths: Left Channel   Right     Coeff Contr.   Expan.
             0   63.23            18.27   18.27   18.27             .1      .3

CROSS SECTION


RIVER: Las Sendas Chann
REACH: Outfall            RS: 308.813*

INPUT
Description:
Station Elevation Data    num=       6
     Sta    Elev     Sta    Elev     Sta    Elev     Sta    Elev     Sta    Elev
       0 1591.14     .01 1585.17    9.34 1582.84    51.5 1582.84   60.83 1585.17
   60.83 1591.84

Manning's n Values        num=       3
     Sta   n Val     Sta   n Val     Sta   n Val
       0    .013       0    .013   60.83    .013

Bank Sta: Left   Right    Lengths: Left Channel   Right     Coeff Contr.   Expan.
             0   60.83            18.27   18.27   18.27             .1      .3

CROSS SECTION


RIVER: Las Sendas Chann
REACH: Outfall            RS: 290.54*

INPUT
Description:
Station Elevation Data    num=       6
     Sta    Elev     Sta    Elev     Sta    Elev     Sta    Elev     Sta    Elev
       0 1591.04     .01 1584.32    7.01 1582.57   51.43 1582.57   58.43 1584.32
   58.44 1591.57

Manning's n Values        num=       3
     Sta   n Val     Sta   n Val     Sta   n Val
```

```
       0    .013       0    .013   58.44    .013

Bank Sta: Left   Right    Lengths: Left Channel   Right     Coeff Contr.   Expan.
             0   58.44             18.27   18.27   18.27             .1      .3

CROSS SECTION


RIVER: Las Sendas Chann
REACH: Outfall            RS: 272.266*

INPUT
Description:
Station Elevation Data    num=       6
     Sta    Elev     Sta    Elev     Sta    Elev     Sta    Elev     Sta    Elev
       0 1590.95     .01 1583.47    4.67  1582.3   51.37  1582.3   56.03 1583.47
   56.04  1591.3

Manning's n Values        num=       3
     Sta   n Val     Sta   n Val     Sta   n Val
       0    .013       0    .013   56.04    .013

Bank Sta: Left   Right    Lengths: Left Channel   Right     Coeff Contr.   Expan.
             0   56.04             18.27   18.27   18.27             .1      .3

CROSS SECTION


RIVER: Las Sendas Chann
REACH: Outfall            RS: 253.993*

INPUT
Description:
Station Elevation Data    num=       6
     Sta    Elev     Sta    Elev     Sta    Elev     Sta    Elev     Sta    Elev
       0 1590.85     .01 1582.61    2.34 1582.03    51.3 1582.03   53.64 1582.61
   53.65 1591.03

Manning's n Values        num=       3
     Sta   n Val     Sta   n Val     Sta   n Val
       0    .013       0    .013   53.65    .013

Bank Sta: Left   Right    Lengths: Left Channel   Right     Coeff Contr.   Expan.
             0   53.65             18.27   18.27   18.27             .1      .3

CROSS SECTION


RIVER: Las Sendas Chann
REACH: Outfall            RS: 235.72

INPUT
Description: Downstream end of transition
Station Elevation Data    num=       4
     Sta    Elev     Sta    Elev     Sta    Elev     Sta    Elev
       0 1590.76     .01 1581.76   51.24 1581.76   51.25 1590.76

Manning's n Values        num=       3
     Sta   n Val     Sta   n Val     Sta   n Val
       0    .013       0    .013   51.25    .013

Bank Sta: Left   Right    Lengths: Left Channel   Right     Coeff Contr.   Expan.
             0   51.25               56      56      56             .1      .3

CROSS SECTION


RIVER: Las Sendas Chann
REACH: Outfall            RS: 179.72
```

```
INPUT
Description: Upstream face of RCBC 2
Station Elevation Data    num=       4
     Sta    Elev     Sta    Elev     Sta    Elev     Sta    Elev
       0 1590.76     .01 1581.72   51.24 1581.72   51.25 1590.76

Manning's n Values        num=       3
     Sta   n Val     Sta   n Val     Sta   n Val
       0    .013       0    .013   51.25    .013

Bank Sta: Left   Right    Lengths: Left Channel   Right     Coeff Contr.   Expan.
            0   51.25               26      26      26             .1      .3

CULVERT


RIVER: Las Sendas Chann
REACH: Outfall            RS: 166.72

INPUT
Description:
Distance from Upstream XS =       1
Deck/Roadway Width        =      24
Weir Coefficient          =     2.6
Upstream  Deck/Roadway Coordinates
    num=       2
     Sta Hi Cord Lo Cord     Sta Hi Cord Lo Cord
       0 1590.76           51.25 1590.76

Upstream Bridge Cross Section Data
Station Elevation Data    num=       4
     Sta    Elev     Sta    Elev     Sta    Elev     Sta    Elev
       0 1590.76     .01 1581.72   51.24 1581.72   51.25 1590.76

Manning's n Values        num=       3
     Sta   n Val     Sta   n Val     Sta   n Val
       0    .013       0    .013   51.25    .013

Bank Sta: Left   Right    Coeff Contr.   Expan.
            0   51.25             .1       .3

Downstream  Deck/Roadway Coordinates
    num=       2
     Sta Hi Cord Lo Cord     Sta Hi Cord Lo Cord
       0 1590.76           51.25 1590.76

Downstream Bridge Cross Section Data
Station Elevation Data    num=       4
     Sta    Elev     Sta    Elev     Sta    Elev     Sta    Elev
       0 1590.77     .01  1581.7   51.24  1581.7   51.25 1590.77

Manning's n Values        num=       3
     Sta   n Val     Sta   n Val     Sta   n Val
       0    .013       0    .013   51.25    .013

Bank Sta: Left   Right    Coeff Contr.   Expan.
            0   51.25             .1       .3

Upstream Embankment side slope             =       0 horiz. to 1.0 vertical
Downstream Embankment side slope           =       0 horiz. to 1.0 vertical
Maximum allowable submergence for weir flow =     .95
Elevation at which weir flow begins        =
Energy head used in spillway design        =
Spillway height used in design             =
Weir crest shape                           = Broad Crested

Number of Culverts =  1

Culvert Name      Shape      Rise    Span
Culvert #1          Box         8      12
```

```
FHWA Chart # 8 - flared wingwalls
FHWA Scale # 1 - Wingwall flared 30 to 75 deg.
Solution Criteria = Highest U.S. EG
Culvert Upstrm Dist  Length    Top n  Bottom n  Depth Blocked  Entrance Loss Coef   Exit Loss Coef
                  1      24     .013     .013        0                  .2               1
Number of Barrels =  4
Upstream   Elevation =  1581.72
Centerline Stations
    Sta.    Sta.    Sta.    Sta.
       6   19.08   32.17   45.25
Downstream Elevation =  1581.7
Centerline Stations
    Sta.    Sta.    Sta.    Sta.
       6   19.08   32.17   45.25

CROSS SECTION


RIVER: Las Sendas Chann
REACH: Outfall            RS: 153.72

INPUT
Description: Downstream face of RCBC 2
Station Elevation Data    num=       4
     Sta    Elev     Sta    Elev     Sta    Elev     Sta    Elev
       0 1590.77     .01  1581.7   51.24  1581.7   51.25 1590.77

Manning's n Values        num=       3
     Sta   n Val     Sta   n Val     Sta   n Val
       0    .013       0    .013   51.25    .013

Bank Sta: Left   Right    Lengths: Left Channel   Right     Coeff Contr.   Expan.
             0   51.25               22      22      22             .1      .3

CROSS SECTION


RIVER: Las Sendas Chann
REACH: Outfall            RS: 131.72

INPUT
Description: Top of Baffle Chute Drop Structure
Station Elevation Data    num=       4
     Sta    Elev     Sta    Elev     Sta    Elev     Sta    Elev
       0 1590.07     .01 1581.68   53.99 1581.68      54 1590.07

Manning's n Values        num=       3
     Sta   n Val     Sta   n Val     Sta   n Val
       0    .013       0    .013      54    .013

Bank Sta: Left   Right    Lengths: Left Channel   Right     Coeff Contr.   Expan.
             0      54               23      23      23             .1      .3

CROSS SECTION


RIVER: Las Sendas Chann
REACH: Outfall            RS: 108.36

INPUT
Description: Bottom of Baffle Chute Drop Structure
Station Elevation Data    num=       4
     Sta    Elev     Sta    Elev     Sta    Elev     Sta    Elev
       0 1578.39     .01    1570   53.99    1570      54 1578.39

Manning's n Values        num=       3
     Sta   n Val     Sta   n Val     Sta   n Val
       0    .013       0    .013      54    .013

Bank Sta: Left   Right    Lengths: Left Channel   Right     Coeff Contr.   Expan.
```

0	54		14	14	14	.1	.3

CROSS SECTION

RIVER: Las Sendas Chann
REACH: Outfall RS: 94.73

INPUT
Description: Outlet into Floodpool

Station Elevation Data num= 4

Sta	Elev	Sta	Elev	Sta	Elev	Sta	Elev
0	1575	.01	1569.98	60.99	1569.98	61	1575

Manning's n Values num= 3

Sta	n Val	Sta	n Val	Sta	n Val
0	.013	0	.013	61	.013

Bank Sta: Left	Right	Lengths: Left Channel	Right	Coeff Contr.	Expan.
0	61	0	0	.1	.3

SUMMARY OF MANNING'S N VALUES

River:Las Sendas Chann

Reach	River Sta.	n1	n2	n3
Outfall	455.00	.013	.013	.013
Outfall	436.726*	.013	.013	.013
Outfall	418.453*	.013	.013	.013
Outfall	400.18*	.013	.013	.013
Outfall	381.906*	.013	.013	.013
Outfall	363.633*	.013	.013	.013
Outfall	345.36	.013	.013	.013
Outfall	327.086*	.013	.013	.013
Outfall	308.813*	.013	.013	.013
Outfall	290.54*	.013	.013	.013
Outfall	272.266*	.013	.013	.013
Outfall	253.993*	.013	.013	.013
Outfall	235.72	.013	.013	.013
Outfall	179.72	.013	.013	.013
Outfall	166.72	Culvert		
Outfall	153.72	.013	.013	.013
Outfall	131.72	.013	.013	.013
Outfall	108.36	.013	.013	.013
Outfall	94.73	.013	.013	.013

SUMMARY OF REACH LENGTHS

River: Las Sendas Chann

Reach	River Sta.	Left	Channel	Right
Outfall	455.00	18.27	18.27	18.27
Outfall	436.726*	18.27	18.27	18.27
Outfall	418.453*	18.27	18.27	18.27
Outfall	400.18*	18.27	18.27	18.27
Outfall	381.906*	18.27	18.27	18.27
Outfall	363.633*	18.27	18.27	18.27
Outfall	345.36	18.27	18.27	18.27
Outfall	327.086*	18.27	18.27	18.27
Outfall	308.813*	18.27	18.27	18.27
Outfall	290.54*	18.27	18.27	18.27
Outfall	272.266*	18.27	18.27	18.27
Outfall	253.993*	18.27	18.27	18.27

Outfall	235.72	56	56	56
Outfall	179.72	26	26	26
Outfall	166.72	Culvert		
Outfall	153.72	22	22	22
Outfall	131.72	23	23	23
Outfall	108.36	14	14	14
Outfall	94.73	0	0	0

SUMMARY OF CONTRACTION AND EXPANSION COEFFICIENTS
River: Las Sendas Chann

Reach	River Sta.	Contr.	Expan.
Outfall	455.00	.1	.3
Outfall	436.726*	.1	.3
Outfall	418.453*	.1	.3
Outfall	400.18*	.1	.3
Outfall	381.906*	.1	.3
Outfall	363.633*	.1	.3
Outfall	345.36	.1	.3
Outfall	327.086*	.1	.3
Outfall	308.813*	.1	.3
Outfall	290.54*	.1	.3
Outfall	272.266*	.1	.3
Outfall	253.993*	.1	.3
Outfall	235.72	.1	.3
Outfall	179.72	.1	.3
Outfall	166.72	Culvert	
Outfall	153.72	.1	.3
Outfall	131.72	.1	.3
Outfall	108.36	.1	.3
Outfall	94.73	.1	.3

Profile Output Table - Standard Table 1

Reach	River Sta	Profile	Q Total (cfs)	Min Ch El (ft)	W.S. Elev (ft)	Crit W.S. (ft)	E.G. Elev (ft)	E.G. Slope (ft/ft)	Vel Chnl (ft/s)	Flow Area (sq ft)	Top Width (ft)	Froude # Chl
Outfall	455.00	with tailwater	1507.00	1585.00	1587.25	1588.96	1593.65	0.015010	20.30	74.25	42.00	2.69
Outfall	455.00	w/o tailwater	1507.00	1585.00	1587.25	1588.96	1593.65	0.015010	20.30	74.25	42.00	2.69
Outfall	436.726*	with tailwater	1507.00	1584.73	1586.85	1588.54	1593.36	0.016015	20.47	73.62	43.21	2.76
Outfall	436.726*	w/o tailwater	1507.00	1584.73	1586.85	1588.55	1593.36	0.016015	20.47	73.62	43.21	2.76
Outfall	418.453*	with tailwater	1507.00	1584.46	1586.46	1588.14	1593.05	0.017003	20.59	73.18	44.57	2.83
Outfall	418.453*	w/o tailwater	1507.00	1584.46	1586.46	1588.14	1593.05	0.017003	20.59	73.18	44.57	2.83
Outfall	400.18*	with tailwater	1507.00	1584.19	1586.09	1587.75	1592.72	0.017932	20.67	72.91	46.00	2.89
Outfall	400.18*	w/o tailwater	1507.00	1584.19	1586.09	1587.75	1592.72	0.017932	20.67	72.91	46.00	2.89
Outfall	381.906*	with tailwater	1507.00	1583.92	1585.73	1587.37	1592.38	0.018819	20.71	72.78	47.52	2.95
Outfall	381.906*	w/o tailwater	1507.00	1583.92	1585.73	1587.37	1592.38	0.018819	20.71	72.78	47.52	2.95
Outfall	363.633*	with tailwater	1507.00	1583.65	1585.37	1586.99	1592.04	0.019708	20.72	72.73	49.14	3.00
Outfall	363.633*	w/o tailwater	1507.00	1583.65	1585.37	1586.99	1592.04	0.019708	20.72	72.73	49.14	3.00
Outfall	345.36	with tailwater	1507.00	1583.38	1585.03	1586.63	1591.66	0.020428	20.67	72.90	50.81	3.04
Outfall	345.36	w/o tailwater	1507.00	1583.38	1585.03	1586.63	1591.66	0.020428	20.67	72.90	50.81	3.04
Outfall	327.086*	with tailwater	1507.00	1583.11	1584.70	1586.25	1591.27	0.021017	20.57	73.25	52.55	3.07
Outfall	327.086*	w/o tailwater	1507.00	1583.11	1584.70	1586.25	1591.27	0.021017	20.57	73.25	52.55	3.07
Outfall	308.813*	with tailwater	1507.00	1582.84	1584.37	1585.86	1590.85	0.021508	20.44	73.73	54.39	3.09
Outfall	308.813*	w/o tailwater	1507.00	1582.84	1584.37	1585.86	1590.85	0.021508	20.44	73.73	54.39	3.09

Outfall	290.54*	with tailwater	1507.00	1582.57	1584.05	1585.52	1590.44	0.021926	20.29	74.28	56.23	3.11
Outfall	290.54*	w/o tailwater	1507.00	1582.57	1584.05	1585.52	1590.44	0.021926	20.29	74.28	56.23	3.11
Outfall	272.266*	with tailwater	1507.00	1582.30	1583.74	1585.21	1590.01	0.021365	20.10	74.99	56.02	3.06
Outfall	272.266*	w/o tailwater	1507.00	1582.30	1583.74	1585.21	1590.01	0.021365	20.10	74.99	56.02	3.06
Outfall	253.993*	with tailwater	1507.00	1582.03	1583.47	1584.95	1589.59	0.019872	19.85	75.90	53.63	2.94
Outfall	253.993*	w/o tailwater	1507.00	1582.03	1583.47	1584.95	1589.59	0.019872	19.85	75.90	53.63	2.94
Outfall	235.72	with tailwater	1507.00	1581.76	1583.27	1584.75	1589.18	0.018221	19.52	77.20	51.23	2.80
Outfall	235.72	w/o tailwater	1507.00	1581.76	1583.27	1584.74	1589.18	0.018221	19.52	77.20	51.23	2.80
Outfall	179.72	with tailwater	1507.00	1581.72	1583.45	1584.70	1587.95	0.011692	17.03	88.47	51.23	2.28
Outfall	179.72	w/o tailwater	1507.00	1581.72	1583.45	1584.71	1587.95	0.011695	17.03	88.47	51.23	2.28
Outfall	166.72		Culvert									
Outfall	153.72	with tailwater	1507.00	1581.70	1583.90	1584.69	1586.68	0.005350	13.38	112.63	51.23	2.28
Outfall	153.72	w/o tailwater	1507.00	1581.70	1583.90	1584.69	1586.68	0.005353	13.38	112.61	51.23	2.28
Outfall	131.72	with tailwater	1507.00	1581.68	1583.76	1584.56	1586.55	0.005695	13.39	112.51	53.98	1.64
Outfall	131.72	w/o tailwater	1507.00	1581.68	1583.76	1584.56	1586.55	0.005697	13.40	112.50	53.98	1.64
Outfall	108.36	with tailwater	1507.00	1570.00	1580.33	1572.88	1580.45	0.000038	2.70	557.89	54.00	0.15
Outfall	108.36	w/o tailwater	1507.00	1570.00	1570.92	1572.88	1585.09	0.081073	30.20	49.90	53.98	5.54
Outfall	94.73	with tailwater	1507.00	1569.98	1580.35	1572.64	1580.44	0.000028	2.38	632.52	61.00	0.13
Outfall	94.73	w/o tailwater	1507.00	1569.98	1570.85	1572.64	1583.52	0.078719	28.57	52.74	60.98	5.41

ERRORS WARNINGS AND NOTES
Errors Warnings and Notes for Plan : RMFUP LS

River: Las Sendas Chann Reach: Outfall RS: 179.72 Profile: with tailwater
  Warning: The velocity head has changed by more than 0.5 ft (0.15 m). This may indicate the need for additional cross sections.
  Warning: The energy loss was greater than 1.0 ft (0.3 m). between the current and previous cross section. This may indicate the need for additional cross sections.
River: Las Sendas Chann Reach: Outfall RS: 179.72 Profile: w/o tailwater
  Warning: The velocity head has changed by more than 0.5 ft (0.15 m). This may indicate the need for additional cross sections.
  Warning: The energy loss was greater than 1.0 ft (0.3 m). between the current and previous cross section. This may indicate the need for additional cross sections.
River: Las Sendas Chann Reach: Outfall RS: 108.36 Profile: with tailwater
  Warning: The cross-section end points had to be extended vertically for the computed water surface.
  Note: Hydraulic jump has occurred between this cross section and the previous upstream section.
River: Las Sendas Chann Reach: Outfall RS: 108.36 Profile: w/o tailwater
  Warning: The velocity head has changed by more than 0.5 ft (0.15 m). This may indicate the need for additional cross sections.
  Warning: The conveyance ratio (upstream conveyance divided by downstream conveyance) is less than 0.7 or greater than 1.4. This may indicate the need for additional cross sections.
  Warning: The energy loss was greater than 1.0 ft (0.3 m). between the current and previous cross section. This may indicate the need for additional cross sections.
River: Las Sendas Chann Reach: Outfall RS: 94.73 Profile: w/o tailwater
  Warning: The velocity head has changed by more than 0.5 ft (0.15 m). This may indicate the need for additional cross sections.
  Warning: The energy loss was greater than 1.0 ft (0.3 m). between the current and previous cross section. This may indicate the need for additional cross sections.

HEC-RAS Plan: RMFUP LS River: Las Sendas Chann Reach: Outfall

Reach	River Sta	Profile	Q Total	Min Ch El	W.S. Elev	Crit W.S.	E.G. Elev	E.G. Slope	Vel Chnl	Flow Area	Top Width	Froude # Chl
			(cfs)	(ft)	(ft)	(ft)	(ft)	(ft/ft)	(ft/s)	(sq ft)	(ft)	
Outfall	455.00	with tailwater	1507.00	1585.00	1587.25	1588.96	1593.65	0.015010	20.30	74.25	42.00	2.69
Outfall	455.00	w/o tailwater	1507.00	1585.00	1587.25	1588.96	1593.65	0.015010	20.30	74.25	42.00	2.69
Outfall	436.726*	with tailwater	1507.00	1584.73	1586.85	1588.54	1593.36	0.016015	20.47	73.62	43.21	2.76
Outfall	436.726*	w/o tailwater	1507.00	1584.73	1586.85	1588.55	1593.36	0.016015	20.47	73.62	43.21	2.76
Outfall	418.453*	with tailwater	1507.00	1584.46	1586.46	1588.14	1593.05	0.017003	20.59	73.18	44.57	2.83
Outfall	418.453*	w/o tailwater	1507.00	1584.46	1586.46	1588.14	1593.05	0.017003	20.59	73.18	44.57	2.83
Outfall	400.18*	with tailwater	1507.00	1584.19	1586.09	1587.75	1592.72	0.017932	20.67	72.91	46.00	2.89
Outfall	400.18*	w/o tailwater	1507.00	1584.19	1586.09	1587.75	1592.72	0.017932	20.67	72.91	46.00	2.89
Outfall	381.906*	with tailwater	1507.00	1583.92	1585.73	1587.37	1592.38	0.018819	20.71	72.78	47.52	2.95
Outfall	381.906*	w/o tailwater	1507.00	1583.92	1585.73	1587.37	1592.38	0.018819	20.71	72.78	47.52	2.95
Outfall	363.633*	with tailwater	1507.00	1583.65	1585.37	1586.99	1592.04	0.019708	20.72	72.73	49.14	3.00
Outfall	363.633*	w/o tailwater	1507.00	1583.65	1585.37	1586.99	1592.04	0.019708	20.72	72.73	49.14	3.00
Outfall	345.36	with tailwater	1507.00	1583.38	1585.03	1586.63	1591.66	0.020428	20.67	72.90	50.81	3.04
Outfall	345.36	w/o tailwater	1507.00	1583.38	1585.03	1586.63	1591.66	0.020428	20.67	72.90	50.81	3.04
Outfall	327.086*	with tailwater	1507.00	1583.11	1584.70	1586.25	1591.27	0.021017	20.57	73.25	52.55	3.07
Outfall	327.086*	w/o tailwater	1507.00	1583.11	1584.70	1586.25	1591.27	0.021017	20.57	73.25	52.55	3.07
Outfall	308.813*	with tailwater	1507.00	1582.84	1584.37	1585.86	1590.85	0.021508	20.44	73.73	54.39	3.09
Outfall	308.813*	w/o tailwater	1507.00	1582.84	1584.37	1585.86	1590.85	0.021508	20.44	73.73	54.39	3.09
Outfall	290.54*	with tailwater	1507.00	1582.57	1584.05	1585.52	1590.44	0.021926	20.29	74.28	56.23	3.11
Outfall	290.54*	w/o tailwater	1507.00	1582.57	1584.05	1585.52	1590.44	0.021926	20.29	74.28	56.23	3.11
Outfall	272.266*	with tailwater	1507.00	1582.30	1583.74	1585.21	1590.01	0.021365	20.10	74.99	56.02	3.06
Outfall	272.266*	w/o tailwater	1507.00	1582.30	1583.74	1585.21	1590.01	0.021365	20.10	74.99	56.02	3.06
Outfall	253.993*	with tailwater	1507.00	1582.03	1583.47	1584.95	1589.59	0.019872	19.85	75.90	53.63	2.94
Outfall	253.993*	w/o tailwater	1507.00	1582.03	1583.47	1584.95	1589.59	0.019872	19.85	75.90	53.63	2.94
Outfall	235.72	with tailwater	1507.00	1581.76	1583.27	1584.75	1589.18	0.018221	19.52	77.20	51.23	2.80
Outfall	235.72	w/o tailwater	1507.00	1581.76	1583.27	1584.74	1589.18	0.018221	19.52	77.20	51.23	2.80
Outfall	179.72	with tailwater	1507.00	1581.72	1583.45	1584.70	1587.95	0.011692	17.03	88.47	51.23	2.28
Outfall	179.72	w/o tailwater	1507.00	1581.72	1583.45	1584.71	1587.95	0.011695	17.03	88.47	51.23	2.28
Outfall	166.72		Culvert									
Outfall	153.72	with tailwater	1507.00	1581.70	1583.90	1584.69	1586.68	0.005350	13.38	112.63	51.23	2.28
Outfall	153.72	w/o tailwater	1507.00	1581.70	1583.90	1584.69	1586.68	0.005353	13.38	112.61	51.23	2.28
Outfall	131.72	with tailwater	1507.00	1581.68	1583.76	1584.56	1586.55	0.005695	13.39	112.51	53.98	1.64
Outfall	131.72	w/o tailwater	1507.00	1581.68	1583.76	1584.56	1586.55	0.005697	13.40	112.50	53.98	1.64
Outfall	108.36	with tailwater	1507.00	1570.00	1580.33	1572.88	1580.45	0.000038	2.70	557.89	54.00	0.15
Outfall	108.36	w/o tailwater	1507.00	1570.00	1570.92	1572.88	1585.09	0.081073	30.20	49.90	53.98	5.54
Outfall	94.73	with tailwater	1507.00	1569.98	1580.35	1572.64	1580.44	0.000028	2.38	632.52	61.00	0.13
Outfall	94.73	w/o tailwater	1507.00	1569.98	1570.85	1572.64	1583.52	0.078719	28.57	52.74	60.98	5.41

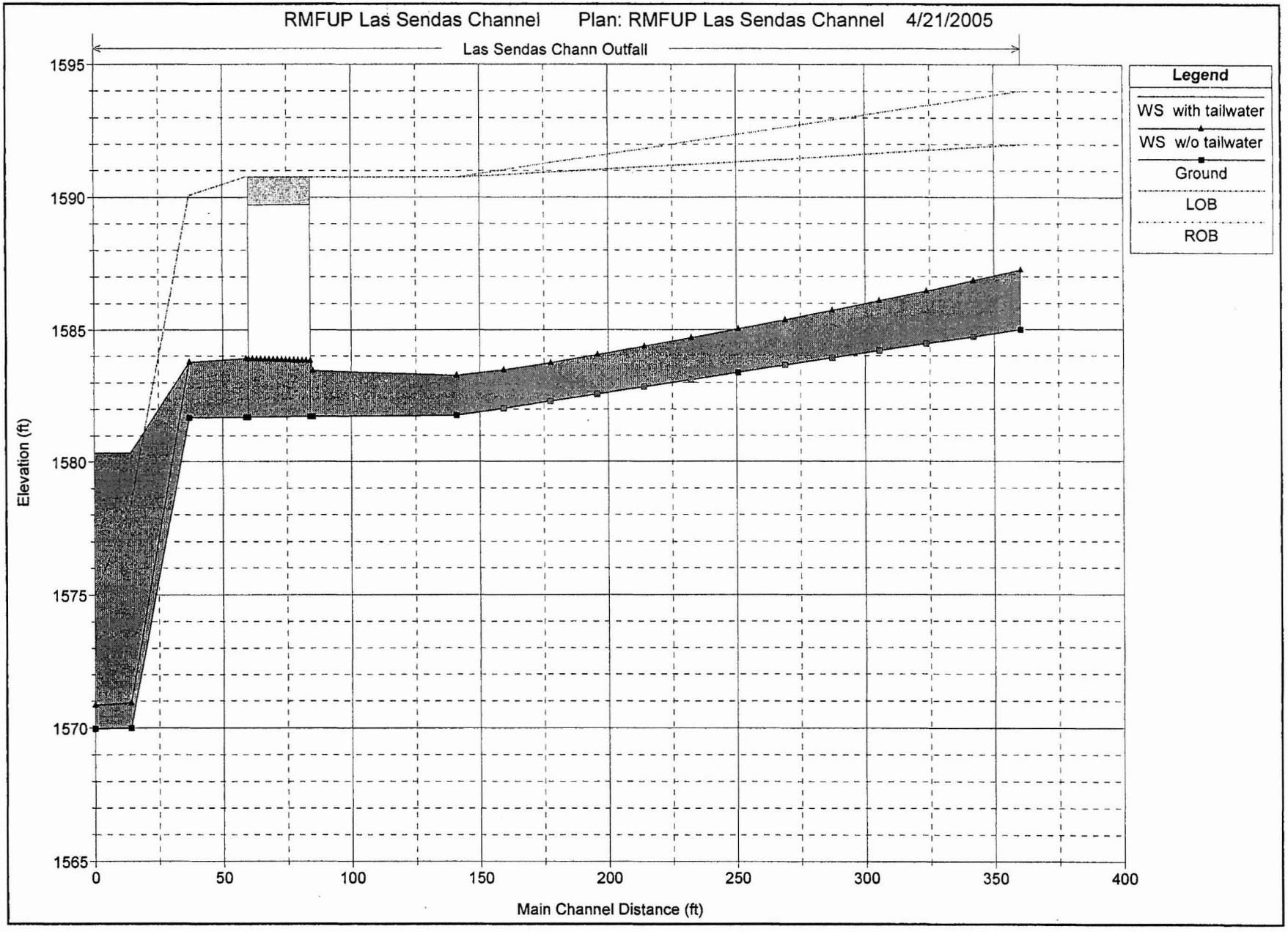
RMFUP Las Sendas Channel Plan: RMFUP Las Sendas Channel 4/21/2005
Las Sendas Chann Outfall
Legend
WS with tailwater
WS w/o tailwater
Ground
LOB
ROB
Elevation (ft)
1595
1590
1585
1580
1575
1570
1565
0
50
100
150
200
250
300
350
400
Main Channel Distance (ft)

Channel Freeboard Check
per ADOT freeboard requirements, RDG Chapter 600 4/25/2005

Las Sendas Channel

			A		B	C	
River Station	Min Chan Elevation	W.S. Elevation	Flow Depth, ft	Velocity, fps	Required FB, ft	Act. Chan. Depth, ft	Check: A+B<C?
455	1585.00	1587.25	2.3	20.3	1.73	7.00	yes
436.726	1584.73	1586.85	2.1	20.5	1.73	7.17	yes
418.453	1584.46	1586.46	2.0	20.6	1.72	7.33	yes
400.18	1584.19	1586.09	1.9	20.7	1.71	7.50	yes
381.906	1583.92	1585.73	1.8	20.7	1.69	7.67	yes
363.633	1583.65	1585.37	1.7	20.7	1.68	7.83	yes
345.36	1583.38	1585.03	1.6	20.7	1.66	8.00	yes
327.086	1583.11	1584.70	1.6	20.6	1.63	8.17	yes
308.813	1582.84	1584.37	1.5	20.4	1.60	8.33	yes
290.54	1582.57	1584.05	1.5	20.3	1.57	8.50	yes
272.266	1582.30	1583.74	1.4	20.1	1.54	8.67	yes
253.993	1582.03	1583.47	1.4	19.9	1.51	8.83	yes
235.72	1581.76	1583.27	1.5	19.5	1.49	9.00	yes
179.72	1581.72	1583.45	1.7	17.0	1.25	9.06	yes
153.72	1581.70	1583.90	2.2	13.4	1.00	9.07	yes
131.72	1581.68	1583.76	2.1	13.4	0.97	8.32	yes

HEC-RAS Version 3.1.2 April 2004
U.S. Army Corp of Engineers
Hydrologic Engineering Center
609 Second Street
Davis, California

```
X     X  XXXXXX    XXXX        XXXX       XX      XXXX
X     X  X        X    X       X   X     X  X    X
X     X  X        X            X   X    X    X   X
XXXXXXX  XXXX     X       XXX  XXXX     XXXXXX    XXXX
X     X  X        X            X  X     X    X        X
X     X  X        X    X       X   X    X    X        X
X     X  XXXXXX    XXXX        X    X   X    X   XXXXX
```

PROJECT DATA
Project Title: RMFUP 86th Street Channel
Project File : RMFUP86.prj
Run Date and Time: 4/21/2005 3:37:22 PM

Project in English units

PLAN DATA

Plan Title: RMFUP 86th Street Channel 95%
Plan File : p:\040031\Eng\Calcs\Hydraulics\HEC-RAS\RMFUP86.p02

Geometry Title: RMFUP 86th Street Channel 95%
Geometry File : p:\040031\Eng\Calcs\Hydraulics\HEC-RAS\RMFUP86.g02

Flow Title : RMFUP 86th Street Channel
Flow File : p:\040031\Eng\Calcs\Hydraulics\HEC-RAS\RMFUP86.f01

Plan Summary Information:

Number of:	Cross Sections	= 11	Multiple Openings	=	0
	Culverts	= 1	Inline Structures	=	0
	Bridges	= 0	Lateral Structures	=	0

Computational Information
Water surface calculation tolerance = 0.01
Critical depth calculation tolerance = 0.01
Maximum number of iterations = 20
Maximum difference tolerance = 0.3
Flow tolerance factor = 0.001

Computation Options
Critical depth computed only where necessary
Conveyance Calculation Method: At breaks in n values only
Friction Slope Method: Average Conveyance
Computational Flow Regime: Mixed Flow

FLOW DATA

Flow Title: RMFUP 86th Street Channel
Flow File : p:\040031\Eng\Calcs\Hydraulics\HEC-RAS\RMFUP86.f01

Flow Data (cfs)

River	Reach	RS	With Tailwater	Without Tailwater	Approx 10-yr
86th Street Chan	Outlet	284.50	460	460	230

Boundary Conditions

River	Reach	Profile	Upstream	Downstream
86th Street Chan	Outlet	With Tailwater	Normal S = 0.02	Known WS = 1583.86
86th Street Chan	Outlet	Without Tailwater	Normal S = 0.02	Normal S = 0.005

GEOMETRY DATA

Geometry Title: RMFUP 86th Street Channel 95%
Geometry File : p:\040031\Eng\Calcs\Hydraulics\HEC-RAS\RMFUP86.g02

CROSS SECTION

RIVER: 86th Street Chan
REACH: Outlet RS: 284.50

INPUT
Description: Channel Station 0+50.13
Station Elevation Data num= 4

Sta	Elev	Sta	Elev	Sta	Elev	Sta	Elev
0	1593.25	7.5	1588.25	15.5	1588.25	23	1593.25

Manning's n Values num= 3

Sta	n Val	Sta	n Val	Sta	n Val
0	.013	0	.013	23	.013

Bank Sta: Left	Right	Lengths: Left Channel	Right	Coeff Contr.	Expan.
0	23	20	20	.1	.3

CROSS SECTION

RIVER: 86th Street Chan
REACH: Outlet RS: 264.496*

INPUT
Description:
Station Elevation Data num= 6

Sta	Elev	Sta	Elev	Sta	Elev	Sta	Elev	Sta	Elev
0	1592.85	.02	1591.84	6	1587.85	14	1587.85	19.58	1591.84
19.6	1592.85								

Manning's n Values num= 3

Sta	n Val	Sta	n Val	Sta	n Val
0	.013	0	.013	19.6	.013

Bank Sta: Left	Right	Lengths: Left Channel	Right	Coeff Contr.	Expan.
0	19.6	20	20	.1	.3

CROSS SECTION

RIVER: 86th Street Chan
REACH: Outlet RS: 244.492*

INPUT
Description:
Station Elevation Data num= 6

Sta	Elev	Sta	Elev	Sta	Elev	Sta	Elev	Sta	Elev
0	1592.45	.01	1590.44	4.5	1587.45	12.5	1587.45	16.18	1590.44
16.2	1592.45								

Manning's n Values num= 3

Sta	n Val	Sta	n Val	Sta	n Val

```
      0    .013       0    .013    16.2    .013

Bank Sta: Left   Right    Lengths: Left Channel   Right     Coeff Contr.   Expan.
             0    16.2             9.86    9.86    9.86             .1       .3

CROSS SECTION


RIVER: 86th Street Chan
REACH: Outlet             RS: 234.63

INPUT
Description: Channel Station 1+00.00
Station Elevation Data    num=       6
     Sta    Elev     Sta    Elev     Sta    Elev     Sta    Elev     Sta    Elev
       0 1592.25     .01 1589.75    3.76 1587.25   11.76 1587.25   14.51 1589.75
   14.52 1592.25

Manning's n Values        num=       3
     Sta   n Val     Sta   n Val     Sta   n Val
       0    .013       0    .013   14.52    .013

Bank Sta: Left   Right    Lengths: Left Channel   Right     Coeff Contr.   Expan.
             0   14.52               20      20      20             .1       .3

CROSS SECTION


RIVER: 86th Street Chan
REACH: Outlet             RS: 214.646*

INPUT
Description:
Station Elevation Data    num=       6
     Sta    Elev     Sta    Elev     Sta    Elev     Sta    Elev     Sta    Elev
       0 1591.85     .01 1588.35    2.26 1586.85   10.26 1586.85   11.91 1588.35
   11.92 1591.85

Manning's n Values        num=       3
     Sta   n Val     Sta   n Val     Sta   n Val
       0    .013       0    .013   11.92    .013

Bank Sta: Left   Right    Lengths: Left Channel   Right     Coeff Contr.   Expan.
             0   11.92               20      20      20             .1       .3

CROSS SECTION


RIVER: 86th Street Chan
REACH: Outlet             RS: 194.662*

INPUT
Description:
Station Elevation Data    num=       6
     Sta    Elev     Sta    Elev     Sta    Elev     Sta    Elev     Sta    Elev
       0 1591.45     .01 1586.95     .76 1586.45    8.76 1586.45    9.31 1586.95
    9.32 1591.45

Manning's n Values        num=       3
     Sta   n Val     Sta   n Val     Sta   n Val
       0    .013       0    .013    9.32    .013

Bank Sta: Left   Right    Lengths: Left Channel   Right     Coeff Contr.   Expan.
             0    9.32             10.04   10.04   10.04             .1       .3

CROSS SECTION


RIVER: 86th Street Chan
REACH: Outlet             RS: 184.63
```

```
INPUT
Description: Channel Station 1+50.00
Station Elevation Data    num=       4
     Sta    Elev     Sta    Elev     Sta    Elev     Sta    Elev
       0 1591.25     .01 1586.25    8.01 1586.25    8.02 1591.25

Manning's n Values        num=       3
     Sta   n Val     Sta   n Val     Sta   n Val
       0    .013       0    .013    8.02    .013

Bank Sta: Left   Right    Lengths: Left Channel   Right     Coeff Contr.   Expan.
             0    8.02            41.08   41.08   41.08             .1      .3

CROSS SECTION


RIVER: 86th Street Chan
REACH: Outlet             RS: 143.55

INPUT
Description: Channel Station 1+91.08
Station Elevation Data    num=       4
     Sta    Elev     Sta    Elev     Sta    Elev     Sta    Elev
       0    1591     .01 1572.56    8.01 1572.56    8.02    1591

Manning's n Values        num=       3
     Sta   n Val     Sta   n Val     Sta   n Val
       0    .013       0    .013    8.02    .013

Bank Sta: Left   Right    Lengths: Left Channel   Right     Coeff Contr.   Expan.
             0    8.02            11.55   11.55   11.55             .1      .3

CROSS SECTION


RIVER: 86th Street Chan
REACH: Outlet             RS: 133

INPUT
Description: Channel Station 2+02.63
Station Elevation Data    num=       4
     Sta    Elev     Sta    Elev     Sta    Elev     Sta    Elev
       0    1591     .01  1572.5    8.01  1572.5    8.02    1591

Manning's n Values        num=       3
     Sta   n Val     Sta   n Val     Sta   n Val
       0    .013       0    .013    8.02    .013

Bank Sta: Left   Right    Lengths: Left Channel   Right     Coeff Contr.   Expan.
             0    8.02              102     102     102             .1      .3

CULVERT


RIVER: 86th Street Chan
REACH: Outlet             RS: 82

INPUT
Description:
Distance from Upstream XS =      .01
Deck/Roadway Width        =      100
Weir Coefficient          =      2.6
Upstream  Deck/Roadway Coordinates
    num=       2
     Sta Hi Cord Lo Cord     Sta Hi Cord Lo Cord
       0    1591  1580.5       8    1591  1580.5

Upstream Bridge Cross Section Data
Station Elevation Data    num=       4
```

```
     Sta    Elev     Sta    Elev     Sta    Elev     Sta    Elev
       0    1591     .01  1572.5    8.01  1572.5    8.02    1591

Manning's n Values        num=       3
     Sta   n Val     Sta   n Val     Sta   n Val
       0    .013       0    .013    8.02    .013

Bank Sta: Left   Right    Coeff Contr.   Expan.
             0    8.02             .1       .3

Downstream  Deck/Roadway Coordinates
    num=       2
     Sta Hi Cord Lo Cord      Sta Hi Cord Lo Cord
       0  1582.5    1580        8  1582.5    1580

Downstream Bridge Cross Section Data
Station Elevation Data    num=       4
     Sta    Elev     Sta    Elev     Sta    Elev     Sta    Elev
       0    1580     .01    1572    8.01    1572    8.02    1580

Manning's n Values        num=       3
     Sta   n Val     Sta   n Val     Sta   n Val
       0    .013       0    .013    8.02    .013

Bank Sta: Left   Right    Coeff Contr.   Expan.
             0    8.02             .1       .3

Upstream Embankment side slope              =       0 horiz. to 1.0 vertical
Downstream Embankment side slope            =       0 horiz. to 1.0 vertical
Maximum allowable submergence for weir flow =     .95
Elevation at which weir flow begins         =
Energy head used in spillway design         =
Spillway height used in design              =
Weir crest shape                            = Broad Crested

Number of Culverts =  1

Culvert Name     Shape      Rise    Span
Culvert #1           Box       8       8
FHWA Chart # 8 - flared wingwalls
FHWA Scale # 3 - Wingwall flared 0 deg. (sides extended straight)
Solution Criteria = Highest U.S. EG
Culvert Upstrm Dist  Length    Top n  Bottom n  Depth Blocked  Entrance Loss Coef   Exit Loss Coef
               .01     100     .013     .013        0                  .2                1
Upstream   Elevation =  1572.5
           Centerline Station =  4.01
Downstream Elevation =  1572
           Centerline Station =  4.01

CROSS SECTION


RIVER: 86th Street Chan
REACH: Outlet            RS: 31

INPUT
Description: Channel Station 3+02.63
Station Elevation Data    num=       4
     Sta    Elev     Sta    Elev     Sta    Elev     Sta    Elev
       0    1580     .01    1572    8.01    1572    8.02    1580

Manning's n Values        num=       3
     Sta   n Val     Sta   n Val     Sta   n Val
       0    .013       0    .013    8.02    .013

Bank Sta: Left   Right    Lengths: Left Channel   Right     Coeff Contr.   Expan.
             0    8.02               31      31      31             .1       .3

CROSS SECTION
```

RIVER: 86th Street Chan
REACH: Outlet RS: 0

INPUT
Description: Channel Station 3+34.63
Station Elevation Data num= 4

Sta	Elev	Sta	Elev	Sta	Elev	Sta	Elev
0	1580	1	1572	25	1572	26	1580

Manning's n Values num= 3

Sta	n Val	Sta	n Val	Sta	n Val
0	.02	0	.02	26	.02

Bank Sta: Left	Right	Lengths: Left Channel	Right	Coeff Contr.	Expan.
0	26	0	0	.1	.3

SUMMARY OF MANNING'S N VALUES

River:86th Street Chan

Reach	River Sta.	n1	n2	n3
Outlet	284.50	.013	.013	.013
Outlet	264.496*	.013	.013	.013
Outlet	244.492*	.013	.013	.013
Outlet	234.63	.013	.013	.013
Outlet	214.646*	.013	.013	.013
Outlet	194.662*	.013	.013	.013
Outlet	184.63	.013	.013	.013
Outlet	143.55	.013	.013	.013
Outlet	133	.013	.013	.013
Outlet	82	Culvert		
Outlet	31	.013	.013	.013
Outlet	0	.02	.02	.02

SUMMARY OF REACH LENGTHS

River: 86th Street Chan

Reach	River Sta.	Left	Channel	Right
Outlet	284.50	20	20	20
Outlet	264.496*	20	20	20
Outlet	244.492*	9.86	9.86	9.86
Outlet	234.63	20	20	20
Outlet	214.646*	20	20	20
Outlet	194.662*	10.04	10.04	10.04
Outlet	184.63	41.08	41.08	41.08
Outlet	143.55	11.55	11.55	11.55
Outlet	133	102	102	102
Outlet	82	Culvert		
Outlet	31	31	31	31
Outlet	0	0	0	0

SUMMARY OF CONTRACTION AND EXPANSION COEFFICIENTS
River: 86th Street Chan

Reach	River Sta.	Contr.	Expan.
Outlet	284.50	.1	.3

Outlet	264.496*		.1	.3
Outlet	244.492*		.1	.3
Outlet	234.63		.1	.3
Outlet	214.646*		.1	.3
Outlet	194.662*		.1	.3
Outlet	184.63		.1	.3
Outlet	143.55		.1	.3
Outlet	133		.1	.3
Outlet	82	Culvert		
Outlet	31		.1	.3
Outlet	0		.1	.3

Profile Output Table - Standard Table 1

Reach	River Sta	Profile	Q Total (cfs)	Min Ch El (ft)	W.S. Elev (ft)	Crit W.S. (ft)	E.G. Elev (ft)	E.G. Slope (ft/ft)	Vel Chnl (ft/s)	Flow Area (sq ft)	Top Width (ft)	Froude # Chl
Outlet	284.50	With Tailwater	460.00	1588.25	1590.26	1591.95	1596.95	0.020036	20.76	22.16	14.03	2.91
Outlet	284.50	Without Tailwate	460.00	1588.25	1590.26	1591.95	1596.95	0.020036	20.76	22.16	14.03	2.91
Outlet	284.50	Approx 10-yr	230.00	1588.25	1589.61	1590.75	1594.00	0.020027	16.81	13.68	12.09	2.78
Outlet	264.496*	With Tailwater	460.00	1587.85	1589.88	1591.56	1596.54	0.019728	20.72	22.20	13.88	2.89
Outlet	264.496*	Without Tailwate	460.00	1587.85	1589.88	1591.56	1596.54	0.019728	20.72	22.20	13.88	2.89
Outlet	264.496*	Approx 10-yr	230.00	1587.85	1589.22	1590.36	1593.59	0.019726	16.78	13.71	11.98	2.76
Outlet	244.492*	With Tailwater	460.00	1587.45	1589.51	1591.13	1596.15	0.019310	20.68	22.25	13.62	2.85
Outlet	244.492*	Without Tailwate	460.00	1587.45	1589.51	1591.13	1596.15	0.019310	20.68	22.25	13.62	2.85
Outlet	244.492*	Approx 10-yr	230.00	1587.45	1588.84	1589.98	1593.19	0.019313	16.74	13.74	11.79	2.73
Outlet	234.63	With Tailwater	460.00	1587.25	1589.33	1590.95	1595.95	0.019004	20.65	22.27	13.41	2.82
Outlet	234.63	Without Tailwate	460.00	1587.25	1589.33	1590.95	1595.95	0.019004	20.65	22.27	13.41	2.82
Outlet	234.63	Approx 10-yr	230.00	1587.25	1588.65	1589.79	1592.99	0.019052	16.72	13.76	11.64	2.71
Outlet	214.646*	With Tailwater	460.00	1586.85	1588.97	1590.67	1595.58	0.017829	20.64	22.29	11.90	2.66
Outlet	214.646*	Without Tailwate	460.00	1586.85	1588.97	1590.67	1595.58	0.017829	20.64	22.29	11.90	2.66
Outlet	214.646*	Approx 10-yr	230.00	1586.85	1588.25	1589.36	1592.61	0.019161	16.75	13.73	11.64	2.72
Outlet	194.662*	With Tailwater	460.00	1586.45	1588.97	1590.71	1595.12	0.015062	19.90	23.12	9.31	2.23
Outlet	194.662*	Without Tailwate	460.00	1586.45	1588.97	1590.71	1595.12	0.015062	19.90	23.12	9.31	2.23
Outlet	194.662*	Approx 10-yr	230.00	1586.45	1587.98	1589.14	1592.21	0.016537	16.51	13.94	9.30	2.38
Outlet	184.63	With Tailwater	460.00	1586.25	1589.31	1590.92	1594.78	0.012924	18.77	24.51	8.01	1.89
Outlet	184.63	Without Tailwate	460.00	1586.25	1589.31	1590.92	1594.78	0.012924	18.77	24.51	8.01	1.89
Outlet	184.63	Approx 10-yr	230.00	1586.25	1588.06	1589.19	1591.96	0.014299	15.85	14.51	8.01	2.07
Outlet	143.55	With Tailwater	460.00	1572.56	1584.37	1577.23	1584.74	0.000420	4.86	94.57	8.01	0.25
Outlet	143.55	Without Tailwate	460.00	1572.56	1574.24	1577.23	1592.46	0.071813	34.25	13.43	8.00	4.66
Outlet	143.55	Approx 10-yr	230.00	1572.56	1573.46	1575.50	1589.45	0.119571	32.10	7.17	8.00	5.98
Outlet	133	With Tailwater	460.00	1572.50	1584.37	1577.17	1584.73	0.000416	4.84	95.04	8.01	0.25
Outlet	133	Without Tailwate	460.00	1572.50	1574.23	1577.17	1591.32	0.065381	33.17	13.87	8.00	4.44
Outlet	133	Approx 10-yr	230.00	1572.50	1573.45	1575.44	1587.66	0.099654	30.25	7.60	8.00	5.47
Outlet	82		Culvert									
Outlet	31	With Tailwater	460.00	1572.00	1583.62		1584.00	0.000435	4.94	93.14	8.02	0.26
Outlet	31	Without Tailwate	460.00	1572.00	1574.23	1576.67	1584.54	0.031440	25.76	17.86	8.01	4.44
Outlet	31	Approx 10-yr	230.00	1572.00	1573.36	1574.94	1580.30	0.033505	21.13	10.88	8.00	5.47
Outlet	0	With Tailwater	460.00	1572.00	1583.86	1574.24	1583.90	0.000037	1.53	300.36	26.00	0.08
Outlet	0	Without Tailwate	460.00	1572.00	1572.77	1574.24	1582.43	0.174092	24.95	18.44	24.19	5.04
Outlet	0	Approx 10-yr	230.00	1572.00	1572.52	1573.41	1577.86	0.159348	18.56	12.39	24.13	4.56

ERRORS WARNINGS AND NOTES
Errors Warnings and Notes for Plan : 95%

```
River: 86th Street Chan  Reach: Outlet     RS: 184.63     Profile: With Tailwater
     Warning:The velocity head has changed by more than 0.5 ft (0.15 m).  This may indicate the need for additional cross sections.
River: 86th Street Chan  Reach: Outlet     RS: 184.63     Profile: Without Tailwate
     Warning:The velocity head has changed by more than 0.5 ft (0.15 m).  This may indicate the need for additional cross sections.
River: 86th Street Chan  Reach: Outlet     RS: 143.55     Profile: With Tailwater
     Note:   Hydraulic jump has occurred between this cross section and the previous upstream section.
River: 86th Street Chan  Reach: Outlet     RS: 143.55     Profile: Without Tailwate
     Warning:The velocity head has changed by more than 0.5 ft (0.15 m).  This may indicate the need for additional cross sections.
     Warning:The conveyance ratio (upstream conveyance divided by downstream conveyance) is less than 0.7 or greater than 1.4.
             This may indicate the need for additional cross sections.
     Warning:The energy loss was greater than 1.0 ft (0.3 m). between the current and previous cross section.  This may indicate
             the need for additional cross sections.
River: 86th Street Chan  Reach: Outlet     RS: 143.55     Profile: Approx 10-yr
     Warning:The velocity head has changed by more than 0.5 ft (0.15 m).  This may indicate the need for additional cross sections.
     Warning:The conveyance ratio (upstream conveyance divided by downstream conveyance) is less than 0.7 or greater than 1.4.
             This may indicate the need for additional cross sections.
     Warning:The energy loss was greater than 1.0 ft (0.3 m). between the current and previous cross section.  This may indicate
             the need for additional cross sections.
River: 86th Street Chan  Reach: Outlet     RS: 133     Profile: Without Tailwate
     Warning:The velocity head has changed by more than 0.5 ft (0.15 m).  This may indicate the need for additional cross sections.
     Warning:The energy loss was greater than 1.0 ft (0.3 m). between the current and previous cross section.  This may indicate
             the need for additional cross sections.
River: 86th Street Chan  Reach: Outlet     RS: 133     Profile: Approx 10-yr
     Warning:The velocity head has changed by more than 0.5 ft (0.15 m).  This may indicate the need for additional cross sections.
     Warning:The energy loss was greater than 1.0 ft (0.3 m). between the current and previous cross section.  This may indicate
             the need for additional cross sections.
River: 86th Street Chan  Reach: Outlet     RS: 82     Profile: With Tailwater
     Warning:The weir over culvert is submerged.
River: 86th Street Chan  Reach: Outlet     RS: 82     Profile: With Tailwater     Culv: Culvert #1
     Warning:During the culvert inlet computations, the program could not balance the culvert/weir flow.  The reported inlet
             energy grade answer may not be valid.
River: 86th Street Chan  Reach: Outlet     RS: 82     Profile: Without Tailwate     Culv: Culvert #1
     Note:   The flow in the culvert is entirely supercritical.
River: 86th Street Chan  Reach: Outlet     RS: 82     Profile: Approx 10-yr     Culv: Culvert #1
     Note:   The flow in the culvert is entirely supercritical.
River: 86th Street Chan  Reach: Outlet     RS: 31     Profile: With Tailwater
     Warning:The cross-section end points had to be extended vertically for the computed water surface.
     Warning:The conveyance ratio (upstream conveyance divided by downstream conveyance) is less than 0.7 or greater than 1.4.
             This may indicate the need for additional cross sections.
River: 86th Street Chan  Reach: Outlet     RS: 0     Profile: Without Tailwate
     Warning:The velocity head has changed by more than 0.5 ft (0.15 m).  This may indicate the need for additional cross sections.
     Warning:The conveyance ratio (upstream conveyance divided by downstream conveyance) is less than 0.7 or greater than 1.4.
             This may indicate the need for additional cross sections.
     Warning:The energy loss was greater than 1.0 ft (0.3 m). between the current and previous cross section.  This may indicate
             the need for additional cross sections.
River: 86th Street Chan  Reach: Outlet     RS: 0     Profile: Approx 10-yr
     Warning:The velocity head has changed by more than 0.5 ft (0.15 m).  This may indicate the need for additional cross sections.
     Warning:The conveyance ratio (upstream conveyance divided by downstream conveyance) is less than 0.7 or greater than 1.4.
             This may indicate the need for additional cross sections.
     Warning:The energy loss was greater than 1.0 ft (0.3 m). between the current and previous cross section.  This may indicate
             the need for additional cross sections.
```

HEC-RAS Plan: 95% River: 86th Street Chan Reach: Outlet

Reach	River Sta	Profile	Q Total	Min Ch El	W.S. Elev	Crit W.S.	E.G. Elev	E.G. Slope	Vel Chnl	Flow Area	Top Width	Froude # Chl
			(cfs)	(ft)	(ft)	(ft)	(ft)	(ft/ft)	(ft/s)	(sq ft)	(ft)	
Outlet	284.50	With Tailwater	460.00	1588.25	1590.26	1591.95	1596.95	0.020036	20.76	22.16	14.03	2.91
Outlet	284.50	Without Tailwate	460.00	1588.25	1590.26	1591.95	1596.95	0.020036	20.76	22.16	14.03	2.91
Outlet	284.50	Approx 10-yr	230.00	1588.25	1589.61	1590.75	1594.00	0.020027	16.81	13.68	12.09	2.78
Outlet	264.496*	With Tailwater	460.00	1587.85	1589.88	1591.56	1596.54	0.019728	20.72	22.20	13.88	2.89
Outlet	264.496*	Without Tailwate	460.00	1587.85	1589.88	1591.56	1596.54	0.019728	20.72	22.20	13.88	2.89
Outlet	264.496*	Approx 10-yr	230.00	1587.85	1589.22	1590.36	1593.59	0.019726	16.78	13.71	11.98	2.76
Outlet	244.492*	With Tailwater	460.00	1587.45	1589.51	1591.13	1596.15	0.019310	20.68	22.25	13.62	2.85
Outlet	244.492*	Without Tailwate	460.00	1587.45	1589.51	1591.13	1596.15	0.019310	20.68	22.25	13.62	2.85
Outlet	244.492*	Approx 10-yr	230.00	1587.45	1588.84	1589.98	1593.19	0.019313	16.74	13.74	11.79	2.73
Outlet	234.63	With Tailwater	460.00	1587.25	1589.33	1590.95	1595.95	0.019004	20.65	22.27	13.41	2.82
Outlet	234.63	Without Tailwate	460.00	1587.25	1589.33	1590.95	1595.95	0.019004	20.65	22.27	13.41	2.82
Outlet	234.63	Approx 10-yr	230.00	1587.25	1588.65	1589.79	1592.99	0.019052	16.72	13.76	11.64	2.71
Outlet	214.646*	With Tailwater	460.00	1586.85	1588.97	1590.67	1595.58	0.017829	20.64	22.29	11.90	2.66
Outlet	214.646*	Without Tailwate	460.00	1586.85	1588.97	1590.67	1595.58	0.017829	20.64	22.29	11.90	2.66
Outlet	214.646*	Approx 10-yr	230.00	1586.85	1588.25	1589.36	1592.61	0.019161	16.75	13.73	11.64	2.72
Outlet	194.662*	With Tailwater	460.00	1586.45	1588.97	1590.71	1595.12	0.015062	19.90	23.12	9.31	2.23
Outlet	194.662*	Without Tailwate	460.00	1586.45	1588.97	1590.71	1595.12	0.015062	19.90	23.12	9.31	2.23
Outlet	194.662*	Approx 10-yr	230.00	1586.45	1587.98	1589.14	1592.21	0.016537	16.51	13.94	9.30	2.38
Outlet	184.63	With Tailwater	460.00	1586.25	1589.31	1590.92	1594.78	0.012924	18.77	24.51	8.01	1.89
Outlet	184.63	Without Tailwate	460.00	1586.25	1589.31	1590.92	1594.78	0.012924	18.77	24.51	8.01	1.89
Outlet	184.63	Approx 10-yr	230.00	1586.25	1588.06	1589.19	1591.96	0.014299	15.85	14.51	8.01	2.07
Outlet	143.55	With Tailwater	460.00	1572.56	1584.37	1577.23	1584.74	0.000420	4.86	94.57	8.01	0.25
Outlet	143.55	Without Tailwate	460.00	1572.56	1574.24	1577.23	1592.46	0.071813	34.25	13.43	8.00	4.66
Outlet	143.55	Approx 10-yr	230.00	1572.56	1573.46	1575.50	1589.45	0.119571	32.10	7.17	8.00	5.98
Outlet	133	With Tailwater	460.00	1572.50	1584.37	1577.17	1584.73	0.000416	4.84	95.04	8.01	0.25
Outlet	133	Without Tailwate	460.00	1572.50	1574.23	1577.17	1591.32	0.065381	33.17	13.87	8.00	4.44
Outlet	133	Approx 10-yr	230.00	1572.50	1573.45	1575.44	1587.66	0.099654	30.25	7.60	8.00	5.47
Outlet	82		Culvert									
Outlet	31	With Tailwater	460.00	1572.00	1583.62		1584.00	0.000435	4.94	93.14	8.02	0.26
Outlet	31	Without Tailwate	460.00	1572.00	1574.23	1576.67	1584.54	0.031440	25.76	17.86	8.01	4.44
Outlet	31	Approx 10-yr	230.00	1572.00	1573.36	1574.94	1580.30	0.033505	21.13	10.88	8.00	5.47
Outlet	0	With Tailwater	460.00	1572.00	1583.86	1574.24	1583.90	0.000037	1.53	300.36	26.00	0.08
Outlet	0	Without Tailwate	460.00	1572.00	1572.77	1574.24	1582.43	0.174092	24.95	18.44	24.19	5.04
Outlet	0	Approx 10-yr	230.00	1572.00	1572.52	1573.41	1577.86	0.159348	18.56	12.39	24.13	4.56

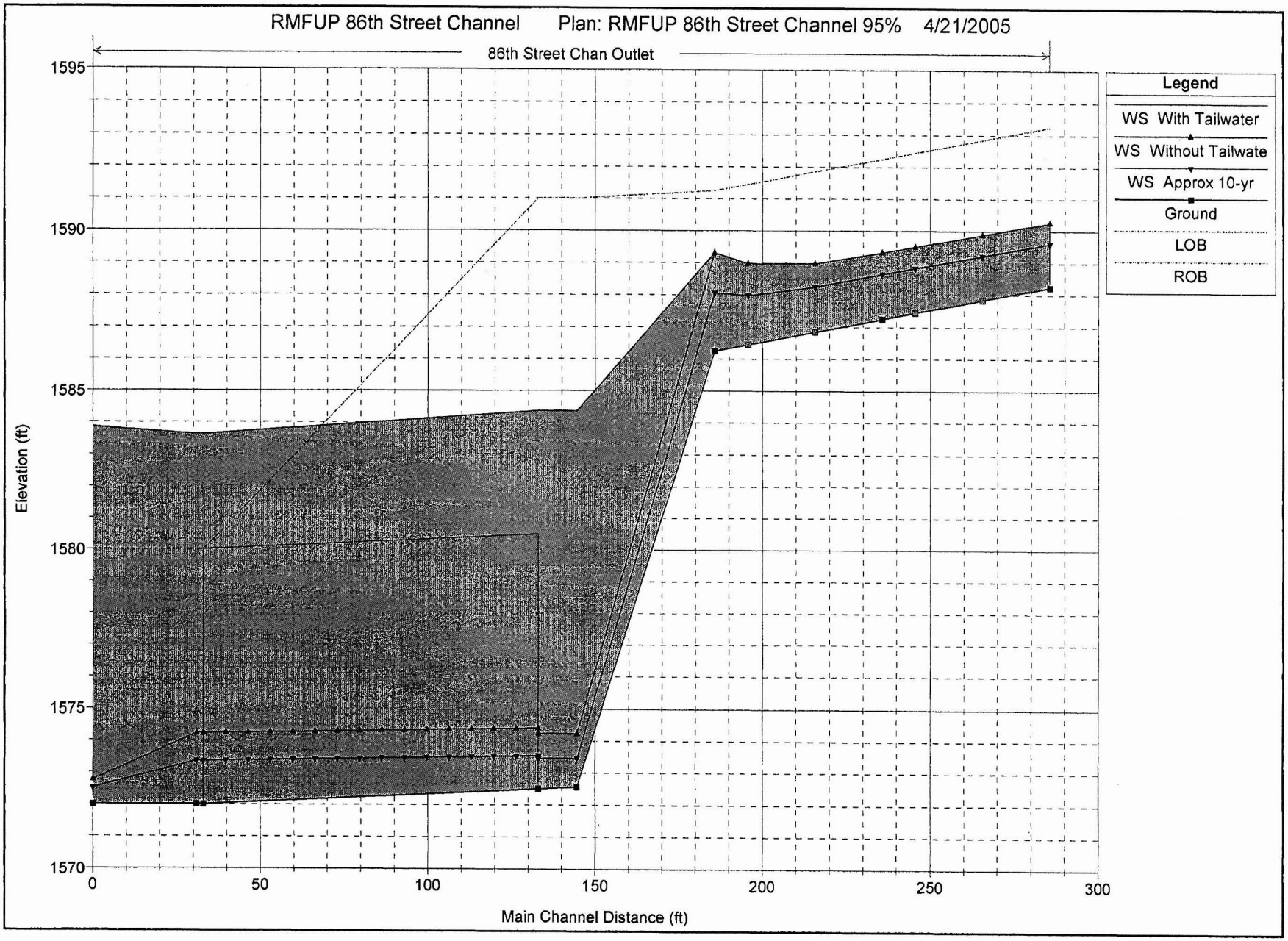
RMFUP 86th Street Channel
Plan: RMFUP 86th Street Channel 95%
4/21/2005
86th Street Chan Outlet
Legend
WS With Tailwater
WS Without Tailwate
WS Approx 10-yr
Ground
LOB
ROB
Elevation (ft)
1595
1590
1585
1580
1575
1570
0
50
100
150
200
250
300
Main Channel Distance (ft)

Channel Freeboard Check
per ADOT freeboard requirements, RDG Chapter 600 4/25/2005

86th Street Channel

			A		B	C		
Cst Station	River Station	Min Chan Elevation	W.S. Elevation	Flow Depth, ft	Velocity, fps	Required FB, ft	Act. Chan. Depth, ft	Check: A+B<C?
50.130	284.5	1588.25	1590.26	2.0	20.8	1.74	5.00	yes
	264.496	1587.85	1589.88	2.0	20.7	1.74	5.00	yes
	244.492	1587.45	1589.51	2.1	20.7	1.74	5.00	yes
100.000	234.63	1587.25	1589.33	2.1	20.7	1.74	5.00	yes
	214.646	1586.85	1588.97	2.1	20.6	1.75	5.00	yes
	194.662	1586.45	1588.97	2.5	19.9	1.73	5.00	yes
150.000	184.63	1586.25	1589.31	3.1	18.8	1.71	5.00	yes
191.080	143.55	1572.56	1574.24	1.7	34.3	3.98	18.44	yes
202.630	133	1572.50	1574.23	1.7	33.2	3.76	18.50	yes

Appendix C: Collector Channel Hydraulic Calculations

- Inlet Hydraulics
- Culvert Analyses
- Baffle Chute Spillway
- Impact Basin Energy Dissipaters
- Weir Spillways

04/25/05
Red Mountain Freeway, Power to University
Flood Pool Pipe Inlet Capacity Summary:

Inlet/ Pipe No.	Station	Q100, cfs	No. of Pipes	Pipe Size, in	Allowable Channel HW, ft	C-15.81 Grate Capacity	C-15.81 OK?	C-15.75 w/ C-13.75 Grate Capacity	C-15.75 w/ C-13.75 Grate OK?
950	12+84	52	1	36	3.0	17.0	NO	68.0	YES
951	18+20	22	1	24	1.5	10.9	NO	22.5	YES
952	20+10	21	1	24	2.0	13.3	NO	24.7	YES
953	23+78	23	1	24	3.0	17.0	NO	28.5	YES
954	25+62	49	1	36	2.0	13.3	NO	59.9	YES
955	32+58	43	1	36	2.0	13.3	NO	59.9	YES
956	43+80	12	1	24	2.0	13.3	YES	24.7	YES
957	46+81	28	1	30	2.5	15.2	NO	43.4	YES
958	48+91	34	1	30	1.5	10.9	NO	37.2	YES
959	62+55	93	2	36	2.5	15.2	NO	128.1	YES
960	68+06	187	2	48	2.0	13.3	NO	224.6	YES
961	70+73	4	1	24	2.5	15.2	YES	26.6	YES
962	74+50	20	1	24	3.0	17.0	NO	28.5	YES
963	76+58	7	1	24	2.0	13.3	YES	24.7	YES
964	77+72	10	1	24	2.5	15.2	YES	26.6	YES
965	84+62	3	1	24	2.5	15.2	YES	26.6	YES
966	107+21	14	1	24	2.5	15.2	YES	26.6	YES
967	108+61	21	1	24	3.5	18.5	NO	30.2	YES
968	114+00	7	1	24	2.5	15.2	YES	26.6	YES
969	117+15	130	2	36	3.0	17.0	NO	135.9	YES
970	118+38	25	1	24	2.5	15.2	NO	26.6	YES
971	120+40	23	1	24	3.0	17.0	NO	28.5	YES
972	123+45	12	1	24	3.0	17.0	YES	28.5	YES
973	133+10	144	2	42	2.0	13.3	NO	166.5	YES
974	137+75	112	2	36	2.5	15.2	NO	128.1	YES
975	142+27	56	1	36	2.0	13.3	NO	59.9	YES
976	144+65	6	1	24	2.5	15.2	YES	26.6	YES
977	147+70	40	1	30	3.0	17.0	NO	46.1	YES
978	157+78	68	1	42	2.5	15.2	NO	88.6	YES
979	160+44	169	2	42	2.5	15.2	NO	177.2	YES
980	162+78	169	2	42	3.0	17.0	NO	187.4	YES
981	169+33	11	1	24	3.0	17.0	YES	28.5	YES
982	171+48	64	1	36	2.5	15.2	NO	64.1	YES
983	174+36	45	1	36	1.5	10.9	NO	55.5	YES
984	178+28	56	1	36	2.5	15.2	NO	64.1	YES
985	181+13	29	1	36	1.0	8.0	NO	50.7	YES
986	183+39	35	1	36	0.5	0.4	NO	45.3	YES
987	193+70	4	1	24	1.5	10.9	YES	22.5	YES
988	197+45	20	1	24	2.0	13.3	NO	24.7	YES
989	200+05	160	2	42	2.5	15.2	NO	177.2	YES
990	205+00	2	1	24	2.0	13.3	YES	24.7	YES

Red Mountain Freeway, Power to University
ADOT C-15.81 Inlet Capacity Calculations:

Single C-15.81 grate:

Weir flow:		
Cw	3.0	
Width	1.94	ft
Length	2.5	ft
P	8.9	ft
clog factor	50.0	%
adj P	6.9	ft
Orifice flow:		
Co	0.67	
A	3.94	ft^2
clog factor	50	%
adj A	1.969271	ft^2

Rating Curve for C-15.81 inlets:

Flow Depth, ft	Head, ft	Single Qi, cfs
0.0	-0.4	0.0
0.5	0.1	0.4
1.0	0.6	8.0
1.5	1.1	10.9
2.0	1.6	13.3
2.5	2.1	15.2
3.0	2.6	17.0
3.5	3.1	18.5
4.0	3.6	20.0

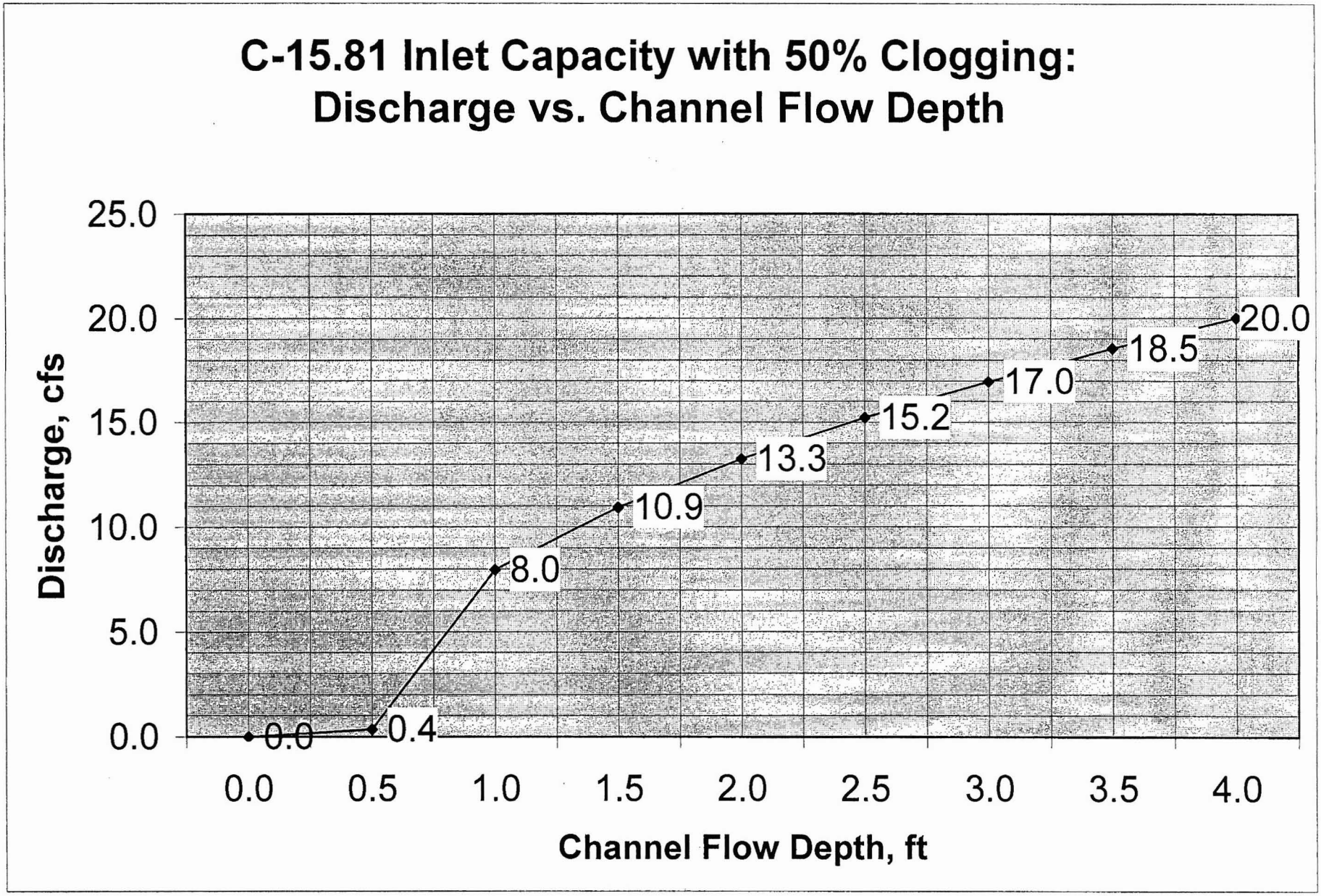
C-15.81 Inlet Capacity with 50% Clogging:
Discharge vs. Channel Flow Depth
Discharge, cfs
25.0
20.0
15.0
10.0
5.0
0.0
0.0
0.4
8.0
10.9
13.3
15.2
17.0
18.5
20.0
0.0
0.5
1.0
1.5
2.0
2.5
3.0
3.5
4.0
Channel Flow Depth, ft

C-13.75 Grate Dimensions (installed at inlets of pipes in C-15.75 drop inlets)

Pipe Size (in)	Dimensions from ADOT Std. Dwg. C-13.75					Gross Area (in^2)	Frame Area (in^2)	Bar Area (in^2)	Net Area (in^2)	Open Area Ratio	Unclogged Open Area, ft^2
	H (in)	W (in)	Frame W (in)	# H bars (in)	# V bars (in)						
24	33.00	36.00	2.00	4.00	4.00	1188.00	68.00	118	1002.00	0.84	2.65
30	33.00	36.00	2.00	4.00	4.00	1188.00	68.00	118	1002.00	0.84	4.14
36	33.00	36.00	2.00	4.00	4.00	1188.00	68.00	118	1002.00	0.84	5.96
42	43.00	36.00	2.00	5.00	4.00	1548.00	108.00	153	1287.00	0.83	8.00
48	50.00	38.00	3.00	6.00	4.00	1900.00	132.00	188	1580.00	0.83	10.45

April 25, 2005
Red Mountain Freeway, Power to University
ADOT C-15.75 Inlet Capacity Calculations

Single 24" C-13.75 grate:

Orifice flow:		
Co	0.67	
A	2.65	ft^2
clog factor	0.0	%
adj A	2.65	ft^2
d	5.0	ft
Qi	31.8	cfs

Rating Curve for C-15.75 inlets:

Channel Flow Depth, ft*	Head, ft	Qi, cfs
0.0	1.0	14.2
0.5	1.5	17.4
1.0	2.0	20.1
1.5	2.5	22.5
2.0	3.0	24.7
2.5	3.5	26.6
3.0	4.0	28.5
3.5	4.5	30.2
4.0	5.0	31.8

Single 30" C-13.75 grate:

Orifice flow:		
Co	0.67	
A	4.14	ft^2
clog factor	0.0	%
adj A	4.14	ft^2
d	5.3	ft
Qi	51.2	cfs

Rating Curve for C-15.75 inlets:

Flow Depth, ft*	Head, ft	Qi, cfs
0.0	1.3	25.4
0.5	1.8	29.8
1.0	2.3	33.7
1.5	2.8	37.2
2.0	3.3	40.4
2.5	3.8	43.4
3.0	4.3	46.1
3.5	4.8	48.7
4.0	5.3	51.2

April 25, 2005
Red Mountain Freeway, Power to University
ADOT C-15.75 Inlet Capacity Calculations

Single 36" C-13.75 grate:

Orifice flow:		
Co	0.67	
A	5.96	ft^2
clog factor	0.0	%
adj A	5.96	ft^2
d	5.5	ft
Qi	75.1	cfs

Rating Curve for C-15.75 inlets:

Flow Depth, ft*	Head, ft	Qi, cfs
0.0	1.5	39
0.5	2.0	45
1.0	2.5	51
1.5	3.0	55
2.0	3.5	60
2.5	4.0	64
3.0	4.5	68
3.5	5.0	72
4.0	5.5	75

Double 36" C-13.75 grate:

Orifice flow:		
Co	0.67	
A	5.96	ft^2
clog factor	0.0	%
adj A	5.96	ft^2
d	5.5	ft
Qi	150.3	cfs

Rating Curve for C-15.75 inlets:

Flow Depth, ft*	Head, ft	Qi, cfs
0.0	1.5	78
0.5	2.0	91
1.0	2.5	101
1.5	3.0	111
2.0	3.5	120
2.5	4.0	128
3.0	4.5	136
3.5	5.0	143
4.0	5.5	150

April 25, 2005
Red Mountain Freeway, Power to University
ADOT C-15.75 Inlet Capacity Calculations

Single 42" C-13.75 grate:

Orifice flow:		
Co	0.67	
A	8.00	ft^2
clog factor	0.0	%
adj A	8.00	ft^2
d	5.8	ft
Qi	103.5	cfs

Rating Curve for C-15.75 inlets:

Flow Depth, ft*	Head, ft	Qi, cfs
0.0	1.8	57
0.5	2.3	64
1.0	2.8	71
1.5	3.3	77
2.0	3.8	83
2.5	4.3	89
3.0	4.8	94
3.5	5.3	98
4.0	5.8	103

Double 42" C-13.75 grate:

Orifice flow:		
Co	0.67	
A	8.00	ft^2
clog factor	0.0	%
adj A	8.00	ft^2
d	5.8	ft
Qi	207.0	cfs

Rating Curve for C-15.75 inlets:

Flow Depth, ft*	Head, ft	Qi, cfs
0.0	1.8	114
0.5	2.3	129
1.0	2.8	143
1.5	3.3	155
2.0	3.8	166
2.5	4.3	177
3.0	4.8	187
3.5	5.3	197
4.0	5.8	206

April 25, 2005
Red Mountain Freeway, Power to University
ADOT C-15.75 Inlet Capacity Calculations

Double 48" C-15.75 grate:

Orifice flow:

Co	0.67	
A	10.45	ft^2
clog factor	0.0	%
adj A	10.45	ft^2
d	6.0	ft
Qi	275.1	cfs

Rating Curve for C-15.75 inlets:

Flow Depth, ft*	Head, ft	Qi, cfs
0.0	2.0	159
0.5	2.5	178
1.0	3.0	195
1.5	3.5	210
2.0	4.0	225
2.5	4.5	238
3.0	5.0	251
3.5	5.5	263
4.0	6.0	275

04/25/05
Red Mountain Freeway, Power to University
Floodpool Pipe Outlet Hydraulics Summary:

Pipe No.	Station	Q100, cfs	No. of Pipes	Pipe Size, in	Outlet Depth, ft	Outlet V, fps
950	12+84	52	1	36	1.59	13.68
951	18+20	22	1	24	0.92	15.51
952	20+10	21	1	24	0.93	14.76
953	23+78	23	1	24	0.98	15.02
954	25+62	49	1	36	1.28	17.1
955	32+58	43	1	36	1.12	17.86
956	43+80	12	1	24	0.79	10.43
957	46+81	28	1	30	0.86	18.65
958	48+91	34	1	30	0.97	19.35
959	62+55	93	2	36	1.25	16.67
960	68+06	187	2	48	1.57	20.41
961	70+73	4	1	24	0.39	9.23
962	74+50	20	1	24	0.82	16.61
963	76+58	7	1	24	0.51	10.97
964	77+72	10	1	24	0.58	13.13
965	84+62	3	1	24	0.35	8.47
966	107+21	14	1	24	0.84	11.13
967	108+61	21	1	24	0.89	15.53
968	114+00	7	1	24	0.56	9.79
969	117+15	130	2	36	1.54	17.85
970	118+38	25	1	24	1.13	13.59
971	120+40	23	1	24	0.96	15.46
972	123+45	12	1	24	0.73	11.56
973	133+10	144	2	42	1.58	17.06
974	137+75	112	2	36	1.39	17.54
975	142+27	56	1	36	1.33	18.45
976	144+65	6	1	24	0.47	10.57
977	147+70	40	1	30	1.28	15.84
978	157+78	68	1	42	1.39	19.1
979	160+44	169	2	42	1.30	25.94
980	162+78	169	2	42	1.37	24.26
981	169+33	11	1	24	0.59	14.32
982	171+48	64	1	36	1.24	23.28
983	174+36	45	1	36	1.00	21.9
984	178+28	56	1	36	1.12	23.34
985	181+13	29	1	36	0.76	20.54
986	183+39	35	1	36	0.83	21.96
987	193+70	4	1	24	0.38	9.55
989	197+45	20	2	42	1.53	19.8
990	205+00	2	1	24	0.30	6.65

Culvert Calculator Report
Pipe 950

Solve For: Headwater Elevation

Culvert Summary					
Allowable HW Elevation	1,586.50	ft	Headwater Depth/Height	1.38	
Computed Headwater Elev	1,588.08	ft	Discharge	52.00	cfs
Inlet Control HW Elev.	1,587.96	ft	Tailwater Elevation	1,570.04	ft
Outlet Control HW Elev.	1,588.08	ft	Control Type	Entrance Control	

Grades					
Upstream Invert	1,583.94	ft	Downstream Invert	1,573.70	ft
Length	150.00	ft	Constructed Slope	0.068267	ft/ft

Hydraulic Profile					
Profile	S2		Depth, Downstream	1.59	ft
Slope Type	Steep		Normal Depth	1.59	ft
Flow Regime	Supercritical		Critical Depth	2.35	ft
Velocity Downstream	13.68	ft/s	Critical Slope	0.022731	ft/ft

Section					
Section Shape	Circular		Mannings Coefficient	0.024	
Section Material	CMP		Span	3.00	ft
Section Size	36 inch		Rise	3.00	ft
Number Sections	1				

Outlet Control Properties					
Outlet Control HW Elev.	1,588.08	ft	Upstream Velocity Head	1.20	ft
Ke	0.50		Entrance Loss	0.60	ft

Inlet Control Properties					
Inlet Control HW Elev.	1,587.96	ft	Flow Control	Submerged	
Inlet Type	Headwall		Area Full	7.1	ft²
K	0.00780		HDS 5 Chart	2	
M	2.00000		HDS 5 Scale	1	
C	0.03790		Equation Form	1	
Y	0.69000				

© Haestad Methods, Inc.

Culvert Calculator Report
Pipe 951

Solve For: Headwater Elevation

Culvert Summary					
Allowable HW Elevation	1,586.50	ft	Headwater Depth/Height	1.55	
Computed Headwater Elev	1,587.65	ft	Discharge	22.00	cfs
Inlet Control HW Elev.	1,587.62	ft	Tailwater Elevation	1,569.30	ft
Outlet Control HW Elev.	1,587.65	ft	Control Type	Entrance Control	

Grades					
Upstream Invert	1,584.55	ft	Downstream Invert	1,569.30	ft
Length	90.00	ft	Constructed Slope	0.169444	ft/ft

Hydraulic Profile					
Profile	S2		Depth, Downstream	0.92	ft
Slope Type	Steep		Normal Depth	0.92	ft
Flow Regime	Supercritical		Critical Depth	1.68	ft
Velocity Downstream	15.51	ft/s	Critical Slope	0.031061	ft/ft

Section					
Section Shape	Circular		Mannings Coefficient	0.024	
Section Material	CMP		Span	2.00	ft
Section Size	24 inch		Rise	2.00	ft
Number Sections	1				

Outlet Control Properties					
Outlet Control HW Elev.	1,587.65	ft	Upstream Velocity Head	0.95	ft
Ke	0.50		Entrance Loss	0.48	ft

Inlet Control Properties					
Inlet Control HW Elev.	1,587.62	ft	Flow Control	Submerged	
Inlet Type	Headwall		Area Full	3.1	ft²
K	0.00780		HDS 5 Chart	2	
M	2.00000		HDS 5 Scale	1	
C	0.03790		Equation Form	1	
Y	0.69000				

© Haestad Methods, Inc.

Culvert Calculator Report
Pipe 952

Solve For: Headwater Elevation

Culvert Summary					
Allowable HW Elevation	1,586.50	ft	Headwater Depth/Height	1.50	
Computed Headwater Elev	1,587.20	ft	Discharge	21.00	cfs
Inlet Control HW Elev.	1,587.13	ft	Tailwater Elevation	1,569.81	ft
Outlet Control HW Elev.	1,587.20	ft	Control Type	Entrance Control	

Grades					
Upstream Invert	1,584.21	ft	Downstream Invert	1,569.81	ft
Length	94.00	ft	Constructed Slope	0.153191	ft/ft

Hydraulic Profile					
Profile	S2		Depth, Downstream	0.93	ft
Slope Type	Steep		Normal Depth	0.93	ft
Flow Regime	Supercritical		Critical Depth	1.64	ft
Velocity Downstream	14.76	ft/s	Critical Slope	0.029289	ft/ft

Section					
Section Shape	Circular		Mannings Coefficient	0.024	
Section Material	CMP		Span	2.00	ft
Section Size	24 inch		Rise	2.00	ft
Number Sections	1				

Outlet Control Properties					
Outlet Control HW Elev.	1,587.20	ft	Upstream Velocity Head	0.90	ft
Ke	0.50		Entrance Loss	0.45	ft

Inlet Control Properties					
Inlet Control HW Elev.	1,587.13	ft	Flow Control	Submerged	
Inlet Type	Headwall		Area Full	3.1	ft²
K	0.00780		HDS 5 Chart	2	
M	2.00000		HDS 5 Scale	1	
C	0.03790		Equation Form	1	
Y	0.69000				

Culvert Calculator Report
Pipe 953

Solve For: Headwater Elevation

Culvert Summary					
Allowable HW Elevation	1,587.00	ft	Headwater Depth/Height	1.63	
Computed Headwater Elev	1,588.00	ft	Discharge	23.00	cfs
Inlet Control HW Elev.	1,588.00	ft	Tailwater Elevation	1,569.65	ft
Outlet Control HW Elev.	1,587.96	ft	Control Type	Inlet Control	

Grades					
Upstream Invert	1,584.74	ft	Downstream Invert	1,569.65	ft
Length	100.00	ft	Constructed Slope	0.150900	ft/ft

Hydraulic Profile					
Profile	S2		Depth, Downstream	0.98	ft
Slope Type	Steep		Normal Depth	0.98	ft
Flow Regime	Supercritical		Critical Depth	1.71	ft
Velocity Downstream	15.02	ft/s	Critical Slope	0.032999	ft/ft

Section					
Section Shape	Circular		Mannings Coefficient	0.024	
Section Material	CMP		Span	2.00	ft
Section Size	24 inch		Rise	2.00	ft
Number Sections	1				

Outlet Control Properties					
Outlet Control HW Elev.	1,587.96	ft	Upstream Velocity Head	1.01	ft
Ke	0.50		Entrance Loss	0.50	ft

Inlet Control Properties					
Inlet Control HW Elev.	1,588.00	ft	Flow Control	Submerged	
Inlet Type	Headwall		Area Full	3.1	ft²
K	0.00780		HDS 5 Chart	2	
M	2.00000		HDS 5 Scale	1	
C	0.03790		Equation Form	1	
Y	0.69000				

Culvert Calculator Report
Pipe 954

Solve For: Headwater Elevation

Culvert Summary					
Allowable HW Elevation	1,587.00	ft	Headwater Depth/Height	1.32	
Computed Headwater Elev	1,588.40	ft	Discharge	49.00	cfs
Inlet Control HW Elev.	1,588.14	ft	Tailwater Elevation	1,569.92	ft
Outlet Control HW Elev.	1,588.40	ft	Control Type	Entrance Control	

Grades					
Upstream Invert	1,584.44	ft	Downstream Invert	1,569.92	ft
Length	112.00	ft	Constructed Slope	0.129643	ft/ft

Hydraulic Profile					
Profile	S2		Depth, Downstream	1.28	ft
Slope Type	Steep		Normal Depth	1.28	ft
Flow Regime	Supercritical		Critical Depth	2.28	ft
Velocity Downstream	17.10	ft/s	Critical Slope	0.021478	ft/ft

Section					
Section Shape	Circular		Mannings Coefficient	0.024	
Section Material	CMP		Span	3.00	ft
Section Size	36 inch		Rise	3.00	ft
Number Sections	1				

Outlet Control Properties					
Outlet Control HW Elev.	1,588.40	ft	Upstream Velocity Head	1.12	ft
Ke	0.50		Entrance Loss	0.56	ft

Inlet Control Properties					
Inlet Control HW Elev.	1,588.14	ft	Flow Control	Submerged	
Inlet Type	Headwall		Area Full	7.1	ft²
K	0.00780		HDS 5 Chart	2	
M	2.00000		HDS 5 Scale	1	
C	0.03790		Equation Form	1	
Y	0.69000				

© Haestad Methods, Inc.

Culvert Calculator Report
Pipe 955

Solve For: Headwater Elevation

Culvert Summary					
Allowable HW Elevation	1,588.50	ft	Headwater Depth/Height	1.21	
Computed Headwater Elev	1,589.50	ft	Discharge	43.00	cfs
Inlet Control HW Elev.	1,589.06	ft	Tailwater Elevation	1,569.97	ft
Outlet Control HW Elev.	1,589.50	ft	Control Type	Entrance Control	

Grades					
Upstream Invert	1,585.88	ft	Downstream Invert	1,569.97	ft
Length	99.00	ft	Constructed Slope	0.160707	ft/ft

Hydraulic Profile					
Profile	S2		Depth, Downstream	1.12	ft
Slope Type	Steep		Normal Depth	1.12	ft
Flow Regime	Supercritical		Critical Depth	2.14	ft
Velocity Downstream	17.86	ft/s	Critical Slope	0.019334	ft/ft

Section					
Section Shape	Circular		Mannings Coefficient	0.024	
Section Material	CMP		Span	3.00	ft
Section Size	36 inch		Rise	3.00	ft
Number Sections	1				

Outlet Control Properties					
Outlet Control HW Elev.	1,589.50	ft	Upstream Velocity Head	0.99	ft
Ke	0.50		Entrance Loss	0.50	ft

Inlet Control Properties					
Inlet Control HW Elev.	1,589.06	ft	Flow Control	Transition	
Inlet Type	Headwall		Area Full	7.1	ft²
K	0.00780		HDS 5 Chart	2	
M	2.00000		HDS 5 Scale	1	
C	0.03790		Equation Form	1	
Y	0.69000				

Culvert Calculator Report
Pipe 956

Solve For: Headwater Elevation

Culvert Summary					
Allowable HW Elevation	1,585.00	ft	Headwater Depth/Height	1.02	
Computed Headwater Elev	1,584.18	ft	Discharge	12.00	cfs
Inlet Control HW Elev.	1,583.94	ft	Tailwater Elevation	1,570.02	ft
Outlet Control HW Elev.	1,584.18	ft	Control Type	Entrance Control	

Grades					
Upstream Invert	1,582.14	ft	Downstream Invert	1,570.02	ft
Length	136.00	ft	Constructed Slope	0.089118	ft/ft

Hydraulic Profile					
Profile	S2		Depth, Downstream	0.79	ft
Slope Type	Steep		Normal Depth	0.79	ft
Flow Regime	Supercritical		Critical Depth	1.24	ft
Velocity Downstream	10.43	ft/s	Critical Slope	0.019022	ft/ft

Section					
Section Shape	Circular		Mannings Coefficient	0.024	
Section Material	CMP		Span	2.00	ft
Section Size	24 inch		Rise	2.00	ft
Number Sections	1				

Outlet Control Properties					
Outlet Control HW Elev.	1,584.18	ft	Upstream Velocity Head	0.53	ft
Ke	0.50		Entrance Loss	0.26	ft

Inlet Control Properties					
Inlet Control HW Elev.	1,583.94	ft	Flow Control	Unsubmerged	
Inlet Type	Headwall		Area Full	3.1	ft²
K	0.00780		HDS 5 Chart	2	
M	2.00000		HDS 5 Scale	1	
C	0.03790		Equation Form	1	
Y	0.69000				

© Haestad Methods, Inc.

Culvert Calculator Report
Pipe 957

Solve For: Headwater Elevation

Culvert Summary					
Allowable HW Elevation	1,587.00	ft	Headwater Depth/Height	1.23	
Computed Headwater Elev	1,587.48	ft	Discharge	28.00	cfs
Inlet Control HW Elev.	1,587.03	ft	Tailwater Elevation	1,570.10	ft
Outlet Control HW Elev.	1,587.48	ft	Control Type	Entrance Control	

Grades					
Upstream Invert	1,584.41	ft	Downstream Invert	1,570.10	ft
Length	59.00	ft	Constructed Slope	0.242542	ft/ft

Hydraulic Profile					
Profile	S2		Depth, Downstream	0.86	ft
Slope Type	Steep		Normal Depth	0.86	ft
Flow Regime	Supercritical		Critical Depth	1.80	ft
Velocity Downstream	18.65	ft/s	Critical Slope	0.020953	ft/ft

Section					
Section Shape	Circular		Mannings Coefficient	0.024	
Section Material	CMP		Span	2.50	ft
Section Size	30 inch		Rise	2.50	ft
Number Sections	1				

Outlet Control Properties					
Outlet Control HW Elev.	1,587.48	ft	Upstream Velocity Head	0.85	ft
Ke	0.50		Entrance Loss	0.42	ft

Inlet Control Properties					
Inlet Control HW Elev.	1,587.03	ft	Flow Control	Transition	
Inlet Type	Headwall		Area Full	4.9	ft²
K	0.00780		HDS 5 Chart	2	
M	2.00000		HDS 5 Scale	1	
C	0.03790		Equation Form	1	
Y	0.69000				

© Haestad Methods, Inc.

Culvert Calculator Report
Pipe 958

Solve For: Headwater Elevation

Culvert Summary					
Allowable HW Elevation	1,587.00	ft	Headwater Depth/Height	1.41	
Computed Headwater Elev	1,588.18	ft	Discharge	34.00	cfs
Inlet Control HW Elev.	1,587.90	ft	Tailwater Elevation	1,570.04	ft
Outlet Control HW Elev.	1,588.18	ft	Control Type	Entrance Control	

Grades					
Upstream Invert	1,584.65	ft	Downstream Invert	1,570.04	ft
Length	63.00	ft	Constructed Slope	0.231905	ft/ft

Hydraulic Profile					
Profile	S2		Depth, Downstream	0.97	ft
Slope Type	Steep		Normal Depth	0.97	ft
Flow Regime	Supercritical		Critical Depth	1.98	ft
Velocity Downstream	19.35	ft/s	Critical Slope	0.024939	ft/ft

Section					
Section Shape	Circular		Mannings Coefficient	0.024	
Section Material	CMP		Span	2.50	ft
Section Size	30 inch		Rise	2.50	ft
Number Sections	1				

Outlet Control Properties					
Outlet Control HW Elev.	1,588.18	ft	Upstream Velocity Head	1.03	ft
Ke	0.50		Entrance Loss	0.52	ft

Inlet Control Properties					
Inlet Control HW Elev.	1,587.90	ft	Flow Control	Submerged	
Inlet Type	Headwall		Area Full	4.9	ft²
K	0.00780		HDS 5 Chart	2	
M	2.00000		HDS 5 Scale	1	
C	0.03790		Equation Form	1	
Y	0.69000				

Culvert Calculator Report
Pipe 959

Solve For: Headwater Elevation

Culvert Summary					
Allowable HW Elevation	1,586.00	ft	Headwater Depth/Height	1.27	
Computed Headwater Elev	1,587.53	ft	Discharge	93.00	cfs
Inlet Control HW Elev.	1,587.22	ft	Tailwater Elevation	1,570.02	ft
Outlet Control HW Elev.	1,587.53	ft	Control Type	Entrance Control	

Grades					
Upstream Invert	1,583.71	ft	Downstream Invert	1,570.02	ft
Length	109.00	ft	Constructed Slope	0.125596	ft/ft

Hydraulic Profile					
Profile	S2		Depth, Downstream	1.25	ft
Slope Type	Steep		Normal Depth	1.25	ft
Flow Regime	Supercritical		Critical Depth	2.22	ft
Velocity Downstream	16.67	ft/s	Critical Slope	0.020532	ft/ft

Section					
Section Shape	Circular		Mannings Coefficient	0.024	
Section Material	CMP		Span	3.00	ft
Section Size	36 inch		Rise	3.00	ft
Number Sections	2				

Outlet Control Properties					
Outlet Control HW Elev.	1,587.53	ft	Upstream Velocity Head	1.07	ft
Ke	0.50		Entrance Loss	0.53	ft

Inlet Control Properties					
Inlet Control HW Elev.	1,587.22	ft	Flow Control	Transition	
Inlet Type	Headwall		Area Full	14.1	ft²
K	0.00780		HDS 5 Chart	2	
M	2.00000		HDS 5 Scale	1	
C	0.03790		Equation Form	1	
Y	0.69000				

© Haestad Methods, Inc.

Culvert Calculator Report
Pipe 960

Solve For: Headwater Elevation

Culvert Summary					
Allowable HW Elevation	1,586.00	ft	Headwater Depth/Height	1.26	
Computed Headwater Elev	1,588.36	ft	Discharge	187.00	cfs
Inlet Control HW Elev.	1,587.89	ft	Tailwater Elevation	1,570.02	ft
Outlet Control HW Elev.	1,588.36	ft	Control Type	Entrance Control	

Grades					
Upstream Invert	1,583.34	ft	Downstream Invert	1,570.02	ft
Length	98.00	ft	Constructed Slope	0.135918	ft/ft

Hydraulic Profile					
Profile	S2		Depth, Downstream	1.57	ft
Slope Type	Steep		Normal Depth	1.57	ft
Flow Regime	Supercritical		Critical Depth	2.93	ft
Velocity Downstream	20.41	ft/s	Critical Slope	0.018345	ft/ft

Section					
Section Shape	Circular		Mannings Coefficient	0.024	
Section Material	CMP		Span	4.00	ft
Section Size	48 inch		Rise	4.00	ft
Number Sections	2				

Outlet Control Properties					
Outlet Control HW Elev.	1,588.36	ft	Upstream Velocity Head	1.39	ft
Ke	0.50		Entrance Loss	0.70	ft

Inlet Control Properties					
Inlet Control HW Elev.	1,587.89	ft	Flow Control	Transition	
Inlet Type	Headwall		Area Full	25.1	ft²
K	0.00780		HDS 5 Chart	2	
M	2.00000		HDS 5 Scale	1	
C	0.03790		Equation Form	1	
Y	0.69000				

© Haestad Methods, Inc.

Culvert Calculator Report
Pipe 961

Solve For: Headwater Elevation

Culvert Summary					
Allowable HW Elevation	1,587.00	ft	Headwater Depth/Height	0.54	
Computed Headwater Elev	1,584.33	ft	Discharge	4.00	cfs
Inlet Control HW Elev.	1,584.06	ft	Tailwater Elevation	1,570.02	ft
Outlet Control HW Elev.	1,584.33	ft	Control Type	Entrance Control	

Grades					
Upstream Invert	1,583.24	ft	Downstream Invert	1,570.02	ft
Length	87.00	ft	Constructed Slope	0.151954	ft/ft

Hydraulic Profile					
Profile	S2		Depth, Downstream	0.39	ft
Slope Type	Steep		Normal Depth	0.39	ft
Flow Regime	Supercritical		Critical Depth	0.70	ft
Velocity Downstream	9.23	ft/s	Critical Slope	0.015291	ft/ft

Section					
Section Shape	Circular		Mannings Coefficient	0.024	
Section Material	CMP		Span	2.00	ft
Section Size	24 inch		Rise	2.00	ft
Number Sections	1				

Outlet Control Properties					
Outlet Control HW Elev.	1,584.33	ft	Upstream Velocity Head	0.26	ft
Ke	0.50		Entrance Loss	0.13	ft

Inlet Control Properties					
Inlet Control HW Elev.	1,584.06	ft	Flow Control	Unsubmerged	
Inlet Type	Headwall		Area Full	3.1	ft²
K	0.00780		HDS 5 Chart	2	
M	2.00000		HDS 5 Scale	1	
C	0.03790		Equation Form	1	
Y	0.69000				

Culvert Calculator Report
Pipe 962

Solve For: Headwater Elevation

Culvert Summary					
Allowable HW Elevation	1,586.00	ft	Headwater Depth/Height	1.44	
Computed Headwater Elev	1,587.12	ft	Discharge	20.00	cfs
Inlet Control HW Elev.	1,586.94	ft	Tailwater Elevation	1,570.02	ft
Outlet Control HW Elev.	1,587.12	ft	Control Type	Entrance Control	

Grades					
Upstream Invert	1,584.24	ft	Downstream Invert	1,570.02	ft
Length	65.00	ft	Constructed Slope	0.218769	ft/ft

Hydraulic Profile					
Profile	S2		Depth, Downstream	0.82	ft
Slope Type	Steep		Normal Depth	0.82	ft
Flow Regime	Supercritical		Critical Depth	1.61	ft
Velocity Downstream	16.61	ft/s	Critical Slope	0.027673	ft/ft

Section					
Section Shape	Circular		Mannings Coefficient	0.024	
Section Material	CMP		Span	2.00	ft
Section Size	24 inch		Rise	2.00	ft
Number Sections	1				

Outlet Control Properties					
Outlet Control HW Elev.	1,587.12	ft	Upstream Velocity Head	0.85	ft
Ke	0.50		Entrance Loss	0.42	ft

Inlet Control Properties					
Inlet Control HW Elev.	1,586.94	ft	Flow Control	Submerged	
Inlet Type	Headwall		Area Full	3.1	ft²
K	0.00780		HDS 5 Chart	2	
M	2.00000		HDS 5 Scale	1	
C	0.03790		Equation Form	1	
Y	0.69000				

Culvert Calculator Report
Pipe 963

Solve For: Headwater Elevation

Culvert Summary					
Allowable HW Elevation	1,586.00	ft	Headwater Depth/Height	0.74	
Computed Headwater Elev	1,583.83	ft	Discharge	7.00	cfs
Inlet Control HW Elev.	1,583.53	ft	Tailwater Elevation	1,570.02	ft
Outlet Control HW Elev.	1,583.83	ft	Control Type	Entrance Control	

Grades					
Upstream Invert	1,582.35	ft	Downstream Invert	1,570.02	ft
Length	79.00	ft	Constructed Slope	0.156076	ft/ft

Hydraulic Profile					
Profile	S2		Depth, Downstream	0.51	ft
Slope Type	Steep		Normal Depth	0.51	ft
Flow Regime	Supercritical		Critical Depth	0.94	ft
Velocity Downstream	10.97	ft/s	Critical Slope	0.016212	ft/ft

Section					
Section Shape	Circular		Mannings Coefficient	0.024	
Section Material	CMP		Span	2.00	ft
Section Size	24 inch		Rise	2.00	ft
Number Sections	1				

Outlet Control Properties					
Outlet Control HW Elev.	1,583.83	ft	Upstream Velocity Head	0.36	ft
Ke	0.50		Entrance Loss	0.18	ft

Inlet Control Properties					
Inlet Control HW Elev.	1,583.53	ft	Flow Control	Unsubmerged	
Inlet Type	Headwall		Area Full	3.1	ft²
K	0.00780		HDS 5 Chart	2	
M	2.00000		HDS 5 Scale	1	
C	0.03790		Equation Form	1	
Y	0.69000				

© Haestad Methods, Inc.

Culvert Calculator Report
Pipe 964

Solve For: Headwater Elevation

Culvert Summary					
Allowable HW Elevation	1,586.00	ft	Headwater Depth/Height	0.91	
Computed Headwater Elev	1,584.28	ft	Discharge	10.00	cfs
Inlet Control HW Elev.	1,583.93	ft	Tailwater Elevation	1,570.02	ft
Outlet Control HW Elev.	1,584.28	ft	Control Type	Entrance Control	

Grades					
Upstream Invert	1,582.45	ft	Downstream Invert	1,570.02	ft
Length	64.00	ft	Constructed Slope	0.194219	ft/ft

Hydraulic Profile					
Profile	S2		Depth, Downstream	0.58	ft
Slope Type	Steep		Normal Depth	0.58	ft
Flow Regime	Supercritical		Critical Depth	1.13	ft
Velocity Downstream	13.13	ft/s	Critical Slope	0.017731	ft/ft

Section					
Section Shape	Circular		Mannings Coefficient	0.024	
Section Material	CMP		Span	2.00	ft
Section Size	24 inch		Rise	2.00	ft
Number Sections	1				

Outlet Control Properties					
Outlet Control HW Elev.	1,584.28	ft	Upstream Velocity Head	0.46	ft
Ke	0.50		Entrance Loss	0.23	ft

Inlet Control Properties					
Inlet Control HW Elev.	1,583.93	ft	Flow Control	Unsubmerged	
Inlet Type	Headwall		Area Full	3.1	ft²
K	0.00780		HDS 5 Chart	2	
M	2.00000		HDS 5 Scale	1	
C	0.03790		Equation Form	1	
Y	0.69000				

Culvert Calculator Report
Pipe 965

Solve For: Headwater Elevation

Culvert Summary					
Allowable HW Elevation	1,586.00	ft	Headwater Depth/Height	0.47	
Computed Headwater Elev	1,583.24	ft	Discharge	3.00	cfs
Inlet Control HW Elev.	1,582.99	ft	Tailwater Elevation	1,570.02	ft
Outlet Control HW Elev.	1,583.24	ft	Control Type	Entrance Control	

Grades					
Upstream Invert	1,582.31	ft	Downstream Invert	1,570.02	ft
Length	81.00	ft	Constructed Slope	0.151728	ft/ft

Hydraulic Profile					
Profile	S2		Depth, Downstream	0.34	ft
Slope Type	Steep		Normal Depth	0.34	ft
Flow Regime	Supercritical		Critical Depth	0.60	ft
Velocity Downstream	8.47	ft/s	Critical Slope	0.015189	ft/ft

Section					
Section Shape	Circular		Mannings Coefficient	0.024	
Section Material	CMP		Span	2.00	ft
Section Size	24 inch		Rise	2.00	ft
Number Sections	1				

Outlet Control Properties					
Outlet Control HW Elev.	1,583.24	ft	Upstream Velocity Head	0.22	ft
Ke	0.50		Entrance Loss	0.11	ft

Inlet Control Properties					
Inlet Control HW Elev.	1,582.99	ft	Flow Control	Unsubmerged	
Inlet Type	Headwall		Area Full	3.1	ft²
K	0.00780		HDS 5 Chart	2	
M	2.00000		HDS 5 Scale	1	
C	0.03790		Equation Form	1	
Y	0.69000				

Culvert Calculator Report
Pipe 966

Solve For: Headwater Elevation

Culvert Summary					
Allowable HW Elevation	1,585.00	ft	Headwater Depth/Height	1.12	
Computed Headwater Elev	1,583.35	ft	Discharge	14.00	cfs
Inlet Control HW Elev.	1,583.11	ft	Tailwater Elevation	1,571.02	ft
Outlet Control HW Elev.	1,583.35	ft	Control Type	Entrance Control	

Grades					
Upstream Invert	1,581.10	ft	Downstream Invert	1,571.02	ft
Length	106.00	ft	Constructed Slope	0.095094	ft/ft

Hydraulic Profile					
Profile	S2		Depth, Downstream	0.84	ft
Slope Type	Steep		Normal Depth	0.84	ft
Flow Regime	Supercritical		Critical Depth	1.35	ft
Velocity Downstream	11.13	ft/s	Critical Slope	0.020631	ft/ft

Section					
Section Shape	Circular		Mannings Coefficient	0.024	
Section Material	CMP		Span	2.00	ft
Section Size	24 inch		Rise	2.00	ft
Number Sections	1				

Outlet Control Properties					
Outlet Control HW Elev.	1,583.35	ft	Upstream Velocity Head	0.60	ft
Ke	0.50		Entrance Loss	0.30	ft

Inlet Control Properties					
Inlet Control HW Elev.	1,583.11	ft	Flow Control	Unsubmerged	
Inlet Type	Headwall		Area Full	3.1	ft²
K	0.00780		HDS 5 Chart	2	
M	2.00000		HDS 5 Scale	1	
C	0.03790		Equation Form	1	
Y	0.69000				

Culvert Calculator Report
Pipe 967

Solve For: Headwater Elevation

Culvert Summary					
Allowable HW Elevation	1,586.00	ft	Headwater Depth/Height	1.50	
Computed Headwater Elev	1,585.85	ft	Discharge	21.00	cfs
Inlet Control HW Elev.	1,585.76	ft	Tailwater Elevation	1,571.08	ft
Outlet Control HW Elev.	1,585.85	ft	Control Type	Entrance Control	

Grades					
Upstream Invert	1,582.86	ft	Downstream Invert	1,571.08	ft
Length	67.00	ft	Constructed Slope	0.175821	ft/ft

Hydraulic Profile					
Profile	S2		Depth, Downstream	0.89	ft
Slope Type	Steep		Normal Depth	0.89	ft
Flow Regime	Supercritical		Critical Depth	1.64	ft
Velocity Downstream	15.53	ft/s	Critical Slope	0.029289	ft/ft

Section					
Section Shape	Circular		Mannings Coefficient	0.024	
Section Material	CMP		Span	2.00	ft
Section Size	24 inch		Rise	2.00	ft
Number Sections	1				

Outlet Control Properties					
Outlet Control HW Elev.	1,585.85	ft	Upstream Velocity Head	0.90	ft
Ke	0.50		Entrance Loss	0.45	ft

Inlet Control Properties					
Inlet Control HW Elev.	1,585.76	ft	Flow Control	Submerged	
Inlet Type	Headwall		Area Full	3.1	ft²
K	0.00780		HDS 5 Chart	2	
M	2.00000		HDS 5 Scale	1	
C	0.03790		Equation Form	1	
Y	0.69000				

Culvert Calculator Report
Pipe 968

Solve For: Headwater Elevation

Culvert Summary					
Allowable HW Elevation	1,586.50	ft	Headwater Depth/Height	0.74	
Computed Headwater Elev	1,584.32	ft	Discharge	7.00	cfs
Inlet Control HW Elev.	1,584.07	ft	Tailwater Elevation	1,571.02	ft
Outlet Control HW Elev.	1,584.32	ft	Control Type	Entrance Control	

Grades					
Upstream Invert	1,582.84	ft	Downstream Invert	1,571.02	ft
Length	104.00	ft	Constructed Slope	0.113654	ft/ft

Hydraulic Profile					
Profile	S2		Depth, Downstream	0.56	ft
Slope Type	Steep		Normal Depth	0.56	ft
Flow Regime	Supercritical		Critical Depth	0.94	ft
Velocity Downstream	9.79	ft/s	Critical Slope	0.016212	ft/ft

Section					
Section Shape	Circular		Mannings Coefficient	0.024	
Section Material	CMP		Span	2.00	ft
Section Size	24 inch		Rise	2.00	ft
Number Sections	1				

Outlet Control Properties					
Outlet Control HW Elev.	1,584.32	ft	Upstream Velocity Head	0.36	ft
Ke	0.50		Entrance Loss	0.18	ft

Inlet Control Properties					
Inlet Control HW Elev.	1,584.07	ft	Flow Control	Unsubmerged	
Inlet Type	Headwall		Area Full	3.1	ft²
K	0.00780		HDS 5 Chart	2	
M	2.00000		HDS 5 Scale	1	
C	0.03790		Equation Form	1	
Y	0.69000				

Culvert Calculator Report
Pipe 969

Solve For: Headwater Elevation

Culvert Summary					
Allowable HW Elevation	1,587.00	ft	Headwater Depth/Height	1.70	
Computed Headwater Elev	1,589.27	ft	Discharge	130.00	cfs
Inlet Control HW Elev.	1,589.27	ft	Tailwater Elevation	1,571.02	ft
Outlet Control HW Elev.	1,589.10	ft	Control Type	Inlet Control	

Grades					
Upstream Invert	1,584.17	ft	Downstream Invert	1,571.02	ft
Length	110.00	ft	Constructed Slope	0.119545	ft/ft

Hydraulic Profile					
Profile	S2		Depth, Downstream	1.54	ft
Slope Type	Steep		Normal Depth	1.54	ft
Flow Regime	Supercritical		Critical Depth	2.59	ft
Velocity Downstream	17.85	ft/s	Critical Slope	0.029895	ft/ft

Section					
Section Shape	Circular		Mannings Coefficient	0.024	
Section Material	CMP		Span	3.00	ft
Section Size	36 inch		Rise	3.00	ft
Number Sections	2				

Outlet Control Properties					
Outlet Control HW Elev.	1,589.10	ft	Upstream Velocity Head	1.56	ft
Ke	0.50		Entrance Loss	0.78	ft

Inlet Control Properties					
Inlet Control HW Elev.	1,589.27	ft	Flow Control	Submerged	
Inlet Type	Headwall		Area Full	14.1	ft²
K	0.00780		HDS 5 Chart	2	
M	2.00000		HDS 5 Scale	1	
C	0.03790		Equation Form	1	
Y	0.69000				

Culvert Calculator Report
Pipe 970

olve For: Headwater Elevation

Culvert Summary					
Allowable HW Elevation	1,586.00	ft	Headwater Depth/Height	1.84	
Computed Headwater Elev	1,587.87	ft	Discharge	25.00	cfs
Inlet Control HW Elev.	1,587.87	ft	Tailwater Elevation	1,571.02	ft
Outlet Control HW Elev.	1,587.66	ft	Control Type	Inlet Control	

Grades					
Upstream Invert	1,584.20	ft	Downstream Invert	1,571.02	ft
Length	120.00	ft	Constructed Slope	0.109833	ft/ft

Hydraulic Profile					
Profile	S2		Depth, Downstream	1.13	ft
Slope Type	Steep		Normal Depth	1.13	ft
Flow Regime	Supercritical		Critical Depth	1.76	ft
Velocity Downstream	13.59	ft/s	Critical Slope	0.037419	ft/ft

Section					
Section Shape	Circular		Mannings Coefficient	0.024	
Section Material	CMP		Span	2.00	ft
Section Size	24 inch		Rise	2.00	ft
Number Sections	1				

Outlet Control Properties					
Outlet Control HW Elev.	1,587.66	ft	Upstream Velocity Head	1.13	ft
Ke	0.50		Entrance Loss	0.57	ft

Inlet Control Properties					
Inlet Control HW Elev.	1,587.87	ft	Flow Control	Submerged	
Inlet Type	Headwall		Area Full	3.1	ft²
K	0.00780		HDS 5 Chart	2	
M	2.00000		HDS 5 Scale	1	
C	0.03790		Equation Form	1	
Y	0.69000				

Culvert Calculator Report
Pipe 971

Solve For: Headwater Elevation

Culvert Summary					
Allowable HW Elevation	1,586.00	ft	Headwater Depth/Height	1.62	
Computed Headwater Elev	1,587.14	ft	Discharge	23.00	cfs
Inlet Control HW Elev.	1,587.14	ft	Tailwater Elevation	1,571.02	ft
Outlet Control HW Elev.	1,587.11	ft	Control Type	Inlet Control	

Grades					
Upstream Invert	1,583.89	ft	Downstream Invert	1,571.02	ft
Length	79.00	ft	Constructed Slope	0.162911	ft/ft

Hydraulic Profile					
Profile	S2		Depth, Downstream	0.96	ft
Slope Type	Steep		Normal Depth	0.96	ft
Flow Regime	Supercritical		Critical Depth	1.71	ft
Velocity Downstream	15.46	ft/s	Critical Slope	0.032999	ft/ft

Section					
Section Shape	Circular		Mannings Coefficient	0.024	
Section Material	CMP		Span	2.00	ft
Section Size	24 inch		Rise	2.00	ft
Number Sections	1				

Outlet Control Properties					
Outlet Control HW Elev.	1,587.11	ft	Upstream Velocity Head	1.01	ft
Ke	0.50		Entrance Loss	0.50	ft

Inlet Control Properties					
Inlet Control HW Elev.	1,587.14	ft	Flow Control	Submerged	
Inlet Type	Headwall		Area Full	3.1	ft²
K	0.00780		HDS 5 Chart	2	
M	2.00000		HDS 5 Scale	1	
C	0.03790		Equation Form	1	
Y	0.69000				

© Haestad Methods, Inc.

Culvert Calculator Report
Pipe 972

Solve For: Headwater Elevation

Culvert Summary					
Allowable HW Elevation	1,585.50	ft	Headwater Depth/Height	1.02	
Computed Headwater Elev	1,583.95	ft	Discharge	12.00	cfs
Inlet Control HW Elev.	1,583.68	ft	Tailwater Elevation	1,571.02	ft
Outlet Control HW Elev.	1,583.95	ft	Control Type	Entrance Control	

Grades					
Upstream Invert	1,581.91	ft	Downstream Invert	1,571.02	ft
Length	92.00	ft	Constructed Slope	0.118370	ft/ft

Hydraulic Profile					
Profile	S2		Depth, Downstream	0.73	ft
Slope Type	Steep		Normal Depth	0.73	ft
Flow Regime	Supercritical		Critical Depth	1.24	ft
Velocity Downstream	11.56	ft/s	Critical Slope	0.019022	ft/ft

Section					
Section Shape	Circular		Mannings Coefficient	0.024	
Section Material	CMP		Span	2.00	ft
Section Size	24 inch		Rise	2.00	ft
Number Sections	1				

Outlet Control Properties					
Outlet Control HW Elev.	1,583.95	ft	Upstream Velocity Head	0.53	ft
Ke	0.50		Entrance Loss	0.26	ft

Inlet Control Properties					
Inlet Control HW Elev.	1,583.68	ft	Flow Control	Unsubmerged	
Inlet Type	Headwall		Area Full	3.1	ft²
K	0.00780		HDS 5 Chart	2	
M	2.00000		HDS 5 Scale	1	
C	0.03790		Equation Form	1	
Y	0.69000				

© Haestad Methods, Inc.

Culvert Calculator Report
Pipe 973

Solve For: Headwater Elevation

Culvert Summary					
Allowable HW Elevation	1,585.00	ft	Headwater Depth/Height	1.32	
Computed Headwater Elev	1,586.85	ft	Discharge	144.00	cfs
Inlet Control HW Elev.	1,586.59	ft	Tailwater Elevation	1,571.02	ft
Outlet Control HW Elev.	1,586.85	ft	Control Type	Entrance Control	

Grades					
Upstream Invert	1,582.23	ft	Downstream Invert	1,571.02	ft
Length	113.00	ft	Constructed Slope	0.099204	ft/ft

Hydraulic Profile					
Profile	S2		Depth, Downstream	1.58	ft
Slope Type	Steep		Normal Depth	1.58	ft
Flow Regime	Supercritical		Critical Depth	2.66	ft
Velocity Downstream	17.06	ft/s	Critical Slope	0.020392	ft/ft

Section					
Section Shape	Circular		Mannings Coefficient	0.024	
Section Material	CMP		Span	3.50	ft
Section Size	42 inch		Rise	3.50	ft
Number Sections	2				

Outlet Control Properties					
Outlet Control HW Elev.	1,586.85	ft	Upstream Velocity Head	1.31	ft
Ke	0.50		Entrance Loss	0.66	ft

Inlet Control Properties					
Inlet Control HW Elev.	1,586.59	ft	Flow Control	Submerged	
Inlet Type	Headwall		Area Full	19.2	ft²
K	0.00780		HDS 5 Chart	2	
M	2.00000		HDS 5 Scale	1	
C	0.03790		Equation Form	1	
Y	0.69000				

Culvert Calculator Report
Pipe 974

Solve For: Headwater Elevation

Culvert Summary					
Allowable HW Elevation	1,585.50	ft	Headwater Depth/Height	1.46	
Computed Headwater Elev	1,587.26	ft	Discharge	112.00	cfs
Inlet Control HW Elev.	1,587.15	ft	Tailwater Elevation	1,571.02	ft
Outlet Control HW Elev.	1,587.26	ft	Control Type	Entrance Control	

Grades					
Upstream Invert	1,582.89	ft	Downstream Invert	1,571.02	ft
Length	94.00	ft	Constructed Slope	0.126277	ft/ft

Hydraulic Profile					
Profile	S2		Depth, Downstream	1.39	ft
Slope Type	Steep		Normal Depth	1.39	ft
Flow Regime	Supercritical		Critical Depth	2.43	ft
Velocity Downstream	17.54	ft/s	Critical Slope	0.024614	ft/ft

Section					
Section Shape	Circular		Mannings Coefficient	0.024	
Section Material	CMP		Span	3.00	ft
Section Size	36 inch		Rise	3.00	ft
Number Sections	2				

Outlet Control Properties					
Outlet Control HW Elev.	1,587.26	ft	Upstream Velocity Head	1.30	ft
Ke	0.50		Entrance Loss	0.65	ft

Inlet Control Properties					
Inlet Control HW Elev.	1,587.15	ft	Flow Control	Submerged	
Inlet Type	Headwall		Area Full	14.1	ft²
K	0.00780		HDS 5 Chart	2	
M	2.00000		HDS 5 Scale	1	
C	0.03790		Equation Form	1	
Y	0.69000				

© Haestad Methods, Inc.

Culvert Calculator Report
Pipe 975

Solve For: Headwater Elevation

Culvert Summary					
Allowable HW Elevation	1,586.00	ft	Headwater Depth/Height	1.46	
Computed Headwater Elev	1,587.83	ft	Discharge	56.00	cfs
Inlet Control HW Elev.	1,587.69	ft	Tailwater Elevation	1,571.02	ft
Outlet Control HW Elev.	1,587.83	ft	Control Type	Entrance Control	

Grades					
Upstream Invert	1,583.46	ft	Downstream Invert	1,571.02	ft
Length	86.00	ft	Constructed Slope	0.144651	ft/ft

Hydraulic Profile					
Profile	S2		Depth, Downstream	1.33	ft
Slope Type	Steep		Normal Depth	1.33	ft
Flow Regime	Supercritical		Critical Depth	2.43	ft
Velocity Downstream	18.45	ft/s	Critical Slope	0.024614	ft/ft

Section					
Section Shape	Circular		Mannings Coefficient	0.024	
Section Material	CMP		Span	3.00	ft
Section Size	36 inch		Rise	3.00	ft
Number Sections	1				

Outlet Control Properties					
Outlet Control HW Elev.	1,587.83	ft	Upstream Velocity Head	1.30	ft
Ke	0.50		Entrance Loss	0.65	ft

Inlet Control Properties					
Inlet Control HW Elev.	1,587.69	ft	Flow Control	Submerged	
Inlet Type	Headwall		Area Full	7.1	ft²
K	0.00780		HDS 5 Chart	2	
M	2.00000		HDS 5 Scale	1	
C	0.03790		Equation Form	1	
Y	0.69000				

© Haestad Methods, Inc.

Culvert Calculator Report
Pipe 976

Solve For: Headwater Elevation

Culvert Summary					
Allowable HW Elevation	1,586.00	ft	Headwater Depth/Height	0.68	
Computed Headwater Elev	1,583.78	ft	Discharge	6.00	cfs
Inlet Control HW Elev.	1,583.48	ft	Tailwater Elevation	1,573.02	ft
Outlet Control HW Elev.	1,583.78	ft	Control Type	Entrance Control	

Grades					
Upstream Invert	1,582.42	ft	Downstream Invert	1,573.02	ft
Length	59.00	ft	Constructed Slope	0.159322	ft/ft

Hydraulic Profile					
Profile	S2		Depth, Downstream	0.47	ft
Slope Type	Steep		Normal Depth	0.47	ft
Flow Regime	Supercritical		Critical Depth	0.87	ft
Velocity Downstream	10.57	ft/s	Critical Slope	0.015841	ft/ft

Section					
Section Shape	Circular		Mannings Coefficient	0.024	
Section Material	CMP		Span	2.00	ft
Section Size	24 inch		Rise	2.00	ft
Number Sections	1				

Outlet Control Properties					
Outlet Control HW Elev.	1,583.78	ft	Upstream Velocity Head	0.33	ft
Ke	0.50		Entrance Loss	0.16	ft

Inlet Control Properties					
Inlet Control HW Elev.	1,583.48	ft	Flow Control	Unsubmerged	
Inlet Type	Headwall		Area Full	3.1	ft²
K	0.00780		HDS 5 Chart	2	
M	2.00000		HDS 5 Scale	1	
C	0.03790		Equation Form	1	
Y	0.69000				

Culvert Calculator Report
Pipe 977

Solve For: Headwater Elevation

Culvert Summary					
Allowable HW Elevation	1,585.50	ft	Headwater Depth/Height	1.64	
Computed Headwater Elev	1,587.34	ft	Discharge	40.00	cfs
Inlet Control HW Elev.	1,587.34	ft	Tailwater Elevation	1,573.04	ft
Outlet Control HW Elev.	1,587.26	ft	Control Type	Inlet Control	

Grades					
Upstream Invert	1,583.25	ft	Downstream Invert	1,573.04	ft
Length	85.00	ft	Constructed Slope	0.120118	ft/ft

Hydraulic Profile					
Profile	S2		Depth, Downstream	1.28	ft
Slope Type	Steep		Normal Depth	1.28	ft
Flow Regime	Supercritical		Critical Depth	2.13	ft
Velocity Downstream	15.84	ft/s	Critical Slope	0.030442	ft/ft

Section					
Section Shape	Circular		Mannings Coefficient	0.024	
Section Material	CMP		Span	2.50	ft
Section Size	30 inch		Rise	2.50	ft
Number Sections	1				

Outlet Control Properties					
Outlet Control HW Elev.	1,587.26	ft	Upstream Velocity Head	1.25	ft
Ke	0.50		Entrance Loss	0.63	ft

Inlet Control Properties					
Inlet Control HW Elev.	1,587.34	ft	Flow Control	Submerged	
Inlet Type	Headwall		Area Full	4.9	ft²
K	0.00780		HDS 5 Chart	2	
M	2.00000		HDS 5 Scale	1	
C	0.03790		Equation Form	1	
Y	0.69000				

© Haestad Methods, Inc.

Culvert Calculator Report
Pipe 978

Solve For: Headwater Elevation

Culvert Summary					
Allowable HW Elevation	1,585.50	ft	Headwater Depth/Height	1.27	
Computed Headwater Elev	1,587.50	ft	Discharge	68.00	cfs
Inlet Control HW Elev.	1,587.10	ft	Tailwater Elevation	1,572.23	ft
Outlet Control HW Elev.	1,587.50	ft	Control Type	Entrance Control	

Grades					
Upstream Invert	1,583.06	ft	Downstream Invert	1,572.23	ft
Length	77.00	ft	Constructed Slope	0.140649	ft/ft

Hydraulic Profile					
Profile	S2		Depth, Downstream	1.39	ft
Slope Type	Steep		Normal Depth	1.39	ft
Flow Regime	Supercritical		Critical Depth	2.58	ft
Velocity Downstream	19.10	ft/s	Critical Slope	0.019418	ft/ft

Section					
Section Shape	Circular		Mannings Coefficient	0.024	
Section Material	CMP		Span	3.50	ft
Section Size	42 inch		Rise	3.50	ft
Number Sections	1				

Outlet Control Properties					
Outlet Control HW Elev.	1,587.50	ft	Upstream Velocity Head	1.24	ft
Ke	0.50		Entrance Loss	0.62	ft

Inlet Control Properties					
Inlet Control HW Elev.	1,587.10	ft	Flow Control	Transition	
Inlet Type	Headwall		Area Full	9.6	ft²
K	0.00780		HDS 5 Chart	2	
M	2.00000		HDS 5 Scale	1	
C	0.03790		Equation Form	1	
Y	0.69000				

© Haestad Methods, Inc.

Culvert Calculator Report
Pipe 979

Solve For: Headwater Elevation

Culvert Summary					
Allowable HW Elevation	1,585.80	ft	Headwater Depth/Height	1.49	
Computed Headwater Elev	1,588.25	ft	Discharge	169.00	cfs
Inlet Control HW Elev.	1,587.60	ft	Tailwater Elevation	1,571.43	ft
Outlet Control HW Elev.	1,588.25	ft	Control Type	Entrance Control	

Grades					
Upstream Invert	1,583.04	ft	Downstream Invert	1,571.43	ft
Length	26.00	ft	Constructed Slope	0.446538	ft/ft

Hydraulic Profile					
Profile	S2		Depth, Downstream	1.30	ft
Slope Type	Steep		Normal Depth	1.15	ft
Flow Regime	Supercritical		Critical Depth	2.86	ft
Velocity Downstream	25.94	ft/s	Critical Slope	0.024105	ft/ft

Section					
Section Shape	Circular		Mannings Coefficient	0.024	
Section Material	CMP		Span	3.50	ft
Section Size	42 inch		Rise	3.50	ft
Number Sections	2				

Outlet Control Properties					
Outlet Control HW Elev.	1,588.25	ft	Upstream Velocity Head	1.56	ft
Ke	0.50		Entrance Loss	0.78	ft

Inlet Control Properties					
Inlet Control HW Elev.	1,587.60	ft	Flow Control	Submerged	
Inlet Type	Headwall		Area Full	19.2	ft²
K	0.00780		HDS 5 Chart	2	
M	2.00000		HDS 5 Scale	1	
C	0.03790		Equation Form	1	
Y	0.69000				

Culvert Calculator Report
Pipe 980

Solve For: Headwater Elevation

Culvert Summary					
Allowable HW Elevation	1,585.30	ft	Headwater Depth/Height	1.49	
Computed Headwater Elev	1,587.84	ft	Discharge	169.00	cfs
Inlet Control HW Elev.	1,587.44	ft	Tailwater Elevation	1,571.08	ft
Outlet Control HW Elev.	1,587.84	ft	Control Type	Entrance Control	

Grades					
Upstream Invert	1,582.63	ft	Downstream Invert	1,571.08	ft
Length	38.00	ft	Constructed Slope	0.303947	ft/ft

Hydraulic Profile					
Profile	S2		Depth, Downstream	1.37	ft
Slope Type	Steep		Normal Depth	1.27	ft
Flow Regime	Supercritical		Critical Depth	2.86	ft
Velocity Downstream	24.26	ft/s	Critical Slope	0.024105	ft/ft

Section					
Section Shape	Circular		Mannings Coefficient	0.024	
Section Material	CMP		Span	3.50	ft
Section Size	42 inch		Rise	3.50	ft
Number Sections	2				

Outlet Control Properties					
Outlet Control HW Elev.	1,587.84	ft	Upstream Velocity Head	1.56	ft
Ke	0.50		Entrance Loss	0.78	ft

Inlet Control Properties					
Inlet Control HW Elev.	1,587.44	ft	Flow Control	Submerged	
Inlet Type	Headwall		Area Full	19.2	ft²
K	0.00780		HDS 5 Chart	2	
M	2.00000		HDS 5 Scale	1	
C	0.03790		Equation Form	1	
Y	0.69000				

Culvert Calculator Report
Pipe 981

Solve For: Headwater Elevation

Culvert Summary					
Allowable HW Elevation	1,585.00	ft	Headwater Depth/Height	0.97	
Computed Headwater Elev	1,583.48	ft	Discharge	11.00	cfs
Inlet Control HW Elev.	1,583.10	ft	Tailwater Elevation	1,571.92	ft
Outlet Control HW Elev.	1,583.48	ft	Control Type	Entrance Control	

Grades					
Upstream Invert	1,581.55	ft	Downstream Invert	1,571.92	ft
Length	42.00	ft	Constructed Slope	0.229286	ft/ft

Hydraulic Profile					
Profile	S2		Depth, Downstream	0.59	ft
Slope Type	Steep		Normal Depth	0.59	ft
Flow Regime	Supercritical		Critical Depth	1.19	ft
Velocity Downstream	14.32	ft/s	Critical Slope	0.018356	ft/ft

Section					
Section Shape	Circular		Mannings Coefficient	0.024	
Section Material	CMP		Span	2.00	ft
Section Size	24 inch		Rise	2.00	ft
Number Sections	1				

Outlet Control Properties					
Outlet Control HW Elev.	1,583.48	ft	Upstream Velocity Head	0.50	ft
Ke	0.50		Entrance Loss	0.25	ft

Inlet Control Properties					
Inlet Control HW Elev.	1,583.10	ft	Flow Control	Unsubmerged	
Inlet Type	Headwall		Area Full	3.1	ft²
K	0.00780		HDS 5 Chart	2	
M	2.00000		HDS 5 Scale	1	
C	0.03790		Equation Form	1	
Y	0.69000				

Culvert Calculator Report
Pipe 982

Solve For: Headwater Elevation

Culvert Summary					
Allowable HW Elevation	1,586.50	ft	Headwater Depth/Height	1.62	
Computed Headwater Elev	1,588.48	ft	Discharge	64.00	cfs
Inlet Control HW Elev.	1,588.32	ft	Tailwater Elevation	1,572.42	ft
Outlet Control HW Elev.	1,588.48	ft	Control Type	Entrance Control	

Grades					
Upstream Invert	1,583.61	ft	Downstream Invert	1,572.42	ft
Length	36.00	ft	Constructed Slope	0.310833	ft/ft

Hydraulic Profile					
Profile	S2		Depth, Downstream	1.24	ft
Slope Type	Steep		Normal Depth	1.16	ft
Flow Regime	Supercritical		Critical Depth	2.57	ft
Velocity Downstream	23.28	ft/s	Critical Slope	0.029229	ft/ft

Section					
Section Shape	Circular		Mannings Coefficient	0.024	
Section Material	CMP		Span	3.00	ft
Section Size	36 inch		Rise	3.00	ft
Number Sections	1				

Outlet Control Properties					
Outlet Control HW Elev.	1,588.48	ft	Upstream Velocity Head	1.53	ft
Ke	0.50		Entrance Loss	0.77	ft

Inlet Control Properties					
Inlet Control HW Elev.	1,588.32	ft	Flow Control	Submerged	
Inlet Type	Headwall		Area Full	7.1	ft²
K	0.00780		HDS 5 Chart	2	
M	2.00000		HDS 5 Scale	1	
C	0.03790		Equation Form	1	
Y	0.69000				

© Haestad Methods, Inc.

Culvert Calculator Report
Pipe 983

Solve For: Headwater Elevation

Culvert Summary					
Allowable HW Elevation	1,587.00	ft	Headwater Depth/Height	1.25	
Computed Headwater Elev	1,588.32	ft	Discharge	45.00	cfs
Inlet Control HW Elev.	1,587.72	ft	Tailwater Elevation	1,572.04	ft
Outlet Control HW Elev.	1,588.32	ft	Control Type	Entrance Control	

Grades					
Upstream Invert	1,584.58	ft	Downstream Invert	1,572.04	ft
Length	43.00	ft	Constructed Slope	0.291628	ft/ft

Hydraulic Profile					
Profile	S2		Depth, Downstream	1.00	ft
Slope Type	Steep		Normal Depth	0.98	ft
Flow Regime	Supercritical		Critical Depth	2.19	ft
Velocity Downstream	21.90	ft/s	Critical Slope	0.020000	ft/ft

Section					
Section Shape	Circular		Mannings Coefficient	0.024	
Section Material	CMP		Span	3.00	ft
Section Size	36 inch		Rise	3.00	ft
Number Sections	1				

Outlet Control Properties					
Outlet Control HW Elev.	1,588.32	ft	Upstream Velocity Head	1.03	ft
Ke	0.50		Entrance Loss	0.52	ft

Inlet Control Properties					
Inlet Control HW Elev.	1,587.72	ft	Flow Control	Transition	
Inlet Type	Headwall		Area Full	7.1	ft²
K	0.00780		HDS 5 Chart	2	
M	2.00000		HDS 5 Scale	1	
C	0.03790		Equation Form	1	
Y	0.69000				

© Haestad Methods, Inc.

Culvert Calculator Report
Pipe 984

Solve For: Headwater Elevation

Culvert Summary					
Allowable HW Elevation	1,592.00	ft	Headwater Depth/Height	1.46	
Computed Headwater Elev	1,593.90	ft	Discharge	56.00	cfs
Inlet Control HW Elev.	1,593.57	ft	Tailwater Elevation	1,571.10	ft
Outlet Control HW Elev.	1,593.90	ft	Control Type	Entrance Control	

Grades					
Upstream Invert	1,589.53	ft	Downstream Invert	1,571.10	ft
Length	67.00	ft	Constructed Slope	0.275075	ft/ft

Hydraulic Profile					
Profile	S2		Depth, Downstream	1.12	ft
Slope Type	Steep		Normal Depth	1.12	ft
Flow Regime	Supercritical		Critical Depth	2.43	ft
Velocity Downstream	23.34	ft/s	Critical Slope	0.024614	ft/ft

Section					
Section Shape	Circular		Mannings Coefficient	0.024	
Section Material	CMP		Span	3.00	ft
Section Size	36 inch		Rise	3.00	ft
Number Sections	1				

Outlet Control Properties					
Outlet Control HW Elev.	1,593.90	ft	Upstream Velocity Head	1.30	ft
Ke	0.50		Entrance Loss	0.65	ft

Inlet Control Properties					
Inlet Control HW Elev.	1,593.57	ft	Flow Control	Submerged	
Inlet Type	Headwall		Area Full	7.1	ft²
K	0.00780		HDS 5 Chart	2	
M	2.00000		HDS 5 Scale	1	
C	0.03790		Equation Form	1	
Y	0.69000				

Culvert Calculator Report
Pipe 985

Solve For: Headwater Elevation

Culvert Summary					
Allowable HW Elevation	1,594.50	ft	Headwater Depth/Height	0.94	
Computed Headwater Elev	1,594.66	ft	Discharge	29.00	cfs
Inlet Control HW Elev.	1,593.95	ft	Tailwater Elevation	1,572.11	ft
Outlet Control HW Elev.	1,594.66	ft	Control Type	Entrance Control	

Grades					
Upstream Invert	1,591.84	ft	Downstream Invert	1,572.11	ft
Length	61.00	ft	Constructed Slope	0.323443	ft/ft

Hydraulic Profile					
Profile	S2		Depth, Downstream	0.76	ft
Slope Type	Steep		Normal Depth	0.76	ft
Flow Regime	Supercritical		Critical Depth	1.74	ft
Velocity Downstream	20.54	ft/s	Critical Slope	0.015755	ft/ft

Section					
Section Shape	Circular		Mannings Coefficient	0.024	
Section Material	CMP		Span	3.00	ft
Section Size	36 inch		Rise	3.00	ft
Number Sections	1				

Outlet Control Properties					
Outlet Control HW Elev.	1,594.66	ft	Upstream Velocity Head	0.72	ft
Ke	0.50		Entrance Loss	0.36	ft

Inlet Control Properties					
Inlet Control HW Elev.	1,593.95	ft	Flow Control	Unsubmerged	
Inlet Type	Headwall		Area Full	7.1	ft²
K	0.00780		HDS 5 Chart	2	
M	2.00000		HDS 5 Scale	1	
C	0.03790		Equation Form	1	
Y	0.69000				

Culvert Calculator Report
Pipe 986

Solve For: Headwater Elevation

Culvert Summary			
Allowable HW Elevation	1,595.00 ft	Headwater Depth/Height	1.06
Computed Headwater Elev	1,593.40 ft	Discharge	35.00 cfs
Inlet Control HW Elev.	1,592.67 ft	Tailwater Elevation	1,571.79 ft
Outlet Control HW Elev.	1,593.40 ft	Control Type	Entrance Control

Grades			
Upstream Invert	1,590.23 ft	Downstream Invert	1,571.79 ft
Length	55.00 ft	Constructed Slope	0.335273 ft/ft

Hydraulic Profile			
Profile	S2	Depth, Downstream	0.83 ft
Slope Type	Steep	Normal Depth	0.83 ft
Flow Regime	Supercritical	Critical Depth	1.92 ft
Velocity Downstream	21.96 ft/s	Critical Slope	0.017080 ft/ft

Section			
Section Shape	Circular	Mannings Coefficient	0.024
Section Material	CMP	Span	3.00 ft
Section Size	36 inch	Rise	3.00 ft
Number Sections	1		

Outlet Control Properties			
Outlet Control HW Elev.	1,593.40 ft	Upstream Velocity Head	0.83 ft
Ke	0.50	Entrance Loss	0.42 ft

Inlet Control Properties			
Inlet Control HW Elev.	1,592.67 ft	Flow Control	Unsubmerged
Inlet Type	Headwall	Area Full	7.1 ft²
K	0.00780	HDS 5 Chart	2
M	2.00000	HDS 5 Scale	1
C	0.03790	Equation Form	1
Y	0.69000		

Culvert Calculator Report
Pipe 987

Solve For: Headwater Elevation

Culvert Summary					
Allowable HW Elevation	1,590.00	ft	Headwater Depth/Height	0.54	
Computed Headwater Elev	1,587.39	ft	Discharge	4.00	cfs
Inlet Control HW Elev.	1,587.10	ft	Tailwater Elevation	1,573.06	ft
Outlet Control HW Elev.	1,587.39	ft	Control Type	Entrance Control	

Grades					
Upstream Invert	1,586.30	ft	Downstream Invert	1,573.06	ft
Length	79.00	ft	Constructed Slope	0.167595	ft/ft

Hydraulic Profile					
Profile	S2		Depth, Downstream	0.38	ft
Slope Type	Steep		Normal Depth	0.38	ft
Flow Regime	Supercritical		Critical Depth	0.70	ft
Velocity Downstream	9.55	ft/s	Critical Slope	0.015291	ft/ft

Section					
Section Shape	Circular		Mannings Coefficient	0.024	
Section Material	CMP		Span	2.00	ft
Section Size	24 inch		Rise	2.00	ft
Number Sections	1				

Outlet Control Properties					
Outlet Control HW Elev.	1,587.39	ft	Upstream Velocity Head	0.26	ft
Ke	0.50		Entrance Loss	0.13	ft

Inlet Control Properties					
Inlet Control HW Elev.	1,587.10	ft	Flow Control	Unsubmerged	
Inlet Type	Headwall		Area Full	3.1	ft²
K	0.00780		HDS 5 Chart	2	
M	2.00000		HDS 5 Scale	1	
C	0.03790		Equation Form	1	
Y	0.69000				

Culvert Calculator Report
Pipe 989

Solve For: Headwater Elevation

Culvert Summary					
Allowable HW Elevation	1,587.00	ft	Headwater Depth/Height	1.43	
Computed Headwater Elev	1,587.66	ft	Discharge	160.00	cfs
Inlet Control HW Elev.	1,587.45	ft	Tailwater Elevation	1,572.71	ft
Outlet Control HW Elev.	1,587.66	ft	Control Type	Entrance Control	

Grades					
Upstream Invert	1,582.67	ft	Downstream Invert	1,572.71	ft
Length	69.00	ft	Constructed Slope	0.144348	ft/ft

Hydraulic Profile					
Profile	S2		Depth, Downstream	1.53	ft
Slope Type	Steep		Normal Depth	1.51	ft
Flow Regime	Supercritical		Critical Depth	2.79	ft
Velocity Downstream	19.80	ft/s	Critical Slope	0.022643	ft/ft

Section					
Section Shape	Circular		Mannings Coefficient	0.024	
Section Material	CMP		Span	3.50	ft
Section Size	42 inch		Rise	3.50	ft
Number Sections	2				

Outlet Control Properties					
Outlet Control HW Elev.	1,587.66	ft	Upstream Velocity Head	1.47	ft
Ke	0.50		Entrance Loss	0.73	ft

Inlet Control Properties					
Inlet Control HW Elev.	1,587.45	ft	Flow Control	Submerged	
Inlet Type	Headwall		Area Full	19.2	ft²
K	0.00780		HDS 5 Chart	2	
M	2.00000		HDS 5 Scale	1	
C	0.03790		Equation Form	1	
Y	0.69000				

© Haestad Methods, Inc.

Culvert Calculator Report
Pipe 990

Solve For: Headwater Elevation

Culvert Summary					
Allowable HW Elevation	1,585.00	ft	Headwater Depth/Height	0.38	
Computed Headwater Elev	1,582.02	ft	Discharge	2.00	cfs
Inlet Control HW Elev.	1,581.83	ft	Tailwater Elevation	1,572.71	ft
Outlet Control HW Elev.	1,582.02	ft	Control Type	Entrance Control	

Grades					
Upstream Invert	1,581.27	ft	Downstream Invert	1,572.71	ft
Length	80.00	ft	Constructed Slope	0.107000	ft/ft

Hydraulic Profile					
Profile	S2		Depth, Downstream	0.30	ft
Slope Type	Steep		Normal Depth	0.30	ft
Flow Regime	Supercritical		Critical Depth	0.49	ft
Velocity Downstream	6.65	ft/s	Critical Slope	0.015303	ft/ft

Section					
Section Shape	Circular		Mannings Coefficient	0.024	
Section Material	CMP		Span	2.00	ft
Section Size	24 inch		Rise	2.00	ft
Number Sections	1				

Outlet Control Properties					
Outlet Control HW Elev.	1,582.02	ft	Upstream Velocity Head	0.17	ft
Ke	0.50		Entrance Loss	0.09	ft

Inlet Control Properties					
Inlet Control HW Elev.	1,581.83	ft	Flow Control	Unsubmerged	
Inlet Type	Headwall		Area Full	3.1	ft²
K	0.00780		HDS 5 Chart	2	
M	2.00000		HDS 5 Scale	1	
C	0.03790		Equation Form	1	
Y	0.69000				

J2 Engineering and Environmental Design

Baffled Chute Spillway Design

By:	**AJR**
Date:	**4/25/2005**
Checked:	DWD
J2 No.:	**04-0031**

Reference: Design of Small Dams, USDI, Bureau of Reclamation, Third Edition, 1987.
Design of Small Canal Structures, USDI, Bureau of Reclamation, 1978
Open Channel Flow, Henderson, 1966.

NOTE: = Required Input Data in Excel

Step 1 (Reference: Design of Small Dams)
Determine the Max Q

Max Q = 1507 cfs Note- this is the 100-year design event.

Step 2 (Reference: Design of Small Dams)
Determine q = Q/W

W= 51.25 ft Note - this is open width of culvert,
q= 29.40488 ignoring wall thickness

Step 3
Determine Entrance Velocity

Ideal Velocity	4.8	ft/s (g*q)^1/3 - 5
Critical Velocity (Vc)	9.8	ft/s (g*q)^1/3
Actual Velocity	13.40	ft/s - Refer to FlowMaster output.
		** If actual velocity is greater than critical, use Sill Control
		Depth of sill is determined in Step 13

Note:

Step 4
Determine Vertical Offset between approach channel floor and chute.
This offset varies with the installation - see Step 13 for Sill Control Calculations.
Set this to establish desirable uniform entrance velocity.
12 inches is the maximum vertical depth between crest and first row of baffles.

Vertical Offset: 12 inches Max distance from crest to first row of baffles.

Step 5
Determine the Baffle Pier Height

Set equal to 0.8 to 0.9 * Critical Depth (Dc)

Dc =	2.99	ft - = (q^2/32.2)^(1/3)
H =	2.40	ft -- use 0.8 to minimize height.
Design H =	3	ft -- round for constructablility

Step 6
Determine Baffle Pier Widths and Spaces

Set at approximately 1.5 H, but not less than H

1.5 H =	4.5	ft - max
H	3	ft - min

Design Width = 4.5 ft

Step 7

Determine spacing between the rows of baffles:

Drop Slope	2	:1 --Use match basin sideslopes - 2:1 max
Spacing	6	ft (H divided by drop slope in decimal form, ie 2:1 is 0.5)
Design Spacing	6	ft (Round to nearest 0.5 ft, but for baffles less than 3 feet should be not greater than 6ft)

Step 8

Determine if piers will be constructed normal to slope or vertical.

This does not significately affect performance, but is a contructability issue.
Use Piers normal to slope to make forming easier.

Step 9

Determine the number of rows

A minimum of 4 rows should be used, if possible.
At least one row should be buried below the outlet channel grade.

Vertical drop	11.68	ft - = Crest elev - basin floor = 1581.68-1570.00
Horizontal distance	23.36	ft -- Drop slope* vertical drop
Distance along slope	26.1	ft
Number of rows	5.4	= dist along slope / design spacing + 1 baffle to be buried.
Design rows	6	

Step 10

Determine Minimum chute wall height

Wall H	9	ft -- 3*pier height.
Design Wall H	9	ft - round to nearest 3-inches.

Step 11

Place rip-rap at the downstream ends of the training walls to prevent erosion of the banks.

Step 12

Determine Force on Baffle Piers

Refer to Open Channel Flow, Henerson, 1966.
Assume Momentum downstream of baffles is zero, due to steep slopes.
Determine force for Q50 and Q500.
Force on block equals momentum of water upstream of block times unit weight of water
F = M*62.4lb/ft^3
Utilize outlet depth from HY8 to determine momentum-- this is more conservative than using the critical depth since this value is less than critical depth.
Momentum= y^2/2+q^2/(g*y) --for rectangular channels

Q500=	2561.9	q500=	49.98829	y= 4.265405 Let Q500 = 1.7*Q100
Q100=	1507	q50=	29.40488	y= 2.994523
Force500=	1703	lbs/ft width of block		
Force100=	839	lbs/ft width of block		
Force500=	2.8	psi		
Force100=	1.9	psi		

Step 13

Determine Depth of Sill for the 100-year event

Refer to Design of Small Canal Structures

Dsill= Es1-Esc-hi

Es1= d1+hv1

Esc= dc + hvc

hi= 0.5 (hvc-hv1)

Entrance V (ft/s)	13.4	From HECRAS output
d1=	2.08	let d1=outlet depth from HECRAS
W	51.25	ft - actual width at sill
v1=	13.40	ft/s (let v1 = Entrance v
hv1=	2.79	ft = v1^2/2g (let g = 32.2 ft/s^2)
Es1 =	4.87	ft = d1+ hv1
dc=	2.99	ft let dc=critical depth
vc=	9.82	ft/s let vc = critical veloctiy
hvc=	1.50	ft/s Vc^2/2g (let vc = critical velocity and g = 32.2 ft/s^2)
Esc =	4.49	ft = dc + hvc
Dsill=	1.022	ft -- This is the minimum sill height that should be used
Design Dsill=	1	ft

J2 Engineeering and Environmental Design

Design of Small Canal Structures
Impact Basin Design

Project:	**Red Mountain Freeway, Power to University**	By:	**AJR**
Subject:	**Collector Channel Outlet Pipe Structures**	Date:	**4/25/2005**
	24 inch pipes	Checked:	**DVD**
		Project No.:	**40031**

Reference:
United States Department of the Interior, Bureau of Reclamation,
Design of Small Canal Structures,
pp. 308 - 322

Calculations:

Step 1) Compute the theorectical velocity in feet per second, V = (2*g*h)^0.5

G = 32.2 ft/sec^2

Inlet Invert =
Outlet Invert =
h = ft (h= head = Inlet invert - Outlet invert)

Theorectical Velocity = 0.00
Calculated Velocity = 16.61 fps from a computer run of the culvert. HY-8 etc

Step 2) Compute the cross sectional area of the incoming flow.

A = Q/V

Q = 25 cfs

Vel. = 16.61 fps (theorectical velocity)

Area = 1.51 square feet

Step 3) Compute the depth of flow d, in feet (assume shape of the jet is square)

d = (A)^0.5

d = 1.2268 ft
d = 14.72 inches

Step 4) Compute the Froude number

Fr = V/(G*d)^0.5

Project:	**Red Mountain Freeway, Power to University**	By:	**AJR**
Subject:	**Collector Channel Outlet Pipe Structures**	Date:	**4/25/2005**
	24 inch pipes	Checked:	**DVD**
		Project No.:	**40031**

Fr = 2.64

Step 5) Enter Figure 6-10 with Fr and read W/d

from Figure 6-10 in the Design of Small Canal Structures, Fr and W/d values were read off of the graph. Then a straight line relationship was applied to the data points.

Fr	W/d	log (Fr)	log (W/d)
1.5	3.65	0.1761	0.5623
9	9.98	0.9542	0.9991

(log W/d) = m*(log Fr)+b

m= 0.5614
b= 0.4634

log (W/d)= 0.700
(W/d) = 5.0161
W = 6.154 ft

W (used) = 6.000 (5' minimum)

Step 6) Dimension the impact basin based upon Figure 6-10, "Design of Small Canal Structures."

L =	8.00 ft	4/3*W	= Length of basin
f =	1.00 ft	1/6*W	= Riprap thickness/ Height of sill
e =	0.50 ft	1/12*W	Refer to figure 6-10
H =	4.50 ft	3/4*W	= Height of impact basin
a =	3.00 ft	1/2*W	Refer to figure 6-10
b =	2.25 ft	3/8*W	Refer to figure 6-10
c=	3.00 ft	1/2*W	Refer to figure 6-10

Step 7) Determine rock diameter for protection.

Minimum Diameter of Rock protection =1/20*W

Project:	**Red Mountain Freeway, Power to University**	By:	**AJR**
Subject:	**Collector Channel Outlet Pipe Structures**	Date:	**4/25/2005**
	24 inch pipes	Checked:	**DVD**
		Project No.:	**40031**

Diameter = 3.6 inches

Step 8) Design air vent if necessary.

Will both the inlet and the outlet be sealed? no (yes or no)

Comment:

No vent is necessary

Diameter of incoming pipe = inches
BR recommended vent pipe D = 0 inches (1/6 of incoming pipe diameter)
Location = ft from inlet (BR recommends that it be "close" to the inlet.

Step 9) Check that tailwater conditions do not degrade impact basin performance significantly

Impact basin does not depend on a tailwater to dissipate the energy of the flow.
However, for best results, the TW should be (b+/2+f) above the invert of the baffled outlet.
The height of the TW above the baffled should never exceed (b+f), otherwise
some of the water will never strike the baffle.

Tw = 0 ft
Min TW for best results = 2.13 ft (b/2+f)
Max TW = 3.25 ft (b+f)

J2 Engineeering and Environmental Design

Design of Small Canal Structures
Impact Basin Design

Project:	**Red Mountain Freeway, Power to University**	By:	**AJR**
Subject:	**Collector Channel Outlet Pipe Structures**	Date:	**4/25/2005**
	30 inch pipes	Checked:	**DVD**
		Project No.:	**40031**

Reference:
United States Department of the Interior, Bureau of Reclamation,
Design of Small Canal Structures,
pp. 308 - 322

Calculations:

Step 1) Compute the theorectical velocity in feet per second, V = (2*g*h)^0.5

G = 32.2 ft/sec^2

Inlet Invert =
Outlet Invert =
h = ft (h= head = Inlet invert - Outlet invert)

Theorectical Velocity = 0.00
Calculated Velocity = 19.35 fps from a computer run of the culvert. HY-8 etc

Step 2) Compute the cross sectional area of the incoming flow.

A = Q/V

Q = 40 cfs

Vel. = 19.35 fps (theorectical velocity)

Area = 2.07 square feet

Step 3) Compute the depth of flow d, in feet (assume shape of the jet is square)

d = (A)^0.5

d = 1.4378 ft
d = 17.25 inches

Step 4) Compute the Froude number

Fr = V/(G*d)^0.5

Project:	**Red Mountain Freeway, Power to University**	By:	**AJR**
Subject:	**Collector Channel Outlet Pipe Structures**	Date:	**4/25/2005**
	30 inch pipes	Checked:	**DVD**
		Project No.:	**40031**

Fr = 2.84

Step 5) Enter Figure 6-10 with Fr and read W/d

from Figure 6-10 in the Design of Small Canal structure, Fr and W/d values were read off of the graph. Then a straight line relationship was applied to the data points.

Fr	W/d	log (Fr)	log (W/d)
1.5	3.65	0.1761	0.5623
9	9.98	0.9542	0.9991

(log W/d) = m*(log Fr)+b

m= 0.5614
b= 0.4634

log (W/d)= 0.718
(W/d) = 5.2270
W = 7.515 ft

W (used) = 8.000 (5' minimum)

Step 6) Dimension the impact basin based upon Figure 6-10, "Design of Small Canal Structures."

L =	10.67 ft	4/3*W	= Length of basin
f =	1.33 ft	1/6*W	= Riprap thickness/ Height of sill
e =	0.67 ft	1/12*W	Refer to figure 6-10
H =	6.00 ft	3/4*W	= Height of impact basin
a =	4.00 ft	1/2*W	Refer to figure 6-10
b =	3.00 ft	3/8*W	Refer to figure 6-10
c=	4.00 ft	1/2*W	Refer to figure 6-10

Step 7) Determine rock diameter for protection.

Minimum Diameter of Rock protection =1/20*W

Project:	**Red Mountain Freeway, Power to University**	By:	**AJR**
Subject:	**Collector Channel Outlet Pipe Structures**	Date:	**4/25/2005**
	30 inch pipes	Checked:	**DVD**
		Project No.:	**40031**

Diameter = 4.8 inches

Step 8) Design air vent if necessary.

Will both the inlet and the outlet be sealed? no (yes or no)

Comment:

No vent is necessary

Diameter of incoming pipe = inches
BR recommended vent pipe D = 0 inches (1/6 of incoming pipe diameter)
Location = ft from inlet (BR recommends that it be "close" to the inlet.

Step 9) Check that tailwater conditions do not degrade impact basin performance significantly

Impact basin does not depend on a tailwater to dissipate the energy of the flow. However, for best results, the TW should be (b+/2+f) above the invert of the baffled outlet. The height of the TW above the baffled should never exceed (b+f), otherwise some of the water will never strike the baffle.

Tw = 0 ft
Min TW for best results = 2.83 ft (b/2+f)
Max TW = 4.33 ft (b+f)

J2 Engineeering and Environmental Design

Design of Small Canal Structures
Impact Basin Design

Project:	**Red Mountain Freeway, Power to University**	By:	**AJR**
Subject:	**Collector Channel Outlet Pipe Structures**	Date:	**4/25/2005**
	Single 36 inch pipes	Checked:	**DVD**
		Project No.:	**40031**

Reference:
United States Department of the Interior, Bureau of Reclamation,
Design of Small Canal Structures,
pp. 308 - 322

Calculations:

Step 1) Compute the theorectical velocity in feet per second, V = (2*g*h)^0.5

G = 32.2 ft/sec^2

Inlet Invert =
Outlet Invert =
h = ft (h= head = Inlet invert - Outlet invert)

Theorectical Velocity = 0.00
Calculated Velocity = 23.34 fps from a computer run of the culvert. HY-8 etc

Step 2) Compute the cross sectional area of the incoming flow.

A = Q/V

Q = 64 cfs

Vel. = 23.34 fps (theorectical velocity)

Area = 2.74 square feet

Step 3) Compute the depth of flow d, in feet (assume shape of the jet is square)

d = (A)^0.5

d = 1.6559 ft
d = 19.87 inches

Step 4) Compute the Froude number

Fr = V/(G*d)^0.5

Project:	**Red Mountain Freeway, Power to University**	By:	**AJR**
Subject:	**Collector Channel Outlet Pipe Structures**	Date:	**4/25/2005**
	Single 36 inch pipes	Checked:	**DVD**
		Project No.:	**40031**

Fr = 3.20

Step 5) Enter Figure 6-10 with Fr and read W/d

from Figure 6-10 in the Design of Small Canal structure, Fr and W/d values were read off of the graph. Then a straight line relationship was applied to the data points.

Fr	W/d	log (Fr)	log (W/d)
1.5	3.65	0.1761	0.5623
9	9.98	0.9542	0.9991

(log W/d) = m*(log Fr)+b

m= 0.5614
b= 0.4634

log (W/d)= 0.747
(W/d) = 5.5814
W = 9.242 ft

W (used) = 9.000 (5' minimum)

Step 6) Dimension the impact basin based upon Figure 6-10, "Design of Small Canal Structures."

L =	12.00 ft	4/3*W	= Length of basin
f =	1.50 ft	1/6*W	= Riprap thickness/ Height of sill
e =	0.75 ft	1/12*W	Refer to figure 6-10
H =	6.75 ft	3/4*W	= Height of impact basin
a =	4.50 ft	1/2*W	Refer to figure 6-10
b =	3.38 ft	3/8*W	Refer to figure 6-10
c=	4.50 ft	1/2*W	Refer to figure 6-10

Step 7) Determine rock diameter for protection.

Minimum Diameter of Rock protection =1/20*W

Diameter = 5.4 inches

Project:	**Red Mountain Freeway, Power to University**	By:	**AJR**
Subject:	**Collector Channel Outlet Pipe Structures**	Date:	**4/25/2005**
	Single 36 inch pipes	Checked:	**DVD**
		Project No.:	**40031**

Step 8) Design air vent if necessary.

Will both the inlet and the outlet be sealed? [no] (yes or no)

Comment:

No vent is necessary

Diameter of incoming pipe = [ ] inches
BR recommended vent pipe D = [0] inches (1/6 of incoming pipe diameter)
Location = [ ] ft from inlet (BR recommends that it be "close" to the inlet.

Step 9) Check that tailwater conditions do not degrade impact basin performance significantly

Impact basin does not depend on a tailwater to dissipate the energy of the flow. However, for best results, the TW should be (b+/2+f) above the invert of the baffled outlet. The height of the TW above the baffled should never exceed (b+f), otherwise some of the water will never strike the baffle.

Tw = [0] ft
Min TW for best results = 3.19 ft (b/2+f)
Max TW = 4.88 ft (b+f)

J2 Engineeering and Environmental Design

Design of Small Canal Structures
Impact Basin Design

Project:	**Red Mountain Freeway, Power to University**	By:	**AJR**
Subject:	**Collector Channel Outlet Pipe Structures**	Date:	**4/25/2005**
	Single 42 inch pipes	Checked:	**DVD**
		Project No.:	**40031**

Reference:
United States Department of the Interior, Bureau of Reclamation,
Design of Small Canal Structures,
pp. 308 - 322

Calculations:

Step 1) Compute the theorectical velocity in feet per second, V = (2*g*h)^0.5

G = 32.2 ft/sec^2

Inlet Invert =
Outlet Invert =
h = ft (h= head = Inlet invert - Outlet invert)

Theorectical Velocity = 0.00
Calculated Velocity = 19.10 fps from a computer run of the culvert. HY-8 etc

Step 2) Compute the cross sectional area of the incoming flow.

A = Q/V

Q = 68 cfs

Vel. = 19.10 fps (theorectical velocity)

Area = 3.56 square feet

Step 3) Compute the depth of flow d, in feet (assume shape of the jet is square)

d = (A)^0.5

d = 1.8869 ft
d = 22.64 inches

Step 4) Compute the Froude number

Fr = V/(G*d)^0.5

Project:	**Red Mountain Freeway, Power to University**	By:	**AJR**
Subject:	**Collector Channel Outlet Pipe Structures**	Date:	**4/25/2005**
	Single 42 inch pipes	Checked:	**DVD**
		Project No.:	**40031**

Fr = 2.45

Step 5) Enter Figure 6-10 with Fr and read W/d

from Figure 6-10 in the Design of Small Canal structure, Fr and W/d values were read off of the graph. Then a straight line relationship was applied to the data points.

Fr	W/d	log (Fr)	log (W/d)
1.5	3.65	0.1761	0.5623
9	9.98	0.9542	0.9991

(log W/d) = m*(log Fr)+b

m= 0.5614
b= 0.4634

log (W/d)= 0.682
(W/d) = 4.8078
W = 9.072 ft

W (used) = 9.000 (5' minimum)

Step 6) Dimension the impact basin based upon Figure 6-10, "Design of Small Canal Structures."

L =	12.00 ft	4/3*W	= Length of basin
f =	1.50 ft	1/6*W	= Riprap thickness/ Height of sill
e =	0.75 ft	1/12*W	Refer to figure 6-10
H =	6.75 ft	3/4*W	= Height of impact basin
a =	4.50 ft	1/2*W	Refer to figure 6-10
b =	3.38 ft	3/8*W	Refer to figure 6-10
c=	4.50 ft	1/2*W	Refer to figure 6-10

Step 7) Determine rock diameter for protection.

Minimum Diameter of Rock protection =1/20*W

Project:	**Red Mountain Freeway, Power to University**	By:	**AJR**
Subject:	**Collector Channel Outlet Pipe Structures**	Date:	**4/25/2005**
	Single 42 inch pipes	Checked:	**DVD**
		Project No.:	**40031**

Diameter = 5.4 inches

Step 8) Design air vent if necessary.

Will both the inlet and the outlet be sealed? no (yes or no)

Comment:

No vent is necessary

Diameter of incoming pipe = inches
BR recommended vent pipe D = 0 inches (1/6 of incoming pipe diameter)
Location = ft from inlet (BR recommends that it be "close" to the inlet.

Step 9) Check that tailwater conditions do not degrade impact basin performance significantly

Impact basin does not depend on a tailwater to dissipate the energy of the flow.
However, for best results, the TW should be (b+/2+f) above the invert of the baffled outlet.
The height of the TW above the baffled should never exceed (b+f), otherwise
some of the water will never strike the baffle.

Tw = 0 ft
Min TW for best results = 3.19 ft (b/2+f)
Max TW = 4.88 ft (b+f)

J2 Engineeering and Environmental Design

Design of Small Canal Structures
Impact Basin Design

Project:	**Red Mountain Freeway, Power to University**	By:	**AJR**
Subject:	**Collector Channel Outlet Pipe Structures**	Date:	**4/25/2005**
	Double 36 inch pipes	Checked:	**DVD**
		Project No.:	**40031**

Reference:
United States Department of the Interior, Bureau of Reclamation,
Design of Small Canal Structures,
pp. 308 - 322

Calculations:

Step 1) Compute the theorectical velocity in feet per second, V = (2*g*h)^0.5

G = 32.2 ft/sec^2

Inlet Invert =
Outlet Invert =
h = ft (h= head = Inlet invert - Outlet invert)

Theorectical Velocity = 0.00
Calculated Velocity = 17.85 fps from a computer run of the culvert. HY-8 etc

Step 2) Compute the cross sectional area of the incoming flow.

A = Q/V

Q 130 cfs

Vel. 17.85 fps (theorectical velocity)

Area = 7.28 square feet

Step 3) Compute the depth of flow d, in feet (assume shape of the jet is square)

d = (A)^0.5

d = 2.6987 ft
d = 32.38 inches

Step 4) Compute the Froude number

Fr = V/(G*d)^0.5

Project:	**Red Mountain Freeway, Power to University**	By:	**AJR**
Subject:	**Collector Channel Outlet Pipe Structures**	Date:	**4/25/2005**
	Double 36 inch pipes	Checked:	**DVD**
		Project No.:	**40031**

Fr = 1.91

Step 5) Enter Figure 6-10 with Fr and read W/d

from Figure 6-10 in the Design of Small Canal structure, Fr and W/d values were read off of the graph. Then a straight line relationship was applied to the data points.

Fr	W/d	log (Fr)	log (W/d)
1.5	3.65	0.1761	0.5623
9	9.98	0.9542	0.9991

(log W/d) = m*(log Fr)+b

m= 0.5614
b= 0.4634

log (W/d)= 0.622
(W/d) = 4.1862
W = 11.297 ft

W (used) = 11.000 (5' minimum)

Step 6) Dimension the impact basin based upon Figure 6-10, "Design of Small Canal Structures."

L =	14.67 ft	4/3*W	= Length of basin
f =	1.83 ft	1/6*W	= Riprap thickness/ Height of sill
e =	0.92 ft	1/12*W	Refer to figure 6-10
H =	8.25 ft	3/4*W	= Height of impact basin
a =	5.50 ft	1/2*W	Refer to figure 6-10
b =	4.13 ft	3/8*W	Refer to figure 6-10
c=	5.50 ft	1/2*W	Refer to figure 6-10

Step 7) Determine rock diameter for protection.

Minimum Diameter of Rock protection =1/20*W

Project:	**Red Mountain Freeway, Power to University**	By:	**AJR**
Subject:	**Collector Channel Outlet Pipe Structures**	Date:	**4/25/2005**
	Double 36 inch pipes	Checked:	**DVD**
		Project No.:	**40031**

Diameter = 6.6 inches

Step 8) Design air vent if necessary.

Will both the inlet and the outlet be sealed? no (yes or no)

Comment:

No vent is necessary

Diameter of incoming pipe = inches
BR recommended vent pipe D = 0 inches (1/6 of incoming pipe diameter)
Location = ft from inlet (BR recommends that it be "close" to the inlet.

Step 9) Check that tailwater conditions do not degrade impact basin performance significantly

Impact basin does not depend on a tailwater to dissipate the energy of the flow. However, for best results, the TW should be (b+/2+f) above the invert of the baffled outlet. The height of the TW above the baffled should never exceed (b+f), otherwise some of the water will never strike the baffle.

Tw = 0 ft
Min TW for best results = 3.90 ft (b/2+f)
Max TW = 5.96 ft (b+f)

J2 Engineeering and Environmental Design

Design of Small Canal Structures
Impact Basin Design

Project:	**Red Mountain Freeway, Power to University**	By:	**AJR**
Subject:	**Collector Channel Outlet Pipe Structures**	Date:	**4/25/2005**
	Double 42 inch pipes	Checked:	**DVD**
		Project No.:	**40031**

Reference:
United States Department of the Interior, Bureau of Reclamation,
Design of Small Canal Structures,
pp. 308 - 322

Calculations:

Step 1) Compute the theorectical velocity in feet per second, V = (2*g*h)^0.5

G = 32.2 ft/sec^2

Inlet Invert =
Outlet Invert =
h = ft (h= head = Inlet invert - Outlet invert)

Theorectical Velocity = 0.00
Calculated Velocity = 25.94 fps from a computer run of the culvert. HY-8 etc

Step 2) Compute the cross sectional area of the incoming flow.

A = Q/V

Q = 169 cfs

Vel. = 25.94 fps (theorectical velocity)

Area = 6.52 square feet

Step 3) Compute the depth of flow d, in feet (assume shape of the jet is square)

d = (A)^0.5

d = 2.5525 ft
d = 30.63 inches

Step 4) Compute the Froude number

Fr = V/(G*d)^0.5

Project:	**Red Mountain Freeway, Power to University**	By:	**AJR**
Subject:	**Collector Channel Outlet Pipe Structures**	Date:	**4/25/2005**
	Double 42 inch pipes	Checked:	**DVD**
		Project No.:	**40031**

Fr = 2.86

Step 5) Enter Figure 6-10 with Fr and read W/d

from Figure 6-10 in the Design of Small Canal structure, Fr and W/d values were read off of the graph. Then a straight line relationship was applied to the data points.

Fr	W/d	log (Fr)	log (W/d)
1.5	3.65	0.1761	0.5623
9	9.98	0.9542	0.9991

(log W/d) = m*(log Fr)+b

m= 0.5614
b= 0.4634

log (W/d)= 0.720
(W/d) = 5.2450
W = 13.388 ft

W (used) = 13.000 (5' minimum)

Step 6) Dimension the impact basin based upon Figure 6-10, "Design of Small Canal Structures."

L =	17.33 ft	4/3*W	= Length of basin
f =	2.17 ft	1/6*W	= Riprap thickness/ Height of sill
e =	1.08 ft	1/12*W	Refer to figure 6-10
H =	9.75 ft	3/4*W	= Height of impact basin
a =	6.50 ft	1/2*W	Refer to figure 6-10
b =	4.88 ft	3/8*W	Refer to figure 6-10
c=	6.50 ft	1/2*W	Refer to figure 6-10

Step 7) Determine rock diameter for protection.

Minimum Diameter of Rock protection =1/20*W

Project:	**Red Mountain Freeway, Power to University**	By:	**AJR**
Subject:	**Collector Channel Outlet Pipe Structures**	Date:	**4/25/2005**
	Double 42 inch pipes	Checked:	**DVD**
		Project No.:	**40031**

Diameter = 7.8 inches

Step 8) Design air vent if necessary.

Will both the inlet and the outlet be sealed? no (yes or no)

Comment:

No vent is necessary

Diameter of incoming pipe = inches
BR recommended vent pipe D = 0 inches (1/6 of incoming pipe diameter)
Location = ft from inlet (BR recommends that it be "close" to the inlet.

Step 9) Check that tailwater conditions do not degrade impact basin performance significantly

Impact basin does not depend on a tailwater to dissipate the energy of the flow.
However, for best results, the TW should be (b+/2+f) above the invert of the baffled outlet.
The height of the TW above the baffled should never exceed (b+f), otherwise
some of the water will never strike the baffle.

Tw = 0 ft
Min TW for best results = 4.60 ft (b/2+f)
Max TW = 7.04 ft (b+f)

J2 Engineeering and Environmental Design

Design of Small Canal Structures
Impact Basin Design

Project:	**Red Mountain Freeway, Power to University**	By:	**AJR**
Subject:	**Collector Channel Outlet Pipe Structures**	Date:	**4/25/2005**
	Double 48 inch pipe	Checked:	**DVD**
		Project No.:	**40031**

Reference:
United States Department of the Interior, Bureau of Reclamation,
Design of Small Canal Structures,
pp. 308 - 322

Calculations:

Step 1) Compute the theorectical velocity in feet per second, V = (2*g*h)^0.5

G = 32.2 ft/sec^2

Inlet Invert =
Outlet Invert =
h = ft (h= head = Inlet invert - Outlet invert)

Theorectical Velocity = 0.00
Calculated Velocity = 20.41 fps from a computer run of the culvert. HY-8 etc

Step 2) Compute the cross sectional area of the incoming flow.

A = Q/V

Q = 187 cfs

Vel. = 20.41 fps (theorectical velocity)

Area = 9.16 square feet

Step 3) Compute the depth of flow d, in feet (assume shape of the jet is square)

d = (A)^0.5

d = 3.0269 ft
d = 36.32 inches

Step 4) Compute the Froude number

Fr = V/(G*d)^0.5

Project:	**Red Mountain Freeway, Power to University**	By:	**AJR**
Subject:	**Collector Channel Outlet Pipe Structures**	Date:	**4/25/2005**
	Double 48 inch pipe	Checked:	**DVD**
		Project No.:	**40031**

Fr = 2.07

Step 5) Enter Figure 6-10 with Fr and read W/d

from Figure 6-10 in the Design of Small Canal structure, Fr and W/d values were read off of the graph. Then a straight line relationship was applied to the data points.

Fr	W/d	log (Fr)	log (W/d)
1.5	3.65	0.1761	0.5623
9	9.98	0.9542	0.9991

(log W/d) = m*(log Fr)+b

m= 0.5614
b= 0.4634

log (W/d)= 0.641
(W/d) = 4.3703
W = 13.228 ft

W (used) = 13.000 (5' minimum)

Step 6) Dimension the impact basin based upon Figure 6-10, "Design of Small Canal Structures."

L =	17.33 ft	4/3*W	= Length of basin
f =	2.17 ft	1/6*W	= Riprap thickness/ Height of sill
e =	1.08 ft	1/12*W	Refer to figure 6-10
H =	9.75 ft	3/4*W	= Height of impact basin
a =	6.50 ft	1/2*W	Refer to figure 6-10
b =	4.88 ft	3/8*W	Refer to figure 6-10
c=	6.50 ft	1/2*W	Refer to figure 6-10

Step 7) Determine rock diameter for protection.

Minimum Diameter of Rock protection =1/20*W

Project:	**Red Mountain Freeway, Power to University**	By:	**AJR**
Subject:	**Collector Channel Outlet Pipe Structures**	Date:	**4/25/2005**
	Double 48 inch pipe	Checked:	**DVD**
		Project No.:	**40031**

Diameter = 7.8 inches

Step 8) Design air vent if necessary.

Will both the inlet and the outlet be sealed? no (yes or no)

Comment:

No vent is necessary

Diameter of incoming pipe = inches
BR recommended vent pipe D = 0 inches (1/6 of incoming pipe diameter)
Location = ft from inlet (BR recommends that it be "close" to the inlet.

Step 9) Check that tailwater conditions do not degrade impact basin performance significantly

Impact basin does not depend on a tailwater to dissipate the energy of the flow. However, for best results, the TW should be (b+/2+f) above the invert of the baffled outlet. The height of the TW above the baffled should never exceed (b+f), otherwise some of the water will never strike the baffle.

Tw = 0 ft
Min TW for best results = 4.60 ft (b/2+f)
Max TW = 7.04 ft (b+f)

J2 Engineeering and Environmental Design

Design of Small Canal Structures

Impact Basin Design

Project:	**Red Mountain Freeway, Power to University**	By:	**AJR**
Subject:	**86th St. Channel Outlet Structure**	Date:	**4/25/2005**
	8' x 8' RCBC	Checked:	**DVD**
		Project No.:	**040031**

Reference:
United States Department of the Interior, Bureau of Reclamation,
Design of Small Canal Structures,
pp. 308 - 322

Calculations:

Step 1) Compute the theorectical velocity in feet per second, V = (2*g*h)^0.5

G = 32.2 ft/sec^2

Inlet Invert =
Outlet Invert =
h = ft (h= head = Inlet invert - Outlet invert)

Theorectical Velocity = 0.00
Calculated Velocity = 26.00 fps from a computer run of the culvert. HY-8 etc

Step 2) Compute the cross sectional area of the incoming flow.

A = Q/V

Q 460 cfs

Vel. 26.00 fps (theorectical velocity)

Area = 17.69 square feet

Step 3) depth of flow d, in feet from HEC-RAS (no tailwater)

d = 2.2400 ft
d = 26.88 inches

Step 4) Froude number from HEC-RAS

Fr = V/(G*d)^0.5

Project:	**Red Mountain Freeway, Power to University**	By:	**AJR**
Subject:	**86th St. Channel Outlet Structure**	Date:	**4/25/2005**
	8' x 8' RCBC	Checked:	**DVD**
		Project No.:	**040031**

Fr = 4.41

Step 5) Enter Figure 6-10 with Fr and read W/d

from Figure 6-10 in the Design of Small Canal structure, Fr and W/d values were read off of the graph. Then a straight line relationship was applied to the data points.

Fr	W/d	log (Fr)	log (W/d)
1.5	3.65	0.1761	0.5623
9	9.98	0.9542	0.9991

(log W/d) = m*(log Fr)+b

m= 0.5614
b= 0.4634

log (W/d)= 0.825
(W/d) = 6.6867
W = 14.978 ft

W (used) = 15.000 (5' minimum)

Step 6) Dimension the impact basin based upon Figure 6-10, "Design of Small Canal Structures."

L =	20.00 ft	4/3*W	= Length of basin
f =	2.50 ft	1/6*W	= Riprap thickness/ Height of sill
e =	1.25 ft	1/12*W	Refer to figure 6-10
H =	11.25 ft	3/4*W	= Height of impact basin
a =	7.50 ft	1/2*W	Refer to figure 6-10
b =	5.63 ft	3/8*W	Refer to figure 6-10
c=	7.50 ft	1/2*W	Refer to figure 6-10

Project:	**Red Mountain Freeway, Power to University**	By:	**AJR**
Subject:	**86th St. Channel Outlet Structure**	Date:	**4/25/2005**
	8' x 8' RCBC	Checked:	**DVD**
		Project No.:	**040031**

Step 7) Determine rock diameter for protection.

Minimum Diameter of Rock protection =1/20*W

Diameter = 9 inches

Step 8) Design air vent if necessary.

Will both the inlet and the outlet be sealed? no (yes or no)

Comment:

No vent is necessary

Diameter of incoming pipe = inches
BR recommended vent pipe D = 0 inches (1/6 of incoming pipe diameter)
Location = ft from inlet (BR recommends that it be "close" to the inlet.

Step 9) Check that tailwater conditions do not degrade impact basin performance significantly

Impact basin does not depend on a tailwater to dissipate the energy of the flow.
However, for best results, the TW should be (b+/2+f) above the invert of the baffled outlet.
The height of the TW above the baffled should never exceed (b+f), otherwise
some of the water will never strike the baffle.

Tw =	0 ft	
Min TW for best results =	5.31 ft	(b/2+f)
Max TW =	8.13 ft	(b+f)

04/25/05

Red Mountain Freeway, Power to University

Weir Inlet Capacity Summary

Station	Q100, cfs	Weir Crest Depth, ft	X, ft	Y, ft	Flow Area, ft^2	Hydraulic Depth ft	Min. Weir Length, ft
69+50	490	3.0	20.0	80.0	150.0	1.9	73.4
81+30	200	3.0	10.0	70.0	120.0	1.7	34.3
96+00	464	3.0	15.0	75.0	135.0	1.8	73.9
112+00	760	2.0	95.0	135.0	230.0	1.7	131.4
128+50	310	3.0	10.0	70.0	120.0	1.7	53.1
152+30	990	3.0	60.0	120.0	270.0	2.3	112.8
165+30	630	3.0	30.0	90.0	180.0	2.0	85.7

Appendix D: 95% (Stage IV) Drainage Plan Sheets

CONTRACT DOC. File Name		Red Mountain Freeway, Power Rd. to University Dr. (95 % submittal) Title	Remarks	Sheet # of	Drawing Num	
		GENERAL				
H5782PS01	dgn	New Pipe Summary Sheet	Pipe 950 tp 958		G-	6.110
H5782PS02	dgn	New Pipe Summary Sheet	Pipe 959 to 967		G-	6.111
H5782PS03	dgn	New Pipe Summary Sheet	Pipe 968 to 976		G-	6.112
H5782PS04	dgn	New Pipe Summary Sheet	Pipe 977 to 985		G-	6.113
H5782PS05	dgn	New Pipe Summary Sheet	Pipe 986 to 992		G-	6.114
H5782BS01	dgn	New CBC Summary Sheet			G-	6.02
		DRAINAGE				
H5782DCG01	dgn	East Channel Geometric Layout	Sta 112+00 to Sta 124+99.72		D-	5.01
H5782DCG02	dgn	Collector Channel Geometric Layout			D-	5.02
H5782DCG03	dgn	Collector Channel Geometric Layout			D-	5.03
H5782DCG04	dgn	Collector Channel Geometric Layout			D-	5.04
H5782DCG05	dgn	Collector Channel Geometric Layout			D-	5.05
H5782DCG06	dgn	Collector Channel Geometric Layout			D-	5.06
H5782DCG07	dgn	Collector Channel Geometric Layout			D-	5.07
H5782DCG08	dgn	Collector Channel Geometric Layout			D-	5.08
H5782CDG01	dgn	Channel Geometric Data Sheet			D-	5.09
H5782CDG02	dgn	Channel Geometric Data Sheet			D-	5.10
H5782CDG03	dgn	Channel Geometric Data Sheet			D-	5.11
H5782DDT01	dgn	Typical Channel Sections			D-	5.12
H5782DPP01	dgn	East Channel Plan & Profile	Sta 112+00 to 124+65.45		D-	5.13
H5782DPP02	dgn	Las Sendas Channel Transition Plan & Profile	202L Sta 1089+94.43, 479.03' Lt		D-	5.14
H5782DPP03	dgn	86th Street Channel Transition Plan & Profile	202L Sta 1247+28, 587.96' Lt		D-	5.15
H5782CPP01	dgn	Collector Channel Plan & Profile	Sta 11+47 to Sta 25+00		D-	5.16
H5782CPP02	dgn	Collector Channel Plan & Profile	Sta 25+00 to Sta 39+50		D-	5.17
H5782CPP03	dgn	Collector Channel Plan & Profile	Sta 39+50 to Sta 54+00		D-	5.18
H5782CPP04	dgn	Collector Channel Plan & Profile	Sta 54+00 to Sta 68+50		D-	5.19
H5782CPP05	dgn	Collector Channel Plan & Profile	Sta 68+50 to Sta 83+00		D-	5.20
H5782CPP06	dgn	Collector Channel Plan & Profile	Sta 83+00 to Sta 97+50		D-	5.21
H5782CPP07	dgn	Collector Channel Plan & Profile	Sta 97+50 to Sta 112+00		D-	5.22
H5782CPP08	dgn	Collector Channel Plan & Profile	Sta 112+00 to Sta 126+50		D-	5.23
H5782CPP09	dgn	Collector Channel Plan & Profile	Sta 126+50 to Sta 141+00		D-	5.24
H5782CPP10	dgn	Collector Channel Plan & Profile	Sta 141+00 to Sta 155+50		D-	5.25
H5782CPP11	dgn	Collector Channel Plan & Profile	Sta 155+50 to Sta 170+00		D-	5.26
H5782CPP12	dgn	Collector Channel Plan & Profile	Sta 170+00 to Sta 184+50		D-	5.27
H5782CPP13	dgn	Collector Channel Plan & Profile	Sta 184+50 to Sta 199+00		D-	5.28
H5782CPP14	dgn	Collector Channel Plan & Profile	Sta 199+00 to Sta 213+27		D-	5.29
H5782DDT02	dgn	Miscellaneous Channel Details	Detail DA1		D-	5.30
H5782DDT03	dgn	Miscellaneous Channel Details	Detail DA2		D-	5.31
H5782DDT04	dgn	Las Sendas Channel Transition Details	Detail DA3		D-	5.32
H5782DDT06	dgn	86th Street Channel Transition Details	Detail DA5		D-	5.35
H5782DDT08	dgn	Small Drop Inlet Typical Detail	Detail DA7		D-	5.37
H5782DDT10	dgn	Large Drop Inlet Typical Detail	Detail DA8		D-	5.38
H5782DDT09	dgn	Weir Inlet Typical Detail	Detail DA9		D-	5.39
H4782DDT12	dgn	Collector Channel Transitions	Detail DA11		D-	5.43
H5782DPL01	dgn	Floodpool Pipe Layout Plan	Sta 1068+00 to Sta 1082+00		F-	6.01
H5782DPL02	dgn	Floodpool Pipe Layout Plan	Sta 1082+00 to Sta 1096+00		F-	6.02
H5782DPL03	dgn	Floodpool Pipe Layout Plan	Sta 1096+00 to Sta 1110+00		F-	6.03
H5782DPL04	dgn	Floodpool Pipe Layout Plan	Sta 1110+00 to Sta 1124+00		F-	6.04
H5782DPL05	dgn	Floodpool Pipe Layout Plan	Sta 1124+00 to Sta 1138+00		F-	6.05
H5782DPL06	dgn	Floodpool Pipe Layout Plan	Sta 1138+00 to Sta 1152+00		F-	6.06
H5782DPL07	dgn	Floodpool Pipe Layout Plan	Sta 1152+00 to Sta 1166+00		F-	6.07
H5782DPL08	dgn	Floodpool Pipe Layout Plan	Sta 1166+00 to Sta 1180+00		F-	6.08
H5782DPL09	dgn	Floodpool Pipe Layout Plan	Sta 1180+00 to Sta 1194+00		F-	6.09
H5782DPL10	dgn	Floodpool Pipe Layout Plan	Sta 1194+00 to Sta 1208+00		F-	6.10
H5782DPL11	dgn	Floodpool Pipe Layout Plan	Sta 1208+00 to Sta 1222+00		F-	6.11
H5782DPL12	dgn	Floodpool Pipe Layout Plan	Sta 1222+00 to Sta 1236+00		F-	6.12
H5782DPL13	dgn	Floodpool Pipe Layout Plan	Sta 1236+00 to Sta 1250+00		F-	6.13
H5782DPL14	dgn	Floodpool Pipe Layout Plan	Sta 1250+00 to Sta 1264+00		F-	6.14
H5782DPL15	dgn	Floodpool Pipe Layout Plan	Sta 1264+00 to Sta 1278+00		F-	6.15
H5782DPR01	dgn	Floodpool Pipe Profiles	Pipe 950 - 953		F-	6.16
H5782DPR02	dgn	Floodpool Pipe Profiles	Pipe 954 - 957		F-	6.17
H5782DPR03	dgn	Floodpool Pipe Profiles	Pipe 958 - 961		F-	6.18
H5782DPR04	dgn	Floodpool Pipe Profiles	Pipe 962 - 965		F-	6.19
H5782DPR05	dgn	Floodpool Pipe Profiles	Pipe 966 - 969		F-	6.20
H5782DPR06	dgn	Floodpool Pipe Profiles	Pipe 970 - 973		F-	6.21
H5782DPR07	dgn	Floodpool Pipe Profiles	Pipe 974 - 977		F-	6.22
H5782DPR08	dgn	Floodpool Pipe Profiles	Pipe 978 - 981		F-	6.23
H5782DPR09	dgn	Floodpool Pipe Profiles	Pipe 982 - 985		F-	6.24
H5782DPR10	dgn	Floodpool Pipe Profiles	Pipe 986 - 989		F-	6.25
H5782DPR11	dgn	Floodpool Pipe Profiles	Pipe 990 - 992		F-	6.26

NOTE:
THE ZEROS IN PARENTHESIS (0, 0.0 & 0.00) IN THE HEADING OF SOME OF THE COLUMNS ARE THE RECOMMENDED PRECISION OF THE VALUE TO BE ENTERED IN THE COLUMN.

NOTE:
FOR PIPE CULVERT PLACEMENT SEE STANDARD DRAWING C-13.15

NOTE:
PIPE OPTIONS SELECTED ARE THOSE REQUIRED TO MEET MINIMUM SERVICE LIFE.
SHADED PIPE OPTION FIELDS ARE NOT ALLOWABLE ALTERNATES.

CSP - CORRUGATED STEEL PIPE
CAP - CORRUGATED ALUMINUM PIPE
RCP - REINFORCED CONCRETE PIPE
NRCP - NON-REINFORCED CONCRETE PIPE
NRCIPCP - NON-REINFORCED CAST-IN-PLACE CONCRETE PIPE
CHDPEPP - CORRUGATED HIGH DENSITY POLYETHYLENE PLASTIC PIPE

F.A.H.U. REGION	STATE	PROJECT NO.	SHEET NO.	TOTAL SHEETS	AS BUILT
9	ARIZ.	202-B(007)B			
		202L MA 023			

	DESCRIPTION						CSP									CAP							RCP							NRCP	NRCIPCP	CHDPEPP	END TREATMENT														QUANTITIES	
				In.	In.	Ft.	Degree	In.	Coating								In.														In.			Each		Catch basin, Manhole, Headwall & Junction Structure												Cubic Yard	
																																	Ea			Ft.			Grate	Ft.							
Station	Plan Ref No.	Controlling Fill Height Range	Size, Corrugated	Size, Smooth	Length (0)	Skew (0)	Corrugation	Wall Thickness (0.00)	Zinc	Bit. Coated Zinc	Aluminum	Bit. Coated Aluminum	Corrugation	Wall Thickness (0.00)	Uncoated	Bit. Coated	Class - Non Trench	Class - Trench	Class	Min Wall Thickness (0)	AASHTO M-294 Type C	AASHTO M-294 Type S	C-13.20 & C-13.25	Detail -	Size, (In) Manhole	Standard or Detail	End Sec S-Single / D-Double	Location	H (0.0)	L Wing (0.0)	L 18" Slotted Drn (0)	L 24" Slotted Drn (0)	Type	Elev. (0.00)	Depth	Inlet Depression L (0.0)	Pipe Exc (0)	Pipe Bkfl (0)	Drn Exc (0)	Berm/Dike Emb (0)	REMARKS
Collector Channel Sta 12+84	950	5	36		160		A	0.063					B	0.060											C-15.75			3.6					1586.58		37	83			Detail DA8
to Sta 13+65, 153' Rt																																									
Collector Channel Sta 18+20	951	4	24		100		A	0.063					A	0.060					X						C-15.75			3.3					1586.87		178	39			Detail DA8
to Sta 18+18, 105' Rt																																								
Collector Channel Sta 20+10	952	5	24		104		A	0.063					A	0.060											C-15.75			3.3					1586.54		185	40			Detail DA7
to Sta 20+14, 105' Rt																																									Connection to Exist. Pipe
Collector Channel Sta 23+78	953	4	24		110		A	0.063					A	0.060					X						C-15.75			3.3					1587.07		220	42			Detail DA8
to Sta 23+76, 116' Rt																																								
Collector Channel Sta 25+62	954	4	36		132		A	0.063					B	0.060					X						C-15.75			3.6					1587.07		240	68			Detail DA8
to Sta 25+60, 95' Rt																																								
Collector Channel Sta 32+58	955	4	36		129		A	0.063					B	0.060					X						C-15.75			3.7					1588.55		234	67			Detail DA8
to Sta 32+58, 82' Rt																																								
Collector Channel Sta 43+80	956	3	24		146		A	0.063					A	0.060					X						C-15.81			4.0					1586.14		227	56			Detail DA7
to Sta 44+39, 133' Rt																																								
Collector Channel Sta 46+81	957	4	30		109		A	0.063					B	0.060					X						C-15.75			3.5					1586.91		236	49			Detail DA8
to Sta 46+81, 105' Rt																																								
Collector Channel Sta 48+91	958	4	30		83		A	0.063					B	0.060					X						C-15.75			3.5					1587.15		180	37			Detail DA8
to Sta 48+92, 84' Rt																																								
Sheet Total																																				1737	481			

FILL HEIGHT RANGE TABLE (Ft.)												
RANGE NO.		1	2	3	4	5	6	7	8	9	10	11	12
FILL	>	1	3	5	8	11	15	20	25	30	40	55	70
HEIGHT (Ft.)	≤	3	5	8	11	15	20	25	30	40	55	70	90

SHOULD FIELD CONDITIONS VARY FROM THE RANGE INDICATED, CONTACT DESIGN FOR RE-EVALUATION OF PIPE DESIGN REQUIREMENTS.

PIPE CORRUGATION			
A	2 2/3 x 1/2	D	6x2
B	3x1	E	3x1 or 9x2 1/2
C	9x2 1/2		

	NAME	DATE
DESIGN	DVD	4/05
DRAWN	MRT	4/05
CHECKED	AJR	4/05

J2 engineering and environmental design
3033 south 48th street, suite 128
phoenix, arizona 85044
phone 602.438.2500
www.j2engineering.com

ARIZONA DEPARTMENT OF TRANSPORTATION
INTERMODAL TRANSPORTATION DIVISION
ROADWAY DESIGN SERVICES

NEW PIPE SUMMARY SHEET

PRELIMINARY
STAGE IV
95% Review
NOT FOR CONSTRUCTION OR RECORDING

ROUTE	LOCATION
202L	RED MTN FWY, POWER ROAD - UNIVERSITY DRIVE

TRACS NO. H 5782 01C | 202-B(007)B | DWG NO. G-6.110 | ___ OF ___

Plotted By: MRT p:\040031\j2cad\sheets\H5782PS01.dgn 4/5/2005 3:02:42 PM

NOTE:
THE ZEROS IN PARENTHESIS (0, 0.0 & 0.00) IN THE HEADING OF SOME OF THE COLUMNS ARE THE RECOMMENDED PRECISION OF THE VALUE TO BE ENTERED IN THE COLUMN.

NOTE:
FOR PIPE CULVERT PLACEMENT SEE STANDARD DRAWING C-13.15

NOTE:
PIPE OPTIONS SELECTED ARE THOSE REQUIRED TO MEET MINIMUM SERVICE LIFE.
SHADED PIPE OPTION FIELDS ARE NOT ALLOWABLE ALTERNATES.

CSP - CORRUGATED STEEL PIPE
CAP - CORRUGATED ALUMINUM PIPE
RCP - REINFORCED CONCRETE PIPE
NRCP - NON-REINFORCED CONCRETE PIPE
NRCIPCP - NON-REINFORCED CAST-IN-PLACE CONCRETE PIPE
CHDPEPP - CORRUGATED HIGH DENSITY POLYETHYLENE PLASTIC PIPE

F.H.W.A. REGION	STATE	PROJECT NO.	SHEET NO.	TOTAL SHEETS	AS BUILT
9	ARIZ.	202-B(007)B			

202L MA 023

DESCRIPTION							CSP						CAP				RCP		NRCP	NRCIPCP	CHDPEPP	
Station	Plan Ref No.	◐ Controlling Fill Height Range	Size, Corrugated (In.)	Size, Smooth (In.)	Length (0) (Ft.)	Skew (0) (Degree)	◪ Corrugation	Wall Thickness (0.00) (In.)	Zinc (Coating)	Blt. Coated Zinc	Aluminum	Blt. Coated Aluminum	◪ Corrugation	Wall Thickness (0.00) (In.)	Uncoated	Blt. Coated	Class - Non Trench	Class - Trench	Class	Min Wall Thickness (0) (In.)	AASHTO M-294 Type C	AASHTO M-294 Type S
Collector Channel Sta 62+55 to Sta 62+45, 118' Rt	959	4	2-36		119		A	0.063					B	0.060							X	
Collector Channel Sta 68+06 to Sta 68+05, 107' Rt	960	4	2-48		108		A	0.063					B	0.060								
Collector Channel Sta 70+73 to Sta 70+69, 94' Rt	961	4	24		97		A	0.063					A	0.060								
Collector Channel Sta 74+50 to Sta 74+51, 76' Rt	962	4	24		75		A	0.063					A	0.060								
Collector Channel Sta 76+58 to Sta 76+51, 100' Rt	963	4	24		89		A	0.063					A	0.060								
Collector Channel Sta 77+72 to Sta 77+72, 83' Rt	964	4	24		74		A	0.063					A	0.060								
Collector Channel Sta 84+62 to Sta 84+56, 91' Rt	965	4	24		91		A	0.063					A	0.060							X	
Collector Channel Sta 107+21 to Sta 107+25, 117' Rt	966	4	24		116		A	0.063					A	0.060							X	
Collector Channel Sta 108+61 to Sta 108+60, 108' Rt	967	4	24		107		A	0.063					A	0.060								
Sheet Total																						

Station	END TREATMENT: End Sec (Each) C-13.20 & C-13.25	Detail -	Catch basin, Manhole, Headwall & Junction Structure: Size, (In) Manhole	Standard or Detail	S-Single / D-Double (Ea)	Location	H (0.0) (Ft.)	L Wing (0.0)	L 18" Slotted Drn (0)	L 24" Slotted Drn (0)	Type (Grate)	Elev. (0.00) (Ft.)	Depth (In.)	Inlet Depression L (0.0) (Ft.)	QUANTITIES (Cubic Yard): Pipe Exc (0)	Pipe Bkfl (0)	Drn Exc (0)	Berm/Dike Emb (0)	REMARKS
Collector Channel Sta 62+55 to Sta 62+45, 118' Rt				C-15.75	D		3.7					1586.37			432	123			Detail DA8
Collector Channel Sta 68+06 to Sta 68+05, 107' Rt				C-15.75	D		4.1					1586.42			720	190			Detail DA8
Collector Channel Sta 70+73 to Sta 70+69, 94' Rt				C-15.81			4.0					1587.24			129	37			Detail DA7
Collector Channel Sta 74+50 to Sta 74+51, 76' Rt				C-15.75			3.3					1586.58			150	29			Detail DA8
Collector Channel Sta 76+58 to Sta 76+51, 100' Rt				C-15.81			4.0					1586.35			178	34			Detail DA7
Collector Channel Sta 77+72 to Sta 77+72, 83' Rt				C-15.81			3.9					1586.39			148	29			Detail DA7
Collector Channel Sta 84+62 to Sta 84+56, 91' Rt				C-15.81			4.0					1586.30			121	35			Detail DA7
Collector Channel Sta 107+21 to Sta 107+25, 117' Rt				C-15.81			4.0					1585.10			180	45			Detail DA7
Collector Channel Sta 108+61 to Sta 108+60, 108' Rt				C-15.75			3.3					1585.19			214	41			Detail DA8
Sheet Total															2272	563			

FILL HEIGHT RANGE TABLE (Ft.)

RANGE NO.		1	2	3	4	5	6	7	8	9	10	11	12
FILL	>	1	3	5	8	11	15	20	25	30	40	55	70
HEIGHT (Ft.)	≤	3	5	8	11	15	20	25	30	40	55	70	90

◐ SHOULD FIELD CONDITIONS VARY FROM THE RANGE INDICATED, CONTACT DESIGN FOR RE-EVALUATION OF PIPE DESIGN REQUIREMENTS.

◪ PIPE CORRUGATION

A	$2\frac{2}{3} \times \frac{1}{2}$	D	6x2
B	3x1	E	3x1 or $9 \times 2\frac{1}{2}$
C	$9 \times 2\frac{1}{2}$		

	NAME	DATE
DESIGN	DVD	4/05
DRAWN	MRT	4/05
CHECKED	AJR	4/05

J2 engineering and environmental design
4222 south 48th street, suite 136
phoenix, arizona 85044
phone 602.438.2221
www.j2design.us

ARIZONA DEPARTMENT OF TRANSPORTATION
INTERMODAL TRANSPORTATION DIVISION
ROADWAY DESIGN SERVICES

NEW PIPE SUMMARY SHEET

PRELIMINARY
STAGE IV
95% Review
NOT FOR CONSTRUCTION OR RECORDING

ROUTE 202L | LOCATION RED MTN FWY, POWER ROAD - UNIVERSITY DRIVE

DWG NO. G-6.111

TRACS NO. H 5782 01C | 202-B(007)B | ___ OF ___

Plotted By: MRT p:\040031\j2cad\sheets\H5782P502.dgn 4/5/2005 3:04:56 PM

NOTE:
THE ZEROS IN PARENTHESIS (0, 0.0 & 0.00) IN THE HEADING OF SOME OF THE COLUMNS ARE THE RECOMMENDED PRECISION OF THE VALUE TO BE ENTERED IN THE COLUMN.

NOTE:
FOR PIPE CULVERT PLACEMENT SEE STANDARD DRAWING C-13.15

NOTE:
PIPE OPTIONS SELECTED ARE THOSE REQUIRED TO MEET MINIMUM SERVICE LIFE.
SHADED PIPE OPTION FIELDS ARE NOT ALLOWABLE ALTERNATES.

CSP - CORRUGATED STEEL PIPE
CAP - CORRUGATED ALUMINUM PIPE
RCP - REINFORCED CONCRETE PIPE
NRCP - NON-REINFORCED CONCRETE PIPE
NRCIPCP - NON-REINFORCED CAST-IN-PLACE CONCRETE PIPE
CHDPEPP - CORRUGATED HIGH DENSITY POLYETHYLENE PLASTIC PIPE

F.H.W.A. REGION	STATE	PROJECT NO.	SHEET NO.	TOTAL SHEETS	AS BUILT
9	ARIZ.	202-B(007)B			
		202L MA 023			

DESCRIPTION									CSP			CAP		RCP	NRCP	CHDPEPP	END TREATMENT														QUANTITIES	
					In.	In.	Ft.	Degree	In.	Coating		In.			In.		Each															Cubic Yard	
Station	Plan Ref No.	Controlling Fill Height Range	Size, Corrugated	Size, Smooth	Length (0)	Skew (0)	Corrugation	Wall Thickness (0.00)	Zinc	Bit. Coated Zinc	Aluminum	Bit. Coated Aluminum	Corrugation	Wall Thickness (0.00)	Uncoated	Bit. Coated	Class - Non Trench	Class - Trench	Class	Min Wall Thickness (0)	AASHTO M-294 Type C	AASHTO M-294 Type S	C-13.20 & C-13.25	Detail -	Size, (In) Manhole	Standard or Detail	End Sec	Ea	Location	H (0.0)	L Wing (0.0)	Ft. L 18° Slotted Drn (0)	Ft. L 24° Slotted Drn (0)	Grate Type	Grate Elev. (0.00)	Grate Ft. Depth	Inlet In. / Ft. L (0.0)	Inlet Depression Pipe Exc (0)	Pipe Bkfl (0)	Drn Exc (0)	Berm/Dike Emb (0)	REMARKS
Collector Channel Sta 114+00	968	5	24		114		A	0.063				A	0.060											C-15.81			4.0					1586.84			253	44			Detail DA7
to Sta 113+87, 118' Rt																																								
Collector Channel Sta 117+15	969	4	2-36		120		A	0.063				B	0.060						X					C-15.75	D		3.7					1586.82			436	124			Detail DA8
to Sta 117+09, 128' Rt																																								
Collector Channel Sta 118+38	970	4	24		130		A	0.063				A	0.060											C-15.75			3.3					1586.49			202	50			Detail DA8
to Sta 118+36, 133' Rt																																								
Collector Channel Sta 120+40	971	4	24		89		A	0.063				A	0.060											C-15.75			3.3					1586.21			158	34			Detail DA8
to Sta 120+39, 98' Rt																																								
Collector Channel Sta 123+45	972	4	24		102		A	0.063				A	0.060											C-15.81			4.0					1585.89			204	39			Detail DA7
to Sta 123+44, 109' Rt																																								
Collector Channel Sta 133+10	973	4	2-42		123		A	0.063				B	0.060											C-15.75	D		3.9					1585.15			547	144			Detail DA8
to Sta 133+12, 123' Rt																																								
Collector Channel Sta 137+75	974	4	2-36		104		A	0.063				B	0.060						X					C-15.75	D		3.7					1585.55			431	108			Detail DA8
to Sta 137+74, 104' Rt																																								
Collector Channel Sta 142+27	975	3	36		96		A	0.063				B	0.060						X					C-15.75			3.7					1586.12			174	50			Detail DA8
to Sta 142+25, 93' Rt																																								
Collector Channel Sta 144+65	976	4	24		69		A	0.063				A	0.060						X					C-15.81			3.8					1586.25			123	27			Detail DA7
to Sta 144+67, 69' Rt																																								
Sheet Total																																				2528	620			

FILL HEIGHT RANGE TABLE (Ft.)												
RANGE NO.		1	2	3	4	5	6	7	8	9	10	11	12
FILL HEIGHT (Ft.)	>	1	3	5	8	11	15	20	25	30	40	55	70
	≤	3	5	8	11	15	20	25	30	40	55	70	90

Should field conditions vary from the range indicated, contact design for re-evaluation of pipe design requirements.

PIPE CORRUGATION			
A	2⅔x½	D	6x2
B	3x1	E	3x1 or 9x2½
C	9x2½		

	NAME	DATE
DESIGN	DVD	4/05
DRAWN	MRT	4/05
CHECKED	AJR	4/05

J2 engineering and environmental design
1102 south 48th street, suite 125
phoenix, arizona 85034
phone 602.438.2288
www.j2design.us

ARIZONA DEPARTMENT OF TRANSPORTATION
INTERMODAL TRANSPORTATION DIVISION
ROADWAY DESIGN SERVICES

NEW PIPE SUMMARY SHEET

PRELIMINARY
STAGE IV
95% Review
NOT FOR CONSTRUCTION OR RECORDING

ROUTE	LOCATION
202L	RED MTN FWY, POWER ROAD - UNIVERSITY DRIVE

TRACS NO. H 5782 01C | 202-B(007)B | DWG NO. C-6.112 | ___ OF ___

Plotted By: MRT p:\040031\j2cad\sheets\H5782PS03.dgn 4/5/2005 3:08:38 PM

NOTE:
THE ZEROS IN PARENTHESIS (0, 0.0 & 0.00) IN THE HEADING OF SOME OF THE COLUMNS ARE THE RECOMMENDED PRECISION OF THE VALUE TO BE ENTERED IN THE COLUMN.

NOTE:
FOR PIPE CULVERT PLACEMENT SEE STANDARD DRAWING C-13.15

NOTE:
PIPE OPTIONS SELECTED ARE THOSE REQUIRED TO MEET MINIMUM SERVICE LIFE.
SHADED PIPE OPTION FIELDS ARE NOT ALLOWABLE ALTERNATES.

NRCP | NRCIPCP | CHDPEPP

CSP - CORRUGATED STEEL PIPE
CAP - CORRUGATED ALUMINUM PIPE
RCP - REINFORCED CONCRETE PIPE
NRCP - NON-REINFORCED CONCRETE PIPE
NRCIPCP - NON-REINFORCED CAST-IN-PLACE CONCRETE PIPE
CHDPEPP - CORRUGATED HIGH DENSTIY POLYETHYLENE PLASTIC PIPE

F.H.W.A. REGION	STATE	PROJECT NO.	SHEET NO.	TOTAL SHEETS	AS BUILT
9	ARIZ.	202-B(007)B			
		202L MA 023			

DESCRIPTION							CSP					CAP		RCP		END TREATMENT															QUANTITIES	
			In.	In.	Ft. / Degree		In.	Coating				In.		In.		Each															Cubic Yard	
																End Sec	Ea	Catch basin, Manhole, Headwall & Junction Structure			Ft.		Grate	Ft.							
Station	Plan Ref No.	◐ Controlling Fill Height Range	Size, Corrugated	Size, Smooth	Length (0)	Skew (0)	◪ Corrugation	Wall Thickness (0.00)	Zinc	Bit. Coated Zinc	Aluminum	Bit. Coated Aluminum	◪ Corrugation	Wall Thickness (0.00)	Uncoated	Bit. Coated	Class - Non Trench	Class - Trench	Class	Min Wall Thickness (0)	AASHTO M-294 Type C	AASHTO M-294 Type S	C-13.20 & C-13.25	Detail -	Size, (In) Manhole	Standard or Detail	S-Single / D-Double	Location	H (0.0)	L Wing (0.0)	L 18" Slotted Drn (0)	L 24" Slotted Drn (0)	Type	Elev. (0.00)	Depth	Inlet Depression In.	Inlet Depression Ft.	L (0.0)	Pipe Exc (0)	Pipe Bkfl (0)	Drn Exc (0)	Berm/Dike Emb (0)	REMARKS
Collector Channel Sta 147+70	977	4	30		105		A	0.063				B	0.060					X					C-15.75			3.5					1585.75				152	47			Detail DA8
to Sta 147+66, 102' Rt																																									
Collector Channel Sta 157+78	978	3	42		107		A	0.063				B	0.060										C-15.75			3.9					1585.97				149	63			Detail DA8
to Sta 157+89, 100' Rt																																									
Collector Channel Sta 160+44	979	3	2-42		56		A	0.063				B	0.060										C-15.75	D		3.9					1585.92				249	66			Detail DA8
to Sta 160+44, 45' Rt																																									
Collector Channel Sta 162+78	980	3	2-42		48		A	0.063				B	0.060										C-15.75	D		3.9					1585.54				160	56			Detail DA8
to Sta 162+76, 44' Rt																																									
Collector Channel Sta 169+33	981	4	24		68		A	0.063				A	0.060					X					C-15.81			4.0					1585.55				106	26			Detail DA7
to Sta 169+30, 52' Rt																																									
Collector Channel Sta 171+48	982	3	36		56		A	0.063				B	0.060					X					C-15.75			3.7					1586.27				102	29			Detail DA8
to Sta 171+48, 51' Rt																																									
Collector Channel Sta 174+36	983	4	36		53		A	0.063				B	0.060					X					C-15.75			3.6					1587.15				110	27			Detail DA8
to Sta 174+37, 57' Rt																																									
Collector Channel Sta 178+28	984	5	36		77		A	0.063				B	0.060										C-15.75			3.5					1592.00				160	40			Detail DA8
to Sta 178+39, 64' Rt																																									
Collector Channel Sta 181+13	985	5	36		71		A	0.063				B	0.060					X					C-15.75			3.7					1594.50				147	37			Detail DA8
to Sta 181+10, 75' Rt																																									
Sheet Total																																				1335	391			

FILL HEIGHT RANGE TABLE (Ft.)													
RANGE NO.		1	2	3	4	5	6	7	8	9	10	11	12
FILL	>	1	3	5	8	11	15	20	25	30	40	55	70
HEIGHT (Ft.)	≤	3	5	8	11	15	20	25	30	40	55	70	90

◐ SHOULD FIELD CONDITIONS VARY FROM THE RANGE INDICATED, CONTACT DESIGN FOR RE-EVALUATION OF PIPE DESIGN REQUIREMENTS.

◪ PIPE CORRUGATION			
A	2⅔x½	D	6x2
B	3x1	E	3x1 or 9x2½
C	9x2½		

	NAME	DATE
DESIGN	DYD	4/05
DRAWN	MRT	4/05
CHECKED	AJR	4/05

J2 engineering and environmental design
2222 south 4th street, suite 130
phoenix, arizona 85034
phone 602.438.2255
www.j2design.us

ARIZONA DEPARTMENT OF TRANSPORTATION
INTERMODAL TRANSPORTATION DIVISION
ROADWAY DESIGN SERVICES

NEW PIPE SUMMARY SHEET

PRELIMINARY
STAGE IV
95% Review
NOT FOR CONSTRUCTION OR RECORDING

ROUTE	LOCATION	DWG NO.
202L	RED MTN FWY, POWER ROAD - UNIVERSITY DRIVE	C-6.113
TRACS NO. H 5782 01C		202-B(007)B

___ OF ___

Plotted By: MRT p:\640031\j2cad\sheets\H5782P564.dgn 4/5/2006 3:08:58 PM

NOTE:
THE ZEROS IN PARENTHESIS (0, 0.0 & 0.00) IN THE HEADING OF SOME OF THE COLUMNS ARE THE RECOMMENDED PRECISION OF THE VALUE TO BE ENTERED IN THE COLUMN.

NOTE:
FOR PIPE CULVERT PLACEMENT SEE STANDARD DRAWING C-13.15

NOTE:
PIPE OPTIONS SELECTED ARE THOSE REQUIRED TO MEET MINIMUM SERVICE LIFE.
SHADED PIPE OPTION FIELDS ARE NOT ALLOWABLE ALTERNATES.

CSP - CORRUGATED STEEL PIPE
CAP - CORRUGATED ALUMINUM PIPE
RCP - REINFORCED CONCRETE PIPE
NRCP - NON-REINFORCED CONCRETE PIPE
NRCIPCP - NON-REINFORCED CAST-IN-PLACE CONCRETE PIPE
CHDPEPP - CORRUGATED HIGH DENSTIY POLYETHYLENE PLASTIC PIPE

F.H.W.A. REGION	STATE	PROJECT NO.	SHEET NO.	TOTAL SHEETS	AS BUILT
9	ARIZ.	202-B(007)B			
		202L MA 023			

DESCRIPTION							CSP				CAP		RCP	NRCP	NRCIPCP	CHDPEPP	END TREATMENT												QUANTITIES	
			In.	In.	Ft.	Degree	In.	Coating			In.			In.			Each	Catch basin, Manhole, Headwall & Junction Structure											Cubic Yard	
																	Ea	Ft.					Grade Ft.		Inlet Depression					
Station	Plan Ref No.	● Controlling Fill Height Range	Size, Corrugated	Size, Smooth	Length (0)	Skew (0)	☑ Corrugation	Wall Thickness (0.00)	Zinc	Bit. Coated Zinc	Aluminum	Bit. Coated Aluminum	☑ Corrugation	Wall Thickness (0.00)	Uncoated	Bit. Coated	Class - Non Trench	Class - Trench	Class	Min Wall Thickness (0)	AASHTO M-294 Type C	AASHTO M-294 Type S	C-13.20 & C-13.25	Detail -	Size, (In) Manhole or Standard Detail	End Sec	S-Single / D-Double	Location	H (0.0)	L Wing (0.0)	L 18" Slotted Drn (0)	L 24" Slotted Drn (0)	Type	Elev. (0.00)	Depth	L (0.0)	Pipe Exc (0)	Pipe Bkfl (0)	Drn Exc (0)	Berm/Dike Emb (0)	REMARKS
Collector Chnl Sta 183+39, 21'Rt	986	4	36		75		A	0.063					B	0.060										C-15.80			4.0					1594.23		244	49			
to Sta 183+39, 81' Rt																																							
Collector Chnl Sta 193+70,104'Rt	987	3	24		109		A	0.063					A	0.060								X		C-15.80			4.0					1590.30		170	42			
to Sta 194+18, 197' Rt																																							
Collector Channel Sta 197+45	988	3	24		72		A	0.063					B	0.060										C-15.75			3.3					1586.85		144	28			Detail DA7
to Sta 197+45, 92' Rt																																							
Collector Channel Sta 200+05	989	4	2-42		89		A	0.063					A	0.060								X		C-15.75	D		3.9					1585.00		396	104			Detail DA8
to Sta 200+02, 79' Rt																																							Connection to Exist. Pipe
Collector Channel Sta 205+00	990	4	24		100		A	0.063					A	0.060								X		C-15.81			4.0					1585.26		178	39			Detail DA7
to Sta 204+95, 98' Rt																																							
Collector Channel Sta 208+60	991	4	24		67		A	0.063					A	0.060								X		C-15.81			4.0					1586.50		134	26			Detail DA7
to Sta 208+56, 55' Rt																																							Connection to Exist. Pipe
Collector Channel Sta 213+34	992	4	24		88		A	0.063					A	0.060								X		C-15.80			4.0					1591.62		196	34			Detail DA7
to Sta 213+34, 75' Rt																																							Connection to Exist. Pipe
Sheet Total																																		1462	322			

FILL HEIGHT RANGE TABLE (Ft.)													
RANGE NO.		1	2	3	4	5	6	7	8	9	10	11	12
FILL	>	1	3	5	8	11	15	20	25	30	40	55	70
HEIGHT (Ft.)	≤	3	5	8	11	15	20	25	30	40	55	70	90
● SHOULD FIELD CONDITIONS VARY FROM THE RANGE INDICATED, CONTACT DESIGN FOR RE-EVALUATION OF PIPE DESIGN REQUIREMENTS.													

☑ PIPE CORRUGATION			
A	2⅔x½	D	6x2
B	3x1	E	3x1 or 9x2½
C	9x2½		

	NAME	DATE
DESIGN	DVD	4/05
DRAWN	MRT	4/05
CHECKED	AJR	4/05

J2 engineering and environmental design
1233 south 13th street, suite 118
phoenix, arizona 85034
phone 602.496.2288
www.j2engineering.com

ARIZONA DEPARTMENT OF TRANSPORTATION
INTERMODAL TRANSPORTATION DIVISION
ROADWAY DESIGN SERVICES

NEW PIPE SUMMARY SHEET

PRELIMINARY
STAGE IV
95% Review
NOT FOR CONSTRUCTION OR RECORDING

ROUTE	LOCATION	DWG NO.
202L	RED MTN FWY, POWER ROAD - UNIVERSITY DRIVE	C-6.114
TRACS NO. H 5782 01C		202-B(007)B

OF

Plotted By: Patty M p:\040031\J2Cad\Sheets\H5782P505.dgn 4/5/2005 3:38:34 PM

F.A.H.A. REGION	STATE	PROJECT NO.	SHEET NO.	TOTAL SHEETS	AS BUILT
9	ARIZ.	202-B(007)B			
		202L MA 023			

REV. DATE: 01-05-2000

DESCRIPTION														END TREATMENT						LENGTH OF BARREL & BARREL EXTENSIONS										APPROXIMATE QUANTITIES									
														WINGS		APRONS		MISC		Construction ℄		Existing & Construction ℄								Lbs. / Ea		Cubic Yards							
Plan Ref No. ◯ & ◉	Structure No.	New	Extend	No. of Barrels	Barrel Span (0.0)	Barrel Height (0.0)	Culvert Length (0.0)	Skew (Degree) (0)	B-01.10 Misc Details	B-01.11 Ext Details	☑ Standard or Detail	▼ Location	Inlet Wings	Outlet Wings ☑ Standard or Detail	Apron ☑ Standard or Detail	Scour/Bank Protection ☑ Standard or Detail	Energy Dissipaters Detail -	I II III IV V		V IV III II I		Barrel Length		Barrel Length		Linear Feet (0.0) ▲ Left of ℄ I	II	III	IV	V	▲ Right of ℄ V	IV	III	II	I	◑ Reinforcing Steel (0)	◑ Place Dowels	◑ Class S Conc f'c=3,000 psi	◑ Remove Str Conc (0)	◑ Str Exc (0)	◑ Structure Backfill (0)	Berm Emb (0)	Dike Emb (0)	Drainage Exc (0)	REMARKS
10		X		4	12.0	8.0	24.0	0	X			Left						24.0																	19678		147		396	187				Dwg. No. D-5.14
Station: Sta 1+54.72 to 1+78.72 Las Sendas												Right																														
Existing: Channel Cst ℄																																		Box Culvert Total									
11		X		1	8.0	8.0	100.	0	X			Left						100.0																	18270		118		676	692				Dwg. No. D-5.15
Station: Sta 2+02.63 to 3+02.63 86th St.												Right																														
Existing: Channel Cst ℄																																		Box Culvert Total									
												Left																														
Station:												Right																														
Existing:																																		Box Culvert Total									
												Left																														
Station:												Right																														
Existing:																																		Box Culvert Total									
												Left																														
Station:												Right																														
Existing:																																		Box Culvert Total									
												Left																														
Station:												Right																														
Existing:																																		Box Culvert Total									
												Left																														
Station:												Right																														
Existing:																																		Box Culvert Total									
												Left																														
Station:												Right																														
Existing:																																		Box Culvert Total									
												Left																														
Station:												Right																														
Existing:																																		Box Culvert Total									
												Left																														
Station:												Right																														
Existing:																																		Box Culvert Total									
												Left																														
Station:												Right																														
Existing:																																		Box Culvert Total									
																																		Sheet Total	37948		265		1072	879				

NOTE:
FOR STRUCTURAL EXCAVATION, STRUCTURE BACKFILL PLACEMENT AND MEASUREMENT, SEE STANDARD DRAWING B-19.50

NOTE:
THE ZEROS IN PARENTHESIS (0, 0.0 & 0.00) IN THE HEADING OF SOME OF THE COLUMNS ARE THE RECOMMENDED PRECISION OF THE VALUE TO BE ENTERED IN THE COLUMN.

◑ TOTALS SHOWN FOR THE BOX CULVERT INCLUDE THE QUANTITIES FOR HEADWALLS, WINGS, APRONS, CURBS, CUT-OFF WALLS AND LAPS AT CONSTRUCTION JOINTS.

☑ STRUCTURES SECTION STANDARD DRAWINGS JUNE, 1992 (PUBLICATION NO. 31-002) (ENGLISH EDITION)

▲ Construction ℄ Looking Ahead

	NAME	DATE
DESIGN	DVD	4/05
DRAWN	MRT	4/05
CHECKED	AJR	4/05

J2 engineering and environmental design
8222 south 48th street, suite 124
phoenix, arizona 85044
phone: 602.438.2500
www.j2design.com

ARIZONA DEPARTMENT OF TRANSPORTATION
INTERMODAL TRANSPORTATION DIVISION
ROADWAY DESIGN SERVICES

REINFORCED CONC BOX CULVERT AND BOX CULVERT EXTENSION SUMMARY SHEET

ROUTE	LOCATION
202L	RED MTN FWY, POWER ROAD - UNIVERSITY DRIVE

TRACS NO. H 5782 01C | 202-B(007)B

PRELIMINARY
STAGE IV
95% Review
NOT FOR CONSTRUCTION OR RECORDING

DWG NO. C-8.02

___ OF ___

Plotted By: MRT p:\040091\j2cad\sheets\H5782BS01.dgn 4/5/2005 3:18:14 PM

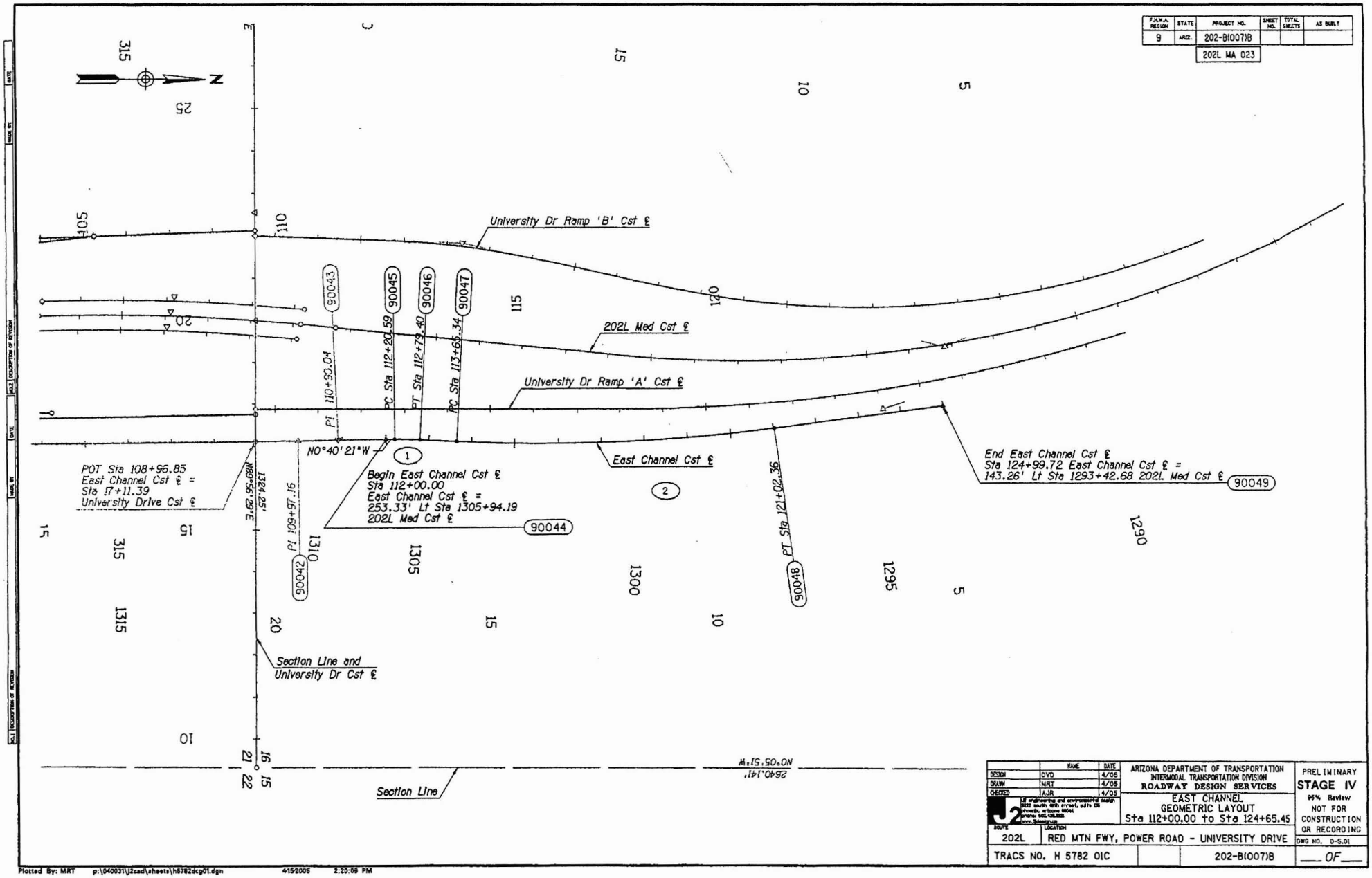

F.H.W.A. REGION	STATE	PROJECT NO.	SHEET NO.	TOTAL SHEETS	AS BUILT
9	ARIZ.	202-B(007)B			
		202L MA 023			

	NAME	DATE
DESIGN	DVD	4/05
DRAWN	MRT	4/05
CHECKED	AJR	4/05

J2 engineering and environmental design
3222 south 48th street, suite 126
phoenix, arizona 85044
phone: 602.438.2500
www.j2engineering.com

ARIZONA DEPARTMENT OF TRANSPORTATION
INTERMODAL TRANSPORTATION DIVISION
ROADWAY DESIGN SERVICES

EAST CHANNEL
GEOMETRIC LAYOUT
Sta 112+00.00 to Sta 124+65.45

PRELIMINARY
STAGE IV
95% Review
NOT FOR CONSTRUCTION OR RECORDING

ROUTE	LOCATION	DWG NO.
202L	RED MTN FWY, POWER ROAD - UNIVERSITY DRIVE	D-5.01

TRACS NO. H 5782 01C | 202-B(007)B | ___ OF ___

Plotted By: MRT p:\040031\j2cad\sheets\h5782dcp01.dgn 4/5/2005 2:20:09 PM

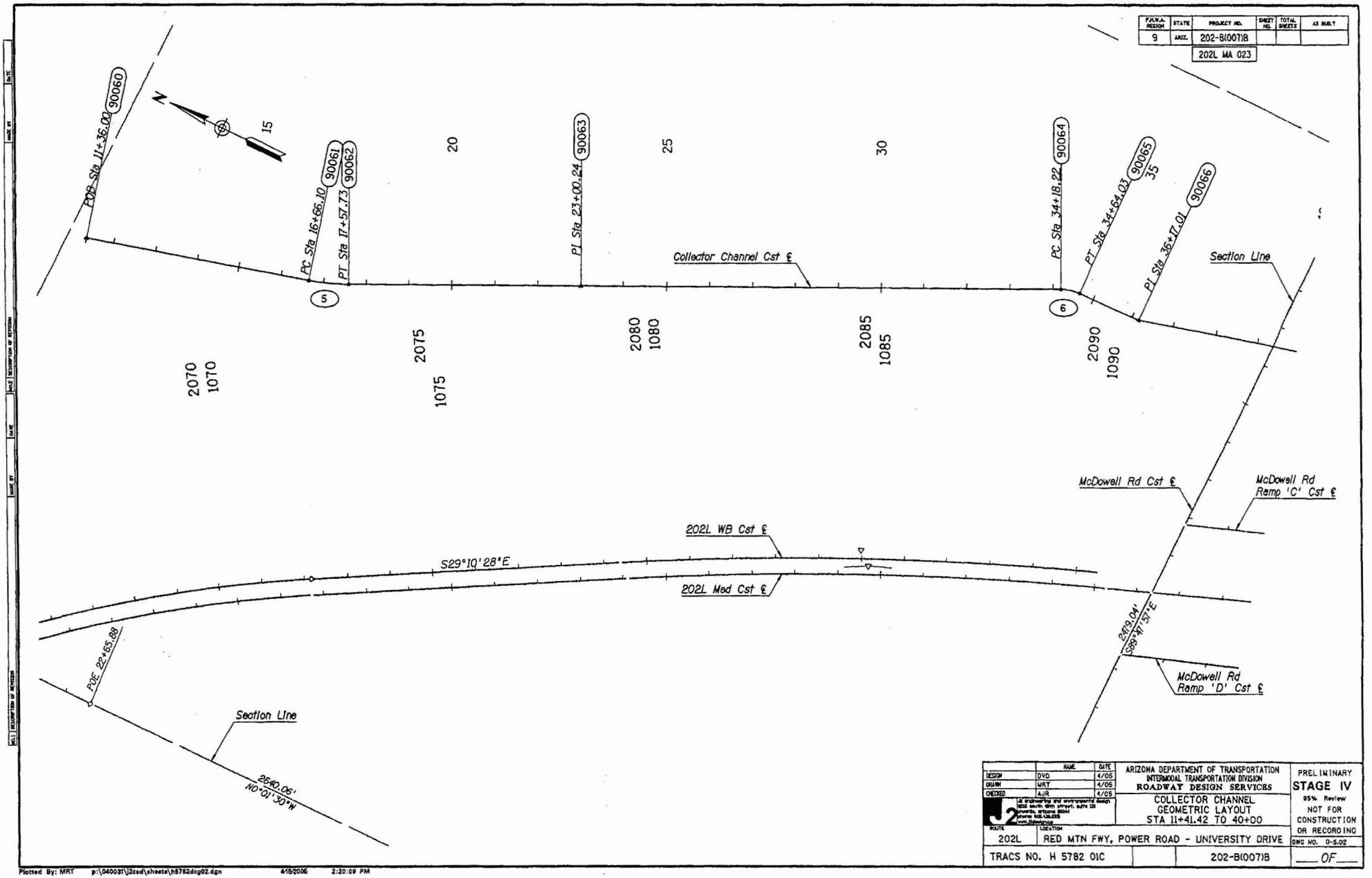

F.H.W.A. REGION	STATE	PROJECT NO.	SHEET NO.	TOTAL SHEETS	AS BUILT
9	ARIZ.	202-B(007)B			
		202L MA 023			

	NAME	DATE
DESIGN	DVD	4/05
DRAWN	MRT	4/05
CHECKED	AJR	4/05

J2 Engineering and Environmental Design
1232 south 48th street, suite 125
Phoenix, Arizona 85044
phone 602.438.2228
www.j2eandd.com

ARIZONA DEPARTMENT OF TRANSPORTATION
INTERMODAL TRANSPORTATION DIVISION
ROADWAY DESIGN SERVICES

COLLECTOR CHANNEL
GEOMETRIC LAYOUT
STA 11+41.42 TO 40+00

PRELIMINARY
STAGE IV
95% Review
NOT FOR CONSTRUCTION OR RECORDING

ROUTE	LOCATION	DWG NO.
202L	RED MTN FWY, POWER ROAD - UNIVERSITY DRIVE	D-5.02
TRACS NO. H 5782 01C		202-B(007)B

___ OF ___

Plotted By: MRT p:\040031\j2sad\sheets\h5782dcg02.dgn 4/5/2006 2:20:09 PM

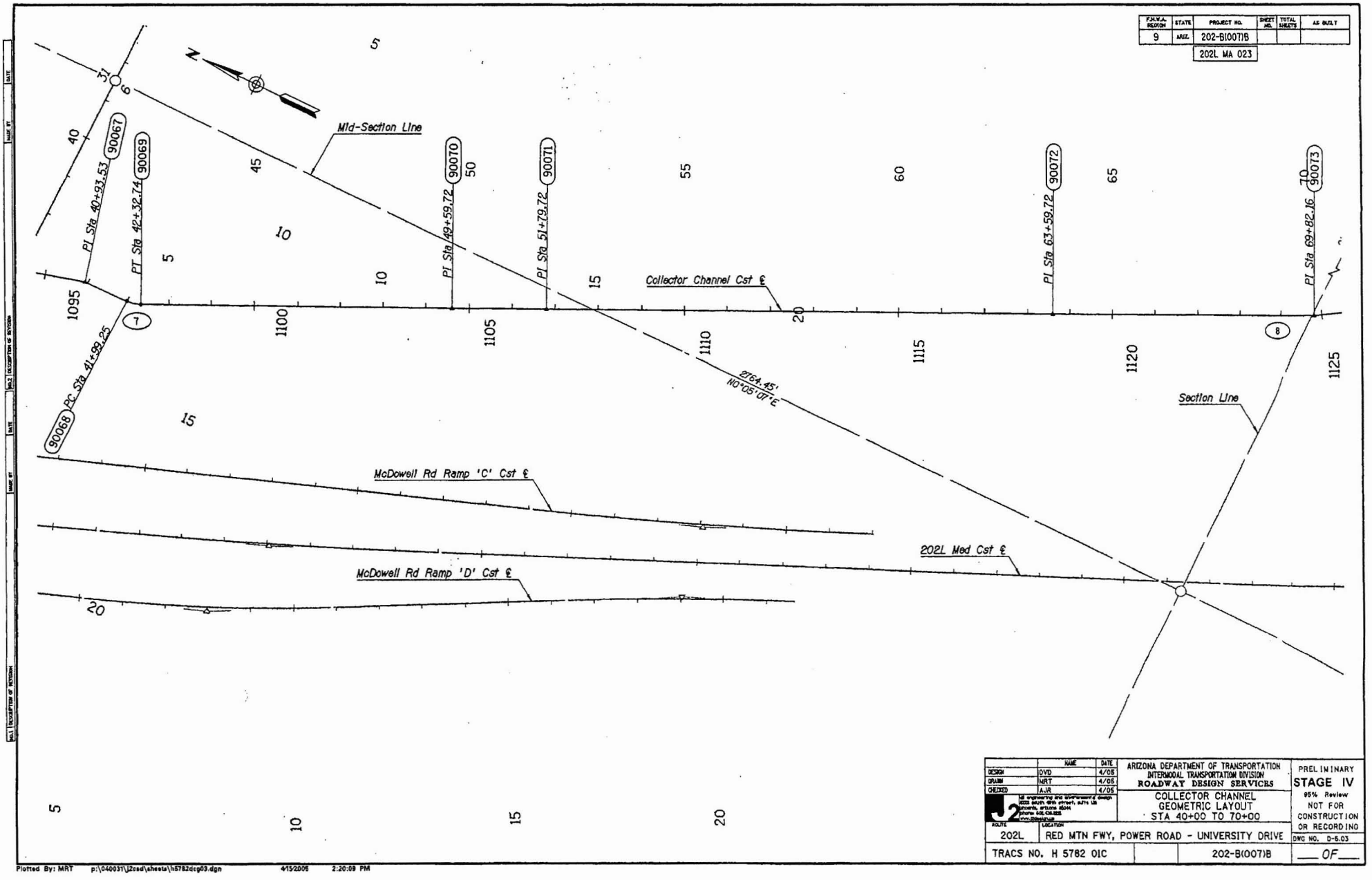

F.H.W.A. REGION	STATE	PROJECT NO.	SHEET NO.	TOTAL SHEETS	AS BUILT
9	ARIZ.	202-B(007)B			
		202L MA 023			

	NAME	DATE
DESIGN	DVD	4/05
DRAWN	MRT	4/05
CHECKED	AJR	4/05

J2 engineering and environmental design
1033 south 48th street, suite 138
phoenix, arizona 85044
phone: 602.438.1555
www.j2design.us

ARIZONA DEPARTMENT OF TRANSPORTATION
INTERMODAL TRANSPORTATION DIVISION
ROADWAY DESIGN SERVICES

COLLECTOR CHANNEL
GEOMETRIC LAYOUT
STA 40+00 TO 70+00

ROUTE	LOCATION
202L	RED MTN FWY, POWER ROAD - UNIVERSITY DRIVE

TRACS NO. H 5782 01C | 202-B(007)B

PRELIMINARY
STAGE IV
95% Review
NOT FOR CONSTRUCTION OR RECORDING

DWG NO. D-6.03

___ OF ___

Plotted By: MRT p:\040031\j2cad\sheets\h5782dcg03.dgn 4/5/2006 2:20:09 PM

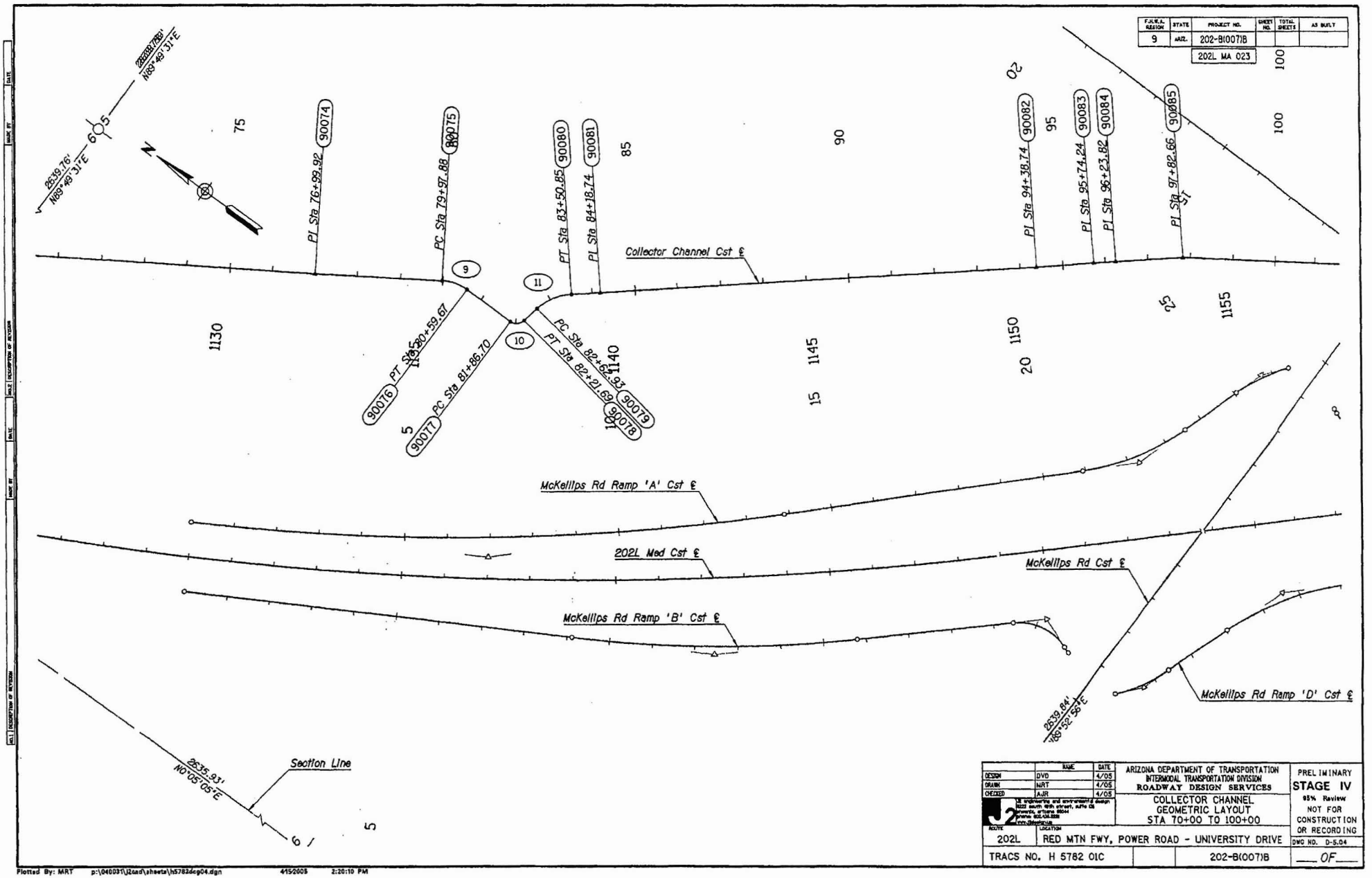

F.H.W.A. REGION	STATE	PROJECT NO.	SHEET NO.	TOTAL SHEETS	AS BUILT
9	ARIZ.	202-B(007)B			
		202L MA 023			

	NAME	DATE
DESIGN	DVD	4/05
DRAWN	MRT	4/05
CHECKED	AJR	4/05

J2 engineering and environmental design
1222 south 48th street, suite 125
phoenix, arizona 85044
phone 602.414.5556
www.j2engineering.com

ARIZONA DEPARTMENT OF TRANSPORTATION
INTERMODAL TRANSPORTATION DIVISION
ROADWAY DESIGN SERVICES

COLLECTOR CHANNEL
GEOMETRIC LAYOUT
STA 70+00 TO 100+00

ROUTE	LOCATION
202L	RED MTN FWY, POWER ROAD - UNIVERSITY DRIVE

TRACS NO. H 5782 01C | 202-B(007)B

PRELIMINARY
STAGE IV
95% Review
NOT FOR CONSTRUCTION OR RECORDING

DWG NO. D-5.04

___ OF ___

Plotted By: MRT p:\040031\j2cad\sheets\h5782dg04.dgn 4/5/2005 2:20:10 PM

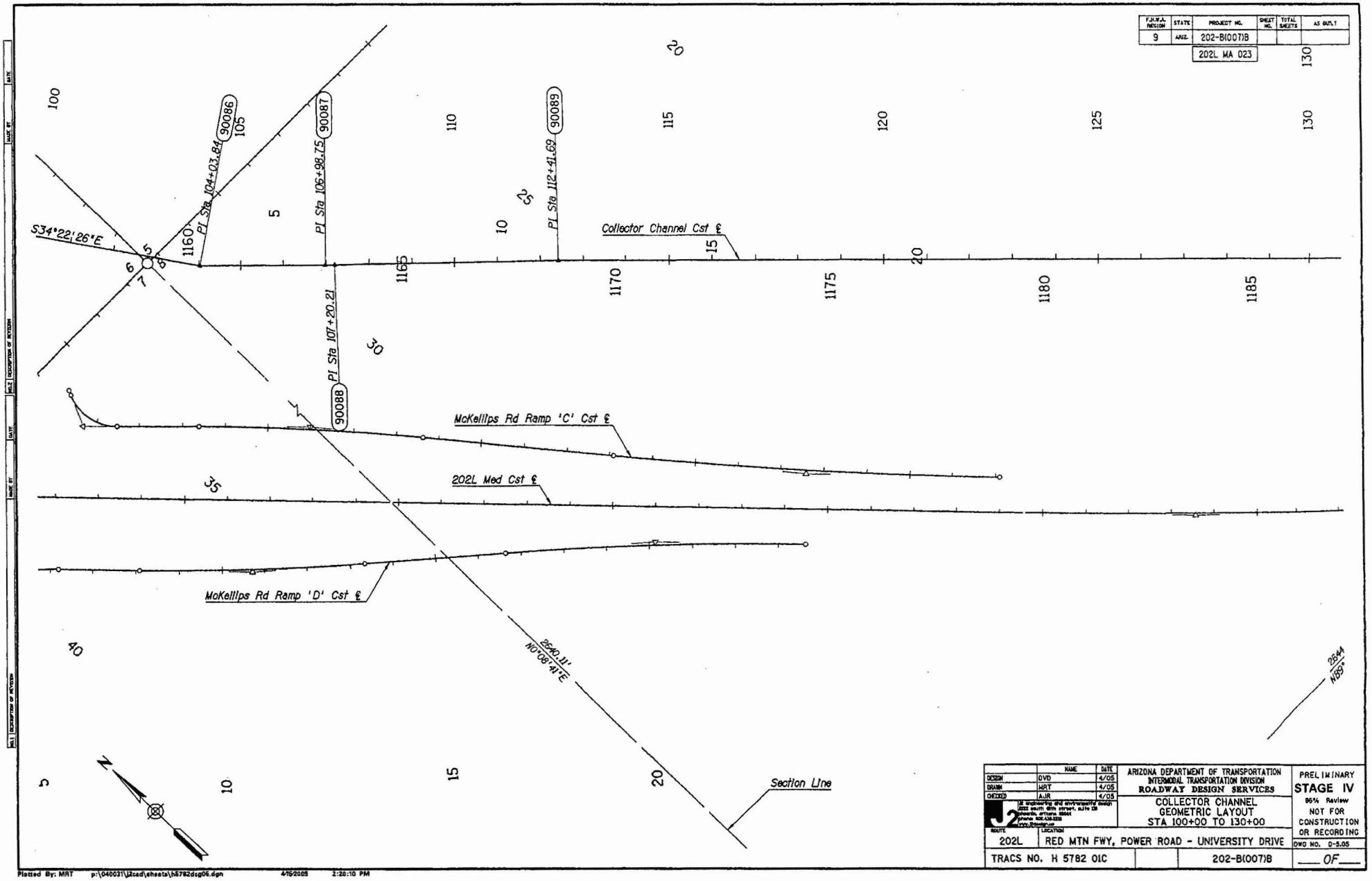

F.H.W.A. REGION	STATE	PROJECT NO.	SHEET NO.	TOTAL SHEETS	AS BUILT
9	ARIZ.	202-B(007)B			
		202L MA 023			

	NAME	DATE
DESIGN	DVD	4/05
DRAWN	MRT	4/05
CHECKED	AJR	4/05

J2 engineering and environmental design
2822 south 48th street, suite 135
tempe, arizona 85282
phone: 602.438.2255
www.j2design.us

ARIZONA DEPARTMENT OF TRANSPORTATION
INTERMODAL TRANSPORTATION DIVISION
ROADWAY DESIGN SERVICES

COLLECTOR CHANNEL
GEOMETRIC LAYOUT
STA 100+00 TO 130+00

PRELIMINARY
STAGE IV
95% Review
NOT FOR CONSTRUCTION OR RECORDING

ROUTE	LOCATION	DWG NO. D-5.05
202L	RED MTN FWY, POWER ROAD - UNIVERSITY DRIVE	
TRACS NO. H 5782 01C	202-B(007)B	___ OF ___

Plotted By: MRT p:\040031\j2cad\sheets\h5782dcp06.dgn 4/15/2005 2:20:10 PM

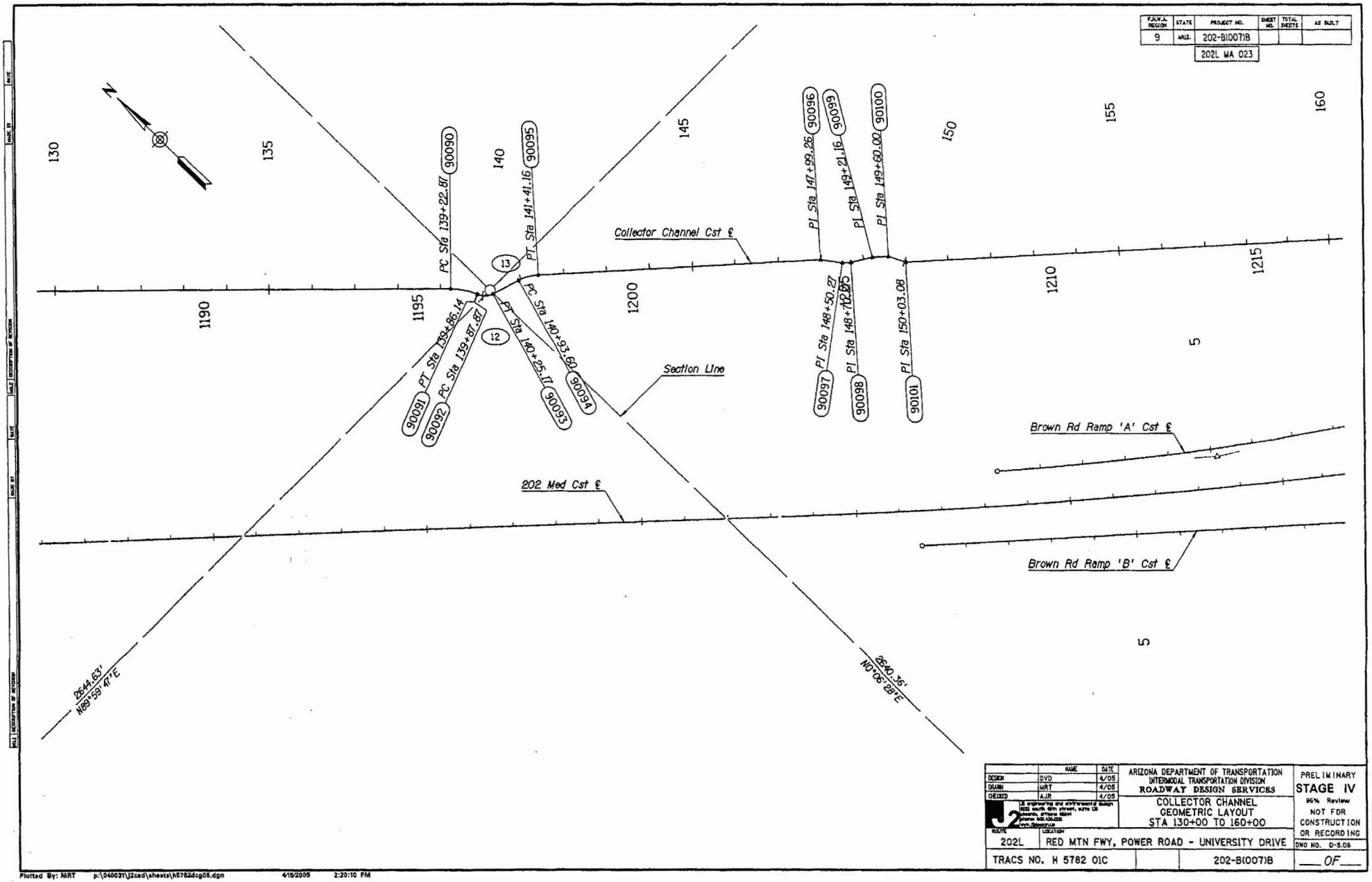

	NAME	DATE
DESIGN	DVD	4/05
DRAWN	MRT	4/05
CHECKED	AJR	4/05

J2 engineering and environmental design
1222 south 4th street, suite 126
phoenix, arizona 85004
phone 602.436.2222
www.j2design.us

ARIZONA DEPARTMENT OF TRANSPORTATION
INTERMODAL TRANSPORTATION DIVISION
ROADWAY DESIGN SERVICES

COLLECTOR CHANNEL
GEOMETRIC LAYOUT
STA 130+00 TO 160+00

PRELIMINARY
STAGE IV
95% Review
NOT FOR CONSTRUCTION OR RECORDING

ROUTE 202L
LOCATION RED MTN FWY, POWER ROAD - UNIVERSITY DRIVE

DWG NO. D-5.05

TRACS NO. H 5782 01C

202-B(007)B

___ OF ___

Plotted By: MRT p:\040031\j2cad\sheets\h5782dcg05.dgn 4/15/2005 2:20:10 PM

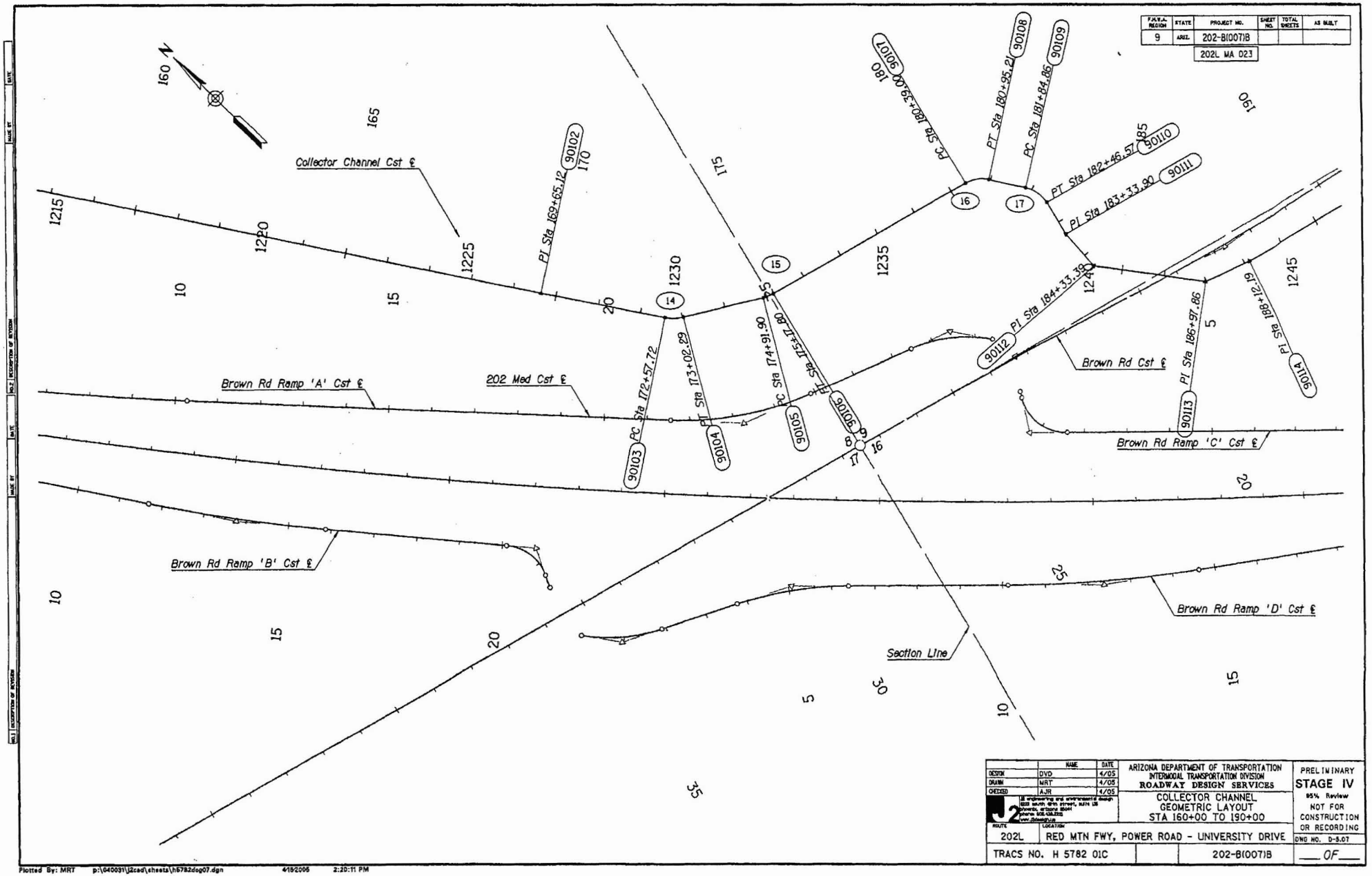

F.H.W.A. REGION	STATE	PROJECT NO.	SHEET NO.	TOTAL SHEETS	AS BUILT
9	ARIZ.	202-B(007)B			
		202L MA 023			

	NAME	DATE
DESIGN	DVD	4/05
DRAWN	MRT	4/05
CHECKED	AJR	4/05

J2 engineering and environmental design
2225 south 48th street, suite 135
phoenix, arizona 85034
phone: 602.438.2500
www.j2design.com

ARIZONA DEPARTMENT OF TRANSPORTATION
INTERMODAL TRANSPORTATION DIVISION
ROADWAY DESIGN SERVICES

COLLECTOR CHANNEL
GEOMETRIC LAYOUT
STA 160+00 TO 190+00

PRELIMINARY
STAGE IV
95% Review
NOT FOR CONSTRUCTION OR RECORDING

ROUTE	LOCATION	DWG NO. D-5.07
202L	RED MTN FWY, POWER ROAD - UNIVERSITY DRIVE	
TRACS NO. H 5782 01C	202-B(007)B	___ OF ___

Plotted By: MRT p:\640031\j2cad\sheets\h5782dog07.dgn 4/5/2006 2:20:11 PM

F.H.W.A. REGION	STATE	PROJECT NO.	SHEET NO.	TOTAL SHEETS	AS BUILT
9	ARIZ.	202-B(007)B			
		202L MA 023			

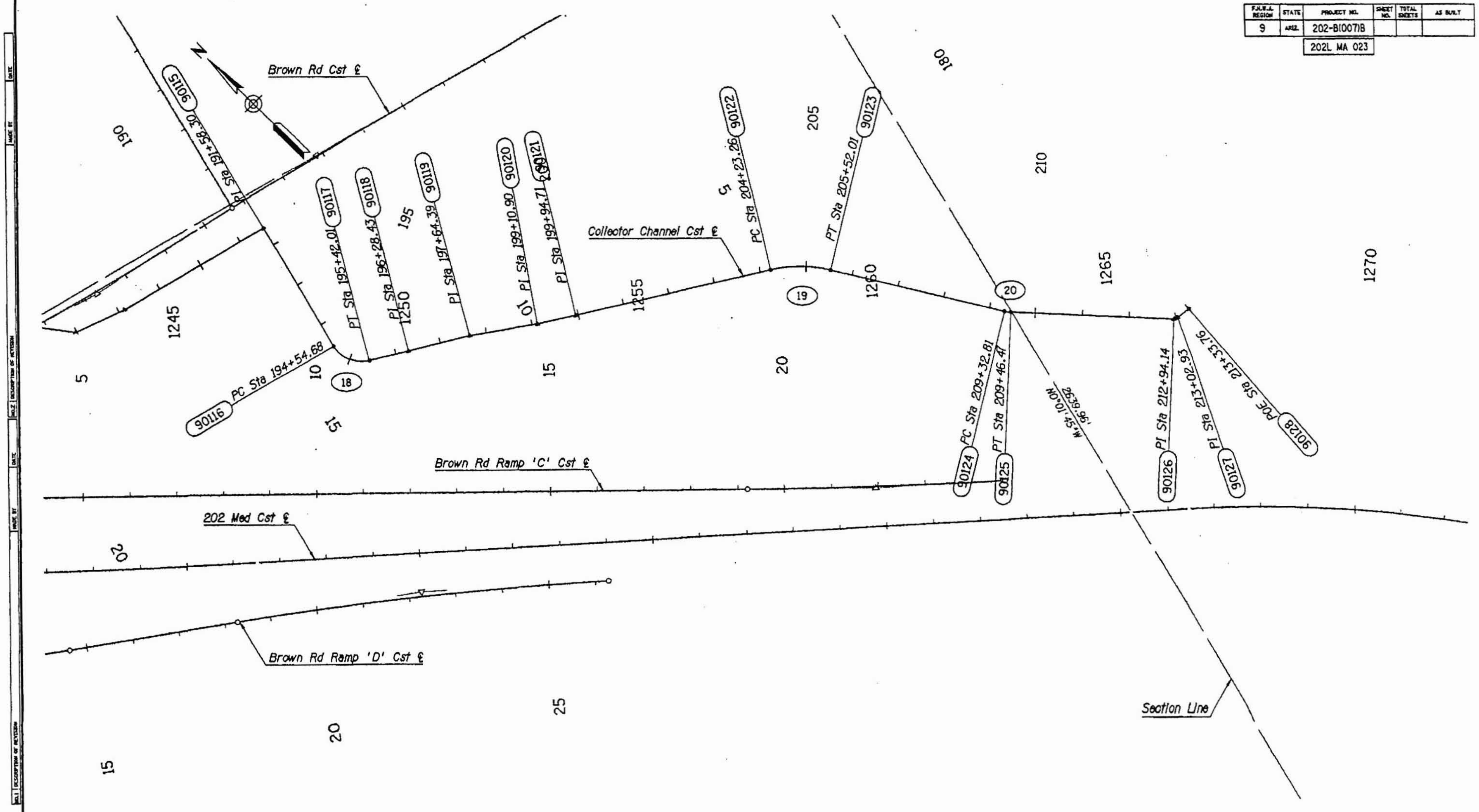

	NAME	DATE
DESIGN	DVD	4/05
DRAWN	MRT	4/05
CHECKED	AJR	4/05

J2 engineering and environmental design

ARIZONA DEPARTMENT OF TRANSPORTATION
INTERMODAL TRANSPORTATION DIVISION
ROADWAY DESIGN SERVICES

COLLECTOR CHANNEL
GEOMETRIC LAYOUT
STA 190+00 TO 213+39

PRELIMINARY
STAGE IV
95% Review
NOT FOR CONSTRUCTION OR RECORDING

ROUTE 202L LOCATION RED MTN FWY, POWER ROAD - UNIVERSITY DRIVE

DWG NO. D-6.08

TRACS NO. H 5782 01C | 202-B(007)B | ___ OF ___

Plotted By: MRT p:\040031\j2cad\sheets\h5782dcg08.dgn 4/15/2006 2:20:11 PM

F.A.H.A. REGION	STATE	PROJECT NO.	SHEET NO.	TOTAL SHEETS	AS BUILT
9	ARIZ.	202-B(007)B			
		202L MA 023			

D=95°29'35" Ext=4.95

PLAN REF NO	LOCATION	P.I./P.O.T. STATION	COORDINATES		All Coordinates Are Ground Coordinates And All Bearings Are Grid Bearings G.A.F. = 1.00016						
90042	East Channel Cst ℄ PI (exst)	109+97.12	N=881559.69	E=785996.13							
90043	East Channel Cst ℄ PI (exst)	110+27.19	N=881589.67	E=785993.78							
90044	East Channel Cst ℄ POB	112+00.00	N=881762.47	E=785991.75							
90045	East Channel Cst ℄ PC	112+20.59	N=881783.06	E=785991.51							
C1	East Channel Cst ℄ PI	112+50.00	N=881812.47	E=785991.17	SIMPLE	Δ=3°22'10"	D=5°43'46"	R=1000.00	T=29.41	Ext=0.43	
90046	East Channel Cst ℄ PT	112+79.40	N=881841.85	E=785992.55							
90047	East Channel Cst ℄ PC	113+65.34	N=881927.69	E=785996.60							
C2	East Channel Cst ℄ PI	117+34.90	N=882296.84	E=786013.99	SIMPLE	Δ=10°33'26"	D=1°25'57"	R=4000.00	T=369.56	Ext=17.04	
90048	East Channel Cst ℄ PT	121+02.36	N=882662.93	E=785963.45							
90049	East Channel Cst ℄ POE	124+99.72	N=883056.56	E=785909.10							
90060	Collector Channel Cst ℄ POB	11+36.00	N=900012.98	E=772078.99							
90061	Collector Channel Cst ℄ PC	16+66.10	N=899500.94	E=772216.18							
C5	Collector Channel Cst ℄ PI	17+12.05	N=899456.56	E=772228.07	SIMPLE	Δ=10°41'29"	D=11°40'09"	R=491.00'	T=45.94'	Ext=2.14'	
90062	Collector Channel Cst ℄ PT	17+57.73	N=899415.16	E=772247.98							
90063	Collector Channel Cst ℄ PI	23+00.24	N=898926.27	E=772483.17							
90064	Collector Channel Cst ℄ PC	34+18.22	N=897919.46	E=772969.17							
C6	Collector Channel Cst ℄ PI	34+41.47	N=897898.52	E=772979.28	SIMPLE	Δ=24°04'56"	D=52°33'54"	R=109.00'	T=23.25'	Ext=2.45'	
90065	Collector Channel Cst ℄ PT	34+64.03	N=897875.28	E=772979.96							
90066	Collector Channel Cst ℄ PI	36+17.01	N=897722.36	E=772984.46							
90067	Collector Channel Cst ℄ PI	40+93.53	N=897261.93	E=773107.24							
90068	Collector Channel Cst ℄ PC	41+99.25	N=897156.22	E=773106.87							
C7	Collector Channel Cst ℄ PI	42+16.28	N=897139.19	E=773106.81	SIMPLE	Δ=25°35'14"	D=76°23'40"	R=75.00'	T=17.03'	Ext=1.91'	
90069	Collector Channel Cst ℄ PT	42+32.74	N=897123.80	E=773114.11							
90070	Collector Channel Cst ℄ PI	49+59.72	N=896467.02	E=773425.78							
90071	Collector Channel Cst ℄ PI	51+79.72	N=896268.40	E=773520.39							
90072	Collector Channel Cst ℄ PI	63+59.72	N=895203.83	E=774029.40							
90073	Collector Channel Cst ℄ PI	69+82.16	N=894643.40	E=774300.24							
90074	Collector Channel Cst ℄ PI	76+99.92	N=894040.10	E=774689.08							
90075	Collector Channel Cst ℄ PC	79+97.88	N=893791.50	E=774853.33							
C8	Collector Channel Cst ℄ PI	80+29.68	N=893764.96	E=774870.86	SIMPLE	Δ=33°24'08"	D=54°03'09"	R=106.00'	T=31.80'	Ext=4.67'	
90076	Collector Channel Cst ℄ PT	80+59.67	N=893733.16	E=774870.89							
90077	Collector Channel Cst ℄ PC	81+86.70	N=893606.14	E=774871.00							
C9	Collector Channel Cst ℄ PI	82+07.75	N=893585.09	E=774871.02	SIMPLE	Δ=80°11'31"	D=-229°10'59"	R=25.00'	T=21.05'	Ext=7.68'	
90078	Collector Channel Cst ℄ PT	82+21.69	N=893581.52	E=774891.76							

CURVE DATA TABLE

	NAME	DATE
DESIGN	DVD	4/06
DRAWN	MRT	4/05
CHECKED	AJR	4/05

J2 engineering and environmental design
4222 south 48th street, suite 120
phoenix, arizona 85044
phone: 602.414.5555
www.j2design.com

ARIZONA DEPARTMENT OF TRANSPORTATION
INTERMODAL TRANSPORTATION DIVISION
ROADWAY DESIGN SERVICES

CHANNEL
GEOMETRIC DATA SHEET

ROUTE	LOCATION
202L	RED MTN FWY, POWER ROAD - UNIVERSITY DRIVE

TRACS NO. H 5782 01C | 202-B(007)B

PRELIMINARY
STAGE IV
95% Review
NOT FOR CONSTRUCTION OR RECORDING

DWG NO. 0-5.09

___ OF ___

Plotted By: MRT p:\040031\j2sad\sheets\h5782sgd01.dgn 4/5/2006 2:20:11 PM

F.H.W.A. REGION	STATE	PROJECT NO.	SHEET NO.	TOTAL SHEETS	AS BUILT
9	ARIZ.	202-B(007)B			
		202L MA 023			

D=95°29'35" Ext=4.95

PLAN REF NO	LOCATION	P.I./P.O.T. STATION	COORDINATES		All Coordinates Are Ground Coordinates And All Bearings Are Grid Bearings G.A.F. = 1.00016						
90079	Collector Channel Cst ℄ PC	82+62.93	N=893574.53	E=774932.41							
C10	Collector Channel Cst ℄ PI	83+08.80	N=893566.76	E=774977.61	SIMPLE	Δ=40°17'46"	D=45°50'12"	R=125.00'	T=45.86'	Ext=8.15'	
90080	Collector Channel Cst ℄ Pt	83+50.85	N=893531.60	E=775007.06							
90081	Collector Channel Cst ℄ PI	84+18.74	N=893479.54	E=775050.65							
90082	Collector Channel Cst ℄ PI	94+38.74	N=892699.64	E=775708.03							
90083	Collector Channel Cst ℄ PI	95+74.24	N=892597.28	E=775796.82							
90084	Collector Channel Cst ℄ PI	96+23.82	N=892559.41	E=775828.82							
90085	Collector Channel Cst ℄ PI	97+82.66	N=892438.09	E=775931.34							
90086	Collector Channel Cst ℄ PI	104+03.84	N=891925.38	E=776282.05							
90087	Collector Channel Cst ℄ PI	106+98.75	N=891717.21	E=776490.95							
90088	Collector Channel Cst ℄ PI	107+20.21	N=891702.46	E=776506.54							
90089	Collector Channel Cst ℄ PI	112+41.69	N=891339.59	E=776881.05							
90090	Collector Channel Cst ℄ PC	139+22.87	N=889443.09	E=778776.31							
C11	Collector Channel Cst ℄ PI	139+54.98	N=889420.38	E=778799.01	SIMPLE	Δ=24°10'05"	D=38°11'50"	R=150.00'	T=32.11'	Ext=3.40	
90091	Collector Channel Cst ℄ PT	139+86.14	N=889390.36	E=778810.42							
90092	Collector Channel Cst ℄ PC	139+87.87	N=889388.74	E=778811.04							
C12	Collector Channel Cst ℄ PI	140+07.92	N=889370.00	E=778818.16	SIMPLE	Δ=52°07'41"	D=139°44'45"	R=41.00'	T=20.05'	Ext=4.64'	
90093	Collector Channel Cst ℄ PT	140+25.17	N=889364.12	E=778837.33							
90094	Collector Channel Cst ℄ PC	140+93.60	N=889344.04	E=778902.76							
C13	Collector Channel Cst ℄ PI	141+17.77	N=889336.95	E=778925.86	SIMPLE	Δ=24°59'50"	D=52°33'54"	R=109.00'	T=24.16'	Ext=2.65'	
90095	Collector Channel Cst ℄ PT	141+41.16	N=889320.77	E=778943.80							
90096	Collector Channel Cst ℄ PI	147+99.26	N=888879.93	E=779432.43							
90097	Collector Channel Cst ℄ PI	148+50.27	N=888839.00	E=779462.87							
90098	Collector Channel Cst ℄ PI	148+70.27	N=888825.63	E=779477.74							
90099	Collector Channel Cst ℄ PI	149+21.16	N=888799.25	E=779521.26							
90100	Collector Channel Cst ℄ PI	149+60.00	N=888773.25	E=779550.12							
90101	Collector Channel Cst ℄ PI	150+03.08	N=888734.59	E=779569.13							
90102	Collector Channel Cst ℄ PI	169+65.12	N=887421.30	E=781026.82							
90103	Collector Channel Cst ℄ PC	172+57.72	N=887226.55	E=781245.19							
C14	Collector Channel Cst ℄ PI	172+80.38	N=887211.47	E=781262.11	SIMPLE	Δ=25°32'13"	D=57°17'45"	R=100.00'	T=22.66'	Ext=2.54'	
90104	Collector Channel Cst ℄ PT	173+02.29	N=887205.15	E=781283.87							
90105	Collector Channel Cst ℄ PC	174+91.90	N=887152.28	E=781465.96							
C15	Collector Channel Cst ℄ PI	175+04.94	N=887148.64	E=781478.48	SIMPLE	Δ=16°18'17"	D=62°57'45"	R=91.00'	T=13.04'	Ext=0.93'	
90106	Collector Channel Cst ℄ PT	175+17.80	N=887148.67	E=781491.51							
90107	Collector Channel Cst ℄ PC	180+39.00	N=887149.71	E=782012.71							

CURVE DATA TABLE

	NAME	DATE
DESIGN	OVO	4/05
DRAWN	MRT	4/05
CHECKED	AJR	4/05

J2 engineering and environmental design
3200 south 48th street, suite 126
phoenix, arizona 85044
phone 602.438.2222
www.j2engineering.com

ARIZONA DEPARTMENT OF TRANSPORTATION
INTERMODAL TRANSPORTATION DIVISION
ROADWAY DESIGN SERVICES

CHANNEL
GEOMETRIC DATA SHEET

PRELIMINARY
STAGE IV
95% Review
NOT FOR CONSTRUCTION OR RECORDING

ROUTE	LOCATION	DWG NO.
202L	RED MTN FWY, POWER ROAD - UNIVERSITY DRIVE	D-5.10
TRACS NO. H 5782 01C		202-B(007)B

___ OF ___

Plotted By: MRT p:\040031\j2cad\sheets\h5782cgd02.dgn 4/15/2005 2:23:12 PM

F.H.W.A. REGION	STATE	PROJECT NO.	SHEET NO.	TOTAL SHEETS	AS BUILT
9	ARIZ.	202-B(007)B			
		202L MA 023			

D=95°29'35" Ext=4.95

PLAN REF NO	LOCATION	P.I./P.O.T. STATION	COORDINATES		All Coordinates Are Ground Coordinates And All Bearings Are Grid Bearings G.A.F. = 1.00016						
C16	Collector Channel Cst ℄ PI	180+68.50	N=887149.77	E=782042.21	SIMPLE	Δ=42°56'46"	D=76°23'40"	R=75.00'	T=29.50'	Ext=5.59'	
90108	Collector Channel Cst ℄ PT	180+95.21	N=887129.71	E=782063.85							
90109	Collector Channel Cst ℄ PC	181+84.86	N=887068.77	E=782129.59							
C17	Collector Channel Cst ℄ PI	182+17.58	N=887046.52	E=782153.59	SIMPLE	Δ=47°08'39"	D=76°23'40"	R=75.00'	T=32.72'	Ext=6.83'	
90110	Collector Channel Cst ℄ PT	182+46.57	N=887013.80	E=782153.60							
90111	Collector Channel Cst ℄ PI	183+33.90	N=886926.47	E=782153.64							
90112	Collector Channel Cst ℄ PI	184+33.39	N=886828.92	E=782173.18							
90113	Collector Channel Cst ℄ PI	186+97.86	N=886664.69	E=782380.49							
90114	Collector Channel Cst ℄ PI	188+12.19	N=886654.80	E=782494.39							
90115	Collector Channel Cst ℄ PI	191+58.30	N=886655.21	E=782840.50							
90116	Collector Channel Cst ℄ PC	194+54.68	N=886358.84	E=782840.86							
C18	Collector Channel Cst ℄ PI	195+05.53	N=886307.99	E=782840.92	SIMPLE	Δ=73°35'00"	D=84°15'31"	R=68.00'	T=50.86'	Ext=16.91'	
90117	Collector Channel Cst ℄ PT	195+42.01	N=886293.67	E=782889.72							
90118	Collector Channel Cst ℄ PI	196+28.43	N=886269.35	E=782972.65							
90119	Collector Channel Cst ℄ PI	197+64.39	N=886232.35	E=783103.48							
90120	Collector Channel Cst ℄ PI	199+10.90	N=886181.42	E=783240.84							
90121	Collector Channel Cst ℄ PI	199+94.71	N=886156.76	E=783320.95							
90122	Collector Channel Cst ℄ PC	204+23.26	N=886031.43	E=783730.76							
C19	Collector Channel Cst ℄ PI	204+88.83	N=886012.25	E=783793.47	SIMPLE	Δ=26°49'31"	D=20°50'05"	R=275.00'	T=65.58'	Ext=7.71'	
90123	Collector Channel Cst ℄ PT	205+52.01	N=885966.83	E=783840.77							
90124	Collector Channel Cst ℄ PC	209+32.81	N=885703.11	E=784115.48							
C20	Collector Channel Cst ℄ PI	209+39.66	N=885698.37	E=784120.42	SIMPLE	Δ=11°01'28"	D=80°41'54"	R=71.00'	T=6.85'	Ext=0.33'	
90125	Collector Channel Cst ℄ PT	209+46.47	N=885694.66	E=784126.18							
90126	Collector Channel Cst ℄ PI	212+94.14	N=885506.29	E=784418.40							
90127	Collector Channel Cst ℄ PI	213+02.93	N=885504.56	E=784427.02							
90128	Collector Channel Cst ℄ POE	213+33.76	N=885510.01	E=784457.36							

CURVE DATA TABLE

	NAME	DATE
DESIGN	DVD	4/05
DRAWN	MRT	4/05
CHECKED	AJR	4/05

J2 engineering and environmental design
2020 north 14th street, suite 210
phoenix, arizona 85006
phone: 602.06.2020
www.j2engineering.com

ARIZONA DEPARTMENT OF TRANSPORTATION
INTERMODAL TRANSPORTATION DIVISION
ROADWAY DESIGN SERVICES

CHANNEL
GEOMETRIC DATA SHEET

PRELIMINARY
STAGE IV
95% Review
NOT FOR CONSTRUCTION OR RECORDING

ROUTE	LOCATION	DWG NO. D-5.11
202L	RED MTN FWY, POWER ROAD - UNIVERSITY DRIVE	
TRACS NO. H 5782 01C		202-B(007)B — OF —

Plotted By: MRT p:\040031\j2cad\sheets\h5782cgd03.dgn 4/15/2005 2:20:12 PM

F.H.W.A. REGION	STATE	PROJECT NO.	SHEET NO.	TOTAL SHEETS	AS BUILT
9	ARIZ.	202-B(007)B			
		202L MA 023			

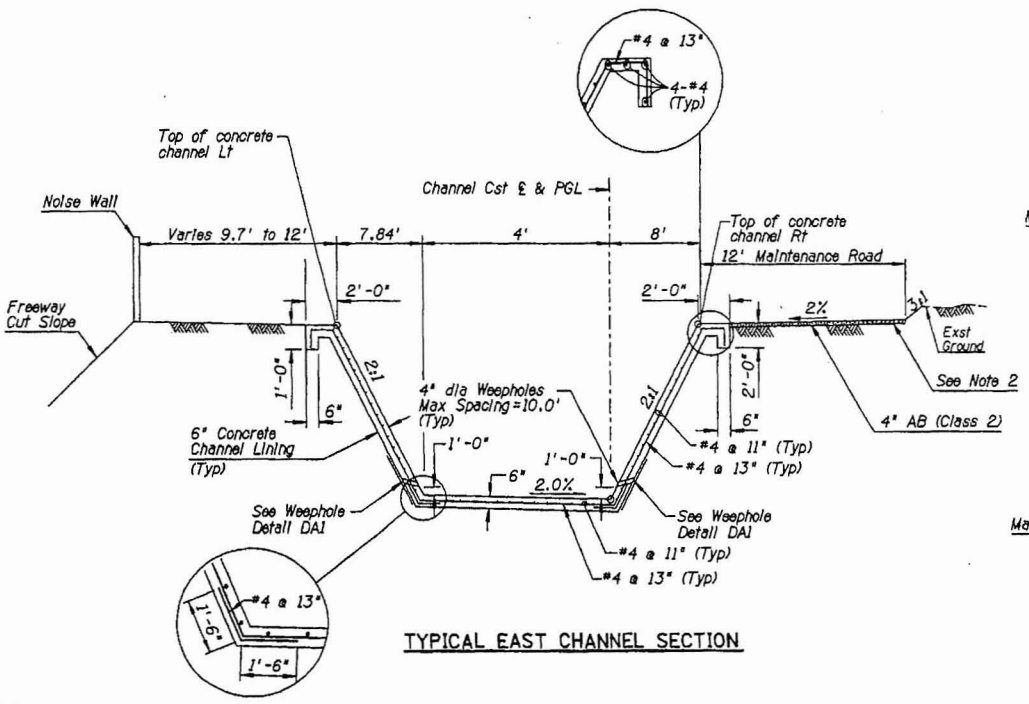

TYPICAL EAST CHANNEL SECTION

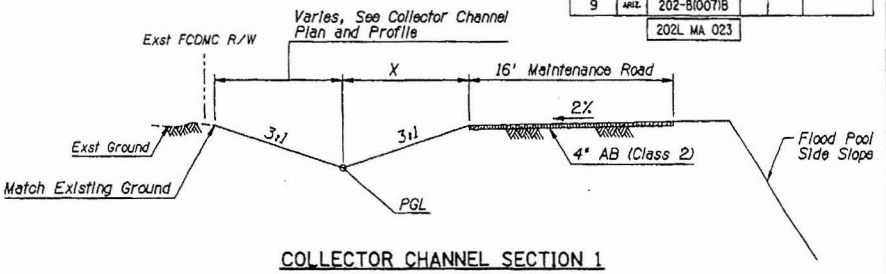

COLLECTOR CHANNEL SECTION 1

Sta 87+00.00 to Sta 93+10.00
Sta 203+00.00 to Sta 213+30.00

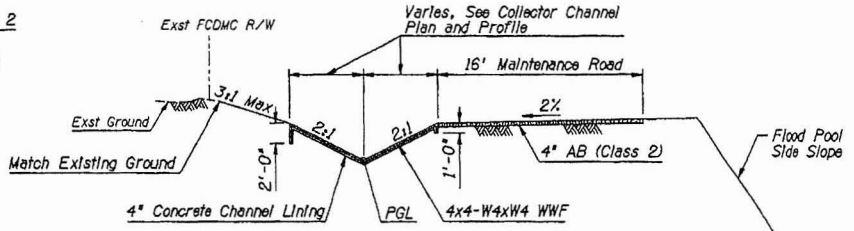

COLLECTOR CHANNEL SECTION 2

Sta 11+36.00 to Sta 86+50.00
Sta 93+60.00 to Sta 149+60.00
Sta 194+37.40 to Sta 202+90.00

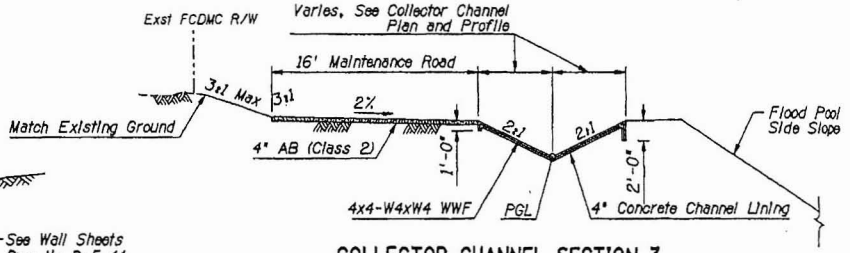

COLLECTOR CHANNEL SECTION 3

Sta 150+03.08 to Sta 181+20.00

Notes:

1. Top of channel lining Lt is to be a minimum of 6" below existing ground.
2. Top 2 ft of earth under the maintenance road shall be native material compacted 95% of maximum dry density.
3. All concrete shall be Class S (f'_c=3000 psi) See special provisions for detailed requirements.
4. All reinforced steel shall conform to ASTM A615/A615M-96a, Grade 60.
5. All reinforcing steel shall have a minimum 2" clear cover to grade and 2" to exposed surfaces unless otherwise noted.
6. Channel lining shall be continuously reinforced without expansion or tooled joints except as follows: Construction joints shall be located at the end of a day's pour or when concrete placement stops for more than forty-five (45) minutes and between longitudinal paving strips. Longitudinal construction joints shall be located one foot up each side slope. Reinforcing steel shall be continuous through lining construction joints and through joints with box culverts and other hydraulic structures unless noted otherwise.
7. Weep holes 10' on center typ.

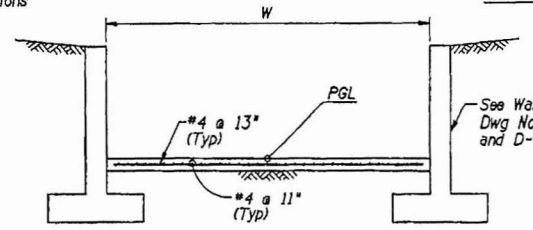

CHANNEL	W (Ft)
Las Sendas Channel	Varies 51.25 to 54.00
86th St Channel	Varies 8.00 to 10.00

TYPICAL RECTANGULAR CHANNEL SECTION

	NAME	DATE
DESIGN	DVD	4/05
DRAWN	MRT	4/05
CHECKED	AJR	4/05

J2 engineering and environmental design
8222 south 48th street, suite 125
phoenix, arizona 85044
phone 602.438.2888
www.j2engineering.com

ARIZONA DEPARTMENT OF TRANSPORTATION
INTERMODAL TRANSPORTATION DIVISION
ROADWAY DESIGN SERVICES

TYPICAL CHANNEL SECTIONS

PRELIMINARY
STAGE IV
95% Review
NOT FOR CONSTRUCTION OR RECORDING

ROUTE	LOCATION
202L	RED MTN FWY, POWER ROAD - UNIVERSITY DRIVE

DWG NO. D-5.12

TRACS NO. H 5782 01C | 202-B(007)B | ___ OF ___

Plotted By: MRT p:\040031\j2cad\sheets\h5782dd01.dgn 4/5/2005 2:20:13 PM

F.H.W.A. REGION	STATE	PROJECT NO.	SHEET NO.	TOTAL SHEETS	AS BUILT
9	ARIZ.	202-B(007)B			
		202L MA 023			

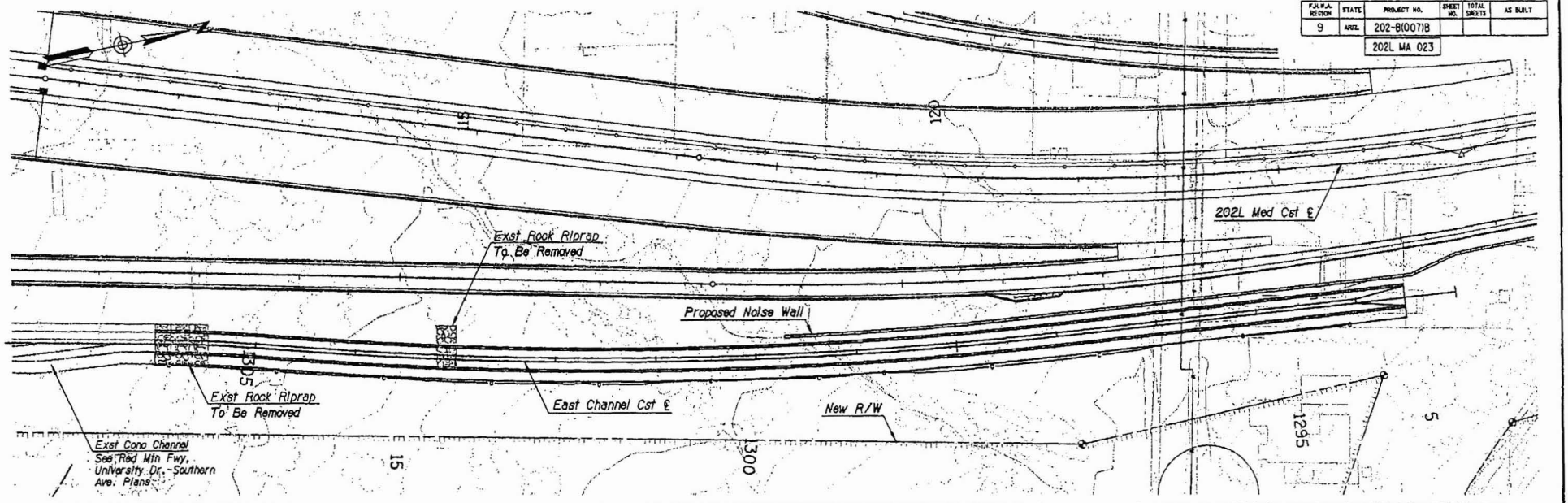

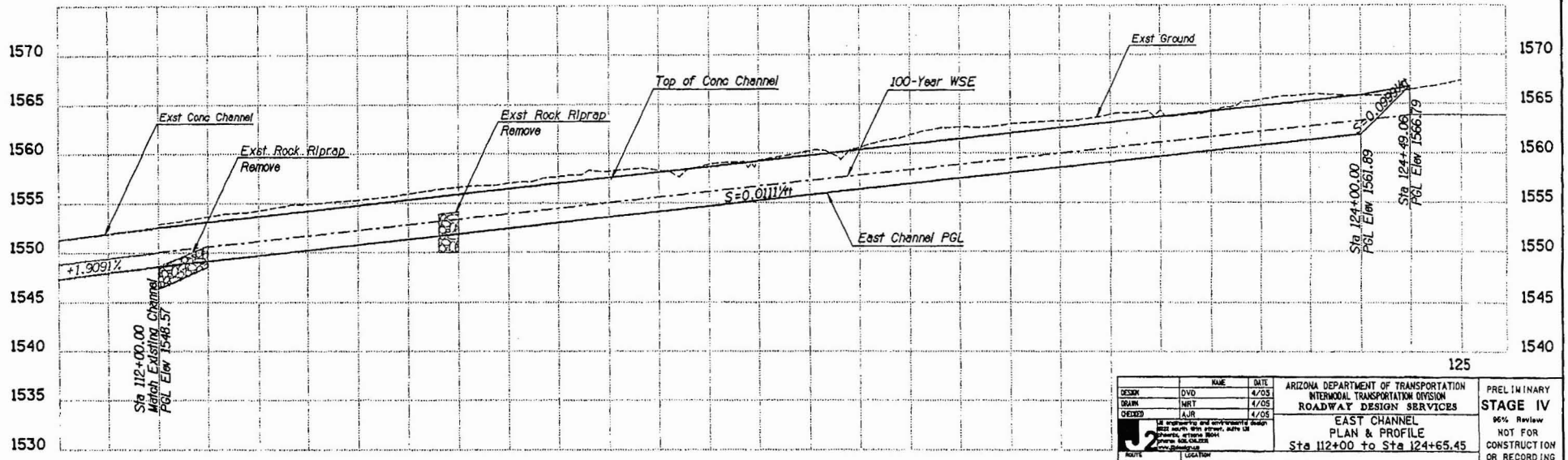

	NAME	DATE
DESIGN	DVD	4/05
DRAWN	MRT	4/05
CHECKED	AJR	4/05

J2 engineering and environmental design
2822 south 48th street, suite 131
phoenix, arizona 85044
phone 602.256.2525
www.j2design.us

ARIZONA DEPARTMENT OF TRANSPORTATION
INTERMODAL TRANSPORTATION DIVISION
ROADWAY DESIGN SERVICES

EAST CHANNEL
PLAN & PROFILE
Sta 112+00 to Sta 124+65.45

ROUTE	LOCATION
202L	RED MTN FWY, POWER ROAD - UNIVERSITY DRIVE

PRELIMINARY
STAGE IV
95% Review
NOT FOR CONSTRUCTION OR RECORDING

DWG NO. D-5.13

TRACS NO. H 5782 01C | 202-B(007)B | ___ OF ___

Plotted By: MRT p:\040031\j2cad\sheets\h5782dpp01.dgn 4/5/2005 2:33:24 PM

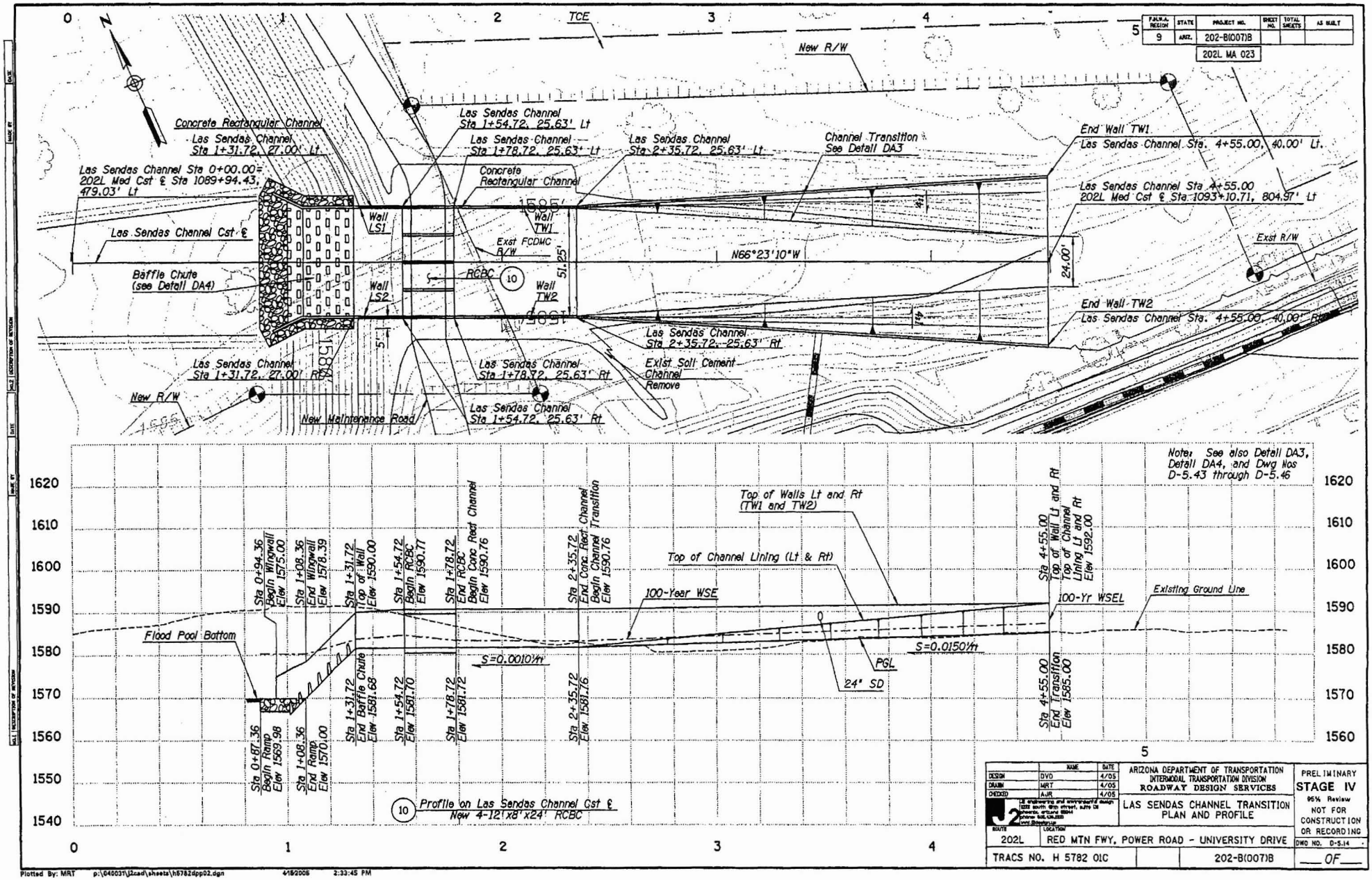

F.A.H.U. REGION	STATE	PROJECT NO.	SHEET NO.	TOTAL SHEETS	AS BUILT
9	ARIZ.	202-B(007)B			
		202L MA 023			

	NAME	DATE
DESIGN	DVO	4/05
DRAWN	MRT	4/05
CHECKED	AJR	4/05

J2 engineering and environmental design
2225 south 4th street, suite 12
phoenix, arizona 85004
phone 602.126.2555
www.j2eandd.com

ARIZONA DEPARTMENT OF TRANSPORTATION
INTERMODAL TRANSPORTATION DIVISION
ROADWAY DESIGN SERVICES

LAS SENDAS CHANNEL TRANSITION
PLAN AND PROFILE

PRELIMINARY
STAGE IV
95% Review
NOT FOR CONSTRUCTION OR RECORDING

ROUTE	LOCATION	DWG NO. D-5.14
202L	RED MTN FWY, POWER ROAD - UNIVERSITY DRIVE	
TRACS NO. H 5782 01C	202-B(007)B	___ OF ___

Plotted By: MRT p:\040031\j2cad\sheets\h5782dpp02.dgn 4/5/2005 2:33:45 PM

F.H.W.A. REGION	STATE	PROJECT NO.	SHEET NO.	TOTAL SHEETS	AS BUILT
9	ARIZ.	202-B(007)B			
		202L MA 023			

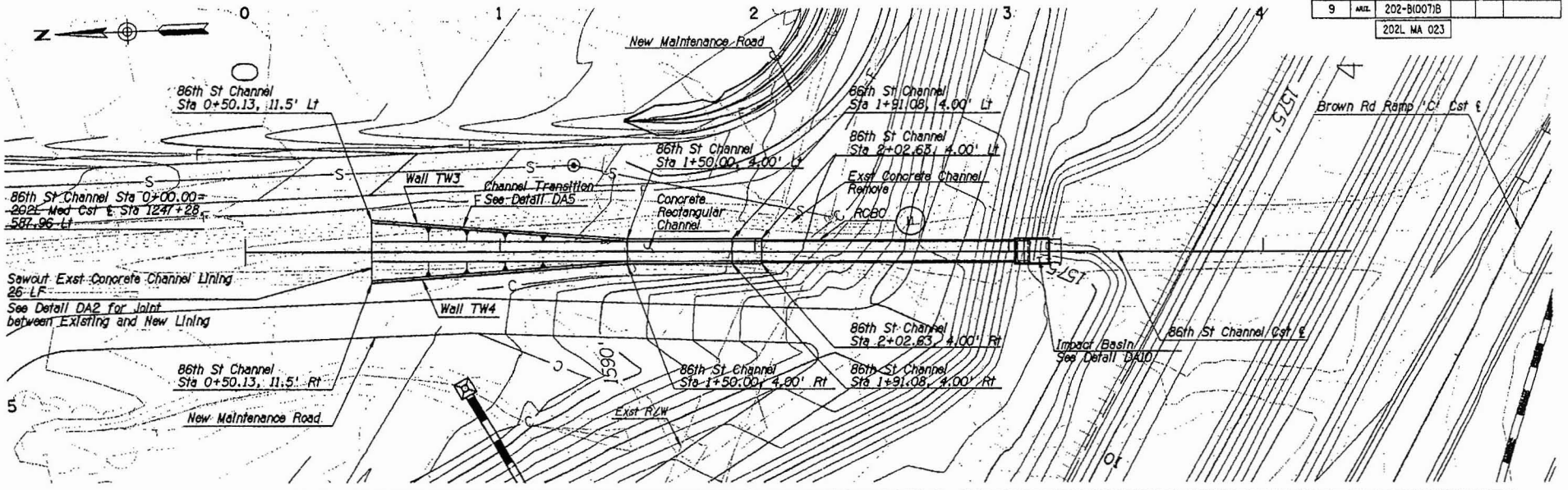

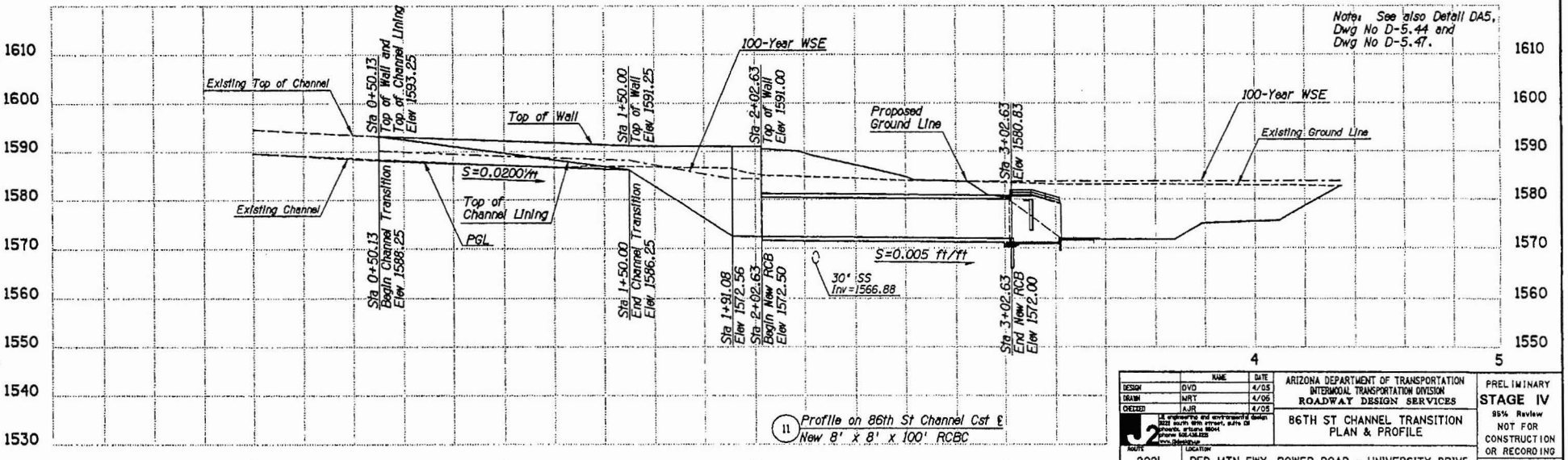

11 Profile on 86th St Channel Cst ℄
New 8' x 8' x 100' RCBC

	NAME	DATE
DESIGN	DVD	4/05
DRAWN	MRT	4/05
CHECKED	AJR	4/05

J2 engineering and environmental design
2020 south 48th street, suite 128
phoenix, arizona 85041
phone 602.438.2020
www.j2engineering.com

ARIZONA DEPARTMENT OF TRANSPORTATION
INTERMODAL TRANSPORTATION DIVISION
ROADWAY DESIGN SERVICES

86TH ST CHANNEL TRANSITION
PLAN & PROFILE

PRELIMINARY
STAGE IV
95% Review
NOT FOR
CONSTRUCTION
OR RECORDING

ROUTE	LOCATION	DWG NO. D-5.15
202L	RED MTN FWY, POWER ROAD - UNIVERSITY DRIVE	
TRACS NO. H 5782 01C	202-B(007)B	___ OF ___

Plotted By: MRT p:\040091\j2road\sheets\h5782dpp03.dgn 4/5/2005 2:34:03 PM

F.H.W.A. REGION	STATE	PROJECT NO.	SHEET NO.	TOTAL SHEETS	AS BUILT
9	ARIZ.	202-B(007)B			

202L MA 023

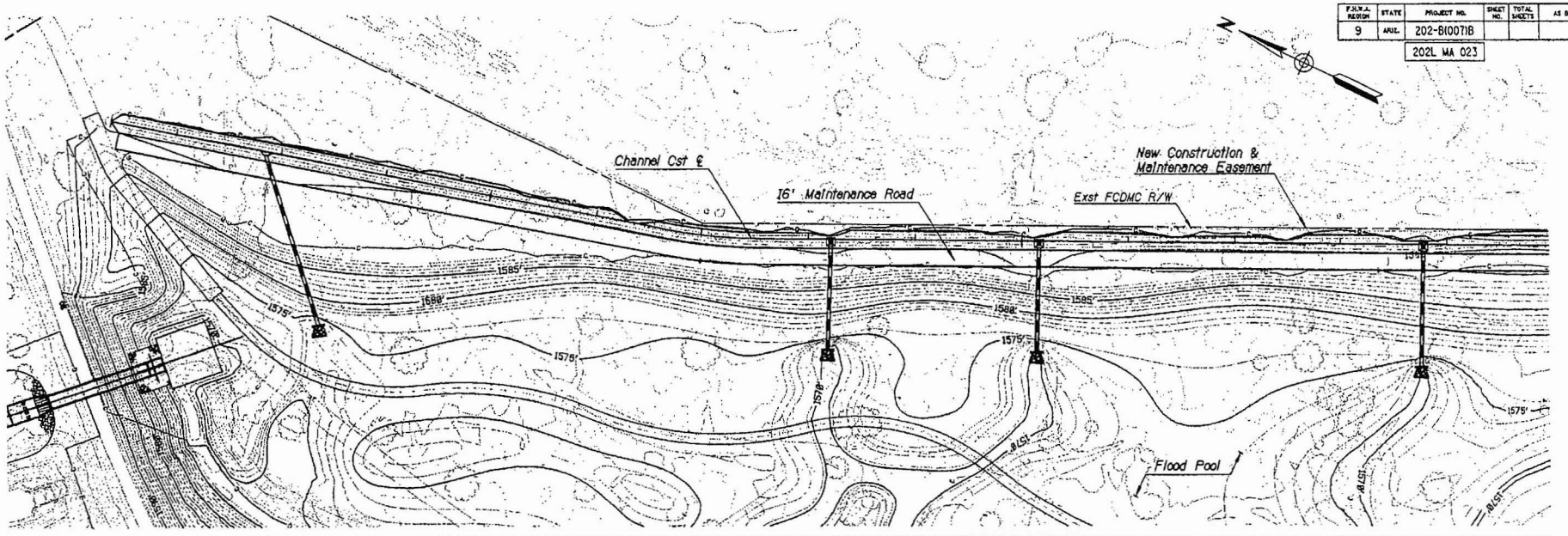

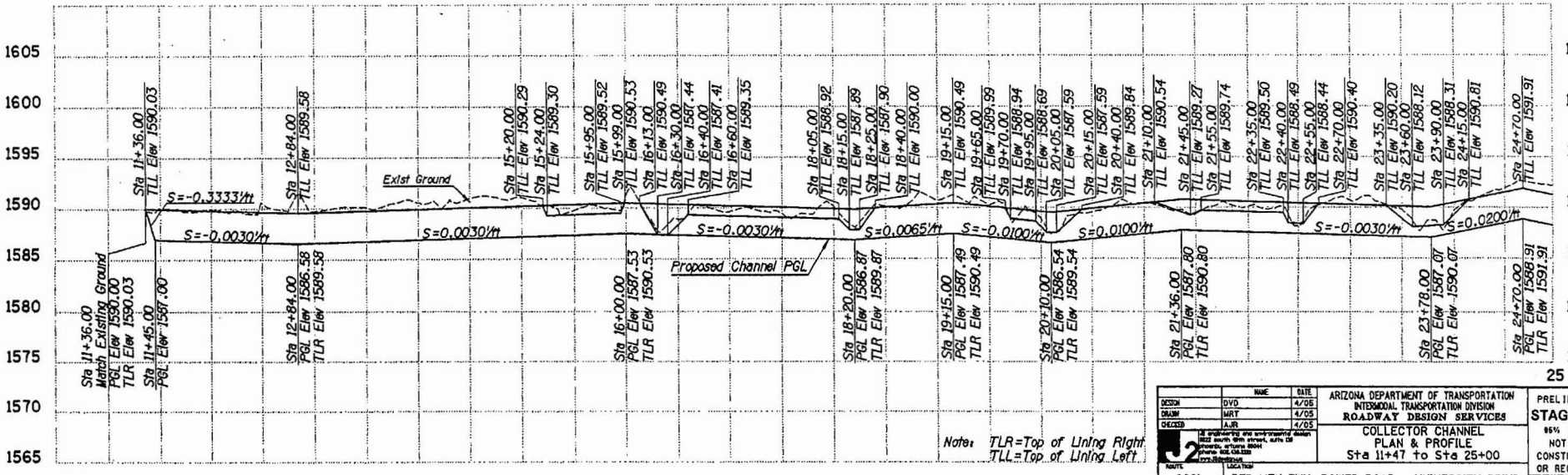

Note: TLR=Top of Lining Right
TLL=Top of Lining Left

	NAME	DATE
DESIGN	DVD	4/05
DRAWN	MRT	4/05
CHECKED	AJR	4/05

J2 engineering and environmental design
3822 south 48th street, suite 138
phoenix, arizona 85044
phone 602.438.2888
www.j2design.com

ARIZONA DEPARTMENT OF TRANSPORTATION
INTERMODAL TRANSPORTATION DIVISION
ROADWAY DESIGN SERVICES

COLLECTOR CHANNEL
PLAN & PROFILE
Sta 11+47 to Sta 25+00

PRELIMINARY
STAGE IV
95% Review
NOT FOR CONSTRUCTION OR RECORDING

ROUTE	LOCATION
202L	RED MTN FWY, POWER ROAD - UNIVERSITY DRIVE

DWG NO. D-5.16

TRACS NO. H 5782 01C | 202-B(007)B | ___ OF ___

Plotted By: MRT p:\040031\j2cad\sheets\h5782spp01.dgn 4/5/2005 2:20:44 PM

F.H.W.A. REGION	STATE	PROJECT NO.	SHEET NO.	TOTAL SHEETS	AS BUILT
9	ARIZ.	202-B(007)B			
		202L MA 023			

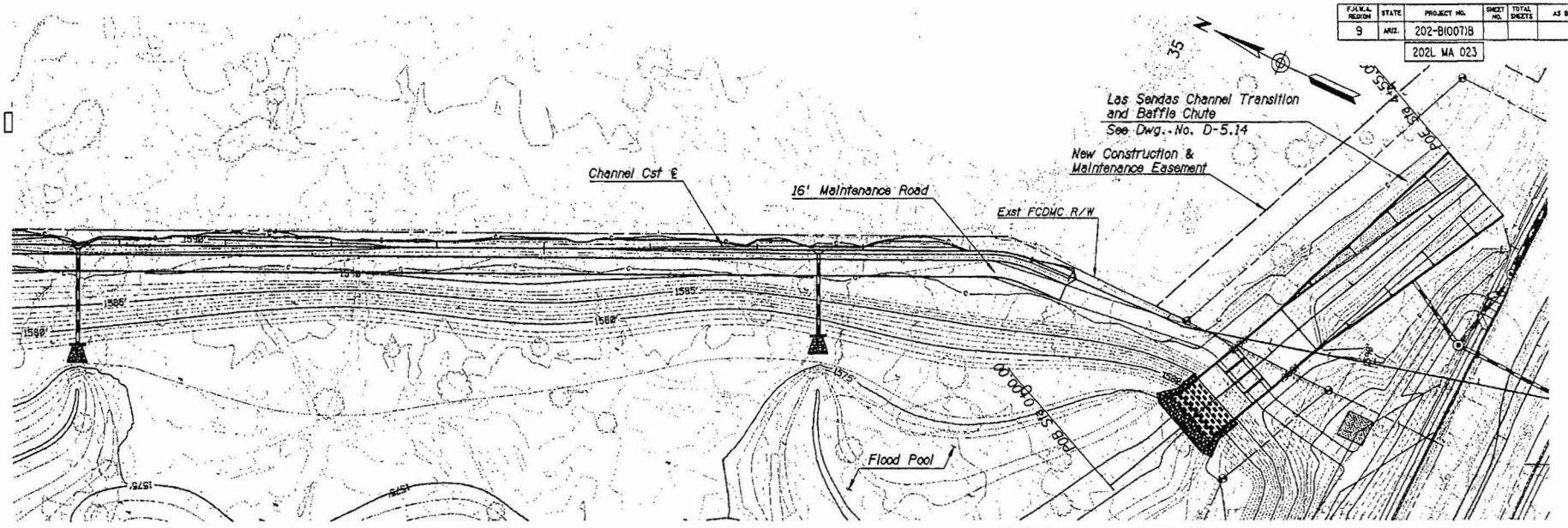

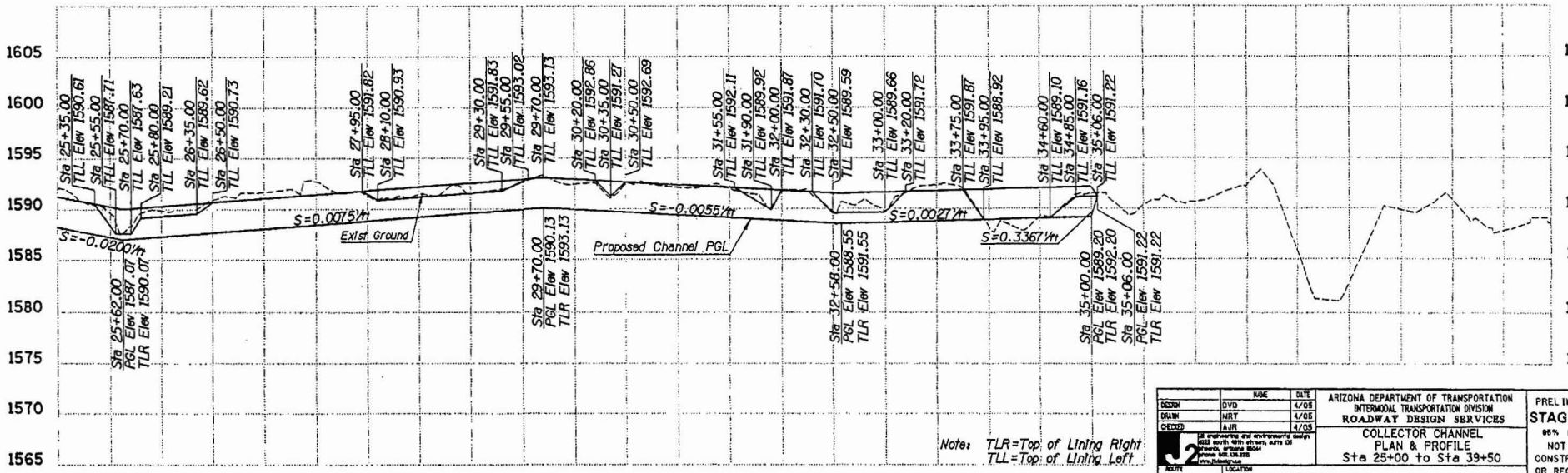

Note: TLR=Top of Lining Right
TLL=Top of Lining Left

	NAME	DATE
DESIGN	DVD	4/05
DRAWN	MRT	4/05
CHECKED	AJR	4/05

J2 engineering and environmental design
2222 south 48th street, suite 126
phoenix, arizona 85034
phone 602.438.2222
www.j2design.net

ARIZONA DEPARTMENT OF TRANSPORTATION
INTERMODAL TRANSPORTATION DIVISION
ROADWAY DESIGN SERVICES

COLLECTOR CHANNEL
PLAN & PROFILE
Sta 25+00 to Sta 39+50

ROUTE	LOCATION
202L	RED MTN FWY, POWER ROAD - UNIVERSITY DRIVE

TRACS NO. H 5782 01C | 202-B(007)B

PRELIMINARY
STAGE IV
95% Review
NOT FOR CONSTRUCTION OR RECORDING

DWG NO. D-5.17

___ OF ___

Plotted By: MRT p:\640031\j2cad\sheets\h5782cpp02.dgn 4/15/2005 2:21:08 PM

F.A.H.U.A. REGION	STATE	PROJECT NO.	SHEET NO.	TOTAL SHEETS	AS BUILT
9	ARIZ.	202-B(007)B			
		202L MA 023			

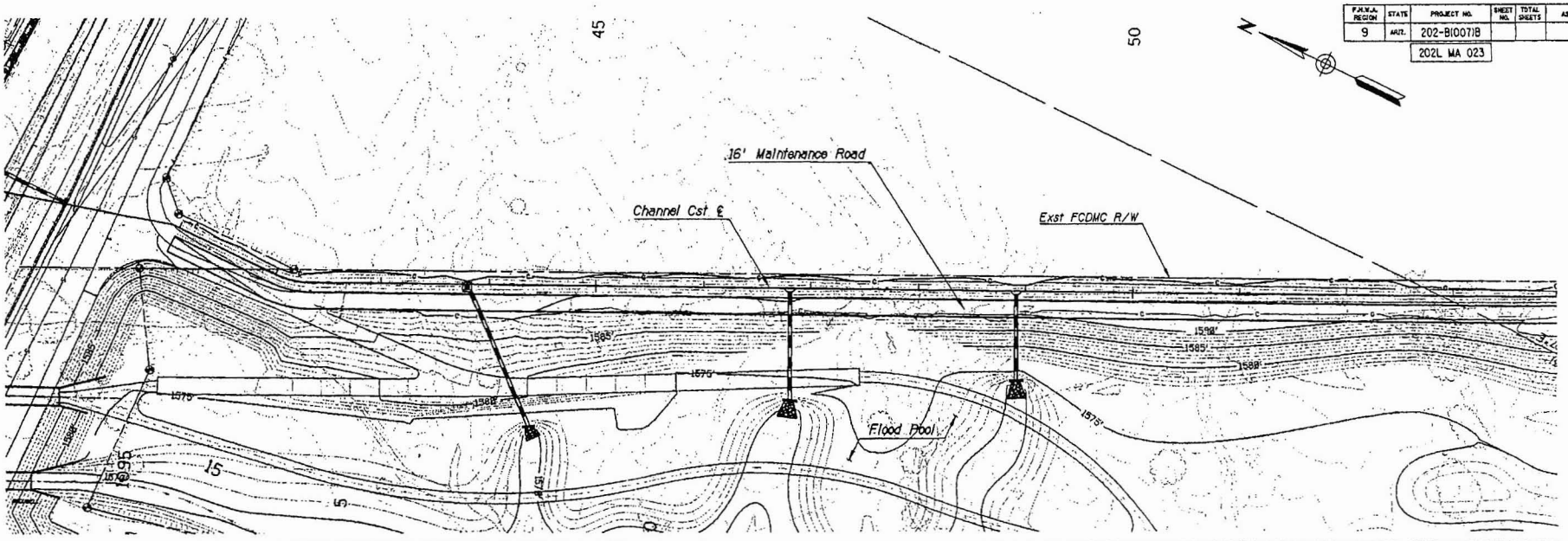

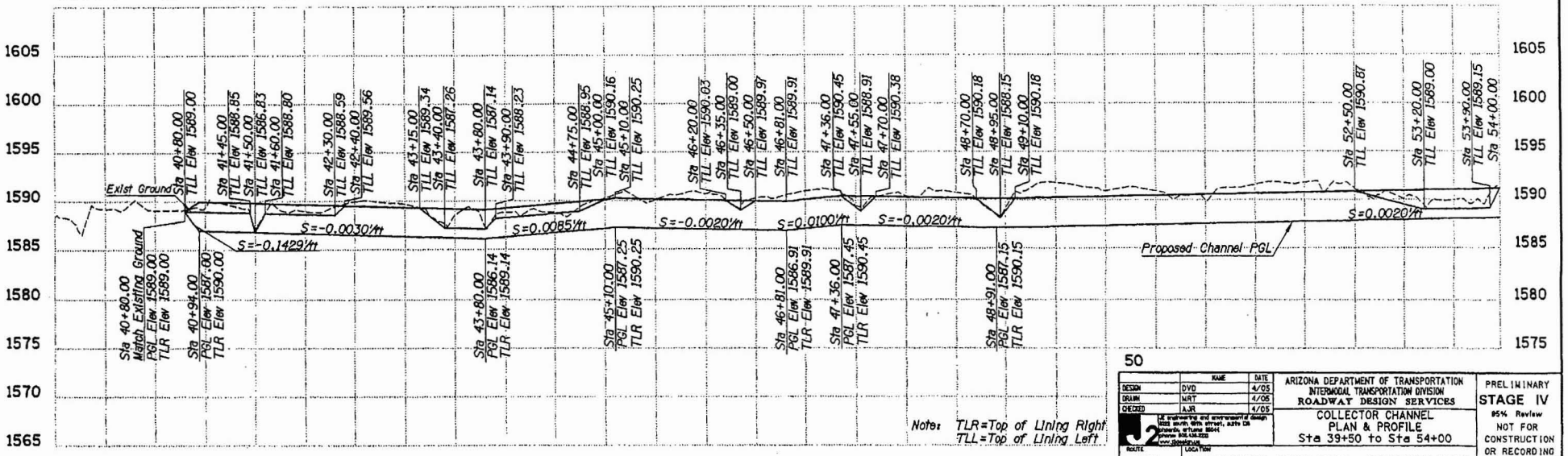

Note: TLR=Top of Lining Right
TLL=Top of Lining Left

	NAME	DATE
DESIGN	DVD	4/05
DRAWN	MRT	4/05
CHECKED	AJR	4/05

J2 engineering and environmental design
1600 south 16th street, suite 126
bismarck, north dakota 58501
phone: 701.258.2220
www.j2design.com

ARIZONA DEPARTMENT OF TRANSPORTATION
INTERMODAL TRANSPORTATION DIVISION
ROADWAY DESIGN SERVICES

COLLECTOR CHANNEL
PLAN & PROFILE
Sta 39+50 to Sta 54+00

PRELIMINARY
STAGE IV
95% Review
NOT FOR CONSTRUCTION OR RECORDING

ROUTE	LOCATION
202L	RED MTN FWY, POWER ROAD - UNIVERSITY DRIVE

DWG NO. D-5.18

TRACS NO. H 5782 01C | 202-B(007)B | ___ OF ___

Plotted By: MRT p:\040031\j2cad\sheets\h5782cpp03.dgn 4/5/2005 2:21:28 PM

F.H.W.A. REGION	STATE	PROJECT NO.	SHEET NO.	TOTAL SHEETS	AS BUILT
9	ARIZ.	202-B(007)B			
		202L MA 023			

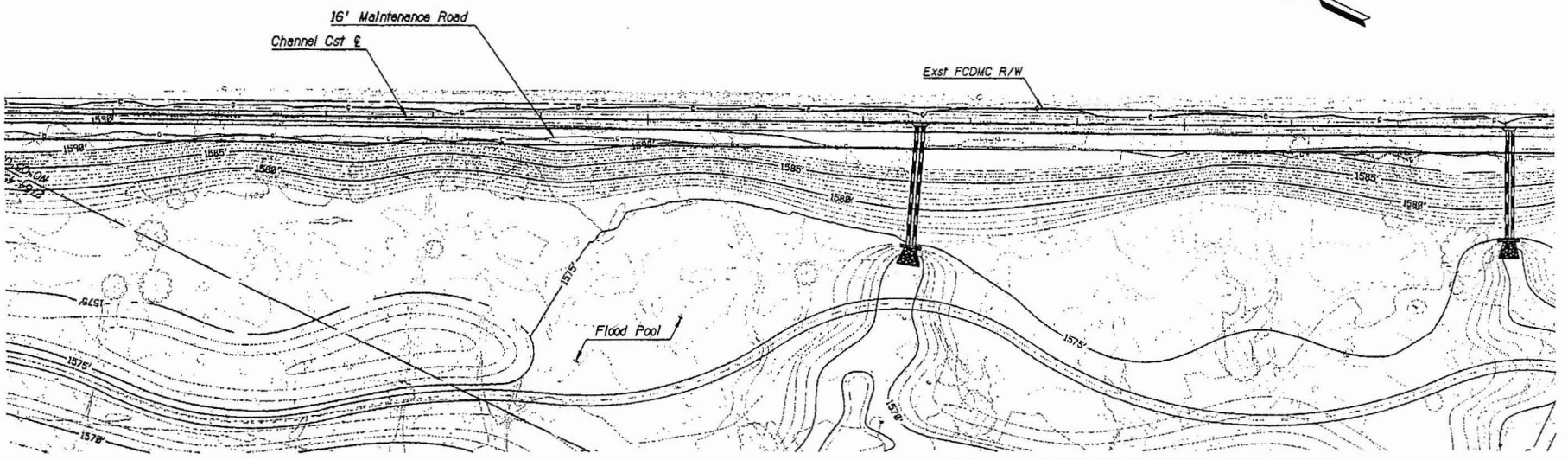

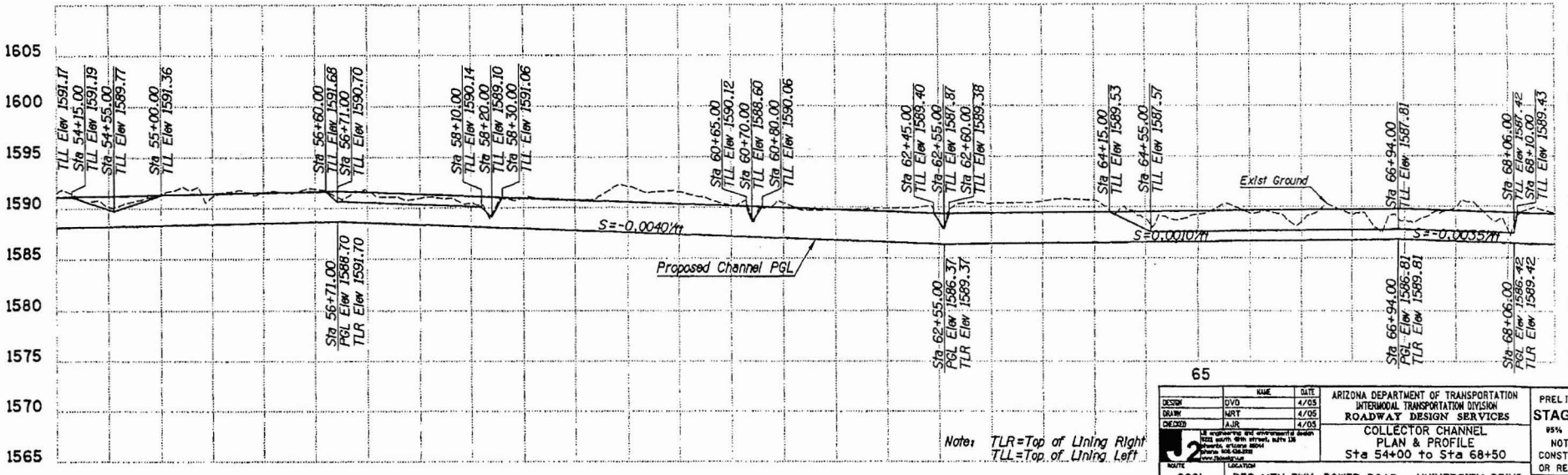

Note: TLR=Top of Lining Right
TLL=Top of Lining Left

	NAME	DATE
DESIGN	DVD	4/05
DRAWN	MRT	4/05
CHECKED	AJR	4/05

J2 engineering and environmental design
1020 south 48th street, suite 130
phoenix, arizona 85044
phone: 602.438.2500
www.j2eandd.com

ARIZONA DEPARTMENT OF TRANSPORTATION
INTERMODAL TRANSPORTATION DIVISION
ROADWAY DESIGN SERVICES

COLLECTOR CHANNEL
PLAN & PROFILE
Sta 54+00 to Sta 68+50

PRELIMINARY
STAGE IV
95% Review
NOT FOR CONSTRUCTION OR RECORDING

ROUTE	LOCATION
202L	RED MTN FWY, POWER ROAD - UNIVERSITY DRIVE

DWG NO. D-5.19

TRACS NO. H 5782 01C | 202-B(007)B | ___ OF ___

Plotted By: MRT p:\040031\j2cad\sheets\h5782epp04.dgn 4/5/2005 2:21:51 PM

F.H.W.A. REGION	STATE	PROJECT NO.	SHEET NO.	TOTAL SHEETS	AS BUILT
9	ARIZ.	202-B(007)B			
		202L MA 023			

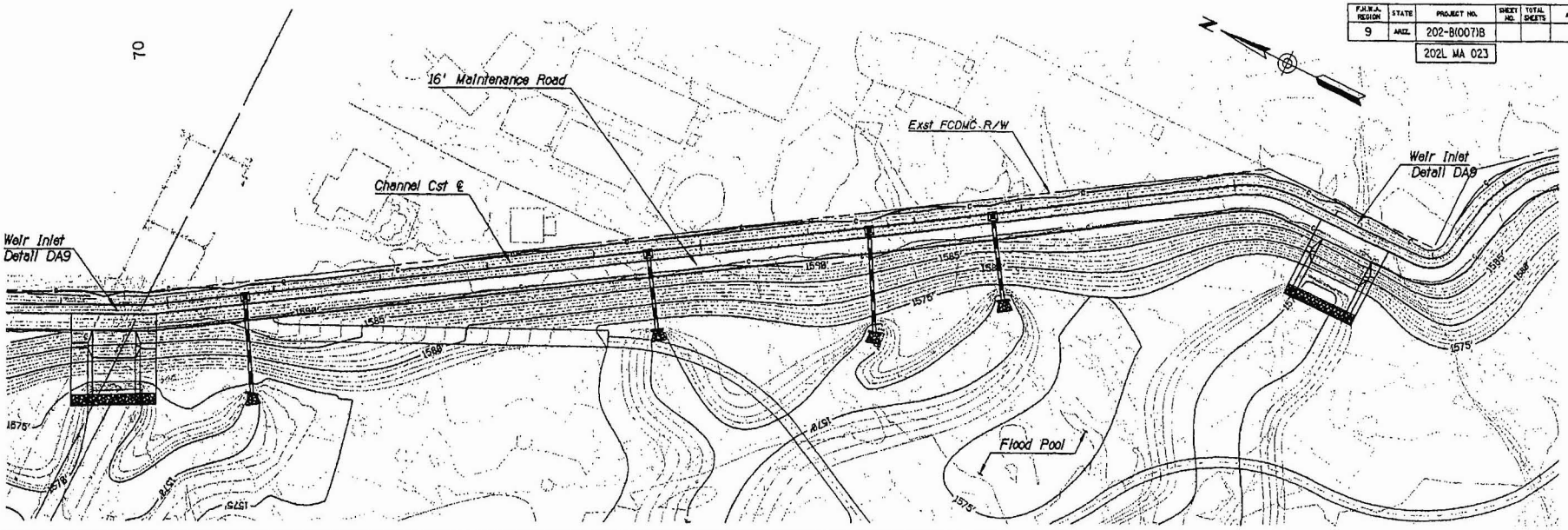

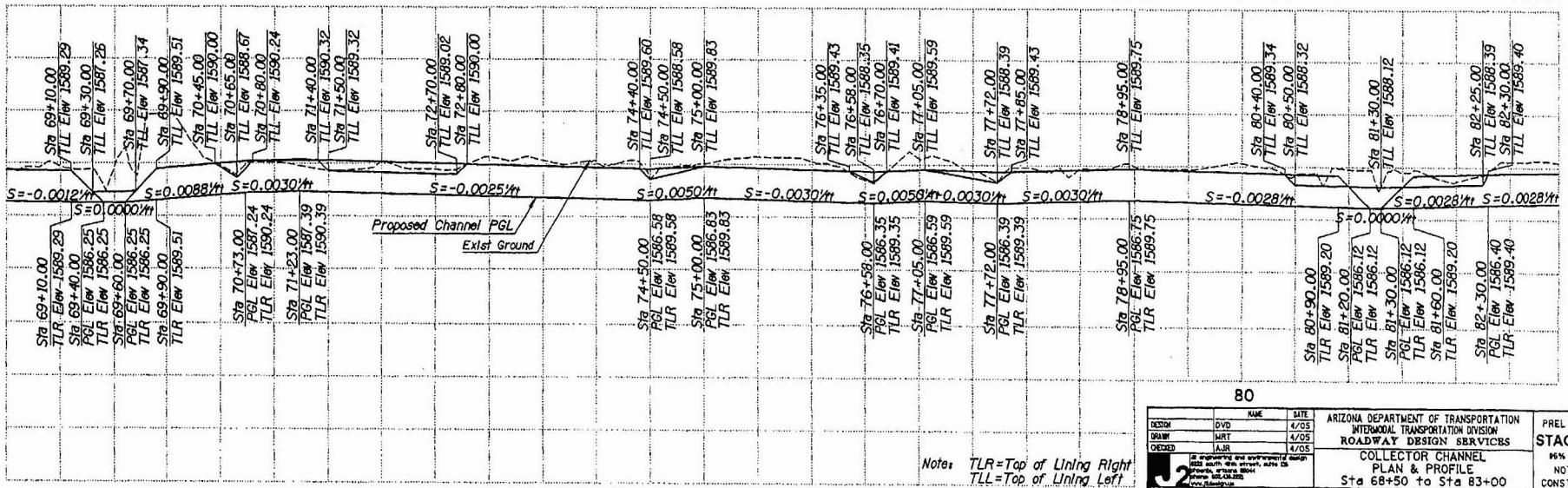

Note: TLR=Top of Lining Right
TLL=Top of Lining Left

	NAME	DATE
DESIGN	DVD	4/05
DRAWN	MRT	4/05
CHECKED	AJR	4/05

J2 engineering and environmental design
8222 south 48th street, suite 126
phoenix, arizona 85044
phone 602.438.2888
www.j2eng.com

ARIZONA DEPARTMENT OF TRANSPORTATION
INTERMODAL TRANSPORTATION DIVISION
ROADWAY DESIGN SERVICES

COLLECTOR CHANNEL
PLAN & PROFILE
Sta 68+50 to Sta 83+00

PRELIMINARY
STAGE IV
95% Review
NOT FOR CONSTRUCTION OR RECORDING

ROUTE	LOCATION	
202L	RED MTN FWY, POWER ROAD - UNIVERSITY DRIVE	
TRACS NO. H 5782 01C		202-B(007)B

DWG NO. D-5.20
___ OF ___

Plotted By: MRT p:\040031\j2cad\sheets\h5782cpp05.dgn 4/19/2005 2:22:13 PM

F.H.W.A. REGION	STATE	PROJECT NO.	SHEET NO.	TOTAL SHEETS	AS BUILT
9	ARIZ.	202-B(007)B			
		202L MA 023			

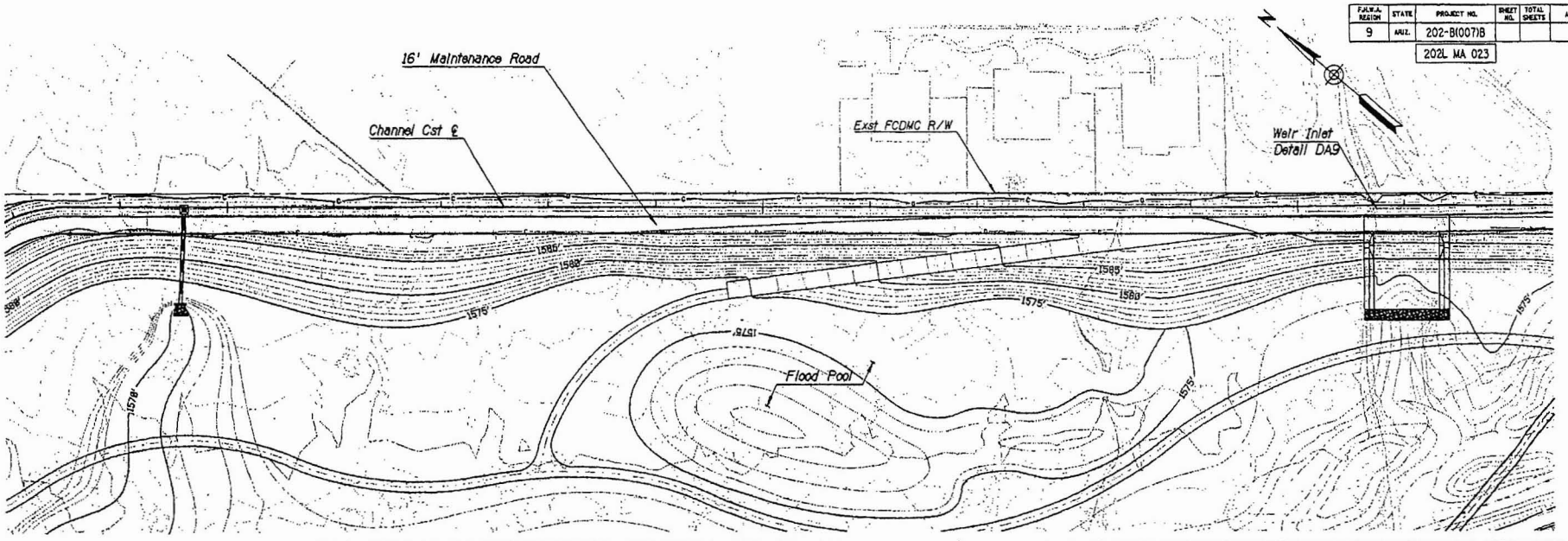

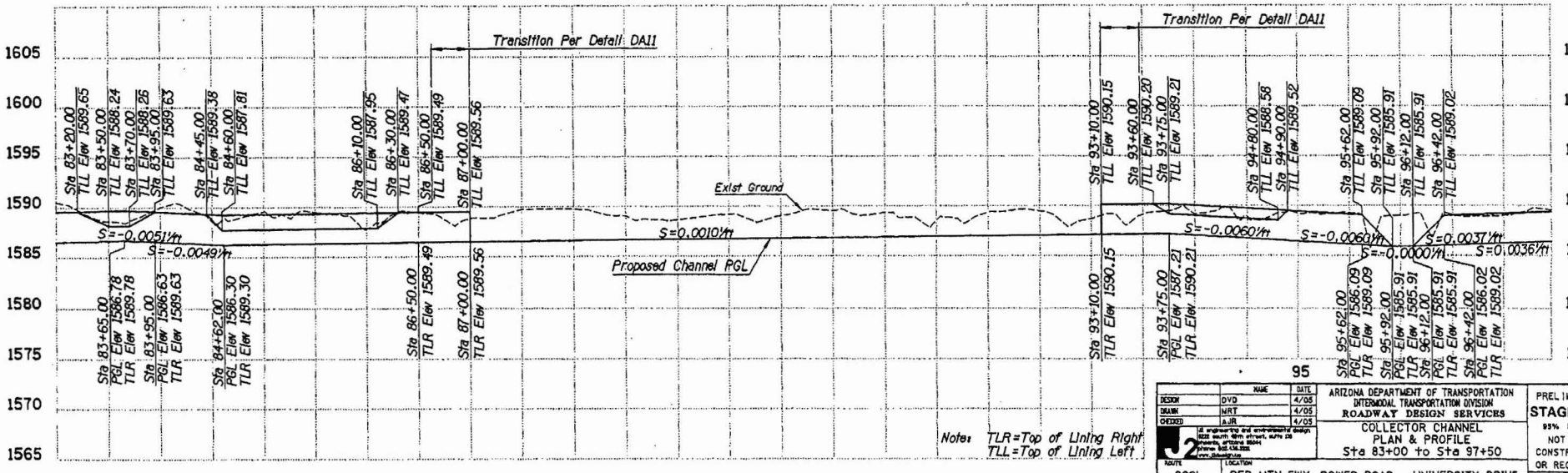

Note: TLR=Top of Lining Right
TLL=Top of Lining Left

	NAME	DATE
DESIGN	DVD	4/05
DRAWN	MRT	4/05
CHECKED	AJR	4/05

J2 engineering and environmental design
8222 south 48th street, suite 125
phoenix, az 85044
phone: 602.438.2888
www.j2design.com

ARIZONA DEPARTMENT OF TRANSPORTATION
INTERMODAL TRANSPORTATION DIVISION
ROADWAY DESIGN SERVICES

COLLECTOR CHANNEL
PLAN & PROFILE
Sta 83+00 to Sta 97+50

PRELIMINARY
STAGE IV
95% Review
NOT FOR CONSTRUCTION OR RECORDING

ROUTE	LOCATION
202L	RED MTN FWY, POWER ROAD - UNIVERSITY DRIVE

TRACS NO. H 5782 01C | 202-B(007)B | DWG NO. D-5.21 | ___ OF ___

Plotted By: MRT p:\040031\j2cad\sheets\h5782cpp08.dgn 4/15/2005 2:22:35 PM

F.A.R.M.A. REGION	STATE	PROJECT NO.	SHEET NO.	TOTAL SHEETS	AS BUILT
9	ARIZ.	202-B(007)B			
		202L MA 023			

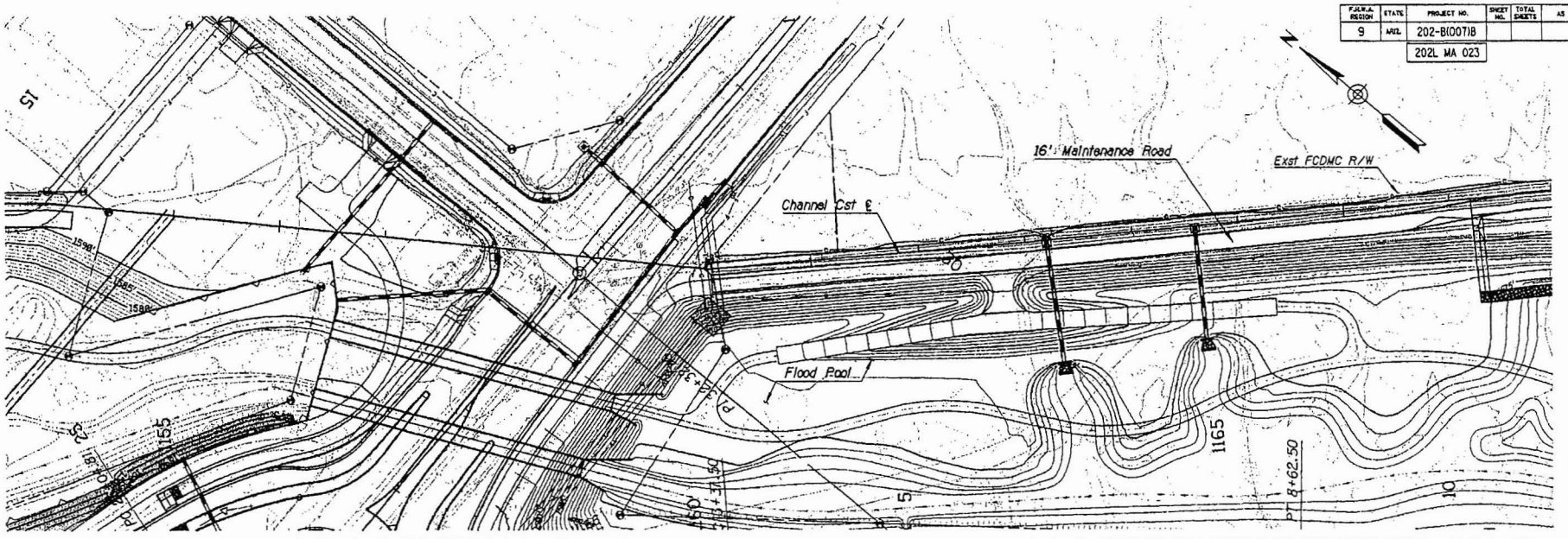

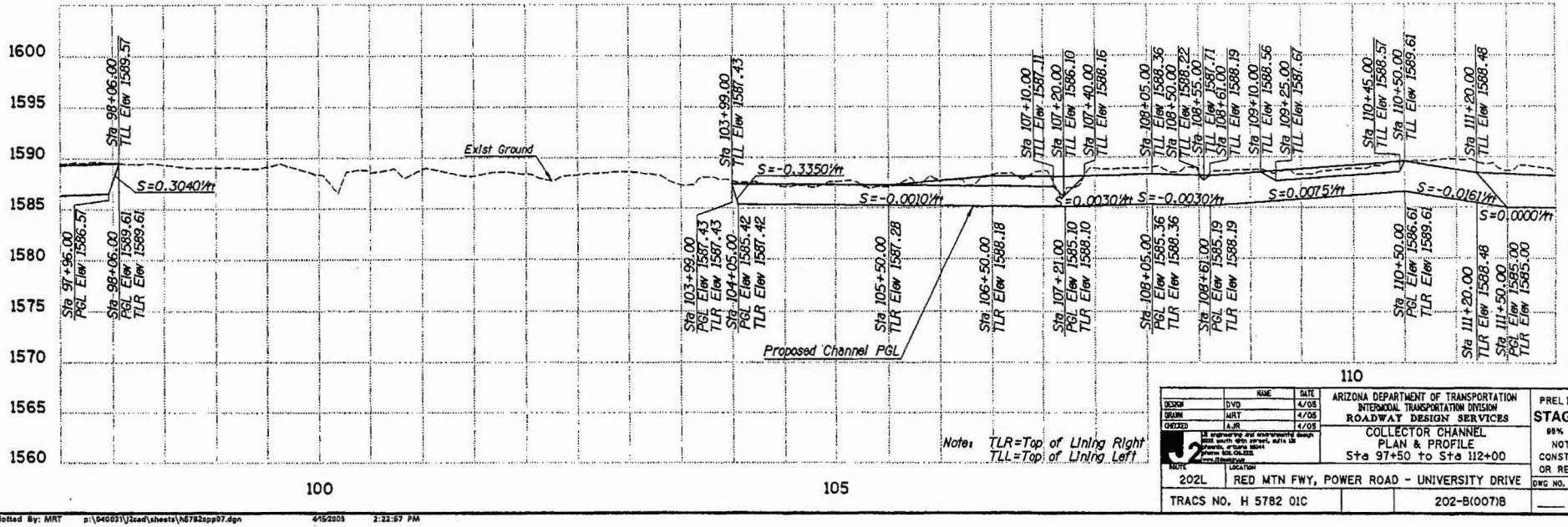

Note: TLR=Top of Lining Right
TLL=Top of Lining Left

	NAME	DATE
DESIGN	DVD	4/05
DRAWN	MRT	4/05
CHECKED	AJR	4/05

J2 engineering and environmental design
2600 south 48th street, suite 150
tempe, arizona 85041
phone 602.438.2500
www.j2eseng.com

ARIZONA DEPARTMENT OF TRANSPORTATION
INTERMODAL TRANSPORTATION DIVISION
ROADWAY DESIGN SERVICES

COLLECTOR CHANNEL
PLAN & PROFILE
Sta 97+50 to Sta 112+00

PRELIMINARY
STAGE IV
95% Review
NOT FOR CONSTRUCTION OR RECORDING

ROUTE	LOCATION
202L	RED MTN FWY, POWER ROAD - UNIVERSITY DRIVE

DWG NO. D-5.22

TRACS NO. H 5782 01C | 202-B(007)B | ___ OF ___

Plotted By: MRT p:\040031\j2cad\sheets\h5782opp07.dgn 4/5/2005 2:22:57 PM

F.H.W.A. REGION	STATE	PROJECT NO.	SHEET NO.	TOTAL SHEETS	AS BUILT
9	ARIZ.	202-B(007)B			
		202L MA 023			

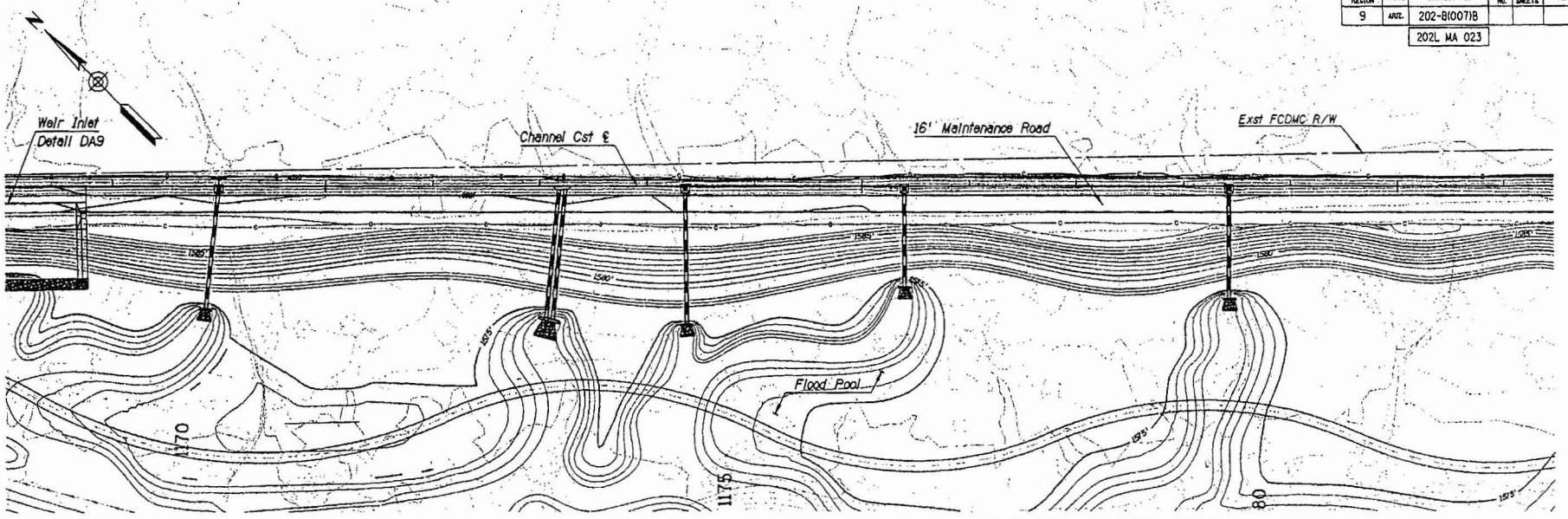

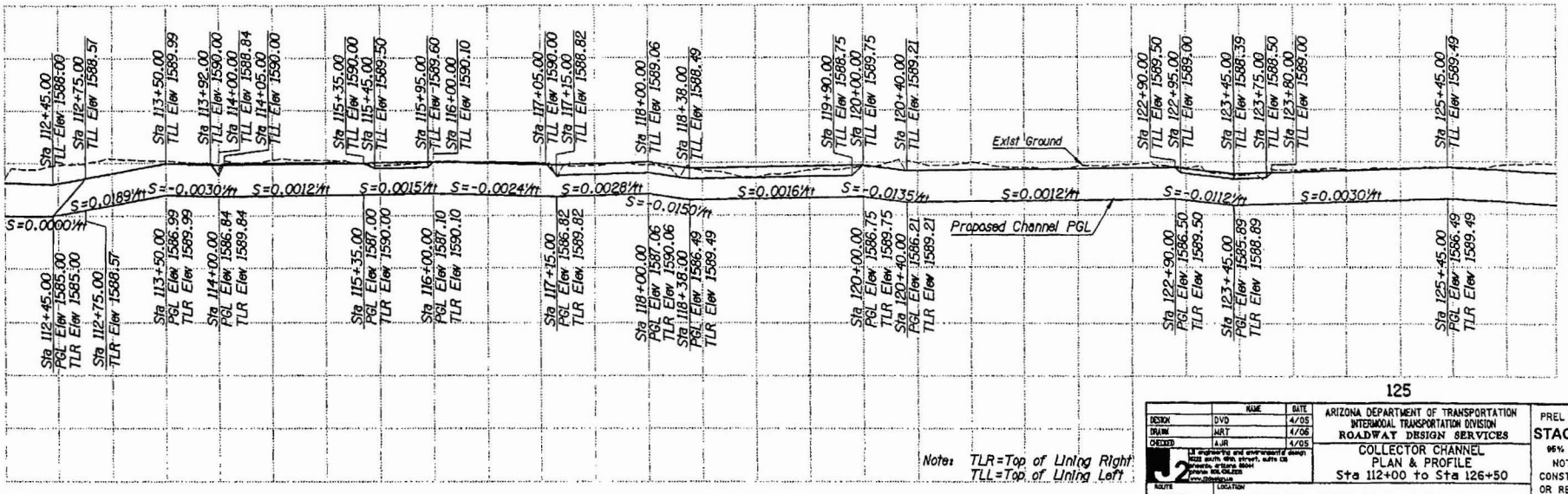

Note: TLR=Top of Lining Right
TLL=Top of Lining Left

	NAME	DATE
DESIGN	DVD	4/05
DRAW	MRT	4/06
CHECKED	AJR	4/05

J2 engineering and environmental design
1232 south 48th street, suite 130
tempe, arizona 85281
phone 602.438.2520
www.j2design.com

ARIZONA DEPARTMENT OF TRANSPORTATION
INTERMODAL TRANSPORTATION DIVISION
ROADWAY DESIGN SERVICES

COLLECTOR CHANNEL
PLAN & PROFILE
Sta 112+00 to Sta 126+50

PRELIMINARY
STAGE IV
95% Review
NOT FOR CONSTRUCTION OR RECORDING

ROUTE	LOCATION
202L	RED MTN FWY, POWER ROAD - UNIVERSITY DRIVE

DWG NO. D-5.23

TRACS NO. H 5782 01C | 202-B(007)B | ___ OF ___

Plotted By: MRT p:\040031\j2cad\sheets\h5782cpp08.dgn 4/15/2005 2:23:16 PM

F.A.P. Y. REGION	STATE	PROJECT NO.	SHEET NO.	TOTAL SHEETS	AS BUILT
9	ARIZ.	202-B(007)B			
		202L MA 023			

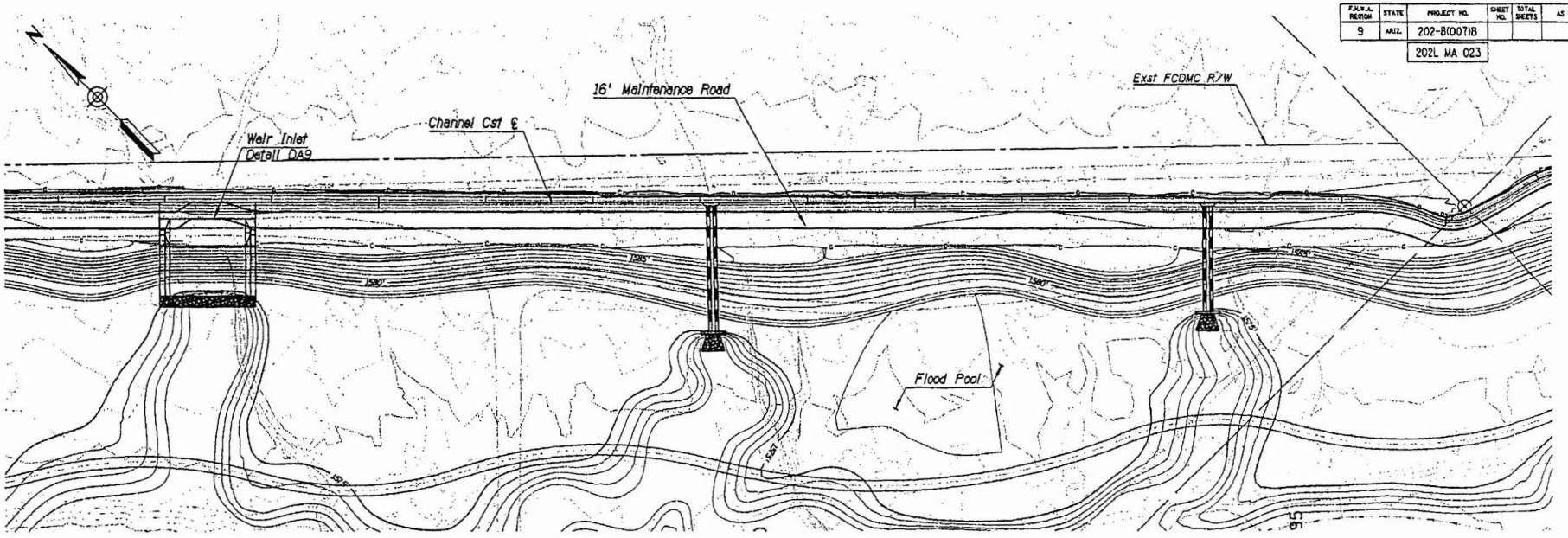

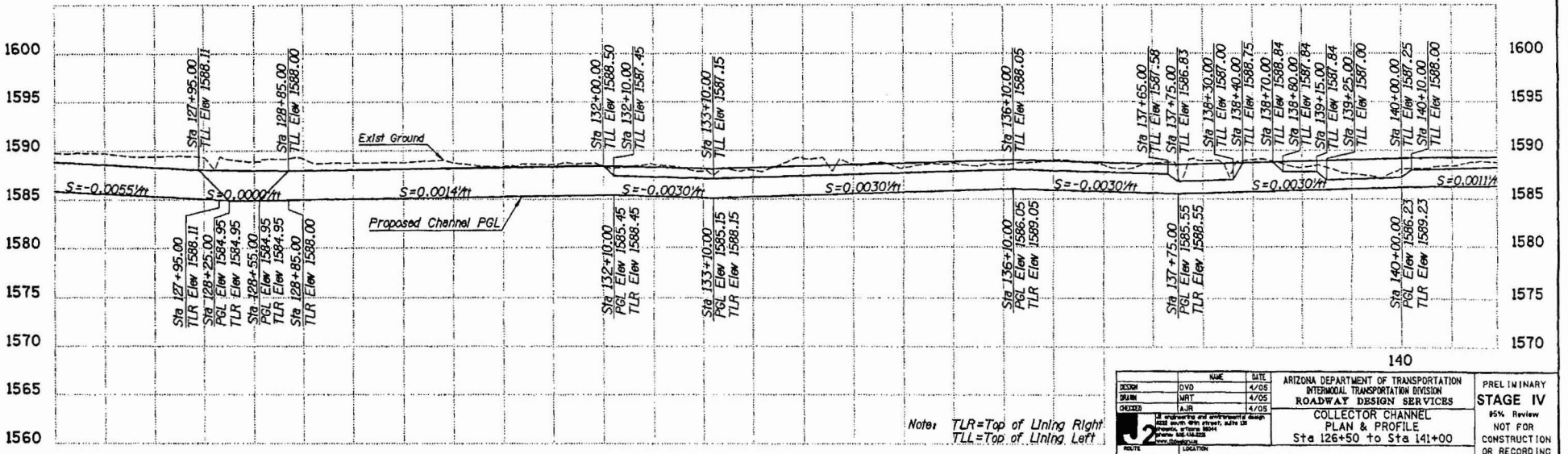

Note: TLR=Top of Lining Right
TLL=Top of Lining Left

	NAME	DATE
DESIGN	DVD	4/05
DRAWN	MRT	4/05
CHECKED	AJR	4/05

J2 engineering and environmental design
1020 south 48th street, suite 130
phoenix, arizona 85034
phone 602.414.0300
www.j2engineering.com

ARIZONA DEPARTMENT OF TRANSPORTATION
INTERMODAL TRANSPORTATION DIVISION
ROADWAY DESIGN SERVICES

COLLECTOR CHANNEL
PLAN & PROFILE
Sta 126+50 to Sta 141+00

ROUTE	LOCATION
202L	RED MTN FWY, POWER ROAD - UNIVERSITY DRIVE

TRACS NO. H 5782 01C | 202-B(007)B

PRELIMINARY
STAGE IV
95% Review
NOT FOR CONSTRUCTION OR RECORDING

DWG NO. 0-5.24

___ OF ___

Plotted By: MRT p:\040031\j2road\sheets\h5782spp09.dgn 4/5/2005 2:23:38 PM

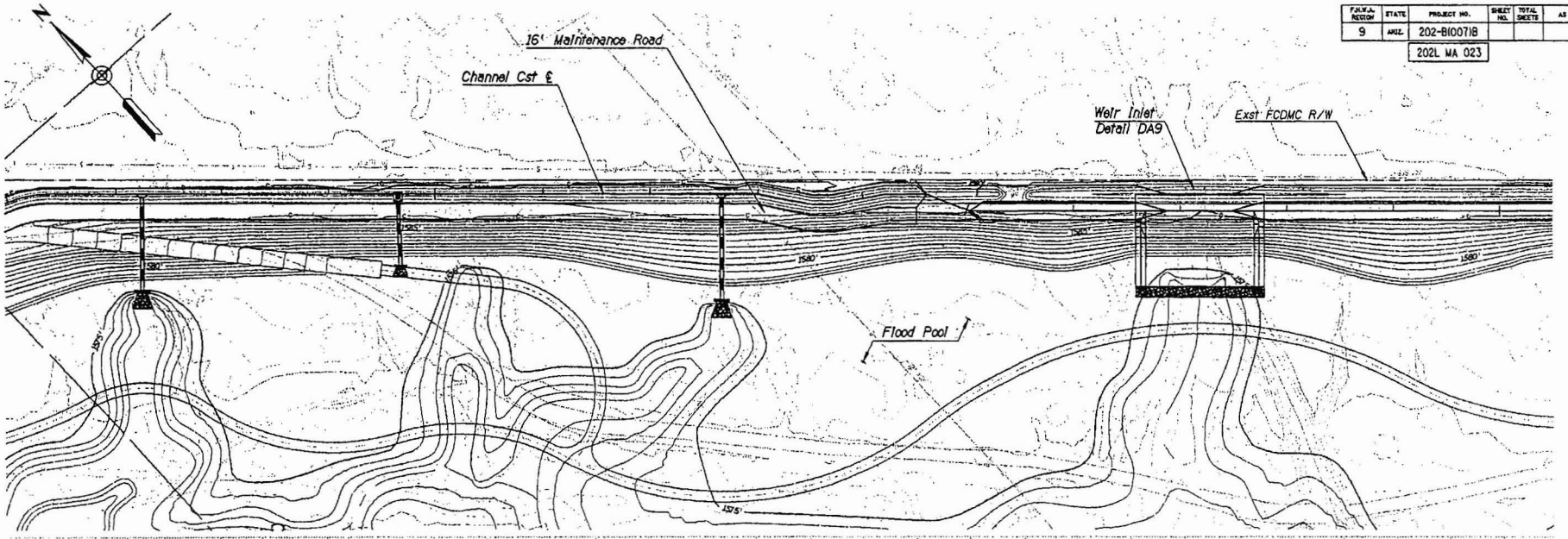

F.H.W.A. REGION	STATE	PROJECT NO.	SHEET NO.	TOTAL SHEETS	AS BUILT
9	ARIZ.	202-B(007)B			
		202L MA 023			

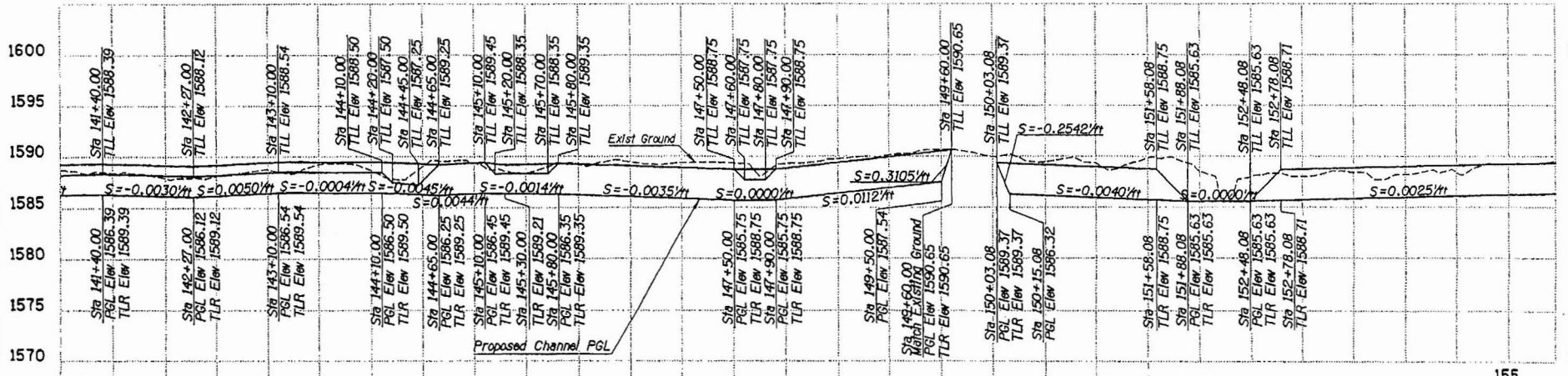

Notes: TLR=Top of Lining Right
TLL=Top of Lining Left

	NAME	DATE
DESIGN	DVD	4/05
DRAWN	MRT	4/05
CHECKED	AJR	4/05

J2 engineering and environmental design
2222 south 48th street, suite 125
Tempe, Arizona 85044
Phone: 602.438.2222
www.J2design.com

ARIZONA DEPARTMENT OF TRANSPORTATION
INTERMODAL TRANSPORTATION DIVISION
ROADWAY DESIGN SERVICES

COLLECTOR CHANNEL
PLAN & PROFILE
Sta 141+00 to Sta 155+50

PRELIMINARY
STAGE IV
95% Review
NOT FOR CONSTRUCTION OR RECORDING

ROUTE	LOCATION
202L	RED MTN FWY, POWER ROAD - UNIVERSITY DRIVE

DWG NO. D-5.25

TRACS NO. H 5782 01C | 202-B(007)B | ___ OF ___

Plotted By: MRT p:\040031\j2csd\sheets\h5782cpp10.dgn 4/5/2006 2:23:58 PM

F.H.W.A. REGION	STATE	PROJECT NO.	SHEET NO.	TOTAL SHEETS	AS BUILT
9	ARIZ.	202-B(007)B			
		202L MA 023			

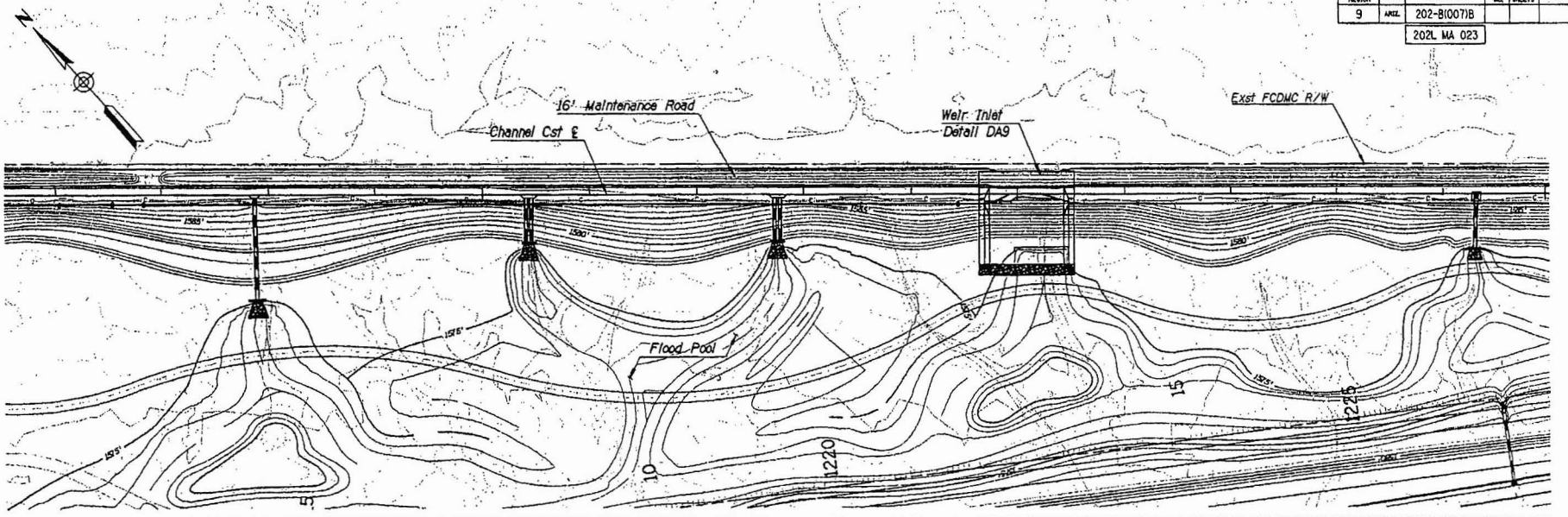

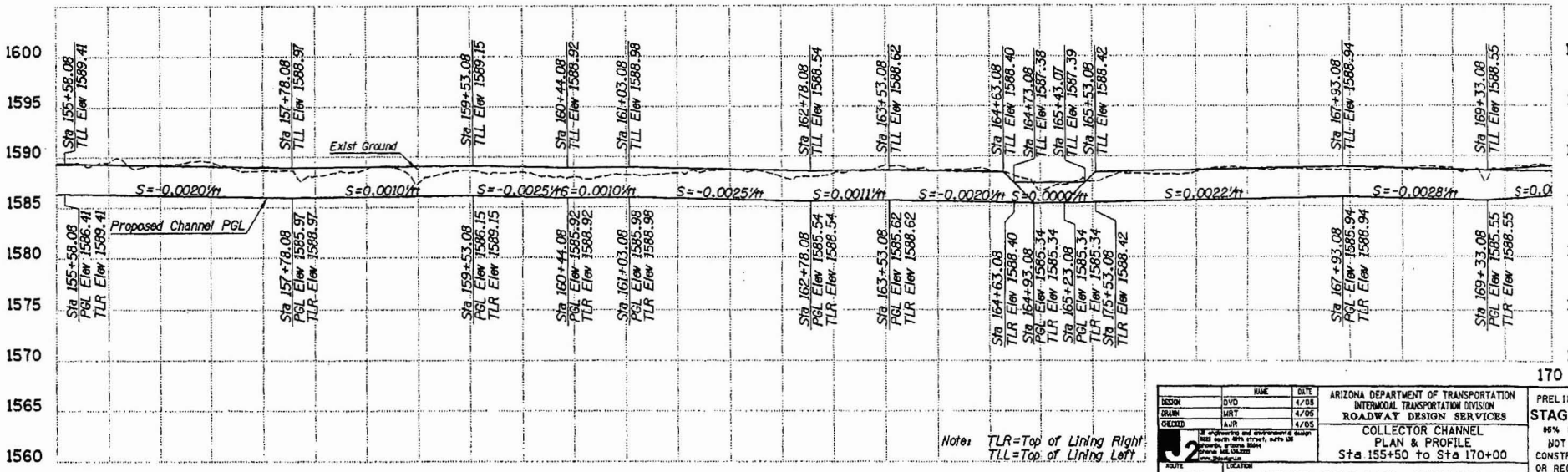

Note: TLR=Top of Lining Right
TLL=Top of Lining Left

	NAME	DATE
DESIGN	DVD	4/05
DRAWN	MRT	4/05
CHECKED	AJR	4/05

J2 engineering and environmental design
3222 south 48th street, suite 135
tempe, arizona 85282
phone 480.736.0202
www.j2engineering.com

ARIZONA DEPARTMENT OF TRANSPORTATION
INTERMODAL TRANSPORTATION DIVISION
ROADWAY DESIGN SERVICES

COLLECTOR CHANNEL
PLAN & PROFILE
Sta 155+50 to Sta 170+00

ROUTE	LOCATION
202L	RED MTN FWY, POWER ROAD - UNIVERSITY DRIVE

TRACS NO. H 5782 01C | 202-B(007)B

PRELIMINARY
STAGE IV
95% Review
NOT FOR CONSTRUCTION OR RECORDING

DWG NO. D-5.26

___ OF ___

Plotted By: MRT p:\040031\2cad\sheets\h5782cpp11.dgn 4/6/2005 2:24:18 PM

F.H.W.A. REGION	STATE	PROJECT NO.	SHEET NO.	TOTAL SHEETS	AS BUILT
9	ARIZ.	202-B(007)B			
		202L MA 023			

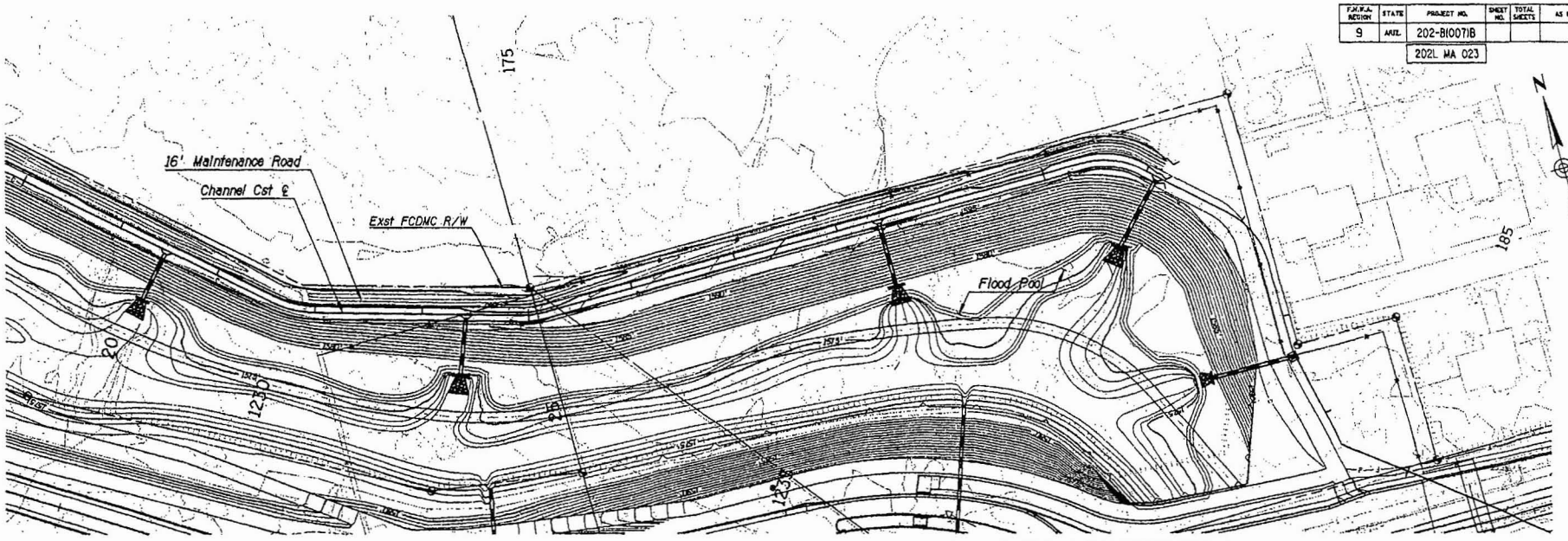

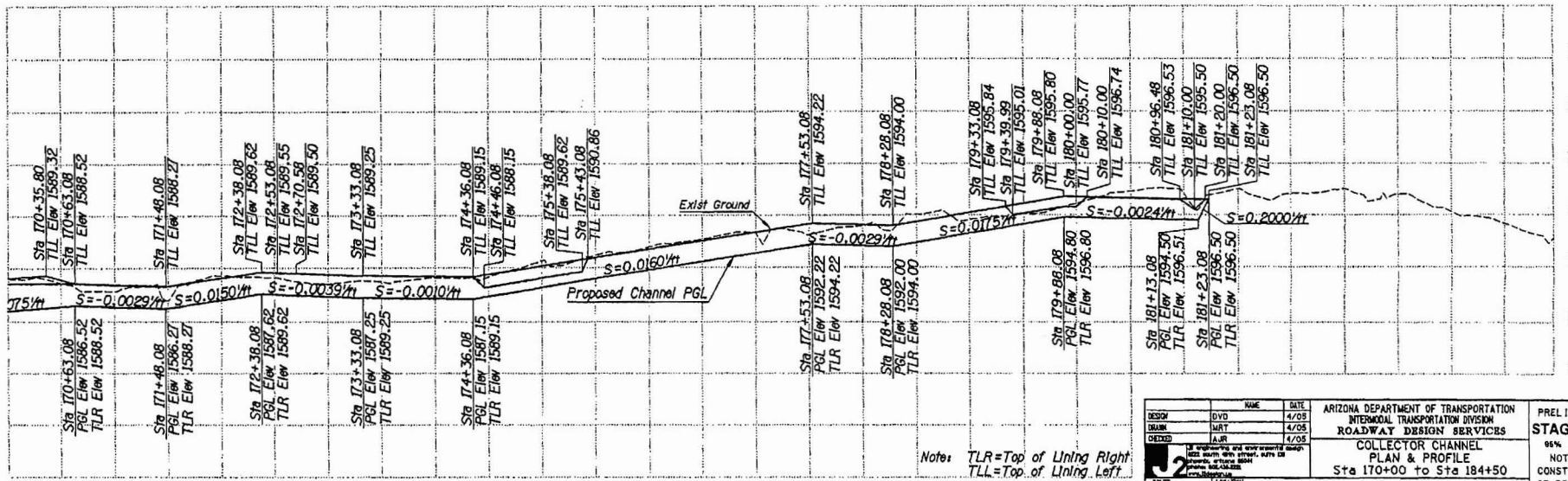

Note: TLR=Top of Lining Right
TLL=Top of Lining Left

	NAME	DATE
DESIGN	DVD	4/05
DRAWN	MRT	4/05
CHECKED	AJR	4/05

J2 engineering and environmental design
222 south 4th street, suite 28
phoenix, arizona 85004
phone 602.126.2555
www.j2design.us

ARIZONA DEPARTMENT OF TRANSPORTATION
INTERMODAL TRANSPORTATION DIVISION
ROADWAY DESIGN SERVICES

COLLECTOR CHANNEL
PLAN & PROFILE
Sta 170+00 to Sta 184+50

PRELIMINARY
STAGE IV
95% Review
NOT FOR CONSTRUCTION OR RECORDING

ROUTE	LOCATION	DWG NO. 0-5.27
202L	RED MTN FWY, POWER ROAD - UNIVERSITY DRIVE	
TRACS NO. H 5782 01C	202-B(007)B	___ OF ___

Plotted By: MRT p:\040031\j2cad\sheets\h5782cpp12.dgn 4/15/2005 2:24:39 PM

F.H.W.A. REGION	STATE	PROJECT NO.	SHEET NO.	TOTAL SHEETS	AS BUILT
9	ARIZ.	202-B(007)B			
		202L MA 023			

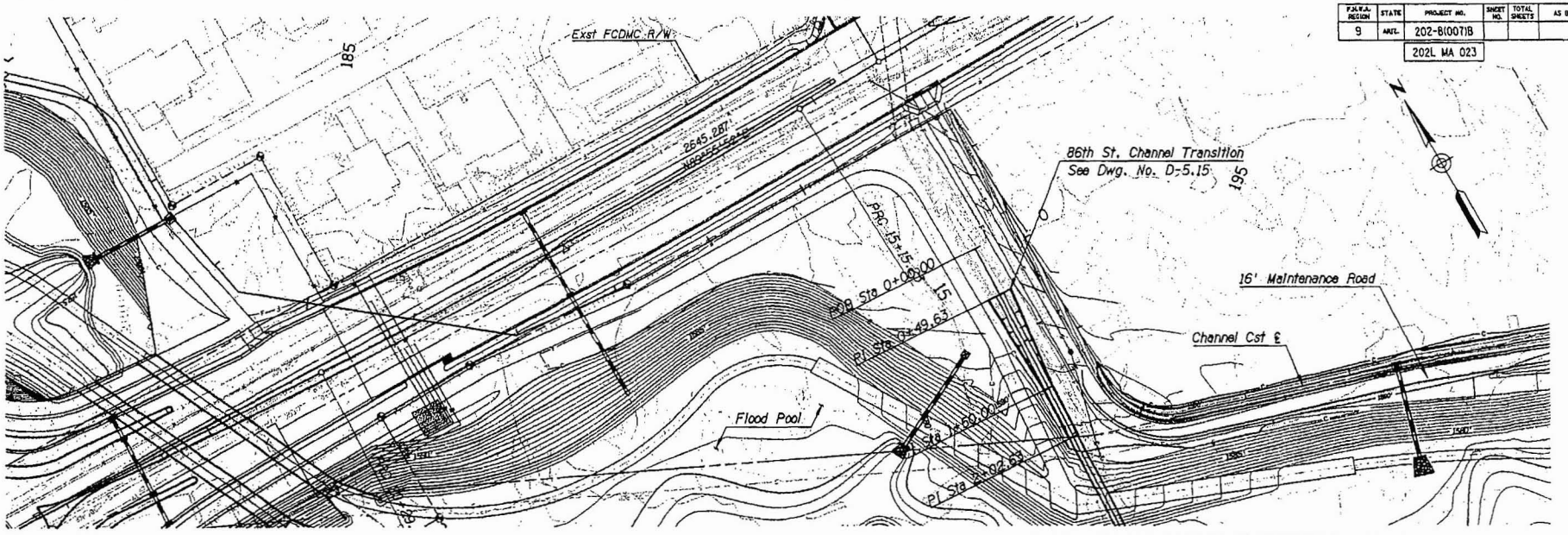

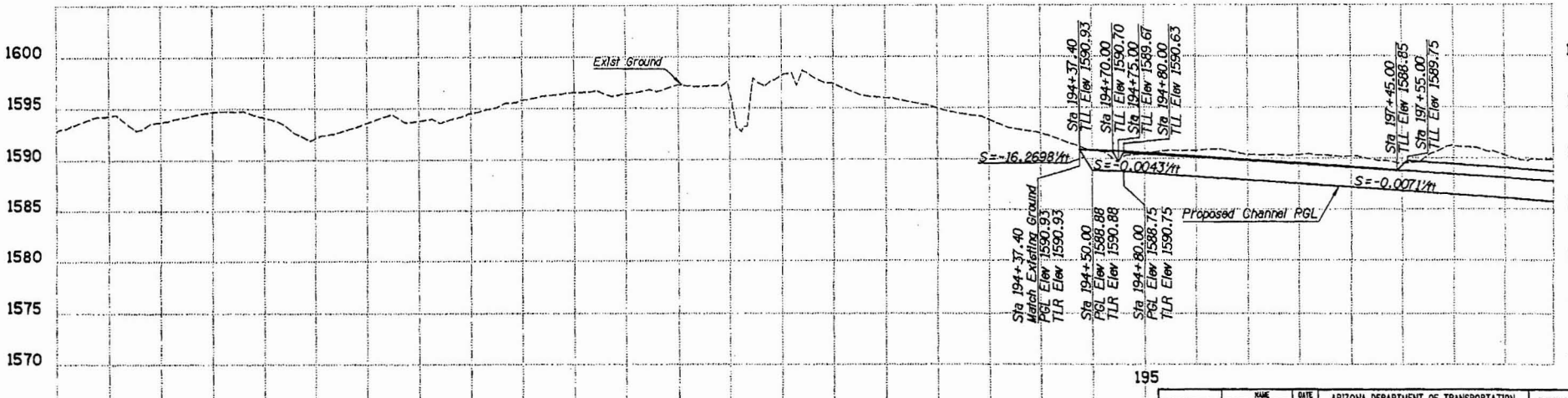

Note: TLR=Top of Lining Right
TLL=Top of Lining Left

	NAME	DATE
DESIGN	DVD	4/05
DRAWN	MRT	4/05
CHECKED	AJR	4/05

J2 engineering and environmental design
8222 south 48th street, suite 126
phoenix, arizona 85044
phone 602.438.2500
www.j2eng.com

ARIZONA DEPARTMENT OF TRANSPORTATION
INTERMODAL TRANSPORTATION DIVISION
ROADWAY DESIGN SERVICES

COLLECTOR CHANNEL
PLAN & PROFILE
Sta 184+50 to Sta 199+00

ROUTE	LOCATION
202L	RED MTN FWY, POWER ROAD - UNIVERSITY DRIVE

TRACS NO. H 5782 01C | 202-B(007)B

PRELIMINARY
STAGE IV
95% Review
NOT FOR CONSTRUCTION OR RECORDING

DWG NO. D-5.28

___ OF ___

Plotted By: MRT p:\040031\j2sad\sheets\h5782cpp13.dgn 4/5/2005 2:25:00 PM

F.H.W.A. REGION	STATE	PROJECT NO.	SHEET NO.	TOTAL SHEETS	AS BUILT
9	ARIZ.	202-B(007)B			
		202L MA 023			

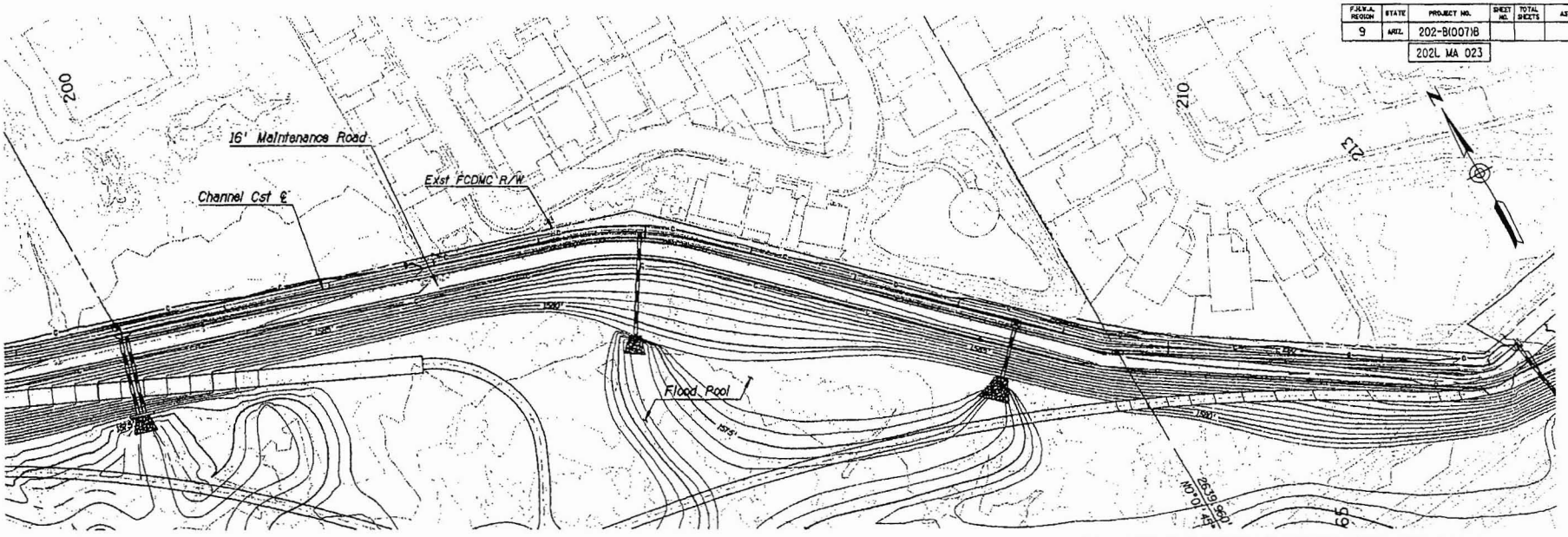

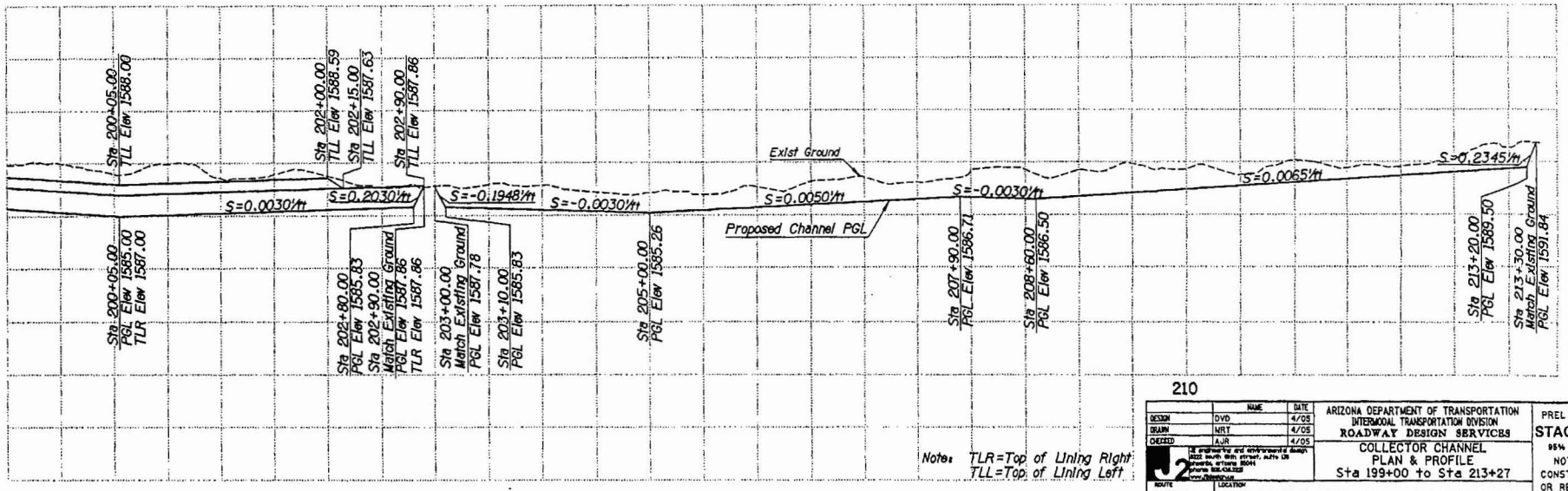

Note: TLR=Top of Lining Right
TLL=Top of Lining Left

	NAME	DATE
DESIGN	DVD	4/05
DRAWN	MRT	4/05
CHECKED	AJR	4/05

J2 engineering and environmental design
2525 south 48th street, suite 130
phoenix, arizona 85044
phone 602.438.2500
www.j2engineering.com

ARIZONA DEPARTMENT OF TRANSPORTATION
INTERMODAL TRANSPORTATION DIVISION
ROADWAY DESIGN SERVICES

COLLECTOR CHANNEL
PLAN & PROFILE
Sta 199+00 to Sta 213+27

PRELIMINARY
STAGE IV
95% Review
NOT FOR CONSTRUCTION OR RECORDING

ROUTE	LOCATION	DWG NO. 0-5.29
202L	RED MTN FWY, POWER ROAD - UNIVERSITY DRIVE	
TRACS NO. H 5782 01C	202-B(007)B	___ OF ___

Plotted By: MAT p:\040031\j2cad\sheets\h5782opp14.dgn 4/15/2005 2:25:19 PM

F.H.W.A. REGION	STATE	PROJECT NO.	SHEET NO.	TOTAL SHEETS	AS BUILT
9	ARIZ.	202-B(007)B			
		202L MA 023			

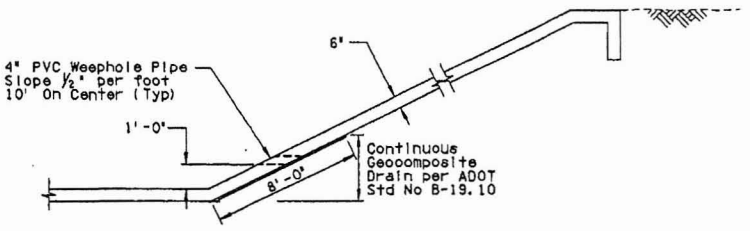

See Section 1014-6
of the Std Specifications
for fabric requirements

WEEPHOLE DETAIL
NTS

Note:

Weepholes typical along
Channel and Transitions.

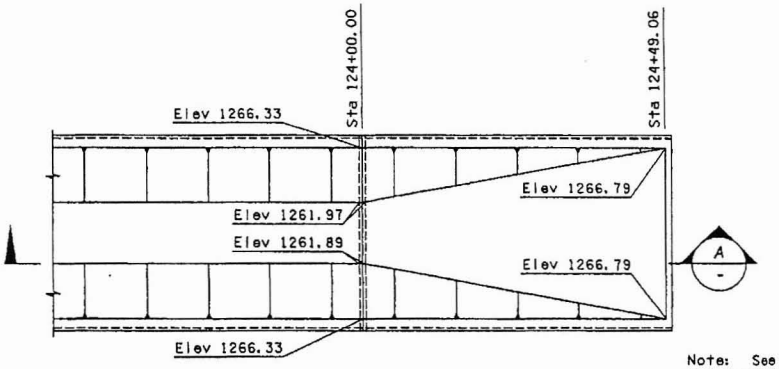

Note: See also
Dwg No D-5.13

END CHANNEL DETAIL (EAST CHANNEL)

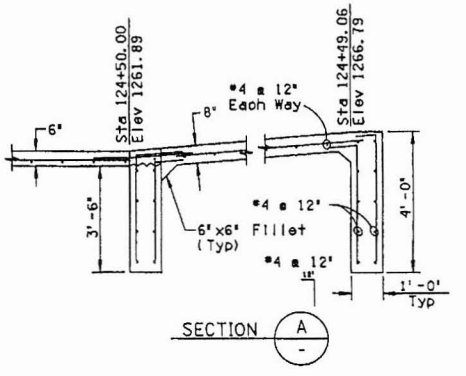

DETAIL DA1

Note:

Turndowns shall be constructed along
total width of channel including
side slopes.

	NAME	DATE
DESIGN	DVD	4/05
DRAWN	MRT	4/05
CHECKED	AJR	4/05

J2 engineering and environmental design
4222 south 40th street, suite 128
phoenix, arizona 85044
phone 602.438.2222
www.j2design.com

ARIZONA DEPARTMENT OF TRANSPORTATION
INTERMODAL TRANSPORTATION DIVISION
ROADWAY DESIGN SERVICES

MISCELLANEOUS CHANNEL DETAILS

PRELIMINARY
STAGE IV
95% Review
NOT FOR
CONSTRUCTION
OR RECORDING

ROUTE	LOCATION	DWG NO. D-5.30
202L	RED MTN FWY, POWER ROAD - UNIVERSITY DRIVE	
TRACS NO. H 5782 01C	202-B(007)B	___ OF ___

Plotted By: MRT p:\040031\j2csd\sheets\h5782dd102.dgn 4/5/2005 2:25:21 PM

P.M.W.J. REGION	STATE	PROJECT NO.	SHEET NO.	TOTAL SHEETS	AS BUILT
9	ARIZ.	202-B(007)B			
		202L MA 023			

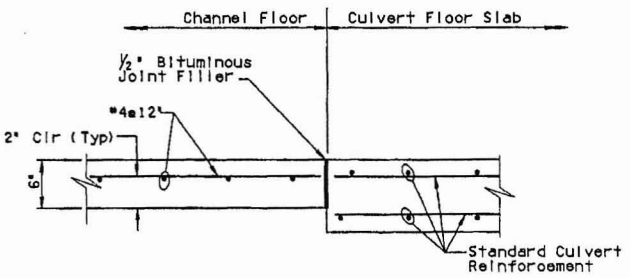

CHANNEL TO CULVERT CONNECTION DETAIL
NTS

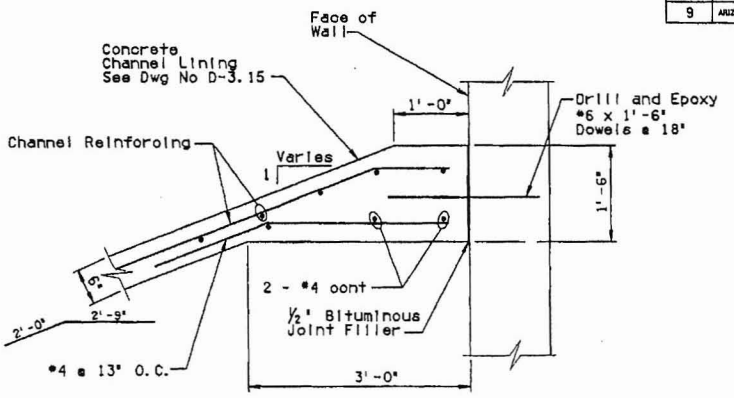

TYPICAL JOINT BETWEEN RETAINING WALL AND CHANNEL LINING
NTS

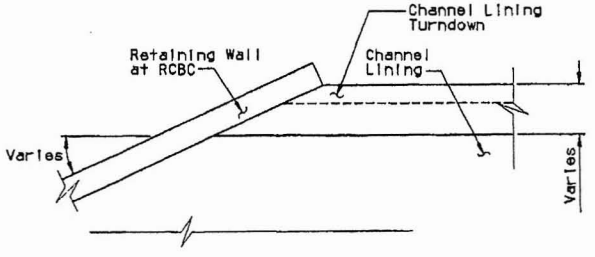

TYPICAL WALL TO CHANNEL LINING CONNECTION
NTS

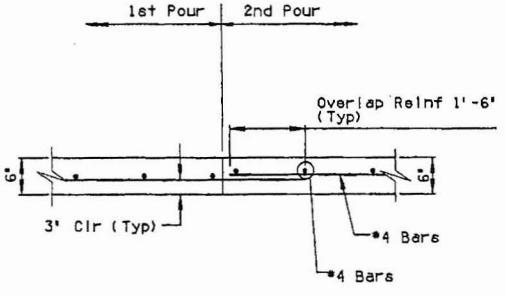

LINING TO LINING CONSTRUCTION JOINT DETAILS
NTS

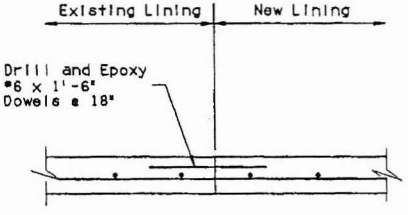

EXISTING LINING TO NEW LINING JOINT DETAIL
NTS

DETAIL DA2

	NAME	DATE
DESIGN	DVD	4/05
DRAWN	MRT	4/05
CHECKED	AJR	4/05

J2 engineering and environmental design
1922 south 48th street, suite 120
phoenix, arizona 85044
phone 602.438.2020
www.j2design.com

ARIZONA DEPARTMENT OF TRANSPORTATION
INTERMODAL TRANSPORTATION DIVISION
ROADWAY DESIGN SERVICES

MISCELLANEOUS CHANNEL DETAILS

PRELIMINARY
STAGE IV
95% Review
NOT FOR CONSTRUCTION OR RECORDING

ROUTE	LOCATION	DWG NO. D-5.31
202L	RED MTN FWY, POWER ROAD - UNIVERSITY DRIVE	
TRACS NO. H 5782 01C	202-B(007)B	___ OF ___

Plotted By: Patty M p:\040031\J2Cad\Sheets\H8782DDT03.dgn 4/15/2005 3:29:34 PM

F.H.W.A. REGION	STATE	PROJECT NO.	SHEET NO.	TOTAL SHEETS	AS BUILT
9	ARIZ.	202-B(007)B			
		202L MA 023			

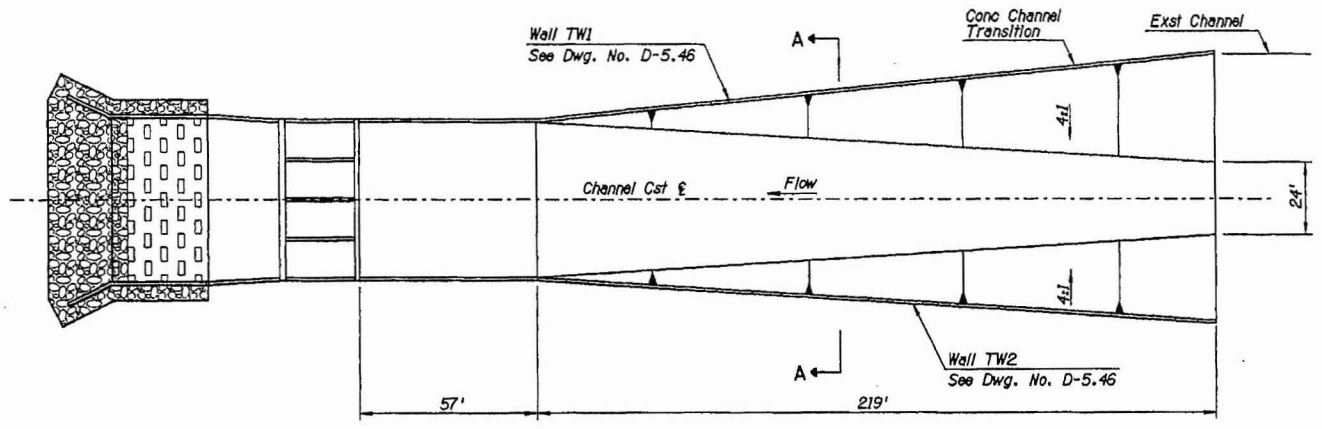

PLAN

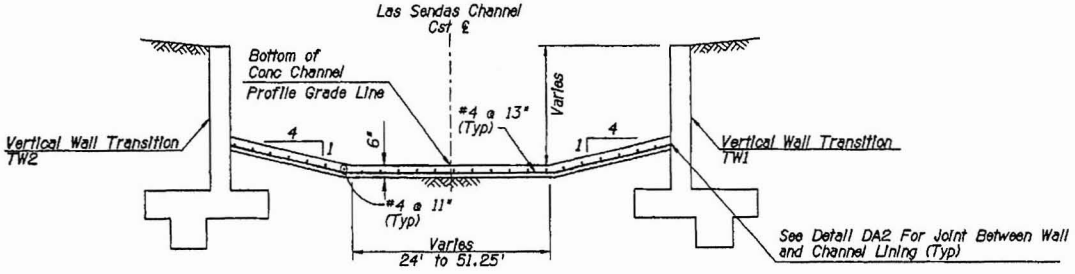

SECTION A-A

DETAIL DA3

	NAME	DATE
DESIGN	DVD	4/05
DRAWN	MRT	4/05
CHECKED	AJR	4/05

J2 engineering and environmental design
3232 south 40th street, suite 138
phoenix, arizona 85041
phone: 602.454.3335
www.j2engineering.com

ARIZONA DEPARTMENT OF TRANSPORTATION
INTERMODAL TRANSPORTATION DIVISION
ROADWAY DESIGN SERVICES

LAS SENDAS CHANNEL TRANSITION

PRELIMINARY
STAGE IV
95% Review
NOT FOR CONSTRUCTION OR RECORDING

ROUTE	LOCATION
202L	RED MTN FWY, POWER ROAD - UNIVERSITY DRIVE

DWG NO. D-5.32

TRACS NO. H 5782 01C | 202-B(007)B | ___ OF ___

Plotted By: MRT p:\040031\j2cad\sheets\h5782ddt04.dgn 4/6/2005 2:26:22 PM

F.A.H.U. REGION	STATE	PROJECT NO.	SHEET NO.	TOTAL SHEETS	AS BUILT
9	ARIZ.	202-B(007)B			
		202L MA 023			

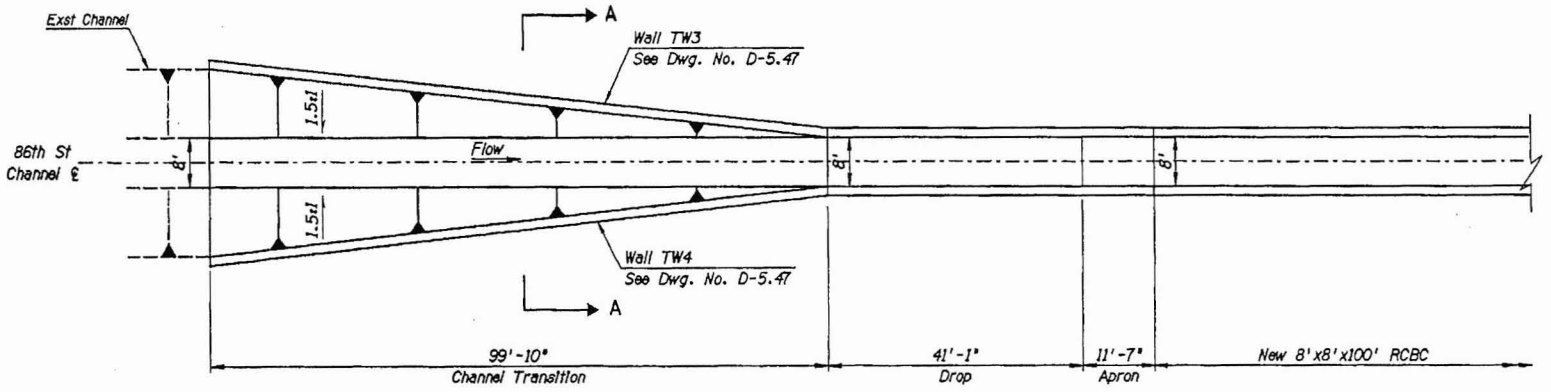

86th ST CHANNEL TRANSITION PLAN DETAIL

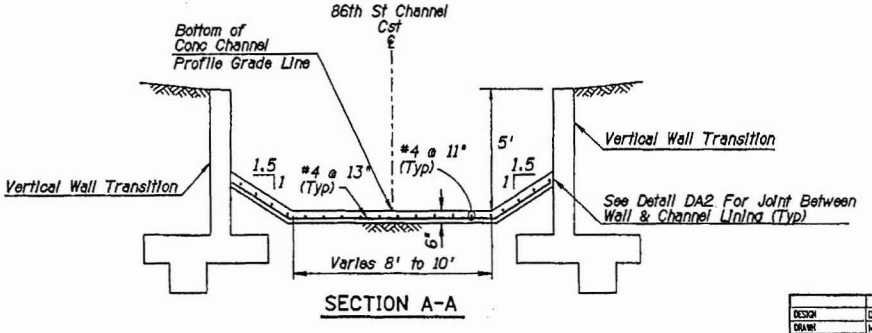

SECTION A-A

DETAIL DA5

	NAME	DATE
DESIGN	DVD	4/05
DRAWN	MRT	4/05
CHECKED	AJR	4/05

J2 engineering and environmental design
8222 south 48th street, suite 120
phoenix, arizona 85044
phone 480.598.9555
www.j2design.us

ARIZONA DEPARTMENT OF TRANSPORTATION
INTERMODAL TRANSPORTATION DIVISION
ROADWAY DESIGN SERVICES

86th ST CHANNEL TRANSITION

PRELIMINARY
STAGE IV
95% Review
NOT FOR CONSTRUCTION OR RECORDING

ROUTE	LOCATION
202L	RED MTN FWY, POWER ROAD - UNIVERSITY DRIVE

DWG NO. D-5.35

TRACS NO. H 5782 01C | 202-B(007)B | ___ OF ___

Plotted By: MRT p:\040931\j2cad\sheets\h5782ddt06.dgn 4/6/2005 2:25:24 PM

F.H.W.A. REGION	STATE	PROJECT NO.	SHEET NO.	TOTAL SHEETS	AS BUILT
9	ARIZ.	202-B(007)B			
		202L MA 023			

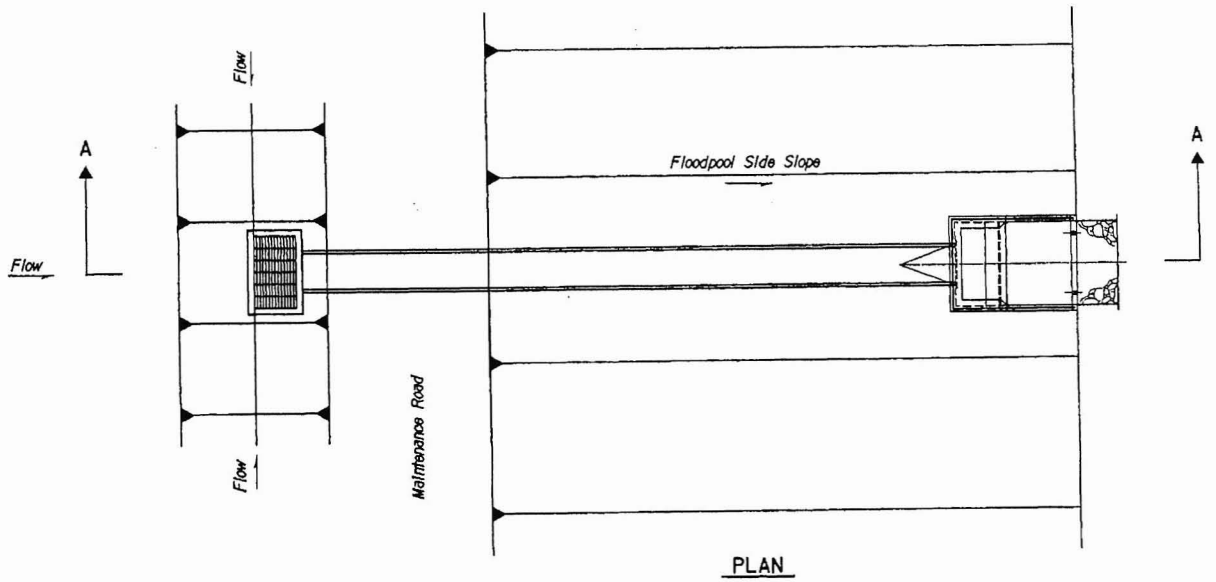

PLAN

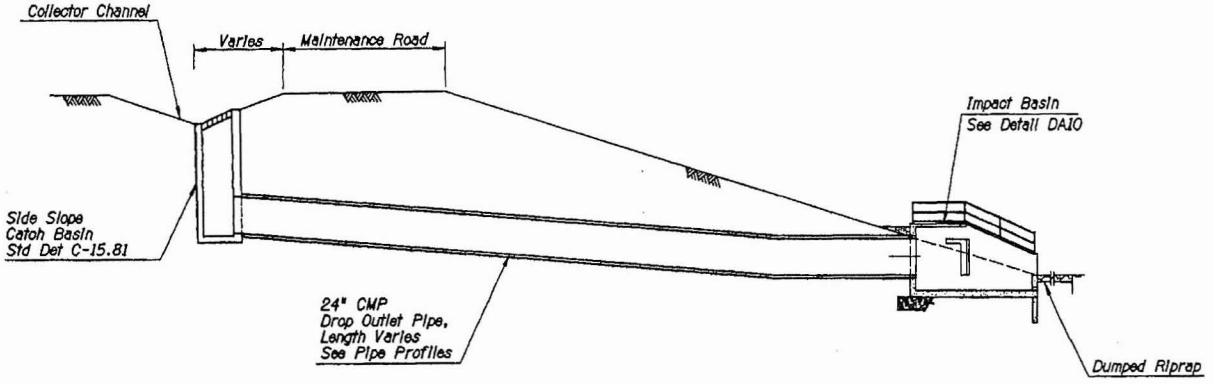

SECTION A-A

DETAIL DA7

	NAME	DATE
DESIGN	DVD	4/05
DRAWN	MRT	4/05
CHECKED	AJR	4/05

J2 engineering and environmental design
8222 south 48th street, suite 120
phoenix, arizona 85044
phone 480.496.2388
www.j2design.us

ARIZONA DEPARTMENT OF TRANSPORTATION
INTERMODAL TRANSPORTATION DIVISION
ROADWAY DESIGN SERVICES

SMALL DROP INLET
TYPICAL DETAIL

PRELIMINARY
STAGE IV
95% Review
NOT FOR CONSTRUCTION OR RECORDING

ROUTE	LOCATION	DWG NO. D-5.37
202L	RED MTN FWY, POWER ROAD - UNIVERSITY DRIVE	
TRACS NO. H 5782 01C	202-B(007)B	___ OF ___

Plotted By: MRT p:\040031\j2cad\sheets\h5782ddt08.dgn 4/15/2005 2:25:25 PM

F.H.W.A. REGION	STATE	PROJECT NO.	SHEET NO.	TOTAL SHEETS	AS BUILT
9	ARIZ.	202-B(007)B			
		202L MA 023			

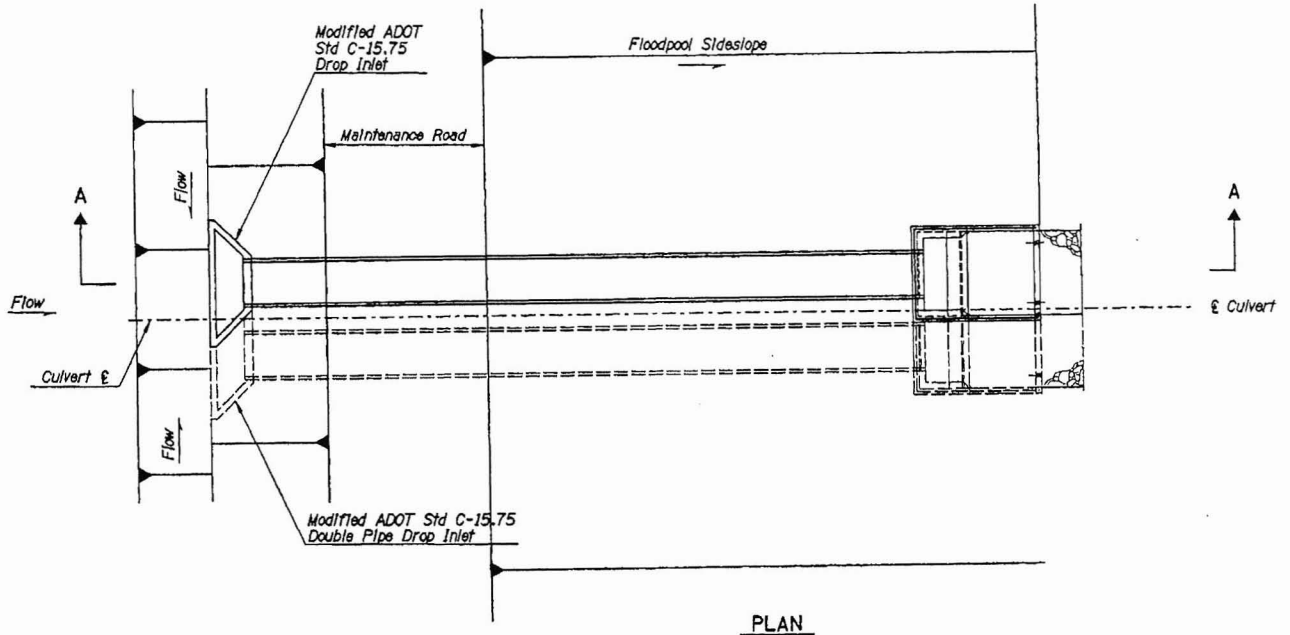

PLAN

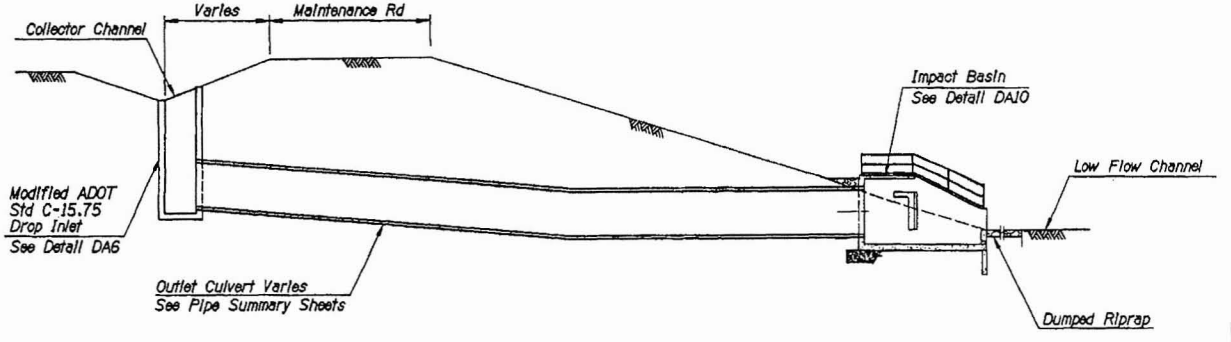

SECTION A-A

DETAIL DA8

	NAME	DATE
DESIGN	DVD	4/05
DRAWN	MRT	4/05
CHECKED	AJR	4/05

J2 engineering and environmental design
2902 south 48th street, suite 125
tempe, arizona 85044
phone 602.438.2525
www.j2design.us

ARIZONA DEPARTMENT OF TRANSPORTATION
INTERMODAL TRANSPORTATION DIVISION
ROADWAY DESIGN SERVICES

LARGE DROP INLET
TYPICAL DETAIL

PRELIMINARY
STAGE IV
95% Review
NOT FOR CONSTRUCTION OR RECORDING

ROUTE	LOCATION
202L	RED MTN FWY, POWER ROAD - UNIVERSITY DRIVE

DWG NO. D-5.38

TRACS NO. H 5782 01C | 202-B(007)B | ___ OF ___

Plotted By: MRT p:\040031\j2cad\sheets\h5782ddt10.dgn 4/5/2006 2:26:25 PM

F.A.H.U. REGION	STATE	PROJECT NO.	SHEET NO.	TOTAL SHEETS	AS BUILT
9	ARIZ.	202-B(007)B			
		202L MA 023			

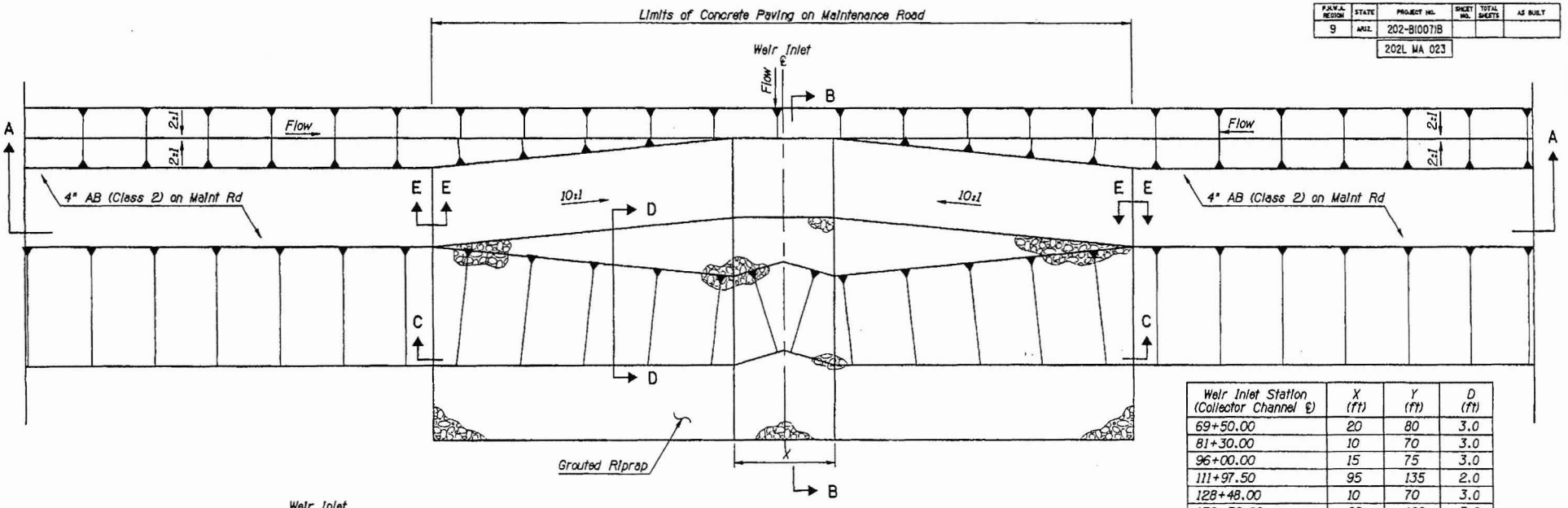

Weir Inlet Station (Collector Channel ℄)	X (ft)	Y (ft)	D (ft)
69+50.00	20	80	3.0
81+30.00	10	70	3.0
96+00.00	15	75	3.0
111+97.50	95	135	2.0
128+48.00	10	70	3.0
152+32.00	60	120	3.0
165+27.00	30	90	3.0

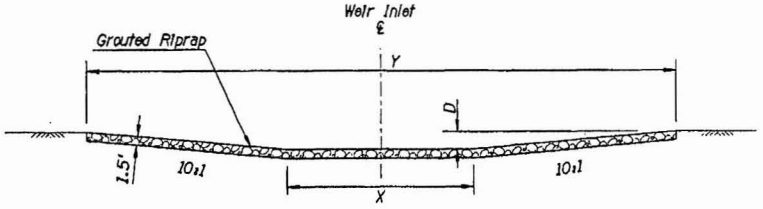

SECTION A-A

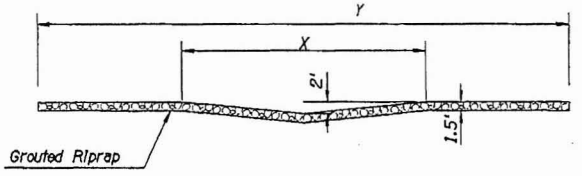

SECTION C-C

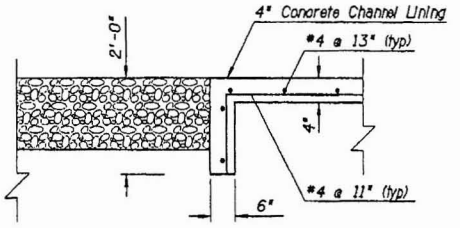

SECTION E-E

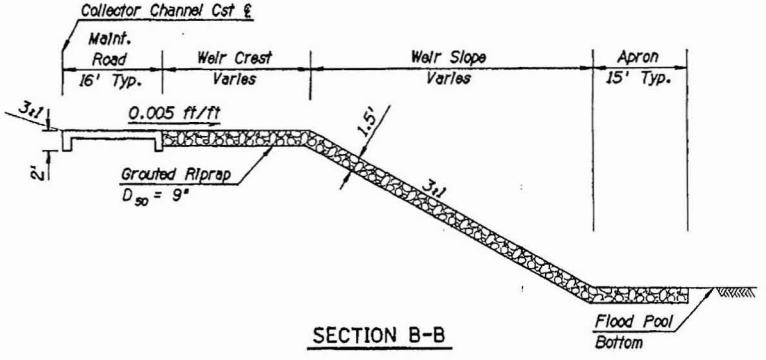

SECTION B-B

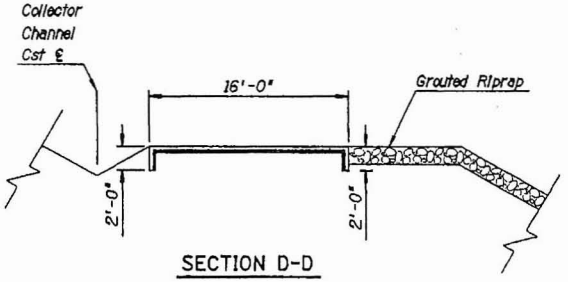

SECTION D-D

DETAIL DA9

	NAME	DATE
DESIGN	DVD	4/05
DRAWN	MRT	4/05
CHECKED	AJR	4/05

J2 engineering and environmental design, 3222 south 48th street, suite 125, phoenix, arizona 85040, phone: 602.454.3929, www.J2design.us

ARIZONA DEPARTMENT OF TRANSPORTATION
INTERMODAL TRANSPORTATION DIVISION
ROADWAY DESIGN SERVICES

WEIR INLET
TYPICAL DETAIL

ROUTE	LOCATION
202L	RED MTN FWY, POWER ROAD - UNIVERSITY DRIVE

TRACS NO. H 5782 01C | 202-B(007)B

PRELIMINARY
STAGE IV
95% Review
NOT FOR CONSTRUCTION OR RECORDING

DWG NO. D-5.39
___ OF ___

Plotted By: MRT p:\040031\j2cad\sheets\h5782ddt09.dgn 4/15/2005 2:25:28 PM

F.H.W.A. REGION	STATE	PROJECT NO.	SHEET NO.	TOTAL SHEETS	AS BUILT
9	ARIZ.	202-B(007)B			
		202L MA 023			

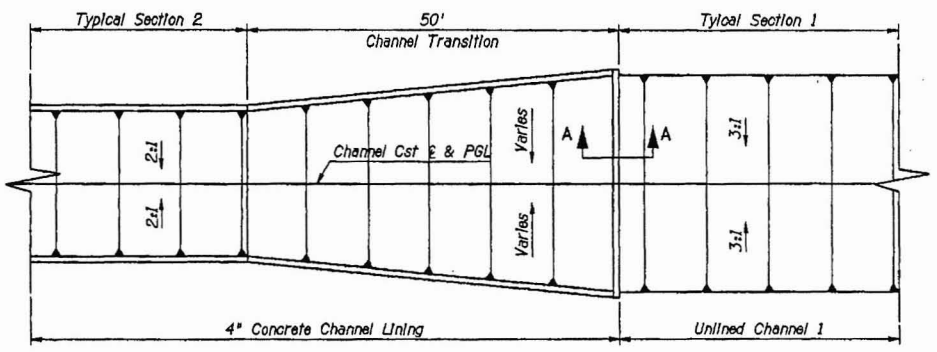

PLAN

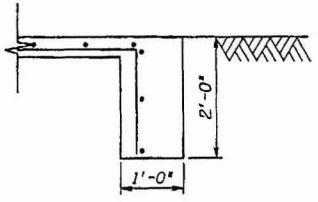

SECTION A-A

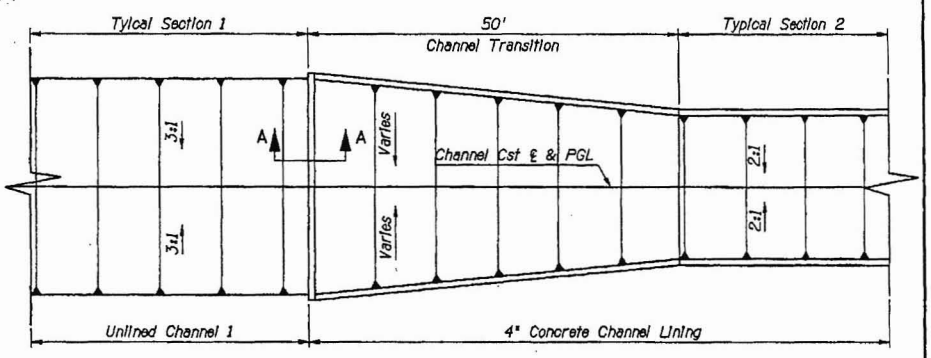

PLAN

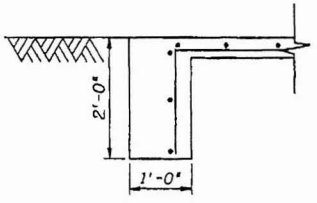

SECTION A-A

DETAIL DA11

	NAME	DATE
DESIGN	DVD	4/05
DRAWN	MRT	4/05
CHECKED	AJR	4/05

J2 engineering and environmental design
3222 south 48th street, suite 125
phoenix, arizona 85044
phone 602.438.0328
www.j2design.us

ARIZONA DEPARTMENT OF TRANSPORTATION
INTERMODAL TRANSPORTATION DIVISION
ROADWAY DESIGN SERVICES

COLLECTOR CHANNEL TRANSITION

PRELIMINARY
STAGE IV
85% Review
NOT FOR CONSTRUCTION OR RECORDING

ROUTE	LOCATION	DWG NO. D-5.43
202L	REO MTN FWY, POWER ROAD - UNIVERSITY DRIVE	
TRACS NO. H 5782 01C	202-B(007)B	___ OF ___

Plotted By: MRT p:\640031\j2cad\sheets\h5782ddt12.dgn 4/15/2006 2:34:04 PM

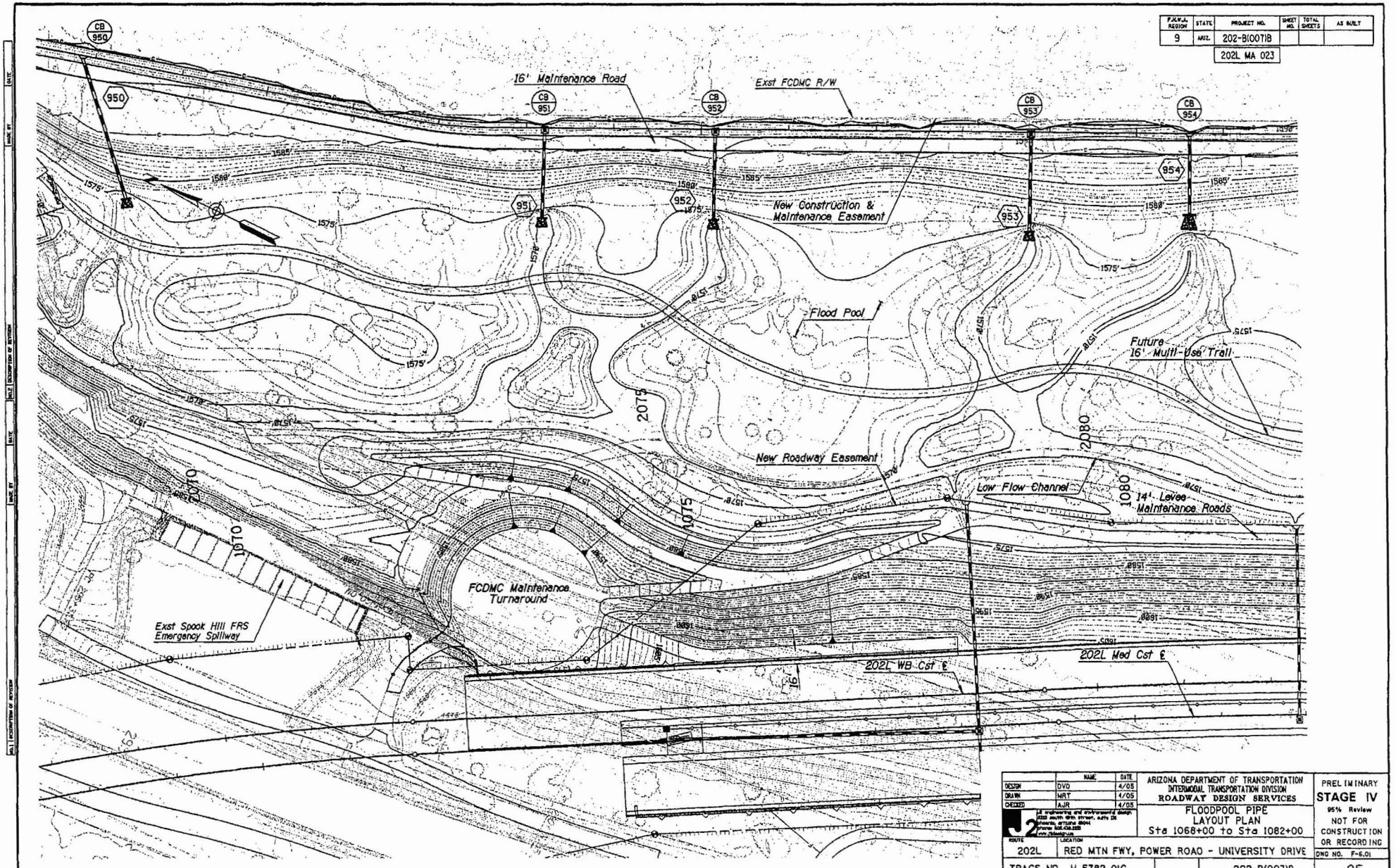

F.H.W.A. REGION	STATE	PROJECT NO.	SHEET NO.	TOTAL SHEETS	AS BUILT
9	ARIZ.	202-B(007)B			
		202L MA 023			

	NAME	DATE
DESIGN	DVD	4/05
DRAWN	MRT	4/05
CHECKED	AJR	4/05

J2 engineering and environmental design
4222 south 40th street, suite 20
phoenix, arizona 85040
phone 602.438.2500
www.j2design.com

ARIZONA DEPARTMENT OF TRANSPORTATION
INTERMODAL TRANSPORTATION DIVISION
ROADWAY DESIGN SERVICES

FLOODPOOL PIPE
LAYOUT PLAN
Sta 1068+00 to Sta 1082+00

ROUTE	LOCATION
202L	RED MTN FWY, POWER ROAD - UNIVERSITY DRIVE

TRACS NO. H 5782 01C | 202-B(007)B

PRELIMINARY
STAGE IV
95% Review
NOT FOR CONSTRUCTION OR RECORDING

DNG NO. F-6.01

___ OF ___

Plotted By: MRT p:\040031\j2cad\sheets\h5782dp101.dgn 4/15/2005 2:28:59 PM

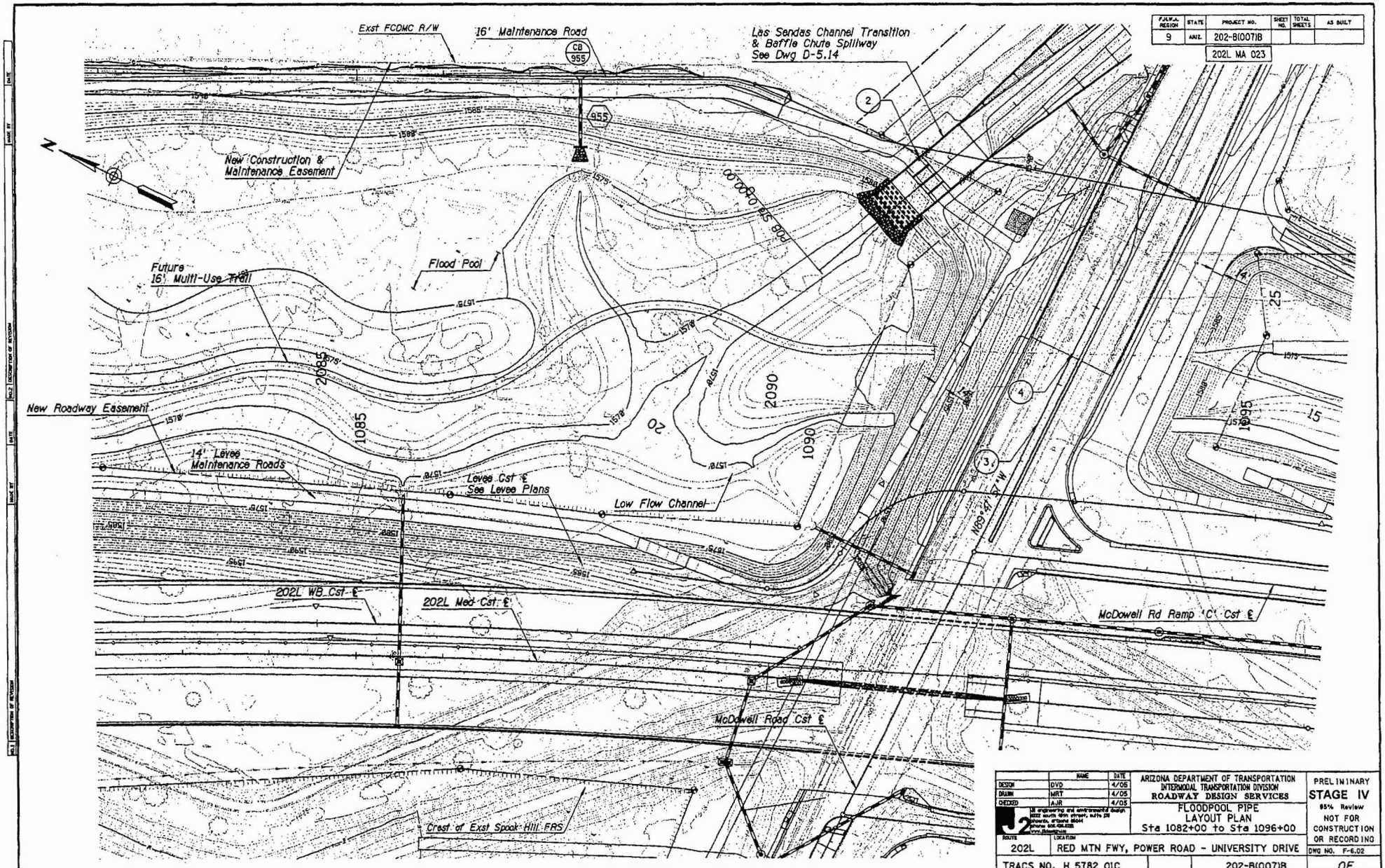

F.H.W.A. REGION	STATE	PROJECT NO.	SHEET NO.	TOTAL SHEETS	AS BUILT
9	ARIZ.	202-B(007)B			

202L MA 023

	NAME	DATE
DESIGN	DVD	4/05
DRAWN	MRT	4/05
CHECKED	AJR	4/05

J2 engineering and environmental design
1802 south 48th street, suite 20
phoenix, arizona 85044
phone 602.438.2525
www.j2design.com

ARIZONA DEPARTMENT OF TRANSPORTATION
INTERMODAL TRANSPORTATION DIVISION
ROADWAY DESIGN SERVICES

FLOODPOOL PIPE
LAYOUT PLAN
Sta 1082+00 to Sta 1096+00

ROUTE	LOCATION
202L	RED MTN FWY, POWER ROAD - UNIVERSITY DRIVE

TRACS NO. H 5782 01C | 202-B(007)B

PRELIMINARY
STAGE IV
95% Review
NOT FOR CONSTRUCTION OR RECORDING

DWG NO. F-6.02

___ OF ___

Plotted By: MRT p:\04003i\j2cad\sheets\h5782dpl02.dgn 4/6/2005 2:28:30 PM

F.H.W.A. REGION	STATE	PROJECT NO.	SHEET NO.	TOTAL SHEETS	AS BUILT
9	ARIZ.	202-B(007)B			
		202L MA 023			

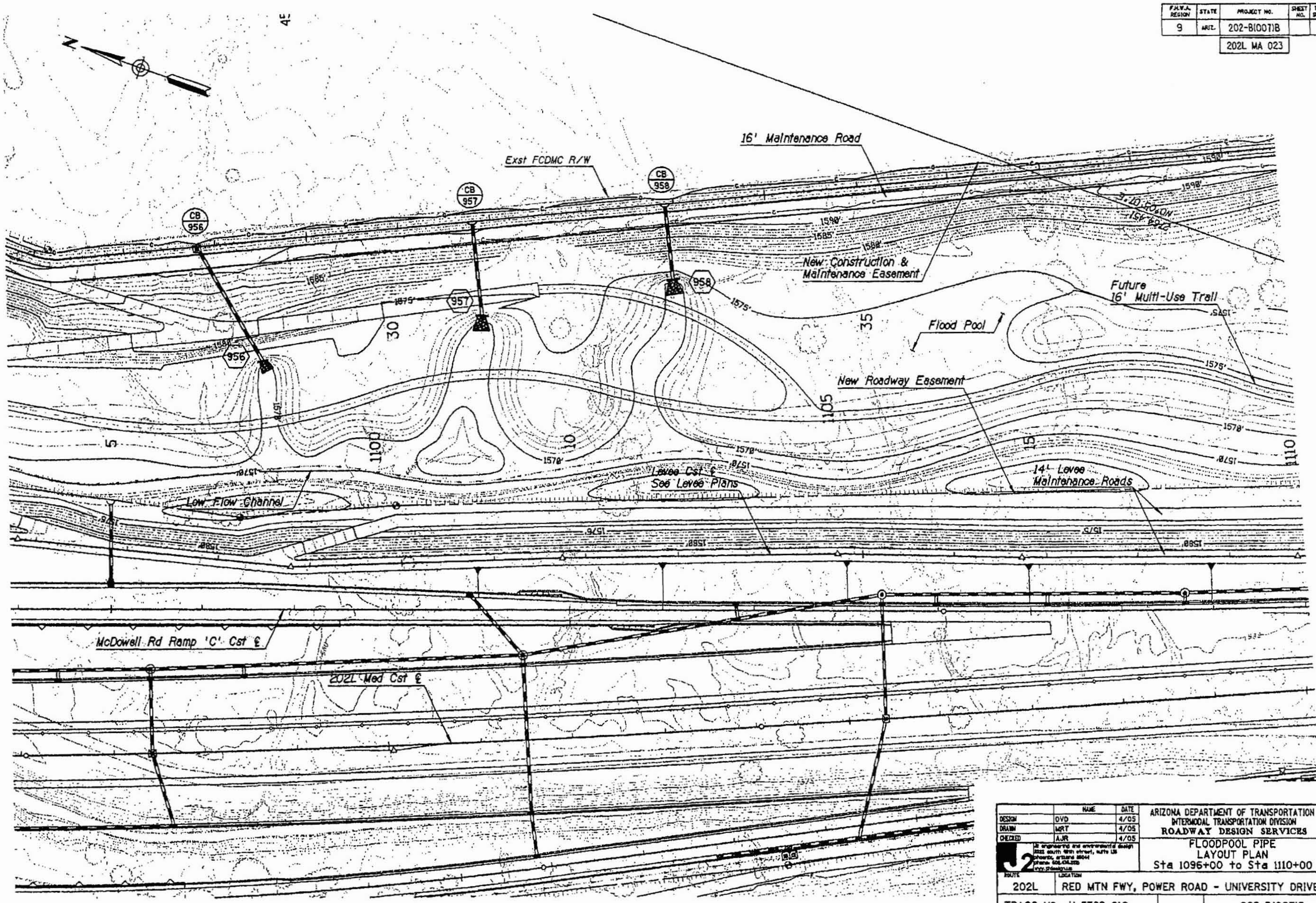

	NAME	DATE
DESIGN	DVD	4/05
DRAWN	MRT	4/05
CHECKED	AJR	4/05

J2 engineering and environmental design

ARIZONA DEPARTMENT OF TRANSPORTATION
INTERMODAL TRANSPORTATION DIVISION
ROADWAY DESIGN SERVICES

FLOODPOOL PIPE
LAYOUT PLAN
Sta 1096+00 to Sta 1110+00

PRELIMINARY
STAGE IV
95% Review
NOT FOR CONSTRUCTION OR RECORDING

ROUTE: 202L | LOCATION: RED MTN FWY, POWER ROAD - UNIVERSITY DRIVE | DWG NO. F-5.03

TRACS NO. H 5782 01C | 202-B(007)B | ___ OF ___

Plotted By: MRT p:\040031\J2cad\sheets\h5782dpl03.dgn 4/5/2005 2:27:04 PM

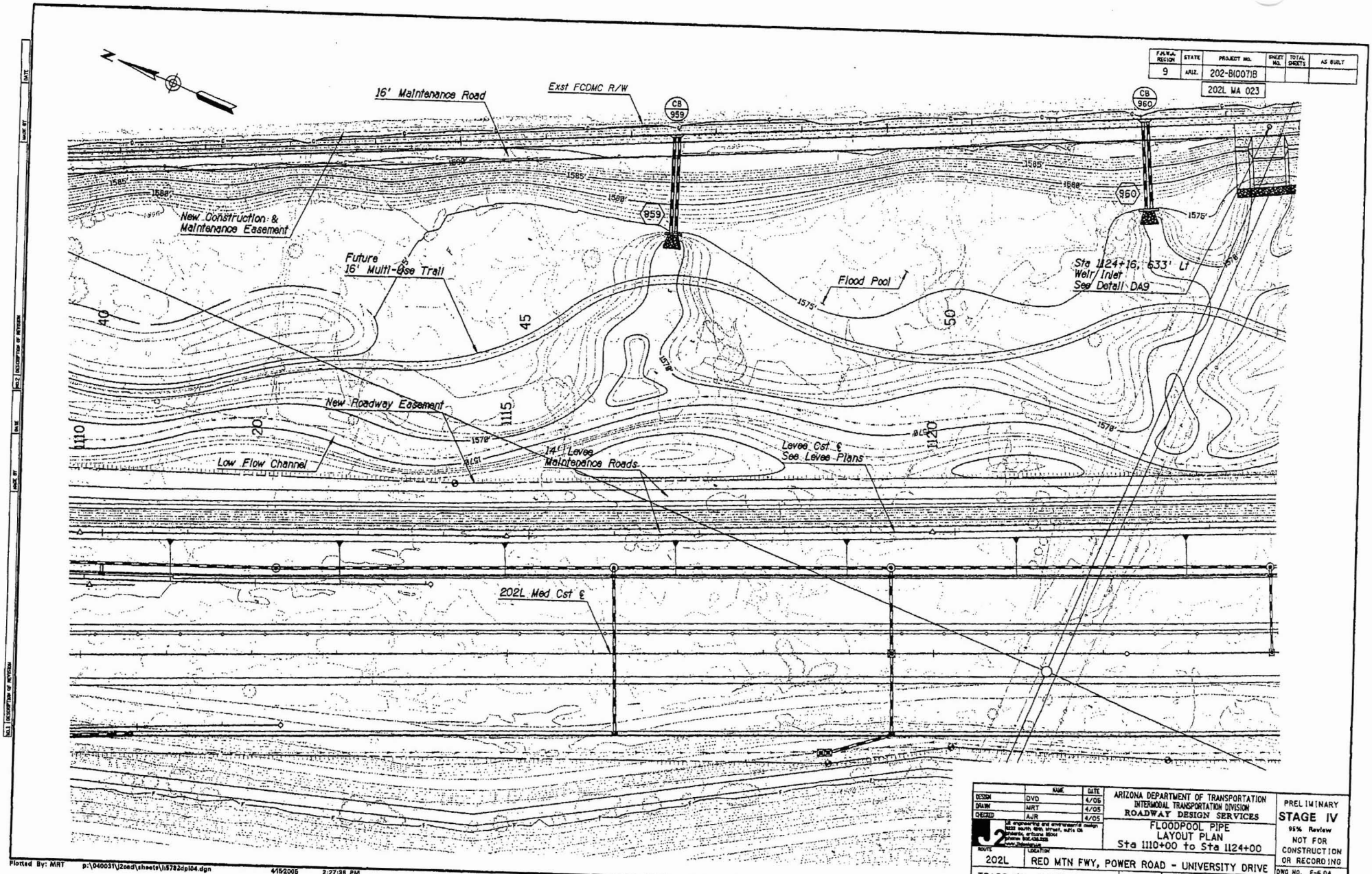

F.H.W.A. REGION	STATE	PROJECT NO.	SHEET NO.	TOTAL SHEETS	AS BUILT
9	ARIZ.	202-B(007)B			
		202L MA 023			

	NAME	DATE
DESIGN	DVD	4/05
DRAWN	MRT	4/05
CHECKED	AJR	4/05

J2 engineering and environmental design
8222 south 48th street, suite 126
phoenix, arizona 85044
phone 602.438.2500
www.j2engineering.com

ARIZONA DEPARTMENT OF TRANSPORTATION
INTERMODAL TRANSPORTATION DIVISION
ROADWAY DESIGN SERVICES

FLOODPOOL PIPE
LAYOUT PLAN
Sta 1110+00 to Sta 1124+00

PRELIMINARY
STAGE IV
95% Review
NOT FOR CONSTRUCTION OR RECORDING

ROUTE	LOCATION
202L	RED MTN FWY, POWER ROAD - UNIVERSITY DRIVE

TRACS NO. H 5782 01C | 202-B(007)B | DWG NO. F-6.04 | ___ OF ___

Plotted By: MRT p:\040031\j2cad\sheets\h5782dpl04.dgn 4/15/2005 2:27:38 PM

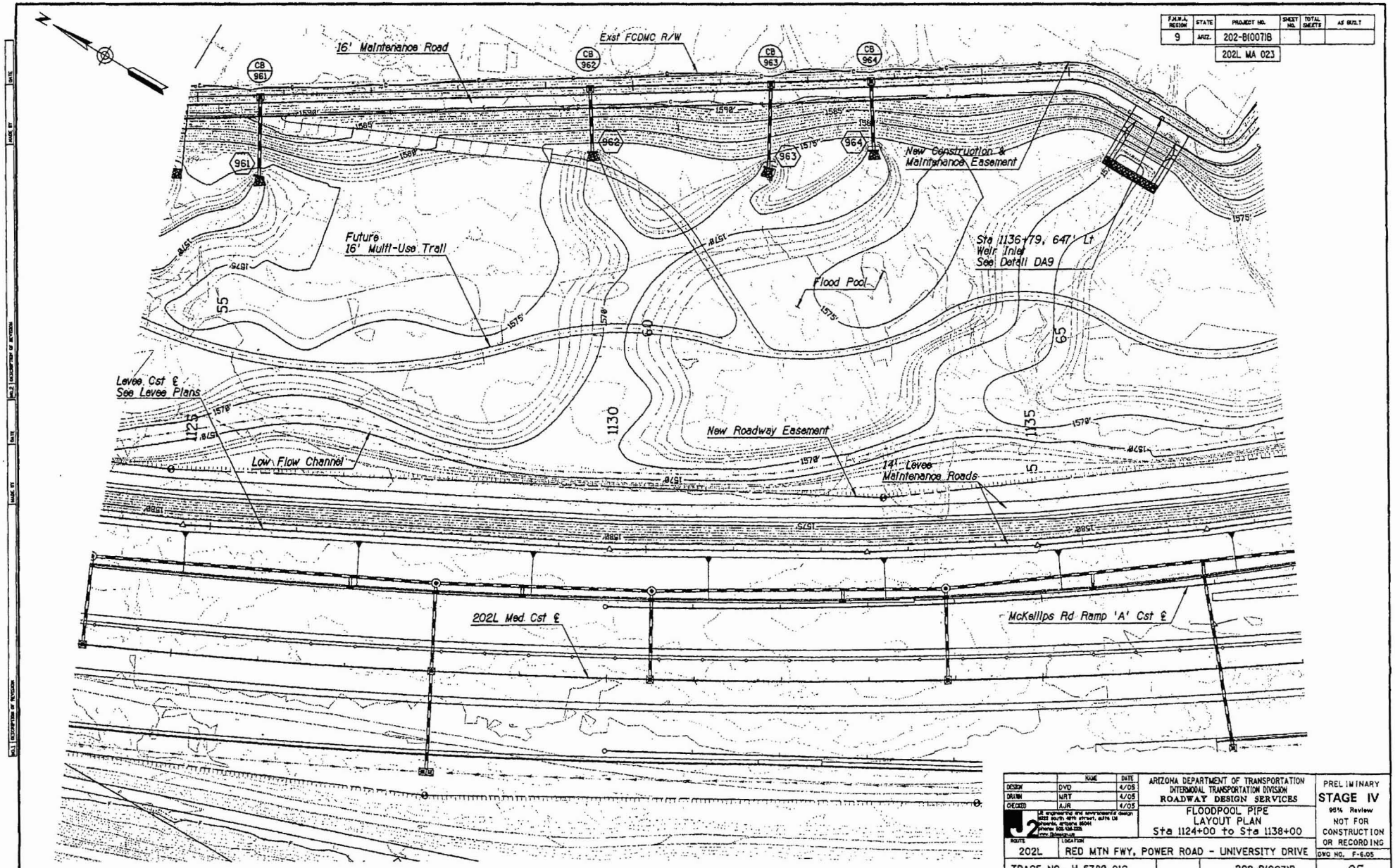

F.H.W.A. REGION	STATE	PROJECT NO.	SHEET NO.	TOTAL SHEETS	AS BUILT
9	ARIZ.	202-B(007)B			
		202L MA 023			

	NAME	DATE
DESIGN	DVD	4/05
DRAWN	NRT	4/05
CHECKED	AJR	4/05

J2 engineering and environmental design
4025 south 48th street, suite 1A
phoenix, arizona 85044
phone 602-438-2215
www.j2design.net

ARIZONA DEPARTMENT OF TRANSPORTATION
INTERMODAL TRANSPORTATION DIVISION
ROADWAY DESIGN SERVICES

FLOODPOOL PIPE
LAYOUT PLAN
Sta 1124+00 to Sta 1138+00

PRELIMINARY
STAGE IV
95% Review
NOT FOR CONSTRUCTION OR RECORDING

ROUTE	LOCATION	DWG NO. F-6.05
202L	RED MTN FWY, POWER ROAD - UNIVERSITY DRIVE	
TRACS NO. H 5782 01C	202-B(007)B	___ OF ___

Plotted By: MRT p:\040031\jroad\sheets\h5782dpl05.dgn 4/15/2005 2:28:07 PM

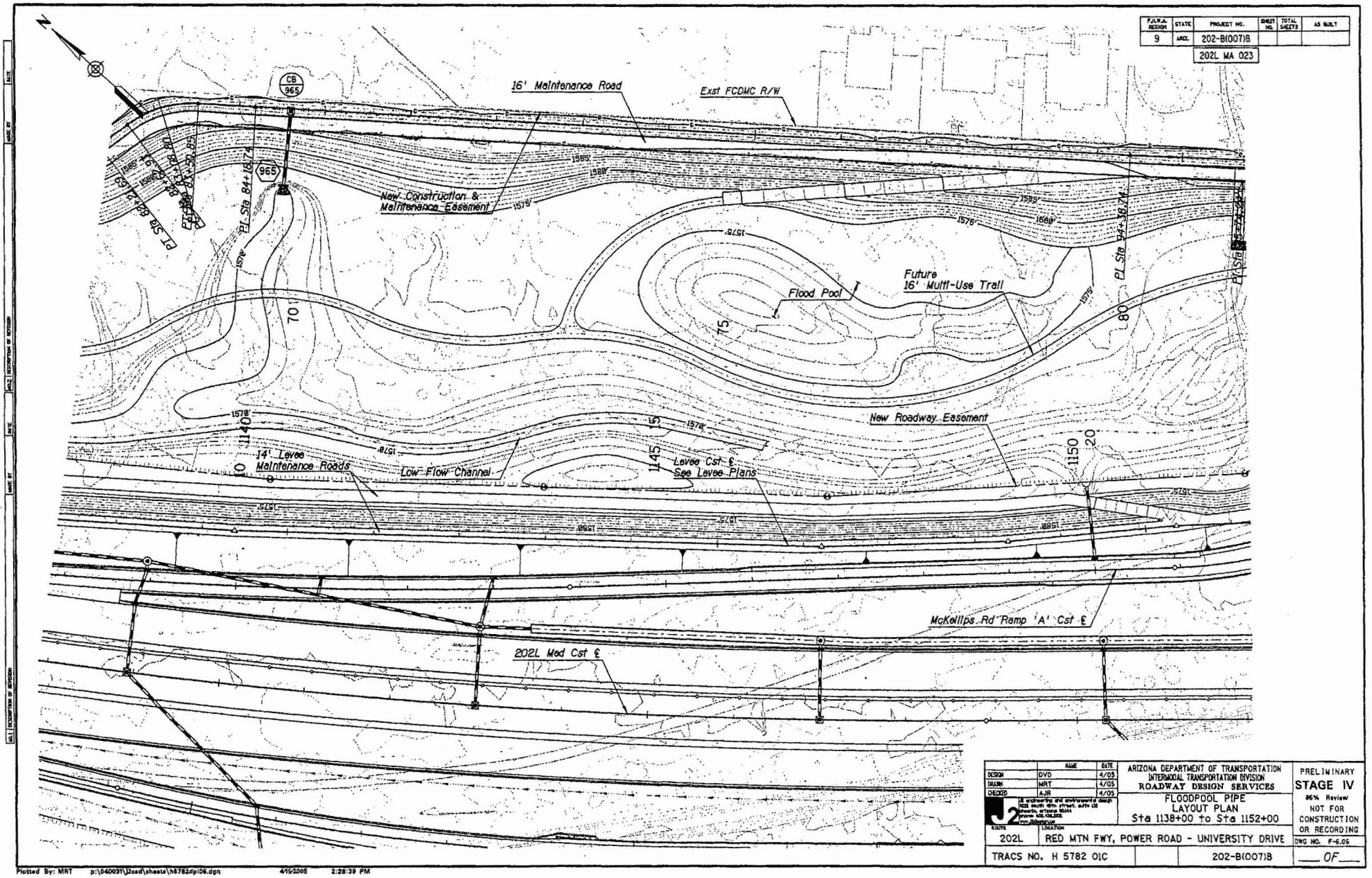

F.H.W.A. REGION	STATE	PROJECT NO.	SHEET NO.	TOTAL SHEETS	AS BUILT
9	ARIZ.	202-B(007)I			
		202L MA 023			

	NAME	DATE
DESIGN	DVD	4/05
DRAWN	MRT	4/05
CHECKED	AJR	4/05

J2 engineering and environmental design
1122 south 48th street, suite 130
phoenix, arizona 85044
phone 602.438.2323
www.j2design.com

ARIZONA DEPARTMENT OF TRANSPORTATION
INTERMODAL TRANSPORTATION DIVISION
ROADWAY DESIGN SERVICES

FLOODPOOL PIPE
LAYOUT PLAN
Sta 1138+00 to Sta 1152+00

PRELIMINARY
STAGE IV
95% Review
NOT FOR CONSTRUCTION OR RECORDING

ROUTE	LOCATION	DWG NO. F-6.05
202L	RED MTN FWY, POWER ROAD - UNIVERSITY DRIVE	
TRACS NO. H 5782 01C		202-B(007)I ___ OF ___

Plotted By: MRT p:\040031\j2cad\sheets\h5782dpl06.dgn 4/5/2005 2:28:39 PM

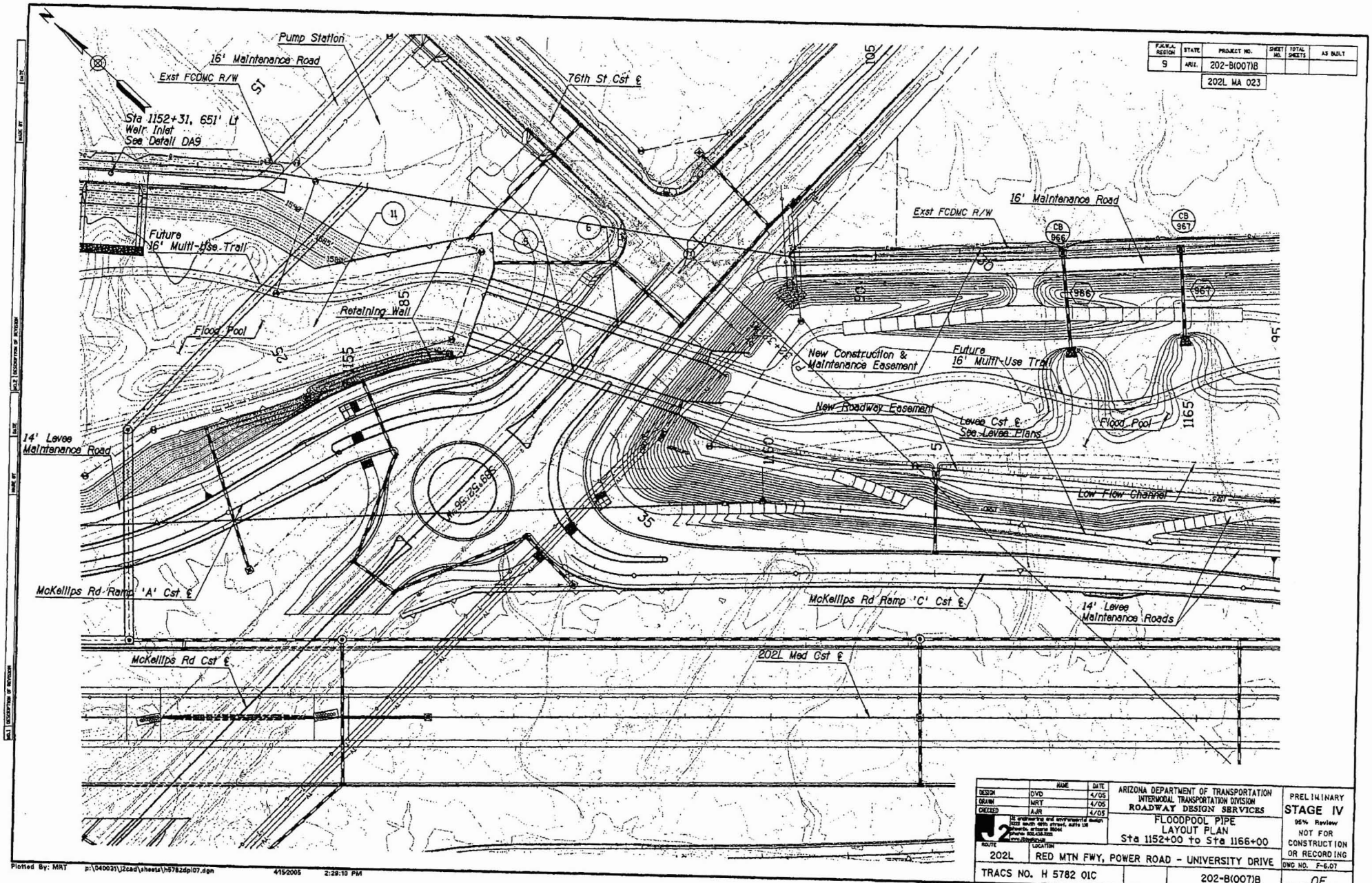

F.H.W.A. REGION	STATE	PROJECT NO.	SHEET NO.	TOTAL SHEETS	AS BUILT
9	ARIZ.	202-B(007)8			
		202L MA 023			

	NAME	DATE
DESIGN	DVD	4/05
DRAWN	MRT	4/05
CHECKED	AJR	4/05

J2 engineering and environmental design
2020 south 48th street, suite 138
phoenix, arizona 85040
phone: 602.438.2020
www.j2engineering.com

ARIZONA DEPARTMENT OF TRANSPORTATION
INTERMODAL TRANSPORTATION DIVISION
ROADWAY DESIGN SERVICES

FLOODPOOL PIPE
LAYOUT PLAN
Sta 1152+00 to Sta 1166+00

PRELIMINARY
STAGE IV
95% Review
NOT FOR
CONSTRUCTION
OR RECORDING

ROUTE	LOCATION	DWG NO.
202L	RED MTN FWY, POWER ROAD - UNIVERSITY DRIVE	F-6.07
TRACS NO. H 5782 01C	202-B(007)8	___ OF ___

Plotted By: MRT p:\040031\j2cad\sheets\h5782dpl07.dgn 4/5/2005 2:29:10 PM

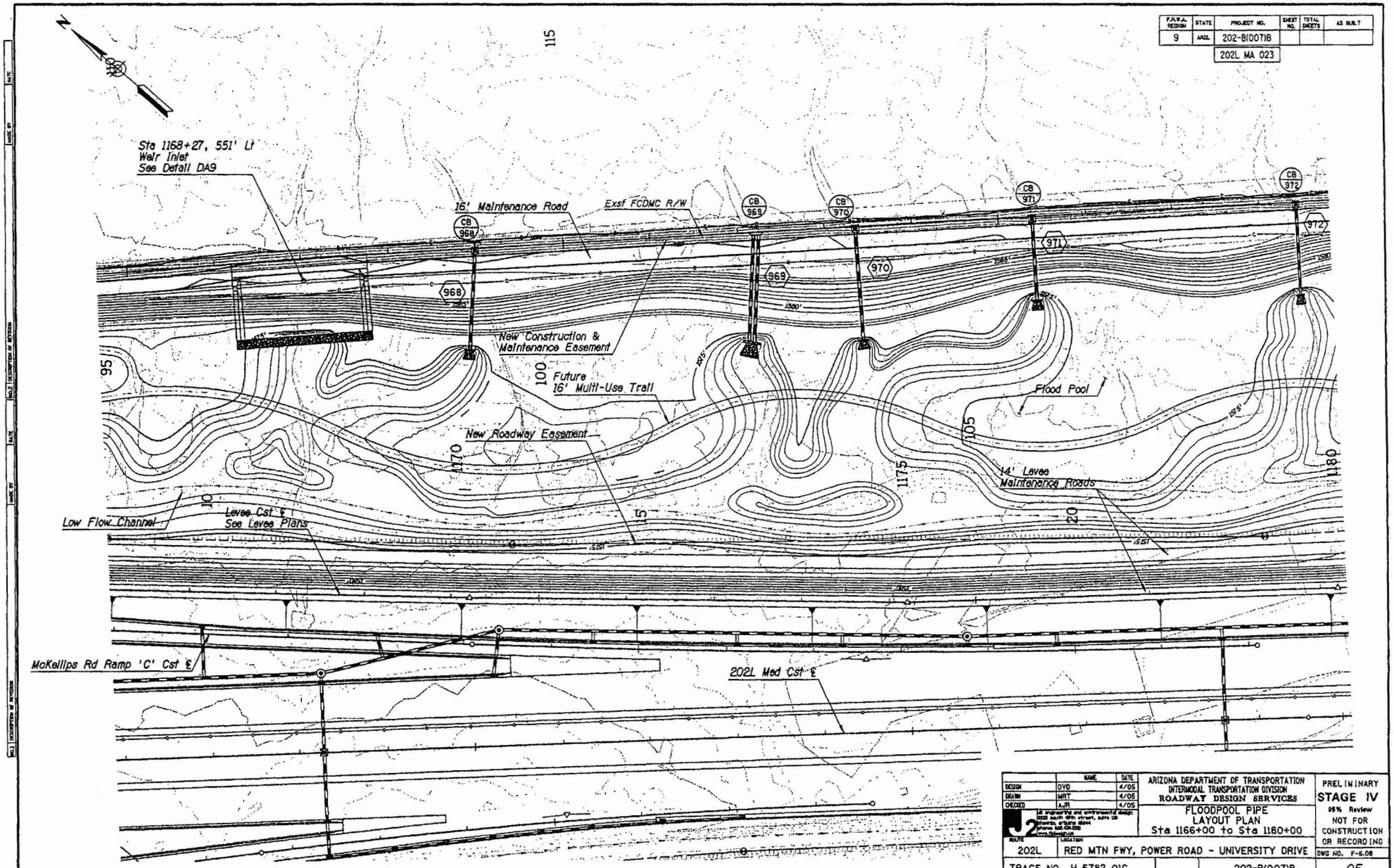

F.H.W.A. REGION	STATE	PROJECT NO.	SHEET NO.	TOTAL SHEETS	AS BUILT
9	ARIZ.	202-B(007)B			
		202L MA 023			

	NAME	DATE
DESIGN	DVD	4/05
DRAWN	MRT	4/05
CHECKED	AJR	4/05

J2 engineering and environmental design
8222 south 48th street, suite 120
phoenix, arizona 85044
phone 480.634.8255
www.j2design.com

ARIZONA DEPARTMENT OF TRANSPORTATION
INTERMODAL TRANSPORTATION DIVISION
ROADWAY DESIGN SERVICES

FLOODPOOL PIPE
LAYOUT PLAN
Sta 1166+00 to Sta 1180+00

PRELIMINARY
STAGE IV
95% Review
NOT FOR
CONSTRUCTION
OR RECORDING

ROUTE	LOCATION	DWG NO. F-6.08
202L	RED MTN FWY, POWER ROAD - UNIVERSITY DRIVE	
TRACS NO. H 5782 01C	202-B(007)B	___ OF ___

Plotted By: MRT p:\040037\j2cad\sheets\h5782dp108.dgn 4/15/2005 2:29:39 PM

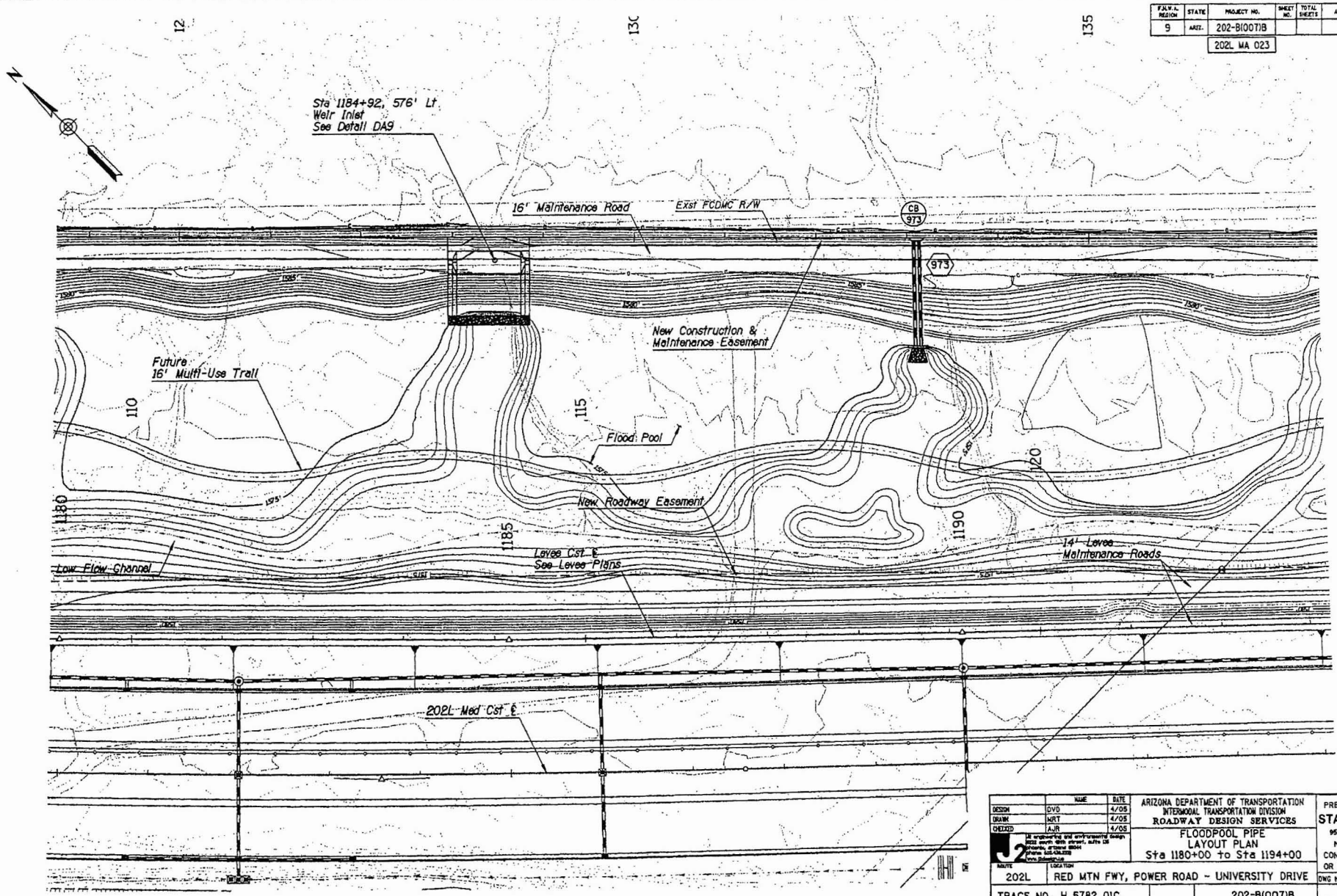

F.H.W.A. REGION	STATE	PROJECT NO.	SHEET NO.	TOTAL SHEETS	AS BUILT
9	ARIZ.	202-B(007)B			
		202L MA 023			

	NAME	DATE
DESIGN	DVD	4/05
DRAWN	MRT	4/05
CHECKED	AJR	4/05

J2 engineering and environmental design
2020 south 48th street, suite 130
tempe, arizona 85282
phone: 602.438.2222
www.j2ee.com

ARIZONA DEPARTMENT OF TRANSPORTATION
INTERMODAL TRANSPORTATION DIVISION
ROADWAY DESIGN SERVICES

FLOODPOOL PIPE
LAYOUT PLAN
Sta 1180+00 to Sta 1194+00

PRELIMINARY
STAGE IV
95% Review
NOT FOR CONSTRUCTION OR RECORDING

ROUTE	LOCATION	DWG NO. F-6.09
202L	RED MTN FWY, POWER ROAD - UNIVERSITY DRIVE	
TRACS NO. H 5782 01C		202-B(007)B ___ OF ___

Plotted By: MRT p:\040031\j2cad\sheets\h5782dpl09.dgn 4/15/2005 2:30:14 PM

F.H.W.A. REGION	STATE	PROJECT NO.	SHEET NO.	TOTAL SHEETS	AS BUILT
9	ARIZ.	202-B(007)B			

202L MA 023

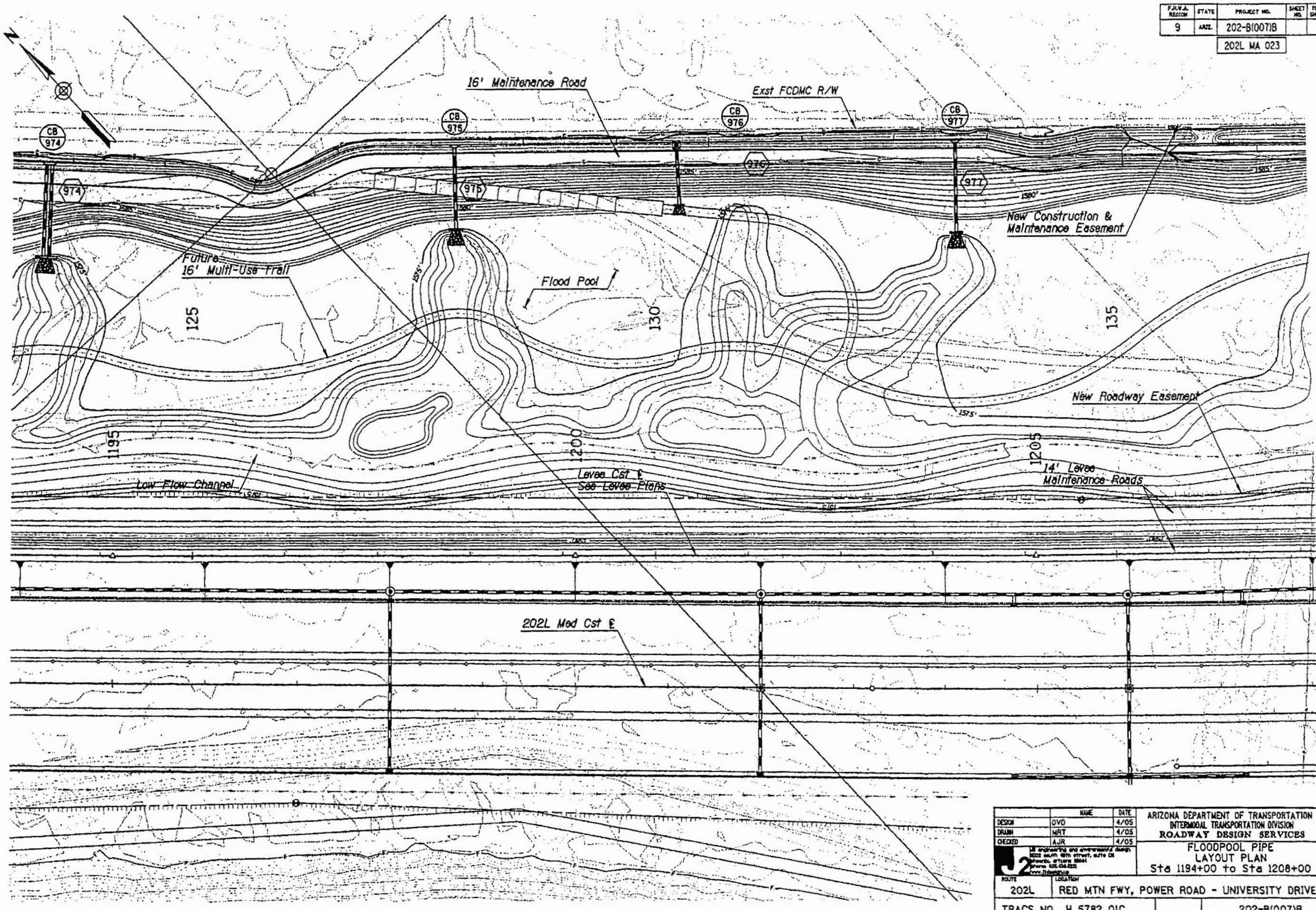

	NAME	DATE
DESIGN	DVD	4/05
DRAWN	MRT	4/05
CHECKED	AJR	4/05

J2 engineering and environmental design

ARIZONA DEPARTMENT OF TRANSPORTATION
INTERMODAL TRANSPORTATION DIVISION
ROADWAY DESIGN SERVICES

FLOODPOOL PIPE
LAYOUT PLAN
Sta 1194+00 to Sta 1208+00

ROUTE 202L
LOCATION RED MTN FWY, POWER ROAD - UNIVERSITY DRIVE

PRELIMINARY
STAGE IV
95% Review
NOT FOR CONSTRUCTION OR RECORDING

DWG NO. F-6.10

TRACS NO. H 5782 01C | 202-B(007)B | ___ OF ___

Plotted By: MRT p:\040031\j2csd\sheets\h5782dpl10.dgn 4/15/2005 2:30:48 PM

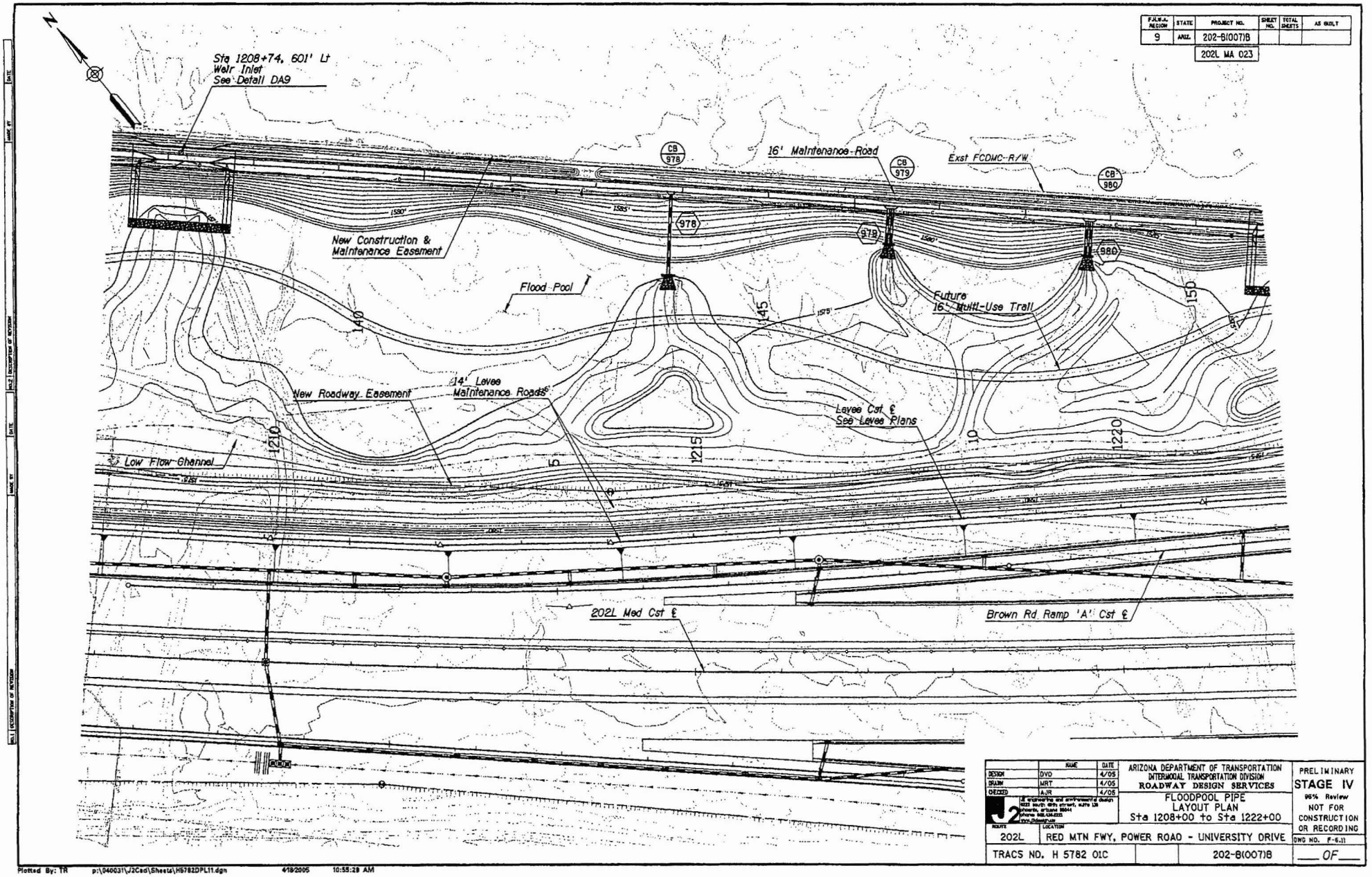

F.A.H.A. REGION	STATE	PROJECT NO.	SHEET NO.	TOTAL SHEETS	AS BUILT
9	ARIZ.	202-B(007)B			
		202L MA 023			

	NAME	DATE
DESIGN	DVO	4/05
DRAWN	MRT	4/05
CHECKED	AJR	4/05

J2 engineering and environmental design
3223 south 48th street, suite 138
phoenix, arizona 85044
phone 602.438.2222
www.j2design.com

ARIZONA DEPARTMENT OF TRANSPORTATION
INTERMODAL TRANSPORTATION DIVISION
ROADWAY DESIGN SERVICES

FLOODPOOL PIPE
LAYOUT PLAN
Sta 1208+00 to Sta 1222+00

PRELIMINARY
STAGE IV
95% Review
NOT FOR CONSTRUCTION OR RECORDING

ROUTE	LOCATION
202L	RED MTN FWY, POWER ROAD - UNIVERSITY DRIVE

DWG NO. F-6.11

TRACS NO. H 5782 01C | 202-B(007)B | ___ OF ___

Plotted By: TR p:\040031\J2Cad\Sheets\H5782DPL11.dgn 4/18/2005 10:55:28 AM

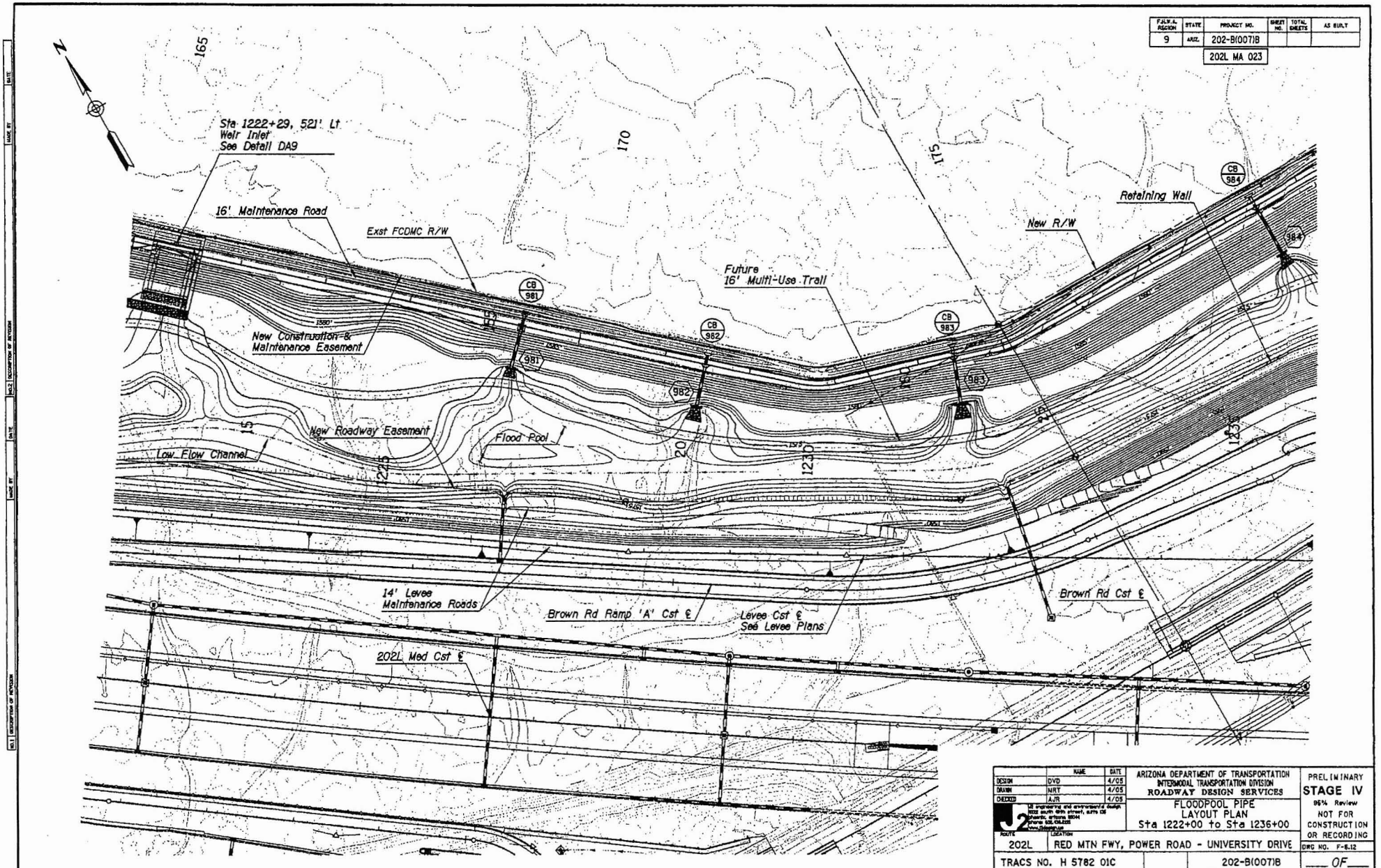

F.H.W.A. REGION	STATE	PROJECT NO.	SHEET NO.	TOTAL SHEETS	AS BUILT
9	ARIZ.	202-B(007)B			
		202L MA 023			

	NAME	DATE
DESIGN	DVD	4/05
DRAWN	NRT	4/05
CHECKED	AJR	4/05

J2 engineering and environmental design
1222 south 48th street, suite 106
phoenix, arizona 85034
phone 602.256.0335
www.j2design.us

ARIZONA DEPARTMENT OF TRANSPORTATION
INTERMODAL TRANSPORTATION DIVISION
ROADWAY DESIGN SERVICES

FLOODPOOL PIPE
LAYOUT PLAN
Sta 1222+00 to Sta 1236+00

PRELIMINARY
STAGE IV
95% Review
NOT FOR CONSTRUCTION OR RECORDING

ROUTE	LOCATION
202L	RED MTN FWY, POWER ROAD - UNIVERSITY DRIVE

DWG NO. F-6.12

TRACS NO. H 5782 01C | 202-B(007)B | ___ OF ___

Plotted By: TR p:\040021\J2Cad\Sheets\H5782DPL12.dgn 4/22/2005 10:33:44 AM

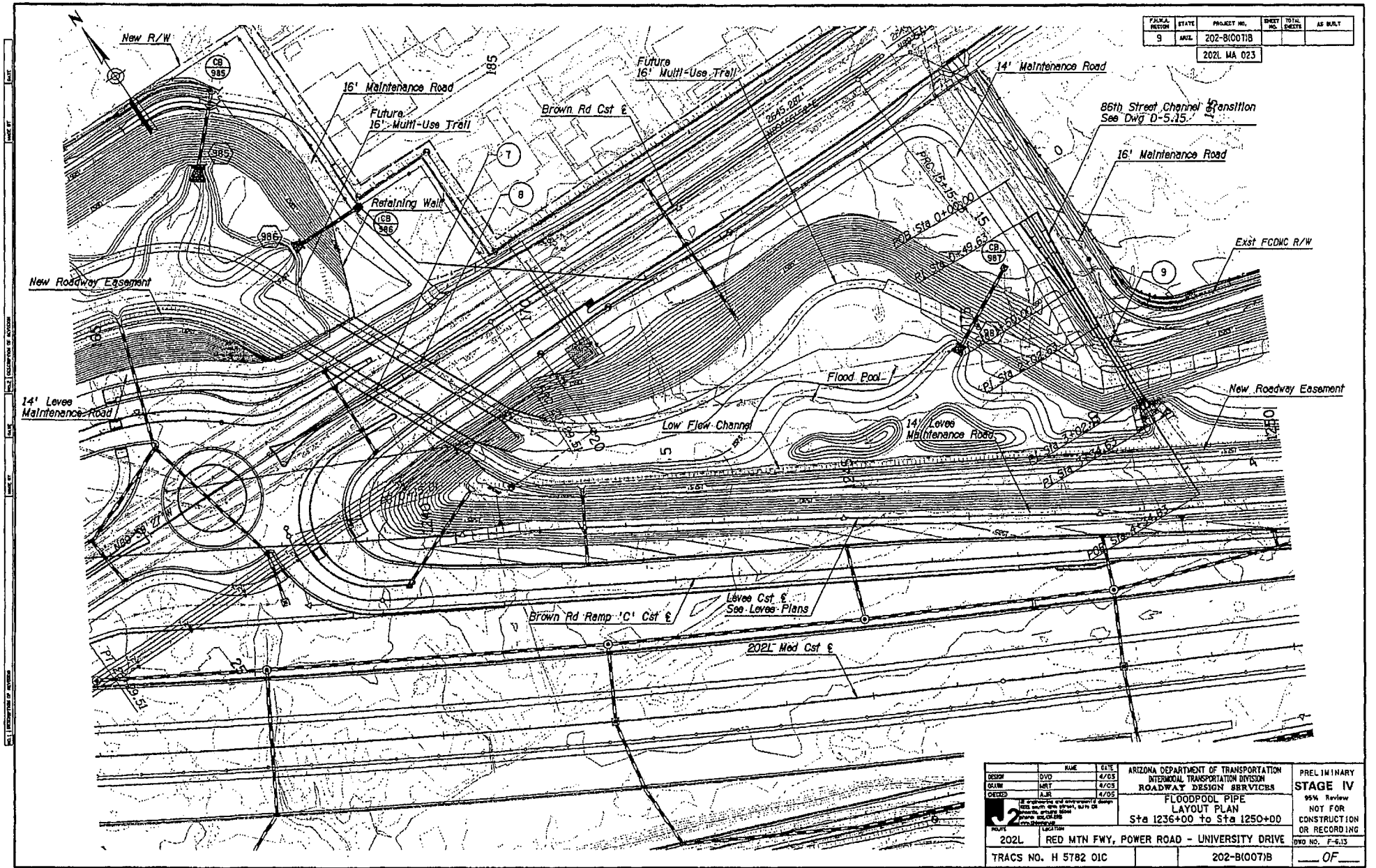

FHWA REGION	STATE	PROJECT NO.	SHEET NO.	TOTAL SHEETS	AS BUILT
9	ARIZ.	202-B(007)B			
		202L MA 023			

	NAME	DATE
DESIGN	DVD	4/05
DRAWN	MRT	4/05
CHECKED	AJR	4/05

J2 engineering and environmental design
1655 south 48th street, suite 08
tempe, arizona 85281
phone 480.491.8155
www.j2engineering.com

ARIZONA DEPARTMENT OF TRANSPORTATION
INTERMODAL TRANSPORTATION DIVISION
ROADWAY DESIGN SERVICES

FLOODPOOL PIPE
LAYOUT PLAN
Sta 1236+00 to Sta 1250+00

PRELIMINARY
STAGE IV
95% Review
NOT FOR CONSTRUCTION OR RECORDING

ROUTE	LOCATION	
202L	RED MTN FWY, POWER ROAD - UNIVERSITY DRIVE	DWG NO. F-6.13
TRACS NO. H 5782 01C		202-B(007)B ___ OF ___

Plotted By: TR p:\040031\J2Cad\Sheets\H5782DPL13.dgn 4/22/2005 10:34:39 AM

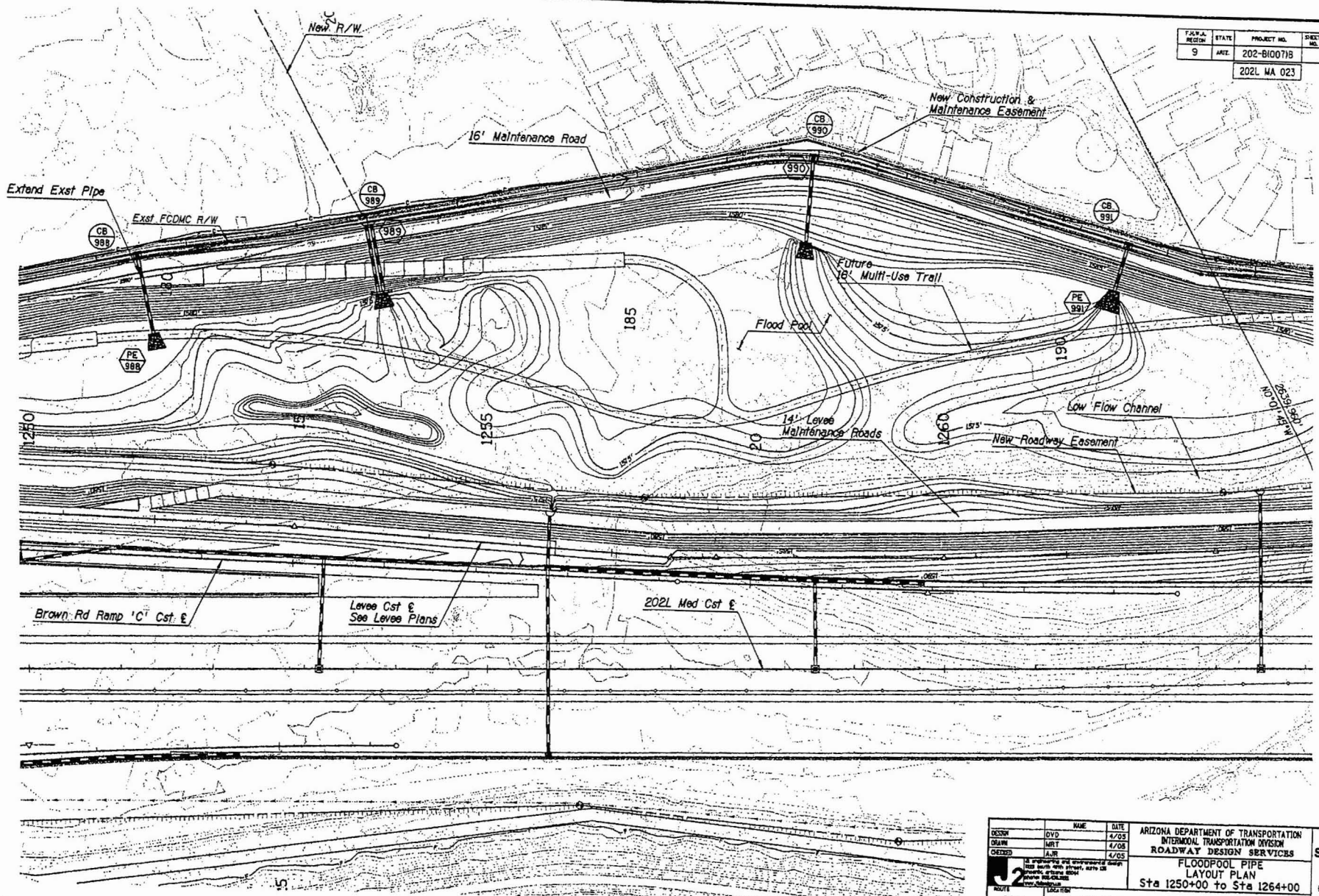

F.H.W.A. REGION	STATE	PROJECT NO.	SHEET NO.	TOTAL SHEETS	AS BUILT
9	ARIZ.	202-B(007)B			
		202L MA 023			

	NAME	DATE
DESIGN	DVD	4/03
DRAWN	MRT	4/08
CHECKED	AJR	4/05

J2 engineering and environmental design
1520 south 4th street, suite 16
phoenix, arizona 85004
phone 602.258.8855
www.j2design.com

ARIZONA DEPARTMENT OF TRANSPORTATION
INTERMODAL TRANSPORTATION DIVISION
ROADWAY DESIGN SERVICES

FLOODPOOL PIPE
LAYOUT PLAN
Sta 1250+00 to Sta 1264+00

PRELIMINARY
STAGE IV
95% Review
NOT FOR CONSTRUCTION OR RECORDING

ROUTE	LOCATION
202L	RED MTN FWY, POWER ROAD - UNIVERSITY DRIVE

TRACS NO. H 5782 01C

202-B(007)B

DWG NO. F-6.14

___ OF ___

Plotted By: TR p:\04D031\J2Cad\Sheets\H5782DPL14.dgn 4/22/2008 10:38:02 AM

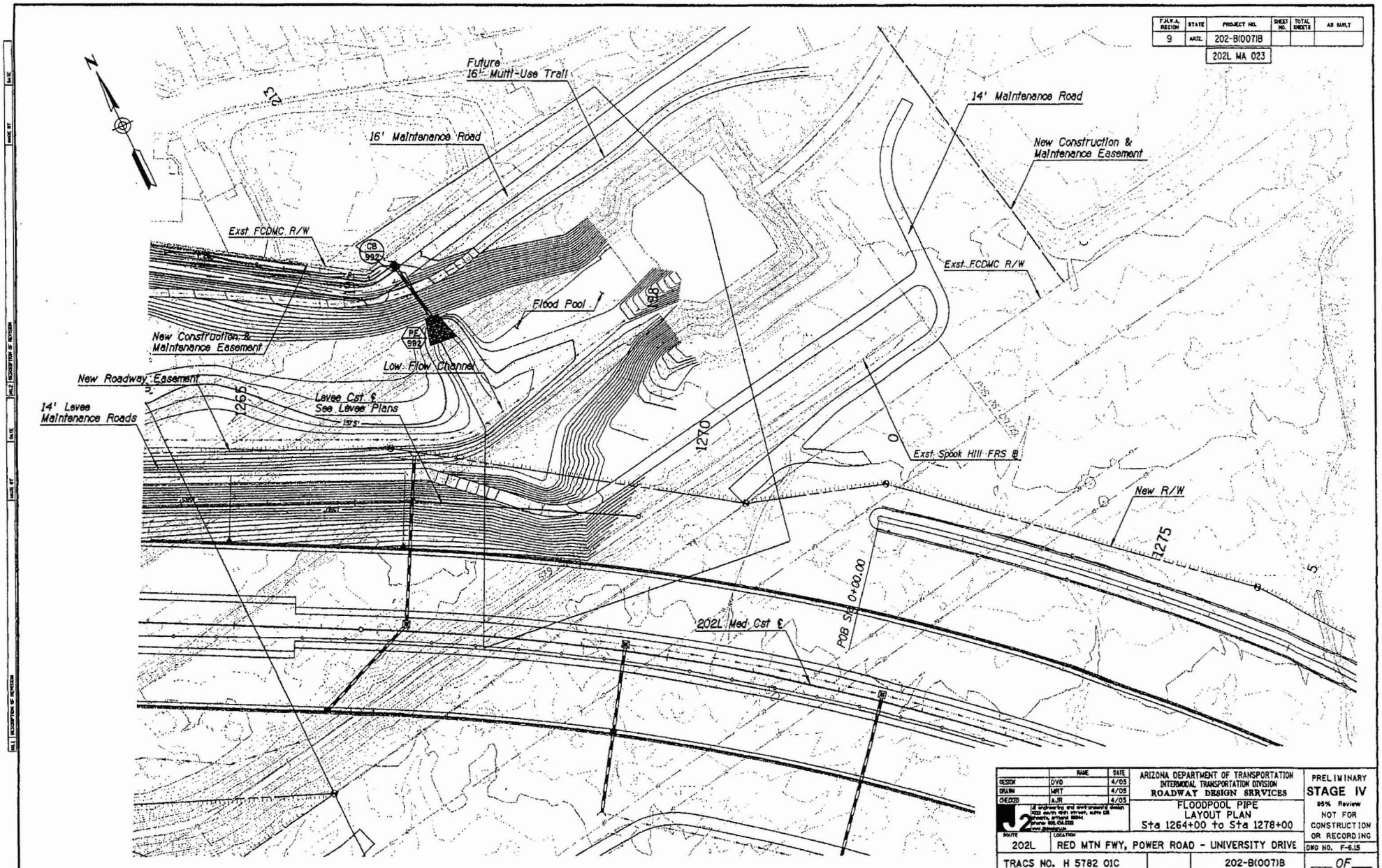

F.H.W.A. REGION	STATE	PROJECT NO.	SHEET NO.	TOTAL SHEETS	AS BUILT
9	ARIZ.	202-B(007)B			
		202L MA 023			

	NAME	DATE
DESIGN	DVD	4/05
DRAWN	MRT	4/05
CHECKED	AJR	4/05

J2 engineering and environmental design
1922 south 48th street, suite 108
phoenix, arizona 85044
phone: 602.243.8300
www.j2design.com

ARIZONA DEPARTMENT OF TRANSPORTATION
INTERMODAL TRANSPORTATION DIVISION
ROADWAY DESIGN SERVICES

FLOODPOOL PIPE
LAYOUT PLAN
Sta 1264+00 to Sta 1278+00

PRELIMINARY
STAGE IV
95% Review
NOT FOR
CONSTRUCTION
OR RECORDING

ROUTE	LOCATION	DWG NO. F-6.15
202L	RED MTN FWY, POWER ROAD - UNIVERSITY DRIVE	
TRACS NO. H 5782 01C		202-B(007)B ___ OF ___

Plotted By: TR p:\040031\J2Cad\Sheets\H5782DPL15.dgn 4/22/2005 10:36:39 AM

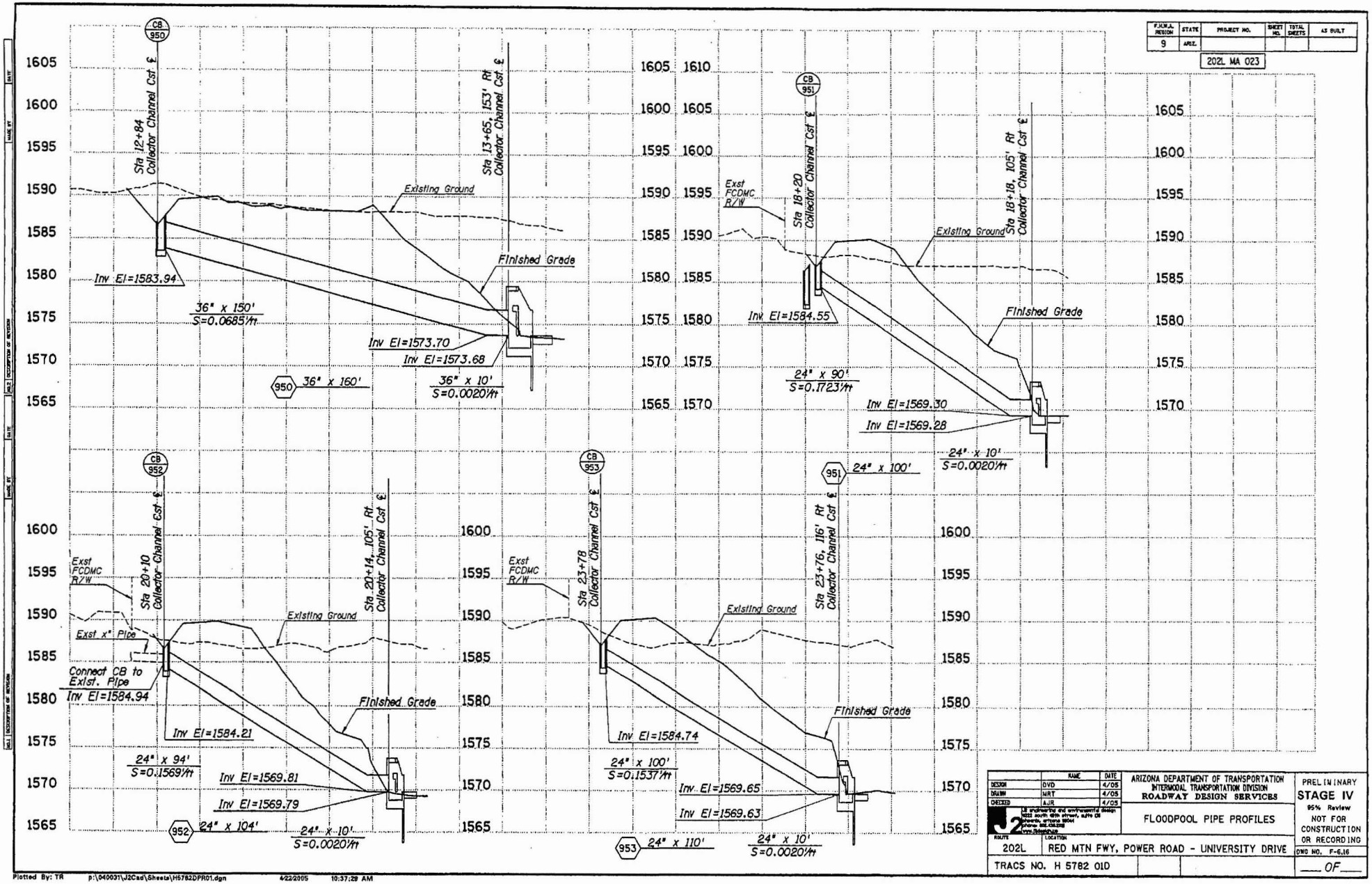

F.H.W.A. REGION	STATE	PROJECT NO.	SHEET NO.	TOTAL SHEETS	AS BUILT
9	ARIZ.				

202L MA 023

	NAME	DATE
DESIGN	DVD	4/05
DRAWN	MRT	4/05
CHECKED	AJR	4/05

J2 engineering and environmental design
1823 south 48th street, suite 08
phoenix, arizona 85044
phone 602.438.0883
www.j2design.us

ARIZONA DEPARTMENT OF TRANSPORTATION
INTERMODAL TRANSPORTATION DIVISION
ROADWAY DESIGN SERVICES

FLOODPOOL PIPE PROFILES

ROUTE	LOCATION
202L	RED MTN FWY, POWER ROAD - UNIVERSITY DRIVE

TRACS NO. H 5782 01D

PRELIMINARY
STAGE IV
95% Review
NOT FOR CONSTRUCTION OR RECORDING

DWG NO. F-6.16

___ OF ___

Plotted By: TR p:\0400031\J2Cad\Sheets\H5782DPR01.dgn 4/22/2005 10:37:29 AM

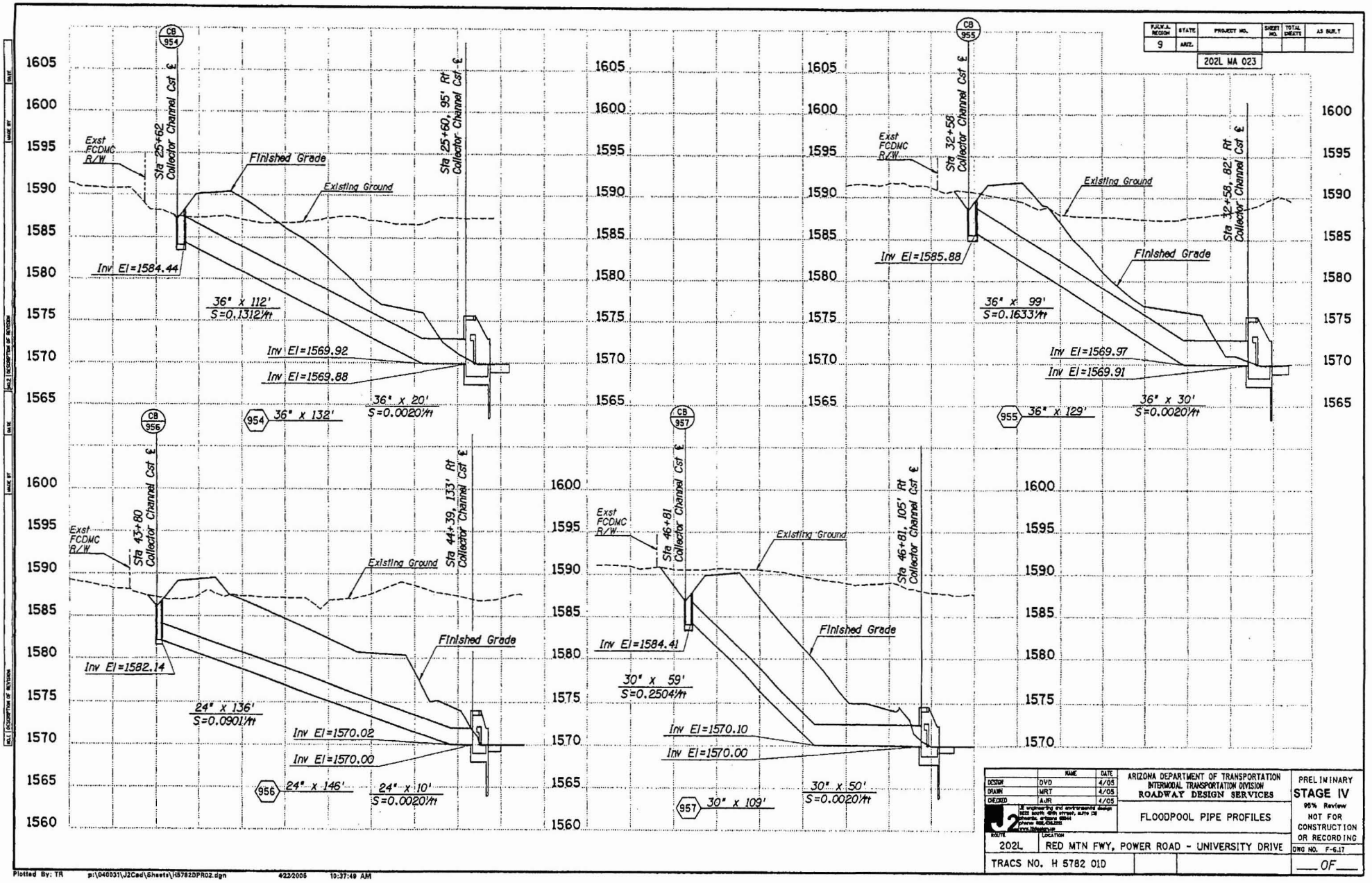

F.H.W.A. REGION	STATE	PROJECT NO.	SHEET NO.	TOTAL SHEETS	AS BUILT
9	ARIZ.				

202L MA 023

	NAME	DATE
DESIGN	DVD	4/05
DRAWN	MRT	4/05
CHECKED	AJR	4/05

J2 engineering and environmental design
3232 south 40th street, suite 28
phoenix, arizona 85040
phone 602.256.7200
www.j2design.com

ARIZONA DEPARTMENT OF TRANSPORTATION
INTERMODAL TRANSPORTATION DIVISION
ROADWAY DESIGN SERVICES

FLOODPOOL PIPE PROFILES

PRELIMINARY
STAGE IV
95% Review
NOT FOR CONSTRUCTION OR RECORDING

ROUTE	LOCATION
202L	RED MTN FWY, POWER ROAD - UNIVERSITY DRIVE

DWG NO. F-6.17

TRACS NO. H 5782 01D

___ OF ___

Plotted By: TR p:\040031\J2Cad\Sheets\H5782DPR02.dgn 4/22/2005 10:37:49 AM

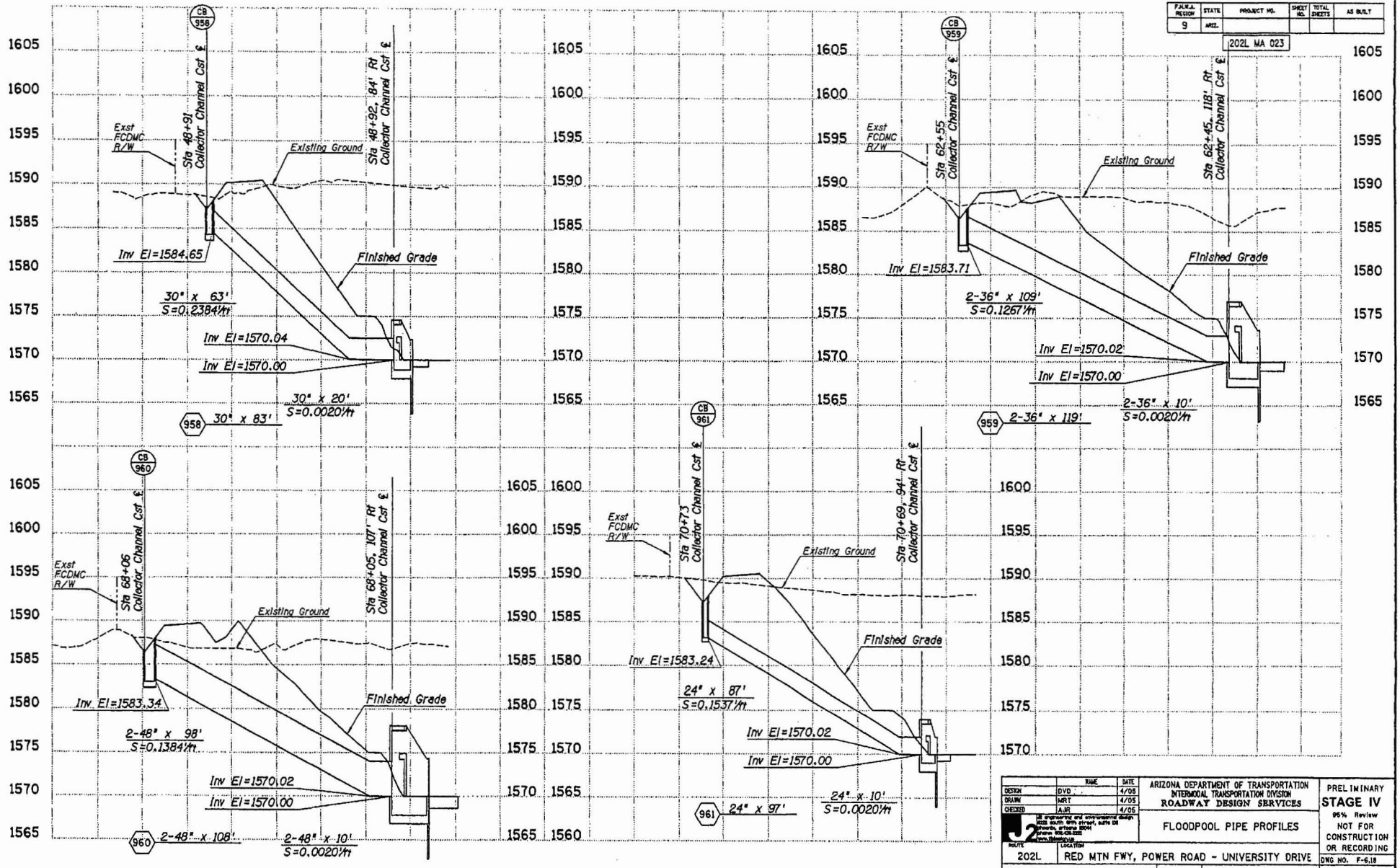

F.H.W.A. REGION	STATE	PROJECT NO.	SHEET NO.	TOTAL SHEETS	AS BUILT
9	ARIZ.				

202L MA 023

	NAME	DATE
DESIGN	DVD	4/05
DRAWN	MRT	4/05
CHECKED	AJR	4/05

J2 engineering and environmental design
3033 south 5th street, suite 126
phoenix, arizona 85004
phone 602.438.2255
www.j2design.us

ARIZONA DEPARTMENT OF TRANSPORTATION
INTERMODAL TRANSPORTATION DIVISION
ROADWAY DESIGN SERVICES

FLOODPOOL PIPE PROFILES

PRELIMINARY
STAGE IV
95% Review
NOT FOR CONSTRUCTION OR RECORDING

ROUTE	LOCATION
202L	RED MTN FWY, POWER ROAD - UNIVERSITY DRIVE

DWG NO. F-6.18

TRACS NO. H 5782 01D

___ OF ___

Plotted By: TR p:\040031\J2Cad\Sheets\H5782DPR03.dgn 4/22/2005 10:38:01 AM

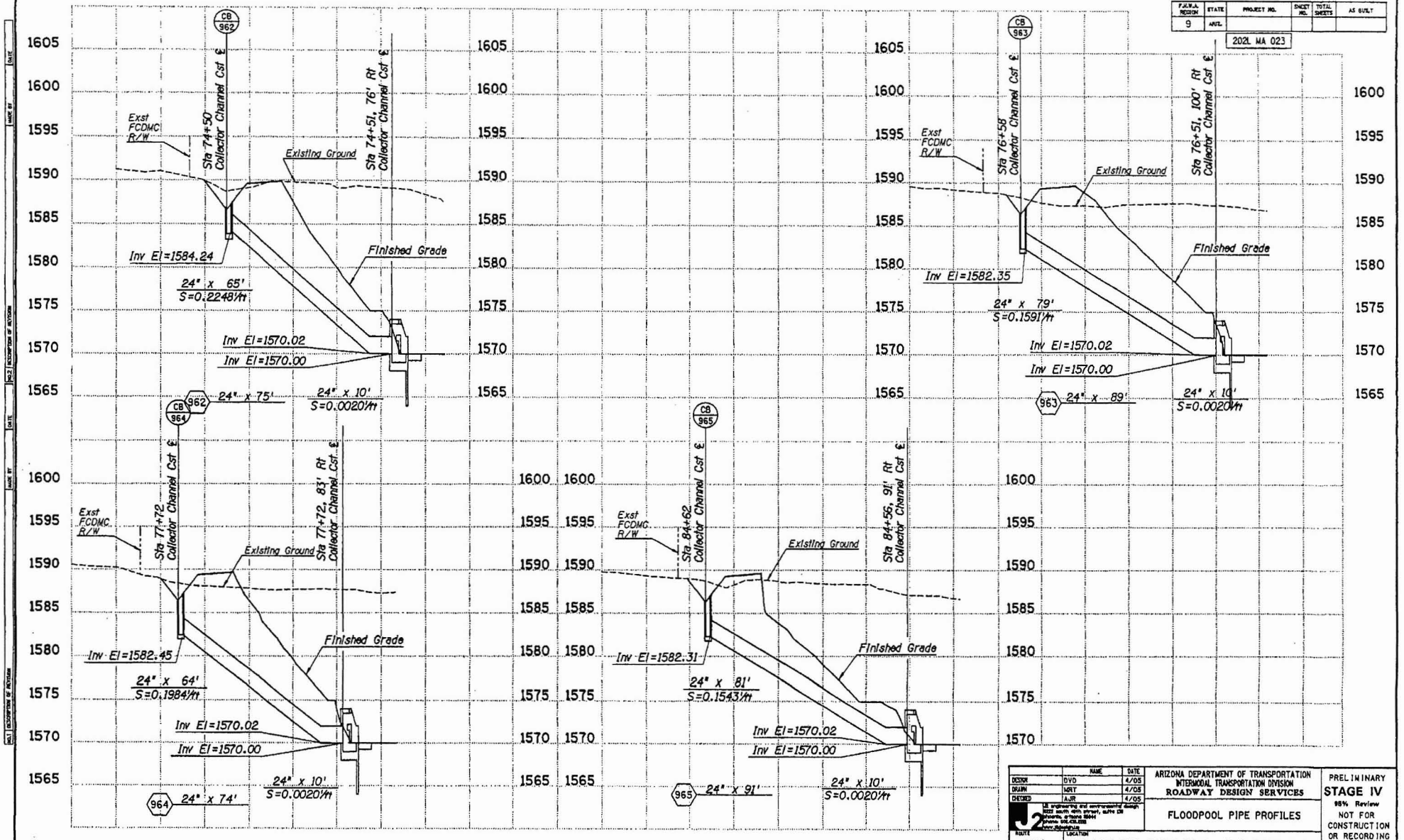

F.H.W.A. REGION	STATE	PROJECT NO.	SHEET NO.	TOTAL SHEETS	AS BUILT
9	ARIZ.	202L MA 023			

	NAME	DATE
DESIGN	DVD	4/05
DRAWN	MRT	4/05
CHECKED	AJR	4/05

J2 engineering and environmental design
8222 south 48th street, suite 128
phoenix, arizona 85044
phone: 602.438.2888
www.j2design.us

ARIZONA DEPARTMENT OF TRANSPORTATION
INTERMODAL TRANSPORTATION DIVISION
ROADWAY DESIGN SERVICES

FLOODPOOL PIPE PROFILES

PRELIMINARY
STAGE IV
95% Review
NOT FOR CONSTRUCTION OR RECORDING

ROUTE	LOCATION
202L	RED MTN FWY, POWER ROAD - UNIVERSITY DRIVE

TRACS NO. H 5782 01D

DRG NO. F-6.19

___ OF ___

Plotted By: TM p:\040031\J2Cad\Sheets\H5782DPR04.dgn 4/22/2005 10:38:11 AM

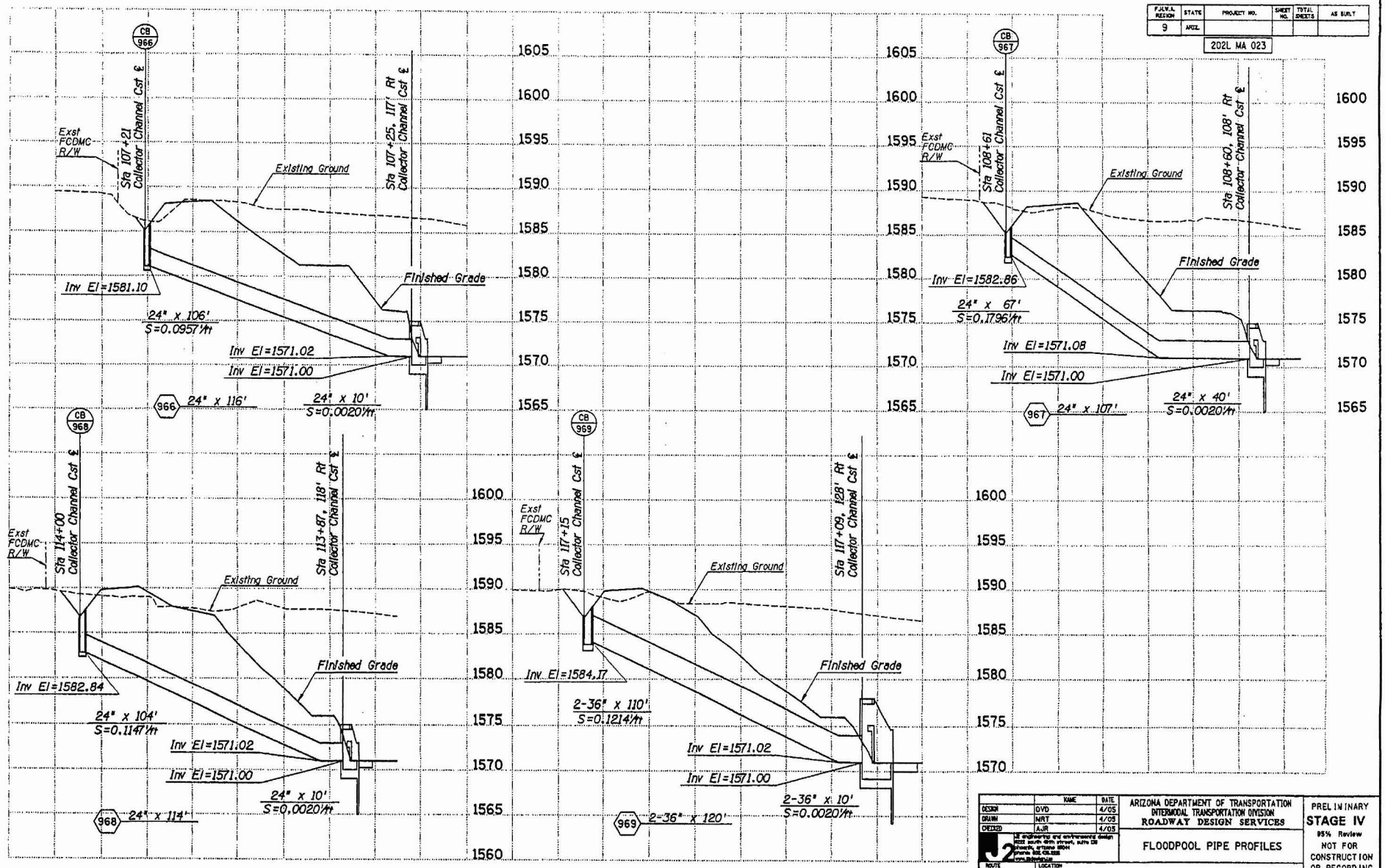

F.H.W.A. REGION	STATE	PROJECT NO.	SHEET NO.	TOTAL SHEETS	AS BUILT
9	ARIZ.				

202L MA 023

NO.	DESCRIPTION OF REVISION	DATE	MADE BY

	NAME	DATE
DESIGN	DVD	4/05
DRAWN	MRT	4/05
CHECKED	AJR	4/05

J2 engineering and environmental design
1222 south 48th street, suite 125
phoenix, arizona 85034
phone 602.438.2888
www.j2design.us

ARIZONA DEPARTMENT OF TRANSPORTATION
INTERMODAL TRANSPORTATION DIVISION
ROADWAY DESIGN SERVICES

FLOODPOOL PIPE PROFILES

PRELIMINARY
STAGE IV
95% Review
NOT FOR CONSTRUCTION OR RECORDING

ROUTE	LOCATION	DWG NO.
202L	RED MTN FWY, POWER ROAD - UNIVERSITY DRIVE	F-6.20

TRACS NO. H 5782 01D

___ OF ___

Plotted By: TR p:\040031\J2Cad\Sheets\H5782DPR05.dgn 4232005 10:38:23 AM

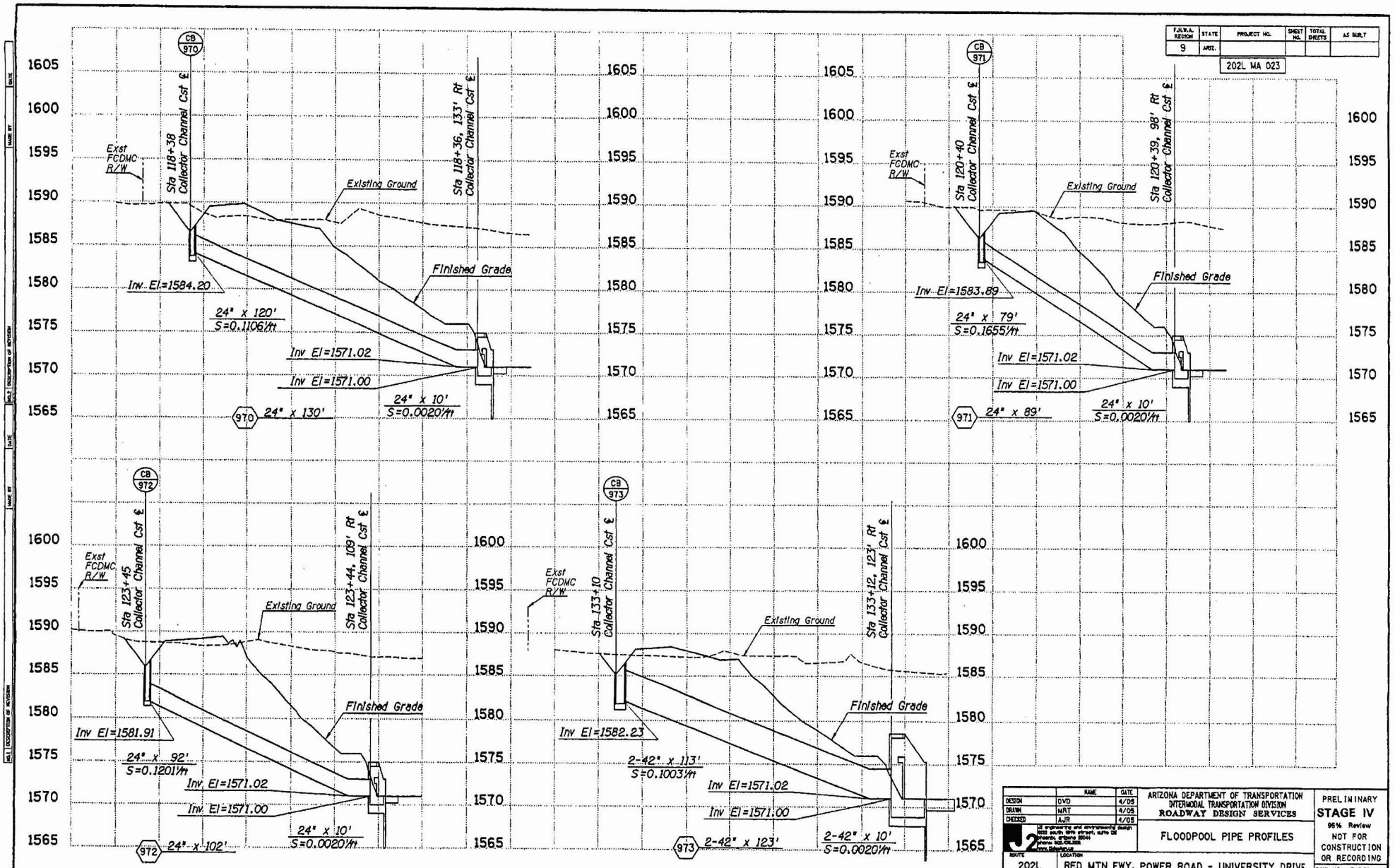

F.H.W.A. REGION	STATE	PROJECT NO.	SHEET NO.	TOTAL SHEETS	AS BUILT
9	ARIZ.				

202L MA 023

	NAME	DATE
DESIGN	DVD	4/05
DRAWN	NRT	4/05
CHECKED	AJR	4/05

J2 engineering and environmental design
1802 south 48th street, suite 125
phoenix, arizona 85044
phone 602.438.2888
www.j2engineering.com

ARIZONA DEPARTMENT OF TRANSPORTATION
INTERMODAL TRANSPORTATION DIVISION
ROADWAY DESIGN SERVICES

FLOODPOOL PIPE PROFILES

ROUTE	LOCATION
202L	RED MTN FWY, POWER ROAD - UNIVERSITY DRIVE

TRACS NO. H 5782 01D

PRELIMINARY
STAGE IV
95% Review
NOT FOR CONSTRUCTION OR RECORDING

DWG NO. F-6.21

___ OF ___

Plotted By: TR p:\040031\J2Cad\Sheets\H5782DPR06.dgn 4/22/2005 10:38:38 AM

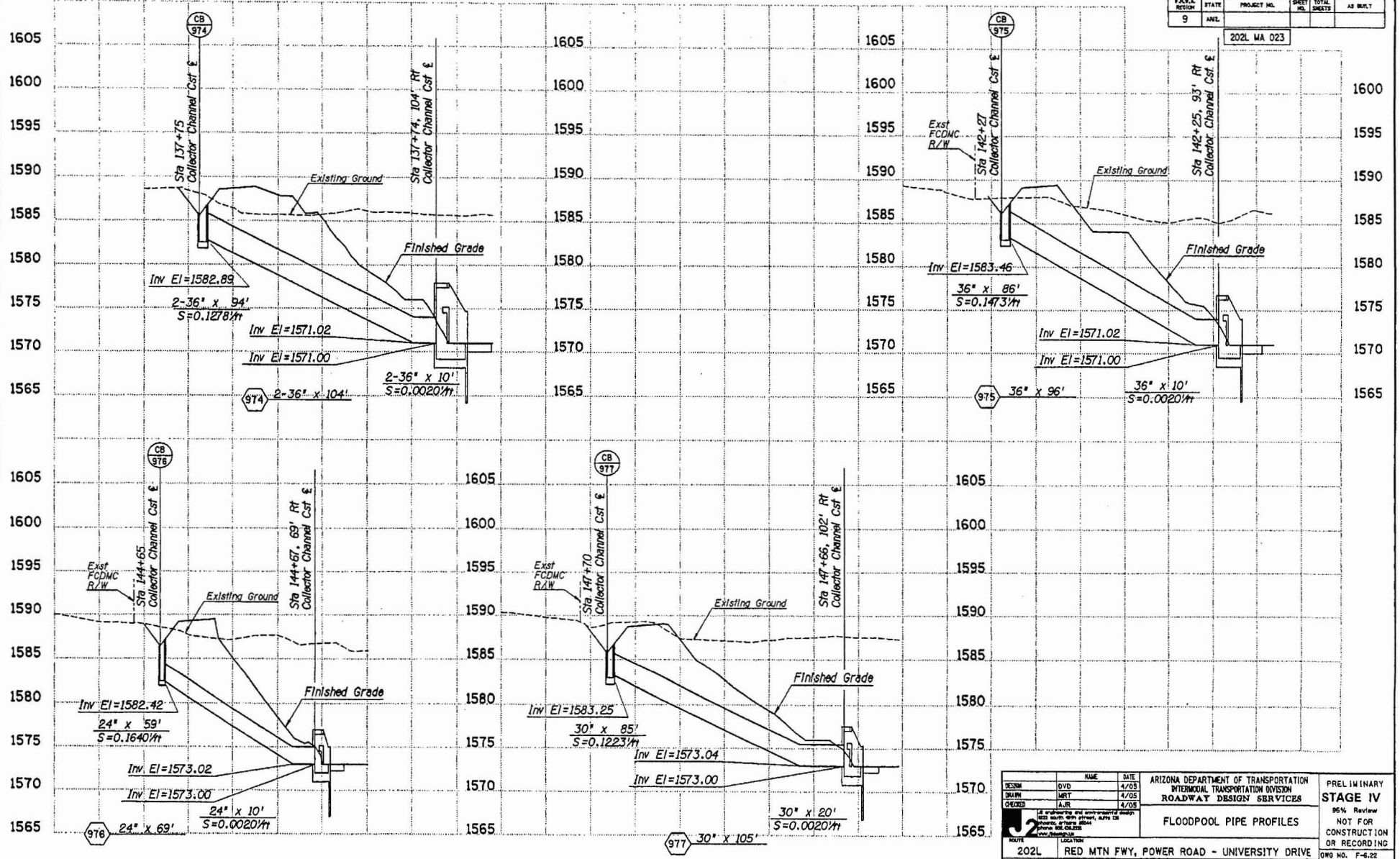

F.H.W.A. REGION	STATE	PROJECT NO.	SHEET NO.	TOTAL SHEETS	AS BUILT
9	ARIZ.	202L MA 023			

	NAME	DATE
DESIGN	DVD	4/05
DRAWN	MRT	4/05
CHECKED	AJR	4/05

J2 engineering and environmental design
1802 south 18th street, suite 126
phoenix, arizona 85034
phone 602.256.0325
www.j2eng.com

ARIZONA DEPARTMENT OF TRANSPORTATION
INTERMODAL TRANSPORTATION DIVISION
ROADWAY DESIGN SERVICES

FLOODPOOL PIPE PROFILES

PRELIMINARY
STAGE IV
95% Review
NOT FOR CONSTRUCTION OR RECORDING

ROUTE	LOCATION	DWG NO.
202L	RED MTN FWY, POWER ROAD - UNIVERSITY DRIVE	F-6.22
TRACS NO. H 5782 01D		___ OF ___

Plotted By: TR p:\040031\J2Cad\Sheets\H5782DPR07.dgn 4/22/2005 10:38:48 AM

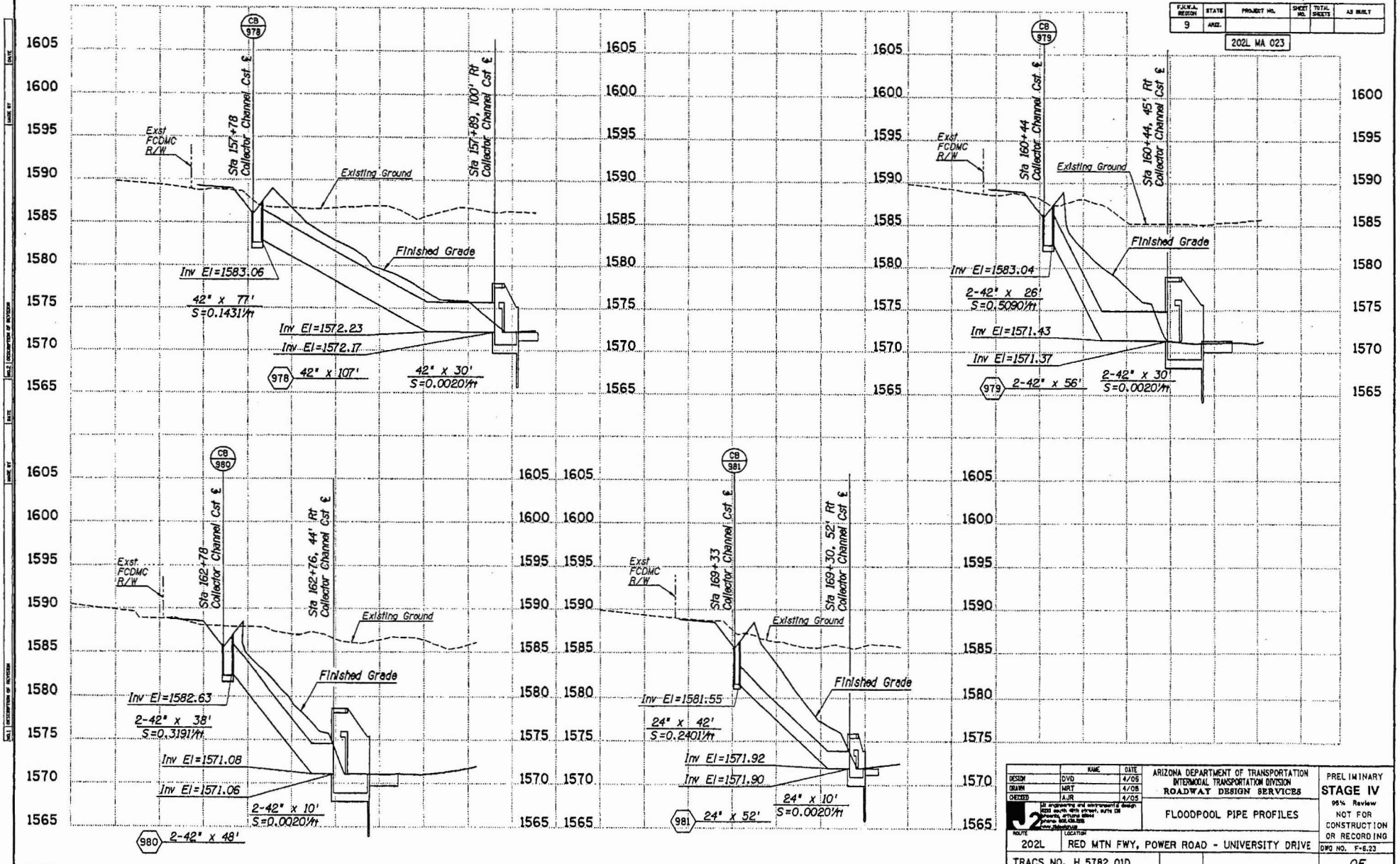

F.H.W.A. REGION	STATE	PROJECT NO.	SHEET NO.	TOTAL SHEETS	AS BUILT
9	ARIZ.				

202L MA 023

	NAME	DATE
DESIGN	DVD	4/05
DRAWN	MRT	4/05
CHECKED	AJR	4/05

J2 engineering and environmental design
2020 south 48th street, suite 130
phoenix, arizona 85044
phone: 602.438.2500
www.j2design.com

ARIZONA DEPARTMENT OF TRANSPORTATION
INTERMODAL TRANSPORTATION DIVISION
ROADWAY DESIGN SERVICES

FLOODPOOL PIPE PROFILES

PRELIMINARY
STAGE IV
95% Review
NOT FOR CONSTRUCTION OR RECORDING

ROUTE	LOCATION	DWG NO.
202L	RED MTN FWY, POWER ROAD - UNIVERSITY DRIVE	F-8.23

TRACS NO. H 5782 01D

___ OF ___

Plotted By: TR p:\04003t\J2Cad\Sheets\H5782DPR08.dgn 4/22/2005 10:38:58 AM

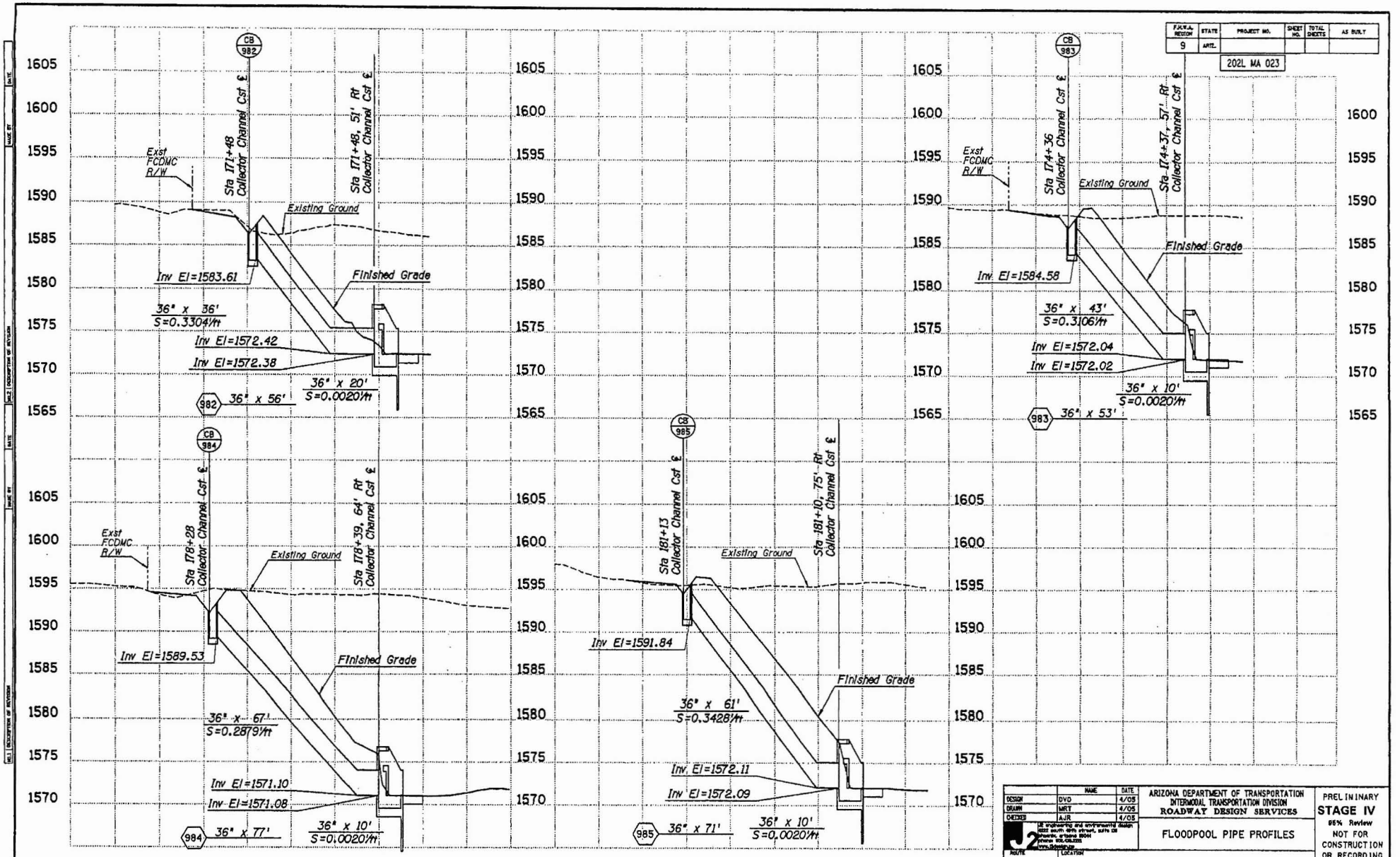

F.A.H.P. REGION	STATE	PROJECT NO.	SHEET NO.	TOTAL SHEETS	AS BUILT
9	ARIZ.	202L MA 023			

	NAME	DATE
DESIGN	DVD	4/05
DRAWN	MRT	4/05
CHECKED	AJR	4/05

J2 engineering and environmental design
8222 south 48th street, suite 108
phoenix, arizona 85044
phone 602.438.2500
www.J2design.com

ARIZONA DEPARTMENT OF TRANSPORTATION
INTERMODAL TRANSPORTATION DIVISION
ROADWAY DESIGN SERVICES

FLOODPOOL PIPE PROFILES

ROUTE 202L LOCATION RED MTN FWY, POWER ROAD - UNIVERSITY DRIVE

TRACS NO. H 5782 01D

PRELIMINARY
STAGE IV
95% Review
NOT FOR CONSTRUCTION OR RECORDING

DWG NO. P-5.24

___ OF ___

Plotted By: TR p:\040031\J2Cad\Sheets\H5782DPR09.dgn 4/22/2005 10:39:07 AM

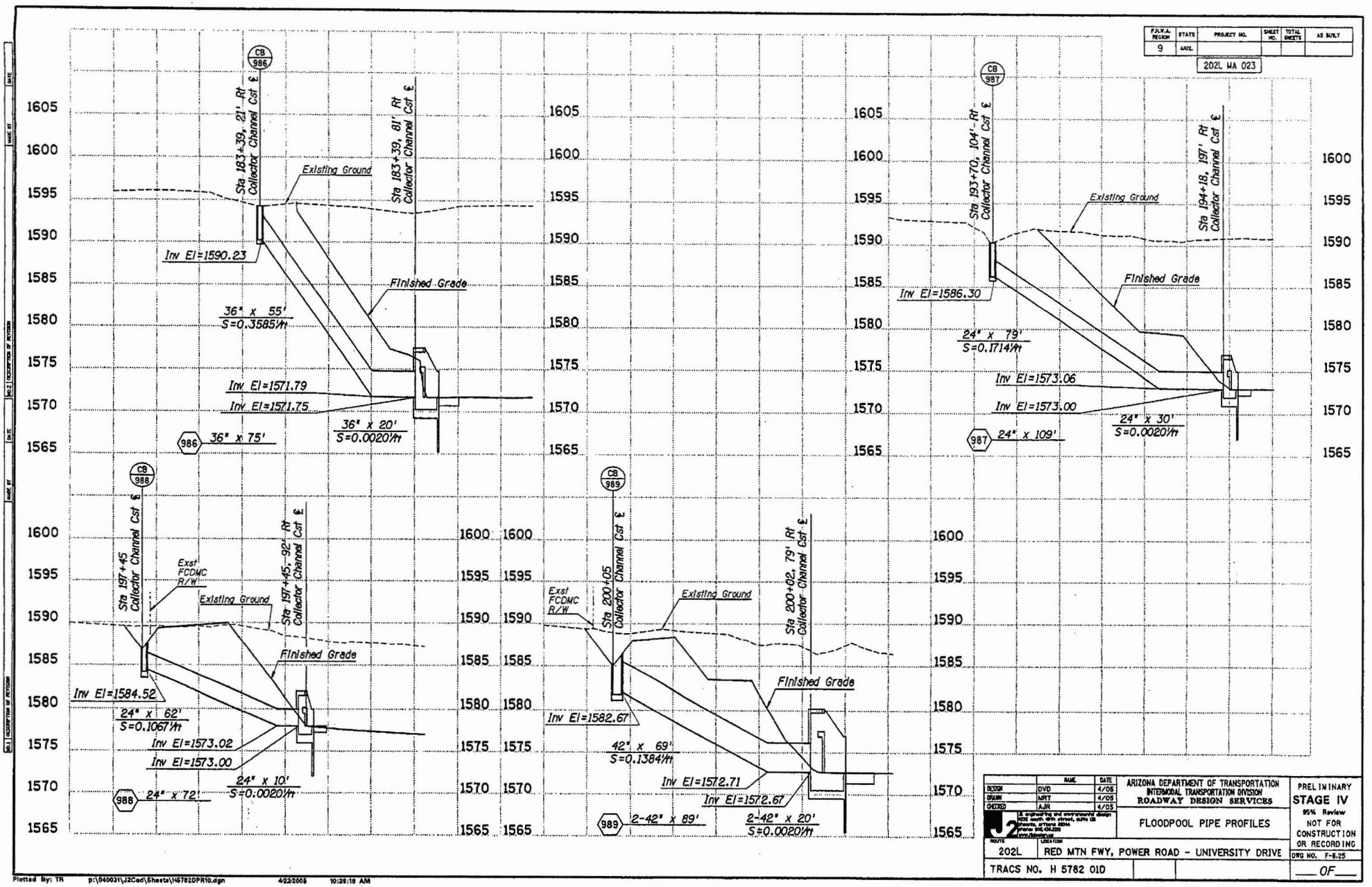

F.A.Y.L. REGION	STATE	PROJECT NO.	SHEET NO.	TOTAL SHEETS	AS BUILT
9	ARIZ.	202L MA 023			

	NAME	DATE
DESIGN	DVD	4/05
DRAWN	MRT	4/05
CHECKED	AJR	4/05

J2 engineering and environmental design
2152 south 48th street, suite 125
phoenix, arizona 85034
phone: 602.438.2288
www.j2design.us

ARIZONA DEPARTMENT OF TRANSPORTATION
INTERMODAL TRANSPORTATION DIVISION
ROADWAY DESIGN SERVICES

FLOODPOOL PIPE PROFILES

PRELIMINARY
STAGE IV
95% Review
NOT FOR CONSTRUCTION OR RECORDING

ROUTE: 202L
LOCATION: RED MTN FWY, POWER ROAD - UNIVERSITY DRIVE

TRACS NO. H 5782 01D

DWG NO. F-6.25

___ OF ___

Plotted By: TR p:\040031\J2Cad\Sheets\H5782DPR10.dgn 4/22/2005 10:39:18 AM

F.H.W.A. REGION	STATE	PROJECT NO.	SHEET NO.	TOTAL SHEETS	AS BUILT
9	ARIZ.				

202L MA 023

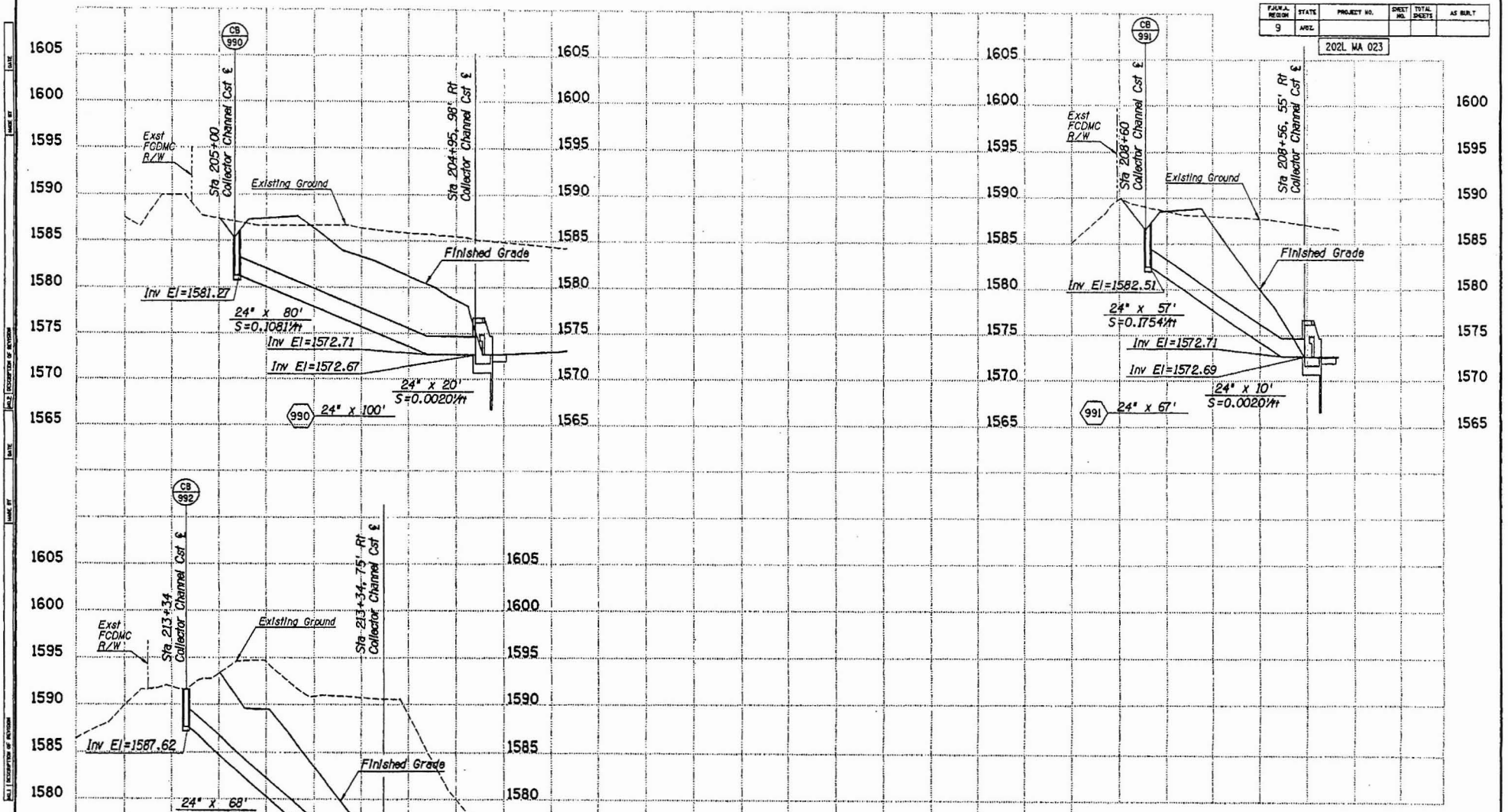

	NAME	DATE
DESIGN	DVD	4/05
DRAWN	MRT	4/05
CHECKED	AJR	4/05

J2 engineering and environmental design
1802 south 48th street, suite 125
phoenix, arizona 85044
phone 602.438.2500
www.j2engineering.com

ARIZONA DEPARTMENT OF TRANSPORTATION
INTERMODAL TRANSPORTATION DIVISION
ROADWAY DESIGN SERVICES

FLOODPOOL PIPE PROFILES

PRELIMINARY
STAGE IV
95% Review
NOT FOR CONSTRUCTION OR RECORDING

ROUTE	LOCATION	DWG NO.
202L	RED MTN FWY, POWER ROAD - UNIVERSITY DRIVE	F-6.25
TRACS NO. H 5782 01D		___ OF ___

Plotted By: TR p:\040031\J2Cad\Sheets\H5782DPR11.dgn 4/22/2005 10:39:33 AM