Property of
Flood Control District of MC Library
Please Return to
2801 W. Durango
Phoenix, AZ 85009

PONDING ALONG SIGNAL BUTTE FLOODWAY

Contract FCD 2000C036

Assignment No. 5

North of the Signal Butte Floodway

June 2002

WP #011315.06

Prepared for: **Flood Control District of Maricopa County**
2801 West Durango Street
Phoenix, Arizona 85009
Phone: (602) 506-1501

Prepared by: **Wood, Patel & Associates, Inc.**
2051 West Northern Avenue
Suite 100
Phoenix, Arizona 85021
Phone: (602) 335-8500
Fax: (602) 335-8580

Registered Professional Engineer (Civil) CERTIFICATE NO. 32854 SHIMIN ZOU Date Signed 6/14/02 ARIZONA U.S.A.

Engineer

Registered Professional Engineer (Civil) CERTIFICATE NO. 10512 ASHOK C. PATEL Date Signed 6/14/02 ARIZONA, U.S.A.

Peer Reviewer

TABLE OF CONTENTS

1.0 INTRODUCTION 1

2.0 HYDROLOGY 2

3.0 HYDRAULICS 3

4.0 CONCLUSIONS 4

APPENDICES

Appendix A Rainfall Data

Appendix B Hydrologic Modeling Results – Rational Method

Appendix C Hydraulic Modeling Results – FlowMaster's Output Files

EXHIBITS

Exhibit A Inlet Pictures

Exhibit B Preliminary Flood Ponding Limits

Registered Professional Engineer (Civil)
CERTIFICATE NO.
32854
SHIMIN
ZOU
Date Signed 6/14/02
ARIZONA U.S.A.

jmb
Y:\WP\Reports\Public Works Dept\011315.06 Ponding Along Signal Butte Floodway.doc

1.0 INTRODUCTION

Signal Butte FRS is a flood control dam. It is one of a complex system of structures (dams and diversions) intended to divert floodwaters from north of the City of Apache Junction to the Salt River.

Signal Butte Floodway is an open channel that conveys flood water from Signal Butte FRS west into Spook Hill FRS. It begins near the east side of Signal Butte Road and ends at the Spook Hill FRS.

The study limit of this project is from downstream of the Signal Butte FRS principal spillway to about 1,600 feet west of Crismon Road.

Since Signal Butte Floodway intercepts flood water from many washes flowing generally from north to south, numerous inlet structures were constructed along the north bank of the floodway to facilitate flood water into the floodway.

Due to development on the north side of the floodway, the Flood Control District of Maricopa County (District) has requested Wood, Patel & Associates, Inc. (Wood/Patel) to investigate the potential impact of the new development on the flood corridors and ponding areas. Specifically, the objective of this study is to define the limits of ponding along the north bank of the Signal Butte Floodway and, where needed, propose a solution that prevents inundation of areas outside District right-of-way.

2.0 HYDROLOGY

The contributing watershed for this project is located within sub-basins 260, 280, 300, and 305 from the *Spook Hill ADMP Update* by Wood/Patel, 2002. Since there are 15 inlets along the north bank of the floodway, 15 concentration points are needed. Therefore, the entire watershed is divided into 15 sub-basins, as shown in Exhibit B. Peak flows of the 100-year storm were estimated by the Rational Method, as outlined in *Drainage Design Manual for Maricopa County, Arizona; Volume 1 – Hydrology*, 1995. This method was used assuming the application of a steady, uniform rainfall intensity, which produces a peak flow value when all points within the watershed contribute to outflow at the concentration point.

The design rainfall data were from the District hydrologic manual and the site-specific rainfall intensity-duration-frequency relationships were developed by using the PREFRE methodology. The data were summarized in Appendix A. The input parameters to the Rational Method equation and computed peak flows were summarized in Appendix B. Note that flow from sub-basin 5A was split. Half of the flow was diverted into inlet number 4.

3.0 HYDRAULICS

Topographic mapping for the study areas was the two-foot contour map provided by the District.

As-built plans for the construction of the Signal Butte Floodway by Soil Conservation Service, U.S. Department of Agriculture, 1983, were reviewed to evaluate the number of inlets, location (Stations), geometric dimensions of the inlets, and right-of-way of the District.

Site visits were conducted by a Wood/Patel employee to evaluate the impact of new development on the wash floodway corridors and to estimate geometric dimensions of the inlets. Site visit photos were included in Exhibit A.

Manning's equation was applied to determine the hydraulic characteristics of the inlets. *Haestad Methods FlowMaster*, Version 6.0 was used to do normal depth calculations and present the results (see Appendix C). The modeling results were summarized in Table 1. The preliminary ponding area limits were delineated and shown in Exhibit B.

The modeling results show that the ponding areas in front of inlet number 4 and inlet number 5 are connected and have significant ponding areas outside of the District right-of-way. The second connected ponding area is created by inlets number 10 through number 13. High flows from the sub-basins of inlet number 12 and number 13 and a dike right on the north side of the District right-of-way are the major factors contributing to this large ponding area.

4.0 CONCLUSIONS

Since the construction of the Signal Butte Floodway, a lot of new development has occurred and is occurring upstream of the washes along the north bank of the floodway. Review of the as-built plans and site visits indicate that most of the inlets' geometric dimensions were modified since their construction.

Hydrologic and hydraulic analyses results show that all 15 inlets have adequate conveyance capacity to carry the 100-year storm runoff with flow depths varying from 1.0 to 5.8 feet. Inlets 4 and 12 create the highest water depth near the inlet areas. Water surface elevations of the inlets vary from 1,696.3 feet (MSL) to 1,701.3 feet (MSL). Most of the water surface elevations are near 1,700 feet (MSL).

Potential options for the elimination of the ponding areas that exist outside of the FCDMC right-of-way include:

1. Widening the inlets: By increasing the inlet width, the hydraulic depth at the spillway crest can be reduced. That in turn will result in a lower ponding area on the upstream side.

2. Buying more right-of-way: Since the majority of the ponding area is along the north bank of the Signal Butte Floodway, most of the ponding area can be limited within public land if more right-of-way is bought;

3. Adding a collection ditch on the north side of the embankment: The collection ditch will receive floodwater from all washes and redistribute flow to the inlets. The ponding area will be reduced by the lower water surface elevation in the ditch and the inlet's geometric dimensions can be modified to release the flow more efficiently, if necessary.

Table 1 Summary of Hydraulic Modeling Results

Inlet No.	Station	Q100 (cfs)	Water Surface Elevation (ft)	Critical Elevation (ft)	Flow Velocity (ft/s)	Top Width (ft)	Maximum Depth (ft)	Mannings Coefficient	Slope (ft/ft)	Froude Number
1	12+60	20	1698.1	1697.7	2.6	9.4	1.1	0.035	0.0050	0.50
2	16+40	61	1697.2	1696.5	3.8	9.5	2.2	0.035	0.0050	0.51
3	20+40	34	1696.3	1695.6	3.4	6.7	2.3	0.035	0.0050	0.48
4	25+90	502	1699.8	1698.8	5.5	33.1	5.8	0.035	0.0050	0.58
5	33+40	105	1700.1	1699.6	3.5	22.4	3.1	0.035	0.0050	0.52
6	37+80	131	1700.4	1699.9	3.4	30.5	1.4	0.035	0.0050	0.54
7	41+90	119	1700.0	1699.3	3.9	17.9	4.0	0.035	0.0050	0.52
8	44+20	123	1699.3	1698.9	3.4	30.3	1.3	0.035	0.0050	0.54
9	49+20	33	1699.0	1698.7	2.7	14.1	1.0	0.035	0.0050	0.51
10	53+10	131	1700.2	1699.6	3.9	20.7	3.2	0.035	0.0050	0.54
11	60+70	203	1700.9	1700.1	4.5	22.6	3.9	0.035	0.0050	0.55
12	66+80	260	1701.3	1700.4	4.8	24.1	4.3	0.035	0.0050	0.56
13	73+60	837	1700.8	1700.0	5.6	58.4	2.8	0.035	0.0050	0.61
14	82+10	100	1698.4	1697.7	3.8	15.6	3.4	0.035	0.0050	0.53
15	87+60	27	1697.2	1696.5	2.4	14.9	1.7	0.035	0.0050	0.48

APPENDIX A

RAINFALL DATA

Ponding Along Signal Butte Floodway

Return Frequency	Rainfall Depth (inches)
2-year, 6-hour	1.19
2-year, 24-hour	1.50
100-year, 6-hour	3.15
100-year, 24-hour	3.80

Short-Duration Rainfall Zone = 8

Rainfall Intensity-Duration -Frequency
Site Specific Table

Duration	Rainfall Depth (inches/hour) Frequency (N-year)						
	2	5	10	25	50	100	500
5-min	3.58	4.88	5.76	6.99	7.93	8.88	11.05
10-min	2.69	3.70	4.39	5.34	6.07	6.80	8.49
15-min	2.18	3.09	3.69	4.53	5.18	5.82	7.30
30-min	1.44	2.07	2.49	3.06	3.50	3.94	4.96
1-hour	0.88	1.28	1.54	1.91	2.19	2.47	3.11
2-hour	0.49	0.71	0.85	1.05	1.20	1.35	1.70
3-hour	0.35	0.50	0.60	0.74	0.85	0.95	1.20
6-hour	0.20	0.28	0.33	0.41	0.47	0.53	0.66
12-hour	0.11	0.16	0.19	0.23	0.26	0.29	0.36
24-hour	0.06	0.09	0.10	0.12	0.14	0.16	0.20

APPENDIX B

HYDROLOGIC MODELING RESULTS – RATIONAL METHOD

Rational Method

Reference: FCDMC, Jan. 1995. Drainage Design Manual for Maricopa County, AZ, Vol. I Hydrology

Project Name: Ponding Along Signal Butte Floodway **Project Number: 011315.06**

Drainage Basin No.	Inlet Station	Drainage Area (acre)	Drainage Area (mile²)	Drainage Length L (mile)	Drainage Slope S (ft/mile)	Drainage Average Height(ft)	Resistance Coefficient Kb	Design I (in/hr)	Concentr Time Tc (hr)	Design Runoff Coeff. C	Design Q (cfs)
1	12+60	4.67	0.0073	0.170	82.13	1707	0.036	8.37	0.095	0.50	20
2	16+40	17.22	0.0269	0.379	79.20	1713	0.034	7.08	0.148	0.50	61
3	20+40	8.26	0.0129	0.180	77.81	1705	0.034	8.30	0.097	0.50	34
4	25+90	141.18	0.2206	0.777	82.42	1730	0.034	6.11	0.222	0.50	502
5A		42.18	0.0659	0.568	91.52	1740	0.034	6.64	0.178	0.50	140
5	33+40	8.72	0.0136	0.180	66.69	1706	0.034	8.10	0.103	0.50	105
6	37+80	42.70	0.0667	0.795	85.49	1736	0.034	6.11	0.222	0.50	131
7	41+90	38.57	0.0603	0.777	90.15	1735	0.034	6.19	0.215	0.50	119
8	44+20	40.17	0.0628	0.786	86.52	1736	0.034	6.15	0.219	0.50	123
9	49+20	8.78	0.0137	0.303	85.80	1715	0.034	7.48	0.127	0.50	33
10	53+10	42.36	0.0662	0.777	90.15	1735	0.034	6.20	0.214	0.50	131
11	60+70	65.89	0.1030	0.795	90.51	1736	0.034	6.17	0.217	0.50	203
12	66+80	84.71	0.1324	0.805	89.45	1736	0.034	6.14	0.220	0.50	260
13	73+60	415.19	0.6487	2.235	116.34	1830	0.034	4.80	0.370	0.42	837
14	82+10	26.86	0.0420	0.275	881.21	1819	0.034	8.88	0.083	0.42	100
15	87+60	7.23	0.0113	0.161	1925.65	1855	0.035	8.88	0.083	0.42	27

APPENDIX C

HYDRAULIC MODELING RESULTS – FLOWMASTER'S OUTPUT FILES

Inlet No. 1
Cross Section for Irregular Channel

Project Description	
Worksheet	Inlet_01
Flow Element	Irregular Channel
Method	Manning's Formula
Solve For	Channel Depth

Section Data		
Mannings Coefficient	0.035	
Slope	0.005000	ft/ft
Water Surface Elevation	1,698.09	ft
Elevation Range	1,697.00 to 1,700.00	
Discharge	20.00	cfs

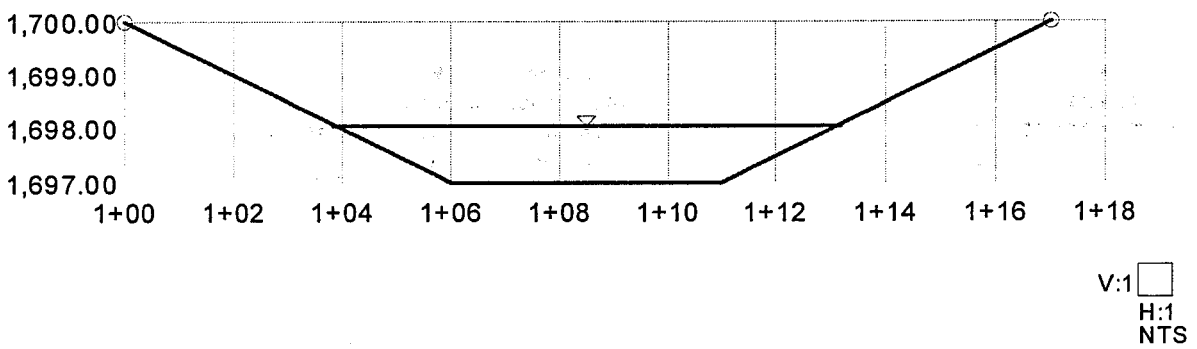

Inlet No. 1
Worksheet for Irregular Channel

Project Description	
Worksheet	Inlet_01
Flow Element	Irregular Channel
Method	Manning's Formula
Solve For	Channel Depth

Input Data		
Slope	0.005000	ft/ft
Discharge	20.00	cfs

Options	
Current Roughness Method	Improved Lotter's Method
Open Channel Weighting Method	Improved Lotter's Method
Closed Channel Weighting Method	Horton's Method

Results		
Mannings Coefficient	0.035	
Water Surface Elevation	1,698.09	ft
Elevation Range	1,697.00 to 1,700.00	
Flow Area	7.8	ft²
Wetted Perimeter	9.86	ft
Top Width	9.35	ft
Actual Depth	1.09	ft
Critical Elevation	1,697.72	ft
Critical Slope	0.022566	ft/ft
Velocity	2.57	ft/s
Velocity Head	0.10	ft
Specific Energy	1,698.19	ft
Froude Number	0.50	
Flow Type	Subcritical	

Roughness Segments

Start Station	End Station	Mannings Coefficient
1+00	1+17	0.035

Natural Channel Points

Station (ft)	Elevation (ft)
1+00	1,700.00
1+06	1,697.00
1+11	1,697.00
1+17	1,700.00

Inlet No. 2
Cross Section for Irregular Channel

Project Description	
Worksheet	Inlet_02
Flow Element	Irregular Channel
Method	Manning's Formula
Solve For	Channel Depth

Section Data		
Mannings Coefficient	0.035	
Slope	0.005000	ft/ft
Water Surface Elevation	1,697.22	ft
Elevation Range	1,695.00 to 1,700.00	
Discharge	61.00	cfs

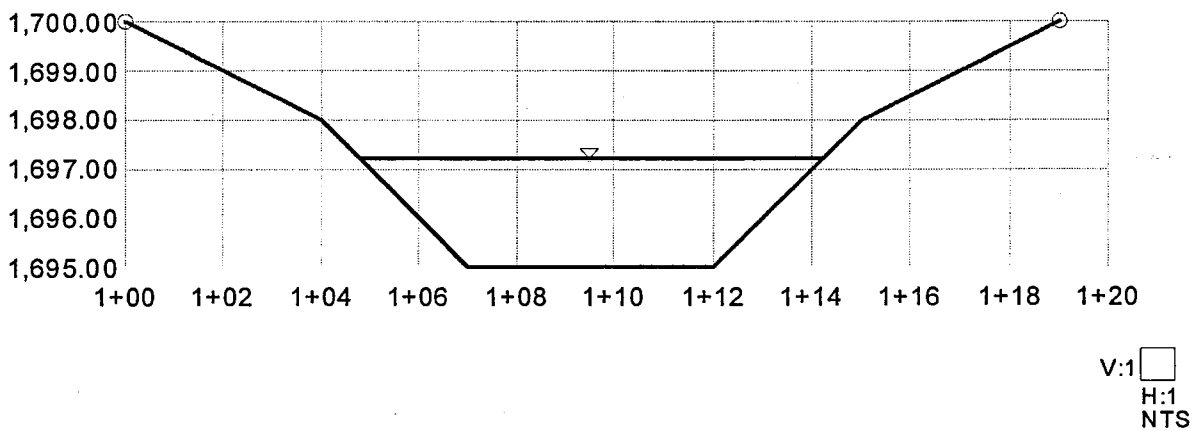

Inlet No. 2
Worksheet for Irregular Channel

Project Description	
Worksheet	Inlet_02
Flow Element	Irregular Channel
Method	Manning's Formula
Solve For	Channel Depth

Input Data		
Slope	0.005000	ft/ft
Discharge	61.00	cfs

Options	
Current Roughness Method	Improved Lotter's Method
Open Channel Weighting Method	Improved Lotter's Method
Closed Channel Weighting Method	Horton's Method

Results		
Mannings Coefficient	0.035	
Water Surface Elevation	1,697.22	ft
Elevation Range	1,695.00 to 1,700.00	
Flow Area	16.1	ft^2
Wetted Perimeter	11.29	ft
Top Width	9.45	ft
Actual Depth	2.22	ft
Critical Elevation	1,696.50	ft
Critical Slope	0.020261	ft/ft
Velocity	3.80	ft/s
Velocity Head	0.22	ft
Specific Energy	1,697.45	ft
Froude Number	0.51	
Flow Type	Subcritical	

Roughness Segments

Start Station	End Station	Mannings Coefficient
1+00	1+19	0.035

Natural Channel Points

Station (ft)	Elevation (ft)
1+00	1,700.00
1+04	1,698.00
1+07	1,695.00
1+12	1,695.00
1+15	1,698.00
1+19	1,700.00

Inlet No. 3
Cross Section for Irregular Channel

Project Description	
Worksheet	Inlet_03
Flow Element	Irregular Channel
Method	Manning's Formula
Solve For	Channel Depth

Section Data		
Mannings Coefficient	0.035	
Slope	0.005000	ft/ft
Water Surface Elevation	1,696.34	ft
Elevation Range	1,694.00 to 1,700.00	
Discharge	34.00	cfs

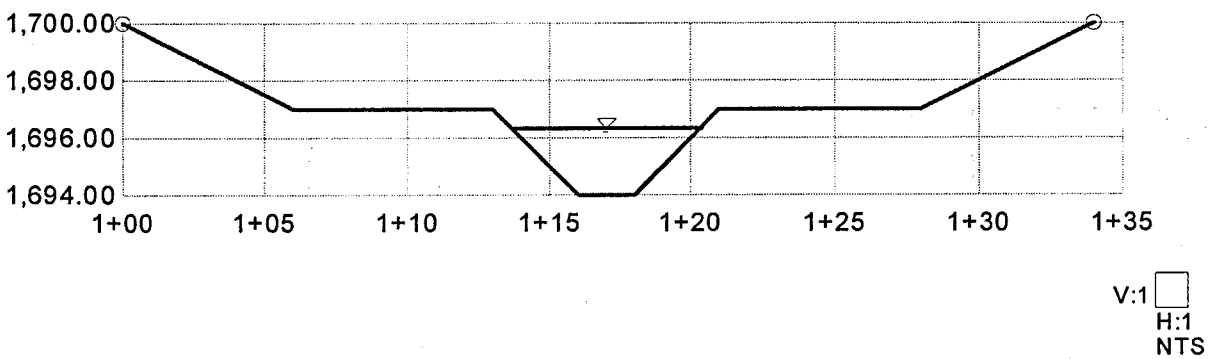

Inlet No. 3
Worksheet for Irregular Channel

Project Description	
Worksheet	Inlet_03
Flow Element	Irregular Channel
Method	Manning's Formula
Solve For	Channel Depth

Input Data		
Slope	0.005000	ft/ft
Discharge	34.00	cfs

Options	
Current Roughness Method	Improved Lotter's Method
Open Channel Weighting Method	Improved Lotter's Method
Closed Channel Weighting Method	Horton's Method

Results		
Mannings Coefficient	0.035	
Water Surface Elevation	1,696.34	ft
Elevation Range	1,694.00 to 1,700.00	
Flow Area	10.2	ft²
Wetted Perimeter	8.62	ft
Top Width	6.68	ft
Actual Depth	2.34	ft
Critical Elevation	1,695.59	ft
Critical Slope	0.023376	ft/ft
Velocity	3.35	ft/s
Velocity Head	0.17	ft
Specific Energy	1,696.51	ft
Froude Number	0.48	
Flow Type	Subcritical	

Roughness Segments

Start Station	End Station	Mannings Coefficient
1+00	1+34	0.035

Natural Channel Points

Station (ft)	Elevation (ft)
1+00	1,700.00
1+06	1,697.00
1+13	1,697.00
1+16	1,694.00
1+18	1,694.00
1+21	1,697.00
1+28	1,697.00
1+34	1,700.00

Inlet No. 4
Cross Section for Irregular Channel

Project Description	
Worksheet	Inlet_04
Flow Element	Irregular Channel
Method	Manning's Formula
Solve For	Channel Depth

Section Data		
Mannings Coefficient	0.035	
Slope	0.005000	ft/ft
Water Surface Elevation	1,699.77	ft
Elevation Range	1,694.00 to 1,700.00	
Discharge	502.00	cfs

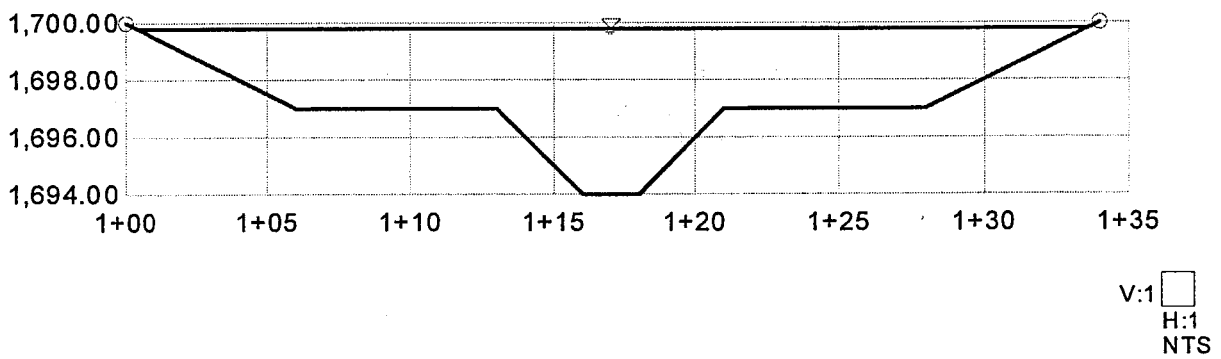

Inlet No. 4
Worksheet for Irregular Channel

Project Description	
Worksheet	Inlet_04
Flow Element	Irregular Channel
Method	Manning's Formula
Solve For	Channel Depth

Input Data		
Slope	0.005000	ft/ft
Discharge	502.00	cfs

Options	
Current Roughness Method	Improved Lotter's Method
Open Channel Weighting Method	Improved Lotter's Method
Closed Channel Weighting Method	Horton's Method

Results		
Mannings Coefficient	0.035	
Water Surface Elevation	1,699.77	ft
Elevation Range	1,694.00 to 1,700.00	
Flow Area	91.3	ft²
Wetted Perimeter	36.88	ft
Top Width	33.09	ft
Actual Depth	5.77	ft
Critical Elevation	1,698.80	ft
Critical Slope	0.016118	ft/ft
Velocity	5.50	ft/s
Velocity Head	0.47	ft
Specific Energy	1,700.24	ft
Froude Number	0.58	
Flow Type	Subcritical	

Roughness Segments

Start Station	End Station	Mannings Coefficient
1+00	1+34	0.035

Natural Channel Points

Station (ft)	Elevation (ft)
1+00	1,700.00
1+06	1,697.00
1+13	1,697.00
1+16	1,694.00
1+18	1,694.00
1+21	1,697.00
1+28	1,697.00
1+34	1,700.00

Inlet No. 5
Cross Section for Irregular Channel

Project Description	
Worksheet	Inlet_05
Flow Element	Irregular Channel
Method	Manning's Formula
Solve For	Channel Depth

Section Data		
Mannings Coefficient	0.035	
Slope	0.005000	ft/ft
Water Surface Elevation	1,700.11	ft
Elevation Range	1,697.00 to 1,702.00	
Discharge	105.00	cfs

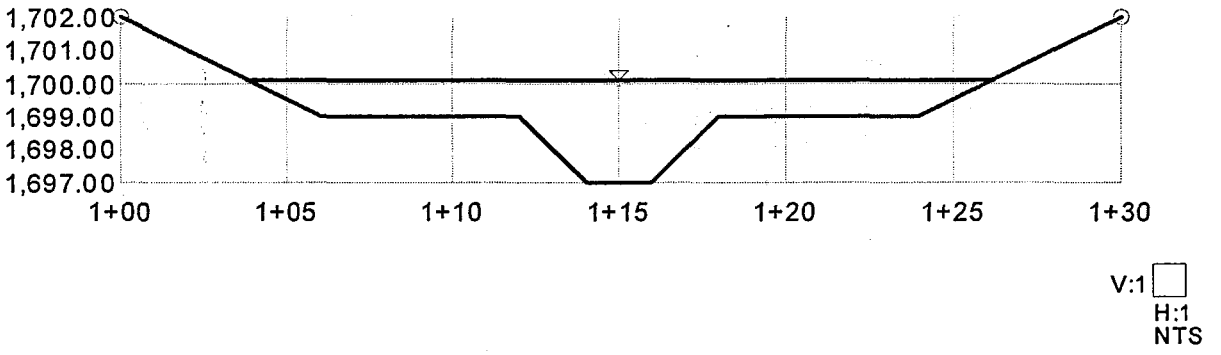

Inlet No. 5
Worksheet for Irregular Channel

Project Description	
Worksheet	Inlet_05
Flow Element	Irregular Channel
Method	Manning's Formula
Solve For	Channel Depth

Input Data		
Slope	0.005000	ft/ft
Discharge	105.00	cfs

Options	
Current Roughness Method	Improved Lotter's Method
Open Channel Weighting Method	Improved Lotter's Method
Closed Channel Weighting Method	Horton's Method

Results		
Mannings Coefficient	0.035	
Water Surface Elevation	1,700.11	ft
Elevation Range	1,697.00 to 1,702.00	
Flow Area	30.4	ft²
Wetted Perimeter	24.61	ft
Top Width	22.43	ft
Actual Depth	3.11	ft
Critical Elevation	1,699.58	ft
Critical Slope	0.020568	ft/ft
Velocity	3.46	ft/s
Velocity Head	0.19	ft
Specific Energy	1,700.29	ft
Froude Number	0.52	
Flow Type	Subcritical	

Roughness Segments

Start Station	End Station	Mannings Coefficient
1+00	1+30	0.035

Natural Channel Points

Station (ft)	Elevation (ft)
1+00	1,702.00
1+06	1,699.00
1+12	1,699.00
1+14	1,697.00
1+16	1,697.00
1+18	1,699.00
1+24	1,699.00
1+30	1,702.00

Inlet No. 6
Cross Section for Irregular Channel

Project Description	
Worksheet	Inlet_06
Flow Element	Irregular Channel
Method	Manning's Formula
Solve For	Channel Depth

Section Data		
Mannings Coefficient	0.035	
Slope	0.005000	ft/ft
Water Surface Elevation	1,700.37	ft
Elevation Range	1,699.00 to 1,702.00	
Discharge	131.00	cfs

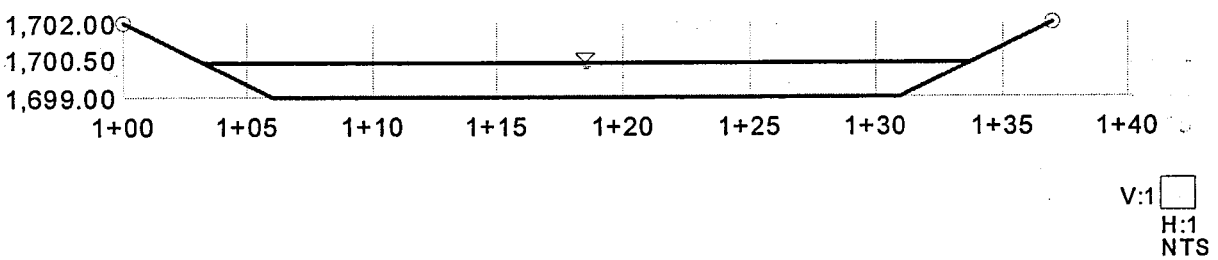

Inlet No. 6
Worksheet for Irregular Channel

Project Description	
Worksheet	Inlet_06
Flow Element	Irregular Channel
Method	Manning's Formula
Solve For	Channel Depth

Input Data		
Slope	0.005000	ft/ft
Discharge	131.00	cfs

Options	
Current Roughness Method	Improved Lotter's Method
Open Channel Weighting Method	Improved Lotter's Method
Closed Channel Weighting Method	Horton's Method

Results		
Mannings Coefficient	0.035	
Water Surface Elevation	1,700.37	ft
Elevation Range	1,699.00 to 1,702.00	
Flow Area	38.1	ft²
Wetted Perimeter	31.15	ft
Top Width	30.50	ft
Actual Depth	1.37	ft
Critical Elevation	1,699.92	ft
Critical Slope	0.019114	ft/ft
Velocity	3.44	ft/s
Velocity Head	0.18	ft
Specific Energy	1,700.56	ft
Froude Number	0.54	
Flow Type	Subcritical	

Roughness Segments

Start Station	End Station	Mannings Coefficient
1+00	1+37	0.035

Natural Channel Points

Station (ft)	Elevation (ft)
1+00	1,702.00
1+06	1,699.00
1+31	1,699.00
1+37	1,702.00

Inlet No. 7
Cross Section for Irregular Channel

Project Description	
Worksheet	Inlet_07
Flow Element	Irregular Channel
Method	Manning's Formula
Solve For	Channel Depth

Section Data		
Mannings Coefficient	0.035	
Slope	0.005000	ft/ft
Water Surface Elevation	1,699.98	ft
Elevation Range	1,696.00 to 1,702.00	
Discharge	119.00	cfs

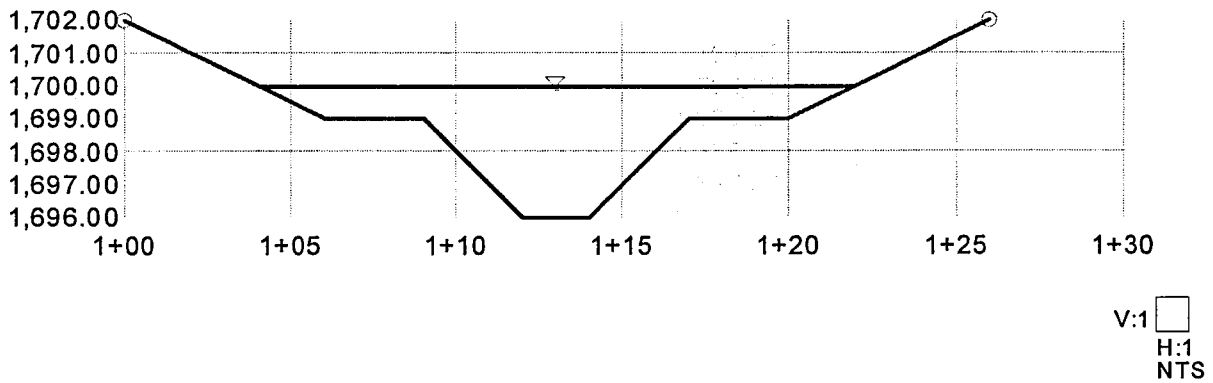

Inlet No. 7
Worksheet for Irregular Channel

Project Description	
Worksheet	Inlet_07
Flow Element	Irregular Channel
Method	Manning's Formula
Solve For	Channel Depth

Input Data		
Slope	0.005000	ft/ft
Discharge	119.00	cfs

Options	
Current Roughness Method	Improved Lotter's Method
Open Channel Weighting Method	Improved Lotter's Method
Closed Channel Weighting Method	Horton's Method

Results		
Mannings Coefficient	0.035	
Water Surface Elevation	1,699.98	ft
Elevation Range	1,696.00 to 1,702.00	
Flow Area	30.7	ft²
Wetted Perimeter	20.88	ft
Top Width	17.93	ft
Actual Depth	3.98	ft
Critical Elevation	1,699.26	ft
Critical Slope	0.020518	ft/ft
Velocity	3.88	ft/s
Velocity Head	0.23	ft
Specific Energy	1,700.22	ft
Froude Number	0.52	
Flow Type	Subcritical	

Roughness Segments

Start Station	End Station	Mannings Coefficient
1+00	1+26	0.035

Natural Channel Points

Station (ft)	Elevation (ft)
1+00	1,702.00
1+06	1,699.00
1+09	1,699.00
1+12	1,696.00
1+14	1,696.00
1+17	1,699.00
1+20	1,699.00
1+26	1,702.00

Inlet No. 8
Cross Section for Irregular Channel

Project Description	
Worksheet	Inlet_08
Flow Element	Irregular Channel
Method	Manning's Formula
Solve For	Channel Depth

Section Data		
Mannings Coefficient	0.035	
Slope	0.005000	ft/ft
Water Surface Elevation	1,699.32	ft
Elevation Range	1,698.00 to 1,702.00	
Discharge	123.00	cfs

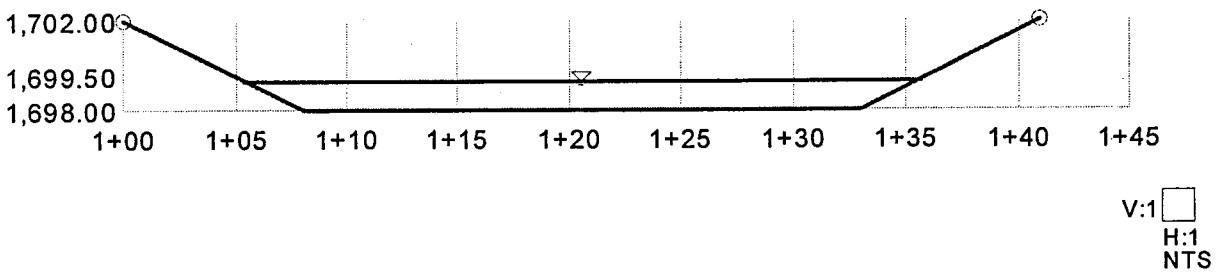

Inlet No. 8
Worksheet for Irregular Channel

Project Description	
Worksheet	Inlet_08
Flow Element	Irregular Channel
Method	Manning's Formula
Solve For	Channel Depth

Input Data		
Slope	0.005000	ft/ft
Discharge	123.00	cfs

Options	
Current Roughness Method	Improved Lotter's Method
Open Channel Weighting Method	Improved Lotter's Method
Closed Channel Weighting Method	Horton's Method

Results		
Mannings Coefficient	0.035	
Water Surface Elevation	1,699.32	ft
Elevation Range	1,698.00 to 1,702.00	
Flow Area	36.6	ft²
Wetted Perimeter	30.92	ft
Top Width	30.30	ft
Actual Depth	1.32	ft
Critical Elevation	1,698.89	ft
Critical Slope	0.019348	ft/ft
Velocity	3.36	ft/s
Velocity Head	0.18	ft
Specific Energy	1,699.50	ft
Froude Number	0.54	
Flow Type	Subcritical	

Roughness Segments

Start Station	End Station	Mannings Coefficient
1+00	1+41	0.035

Natural Channel Points

Station (ft)	Elevation (ft)
1+00	1,702.00
1+08	1,698.00
1+33	1,698.00
1+41	1,702.00

Inlet No. 9
Cross Section for Irregular Channel

Project Description	
Worksheet	Inlet_09
Flow Element	Irregular Channel
Method	Manning's Formula
Solve For	Channel Depth

Section Data		
Mannings Coefficient	0.035	
Slope	0.005000	ft/ft
Water Surface Elevation	1,699.02	ft
Elevation Range	1,698.00 to 1,702.00	
Discharge	33.00	cfs

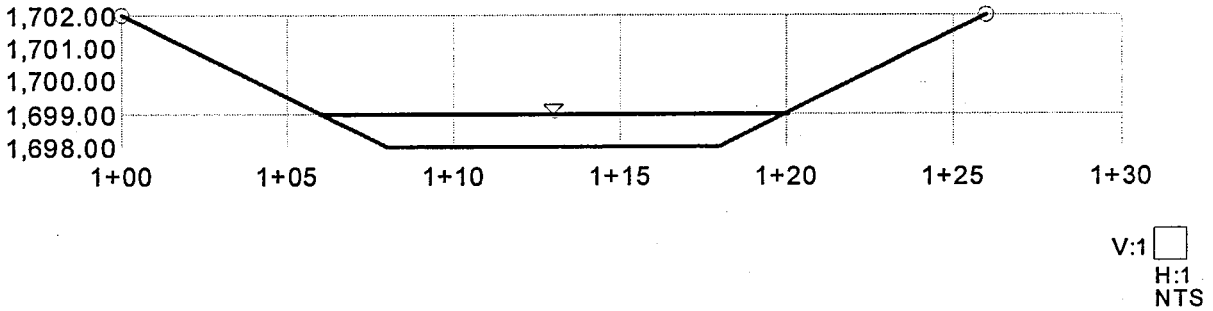

Inlet No. 9
Worksheet for Irregular Channel

Project Description	
Worksheet	Inlet_09
Flow Element	Irregular Channel
Method	Manning's Formula
Solve For	Channel Depth

Input Data	
Slope	0.005000 ft/ft
Discharge	33.00 cfs

Options	
Current Roughness Method	Improved Lotter's Method
Open Channel Weighting Method	Improved Lotter's Method
Closed Channel Weighting Method	Horton's Method

Results	
Mannings Coefficient	0.035
Water Surface Elevation	1,699.02 ft
Elevation Range	1,698.00 to 1,702.00
Flow Area	12.3 ft²
Wetted Perimeter	14.57 ft
Top Width	14.09 ft
Actual Depth	1.02 ft
Critical Elevation	1,698.67 ft
Critical Slope	0.021923 ft/ft
Velocity	2.68 ft/s
Velocity Head	0.11 ft
Specific Energy	1,699.13 ft
Froude Number	0.51
Flow Type	Subcritical

Roughness Segments

Start Station	End Station	Mannings Coefficient
1+00	1+26	0.035

Natural Channel Points

Station (ft)	Elevation (ft)
1+00	1,702.00
1+08	1,698.00
1+18	1,698.00
1+26	1,702.00

Inlet No. 10
Cross Section for Irregular Channel

Project Description	
Worksheet	Inlet_10
Flow Element	Irregular Channel
Method	Manning's Formula
Solve For	Channel Depth

Section Data		
Mannings Coefficient	0.035	
Slope	0.005000	ft/ft
Water Surface Elevation	1,700.18	ft
Elevation Range	1,697.00 to 1,702.00	
Discharge	131.00	cfs

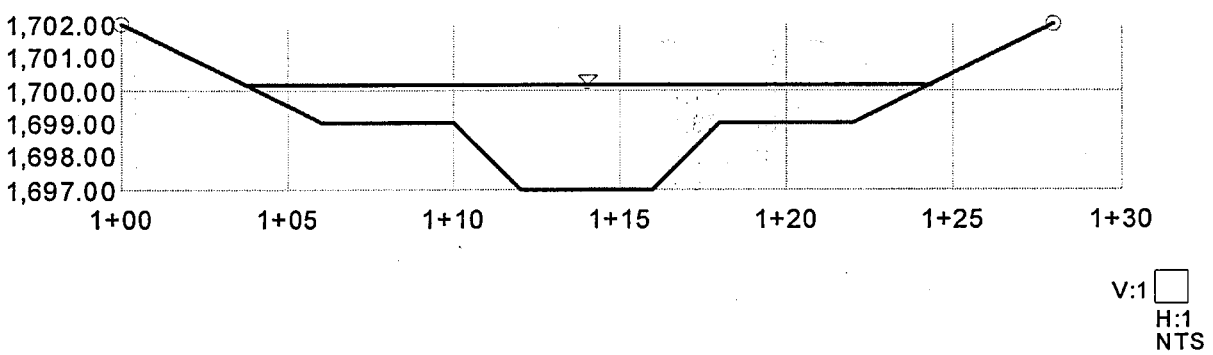

Inlet No. 10
Worksheet for Irregular Channel

Project Description	
Worksheet	Inlet_10
Flow Element	Irregular Channel
Method	Manning's Formula
Solve For	Channel Depth

Input Data		
Slope	0.005000	ft/ft
Discharge	131.00	cfs

Options	
Current Roughness Method	Improved Lotter's Method
Open Channel Weighting Method	Improved Lotter's Method
Closed Channel Weighting Method	Horton's Method

Results		
Mannings Coefficient	0.035	
Water Surface Elevation	1,700.18	ft
Elevation Range	1,697.00 to 1,702.00	
Flow Area	33.7	ft²
Wetted Perimeter	22.95	ft
Top Width	20.74	ft
Actual Depth	3.18	ft
Critical Elevation	1,699.55	ft
Critical Slope	0.019344	ft/ft
Velocity	3.88	ft/s
Velocity Head	0.23	ft
Specific Energy	1,700.42	ft
Froude Number	0.54	
Flow Type	Subcritical	

Roughness Segments

Start Station	End Station	Mannings Coefficient
1+00	1+28	0.035

Natural Channel Points

Station (ft)	Elevation (ft)
1+00	1,702.00
1+06	1,699.00
1+10	1,699.00
1+12	1,697.00
1+16	1,697.00
1+18	1,699.00
1+22	1,699.00
1+28	1,702.00

Inlet No. 11
Cross Section for Irregular Channel

Project Description	
Worksheet	Inlet_11
Flow Element	Irregular Channel
Method	Manning's Formula
Solve For	Channel Depth

Section Data		
Mannings Coefficient	0.035	
Slope	0.005000	ft/ft
Water Surface Elevation	1,700.89	ft
Elevation Range	1,697.00 to 1,702.00	
Discharge	203.00	cfs

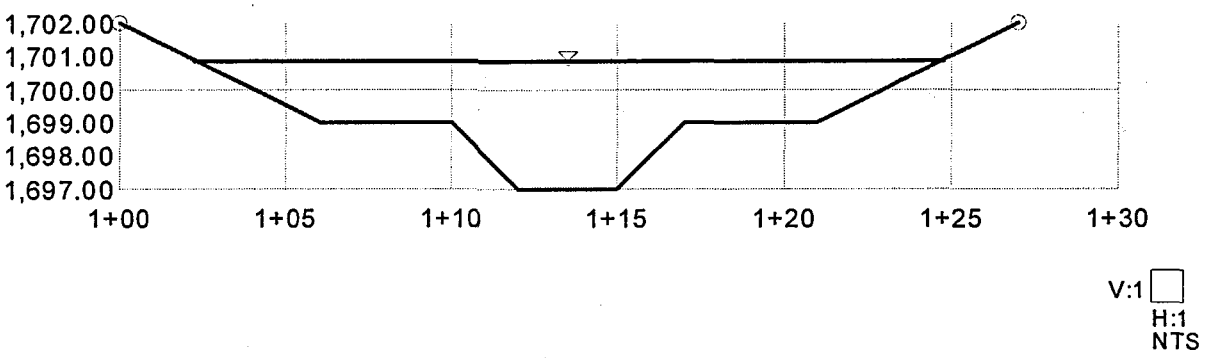

Inlet No. 11
Worksheet for Irregular Channel

Project Description	
Worksheet	Inlet_11
Flow Element	Irregular Channel
Method	Manning's Formula
Solve For	Channel Depth

Input Data		
Slope	0.005000	ft/ft
Discharge	203.00	cfs

Options	
Current Roughness Method	Improved Lotter's Method
Open Channel Weighting Method	Improved Lotter's Method
Closed Channel Weighting Method	Horton's Method

Results		
Mannings Coefficient	0.035	
Water Surface Elevation	1,700.89	ft
Elevation Range	1,697.00 to 1,702.00	
Flow Area	45.5	ft²
Wetted Perimeter	25.11	ft
Top Width	22.56	ft
Actual Depth	3.89	ft
Critical Elevation	1,700.11	ft
Critical Slope	0.017965	ft/ft
Velocity	4.46	ft/s
Velocity Head	0.31	ft
Specific Energy	1,701.20	ft
Froude Number	0.55	
Flow Type	Subcritical	

Roughness Segments

Start Station	End Station	Mannings Coefficient
1+00	1+27	0.035

Natural Channel Points

Station (ft)	Elevation (ft)
1+00	1,702.00
1+06	1,699.00
1+10	1,699.00
1+12	1,697.00
1+15	1,697.00
1+17	1,699.00
1+21	1,699.00
1+27	1,702.00

Inlet No. 12
Cross Section for Irregular Channel

Project Description	
Worksheet	Inlet_12
Flow Element	Irregular Channel
Method	Manning's Formula
Solve For	Channel Depth

Section Data		
Mannings Coefficient	0.035	
Slope	0.005000	ft/ft
Water Surface Elevation	1,701.26	ft
Elevation Range	1,697.00 to 1,702.00	
Discharge	260.00	cfs

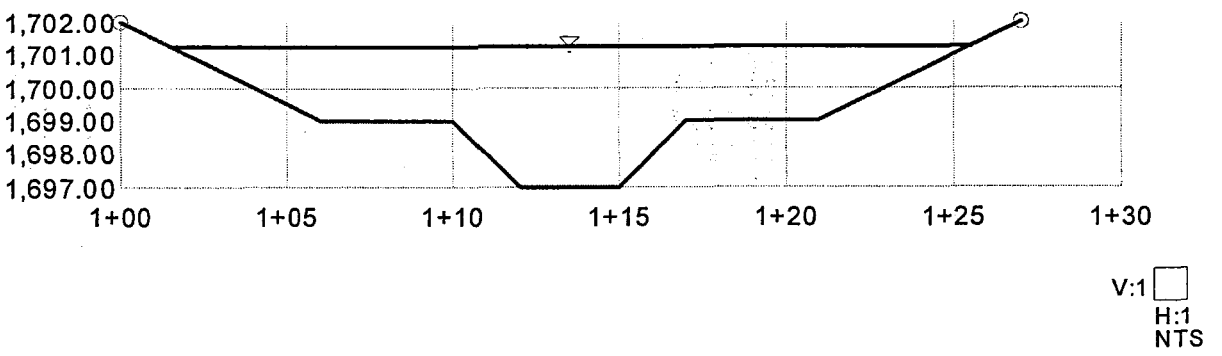

Inlet No. 12
Worksheet for Irregular Channel

Project Description	
Worksheet	Inlet_12
Flow Element	Irregular Channel
Method	Manning's Formula
Solve For	Channel Depth

Input Data		
Slope	0.005000	ft/ft
Discharge	260.00	cfs

Options	
Current Roughness Method	Improved Lotter's Method
Open Channel Weighting Method	Improved Lotter's Method
Closed Channel Weighting Method	Horton's Method

Results		
Mannings Coefficient	0.035	
Water Surface Elevation	1,701.26	ft
Elevation Range	1,697.00 to 1,702.00	
Flow Area	54.1	ft²
Wetted Perimeter	26.77	ft
Top Width	24.05	ft
Actual Depth	4.26	ft
Critical Elevation	1,700.41	ft
Critical Slope	0.017235	ft/ft
Velocity	4.80	ft/s
Velocity Head	0.36	ft
Specific Energy	1,701.62	ft
Froude Number	0.56	
Flow Type	Subcritical	

Roughness Segments

Start Station	End Station	Mannings Coefficient
1+00	1+27	0.035

Natural Channel Points

Station (ft)	Elevation (ft)
1+00	1,702.00
1+06	1,699.00
1+10	1,699.00
1+12	1,697.00
1+15	1,697.00
1+17	1,699.00
1+21	1,699.00
1+27	1,702.00

Inlet No. 13
Cross Section for Irregular Channel

Project Description	
Worksheet	Inlet_13
Flow Element	Irregular Channel
Method	Manning's Formula
Solve For	Channel Depth

Section Data		
Mannings Coefficient	0.035	
Slope	0.005000	ft/ft
Water Surface Elevation	1,700.78	ft
Elevation Range	1,698.00 to 1,702.00	
Discharge	837.00	cfs

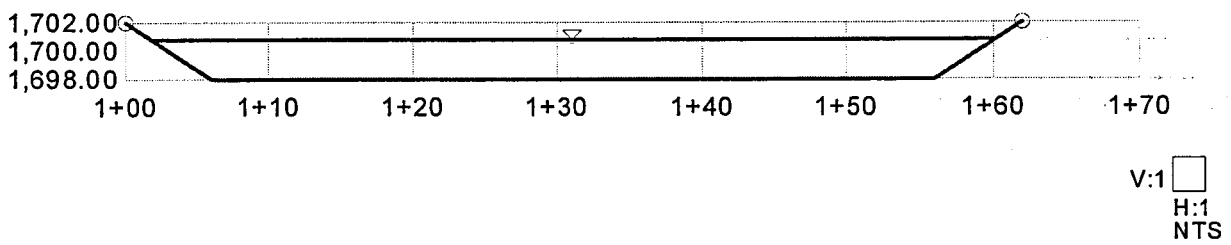

Inlet No. 13
Worksheet for Irregular Channel

Project Description	
Worksheet	Inlet_13
Flow Element	Irregular Channel
Method	Manning's Formula
Solve For	Channel Depth

Input Data		
Slope	0.005000	ft/ft
Discharge	837.00	cfs

Options	
Current Roughness Method	Improved Lotter's Method
Open Channel Weighting Method	Improved Lotter's Method
Closed Channel Weighting Method	Horton's Method

Results		
Mannings Coefficient	0.035	
Water Surface Elevation	1,700.78	ft
Elevation Range	1,698.00 to 1,702.00	
Flow Area	150.9	ft²
Wetted Perimeter	60.04	ft
Top Width	58.35	ft
Actual Depth	2.78	ft
Critical Elevation	1,700.02	ft
Critical Slope	0.014815	ft/ft
Velocity	5.55	ft/s
Velocity Head	0.48	ft
Specific Energy	1,701.26	ft
Froude Number	0.61	
Flow Type	Subcritical	

Roughness Segments

Start Station	End Station	Mannings Coefficient
1+00	1+62	0.035

Natural Channel Points

Station (ft)	Elevation (ft)
1+00	1,702.00
1+06	1,698.00
1+56	1,698.00
1+62	1,702.00

Inlet No. 14
Cross Section for Irregular Channel

Project Description	
Worksheet	Inlet_14
Flow Element	Irregular Channel
Method	Manning's Formula
Solve For	Channel Depth

Section Data		
Mannings Coefficient	0.035	
Slope	0.005000	ft/ft
Water Surface Elevation	1,698.41	ft
Elevation Range	1,695.00 to 1,700.00	
Discharge	100.00	cfs

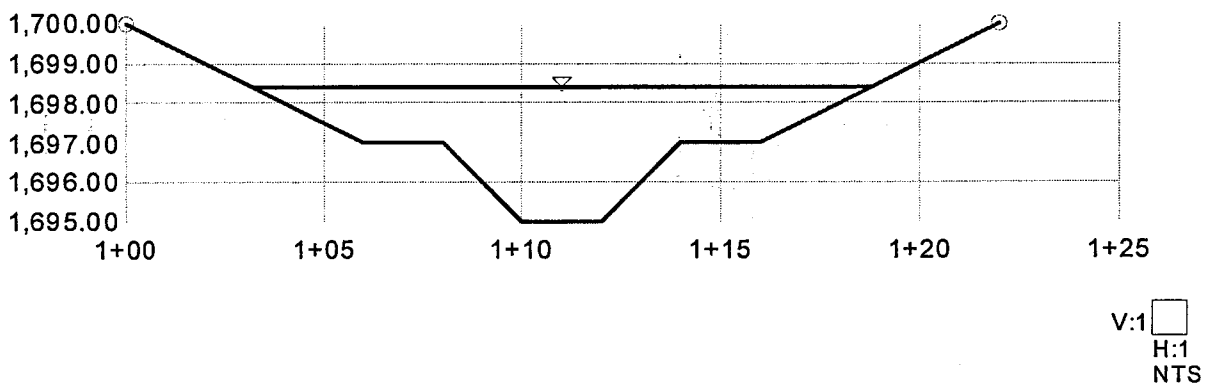

Inlet No. 14
Worksheet for Irregular Channel

Project Description	
Worksheet	Inlet_14
Flow Element	Irregular Channel
Method	Manning's Formula
Solve For	Channel Depth

Input Data		
Slope	0.005000	ft/ft
Discharge	100.00	cfs

Options	
Current Roughness Method	Improved Lotter's Method
Open Channel Weighting Method	Improved Lotter's Method
Closed Channel Weighting Method	Horton's Method

Results		
Mannings Coefficient	0.035	
Water Surface Elevation	1,698.41	ft
Elevation Range	1,695.00 to 1,700.00	
Flow Area	26.0	ft²
Wetted Perimeter	17.94	ft
Top Width	15.62	ft
Actual Depth	3.41	ft
Critical Elevation	1,697.69	ft
Critical Slope	0.020139	ft/ft
Velocity	3.84	ft/s
Velocity Head	0.23	ft
Specific Energy	1,698.64	ft
Froude Number	0.53	
Flow Type	Subcritical	

Roughness Segments

Start Station	End Station	Mannings Coefficient
1+00	1+22	0.035

Natural Channel Points

Station (ft)	Elevation (ft)
1+00	1,700.00
1+06	1,697.00
1+08	1,697.00
1+10	1,695.00
1+12	1,695.00
1+14	1,697.00
1+16	1,697.00
1+22	1,700.00

Inlet No. 15
Cross Section for Irregular Channel

Project Description	
Worksheet	Inlet_15
Flow Element	Irregular Channel
Method	Manning's Formula
Solve For	Channel Depth

Section Data		
Mannings Coefficient	0.035	
Slope	0.005000	ft/ft
Water Surface Elevation	1,697.22	ft
Elevation Range	1,695.50 to 1,700.00	
Discharge	27.00	cfs

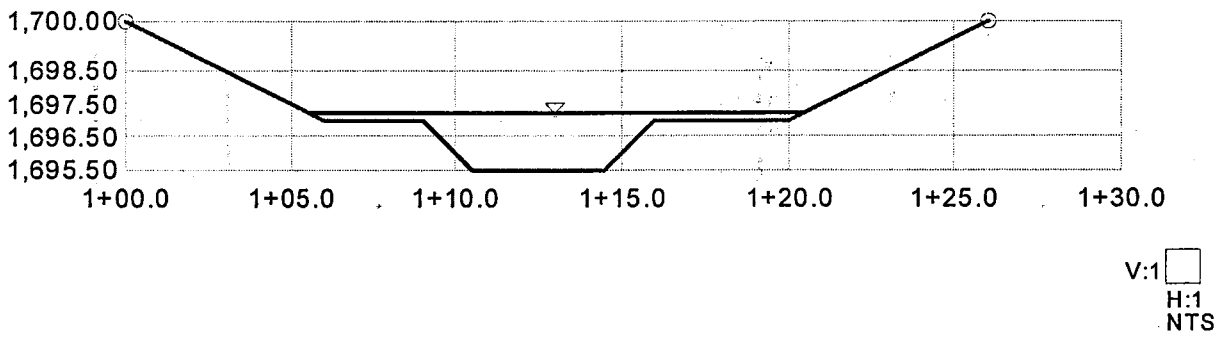

Inlet No. 15
Worksheet for Irregular Channel

Project Description	
Worksheet	Inlet_15
Flow Element	Irregular Channel
Method	Manning's Formula
Solve For	Channel Depth

Input Data		
Slope	0.005000	ft/ft
Discharge	27.00	cfs

Options	
Current Roughness Method	Improved Lotter's Method
Open Channel Weighting Method	Improved Lotter's Method
Closed Channel Weighting Method	Horton's Method

Results		
Mannings Coefficient	0.035	
Water Surface Elevation	1,697.22	ft
Elevation Range	1,695.50 to 1,700.00	
Flow Area	11.4	ft²
Wetted Perimeter	16.21	ft
Top Width	14.87	ft
Actual Depth	1.72	ft
Critical Elevation	1,696.53	ft
Critical Slope	0.022435	ft/ft
Velocity	2.37	ft/s
Velocity Head	0.09	ft
Specific Energy	1,697.30	ft
Froude Number	0.48	
Flow Type	Subcritical	

Roughness Segments

Start Station	End Station	Mannings Coefficient
1+00.0	1+26.0	0.035

Natural Channel Points

Station (ft)	Elevation (ft)
1+00.0	1,700.00
1+06.0	1,697.00
1+09.0	1,697.00
1+10.5	1,695.50
1+14.5	1,695.50
1+16.0	1,697.00
1+20.0	1,697.00
1+26.0	1,700.00

PIPE CULVERT ANALYSIS
COMPUTATION OF CULVERT PERFORMANCE CURVE

April 17, 2002

PROGRAM INPUT DATA

DESCRIPTION	VALUE
Culvert Diameter (ft)	3.5
FHWA Chart Number	2
FHWA Scale Number (Type of Culvert Entrance)	1
Manning's Roughness Coefficient (n-value)	0.028
Entrance Loss Coefficient of Culvert Opening	0.5
Culvert Length (ft)	30.0
Invert Elevation at Downstream end of Culvert (ft)	1,697.0
Invert Elevation at Upstream end of Culvert (ft)	1,697.15
Culvert Slope (ft/ft)	0.005
Starting Flow Rate (cfs)	100.0
Incremental Flow Rate (cfs)	10.0
Ending Flow Rate (cfs)	200.0
Starting Tailwater Depth (ft)	0.2
Incremental Tailwater Depth (ft)	0.2
Ending Tailwater Depth (ft)	2.2

COMPUTATION RESULTS

Flow Rate (cfs)	Tailwater Depth (ft)	Headwater (ft) Inlet Control	Headwater (ft) Outlet Control	Normal Depth (ft)	Critical Depth (ft)	Depth at Outlet (ft)	Outlet Velocity (fps)
100.0	0.2	6.5	5.38	3.5	3.07	3.5	10.39
110.0	0.4	7.36	5.9	3.5	3.17	3.5	11.43
120.0	0.6	8.3	6.44	3.5	3.25	3.5	12.47
130.0	0.8	9.33	7.02	3.5	3.31	3.5	13.51
140.0	1.0	10.43	7.64	3.5	3.35	3.5	14.55
150.0	1.2	11.62	8.29	3.5	3.39	3.5	15.59
160.0	1.4	12.89	8.99	3.5	3.41	3.5	16.63
170.0	1.6	14.24	9.73	3.5	3.43	3.5	17.67
180.0	1.8	15.67	10.51	3.5	3.44	3.5	18.71
190.0	2.0	17.19	11.33	3.5	3.46	3.5	19.75
200.0	2.2	18.78	12.2	3.5	3.46	3.5	20.79

HYDROCALC Hydraulics for Windows, Version 1.2a Copyright (c) 1996
Dodson & Associates, Inc., 5629 FM 1960 West, Suite 314, Houston, TX 77069
Phone:(281)440-3787, Fax:(281)440-4742, Email:software@dodson-hydro.com
All Rights Reserved.

EXHIBIT A

INLET PICTURES

Inlet No. 1, Facing Downstream

Inlet No. 2, Facing Downstream

Inlet No. 3, Facing Downstream

Inlet No. 4, Facing Downstream

Inlet No. 5, Facing Downstream

Inlet No. 6, Facing Downstream

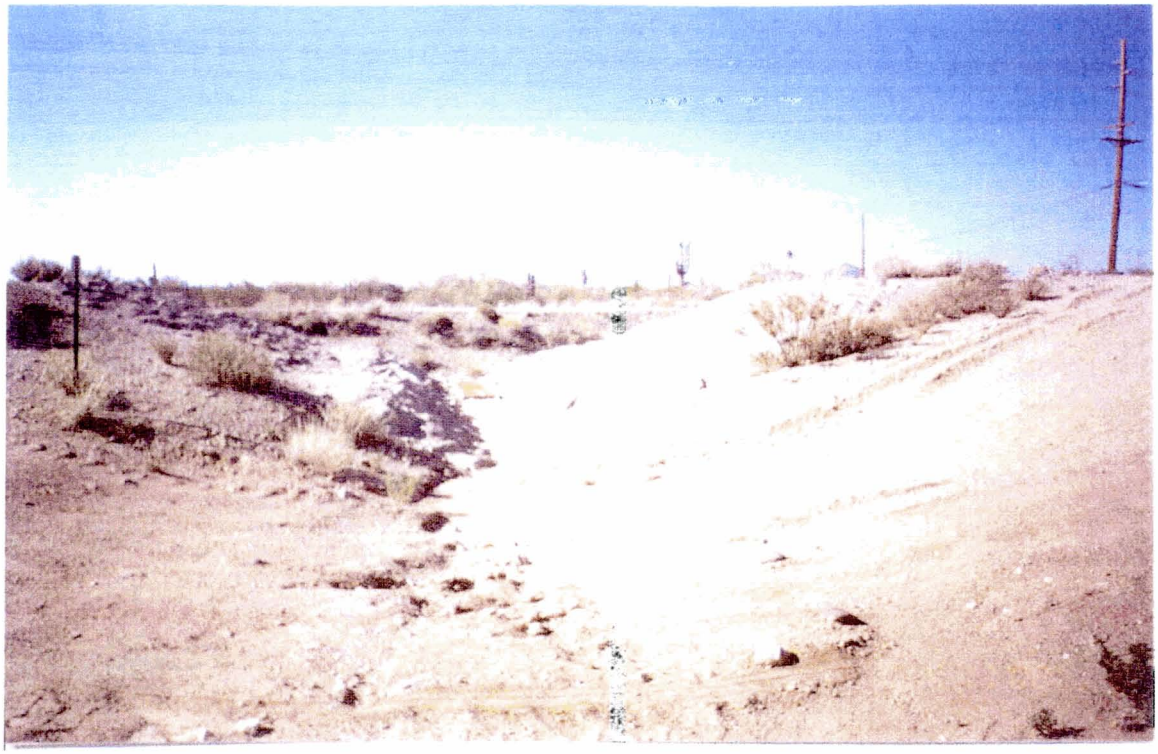

Inlet No. 7, Facing Downstream

Inlet No. 8, Facing Downstream

Inlet No. 9, Facing Downstream

Inlet No. 10, Facing Downstream

Inlet No. 11, Facing Downstream

Inlet No. 12, Facing Downstream

Inlet No. 12A: Pipe culvert at upstream of Inlet No. 12, facing upstream

Inlet No. 13, Facing Downstream

Inlet No. 14, Facing Downstream

Inlet No. 15, Facing Downstream

EXHIBIT B

PRELIMINARY FLOOD PONDING LIMITS

PONDING ALONG SIGNAL BUTTE FLOODWAY

EXHIBIT B
PRELIMINARY FLOOD PONDING LIMITS

LEGEND

- SUB-BASIN BOUNDARY
- PONDING LIMITS
- PRELIMINARY FLOODPLAIN LIMITS
- (6) INLET NUMBER

WOOD/PATEL

CIVIL ENGINEERS
HYDROLOGISTS
LAND SURVEYORS

2051 West Northern
Suite 100
Phoenix, AZ 85021

Phone: (602) 335-8500
Fax: (602) 335-8580

ENGINEER	A. PATEL
DESIGNER	S. ZOU
CAD TECHNICIAN	R. WAGNER
SCALE (HORIZONTAL)	–
SCALE (VERTICAL)	1"=200'
DATE	06/14/02
JOB NUMBER	011315.06
SHEET	1 OF 1

W:\01\1315.06\DATA\200SCALE.DWG