HYDRO LIBRARY

"AS BUILT"

Vineyard

FLOODWATER RETARDING

STRUCTURE

A320.601 1/66

Property of
Flood Control District of MC Library
Please Return to
2801 W. Durango
Phoenix, AZ 85009

WILLIAMS-CHANDLER WATERSHED PROTECTION AND FLOOD PREVENTION PROJECT

PINAL COUNTY, ARIZONA

PLANS FOR THE CONSTRUCTION OF

VINEYARD ROAD FLOODWATER RETARDING STRUCTURE

INDEX OF DRAWINGS

DRWG. NO.	SHT. NO.	TITLE
7-E-18724	1.	TITLE SHEET
	2.	LOCATION MAP
	3.	PLAN AND PROFILE OF EMB
	4.	PLAN AND PROFILE OF EMB
	5.	PLAN AND PROFILE OF EMB
	6.	PLAN AND PROFILE OF DAM
	7.	DETAILS OF SOUTH EMERGENCY SPILLWAY
	8.	DETAILS OF NORTH EMERGENCY SPILLWAY
	9.	DETAILS OF PRINCIPAL SPILLWAY OUTLET WORKS
	10.	DETAILS OF PRINCIPAL SPILLWAY INLET AND TRASH RACK
	11.	DETAILS OF PRINCIPAL SPILLWAY INLET
	12.	DETAILS OF PRINCIPAL SPILLWAY CONDUIT
	13.	DETAILS OF P.W.D. OUTLET STRUCTURE
	14.	DETAILS OF P.W.D. OUTLET STRUCTURE
	15.	DETAILS OF P.W.D. OUTLET STRUCTURE
	16.	DETAILS OF GATED OUTLETS
	17.	DETAILS OF 24" GATED OUTLET
	18.	DETAILS OF 24" GATED OUTLET
	19.	DETAILS OF 18" GATED OUTLET
	20.	DETAILS OF 18" GATED OUTLET
	21.	LOCATION OF GEOLOGIC TEST HOLES
	22.	PLAN AND PROFILES FOR GEOLOGIC INVESTIGATIONS
	23.	PLAN AND PROFILES FOR GEOLOGIC INVESTIGATIONS
	24.	PLAN AND PROFILES FOR GEOLOGIC INVESTIGATIONS
	25.	PLAN AND PROFILES FOR GEOLOGIC INVESTIGATIONS

STRUCTURAL NOTES

1. All exposed concrete edges shall be chamfered 1 inch or rounded.
2. Indicated reinforcing bar spacing is center to center of bars, bar cover is clear distance between surface of bar and face of concrete, and shall be 2" for formed and top surfaces and 3" for surfaces poured against earth, unless otherwise shown.
3. In sections having a single mat of reinforcing, the steel shall be positioned in the center of the section unless otherwise shown.
4. All bar splices not shown on the drawings shall be staggered with bars lapped a min. of 24" dia.
5. Quantities are for bid purposes only. Contractor will be responsible for the furnishing and placing of all materials.

GENERAL NOTES

1. Elevations are shown in feet above mean sea level datum.
2. All stationing refers to centerline of construction and is the measured horizontal distance.
3. Subsurface utility lines which lie within excavation limits, unless otherwise noted, will be removed or relocated by the owner thereof or abandoned in place.
4. Locations shown for subsurface utilities are approximate only. Such locations are indicated only to direct the contractor's attention to the probability that those utilities lie within the construction limits.
5. Utility poles which lie within the construction limits or within reservoir or borrow areas will be removed or relocated by the owners thereof unless otherwise noted.

DESIGN DATA

1. Class 3,000 Concrete
   - f'_c = 3,000 psi
   - f_c = 1,200 psi
   - f_s = 20,000 psi
   - n = 9
   - v_c = 60

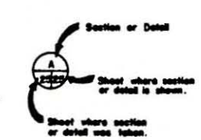

AS BUILT

INDEX OF DRAWINGS
WILLIAMS-CHANDLER W.P.P.
PINAL COUNTY, ARIZONA

U. S. DEPARTMENT OF AGRICULTURE
SOIL CONSERVATION SERVICE

	Date	
Designed		Approved by [signature]
Drawn		Title Head, E & W.P. Unit
Traced		[signature]
Checked [signature]	6-67	Title State Conservation Engineer
		Sheet No. 1 of 25 — Drawing No. 7-E-18724

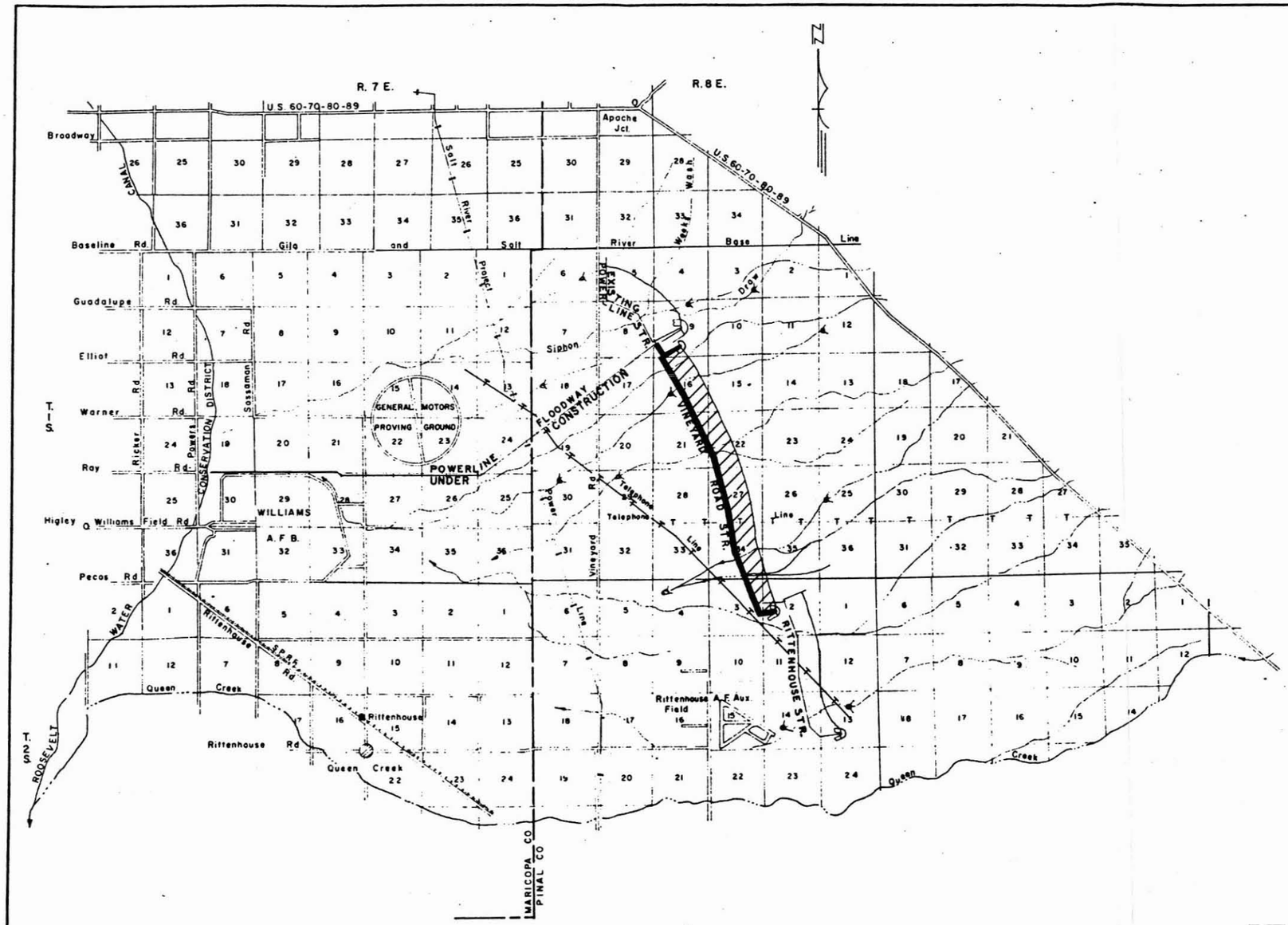

AS BUILT

LOCATION MAP
VINEYARD ROAD FLOODWATER RETARDING STRUCTURE
WILLIAMS-CHANDLER W.P.P.
PINAL COUNTY, ARIZONA

U. S. DEPARTMENT OF AGRICULTURE
SOIL CONSERVATION SERVICE

Designed	Date	Approved by	Title
Drawn G.D.H.	2-11-66		
Traced		Title	
Checked G.W.M.	2-15-66	Sheet No. 2 of 25 sheets	Drawing No.

FORM SCS-6

CURVE DATA
Δ---- 74° 01'
R---- 132.66'
T---- 100.00'
L---- 171.38'
E---- 33.47'

P.I. Sta 98+32.50
P.C. Sta 99+03.88
P.C. Sta 97+32.50
100+00
110+00
120+00
Ramp crossing Sta. 124+60± for details see sheet 5
Gated outlet to Sta. 129+36± 24" dia. pipe, see sheets 16, 17 & 18
Gated outlet Sta. 152+40± 18" dia. pipe, see sheets 16, 19 & 20
130+00
140+00
150+00
Match line Sta. 160+00
N22° 19' W
℄ C
Disposal area
1566
25'
25'
250'
700'
Do not borrow, 50' min width, 3:1 side slopes
50' wide entrance channel, 5:1 side slopes
℄ of borrow channel
50' wide entrance channel, 5:1 side slopes
1570
Limits of borrow area
90+00
S 23° 40' W
For details of south emergency spillway and diversion dike see sheet 7
1574
Emergency Spillway Crest El. 1574.8
1578
Sta. 80+00 on ℄ of embankment = Sta. 11+38.2 on ℄ of emergency spillway
Construct grader ditch
8'
1582
75+00
Portion of Rittenhouse Retarding Structure (not part of this contract)

PLAN
0 400 800
Scale in feet

℄ embankment
14'
7 7
Place ℄ crown on top of embankment
El. 1579.5
Crest of Emergency Spillway El. 1574.8
Varies
Natural ground line
10' min.
Varies 2' to 4'
Varies
2 X height of emb.

TYPICAL EMB. SECTION
0 10 20 30
Scale in Feet

Notes: 1. For Section C-C see sheet 6
2. Final depth of cutoff trench to be determined by field engineer.

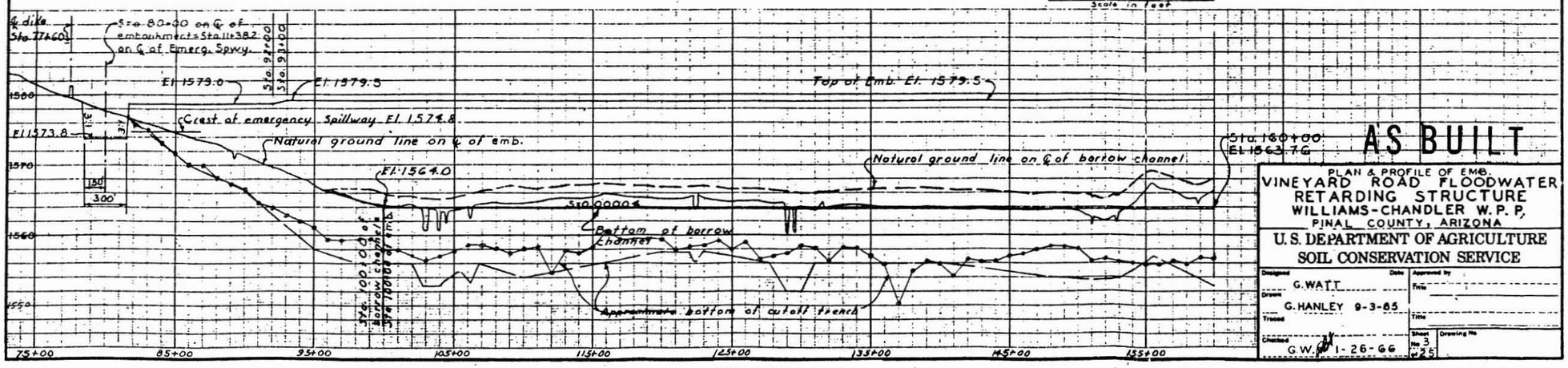

AS BUILT

PLAN & PROFILE OF EMB.
VINEYARD ROAD FLOODWATER RETARDING STRUCTURE
WILLIAMS-CHANDLER W. P. P.
PINAL COUNTY, ARIZONA

U.S. DEPARTMENT OF AGRICULTURE
SOIL CONSERVATION SERVICE

Designed	Date	Approved by	
G. WATT		Title	
Drawn			
G. HANLEY 9-3-65		Title	
Traced			
Checked G.W. 11-26-66		Sheet No. 3 of 25	Drawing No.

Form SCS-318 (November 1955)

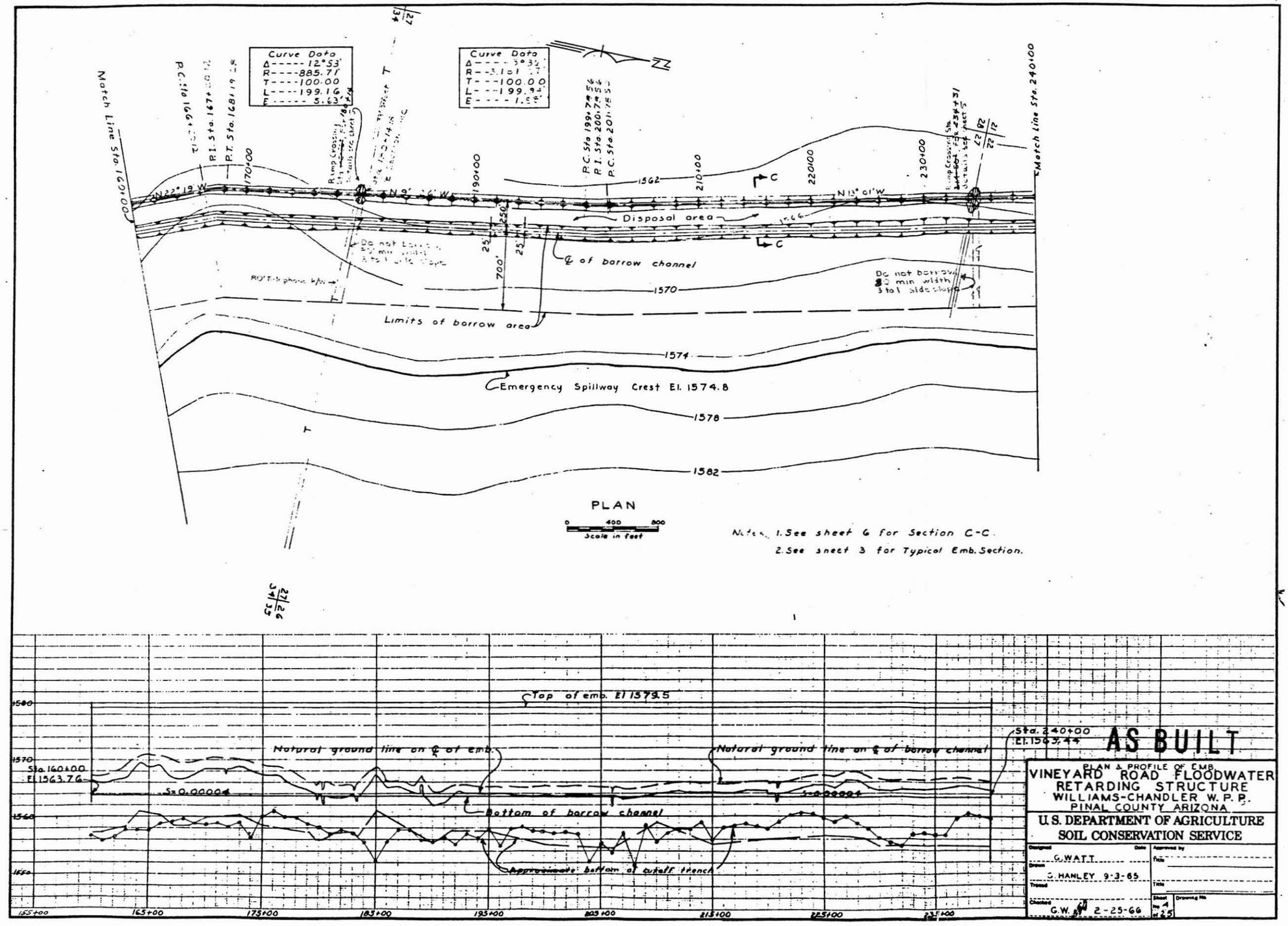

AS BUILT

PLAN & PROFILE OF EMB.
VINEYARD ROAD FLOODWATER RETARDING STRUCTURE
WILLIAMS-CHANDLER W. P. P.
PINAL COUNTY ARIZONA

U.S. DEPARTMENT OF AGRICULTURE
SOIL CONSERVATION SERVICE

Designed	Date	Approved by
Drawn G. WATT / G. HANLEY 9-3-65		Title
Traced		Title
Checked G.W. 2-25-66		Sheet No. 4 of 25 / Drawing No.

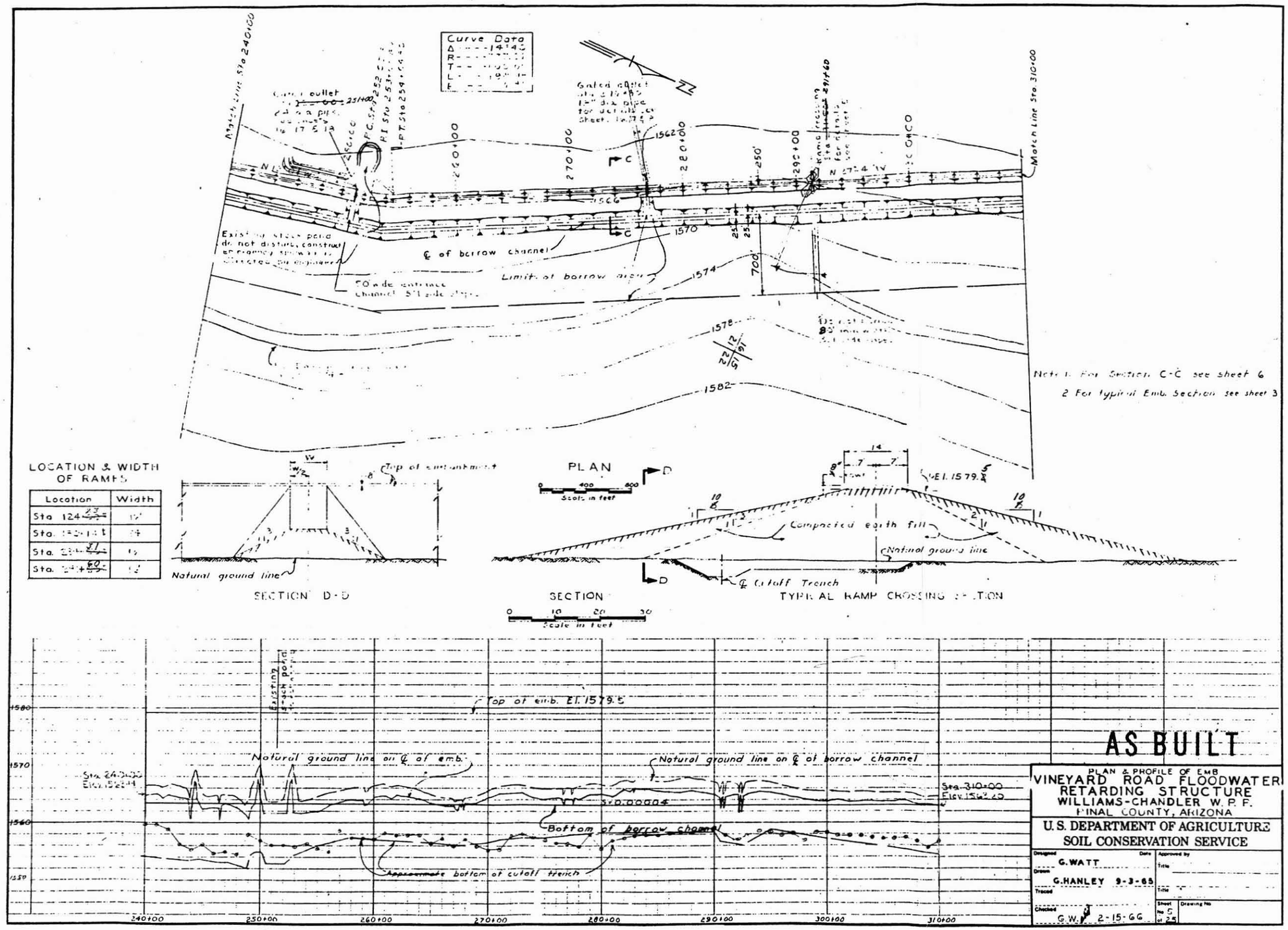

LOCATION & WIDTH OF RAMPS

Location	Width
Sta 124+23	[illegible]
Sta. [illegible]	[illegible]
Sta. [illegible]	[illegible]
Sta. [illegible]	[illegible]

AS BUILT

PLAN & PROFILE OF EMB
VINEYARD ROAD FLOODWATER RETARDING STRUCTURE
WILLIAMS-CHANDLER W. P. F.
PINAL COUNTY, ARIZONA

U. S. DEPARTMENT OF AGRICULTURE
SOIL CONSERVATION SERVICE

Designed G. WATT	Approved by
Drawn G. HANLEY 9-3-65	Title
Traced	Title
Checked G.W. 2-15-66	Sheet No. 5 of 25

Form SCS-318 (November 1955)

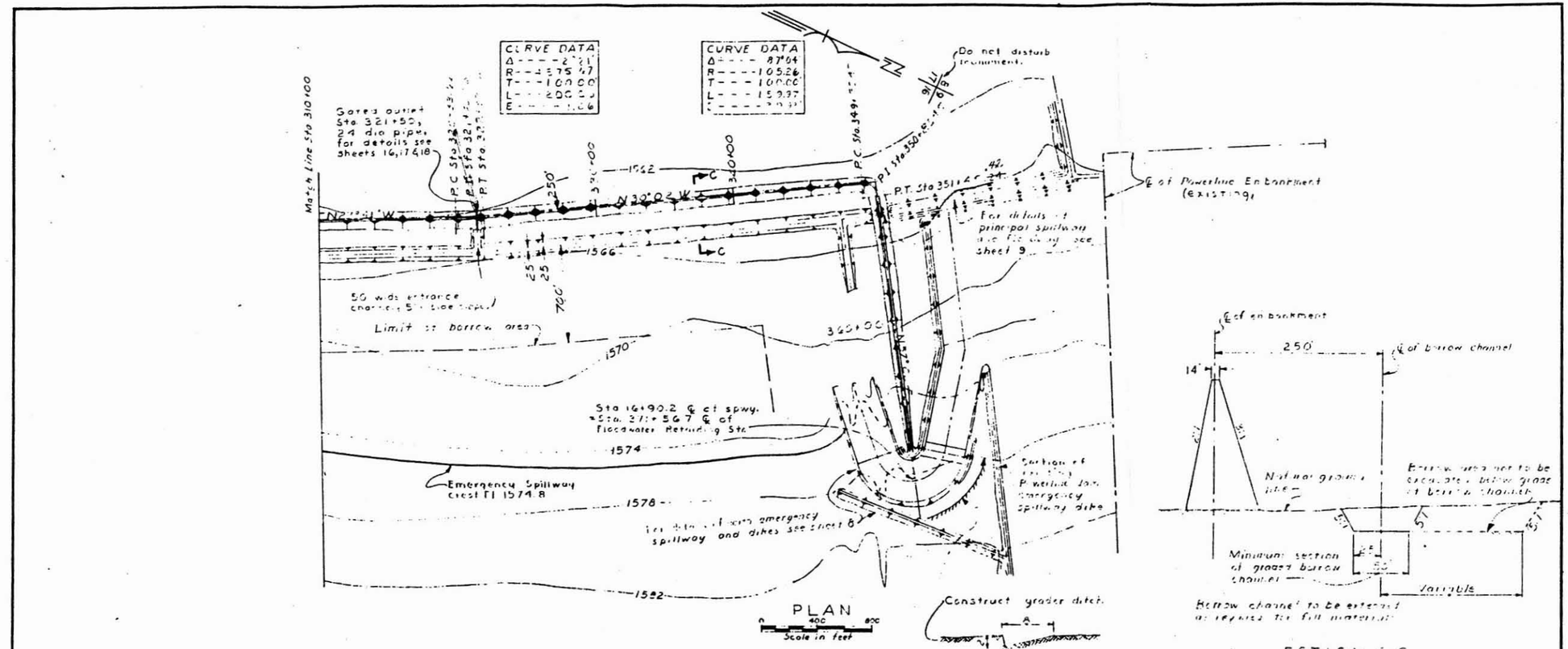

AS BUILT

PLAN & PROFILE OF DAM

VINEYARD ROAD FLOODWATER RETARDING STRUCTURE

WILLIAMS-CHANDLER W. P. P

PINAL COUNTY, ARIZONA

U.S. DEPARTMENT OF AGRICULTURE

SOIL CONSERVATION SERVICE

Designed	Date	Approved by
Drawn G.W.		Title
Traced G.D.H. 9-3-65		Title
Checked G.W. 2-15-66	Sheet No. 6 of 25	Drawing No.

Form SCS-318 (November 1955)

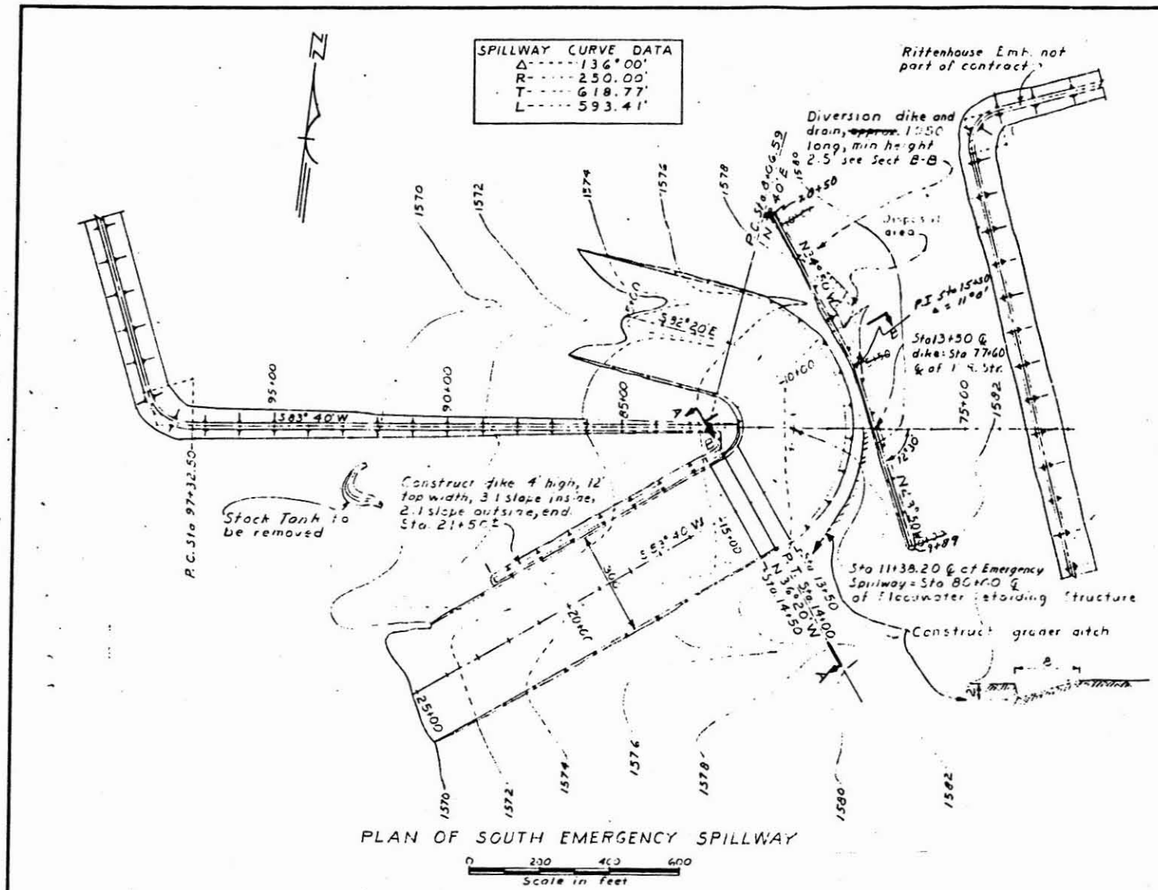

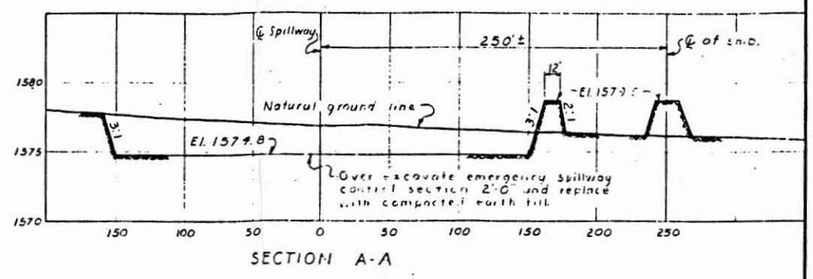

SECTION A-A

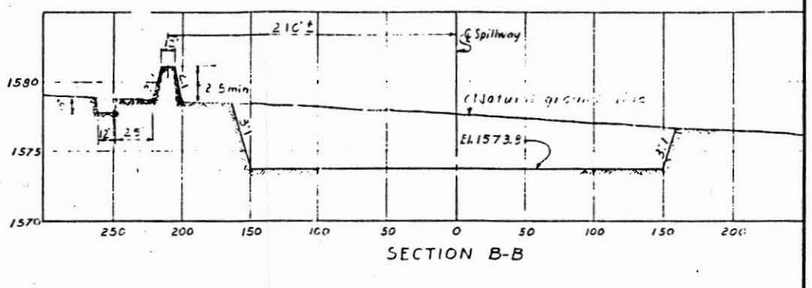

SECTION B-B

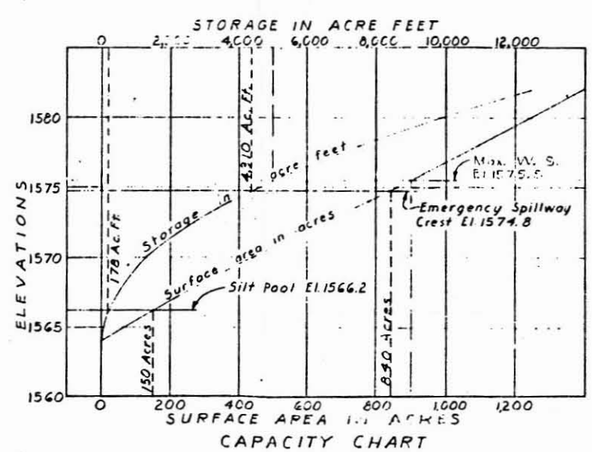

CAPACITY CHART

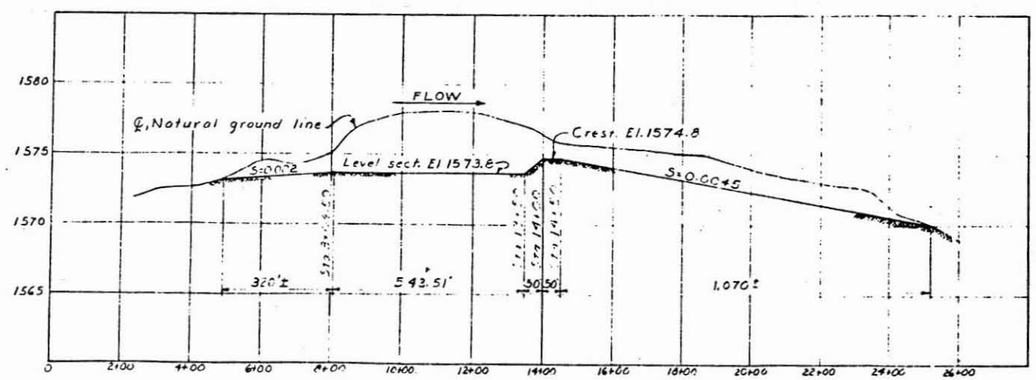

PROFILE OF EMERGENCY SPILLWAY

AS BUILT

DETAILS OF SOUTH EMERGENCY SPILLWAY
VINEYARD ROAD FLOODWATER RETARDING STRUCTURE
WILLIAMS-CHANDLER W. P. P.
PINAL COUNTY, ARIZONA

U. S. DEPARTMENT OF AGRICULTURE
SOIL CONSERVATION SERVICE

	Date		
Designed	G.W. & G.D.H.	Approved by	
Drawn	G.D.H. 8-24-65	Title	
Traced		Title	
Checked	G.W.K. 2-15-66	Sheet No.	7 of 25
		Drawing No.	

FORM SCS 313 (APRIL 1963)

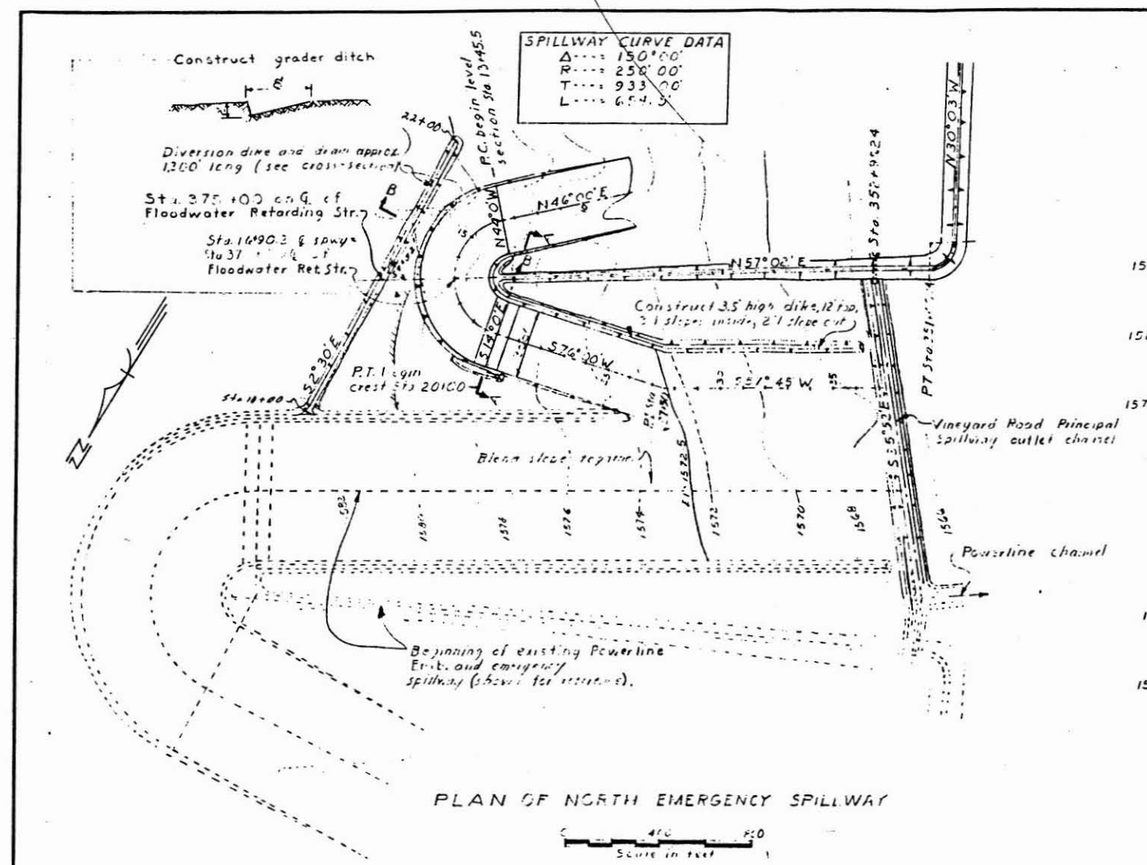

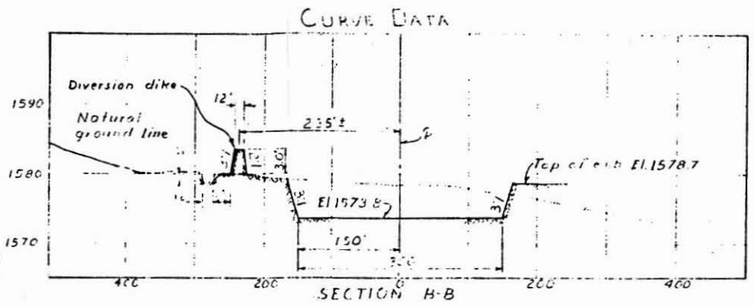

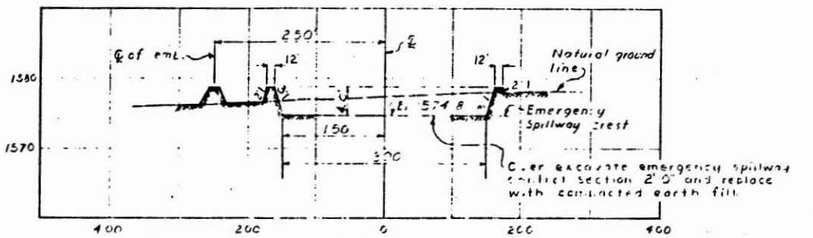

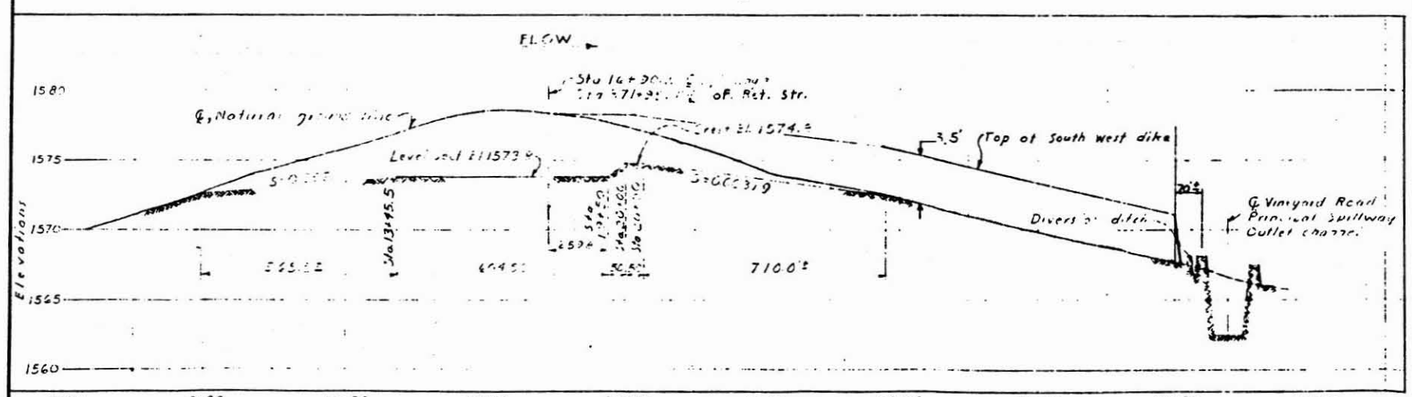

AS BUILT

DETAILS OF NORTH EMERGENCY SPILLWAY
VINEYARD ROAD FLOODWATER RETARDING STRUCTURE
WILLIAMS-CHANDLER W. P. P.
PINAL COUNTY, ARIZONA

U. S. DEPARTMENT OF AGRICULTURE
SOIL CONSERVATION SERVICE

Designed G.W. & G.D.H.	Date	Approved by	
Drawn G.D.H.	8-16-65	Title	
Traced		Sheet No. 8 of 25	Drawing No.
Checked G.W.	2-15-66		

FORM SCS 313 (APRIL 1963)

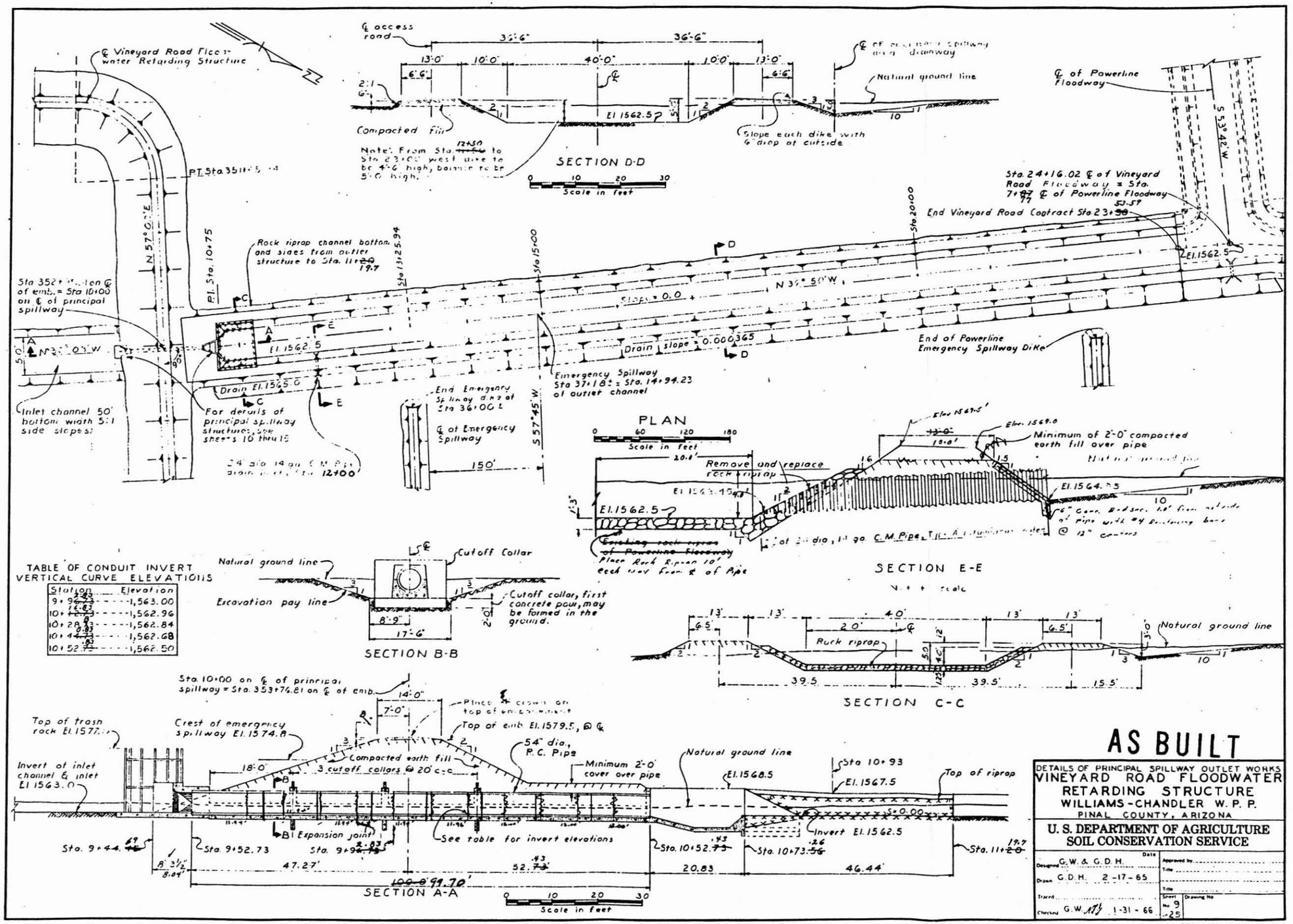

AS BUILT

DETAILS OF PRINCIPAL SPILLWAY OUTLET WORKS
VINEYARD ROAD FLOODWATER RETARDING STRUCTURE
WILLIAMS-CHANDLER W. P. P.
PINAL COUNTY, ARIZONA

U. S. DEPARTMENT OF AGRICULTURE
SOIL CONSERVATION SERVICE

Designed	G. W. & G. D. H.	Date	Approved by
Drawn	G. D. H. 2-17-65		Title
Traced			Title
Checked	G. W. 1-31-66	Sheet No. 9 of 25	Drawing No.

FORM SCS 313 (APRIL 1963)

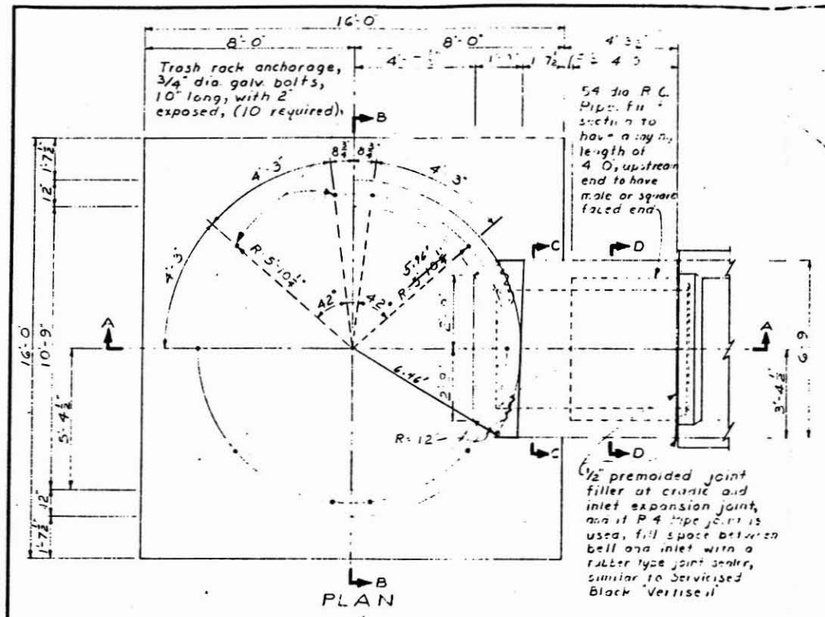

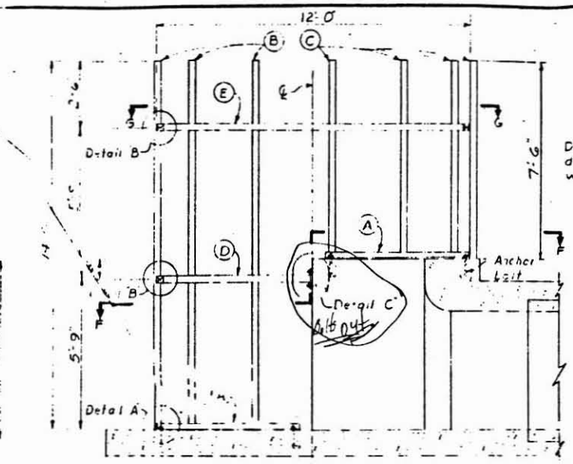

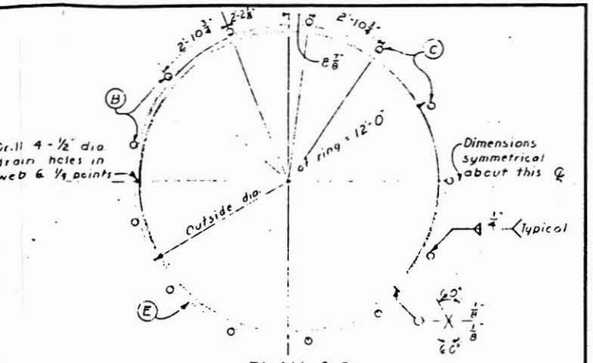

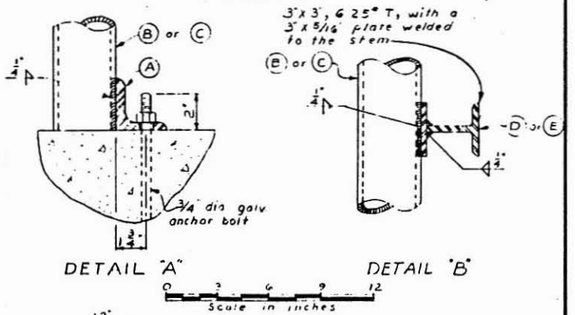

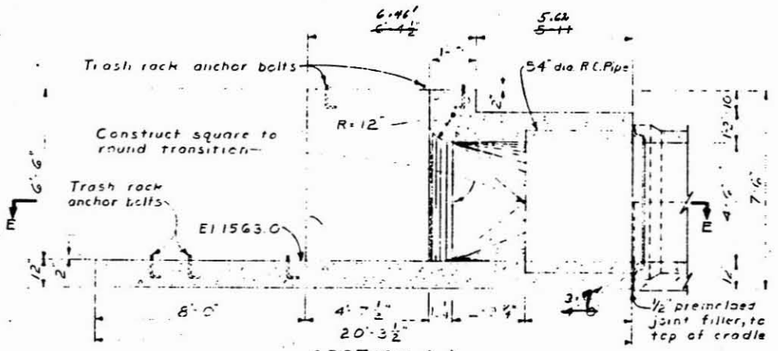

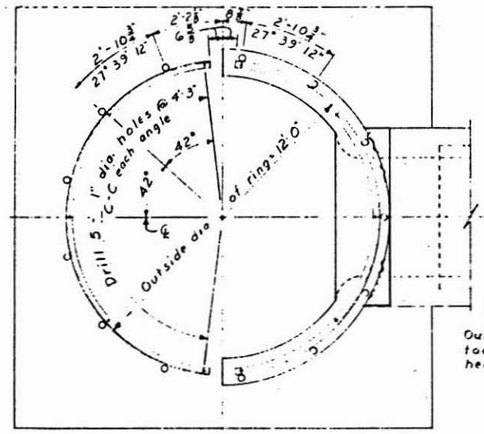

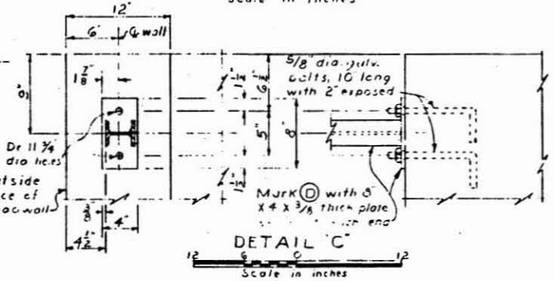

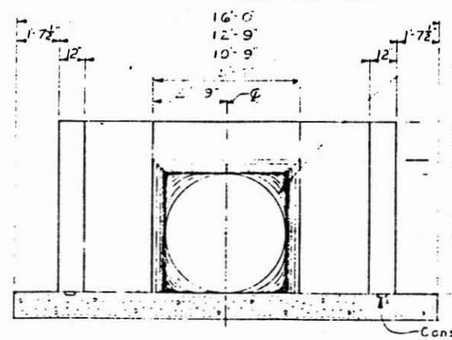

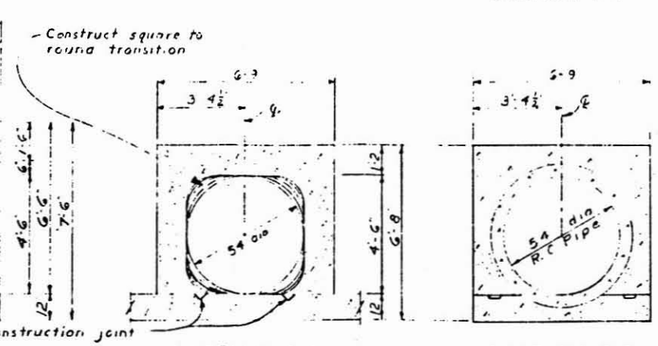

TRASH RACK MATERIAL LIST

Mark	Description	Quantity
A	Ls 3 x 3" x 5/16", 17'-10" long, bent in circular arc & drilled for anchor bolts as shown	2
B	Pipe, block, 3" dia extra strong, 14'-0" long.	6
C	Pipe, block, 3" dia extra strong, 7'-6" long	7
D	3" x 3", 6.25# T, 18" [illegible] long O.D with 3" x 5/16" plate 17 11/16" long welded to stem, finished member will be 12'-0" O.D. 1/2 circular ring, as shown.	1
E	3" x 3", 6.25# T, 37" [illegible] long O.D with a 3" x 5/16" plate 36'-0 5/8" long welded to stem, finished member will be 12'-0 O.D circular ring, as shown in Plan G-G	1
Bolts	Anchor, 3/4" dia galv. 10" long, 10 req.; 5/8" dia galv. 10" long, 4 req.	14

Notes: 1. See reinforcing steel placement drawings for Sectional Plan E-E
2. All circular bends of structural steel shall be cold rolled to a smooth radius. No polygonal-shaped curve acceptable.
3. All exposed concrete edges shall be chamfered 3/4"

AS BUILT

TABLE OF QUANTITIES		
Item	Unit	Quantity
Concrete	Cu.Yd	~~18.5~~ 18.45
Reinforcing Steel	Lbs.	1,080

DETAILS OF PRINCIPAL SPWY INLET & TRASH RACK
VINEYARD ROAD FLOODWATER RETARDING STRUCTURE
WILLIAMS-CHANDLER W. P. P.
PINAL COUNTY, ARIZONA

U. S. DEPARTMENT OF AGRICULTURE
SOIL CONSERVATION SERVICE

Designed G.W. Date
Drawn G.D.H. 9-21-65
Traced
Checked G.W. 1-31-66
Approved by
Title
Title
Sheet No. 10 of 25 Sheets
Drawing No.

FORM SCS 313 (APRIL 1963)

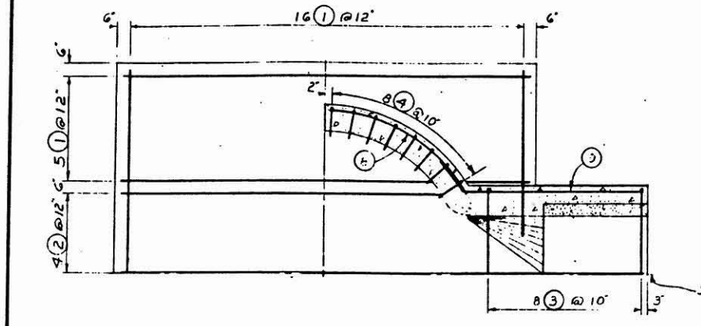

BOTTOM BARS IN APRON & OUTSIDE BARS IN WALL

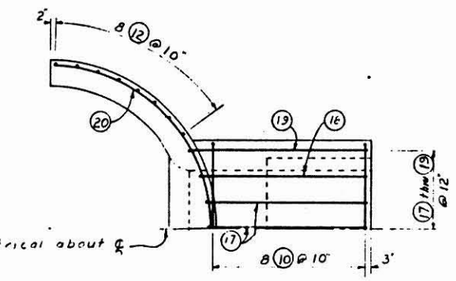

TOP BARS IN ENCASEMENT & OUTSIDE BARS IN WALLS

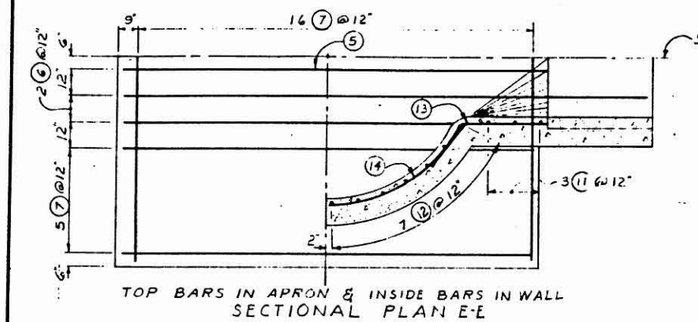

TOP BARS IN APRON & INSIDE BARS IN WALL
SECTIONAL PLAN E-E

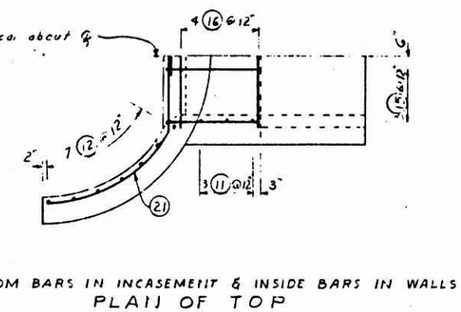

BOTTOM BARS IN INCASEMENT & INSIDE BARS IN WALLS
PLAN OF TOP

BAR SCHEDULE												
Mark A	No.	Size	Quantity	Length	Total Length	Type	A	B	G	H	K	R	O
A	1	4	26	15-6	403-0	Str.							
A	2	4	7	20-0	140-0	Str.							
A	3	5	8	11-3	90-0	2	2-5	6-5	2-5				
A	4	5	16	4-0	64-0	2	1-3	2-9					
A	5	5	2	16-0	32-0	Str.							
A	6	5	4	20-0	80-0	Str.							
A	7	5	26	15-6	403-0	Str.							
A	8	5	10	6-6	65-0	10	6-6					6-1½	6-2
A	9	5	10	8-3	82-6	19	1-6	6-9		1-2⅜	0-11¼		
A	10	5	8	17-3	138-0	2	5-5	6-5	5-5				
A	11	5	6	5-3	31-6	Str.							
A	12	5	30	6-3	187-6	Str.							
A	13	5	10	4-6	45-0	19	1-6	3-0		1-2⅜	0-11¼		
A	14	5	10	6-0	60-0	10	6-0					5-7¼	5-10
A	15	5	6	4-9	28-6	14	1-2	0-9	2-10	1-8⅜			
A	16	5	4	5-9	23-0	Str.							
A	17	5	3	7-0	21-0	2	0-11	6-1					
A	18	5	2	7-3	14-6	2	0-11	6-4					
A	19	5	2	7-9	15-6	2	0-11	6-10					
A	20	5	2	19-0	38-0	10	19-0					6-1¾	12-3¾
A	21	5	4	9-6	38-0	9	5-9	3-9				5-8	9-6

BAR TYPES

Straight

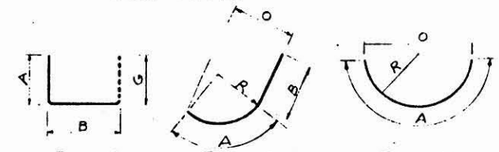

Str. Type-2 Type-9 Type-10

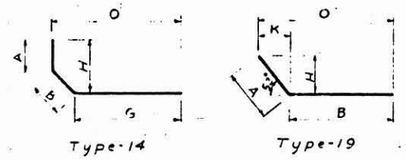

Type-14 Type-19

BAR TOTALS		
Size	Length in feet	Weight in Lbs.
4	543.00	363
5	1916.00	1519

NOTES:
1. All bar dimensions are cut to out of bar
2. Radius of bends are seven times the bar dia.
3. Place bars 2" from face of concrete, except as shown and place apron bars 3" clear from ground surface.

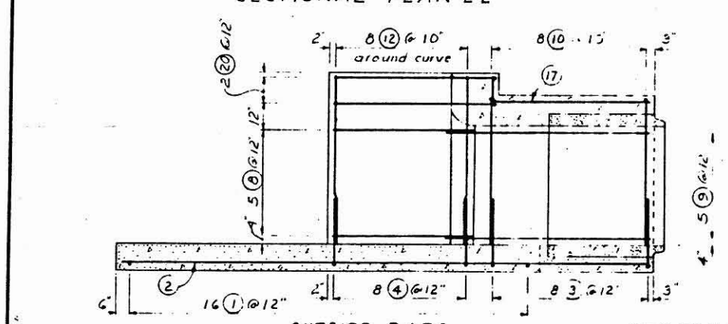

SECTION A-A

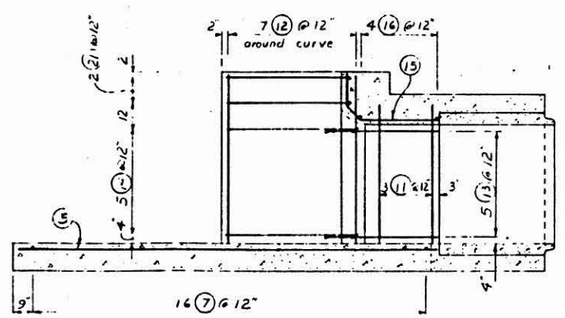

OUTSIDE BARS INSIDE BARS

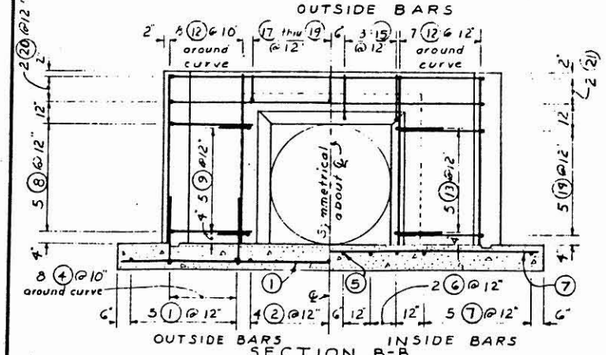

OUTSIDE BARS INSIDE BARS
SECTION B-B

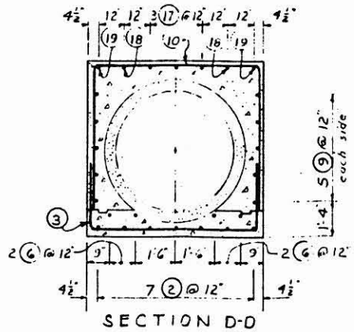

SECTION D-D

~~AS BUILT~~

DETAILS OF PRINCIPAL SPWY INLET
VINEYARD ROAD FLOODWATER RETARDING STRUCTURE
WILLIAMS-CHANDLER W. P. P.
PINAL COUNTY ARIZONA

U. S. DEPARTMENT OF AGRICULTURE
SOIL CONSERVATION SERVICE

Designed G.W.	Date	Approved by
Drawn G.D.H. 9-27-65		Title
Traced		Title
Checked G.W. 2-1-66	Sheet No. 11 of 25	Drawing No.

FORM SCS 313 (APRIL 1963)

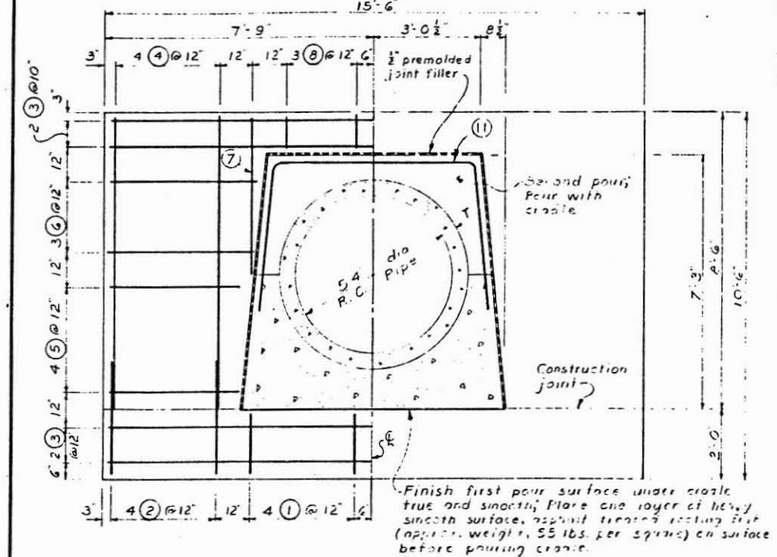

ELEVATION OF CUTOFF COLLAR

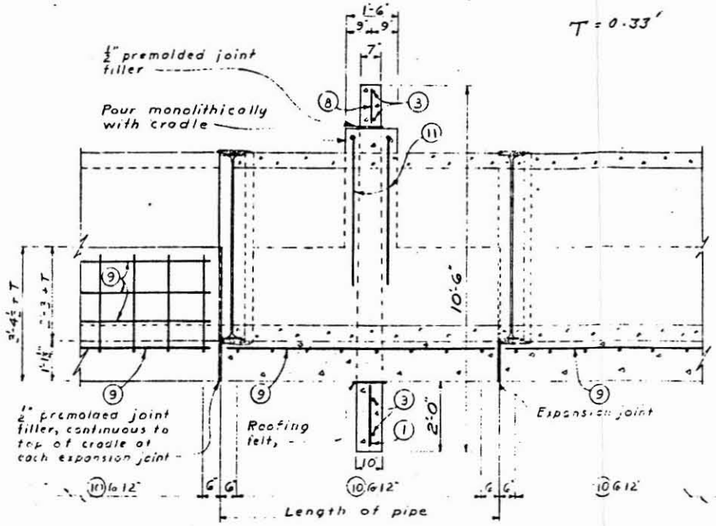

OUTLET CONDUIT AND CUTOFF COLLAR*

Scale in feet

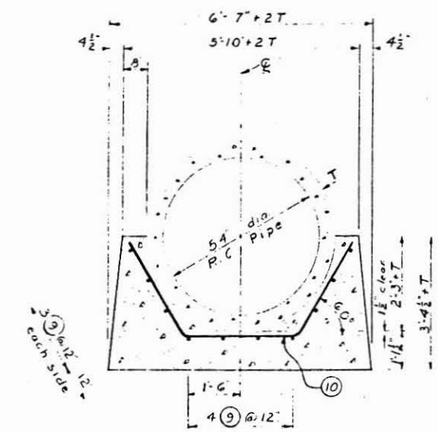

CRADLE SECTION

B	9	6	70	11'-6"	805'-0"	str						
B	9a	6	10	11'-9"	117'-6"	str						

BAR SCHEDULE

Mark B	Mark No	Size	Quantity	Length	Total Length	Type	A	B	G	H	K	O
B	1	4	24	1-6	36-0	Str						
B	2	4	24	3-3	78-0	Str						
B	3	4	12	15-0	180-0	Str						
B	4	4	24	8-3	198-0	Str						
B	5	4	24	3-9	90-0	Str						
B	6	4	18	4-3	76-6	Str						
B	7	4	6	4-6	27-0	Str						
B	8	4	18	1-0	18-0	Str						
* B	9	6	*	*	~~[illegible]~~	Str						
B	10	4	9~~8~~6	9-3	~~888-9~~	7	3-0	3-3	3-0	2-7¾	1-6	6-3
B	11	4	6	14-3	85-6	7	4-3	5-9	4-3	4-2½	0-5	6-7

Total Lin. feet of No. 4 bars = 1582-3' for cradle and collars.

* see note (5)

BAR TYPES

Straight

Str.

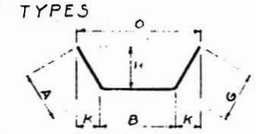

Type - 7

TABLE OF QUANTITIES		
Item	Unit	Quantity
Concrete	Cu Yd	~~[illegible]~~
Reinforcing Steel	Lb.	~~[illegible]~~ 2,506#

Notes:
1. All bar dimensions are out to out of bar.
2. Radius of bends equals seven times the bar diameter.
3. Cutoff collars shall be spaced equally a maximum of 2'0" between collars and placed a minimum of 2'0" from pipe joints.
4. Cradle expansion joints are to be provided at each pipe joint.
5. Length of reinforcing bar B⑨ is to be 6" less than corresponding length of pipe section, except end section at outlet structure.

AS BUILT

DETAILS OF PRINCIPAL SPILLWAY CONDUIT
VINEYARD ROAD FLOODWATER RETARDING STRUCTURE
WILLIAMS-CHANDLER W. P. P.
PINAL COUNTY, ARIZONA

U. S. DEPARTMENT OF AGRICULTURE
SOIL CONSERVATION SERVICE

Designed G.D.H. Date
Drawn G.D.H. 9-29-65
Traced
Checked G.W. 2-1-66
Approved by
Title
Title
Sheet No. 12 of 25
Drawing No.

FORM SCS 313 (APRIL 1963)

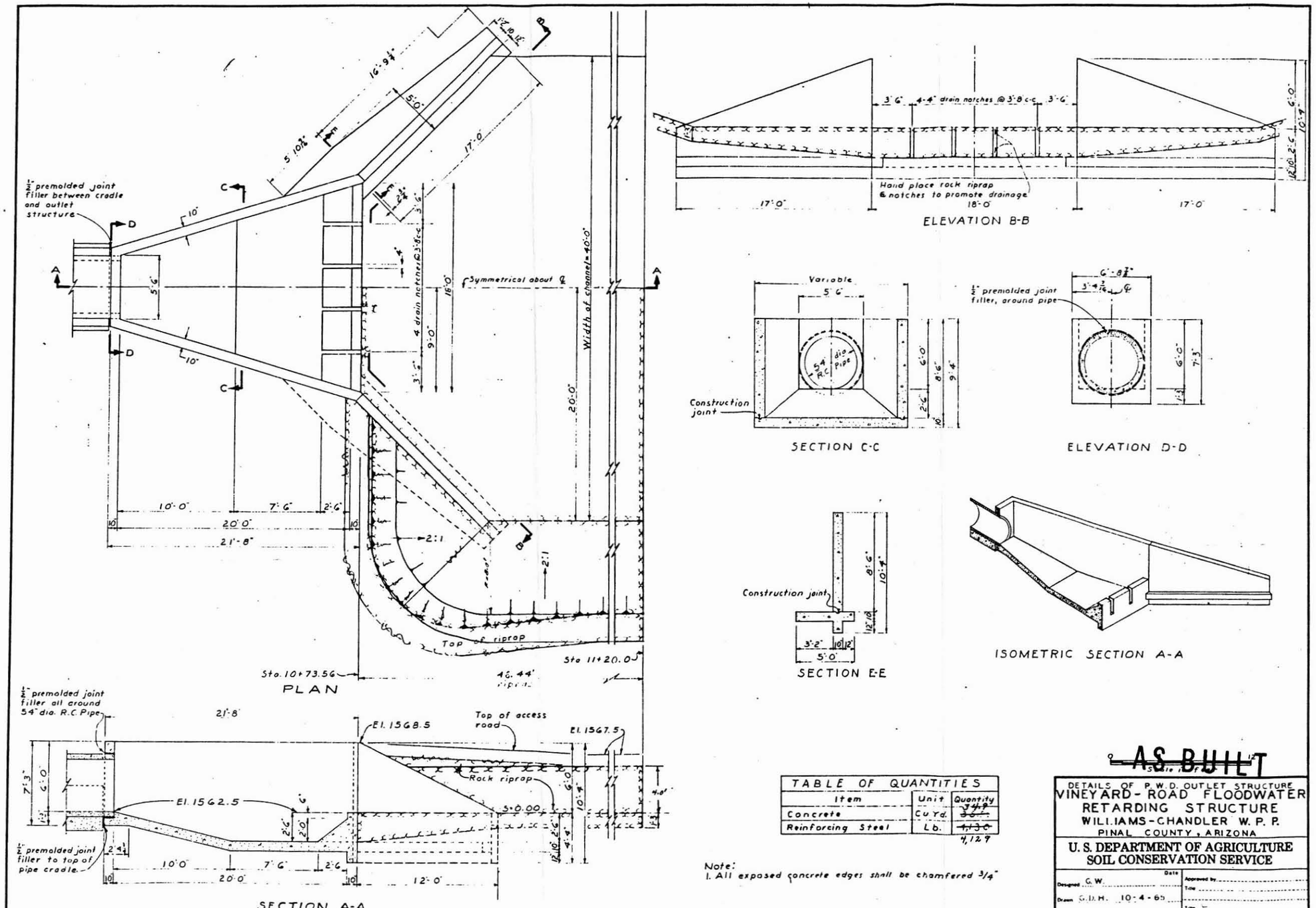

TABLE OF QUANTITIES		
Item	Unit	Quantity
Concrete	Cu. Yd.	~~34.9~~ ~~36.1~~
Reinforcing Steel	Lb.	~~4,130~~ 4,129

Note:
1. All exposed concrete edges shall be chamfered 3/4"

~~AS BUILT~~

DETAILS OF P.W.D. OUTLET STRUCTURE
VINEYARD-ROAD FLOODWATER RETARDING STRUCTURE
WILLIAMS-CHANDLER W.P.P.
PINAL COUNTY, ARIZONA

U. S. DEPARTMENT OF AGRICULTURE
SOIL CONSERVATION SERVICE

Designed G.W. Date
Drawn G.D.H. 10-4-65
Traced
Checked G.W. 11-10-66
Approved by
Title
Sheet No. 13 of 25
Drawing No.

FORM SCS 313 (APRIL 1963)

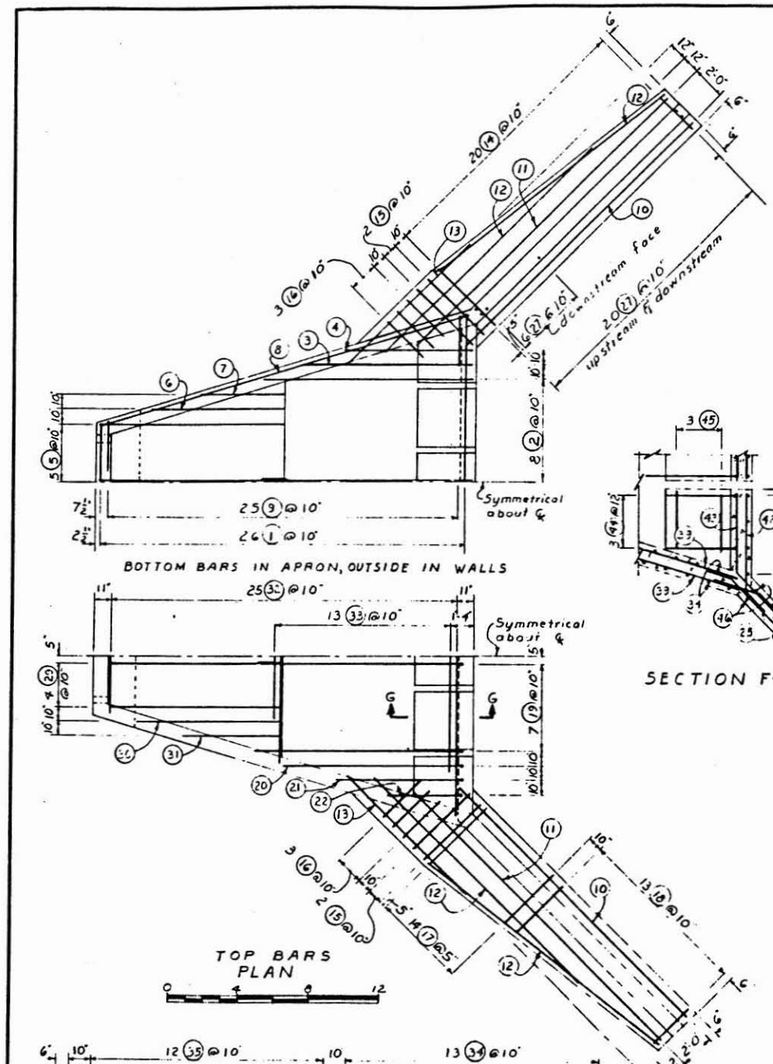

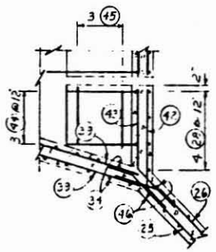

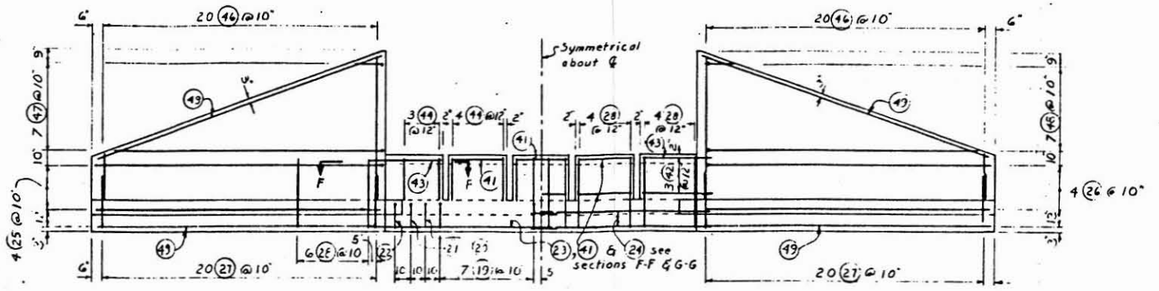

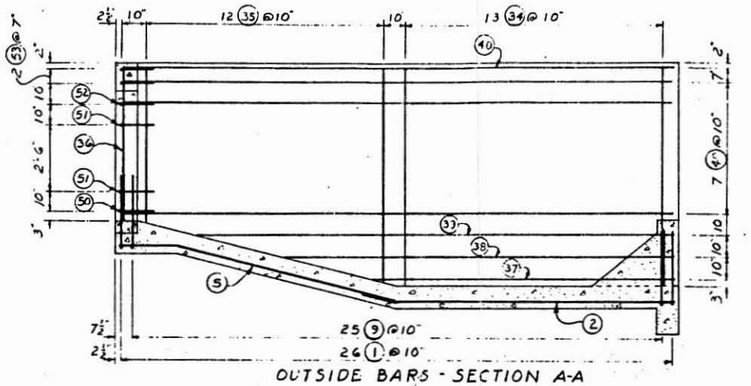

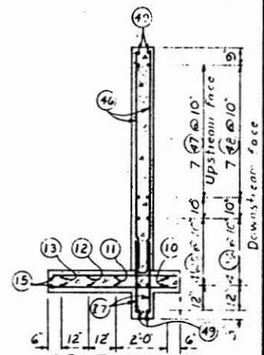

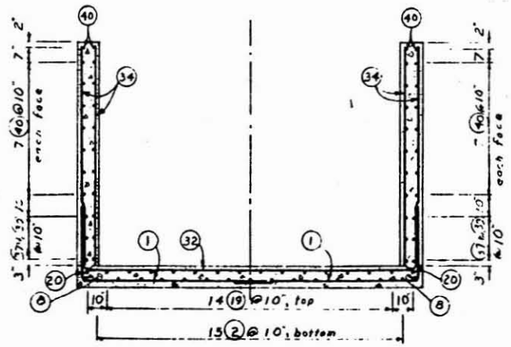

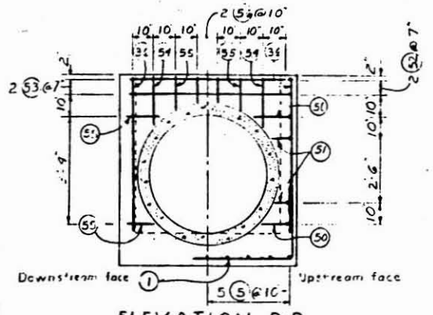

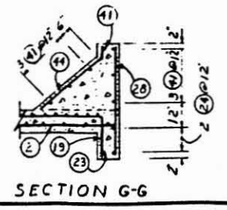

Scale in feet
All sections except as shown

NOTE: For bar schedule and bending diagrams see sheet 15

AS BUILT

DETAILS OF P.W.D. OUTLET STRUCTURE
VINEYARD ROAD FLOODWATER RETARDING STRUCTURE
WILLIAMS-CHANDLER W.P.P.
PINAL COUNTY, ARIZONA

U.S. DEPARTMENT OF AGRICULTURE
SOIL CONSERVATION SERVICE

Date	
Designed G. W.	Approved by
Drawn G.D.H. 10-6-65	Title
Traced	Sheet No. 14 of 25
Checked G. W. 11-14-66	Drawing No.

FORM SCS 313 (APRIL 1963)

BAR SCHEDULE

Location	Mark C	Mark No	Size	Quantity	Length	Total Length	Type	A	B	G	H	K	ϕ
Apron	C	1	4	2 sets of 26 bars	6-7 to 12-10 @ 3" increments	504-10	2	2-9	3-10 to 10-1 @ 3" increments.				
"	C	2		15	12-0	180-0	19	1-3	10-9		0-3½	1-2½	14° 2'
"	C	3		2	9-6	19-0	Str.						
"	C	4		2	7-0	14-0	Str.						
"	C	5		9	11-0	99-0	19	2-3	8-9		0-6½	2-2½	14° 2'
"	C	6		2	8-0	16-0	Str.						
"	C	7		2	5-0	10-0	Str						
"	C	8		2	21-9	43-6	20	2-0	9-0	10-9	2-2½	8-9	4° 2'
"	C	9		50	5-6	275-0	2	2-9	2-9				
Wingwall footings	C	10		4	18-6	74-0	Str.						
" "	C	11		4	20-0	80-0	Str						
" "	C	12		8	16-6	132-0	Str.						
" "	C	13		4	9-6	38-0	Str.						
" "	C	14		2 sets of 20 bars	2-6½ to 4-6 @ 1¼" increments	140-5	Str.						
" "	C	15		8	4-6	36-0	Str.						
" "	C	16		12	3-0	36-0	Str.						
" "	C	17		2 sets of 14 bars	4-0 to 4-6½ @ ½" increments	119-7	Str						
" "	C	18		2 sets of 13 bars	2-8 to 3-11 @ 1¼" increments	85-7	Str.						
Apron	C	19		14	13-0	182-0	21	1-3	10-3	1-6	0-3½	1-2½	14° 2'
"	C	20		2	11-6	23-0	2	1-6	10-0				
"	C	21		2	8-6	17-0	2	1-6	7-0				
"	C	22		2	5-6	11-0	2	1-6	4-0				
Toe wall	C	23		2	11-6	23-0	19	2-0	9-6		1-5		45° 0'
" "	C	24		4	11-6	46-0	19	1-0	10-6		0-8½		45° 0'
Wingwall	C	25		2	18-6	148-0	19	1-0	17-6		0-5½	0-10½	28° 18'
"	C	26		2	18-3	146-6	19	2-0	16-3		0-11½	1-9	28° 18'
"	C	27		80	2-9	220-0	Str.						
End sills (vertical)	C	28		36	4-0	126-0	Str.						
Apron	C	29		8	10-3	82-0	Str.						
"	C	30		2	8-6	17-0	Str.						
"	C	31		2	5-9	11-6	Str.						
"	C	32		25	6-6 to 18-6 @ 6" Increments	312-6	Str.						
"	C	33		13	7-3 to 13-3 @ 6" Increments	133-3	Str.						
Sidewalls	C	34		52	8-3	429-0	Str.						
"	C	35		4 sets of 12 bars	5-9 to 8-[illegible] @ [illegible] Increments	331-0	Str.						
"	C	36		4	5-9	23-0	Str.						
"	C	37		4	12-0	48-0	Str.						
"	C	38		4	15-6	62-0	Str.						
"	C	39		4	19-3	77-0	Str.						
"	C	40		32	22-0	704-0	Str.						
End sills	C	41		21	3-0	63-0	Str.						
" "	C	42		6	4-[illegible]	28-6	19	1-0	3-9		0-8½		45° 0'
" "	C	43		2	5-0	10-0	19	2-0	3-0		1-5		45 0
" "	C	44		18	3-6	63-0	19	0-6	3-0		0-3½	0-9½	38° 39
" "	C	45		6	2-3	13-6	Str.						
Wingwalls	C	46		4 sets of 20 bars	2-6 to 8-0½ @ 3½" Increments	421-8	Str.						
"	C	47		2 sets of 7 bars	3-6 to 17-6 @ 2-9" Increments	147-0	19	1-0	2-6 to 16-6 @ 2-9 Increments		0-5½	0-10½	28° 18'
"	C	48		2 sets of 7 bars	4-0 to 18-0 @ 2-9" Increments	154-0	19	2-0	2-0 to 16-0 @ 2-9" Increments		0-11½	1-9	28° 18'
"	C	49		8	17-3	138-0	Str.						
Headwall	C	50		4	2-6	10-0	19	1-3	1-3		1-2½	0-4½	73° 08'
"	C	51		4	2-0	8-0	19	0-9	1-3		0-8½	0-2½	73° 08'
"	C	52		2	8-9	17-6	19	1-3	6-3	1-3	1-2½	0-4½	73° 08'
"	C	53		2	5-9	11-6	Str.						
"	C	54		4	1-9	7-0	Str.						
"	C	55		6	1-3	[illegible]	Str.						
"	C	56	4	4	1-0	4-0	Str						

Total length of No. 4 bars = 6,182'-4" = 4,130 Lbs.

BAR TYPES

Straight

Str.

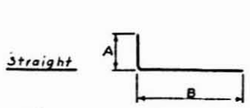

Type-2

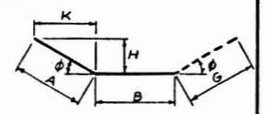

Type-19

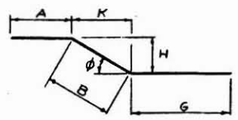

Type-20

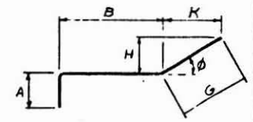

Type-21

NOTES:
1. All bar dimensions are out to out of bar.
2. Radius of bends equals seven times the bar diameter
3. Place bars 2" clear from face of concrete, except as shown, and place apron and footing bars 3" clear from ground surface.

AS BUILT

DETAILS OF P.W.D. OUTLET STRUCTURE
VINEYARD ROAD FLOODWATER RETARDING STRUCTURE
WILLIAMS-CHANDLER W. P. P.
PINAL COUNTY, ARIZONA

U. S. DEPARTMENT OF AGRICULTURE
SOIL CONSERVATION SERVICE

Designed G. W. Date
Drawn G. D. H. 10-11-65
Traced
Checked G. W. 2-15-66
Approved by
Title
Sheet No. 15 of 25
Drawing No.

SCS-313B (APRIL 1963)

TABLE FOR PIPE CAMBER

Station	Drop in ft.	Elevation
K+00	0	"B"
K+10	0.02	"B"-0.02
K+20	0.08	"B"-0.08
K+30	0.18	"B"-0.18
K+40	0.32	"B"-0.32
K+50	0.50	"C"=B-0.50

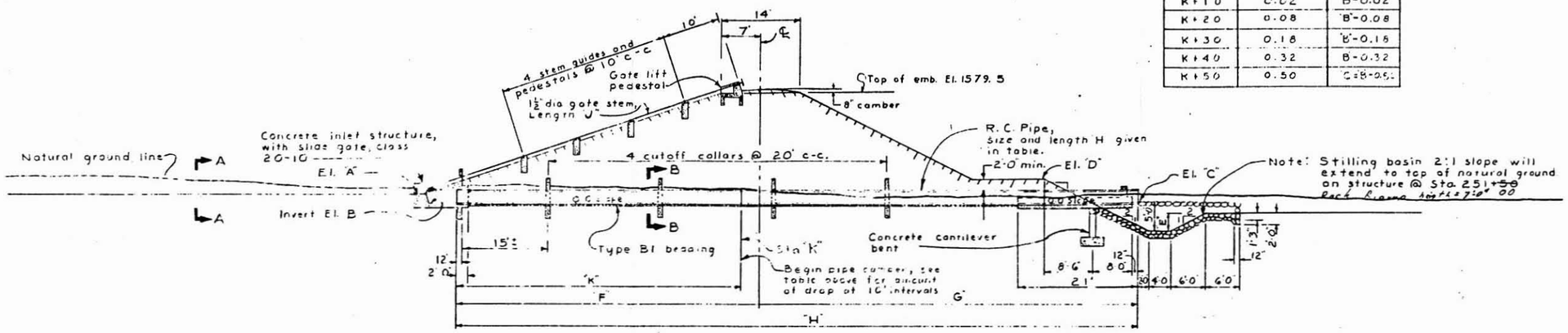

SECTION ON ℄ OF GATED OUTLET

TABLE OF DIMENSIONS

Structure Station	Size of pipe, dia.	Elevation "A"	Elevation B	Elevation C	Elevation D	Dimension E	Dimension F	Dimension G	Dimension H	Length of gate stem "J"	Distance of 0% grade "K"
129+~~35~~ 70	24"	~~1562.8~~ 1563.0	~~1560.5~~ 1561.0	1560.5	1564.~~25~~ .75	3.0'	~~53.57'~~ 50.00'	~~66.43'~~ 69.60	~~120.0'~~ 119.6	59.0'	50.0'
152+40	18"	15~~62.5~~ 63.0	~~1561.0~~ 1561.5	~~1560.5~~ 1561.0	1564.~~25~~ .75	3.0'	~~58.09'~~ 52.76	~~67.91'~~ 71.14	~~124.0'~~ 123.9	61.0'	54.0'
~~252+00~~ 251+00	24"	1563.25	1561.25	1560.75	1565.00	~~To nat. grnd.~~ 5	~~51.32'~~ 49.30'	~~64.68'~~ 66.50'	~~116.0'~~ 115.8'	57.0'	46.0'
276+80	18"	1562.0	1560.5	1560.0	1563.75	~~3.0~~ 4.0	~~57.59'~~ 55.80'	~~68.41'~~ 70.00'	~~126.0'~~ 125.8	64.0'	56.0'
321+~~54~~ 40	24"	15~~62.5~~ 61.5	15~~60.0~~ 59.5	15~~59.5~~ 59.0	1563.~~75~~ 3	~~3.0~~ 4.0	~~55.07'~~ 56.30'	~~68.93'~~ 67.70'	124.0'	61.0'	54.0'

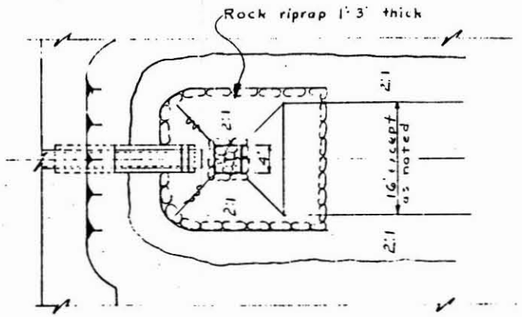

PLAN OF STILLING BASIN

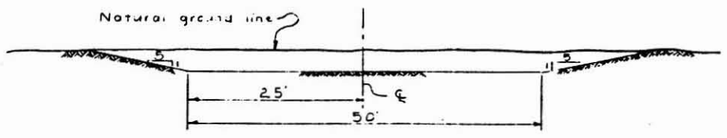

SECTION A-A

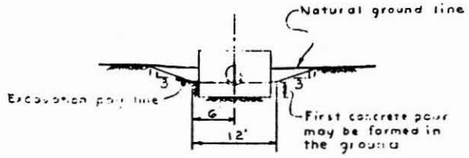

SECTON B-B

0 10 20 30
Scale in Feet

AS BUILT

DETAILS OF GATED OUTLETS
VINEYARD ROAD FLOODWATER RETARDING STRUCTURE
WILLIAMS-CHANDLER W.P.P.
PINAL COUNTY, ARIZONA

U. S. DEPARTMENT OF AGRICULTURE
SOIL CONSERVATION SERVICE

Designed R Arrington — Date
Drawn G HANLEY 5-20-67
Traced
Checked R Arrington 5-67
Approved by
Title
Title
Sheet No. 16 of 25
Drawing No.

FORM SCS 313 (APRIL 1963)

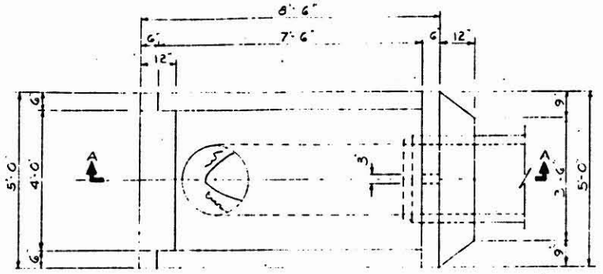

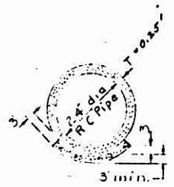

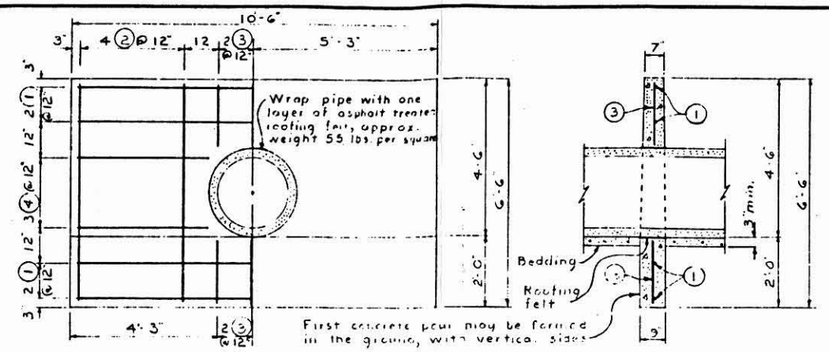

DETAILS OF CUTOFF COLLAR

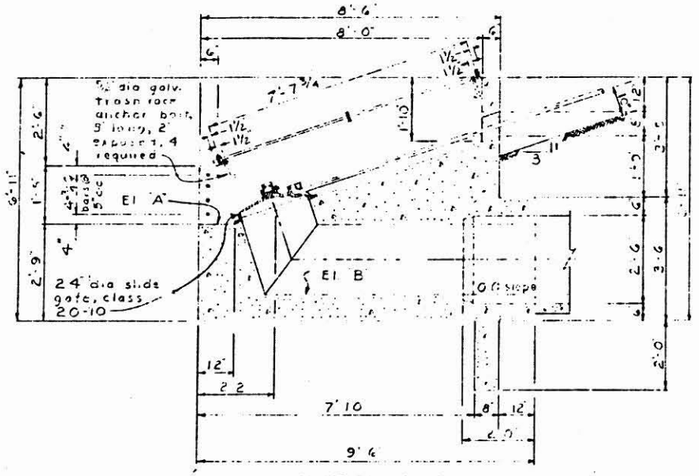

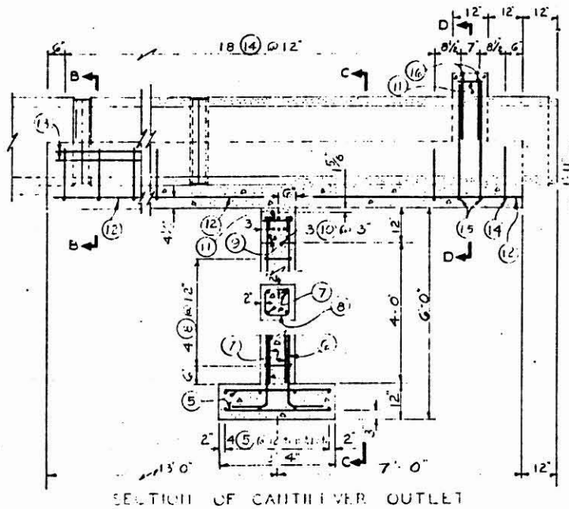

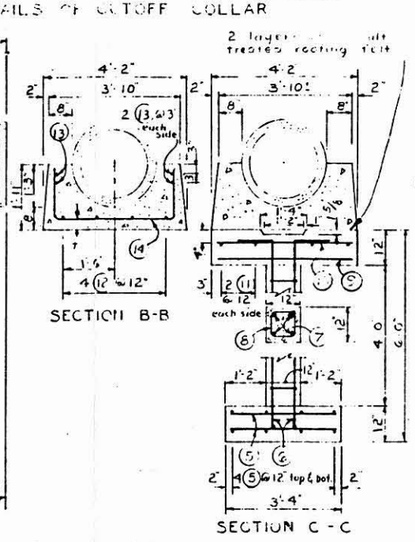

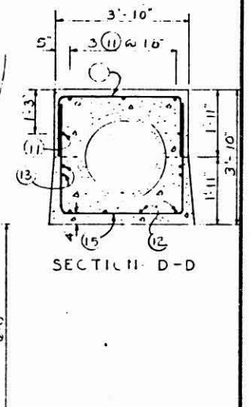

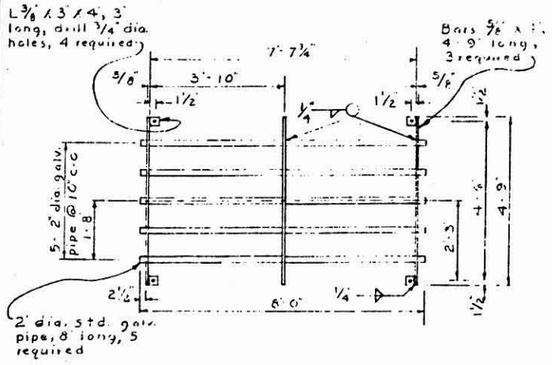

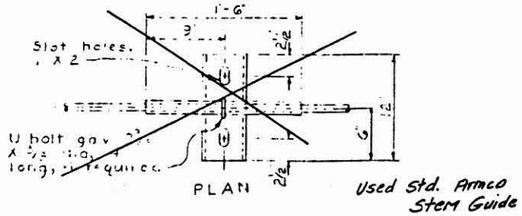

Used Std. Armco Stem Guide

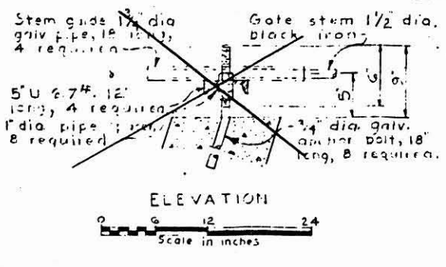

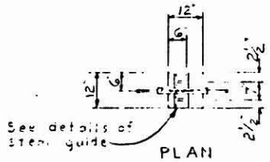

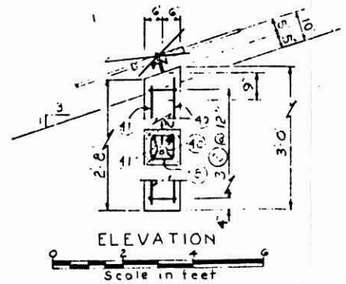

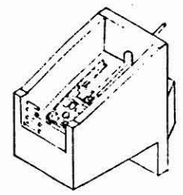

AS BUILT

DETAILS OF 24" GATED OUTLET
VINEYARD ROAD FLOODWATER RETARDING STRUCTURE
WILLIAMS-CHANDLER W.P.P.
PINAL COUNTY, ARIZONA

U. S. DEPARTMENT OF AGRICULTURE
SOIL CONSERVATION SERVICE

Designed R. ARRINGTON	Date	Approved by:	
Drawn G. HANLEY	5-23-67	Title	
Traced		Title	
Checked	5-67	Sheet No. 17 of 25	Drawing No.

FORM SCS 313 (APRIL 1963)

PLAN

SECTIONAL ELEVATION

BAR SCHEDULE

Structure & Location	Mark	No.	Size	Quantity	Length	Total Length	Type	A	B	C	D	E	G	H	K
	D	1	4	16	10-0	160-0	Str								
	D	2	4	32	6-0	192-0	Str								
		3	[illegible]	24	1-9	42-0	Str								
		4	[illegible]	24	3-9	90-0	Str								
		5	[illegible]	16	[illegible]	[illegible]	Str								
		6	5	4	[illegible]	14-0	2	1-0	[illegible]						
		7	5	4	[illegible]	24-0	2	1-4	[illegible]						
		8	4	16	[illegible]	48-0	T1	[illegible]	[illegible]	[illegible]	[illegible]	[illegible]	[illegible]		
		9	4	2	[illegible]	7-6	Str								
		10	[illegible]	3	[illegible]	11-[illegible]	Str								
		11	4	4	[illegible]	6-9	Str								
		12	6	4	[illegible]	75-0	Str								
		13	7	4	[illegible]	78-0	Str								
		14	4	~~420~~	[illegible]	~~[illegible]~~	2	1-4	[illegible]				[illegible]		
	D	15	4	2	[illegible]	19-0	2	[illegible]	[illegible]						
		16	4	2	[illegible]	[illegible]	[illegible]								
		17	4	4	8-6	34-0	Str								
		18	4	2	[illegible]	4-[illegible]	Str								
		19	4	10	4-[illegible]	45-0	Str								
		20	4	1	17-0	17-0	2	[illegible]	[illegible]				[illegible]		
		21	4	1	16-0	16-0	2	[illegible]	[illegible]						
		22	4	1	15-6	15-6	2	[illegible]	[illegible]				[illegible]		
		23	4	1	15-0	15-0	2	[illegible]	[illegible]				[illegible]		
		24	4	1	14-[illegible]	14-[illegible]	2	[illegible]	[illegible]				[illegible]		
		25	4	1	13-[illegible]	13-[illegible]	2	4-[illegible]	[illegible]				4-[illegible]		
		26	4	1	[illegible]	[illegible]	[illegible]	4-3	[illegible]				4-3		
		27	4	1	[illegible]	[illegible]	[illegible]	4-0	[illegible]				4-0		
		28	4	4	11-0	44-0	2	[illegible]	[illegible]						
		29	4	4	9-0	36-0	2	[illegible]	[illegible]						
		30	4	2	10-[illegible]	20-[illegible]	2	[illegible]	[illegible]						
		31	4	[illegible]	[illegible]	[illegible]	2	[illegible]	4-[illegible]						
		32	4	2	4-[illegible]	8-[illegible]	2	[illegible]	1-[illegible]						
		33	4	2	[illegible]	[illegible]	Str								
		34	4	[illegible]	[illegible]	7-0	Str								
		35	4	4	[illegible]	[illegible]	Str								
		36	4	4	[illegible]	[illegible]	Str								
		37	4	[illegible]	[illegible]	[illegible]	[illegible]	1-0	2-3						
		38	4	2	[illegible]	10-0	Str								
		39	4	2	[illegible]	17-0	19	2-3	1-0				7-6	0-3¾	0-1¼
		40	4	8	2-6	20-0	Str								
		41	4	8	2-3	18-0	Str								
		42	4	[illegible]	[illegible]	18-[illegible]	2	1-6	[illegible]				1-[illegible]		
		43	4	[illegible]	2-3	[illegible]	Str								
		44	4	1	[illegible]	[illegible]	2	1-6	[illegible]				1-6		
		45	4	1	5-4	[illegible]	2	1-9	[illegible]				1-4		
		46	4	2	4-6	9-0	2	0-9	[illegible]				1-4		
		47	4	2	4-4	[illegible]	2	0-9	[illegible]				1-8		
		48	4	2	3-0	[illegible]	Str								
		49	4	2	2-9	5-6	Str								

Notes: 1. All exposed concrete edges shall be chamf red ¾"

2. All bar dimensions are out to out of bar.

3. Radius of bends are seven times the bar diameter.

BAR TYPES

QUANTITIES TABLE FOR ONE 24" GATED OUTLET

Structure	Concrete Cu.Yd.	Reinforcing Steel Lbs.
Inlet	6.6 ~~[illegible]~~	~~[illegible]~~
Bedding	1.9 ~~[illegible]~~	None
Cutoff collars	6.8 ~~[illegible]~~	~~323~~
Cantilever Bent	4.8 ~~[illegible]~~	~~72~~
Cantilever cradle	~~12.3~~	~~[illegible]~~
Gate Stem pedestal	0.7 ~~1.3~~	~~26~~
Gate lift anchor block	0.4 ~~1.2~~	~~47~~
Total	21.2 ~~[illegible]~~	~~1,177~~ 1,180

ELEVATION

ELEVATION

DETAILS OF INLET

Scale in feet

SECTIONAL ELEVATION OF LIFT ANCHOR BLOCK

Scale in feet

SECTION E-E

AS BUILT

DETAILS OF 24" GATED OUTLET
VINEYARD ROAD FLOODWATER RETARDING STRUCTURE
WILLIAMS-CHANDLER W.P.P.
PINAL COUNTY, ARIZONA

U. S. DEPARTMENT OF AGRICULTURE
SOIL CONSERVATION SERVICE

Designed R. ARRINGTON	Date	Approved by
Drawn G HANLEY	5-25-67	Title
Traced		Title
Checked [illegible]	5-67	Sheet No. 18 of 25 / Drawing No.

SECTION A-A

PLAN OF TRASH RACK

PLAN

SECTION OF PIPE & BEDDING

ELEVATION

SECTION

DETAILS OF CUTOFF COLLAR

SECTION OF CANTILEVER OUTLET

SECTION B-B

SECTION C-C

SECTION D-D

PLAN

ELEVATION

PLAN

ELEVATION

AS BUILT

DETAILS OF RECTANGULAR OUTLET
VINEYARD ROAD FLOODWATER RETARDING STRUCTURE
WILLIAMS-CHANDLER W. F. P.
PINAL COUNTY, ARIZONA

U. S. DEPARTMENT OF AGRICULTURE
SOIL CONSERVATION SERVICE

Designed R. ARRINGTON	Date	Approved by	
Drawn D. VARLOW		Title	
Traced		Title	
Checked	5-67	Sheet No. 19 of 25	Drawing No.

FORM SCS-313 (APRIL 1963)

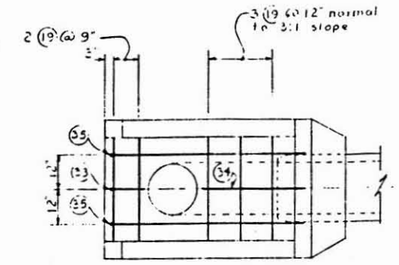

PLAN

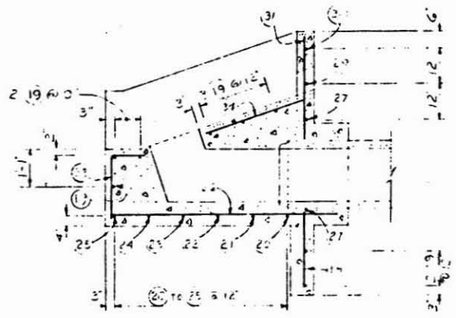

SECTIONAL ELEVATION

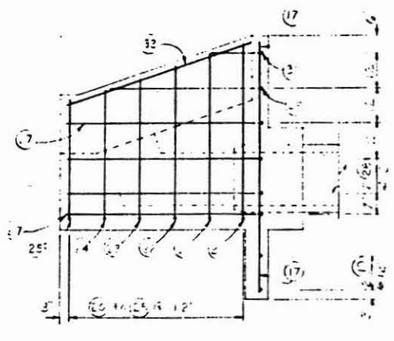

ELEVATION

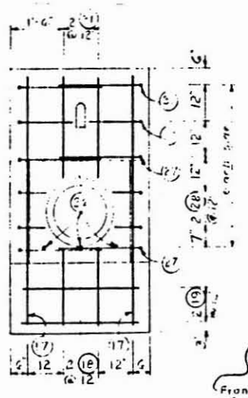

ELEVATION

BAR SCHEDULE

Structure & Location	Mark D	Mark No	Size	Quantity	Length	Total Length	Type	A	B	C	D	E	G	H	K
Cutoff Collar	E	1	4	16	9'-6	152'-0	Str								
	E	2	4	32	5'-6	176'-0	Str								
	E	3	4	16	1'-9	28'-0	Str								
	E	4	4	16	3'-3	52'-0	Str								
Cantilever Outlet	E	5	4	16	3'-0	48'-0	Str								
	E	6	5	4	3'-6	14'-0	2	1'-0	2'-6						
	E	7	5	1	6'-6	6'-6	2	1'-9	4'-9						
	E	8	4	416	3'-0	1248'-0	T1	0'-2	2'-4	2'-6	0'-8	0'-8	0'-2		
	E	9	4	2	3'-9	7'-6	1								
	E	10	5	4	3'-3	13'-0	1								
	E	11	4	4	6'-1	24'-4	1								
	E	12	6	3	19'-6	58'-6	1								
	E	13	7	4	19'-6	78'-0	1								
	E	14	4	420	3'-0	1260'-0	1		2'-6				1'-2		
	E	15	4	2	8'-1	16'-2	1	2'-1	2'-6				1'-2		
	E	16	4	2	5'-3	10'-6	1	1'-3	2'-6				1'-3		
Inlet	E	17	4	2	7'-1	14'-2	1								
	E	18	4	2	4'-9	9'-6	1								
	E	19	4	1	3'-0	6'-0	1								
	E	20	4	1	13'-4	13'-4	1	5'-3	3'-6				4'-3		
	E	21	4	1	13'-4	13'-4	1	4'-3	3'-6				4'-3		
	E	22	4	1	12'-4	12'-4	2	4'-3	3'-6				4'-3		
	E	23	4	1	11'-0	11'-0	2	4'-3	3'-6				4'-3		
	E	24	4	1	10'-4	10'-4	2	3'-3	3'-6				3'-3		
	E	25	4	1	9'-6	9'-6	2	2'-5	3'-6				2'-5		
	E	26	4	3	8'-9	26'-3	2	1'-8	3'-6				1'-8		
	E	27	4	4	8'-1	32'-4	2	1'-0	3'-6				1'-0		
	E	28	4	4	7'-4	29'-4	2	0'-3	3'-6				0'-3		
	E	29	4	2	6'-7	13'-2	2	1'-6	3'-6				1'-6		
	E	30	4	2	5'-11	11'-10	2	1'-0	2'-6				1'-0		
	E	31	4	2	5'-3	10'-6	2	0'-3	2'-6				0'-3		
	E	32	4	2	5'-3	10'-6	2	0'-3	2'-6				0'-3		
	E	33	4	1	2'-9	5'-6	1	1'-6	1'-3						
	E	34	4	1	3'-9	7'-6	1	2'-6	1'-3						
	E	35	4	1	4'-9	9'-6	1	3'-6	1'-3						
	E	36	4	3	6'-1	18'-3	1	4'-6	1'-3						
	E	37	4	4	7'-1	28'-4	1	5'-6	1'-3						
	E	38	4	4	8'-1	32'-4	1	6'-6	1'-3						
	E	39	4	2	9'-1	18'-2	1	7'-6	1'-3						
	E	40	4	2	10'-1	20'-2	1	8'-6	1'-3						
	E	41	4	2	11'-1	22'-2	1	9'-6	1'-3						
	E	42	4	1	12'-1	12'-1	1	10'-6	1'-3						
	E	43	4	1	13'-1	13'-1	1	11'-6	1'-3						
	E	44	4	1	3'-0	6'-0	1	2'-9	1'-3						
	E	45	4	1	2'-9	5'-6	1	2'-6	1'-3						

Notes

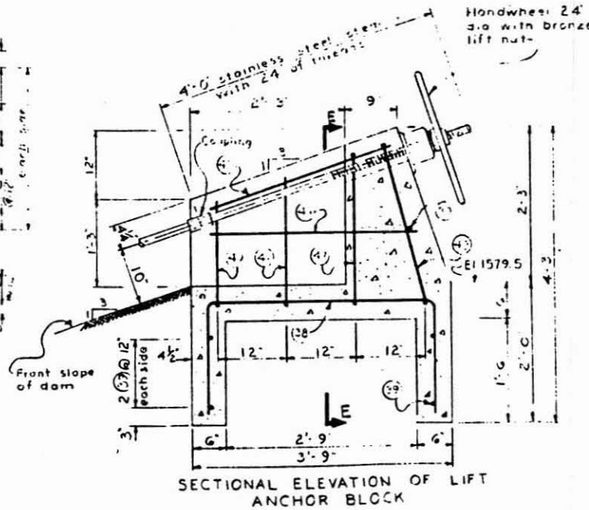

SECTIONAL ELEVATION OF LIFT ANCHOR BLOCK

BAR TYPES

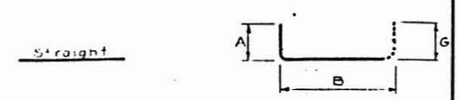

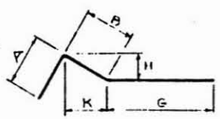

QUANTITIE TABLE FOR ONE 1.5 GATED OUTLET

Structure		
Inlet	3.2	
[illegible]	1.5	Noel
[illegible]	5.8	
Cantilever Outlet	3.9	
[illegible]		
[illegible]	0.7	
[illegible]	0.4	
Total	15.5	

972

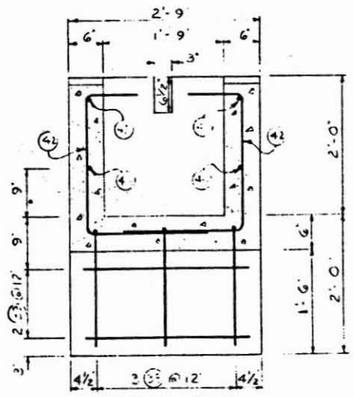

SECTION E-E

AS BUILT

DETAILS OF IMPROVEMENTS TO
VINEYARD ROAD FLOODWATER RETARDING STRUCTURE
WILLIAMS-CHANDLER W.P.P.
PINAL COUNTY, ARIZONA

U. S. DEPARTMENT OF AGRICULTURE
SOIL CONSERVATION SERVICE

Designed	R Arrington	Date	Approved by
Drawn	G. Hanley	5-27-67	Title
Traced			Title
Checked	R Arrington	5-67	Sheet No. 20 of 25

Drawing No.

FORM SCS 313 (APRIL 1963)

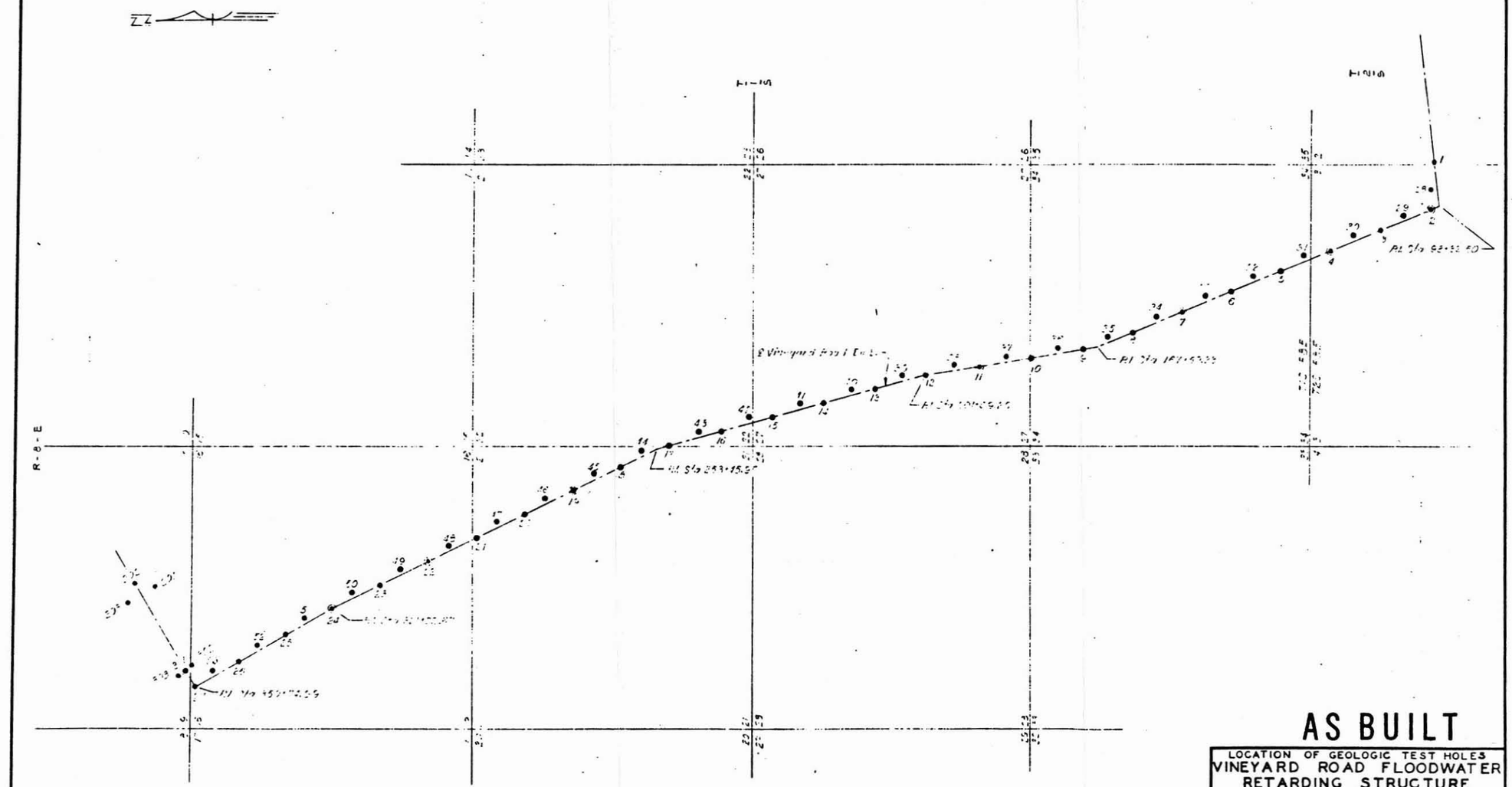

AS BUILT

LOCATION OF GEOLOGIC TEST HOLES
VINEYARD ROAD FLOODWATER RETARDING STRUCTURE
WILLIAMS-CHANDLER W. P. P.
PINAL COUNTY, ARIZONA

U. S. DEPARTMENT OF AGRICULTURE
SOIL CONSERVATION SERVICE

	Date	
Designed W.F. MILTNER	7-12-64	Approved by:
Drawn D.H.M.	7-12-64	Title:
Traced		Title:
Checked		Sheet No. 21 of 25 — Drawing No.

SCS-313B (APRIL 1963)

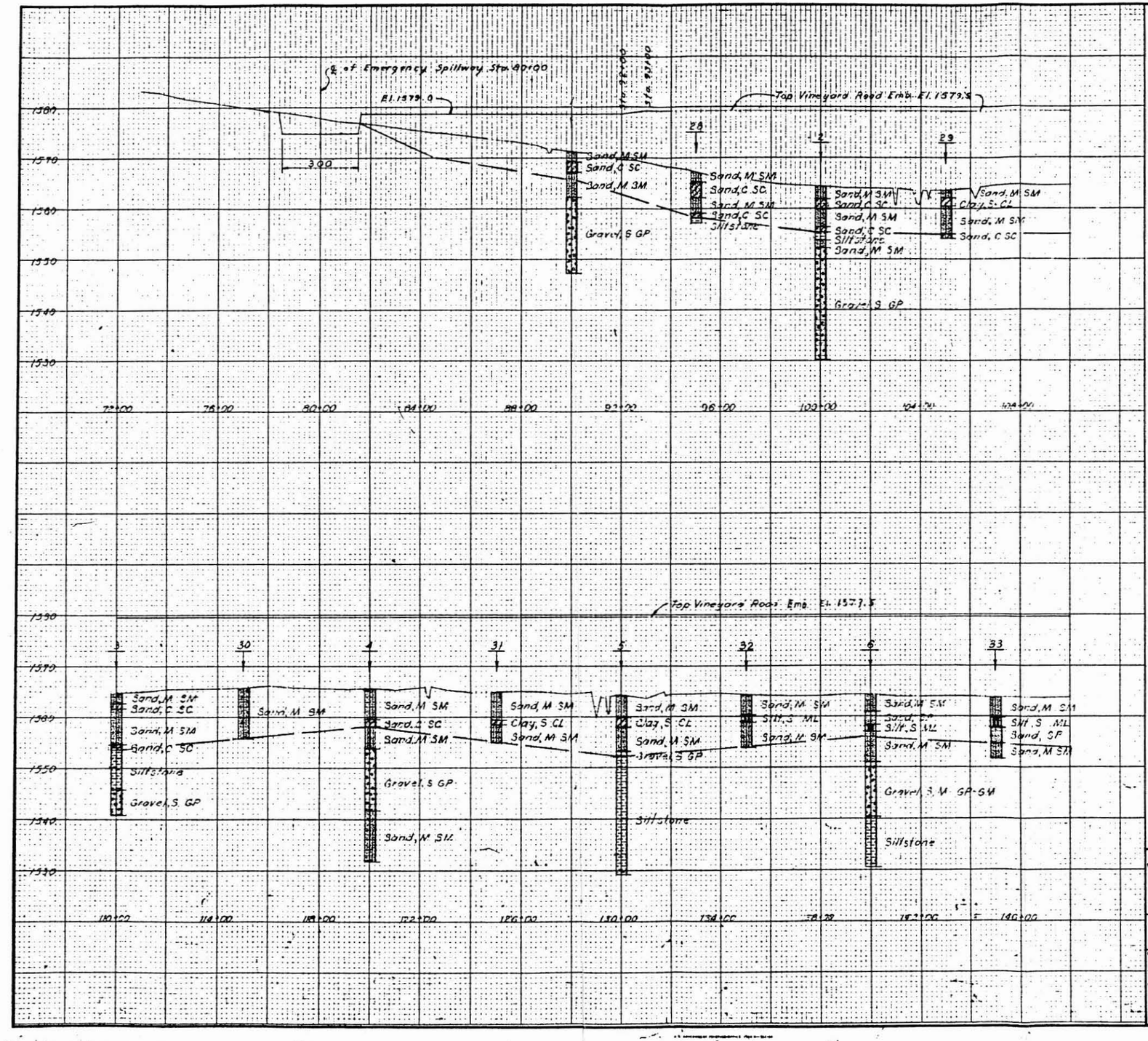

LEGEND

SYMBOLS

UNCONSOLIDATED MATERIAL

gravel; sand; silt; clay; cobbles, boulders
gravel, sandy; sand, gravelly; silt, gravelly; clay, gravelly; peat
gravel, silty; sand, silty; silt, sandy; clay, sandy; gypsiferous *
gravel, clayey; sand, clayey; silt, clayey; clay, silty; calcareous *
gravel, sand, silt; sand, silt, clay; organic silt; organic clay

* to be added to Standard Symbol when significant amounts of dispersed gypsum or calcified zones are present in the section.

CONSOLIDATED MATERIAL

Sedimentary Rocks

shale; sandstone; limestone; chalk; coal
calcareous shale; calcareous sandstone; cherty limestone; marl; gypsum
sandy shale; shaley sandstone; sandy limestone; chert; conglomerate
siltstone; breccia; dolomite

Metamorphic Rocks

quartzite; slate; gneiss; schist; marble; soapstone, talc, serpentine

Igneous Rocks

intrusive; extrusive; pyroclastic

Undifferentiated

Other Symbols

hole logged only; hole sampled; dip and strike; pit or trench

ABBREVIATIONS

aq	aquifer	fri	friable
cav	cavities	lam	laminated
℄	centerline	mas	massive
con	concretions	TD	total depth
US	undisturbed samples	v.	very
DS	disturbed samples	w/	with
dip	dipping	wea	weathered
frac	fractured	Wt.	(date) groundwater level on a specified date

TEST HOLE NUMBERING SYSTEM

Centerline of dam	1 - 99
Borrow area	101 - 199
Emergency spillway	201 - 299
Centerline of outlet structure	301 - 399
Stream channel	401 - 499
Relief wells	501 - 599
	601 - 699
	701 - 799

UNIFIED SOIL CLASSIFICATION SYSTEM SYMBOLS

GW	Well graded gravels; gravel-sand mixtures
GP	Poorly graded gravels
GM	Silty gravels; gravel-sand-silt mixtures
GC	Clayey gravels; gravel-sand-clay mixtures
SW	Well graded sands; sand-gravel mixtures
SP	Poorly graded sands
SM	Silty sand
SC	Clayey sands; sand-clay mixtures
ML	Silts; silty, v. fine sands; sandy or clayey silts
CL	Clays of low to medium plasticity; silty, sandy or gravelly clays
CH	Inorganic clays of high plasticity; fat clays
MH	Elastic silts; mecaceous or diatomaceous silts
OL	Organic silts and organic silty clays of low plasticity
OH	Organic clays of medium to high plasticity

AS BUILT

PLAN AND PROFILES FOR GEOLOGIC INVESTIGATIONS
VINEYARD ROAD FLOODWATER RETARDING STRUCTURE
WILLIAMS-CHANDLER W. P. P.
PINAL COUNTY, ARIZONA

U. S. DEPARTMENT OF AGRICULTURE
SOIL CONSERVATION SERVICE

Investigated by: W. F. MALONEY Jr. U.S.F. — Date
Title
Checked by
Title
Approved by
Title
Title
Sheet No. 22 of 25 — Drawing No.

ES 900 Sheet 4 of 4 SCS-330 (4-59)

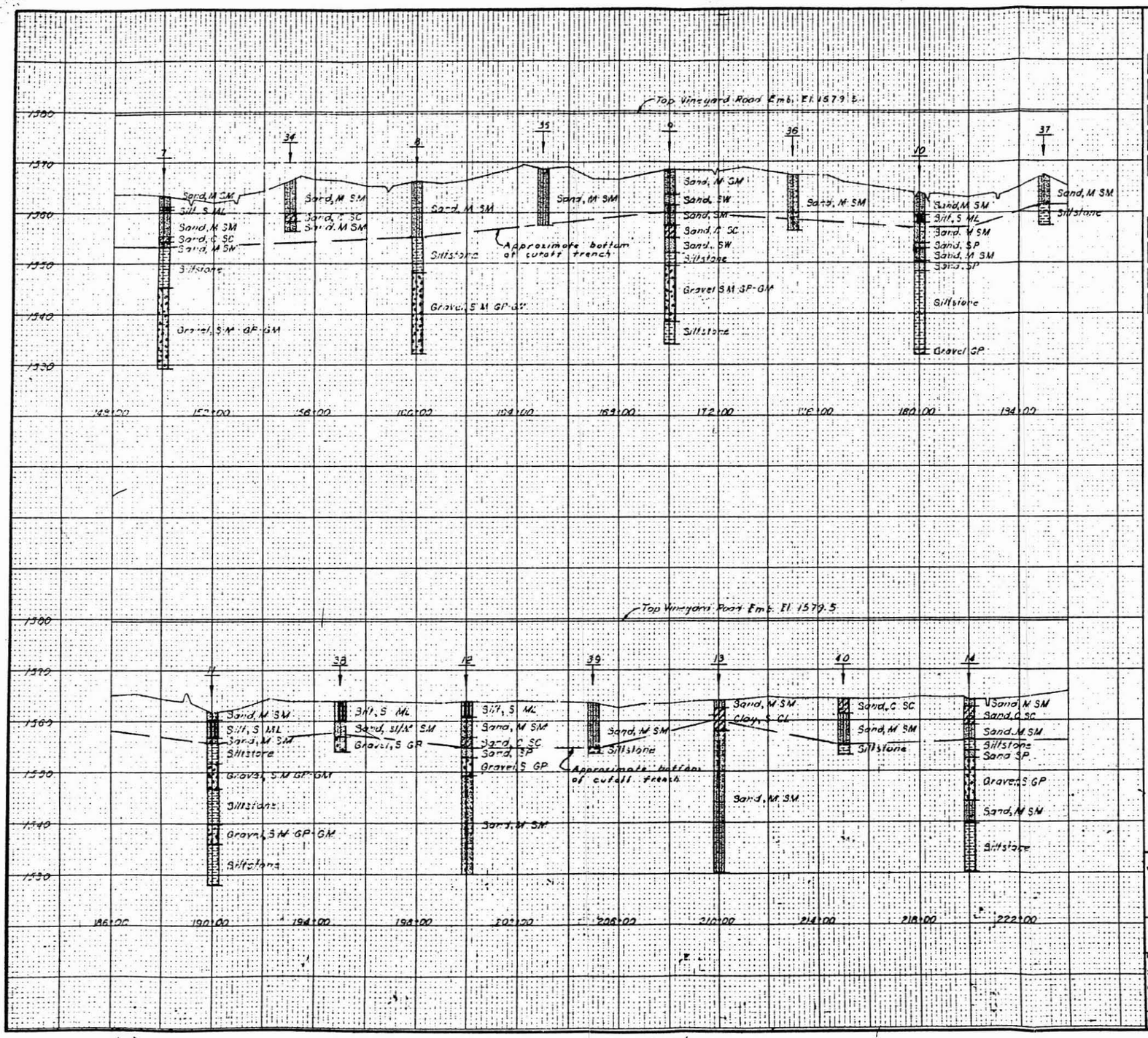

LEGEND

SYMBOLS

UNCONSOLIDATED MATERIAL

gravel; sand; silt; clay; cobbles, boulders
gravel, sandy; sand, gravelly; silt, gravelly; clay, gravelly; peat
gravel, silty; sand, silty; silt, sandy; clay, sandy; gypsiferous *
gravel, clayey; sand, clayey; silt, clayey; clay, silty; calcareous *
gravel, sand, silt; sand, silt, clay; organic silt; organic clay

* to be added to Standard Symbol when significant amounts of dispersed gypsum or calcified zones are present in the section.

CONSOLIDATED MATERIAL

Sedimentary Rocks

shale; sandstone; limestone; chalk; coal
calcareous shale; calcareous sandstone; cherty limestone; marl; gypsum
sandy shale; shaley sandstone; sandy limestone; chert; conglomerate
siltstone; breccia; dolomite

Metamorphic Rocks

quartzite; slate
gneiss; schist
marble; soapstone talc serpentine

Igneous Rocks

intrusive; extrusive
pyroclastic

Undifferentiated

Other Symbols

● hole logged only
● hole sampled
dip and strike
pit or trench

ABBREVIATIONS

aq	aquifer	fri	friable
cav.	cavities	lam	laminated
℄	centerline	mas	massive
con	concretions	TD	total depth
US	undisturbed samples	v.	very
DS	disturbed samples	w/	with
dip	dipping	wea	weathered
frac	fractured	Wt.	(date) groundwater level on a specified date

TEST HOLE NUMBERING SYSTEM

Centerline of dam	1 - 99
Borrow area	101 - 199
Emergency spillway	201 - 299
Centerline of outlet structure	301 - 399
Stream channel	401 - 499
Relief wells	501 - 599
	601 - 699
	701 - 799

UNIFIED SOIL CLASSIFICATION SYSTEM SYMBOLS

GW	Well graded gravels; gravel-sand mixtures
GP	Poorly graded gravels
GM	Silty gravels; gravel-sand-silt mixtures
GC	Clayey gravels; gravel-sand-clay mixtures
SW	Well graded sands; sand-gravel mixtures
SP	Poorly graded sands
SM	Silty sand
SC	Clayey sands; sand-clay mixtures
ML	Silts; silty, v. fine sands; sandy or clayey silts
CL	Clays of low to medium plasticity; silty, sandy or gravelly clays
CH	Inorganic clays of high plasticity; fat clays
MH	Elastic silts; micaceous or diatomaceous silts
OL	Organic silts and organic silty clays of low plasticity
OH	Organic clays of medium to high plasticity

AS BUILT

PLAN AND PROFILES FOR GEOLOGIC INVESTIGATIONS
VINEYARD ROAD FLOODWATER RETARDING STRUCTURE
WILLIAMS-CHANDLER W. P. P.
PINAL COUNTY, ARIZONA

U. S. DEPARTMENT OF AGRICULTURE
SOIL CONSERVATION SERVICE

Investigated by	Date	Approved by	
W. F. MILDNER	7-12-65	Title	
Title		Title	
Checked by		Title	
Title		Sheet No. 23 of 25	Drawing No.

ES 900 Sheet 4 of 4 SCS-350 (6-59)

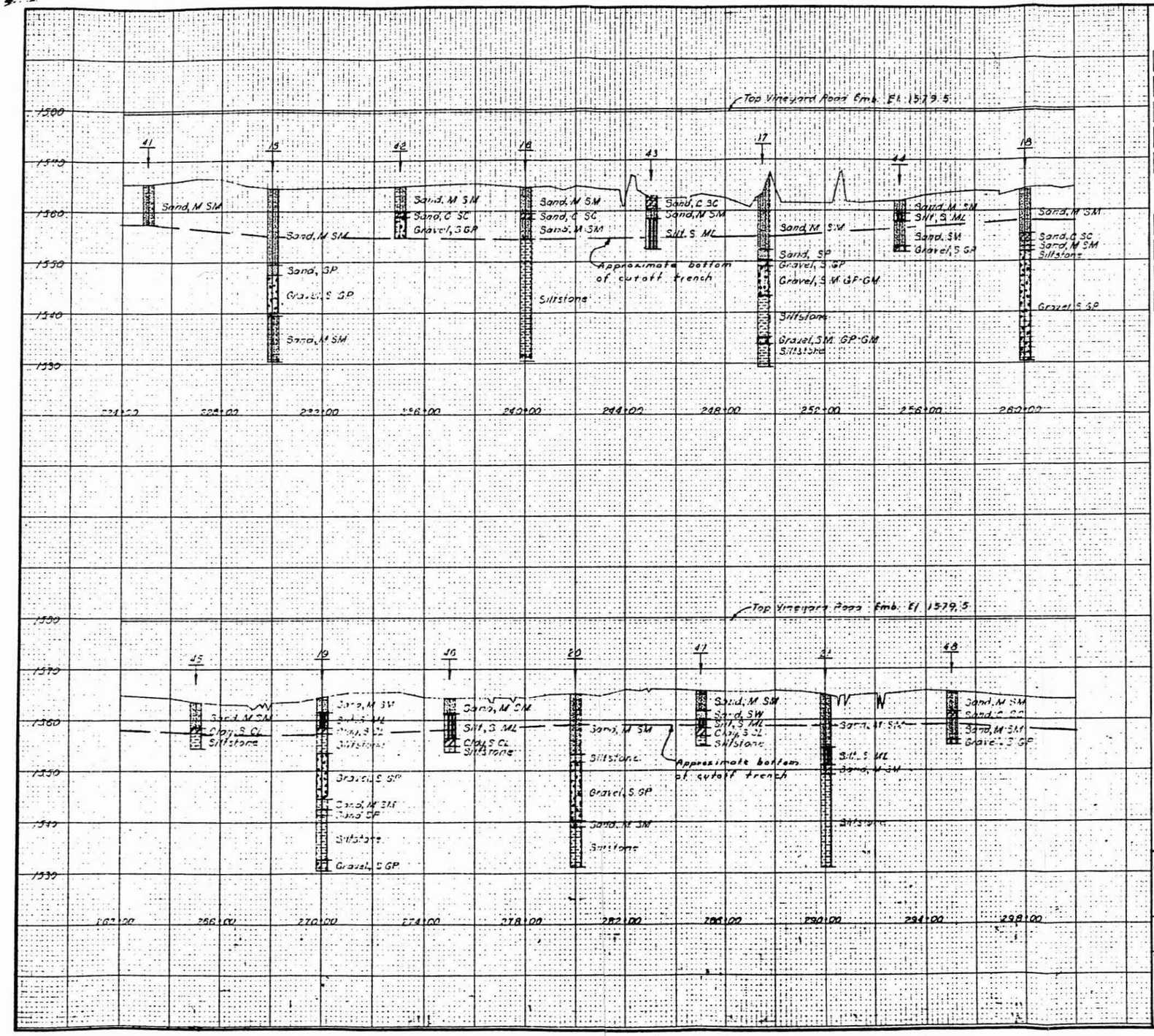

LEGEND

SYMBOLS

UNCONSOLIDATED MATERIAL

gravel, sand, silt, clay, cobbles, boulders, gravel, sandy, sand, gravelly, silt, gravelly, clay, gravelly, peat, gravel, silty, sand, silty, silt, sandy, clay, sandy, gypsiferous *, gravel, clayey, sand, clayey, silt, clayey, clay, silty, calcareous *, gravel, sand, silt, sand, silt, clay, organic silt, organic clay

* to be added to Standard Symbol when significant amounts of dispersed gypsum or calcified zones are present in the section.

CONSOLIDATED MATERIAL

Sedimentary Rocks: shale, sandstone, limestone, chalk, coal, calcareous shale, calcareous sandstone, cherty limestone, marl, gypsum, sandy shale, shaley sandstone, sandy limestone, chert, conglomerate, siltstone, breccia, dolomite

Metamorphic Rocks: quartzite, slate, gneiss, schist, marble, soapstone talc serpentine

Igneous Rocks: intrusive, extrusive, pyroclastic

Undifferentiated

Other Symbols: hole logged only, hole sampled, dip and strike, pit or trench

ABBREVIATIONS

aq	aquifer	fri	friable
cav.	cavities	lam	laminated
℄	centerline	mas	massive
con	concretions	TD	total depth
US	undisturbed samples	v.	very
DS	disturbed samples	w/	with
dip	dipping	wea	weathered
frac	fractured	WL	(date) groundwater level on a specified date

TEST HOLE NUMBERING SYSTEM

Centerline of dam	1 - 99
Borrow area	101 - 199
Emergency spillway	201 - 299
Centerline of outlet structure	301 - 399
Stream channel	401 - 499
Relief wells	501 - 599
	601 - 699
	701 - 799

UNIFIED SOIL CLASSIFICATION SYSTEM SYMBOLS

GW	Well graded gravels; gravel-sand mixtures
GP	Poorly graded gravels
GM	Silty gravels; gravel-sand-silt mixtures
GC	Clayey gravels; gravel-sand-clay mixtures
SW	Well graded sands; sand-gravel mixtures
SP	Poorly graded sands
SM	Silty sand
SC	Clayey sands; sand-clay mixtures
ML	Silts; silty, v. fine sands; sandy or clayey silts
CL	Clays of low to medium plasticity; silty, sandy or gravelly clays
CH	Inorganic clays of high plasticity; fat clays
MH	Elastic silts; micaceous or diatomaceous silts
OL	Organic silts and organic silty clays of low plasticity
OH	Organic clays of medium to high plasticity

AS BUILT

PLAN AND PROFILES FOR GEOLOGIC INVESTIGATIONS

VINEYARD ROAD FLOODWATER RETARDING STRUCTURE

WILLIAMS-CHANDLER W. P. P.

PINAL COUNTY, ARIZONA

U. S. DEPARTMENT OF AGRICULTURE
SOIL CONSERVATION SERVICE

Investigated by: W. F. MILDNER — Date: 7-12-65

Title

Checked by

Title

Approved by

Title

Title

Sheet No. 24 of 25

Drawing No.

ES 900 Sheet 4 of 4 SCS-3,89 (4-72)

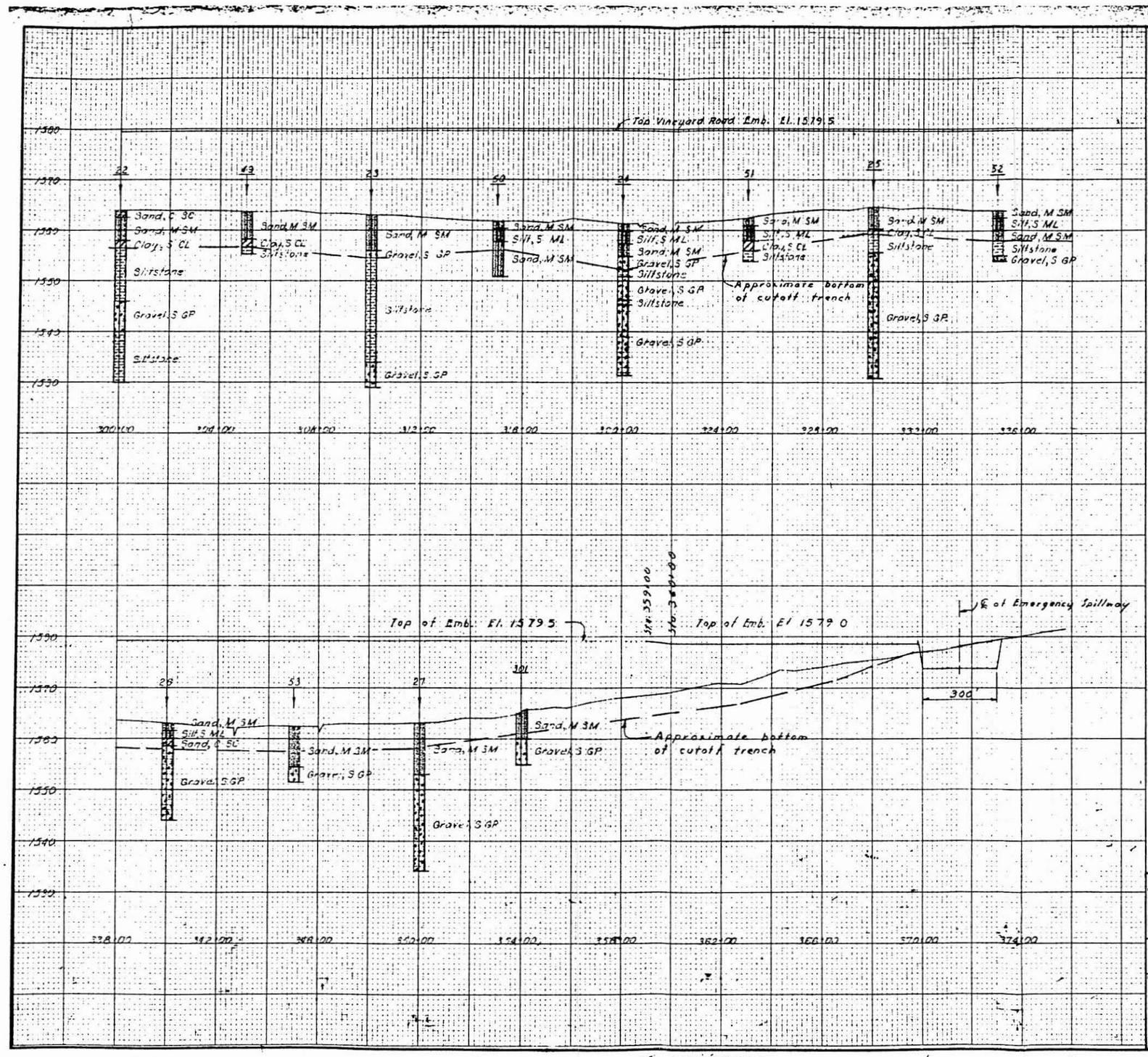

LEGEND

SYMBOLS

UNCONSOLIDATED MATERIAL

gravel; sand; silt; clay; cobbles, boulders
gravel, sandy; sand, gravelly; silt, gravelly; clay, gravelly; peat
gravel, silty; sand, silty; silt, sandy; clay, sandy; gypsiferous *
gravel, clayey; sand, clayey; silt, clayey; clay, silty; calcareous *
gravel, sand, silt; sand, silt, clay; organic silt; organic clay

* to be added to Standard Symbol when significant amounts of dispersed gypsum or calcified zones are present in the section.

CONSOLIDATED MATERIAL

Sedimentary Rocks

shale; sandstone; limestone; chalk; coal
calcareous shale; calcareous sandstone; cherty limestone; marl; gypsum
sandy shale; shaley sandstone; sandy limestone; chert; conglomerate
siltstone; breccia; dolomite

Metamorphic Rocks

quartzite; slate
gneiss; schist
marble; soapstone, talc, serpentine

Igneous Rocks

intrusive; extrusive
pyroclastic

Undifferentiated

Other Symbols

● hole logged only
● hole sampled
dip and strike
pit or trench

ABBREVIATIONS

aq	aquifer	fri	friable
cav.	cavities	lam	laminated
℄	centerline	mas	massive
con	concretions	TD	total depth
US	undisturbed samples	v.	very
DS	disturbed samples	w/	with
dip	dipping	wea	weathered
frac	fractured	WL	(date) groundwater level on a specified date

TEST HOLE NUMBERING SYSTEM

Centerline of dam	1 - 99
Borrow area	101 - 199
Emergency spillway	201 - 299
Centerline of outlet structure	301 - 399
Stream channel	401 - 499
Relief wells	501 - 599
	601 - 699
	701 - 799

UNIFIED SOIL CLASSIFICATION SYSTEM SYMBOLS

GW	Well graded gravels; gravel-sand mixtures
GP	Poorly graded gravels
GM	Silty gravels; gravel-sand-silt mixtures
GC	Clayey gravels; gravel-sand-clay mixtures
SW	Well graded sands; sand-gravel mixtures
SP	Poorly graded sands
SM	Silty sand
SC	Clayey sands; sand-clay mixtures
ML	Silts; silty, v. fine sands; sandy or clayey silts
CL	Clays of low to medium plasticity; silty, sandy or gravelly clays
CH	Inorganic clays of high plasticity; fat clays
MH	Elastic silts; micaceous or diatomaceous silts
OL	Organic silts and organic silty clays of low plasticity
OH	Organic clays of medium to high plasticity

AS BUILT

PLAN AND PROFILES FOR GEOLOGIC INVESTIGATIONS
VINEYARD ROAD FLOODWATER RETARDING STRUCTURE
WILLIAMS-CHANDLER W. P. P.
PINAL COUNTY, ARIZONA

U. S. DEPARTMENT OF AGRICULTURE
SOIL CONSERVATION SERVICE

Investigated by W. F. MILDNER	Date 7-12-65	Approved by	
Title		Title	
Checked by		Title	
Title		Sheet No. 25 of 25	Drawing No.

ES 900 Sheet 4 of 4 SCS-330 (6-39)