McLAIN HARBERS CO., INC.
720 W. Prince Rd.
Tucson, Arizona 85705
Phone: (602) 887-7272

April 1, 1996

MEMORANDUM

TO: Tim Murphy, FCD Maricopa County

FROM: Gordon McLain

RE: Photo Flights, Harquahala and Saddleback FRS.

Enclosed are two prints each of the aerial photography including flight index drawings.

FLIGHT OF MARCH 9, 1996 (FLIGHT LINES 1 THROUGH 7)

Winds aloft were out of the southeast at approximately 25 knots and turbulence was moderate. The skies were clear with some blowing surface dust. The winds aloft made our time over the project longer than we anticipated, however the flight lines and the winds were somewhat compatible which made our trip productive. Examination of the level bubble which is recorded for each photograph indicated that the maximum tilt or tip does not exceed 2.5 degrees and the crab angle was acceptable.

FLIGHT OF MARCH 16, 1996 (FLIGHT LINES 8 AND 9)

Winds aloft were out of the northwest at approximately 5 knots, without turbulence. Surface winds were calm and the skies were clear over the project site. The camera tilt or tip did not exceed 1 degree.

FLIGHT OF MARCH 23, 1996 (FLIGHT LINE 10)

This flight was scheduled to be the final flight, however the weather was not cooperating. Skies were partly cloudy and winds aloft were out of the northwest at approximately 30 knots. After numerous attempts, we were able to obtain photography of flight line 10. Due to increasing clouds the remaining flight was canceled. An examination of Flight Line 10 negatives indicated they are acceptable for mapping.

FLIGHT OF MARCH 30, 1996 (FLIGHT LINES 11 THROUGH 18)

Finally, good flying weather, skies were clear, surface winds and winds aloft were calm, the camera was level throughout the flight.

CONTENTS

Property of
Flood Control District of MC Library
Please Return to
2801 W. Durango
Phoenix, AZ 85009

COVER LETTER.....Section 1

LIST - DESCRIPTION OF CONTROL POINTS.....Section 2

LIST - XYZ VALUES OF CONTROL POINTS.....Section 3

LIST - XYZ PHOTOGRAMMETRIC CHECK POINTS.....Section 4

DIAGRAM - HORIZONTAL CONTROL.....Section 5

DIAGRAM - VERTICAL CONTROL (Diff. Levels).....Section 6

DIFFERENTIAL LEVEL NOTES.....Section 7

AEROTRIANGULATION.....NOT INCLUDED.....Section 8

STRUCTURE DRAWINGS.....Section 9

PUBLISHED CONTROL POINTS.....NOT INCLUDED.....Section 10

ABBREVIATIONS.....Last Page

April 29, 1996

Mr. Timothy M. Murphy
Project Manager
FCD, Maricopa County
2801 W. Durango
Phoenix, Arizona 85009

RE: HARQUAHALA AND SADDLEBACK FRS INCLUDING DIVERSION CHANNELS

Point numbers shown herein are referenced to certain types of monumentation. Points numbered 0 to 199 will be Township, Section or Quarter Section corners. Points numbered 200 to 299 are Geodetic horizontal and vertical control points or any type of existing control points. Points numbered 300 to 499 are points established during this survey for mapping control. Points numbered 500 - are provided for verifying the photogrammetric accuracy of the project, which are listed separately along with the differences in elevation. An exception will be Bench Marks located along the flood control structures and diversion channel structures, these are listed as actually marked on the monument. Also, an "S" was added to the Bench Mark identification numbers which are located along the Saddleback FRS., this was done to eliminate confusion of identical numbers.

HORIZONTAL CONTROL

Horizontal coordinates for all points were determined by DGPS using Kinematic or Real Time data collection procedures.

Horizontal control points Pleasanton (202) and Tonopah (203) were used as primary control for this project. From the two primary control points a network was established for GPS real time base station observations. The included horizontal control diagram demonstrates the network and the points chosen for Real Time base stations. All horizontal coordinates are to NAD 83 international foot.

VERTICAL CONTROL

Differential levels or DGPS Real Time was used to provide vertical values for this project, the method used for each point is shown in the XYZ listing. A diagram of the level circuits is also enclosed.

April 29, 1996

Before proceeding with projects that require the new vertical datum of 1988, various Bench Marks throughout the project area is analyzed to determine a mean corrected elevation to be applied to the vertical datum of 1929. To accomplish this Vertcon software is employed. Entering the latitude and longitude of a given point the Vertcon correction is calculated. The following is a list of corrections for various points throughout the project area.

PT.No.	BENCH MARK	1929 DATUM	VERTCON CORRECTIONS	1988 DATUM
211	A 415 52	1234.87	+0.60m (1.97 ft.)	1236.840
200	BURNT	1441.992	+0.61m (2.00 ft.)	1443.992
	GREGG	1433.515	+0.57m (1.87 ft.)	1435.385
208	Y 476	1394.81	+0.65m (2.13 ft.)	1396.940
25	RME 706	1071.64	+0.62m (2.03 ft.)	1073.67

Bench Mark A 415 52 is centrally located within the project area, therefore it was chosen to be the project Bench Mark and a Vertcon Correction of 1.97 Ft. will be added to the 1929 vertical datum of all other Bench Marks within the project area.

Level circuit No.1 began at Bench Mark No. A 415 52, located in the median of Interstate Hwy 10 approximately one half mile west of Harquahala Diversion Channel. This circuit was ran northeasterly along the Diversion Channel and westerly along the Harquahala FRS, for approximately 13.7 miles to the Bench Mark Y 476, located at Salome Hwy. and Granite Reef Aqueduct,

The observed difference between Y 476 and our level circuit was 0.08 Ft., using this difference a lineral interpolation was used to adjust this level circuit. Final adjusted elevations are shown in the field notes, and are also shown in all final XYZ listings.

Level Circuit No.2 began at Bench Mark C 415 51, located in the median of Interstate Hwy 10

approximately 500 Ft. west of the east line of Section 11, T. 2 N., R. 9 W.. The level circuit was ran northerly to our control point number 360 and returned to C 415 51. This was conducted to check our GPS elevation of point 360.

Level Circuit No. 3 is a continuation of Circuit No.2 which was ran westerly along the frontage road through our point number 359 to Bench Mark S 476 located at Salome Rd. and the frontage road.

Level Circuit No. 4 began at Bench Mark A 415 52, (as described above) which was ran westerly along I-10 to our point number 359 and returned to A 415 52.

Level circuit No's. 5 and 6 were ran south from Bench Mark A 415 to the south end of the project to ERM 706 (25) and returned to the point of origin. Published Bench Marks we ran through are tabulated to reflect the extent of misclosures are shown below.

PT. NO.	BENCH MARK	NAVD 88 (THIS SURVEY)	NAVD 88-1.97 (THIS SURVEY)	PUBLISHED NGVD 29	DIFF. (±)
25	ERM 706 (FEMA)	1074.28	1072.31	1071.64	+0.67
26	ERM 707 (FEMA)	1072.79	1070.82	1070.04	+0.78
208	Y 476 (NGS)	1396.78	1394.81	1394.81	+0.08
211	A 415 (USC&GS)	1236.84	1234.87	1234.87	BASE
270	Q 362 (USC&GS)	1250.75	1248.78	1248.47	+0.31
273	P 476 (NGS)	1217.42	1215.45	1215.13	+0.32
274	A 263 (USC&GS)	1216.31	1214.34	1213.99	+0.35
275	B 263 (USC&GS)	1205.86	1203.89	1203.52	+0.37
296	C 13 (USC&GS)	1190.69	1188.72	1188.46	+0.26
298	D 13 (USC&GS)	1211.25	1209.28	1208.92	+0.36
299	Q 476 (NGS)	1218.70	1216.73	1216.43	+0.30

Since all the listed Bench Marks are located in th valley basins, the difference could be contributed to subsidence. A passing thought regarding subsidence is that there are two Bench Marks, Burnt (200) and Gregg ( ), which are set in the pediments and could be used for subsidence monitoring. Using Burnt, Greg and never changing the values, no matter which datum they are, will provide you with a good baseline for future subsidence surveys.

PHOTOGRAMMETRY

This project was flown at a scale of 1"=600 ft. (1:7200), which was used to collect digital terrain models and plan files. Using the DTM files, contours are mathematically generated for 1"=200 ft., 2 ft. contour interval mapping. Aero-triangulation was used to provide the additional control for mapping this project.

Photogrammetric check points along with actual GPS field elevations and the observed differences are included with this report.

The Bench Marks which are positioned along the outside edge of the flood retention structures are situated in ground area which is not level, which makes these points difficult if not impossible to use for photogrammetric check points.

STRUCTURES

Drawings of the drainage structures located along Interstate Hwy. 10 from Salome Interchange easterly for approximately 6000 ft. are included in this report. The stations which identify the structures should correspont with "As Built" drawings. The stations are also shown on the final section maps. Similarly, other structures are identified by station or number.

April 30, 1996

HARQUAHALA - SADDLEBACK FRS'S AND DIVERSION CHANNELS

Primary Control Points

I.D NO.	ELEV. (FT.)	DESCRIPTION
1	1411.30	Section cor. for sec's. 29, 30, 31 & 32, T. 3 N., R. 8 W., monumented with a 2 ins. iron post 0.9 ft. above ground surface, firmly set with the BLM brass cap properly mkd.
2	1423.89	Section cor. for sec's. 23, 24, 25 & 26, T. 3 N., R. 9 W., monumented with a 2 ins. iron post 1.0 ft. above ground surface, firmly set with the GLO brass cap properly mkd.
3	1403.31	Quarter cor. for sec's. 22 & 23 T. 3 N., R. 9 W., monumented with a 1 in. iron post 1.7 ft. above ground surface, firmly set with the GLO brass cap properly mkd.
4	1445.24	Section cor. for sec's. 15, 16, 21 & 22, T. 3 N., R. 9 W., monumented with a 2 ins. iron post 1.3 ft. above ground surface, firmly set with the GLO brass cap properly mkd.
5	1430.72	Section cor. for sec's. 16, 17, 20 & 21, T. 3 N., R. 9 W., monumented with a 2 ins. iron post 0.6 ft. above ground surface, firmly set with the GLO brass cap properly mkd.
6	1222.16	Section cor. for sec's. 1, 2, 11 & 12, T. 2 N., R. 9 W., monumented with a 2 ins. iron post 0.9 ft. above ground surface, firmly set with the GLO brass cap properly mkd.
7	1257.34	Section cor. for sec's. 1, 2, 35 & 36, Tps. 2 & 3 N., R. 9 W., monumented with a 2 ins. iron post 0.5 ft. above ground surface, firmly set with the GLO brass cap properly mkd.
8	1287.14	Township cor. for Tps. 2 & 3 N., Rs. 8 & 9 W., monumented with a 3 ins. iron post 0.7 ft. above ground surface, firmly set with the GLO brass cap properly mkd. (Also sec's. 1, 6, 31 & 36)
9	1278.99	Quarter cor. for sec's. 1 & 6, T. 2 N., Rs. 8 & 9 W., monumented with a 1 in. iron post 1.0 ft. above ground surface, firmly set with the GLO brass cap properly mkd.
10	1312.64	Quarter cor. for sec's. 31 & 36, T. 3 N., Rs. 8 & 9 W., monumented with a 1 in. iron post 0.7 ft. above ground surface, firmly set with the GLO brass cap properly mkd.

I.D NO.	ELEV. (FT.)	DESCRIPTION
11	1351.60	Section cor. for sec's. 25, 30, 31 & 36, T. 3 N., Rs. 8 & 9 W., monumented with a 2 ins. iron post 0.8 ft. above ground surface, firmly set with the GLO brass cap properly mkd.
12	1305.15	Section cor. for sec's. 5, 6, 7 & 8, T. 2 N., R. 8 W., monumented with a 2 ins. iron post 0.9 ft. above ground surface, firmly set with the GLO brass cap properly mkd.
13	1420.78	Section cor. for sec's. 13, 14, 23 & 24, T. 3 N., R. 10 W., monumented with a 2 ins. iron post 1.0 ft. above ground surface, firmly set with the GLO brass cap properly mkd.
14	1422.30	Section cor. for sec's. 15, 16, 21 & 22, T. 3 N., R. 10 W., monumented with a 2 ins. iron post 0.7 ft. above ground surface, firmly set with the GLO brass cap properly mkd.
15	1374.27	Section cor. for sec's. 23, 24, 25 & 26, T. 3 N., R. 10 W., monumented with a 2 ins. iron post 0.7 ft. above ground surface, firmly set with the GLO brass cap properly mkd.
16	1376.89	Section cor. for sec's. 19, 24, 25 & 30, T. 3 N., Rs. 9 & 10 W., monumented with a 2 ins. iron post 0.6 ft. above ground surface, firmly set with the GLO brass cap properly mkd.
17	1376.62	Section cor. for sec's. 19, 20, 29 & 30, T. 3 N., R. 9 W., monumented with a 2 ins. iron post 0.6 ft. above ground surface, firmly set with the GLO brass cap properly mkd.
18	1372.48	Section cor. for sec's. 20, 21, 28 & 29, T. 3 N., R. 9 W., monumented with a 2 ins. iron post 0.6 ft. above ground surface, firmly set with the GLO brass cap properly mkd.
19	1356.68	Section cor. for sec's. 5, 6, 31 & 32, Tps. 2 & 3 N., R. 8 W., monumented with a 2 ins. iron post 1.1 ft. above ground surface, firmly set with the GLO brass cap properly mkd.
20	1386.94	Quarter cor. for sec's. 5 & 32, Tps. 2 & 3 N., R. 8 W., monumented with a 1 in. iron post 1.0 ft. above ground surface, firmly set with the GLO brass cap properly mkd.
21	1356.31	Section cor. for sec's. 21, 22, 27 & 28, T. 3 N., R. 9 W., monumented with a 2 ins. iron post 0.6 ft. above ground surface, firmly set with the GLO brass cap properly mkd.
22	1362.42	Section cor. for sec's. 22, 23, 26 & 27, T. 3 N., R. 9 W., monumented with a 2 ins. iron post 0.6 ft. above ground surface, firmly set with the GLO brass cap properly mkd.

I.D NO.	ELEV. (FT.)	DESCRIPTION
23	1200.65	Quarter section cor. for sec's. 26 & 27, T. 2 N., R. 8 W., monumented with a 1 in. iron post 1.0 ft. above ground surface, firmly set with the GLO bras cap properly mkd.
24	1166.24	Section cor for sec's 8, 9, 16 & 17, T. 1 N., R. 8 W., monumented with a 2 ins. iron post 0.9 ft. above ground surface, firmly set with the GLO brass cap properly mkd.
25	1074.28	Quarter section cor. for sec's 29 & 30, T. 1 N., R. 8 W., monumented with a 1 in. iron post 0.5 ft. above ground surface, firmly set with the GLO brass cap properly mkd.
26	1072.79	Section cor. for sec's 19, 20, 29 & 30, T. 1 N., R. 8 W., monumented with a 2 ins. iron post 0.4 ft. above ground surface, firmly set with the GLO brass cap properly mkd.
27	1235.87	Section cor. for sec's 15, 16, 21 & 22, T. 2 N., R. 8 W., monumented with a 2 ins. iron post 0.5 ft. above ground surface, firmly set with the GLO brass cap properly mkd.
28	1206.19	Section cor. for sec's 7, 8, 17 & 18, T. 2 N., R. 8 W., monumented with a 2 ins. iron post 0.8 ft. above ground surface, firmly set with the GLO brass cap properly mkd.
29	1203.65	Quarter section cor. for sec's 4 & 9, T. 1 N., R. 8 W., monumented with a 1 in. iron post 0.6 ft. above ground surface, firmly set with the GLO brass cap properly mkd.
30	1249.42	Section cor. for sec's 3, 4, 9 & 10, T. 1 N., R. 8 W., monumented with a 2 in. iron post 0.8 ft. above ground surface, firmly set with the GLO brass cap properly mkd.
31	1095.05	Section cor. for sec's 17, 18, 19 & 20, T. 1 N., R. 8 W., monumented with a 2 ins. iron post 0.6 ft. above ground surface, firmly set with the GLO brass cap properly mkd.
32	1099.06	Quarter section cor. for sec's 17 & 18, T. 1 N., R. 8 W., monumented with a 1 ins. iron post 1.0 ft. above ground surface, firmly set with the GLO brass cap properly mkd.
200	1443.90	Bench Mark monumented with USDA - SCS brass cap in rock outcrop, flush with ground surface, mkd. "BURNT 1 84", located approximately 1863 ft. south and 4351 ft. east from the NW corner of sec. 5, T. 2 N., R. 8 W.
201	1435.38	Bench Mark, monumented with USDA - SCD brass cap in rock, flush with ground surface, mkd. "GREG 1-84", located Lt. of Sta. 745+00.

I.D NO.	ELEV. (FT.)	DESCRIPTION
202	1203.69	Horizontal control point, monumented with USC & GS brass cap in concrete flush with ground surface, mkd. "PLEASANTON 1948 1972", located approximately 650 ft. south and 100 ft. west from the NE corner of sec. 1., T. 2 N., R. 9 W.
203	1613.46	Horizontal control point, monumented with USC&GS brass cap in concrete 0.5 ft. above ground surface, mkd. "HORN 1948", located approximately _____ ft. _____ and _____ ft. from the _____ corner of sec. _____, T. N., R. W.
204	1131.23	Horizontal control point, monumented with USC&GS brass cap in concrete 0.3 ft. above ground surface, mkd. "TONOPAH 1947", located approximately _____ ft. _____ _ and _____ ft. from the _____ corner of sec. _____, T. N., R. W.
208	1396.78	Bench Mark, monumented with a NGS stainless steel rod in standard underground container, 0.3 ft. below ground surface, mkd. "Y 476 1981", located at the NW cor. of Salome Hwy. and Granite Reef Aqueduct.
211	1236.84	Bench Mark, monumented with a USC&GS brass cap, in concrete, 0.2 ft. above the ground surface, mkd. "A415, 52 1962", located approximately 2077 ft. south and 4866 ft. east from the NW corner of sec. 12, T. 2 N., R. 9 W..
212	1371.13	Bench Mark, monumented with a USDI brass cap in concrete, flush with ground surface, mkd. "C-REF 150.00 FT RT H.FW. PC 21+50", located approximately 3900 ft. north and 2695 ft. east from the SW corner of section 5, T. 2 N., R. 8 W.
213	1399.59	Bench Mark, monumented with a USDA - SCS brass cap in concrete, flush with ground surface, mkd. "B-50 2-84", located Rt. of Sta. 928+83.
214	1255.48	Bench Mark, monumented with a USDI brass cap in concrete, flush with ground surface, mkd. "C-REF 150.00 FT RT 100+00", located approximately 1593 ft. south and 2948 ft. west from the NE corner of section 7, T. 2 N., R. 8 W..
215	1275.37	Bench Mark, monumented with a USDI brass cap in concrete, 0.4 ft. above ground surface, mkd. "C-REF 150.00 FT RT Sta. 90+00.02", located approximately 903 ft. south and 2246 ft. west from the NE corner of section 7, T. 2 N., R. 8 W..

I.D NO.	ELEV. (FT.)	DESCRIPTION
216	1295.48	Bench Mark, monumented with a USDI brass cap set in concrete, flush with ground surface, mkd. "C-REF 150.00 RT 75+00", located approximately 235 ft. north and 1269 ft. west from the SE corner of section 6, T. 2 N., R. 8 W..
217	1313.66	Bench Mark, monumented with a USDI brass cap set in concrete, flush with ground surface, mkd. "C-REF 150.00 FT RT 62+00.01", located approximately 1217 ft. north and 379 ft. west from the SE corner of section 6, T. 2 N., R. 8 W..
218	1216.70	Bench Mark, monumented with a USC&GS brass cap in concrete 0.6 ft. above ground surface, mkd. "C-415 1962 51", located approximately 600 ft. south and 250 ft. west from the NE corner of section 11, T. 2 N., R. 9 W..
219	1226.39	Bench Mark, monumented with a NGS stainless steel rod in a standard underground container, 0.2 ft. below ground surface mkd. "S-476 1981", located approximately 1100 ft. north and 3600 ft. west from the SW corner of section 2, T. 2 N., R. 9 W..
220	1232.89	R/W point, monumented with a AHD brass cap in concrete 0.5 ft. above ground surface, mkd. "POT 4355+00 1969", located approximately 1484 ft. south and 3689 ft. east from the NW corner of section 12, T. 2 N., R. 9 W..
221	1181.83	Bench Mark, monumented with a FCDMC brass cap in concrete, flush with ground surface mkd. "Sta. 19+69.00 ELEV. 1179.62 ".
222	1166.04	Bench Mark, monumented with a FCDMC brass cap in concrete, flush with ground surface mkd. "Sta. 50+00 ELEV. 1163.83" .
223	1166.42	Bench Mark, monumented with a FCDMC brass cap in concrete, flush with ground surface mkd. "Sta. 55+00 ELEV. 1164.21" .
224	1150.75	Bench Mark, monumented with a FCDMC brass cap in concrete, flush with ground surface mkd. " Sta. 115+94.68 ELEV. 1148.47" .
225	1150.01	Bench Mark, monumented with a FCDMC brass cap in concrete, flush with ground surface mkd. "Sta. 120+00 ELEV. 1147.71" .
226	1149.94	Bench Mark, monumented with a FCDMC brass cap in concrete, 0.2 ft. above ground surface mkd. " Sta. 125+00.00 ELEV. 1147.64" .

I.D NO.	ELEV. (FT.)	DESCRIPTION
227	1137.47	Bench Mark, monumented with a FCDMC brass cap in concrete, flush with ground surface mkd. " Sta. 159+47.27 ELEV. 1135.14".
228	1127.94	Bench Mark, monumented with a FCDMC brass cap in concrete, flush with ground surface mkd. " Sta. 190+00.00 ELEV. 1125.68".
229	1127.85	Bench Mark, monumented with a FCDMC brass cap in concrete, 0.2 ft. above ground surface mkd. "Sta. 195+00.00 ELEV. 1125.56".
230	1126.99	Bench Mark, monumented with a FCDMC brass cap in concrete, 0.2 ft. above ground surface mkd. "Sta. 202+74.10 ELEV. 1124.71".
231	1126.12	Bench Mark, monumented with a FCDMC brass cap in concrete, flush with ground surface mkd. "Sta. 210+00.00 ELEV. 1123.86".
232	1123.78	Bench Mark, monumented with a FCDMC brass cap in concrete, flush with ground surface mkd. "Sta. 215+00.00 ELEV. 1121.53".
233	1124.55	Bench Mark, monumented with a FCDMC brass cap in concrete, 0.4 ft. above ground surface mkd. "Sta. 220+32.69 ELEV. 1122.27".
234	1106.12	Bench Mark, monumented with a FCDMC brass cap in concrete, flush with ground surface mkd. " 245+00.00 ELEV. 1103.79".
235	1188.86	Bench Mark, chiseled + in headwall of 10 x 8 ft. (w x h) concrete box culvert under Saddleback FRS. located at Sta. 15+38.
262	1253.20	Bench Mark, AHD brass cap in headwall of 3 - 10 x 15 (w x h) concrete box culvert for Harquahala - Saddleback FRS Diversion Channel under Interstate Hwy 10 located at Hwy. Sta. 4388+88.
267	1183.87	Bench Mark, chiseled + in headwall of 3 - 10 x 6 (w x h) concrete box culvert under Courthouse Road located at Sta. 9+93.
270	1250.75	Bench Mark, monumented with a USC&GS brass cap in concrete, 0.7 ft. above ground surface mkd. "Q362 1967" located approximately 1300 ft. north and 600 ft. west from the SE corner of section 36, T. 2 N., R. 8 W..

I.D NO.	ELEV. (FT.)	DESCRIPTION
271	1130.17	Bench Mark, monumented with a FCDMC brass cap in concrete, flush with ground surface mkd. " Sta. 185+00.00 ELEV. 1127.84".
272	1144.43	Bench Mark, monumented with a FCDMC brass cap in concrete, flush with ground surface mkd. " Sta. 144+82.00 ELEV. 1142.14".
273	1217.42	Bench Mark, monumented with a NGS stainless steel rod in standard underground container 0.2 ft. below ground surface mkd. "P476 1981" located approximately 100 ft. north and 200 ft. west from the SE corner of section 22, T. 2 N., R. 8 W..
274	1216.31	Bench Mark, monumented with a USC&GS brass cap in concrete, 0.2 ft. below ground surface mkd. " A263 1947" located approximately 50 ft. south and 200 ft. east from the NW corner of section 26, T. 2 N., R. 8 W..
275	1205.86	Bench Mark, monumented with a USC&GS brass cap in concrete, 0.3 ft. above ground surface mkd. " B263 1947" located approximately 2300 ft. north and 3000 ft. east from the SW corner of section 26, T. 2 N., R. 8 W..
276	1181.05	Reference point, monumented with a FCDMC brass cap in concrete, flush with ground surface, mkd. Sta. 18+83.00.
277	1181.58	Reference point, monumented with FCDMC brass cap in concrete, flush with ground surface, mkd. Sta. 85+00.00.
295	1187.38	Reference point, monumented with FCDMC brass cap in concrete, flush with ground surface, mkd. Sta. 109+10.64.
296	1190.68	Bench Mark, monumented with a USC&GS brass cap in concrete, 0.4 ft. above ground surface mkd. "C13 1927" located approximately 1600 ft. south and 200 ft. east from the NW corner of section 21, T. 2 N., R. 8 W..
297	1177.40	Reference point, monumented with FCDMC brass cap in concrete, flush with ground surface, mkd. Sta. 55+00.00.
298	1211.25	Bench Mark, monumented with a USC&GS brass cap in concrete. 0.3 ft. above ground surface mkd. " D13 1927" located approximately 1400 ft. south and 700 ft. east from the NW corner of section 36, T. 2 N., R. 8 W..

I.D NO.	ELEV. (FT.)	DESCRIPTION
299	1218.70	Bench Mark, monumented with a NGS stainless steel rod in standard underground container, 0.2 ft. below ground surface mkd. "Q476 1981" located approximately 1700 ft. north and 1700 ft. east from the SW corner of section 22, T. 2 N., R. 8 W..
302	1423.26	Set 60d nail flush with ground surface on top of Harquahala Structure located approximately 1769 ft. south and 4200 ft. east from the NW corner of section 5, T. 2 N., R. 8 W..
305	1420.69	Set 60d nail flush with ground surface, located approximately 1327 ft. north and 4987 ft. east from the SW corner of section 32, T. 3 N., R. 8 W..
306	1412.00	Set 60d nail flush with ground surface, located approximately 2932 ft. south and 2495 ft. east from the NW corner of section 32, T. 3 N., R. 8 W..
307	1416.05	Set 60d nail flush with ground surface, located approximately 2016 ft. south and 1111 ft. east from the NW corner of section 32, T. 3 N., R. 8 W..
309	1446.77	Set ½ x 18 ins. rebar flush with ground surface, located approximately 3870 ft. north and 1049 ft. east from the SW corner of section 30, T. 3 N., R. 8 W..
311	1414.31	Set 60d nail flush with ground surface, located approximately 3423 ft. north and 1599 ft. west from the SE corner of section 25, T. 3 N., R. 9 W..
312	1434.33	Set ½ x 18 ins. rebar flush with ground surface, located approximately 391 ft. south and 1643 ft. east from the NW corner of section 25, T. 3 N., R. 9 W..
314	1427.01	Set ½ x 18 ins. rebar flush with ground surface, located approximately 1173 ft. north and 1754 ft. west from the SE corner of section 23, T. 3 N., R. 9 W..
318	1418.59	Set 60d nail flush with ground surface, located 3 ft. south of an East-west barbed wire fence, also located approximately 1288 ft. south and 259 ft. east from the NW corner of section 22, T. 3 N., R. 9 W..
320	1422.60	Set 60d nail flush with ground surface, on top of Harquahala Structure located approximately 2588 ft. south and 651 ft. west from the NE corner of section 21, T. 3 N., R. 9 W..

I.D NO.	ELEV. (FT.)	DESCRIPTION
323	1423.00	Set 60d nail flush with ground surface on top of Harquahala Structure located approximately 1629 ft. north and 3450 ft. west from the SE corner of section 23, T. 3 N., R. 9 W..
324	1423.00	Set 60d nail flush with ground surface on top of Harquahala Structure located approximately 293 ft. north and 2127 ft. west of the SE cor. of sec. 23, T. 3 N., R. 9 W..
325	1422.90	Set 60d nail flush with ground surface on top of Harquahala Structure located approximately 830 ft. south and 456 ft. west from the NE corner of section 26, T. 3 N., R. 9 W..
328	1422.20	Set 60d nail flush with ground surface on top of Harquahala Structure located approximately 2300 ft. north and 927 ft. east from the SW corner of section 30, T. 3 N., R. 8 W..
329	1424.40	Set 60d nail flush with ground surface on top of Harquahala Structure located approximately 1950 ft. north and 1209 ft. west from the SE corner of section 19, T. 3 N., R. 9 W..
332	1424.50	Set 60d nail flush with ground surface on top of Harquahala Structure located approximately 2645 ft. north and 621 ft. east from the SW corner of section 21, T. 3 N., R. 9 W..
339	1399.39	Set 60d nail flush with ground surface located approximately 3254 ft. north and 1454 ft. west from the SE corner of section 23, T. 3 N., R. 10 W. .
341	1422.43	Set 60d nail flush with ground surface located approximately 4183 ft. north and 2971 ft. east from the SW corner of section 20, T. 3 N., R. 9 W..
342	1421.63	Set 60d nail flush with ground surface located approximately 3980 ft. north and 1006 ft. east from the SW corner of section 20, T. 3 N., R. 9 W..
343	1429.07	Set ½ x 18 ins. rebar flush with ground surface located approximately 4706 ft. north and 2074 ft. west from the SE corner of section 19, T. 3 N., R. 9 W..
346	1427.20	Set 60d nail flush with ground surface located approximately 54 ft. north and 2725 ft. east from the SW corner of section 13, T. 3 N., R. 10 W. .
347	1424.41	Set ½ x 18 ins. rebar flush with ground surface located approximately 604 ft. north and 968 ft. west from the SE corner of section 14, T. 3 N., R. 10 W. .

I.D NO.	ELEV. (FT.)	DESCRIPTION
350	1423.78	Set ½ x 18 ins. rebar flush with ground surface located approximately 780 ft. north and 3605 ft. east from the SW corner of section 15, T. 3 N., R. 10 W. .
351	1424.50	Set 60d nail flush with ground surface, on top of Harquahala Structure located approximately 2594 ft. north and 2274 ft. east from the SW corner of section 24, T. 3 N., R. 10 W. .
359	1219.51	Set ½ x 18 ins. rebar flush with ground surface located approximately 400 ft. north and 2387 ft. west from the SE corner of section 2, T. 2 N., R. 9 W..
360	1219.49	Set ½ x 18 ins. rebar flush with ground surface located approximately 457 ft. south and 170 ft. east from the NW corner of section 12, T. 2 N., R. 9 W..
361	1233.55	Set 60d nail flush with ground surface located approximately 3143 ft. south and 274 ft. west from the NE corner of section 2, T. 2 N., R. 9 W..
362	1260.01	Set 60d nail flush with ground surface located approximately 385 ft. south and 1685 ft. east from the NW corner of section 1, T. 2 N., R. 9 W..
363	1278.63	Set ½ x 18 ins. rebar flush with surface of the ground located approximately 1740 ft. north and 1007 ft. east from the SW corner of section 36, T. 3 N., R. 9 W..
364	1297.81	Set ½ x 18 ins. rebar flush with ground surface located approximately 2693 ft. north and 2545 ft. west from the SE corner of section 36, T. 3 N., R. 9 W..
366	1233.13	Set 60d nail flush with ground surface located approximately 1390 ft. south and 3354 ft. east from the NW corner of section 12, T. 2 N., R. 9 W..
367	1236.36	Set ½ x 18 ins. rebar flush with ground surface located approximately 407 ft. north and 2646 ft. east from the SW corner of section 1, T. 2 N., R. 9 W..
371	1270.12	Set 60d nail flush with ground surface located approximately 2184 ft. south and 958 ft. west of the NE corner from section 1, T. 2 N., R. 9 W..
372	1298.45	Set ½ x 18 ins. rebar flush with ground surface located approximately 913 ft. south and 844 ft. east from the NW corner of section 6, T. 2 N., R. 8 W..

I.D NO.	ELEV. (FT.)	DESCRIPTION
373	1277.46	Set ½ x 18 ins. rebar flush with ground surface located approximately 274 ft. north and 1376 ft. west from the SE corner of section 36, T. 3 N., R. 9 W..
374	1312.20	Set ½ x 18 ins. rebar flush with ground surface located approximately 1893 ft. north and 859 ft. east from the SW corner of section 31, T. 3 N., R. 8 W..
375	1344.51	Set ½ x 18 ins. rebar flush with ground surface located approximately 4076 ft. north and 1481 ft. east from the SW corner of section 31, T. 3 N., R. 8 W..
376	1347.01	Set ½ x 18 ins. rebar flush with ground surface located approximately 85 ft. north and 1163 ft. west from the SE corner of section 25, T. 3 N.. R. 9 W..
380	1237.33	Set 60d nail, flush with ground surface located approximately 3940 ft. south and 3438 ft. west from the NE corner of sec. 7, T. 2 N., R. 8 W..
381	1309.20	Set 60d nail flush with ground surface located approximately 1441 ft. north and 867 ft. west from the SE corner of section 6, T. 2 N., R. 8 W..
382	1382.19	Set ½ x 18 ins. rebar flush with ground surface located approximately 4744 ft. north and 3070 ft. east from the SW corner of section 5, T. 2 N., R. 8 W..
383	1331.36	Set ½ x 18 ins. rebar flush with ground surface located approximately 1839 ft. north and 936 ft. east from the SW corner of section 5, T. 2 N., R. 8 W..
384	1283.13	Set ½ ins. rebar flush with ground surface located approximately 624 ft. south and 1694 ft. west from the NE corner of section 7, T. 2 N., R. 8 W..
400	1217.68	Set ½ x 18 ins. rebar flush with ground surface located approximately 1040 ft. north and 472 ft. west from the SE corner of section 7, T. 2 N., R. 8 W..
401	1194.60	Set ½ x 18 ins. rebar flush with ground surface located approximately 2130 ft. north and 2295 ft. east from the SW corner of section 8, T. 2 N., R. 8 W..
402	1198.47	Set 60d nail flush with ground surface located approximately 377 ft. south and 682 ft. east from the NW corner of section 17, T. 2 N., R. 8 W..

I.D NO.	ELEV. (FT.)	DESCRIPTION
403	1192.35	Set ½ x 18 ins. rebar flush with ground surface, located approximately 1423 ft. south and 3566 ft. east from the NW corner of section 17, T. 2 N., R. 8 W..
404	1215.16	Set ½ x 18 ins. rebar flush with ground surface located approximately 1418 ft. north and 2933 ft. east from the SW corner of section 16, T. 2 N., R. 8 W..
405	1192.53	Set ½ x 18 ins. rebar flush with ground surface located approximately 80 ft. north and 150 ft. east from the SW corner of section 16, T. 2 N., R. 8 W..
406	1187.67	Set 60d nail flush with ground surface located approximately 640 ft. south and 1020 ft. west from the NE corner of section 28, T. 2 N., R. 8 W..
407	1178.96	Set 60d nail flush with ground surface located approximately 2750 ft. west and 400 ft. south from the NE corner of section 34, T. 2 N., R. 8 W..
408	1184.32	Set 60d nail flush with ground surface located approximately 1257 ft. south and 220 ft. east from the NW corner of section 35, T. 2 N., R. 8 W..
409	1213.94	Set PK nail in Courthouse Road flush with asphalt paving near the unknown position of the SW corner of section 35, T. 2 N., R. 8 W..
410	1206.77	Set 60d nail flush with ground surface located approximately 3021 ft. south and 3950 ft. east from the NW corner of section 35, T. 2 N., R. 8 W..
411	1196.23	Set ½ x 18 ins. rebar flush with ground surface located approximately 510 ft. south and 3290 ft. east from the NW corner of section 35, T. 2 N., R. 8 W..
412	1212.88	Set 60d nail flush with ground surface located approximately 100 ft. south and 1458 west from the NE corner of section 27, T. 2 N., R. 8 W..
413	1192.73	Set 60d nail flush with ground surface located approximately 3784 ft. north and 200 ft. west from the SE corner of section 4, T. 1 N., R. 8 W..
414	1160.99	Set PK nail in Courthouse Road flush with asphalt paving located approximately 1770 ft. west from the NE corner of section 4, T. 1 N., R. 8 W..

415	1190.83	Set 60d nail flush with ground surface located approximately 1120 ft. north and 2410 ft. west from the SE corner of section 4, T. 1 N., R. 8 W..
416	1153.26	Set 60d nail flush with ground surface located approximately 3368 ft. north and 3658 ft. west from the SE corner of section 4, T. 1 N., R. 8 W..
418	1175.95	Set ½ x 18 ins. rebar flush with ground surface located approximately 175 ft. north and 3780 ft. west from the SE corner of section 4, T. 1 N., R. 8 W..
419	1123.70	Set ½ x 18 ins. rebar flush with ground surface located approximately 3840 ft. north and 2620 ft. east from the SW corner of section 17, T. 1 N., R. 8 W..
420	1120.04	Set ½ x 18 ins. rebar flush with ground surface located approximately 1610 ft. north and 3620 ft. east from the SW corner of section 20, T. 1 N., R. 8 W..
421	1080.69	Set ½ x 18 ins rebar flush with ground surface located approximately 770 ft. north and 390 ft. east from the SW corner of section 20, T. 1 N., R. 8 W..
422	1072.02	Set 60d nail flush with ground surface located approximately 3903 ft. south and 2180 ft. east from the NW corner of section 29, T. 1 N., R. 8 W..
423	1120.51	Set 60d nail flush with ground surface located approximately 2811 ft. south and 5010 ft. east from the NW corner of section 29, T. 1 N., R. 8 W..
424	1092.45	Set ½ x 18 ins. rebar flush with ground surface located approximately 1350 ft. south and 2868 ft. east from the NW corner of section 29, T. 1 N., R. 8 W..
425	1081.88	Set ½ x 18 ins rebar flush with ground surface located approximately 570 ft. south and 2530 ft. west from the NW corner of section 30, T. 1 N., R. 8 W..
426	1061.92	Set ½ x 18 ins. rebar flush with ground surface located approximately 1250 ft. south and 100 ft. east from the NW corner of section 32, T. 1 N., R. 8 W..
427	1068.29	Set ½ x 18 ins. rebar flush with ground surface located approximately 630 ft. south and 1850 ft. east from the NW corner of section 32, T. 1 N., R. 8 W..
428	1117.56	Set 60d nail flush with ground surface located approximately 1250 ft. north and 2610 ft. east from the SW corner of section 17, T. 1 N., R. 8 W..

I.D NO.	ELEV. (FT.)	DESCRIPTION
430	1201.78	Set PK nail in Courthouse Road flush with asphalt paving located approximately 2540 ft. west from the SE corner of section 34, T. 2 N., R. 8 W..
431	1150.08	Set ½ x 18 ins. rebar flush with ground surface located approximately 3038 ft. north and 1200 ft. west from the SE corner of section 8, T. 1 N., R. 8 W..
432	1147.69	Set 60d nail flush with ground surface located approximately 1210 ft. north and 1430 ft. west from the SE corner of section 8, T. 1 N., R. 8 W..
433	1136.37	Set 60d nail flush with ground surface located approximately 1732 ft. south and 1385 ft. west from the NE corner of section 17, T. 1 N., R. 8 W..
434	1094.56	Set 60d nail flush with ground surface located approximately 92 ft. south and 2887 ft. east from the NW corner of section 29, T. 1 N., R. 8 W..
435	1096.22	Set 60d nail flush with ground surface located approximately 2415 ft. north and 684 ft. east from the SW corner of section 20, T. 1 N., R. 8 W..
436	1160.91	Set ½ x 18 ins. rebar flush with ground surface and adjacent to spillway located approximately 370 ft. north and 4630 ft. west from the SE corner of section 4, T. 1 N., R. 8 W..
437	1126.24	Set ½ x 18 ins. rebar flush with ground surface located approximately 1425 ft. north and 2725 ft. east from the SW corner of section 20, T. 1 N., R. 8 W..
438	1079.07	Set ½ x 18 ins. rebar flush with ground surface located approximately 1326 ft. south and 1302 ft. east from the NW corner of section 29, T. 1 N., R. 8 W..
439	1196.67	Set ½ x 18 ins. rebar flush with ground surface, next to Sta Marker 10+00 on top of Saddleback FRS. located approximately 200 ft. north and 4130 ft. west from the SE corner of section 34, T. 2 N., R. 8 W..
440	1249.07	Set ½ x 18 ins. rebar flush with ground surface located approximately 1785 ft. north and 3490 ft. west from the SE corner of section 7, T. 2 N., R. 8 W..
441	1155.48	Set ½ x 18 ins. rebar 0.7 ft. above ground surface, located approximately 1330 ft. north and 2584 ft. east of the SE corner of section 20, T. 1 N., R. 8 W..

I.D NO.	ELEV. (FT.)	DESCRIPTION
A-1	1423.11	Bench Mark, monumented with a USDA - SCS brass cap in concrete, flush with ground surface, mkd. "A-1 2-84", located Rt. of Sta. 439+78.
A-2	1423.85	Bench Mark, monumented with a USDA - SCS brass cap in concrete, flush with ground surface, mkd. "A-2 2-84", located Rt. of Sta. 449+80.
A-3	1424.52	Bench Mark, monumented with a USDA - SCS brass cap in concrete, flush with ground surface, mkd. "A-3 2-84", located Rt. of Sta. 460+00.
A-4	1424.40	Bench Mark, monumented with a USDA - SCS brass cap in concrete, 0.2 ft. below ground surface, mkd. " A-4 2-84", located Rt. of Sta. 471+23.
A-5	1424.13	Bench Mark, monumented with a FCDMC brass cap in concrete, flush with ground surface, (no markings) , located Rt. of Sta. 480+20.
A-6	1424.82	Bench Mark, monumented with a USDA - SCS brass cap in concrete, 0.2 ft. below ground surface, mkd. "A-6 2-84", located Rt. of Sta. 490+20.
A-7	1424.10	Bench Mark, monumented with a USDA - SCS brass cap in concrete, 0.4 ft. below ground surface, mkd. "A-7 2-84", located Rt. of Sta. 500+20.
A-8	1424.10	Bench Mark, monumented with a USDA - SCS brass cap in concrete, 0.6 ft. below ground surface, mkd. "A-8 2-84", located Rt. of Sta. 510+00.
A-9	1424.35	Bench Mark, monumented with a USDA - SCS brass cap in concrete, 0.3 ft. below ground surface, mkd. "A-9 2-84", located Rt. of Sta. 517+42.
A-10	1424.07	Bench Mark, monumented with a USDA - SCS brass cap in concrete, 0.6 ft. below ground surface, mkd. "A-10 2-84", located Rt. of Sta. 527+58.
A-11	1423.92	Bench Mark, monumented with a USDA - SCS brass cap in concrete, 0.6 ft. below ground surface, mkd. "A-11 2-84", located Rt. of Sta. 538+27.
A-12	1424.22	Bench Mark, monumented with a USDA - SCS brass cap in concrete, 0.4 ft. below ground surface, mkd. "A-12 2-84", located Rt. of Sta. 547+93.

I.D NO.	ELEV. (FT.)	DESCRIPTION
A-13	1424.24	Bench Mark, monumented with a USDA - SCS brass cap in concrete, 0.3 ft. below ground surface, mkd. "A-13 2-84", located Rt. of Sta. 558+13.
A-14	1424.09	Bench Mark, monumented with a USDA - SCS brass cap in concrete, 0.4ft. below ground surface, mkd. "A-14 2-84", located Rt. of Sta. 567+97.
A-15	1424.39	Bench Mark, monumented with a USDA - SCS brass cap in concrete, 0.2 ft. below ground surface, mkd. "A-15 2-84", located Rt. of Sta. 578+65.
A-16	1424.30	Bench Mark, monumented with a USDA - SCS brass cap in concrete, 0.6 ft. below ground surface, mkd. "A-16 2-84", located Rt. of Sta. 589+28.
A-17	1424.17	Bench Mark, monumented with a USDA - SCS brass cap, in concrete, 0.4 ft. below ground surface, mkd. "A-17 2-84", located Rt. of Sta. 597+16.
A-18	1424.37	Bench Mark, monumented with a USDA - SCS brass cap in concrete, 0.1 ft. below ground surface, mkd. "A-18 2-84", located Rt. of Sta. 607+37.
A-19	1424.48	Bench Mark, monumented with a USDA - SCS brass cap in concrete, flush with ground surface, mkd. "A-19 2-84", located Rt. of Sta. 617+67.
A-20	1424.62	Bench Mark, monumented with a USDA - SCS brass cap in concrete, 0.3 ft. below ground surface, mkd. "A-20 2-84", located Rt. of Sta. 627+50.
A-21	1424.15	Bench Mark, monumented with a USDA - SCS brass cap in concrete, 0.3 ft. below ground surface, mkd. "A-21 2-84", located Rt. of Sta. 637+77.
A-22	1424.17	Bench Mark, monumented with a USDA - SCS brass cap in concrete, flush with ground surface, mkd. "A-22 2-84", located Rt. of Sta. 647+92.
A-23	1424.19	Bench Mark, monumented with a USDA - SCS brass cap in concrete, 0.1 ft. below ground surface, mkd. "A-23 2-84", located Rt. of Sta. 657+97.
A-24	1424.37	Bench Mark, monumented with a USDA - SCS brass cap in concrete, 0.3 ft. below ground surface, mkd. "A-24 2-84", located Rt. of Sta. 668+08.

I.D NO.	ELEV. (FT.)	DESCRIPTION
A-25	1424.27	Bench Mark, monumented with a USDA - SCS brass cap in concrete, 0.7 ft. below ground surface, mkd. "A-25 2-84", located Rt. of Sta. 678+32.
A-26	1424.18	Bench Mark, monumented with a USDA - SCS brass cap in concrete, 0.6 ft. below ground surface, mkd. "A-26 2-84", located Rt. of Sta. 688+40.
A-27	1424.33	Bench Mark, monumented with a USDA - SCS brass cap in concrete, 0.3 ft. below ground surface, mkd. "A-27 2-84", located Rt. of Sta. 698+42.
A-28	1424.54	Bench Mark, monumented with a USDA - SCS brass cap in concrete, 0.3 ft. below ground surface, mkd. "A-28 2-84", located Rt. of Sta. 708+44.
A-29	1423.29	Bench Mark, monumented with a USDA - SCS brass cap in concrete, 0.4 ft. below ground surface, mkd. "A-29 2-84", located Rt. of Sta. 718+47.
A-30	1422.06	Bench Mark, monumented with a USDA - SCS brass cap in concrete, 0.6 ft. below ground surface, mkd. "A-30 2-84", located Rt. of Sta. 729+58.
A-31	1421.85	Bench Mark, monumented with a USDA - SCS brass cap in concrete, 0.5 ft. below ground surface, mkd. "A-31 2-84", located Rt. of Sta. 737+36.
A-32	1422.75	Bench Mark, monumented with a USDA - SCS brass cap in concrete, 0.5 ft. below ground surface, mkd. "A-32 2-84", located Rt. of Sta. 749+52.
A-33	1422.59	Bench Mark, monumented with a USDA - SCS brass cap in concrete, 0.2ft. below ground surface, mkd. "A-33 2-84", located Rt. of Sta. 758+41.
A-34	1422.21	Bench Mark, monumented with a USDA - SCS brass cap in concrete, 0.7 ft. below ground surface, mkd. "A-34 2-84", located Rt. of Sta. 766+14.
A-35	1422.85	Bench Mark, monumented with a USDA - SCS brass cap in concrete, 0.6 ft. below ground surface, mkd. "A-35 2-84", located Rt. of Sta. 777+05.
A-36	1422.74	Bench Mark, monumented with a USDA - SCS brass cap in concrete, 0.4 ft. below ground surface, mkd. "A-36 2-84", located Rt. of Sta. 786+49.

I.D NO.	ELEV. (FT.)	DESCRIPTION
A-37	1422.24	Bench Mark, monumented with a USDA - SCS brass cap in concrete, 0.4 ft. below ground surface, mkd. "A-37 2-84", located Rt. of Sta. 796+99.
A-38	1422.92	Bench Mark, monumented with a USDA - SCS brass cap in concrete, 0.1 ft. below ground surface, mkd. "A-38 2-84", located Rt. of Sta. 808+46.
A-39	1422.61	Bench Mark, monumented with a USDA - SCS brass cap in concrete, 0.4 ft. below ground surface, mkd. "A-39 2-84", located Rt. of Sta. 818+25.
A-40	1423.06	Bench Mark, monumented with a USDA - SCS brass cap in concrete, 0.1 ft. below ground surface, mkd. "A-40 2-84", located Rt. of Sta. 827+22.
A-41	1422.08	Bench Mark, monumented with a USDA - SCS brass cap in concrete, 0.5 ft. below ground surface, mkd. "A-41 2-84", located Rt. of Sta. 837+91.
A-42	1422.59	Bench Mark, monumented with a USDA - SCS brass cap in concrete, 0.2 ft. below ground surface, mkd. "A-42 2-84", located Rt. of Sta. 847+76.
A-43	1422.31	Bench Mark, monumented with a USDA - SCS brass cap in concrete, 0.2 ft. below ground surface, mkd. "A-43 2-84", located Rt. of Sta. 857+54.
A-44	1422.38	Bench Mark, monumented with a USDA - SCS brass cap in concrete, 0.4 ft. below ground surface, mkd. "A-44 2-84", located Rt. of Sta. 867+87.
A-45	1422.26	Bench Mark, monumented with a USDA - SCS brass cap in concrete, 0.3 ft. below ground surface, mkd. "A-45 2-84", located Rt. of Sta. 877+95.
A-46	1422.30	Bench Mark, monumented with a USDA - SCS brass cap in concrete, 0.3 ft. below ground surface, mkd. "A-46 2-84", located Rt. of Sta. 887+65.
A-47	1422.10	Bench Mark, monumented with a USDA - SCS brass cap in concrete, 0.4 ft. below ground surface, mkd. "A-47 2-84", located Rt. of Sta. 897+33.
A-48	1422.30	Bench Mark, monumented with a USDA - SCS brass cap in concrete, 0.4 ft. below ground surface, mkd. "A-48 2-84", located Rt. of Sta. 907+89.

I.D NO.	ELEV. (FT.)	DESCRIPTION
A-49	1421.88	Bench Mark, monumented with a USDA - SCS brass cap in concrete, 0.4 ft. below ground surface, mkd. "A-49 2-84", located Rt. of Sta. 917+96.
A-50	1421.91	Bench Mark, monumented with a USDA - SCS brass cap in concrete, 0.5 ft. below ground surface, mkd. "A-50 2-84", located Rt. of Sta. 928+83.
A-51	1421.62	Bench Mark, monumented with a USDA - SCS brass cap in concrete, 0.6 ft. below ground surface, mkd. "A-51 2-84", located Rt. of Sta. 930+19.
A-52	1421.32	Bench Mark, monumented with a USDA - SCS brass cap in concrete, 0.6 ft. below ground surface, mkd. "A-52 2-84", located Rt. of Sta. 948+66.
A-53	1421.43	Bench Mark, monumented with a USDA - SCS brass cap in concrete, 0.7 ft. below ground surface, mkd. "A-53 2-84", located Rt. of Sta. 958+35.
A-54	1421.78	Bench Mark, monumented with a USDA - SCS brass cap in concrete, 0.3 ft. below ground surface, mkd. "A-54 2-84", located Rt. of Sta. 970+87.
A-55	1421.37	Bench Mark, monumented with a USDA - SCS brass cap in concrete, 0.5 ft. below ground surface, mkd. "A-55 2-84", located Rt. of Sta. 979+47.
A-56	1421.83	Bench Mark, monumented with a USDA - SCS brass cap in concrete, 0.5 ft. below ground surface, mkd. "A-56 2-84", located Rt. of Sta. 988+60.
A-57	1420.49	Bench Mark, monumented with a USDA - SCS brass cap in concrete, 0.7 ft. below ground surface, mkd. "A-57 2-84", located Rt. of Sta. 999+17.
A-58	1421.68	Bench Mark, monumented with a USDA - SCS brass cap in concrete, 0.5 ft. below ground surface, mkd. "A-58 2-84", located Rt. of Sta. 1010+09.
A-59	1421.77	Bench Mark, monumented with a USDA - SCS brass cap in concrete, 0.5 ft. below ground surface, mkd. "A-59 2-84", located Rt. of Sta. 1020+11.
A-60	1421.83	Bench Mark, monumented with a USDA - SCS brass cap in concrete, 0.2 ft. below ground surface, mkd. "A-60 2-84", located Rt. of Sta. 1030+98.

I.D NO.	ELEV. (FT.)	DESCRIPTION
A-61	1421.19	Bench Mark, monumented with a USDA - SCS brass cap in concrete, 0.6 ft. below ground surface, mkd. "A-61 2-84", located Rt. of Sta. 1040+19.
A-62	1421.52	Bench Mark, monumented with a USDA - SCS brass cap in concrete, 0.2 ft. below ground surface, mkd. "A-62 2-84", located Rt. of Sta. 1049+91.
C-1	1355.08	Bench Mark, monumented with a USDA - SCS brass cap in concrete headwall of drop str., mkd. "C-1 1-84", at Sta. 35+00.
C-2	1341.45	Bench Mark, monumented with a USDA - SCS brass cap in concrete headwall of drop str., mkd. "C-2 1-84", at Sta. 45+00.
C-3	1331.67	Bench Mark, monumented with a USDI brass cap in concrete headwall of drop str., mkd. "C-3 ", at Sta. 55+00.
C-4	1322.44	Bench Mark, monumented with a USDA - SCS brass cap in concrete headwall of drop str., mkd. " C-4 1-84", at Sta. 61+50.
C-5	1313.05	Bench Mark, monumented with a USDI brass cap in concrete headwall of drop str., mkd. "C-5 ", at Sta. 68+50.
C-6	1303.82	Bench Mark, monumented with a USDA - SCS brass cap in concrete headwall of drop str., mkd. "C-6 1-84", at Sta. 75+00.
C-7	1294.52	Bench Mark, monumented with a USDI brass cap in concrete headwall of drop str., mkd. "C-7 ", at Sta. 82+50.
C-8	1284.56	Bench Mark, monumented with a USDA - SCS brass cap in concrete headwall of drop str., mkd. "C-8 1-84", at Sta. 89+50.
C-9	1274.55	Bench Mark, monumented with a USDA - SCS brass cap in concrete headwall of drop str., mkd. "C-9 1-84", at Sta. 94+50.
C-10	1264.44	Bench Mark, monumented with a USDA - SCS brass cap in concrete headwall of drop str., mkd. "C-10 1-84", at Sta. 100+00.
C-11	1247.63	Bench Mark, monumented with a USDA - SCS brass cap in concrete headwall of drop str., mkd. "C-11 1-84", at Sta. 127+81.

I.D NO.	ELEV. (FT.)	DESCRIPTION
C-12	1238.37	Bench Mark, monumented with a USDA - SCS brass cap in concrete headwall of drop str., mkd. "C-12 1-84", at Sta. 138+61.
C-13	1229.13	Bench Mark, monumented with a USDA - SCS brass cap in concrete headwall of drop str., mkd. "C-13 1-84", at Sta. 149+21.
C-14	1219.91	Bench Mark, monumented with a USDA - SCS brass cap in concrete headwall of drop str., mkd. "C-14 1-84", at Sta. 158+61.
C-15	1210.74	Bench Mark, monumented with a USDA - SCS brass cap in concrete headwall of drop str., mkd. "C-15 1-84", at Sta. 165+41.
C-16	1201.65	Bench Mark, monumented with a USDA - SCS brass cap in concrete headwall of drop str., mkd. "C-16 1-84", at Sta. 173+41.
A-3S	1193.97	Bench Mark monumented with a FCDMC brass cap in concrete, 0.2 ft. below ground surface, mkd. "A-3", located Lt. of Sta. 30+00.
A-4S	1195.13	Bench Mark monumented with a FCDMC brass cap in concrete, 0.2 ft. below ground surface, mkd. "A-4", located Lt. of Sta. 40+00.
A-5S	1195.33	Bench Mark monumented with a FCDMC brass cap in concrete, flush with ground surface, mkd. "A-5", located Lt. of Sta. 50+00.
A-6S	1194.84	Bench Mark monumented with a FCDMC brass cap in concrete, 0.3 ft. below ground surface, mkd. "A-6", located Lt. of Sta. 60+00.
A-7S	1195.03	Bench Mark monumented with a FCDMC brass cap in concrete, 0.5 ft. below ground surface, mkd. "A-7", located Lt. of Sta. 70+00.
A-8S	1194.68	Bench Mark monumented with a FCDMC brass cap in concrete, 0.4 ft. below ground surface, mkd. " A-8", located Lt. of Sta. 80+00.

I.D NO.	ELEV. (FT.)	DESCRIPTION
A-11S	1195.20	Bench Mark monumented with a FCDMC brass cap in concrete, 0.3 ft. below ground surface, mkd. "A-11", located Lt. of Sta. 110+00.
A-12S	1195.48	Bench Mark monumented with a FCDMC brass cap in concrete, 0.5 ft. below ground surface, mkd. "A-12", located Lt. of Sta. 120+00.
A-13S	1195.03	Bench Mark monumented with a FCDMC brass cap in concrete, 0.8 ft. below ground surface, mkd. "A-13", located Lt. of Sta. 130.00.
A-14S	1195.04	Bench Mark monumented with a FCDMC brass cap in concrete, 0.8 ft. below ground surface, mkd. " A-14", located Lt. of Sta. 140+00.
A-15S	1195.48	Bench Mark monumented with a FCDMC brass cap in concrete, 0.3 ft. below ground surface, mkd. " A-15", located Lt. of Sta. 150+00.
A-16S	1195.17	Bench Mark monumented with a FCDMC brass cap in concrete, 0.5 ft. below ground surface, mkd. "A-16", located Lt. of Sta. 160+00.
A-17S	1194.98	Bench Mark monumented with a FCDMC brass cap in concrete, 0.6 ft. below ground surface, mkd. "A-17", located Lt. of Sta. 170+00.
A-19S	1196.80	Bench Mark monumented with a FCDMC brass cap in concrete, flush with ground surface, mkd. "A-19", located Lt. of Sta. 190+00.
A-21S	1195.99	Bench Mark monumented with a FCDMC brass cap in concrete, flush with ground surface, mkd. "A-21", located Lt. of Sta. 210+00.
A-22S	1196.27	Bench Mark monumented with a FCDMC brass cap in concrete, flush with ground surface, mkd. "A-22", located Lt. of Sta. 220+00.
A-23S	1196.48	Bench Mark monumented with a FCDMC brass cap in concrete, flush with ground surface, mkd. "A-23", located Lt. of Sta. 230+00.
A-24S	1195.94	Bench Mark monumented with a FCDMC brass cap in concrete, 0.7 ft. below ground surface, mkd. " A-24", located Lt. of Sta. 240+00.

I.D NO.	ELEV. (FT.)	DESCRIPTION
A-25S	1195.98	Bench Mark monumented with a FCDMC brass cap in concrete, 0.4 ft. below ground surface, mkd. " A-25", located Lt. of Sta. 250+00.
A-26S	1195.90	Bench Mark monumented with a FCDMC brass cap in concrete, 0.3 ft. below ground surface, mkd. " A-26", located Lt. of Sta. 260+00.
A-27S	1196.57	Bench Mark monumented with a FCDMC brass cap in concrete, 0.2 ft. above ground surface, mkd. "A-27", located Lt. of Sta. 270+00.

April 30, 1996

HARQUAHALA - SADDLEBACK FRS'S AND DIVERSION CHANNELS

Primary & Mapping Control Points

PT. NO.	NORTH	EAST	TOP MON.	GR. ELEV.	TYPE ELEV.
1	935636.97	336456.37	1411.30	1410.4	GPS
2	941045.87	326028.63	1423.89	1422.9	GPS
3	943750.66	320771.11	1403.31	1401.6	GPS
4	946454.90	315521.15	1445.24	1443.9	GPS
5	946514.70	310239.83	1430.72	1430.1	GPS
6	925183.90	325827.04	1222.16	1221.3	GPS
7	930479.44	325903.29	1257.34	1256.8	GPS
8	930420.44	331186.50	1287.14	1286.4	GPS
9	927776.06	331154.69	1278.99	1278.0	GPS
10	933059.45	331217.81	1312.64	1311.9	GPS
11	935699.29	331248.75	1351.60	1350.8	GPS
12	925080.57	336340.37	1305.15	1304.3	GPS
13	946694.68	294453.49	1420.78	1419.8	GPS
14	946828.34	283877.89	1422.30	1421.6	GPS
15	941413.07	294390.03	1374.27	1373.6	GPS
16	941344.88	299674.75	1376.89	1376.3	GPS
17	941290.48	304892.96	1376.62	1376.0	GPS
18	941231.14	310179.84	1372.48	1371.9	GPS
19	930357.02	336403.11	1356.68	1355.6	GPS
20	930326.56	339044.76	1386.94	1385.9	GPS
21	941169.39	315459.92	1356.31	1355.7	GPS
22	941109.86	320741.55	1362.42	1361.8	GPS
23	906423.55	351989.70	1200.65	1199.6	GPS
24	888041.53	341202.29	1166.24	1165.3	GPS
25	874895.76	335786.05	1074.28	1073.8	Diff. Elev.

PT. NO.	NORTH	EAST	TOP MON.	GR. ELEV.	TYPE ELEV.
26	877537.58	335813.81	1072.79	1072.4	Diff. Elev.
27	914394.31	346793.76	1235.87	1235.4	GPS
28	919792.26	336285.54	1206.19	1205.6	GPS
29	893294.16	343906.65	1203.65	1203.0	GPS
30	893260.87	346351.33	1249.42	1248.6	GPS
31	882820.83	335868.19	1095.05	1094.4	GPS
32	885462.19	335895.58	1099.06	1098.1	GPS
200	928494.26	340754.85	1443.90	Same	Diff. Elev.
201			1435.38	Same	Diff. Elev.
202	919248.45	331030.07	1203.69	Same	GPS
203	950143.59	369746.01	1613.46	1613.0	GPS
204	908751.62	386641.46	1131.23	1130.9	GPS
208	944003.26	289066.33	1396.78	1397.2	Diff. Elev.
211	923106.09	330693.51	1236.84	1236.6	Diff. Elev.
212	928980.15	339035.96	1371.13	Same	Diff. Elev.
213	937262.58	332979.80	1399.59	Same	GPS
214	923487.48	333392.19	1255.48	Same	Diff. Elev.
215	924177. 68	334094.25	1275.37	1275.1	Diff. Elev.
216	925315.93	335071.28	1295.48	Same	Diff. Elev.
217	926297.15	335961.05	1313.66	Same	Diff. Elev.
218			1216.70	1216.1	Diff. Elev.
219			1226.39	1226.6	Diff. Elev.
220	923699.31	329516.76	1232.89	1232.4	Diff. Elev.
221	897721.36	346279.98	1181.83	Same	Diff. Elev.
222	895898.70	343859.98	1166.04	Same	Diff. Elev.
223	895594.66	343462.89	1166.42	Same	Diff. Elev.
224	890845.49	339997.43	1150.75	Same	Diff. Elev.
225	890444.24	339937.08	1150.01	Same	Diff. Elev.

PT. NO.	NORTH	EAST	TOP MON.	GR. ELEV.	TYPE ELEV.
226	889949.77	339862.35	1149.94	1149.7	Diff. Elev.
227	886594.61	339802.36	1137.47	Same	Diff. Elev.
228	883513.06	339261.36	1127.94	Same	Diff. Elev.
229	883036.19	339111.56	1127.85	1127.6	Diff. Elev.
230	882297.74	338879.55	1126.99	1126.8	Diff. Elev.
231	881634.49	338737.39	1126.12	Same	Diff. Elev.
232	881167.61	338712.24	1123.78	Same	Diff. Elev.
233	880671.21	338751.43	1124.55	1124.1	Diff. Elev.
234	878088.39	339049.97	1106.12	Same	Diff. Elev.
235	—	—	1188.86	Same	Diff. Elev.
262	922670.65	332752.44	1253.20	Same	Diff. Elev.
263	921578.53	332796.16	1249.06	Same	Diff. Elev.
267	898525.78	346820.24	1183.87	Same	Diff. Elev.
270	899643.38	361893.90	1250.75	1250.0	Diff. Elev.
271	883990.10	339411.23	1130.17	Same	Diff. Elev.
272	888013.40	339644.68	1144.43	Same	Diff. Elev.
273	909099.98	351774.20	1217.42	1217.6	Diff. Elev.
274	909010.24	352203.42	1216.31	1216.1	Diff. Elev.
275	906038.96	355060.92	1205.86	1205.6	Diff. Elev.
276	899574.14	347292.55	1181.05	Same	GPS
277	900594.72	348615.97	1181.58	Same	GPS
295	906852.97	347188.87	1187.38	Same	GPS
296			1190.68	1190.4	Diff. Elev.
297	902208.61	349251.41	1177.40	Same	GPS
298	902322.86	357894.73	1211.25	1211.0	Diff. Elev.
299	—	—	1218.70	1218.9	Diff. Elev.
302	928588.55	340683.33	1423.26	Same	Diff. Elev.
305	931684.86	341389.68	1420.69	Same	GPS

PT. NO.	NORTH	EAST	TOP MON.	GR. ELEV.	TYPE ELEV.
306	932705.01	338951.74	1412.00	Same	GPS
307	933621.15	337567.26	1416.05	Same	GPS
309	939568.78	332298.44	1446.77	Same	GPS
311	939122.26	329650.03	1414.31	Same	GPS
312	940655.64	327672.71	1434.33	Same	GPS
314	942219.49	324275.97	1427.01	Same	GPS
318	945165.73	315779.80	1418.59	Same	GPS
320	943896.24	314870.13	1422.60	Same	Diff. Elev.
323	942674.39	322579.61	1423.00	Same	Diff. Elev.
324	941339.35	323902.15	1423.00	Same	Diff. Elev.
325	940215.16	325573.36	1422.90	Same	Diff. Elev.
328	937999.26	332144.49	1422.20	Same	Diff. Elev.
329	943240.40	303683.50	1424.40	Same	Diff. Elev.
332	943876.48	310800.47	1424.50	Same	Diff. Elev.
339	944666.84	292936.54	1399.39	Same	GPS
341	945472.29	307863.55	1422.43	Same	GPS
342	945270.22	305897.38	1421.63	Same	GPS
343	945996.25	302817.95	1429.07	Same	GPS
346	946746.95	297178.63	1427.20	Same	GPS
347	947299.30	293485.32	1424.41	Same	GPS
350	947607.74	287482.77	1423.78	Same	GPS
351	944007.19	296664.08	1424.50	Same	Diff. Elev.
359	925583.85	323440.29	1219.51	Same	Diff. Elev.
360	924726.68	325997.93	1219.49	Same	Diff. Elev.
361	927336.38	325629.72	1233.55	Same	GPS
362	930094.50	327588.62	1260.01	Same	GPS
363	932219.52	326910.07	1278.63	Same	GPS
364	933113.02	328641.60	1297.81	Same	GPS
366	923793.38	329181.36	1233.13	Same	GPS

PT. NO.	NORTH	EAST	TOP MON.	GR. ELEV.	TYPE ELEV.
367	925590.43	328473.44	1236.36	Same	GPS
371	928236.43	330228.08	1270.12	Same	GPS
372	929507.14	332030.14	1298.45	Same	GPS
373	930694.93	329450.24	1277.46	Same	GPS
374	932313.66	332045.20	1312.20	Same	GPS
375	934496.03	332767.99	1344.51	Same	GPS
376	935784.63	330085.38	1347.01	Same	GPS
380	921140.59	332902.48	1237.33	Same	GPS
381	926521.03	335473.52	1309.20	Same	GPS
382	929824.87	339410.9	1382.19	Same	GPS
383	926919.94	337276.15	1331.36	Same	GPS
384	924456.44	334643.20	1283.13	Same	GPS
400	920833.05	335813.89	1217.68	Same	GPS
401	921923.86	338580.68	1194.60	Same	GPS
402	919415.53	336968.85	1198.47	Same	Diff. Elev.
403	918369.54	339851.73	1192.35	Same	GPS
404	915812.53	343861.85	1215.16	Same	GPS
405	914478.57	341694.97	1192.53	Same	Diff. Elev.
406	908455.40	345633.76	1187.67	Same	GPS
407	904060.53	349183.63	1178.96	Same	GPS
408	902556.76	351713.17	1184.32	Same	GPS
409	898497.52	351917.60	1213.94	Same	Diff. Elev.
410	900792.32	355880.65	1206.77	Same	GPS
411	903304.88	355221.01	1196.23	Same	GPS
412	908999.43	350475.18	1212.88	Same	GPS
413	897045.60	346540.68	1192.73	Same	GPS
414	898579.00	344580.74	1160.99	Same	GPS
415	894382.23	343945.96	1190.83	Same	GPS
416	896629.64	342693.61	1153.26	Same	GPS

PT. NO.	NORTH	EAST	TOP MON.	GR. ELEV.	TYPE ELEV.
418	893433.50	342572.85	1175.95	Same	GPS
419	886660.52	338489.92	1123.70	Same	GPS
420	879146.03	339437.77	1120.04	Same	GPS
421	878304.39	336132.99	1080.69	Same	Diff. Elev.
422	873634.29	337993.39	1072.02	Same	GPS
423	874726.79	340824.50	1120.51	Same	GPS
424	876188.06	338681.77	1092.45	Same	GPS
425	876969.28	333281.49	1081.88	Same	GPS
426	870978.56	335808.99	1061.92	Same	GPS
427	871628.02	337661.06	1068.29	Same	GPS
428	884214.27	338478.66	1117.56	Same	GPS
430	898523.79	349378.36	1201.78	Same	Diff. Elev.
431	891079.05	340005.24	1150.08	Same	Diff. Elev.
432	889251.10	339771.66	1147.69	Same	Diff. Elev.
433	886318.42	339817.82	1136.37	Same	Diff. Elev.
434	877445.32	338700.88	1094.56	Same	Diff. Elev.
435	879953.01	336497.69	1096.22	Same	Diff. Elev.
436	893632.59	341721.34	1160.91	Same	Diff. Elev.
437	878962.76	338537.57	1126.24	Same	Diff. Elev
438	873211.72	337115.34	1079.07	Same	Diff. Elev.
439	898666.03	347695.40	1196.67	Same	Diff. Elev.
440	921578.53	332796.16	1249.07	Same	Diff. Elev.
441	878866.94	338398.42	1155.48	1154.8	Diff. Elev.
A-1	947061.79	287497.12	1423.11	1423.2	GPS
A-2	946053.45	287558.67	1423.85	1423.9	GPS
A-3	945208.17	288095.26	1424.52	1424.5	GPS
A-4	944513.24	289058.96	1424.40	1424.6	Diff. Elev.
A-5	944121.86	289838.33	1424.13	1424.1	Diff. Elev.

PT. NO.	NORTH	EAST	TOP MON.	GR. ELEV.	TYPE ELEV.
A-6	944205.42	290859.00	1424.82	1425.0	Diff. Elev.
A-7	944355.68	291884.69	1424.10	1424.5	Diff. Elev.
A-8	944478.71	292861.83	1424.10	1424.7	Diff. Elev.
A-9	944473.04	293602.56	1424.35	1424.7	Diff. Elev.
A-10	944336.79	294611.11	1424.07	1424.7	Diff. Elev.
A-11	944161.27	295664.95	1423.92	1424.5	Diff. Elev.
A-12	943996.84	296661.11	1424.22	1424.6	Diff. Elev.
A-13	943830.84	297666.06	1424.24	1424.5	Diff. Elev.
A-14	943663.25	298669.17	1424.09	1424.5	Diff. Elev.
A-15	943494.41	299677.89	1424.39	1424.6	Diff. Elev.
A-16	943407.86	300715.37	1424.30	1424.9	Diff. Elev.
A-17	943353.80	301614.41	1424.17	1424.6	Diff. Elev.
A-18	943290.91	302650.84	1424.37	1424.5	Diff. Elev.
A-19	943227.25	303686.42	1424.48	1424.4	Diff. Elev.
A-20	943247.04	304672.36	1424.62	1424.9	Diff. Elev.
A-21	943316.06	305712.34	1424.15	1424.4	Diff. Elev.
A-22	943380.39	306732.73	1424.17	1424.2	Diff. Elev.
A-23	943449.09	307753.71	1424.19	1424.3	Diff. Elev.
A-24	943513.98	308781.83	1424.37	1424.7	Diff. Elev.
A-25	943661.15	309806.58	1424.27	1425.0	Diff. Elev.
A-26	943863.87	310803.61	1424.18	1424.8	Diff. Elev.
A-27	944060.24	311766.41	1424.33	1424.6	Diff. Elev.
A-28	944130.05	312810.41	1424.54	1424.8	Diff. Elev.
A-29	944119.77	313717.08	1423.29	1423.7	Diff. Elev.
A-30	943880.30	314868.44	1422.06	1422.7	Diff. Elev.
A-31	943659.43	315611.79	1421.85	1422.3	Diff. Elev.
A-32	943506.96	316611.55	1422.75	1423.2	Diff. Elev.
A-33	943670.47	317598.87	1422.59	1422.8	Diff. Elev.
A-34	943773.77	318499.54	1422.21	1422.9	Diff. Elev.

PT. NO.	NORTH	EAST	TOP MON.	GR. ELEV.	TYPE ELEV.
A-35	943597.65	319597.35	1422.85	1423.4	Diff. Elev.
A-36	943411.02	320523.16	1422.74	1423.1	Diff. Elev.
A-37	943187.69	321558.06	1422.24	1422.6	Diff. Elev.
A-38	942663.64	322573.72	1422.92	1423.0	Diff. Elev.
A-39	941977.78	323271.10	1422.61	1423.0	Diff. Elev.
A-40	941329.69	323892.84	1423.06	1423.2	Diff. Elev.
A-41	940620.89	324684.07	1422.08	1422.6	Diff. Elev.
A-42	940202.99	325568.21	1422.59	1422.8	Diff. Elev.
A-43	939808.89	326463.16	1422.31	1422.5	Diff. Elev.
A-44	939390.58	327400.34	1422.38	1422.8	Diff. Elev.
A-45	938967.39	328313.25	1422.26	1422.6	Diff. Elev.
A-46	938579.92	329199.02	1422.30	1422.6	Diff. Elev.
A-47	938317.44	330130.23	1422.10	1422.5	Diff. Elev.
A-48	938205.65	331169.88	1422.30	1422.7	Diff. Elev.
A-49	937989.45	332137.19	1421.88	1423.3	Diff. Elev.
A-50	937345.23	333003.56	1421.91	1422.4	Diff. Elev.
A-51	936888.53	333889.78	1421.62	1422.2	Diff. Elev.
A-52	936481.32	334752.95	1421.32	1421.9	Diff. Elev.
A-53	936028.38	335592.03	1421.43	1422.1	Diff. Elev.
A-54	934899.26	335969.13	1421.78	1422.1	Diff. Elev.
A-55	934103.77	336195.08	1421.37	1421.9	Diff. Elev.
A-56	933439.06	336809.62	1421.83	1422.3	Diff. Elev.
A-57	932744.45	337588.68	1420.49	1421.2	Diff. Elev.
A-58	932248.87	338550.41	1421.68	1422.2	Diff. Elev.
A-59	931616.33	339295.49	1421.77	1422.3	Diff. Elev.
A-60	930620.30	339684.60	1421.83	1422.0	Diff. Elev.
A-61	929707.64	339994.17	1421.19	1421.8	Diff. Elev.
A-62	928896.59	340364.37	1421.52	1421.7	Diff. Elev.

PT. NO.	NORTH	EAST	TOP MON.	GR. ELEV.	TYPE ELEV.
C-1	928019.74	338026.18	1355.07	Same	Diff. Elev.
C-2	927304.65	337326.58	1341.44	Same	Diff. Elev
C-3	926648.38	336578.04	1331.67	Same	Diff. Elev
C-4	926236.31	336075.30	1322.44	Same	Diff. Elev
C-5	925719.02	335599.47	1313.05	Same	Diff. Elev
C-6			1303.82	Same	Diff. Elev.
C-7	924656.75	334687.10	1294.52	Same	Diff. Elev
C-8	924137.88	334217.03	1284.56	Same	Diff. Elev
C-9	923780.47	333872.70	1274.55	Same	Diff. Elev
C-10	923401.12	333474.25	1264.44	Same	Diff. Elev
C-11	921378.02	333386.40	1247.63	Same	Diff. Elev.
C-12	921082.36	334424.99	1238.37	Same	Diff. Elev.
C-13	920791.08	335444.37	1229.13	Same	Diff. Elev.
C-14	920533.84	336348.46	1219.91	Same	Diff. Elev.
C-15	920319.04	336983.73	1210.74	Same	Diff. Elev.
C-16	919779.26	337542.19	1201.65	Same	Diff. Elev.
A-3S	900235.41	348261.28	1193.97	1194.2	Diff. Elev.
A-4S	900843.67	349055.35	1195.13	1195.3	Diff. Elev.
A-5S	901708.50	349319.58	1195.33	1195.3	Diff. Elev.
A-6S	902709.44	349324.44	1194.84	1195.1	Diff. Elev.
A-7S	903710.83	349320.26	1195.03	1195.5	Diff. Elev.
A8S	904599.75	349015.18	1194.68	1195.1	Diff. Elev.
A11S	906959.63	347156.31	1195.20	1195.5	Diff. Elev.
A-12S	907527.65	346345.12	1195.48	1196.0	Diff. Elev.
A-13S	908270.89	345679.91	1195.03	1195.8	Diff. Elev.
A-14S	909039.57	345040.05	1195.04	1195.8	Diff. Elev.
A-15S	909789.06	344415.81	1195.48	1195.8	Diff. Elev.
A-16S	910575.18	343759.86	1195.17	1195.7	Diff. Elev.

PT. NO.	NORTH	EAST	TOP MON.	GR. ELEV.	TYPE ELEV.
A-17S	911343.02	343118.17	1194.98	1195.6	Diff. Elev.
A-19S	913082.29	342132.71	1196.80	1196.8	Diff. Elev.
A-21S	914881.46	341404.18	1195.99	1196.0	Diff. Elev.
A-22S	915677.13	340798.91	1196.27	1196.3	Diff. Elev.
A-23S	916474.74	340194.62	1196.48	1196.5	Diff. Elev.
A-24S	917269.35	339587.76	1195.94	1196.6	Diff. Elev.
A-25S	917935.48	338847.97	1195.98	1196.4	Diff. Elev.
A-26S	918576.14	338079.76	1195.90	1196.2	Diff. Elev.
A-27S	919217.17	337312.54	1196.57	1196.4	Diff. Elev.

April 30, 1996

HARQUAHALA - SADDLEBACK FRS'S AND DIVERSION CHANNELS

Quality Control Photogrammetric Check Points

PT.NO.	NORTH	EAST	FIELD ELEV.	PHOTOGRAM. ELEV.	DIFFERENCE
500	925071.50	324597.90	1216.60	1217.0	0.4
501	926626.80	324823.80	1225.90	1225.1	0.8
502	928127.50	326074.70	1239.30	1238.3	1.0
503	928285.70	327434.30	1248.20	1248.1	0.1
504	930354.10	327231.80	1261.20	1261.8	0.6
505	929273.00	325674.50	1245.50	1245.2	0.3
506	928079.50	325307.50	1235.00	1234.1	0.9
507	931167.90	328906.10	1277.50	1277.6	0.1
508	925359.24	326757.18	1225.80	1226.0	0.2
509	924688.70	328252.40	1228.80	1229.0	0.2
510	927078.20	327449.70	1240.80	1240.7	0.1
511	927064.80	330236.40	1264.10	1264.6	0.5
512	926548.90	329400.90	1251.90	1251.9	—
513	928680.90	331587.90	1287.40	1287.1	0.3
514	932485.10	331148.70	1305.20	1305.8	0.6
515	935802.80	328795.80	1342.20	1343.2	1.0
516	937591.40	330414.50	1385.40	1386.2	0.8
517	937499.30	330890.50	1383.80	1384.2	0.4
518	937212.80	331423.00	1377.30	1378.1	0.8
519	936805.60	332397.40	1376.90	1377.1	0.2
520	936431.00	333350.90	1383.40	1384.3	0.9
521	936275.30	333858.80	1385.80	1385.8	—
522	935672.30	333572.10	1369.00	1369.2	0.2

PT.NO.	NORTH	EAST	FIELD ELEV.	PHOTOGRAM. ELEV.	DIFFERENCE
523	935034.80	333293.20	1357.40	1358.4	1.0
524	934206.80	332302.70	1336.60	1336.5	0.1
525	922809.20	332782.50	1252.40	1253.1	0.7
526	927055.60	336918.30	1326.90	1327.6	0.7
527	928087.00	337958.20	1345.30	1346.2	0.9
528	928673.20	338865.00	1364.40	1364.1	0.3
529	936038.01	335600.84	1422.20	1422.2	—
530	932755.34	337596.32	1421.20	1421.5	0.3
531	930774.19	340216.53	1388.45	1388.6	0.1
532	937193.50	334916.33	1421.39	1421.2	0.2
533	938409.45	330530.61	1403.40	1403.3	0.1
534	942463.16	322976.42	1406.75	1406.5	0.3
535	943750.05	320772.12	1401.60	1401.9	0.3
536	944973.74	321120.83	1418.98	1419.1	0.1
537	943684.93	317593.30	1422.40	1421.9	0.5
538	943610.87	319600.80	1423.50	1423.7	0.2
539	938978.34	328318.03	1422.60	1422.9	0.3
540	938329.79	330133.82	1422.60	1421.9	0.7
541	943392.78	306728.61	1424.30	1424.3	—
542	943526.03	308778.63	1424.30	1424.5	0.2
543	944147.33	312809.19	1424.60	1424.2	0.4
544	944044.66	314929.10	1397.41	1397.5	0.1
545	945450.09	313581.84	1417.86	1417.9	—
546	946443.56	309285.54	1428.64	1428.8	0.2
547	945551.98	300973.50	1421.13	1421.2	0.1
548	945954.78	298726.52	1423.44	1423.4	—
549	947343.38	290750.41	1420.11	1420.7	0.6
550	943672.36	298673.36	1424.20	1424.1	0.1

PT.NO.	NORTH	EAST	FIELD ELEV.	PHOTOGRAM. ELEV.	DIFFERENCE
551	943419.51	300717.24	1424.50	1424.4	0.1
552	943433.10	303385.86	1399.88	1399.9	—
553	943842.62	309798.90	1399.55	1399.7	0.1
554	944170.13	296658.15	1400.21	1400.3	0.1
565	943732.60	315804.10	1393.90	1393.7	0.2
566	944100.90	315778.90	1392.40	1392.5	0.1
567	944042.30	314807.30	1396.50	1396.4	0.1
568	944404.80	313519.80	1402.60	1402.8	0.2
569	944879.40	313471.50	1410.30	1410.2	0.1
570	945380.90	314138.50	1419.30	1418.8	0.5
571	945340.30	314612.20	1422.80	1422.5	0.3
572	945244.70	315537.30	1421.30	1421.4	0.1
573	945533.80	316514.50	1443.20	1444.1	0.9
574	944639.20	313111.20	1406.40	1405.9	0.5
575	945463.40	312544.50	1414.00	1413.7	0.3
576	945781.80	311226.30	1421.20	1420.6	0.6
577	945669.60	310125.90	1419.20	1419.0	0.2
578	945553.10	309027.80	1421.30	1421.3	—
579	945431.90	307866.80	1421.90	1422.6	0.7
580	945316.70	306765.50	1420.20	1420.7	0.5
581	945201.40	305690.40	1420.80	1420.7	0.1
582	945096.80	304676.30	1418.10	1418.9	0.8
583	945015.90	303896.80	1419.20	1420.0	0.8
584	945229.00	302683.0	1419.30	1420.2	0.9
585	945417.70	301609.70	1420.00	1420.5	0.5
586	945492.40	301133.60	1421.50	1421.8	0.3
587	944379.20	301052.20	1408.60	1408.9	0.3
588	943646.70	300923.80	1401.50	1401.5	—

PT.NO.	NORTH	EAST	FIELD ELEV.	PHOTOGRAM. ELEV.	DIFFERENCE
589	945708.20	299902.40	1422.50	1423.2	0.7
590	945898.90	298811.40	1421.80	1421.4	0.4
591	946071.50	297815.90	1421.80	1422.2	0.4
592	946252.70	296778.10	1421.60	1421.7	0.1
593	946441.60	295692.20	1420.90	1421.8	0.9
594	946623.90	294654.70	1419.30	1419.8	0.5
595	947043.80	292230.30	1418.30	1418.6	0.3
596	947251.60	291046.30	1419.10	1419.7	0.6
597	947494.70	289653.80	1421.20	1422.2	1.0
598	947542.70	289360.60	1422.10	1422.9	0.8
599	947586.80	288073.20	1422.30	1422.8	0.5
600	946558.30	287591.80	1415.70	1415.5	0.2
601	945332.90	288105.80	1406.70	1407.0	0.3
602	944806.60	290562.80	1392.40	1392.9	0.5
603	944797.80	291127.60	1392.40	1392.5	0.1
604	944724.50	291717.00	1392.40	1392.3	0.1
605	944717.00	292846.30	1398.70	1399.1	0.4
606	923544.40	333672.10	1255.60	1255.4	0.2
607	924340.80	334431.90	1275.70	1275.4	0.3
608	929313.80	340376.20	1381.70	1382.2	0.5
609	930282.70	340089.50	1391.60	1391.5	0.1
610	930930.90	339918.90	1388.40	1388.6	0.2
611	931431.90	340346.80	1410.00	1410.2	0.2
612	932099.80	341045.30	1421.30	1421.3	—
613	932048.70	339871.80	1409.80	1410.6	0.8
614	931917.40	339218.40	1399.00	1399.6	0.6
615	932446.70	338408.30	1403.10	1403.4	0.3
616	932954.60	338709.70	1418.00	1417.8	0.2

PT.NO.	NORTH	EAST	FIELD ELEV.	PHOTOGRAM. ELEV.	DIFFERENCE
617	932898.60	337560.40	1400.60	1401.1	0.5
618	933720.00	336714.00	1403.20	1404.2	1.0
619	934231.90	337353.40	1422.90	1422.8	0.1
620	934561.40	336108.20	1400.90	1401.8	0.9
621	935548.80	336943.40	1422.70	1422.3	0.4
622	936571.90	334855.60	1403.70	1403.9	0.2
623	936891.20	334357.20	1406.00	1406.1	0.1
624	937815.60	333329.20	1422.00	1422.6	0.6
625	937747.30	332632.80	1403.50	1404.3	0.8
626	938852.60	332327.70	1425.20	1425.4	0.2
627	939004.50	330935.50	1418.90	1419.5	0.6
628	938404.80	330796.20	1405.50	1405.4	0.1
629	938765.90	329054.80	1401.70	1401.9	0.2
630	939745.40	328494.80	1419.50	1420.2	0.7
631	939472.20	327456.50	1402.60	1402.8	0.2
632	939912.50	326511.60	1402.60	1402.0	0.6
633	940302.50	325609.50	1403.30	1403.6	0.3
634	940836.20	326084.10	1420.60	1421.0	0.4
635	940670.50	324811.80	1403.30	1403.8	0.5
636	941665.40	323852.70	1409.10	1409.2	0.1
637	942391.60	323018.30	1405.80	1406.3	0.5
638	943342.60	321458.70	1400.60	1401.2	0.6
639	943597.60	320315.10	1398.30	1398.8	0.5
640	943781.60	319332.70	1400.30	1400.3	—
641	944907.10	319619.60	1420.80	1421.0	0.2
642	943894.00	318390.40	1398.10	1398.2	0.1
643	943892.90	317105.80	1391.80	1391.7	0.1
644	944553.60	317058.20	1407.20	1407.9	0.7

DIAGRAM - HORIZONTAL CONTROL

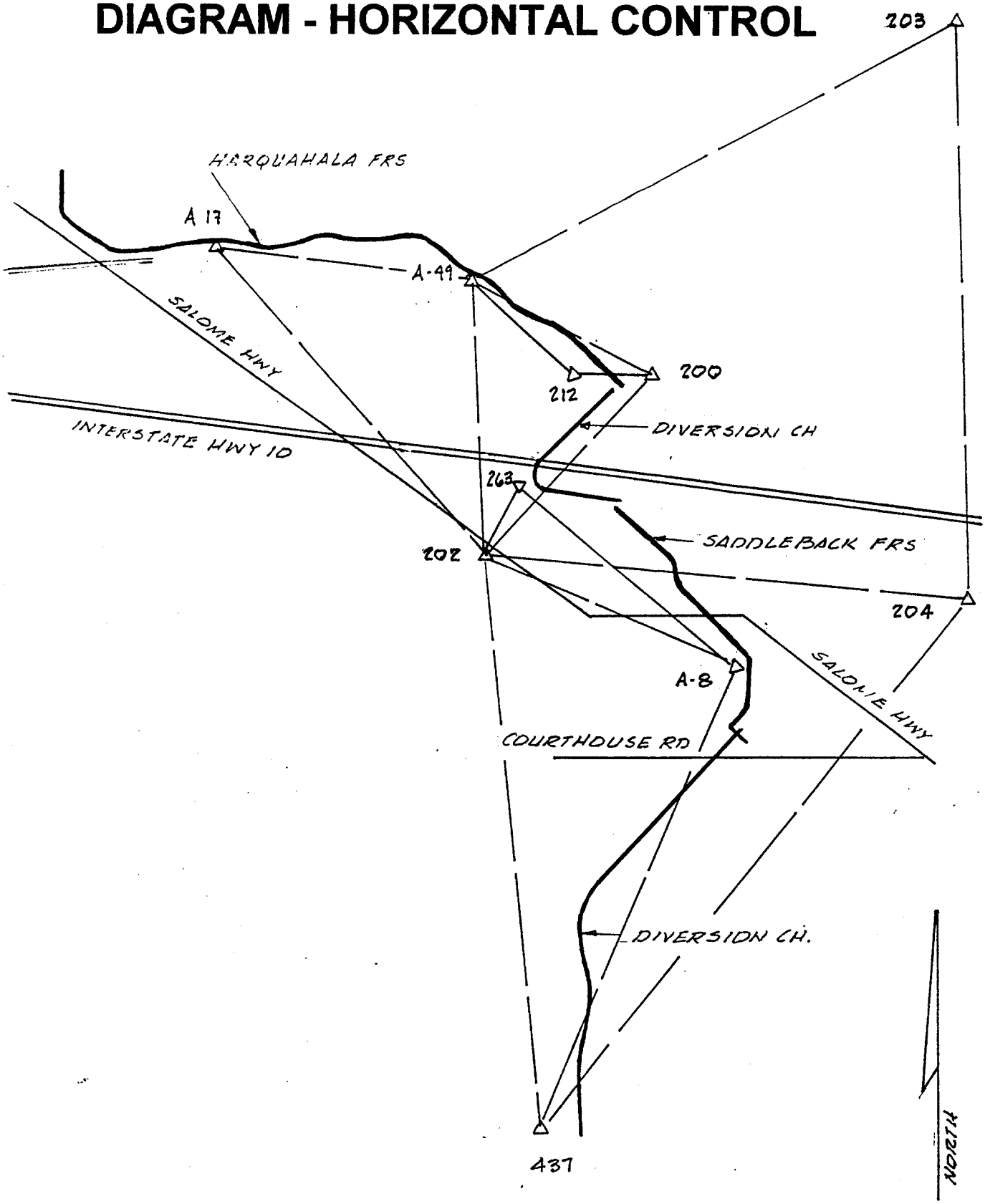

DIAGRAM - DIFFERENTIAL LEVELS

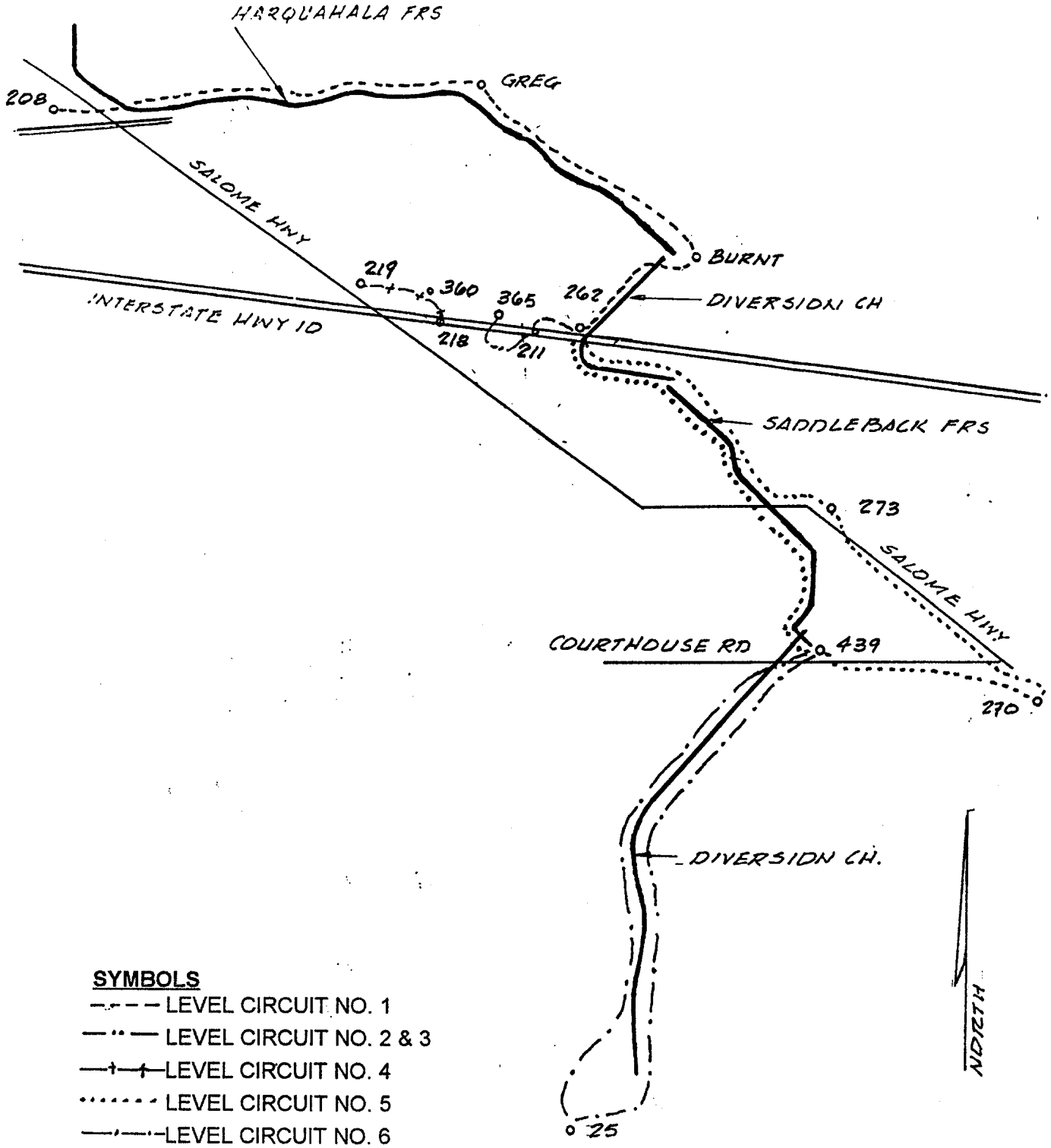

SYMBOLS

- LEVEL CIRCUIT NO. 1
- LEVEL CIRCUIT NO. 2 & 3
- LEVEL CIRCUIT NO. 4
- LEVEL CIRCUIT NO. 5
- LEVEL CIRCUIT NO. 6

DIFFERENTIAL LEVEL NOTES

DATE: 3-7-96 WEATHER: CLEAR BREEZY CREW: SM-CS CIR. NO. 1

PT. NO.	(+)	H.I.	(-)	ELEV.	B.M.	DESCRIPTION
BM (211)				1236.84	1236.84	NGS (USC&GS) BC IN CONC. MKD "A 415 52 1962" (+0.2)
	10.05	1246.89				
			7.17	1239.72		
	7.50	1247.22				
			3.52	1243.70		
	6.90	1250.60				
			4.80	1245.80		
	5.92	51.72				
			4.26	1247.46		
	8.72	56.18				
BM 262			2.98	1253.20	1253.20	AHD BC IN CONC HDWL OF BOX CULVERT MKD 4388+88 1251.15 1973 (FLUSH)
	6.47	59.67				
			6.58	1253.09		
	7.35	60.44				
			5.01	1255.43		
	9.40	64.83				
214			9.35	1255.48	1255.48	USDI BC 4"DIA IN CONC. MKD C-REF 150.00 FT RT 100+00 (FLUSH)
BM C-10			0.39	1264.44	1264.44	USDA BC 2"DIA IN CONC. WALL OF DROP STR. STA 100+00 MKD C10 1-84 (FLUSH)
	6.05	70.49				
			4.81	1265.68		
	9.43	75.11				
BM C-9			0.56	1274.55	1274.55	USDA BC 2"DIA IN CONC. WALL OF DROP STR. STA 94+50 MKD C-9 1-84 (FLUSH)
	6.27	80.82				
215			5.45	1275.37	1275.37	USDI BC 4"DIA IN CONC. MKD C-REF 150.00 FT RT STA 90+00.02 (+0.3'±)
			4.37	1276.45		
	8.58	1285.03				

McLAIN AERIAL INC. JOB NO. 10-20

DIFFERENTIAL LEVEL NOTES

DATE: 5-7-96 WEATHER: CLEAR BREEZY CREW: SM C-5 CIR. NO. 1

PT. NO.	(+)	H.I.	(-)	ELEV.	B.M. ADJ	DESCRIPTION
		1285.03				
BM C-8			0.48	1284.55	1284.56	USDA BC 2"DIA ON CONC WALL OF DROP STR. STA 89+50, MKD C-8 1-84 (FLUSH)
	5.87	90.42				
			4.09	1286.33		
	8.99	95.32				
BM C-7			0.81	1294.51	1294.52	USDI BC 4"DIA ON CONC WALL DROP STR. STA 82+50, MKD C-7 (FLUSH)
	5.83	1300.34				
216			4.87	1295.47	1295.48	USDI BC 4"DIA SET IN CONC C-REF. 150.00 FT. RT. 75+00 (FLUSH)
			5.29	1295.05		
	9.09	04.14				
BM C-6			0.33	1303.81	1303.82	USDA BC 2"DIA ON CONC WALL DROP STR. STA 75+00 MKD C-6 1-84 (FLUSH)
	5.09	08.90				
			3.92	1304.98		
	8.27	13.25				
			0.18	1313.07		
	6.33	19.40				
217			5.75	1313.65	1313.66	USDI BC 4"DIA. IN CONC C-REF 150.00 FT RT. 62+00.01 (FLUSH)
BM C-5			6.36	1313.04	1313.05	USDI BC 4"DIA ON CONC WALL OF DROP STR. STA 68+50 MKD C-5 (FLUSH)
	9.56	22.60				
BM C-4			0.17	1322.43	1322.44	USDA BC 2"DIAM ON CONC WALL OF DROP STR. STA 61+50, MKD C4 1-84 (FLUSH)
	6.31	28.74				
			5.64	1323.10		
	8.86	31.96				
BM C-3			0.30	1331.66	1331.67	USDI BC 4"DIA ON CONC WALL OF DROP STR. STA 55+00 MKD C-3 (FLUSH)
	5.52	1337.18				
			4.74	1332.44		

McLAIN AERIAL INC. JOB NO. 1946

DIFFERENTIAL LEVEL NOTES

P. 3-4

DATE: 3-7-96 WEATHER: CLEAR BREEZY CREW: SM1-CS CIR. NO. 1

PT. NO.	(+)	H.I.	(-)	ELEV.	B.M. ADJ	DESCRIPTION
				1332.44		
	5.35	1337.79				
			4.74	1333.05		
	8.68	41.73				
BM C-2			0.29	1341.44	1341.45	USDA BC 2"DIA. ON CONC WALL OF DROP STR. STA 45+00 MKD C-2 1-84 (FLUSH)
	7.34	48.78				
			5.10	1343.68		
	6.90	50.58				
			3.90	1346.68		
	8.72	55.40				
BM C-1			0.33	1355.07	1355.08	USDA BC 2"DIA., ON CONC WALL OF DROP STR. STA 35+00 MKD C-1 1-84 (FLUSH)
	5.44	60.51				
			4.72	1355.79		
	7.02	62.81				
			2.45	1360.36		
	10.98	71.34				
212			0.22	1371.12	1371.13	LISDI BC 4"DIA ON CONC WALL C-REF 150.00FT RT H.FW. PC 21+50 (FLUSH)
	5.37	76.49				
			0.71	1375.78		
	12.44	88.22				
			1.32	1386.90		
	3.19	90.09				
			1.70	1388.39		
	12.58	1400.97				
			0.89	1400.08		
	12.60	12.68				
			0.10	1412.58		
	12.94	25.52				
			0.51	1425.01		

McLAIN AERIAL INC. JOB NO. 1946

DIFFERENTIAL LEVEL NOTES

DATE: 3-7-96 WEATHER: CLEAR - BREEZY CREW: SM-CS CIR. NO. 1

PT. NO.	(+)	H.I.	(-)	ELEV.	B.M. ADJ	DESCRIPTION
				1425.01		
	12.17	1437.18				
			0.11	1437.07		
	13.02	50.09				
BM BURNT			6.21	1443.88	1443.90	USDA 2" DIA. BC SET IN ROCK. MKD BURNT 1-84 (FLUSH)
(200)						
	0.11	43.99				
			12.16	1431.83		
	0.17	32.00				
302			8.76	1423.2	1423.26	SET 60d NAIL (FLUSH)
	4.17	27.41				
BM A62			5.91	1421.50	1421.52	USDA 2" DIA BC SET IN CONC MKD A 62 2-84 (-0.2'±)
	6.23	27.73				
			5.19	1422.54		
	4.52	27.06				
BM A61			5.89	1421.17	1421.19	USDA 2" DIA BC SET IN CONC MKD A 61 2-84 (-0.6'±)
	5.93	27.10				
			5.16	1421.94		
	5.33	27.27				
BM A60			5.46	1421.81	1421.83	USDA 2" DIA BC SET IN CONC MKD A 60 2-84 (-0.2'±)
	5.63	27.44				
			4.95	1422.49		
	5.11	27.60				
BM A59			5.85	1421.75	1421.77	USDA 2" DIA BC SET IN CONC MKD A 59 2-84 (-0.5'±)
	5.50	27.25				
			5.32	1421.93		
	5.35	27.28				
BM A58			5.62	1421.66	1421.68	USDA 2" DIA BC SET IN CONC MKD A 58 2-84 (-0.5'±)

McLAIN AERIAL INC. JOB NO. 1946

DIFFERENTIAL LEVEL NOTES

P. 5-14

DATE: 3-8-96 WEATHER: CLEAR - WARM CREW: SM CS CIR. NO. 1

PT. NO.	(+)	H.I.	(-)	ELEV.	B.M. ADJ	DESCRIPTION
				1421.66		
	5.62	1427.28				
			5.28	1421.90		
	4.88	26.78				
BM A57			6.31	1420.47	1420.49	USDA 2" DIA BC SET IN CONC MKD A-57 2-84, (-0.7'±)
	6.78	27.25				
530			6.1	1421.2	1421.2	SET 60d NAIL (FLUSH)
			5.01	1422.24		
	5.17	27.41				
BM A56			5.61	1421.80	1421.83	USDA 2" DIA BC SET IN CONC. MKD A-56 2-84 (-0.5'±)
	5.97	27.77				
			5.28	1422.49		
	4.96	27.45				
BM A55			6.11	1421.34	1421.37	USDA 2" DIA BC SET IN CONC MKD A 55 2-84 (-0.5'±)
	6.18	27.52				
			5.65	1421.87		
	5.31	27.18				
BM A54			5.43	1421.75	1421.78	USDA 2" DIA BC SET IN CONC MKD A 54 2-84 (-0.3'±)
	5.49	27.24				
			5.10	1422.14		
	5.22	27.36				
			5.10	1422.26		
	5.28	27.64				
529			5.4	1422.2	1422.2	SET 60d NAIL FLUSH
BM A53			6.24	1421.40	1421.43	USDA 2" DIA BC SET IN CONC MKD A 53 2-84 (-0.7'±)
	6.27	27.67				
			5.62	1422.05		

McLAIN AERIAL INC. JOB NO. 1946

DIFFERENTIAL LEVEL NOTES

DATE: 3-8-96 WEATHER: CLEAR - WARM CREW: SM-CS CIR. NO. 1

PT. NO.	(+)	H.I.	(-)	ELEV.	B.M. ADJ.	DESCRIPTION
				1422.05		
	5.36	1427.41				
BMA 52			6.12	1421.29	1421.32	USDA 2"DIA. BC. SET IN CONC. MKD A52 2-84 (-0.6±)
	5.66	26.95				
			4.94	1422.01		
	5.58	27.59				
BMA 51			6.00	1421.59	1421.62	USDA 2" DIA BC SET IN CONC MKD A 51 2-84 (-0.6'±)
	5.31	26.90				
			4.59	1422.31		
	5.18	27.49				
BMA 50			5.61	1421.88	1421.91	USDA 2"DIA. BC SET IN CONC. MKD A50 2-84 (-0.5'±)
	5.78	27.66				
			5.32	1422.34		
	5.72	28.06				
BMA 49			6.21	1421.85	1421.88	USDA 2"DIA BC SET IN CONC MKD A49 2-84 (-0.4±)
	6.37	28.22				
328			6.0	1422.2	1422.2	SET 60d NAIL (F)
			5.56	1422.66		
	5.13	27.79				
BMA48			5.53	1422.26	1422.30	USDA 2" DIA BC SET IN CONC MKD A 48 2-84 (-0.4±)
	5.17	27.43				
			4.68	1422.75		
	5.23	27.98				
BMA47			5.92	1422.06	1422.10	USDA 2" DIA BC SET IN CONC MKD A47 2-84 (-0.4±)
	6.25	28.31				
540			5.7	1422.6	1422.6	SET 60d NAIL (F)
			5.73	1422.58		

McLAIN AERIAL INC. JOB NO. 1946

DIFFERENTIAL LEVEL NOTES

DATE: 5-8-96 WEATHER: CLEAR - WARM CREW: SM CS CIR. NO. 1

PT. NO.	(+)	H.I.	(-)	ELEV.	B.M. ADJ	DESCRIPTION
				1422.58		
	5.56	1428.14				
BM A 46			5.88	1422.26	1422.30	USDA 2" DIA BC SET IN CONC. MKD A-46 2-84 (-0.3±)
	5.72	27.98				
			5.21	1422.77		
	5.63	28.40				
BM A-45			6.18	1422.22	1422.26	USDA 2" DIA BC SET IN CONC MKD A 45 2-84 (-0.3±)
	5.93	28.15				
539			5.6	1422.6	1422.6	SET 60d NAIL (F)
			5.29	1422.86		
	5.57	28.43				
BM A 44			6.09	1422.34	1422.38	USDA 2" DIA BC SET IN CONC MKD A 44 2-84 (-0.4'±)
	6.01	28.35				
			5.65	1422.70		
	5.59	28.29				
BM A 43			6.02	1422.27	1422.31	USDA 2" DIA BC SET IN CONC MKD A 43 2-84 (-0.2±)
	5.95	28.22				
			5.51	1422.71		
	5.15	27.86				
BM A 42			5.31	1422.55	1422.59	USDA 2" DIA BC SET IN CONC. MKD A 42 2-84 (-0.2±)
	5.48	28.03				
325			5.1	1422.8	1422.9	SET 60d NAIL (F)
			5.31	1422.72		
	5.60	28.32				
BM A 41			6.28	1422.04	1422.08	USDA 2" DIA BC SET IN CONC MKD A 41 2-84 (-0.5±)
	5.97	28.01				
			4.88	1423.13		

McLAIN AERIAL INC. JOB NO. 1946

DIFFERENTIAL LEVEL NOTES

DATE: 3-8-96 WEATHER: CLEAR-WARM CREW: SM CS CIR. NO. 1

PT. NO.	(+)	H.I.	(-)	ELEV.	B.M. ADJ	DESCRIPTION
				1423.13		
	5.30	1428.43				
BMA40			5.41	1423.02	1423.06	USDA 2" DIA BC SET IN CONC. MKD A-40 2-84, (-0.1±)
	5.12	28.14				
324			5.1	1423.0	1423.0	SET 60d NAIL (F)
			4.63	1423.51		
	5.41	28.92				USDA 2" DIA BC SET IN CONC. MKD A39 2-84, (-0.4'±)
BMA39			6.35	1422.57	1422.61	
	5.77	28.34				
			4.65	1423.69		
	4.94	28.63				
BMA38			5.75	1422.88	1422.92	USDA 2" DIA. BC SET IN CONC. MKD A 38 2-84, (-0.1'±)
	5.54	28.42				
323			5.4	1423.0	1423.0	SET 60d NAIL (F)
			5.38	1423.04		
	5.00	28.04				
BMA37			5.85	1422.19	1422.24	USDA 2" DIA. BC SET IN CONC MKD A37 2-84, (-0.4'±)
	5.89	28.08				
			5.32	1422.76		
	5.54	28.30				
BMA36			5.61	1422.69	1422.74	USDA 2" DIA BC SET IN CONC MKD A36 2-84, (-0.4'±)
	5.51	28.20				
			5.37	1422.83		
	5.67	28.50				
BMA35			5.70	1422.80	1422.85	USDA 2" DIA. BC SET IN CONC MKD A35 2-84, (-0.6'±)
	5.25	1428.05				

McLAIN AERIAL INC. JOB NO. 1946

DIFFERENTIAL LEVEL NOTES

DATE: 5-8-96 WEATHER: CLEAR - WARM CREW: SM-CS CIR. NO. 1

PT. NO.	(+)	H.I.	(-)	ELEV.	B.M. ADJ	DESCRIPTION
		1428.05				
538			4.6	1423.4	1423.5	SET 60d NAIL (FLUSH)
			5.37	1422.68		
	5.50	28.18				
BM A34			6.02	1422.16	1422.21	USDA 2" DIA BC SET IN CONC MKD A 34 2-84 (-0.7±)
	7.09	29.25				
			6.11	1423.14		
	4.63	27.77				
BM A 33			5.23	1422.54	1422.59	USDA 2" DIA BC SET IN CONC MKD. A33 2-84 (-0.2'±)
	5.77	28.31				
537			5.9	1422.4	1422.4	
			5.47	1422.84		
	5.13	1427.97				
BM A32			5.27	1422.70	1422.75	USDA 2" D'A. BC IN CONC. MKD A 32 2-84 (-0.5'±)
	16.34	39.04				
201			3.71	1435.33	1435.38	USDA 2" DIA BC SET IN ROCK MKD GREGG FLUSH W/ ROCK
						DETERMINE ELEV'S TOP HDWLS & SPILLWAY BOTTOM
A 51					1421.62	
	4.05					
			3.93		1421.74	TOP HDWL
	4.03					
A 51			4.15		1421.62	

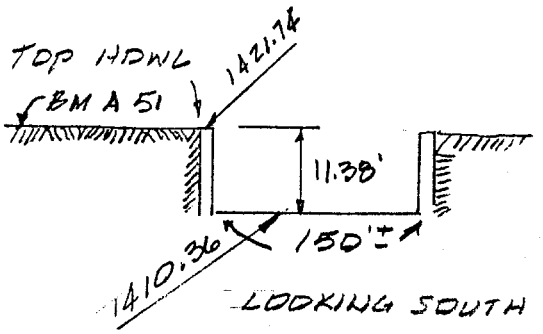

SPILLWAY

McLAIN AERIAL INC. JOB NO. 1946

DIFFERENTIAL LEVEL NOTES

DATE: 3-12-96 WEATHER: CLOUDY BREEZY CREW: SH JF CIR. NO. 1

PT. NO.	(+)	H.I.	(-)	ELEV.	B.M. ADJ	DESCRIPTION
				1435.33	1435.38	GREGG
	1.88	1437.21				
BM A32			14.51	1422.70	1422.75	USDA BC 2"DIA SET IN CONC. MKD A32 2-84 (-0.5'±)
	5.94	28.64				
			5.91	1422.73		
	5.30	28.03				
BM A31			6.23	1421.80	1421.85	USDA 2"DIA BC SET IN CONC MKD A31 2-84 (-0.5'±)
	6.39	28.19				
			5.23	1422.96		
	5.26	28.22				
BM A30			6.21	1422.01	1422.06	USDA 2"DIA BC SET IN CONC MKD A30 2-84 (-0.6'±)
	6.13	28.14				
320			5.6	1422.6	1422.6	SET 60d NAIL (F)
			5.00	1423.14		
	5.52	28.66				
BM A29			5.43	1423.23	1423.29	USDA 2"DIA BC SET IN CONC MKD A29 2-84 (-0.4'±)
	5.64	28.87				
			4.10	1424.77		
	5.23	30.00				
BM A28			5.52	1424.48	1424.54	USDA 2" DIA BC SET IN CONC MKD A28 2-84 (-0.3'±)
	5.51	29.99				
543			5.4	1424.6	1424.6	SET 60d NAIL (F)
			5.02	1424.97		
	5.12	30.09				
BM A27			5.82	1424.27	1424.33	USDA 2" DIA BC SET IN CONC MKD A-27 2-84 (-0.3'±)

McLAIN AERIAL INC. JOB NO. 1946

DIFFERENTIAL LEVEL NOTES

DATE: 3-12-96 WEATHER: CREW: SM JP CIR. NO. 1

PT. NO.	(+)	H.I.	(-)	ELEV.	B.M. ADJ	DESCRIPTION
				1424.27		
	5.97	1430.24				
			5.52	1424.72		
	5.40	30.12				
BMA26			6.00	1424.12	1424.18	USDA 2" DIA B.C. SET IN CONC MKD A26 2-84 (-0.6'±)
	5.75	29.87				
332			5.4	1424.5	1424.5	SET 60d NAIL (FLUSH)
			4.82	1425.05		
	4.55	29.60				
BMA25			5.39	1424.21	1424.27	USDA 2" DIA BC SET IN CONC MKD A25 2-84 (-0.7'±)
	5.52	29.73				
			4.86	1424.87		
	5.30	30.17				
BMA24			5.86	1424.31	1424.37	USDA 2" DIA BC SET IN CONC. MKD A24 2-84 (-0.3'±)
	5.28	29.59				
542			5.3	1424.3	1424.3	SET 60d NAIL (F)
			4.81	1424.78		
	5.10	29.88				
BMA23			5.75	1424.13	1424.19	USDA 2" DIA BC SET IN CONC MKD A23 2-84 (-0.1'±)
	5.26	29.39				
			4.74	1424.65		
	5.20	29.85				
BMA22			5.74	1424.11	1424.17	USDA 2" DIA BC SET IN CONC. MKD A22 2-84 (FLUSH)
	5.45	29.56				
541			5.3	1424.3	1424.3	SET 60d NAIL (FLUSH)
			5.20	1424.36		

McLAIN AERIAL INC. JOB NO. 1946

DIFFERENTIAL LEVEL NOTES

DATE: 3-12-96 WEATHER: _____ CREW: _____ CIR. NO. 1

PT. NO.	(+)	H.I.	(-)	ELEV.	B.M. ADJ	DESCRIPTION
				1424.36		
	4.87	29.23				
BMA21			5.14	1424.09	1424.15	USDA 2" DIA B.C SET IN CONC MKD A-21 2-84 (-0.3'±)
	5.49	29.59				
			5.31	1424.27		
	5.57	29.84				
BMA20			5.28	1424.56	1424.62	USDA 2" DIA B.C. SET IN CONC MKD A-20 2-84 (-0.3'±)
	5.46	30.02				
			5.28	1424.74		
	5.03	29.77				
BMA19			5.35	1424.42	1424.48	USDA 2" DIA BC SET IN CONC. MKD A 19 2-84 (FLUSH)
	5.16	29.58				
329			5.2	1424.4	1424.4	SET 60d NAIL (F)
			5.12	1424.46		
	5.24	29.70				
BMA18			5.39	1424.31	1424.37	USDA 2" DIA BC SET IN CONC MKD A-18 2-84 (-0.1'±)
	5.38	29.69				
			4.73	1424.96		
206	5.19	30.15				
BMA17			6.05	1424.10	1424.17	USDA 2" DIA BC SET IN CONC. MKD A17 2-84 (-0.4'±)
	5.69	29.79				
			5.00	1424.79		
	5.12	29.91				
BMA16			5.68	1424.23	1424.30	USDA 2" DIA BC SET IN CONC MKD A-16 2-84 (-0.6'±)
	5.82	30.05				
551			5.6	1424.4	1424.5	SET 60d NAIL (F)
			5.35	1424.70		

McLAIN AERIAL INC. JOB NO. 1946

DIFFERENTIAL LEVEL NOTES

DATE: 3-12-96 WEATHER: _____ CREW: _____ CIR. NO. 1

PT. NO.	(+)	H.I.	(-)	ELEV.	B.M. ADJ	DESCRIPTION
				1424.70		
	5.23	1429.93				
BMA15			5.61	1424.32	1424.39	USDA 2" DIA BC SET IN CONC. MKD A-15 2-84 (-0.2'±)
	5.15	29.47				
			4.85	1424.62		
	5.12	29.74				
BMA14			5.72	1424.02	1424.09	USDA 2" DIA BC SET IN CONC MKD A-14 2-84 (-0.4'±)
	5.52	29.54				
550			5.4	1424.1	1424.2	SET 60d NAIL (F)
			5.25	1424.29		
	5.19	29.48				
BMA13			5.31	1424.17	1424.24	USDA 2" DIA BC IN CONC MKD A-13 2-84 (-0.3')±
	6.09	30.26				
			5.67	1424.59		
	5.32	29.91				
BMA12			5.76	1424.15	1424.22	USDA 2" DIA BC IN CONC MKD A-12 2-84 (-0.4'±)
	5.86	30.01				
351			5.5	1424.5	1424.5	SET 60d NAIL (F)
			5.70	1424.31		
	5.32	29.63				
BMA11			5.78	1423.85	1423.92	USDA 2" DIA BC IN CONC. MKD A 11 2-84 (-0.6'±)
	5.45	29.30				
			5.50	1424.30		
	5.78	30.08				
BMA10			6.08	1424.00	1424.07	USDA 2" DIA BC SET IN CONC MKD A 10 2-84 (-0.6'±)
	6.19	1430.19				

McLAIN AERIAL INC. JOB NO. 1946

DIFFERENTIAL LEVEL NOTES

DATE: 5-12-96 WEATHER: _____ CREW: _____ CIR. NO. 1

PT. NO.	(+)	H.I.	(-)	ELEV.	B.M. ADJ.	DESCRIPTION
		1430.19				
			5.86	1424.33		
	5.60	29.93				
BM A9			5.66	1424.27	1424.35	USDA 2" DIA BC SET IN CONC MKD A9 2-84 (-0.5'±)
	5.38	29.65				
BMA8			5.63	1424.02	1424.10	USDA 2" DIA BC SET IN CONC MKD A8 2-84 (-0.6'±)
	5.94	29.96				
			4.71	1425.25		
	4.82	30.07				
BMA7			6.05	1424.02	1424.10	USDA 2" DIA BC SET IN CONC MKD A7 2-84 (-0.4'±)
	6.20	30.22				
			5.14	1425.08		
	5.03	30.11				
BMA6			5.37	1424.74	1424.82	USDA 2" DIA BC SET IN CONC MKD A-6 2-84 (-0.2'±)
	5.25	29.99				
			4.89	1425.10		
	4.90	30.00				
BMA5			5.95	1424.05	1424.13	FCDMC 3" DIA. BC IN CONC MKD FCDMC (FLUSH
	5.91	29.96				
			4.96	1425.00		
	5.02	30.02				
BMA4			5.70	1424.32	1424.40	USDA 2" DIA BC IN CONC, MKD A4 2-84 (-0.2'±)
	0.80	25.12				
			24.87	1400.25		
	3.48	03.73				
BM YA76			7.03	1396.70	1396.78	NGS BM STAINLESS STEEL ROD SET BELOW SURFACE IN STD. CONTAINER.
208						DIFF = -0.08'
						ALLOWABLE ERROR =
						0.035$\sqrt{13.7 \text{ MILES}}$ = 0.13'

McLAIN AERIAL INC. JOB NO. 1966

DIFFERENTIAL LEVEL NOTES

DATE: 3-20-96 WEATHER: CLEAR - WARM CREW: SM - CS CIR. NO. 2 & 3

PT. NO.	(+)	H.I.	(-)	ELEV.	B.M.	DESCRIPTION
						THIS LEVEL RUN WAS MADE
						TO VERIFY THE VERTICAL
						VALUE OF POINT # 360
						USING BM C 415 51
						NAVD (1929) = 1214.73
						+ 1.97 = 1216.70 NAVD (1988)
				CIR NO. 2		
BM 218					1216.70	USC&GS BC IN CONC
						MKD C 415 52 (+0.6)
	10.04	1226.74				
360			7.25	1219.49	1219.49	GPS = 1219.50
	7.52	1227.01				
			10.31	1216.70	1216.70	END OF RUN NO ADJ.
				CIR NO. 3		CONTINUE LEVEL RUN
						FROM # 360 - THROUGH
						# 359 TO BM S-476
360					1219.49	1/2" REBAR (F)
	3.73	1223.22				
			5.60	1217.62		
	4.89	22.51				
			6.56	1215.95		
	5.31	21.26				
			4.48	1216.78		
	5.41	22.19				
			3.87	1218.32		
	5.87	24.19				
			5.33	1218.86		

McLAIN AERIAL INC. JOB NO. 1956

DIFFERENTIAL LEVEL NOTES

P. 5,2

DATE: 3-20-96 WEATHER: — CREW: — CIR. NO. 3

PT. NO.	(+)	H.I.	(-)	ELEV.	B.M.	DESCRIPTION
				1218.86		
	5.54	1224.40				
359			4.90	1219.50	1219.51	SET 1/2 REBAR (FLUSH)
	4.74	24.24				(GPS 1219.54)
			5.00	1219.24		
	6.35	25.59				
			4.27	1221.32		
	7.13	28.45				
			2.13	1226.32		
	5.48	31.80				
~~BM~~ 5476			5.43	1226.37	1226.39	STAINLESS STEEL ROD IN
219						STANDARD UNDERGROUND
				+0.02		CONTANER - MILD.
						5476 - USC&GS
						NAVD (1929) = 1226.32 +
						1.97 = 1226.39 NAVD (1988)

McLAIN AERIAL INC. JOB NO. 194

DIFFERENTIAL LEVEL NOTES

DATE: 3-20-96 WEATHER: — CREW: SM-CS CIR. NO. 4

PT. NO.	(+)	H.I.	(-)	ELEV.	B.M.	DESCRIPTION
						RUN TO VERIFY ELEVATION
						OF GPS PT. #365
						USING BM A 415 (211)
BM(211)					1236.84	
	9.67	1246.51				
			10.31	1236.20		
	3.77	39.97				
			6.17	1233.80		
	4.00	37.80				
220			4.91	1232.89	1232.89	GPS = 1232.86' dv = +0.03'
	5.85	38.74				
			3.82	1234.92		
	6.85	41.77				
			3.70	1238.07		
	5.50	43.57				
BM(211)			6.73	1236.84	1236.84	NO ADJUSTMENT

McLAIN AERIAL INC. JOB NO. 196

DIFFERENTIAL LEVEL NOTES

DATE: 4-9-96 WEATHER: WARM & DRY CREW: SMGS CIR. NO. 5

PT. NO.	(+)	H.I.	(-)	ELEV.	B.M.	DESCRIPTION
262					1253.20	AHD BC IN CONC HDWL OF BOX CULVERT MKD 438S+88. SEE CIR. NO. 1
	3.40	1256.60				
			6.93	49.67		
	5.22	54.89				
			5.67	49.22		
	5.28	54.50				
BM C-11			6.87	1247.63	1247.63	USDA BC(2") IN CONC HDWL OF DROP STR. STA 127+81
	1.32	48.95				
			9.19	39.76		
	5.61	45.37				
			5.67	39.70		
	5.22	44.92				
BM C-12			6.55	1238.37	1238.37	USDA 2" BC ON CONC HDWL OF DROP STR. 138+61
	0.51	38.88				
			7.94	30.94		
	5.05	35.99				
			6.44	29.55		
	4.88	34.43				
BM C-13			5.30	1229.13	1229.13	USDA 2" BC ON CONC HDWL. OF DROP STR. 149+21
	0.66	29.79				
			8.74	21.05		
	3.95	25.00				
			5.33	19.67		
	5.34	25.01				
BM C-14			5.10	1219.91	1219.91	USDA 2" BC ON CONC HDWL OF DROP STR 158+61
	0.55	20.46				
			8.31	12.15		
	3.72	15.87				
BM C 15			5.13	1210.74	1210.74	USDA 2" BC ON CONC HDWL OF DROP STR. 165+41

McLAIN AERIAL INC. JOB NO. 1946

DIFFERENTIAL LEVEL NOTES

P. 2-16

DATE: 4-9-96 WEATHER: CREW: SLI CS CIR. NO. 5

PT. NO.	(+)	H.I.	(-)	ELEV.	B.M.	DESCRIPTION
				1210.74		
	0.22	1210.96				
			7.70	03.26		
	5.21	08.47				
			5.57	02.90		
	5.16	08.06				
BM C16			6.41	1201.65	1201.65	USDA 2" BC ON CONC HDWL OF DROP STR 173+41
	0.25	01.90				
			8.19	1193.71		
	6.30	1200.01				
BM A27			3.44	96.57	1196.57	FCDMC 3" BC IN CONC STA POST 270+00, BM APPEARS DISTURBED. (F)
	5.39	1201.96				
			5.51	96.45		
	5.45	01.90				
BM A26			6.00	1195.90	1195.90	FCDMC 3" BC IN CONC. 260+00 (F)
	6.54	02.44				
			5.95	96.49		
	5.34	01.83				
BM A25			5.85	1195.98	1195.98	FCDMC 3" BC IN CONC STA 250+00 (-0.4)
	5.73	01.71				
			5.01	96.70		
	5.49	02.19				
BM A24			6.25	1195.94	1195.94	FCDMC 3" BC IN CONC. STA 240+00 (-0.6)
	5.90	01.84				
			5.17	96.67		
	5.36	02.03				
BM A23			5.55	1196.48	1196.48	FCDMC 3" BC IN CONC STA 230+00 (FLUSH)
	5.43	01.97				
			5.57	1196.40		

McLAIN AERIAL INC. JOB NO. 1946

DIFFERENTIAL LEVEL NOTES

DATE: 4-9-96 WEATHER: CREW: SM: CS. CIR. NO. 5

PT. NO.	(+)	H.I.	(-)	ELEV.	B.M.	DESCRIPTION
				1196.40		
	5.59	1201.99				
BM A22			5.72	1196.27	1196.27	FCDMC 3" BC IN CONC 220+00 (F)
	5.47	01.74				
			5.36	96.38		
	5.42	01.80				
BM A21			5.81	1195.99	1195.99	FCDMC 3" BC IN CONC 210+00 (F)
	6.38	02.37				
TP			5.71	1196.66		
	5.32	01.98				℄ SALOME & BULLEYE RDS - ALSO ℄ OF SADDLE PACK STR RD.
			5.30	96.68		
	5.35	02.03				
			5.39	96.64		NOTE A-20 NOT FOUND
	5.46	02.10				
BM A19			5.30	1196.80	1196.80	FCDMC 3" BC IN CONC 190+00 (F)
	5.45	02.25				
			5.46	96.79		
	5.43	02.22				NOTE: COULD NOT FIND A-18
			5.32	96.90		
	5.07	01.97				
			5.70	96.27		
	5.99	02.26				
BM A17			7.28	1194.98	1194.98	FCDMC 3" BC IN CONC NO STA MKER. (-0.6)
	6.02	01.00				
			5.09	95.91		
	5.51	01.42				
BM A16			6.25	1195.17	1195.17	FCDMC 3" BC IN CONC 160+00 (-0.5)
	5.89	01.06				
			5.33	1195.73		

McLAIN AERIAL INC. JOB NO. 1946

DIFFERENTIAL LEVEL NOTES

DATE: 4-9-96 WEATHER: CREW: DM - CS CIR. NO. 5

PT. NO.	(+)	H.I.	(-)	ELEV.	B.M.	DESCRIPTION
				1195.73		
	5.15	1200.88				
			5.12	95.76		
	5.44	01.20				
BM A-15			5.72	1195.48	1195.48	FCDMC 3" DIA BC IN CONC (-0.4)
	5.41	00.39				
			5.41	95.48		
	5.77	01.25				
BM A14			6.21	1195.04	1195.04	FCDMC 3" DIA BC IN CONC STA 140+00 (-0.8)
	6.01	01.05				
			5.51	95.54		
	5.59	01.13				
BM A13			6.10	1195.03	1195.03	FCDMC 3" DIA BC IN CONC 130+00 (-0.8)
	6.24	01.27				
			5.13	96.14		
	4.81	00.95				
BM A12			5.47	1195.48	1195.48	FCDMC 3" DIA BC IN CONC 120+00 (-0.5)
	5.95	01.43				
			5.78	95.65		
	5.33	00.98				
BM A11			5.78	1195.20	1195.20	FCDMC 3" DIA BC IN CONC 110+00 (-0.3)
	6.26	01.46				
			4.99	96.47		
	4.38	00.85				NOTE: BENCH MK'S. A-9 A-10 NOT FOUND
			4.90	95.95		
	5.29	01.24				
			5.57	95.67		
	5.56	01.23				
			5.40	1195.83		

McLAIN AERIAL INC. JOB NO. 1946

DIFFERENTIAL LEVEL NOTES

DATE: _____ WEATHER: _____ CREW: _____ CIR. NO. 5

PT. NO.	(+)	H.I.	(-)	ELEV.	B.M.	DESCRIPTION
				1195.83		
	5.28	1201.11				
			5.21	95.90		
	5.17	01.07				
BM A-8			6.39	1194.68	1194.68	FCDMC 3" DIA BC IN CONC 80+00 (-0.4)
	6.62	01.30				
			5.71	95.59		
	5.55	01.14				
BM A7			6.11	1195.03	1195.03	FCDMC 3" DIA BC IN CONC. 70+00 (-0.5)
	5.81	00.84				
			5.18	95.66		
	5.62	01.28				
			5.17	96.11		
	5.33	01.44				
BM A6			6.60	1194.84	1194.84	FCDMC 3" DIA BC IN CONC 60+00 (-0.3)
	6.40	01.24				
			5.00	96.24		
	5.26	01.50				
BM A5			6.17	1195.33	1195.33	FCDMC 3" BC IN CONC 50+00 (F)
	5.93	01.26				
			5.47	95.79		
	5.05	00.84				
BM A4			5.71	1195.13	1195.13	FCDMC 3" BC IN CONC 40+00 (-0.2)
	5.91	01.04				
			4.90	1196.14		
	4.70	00.84				
BM A3			6.87	1193.97	1193.97	FCDMC 3" DIA BC IN CONC 30+00 (-0.2)
	6.98	00.95				
			5.05	1195.90		

McLAIN AERIAL INC. JOB NO. 1946

DIFFERENTIAL LEVEL NOTES

DATE: 4-9-96 4-10-96 WEATHER: CREW: SM-CE CIR. NO. 5

PT. NO.	(+)	H.I.	(-)	ELEV.	B.M.	DESCRIPTION
				1195.90		
	4.57	1200.47				
			4.65	95.82		
	4.59	00.41				TOP HDWL - EAST END OF 10X8 (WXH) CONC BOX CULVERT. STA 15+83
235			11.55	1188.86	1188.86	
	11.45	00.31				
			5.18	95.13		
	5.96	01.09				
439			4.42	1196.67	1196.67	SET 1/2 IN. REBAR AT BASE OF STA POST 10+00 (F)
	1.75	98.42				
			3.46	94.96		
	6.67	1201.63				
			3.32	98.31		
	6.81	05.12				
			4.68	00.44		
	5.47	05.91				
430			4.13	1201.78	1201.78	SET P-K NAIL IN ℄ COURTHOUSE RD FOR PANEL PT. (F)
	6.97	08.75				
			1.41	07.34		
	5.96	13.30				
			4.83	08.47		
	5.22	13.69				
			4.15	09.54		
	6.82	16.36				
			3.66	12.70		
	5.63	18.33				
			4.48	13.85		
	4.20	18.05				
409			4.11	1213.94	1213.94	SET P-K NAIL ℄ COURTHOUSE RD FOR PANEL PT. (F)

McLAIN AERIAL INC. JOB NO. 1946

DIFFERENTIAL LEVEL NOTES

P. 7-12

DATE: 4-10-96 WEATHER: CREW: SM-CS CIR. NO. 5

PT. NO.	(+)	H.I.	(-)	ELEV.	B.M.	DESCRIPTION
409				1213.94		
	5.38	1219.32				
			4.84	14.48		
	4.02	18.50				
			3.11	15.39		
	7.14	22.53				
			1.59	20.94		
	4.52	25.46				
			1.40	24.06		
	7.15	31.21				
			2.47	28.74		
	4.41	33.15				
			1.57	31.58		
	6.07	37.65				
			5.75	31.90		
	7.20	39.10				
			2.78	36.32		
	5.62	41.94				
			4.37	37.57		
	5.23	42.80				
			5.59	37.21		
	3.28	40.49				
			1.29	39.20		
	6.97	46.17				
			1.95	44.22		
	7.11	51.33				
			1.19	50.14		
	6.84	56.98				
			1.49	1255.49		

McLAIN AERIAL INC. JOB NO. _____

DIFFERENTIAL LEVEL NOTES

DATE: 9-15-96 WEATHER: CREW: SM-CS CIR. NO. 5

PT. NO.	(+)	H.I.	(-)	ELEV.	B.M.	DESCRIPTION
				1255.47		
	6.87	1262.36				
			3.25	59.11		
	5.14	64.25				
			2.43	61.82		
	3.79	65.61				
			5.64	59.97		
	5.17	65.14				
			5.19	59.95		
	0.22	60.17				
			6.47	53.70		
	1.82	55.52				
			6.64	48.88		
	1.65	50.53				
			4.45	46.08		
270 BM	6.90	52.98				
			2.23	1250.75	1250.75	BENCHMARK USC&GS, BC IN CONC. MKD "Q 362 1967" PUBLISHED AS 1250.58 (88) (+0.7)
	5.17	55.92				
			5.53	50.39		
	4.60	54.99				
			7.78	47.21		
	4.00	51.21				
			9.57	41.64		
	3.61	45.25				
			7.32	37.93		
	2.23	40.16				
			9.03	31.13		
	1.47	32.60				
			8.31	1224.29		

McLAIN AERIAL INC. JOB NO. 1946

DIFFERENTIAL LEVEL NOTES

DATE: 4-15-96 WEATHER: CREW: SM-CS CIR. NO. 5

PT. NO.	(+)	H.I.	(-)	ELEV.	B.M.	DESCRIPTION
				1224.29		
	2.97	1227.26				
			7.67	19.59		
	2.71	22.30				
			7.12	15.18		
	3.56	18.74				
			7.45	11.29		
	5.56	16.85				
298 BM			5.60	1211.25	1211.25	BENCH MARK - USC&GS, BC IN CONC. MKD "D13 1927" PUBLISHED AS 1211.05 (+0.3')
	5.98	17.23				
			5.94	11.29		
	4.14	15.43				
			7.29	08.14		
	4.34	12.48				
			6.37	06.11		
	4.44	10.55				
			6.47	04.08		
	4.42	08.50				
			5.21	03.29		
	4.46	07.75				
			5.60	02.15		
	5.18	07.33				
			4.69	02.64		
	4.27	06.91				
			4.17	02.74		
	7.21	09.95				
			6.19	03.76		
	6.87	10.63				
			6.97	1203.66		

McLAIN AERIAL INC. JOB NO. 1946

DIFFERENTIAL LEVEL NOTES

P. 10-14

DATE: 4-11-96 WEATHER: CREW: SH CS CIR. NO. 5

PT. NO.	(+)	H.I.	(-)	ELEV.	B.M.	DESCRIPTION
				1205.66		
	5.70	1209.36				
			5.11	04.25		
	5.96	10.21				
275 BM			4.35	1205.86	1205.86	BENCH MARK - USC&GS, BC IN CONC. MKD "B 263 1947" PUBLISHED AS 1205.64 (BS) (+0.3)
	6.98	12.84				
			4.43	08.41		
	4.18	12.59				
			5.17	07.42		
	5.21	12.63				
			4.67	07.96		
	5.90	13.86				
			4.51	09.35		
	5.58	14.93				
			4.53	10.40		
	5.91	16.31				
			3.13	13.18		
	8.21	21.39				
			5.67	15.72		
	3.89	19.61				
			4.96	14.65		
	5.80	20.45				
274 BM			4.14	1216.31	1216.31	BENCH MARK, USC&GS, BC IN CONC. MKD "A 263 1947" PUBLISHED 1216.10 (F)
	5.44	21.75				
273 BM			4.33	1217.42	1217.42	BENCH MARK USC&GS STAINLESS STEEL ROD IN SUBSURFACE CONTAINER MKD "P 476 1981" PUBLISHED 1217.22 (-0.2)
	5.47	22.89				
			5.29	17.60		
	5.47	23.07				
			5.35	1217.72		

McLAIN AERIAL INC. JOB NO. 1946

DIFFERENTIAL LEVEL NOTES

DATE: 4-11-96 WEATHER: CREW: SM-35 CIR. NO. 5

PT. NO.	(+)	H.I.	(-)	ELEV.	B.M.	DESCRIPTION
				1217.72		
	5.62	1223.34				
			4.28	19.06		
	5.83	24.89				
			5.01	19.88		
	5.99	25.87				
			5.70	20.17		
	4.10	24.27				
			4.33	19.94		
	4.18	24.12				
			4.87	19.25		
	4.39	23.64				
299 BM			4.94	1218.70	1218.70	BENCH MARK, USC&GS, STAINLESS STEEL RD IN STD W.G CONTAINER MKD "Q476 1981" PUBLISHED AS 1218.52 (88) (-0.2)
	4.04	22.74				
			5.83	16.91		
	3.45	20.36				
			5.83	14.53		
	4.32	18.85				
			5.19	13.66		
	4.81	18.47				
			4.06	1214.41		
	2.71	17.12				
			7.00	10.12		
	6.02	16.14				
			5.64	10.50		
	3.26	13.76				
			6.66	1207.10		
	5.14	12.24				
			6.37	1205.87		

McLAIN AERIAL INC. JOB NO. 1946

DIFFERENTIAL LEVEL NOTES

DATE: _____ WEATHER: _____ CREW: SM-22 CIR. NO. 5

PT. NO.	(+)	H.I.	(-)	ELEV.	B.M.	DESCRIPTION
				1205.87		
	4.92	1210.79				
			5.71	05.08		
	4.45	09.53				
			6.07	03.46		
	3.08	06.54				
			7.55	98.99		
	5.63	04.67				
			3.35	01.32		
	1.81	03.13				
			8.39	94.74		
	3.72	98.46				
			7.79	90.67		
	7.63	98.30				
4.05			5.77	1192.53	1192.53	SET 1/2 IN. REBAR (*)
	9.93	02.46				
			6.46	96.00		
	5.65	01.65				
			5.27	96.38		
	5.09	01.47				
			5.20	96.27		
	5.47	01.74				
			5.34	96.40		
	4.90	01.30				
			4.81	96.49		
	5.27	01.76				
			5.08	96.68		
	4.61	01.29				
			5.33	1195.96		

McLAIN AERIAL INC. JOB NO. 1946

DIFFERENTIAL LEVEL NOTES

P. 13

DATE: 4/12/96 WEATHER: CREW: SAA - CS CIR. NO. 5

PT. NO.	(+)	H.I.	(-)	ELEV.	B.M.	DESCRIPTION
				1195.96		
	5.69	01.65				
			4.93	96.72		
	4.77	01.49				
			5.48	96.01		
	5.30	01.31				
			4.79	96.52		
	5.74	02.26				
			6.32	95.94		
	5.80	01.74				
			5.25	96.49		
	5.07	01.56				
			4.95	96.61		
	5.12	01.73				
402			3.24	1198.49	1198.49	SET 60 d NAIL (F)
	2.91	01.40				
			1.11	00.29		
	6.23	06.52				
			4.84	1201.68		
	6.93	08.61				
			5.77	02.84		
	12.88	15.72				
			4.67	11.05		
	11.47	22.52				
			3.14	19.38		
	5.61	24.99				
			3.49	21.50		
	9.23	30.73				
			1.58	1229.15		

McLAIN AERIAL INC. JOB NO. 1946

DIFFERENTIAL LEVEL NOTES

P. [illegible]

DATE: 4-12-96 WEATHER: CREW: SAI CS CIR. NO. 5

PT. NO.	(+)	H.I.	(-)	ELEV.	B.M.	DESCRIPTION
				1229.15		
	5.39	1234.54				
			4.61	29.93		
	6.43	36.36				
			5.40	30.96		
	8.13	39.09				
			0.70	38.39		
	6.50	44.89				
			5.12	39.77		
	5.79	45.56				
			5.85	39.71		
	9.30	49.01				
			1.38	47.63		
	6.88	54.51				
440			5.44	1249.07	1249.07	SET 1/2" REBAR, 15'± S. OF (E) GATE
	5.53	54.60				
			5.13	49.47		
	7.14	56.61				
262			3.41	1253.20	1253.20	AND BC IN CONC HDWL.
						(END CIR #5)
						CLOSURE IS ACCEPTABLE
A-19					1196.80	DETERMINE ELEV. OF PT. NO. 296
	1.23	1198.03				
296 BM			7.35			
	6.58	97.26		1190.68	1190.68	USCE&S BM BC IN CONC MKD C-13 1927 (+0.4)
			0.46			
					1196.80	✓

McLAIN AERIAL INC. JOB NO. 1946

DIFFERENTIAL LEVEL NOTES

DATE: 4-15-96 WEATHER: CREW: SM-CS CIR. NO. 6

PT. NO.	(+)	H.I.	(-)	ELEV.	B.M.	DESCRIPTION
439					1196.67	SET 1/2" REBAR AT BASE OF STA POST 10+00 (F)
	0.86	1197.53				
			7.85	1189.68		
	3.53	93.21				
			8.09	85.12		
	4.16	89.28				
			5.82	1183.46		
	4.15	87.61				℄ COURTHOUSE RD @ ℄ CHANNEL
267			3.74	1183.87	1183.87	+ CHISLED ON TOP CONC HDWL CTR 3 BARREL CPC
	4.20	88.07				
			4.60	83.47		
	3.43	86.90				
221			5.07	1181.83	1181.83	FCDMC 3" DIA B.C. IN CONC. MKD "STA 19+69.00 EL 1179.62" (18' E RW FENCE) (F)
	2.97	84.80				
			11.30	73.50		
	3.54	77.04				
			4.73	72.31		
	2.69	75.00				
			4.76	70.24		
	3.63	73.87				
			5.38	68.49		
	4.28	72.77				
			4.34	68.43		
	4.59	73.02				
			3.80	1169.22		℄ 479TH AVE @ ℄ DYKE
	0.23	69.45				
222			3.41	1166.04	1166.04	FCDMC 3" DIA BC IN CONC, MKD STA 50+00.00 ELEV 1163.83" (F)

McLAIN AERIAL INC. JOB NO. 1946

DIFFERENTIAL LEVEL NOTES

DATE: 4-15-96 WEATHER: WARM & DRY CREW: SM CS CIR. NO. 6

PT. NO.	(+)	H.I.	(-)	ELEV.	B.M.	DESCRIPTION
				1166.04		
	3.61	1169.65				
223			3.23	1166.42	1166.42	FCD MC 3" D. BC IN CONC MKD" STA 55+00 ELEV 1164.21" (F)
	3.99	70.41				
			4.64	65.77		
	3.74	69.51				
			4.18	65.33		
	4.13	69.46				
			5.44	64.02		
	4.09	68.11				
			6.13	61.98		
	4.00	65.98				
436			5.07	1160.91	1160.91	SET 1/2" RB, EAST END SPILLWAY 05' WEST OF FENC POST ALONG EAST R/W LINE (F)
	2.19	63.10				
			6.74	56.36		
	3.74	60.10				
			6.29	53.81		
	3.99	57.80				
			4.61	53.19		
	5.92	59.11				
			6.02	53.09		
	5.27	58.36				
			6.48	51.88		
	3.48	55.36				
			5.47	49.89		
	5.45	55.34				
431			5.26	1150.08	1150.08	SET 1/2" RB PANEL PT. (F)
	6.17	56.25				
221			5.50	1150.75	1150.75	FCD MC 3" DIA BC IN CONC. MKD "STA 115+94.68 ELEV. 1148.47" 5' EAST OF R/W FENCE (F)

McLAIN AERIAL INC. JOB NO. 1946

DIFFERENTIAL LEVEL NOTES

DATE: 4-13-96 WEATHER: CREW: SAI CS CIR. NO. 6

PT. NO.	(+)	H.I.	(-)	ELEV.	B.M.	DESCRIPTION
				1150.75		
	3.86	1154.61				
225			4.60	1150.01	1150.01	FCDMC 3" DIA BC IN CONC MKD "STA 120+00 ELEV. 1147.71" 1 FT WEST OF EAST R/W FENCE (F)
	4.11	54.12				
226			4.18	1149.94	1149.94	FCDMC 3" DIA BC IN CONC MKD "125+00 ELEV. 1147.64" 8' WEST OF EAST R/W FENCE (+0.2)
	2.19	52.13				
			5.62	46.51		
	4.39	50.90				
432			3.21	1147.69	1147.69	SET 60d NAIL (F)
	0.93	48.62				
			6.22	42.40		
	4.64	47.04				
			6.28	40.76		
	6.33	47.09				
272			2.66	1144.43	1144.43	FCDMC 3" DIA BC IN CONC MKD "STA 144+82 ELEV. 1143.14" (F)
	2.35	46.78				
			8.18	38.60		
	4.39	42.99				
			6.66	36.33		
	4.09	40.42				
227			2.95	1137.47	1137.47	FCDMC 3" DIA BC IN CONC. MKD "STA 159+47.27 EL 1135.14" 5' EAST OF EAST R/W (F)
	2.86	40.33				
433			3.96	1136.37	1136.37	SET 60d NAIL (F)
	1.91	38.28				
			4.93	1133.35		
	4.01	37.36				
			5.57	1131.79		

McLAIN AERIAL INC. JOB NO. 1946

DIFFERENTIAL LEVEL NOTES

DATE: _____ WEATHER: _____ CREW: SMCS CIR. NO. 6

PT. NO.	(+)	H.I.	(-)	ELEV.	B.M.	DESCRIPTION
				1131.79		
	3.30	1135.09				
			4.61	30.48		
	5.12	35.60				
			6.56	29.04		
	4.49	33.53				
271			3.36	1130.17	1130.17	FCDMC 3"DIA BC IN CONC MKD "185+00.00 EL 1127.84' 5' WEST OF EAST R/W FENCE (F)
	4.91	35.08				
228			7.14	1127.94	1127.94	FC DMC 3"DIA BC IN CONC. MKD STA 190+00.00 EL 1125.68" 11' WEST OF EAST R/W FENCE (F)
	6.54	34.48				
229			6.63	1127.85	1127.85	FCDMC 3" DIA BC IN CONC MKD STA 195+00.00 EL 1125.56' 21' WEST OF EAST R/W FENCE (+0.2)
	2.57	30.42				
			6.34	24.08		
	5.87	29.95				
230			2.96	1126.99	1126.99	FCDMC 3"DIA BC IN CONC MKD "STA 202+74.10 ELEV. 1124.71" (+0.2)
	1.79	28.78				
			5.03	23.75		
	5.76	29.51				
231			3.39	1126.12	1126.12	FCDMC 3" DIA BC IN CONC MKD. "STA 210+00.00 EL 1123.86"(F)
	3.31	29.43				
232			5.65	1123.78	1123.78	FCDMC 3"DIA BC IN CONC MKD 215+00.00 EL 1121.53" 13' W. OF EAST R/W FENCE (F)
	5.51	29.29				
233			4.74	1124.55	1124.55	FCDMC 3" DIA B.C. IN CONC. MKD "STA 220+32.69 EL 1122.27" 4' WEST OF E R/W FENCE (+0.4)
	2.02	26.57				
			6.87	1119.70		

McLAIN AERIAL INC. JOB NO. 194

DIFFERENTIAL LEVEL NOTES

DATE: _____ WEATHER: _____ CREW: SM-CS CIR. NO. 6

PT. NO.	(+)	H.I.	(-)	ELEV.	B.M.	DESCRIPTION
				1119.70		
	2.47	1122.17				
			5.97	16.20		
	4.04	20.24				
			8.79	11.45		
	11.90	23.35				
			2.32	21.03		
	7.20	28.23				
437			1.99	1126.24	1126.24	SET 1/2" REBAR (FLUSH)
	0.67	26.91				
			12.39	14.52		
	1.92	16.44				
STA 273+10.06			5.29	11.15	1111.15	DROP STR. NO. 4 ℄ OF CHANNEL
	7.60	18.75				
			7.19	11.56		
	1.21	12.77				
			6.24	06.53		
	5.01	11.54				
234			5.42	1106.12	1106.12	FCDMC 3" DIA BC IN CONC. MKD "STA 245+00.00 EL 1103.79" (F)
	2.93	09.05				
			9.57	99.48		
	3.79	03.27				
434			8.71	1094.56	1094.56	SET 60d NAIL (F)
	4.54	99.10				
			9.49	89.61		
	3.62	93.23				
			6.78	86.45		
	3.05	1089.50				
			7.83	1081.67		

McLAIN AERIAL INC. JOB NO. 1946

DIFFERENTIAL LEVEL NOTES

DATE: 4-14-92 WEATHER: CREW: SM C-S CIR. NO. 6

PT. NO.	(+)	H.I.	(-)	ELEV.	B.M.	DESCRIPTION
				1081.67		
	2.10	1083.77				
439			4.70	1079.07	1079.07	SET 1/2" REBAR (F)
	0.09	79.16				
			6.47	72.69		
	3.85	76.54				
			6.37	70.17		
	4.46	74.63				
			4.75	69.88		
	9.92	79.80				
			4.75	75.05		
	4.83	79.88				
			5.77	74.11		
	2.89	77.00				
25			2.72	1074.28	1074.28	1/4 COR BETWEEN SEC'S 29 & 30 (+0.5) POINT IS ALSO RME 706 ELEV. 1073.67 (88)
		RETURN	—			
25				1074.28	1074.28	
	2.72	1077.00				
			2.89	74.11		
	5.77	79.88				
			4.83	75.05		
	4.75	79.80				
			9.92	69.88		
	6.40	76.28				
			6.63	69.65		
	5.08	74.73				
			4.58	1070.15		

McLAIN AERIAL INC. JOB NO. 1946

DIFFERENTIAL LEVEL NOTES

P. 7-1.

DATE: 4-14-96 WEATHER: CREW: SH-CS CIR. NO. 6

PT. NO.	(+)	H.I.	(-)	ELEV.	B.M.	DESCRIPTION
				1070.15		
	6.17	1076.32				
			4.29	72.03		
	5.57	77.60				
			5.50	72.10		
	5.73	77.83				
26			5.04	1072.79	1072.79	SEC COR 19 20 30 29 (+0.4) ALSO RME 707, ELEV.
	6.79	79.58				
			3.23	76.35		
	8.04	84.39				
421			3.70	1080.69	1080.69	SET 1/2 INS REBAR (F)
	5.93	86.62				
			3.53	83.09		
	6.48	89.57				
			5.65	1083.92		
	10.11	94.03				
			2.44	91.59		
	4.72	96.31				
			6.90	89.41		
	6.62	96.03				
			4.44	91.59		
	7.18	98.77				
435			2.55	96.22	1096.22	SET 60d NAIL (F)
	8.61	04.83				
			3.63	01.20		
	7.10	08.30				
			1.82	06.48		
	5.89	12.37				
			3.05	1109.32		

McLAIN AERIAL INC. JOB NO. 1946

DIFFERENTIAL LEVEL NOTES

DATE: _____ WEATHER: _____ CREW: SM CS CIR. NO. 6

PT. NO.	(+)	H.I.	(-)	ELEV.	B.M.	DESCRIPTION
				1109.32		
	7.05	1116.37				
			1.03	15.34		
	11.91	27.25				
			11.85	15.40		
	12.14	27.54				
			3.78	23.76		
	6.09	29.85				
			3.74	26.11		
	6.04	32.15				
			5.17	26.98		
	5.63	32.61				
			4.77	27.84		
	6.68	34.52				
			6.59	27.93		
	7.04	34.97				
			4.81	30.16		
	2.53	32.69				
			2.93	29.76		
	6.03	35.79				
			5.40	30.39		
	7.14	37.53				
			4.72	32.81		
	5.43	38.24				
			1.88	36.36		
	4.12	40.48				
			3.02	37.46		
	5.59	43.05				
			6.79	1136.26		

McLAIN AERIAL INC. JOB NO. 1946

DIFFERENTIAL LEVEL NOTES

P. 9-1.

DATE: _____ WEATHER: _____ CREW: SAI-CS CIR. NO. 6

PT. NO.	(+)	H.I.	(-)	ELEV.	B.M.	DESCRIPTION
				1136.26		
	6.59	1142.85				
			4.74	38.11		
	5.76	43.87				
STA 144+82			6.25	37.62	1137.62	TOP OF DROP STR. NO.3
	7.15	44.77				
			0.31	44.46		
	4.70	49.16				
			7.41	41.75		
	6.35	48.10				
			0.40	47.70		
	5.58	53.28				
			3.34	49.94		
	3.73	53.67				
			3.65	50.02		
	4.95	54.97				
			4.20	50.77		
	5.86	56.63				
			6.53	50.10		
	6.11	56.21				
			6.12	50.09		
	7.02	57.11				
			3.35	53.76		
	4.63	58.39				
			4.78	53.61		
	4.27	57.88				
			3.40	54.48		
	6.82	61.30				
STA 81+83			6.18	1155.12	1155.12	TOP OF DROP STR NO.2

McLAIN AERIAL INC. JOB NO. 19-6

DIFFERENTIAL LEVEL NOTES

DATE: _____ WEATHER: _____ CREW: SM-CS CIR. NO. 6

PT. NO.	(+)	H.I.	(-)	ELEV.	B.M.	DESCRIPTION
				1155.12		
	10.28	1165.40				
			4.46	60.94		
	5.00	65.94				
			3.71	62.23		
	6.44	68.67				
			4.65	64.02		
	5.61	69.63				
			6.51	63.12		
	7.23	70.35				
			3.95	66.40		
	3.36	69.76				
			3.73	66.03		
	6.44	72.47				
			5.19	67.28		
	5.63	72.91				
			4.37	68.54		
	6.61	75.15				
			5.45	69.70		
	7.16	76.86				
			3.80	73.06		
	7.97	81.03				
STA 19+69			7.97	73.06	1173.06	TOP OF DROP STR NO. 1
	10.96	83.92				
			2.12	81.80		
	5.54	87.34				
			6.06	81.28		
	5.96	87.24				
			3.35	1183.89		

McLAIN AERIAL INC. JOB NO. 1946

DIFFERENTIAL LEVEL NOTES

DATE: _____ WEATHER: _____ CREW: _____ CIR. NO. 6

PT. NO.	(+)	H.I.	(-)	ELEV.	B.M.	DESCRIPTION
				1183.89		
	6.91	1190.80				
			2.38	88.42		
	4.61	93.03				
			4.08	88.95		
	8.63	97.58				
439			0.89	1196.69	1196.67	MISCLOSURE = -0.02'
						RUN TO 441
437					1126.24	
	12.06	1138.30				
			0.43	37.87		
	12.27	50.14				
			0.50	49.64		
	6.83	56.47				
441			0.99	1155.48	1155.48	SET 1/2" R.B. (+0.7')
	0.80	56.28				
			6.64	49.64		
	0.62	50.26				
			12.39	37.87		
	0.55	38.42				
437			12.17	1126.25	0.01	OK

McLAIN AERIAL INC. JOB NO. 1946

DATE: 3-28-96

GPS 293

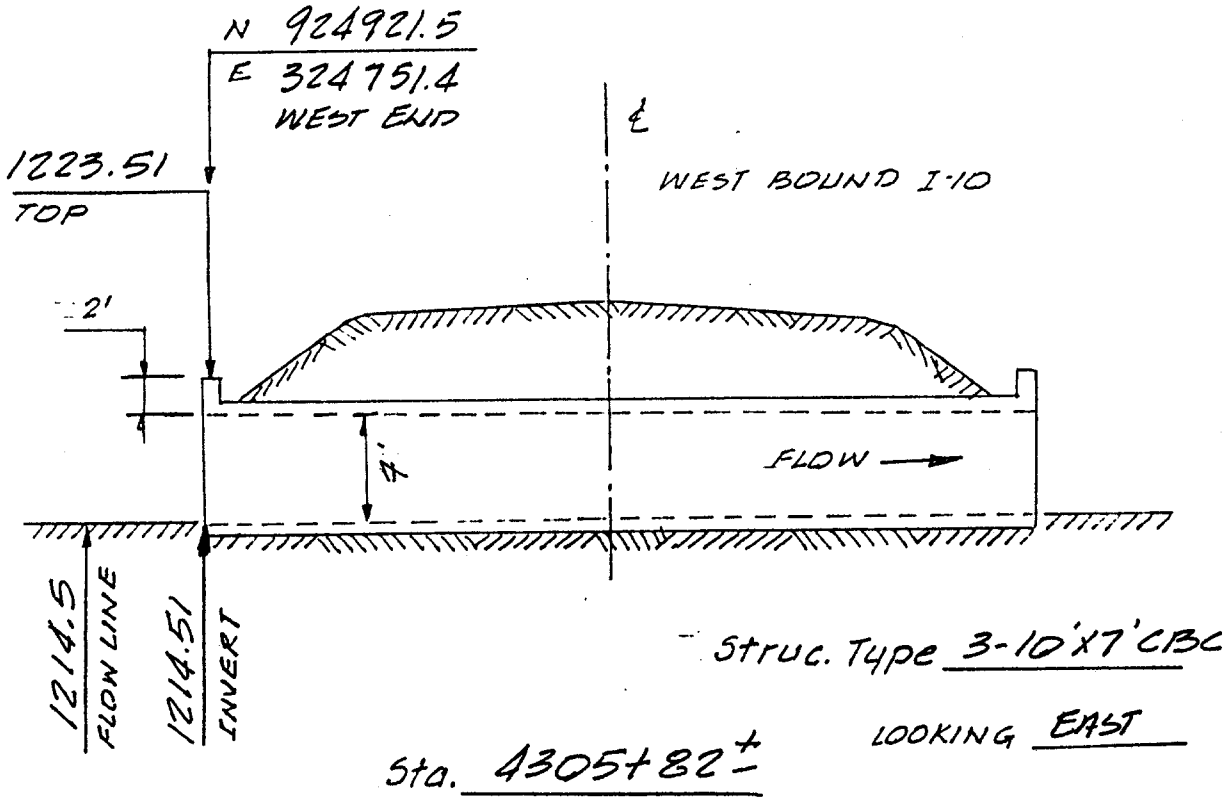

GPS 294

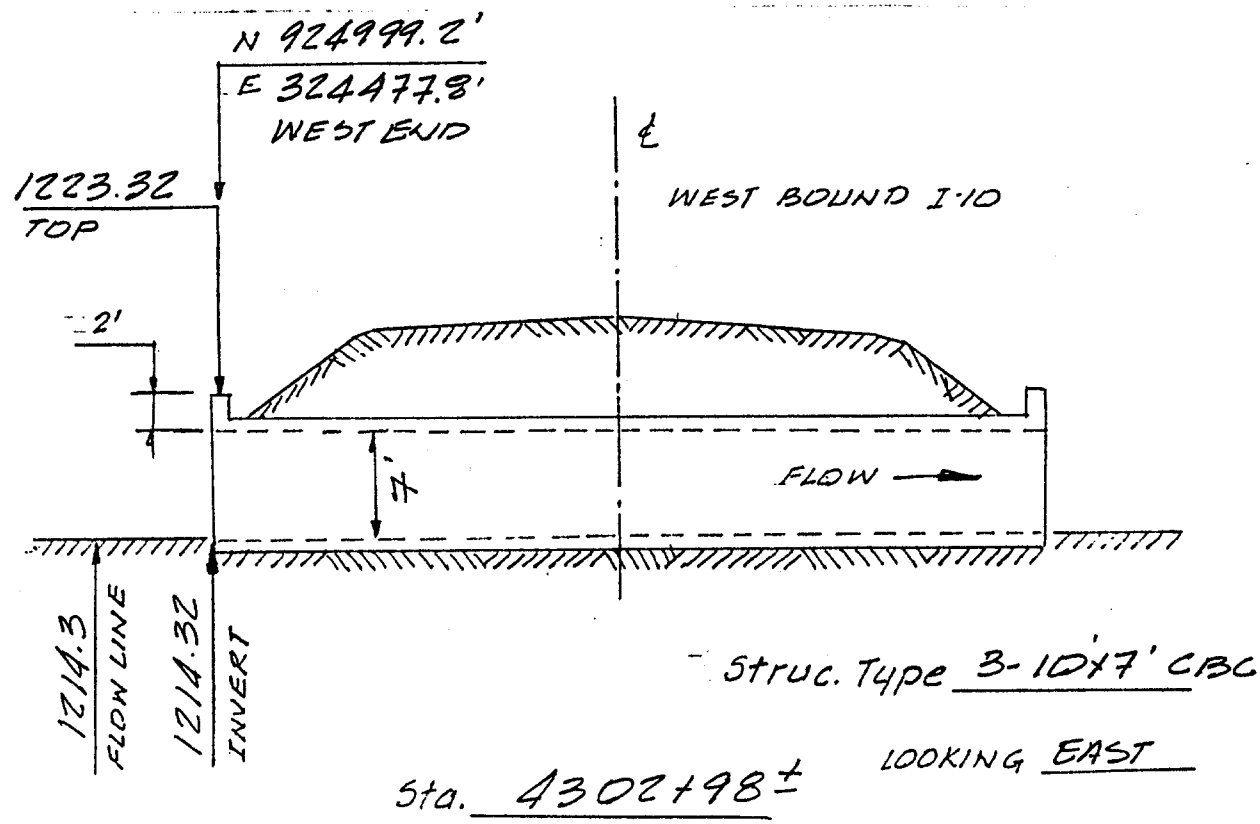

DATE: 3-28-96

GPS 291

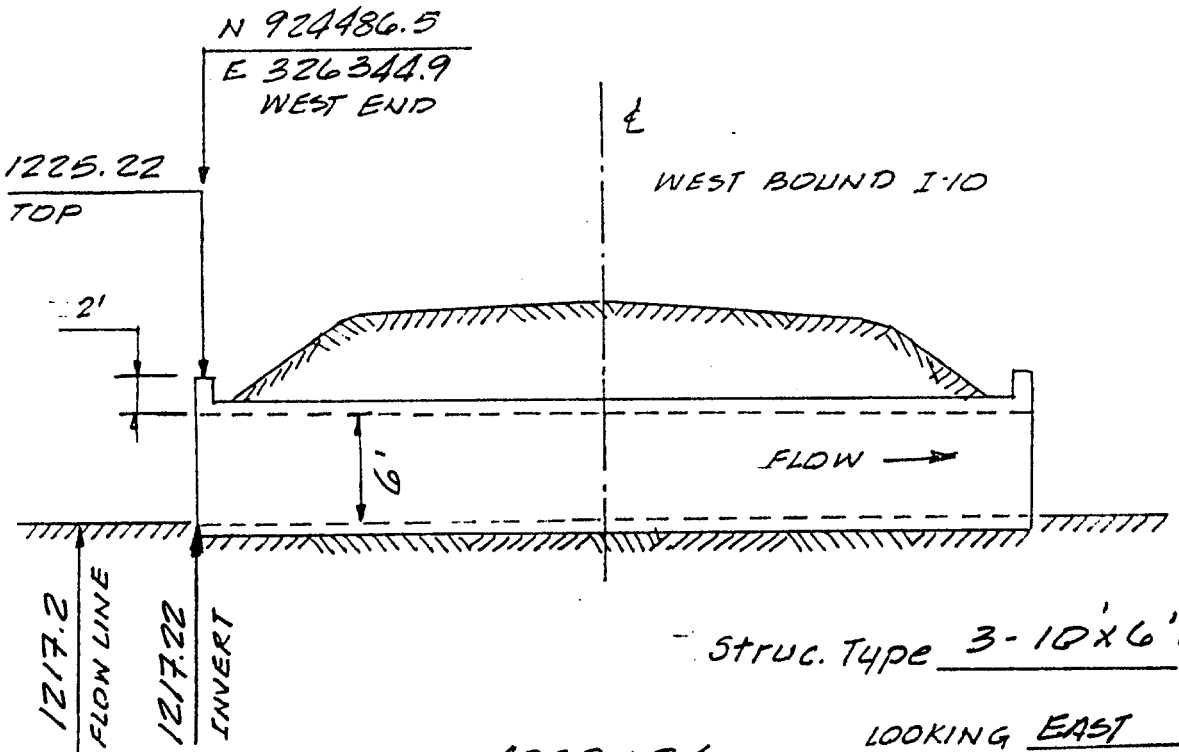

Struc. Type 3-10'x6' CBC

LOOKING EAST

Sta. 4322+34

GPS 292

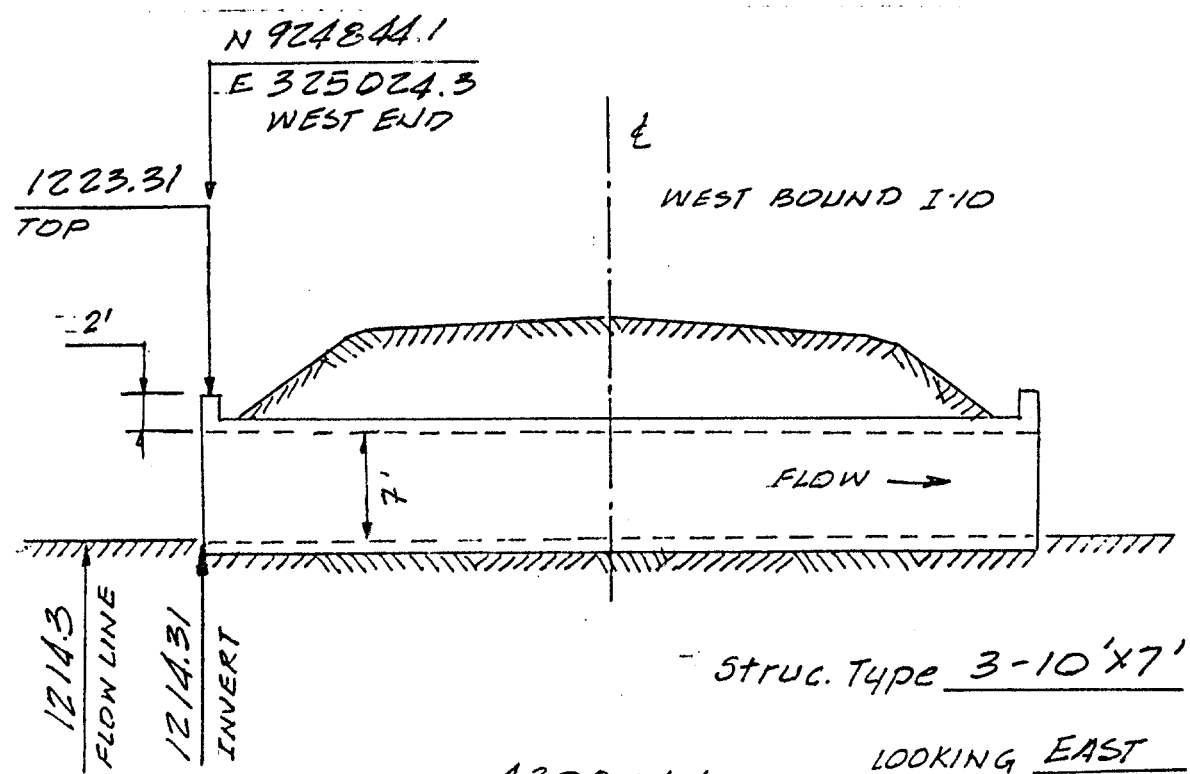

Struc. Type 3-10'x7' CBC

LOOKING EAST

Sta. 4308+66

DATE: 3·28·96

GPS 289

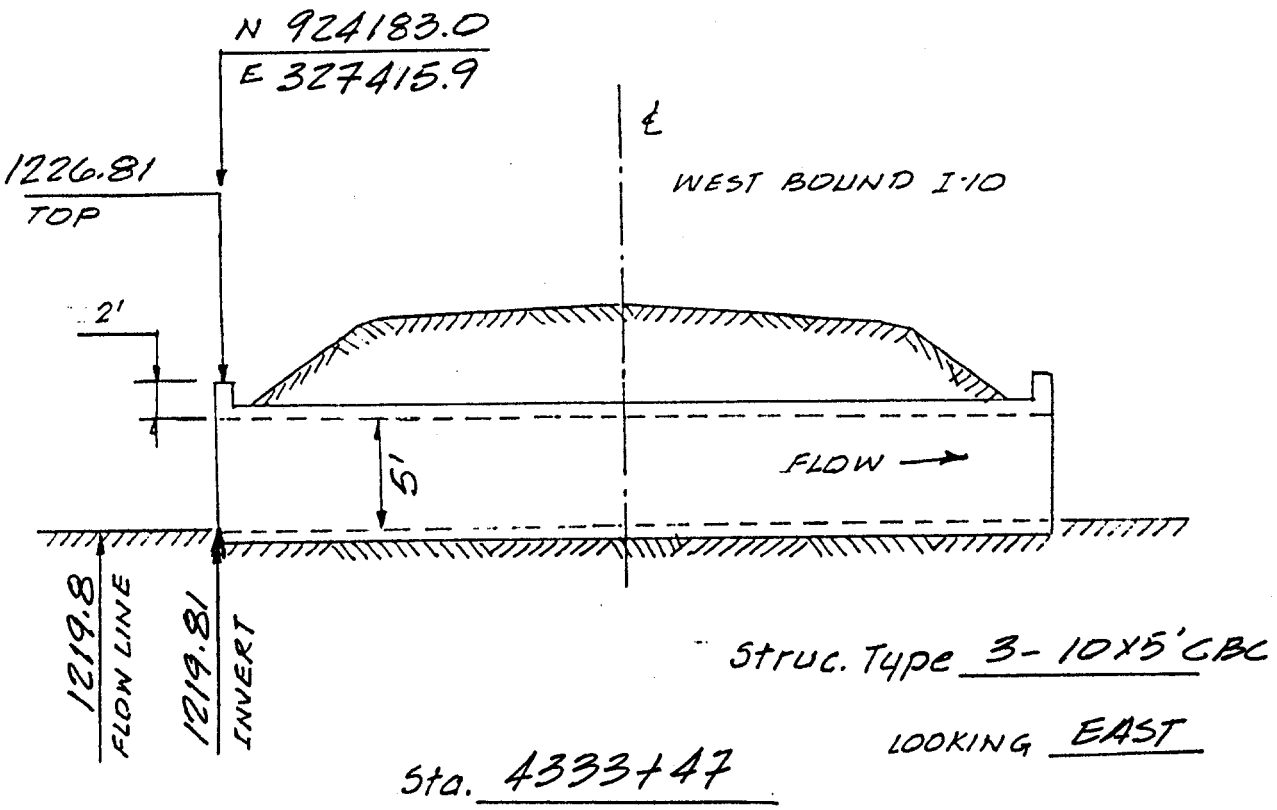

GPS 290

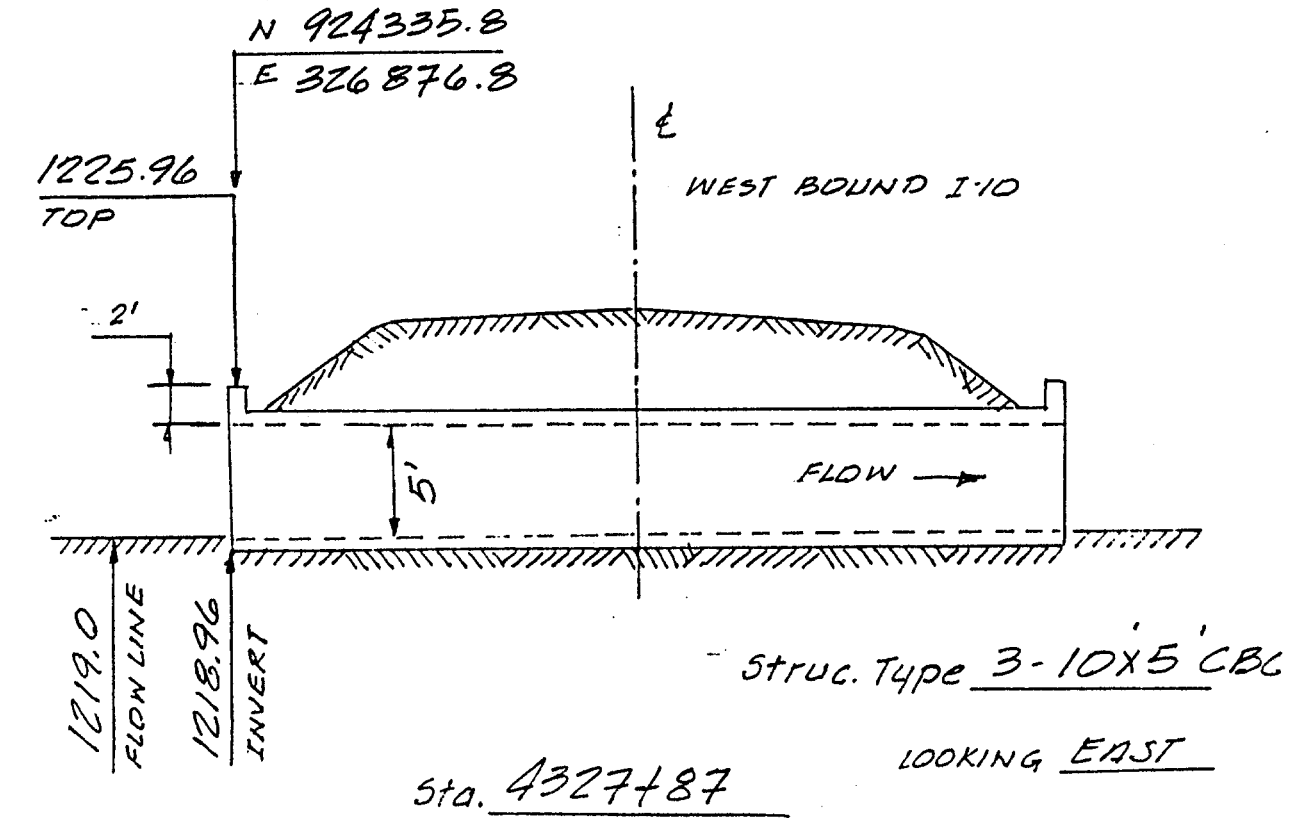

DATE: 3-28-96

GPS 287

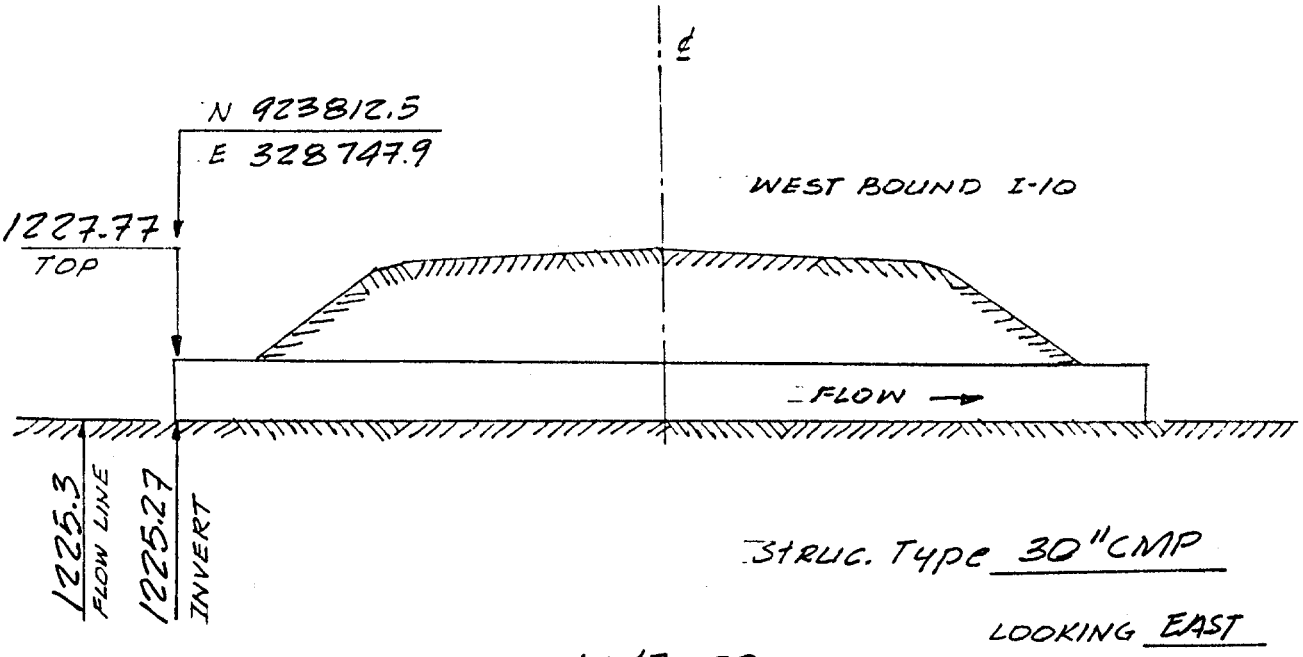

Struc. Type 30" CMP

LOOKING EAST

Sta. 4347+28

GPS 288

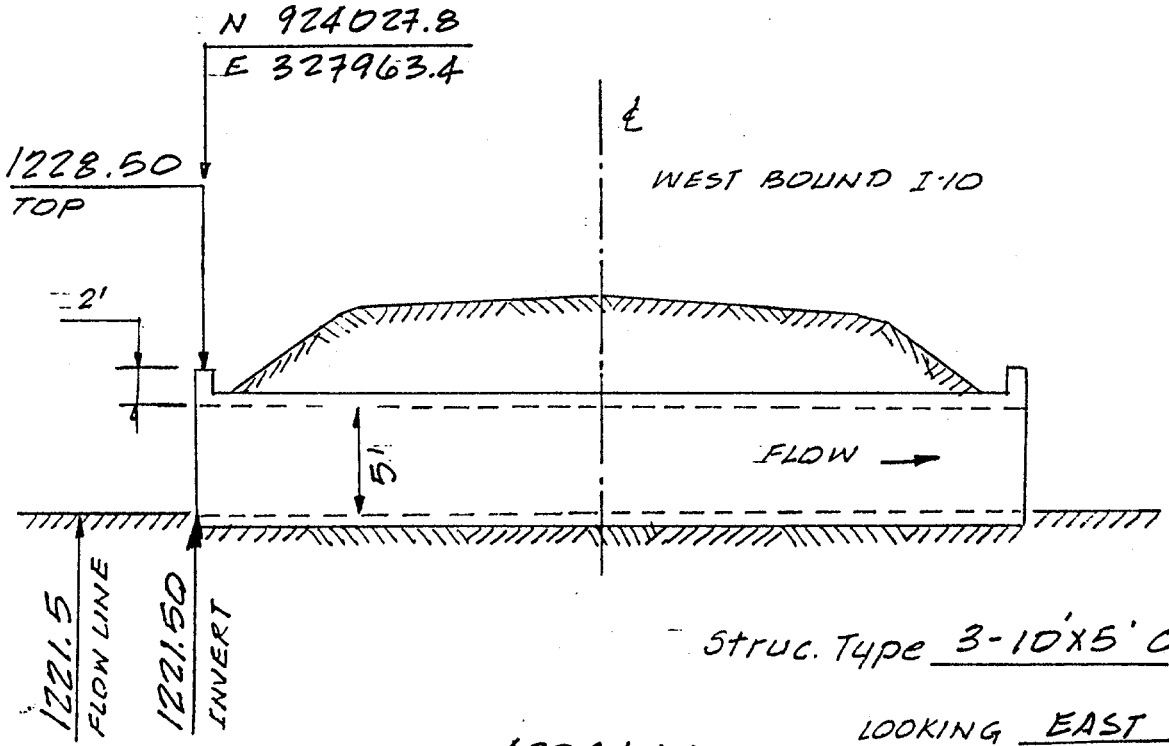

Struc. Type 3-10'x5' CBC

LOOKING EAST

Sta. 4339+15

DATE: 3-28-96

GPS 285

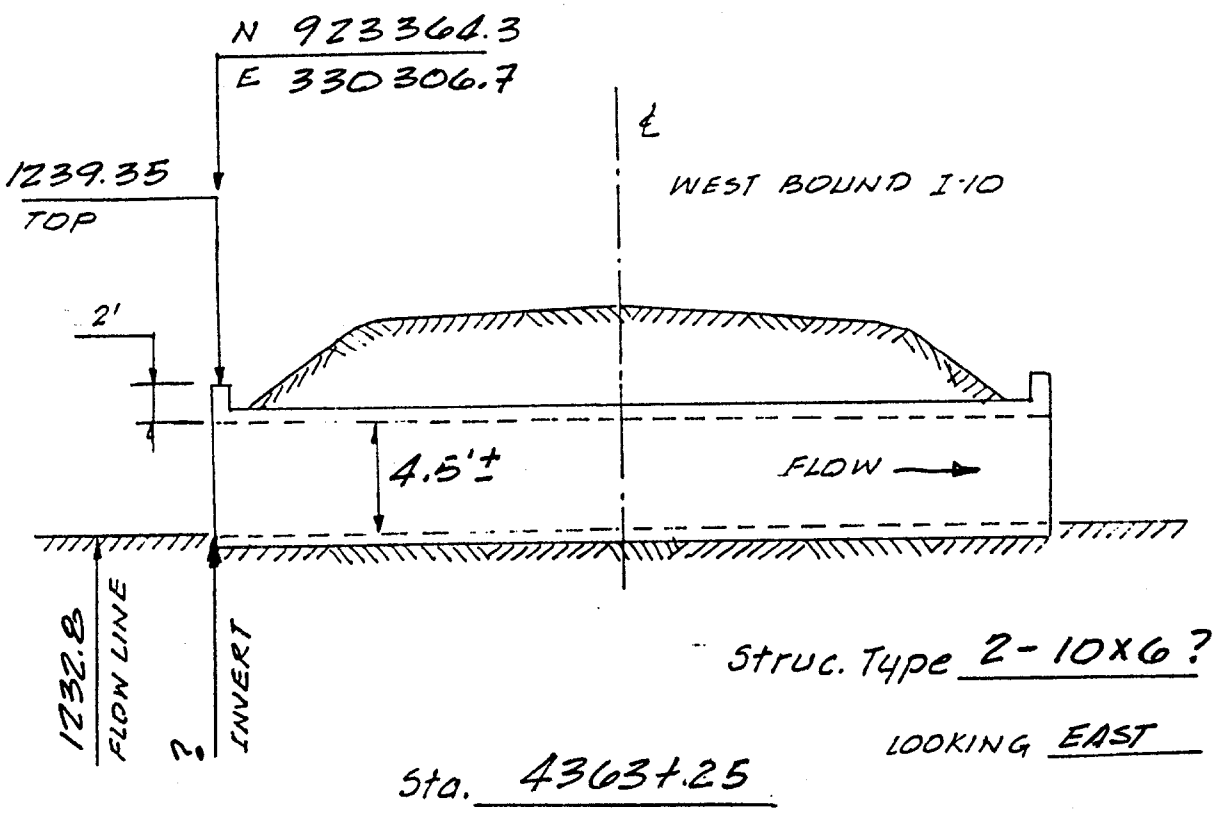

Struc. Type 2-10X6?

LOOKING EAST

Sta. 4363+25

GPS 286

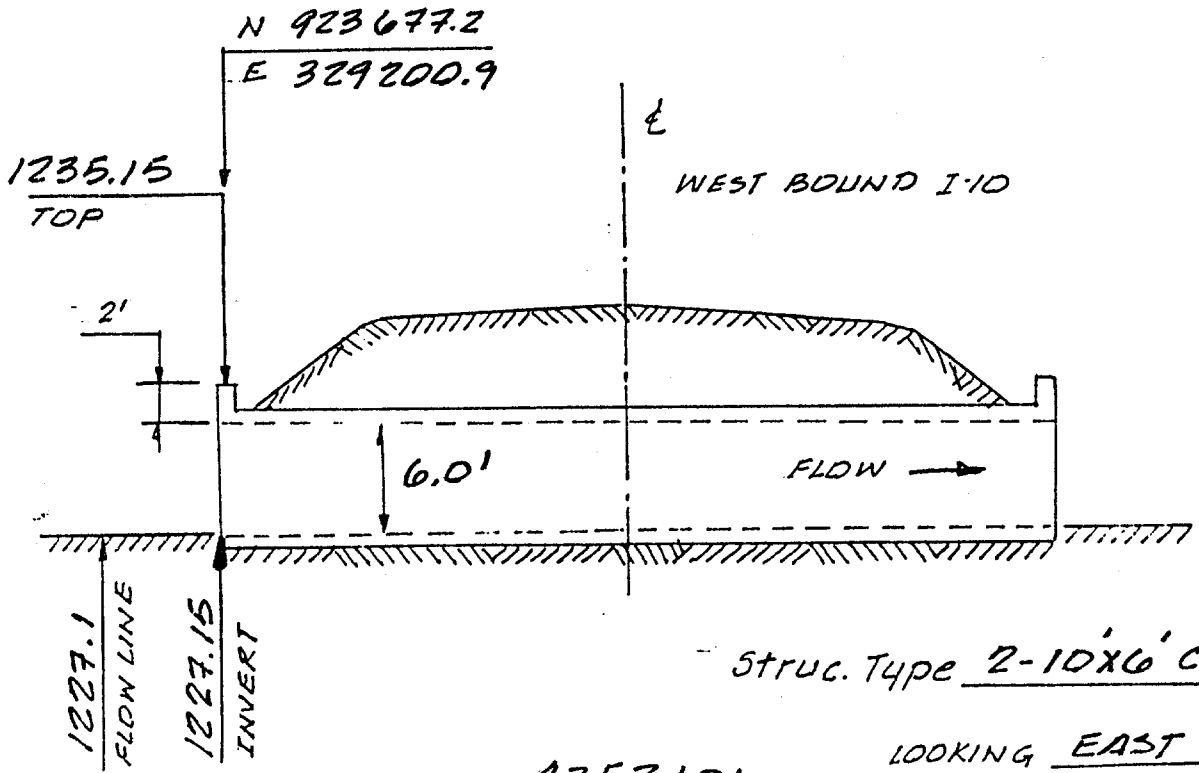

Struc. Type 2-10'x6' CBC

LOOKING EAST

Sta. 4352+01

DATE: 3.28.96

GPS - 283

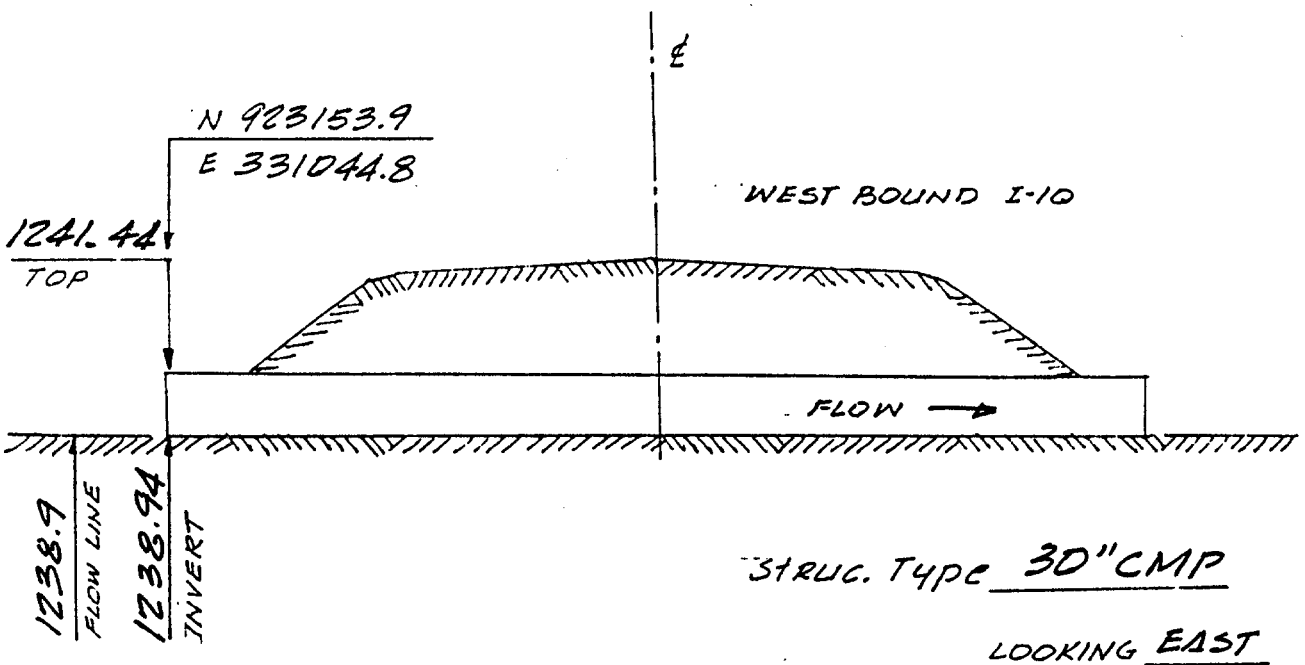

STRUC. TYPE 30" CMP

LOOKING EAST

Sta. 4370+93±

GPS 284

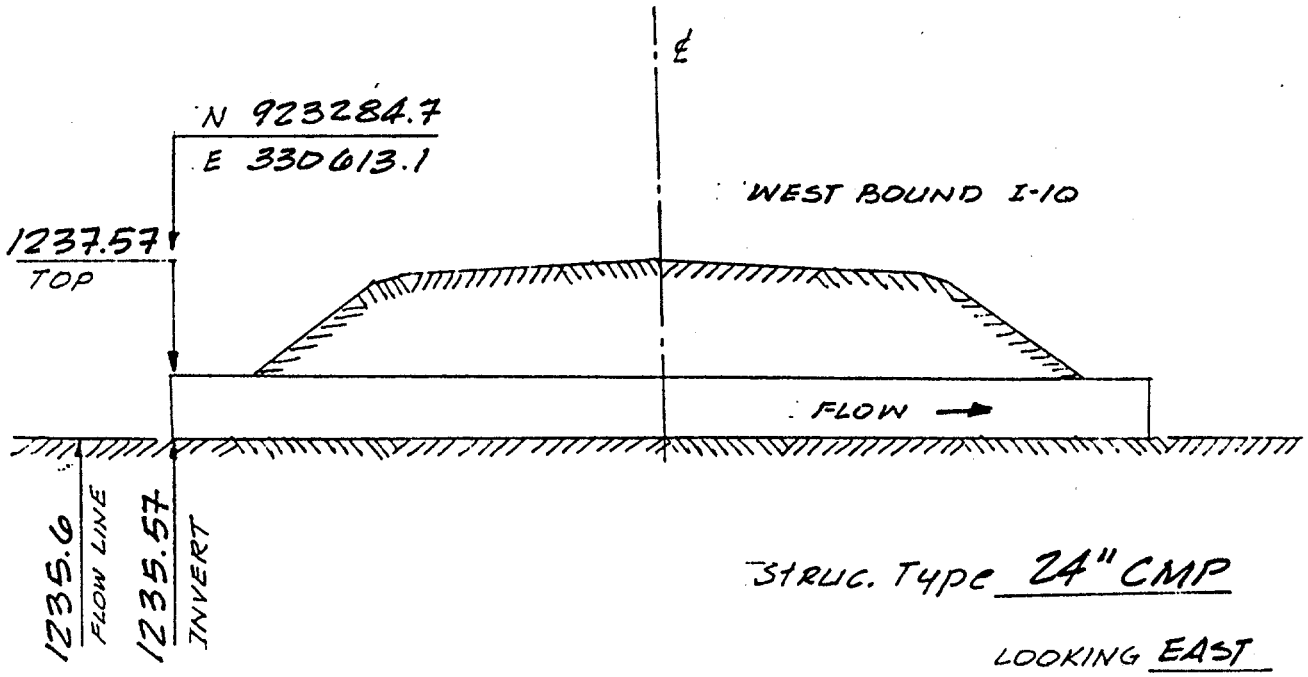

STRUC. TYPE 24" CMP

LOOKING EAST

Sta. 4366+42±

DATE: APR 1996

TOP HEADWALL EL.= 1355.08
BM C1

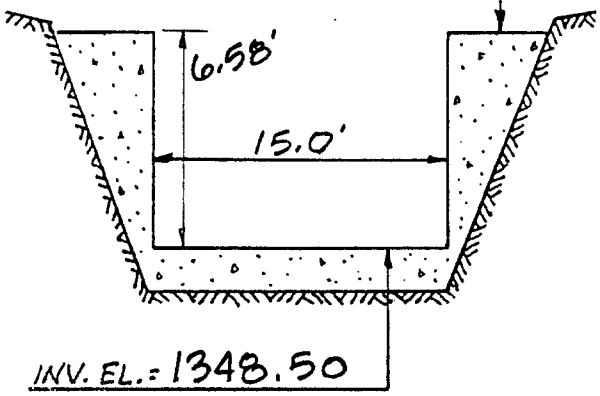

STA. 35+00

CONCRETE DROP STRUCTURE
LOOKING DOWNSTREAM

TOP HEADWALL EL.= 1341.45
BM C2

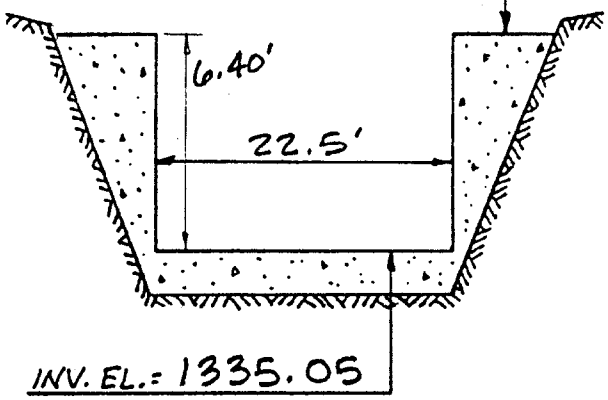

STA. 45+00

CONCRETE DROP STRUCTURE
LOOKING DOWNSTREAM

TOP HEADWALL EL.= 1331.67
BM C3

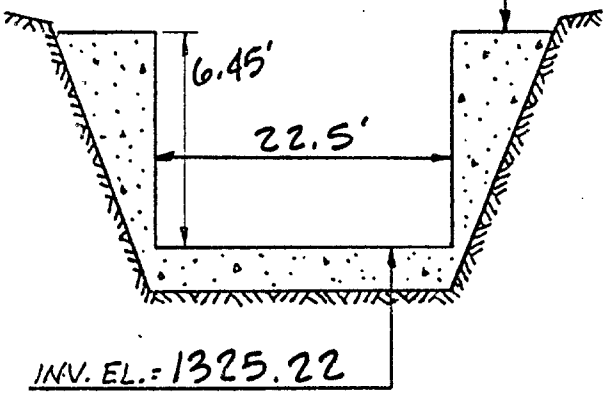

STA. 55+00

CONCRETE DROP STRUCTURE
LOOKING DOWNSTREAM

TOP HEADWALL EL.= 1322.44
BM C4

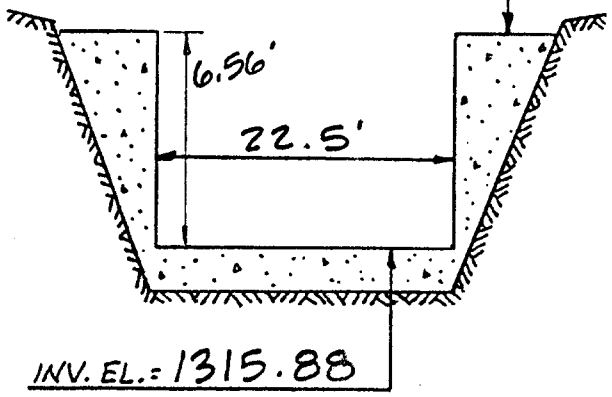

STA. 61+50

CONCRETE DROP STRUCTURE
LOOKING DOWNSTREAM

DATE: APR. 1996

TOP HEADWALL EL.= 1313.05
BM C5

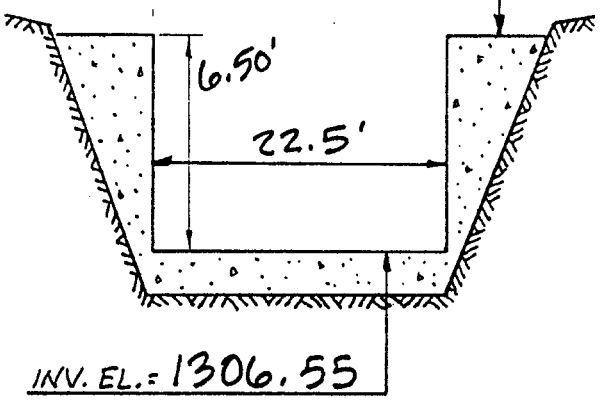

INV. EL.= 1306.55

STA. 68+50

CONCRETE DROP STRUCTURE
LOOKING DOWNSTREAM

TOP HEADWALL EL.= 1303.82
BM C6

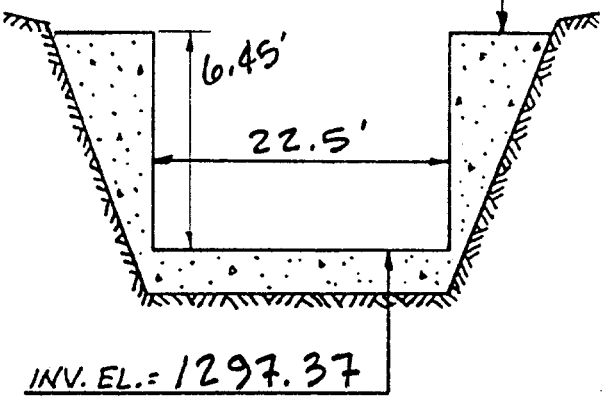

INV. EL.= 1297.37

STA. 75+00

CONCRETE DROP STRUCTURE
LOOKING DOWNSTREAM

TOP HEADWALL EL.= 1294.52
BM C7

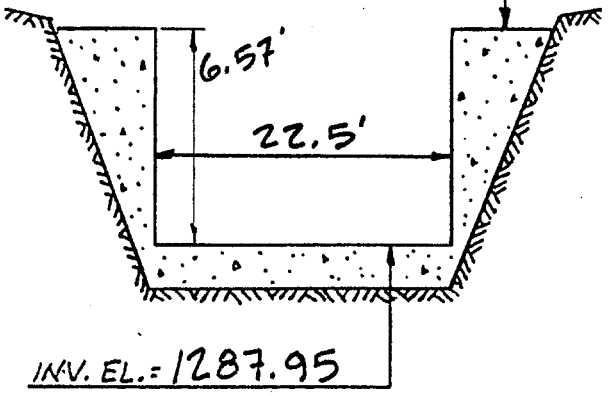

INV. EL.= 1287.95

STA. 82+50

CONCRETE DROP STRUCTURE
LOOKING DOWNSTREAM

TOP HEADWALL EL.= 1284.56
BM C8

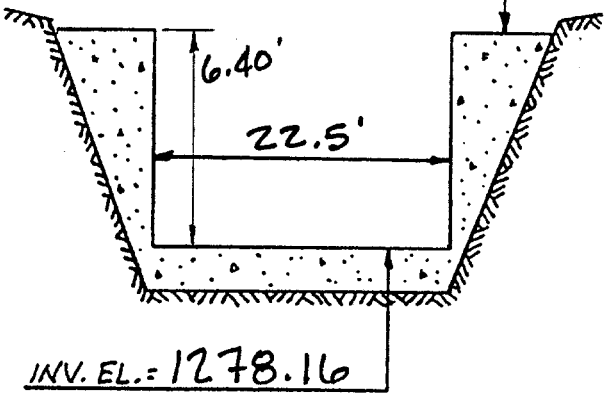

INV. EL.= 1278.16

STA. 89+50

CONCRETE DROP STRUCTURE
LOOKING DOWNSTREAM

DATE: APR 1996

TOP HEADWALL EL.= 1274.55
BM C9

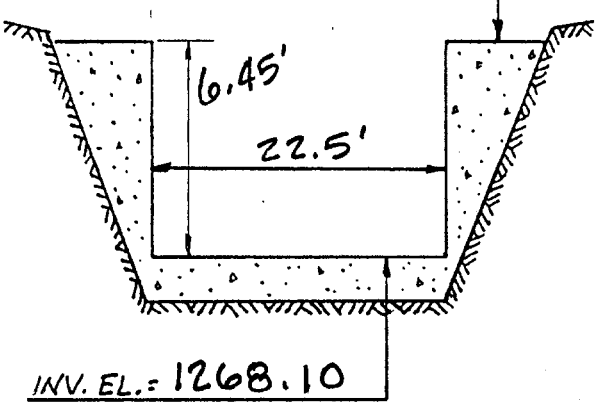

STA. 94 + 50

CONCRETE DROP STRUCTURE
LOOKING DOWNSTREAM

TOP HEADWALL EL.= 1264.44
BM C10

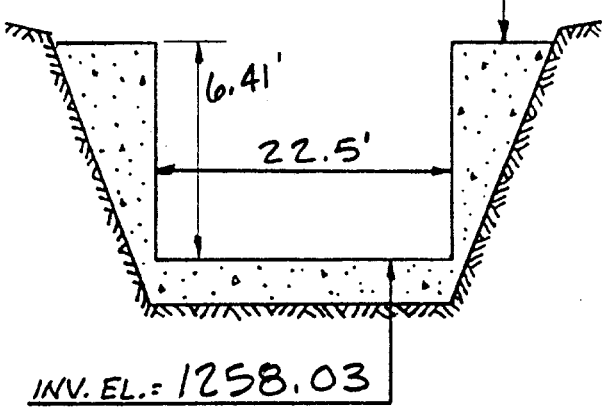

STA. 100 + 00

CONCRETE DROP STRUCTURE
LOOKING DOWNSTREAM

TOP HEADWALL EL.= 1247.63
BM C11

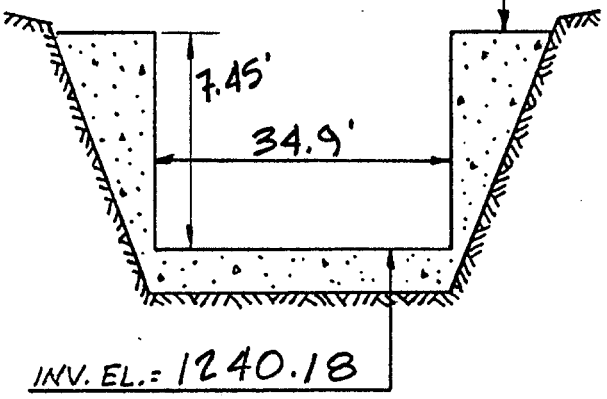

STA. 127 + 81

CONCRETE DROP STRUCTURE
LOOKING DOWNSTREAM

TOP HEADWALL EL.= 1238.37
BM C12

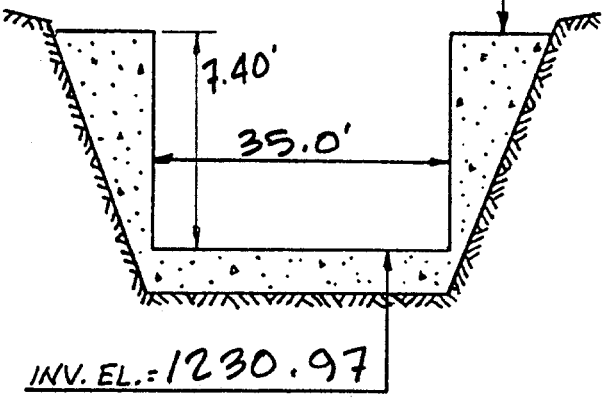

STA. 138 + 61

CONCRETE DROP STRUCTURE
LOOKING DOWNSTREAM

DATE: APR 1996

TOP HEADWALL EL.= 1229.13
BM C13

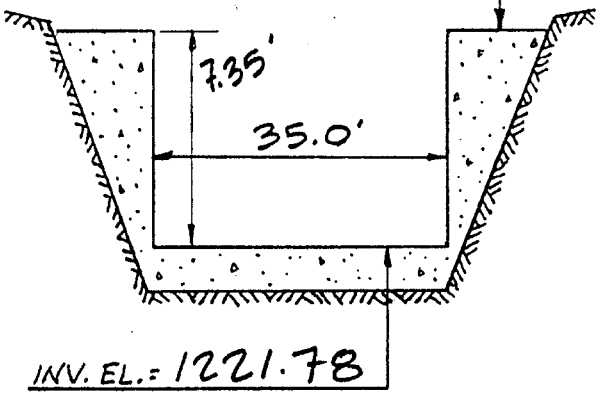

INV. EL.= 1221.78

STA. 149 + 21

CONCRETE DROP STRUCTURE
LOOKING DOWNSTREAM

TOP HEADWALL EL.= 1219.91
BM C14

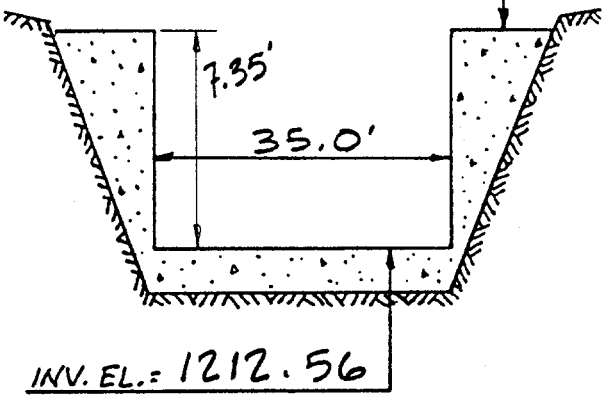

INV. EL.= 1212.56

STA. 158 + 61

CONCRETE DROP STRUCTURE
LOOKING DOWNSTREAM

TOP HEADWALL EL.= 1210.74
BM C15

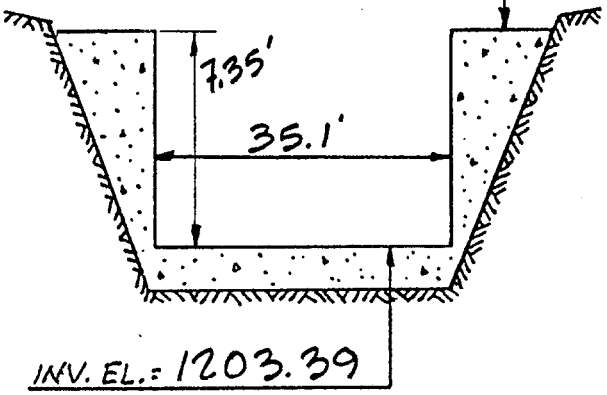

INV. EL.= 1203.39

STA. 165 + 41

CONCRETE DROP STRUCTURE
LOOKING DOWNSTREAM

TOP HEADWALL EL.= 1201.65
BM C16

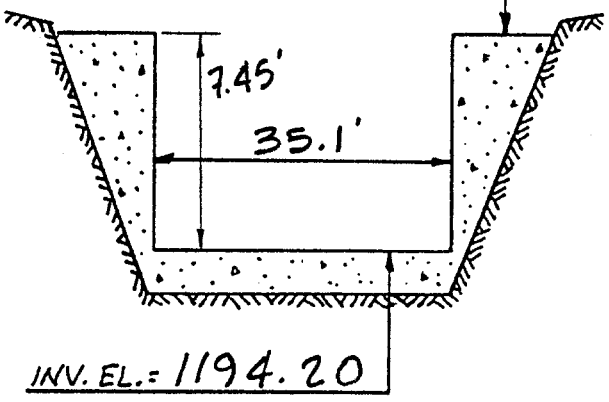

INV. EL.= 1194.20

STA. 173 + 41

CONCRETE DROP STRUCTURE
LOOKING DOWNSTREAM

DATE: _____

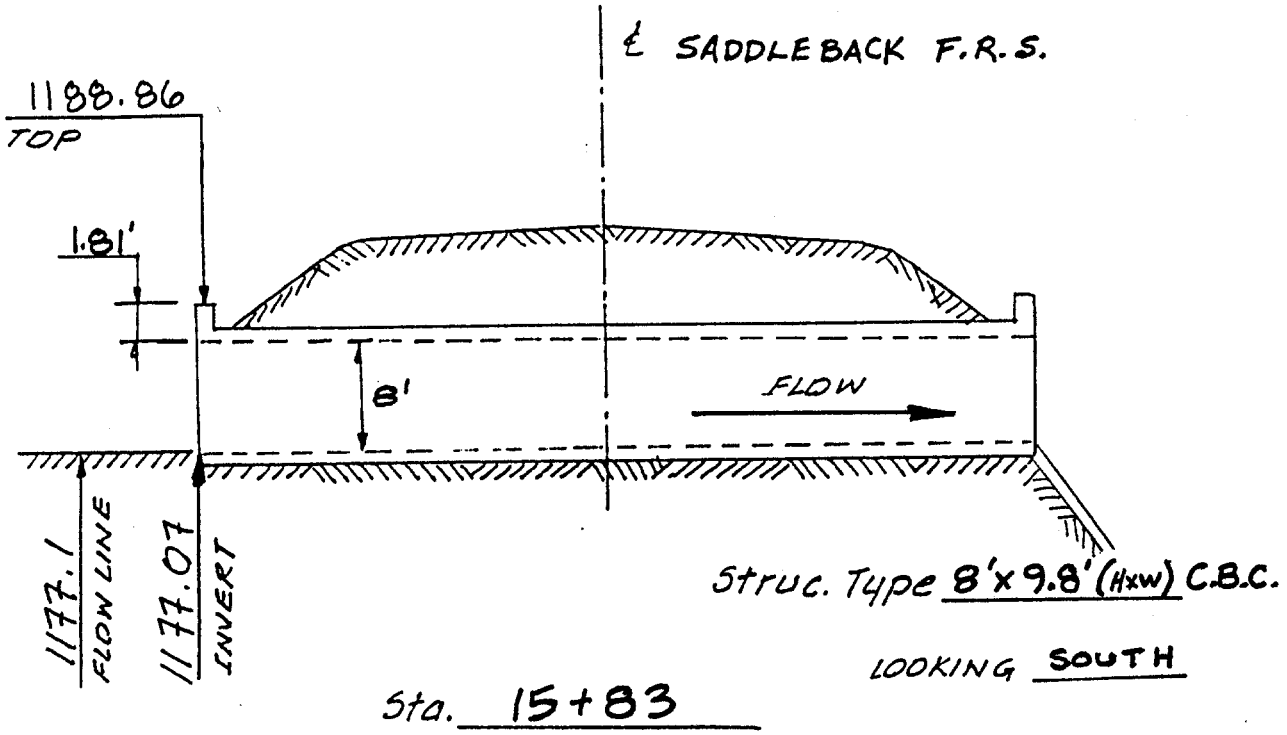

Sta. 15+83

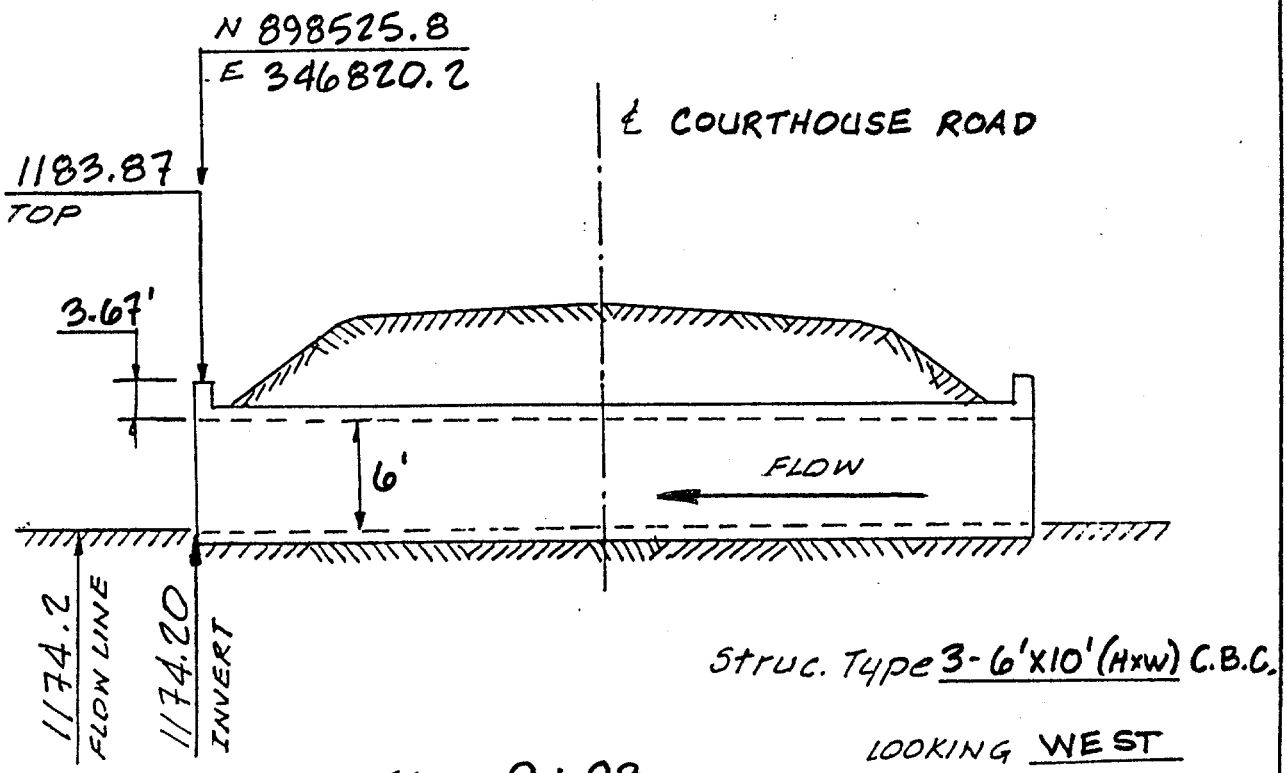

Sta. 9+93

DATE: _____

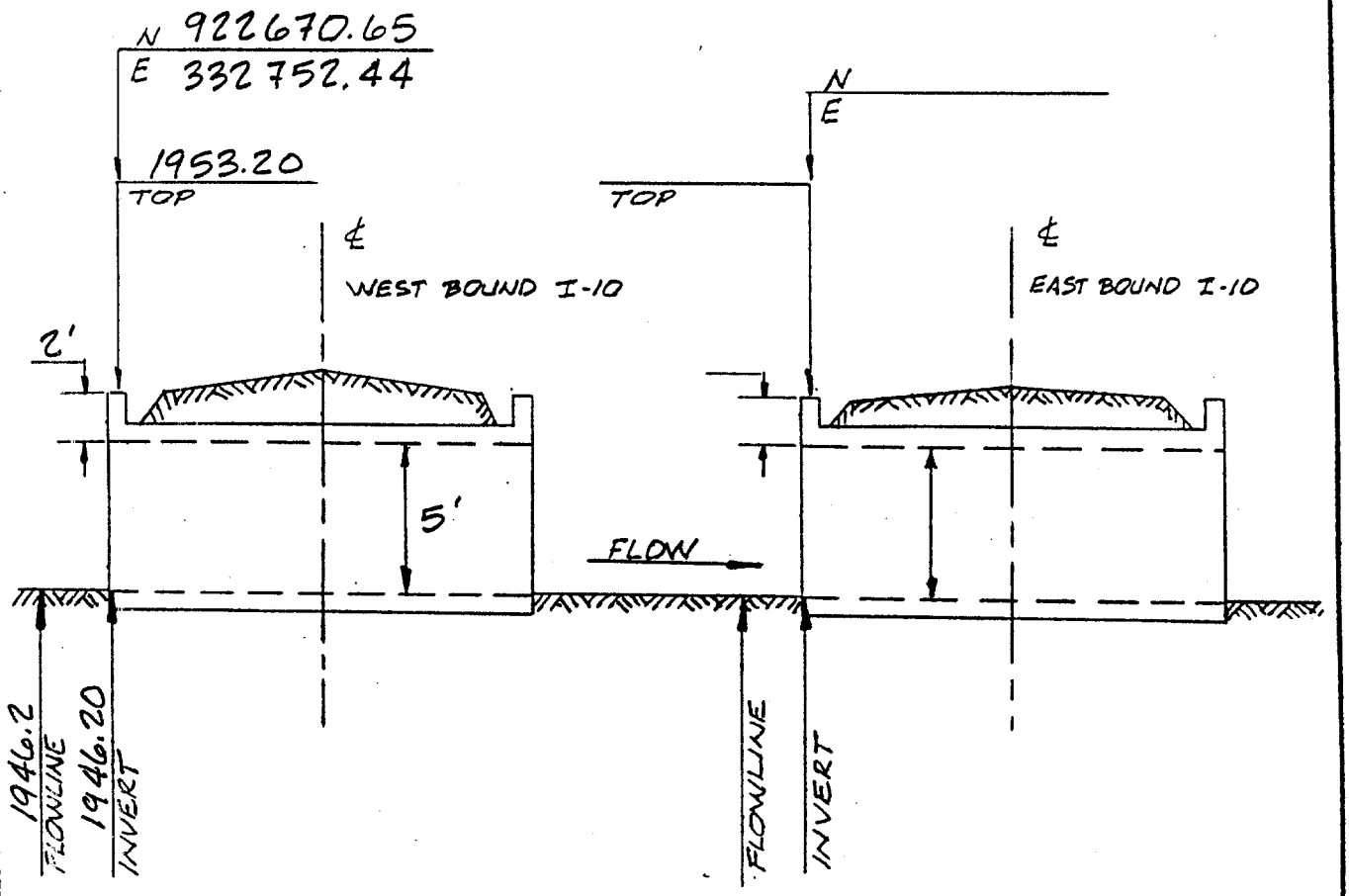

STRUCTURE TYPE 3-5'x10' (HxW) C.B.C. LOOKING EAST

STA. 4388+88 (HWY. STA.)

HARQUAHALA FLOODWAY AT INTERSTATE 10

DATE: _____

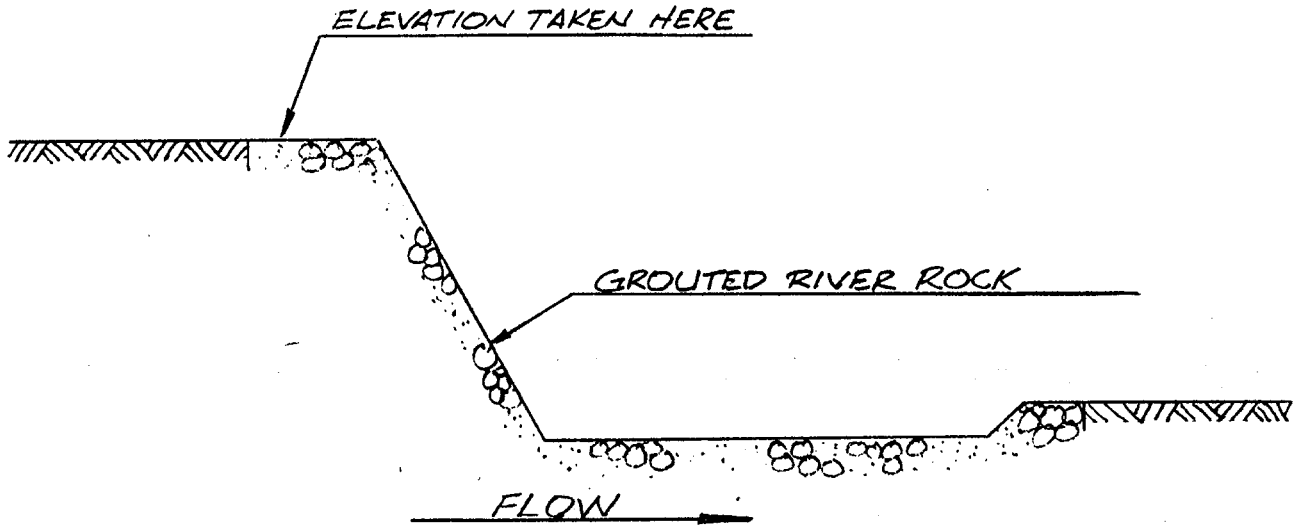

DROP STRUCTURE	STATION	ELEVATION
1	19 + 69	1173.06
2	81 + 83	1155.12
3	144 + 82	1137.62
4	273 + 10	1111.15

PROFILE VIEW OF DROP STRUCTURES

ABBREVIATIONS

AHD	Arizona Highway Dept
BC	Brass Cap
BLM	Bureau of Land Management
BM	Bench Mark
C-REF	Channel Reference monument
Conc.	Concrete
Cor	Corner
DGPS	Differential Global Positioning System
Dia.	Diameter
ft.	feet
GLO	General Land Office
GPS	Global Positioning System
in. or ins.	inch or inches
Lt.	Left
mkd.	marked
NAD	National Adjusted Datum (year)
NAVD	National Adjusted Vertical Datum (year)
NE	northeast
NGS	National Geodetic Survey
NW	northwest
P-K	Standard masonary nail (Parker Kalon)
PC	Point of curve
POT	Point on tangent
R/W	right-of-way
R. or Rs.	Range or Ranges
RB	Rebar
Rt.	Right
SCS	Soil Conservation Service
SE	Southeast
Sec. or sec's.	Section or sections
Sta.	Station
Str.	Structure
SW	Southwest
T. or Tps.	Township or Townships
USC&GS	United States Coast and Geodetic Survey
USDA	United States Department of Agriculture
USDI	United States Department of Interior
1-84	January, 1984
2-84	February, 1984
21+50	2150 ft.
60d	Standard hardware nail, 6 inches long