Casandro Wash Dam
Individual Structure Assessment

Prepared for
Flood Control District of Maricopa County
On-call Phase I Assessment
FCD 2003C015
PCN: 050.36.31
June 2004

Kimley-Horn
and Associates, Inc.

Property of
Flood Control District of MC Library
Please Return to
2801 W. Durango
Phoenix, AZ 85009

On-Call Phase I Assessment

Casandro Wash Dam

Individual Structure Assessment

FCD 2003C015
PCN 050.36.31

KIMLEY-HORN AND ASSOCIATES, INC.
7878 NORTH 16TH STREET, SUITE 300
PHOENIX, ARIZONA 85020
(602) 944-5500

June 2004

Kimley-Horn and Associates, Inc.

Registered Professional Engineer (Civil)
CERTIFICATE NO. 24767
ROBERT A. EICHINGER
DATE SIGNED July 2 2004
ARIZONA, U.S.A.

This document, together with the concepts and designs presented herein, as an instrument of service, is intended only for the specific purpose and client for which it was prepared. Reuse of and improper reliance on this document without written authorization and adaptation by Kimley-Horn and Associates, Inc., shall be without liability to Kimley-Horn and Associates, Inc.

Registered Professional Engineer (Civil) CERTIFICATE NO. 24767 ROBERT A. EICHINGER DATE SIGNED July 2, 2008 ARIZONA, U.S.A.

INDIVIDUAL STRUCTURE ASSESSMENT for CASANDRO WASH DAM

TABLE OF CONTENTS

Section No. **Page No.**

1.0 Executive Summary 1-1

1.1 Dam Description 1-1
1.2 Hydrologic and Hydraulic Considerations 1-2
1.3 Geologic and Geotechnical Considerations 1-5
1.4 Land Use 1-9
1.5 Field Inspection 1-9
1.6 Failure Modes and Effects Analysis 1-10
1.7 Recommendations 1-10

2.0 Description of Dam 2-1

2.1 Purpose of Dam 2-1
2.2 Dam Location and Features 2-1
2.3 Physical Features 2-1

3.0 Technical Review

3.1 Dam Design Criteria 3-1
3.2 Dam Classification 3-2
3.3 Hydrology and Hydraulic Review 3-2
3.4 Geological and Geotechnical Review 3-12
3.5 Supplemental Geotechnical Analysis 3-22
3.6 Construction History 3-25
3.7 Utilities 3-25
3.8 Emergency Action Plan 3-26

4.0 Preliminary Failure Modes 4-1

5.0 Land Use 5-1

5.1 Source of Data 5-1
5.2 Description of Land Use Categories 5-1
5.3 Existing Land Use 5-1
5.4 Proposed Land Use 5-2

Section No. **Page No.**

6.0 Field Inspections 6-1

6.1 Previous Inspections 6-1
6.2 Field Inspection for Structure Assessment 6-3
6.3 Signs of Distress 6-3
6.4 Safety Deficiencies 6-3

7.0 Failure Modes and Effects Analysis 7-1

7.1 Introduction 7-1
7.2 FMEA Procedure 7-1
7.3 FMEA Results 7-2
7.4 FMEA Limitations 7-4

8.0 Recommended Studies and Investigations 8-1

8.1 Hydrologic and Hydraulic Recommendations 8-1
8.2 Geotechnical and Geologic Recommendations 8-2
8.3 Additional Recommendations 8-6

9.0 References 9-1

List of Tables

Table No.

1. Casandro Wash Dam Physical Data
2. Summary of ADWR and Dam Design Criteria

List of Figures

Figure No.

1. Vicinity Map
2. Landownership Map
3. Casandro Wash Dam Break Zone Inundation Area
4. Casandro Wash Dam Emergency Spillway Inundation Area
5. Casandro Wash Dam Top of Dam Pool Delineation
6. General Land use
7. Future Land use

List of Appendices

Appendix.

Tables
Figures
A. As-Built Drawings
B. Crest Settlement Survey Data
C. Emergency Action Plan
D. Preliminary Failure Modes Identification Report
E. Field Inspection Reports
F. Failure Modes and Effects Analysis Report
G. Geological Review Technical Report
H. Geotechnical Review Technical Report

Watershed
The dam was constructed across Casandro Wash, a tributary to the Hassayampa River. The drainage area contributing to the dam is 3.0 square miles.

Flood Pool
The spillway crest was constructed at an elevation of 2155 feet, with a reservoir capacity of 143 ac-ft. The peak volume inflow into the reservoir during the 100-year flood, estimated to be156 acre-feet.

Dam Embankment
The dam is a homogenous earth fill dam with a chimney drain with 3:1 (horizontal to vertical) slopes upstream and downstream. The embankment slopes are protected from slope erosion by a blanket of gravel mulch.

Principal Outlet Works
The low flow outlet is a 36-inch reinforced concrete pipe with a 1.4 square foot orifice plate. The orifice is sized to discharge approximately 20 cfs at the time of the downstream watershed hydrograph peak at the storm drain inlet. The orifice will discharge approximately 30 cfs during the 100-year flood event. (CH2M Hill, 1995c)

Emergency Spillway
The emergency spillway was designed to pass the 1/2 PMF with 3 ft of freeboard with a crest elevation of 2155 ft. The emergency spillway is an 80 foot wide, elliptical crest with a 3:1 slope to the downstream chute. The design hydraulics for the emergency spillway indicated that a discharge of 120 cfs for the 100-year flood will occur. However, a subsequent hydrologic routing for Casandro Wash Dam conducted as part of the Casandro Wash LOMR indicated no discharge from the emergency spillway during the 100-year storm event.

1.2 Hydrologic and Hydraulic Considerations

Casandro Wash Dam was analyzed and designed on behalf of the Flood Control District by the engineering consulting firm of CH2M HILL from January 1994 through the October 1995. Design report documentation indicates that the dam and detention basin were designed to "require the 100-year event be substantially detained below the spillway elevation and/or the maximum outflow be less than or equal to the hydraulic capacity of the proposed storm drain to be constructed downstream of the dam". The concept for the dam was part of the flood control recommendations identified in the Wickenburg Area Drainage Master Study.

The 100-year design event was used to size the principal spillway and reservoir volume. The principal spillway consists of an inlet structure with trash rack and a 36-inch diameter reinforced concrete pipe (RCP). The inlet structure is fixed with a 16-inch orifice plate over the entrance to the 36-inch diameter RCP. The 36-inch RCP is also fixed with a 24-inch gated orifice in the event that the lower orifice is clogged with debris or in the event extra hydraulic capacity is needed in the principal spillway.

According to the CH2M HILL final design report, the Casandro Wash Dam Inflow Design Flood (IDF) for emergency spillway capacity is the routed ½ probable maximum flood (PMF). The top of dam elevation was set to safely pass the routed PMF with no freeboard on the dam.

Most notable of the design hydrology assumptions is that the hydrology was based on future land use conditions in the upstream contributing watershed. The June 1994 Concept Report states that the "future watershed conditions assume 100 percent build-out according to the existing zoning in the watershed to account for potential changes in runoff rates over the long design life of the detention dam".

The Final Design Report documents the following as the final design hydrology:

Design Storm Event	Peak Inflow [cfs]	Maximum Water Surface Elevation In Pool [ft]
100-year	1769	2155.3
½ PMF	5398	2160.2
PMF	10941	not reported

The emergency spillway crest elevation is 2155.0 ft. Note that in this February 1995 report, discharge in the emergency spillway occurs for the 100-year storm event. The proposed top of dam elevation in this report was reported as 2163.5 feet.

An additional hydrologic routing analysis for the detention basin was conducted based on clogging of the low level outlet. This additional hydrologic routing was requested by ADWR. The results of the inlet clogging water surface elevations for the 100-year and ½ PMF are presented in the following table.

Flood Event	Peak Stage [ft]		Peak Discharge [cfs]	
	With Low Flow	Clogging of Low Flow	With Low Flow	Clogging of Low Flow
100-year	2155.3	2155.57	118	151
½ PMF	2160.23	2160.29	3708	3744

A "final" ½ PMF routing was prepared in 1995. The final HEC-1 model assumed the low flow inlet to be clogged. The peak stage reached in the reservoir for the routed flood was 2160.29 ft with a discharge of 3744 cfs.

In September 1996 a technical data notebook for a Letter of Map Revision (LOMR) for Casandro Wash was completed. The limits of the LOMR were from the dam downstream to Sols Wash. The purpose of the LOMR was to re-delineate the 100-year floodplain and floodway downstream of the dam and to incorporate the revised hydrology impacts due to the presence of the dam and reservoir pool. The LOMR study conducted

new 100-year hydrology for the dam based on the District's revised hydrologic methods at that time. The results for the 1996 study 100-year flow are provided in the following table and compared to the final design hydrologic results.

Flow Location	Design [cfs]	LOMR before dam [cfs]	LOMR post dam [cfs]
Into Dam	1769	1261	1265
Out of Dam	118	1261	30

The results of the LOMR hydrology indicate that no discharge occurs for the 100-year storm event through the emergency spillway which is contrary to the results of the final design hydrologic investigation. The estimated 100-year peak discharges in Casandro Wash resulting from the hydrologic analysis from the LOMR study are lower that the estimates made in previous studies. The LOMR study states that the District published an addendum to the hydrology manual which suggested that directly connected percent impervious parameters that were lower than those used in the previous three studies for most land uses. The LOMR study states that this was the only significant hydrologic difference between the various hydrology models.

Kimley-Horn prepared a preliminary ½ PMF and PMF hydrologic model using the 100-year HEC-1 LOMR model as a base. The purpose was to rerun the ½ PMF and PMF to evaluate the effects of the revised hydrology methods used in the LOMR study on these storm events and routing through the dam. The results of the modeling are provided in the following table.

Storm Event	Final Design Hydrology		Kimley-Horn and Associates Post dam hydrology	
	Flow [cfs]	Water surface elevation [ft]	Flow [cfs]	Water surface elevation [ft]
½ PMF in	5398	n/a	4279	n/a
½ PMF out	3744	2160.44	3007	2159.57
PMF in	10941	n/a	8603	n/a
PMF out	9256*	2164.8*	7524	2163.41

* KHA model run of PMF using CH2M HILL ½ PMF HEC-1 model. The emergency spillway crest elevation is 2155.0 ft. The as-built top of dam elevation is 2163.5 feet. n/a = not applicable

The ramifications of the results in the above table indicate less flow into and out of the dam using the LOMR model. The major result for the PMF event shows that overtopping is incipient for this storm event.

1.3 Geologic and Geotechnical Considerations

Geologic Setting. Casandro Wash Dam is located in hilly terrain within the northeast-central portion of the Sonoran Desert section of the Basin and Range Physiographic Province near its boundary with the Arizona Transition Zone Section. The latitude and longitude of the center part of the structure is approximately 33° 58' 04" N and 112° 44' 54" W based on NAD 27 datum. This portion of the Basin and Range is characterized by broad alluvial fans that are locally dissected and gently sloping connected valleys bounded by high, rugged northwest, north, and northeast trending mountains including the Date Creek and Weaver Mountains to the north, the Vulture Mountains to the south and the Wickenburg Mountains to the east that rise abruptly to form broad, elongated, deep, sediment-filled valleys produced by block faulting and folding during past episodes of mountain/basin bounding fault movements (Cooley, 1977). The dam, which is astride Casandro Wash north of the U.S. Highway 60 alignment, is within the town limits of Wickenburg, Arizona off the northeastern flank of the Vulture Mountains.

Seismicity. A seismicity assessment was conducted as part of the Casandro Wash Dam design analysis. Based on the design engineer's review of seismic design criteria from various source, 0.1 g was selected as a "reasonably conservative" peak design acceleration.

The deterministic and probabilistic analysis of seismic hazard affecting the Casandro Wash Dam area was conducted by the District to establish seismic attenuation relationships and the maximum probable earthquake. The closest Quaternary age fault is the Sand Tank Fault located about 77 miles south of the site. According to the District report the maximum credible earthquakes for this fault source ranges between M6.2 and M6.6. The background earthquake, which is estimated to have a higher maximum magnitude of M7.2, was applied to the regression relationship to derive the horizontal ground acceleration. The recommended peak ground acceleration calculated for the Casandro Wash Dam area, based on the background seismic source, is 0.10 g (10 percent of gravitational acceleration) which is the same design value selected by the design engineer.

Land Subsidence. No unconsolidated, compressible basin fill soils are believed to be present beneath the Casandro Wash Dam. The subsurface geological conditions in the embankment dam area, consists of relatively hard, cemented Tertiary age fanglomerate and in the subsurface deposited on crystalline bedrock indicate the potential for land subsidence due to groundwater withdrawal does not exist at the Casandro Wash Dam site.

Earth Fissures. No earth fissures, related to land subsidence, are documented nor reported as occurring within the Casandro Wash Dam project area. Geological conditions in the Casandro Wash Dam area preclude the development of earth fissures at this site.

Foundation Conditions. The Geotechnical Report described the foundation soils in the main channel section as alluvial deposits overlying dense, carbonate-cemented sands and gravels. The surficial, uncemented soils were characterized as gravelly, well-graded sands with varying amounts of silt or clay. The upper soil layer was further described in the Geotechnical Report as dry, medium-dense to dense sands, with approximately 10 to 15 percent gravel and less than 10 percent low plasticity fines. The upper layer varied in thickness from 5 to 12 feet within the basin area, and 16 to greater than 20 feet in the dam foundation. The materials underlying the upper soil layer were characterized as more gravelly, very dense or cemented, and containing fewer fines.

Embankment Materials. The design consists of a homogeneous embankment (Zone I) and 4-foot wide, central vertical chimney filter/drain (Zone II). The vertical filter/drain extends 6 feet into the foundation below the base of the fill in the keyway, and is interconnected to four finger drain outlets (Zone II) that daylight at the downstream toe.

The Zone I materials were assumed to be comprised predominantly of gravelly sands with less than 10 percent silty fines. The designers included a substantial, pervious chimney drain in their design to control the anticipated high quantities of seepage through the Zone I. The drain material (Zone II) was specified to consist of clean granular material with a permeability of 1 foot/min (0.5 cm/sec). Filter compatibility for Zone II with Zone I base soil was a consideration in the drain material design, but the designers considered drainage, not filter protection, as the primary function of the chimney drain.

It is evident based on review of the design assumptions, original field and laboratory investigation results, and construction records, that the materials used to construct the dam are moderately different from the materials that were the basis for design and construction specifications. Actual Zone I materials used in construction were silty or clayey gravelly sands with between 10 and 24 percent, low plasticity fines. The designers had assumed Zone I materials would be predominantly sands with less than 10% silty fines. As a consequence, the results of seepage analyses used to develop specifications for the Zone II filter/drain material may not be representative of the conditions that are now expected in the field.

Filter/Drain Design and Construction. A vertical filter/drain system was installed in the embankment for the purpose of controlling seepage during water impoundment events. The filter/drain system was designed based on the assumption of full impoundment for sufficiently long time periods to result in full development of steady state seepage through the embankment, using permeability assumptions obtained from the original field and laboratory investigation (CH2M Hill, 1995a).

Drainage Capacity. Seepage analyses were performed using an analytical approach and a "simple Darcy's Law seepage model" to estimate how quickly seepage would penetrate into the dam during impoundment events. The Darcy seepage model assumed one dimensional horizontal flow and was used to estimate the rate of advancement of the seepage line towards the drain. Assuming the reservoir pool remained full throughout the

period of infiltration, the results indicated that water would reach the drain within 5 to 10 days.

Drain capacity requirements were then determined based on estimates of the quantity of seepage from a flow net constructed for the upstream Zone I section with the drain as the vertical discharge face and the high pool elevation on the upstream slope as boundary conditions. The assumptions implicit in this calculation are steady seepage and isotropic hydraulic conductivity $k = 5 \times 10^{-3}$ cm/s. Based on these assumptions, the quantity of flow into the chimney drain was computed as approximately 1 gpm/ft of drain. For a 400 ft long drain the total estimated steady-state flow was approximately 400 gpm.

As part of this Individual Structures Assessment, the Kimley-Horn team performed preliminary seepage analyses which indicate that under normal flood scenarios, steady state seepage will not develop in Casandro Dam. Therefore, the vertical filter/drain should see very little to no discharge from the upstream Zone I if the reservoir is drained within 10 days following flood impoundments, as anticipated. It is important to understand however that, because of the limited capacity of the finger drains, the overall drainage capacity of the internal filter/drain system is on the order of only about 34 gpm. This is substantially less than the designer's intended drain capacity of about 1,120 gpm.

Filter Criteria. The original design intent for the central filter/drain was to serve as both a protective filter and as a drain, with its primary function believed by the designers (CH2M Hill) to be as a drain because of the expected high permeability of the embankment materials. In actuality, the primary benefit of the Zone II vertical filter/drain is as a filter to protect against piping of Zone I in the event that transverse cracks develop.

The gradation band specified in the project contract documents was designed in accordance with the NAVFAC guidance document for both filtering and permeability considerations. To achieve the desired kmin = 1 ft/min characteristic, the designers established the filter band such that it met the filter requirements, but also encompassed typical gradation curves for granular drain materials that meet the permeability requirement.

During construction the contractor had some difficulty meeting the specified kmin = 1 ft/min requirements for Zone II filter, and there was considerable discussion in the project correspondence regarding this issue. Following the initial trials, the engineer of record checked the filtering requirements for the revised Zone I gradations using the current methodology and developed a revised filter band. Ultimately, the hydraulic conductivity requirement was reduced to 0.8 ft/min, which allowed the contractor to meet the modified specification while staying within the revised gradation band.

In order to compensate for the assumed reduced hydraulic capacity, the cross-sectional areas of the finger drains were increased by 20 percent. It is assumed that the finger drain capacity as constructed is roughly equivalent to the capacity as calculated previously (approximately 34 gal/min) for the smaller finger drains with higher k.

Original Slope Stability Analyses. The designers evaluated the upstream slope for a rapid drawdown condition under the assumptions that a full phreatic line could develop up to the emergency spillway elevation, and that no dissipation of pore pressures would occur following instantaneous drawdown from full to a pool level corresponding to ½ the full level. This limitation on the instantaneous drawdown level achieved the required minimum factor of safety = 1.2.

The pseudo-static analysis were done assuming a pseudo static coefficient = 0.1g. This coefficient is equal to the estimated peak ground acceleration based on a review of existing regional seismicity data and studies of known faults.

Downstream slope stability was evaluated for both dry slope conditions (assuming the drain intercepts seepage) and an assumed steady seepage condition without the internal drain (phreatic line emerging on the downstream slope). Computed factors of safety were acceptable, even for the conservative seepage assumption for the 3H:1V slope. It is believed that the downstream slope inclination was controlled not by stability considerations, but rather by constructability considerations for the emergency spillway over the dam.

Embankment Settlement. Settlement of the embankment and foundation was estimated using elastic theory. Compressions of between 1 and 1.3 inches were estimated for both the foundation and embankment, resulting in a total settlement of approximately 2 to 3 inches maximum. To accommodate anticipated settlements, the designers recommended increasing the height of the dam by 6 inches.

Erosion Protection below Emergency Spillway. The depth of the cutoff wall below the emergency spillway stilling basin was estimated using a procedure outlined in the District's Hydraulics Manual for estimating local scour hole geometry at outlet structures. To protect the stilling basin from undermining by scour during large flow events, the designers recommended incorporating an 8 ft deep cut-off wall below the stilling basin.

As-built drawings indicate the cutoff wall extends 11.5 ft below the ground surface, and about 5.5 ft below the stilling basin slab. This wall extends around the end and both sides of the stilling basin. Also, a 4-ft deep riprap apron was constructed downstream from the stilling basin. The riprap extends across the 80-ft width of the stilling basin and an estimated 40 feet downstream from the structure. No riprap was placed behind the stilling basin walls on either side or this area may be vulnerable to erosion and scour during major flood events.

Design Phase Site Investigation and Testing. The number of exploration pits and borings, number and types of samples collected, and number and types of laboratory tests that were done during the design phase were quite reasonable for a dam of this size. However, there were some deficiencies in the investigation program that are worth noting. A key issue was the evidently inaccurate characterization of the Zone I materials – the primary material used to construct the dam. The designers believed this material would be predominantly clean to slightly silty gravelly sand with less than 10%, non-

plastic fines. This assumption was based on the results of the laboratory test program. Shear strength and hydraulic conductivity parameters that were assumed for the design analyses were based on laboratory testing of these low fines content materials.

The majority of Zone I materials that were encountered during the construction phase contained significantly higher amounts of low plasticity, clayey fines (>10% up to 24%). The reason for this discrepancy is not totally clear from the project records. It is clear that the engineers of record for the construction phase were aware that this discrepancy could have had significant impacts on key design analyses, especially slope stability and filter design, and check analyses were done to ensure that essential criteria would be met. These check analyses included verification of the filter compatibility for the finer Zone I base soils using modern filter criteria.

Zone II Chimney Drain. The designers assumed that full and rapid development of a phreatic line would occur within the dam during extreme flood events, and used this assumption as primary justification for incorporating a high-capacity internal chimney drain in their embankment design. As constructed, the actual capacity of the internal drain system is severely constrained by the limited cross-sectional area and permeability of the Zone II finger drains. The evident design intent was that the drain system should have substantial hydraulic capacity, on the order of 3 times the estimated worst-case seepage estimate. This estimated design capacity was based on the outlet portion of the drain system comprised of two, 8-inch pipes. However, as constructed, these outlet pipes were not installed, and instead four granular finger drains were constructed to provide the outlets for the chimney drain. KHA could not locate any design calculations related to sizing of the finger drains. The KHA team independent calculation indicates that the total finger drain capacity is about 34 gal/min, which is substantially less than the 1120 gal/min capacity of the outlet pipes assumed by the designers.

The project reviewers and geotechnical engineer of record during construction recognized that the critical function of Zone II is not as a drain, but as a filter to protect against internal erosion and piping of the Zone I. Transient seepage analysis show that seepage into the chimney drain is likely to be minimal, even during extreme flood events, due to the limited impoundment times anticipated for this flood retention structure.

1.4 Land Use

Casandro Wash Dam is located in the Town of Wickenburg, Arizona. The surrounding land use is primarily single family residential, commercial, and office. The downstream residential area is almost fully developed. However, open space exists for further increased development.

1.5 Field Inspection

Casandro Wash Dam is regularly inspected by the District and the Arizona Department of Water Resources. The Kimley-Horn team inspected the facility as part of the Phase I Assessment. None of these inspections identified conditions that indicated an imminent

risk to the integrity of the structure. The structure is well maintained and appears to be in a satisfactory operable condition.

1.6 Failure Modes and Effects Analysis

Kimley-Horn conducted a FMEA for Casandro Wash Dam as part of the Phase I Assessment. The objective of the FMEA was to qualitatively assess the identified risks associated with potential failure modes to Casandro Wash Dam.

The FMEA developed only one Category I and one Category II potential failure modes. These are:

- Adverse Consequences Resulting from Emergency Spillway Discharges During Major Rainfall Events (Category I).
- Seepage Erosion through Right Abutment. (Category II)

The potential failure modes range from a low likelihood of occurrence, high consequence to a high likelihood, low consequence. None of the potential failure modes have a high likelihood, high consequence.

1.7 Recommendations

The following additional studies and investigations are recommended based on updating existing studies, results of the FMEA, and other issues during the Phase I Assessment:

1. An updated dambreak analysis and inundation mapping should be prepared for Casandro Wash Dam. .

2. Kimley-Horn suggests that the number of EAP flowchart percent levels/actions be reduced and consolidated given consideration for the time to fill the impoundment during large event storms.

3. A quantitative risk assessment for the facility will require development of stage-frequency and emergency spillway discharge frequency relationships.

4. Probable Maximum Precipitation. Prepare PMP/PMF using 24-hr and 72-hour durations. Compare routings of these events to PMP 6-hr duration flood.

5. Kimley-Horn recommends that an incremental damage analysis be conducted for Casandro Wash Dam to determine the appropriate inflow design flood (IDF). The current IDF is the ½ PMF.

6. The intergovernmental agreement between the District and the Town of Wickenburg has established a flood zone downstream of the dam along Casandro Wash. This flood zone restricts the construction of habitable structures from within the flood zone of the emergency spillway flows. Kimley-Horn recommends reviewing the

boundaries of the flood zone with a current (2004) aerial photograph to locate structures within the flood zone and to monitor that structures have not been constructed in the flood zone. A comparison with earlier aerial photographs would enable the District to approximate the date of construction of structures within the flood zone.

7. Kimley-Horn recommends that a hydraulic analysis of the emergency spillway and energy dissipator be conducted to confirm the design report hydraulic analysis. The hydraulic analysis should be conducted using the unsteady flow routine of the HEC-RAS model.

8. Kimley-Horn recommends that a spillway inundation study be conducted for Casandro Wash Dam following District methods for such studies.

9. Monitoring. KHA recommends monitoring for seepage through the abutments during impoundment events, and regular visual inspection of the thin fill blanket that covers the natural slope south of the right abutment to ensure it is being properly maintained.

10. Additional Testing to Confirm Zone 1 and Zone 2 Material Characteristics. Sampling and testing of representative samples of both Zone 1 and Zone 2 materials could be done during Phase II to verify geotechnical properties that came into question between the design and construction phases of Casandro Dam.

11. Documentation of Slope Stability and Seepage for Main Dam. The Kimley-Horn team does not anticipate any problems with slope stability under any reasonable loading conditions for Casandro Dam. The original stability analysis and our preliminary stability analyses adequately document factors of safety for all the loading conditions that would need to be evaluated under current NRCS or ADWR criteria.

12. Phase II Evaluation of Potential Seepage and Piping Issues in Left Abutment. A potential Category II failure mode that was recognized during the FMEA involves piping and erosion of materials in the right abutment, either as a result of a separation of the zone between the dam section and the blanket fill, or as a result of cracks or openings that penetrate the thin blanket fill material that was placed on the abutment slope south of the abutment. Additional seepage and slope stability analysis could be performed to evaluate the candidate failure mode associated with potential seepage and piping erosion through the right abutment.

13. Evaluation of Potential Settlement and Elongation of the Principal Spillway. It is normally undesirable to found the outlet pipe on embankment fill. Analyses could be done to estimate the maximum elongation that could occur under expected differential settlements, and compare that axial strain to the tolerances of the pipe and its joints.

14. The District has adopted the findings of the Casandro Wash LOMR study, but has not put those findings into practice (e.g. - not in the key resource documents for the dam). The District should decide on where and how it should implement/use the LOMR results regarding the hydrology for the dam and on the implications of adopting the LOMR results.

15. Provide additional crest settlement monuments along the right abutment and right contact as noted in the FMEA report.

2.0 DESCRIPTION OF DAM

The Casandro Wash Dam is a structural plan element of the Wickenburg Area Drainage Master Study (ADMS), Unincorporated Maricopa County/Town of Wickenburg, Arizona. The ADMS was prepared by the Flood Control District of Maricopa County in 1990. The Wickenburg Watershed is in west central Arizona in Maricopa between the Vulture and Date Creek Mountains. That part of the watershed within Maricopa County is in the Wickenburg Natural Resources Conservation District (NRCD), and that part within Yavapai County is in the Triangle NRCD. The total original watershed area is 100,000 acres and includes the towns of Wickenburg and Congress.

2.1 Purpose of Dam

The results and recommendations of the 1991 ADMS included constructing the Casandro Wash Dam on Casandro Wash. The purpose of the Casandro Wash Dam is to provide flood and erosion control benefits for downstream developments (primarily commercial and urban areas). The Casandro Wash Dam was designed to control runoff from the 100-year event. The inflow design flood for the dam is the 1/2PMF.

2.2 Dam Location and Features

Casandro Wash Dam is located approximately 1500 feet upstream of Mariposa Drive in the Town of Wickenburg, Arizona. The Casandro Wash Dam is located across Casandro Wash wash, a tributary to the Hassayampa River. **Figure 1** provides a location map of Casandro Wash. The project consists of the dam embankment structure, principal spillway, a reinforced concrete chute emergency spillway, and energy dissipater/stilling basin.

The reservoir behind the dam is 11 acres with a capacity of 143 acre-feet. A permanent pool will not be retained in the reservoir, instead, the dam and reservoir are designed to trap floodwater and store it only for as long as it takes to release it slowly and safely downstream. Reservoir capacity is then restored to handle future flood.

The emergency spillway is a reinforced concrete chute spillway located in the middle of the embankment. Construction of the FRS and appurtenant structures was completed by the CH2M Hill in June 1995.

2.3 Physical Features

The Casandro Wash Dam is a homogenous earth fill structure with a central chimney drain/filter. The length of the dam is 1,011feet with a maximum height of 32.5 feet and crest width of 14 feet. The reservoir capacity is approximately 143 acre-feet at the emergency spillway crest elevation, 2155 feet. The dam was designed with 2 acre feet of sediment storage (100-year). Casandro Wash Dam is located in the Town of Wickenburg, Arizona north of the intersection of U.S. 60 and Mariposa Avenue. The

maximum recorded impoundment for Casandro Wash Dam is 65 acre-feet with a stage of 11.3 feet at the Dam (September 26, 1997) (ADWR; 2004a).

Watershed
The dam was constructed across Casandro Wash, a tributary to the Hassyampa River. The drainage area contributing to the dam is 3 square miles (CH2M Hill, 1995c).

Flood Pool
The spillway crest was constructed at an elevation of 2155 feet, with a reservoir capacity of 143 ac-ft (CH2M Hill, 1995c). The peak volume inflow into the reservoir during the 100-year flood, estimated to be 156 acre-feet (CH2M Hill, 1995c).

Dam Embankment
The dam is a homogenous earth fill dam with a chimney drain with 3:1 (horizontal to vertical) slopes upstream and downstream. The embankment slopes are protected from slope erosion by a blanket of gravel mulch.

Principal Outlet Works
The low flow outlet is a 36-inch reinforced concrete pipe (RCP) with a 1.4 ft^2 orifice plate. The orifice is sized to discharge approximately 20 cfs at the time of the downstream watershed hydrograph peak at the storm drain inlet. And approximately 30 cfs during the 100-year flood event (CH2M Hill, 1995c). The orifice rating curve was developed by the HEC-1 model assuming an orifice coefficient of 0.6 and an inlet elevation of 2,135 feet.

Emergency Spillway
The emergency spillway was designed to pass the 1/2 PMF with 3 ft of freeboard with a crest elevation of 2155 ft. The emergency spillway is an 80 foot wide, elliptical crest with a 3:1 slope to the downstream chute. The emergency spillway will discharge 120 cfs for the 100-year flood (CH2M Hill, 1995c). However, a subsequent hydrologic routing for Casandro Wash Dam conducted as part of the Casandro Wash LOMR indicated no discharge from the emergency spillway during the 100-year storm event.

Table 1 provides a summary of the physical data for the dam.

Section 3.0 Technical Review

The purpose of the technical review was twofold. First the project assessment team reviewed the existing and available engineering records related to the dam and its construction. Secondly, through this review the project assessment team became familiar with the structure, became familiar with the history of the structure, and acquainted the team with the basis of analysis and design. The review also provides for a review of original design criteria and design guidelines under which the dam was constructed.

The report presents a discussion of the dam design criteria under which the dam was originally constructed versus the Arizona Department of Water Resources dam safety rules and regulations for jurisdictional dams.

This section of the report presents a review of the technical documentation for the structure. The review of the technical documentation was limited to the available reports, studies, investigations, construction plans and as-builts, specifications, and office correspondence collected as part of this study. The purpose of the review of the technical documents is to assist in the engineering assessment of the structure. The technical document review, along with the field examinations and the failure mode and effects analysis (FMEA), provided a basis to evaluate the structure regarding operational adequacy, structural stability, and compliance with current dam safety rules and regulations.

The information and data reviewed in this assessment were collected from several sources/repositories. These repositories included the libraries and office files of the District and ADWR, Office of Dam Safety. Kimley-Horn has prepared under separate cover, a data collection report, summarizing the information collected for Casandro Wash Dam.

3.1 Dam Design Criteria

Casandro Wash Dam was analyzed and designed on behalf of the Flood Control District by the engineering consulting firm of CH2M HILL from January 1994 through the October 1995. Design report documentation indicates that the dam and detention basin were designed to "require the 100-year event be substantially detained below the spillway elevation and/or the maximum outflow be less than or equal to the hydraulic capacity of the proposed storm drain to be constructed downstream of the dam" (FCD, February 1995). The concept for the dam was part of the flood control recommendations identified in the Wickenburg Area Drainage Master Study (ADMS) (FCD, 1991).

The basis of design for the dam was founded in the Arizona Department of Water Resources (ADWR) report "Guidelines for the Determination of Spillway Capacity Requirements" (May 1991) for a high hazard small dam. CH2M HILL used other (e.g., U.S Bureau of Reclamation, U.S. Army Corps of Engineers) engineering design

guidelines to develop rainfall/runoff for various storm events, analyze and design the emergency spillway, and analyze and design the energy dissipator.

Table 2 (Appendix A) provides a summary of the original design criteria (ADWR May 1994) for the dam and compares the criteria against current (2004) ADWR dam safety rules and regulations for jurisdictional dams. Casandro Wash Dam was designed to substantially detain the 100-year event using ADWR criteria. However, there is discharge in the emergency spillway during the 100-year event according to the results of the basin routing of the 100-year storm.

The 100-year design event was used to size the principal spillway and reservoir volume. The principal spillway consists of an inlet structure with trash rack and a 36-inch diameter reinforced concrete pipe (RCP). The inlet structure is fixed with a 16-inch orifice plate over the entrance to the 36-inch diameter RCP. The 36-inch RCP is also fixed with a 24-inch gated orifice in the event that the lower orifice is clogged with debris or in the event extra hydraulic capacity is needed in the principal spillway.

The hydrology for the emergency spillway design and top of dam elevation design flood is discussed below in the Hydrology and Hydraulics section. According to the CH2M HILL final design report, the Casandro Wash Dam Inflow Design Flood (IDF) for emergency spillway capacity is the routed ½ probable maximum flood (PMF). The top of dam elevation was set to safely pass the routed PMF with no freeboard on the dam.

3.2 Dam Classification

The Arizona Department of Water Resources rules and regulations (May 1991) for jurisdictional dams classifies Casandro Wash Dam as a high hazard, small size dam. Hazard classification is based on factors such as height of the dam, storage capacity, existing and probable future downstream development, uses of the flood pool, operational procedures, type of dam, type of spillway, and other evaluation factors. According to the final design report (FCD, February 1995), Casandro Wash Dam would be classified by ADWR as a small, significant to high hazard dam due to the presence of more than a small number of habitable structures downstream and the potential for appreciable economic losses downstream.

3.3 Hydrology and Hydraulic Review

3.3.1 Hydrology- The design hydrology for Casandro Wash Dam is documented in several design reports. The first report "Casandro Wash Detention Dam Concept Design Report" (FCD, June 1994) provides the methodology and assumptions used in the hydrologic analysis of the contributing watershed for the 100-year and probable maximum flood events. The hydrologic analysis for the 100-year storm event was based on the District's "Drainage Design Manual for Maricopa County, Arizona, Volume I, Hydrology (FCD, 1992). In the June 1994 Concept Report, CH2M HILL documents the hydrologic parameters for rainfall, rainfall loss parameters, unit

hydrograph, and channel and detention basin routing. Most notable of the design hydrology assumptions is that the hydrology was based on future land use conditions in the upstream contributing watershed. The June 1994 Concept Report states that the "future watershed conditions assume 100 percent build-out according to the existing zoning in the watershed to account for potential changes in runoff rates over the long design life of the detention dam".

CH2M HILL prepared an estimate of the probable maximum flood using Hydrometerological Report No. 49 (September 1977). The probable maximum precipitation (PMP) for a local storm was determined from HMR-49 and included the following:

- 1-hour PMP of 11.5 inches
- No elevation adjustment
- 6-hour to 1-hour ratio of 1.32
- Areal reduction of 0.25, 0.5, and 0.75 PMP values (area = 1.24 sq mi)
- No areal reduction adjustment for 1-hour to 6-hour durations
- Corps of Engineers incremental PMP distribution (Engineering Manual No. 1110-2-1411)
- No areal distribution of PMP storm

The following table presents a summary of the hydrologic results from the June 1994 Concept Design Report. The emergency spillway crest elevation is 2153.0 ft and top of dam crest elevation is 2163.5 ft.

Design Storm Event	Peak Inflow [cfs]	Maximum Water Surface Elevation In Pool [ft]
100-year	1769	2153.9
½ PMF	5404	2158.8
PMF	10941	2162.8

The District updated the June 1994 in October 1994 ("Casandro Wash Detention Dam Concept Design Report- October 1994). The hydrologic summary results of the October 1994 report are provided in the following table. The proposed top of dam elevation in this report was reported as 2163.5 feet. The emergency spillway crest elevation was changed to 2155.0 ft. Note that in this October 1994 report, discharge in the emergency spillway occurs for the 100-year storm event.

Design Storm Event	Peak Inflow [cfs]	Maximum Water Surface Elevation In Pool [ft]
100-year	1769	2155.7
½ PMF	5404	2160.2
PMF	10941	2162.8 (overtops dam)

The October 1994 report states that the detention basin outflow will be through a low-flow orifice outlet as well as over the spillway (only for floods greater than the 50-year

event). The spillway elevation and orifice opening were varied to achieve the maximum outflow without exceeding the 339 cfs capacity of the proposed District storm drain improvements downstream of the dam. After optimization, a spillway elevation of 2155.0 ft and an orifice opening of 1.4 square feet were selected.

The October 1994 report estimated the drain time for the detention basin. The October 1994 report states that the basin will drain in approximately 136 hours (5.7 days) and applies to all flows in excess of the 100-year. The report notes that shorter drain times could be achieved by removing or enlarging the orifice or by using a hydraulic gate designed to be operated manually.

CH2M HILL finalized the design of Casandro Wash Dam and documented the final design in their report titled "Casandro Wash Dam Final Design Report" (February 1995). The Final Design Report documents the following as the final design hydrology:

Design Storm Event	Peak Inflow [cfs]	Maximum Water Surface Elevation In Pool [ft]
100-year	1769	2155.3
½ PMF	5398	2160.2
PMF	10941	not reported

The emergency spillway crest elevation is 2155.0 ft. Note that in this February 1995 report, discharge in the emergency spillway occurs for the 100-year storm event. The proposed top of dam elevation in this report was reported as 2163.5 feet.

Note that the final design report did not report results of HEC-1 modeling for the PMF storm event. In order to evaluate the PMF, Kimley-Horn prepared a "what-if" PMF model of Casandro Wash Dam using the ½ PMF HEC-1 model that was included in the CH2M HILL final design report. The results of routing the PMF through the dam and basin indicate overtopping of the dam. The maximum routed water surface elevation was 2164.8 ft or 1.3 feet above the dam crest elevation (2163.5 ft). The duration of overtopping is short, approximately 20 minutes. The time of overtopping, however, occurs during the rising limb of the inflow PMF hydrograph (at hour 3.67). The outflow from the dam from the routed PMF is 9,256 cfs (includes principal spillway, emergency spillway, and overtopping flow).

The June 1994 Concept Design Report indicated no overtopping of the dam from routing the PMF. The October 1994 report indicates overtopping of the dam. It is not clear in either the October 1994 report or the final design report the reason for the change in design concept to allow overtopping of the dam during the PMF event.

Kimley-Horn recommends that an incremental damage analysis be conducted for Casandro Wash Dam to determine the appropriate inflow design flood (IDF). The current IDF is the ½ PMF. The IDF could change to as high as the PMF due to the increased urbanization downstream of the dam. Based on current ADWR dam safety

rules, the IDF may change to between the ½ PMF and PMF depending on downstream incremental damage analysis.

The intergovernmental agreement between the District and the Town of Wickenburg has established a flood zone downstream of the dam along Casandro Wash. This flood zone restricts the construction of habitable structures within the flood zone of the emergency spillway flows. Kimley-Horn recommends reviewing the boundaries of the flood zone with a current (2004) aerial photograph to locate structures within the flood zone and to monitor that structures have not been constructed in the flood zone. A comparison with earlier aerial photographs would enable the District to approximate the date of construction of structures within the flood zone.

The final design report states that the contributing drainage area to the dam is approximately 3 square miles. However, a review of the hydrology HEC-1 model output provided in the final report indicates a total contributing drainage area of 1.24 square miles. This discrepancy may be due to the inclusion of the drainage area downstream of the dam for total watershed drainage area.

The final design report estimated the drain time for the detention basin. The report states that the basin will drain in approximately 136 hours (5.7 days) and applies to all flows in excess of the 100-year. The report notes that shorter drain times could be achieved by removing or enlarging the orifice or by using a 24-inch by 24-inch sluice gate designed to be operated manually by District field personnel.

3.3.2. Hydraulics – Hydraulic structures associates with Casandro Wash Dam include the low-flow outlet, principal spillway, emergency spillway approach section and spillway chute, energy dissipator at the end of the spillway chute, and a sedimentation reservoir within the detention basin.

Outflow from the detention basin includes a low flow orifice and the emergency spillway. The low flow outlet conduit is a 36-inch reinforced concrete pipe with a 1.4 square foot orifice plate. The orifice was sized to discharge approximately 20 cfs at the time of the downstream watershed hydrograph peak at the storm drain inlet and approximately 30 cfs during the 100-year storm event. Maximum downstream discharge at the storm drain inlet occurs at 4.05 hours, according to the District HEC-1 model results. The difference between the downstream peak discharge (6-hour storm duration) and the 339 cfs capacity of the storm drain is 20 cfs. CH2M HILL developed the orifice rating curve using the HEC-1 model assuming an orifice coefficient of 0.6 and an inlet elevation of 2135.0 feet. A gate outlet was provided as a backup for the orifice to facilitate maintenance and to allow opening of the orifice in the event of debris clogging. The inlet to the orifice was placed in a grated concrete inlet box to reduce the potential for debris and sediment clogging.

CH2M HILL prepared an additional hydrologic routing analysis for the detention basin based on clogging of the low level outlet. This additional hydrologic routing was requested by ADWR in their review letter to the District dated April 27, 1994.

The results of the inlet clogging water surface elevations for the 100-year and ½ PMF are presented in the following table.

Flood Event	Peak Stage [ft]		Peak Discharge [cfs]	
	With Low Flow	Clogging of Low Flow	With Low Flow	Clogging of Low Flow
100-year	2155.3	2155.57	118	151
½ PMF	2160.23	2160.29	3708	3744

CH2M HILL presented a "final" ½ PMF routing in their October 6, 1995 letter to the District. In this letter the final HEC-1 model assumed the low flow inlet to be clogged. The peak stage reached in the reservoir for the routed flood was 2160.29 ft with a discharge of 3744 cfs.

The emergency spillway consists of what CH2M HILL describes as an elliptical crest with the crest apex at elevation 2155.0 feet. The spillway width is 80 feet with a design head of 5.5 feet for the ½ PMF event. The total spillway height is 8.5 feet. The spillway chute energy dissipator was sized for the routed ½ PMF (3700 cfs). A spillway rating curve for the elliptical crest was developed using the procedures outlined in the "Design of Small Dams" (U.S. Bureau of Reclamation, 1987) and the "Hydraulic Design of Spillways" (U.S. Army Corps of Engineers, 1990).

Kimley-Horn reviewed the hydraulic calculations for the emergency spillway presented in the final design report (February 1995). The computations appear to be reasonable given the above references used to prepare the spillway hydraulics. The final design report did not include a water surface profile for the routed ½ PMF through the spillway. ADWR also reviewed the CH2M HILL emergency spillway hydraulic computations and provided review comments to the District in their letter dated April 27, 1995. In the letter ADWR summarized the spillway analysis discussions to date (of their letter) as:

> "The engineer indicated that they believed they had appropriately calculated the reservoir level using the USBR, USCOE, and Chow references and that the use of HEC-2 was not appropriate since, among other things, this required the input of coefficients for contraction which is the present area of disagreement. The engineer requested consideration of the use of a third party expert to review the analysis and to make a final determination. ADWR indicated they would consider this approach.
>
> Update Comments: ADWR has discussed the spillway design for ogee spillway with personnel at the US Bureau of Reclamation and the US Corps of Engineers. Based upon these discussions, it appears that the engineer is applying the

coefficient of discharge for the ogee section, in conjunction with entrance and channel head losses, to determine the reservoir level in an accepted manner. Although, we (ADWR) believe some aspects of the analysis remain unresolved, the order of magnitude of the difference in the calculated reservoir level is relatively small and the freeboard of 3 feet included in the design is anticipated to be acceptable to prevent any over-topping of the dam during eh occurrence of the 0.5 Probable Maximum Flood used as the Spillway Design Flood".

The spillway chute has a slope of 3:1 which according to CH2M HILL is sufficient for developing supercritical flow. A Bureau of Reclamation Type III energy dissipator was constructed to force a hydraulic jump before flow exits to the natural channel downstream of the dam. The detention basin was place approximately 6 feet below natural grade to ensure that the computed jump height will match the tailwater elevation of the downstream channel. Dumped rip-rap (D50 equal 2 feet) was placed downstream of the dissipator to mitigate impacts on the dam backslope during the spillway design event and during lesser flows exiting the dissipator.

Kimley-Horn recommends that a hydraulic analysis of the emergency spillway and energy dissipator be conducted to confirm the design report analysis. The hydraulic analysis should be conducted using the unsteady flow routine of the HEC-RAS model.

Spillway Inundation Studies – The Emergency Action Plan for Sunset FRS, Sunnycove FRS, and Casandro Wash in the Town of Wickenburg (FCD, November 2003) includes a spillway inundation exhibit portraying the downstream inundation due to emergency spillway discharge. The report is unclear however as to the reference for the hydraulic study that documents the evaluation of the inundation limits. The EAP text states that the exhibit portrays the inundation limits for spillway flows at 1/3, 2/3, and full. The report is not clear whether the reference to spillway flows is rated spillway capacity or referenced to PMF routed discharges. Discussions with FCD staff indicate that the development of the inundation mapping for Sunnycove FRS was conceptually evaluated in-house at the District and that back-up documentation is limited. **Figure 4 (Appendix Figures)** illustrates the emergency spillway inundation area. The data for this figure was gathered from the District's GIS department.

Kimley-Horn recommends that a spillway inundation study be conducted for Casandro Wash Dam following District methods for such studies. The EAP inundation boundary exhibit virtually depicts very little difference in the boundaries for the three flows. Kimley-Horn recommends that the exhibit only display the inundation boundary for full flows. The spillway inundation analysis should be continued further downstream than depicted in the EAP. The downstream limits of the EAP inundation mapping are the Atchison Topeka Railroad. The downstream inundation mapping should be continued through the railroad crossing to Sols Wash and possible to the Hassayampa River.

Dambreak Analysis - The dambreak analysis for Casandro Wash Dam was conducted as part of the dam safety permit application to the Arizona Department of Water Resources. The dambreak analysis is documented in the CH2M HILL report titled "Casandro Wash Dam Break Analysis" (FCD, January 1995). The objective of the dambreak analysis was to delineate the area downstream of the dam that would be inundated following a failure of Casandro Wash Dam. **Figure 3 (Appendix Figures)** illustrates the dam break inundation area. The data for this figure was gathered from the District's GIS department.

The dambreak report notes that the selected dambreak scenario is the "worst case" scenario. The impression given by this statement is somewhat misleading given the limited evaluation and sensitivity analysis conducted as part of the dambreak analysis for Casandro Wash Dam. A "realistic" dambreak scenario was not evaluated as provided in case history of dambreaks for earthen dams in arid regions and given the reservoir pool volume and geometry of the embankment for Casandro Wash Dam

The dambreak analysis was conducted using the simplified methodology provided in the U.S. Army Corps of Engineers HEC-1 computer program. The report documented the reasoning for the selection of this computer program as "the downstream channel geometry is not extremely complex and the travel distance of the flood wave is relatively short". Note that the downstream channel geometry was based on USGS topographic mapping with a contour interval of 10 feet (2000 scale). The downstream limit of the study was terminated at Sols Wash a distance from Casandro Wash Dam of approximately 3200 feet. The report did not discuss nor is it clear from the report whether more sophisticated models available at the time of analysis were considered for the analysis. Based on the results of the dambreak floodwave routing the downstream limits of the study could have been extended further downstream to the confluence of the Hassayampa River to a point where the depth of flow reached one foot or less. The HEC-1 model is not a water surface profile backwater model and therefore not sufficient to model the downstream floodwave. A more appropriate model to use at the time of the analysis would have been use HEC-2, HEC-RAS, or the downstream routing option of the unsteady flow model DAMBRK to model the peaks flows at each cross section.

The dambreak analysis was conducted evaluating five dambreak scenarios. The "worst case" scenario assumed the following breach parameters and assumptions:

- Time to failure: 15 minutes
- Breach bottom width: 40 feet
- Inflow design flood: ½ PMF
- Reservoir initial conditions: empty
- Time commencement of breach: Pool reaches elevation of emergency spillway crest

- Type of failure: Breach due to piping (no overtopping as hydrologic analysis indicates that the ½ PMF passes through dam with 3 feet of freeboard.
- Breach Depth: Extends to bottom of reservoir
- Concrete spillway is not removed during the breach
- Breach side slope adjacent to spillway: 0:1 (essentially vertical)
- Breach side slope adjacent to right contact: 4:1 (follows the natural ground slope)

The dambreak report states that initial modeling trials indicated that unless the breach occurred concurrent with the spillway overflow, the dambreak flood peak was less than the spillway discharge for the ½ PMF (3700 cfs). The approach indicates that CH2M HILL conducted a sensitively analysis to maximize breach outflow with the timing of pool water surface conditions.

It should be noted that the June 1994 Concept Design Report noted that the PMF overtopped the dam. A hydrologic analysis by Kimley-Horn (see Hydrology 3.3.1) also indicated that the routed PMF results in overtopping the dam. Given the rapid urbanization downstream of Casandro Wash Dam, Kimley-Horn recommends that the PMF event be evaluated as part of an update of the dambreak analysis.

The development and selection of the breach parameters used in the dambreak analysis are not documented in the report. At the time of the dambreak analysis, parametric methods and other published estimation methods were available to estimate breach parameters. It would be reasonable in an update of the dambreak analysis to conduct a more rigorous evaluation of dambreach parameters for Casandro Wash Dam.

ADWR (ADWR, April 1995) in their review of the dambreak analysis requested the inclusion of several important routed downstream hydraulic parameters. These parameters include the arrival time of the floodwave at each cross section, the arrival time of the flood wave peak, and the maximum estimated water surface and flow depth. These parameters are important for appropriate flood response activities and evacuations. A location map indicating the locations of the downstream hydraulic cross sections was also requested. CH2M HILL prepared an addendum (Addendum No 1) their final design report in June 1995 to include revisions and review comments from the District and ADWR. The addendum does not appear to address or incorporate the April 1995 ADWR review comments.

ADWR also recommended a dambreak analysis assuming failure to occur when water is flowing over the emergency spillway and the reservoir has reached the maximum estimated storage capacity (203 acre feet at elevation 2160.15). ADWR appeared to question the CH2M HILL statement regarding "the worst case scenario".

Kimley-Horn recommends that an updated dambreak analysis be conducted for Casandro Wash Dam. At the present time, the District is contracting for new aerial topographic mapping for the Wickenburg area as part of the update to the Wickenburg

Area Drainage Master Plan (ADMP). This ADMP is programmed to be conducted in the spring of 2005. The updated dambreak for Casandro Wash Dam could utilized the new aerial mapping (2 foot contours) for downstream routing. The downstream channel geometry is complex given the degree of urbanization encroachment into the floodplain. The updated dambreak analysis should include a more rigorous evaluation of the dam breach parameters and a sensitivity analysis of those parameters. The dambreak option of the unsteady flow module in HEC-RAS made be used to conduct the dambreach, dambreak, and routing of the breach outflow hydrograph. Hydraulic tables documenting flood wave travel times, flood depths, and other parameters for each cross section should be included in the report. The analysis should include an evaluation of the ½ PMF (for piping failure) and PMF (for overtopping breach failure). The dambreak model downstream mapping limits should extend to Sols Wash and the Hassayampa River.

Sedimentation – A sediment investigation was conducted by CH2M HILL to estimate the potential sediment supply to the basin. The estimate of the sediment supply was used to evaluate the additional storage volume needed to meet the requirements for floodwater storage and conveyance through the basin and dam. The sediment investigation assumed 100 percent sediment trap efficiency due to the high percentage of bed load transport, the orifice type outlet design type, and the duration of drain time relative to the design storm duration.

Kimley-Horn reviewed the sedimentation investigation methodology used by CH2M HILL. The methodology is standard practice used to estimate sediment yield. Methods included were the Pacific Southwest Interagency Committee (PSIAC) method, Modified Universal Soil Loss Equation (MUSLE), previous Soil Conservation Service studies, the Yang Equation, and from District sediment removal maintenance records. The sedimentation results reported in the Final Design Report indicate that a sediment storage volume of 2 acre-feet will be provided as part of the basin design for the 100-year storm event. The designers based the sediment volume on an operation and maintenance program which removes 2 ac-ft of sediment every 5 years. A summary of the final design sediment volumes are provided in the following table.

Recurrence Interval	Sediment Volume
Average annual	0.4 acre feet/year
100-year	1.8 acre feet

Letter of Map Revision – In September 1996 the engineering firm of Collins Pina completed the technical data notebook for a Letter of Map Revision (LOMR) for Casandro Wash. The limits of the LOMR were from the dam downstream to Sols Wash. The purpose of the LOMR was to re-delineate the 100-year floodplain and floodway downstream of the dam and to incorporate the revised hydrology impacts due to the presence of the dam and reservoir pool. The LOMR study conducted new 100-year hydrology for the dam based on the District's revised hydrologic methods at

that time. The results for the 100-year flow are provided in the following table and compared to the CH2M HILL hydrologic results.

Flow Location	CH2M HILL [cfs]	Collins Pina before dam [cfs]	Collins Pina post dam [cfs]
Into Dam	1769	1261	1265
Out of Dam	118	1261	30

The results of the LOMR hydrology indicate that no discharge occurs for the 100-year storm event through the emergency spillway which is contrary to the results of the CH2M HILL hydrologic investigation. The estimated 100-year peak discharges in Casandro Wash resulting from the hydrologic analysis from the LOMR study are lower that the estimates made in previous studies. The LOMR study states that the District published an addendum to the hydrology manual which suggested that directly connected percent impervious parameters that were lower than those used in the previous three studies for most land uses. The LOMR study states that this was the only significant hydrologic difference between the various hydrology models.

Kimley-Horn prepared a "what-if" ½ PMF and PMF hydrologic model using the 100-year HEC-1 LOMR model as a base. The purpose was to rerun the ½ PMF and PMF to evaluate the effects of the revised hydrology methods on these storm events and routing through the dam. The results of the modeling are provided in the following table.

Storm Event	CH2M HILL		Kimley-Horn and Associates Post dam hydrology	
	Flow [cfs]	Water surface elevation [ft]	Flow [cfs]	Water surface elevation [ft]
½ PMF in	5398	n/a	4279	n/a
½ PMF out	3744	2160.44	3007	2159.57
PMF in	10941	n/a	8603	n/a
PMF out	9256*	2164.8*	7524	2163.41

* KHA model run of PMF using CH2M HILL ½ PMF HEC-1 model. The emergency spillway crest elevation is 2155.0 ft. The as-built top of dam elevation is 2163.5 feet.

The ramifications of the results in the above table indicate less flow into and out of the dam using the LOMR model. The major result for the PMF event shows that overtopping is incipient for this storm event.

Kimley-Horn recommends that an evaluation of the LOMR hydrology be conducted to confirm the findings presented in the above table. The basin inflow and outflow have changed in the LOMR study. The as-built basin inflow and outflow will need to be

revised (Sheet 2 of 34 of the as-built plans for Casandro Wash Dam) to reflect the revised basin inflow and outflow curves.

3.4 Geological and Geotechnical Review

This section summarizes the review of the geological and geotechnical aspects of Casandro Wash Dam. The full presentation of the geologic and geotechnical review is provided in **Appendix G** and **Appendix H**, respectively. The geologic review was conducted by Geological Consultants, Inc., on behalf of Kimley-Horn and Associates, Inc. The geotechnical review was conducted by Gannett Fleming, Inc., on behalf of Kimley-Horn and Associates, Inc. This section of the report provides a summary of the major discussion and findings presented in Appendix G and Appendix H. The reader is referred to these two appendices for further discussion.

3.4.1 Geologic Setting. Casandro Wash Dam is located in hilly terrain within the northeast-central portion of the Sonoran Desert section of the Basin and Range Physiographic Province near its boundary with the Arizona Transition Zone Section. The latitude and longitude of the center part of the structure is approximately 33° 58' 04" N and 112° 44' 54" W based on NAD 27 datum. This portion of the Basin and Range is characterized by broad alluvial fans that are locally dissected and gently sloping connected valleys bounded by high, rugged northwest, north, and northeast trending mountains including the Date Creek and Weaver Mountains to the north, the Vulture Mountains to the south and the Wickenburg Mountains to the east that rise abruptly to form broad, elongated, deep, sediment-filled valleys produced by block faulting and folding during past episodes of mountain/basin bounding fault movements (Cooley, 1977). The dam, which is astride Casandro Wash north of the U.S. Highway 60 alignment, is within the town limits of Wickenburg, Arizona off the northeastern flank of the Vulture Mountains in North, Range 5 West (Figure 1 Appendix G - the southeast quarter of Section 11, Township 7, Site Location Map

3.4.2 Seismicity. A seismicity assessment was conducted as part of the Casandro Wash Dam design analysis (CH2M Hill, 1995b). Seventeen earthquakes, ranging from magnitude 2.5 to 4.9 were recorded within a 150-kilometer radius of the site. No earthquake event was closer that 70 kilometers to the site. Based on the CH2M Hill review of seismic design criteria from various source including U.S. Bureau of Reclamation, SCS Technical Release No. 60, Applied Technology Council, FEMA and the Uniform Building Code, 0.1 g was selected as a "reasonably conservative" peak design acceleration.

No deterministic or probabilistic seismicity evaluation was conducted for the design of Casandro Wash Dam based on a review of the project files. However, a seismicity evaluation for all of the FCDMC dam structures was conducted in 2002. The report entitled "Seismic Exposure Evaluation, Dam Safety Program, Flood Control District of Maricopa County" describes the various seismotectonic zones, fault zones, design earthquake, and characteristic ground motion affecting FCDMC structures (AMEC, 2002).

Casandro Wash Dam is situated within the Southern Basin and Range (SBR) Source Zone as defined by AMEC (2002), which includes the Sonoran Seismic Source Zone defined by ADOT (1992). The SRB source zone appears to be tectonically quiescent, with a low level of seismicity and few neotectonic faults that would be considered active or potentially active sources of earthquakes (Bausch and Brumbaugh, 1994; ADOT, 1992). The largest historic earthquake within this zone was a magnitude 5.0 that occurred in the southern part of the source zone in 1965. Only a few minor faults occur in the SBR (AMEC, 2002; ADOT, 1992). Earthquake epicenters and Quaternary faults are shown in Figure 3 of the AMEC (2002) report.

The deterministic and probabilistic analysis of seismic hazard affecting the Casandro Wash Dam area was conducted by AMEC (2002) to establish seismic attenuation relationships and the maximum probable earthquake. The closest Quaternary age fault is the Sand Tank Fault located about 77 miles south of the site. According to AMEC (2002) the maximum credible earthquakes for this fault source ranges between M6.2 and M6.6. The background earthquake, which is estimated to have a higher maximum magnitude of M7.2, was applied to the regression relationship to derive the horizontal ground acceleration. The recommended peak ground acceleration calculated for the Casandro Wash Dam area, based on the background seismic source, is 0.10 g (10 percent of gravitational acceleration) (AMEC, 2002), which is the same design value selected by CH2M Hill.

3.4.3 Land Subsidence. Land subsidence is known to occur in alluvium-filled valleys of Arizona where agricultural activities and urban development have caused substantial over-drafting or removal of groundwater from thick basin aquifers. The magnitude of subsidence is directly related to the subsurface geology, the thickness and compressibility of the alluvial sediments deposited in the valleys, and the net groundwater decline. However, in the Wickenburg area, there is no documented evidence of excessive groundwater withdrawal nor land subsidence.

No unconsolidated, compressible basin fill soils are believed to be present beneath the Casandro Wash Dam. The subsurface geological conditions in the embankment dam area (Figure 3 Appendix G), consists of relatively hard, cemented Tertiary age fanglomerate and in the subsurface deposited on crystalline bedrock indicate the potential for land subsidence due to groundwater withdrawal does not exist at the Casandro Wash Dam site.

According to Staedicke (1995), because there is no history of extensive groundwater pumping or subsidence, the NRCS (formerly the SCS) has never surveyed the Casandro Wash Dam structure. Although land subsidence is not expected to affect the Casandro Wash Dam, Kimley-Horn recommends the structure be surveyed periodically under the Recurrence Activities program.

3.4.5 Earth Fissures. No earth fissures, related to land subsidence, are documented nor reported as occurring within the Casandro Wash Dam project area. Geological

conditions in the Casandro Wash Dam area preclude the development of earth fissures at this site.

3.4.6 Foundation Conditions. CH2M Hill's Geotechnical Report (1995a) described the foundation soils in the main channel section as alluvial deposits overlying dense, carbonate-cemented sands and gravels. The surficial, uncemented soils were characterized as gravelly, well-graded sands with varying amounts of silt or clay. The upper soil layer was further described in the Geotechnical Report as dry, medium-dense to dense sands, with approximately 10 to 15 percent gravel and less than 10 percent low plasticity fines. The upper layer varied in thickness from 5 to 12 feet within the basin area, and 16 to greater than 20 feet in the dam foundation. The materials underlying the upper soil layer were characterized as more gravelly, very dense or cemented, and containing fewer fines.

The abutments were described in the Geotechnical Report (CH2M Hill, 1995a) as graded terraces, which had been leveled at the tops of the slopes to construct pads for structures. Loose fill had been dumped over the top edge of both abutment slopes to extend the leveling pads. The ends of the terraces were described as loose to medium dense silty sand and sand fill.

The Design Report (CH2M Hill, 1995b) recommended complete removal of the surficial materials to typical depths up to 12 feet within the dam footprint to found the dam on the very dense or cemented materials. It was recommended that keyway excavations extend into the abutments an estimated 15 to 30 feet into the slopes to found the embankment fill on native cemented materials. The abutment slopes were specified to be no steeper than 1H:1V.

During construction, the depth of excavation was extended in the left abutment between about Stations 9+90 and 12+05, in an area that contained deep lenses of uncemented, relatively clean, pervious materials. Excavation of these materials to "firm, acceptable" materials was conducted under field direction. Between Stations 11+00 and 11+35 cemented materials were reached within the chimney drain trench excavation, which extends below the central keyway.

3.4.7 Embankment Materials. A typical cross section of Casandro Wash Dam is shown as Figure 1 of Appendix H. The design consists of a homogeneous embankment (Zone I) and 4-foot wide, central vertical chimney filter/drain (Zone II). The vertical filter/drain extends 6 feet into the foundation below the base of the fill in the keyway, and is interconnected to four finger drain outlets (Zone II) that daylight at the downstream toe.

The Zone I and Zone II materials assumptions that were the basis for the design were derived from the original field and laboratory investigation (CH2M Hill, 1995a). The laboratory test results from the original field investigations are provided in Appendix H. A total of 40 samples were collected from 21 test pits and 13 soil borings in the dam foundation and upstream impoundment areas.

Table 3-2 (Appendix H) shows USCS classifications for each of 40 samples. Of the 40 samples reported, 25 of them classified as well-graded sand (SW), silty sand (SM), or dual classification (SW-SM). Based on the few number of Atterberg limits tests that were performed, we assume that most of the classifications shown are based on field observation, and are not based on laboratory testing and classification of the fines fraction. The % fines of the 24 samples tested ranged from 2.7% to 25.6% with an average value of 8.3%. Only 6 of the 24 samples tested contained more than 10% fines. Atterberg limits from two samples tested gave liquid limit values of 27% and 33% and plasticity indices of 6% and 12%.

The embankment section, including the vertical chimney drain, was designed based on the results presented in the attached Table 3-2 in Appendix H. The Zone I materials were assumed to be comprised predominantly of gravelly sands with less than 10 percent silty fines. The designers included a substantial, pervious chimney drain in their design to control the anticipated high quantities of seepage through the Zone I. The drain material (Zone II) was specified to consist of clean granular material with a permeability of 1 foot/min (0.5 cm/sec) (CH2M Hill, 1995c). Filter compatibility for Zone II with Zone I base soil was a consideration in the drain material design, but the designers considered drainage, not filter protection, as the primary function of the chimney drain.

Table 1 of Appendix H summarizes test results from the construction-phase testing, which are assumed to be representative of the actual in-place constructed Zone I materials. Testing results on the Zone I materials throughout the remainder of dam construction indicated similar results as shown in Appendix H on Table 1 (RAM, 1996).

It is evident based on review of the design assumptions, original field and laboratory investigation results, and construction records, that the materials used to construct the dam are moderately different from the materials that were the basis for design and construction specifications. Actual Zone I materials used in construction were silty or clayey gravelly sands with between 10 and 24 percent, low plasticity fines, as summarized in Appendix H on Table 1 (RAM, 1996). The designers had assumed Zone I materials would be predominantly sands with less than 10% silty fines, as shown on the attached design report Table 3-2 in Appendix H. As a consequence, the results of seepage analyses used to develop specifications for the Zone II filter/drain material may not be representative of the conditions that are now expected in the field. This issue is discussed in more detail in the following section.

3.4.8 Filter/Drain Design and Construction. A vertical filter/drain system was installed in the embankment for the purpose of controlling seepage during water impoundment events. The filter/drain system was designed based on the assumption of full impoundment for sufficiently long time periods to result in full development of steady state seepage through the embankment, using permeability assumptions obtained from the original field and laboratory investigation (CH2M Hill, 1995a).

3.4.8.1 Drainage Capacity. Seepage analyses were performed using an analytical approach and a "simple Darcy's Law seepage model" to estimate how quickly seepage would penetrate into the dam during impoundment events (CH2M Hill, 1995b). The vertical hydraulic conductivity (kv) of Zone I materials was estimated to be 5 X 10^{-4} cm/s based on laboratory permeability test results (see Appendix H attachment, Table 3-2 from the Design Report Addendum 2, CH2M Hill, 1996b). The horizontal hydraulic conductivity (kh) was assumed to be 10 times the vertical, or 5 X 10^{-3} cm/s. The Darcy seepage model assumed one dimensional horizontal flow and was used to estimate the rate of advancement of the seepage line towards the drain. Assuming the reservoir pool remained full throughout the period of infiltration, the results indicated that water would reach the drain within 5 to 10 days.

Drain capacity requirements were then determined based on estimates of the quantity of seepage from a flow net constructed for the upstream Zone I section with the drain as the vertical discharge face and the high pool elevation on the upstream slope as boundary conditions. The assumptions implicit in this calculation are steady seepage and isotropic hydraulic conductivity k = 5 X 10^{-3} cm/s. Based on these assumptions, the quantity of flow into the chimney drain was computed as approximately 1 gpm/ft of drain. For a 400 ft long drain the total estimated steady-state flow was approximately 400 gpm.

Review of the construction specifications indicates that the hydraulic conductivity of the Zone II material was specified to be a minimum of 1 ft/min. Gannett Fleming estimates the total capacity of a 4-foot wide granular chimney drain constructed with Zone II material (k = 1 ft/min) to be about 12,000 gpm, as follows:

$$q_{per\ foot} = kiA = (1\,ft/\min)(1)(4\,ft * 1\,ft) = 4\,ft^3/\min/ft = 29.9\,gpm/ft$$
$$Q_{total} = 29.9\,gpm/ft * 400\,ft = 11{,}970\,gpm \approx 12{,}000\,gpm$$

where the gradient, i = 1 because the flow is vertical downward within the chimney section. This capacity is about 30 times the required capacity of 400 gpm, based on the flow net calculation by the designers. This capacity is about 30 times the required capacity of 400 gpm, based on the flow net calculation.

The designers intended to use outlet pipes to convey seepage flows from the chimney drain to the downstream toe of the dam. Gannett Fleming reviewed the design calculations that were the basis for the outlet pipe size requirements (computation sheet titled "Chimney Drain Capacity" dated 3/20/94 by J. Livingston in appendix to CH2M Hill, 1995a, Volume 2). The designer calculation is shown on the data sheet as follows:

"Check Flow to Drain Pipe – Vertical Flow"

$$Q = kiA$$

$$Q = 10^{-1}(ft/\min)\frac{15(ft)}{15(ft)}4(ft - drain\ width) * 7.48(gal/ft^3) * 400(ft - dam\ length)$$

$$= 1197\ gpm$$

It appears from the calculations above that the hydraulic conductivity of the Zone II material was assumed to be 0.1 ft/min, or 10 times lower than the specified hydraulic conductivity, resulting in a total calculated maximum flow from the chimney drain to the outlets of 1,197 gpm. It is unclear why the designers used the lower hydraulic conductivity value (10^{-1} ft/min) to size the outlet pipes, rather than the more conservative estimate (1 ft./min.) which would have resulted in a total flow to the drain of 11,970 gpm as shown above.

The calculation presented on the computation sheet (1,197 gpm) appears to be the basis for sizing the outlet pipes. According to subsequent calculation sheets, the discharge was to be accommodated using two, 8-inch diameter outfall pipes, with an estimated combined capacity of 1,120 gpm. Gannett Fleming estimates that if the pipes had been installed, this would have provided a factor of safety equal to 2.8, as follows:

$$FOS(as\ designed) = \frac{outlet\ pipe\ capacity\ (two\ 8"\ dia.\ pipes)}{total\ flow\ from\ dam\ from\ flow\ net} = \frac{1{,}120gpm}{400gpm} = 2.8$$

However, review of the construction drawings indicates that the outlet pipes were not installed in the finger drains, but instead, the finger drains were constructed of drainage rock (Zone II materials). Figure 2 of Appendix H shows details taken from the construction documents including the details for the finger drains. Four finger drains are shown, each constructed using the Zone II material, with cross-sections 10 ft wide by 3 ft-8 in high, and extending through the dam to discharge on the downstream toe. Without the 8-inch pipes, Gannett Fleming estimates the combined total capacity of these finger drains as follows (refer to Figure 2 of Appendix H for definition of parameters):

$$q = \frac{kh^2}{2L} = \frac{1\,ft/\min * (3.67 + 1\,ft)^2}{2 * 94.5\,ft} = 0.115\,ft^3/\min/ft = 0.86\,gal/\min/ft\,(of\ drain\ width)$$

$$Q = 0.86\,gal/\min/ft * 40\,ft\,(combined\ with\ of\ 4\,drains) = 34\,gal/\min$$

Where: q = capacity of finger drains per ft (width) of drain, k = hydraulic conductivity, h = head drop from top of finger drain at the location of the chimney (elevation 2136.67 ft) to the bottom of the drain at the toe of the dam (elevation 2132), L = length of finger drain from chimney section to toe of dam, as shown on Figure 2 in Appendix H. This calculation shows that the total combined capacity of the four

finger drains is 34 gpm. This capacity is substantially less than the required capacity of 400 gpm under steady seepage conditions, as estimated from the flow net.

As part of this Individual Structures Assessment, Gannett Fleming has performed preliminary seepage analyses (see appendix H) which indicate that under normal flood scenarios, steady state seepage will not develop in Casandro Wash Dam. Therefore, the vertical filter/drain should see very little to no discharge from the upstream Zone I if the reservoir is drained within 10 days following flood impoundments, as anticipated. It is important to understand however that, because of the limited capacity of the finger drains, the overall drainage capacity of the internal filter/drain system is on the order of only about 34 gpm. This is substantially less than the designer's intended drain capacity of about 1,120 gpm, but could still be adequate according to our transient seepage analysis model which is described in Appendix H. In Appendix H, we provide recommendations for Phase II sampling, testing, and analyses that could be performed to confirm the expected seepage quantities and required capacity of the internal drain system.

3.4.8.2 Filter Criteria. The primary benefit of the Zone II vertical filter/drain is as a filter to protect against piping of Zone I in the event that transverse cracks develop. The original filter design presented in CH2M Hill (1995a) was based on NAVFAC DM 7.1 (1992). This procedure differs from the more widely accepted standard that is outlined in Chapter 26, Part 633, of the National Engineering Handbook (NRCS, 1994), in that, among other things, the base soil gradation curves are not adjusted for gravel content. Because the base soils contained significant quantities of gravel, the critical filtering requirement (D15f / D85b < 5) could allow for the filter to be too coarse. In fact, in the Design Report the maximum D15f for the filter initially was established too coarse, but the gradation that was actually specified and ultimately used to construct Zone II (summarized on Table 2 of Appendix H) does just meet the filtering requirement, as described in the Section 2 - Supplemental Geotechnical Analysis of Appendix H.

The gradation band specified in the project contract documents, and summarized on Table 2 of Appendix H, was designed in accordance with the NAVFAC guidance document for both filtering and permeability considerations. To achieve the desired kmin = 1 ft/min characteristic, the designers established the filter band such that it met the filter requirements, but also encompassed typical gradation curves for granular drain materials that meet the permeability requirement. The design calculations refer to Figure 6, pp. 7.1-277, on the NAVFAC DM 7.1 as the basis for their design limits (CH2M Hill, 1995a). This figure shows typical permeability estimates for specific gradations of several drain materials.

During construction the contractor had some difficulty meeting the specified kmin = 1 ft/min requirements for Zone II filter, and there was considerable discussion in the project correspondence regarding this issue. The principal concern noted in the correspondence dealt with an apparent incompatibility between the Zone II gradation to meet both the filtration requirements and the specified minimum hydraulic

conductivity (kmin = 1 ft/min). The contractor initially experienced several failed attempts to achieve the permeability requirement with materials that were processed and blended to meet the gradation specification.

Following the initial trials, the engineer of record (Ken Ricker) checked the filtering requirements for the revised Zone I gradations using the current methodology (NRCS, 1994), and developed a revised filter band. Ultimately, the hydraulic conductivity requirement was reduced to 0.8 ft/min, which allowed the contractor to meet the modified specification while staying within the revised gradation band.

In order to compensate for the assumed reduced hydraulic capacity, the cross-sectional areas of the finger drains were increased by 20 percent. It is assumed that the finger drain capacity as constructed is roughly equivalent to the capacity as calculated previously (approximately 34 gal/min) for the smaller finger drains with higher k.

3.4.9 Original Slope Stability Analyses. The designers assumed the parameters shown on Table 3 of Appendix H for the slope stability analyses, based on laboratory direct shear testing of 6 remolded samples (CH2M Hill, 1995a). Alternate strength assumptions for the Zone I fill were developed based on triaxial shear testing of samples with higher fines content (TP-15, B-1, with 25.6 percent low plasticity fines). The designers did not anticipate these samples as being representative of the Zone I fill. All samples were obtained from the surficial soils in the dam foundation and the upstream reservoir areas. Slope stability analysis results were reported for the expected strength and loading conditions shown on Table 4 of Appendix H. Table 5 of Appendix H provides the results of slope stability analyses for various loading conditions under the alternate strength assumptions.

The designers evaluated the upstream slope for a rapid drawdown condition under the assumptions that a full phreatic line could develop up to the emergency spillway elevation, and that no dissipation of pore pressures would occur following instantaneous drawdown from full to a pool level corresponding to ½ the full level. This limitation on the instantaneous drawdown level achieved the required minimum factor of safety = 1.2.

The pseudo-static analysis were done assuming a pseudo static coefficient = 0.1g. This coefficient is equal to the estimated peak ground acceleration based on a review of existing regional seismicity data and studies of known faults. The data review is summarized in the Geotechnical Report (CH2M Hill, 1995a).

Downstream slope stability was evaluated for both dry slope conditions (assuming the drain intercepts seepage) and an assumed steady seepage condition without the internal drain (phreatic line emerging on the downstream slope). Computed factors of safety were acceptable, even for the conservative seepage assumption for the 3H:1V slope. It is believed that the downstream slope inclination was controlled not by stability considerations, but rather by constructability considerations for the emergency spillway over the dam.

3.4.10 Embankment Settlement. Settlement of the embankment and foundation was estimated using elastic theory. Compressions of between 1 and 1.3 inches were estimated for both the foundation and embankment, resulting in a total settlement of approximately 2 to 3 inches maximum. To accommodate anticipated settlements, the designers recommended increasing the height of the dam by 6 inches.

3.4.11 Penetrations through the Embankment and Foundation. In the original design there were to have been 4 new pipes passing through the embankment and foundation as follows: relocated sanitary sewer pipe, low flow outlet pipe, and 2 pipes to drain the chimney drain (CH2M Hill, 1995a). Kimley-Horn or Gannett Fleming could find no record that the chimney drain outfall pipes were installed. Instead, as described in this report, four granular finger drains were used to provide drainage outlets for the chimney drain.

Outlet Pipe. The primary outlet is a 36-inch diameter reinforced concrete pipe that extends through the embankment fill, emerges through the spillway chute slab, and discharges into the stilling basin. The original design recommended the pipe be installed by placing the embankment fill to an elevation approximately 2 feet above the top of the pipe, then excavating the pipe trench into the compacted fill. In the original design, the outlet pipe trench was to be backfilled with concrete slurry up to the top of the trench between the upstream face of the dam to 4 feet downstream from the chimney drain, then backfilled with chimney drain material (Zone II) from that point to the spillway. During construction, the inspectors realized that this would result in an unintended outlet for the chimney drain at a lower elevation than the finger drains, which were the intended outlets. A field change was made which eliminated the Zone II backfill downstream from the chimney section, such that the pipe was installed downstream from the chimney in a similar manner as upstream. The penetration of the pipe through the chimney section provides a filter diaphragm for the pipe.

3.4.12 Erosion Protection below Emergency Spillway. The depth of the cutoff wall below the emergency spillway stilling basin was estimated using a procedure outlined in the District's Hydraulics Manual for estimating local scour hole geometry at outlet structures. This procedure predicted a maximum scour hole depth of 8.8 ft located 60 ft downstream from the stilling basin. In the original design report, it was assumed that no riprap protection would be provided downstream from the stilling basin (CH2M Hill, 1995a). To protect the stilling basin from undermining by scour during large flow events, the designers recommended incorporating an 8 ft deep cut-off wall below the stilling basin.

As-built drawings indicate the cutoff wall extends 11.5 ft below the ground surface, and about 5.5 ft below the stilling basin slab. This wall extends around the end and both sides of the stilling basin. Also, a 4-ft deep riprap apron was constructed downstream from the stilling basin. The riprap extends across the 80-ft width of the stilling basin and an estimated 40 feet downstream from the structure. No riprap was

placed behind the stilling basin walls on either side, and this area may be vulnerable to erosion and scour during major flood events.

3.4.13 Under-drainage Measures for Emergency Spillway Chute and Stilling Basin Slab. The design incorporated several features to provide drainage for the emergency spillway which is constructed as a concrete weir and chute over the dam. These spillway drainage elements are described as follows:

Zone II material was placed in an 8 to 12-inch layer under the chute slab, and as the lower 2 feet of backfill behind the vertical chute walls. The under-slab drainage layer was placed directly on the 3H:1V downstream slope using a wire mesh to stabilize and support the granular drain rock material and facilitate slab construction. The chute under-drain ties into the chimney drain near the top of the chute, and outlet pipes are provided through the chute walls at various locations down the sloping backfill. In addition to its intended function as a drainage layer, the Zone II material also is intended to serve as a protective filter to prevent fines from being sucked up through cracks in the slab if negative pressures were to develop at vertical offsets in the slab. A 12-inch layer of Zone II material was placed beneath the horizontal stilling basin slab, and ties into the sloping chute under-drain. Slotted PVC drain pipes were installed within the granular layer which discharge through the chute walls a few feet above the elevation of the top of the stilling basin slab. The design intent is for this under-drain to relieve potentially damaging hydraulic uplift pressures beneath the slab following discharge events. The designers also incorporated an 11.5 ft deep vertical cutoff wall extending around the downstream end and sides of the stilling basin to minimize the flow towards the stilling basin, and to protect against undermining as described previously.

3.4.14 Summary of Key Findings from the Geotechnical Data Review.

Design Phase Site Investigation and Testing. The number of exploration pits and borings, number and types of samples collected, and number and types of laboratory tests that were done during the design phase were quite reasonable for a dam of this size. However, there were some deficiencies in the investigation program that are worth noting. A key issue was the evidently inaccurate characterization of the Zone I materials – the primary material used to construct the dam. The designers believed this material would be predominantly clean to slightly silty gravelly sand with less than 10%, non-plastic fines. This assumption was based on the results of the laboratory test program. Shear strength and hydraulic conductivity parameters that were assumed for the design analyses were based on laboratory testing of these low fines content materials.

The majority of Zone I materials that were encountered during the construction phase contained significantly higher amounts of low plasticity, clayey fines (>10% up to 24%). The reason for this discrepancy is not totally clear from the project records. It is clear that the engineers of record for the construction phase were aware that this discrepancy could have had significant impacts on key design analyses, especially

slope stability and filter design, and check analyses were done to ensure that essential criteria would be met. These check analyses included verification of the filter compatibility for the finer Zone I base soils using modern filter criteria (NRCS, 1994). The ADWR also requested additional stability analyses using alternative strength assumptions based on testing of soils with higher fines content. These additional stability analyses were completed as described in Addendum 2 to the Design Report, and the results are summarized on Table 5 in Appendix H.

Zone II Chimney Drain. The designers assumed that full and rapid development of a phreatic line would occur within the dam during extreme flood events, and used this assumption as primary justification for incorporating a high-capacity internal chimney drain in their embankment design. As constructed, the actual capacity of the internal drain system is severely constrained by the limited cross-sectional area and permeability of the Zone II finger drains. The evident design intent was that the drain system should have substantial hydraulic capacity, on the order of 3 times the estimated worst-case seepage estimate. This estimated design capacity was based on the outlet portion of the drain system comprised of two, 8-inch pipes. However, as constructed, these outlet pipes were not installed, and instead four granular finger drains were constructed to provide the outlets for the chimney drain. Gannett Fleming could not locate any design calculations related to sizing of the finger drains. Our independent calculation (presented in Appendix H) indicates that the total finger drain capacity is about 34 gal/min, which is substantially less than the 1120 gal/min capacity of the outlet pipes assumed by the designers.

The project reviewers and geotechnical engineer of record during construction recognized that the critical function of Zone II is not as a drain, but as a filter to protect against internal erosion and piping of the Zone I. An excessive amount of time and effort was spent during construction in trying to comply with a specification standard for permeability that was not only in conflict with the gradation specification required to achieve filtration, but was ultimately unnecessary, as indicated by supplemental seepage analysis provided in Appendix H. Transient seepage analysis show that seepage into the chimney drain is likely to be minimal, even during extreme flood events, due to the limited impoundment times anticipated for this flood retention structure.

3.5 Supplemental Geotechnical Analysis

3.5.1 Supplemental Seepage and Slope Stability Analysis. In support of the Phase I Structures Assessment, Gannett Fleming conducted preliminary supplemental seepage and slope stability analysis for Casandro Wash Dam to document the expected stability of the structure under anticipated phreatic surface conditions. The key design assumption used in the original stability analysis by CH2M Hill is suspect for the following reasons:

- Design Assumption: Development of a steady state phreatic line – The original design assumed that a steady state phreatic line would be likely to

develop within the dam because the embankment was expected to be constructed of relatively pervious Zone I materials comprised predominantly of clean to slightly silty gravelly sands.

- Revised Assumption No. 1: Development of a high-level steady state phreatic line is not likely because (1) the Zone I materials actually used to construct the dam had between 10 and 24 percent clayey fines and would therefore not be pervious, and (2) the maximum detention time for a 100-year event will be less than 10 days, assuming the outlet does not clog. In our estimation, this is insufficient time for a high-level steady state seepage line to develop.

Gannett Fleming conducted preliminary seepage analyses using a numerical model (SEEP/W) that allows simulation of the transient wetting front advance into the upstream shell of the dam during a storm detention event, or sequence of events. The results are shown on Figure 3 of Appendix H for a sequence of two back-to-back 100-year floods.

The SEEP/W model correctly accounts for unsaturated and saturated hydraulic conductivities and gradients within the soil to predict the rate of infiltration during a temporary impoundment event. A standard "Silty Sand" material type was selected from the model's database to represent the Casandro Wash Dam embankment materials. The database provides the necessary unsaturated hydraulic parameters for use in the simulation. The vertical saturated hydraulic conductivity was assumed to be 1.4 ft/day (5 X 10-4 cm/s). This was the value used by the original designers based on laboratory tests on materials containing less than 10 percent fines, as reported in the Geotechnical Report (CH2M Hill, 1975a). As previously stated, these materials are likely not representative of materials actually used to construct Zone I, which contained higher percentages of low plasticity fines. However, this high vertical hydraulic conductivity assumption is expected to provide conservative results for the seepage estimate. The embankment was modeled as a homogeneous section, with a horizontal:vertical anisotropy (kh/kv) ratio of 10:1 for the hydraulic conductivity.

Figure 3 of Appendix H shows the simulated development of the seepage line into the embankment with time during a sequence of two consecutive 100-year events (multiple storm scenario). This impoundment scenario was modeled to estimate a conservative phreatic line for use in evaluating slope stability during drawdown. It is evident that even following multiple storm events, the wetting front will advance to a very limited extent into the dam. Also, the model results indicate rapid dissipation of the upstream pore pressures as the pool level drops.

Slope stability was analyzed using the program SLOPE/W, which imports the estimated pore pressures from the SEEP/W analysis. Stability was evaluated using the same material property assumptions that the CH2M Hill designers used (as summarized in Appendix H on Table 3) except that a small cohesion intercept (c = 10 psf) was assigned for the strength estimate in order to exclude non-critical, extremely shallow (infinite slope) failure surface results. Figures 4 and 5 of Appendix H show

the estimated minimum factors of safety for the upstream slope at two times: (1) during drawdown after the 2nd flood impoundment (factor of safety = 3.0), and (2) after drawdown to the sediment pool level immediately following two consecutive impoundment events (factor of safety = 2.7). The factor of safety is slightly higher at the intermediate impoundment stage (during drawdown) because the pool provides additional buttressing against the slope. Note that the slope is predicted to be nearly completely drained (low phreatic line) immediately following the two events, based on the assumptions used in the model for impoundment times, drawdown times, and hydraulic conductivity of the materials.

Slope stability for the downstream slope was also checked, although the original analysis was considered appropriate and correct. The factor of safety = 2.7 is in agreement with the original computation. The results of the preliminary supplemental seepage and slope stability analyses are summarized on Table 6 of Appendix H.

3.5.2 Compatibility of Zone II Drain Fill as Filter for Zone I. Zone II is shown on the as-built drawings as a 4-ft wide, vertical chimney drain positioned under the downstream side of the dam crest. This zone was designed to act as both a drain and a filter. Its most important function is to serve as a filter to protect against potential internal erosion and piping of the core materials in the event of transverse crack development. Because of its critical function as a filter, the Zone II gradation was checked against current filter criteria in accordance with the NRCS, National Engineering Handbook, Chapter 26 "Gradation Design of Sand and Gravel Filters" (NRCS, 1994). This check was performed by the engineer of record during construction (RAM, 1996).

Figure 7 of Appendix H shows what is believed to be a representative gradation curve for the finer materials used in the Zone I "Base Soil" (graphed with solid circle symbols). This gradation curve was developed for a field sample from the "SC Stockpile" from the construction records, and has about 24 percent fines content. The sample classifies as a low plasticity clayey gravelly sand SC according to the Unified Soil Classification system (USCS). A second base soil gradation curve was also developed (graphed with solid triangles) from a sample derived from the "NC Stockpile", and had about 12 percent fines content.

The base soil gradation curves (solid symbols) were adjusted for gravel content as shown by the curves graphed with open symbols on Figure 7 of Appendix H. The filtering and permeability (k) criteria for the adjusted curves are shown by the solid circles and solid triangles, respectively, on the 15% passing line. The coarse side of the Zone II specification band just achieves the recommended filtering limit for the finest base soils. Zone II does meet the permeability criteria for both base soil gradations.

3.6 Construction History

Construction activities of Casandro Wash Dam were documented in several key reports. A "Summary Report – Casandro Wash Dam" was prepared by Ricker Atkinson McBee & Associates Inc. (RAM, 1996) that chronologically summarized the construction of the dam. RAM provided construction oversight of the dam on behalf of the District and the design engineer. Award of dam construction was made to Roy E. Ladd Construction. Construction activities were initiated in January 1996 and substantial completion of the dam noted in August 1996. A second report documenting major obstacles in construction was the minutes of the meeting held on July 16, 1996 "Post Construction Critique". The meeting reviewed the major construction problems incurred at the site and the resolution of those problems. Both reports discussed the major issues. These reports are on file at the District. The major construction issues extracted from the two reports are (but not limited to):

- Zone II material: conflicting specifications on gradation, uniformity coefficient, and permeability.
- 36-inch Outlet Pipe: D-Load interpretation.
- Sanitary Sewer Manhole #3: Moved 100 feet from design plans. Moved to edge of downstream embankment. ADWR had concerns regarding this placement.
- Intersection of chimney drain and 12-inch sewer: No details provided on plans for this intersection. Sewer line passes right through chimney drain.
- Spillway Drain (Zone II materials): Zone II material on spillway drain with a 3:1 H:V slope was found to be unstable. Decision was to place ¼ inch mesh on the top of the material.
- Alignment of Two Finger Drains: Two of the four finger drains were field adjusted. The realignment was to reduce the length of the finger drains by 100 feet.

3.7 Utilities

A sanitary sewer was relocated as part of the construction of Casandro Wash Dam. The sewer is owned by the Town of Wickenburg. The relocated sewer line is a 12-inch ductile iron pipe that replaced a 10-inch pipe which was removed from the dam foundation. The relocated sewer crosses the dam axis at about Station 14+59, south of the emergency spillway, at elevation 2121.6. The new sewer pipe was trenched into native foundation material, and the pipe is encased in concrete slurry from just upstream from the dam to the downstream sanitary manhole at the downstream toe of the dam, except as follows:

The relocated sewer pipe crosses through the Zone II chimney drain trench, approximately 4.5 ft above the bottom of the trench. A special construction detail was prepared in the field, and review of the as-built plan indicates that the chimney drain material extends all around the sanitary sewer pipe, serving as a filter diaphragm.

The pipe is founded in the native, cemented soils except from Sta 10+30 to 10+90 (stationing on the sewer-line), where the pipe invert was above grade. Special details were developed in the field to form the concrete pipe encasement through this reach, and to construct the fill around the pipe to ensure good compaction against the formed concrete.

Figure 5 (Appendix Figures) shows the location of utilities in relationship to Casandro Wash Dam.

3.8 Emergency Action Plan

The Flood Control District has an Emergency Action Plan for Casandro Wash Dam (FCD, November 2003). The EAP appears to meet the minimum requirements published in the Federal Emergency Management Agency guidelines FEMA 64 Emergency Action Planning for Dam Owners (FEMA, October 1998). The EAP provides an EAP flowchart based on percent reservoir impoundment on reservoir filling. However, the text (page 5 of the EAP) presents the flowchart based on percent spillway capacity. This discrepancy should be corrected in an updated EAP.

The EAP provides inundation mapping for spillway discharges as well as for potential dambreak. The inundation mapping for Sunnycove FRS is displayed on the same figures as shown for Sunset FRS. Although there is a remote probability that both dams may incur impoundments at the same time it is unlikely that spillway discharges and/or dambreaks will occur concurrently. The inundation mapping exhibit in the EAP for Sunnycove should be shown independent of Sunset FRS.

The EAP flowchart is divided into actions items based on percent reservoir filling. The flowchart is divided into 10, 25, 50, 90, and 100 percent response actions. The five levels of action may occur in a relatively short time frame given the expected rapid filling of the reservoir. Kimley-Horn suggests that the EAP flowchart percent levels be reduced and given consideration for the time to fill the impoundment during large event storms.

The Maricopa County Department of Emergency Management currently has an Emergency Operation Plan (McDEM, 1999) that outlines the procedures and duties of various agencies which are activated in emergency flood situations. Sunnycove FRS is included the McDEM Plan.

The District has prepared a Flood Emergency Response Manual (FERM) (FCD, January 2002) that presents the most current duties for District personnel during significant rainfall events and/or flood emergencies. The FERM indicates that District personnel will be sent to observe the dam during flood emergencies or when weather conditions merit observation. The manual states that the District Operation and Maintenance Division will be notified at an impoundment depth of 21.8 feet. In

addition, McDEM would be notified at an impoundment depth of 28.5 feet (7 foot difference).

The notification levels form the FERM and the Emergency Operation Plan are presented in the table below. The table shows a discrepancy in the notification levels in the two plans.

	Emergency Operations Plan	FERM (January 2002)
	Pool Level [ft]	Pool Level [ft]
District Alarm	-	15.0
Notify FCD O&M	-	21.8
Notify McDEM	19	28.5

4.0 PRELIMINARY FAILURE MODES

Kimley-Horn and Associates, Inc. (KHA) facilitated a Preliminary Failure Modes Identification workshop for Sunnycove FRS conducted on February 24, 2004. The overall objective of the workshop was to develop a comprehensive list of potential failure modes for the structure and appurtenances. The workshop was conducted at the offices of the Flood Control District of Maricopa County. The following individuals participated in the workshop:

Tom Renckly, P.E.	Flood Control District
Mike Greenslade, P.E.	Flood Control District
Andrew Dziobek, P.E.	Natural Resources Conservation Service
Bob Eichinger, P.E., CFM	Kimley-Horn and Associates, Inc.
Kelli Blanchard, EIT	Kimley-Horn and Associates, Inc.
Debora Miller, Ph.D, P.E.	Gannett Fleming, Inc.
Ken Euge, R.G.	Geological Consultants, Inc.

The workshop participants identified key issues that would require additional review or assessment during the Structure Assessment and field inspections. A detailed Failure Modes and Effect Analysis (FMEA) was conducted subsequent to this Preliminary Failure Modes Workshop. The main potential failure modes and items reviewed during the Preliminary Failure Mode Workshop are as follows:

1. **Embankment Overtopping**: The embankment crest and downstream slope are protected against minor erosion. Overtopping of the embankment could lead to erosion and formation of a breach.

2. **Downstream Impacts**: This pertains not only to downstream impacts due to failure of one of more components of the dam, but impacts that would result from normal operations at the facility.

3. **Erosion at the Emergency Spillway**: The emergency spillway is a concrete-lined chute.

4. **Failure of Principal Outlet**: The principal outlet (PO) for the dam is a reinforced concrete pipe 36 inches in diameter.

5. **Piping Involving Foundation and Abutments**: Relates to potential piping erosion of soil materials from the embankment fill into the foundation and/or developing through the foundation under the embankment.

6. **Erosion and Piping through the Embankment**: This failure mode relates to the concentrated leakage piping along a transverse crack, or along a penetration through the dam (outlet pipes and/or utility conduits).

7. **Slope Stability**: This failure mode covers both the upstream and downstream slopes of the embankment.

8. **Failure Mechanisms Associated with Presence of Collapsible Soils in Dam Foundation:** This failure mode relates to the potential for collapse on saturation of meta-stable soils in the dam foundation. Geologic mapping/boring logs/laboratory test data will be reviewed to assess to the extent practical the presence of potentially collapsible materials.

9. **Failure Mechanisms Associated with Earth Fissures**: Previous as well as current investigations by others have identified a strong potential for earth fissures at a number of FCD structures. This potential failure mode is an unlikely scenario.

10. **Other considerations**: This section addresses issues that are not directly related to a failure of the dam or its appurtenant facilities, but which nonetheless may be relevant to the FMEA:
    a. Qualitatively assess the impact of discharge from the emergency spillway on the downstream areas. Obtain spillway delineation study or FEMA study for Casandro Wash.
    b. Qualitatively assess the impact of groundwater withdrawal in the vicinity of the dam.
    c. Outlet flows, cavitations of spillways.

A detailed report of the Preliminary Failure Mode Workshop is presented in **Appendix D**.

5.0 Land Use

This section discusses data on the existing and future land use upstream and downstream of Casandro Wash Dam. Land use information for Casandro Wash Dam was collected to allow a qualitative assessment of the consequence of dam failure and/or spillway inundation flood events. The scope of the study required review of 2 miles upstream and downstream of the dam.

5.1 Source of Data

The Flood Control District of Maricopa County provided aerial photography, information regarding dam pools and flood retention structures, and land use information.

5.2 Description of Land Use Categories

The main categories inventoried for land use included residential, commercial, educational facilities, public facilities, active open space, and mixed use jurisdiction defined) (see **Figures 6 and 7** in **Figures Appendix**). These categories as discussed in MAG (2000) are described briefly below:

- *Residential* land uses include estate residential (1/5-1 unit per acre), single family (small lot 4-6 units per acre to medium lot 2-4 units per acre) and multi-family (10-15 units per acre). There are several areas designated as single-family (small lot) residential land located directly downstream and directly northwest of the dam. Land area designated as estate residential land is located throughout the 2 mile radius, as shown on Figure 6.
- *Commercial* land uses include retail establishments, office buildings, hotels, and warehouses. Commercial land that contains 50,000 to 100,000 sq. ft is classified as Neighborhood Commercial land. Commercial land of 100,000-500,000 sq ft is classified as Community Commercial. There are several areas designated as community commercial land located with 5,000 ft downstream of the dam and adjacent to the right abutment.
- *Public Facilities* include community centers, power sub-stations, libraries, city halls, police/fire stations, and other government facilities). There are several areas designated as public facilities located within 4,000 ft downstream of the dam.
- *Educational* land uses include public schools, private school and universities.

5.3 Existing Land Use

Existing land uses in the study area generally are characterized as residential, commercial, or as public facilities. This information is depicted on Figure 6 and is summarized as follow:

- Wickenburg Way/US 60 is a major road for the Town of Wickenburg and contains a large portion of land designated as community commercial lots. This road is located approximately 400 feet south of Casandro Wash Dam and runs upstream and downstream of the dam.

- Residential land surrounds the dam and is located directly downstream of the dam as well as properties located upstream and at the left abutment.
- No new residential development was recorded for this dam.

5.4 Proposed Land Use

Future land use plans were obtained through the District. There are no significant changes. A portion of the active open space has changed to industrial land use and is locate within 9,500 feet upstream of the dam. Also downstream of the dam, on the east side of the Gila River the active open space has changed to residential land. These trends illustrate a trend from converting open space into more intense land use categories ("infilling").

6.0 FIELD INSPECTIONS

6.1 Previous Inspections

Kimley-Horn reviewed field inspection reports for Casandro Wash Dam from project files at the Flood Control District and Arizona Department of Water Resources. The reports collected from these sources date to October 21, 1997. A total of 3 inspections from October 1997 to November 2003 were reviewed as part of this task and are summarized in the table below.

Key findings documented in the above mentioned field inspection reports include the following:

- In 1997 it was noted that headcutting was occurring in the outfall area just downstream of dam and needed repair. Headcutting continue through 2003.
- 1997-sediment build up was occurring at the box structure at Navajo and Jackson Street, structure needs to cleaned and cleared of sediment.
- In 2002 rilling was noted on the left abutment area, where gravel mulch was not placed.
- Minor spalling on the right side of the ogee crest, was noted in 2002, no repairs required.
- In 2002 and 2003 shrinkage and/or temperature cracks on emergency spillway control structure, channel, and stilling basin. No structural cracks were noted, no repairs required.
- In 2003 riprap lined downstream of stilling basin.
- In 2003 rilling left of the emergency spillway was repaired when gravel mulch was applied in 2003.
- Erosion gullies were report on the downstream slope in 1997, with a note of repair needed.
- In 2002 scattered rills throughout both slopes and erosion in emergency spillway approach channel.
- In 2003 gravel mulch was applied to the upstream and downstream slope.
- In 2003 the principal spillway conduit was videotaped.

Summary of Casandro Wash Dam Inspection Reports

Date	ADWR Inspector (s)	District Personnel	Other Personnel	Principal Findings
21-Oct-97	Ken Hussain	Chuck Smith Ernie Hamer		Impoundment on 9/26/97 of 11.5ft
				Minor rilling on both upstream and downstream slopes need to be repaired
				FCD crews recently performed routine maintenance throughout the project area
				Headcutting occurring in the outfall area just downstream of the dam needs to be repaired
				Sediment build up is occurring at the box structure at Navajo and Jackson Street, structure needs to be cleaned and cleared of sediment
6-Nov-02		Michael Greenslade		Rilling near the left abutment area where gravel mulch was not placed. Need to complete gravel mulch application on the upstream slope
				Rilling left of the emergency spillway. Schedule gravel mulch application at the left abutment area
				Video inspection of Principal Spillway conduit scheduled FY 2002-003
				Minor spalls on the right side of ogee crest, no repairs required
				Shrinkage and/or temperature cracks on emergency spillway control structure, channel, Stilling Basin. No structural cracks noted. No repairs required.
				Headcutting downstream of emergency spillway outlet channel
3-Nov-03		Larry Lambert	John Chua	Gravel mulch place on upstream slope in 2003. No rilling noted where mulch placed
				Rilling left of the emergency spillway repaired when gravel mulch was applied in 2003
				Extended riprap in right downstream groin area where erosion was occurring (2003)
				Video inspection of Principal Spillway conduit completed in 2003. No problems noted
				Riprap lined downstream of stilling basin
				Head cutting downstream. No apparent change in 2003
				Surveyed in 2003 and scheduled for 2004

6.2 Field Inspection for Structure Assessment

As part of the Phase I Assessment for Casandro Wash Dam, a visual inspection of Casandro Wash Dam and its appurtenant structures was performed on February 25, 2004. The inspection team included Mike Meng of the District, Bob Eichinger, P.E., CFM, Kimley-Horn and Associates, Inc., Debora Miller, Ph.D, P.E., Gannett Fleming, Inc., Ken Euge, R.G. Geological Consultants, Inc. and Enamul Hoque P. E., Hoque & Associates, Inc. Key elements of the dam system including the emergency spillway and the principal outlet were inspected by all members of the inspection team.

The inspection team spilt into two groups to inspect the dam embankment. The team walked along the upstream and downstream embankment toes and the crest of the dam embankment. Key features observed during the inspection were documented in field notes and photographed. A detailed inspection report is included in **Appendix E**. Appendix E also includes photographs and the inspection form used to document the field conditions. Key findings are summarized as follow:

- Gravel mulch place on upstream and downstream slopes in 2003.
- Gravel mulch is thinner than at either Sunnycove or Sunset FRS.
- Animal burrows were spotted through upstream and downstream slope and on crest.

6.3 Signs of Distress

Based on the field inspection performed by the Kimley-Horn team, historic inspection reports by ADWR and the District and the results of FMEA for the FRS, no major signs of distress have been identified relative to Casandro Wash Dam and its appurtenant facilities.

6.4 Safety Deficiencies

Based on the field inspection performed by the Kimley-Horn team, historic inspection reports by ADWR and the District and the results of FMEA for the FRS, no safety deficiencies have been identified relative to Casandro Wash Dam and its appurtenant facilities.

7.0 FAILURE MODES AND EFFECTS ANALYSIS

7.1 Introduction

Kimley-Horn and Associates, Inc. and the FMEA team conducted a failure modes and effects analysis for Casandro Wash Dam. The FMEA is a qualitative risk-based procedure that can be usefully applied to any engineered system, especially for those with complex components or component interactions. The FMEA relies on the collective engineering judgment of experience professionals in a workshop setting to describe potential failure modes, the likelihood of that potential failure mode, and the potential consequences resulting from the failure.

The workshop was conducted on March 4, 2004. The workshop participant included:

Tom Renckly, P.E., Flood Control District of Maricopa County, Project Manager,
Michael Greenslade, P.E., Flood Control District of Maricopa County, Dam Safety Engineer
Bob Eichinger, P.E., CFM, Kimley-Horn and Associates, Inc., Project Manager
Larry Von Thun, P.E, Dam Consultant and FMEA Facilitator
Debbie Miller, P.E., PhD, Gannett Fleming, Inc. Geotechnical
Ken Euge, R.G., Geological Consultants, Geology
Kelli Blanchard, E.I.T, Kimley-Horn and Associates, Inc, Session Recorder

The detailed Failure Mode and Effects Analysis Report is provided in **Appendix F** of this report. The FMEA report was reviewed the FMEA team.

The purpose and scope of the FMEA exercise was to:

- Identify potential site-specific failure modes for the dam.
- Discuss qualitatively the likelihood of the occurrence of potential failure modes.
- Determine whether or not, and how, important the potential failure mechanisms are being monitored.
- Examine the potential consequences of failure and the adverse consequences of successful operation during flood loading (e.g. – large spillway releases).
- Identify possible risk reduction actions that may be taken to reduce the likelihood of failure or to mitigate adverse consequences.
- Determine what information, investigations or analyses may be needed to resolve uncertainties relative to potential failure modes.

7.2 FEMA Procedure.

The FMEA workshop was conducted in the following steps:

- Define the System: This process involves developing a detailed description of the dam system and its components. This is an important step in understanding how the system components operate and relate and how the components or system may fail.

- Define System Potential Failure: Typically, failure of a dam is defined as the uncontrolled release of the reservoir. This definition was modified to include emergency spillway discharges during normal operations of the facility.
- Define Likelihood and Consequence Categories: The likelihood of consequences of potential failure were divided into three broad categories: low, medium, and high.
- Identify Potential Failure Modes: This step involves examining each component in detail to identify the ways in which it might cause a system failure.
- Evaluate Failure Modes: A likelihood and consequence category was assigned to each potential Class I or Class II failure mode.
- Binning: A two-dimensional array/matrix was used to "combine" the likelihood and consequence to obtain the relative risk associated with each potential Class I and Class II failure mode.
- Documentation: The results of the FMEA were documents in a detailed report prepared by Kimley-Horn and reviewed by the FMEA team. The detailed report is included in **Appendix F**.

7.3 FMEA Results

The FMEA for Casandro Wash Dam did not identify any potential failure modes with a high likelihood and high consequence. The following Category I and II failure modes were assigned a low likelihood of occurrence and a high consequence to a high likelihood and low consequence:

Potential Adverse Consequences Resulting from Emergency Spillway Discharges During Major Rainfall Events (Category I).

Potential Adverse Consequence Description: The Casandro Wash Dam emergency spillway is an 80 foot wide reinforced concrete chute spillway located in the middle of the main dam embankment. Normal flood discharges from the spillway are directed into a natural, shallow, ill defined wash that is bounded by development. The flows continue in the wash and are directed toward residential development within the Town of Wickenburg. This potential "failure mode" does not "fail" the dam or emergency spillway. However, any appreciable flows from the spillway would likely cause adverse consequences downstream from the dam. Very large flows have the potential for resulting in extensive damage and loss of life. This potential adverse consequence was rated as Category I because normal "successful" operation of the emergency spillway can produce discharges that could have significant adverse consequences and the likelihood of occurrence of these adverse consequences is associated with floods of reasonably probable frequency.. The floodwaters will pass through the emergency spillway. From that point the water will flow into residential housing communities downstream from the dam.

Seepage Erosion through Right Abutment. (Category II – considered but not highlighted).

Failure Mode Description: Initially seepage flows into the right abutment at or near the dam/abutment as a result of a separation of the zone between the dam section and the blanket fill or as a result of cracks or openings that penetrate the blanket fill material. Seepage flows increase and flow with some appreciable velocity develops through a natural coarse zone or zones in the abutment. This flow in the coarse zone erodes silt or fine sand zones adjacent to the coarse zones and "caving" of overlying materials initiates. Flows increase and caving continues. Caving continues to the point of allowing an overtopping breach to start. Continued breaching erodes natural hillside. This mode is only feasible during the highest levels of flooding. Below elevation 1255 ft the seepage would have a longer flow path and would not be likely to develop adequate velocities to initiate erosion of adjacent materials. For this failure mode to get into realm of reality there needs to be an anomaly or unknown situation or condition within the abutment (of which there is no specific evidence) that is particularly adversely configured to allow the erosion process to develop and proceed as postulated. This mode is more likely to occur on the right abutment than on the left abutment because of the nature of the tie with the abutment and the presence of the thin blanket fill over the abutment ridge.

The following Class III's are provided but further evaluation is required upon availability of appropriate data:

Potential Failure from Embankment Overtopping Due To Major Floods Approaching The PMF Level. (Category III – failure modes for which insufficient information is presently available for making engineering judgments).

Failure Mode Description: The inflow design flood for Casandro Wash Dam is the ½ PMF. The design of the dam was based on the ½ PMF using HMR-49 guidelines and the 6-hour duration storm. This failure mode was examined based on the possibility of the occurrence of major floods approaching the PMF and the uncertainty as to whether these floods can be passed by Casandro Wash Dam and Spillway under the current operating conditions. To address this uncertainty the hydrologic routing needs to be re-done to for current PMF and dam spillway conditions. The original routing for the PMF done for the concept design resulted in a water surface elevation at the dam at 2162.8 ft. (Which would indicate that the PMF could be safely passed without overtopping.) However, this routing was done for a different spillway crest type (ogee versus elliptical), and for a different spillway crest elevation (2153 ft versus 2155 ft). The design crest of dam is 2163.5 ft and as-built top of dam crest elevation is 2163.5 ft. The actual current dam crest elevation is 2163.3 ft. The PMF discharge through the emergency spillway, based on the concept design configuration, and not the as-built configuration, is approximately 6,800 cfs (from rating curve). The routing for the original design using the ½ PMF started with an empty pool and thus it was assumed that the PMF routing did as well. Whether or not an allowance for outlet flow was made is not known.

Potential Effect of Principal Outlet Discharges on Emergency Spillway Discharges. (Category III – failure modes for which insufficient information is presently available for making engineering judgments).

Failure Mode Description: The principal spillway was designed and constructed to discharge into the emergency spillway chute. If discharges or spills were to occur in the emergency spillway there would be simultaneous flow from the principal spillway as well. The documents for the design of the principal and emergency spillways did not analyze the effect of discharges from the principal spillway on the flow hydraulics of the emergency spillway. This condition may not result in a realistic concern as a potential failure mode of the dam or spillways but may have an adverse consequence on the operation of the emergency spillway, downstream and lateral extent of erosion protection, and required freeboard on the wing walls.

7.4 FMEA Limitations

It is prudent to recognize that there exist for all dams specific ways that failure could come about that warrant attention and diligent monitoring. The identification of a condition or process as a "potential failure mode" does not imply that the dam is about to fail or even necessarily that there is a dam safety deficiency at the site. Rather it identifies physically possible conditions or processes (generally with a remote but still credible chance of occurrence) that persons associated with owning, inspecting, analyzing and operating the dam should be aware. Some of the potential failure modes are highlighted (or prioritized) for attention of the dam owners and operators. They are highlighted because the specific conditions at the dam and appurtenant structures are such that these failure modes are physically possible and are considered the most realistic and most credible potential failure modes definable at the site.

8.0 RECOMMENDED STUDIES AND INVESTIGATIONS

The existing available studies, analyses, construction records, and investigations conducted as part of the design and construction of the structure were reviewed by the Kimley-Horn team. Kimley-Horn has developed the following recommendations for further studies and investigations as a result of the data review. In addition, recommendations for further studies and investigations were developed in the Failure Mode and Effect Analysis workshop for the dam. This section provides a summary of the major recommendations.

8.1 Hydrologic and Hydraulic Recommendations

1. An updated dambreak analysis and inundation mapping should be prepared for Casandro Wash Dam. New integrated hydraulic models such as HEC-RAS (unsteady flow and dambreak options) could be used to prepare the updated study. The dambreak update should develop reasonable dambreach parameters using published guidelines and the District's dambreach model currently under development. It should be noted that the June 1994 Concept Design Report noted that the PMF overtopped the dam. A hydrologic analysis by Kimley-Horn (see Hydrology 3.3.1) also indicated that the routed PMF results in overtopping the dam. Given the rapid urbanization downstream of Casandro Wash Dam, Kimley-Horn recommends that the PMF event be evaluated as part of an update of the dambreak analysis.

2. The EAP flowchart is divided into actions items based on percent reservoir filling. The flowchart is divided into 10, 25, 50, 90, and 100 percent response actions. The five levels of action may occur in a relatively short time frame given the expected rapid filling of the reservoir. Kimley-Horn suggests that the number of EAP flowchart percent levels/actions be reduced and consolidated given consideration for the time to fill the impoundment during large event storms.

3. A quantitative risk assessment for the facility will require development of stage-frequency and emergency spillway discharge frequency relationships.

4. Probable Maximum Precipitation. Prepare PMP/PMF using 24-hr and 72-hour durations. Compare routings of these events to PMP 6-hr duration flood to verify that they are less critical (or determine that they are more critical).

5. Kimley-Horn recommends that an incremental damage analysis be conducted for Casandro Wash Dam to determine the appropriate inflow design flood (IDF). The current IDF is the ½ PMF. The IDF could change to as high as the PMF due to the increased urbanization downstream of the dam. Based on current ADWR dam safety rules, the IDF may change to between the ½ PMF and PMF depending on downstream incremental damage analysis.

6. The intergovernmental agreement between the District and the Town of Wickenburg has established a flood zone downstream of the dam along Casandro Wash. This

flood zone restricts the construction of habitable structures within the flood zone of the emergency spillway flows. Kimley-Horn recommends reviewing the boundaries of the flood zone with a current (2004) aerial photograph to locate structures within the flood zone and to monitor that structures have not been constructed in the flood zone. A comparison with earlier aerial photographs would enable the District to approximate the date of construction of structures within the flood zone.

7. Kimley-Horn recommends that a hydraulic analysis of the emergency spillway and energy dissipator be conducted to confirm the design report hydraulic analysis. The hydraulic analysis should be conducted using the unsteady flow routine of the HEC-RAS model.

8. Kimley-Horn recommends that a spillway inundation study be conducted for Casandro Wash Dam following District methods for such studies. The EAP inundation boundary exhibit virtually depicts very little difference in the boundaries for the three flows. Kimley-Horn recommends that the exhibit only display the inundation boundary for full flows. The spillway inundation analysis should be continued further downstream than depicted in the EAP. The downstream limits of the EAP inundation mapping are the Atchison Topeka Railroad. The downstream inundation mapping should be continued through the railroad crossing to Sols Wash and possible to the Hassayampa River.

8.2 Geotechnical and Geological Recommendations

1. Monitoring. In recognition of the presence of potentially erosive materials, inter-layered with potentially pervious lenses within native materials in both abutments, KHA recommends monitoring for seepage through the abutments during impoundment events, and regular visual inspection of the thin fill blanket that covers the natural slope south of the right abutment to ensure it is being properly maintained.

2. Supplemental Geotechnical Analyses

   2.1 <u>Additional Testing to Confirm Zone 1 and Zone 2 Material Characteristics</u>. Sampling and testing of representative samples of both Zone 1 and Zone 2 materials could be done during Phase II to verify geotechnical properties that came into question between the design and construction phases of Casandro Wash Dam. In particular, the gradation characteristics and hydraulic conductivities of these materials could be tested to support additional seepage analyses and drain sizing evaluations. Representative samples could be obtained by excavation of test pits, and gradation tests done to confirm the construction-phase findings. Hydraulic conductivity tests could be performed using flexible-wall, triaxial tests on samples compacted in accordance with the construction specifications. These tests would provide estimates of the vertical hydraulic conductivities of the Zone 1 and Zone 2 materials for use in the seepage analyses.

2.2 Documentation of Slope Stability and Seepage for Main Dam. Gannett Fleming does not anticipate any problems with slope stability under any reasonable loading conditions for Casandro Wash Dam. The original stability analysis, and our preliminary (Phase I) stability analyses adequately document factors of safety for all the loading conditions that would need to be evaluated under current NRCS or ADWR criteria, with the possible exception of rapid drawdown as discussed below. Table 7 shows the definitions of various loading conditions and a comparison between the current NRCS design criteria that are outlined in TR-60 (SCS, 1985), and the current criteria as presented in the ADWR dam safety rules and regulations for jurisdictional dams.

Rapid Drawdown Stability (upstream slope): Preliminary analyses were conducted as part of this Phase I study that simulated a plausible scenario for development of the seepage line into the dam under temporary impoundment events, and to assess the upstream slope stability under expected drawdown rates with the outlet works functioning normally. These analyses show that it is very unlikely that a steady state phreatic line would develop in the Casandro Wash Dam, assuming the outlet works are operational and not clogged for sustained periods of time following a flood event. ADWR criteria require that an "instantaneous" drawdown analysis be performed. The ADWR guidance and rules were developed for water retention dams, and the criteria are interpreted to mean that rapid drawdown stability should be evaluated assuming that a steady state phreatic line has developed from the normal high reservoir pool elevation. In the original analysis, rapid drawdown was evaluated assuming a fully developed phreatic line from the normal high reservoir pool elevation, followed by instantaneous drawdown to "½ the PMF elevation". It is unclear why the designers put this limitation on the instantaneous drawdown elevation. The critical upstream failure surface under this loading scenario was a shallow slip surface on the upper part of the slope. A more realistic, but still conservative rapid drawdown analysis that should adequately address the ADWR criteria would involve the following steps:

a. Establish the steady state phreatic line and pore pressure distribution using 2-D seepage analysis. Use reasonable assumptions for hydraulic conductivity and anisotropy for the embankment materials based on available information, or new testing of the Zone 1 and Zone 2 materials as described previously.
b. Model the dissipation of pore pressures with time, starting from the steady state initial condition, and assuming a worst case drawdown rate. The drawdown rate should be based on the fastest rate feasible assuming a fully operational outlet discharging at capacity. This is not an "instantaneous" drawdown assumption, but is much more realistic given the physical constraints on the rate of drawdown. Realistic hydraulic conductivities should be used for Zone 1 based on the actual materials that were used in construction, and not on the laboratory testing on samples having less than 10 percent fines. Pore pressure dissipation with time

from the steady state condition can be estimated using either a transient numerical flow analysis or a suitable analytical procedure.

c. Evaluate the upstream slope stability at various stages of the drawdown by inputting the instantaneous pore pressure grids and reservoir levels from the transient seepage analysis. Report the minimum value, and compare against the design criteria (minimum factor of safety = 1.2).

Supplemental Seepage Analyses and Drain Size Evaluation: Previous seepage analyses for drain sizing in the original design report, and supplemental analyses by Gannett Fleming as part of this Phase I Structures Assessment, used Zone 1 hydraulic conductivity estimates from the original site investigation and design report (kv = 5X10-4 cm/s, kh = 10kv = 5X10-3 cm/s). These results are suspect because the materials tested for hydraulic conductivity in the original investigation are evidently different from the majority of Zone 1 materials actually used to construct the dam. It is likely that the Zone 1 materials may have substantially lower hydraulic conductivities due to higher amounts of low plasticity fines.

Supplemental transient seepage analyses that are documented in Section 3 of this report indicate that the upstream zone will not become fully saturated, and that a steady state seepage condition into the chimney drain is unlikely to develop under plausible storm scenarios and normal operating conditions. However, it may be desirable or necessary to evaluate the drain capacity requirements under conditions where the outlet is plugged, and a steady state phreatic line does develop after some extended time period of impoundment. In concert with step (a) of the upstream rapid drawdown stability analysis previously described, additional supplemental analysis could be used to estimate "worst case" seepage quantities into the chimney drain using revised Zone 1 permeability assumptions. The finger drain capacity could then be checked against this revised seepage rate to evaluate whether or not the finger drains are adequate to handle the revised estimates of steady state seepage volumes. The stability analyses indicate that the downstream slope would be stable with adequate factors of safety, even if a seepage line were to develop on the downstream face (i.e., the internal drains were ineffective). The documentation of these analyses could show that even if the finger drains are overwhelmed, the likelihood of failure is low due to the relatively flat downstream slope (3H:1V), and strength of the Zone 1 materials.

2.3 Phase II Evaluation of Potential Seepage and Piping Issues in Left Abutment. A potential Category II failure mode that was recognized during the FMEA involves piping and erosion of materials in the right abutment, either as a result of a separation of the zone between the dam section and the blanket fill, or as a result of cracks or openings that penetrate the thin blanket fill material that was placed on the abutment slope south of the abutment. Adverse factors contributing to this failure scenario are the presence of lenticular zones of coarse native materials, and loose fill materials in the abutment. This adverse abutment condition is more of a concern on the right abutment than on the left abutment because of the nature of

the steep cut and tie with the abutment and the presence of the thin blanket fill that was placed over the abutment ridge, which serves as the "dam" south of the right abutment.

Additional seepage and slope stability analysis could be performed to evaluate the candidate failure mode associated with potential seepage and piping erosion through the right abutment. The analysis is outlined as follows:

1. Develop geologic cross sections through the abutment, beyond the extent of the Zone 1/Zone 2 fill. Sections should be drawn for both the upstream and downstream abutment slopes. Use boring log and laboratory test data from the Geotechnical Report (CH2M Hill, 1995a), and the as-built construction plans to estimate the subsurface slope stratigraphy and geometry as accurately as possible. Assign material parameters (hydraulic conductivities) for the various layers in the slope using available information and judgement.
2. Highlight any zones or potential zones of high transmissivity.
3. Conduct seepage analysis to estimate the range or extent of saturation and seepage through the abutment during impoundment events.
    a. CASE 1 – Establish a "worst case" seepage line through the abutment. A conservative analysis could assume that the outlet intake is clogged, allowing a high elevation steady-state seepage line to develop through the narrow ridge at the right end of the dam. Also, it could be assumed that the Zone 1 blanketing layer is very thin, or has been damaged, allowing reservoir seepage to quickly penetrate into coarse, loose layers of fill and highly stratified, coarse deposits in the abutment. Further, it could be assumed that the slope has been "pre-saturated" by vertical infiltration from the structures on the pad at the top of the ridge. In this worst case scenario, it is likely that seepage would emerge on the downstream side of the ridge.
    b. CASE 2 – Estimate a more likely extent of saturation and pore pressure development in the abutment slope by running a seepage analysis with the Zone 1 blanketing intact, and assuming limited detention time in the reservoir following an impoundment event or events. In this case the seepage line would likely only partially penetrate the upstream slope of the ridge, and may not emerge on the downstream slope.
4. Evaluate whether the potential worst-case and likely seepage scenarios present a potential threat with regard to piping or internal erosion, and recommend remedial actions that could be taken to improve the conditions in the right abutment of the dam, such as installation of a protective filter or seepage cutoff through the ridge.

2.4 Evaluation of Potential Settlement and Elongation of the Principal Spillway. It is normally undesirable to found the outlet pipe on embankment fill. The concern is that the pipe could settle differentially, with more settlement occurring under the central part of the embankment, and less settlement towards the upstream and downstream toes. This "bowing" of the pipe under severe settlement conditions could lead to disruption of joints in the pipe and leakage through the joints when the pipe is flowing full during flood events. At Casandro Wash Dam the potential for embankment settlement causing elongation and disruption of the pipe is mitigated by the low height of the dam, the relatively firm foundation, and very low probability for saturation of the fill. However, analyses could be done to estimate the maximum elongation that could occur under expected differential settlements, and compare that axial strain to the tolerances of the pipe and its joints.

8.3 Additional Recommendations

1. The District has adopted the findings of the Casandro Wash LOMR study, but has not put those findings into practice (e.g. - not in the key resource documents for the dam). The District should decide on where and how it should implement/use the LOMR results regarding the hydrology for the dam and on the implications of adopting the LOMR results.
2. Provide additional crest settlement monuments along the right abutment and right contact as noted in the FMEA report.

9.0 REFERENCES

AWC; 1979; "Sunnycove Phase I Inspection Report National Dam Safety Program"; prepared by Arizona Water Commission Supervision of Dam Safety; January 1979; 14 p. Phase I inspection of Sunnycove FRS.

ADOT; 1992; Development of Seismic Acceleration Contour Maps for Arizona; ADOT Report No. AZ92-344; prepared by K.M. Euge and B.A. Schell, Geological Consultants, Phoenix, Arizona and I.P. Lam, Earth Mechanics Inc. Fountain Valley, CA; September 1992; 328 p.

AMEC; 2002; consultants report entitled "Seismic Exposure Evaluation, Dam Safety Program, Flood Control District of Maricopa County"; prepared for Flood Control District of Maricopa County, Phoenix, Arizona; AMEC Job No. 0-117-001122, Task 2; May 2, 2002; 22 p.

CH2M Hill; 1995; consultants report entitled "Casandro Wash Detention Dam Geotechnical Report, Volume 1, Field and Laboratory Data," prepared for Flood Control District of Maricopa County, Phoenix, Arizona; prepared by CH2M Hill, Tempe, Arizona; February 1995; 9 p. with drill hole, test pit logs, and soils laboratory test results.

CH2M Hill; 1995b; consultants report entitled "Casandro Wash Detention Dam Geotechnical Report, Volume 2, Analysis and Recommendations," prepared for Flood Control District of Maricopa County, Phoenix, Arizona; prepared by CH2M Hill, Tempe, Arizona; February 1995; 9 p. with stability analysis calculations.

CH2M Hill; 1995c; consultants report entitled "Casandro Wash Dam Final Design Report," prepared for Flood Control District of Maricopa County, Phoenix, Arizona; prepared by CH2M Hill, Tempe, Arizona; February 1995; 49 p. summarizes data collected and present results and recommendations of the preliminary analyses.

CH2M Hill; 1995c. Construction Specifications for Contract FCD 95-02, Casandro Wash Dam in the Town of Wickenburg near the Intersection of U.S. Highway 60 and Mariposa," CH2M Hill, Tempe, AZ

Cooley, M.E.; 1973; Map Showing Distribution and Estimated Thicknesses of Alluvial Deposits in the Phoenix Area, Arizona; U.S. Geological Survey Miscellaneous Investigation Series Map I-845-C; 1 sheet; Scale 1:250,000.

Cooley, M.E.; 1977; Map Showing Selected Alluvial Structures and Geomorphic Features; U.S. Geological Survey Open-File Report 77-343; 29 p.

FCD; 2004; http://156.42.96.39/alert/Flow/7133.htm; Flood Control District website; May 2004; Gage information, Impoundment History, Precipitation Data for Casandro Wash Dam.

Grubensky, M.J., Stimac, J.A., Reynolds, S.J. and Richard, S.M.; 1987; Geologic Map of the Northeastern Vulture Mountains and Vicinity, Central Arizona; Arizona Geological Survey Open-File Report 87-10; October 1987; 7 p. with 1:24,000 scale geologic map and cross sections.

NRCS; undated; Sunset FRS, Sunnycove FRS and Pipeline Hydrology, Wickenburg WPP Arizona; undated; Pipeline hydrology

SCS; 1974; Watershed Work Plan, Wickenburg Watershed; prepared by us department of agriculture, Soil Conservation Service, Flood Control District of Maricopa County, Triangle Natural Resource Conservation District, Wickenburg Natural Resource Conservation District, Yavapai County Board of Supervisors, and Town of Wickenburg, December 1974; p. 69. summarizes the watershed work plan for Sunset Wash, Sunnycove Wash, and Casandro Wash.

Staedicke, J.M.; 1995; Settlement Monitoring of Earthen Dams Operated by the Flood Control District of Maricopa County; prepared by Jan M. Staedicke, FCDMC; June 1, 1995;

RAM; 1996. "Summary Report, Casandro Wash Dam," letter report from Ricker, Atkinson, McBee & Assoc. to Flood Control District of Maricopa County, Arizona, November 18.

NRCS; 1994. "National Engineering Handbook," National Resources Conservation Service, United Stares Department of Agriculture.

GEO-SLOPE; 2002. "User's Guide for the Computer Program Seep/W Version 5," GEO-SLOPE International Ltd., Calgary, Alberta, Canada.

Table 1. Casandro Wash Dam
Physical Data

	As-Designed Casandro Wash Dam Final Design Report, 1995		As-Builts Plans Casandro Wash Dam, 1995	
Item		Reference Page		Reference Sheet
Inflow Design Flood				
1/2 PMF				
Watershed Characteristics				
Watershed Area (acres) (square miles)	1920 (3.0)	1-1	1920 (3.0)	22
Maximum Elevation (ft MSL)	**2460	**See Note Below	n/a	
Minimum Elevation (ft MSL)	**2200	**See Note Below	n/a	
Reservoir or Flood Pool				
Peak volume Inflow Flood During 100 year (ac-ft)	156	2-3	n/a	
Peak Inflow Flood During 1/2 PMF (cfs)	5398	2-4	n/a	
Storage at Emergency Spillway Crest with 2 ac-ft of Sediment (ac-ft)	143	1-5	142	22
*100-yr Sediment Accumulation (ac-ft)	*2	2-10	n/a	
Reservoir Storage at PMF Water Level (ac-ft)	406	2-4	n/a	
Main Embankment				
Type	Homogeneous Earth filled	1-5		
Length (ft)	350	iv	350	18
Maximum Height above Stream bed (ft)	32.5	iv	32.5	6
Crest Width (ft)	14	iv	14	6
Crest Elevation (ft MSL)	2163.5	iv	2163.5	5
Upstream Slope (H:V)	3:1	iv	3:1	6
Downstream Slope (H:V)	3:1	iv	3:1	6
Outlet Works				
Flood Control Inlet Tower	Gated Outlet: 24 in square slice gate	1-5		
Type	RCP	iv	RCP	7
Length (ft)	147		147	7
Diameter (in).	36	iv	36	7
Maximum Discharge (cfs)	30	2-11	30	2
Principal Spillway Crest (ft MSL)	2135	2-11	2135	7
Emergency Spillway				
Type	Concrete lined Chute			
Approach Channel Length (ft)	none		none	
Crest Length (ft)	80	2-11	80	8
Crest Elevation (ft)	2155	2-6	2155	6
1/2 PMF- Maximum Water Surface Elevation (ft MSL)	2160.2	26-	2160.2	6
1/2 PMF- Peak Outflow (cfs)	3700	1-5	n/a	
ADWR Size Classification	Small			
ADWR Hazard Potential Classification	High			

* Sediment yield of 0.4 AF/yr. It was assumed that with proper maintenance every five years 2-af of sediment would be excavated.

**The Wickenburg WPP Arizona Sunset FRS, Sunnycove FRS and Pipeline Hydrology computation sheets

Item	ADWR Criteria As-designed	ADWR Criteria Eff June 12, 2000	Comment/Remarks
Publications and References for NRCS and ADWR Criteria	"Guidelines for the Determination of Spillway Capacity Requirements" ADWR May 1991	Arizona Administrative Code Title 12, Chapter 15 Effective June 12, 2000	
Size	Small: dam height is between 25 and 39 feet and capacity is between 15 and 499 acre feet. According to Table 2 of May 1991 references the dam is classified as small.	**Small:** Storage capacity 50 to 1,000 Acft and height 25 to 40 ft	
Hazard	High harard: Table 1 of above reference classifies dam as high hazard for urban development and significat hazard for economic loss.	**High**: failure or improper operation of a dam would be likey to cause loss of human life because of residential, commercial, or industrial development. Intangible losses may be major and potentially impossible to mitigate, critical lifeline services may be significantly disrupted, and property losses may be extensive.	High: Probable loss of human life - Probable - one or more expected Probable Economic, Lifeline, and Intagible Losses - Low to High
Inflow Design Flood (IDF)	1/2 PMF: Design engineer based IDF on ADWR May 1991 reference given the hazard and size of dam.	High: All Sizes **0.5PMF to PMF**: High hazard class with any size class will vary with size increased based on downstream population (persons at risk) and potential economic losses. The applicant shall consider foreseeable future conditions.	
Total Freeboard (between Emergency Spillway crest and the settled top of the dam crest)	Total freeboard, or the distance between the top of the dam and the spillway crest, is determined by the type of dam, the maximum water surface during discharge of the design flow (1/2 PMF), wave height and runup, and economic factors. The minimum permissible total freeboard for the spillway will be 4 feet according to the above reference	The applicant shall ensure that the total freeboard is the largest of the following: a) The sum of the IDF maximum water depth above the spillway crest plus wave runup. b) The sum of the IDF maximum water depth above the spillway crest plus 3 feet. c) The minimum of 5 feet.	
Residual Freeboard (between maximum IDF water surface elevation to dam crest)	Design engineer recommended 3 feet.	means the vertical distance between the highest water surface elevation during the IDF and the lowest point at the top of the dam	
Principal Spillway Design Flood		N/A	100-year
Principal Spillway Capacity		Low level outlet that is capable of: i) draining the reservoir pool to the sediment pool level ii) high hazard dams - Outlet works shall be a minimum of 36-inch diameter b. high hazard dams: capacity to drain 90% of storage capacity of reservoir within 30 days. c. has diaphram filter or other current practice measure to reduce potential for piping along conduit. e. has an emergency manual override system or can be operated manually	(a) Discharge through the emergency spillway will not occur (b) Adequate to empty the retarding pool in 10 days or less. Or adequate to empty 80 percent or more of the maximum volume of retarding storage after 10 days. The 10-day is measured starting from the time the maximum water surface elevation is attained during the passage of the principal spillway flood
Initial Reservoir Stage for Principal Spillway Hydrograph Routing		N/A	Crest elevation of the lowest ungated principal spillway inlet or the anticipated elevation of the sediment storage, whichever is higher
Design Procedures for Principal Spillways		for high and significant hazard dams principal spillway shall be 36-inches or greater; all high and significant hazard dams shall have the capacity to evacuate 90% of storage capacity of reservoir within 30 days, excluding reservoir inflows; corrugated metal pipe not acceptable	
PMP Storm Types	The 1/2 PMF and PMF were estimated using the procedures outlined in HMR 49 "Probable Maximum Precipitation Estimates, Colorado River and Great Basin Drainages", US Army Corps of Engineers, September 1997. The design engineer evaluated the "local" 6-hour storm.	Both frontal and thunderstorm (tropical) type storms should be studied with due consideration given to tropical storm potential and orographic influences that may greatly increase rainfall. Local Storm duration 6 hour; General Storm duration 72 hour (whichever is greater)	See ADWR guidlelines "PMF Studies for Evaluation of Spillway Adequacy General Guidelines" Revised March 2004. Site-specific PMP studies are acceptable.

Item	ADWR Criteria As-designed	ADWR Criteria Eff June 12, 2000	Comment/Remarks
Reservoir Stage-Storage Curve for Routing PMP Hydrograph and Stability Design Storm Hydrograph	The adequacy of the spillway for an existing dam is nonnally determined by routing the IDF through the reservoir and spillway. Flood routings for spillway capacity determinations will normally be required to commence with the reservoir at the spillway crest elevation. Infrequent exception would be: (1) normal conservation storage level is below the spillway crest of a reservoir without a flood storage pool. (2) the normal upper surface of the conservation pool is limited to a level that is coincident with the bottom level of the flood control pool allocation or (3) the reservoir is used exclusivley for flood cotmol and would normally be empty. Deviations from the normal starting levels of routing at the sillwywas crest elevation must be considered on the basis of risk and reservoir operation procedure.	The adequacy of the emergency spillway is normally determined by routing the IDF through the reservoir and spillway. Flood routings for spillway capacity determinations will normally be required to begin with reservoir storage at the spillway crest elevation. An infrequent exception is that the reservoir is used exclusively for flood control and would normally be empty.	
Emergency Spillway Capacity	See above. A spillway rating curve for the elliptical crest was developed using the procedures outlined in the "Design of Small Dams" by the US Bureau of Reclamation (1987) and "Hydraulic Design of Spillways" by the US Army Corps of Engineers (1990).	Spillways and outlets of flood control dams shall be able to pass all the flood water at a discharge rate as calculated on the basis of the spillway design flood. Emergency spillways must be designed to safely discharge the PMF while maintaining adequate freeboard.	Additional ADWR criteria: i. include a control structure to avoid head cutting and lowering o fthe spillway crest for spillways excavated in soils or soft rock. Ii. Ensure each spillway, in combination with outlet, is able to safetly pass the peak discharge flow rate, as calculated on the basis of the IDF.
Emergency Spillway Crest Elevation	See above	N/A	
Initial Reservoir Stage for Emergency Spillway Hydrograph Routing	See above	Deviations from the normal starting level of routing at the spillway crest elevation must be considered on the basis of risk and reservoir operating procedure, and are evaluated by the Department on a case-by-case basis.	
Sedimentation	100-year sediment volume 1.8 AF Designed for 100 year of 2 AF. Evaluatio using various procedures (PSIAC, MUSLE, Yang, SCS modeling for Sunet and Sunnycove)	N/A	
Dam Breach	Inundation mapping required as part of Emergency Action Plan	Unless waived by the Director, owners of high and significant hazard potential dams shall prepare, maintain, and exercise Emergency Action Plans for immediate defensive action to prevent failure of the dam and minimize threat to downstrem development.	Develop EAP to FEMA 64 guidelines and ADWR requirements.
Special Requirement for Storage	The temporary storage will be evacuated as soon as possible following such periods of flood.(from License)	The temporary storage will be evacuated as soon as possible following such periods of flood.	
Seismic	Design the dam to withstand the maximum credible earthquake (MCE)	Design the dam to withstand the maximum credible earthquake (MCE)	AAC R12-15-1216.B.2. Seismic Requirements
Miscellaneous Design Criteria	A BuREC Type III energy dissipator was constructed to force a hydraulic jump before flow exits to the natural channel donwstream of the dam.	a. the design ...shall include seepage collection and prevent internal erosion or piping due to embankment cracking.. B. the minimum top width of an embankment dam is equal to the structrual height of the dam divided by 5 plus an additional 5 feet. The required minimum top width for any embankment dam is 12 feet. The maximum top width for any embankment dam is 25 feet. c.the applicant shall keep the top of the dam and appurtenant structures accessible by equipment and vehicles for emergency operations and maintenance.	

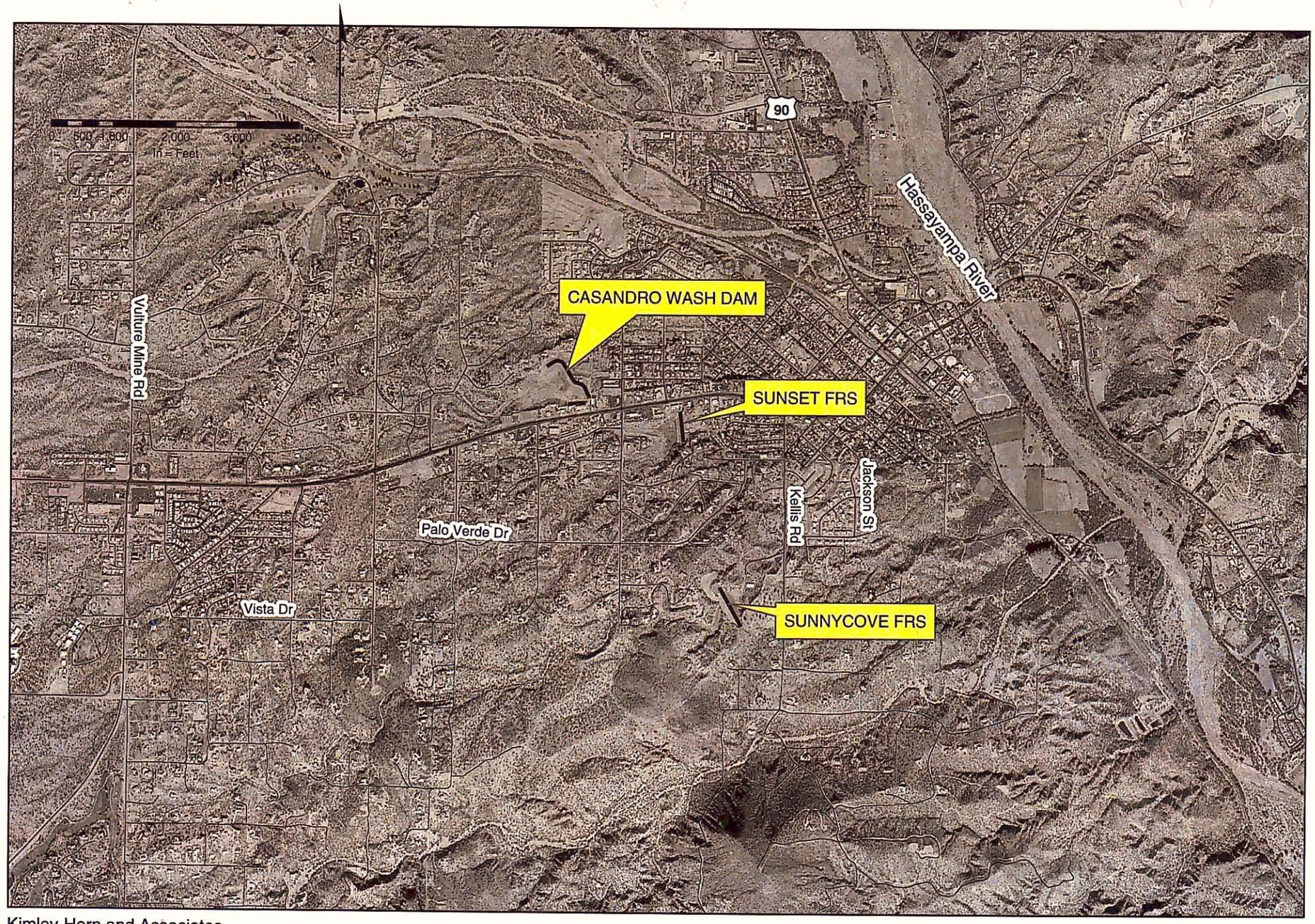

Kimley-Horn and Associates
KHA Project No. 091131008

FIGURE 1: VICINITY MAP

FCD2003C015
PCN 050.36.31

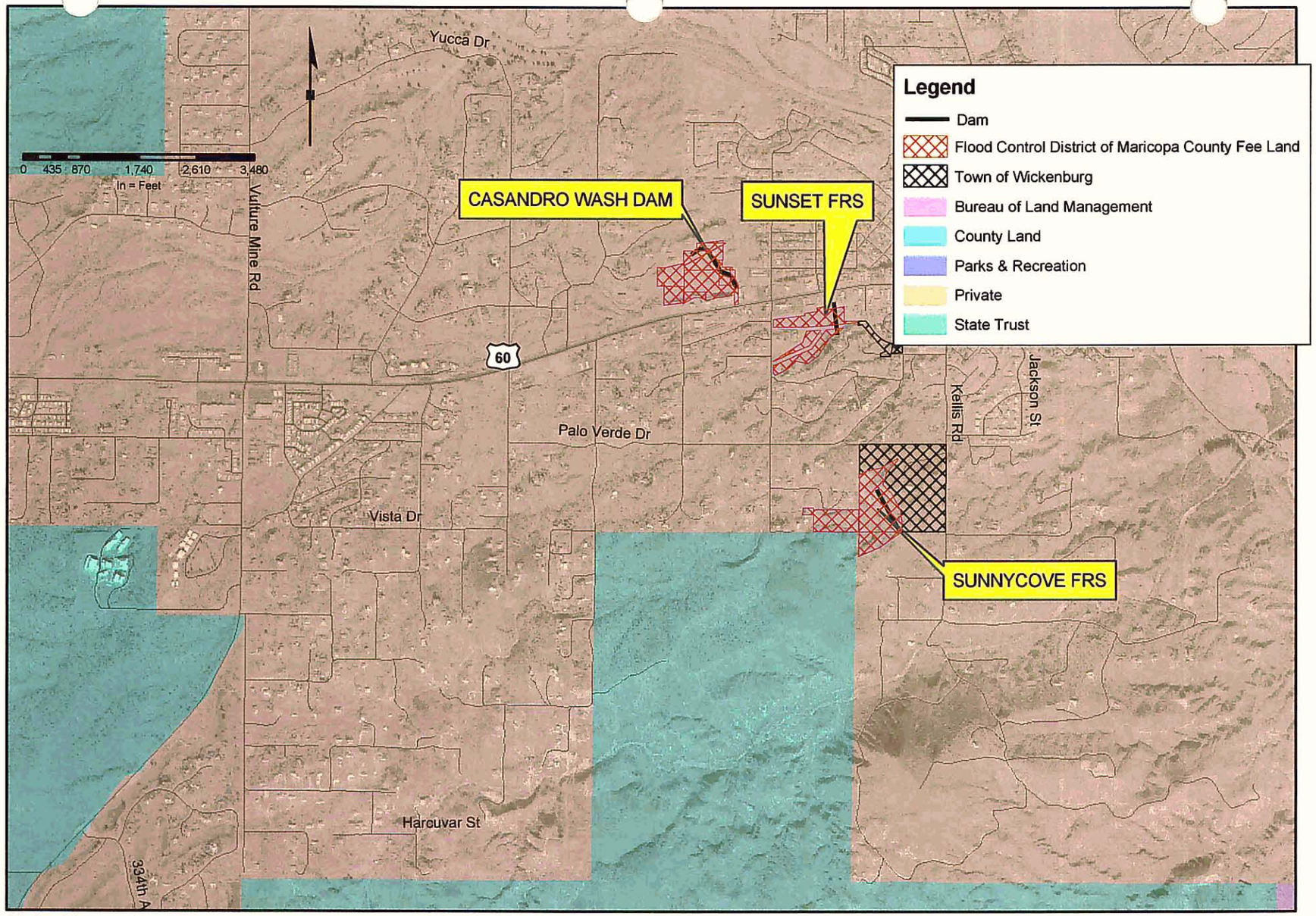

Kimley-Horn and Associates, Inc
KHA Project No. 091131008

FIGURE 2: LANDOWNERSHIP

FCD2003C015
PCN 050.36.31

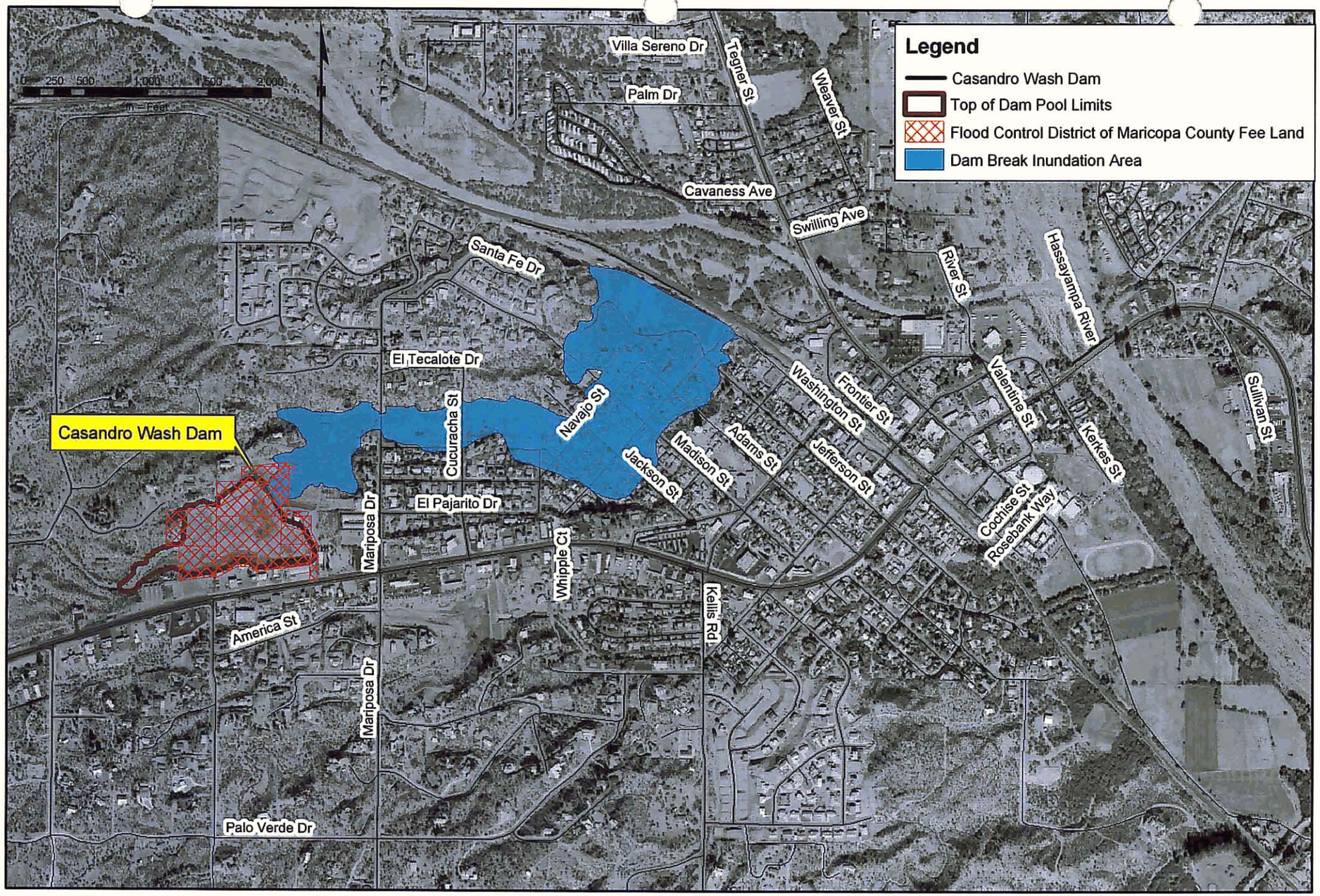

Kimley-Horn and Associates Inc.
KHA Project No. 091131008

FIGURE 3: CASANDRO DAM BREAK INUNDATION AREA

FCD2003C015
PCN 050.36.31

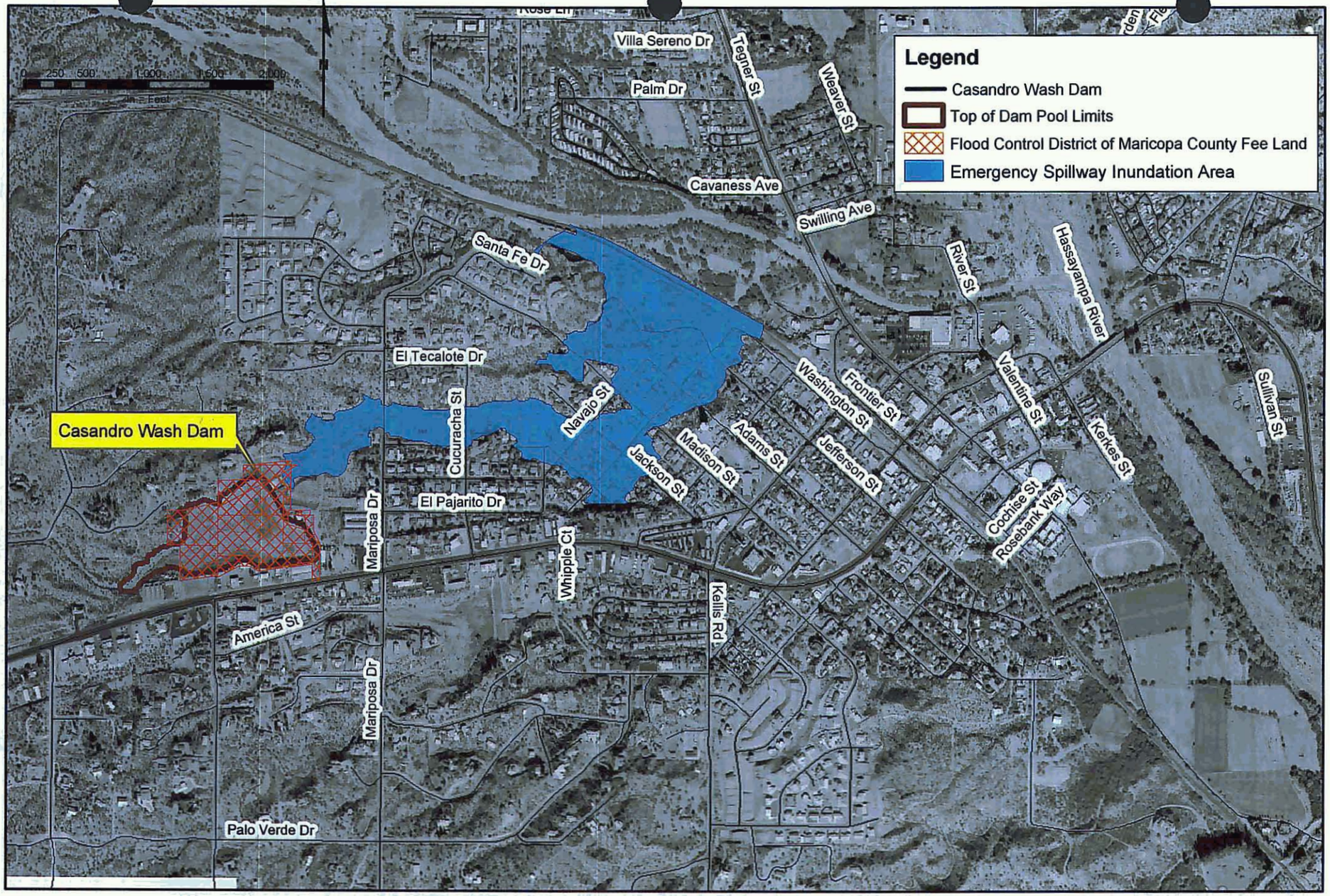

Kimley-Horn and Associates Inc.
KHA Project No. 091131008

FIGURE 4: CASANDRO WASH DAM EMERGENCY SPILLWAY INUNDATION AREA

FCD2003C015
PCN 050.36.31

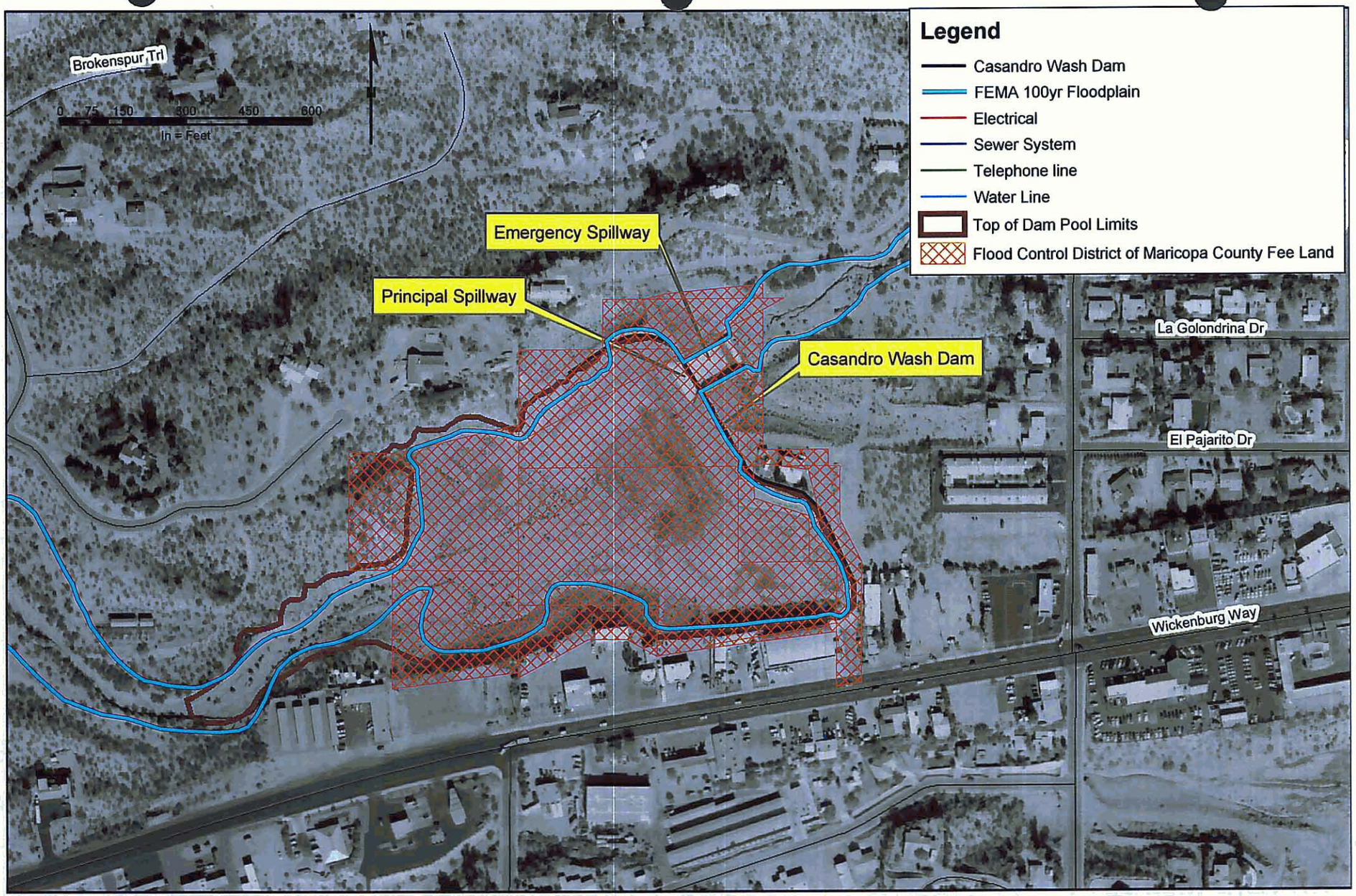

Kimley-Horn and Associates Inc.
KHA Project No. 091131008

FIGURE 5: CASANDRO WASH DAM TOP OF DAM POOL DELINEATION

FCD2003C015
PCN 050.36.31

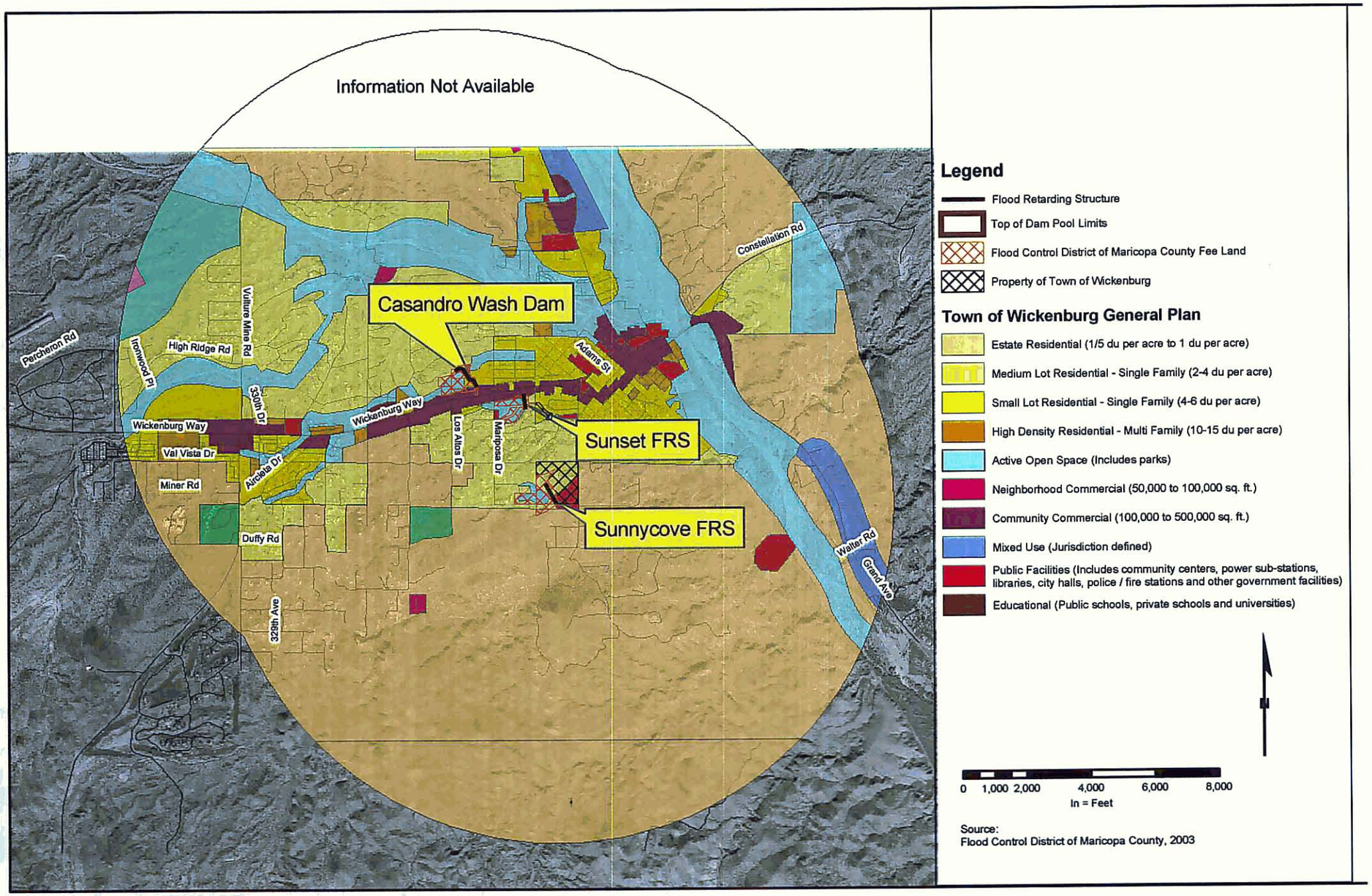

Kimley-Horn and Associates Inc
KHA Project No. 091131008

FIGURE 6: GENERAL LAND USE

FCD2003C018
PCN 050.36.31

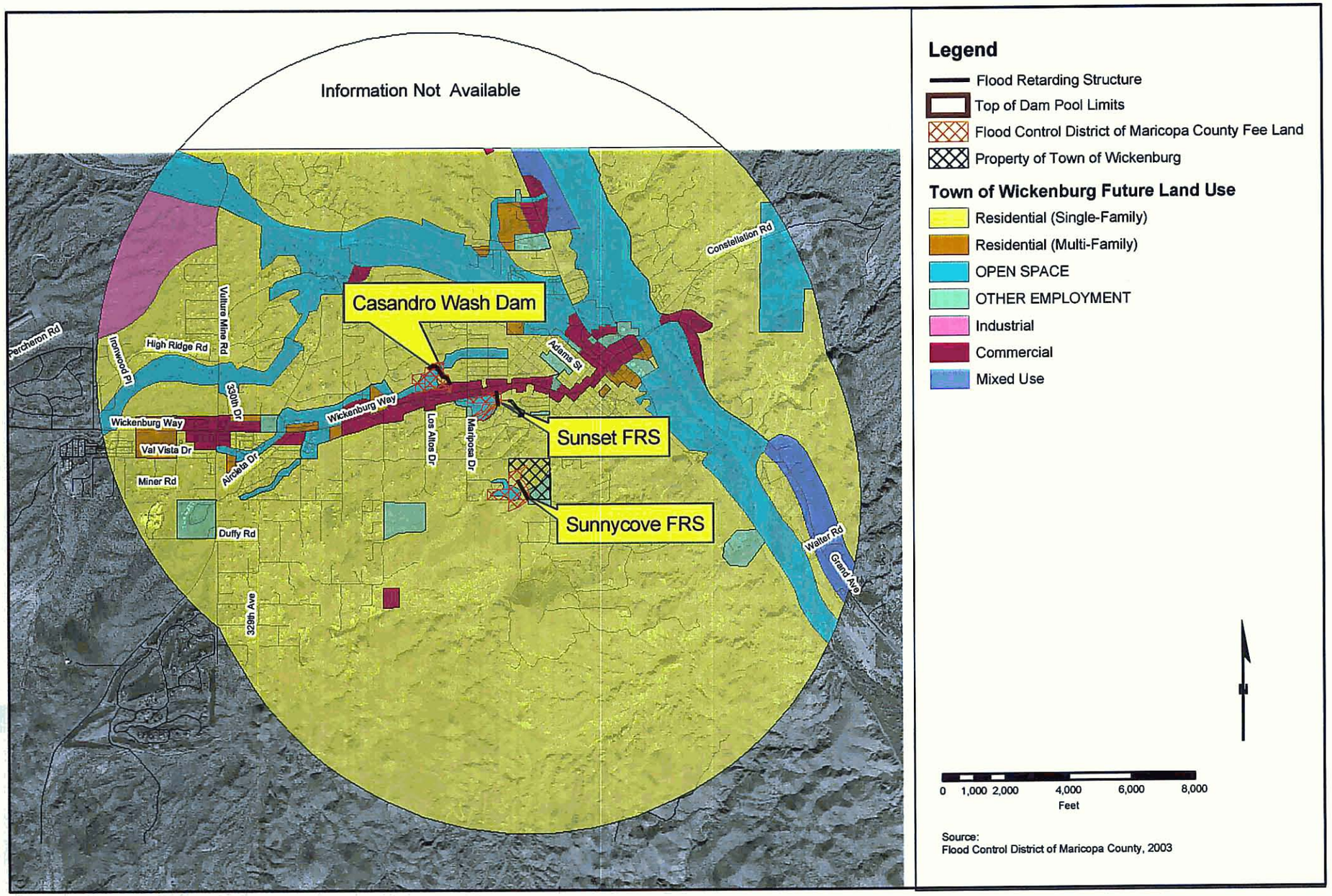

Kimley-Horn and Associates Inc
KHA Project No. 091131008

FIGURE 7: FUTURE LAND USE

FCD2003C018
PCN 050.36.31

FLOOD CONTROL DISTRICT OF MARICOPA COUNTY

In Cooperation With

THE TOWN OF WICKENBURG

Plans For The Construction of

CASANDRO WASH DAM

FCD-95-02

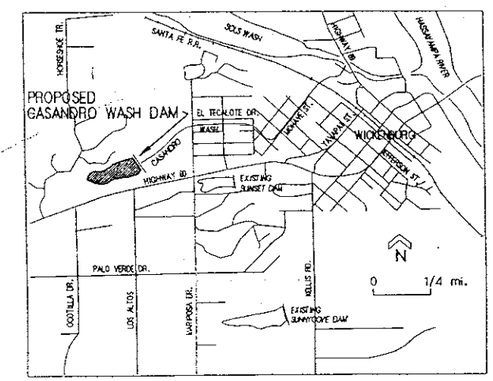

PROJECT SITE

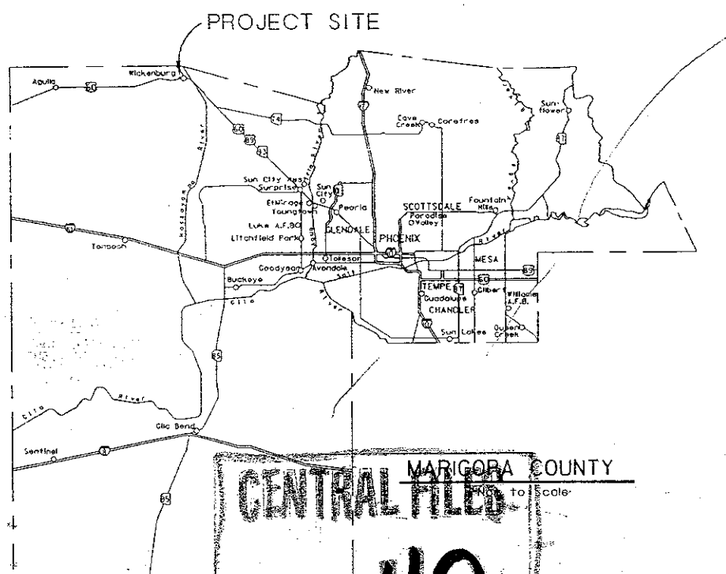

MARICOPA COUNTY

not to scale

CENTRAL FILE

40

Tom S. Chisholm 10/3/95

MARICOPA COUNTY
ENVIRONMENTAL SERVICES
DEPARTMENT

FLOOD CONTROL DISTRICT OF MARICOPA COUNTY	
ISSUED FOR PUBLIC BIDDING BY:	
Stanley L. Shumway, Acting DIRECTOR	9-26-95 DATE
COUNTY BOARD OF DIRECTORS	
TOM RAWLES - CHAIRMAN	
DISTRICT 1	TOM RAWLES
DISTRICT 2	DON STAPLEY
DISTRICT 3	BETSEY BAYLESS
DISTRICT 4	EDWARD KING
DISTRICT 5	MARY ROSE WILCOX

CASANDRO WASH DAM
AS BUILT
FCD 95-02 343

F.DGN 9/8/93

5441P101.DGN

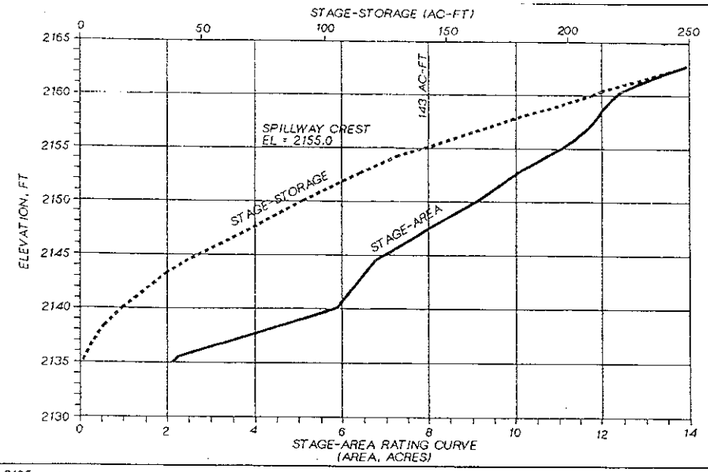

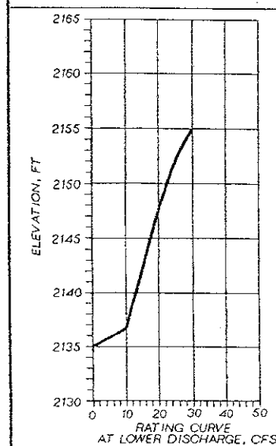

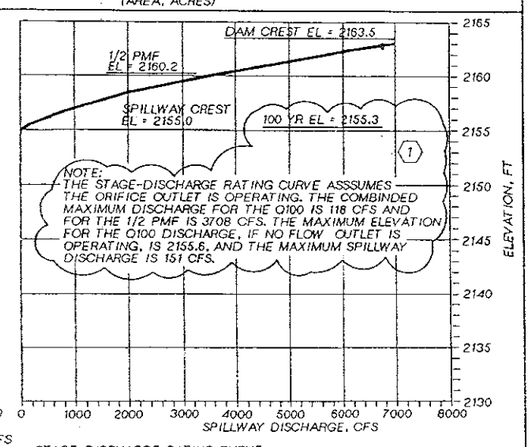

STAGE-DISCHARGE RATING CURVE
(TWO DIFFERENT HORIZONTAL SCALES)

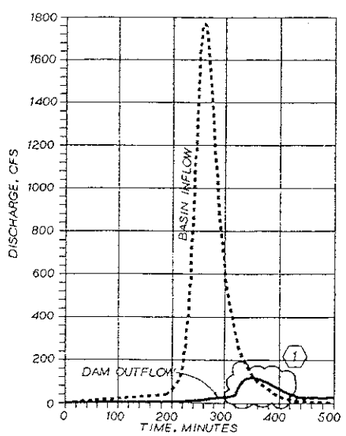

BASIN INFLOW AND DAM OUTFLOW
100 YEAR EVENT

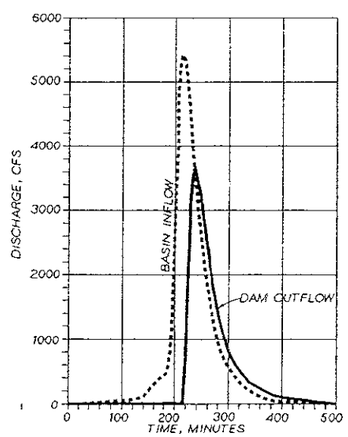

BASIN INFLOW AND DAM OUTFLOW
HALF PMF

ABBREVIATIONS

AB	ANCHOR BOLT
ABC	AGGREGATE BASE COURSE
AC-FT	ACRE FEET
ASSY	ASSEMBLY
BC	BRASS CAP
BM	BENCH MARK
BRG	BEARING
c. c.	CENTER TO CENTER
CTRD	CENTERED
CFS	CUBIC FEET PER SECOND
CHD	CHORD
CLR	CLEAR
CMP	CORRUGATED METAL PIPE
CONC	CONCRETE
CORR	CORRECTION
CONT	CONTINUOUS
CP	CONTROL POINT
DET	DETAIL
DIA	DIAMETER
DIP	DUCTILE IRON PIPE
DIST	DISTANCE
E/P	EDGE OF PAVEMENT
EL	ELEVATION
ESMT	EASEMENT
EQ	EQUAL
EXST	EXISTING
EW	EACH WAY
FT	FOOT/FEET
FCDMC	FLOOD CONTROL DISTRICT OF MARICOPA COUNTY
GALV	GALVANIZED
GND	GROUND
HSSP	HIGH STRENGTH STEEL POLE
HEX.	HEXAGONAL
ID	INSIDE DIAMETER
INV	INVERT
L	ARC LENGTH
LF	LINEAR FEET
LT	LEFT
MAG	MARICOPA ASSOCIATION OF GOVERNMENTS
MAX	MAXIMUM
MH	MANHOLE
MIN	MINIMUM
NO.	NUMBER
NTS	NOT TO SCALE
OC	ON CENTER
OD	OUTSIDE DIAMETER
OPNG	OPENING
PC	POINT OF CURVATURE
PMF	PROBABLE MAXIMUM FLOOD
PGL	PROFILE GRADE LINE
℞	PLATE
PLS	PURE LIVE SEED
POC	POINT ON CURVE
POT	POINT ON TANGENT
PSI	POUNDS PER SQUARE INCH
PT	POINT OF TANGENCY
PVC	POLYVINYL CHLORIDE
RCP	REINFORCED CONCRETE PIPE
RDWY	ROADWAY
REINF	REINFORCING
RT	RIGHT
R/W	RIGHT OF WAY
SE	SLOPE EASEMENT
STA	STATION
STD	STANDARD
SAN	SANITARY
SCHED	SCHEDULE
SHT	SHEET
SIM	SIMILAR
SS	STAINLESS STEEL
SQ	SQUARE
TAN	TANGENT LENGTH
T&B	TOP & BOTTOM
TCE	TEMPORARY CONSTRUCTION EASEMENT
TOT	TOTAL
TYP	TYPICAL
VC	VERTICAL CURVE
VCP	VITRIFIED CLAY PIPE
VERT	VERTICAL
VPI	VERTICAL POINT OF INTERSECTION
WP	WORKING POINT
WS	WATER SURFACE
YDS.	YARDS
ø	DIAMETER

GENERAL LEGEND

3:1	NEW EMBANKMENT SLOPE AS INDICATED
	DRAINAGE DITCH SHOWING DIRECTION OF FLOW
×1000.0	EXISTING GRADE
1000	EXISTING CONTOUR
1000	NEW CONTOUR
	PROJECT CONTROL POINT
	HORIZONTAL OR VERTICAL POINT OF INTERSECTION
	PROJECT BENCH MARK
	EXISTING TREES AND SHRUBS
	EXISTING UNPAVED ROAD
	EXISTING FENCE
	EXISTING SIGN
	PROPERTY LINE/RIGHT OF WAY
	EASEMENT LINE
	NEW ROAD CENTERLINE
	EXISTING UTILITY OR TELEPHONE POLE
MH	EXISTING MANHOLE
MH	NEW MANHOLE
	GROUND SURFACE
	EXISTING STRUCTURE
	APPROXIMATE LIMITS OF EMBANKMENT FILL
H	EXISTING HOUSE
	NEW SETTLEMENT MONUMENT (TYPE A)
	NEW SETTLEMENT MONUMENT TYPE B)

GENERAL NOTES

1. TOPOGRAPHIC MAPPING IS BASED ON AERIAL PHOTOGRAPHY TAKEN JUNE 18, 1993, AND PREPARED FOR FCDMC. MAPPING BY AERIAL MAPPING, INC., PHOENIX, ARIZONA.
2. COORDINATES ARE BASED ON ARIZONA STATE PLANE COORDINATE SYSTEM. ALL DISTANCES ARE GROUND DISTANCES.
3. ACCESS TO RESIDENTIAL AND COMMERCIAL BUILDINGS SHALL BE MAINTAINED AT ALL TIMES.
4. ALL WORKMANSHIP AND MATERIALS SHALL CONFORM TO THE MAG UNIFORM STANDARD SPECIFICATIONS (LATEST EDITION) AND THE SPECIAL PROVISIONS FOR THIS PROJECT.
5. CONTRACTOR SHALL BE RESPONSIBLE FOR FURNISHING, INSTALLING, AND MAINTAINING ALL TEMPORARY TRAFFIC CONTROL DEVICES WHEN WORKING IN OR ADJACENT TO PUBLIC RIGHT-OF-WAY, AND SHALL BE IN ACCORDANCE WITH THE MANUAL ON UNIFORM TRAFFIC CONTROL DEVICES (MUTCD), LATEST EDITION.
6. THE CONTRACTOR SHALL DISPOSE OF CONSTRUCTION DEBRIS AND/OR WASTE MATERIAL AT AN AUTHORIZED LANDFILL.
7. THE LOCATION OF THE EXISTING UTILITIES SHOWN ON THE PLANS ARE APPROXIMATE. UNDERGROUND SERVICE UTILITIES ARE NOT SHOWN. THE CONTRACTOR SHALL VERIFY THE EXACT LOCATION AND DEPTH OF ALL UNDERGROUND FACILITIES.
8. RIGHT-OF-WAY INFORMATION SHOWN WAS OBTAINED FROM FCDMC. EXACT LOCATIONS WILL BE STAKED AND PROPERTY MONUMENTS SET BY FCDMC.
9. THE CONTRACTOR SHALL REMOVE ALL STRUCTURES AND OBSTRUCTIONS WITHIN THE PROJECT LIMITS UNLESS OTHERWISE SHOWN. VERIFY REMOVAL OF ITEMS WITH ENGINEER PRIOR TO CONSTRUCTION.

SHEET INDEX

SHT NO.	TITLE
1	COVERSHEET/LOCATION MAP
2	GENERAL NOTES/ABBREVIATIONS/LEGEND
3	SITE LAYOUT/SURVEY CONTROL
4	SITE IMPROVEMENTS AND GRADING PLAN
5	DAM CENTERLINE PROFILE - STA 9+97 TO 17+00
6	DAM SECTIONS - SPILLWAY AND DRAIN PIPE
7	OUTLET PIPE - PLAN AND PROFILE
8	SPILLWAY/STILLING BASIN PLAN
9	STRUCTURAL DETAILS - SPILLWAY
10	STRUCTURAL DETAILS - STILLING BASIN
11	STRUCTURAL DETAILS - OUTLET PIPE (1 OF 2)
12	STRUCTURAL DETAILS - OUTLET PIPE (2 OF 2)
13	STRUCTURAL DETAILS - MISCELLANEOUS
14	GATE CONTROL DETAILS
15	DRAIN PIPE DETAILS
16	PLAN AND PROFILE - ACCESS ROAD A
17	PLAN AND PROFILE - ROADS B AND C
18	PLAN AND PROFILE- ROAD D
19	FENCE PLAN
20	PLAN AND PROFILE - SEWER RELOCATION
21	SEWER RELOCATION/STILLING BASIN DRAIN PIPE
22	MISCELLANEOUS DETAILS
23	LANDSCAPE PLAN
24	CROSS-SECTION INDEX SHEET
25-32	CROSS-SECTIONS
33	SOIL LOGS DAM AREA
34	SOIL LOGS DETENTION BASIN AREA

PROJECT NOTES

1. SCREENED ELEMENTS ON AERIAL MAPPING REPRESENT EXISTING FACILITIES OR ELEVATIONS. SCREENED BACKGROUNDS ON OTHER DRAWINGS CAN REPRESENT EXISTING FACILITIES OR FACILITIES TO BE CONSTRUCTED UNDER THIS CONTRACT WHICH, IF DRAWN IN SOLID LINES, WOULD OBSCURE THE PARTICULAR DETAILS BEING SHOWN. CONSULT THE ENGINEER IF SCREENING OF ANY ELEMENTS IS NOT SELF EXPLANATORY.
2. TOWN OF WICKENBURG CONTACTS:
   BUILDING SAFETY INSPECTOR: SKIP BLUNT (TEL. NO. 684-5451)
   PUBLIC WORKS DIRECTOR: TONY OROSCO (TEL. NO. 684-2761)

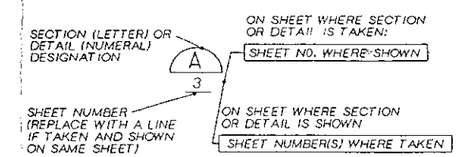

DETAIL AND SECTION DESIGNATION

Two working days before you dig, CALL FOR THE BLUE STAKES
263-1100
Blue Stake Center
CALL COLLECT

NO.	REVISION	BY	DATE
3			
2			
1	(1) ADDENDA NO. 1	DJA	10/16/95

FLOOD CONTROL DISTRICT
OF MARICOPA COUNTY
ENGINEERING DIVISION

GENERAL NOTES
ABBREVIATIONS / LEGEND

	BY	DATE
DESIGNED	MD COEN	6/08/95
DRAWN	MD COEN	6/08/95
CHECKED	TJ WOLF	6/08/95

CH2M HILL

CASANDRO WASH DAM

SHEET 2 OF 34

TRACS NO.

5441P102.DGN

EXISTING SURVEY CONTROL				
POINT NO.	NORTHING	EASTING	ELEVATION	REMARKS
CP 102	1080548.01	447907.97	2151.00	1/2 " IRON ROD
CP 103	1080883.16	448180.20	2122.89	1/2 " IRON ROD
CP 104	1080234.65	447020.26	2178.12	1/2 " IRON ROD
CP 105	1079847.54	446746.42	2185.59	1/2 " IRON ROD
CP 807	1080009.90	448663.55	2154.84	PK NAIL W/ WASHER
BM 823	1080976.33	448670.37	2128.33	BRASS CAP (BM)

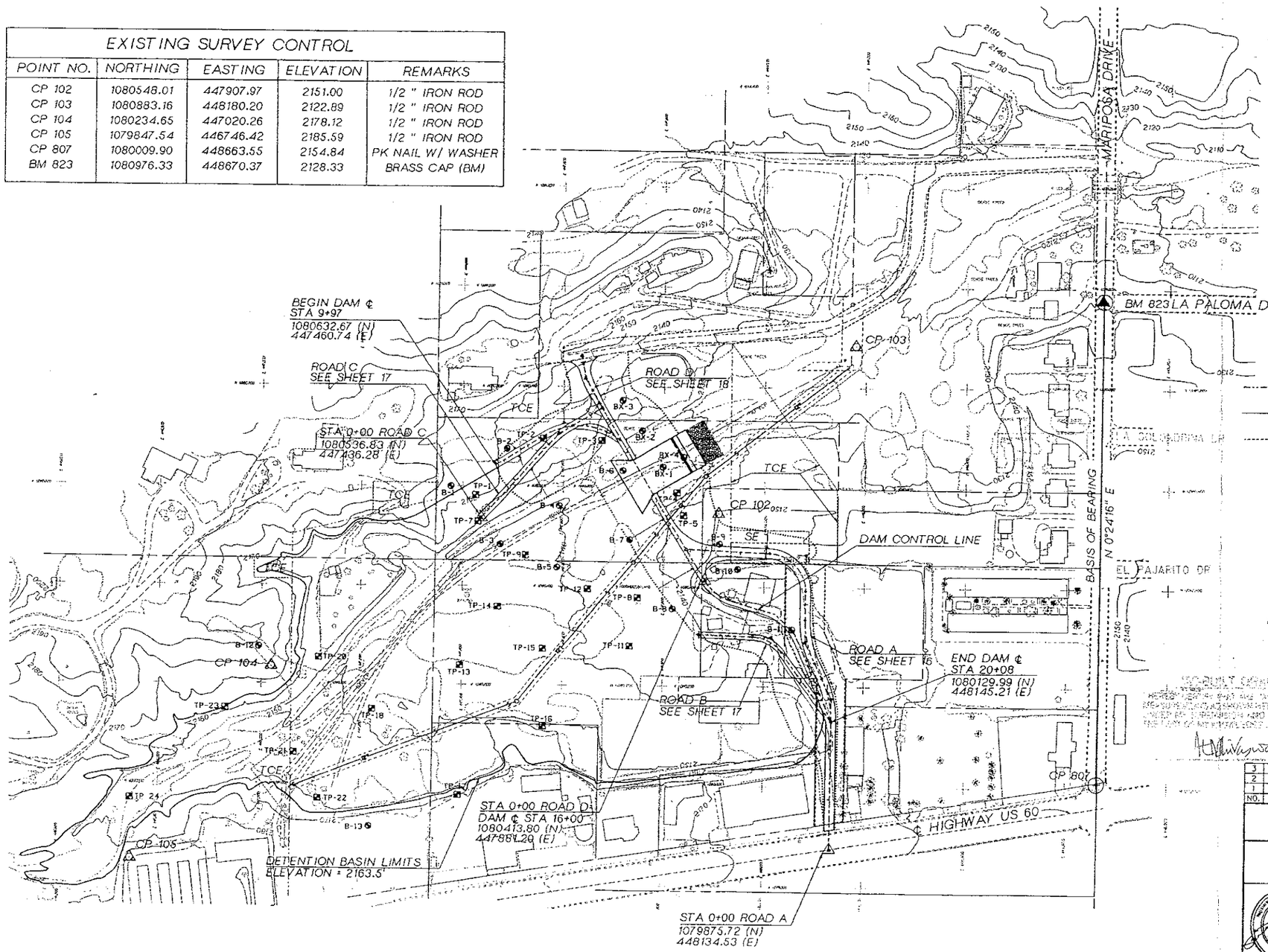

SCALE 1"=100'

LEGEND - SHEETS 3, 4

- Existing Survey Monument
- Existing Control Point
- Project Control Point
- Project Bench Mark
  BC FLUSH AT INTERSECTION OF MARIPOSA DR. AND LA PALOMA DR.
  EL = 2183.33
- TCE
- FCDMC R/W
- PROPERTY LINE
- ACCESS ESMT LINE
- SLOPE ESMT
- SAN SEWER
- SEWER ESMT
- B-8 BORING LOCATION
- TP-15 TEST PIT LOCATION

NOTE:
FOR DAM ℄ AND ROADWAY GEOMETRICS SEE SHEETS 5,16,17, & 18.

Two working days before you dig, CALL FOR THE BLUE STAKES
263-1100
Blue Stake Center CALL COLLECT

NO.	REVISION	BY	DATE
3			
2			
1			

FLOOD CONTROL DISTRICT OF MARICOPA COUNTY
ENGINEERING DIVISION

SITE LAYOUT
SURVEY CONTROL

	BY	DATE
DESIGNED	TJ WOLF	6/08/95
DRAWN	MD COEN	6/08/95
CHECKED	JE LIVINGSTON	6/08/95

CH2M HILL

CASANDRO WASH DAM

SHEET 3 OF 34

TRACS NO.

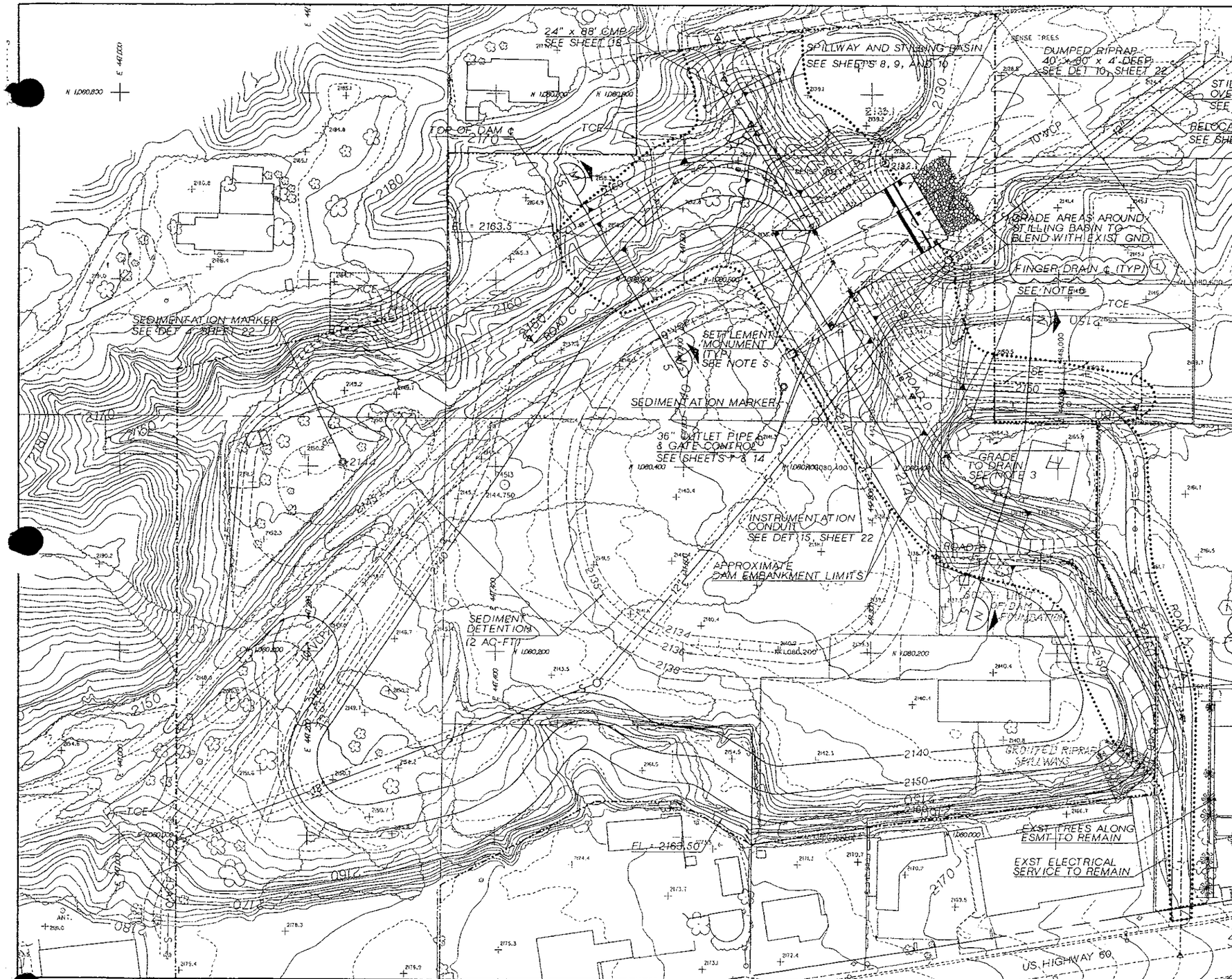

Two working days before you dig, CALL FOR THE BLUE STAKES
263-1100
Out State Center CALL COLLECT

NOTES:

1. SEE SHEET 19 FOR FENCING PLAN AND DETAILS
2. RELOCATED SAN SEWER HAS 16' ESMT AS SHOWN ON SEWER PLANS.
3. GRADE AREA AROUND HOUSE TO DRAIN TOWARD DETENTION BASIN. AREA BETWEEN ROAD A AND DAM ℄ SHALL BE MINIMUM EL OF 2163.5.
4. EXISTING UTILITY CONNECTIONS FOR HOUSE ARE TO REMAIN.
5. INSTALL 6 SETTLEMENT MONUMENTS MAG STD DET 120-1 TYPE B ON DAM & 8 MONUMENTS MAG STD DET 120-1, BRASS CAP ONLY ON CONC STRUCTURES, AT LOCATIONS APPROVED BY THE ENGINEER.
6. EXCAVATE TRASH, DEBRIS, PAVEMENT, & OTHER FILL MATERIAL TO FIRM, NATURAL FOUNDATION.
7. EXCESS FILL DISPOSAL AREA (EARTHWORK) WILL BE ON SITE AS DIRECTED BY THE ENGINEER.
8. PROVIDE AND INSTALL PROJECT SIGN AT LOCATION APPROVED BY THE OWNER. SEE DET 13, SHEET 22 FOR DETAILS.
9. PLACE MAG 120, TYPE B MARKER, AT THE OUTLET OF EACH FINGER DRAIN. TOP OF MARKER SHOULD BE 6 INCHES ABOVE FINISH GRADE.

NO.	REVISION	BY	DATE
3			
2			
1	① ADDENDA NO. 1	DJA	10/16/95

FLOOD CONTROL DISTRICT OF MARICOPA COUNTY
ENGINEERING DIVISION

SITE IMPROVEMENTS & GRADING PLAN

	BY	DATE
DESIGNED	TJ WOLF	6/08/95
DRAWN	MD COEN	6/08/95
CHECKED	JE LIVINGSTON	6/08/95

CH2M HILL

CASANDRO WASH DAM

SHEET 4 OF 34

TRACS NO.

CURVE (A)
(Non-Tangent Curve)
Radius = 130.50'
L = 163.16'
Chd Brg = S85°18'45"E
Chd Dist = 153.03'

CURVE (B)
Delta = 42°57'12"
Radius = 93'
Tan = 36.59'
L = 69.72'

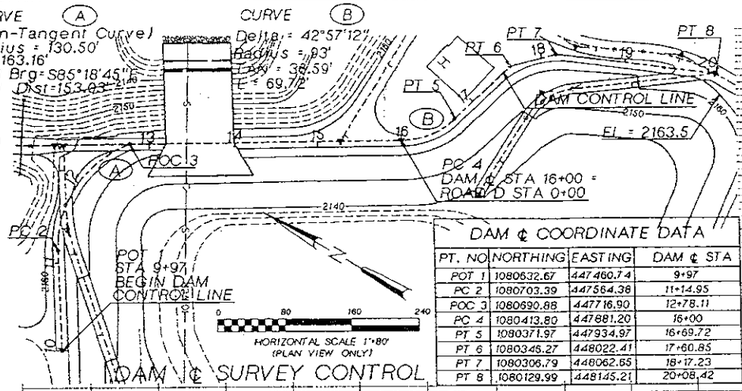

DAM ℄ COORDINATE DATA			
PT. NO	NORTHING	EASTING	DAM ℄ STA
POT 1	1080632.67	447460.74	9+97
PC 2	1080703.39	447564.38	11+14.95
POC 3	1080690.88	447716.90	12+78.11
PC 4	1080413.80	447881.20	16+00
PT 5	1080371.97	447934.97	16+69.72
PT 6	1080345.27	448022.41	17+60.85
PT 7	1080306.79	448062.65	18+17.23
PT 8	1080129.99	448145.21	20+08.42

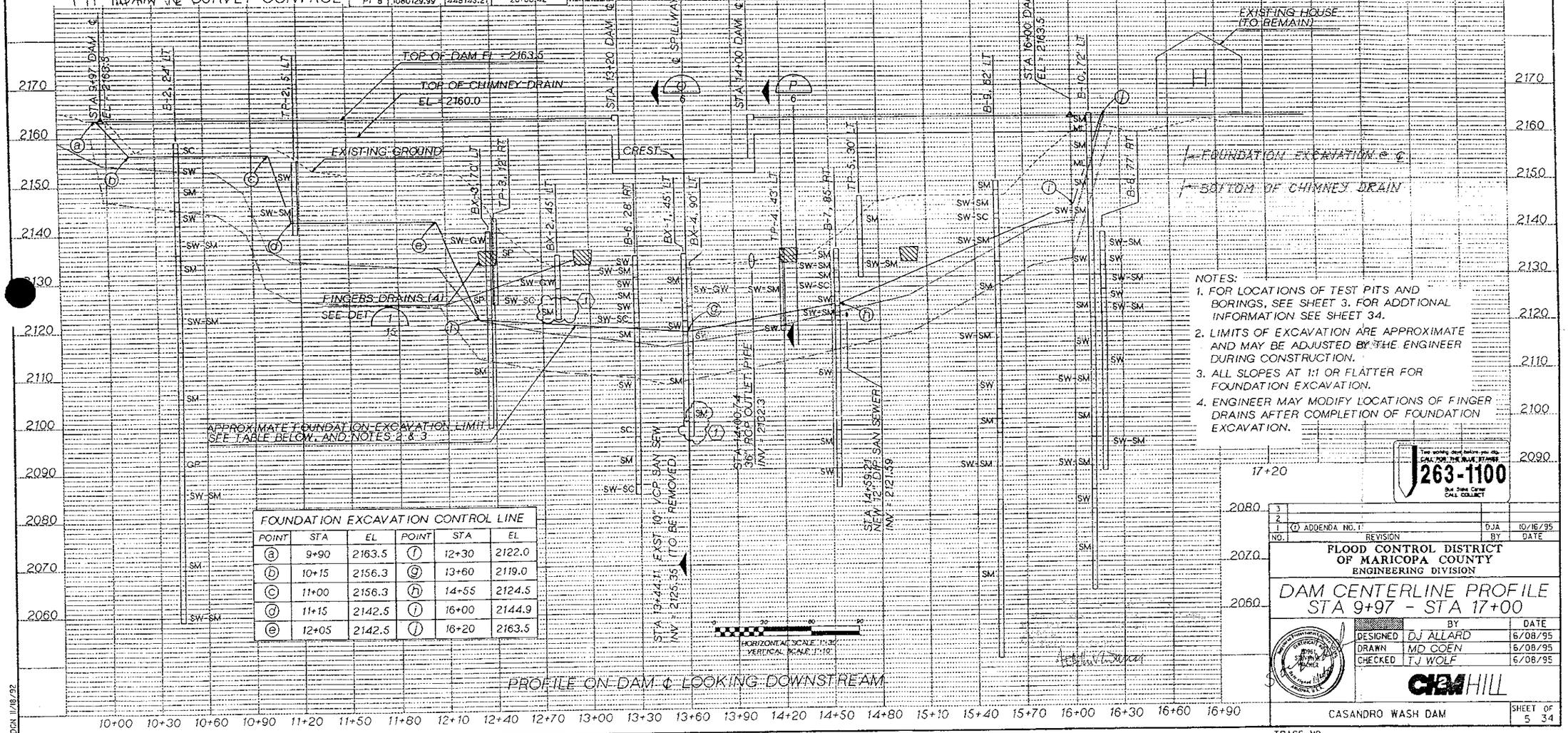

FOUNDATION EXCAVATION CONTROL LINE					
POINT	STA	EL	POINT	STA	EL
ⓐ	9+90	2163.5	ⓕ	12+30	2122.0
ⓑ	10+15	2156.3	ⓖ	13+60	2119.0
ⓒ	11+00	2156.3	ⓗ	14+55	2124.5
ⓓ	11+15	2142.5	ⓘ	16+00	2144.9
ⓔ	12+05	2142.5	ⓙ	16+20	2163.5

NOTES:
1. FOR LOCATIONS OF TEST PITS AND BORINGS, SEE SHEET 3. FOR ADDTIONAL INFORMATION SEE SHEET 34.
2. LIMITS OF EXCAVATION ARE APPROXIMATE AND MAY BE ADJUSTED BY THE ENGINEER DURING CONSTRUCTION.
3. ALL SLOPES AT 1:1 OR FLATTER FOR FOUNDATION EXCAVATION.
4. ENGINEER MAY MODIFY LOCATIONS OF FINGER DRAINS AFTER COMPLETION OF FOUNDATION EXCAVATION.

Two working days before you dig CALL FOR THE LOCATION OF UNDERGROUND UTILITIES
263-1100
Bill Blake Center CALL COLLECT

NO.	REVISION	BY	DATE
3			
2			
1	ⓘ ADDENDA NO. 1	DJA	10/16/95

FLOOD CONTROL DISTRICT OF MARICOPA COUNTY
ENGINEERING DIVISION

DAM CENTERLINE PROFILE
STA 9+97 - STA 17+00

	BY	DATE
DESIGNED	DJ ALLARD	6/08/95
DRAWN	MD COEN	6/08/95
CHECKED	TJ WOLF	6/08/95

CH2M HILL

CASANDRO WASH DAM

SHEET 5 OF 34

TRACS NO.

DGN 11/18/92

5441P108.DGN

NOTES:

1. SEE SHEET 5 FOR LOCATION OF CHIMNEY FINGER DRAINS
2. SEE STRUCTURAL DETAIL SHEETS 8, 9, & 10 FOR SPILLWAY AND STILLING BASIN DETAILS
3. PLACE ANIMAL GUARDS IN 4" PIPE THROUGH WALLS, SEE DET 3, SHEET 15
4. SEE SECTION 301 OF SPECIAL PROVISIONS FOR SUBGRADE PREPARATION
5. SEE SECTION 211 OF SPECIAL PROVISIONS FOR PLACEMENT OF ZONES 1 AND 2

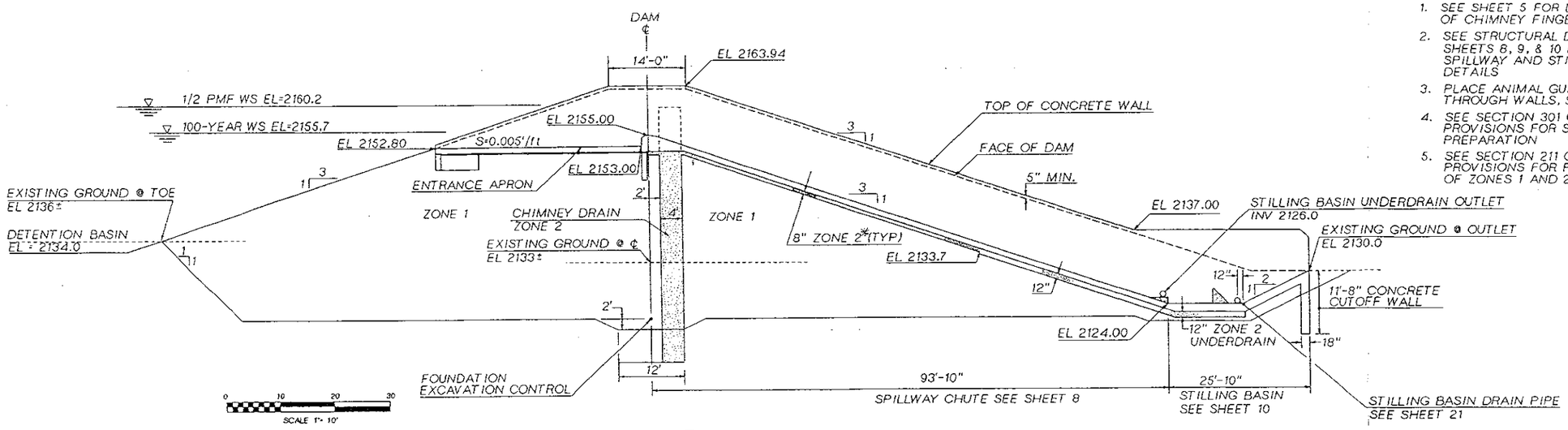

SECTION 0/5

DAM SECTION AT SPILLWAY

* ZONE 2 BELOW SPILLWAY CONCRETE STABILIZED BY PLACING WIREMESH (1/2" OPENING-STANDARD GALVANIZED WIRE)

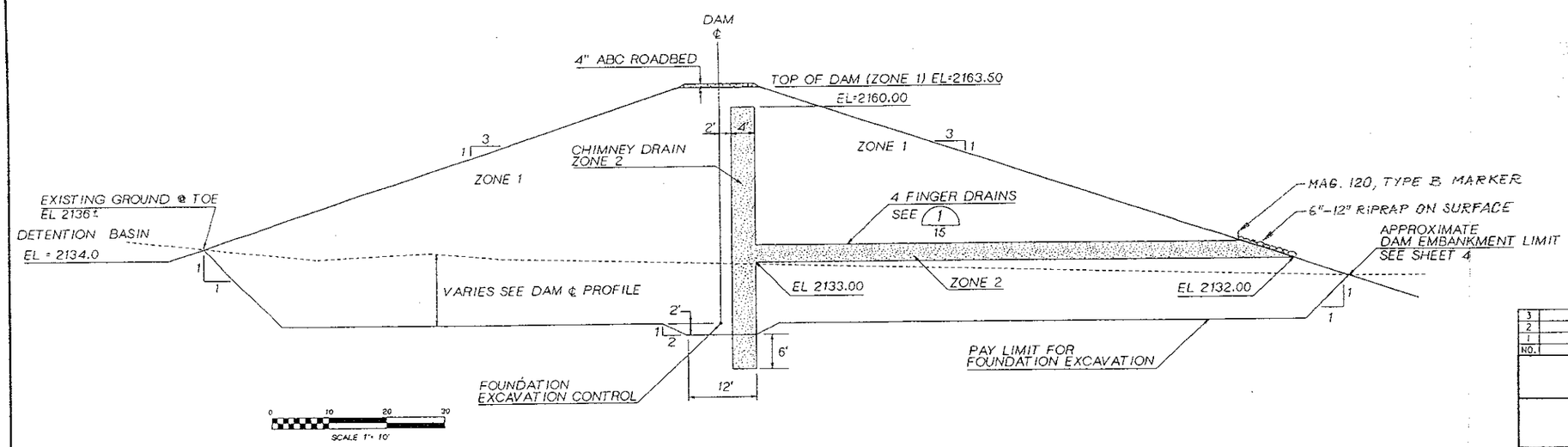

SECTION P/5

DAM SECTION AT OUTSIDE SPILLWAY

Two working days before you dig, CALL FOR THE BLUE STAKES
263-1100
Blue Stake Center
CALL COLLECT

NO.	REVISION	BY	DATE
3			
2			
1			

FLOOD CONTROL DISTRICT OF MARICOPA COUNTY
ENGINEERING DIVISION

DAM SECTIONS
SPILLWAY & DRAIN PIPE

	BY	DATE
DESIGNED	TJ WOLF	6/08/95
DRAWN	MD COEN	6/08/95
CHECKED	JE LIVINGSTON	6/08/95

CH2M HILL

CASANDRO WASH DAM

SHEET 6 OF 34

TRACS NO.

5441P119.DGN

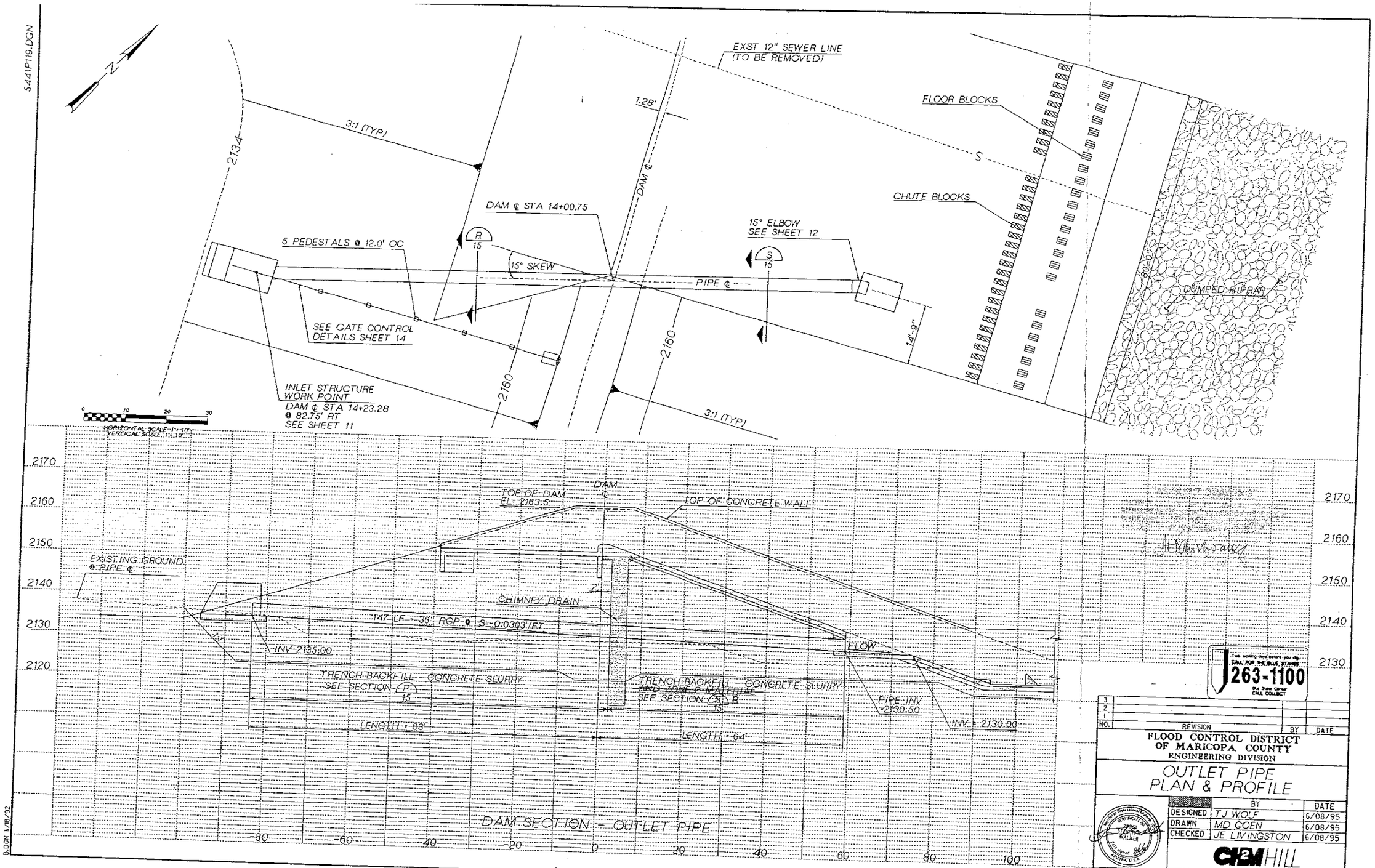

B.DGN 1/18/92

AS-BUILT DRAWING

263-1100

NO.	REVISION	BY	DATE
3			
2			
1			

FLOOD CONTROL DISTRICT
OF MARICOPA COUNTY
ENGINEERING DIVISION

OUTLET PIPE PLAN & PROFILE

	BY	DATE
DESIGNED	TJ WOLF	6/08/95
DRAWN	MD COEN	6/08/95
CHECKED	JE LIVINGSTON	6/08/95

CH2M HILL

CASANDRO WASH DAM

SHEET 7 OF 34

TRACS NO.

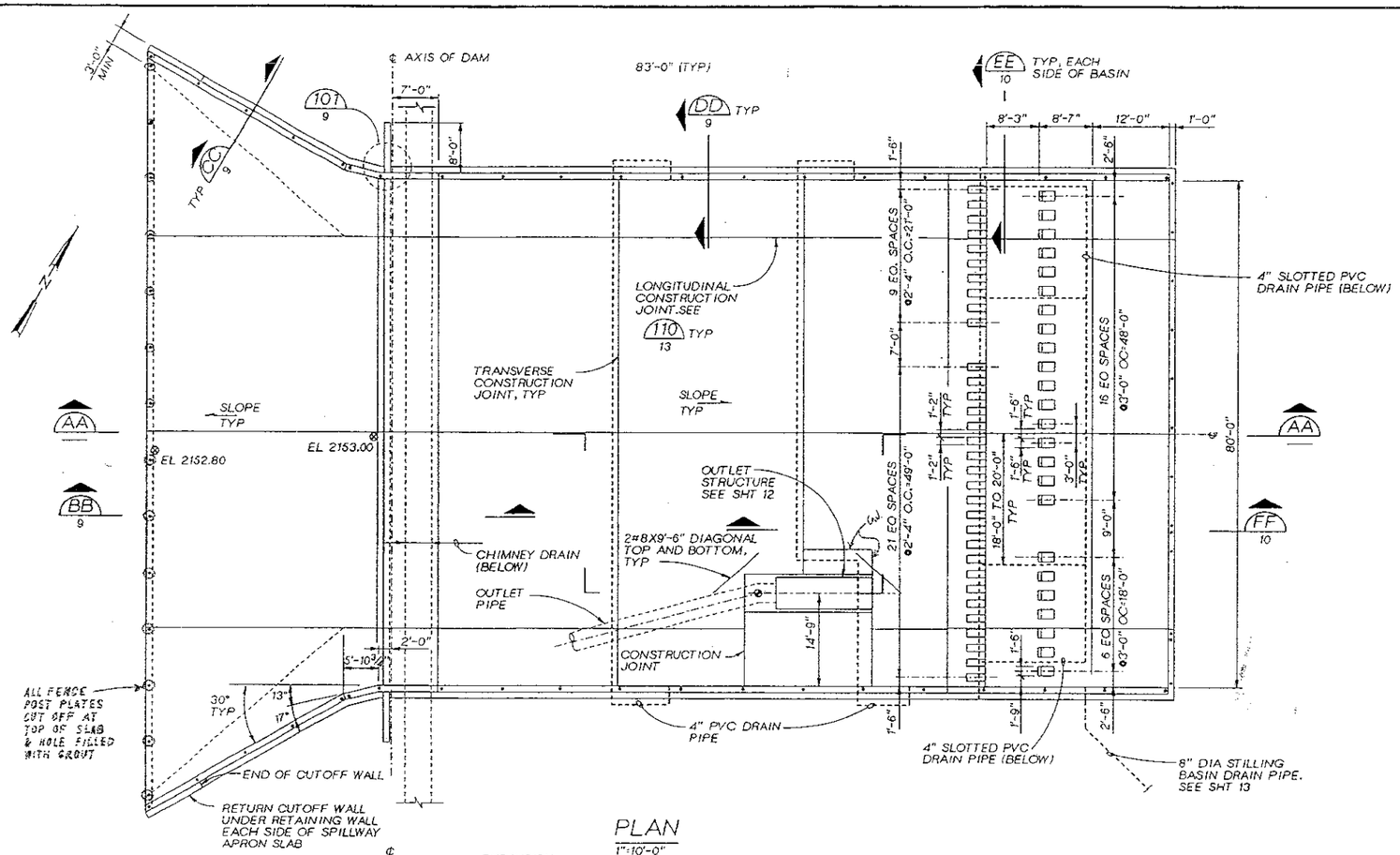

PLAN
1"=10'-0"

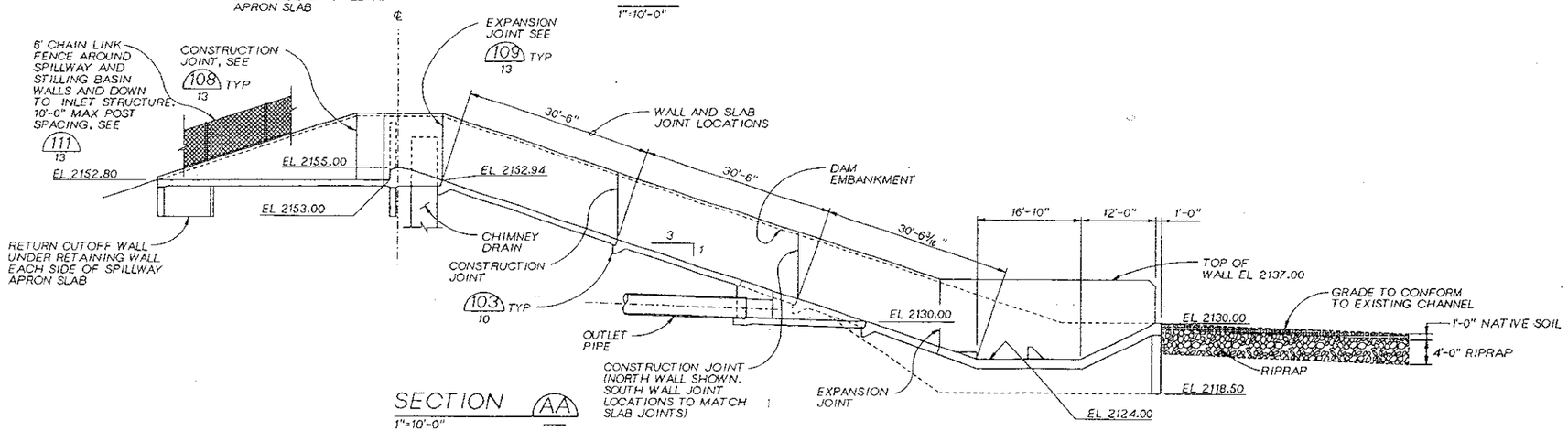

SECTION AA
1"=10'-0"

GENERAL STRUCTURAL NOTES

REINFORCING DETAILS

1. CLEARANCE FOR REINFORCEMENT BARS, UNLESS SHOWN OTHERWISE, SHALL BE:
   - WHEN PLACED ON GROUND: —— 3"
   - ALL OTHER CONCRETE SURFACES:
     - #5 BAR OR SMALLER —— 1½"
     - #6 BAR OR LARGER —— 2"
2. CONCRETE STRENGTH AT 28 DAYS: f_c =4,000 psi
   REINFORCING STEEL: F_y =60,000 psi
3. ALL BENDS, UNLESS OTHERWISE SHOWN, SHALL BE A 90 DEGREE STANDARD HOOK AS DEFINED IN LATEST EDITION OF ACI 318.
4. ALL WALL CORNER AND WALL INTERSECTION REINFORCEMENT BARS SHALL BE CONTINUOUS AROUND CORNERS.
5. VERTICAL WALL BARS SHALL BE LAPPED WITH DOWELS FROM BASE SLABS.
6. UNLESS INDICATED OTHERWISE, CONTRACTOR MAY SPLICE CONTINUOUS SLAB OR LONGITUDINAL BEAM BARS AT LOCATIONS OF HIS CHOOSING, ALTERNATE ADJACENT LAP LOCATIONS. ALL REINFORCEMENT BENDS AND LAPS, UNLESS OTHERWISE NOTED, SHALL SATISFY THE FOLLOWING MINIMUM REQUIREMENT:

DETAIL OF REINFORCEMENT - LAP LENGTHS

BAR SIZE		#5 OR SMALLER	#7	#8	#9	#10	#11
CONC DESIGN STRENGTH		4000 PSI					
GR 60	TOP BAR*	45 DIA, MIN 2'-0"	3'-8"	4'-9"	6'-0"	7'-8"	9'-6"
	OTHER BAR	32 DIA, MIN 1'-6"	2'-8"	3'-6"	4'-4"	5'-6"	6'-9"

* TOP BARS SHALL BE DEFINED AS ANY HORIZONTAL BARS PLACED SUCH THAT MORE THAN 12" OF FRESH CONCRETE IS CAST IN THE MEMBER BELOW THE BAR, IN ANY SINGLE POUR. HORIZONTAL WALL BARS ARE CONSIDERED TOP BARS.

Preliminary

NO.	REVISION	BY	DATE
3			
2			
1			

FLOOD CONTROL DISTRICT OF MARICOPA COUNTY
ENGINEERING DIVISION

SPILLWAY/STILLING BASIN PLAN

	BY	DATE
DESIGNED	RL MORRISON SR.	6/08/95
DRAWN	JE URIA	6/09/95
CHECKED	MJ COOPER	6/08/95

CH2M HILL

CASANDRO WASH DAM

SHEET 8 OF 34

TRACS NO.

5441S001.dgn 27-JAN-1995 15:09:52

54415002.dgn

08:33:23 24-OCT-1995

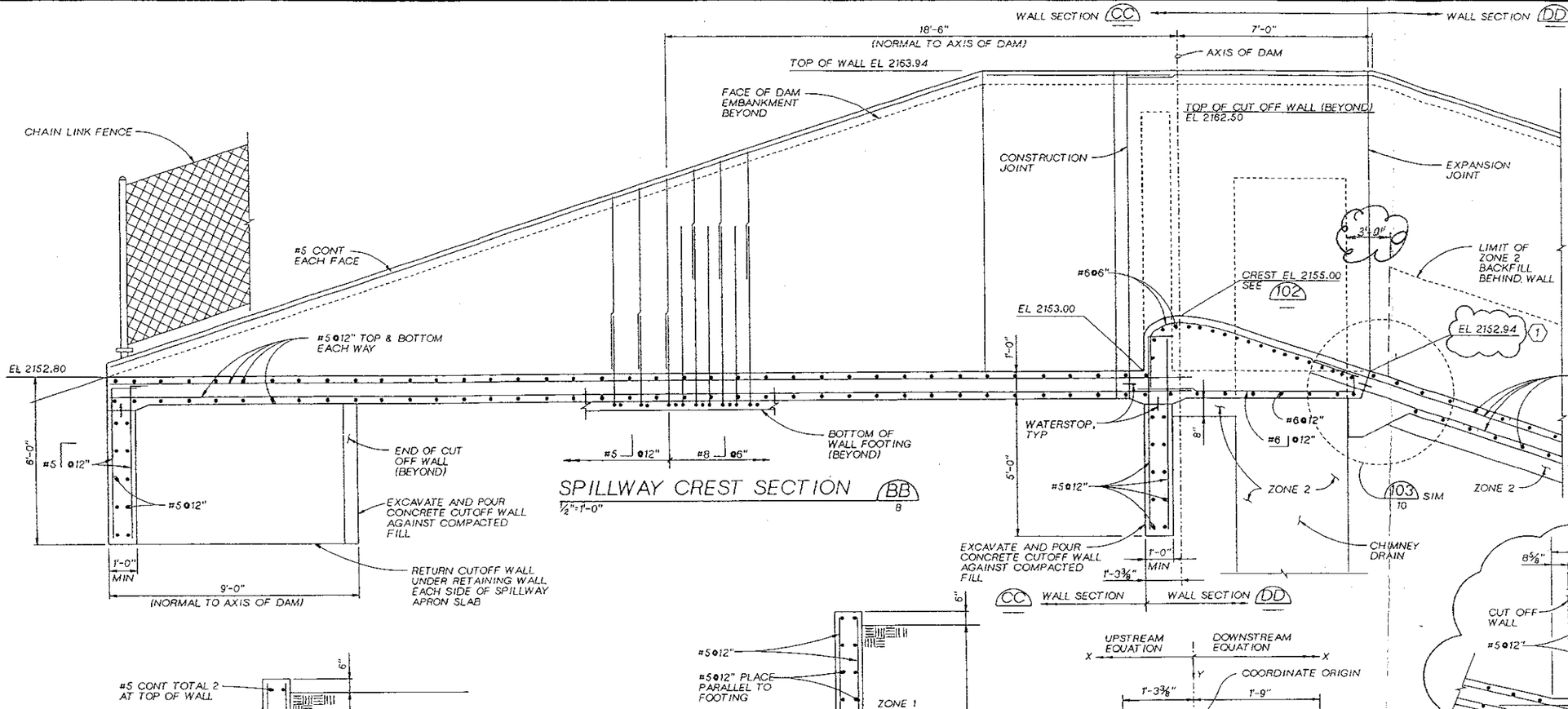

ELLIPTICAL CREST GEOMETRY

UPSTREAM (FT) $X=(4.4Y-2.94Y^2)^{0.5}$		DOWNSTREAM (FT) $Y=0.11X^{1.85}$	
Y (IN)	X (IN)	X (IN)	Y (IN)
1	7 1/16	3	3/32
2	9 11/16	6	3/8
3	11 1/2	9	3/4
4	12 3/4	12	1 9/16
5	13 13/16	15	2
6	14 1/2	18	2 3/4
7	15	21	3 3/4
8	15 5/16		
9	15 3/8		

NOTE: PROVIDE SMOOTH CURVE BETWEEN POINTS SHOWN

DETAIL 102
1"=1'-0"

NO.	REVISION	BY	DATE
3			
2			
1	1 ADDENDA NO. 1	DJA	10/16/95

FLOOD CONTROL DISTRICT OF MARICOPA COUNTY
ENGINEERING DIVISION

STRUCTURAL DETAILS SPILLWAY

	BY	DATE
DESIGNED	RL MORRISON SR.	6/08/95
DRAWN	JE URIA	6/08/95
CHECKED	MJ COOPER	6/08/95

CH2M HILL

CASANDRO WASH DAM

SHEET 9 OF 34

TRACS NO.

5441s003.dgn

08:34:01 24-OCT-1995

DD 9 WALL SECTION — WALL SECTION EE

#5 @6" #8 @6"

VERTICAL REINF AT WALL BASE

EL 2137.00

103 TYP

1 APPROX LIMIT OF ZONE 2 BACKFILL BEHIND WALL

EXPANSION JOINT

DAM EMBANKMENT

6'-0" 8'-3" 8'-7" 12'-0"

1'-0" 7'-0"

WALL STEP (BEYOND)

1 END CONC CUT OFF WALL AT EL 2130.0

ZONE 2 MATERIAL

4" PVC UNDER DRAIN PIPE OUTFALL INTO STILLING BASIN EACH SIDE WITH ANIMAL GUARD 3/15

INV 2126.0

4'-0" 2'-0" 2#6

4#4

EL 2124.00

EXTEND ONE-HALF OF LONGITUDINAL TOP AND BOTTOM REINF THROUGH JOINT (ALTERNATE BARS)

1 1'-6"

2'-0"

#8 @ 6"

1'-0" 4"

6" DIA DRAIN PIPE IN SOUTH WALL. FOR ALIGNMENT DETAILS SEE SHT 13 WITH ANIMAL GUARD 3/15 SCREW ON SURFACE

#4 3#6 #5

EL 2124.00

1'-6" 2'-0"

ZONE 2 MATERIAL

GEONET MATERIAL

#5 @12"

#5@12" EACH FACE

1'-8" 6'-0" 4'-4" 5'-6"

CONC CUT OFF WALL EACH SIDE OF STILLING BASIN

1'-6" MIN

1 STILLING BASIN SECTION FF ½"=1'-0" 8

EXTEND ONE-HALF OF LONGITUDINAL TOP AND BOTTOM REINF THROUGH JOINT (ALTERNATE BARS)

ADD'L TYPICAL SLAB BAR AT JOINT

6" PVC WATERSTOP, TYP

TYPICAL SLAB REINF

PAINT SURFACE WITH BOND BREAKER

4" SCHED 80 NON-SLOTTED PVC PIPE OUTSIDE FOOTING

ZONE 2

3'-6" #5 @6"

4" SCHED 80 SLOTTED PVC PIPE

5#5 #5 @12"

PLACE CONC AGAINST COMPACTED ZONE 1 MATERIAL

1'-0" BELOW EL 2133.7 0'-8" MIN ABOVE EL 2133.7

DETAIL 103 ½"=1'-0"

DAYLIGHT 4" PVC PIPE THROUGH WALL INTO SPILLWAY WITH ANIMAL GUARD 3/15

SLOPE TO DRAIN

2'-0" MIN 3'-0" MAX

#5@12" PLACE PARALLEL TO TOP OF WALL

#7@12"

ZONE 1

7'-6" 2'-9" VARIES 13'-0" MAX 18'-6"

CONSTRUCTION JOINT

9'-3"

110 13 TYP

#5@12" #8@6"

NORTH WALL WATERSTOP, TYP

SOUTH WALL

SLURRY CONC FILL, 6" MIN COVER OVER PIPE

#8 @6"

1'-6"

NON-SLOTTED PIPE THROUGH AND OUTSIDE OF WALL

ZONE 2 MATERIAL

4" UNDER DRAIN PIPE

SLOTTED PIPE

CONC CUT OFF WALL

#5@12" EACH FACE

WATER STOP TYP

VARIES 4'-0" MIN

1'-6" MIN 1'-0"

WALL SECTION EE ½"=1'-0" 8

NO.	REVISION	BY	DATE
3			
2			
1	(1) ADDENDA NO. 1	DJA	10/16/95

FLOOD CONTROL DISTRICT OF MARICOPA COUNTY
ENGINEERING DIVISION

STRUCTURAL DETAILS
STILLING BASIN

	BY	DATE
DESIGNED	MJ COOPER	6/08/95
DRAWN	JE URIA	6/08/95
CHECKED	RL MORRISON SR.	6/08/95

CH2M HILL

CASANDRO WASH DAM

SHEET 10 OF 34

TRACS NO.

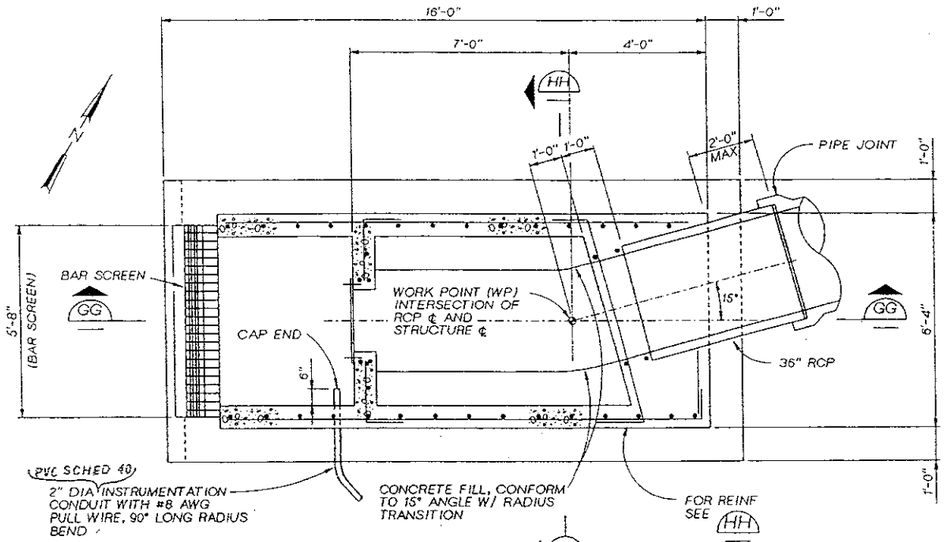

FOUNDATION PLAN

½"=1'-0"

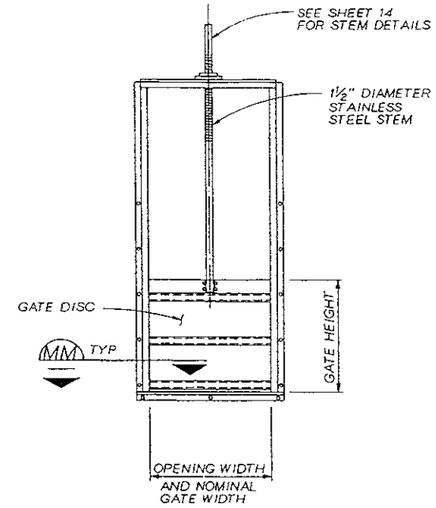

FABRICATED STAINLESS STEEL SLIDE GATES

NTS

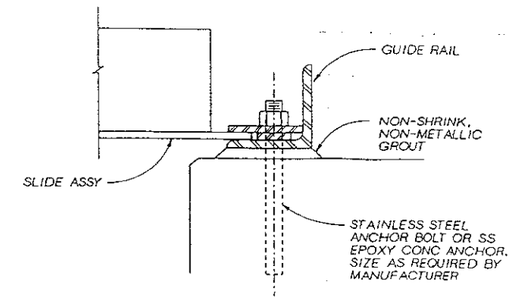

SECTION MM

3"=1'-0"

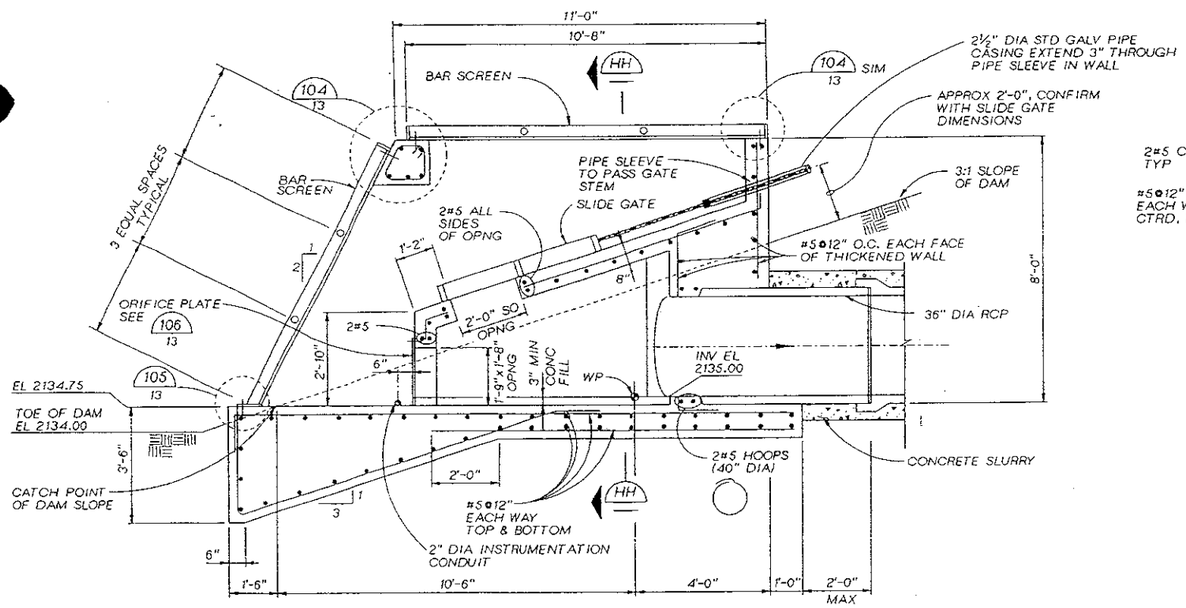

SECTION GG

½"=1'-0"

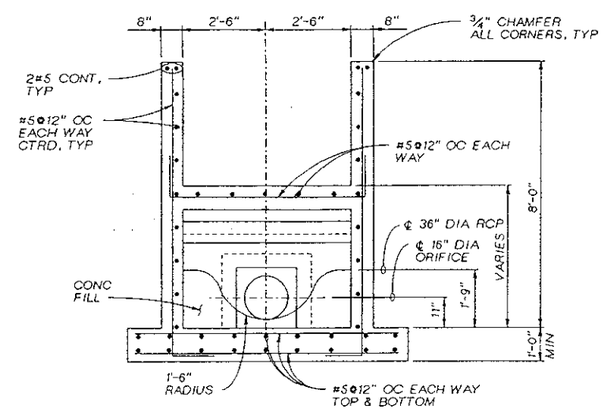

SECTION HH

½"=1'-0"

NO.	REVISION	BY	DATE
3			
2			
1			

FLOOD CONTROL DISTRICT OF MARICOPA COUNTY
ENGINEERING DIVISION

STRUCTURAL DETAILS
OUTLET PIPE (1 OF 2)

	BY	DATE
DESIGNED	RL MORRISON SR.	6/08/95
DRAWN	JE URIA	6/08/95
CHECKED	MJ COOPER	6/08/95

CH2M HILL

CASANDRO WASH DAM

SHEET 11 OF 34

TRACS NO.

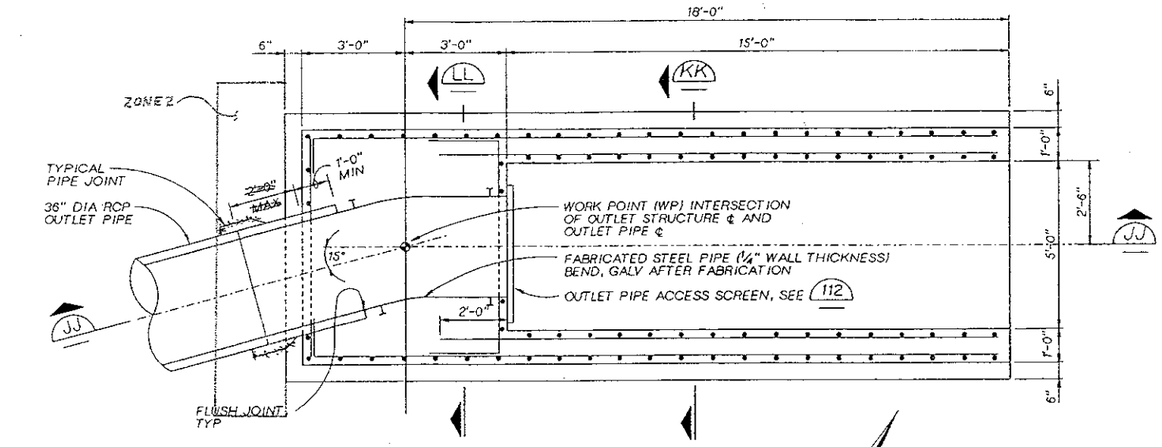

PLAN
1/2"=1'-0"

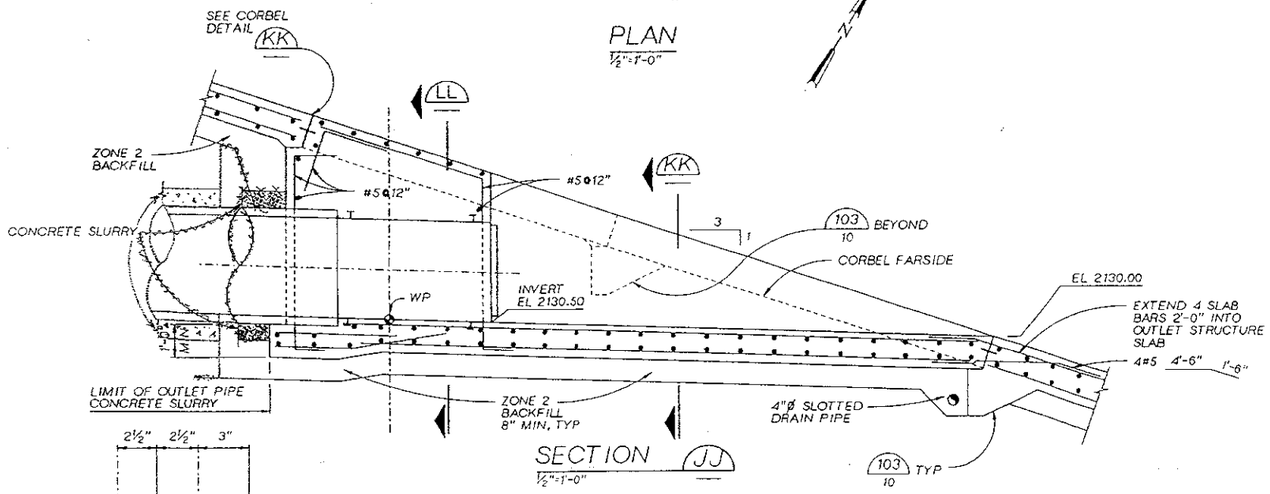

SECTION JJ
1/2"=1'-0"

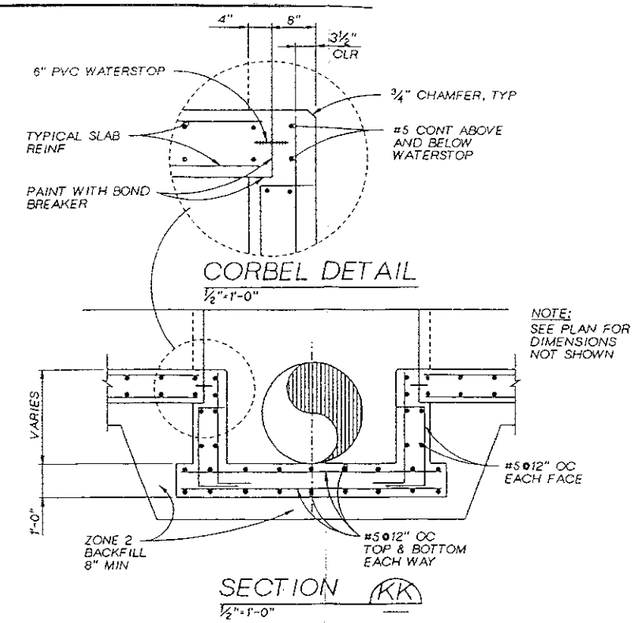

SECTION KK
1/2"=1'-0"

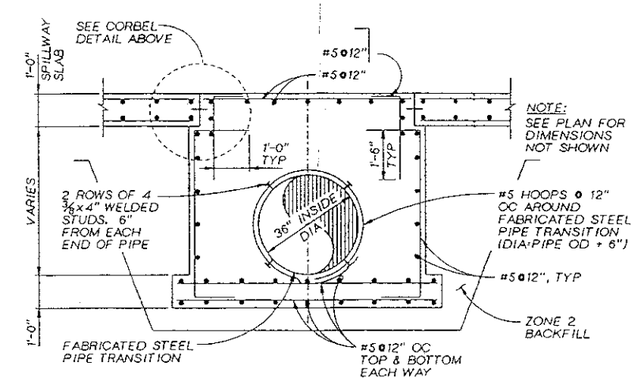

SECTION LL
1/2"=1'-0"

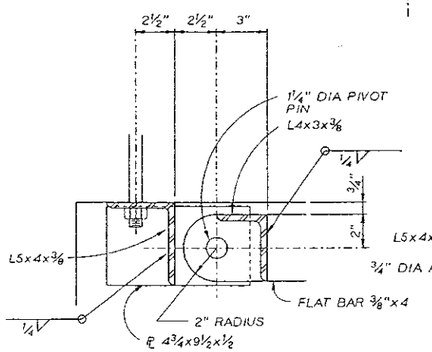

SECTION

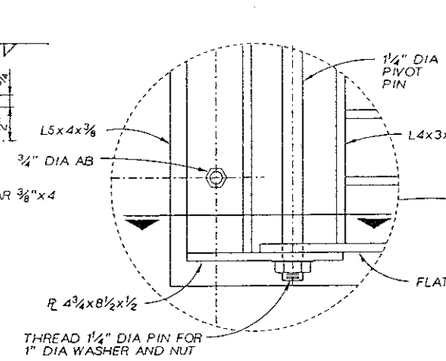

NOTE:
HOT DIP GALV ASSY AFTER FABRICATION

OUTLET PIPE ACCESS SCREEN 112
1"=1'-0"

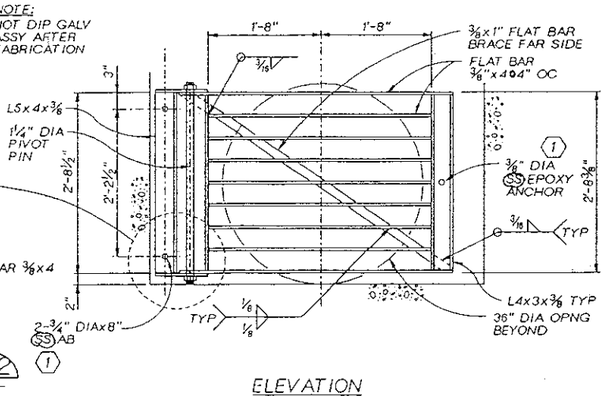

ELEVATION

NO.	REVISION	BY	DATE
3			
2			
1	1 ADDENDA NO. 1	DJA	10/16/95

FLOOD CONTROL DISTRICT OF MARICOPA COUNTY
ENGINEERING DIVISION

STRUCTURAL DETAILS OUTLET PIPE (2 OF 2)

	BY	DATE
DESIGNED	RL MORRISON SR.	6/08/95
DRAWN	JE URIA	6/08/95
CHECKED	MJ COOPER	6/08/95

CH2M HILL

CASANDRO WASH DAM

SHEET 12 OF 34

TRACS NO.

5441s006.dgn 08:34:43 24-OCT-1995

5441s004.dgn

1401.09 05-SEP-1995

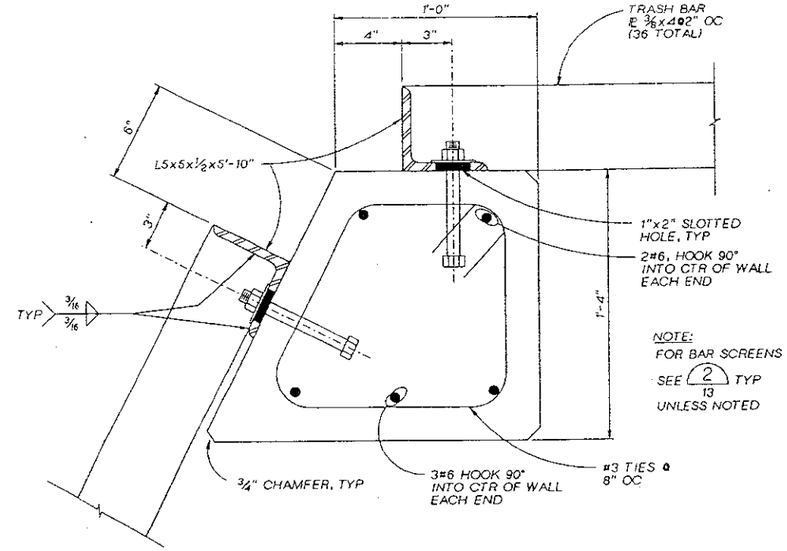

DETAIL 104
3"=1'-0" 11

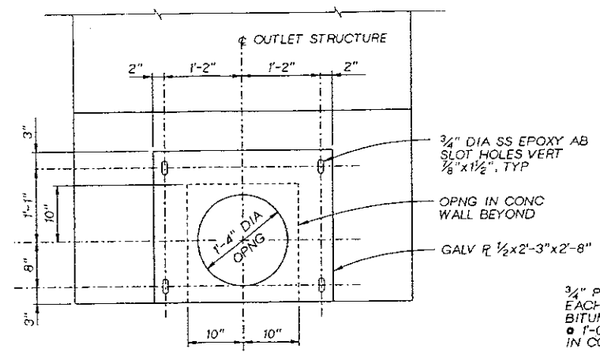

ORIFICE PLATE DETAIL 106
1"=1'-0" 11

NOTE:
ONE-HALF OF REINFORCING CONTINUOUS ACROSS JOINT (ALTERNATE BARS). STAGGER MINIMUM 40 BAR DIAMETERS UNLESS INDICATED OTHERWISE.

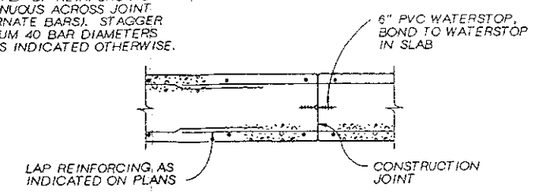

PLAN

WALL CONSTRUCTION JOINT 108
NTS 8,9,10

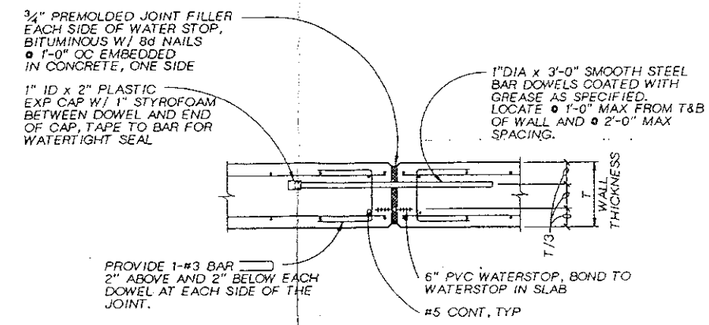

WALL EXPANSION JOINT 109
NTS 8,9,10

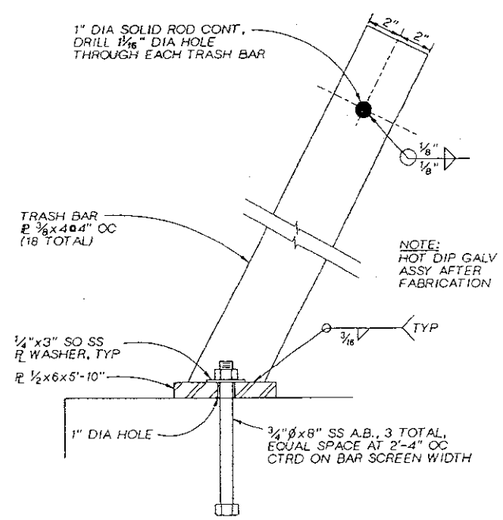

DETAIL 105
3"=1'-0" 11

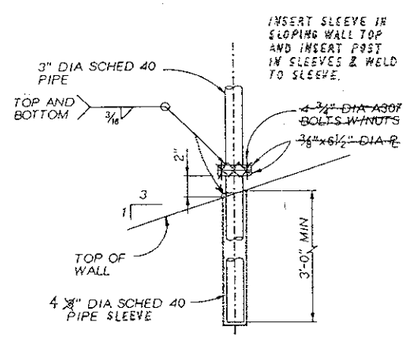

WALL MOUNT

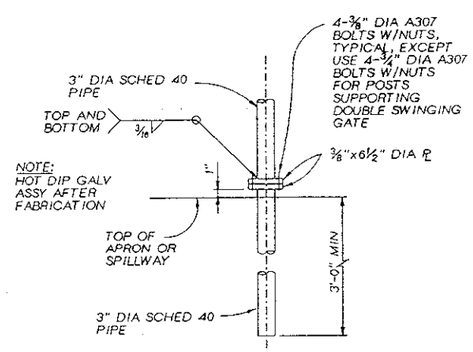

STILLING BASIN APRON MOUNT

FENCE MOUNT DETAIL 111
NTS 8

NOTE:
ONE-HALF OF REINFORCING CONTINUOUS ACROSS JOINT (ALTERNATE BARS). STAGGER MINIMUM 40 BAR DIAMETERS UNLESS INDICATED OTHERWISE.

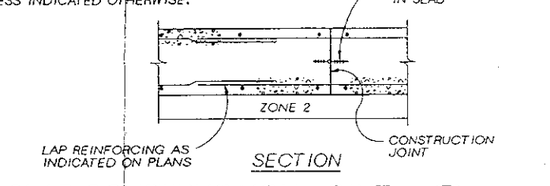

SECTION

SLAB CONSTRUCTION JOINT 110
NTS 8,9,10

"AS BUILT DRAWING"
I HEREBY CERTIFY THAT THIS AS BUILT DRAWING REPRESENTS THE CONDITIONS AS CONSTRUCTED UNDER MY SUPERVISION AND TO THE BEST OF MY KNOWLEDGE AND BELIEF

NO.	REVISION	BY	DATE
3			
2			
1			

FLOOD CONTROL DISTRICT
OF MARICOPA COUNTY
ENGINEERING DIVISION

STRUCTURAL DETAILS
MISCELLANEOUS

	BY	DATE
DESIGNED	RL MORRISON SR.	6/08/95
DRAWN	JE URIA	6/08/95
CHECKED	MJ COOPER	6/08/95

CH2M HILL

CASANDRO WASH DAM

SHEET 13 OF 34

TRACS NO.

5441GCD.dgn

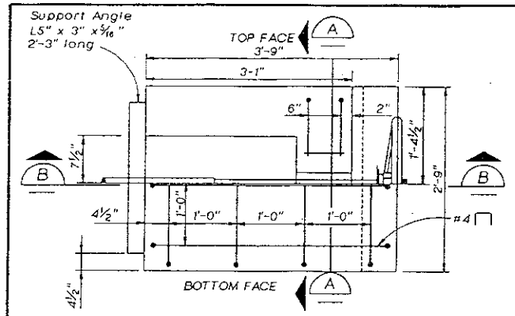

PLAN

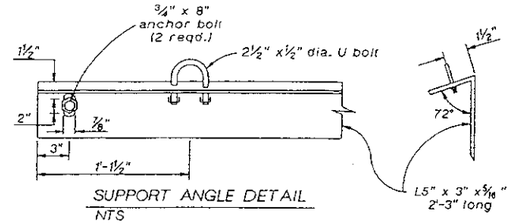

SUPPORT ANGLE DETAIL
NTS

0 1 2 3 Feet

GATE CONTROL NOTES

1. FILL STEM ENCASEMENT WITH APPROXIMATELY 14.0 GALLONS OF SAE 20 MOTOR OIL.
2. THE STAINLESS STEEL PORTION OF THE GATE STEM SHALL EXTEND A SUFFICIENT LENGTH ON EACH END SO THAT NO PART OF THE CARBON STEEL STEM IS EXPOSED DURING OPERATION OF THE GATE. A CARBON STEEL STEM WILL BE USED BETWEEN THE UPPER AND THE LOWER SPLICES INSIDE THE ENCASEMENT.
3. ALL PARTS TO BE GALVANIZED UNLESS OTHERWISE INDICATED.
4. ALL REINFORCING SHALL BE #4 REBAR UNLESS OTHERWISE INDICATED.

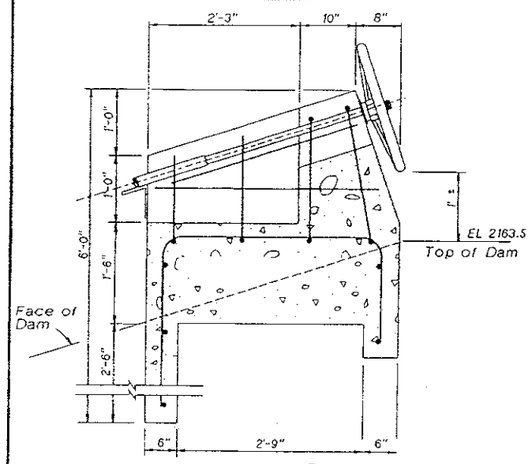

SECTION B

GATE LIFT PEDESTAL
1"=1'

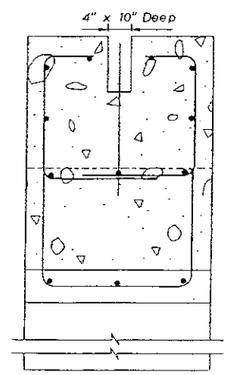

SECTION A

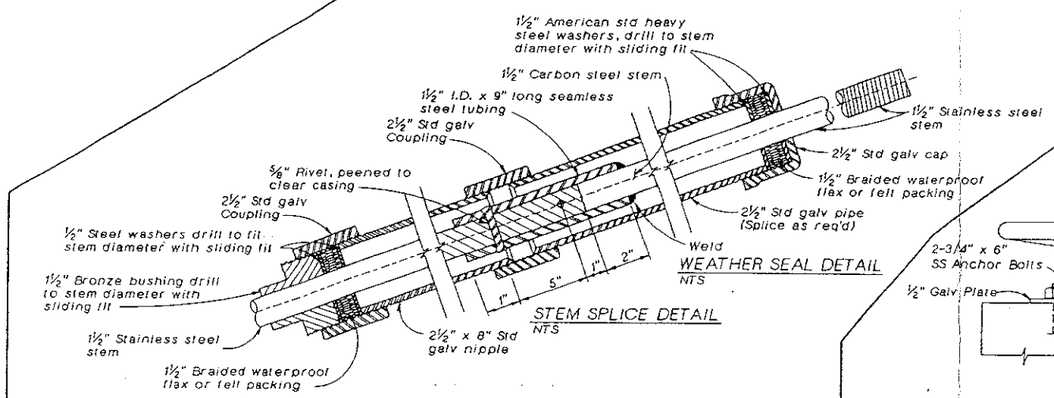

WEATHER SEAL DETAIL
NTS

STEM SPLICE DETAIL
NTS

OIL SEAL DETAIL
NTS

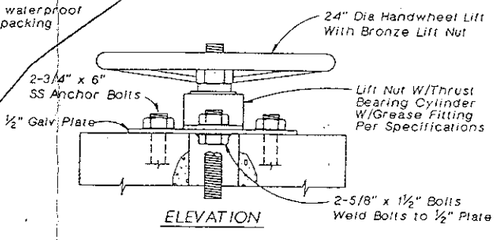

ELEVATION

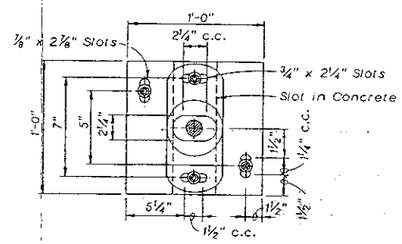

PLAN

BASE PLATE
1"=1/2"

0 ½ 1 1½ Feet

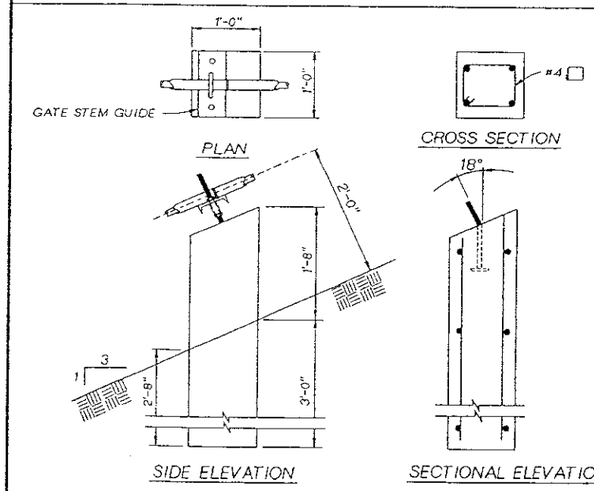

GATE STEM PEDESTAL
1"=1'

0 1 2 3 Feet

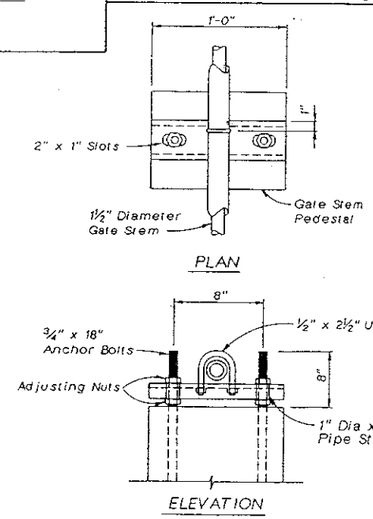

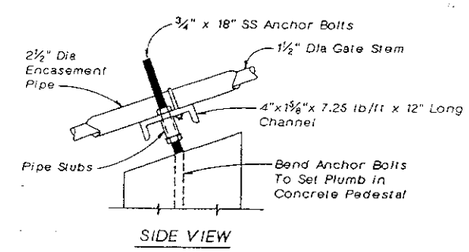

SIDE VIEW

0 ½ 1 1½ Feet

GATE STEM GUIDE
1"=1/2"

AS BUILT DRAWING

NO.	REVISION	BY	DATE
3			
2			
1			

FLOOD CONTROL DISTRICT OF MARICOPA COUNTY
ENGINEERING DIVISION

GATE CONTROL DETAILS

	BY	DATE
DESIGNED	JE LIVINGSTON	6/08/95
DRAWN	RE FREIER	6/08/95
CHECKED	TJ WOLF	6/08/95

CH2M HILL

CASANDRO WASH DAM

SHEET 14 OF 34

TRACS NO.

5441P122.DGN

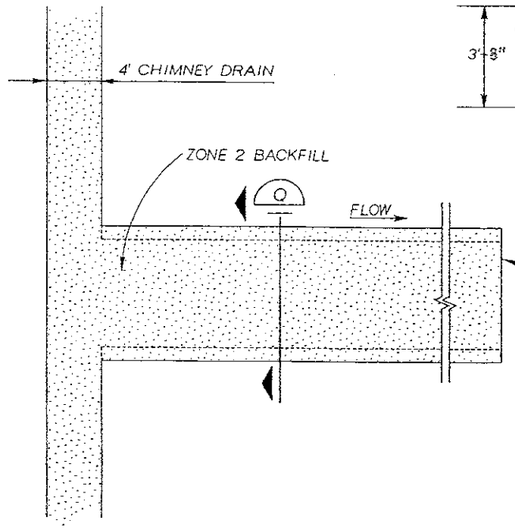

DETAIL 1 (5,6)

0 5 10 15 Feet

FINGER DRAIN DETAIL

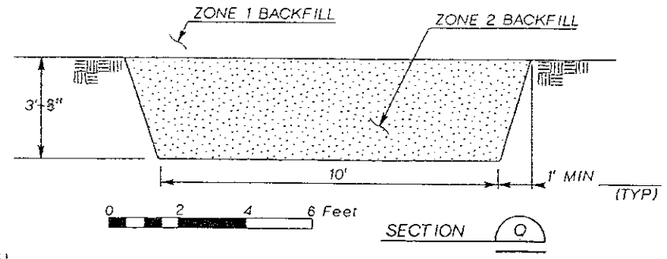

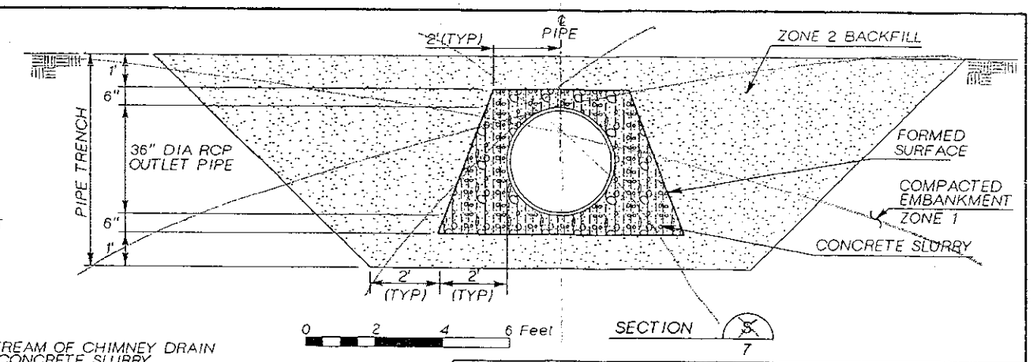

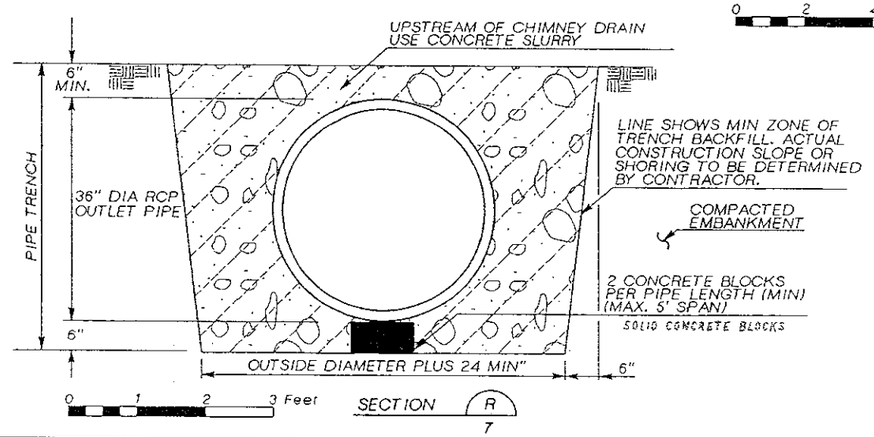

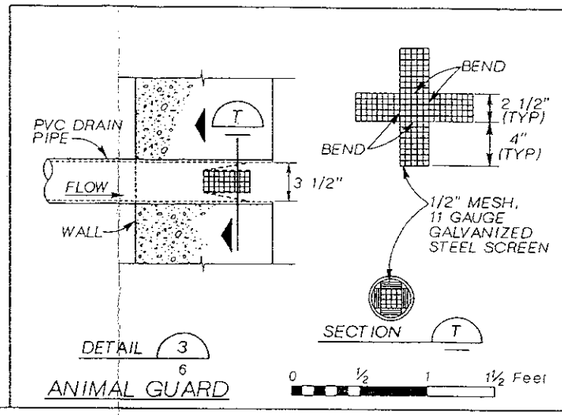

DETAIL 3 (6)

ANIMAL GUARD

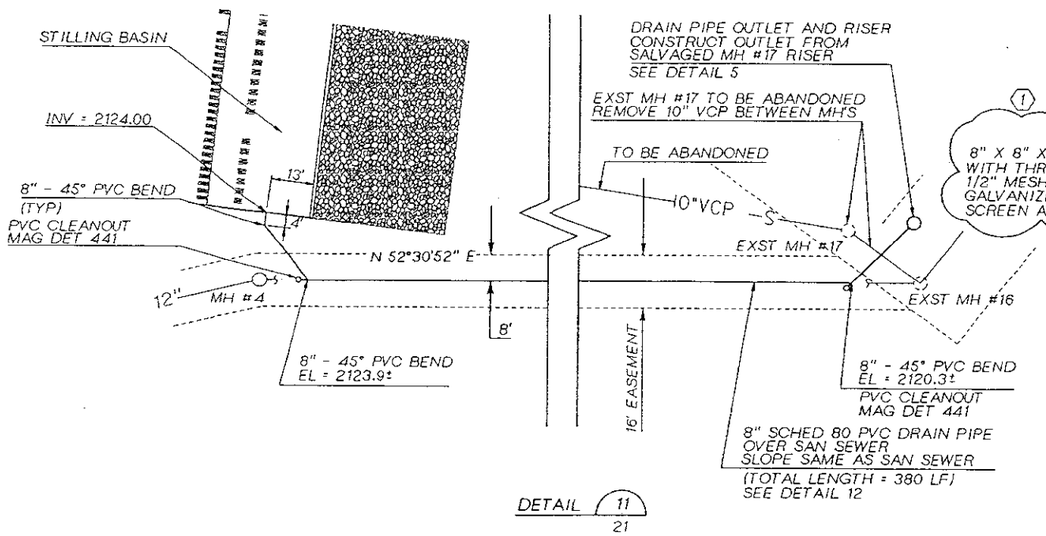

DETAIL 11 (21)

8" STILLING BASIN DRAIN PIPE

NTS

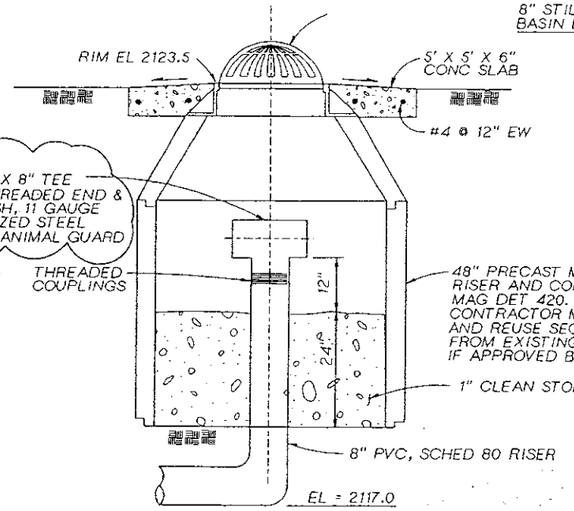

DETAIL 5

8" DRAIN PIPE RISER AND OUTLET

NTS

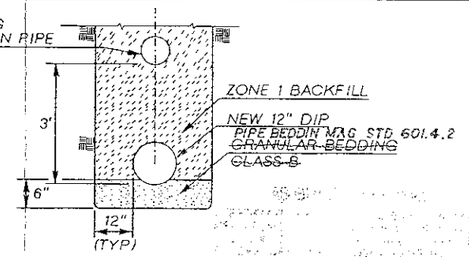

DETAIL 12 (21)

NTS

NO.	REVISION	BY	DATE
3			
2			
1	(1) ADDENDA NO. 1	DJA	10/16/95

FLOOD CONTROL DISTRICT OF MARICOPA COUNTY
ENGINEERING DIVISION

DRAIN PIPE DETAILS

	BY	DATE
DESIGNED	DJ ALLARD	6/08/95
DRAWN	MD COEN	6/08/95
CHECKED	JE LIVINGSTON	6/08/95

CH2M HILL

CASANDRO WASH DAM

SHEET 15 OF 34

TRACS NO.

Two working days before you dig CALL FOR THE BLUE STAKES 263-1100 Blue Stake Center CALL COLLECT

5441P105.DGN

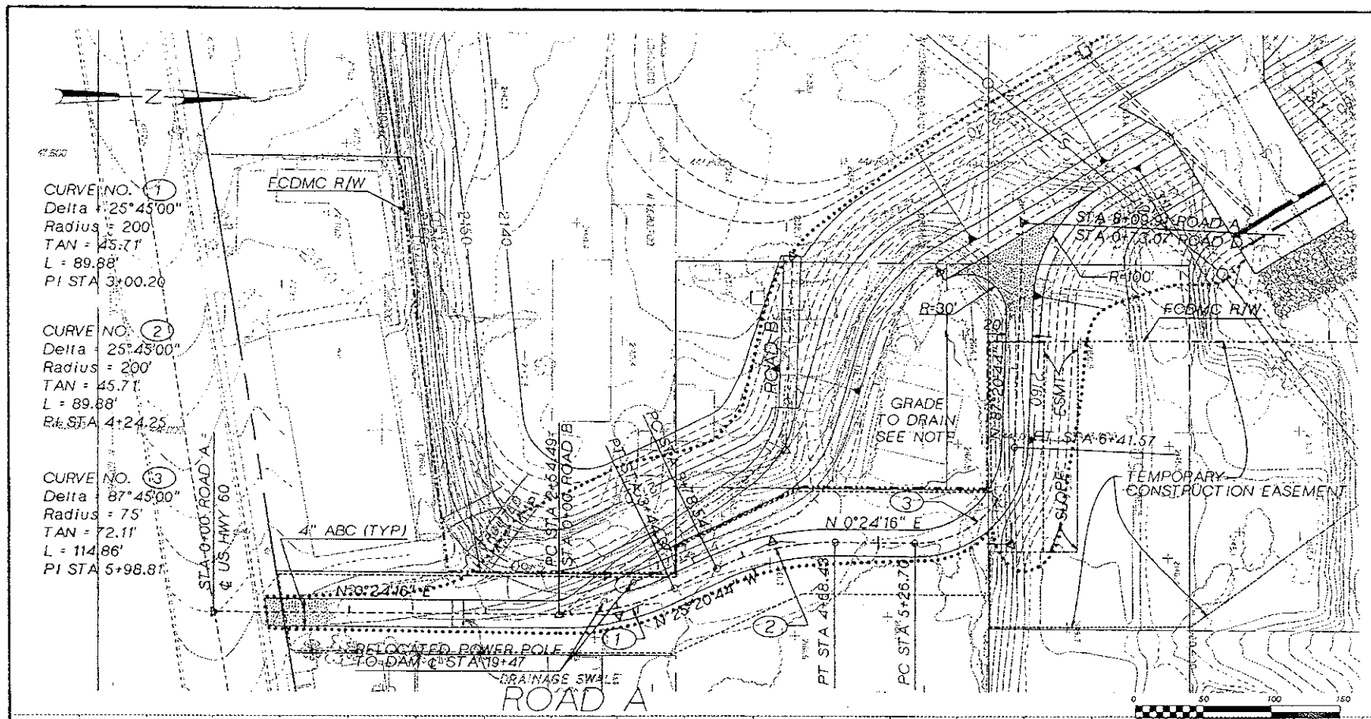

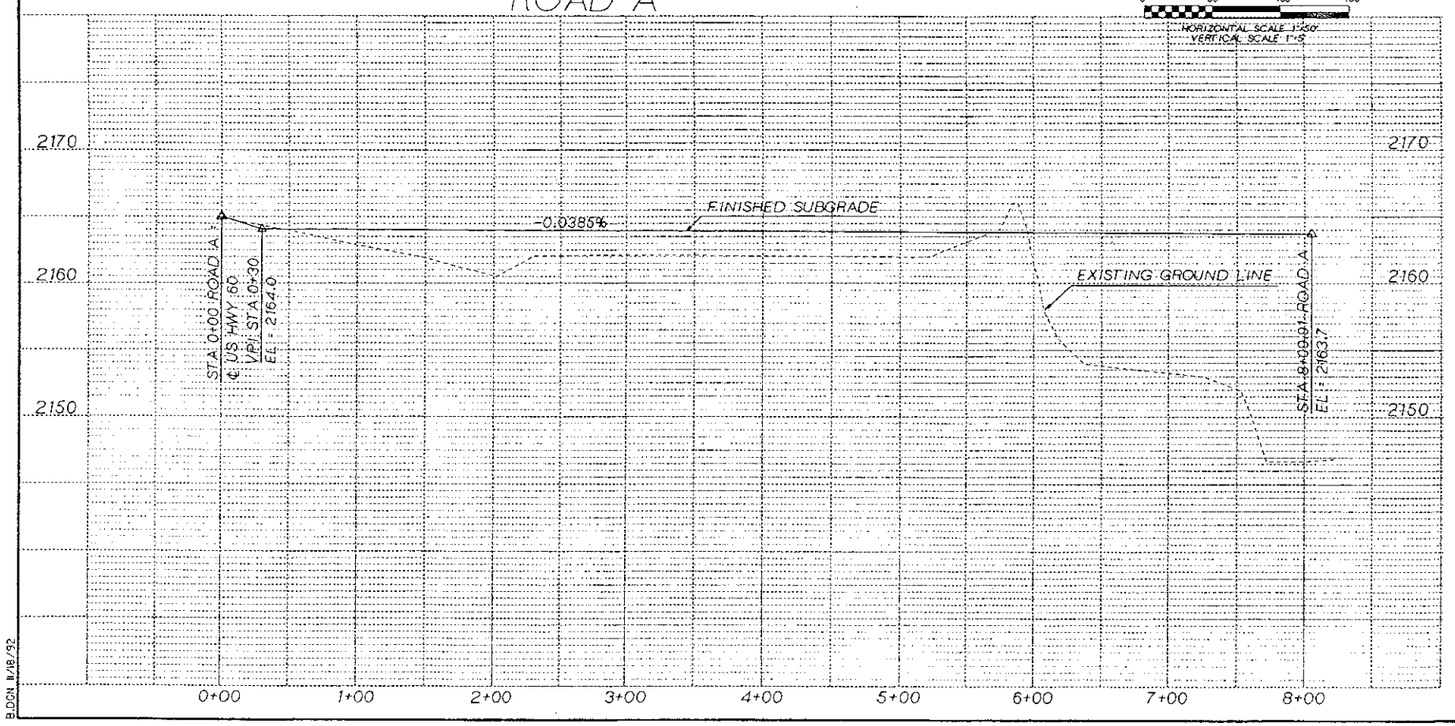

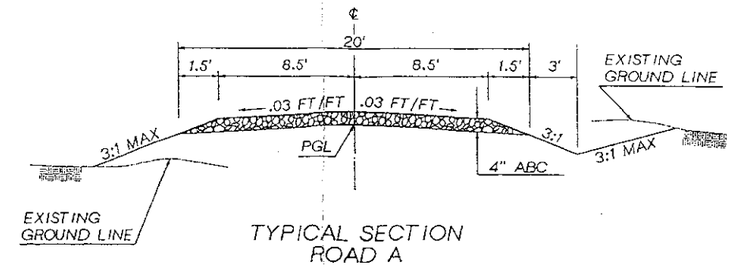

TYPICAL SECTION
ROAD A

N.T.S.

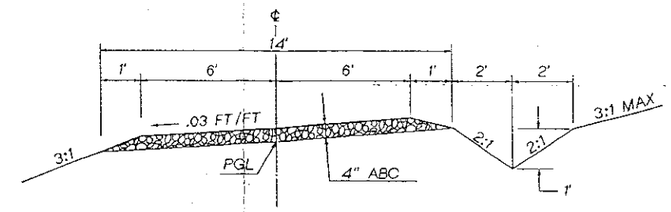

TYPICAL SECTION
ROADS B AND C

N.T.S.

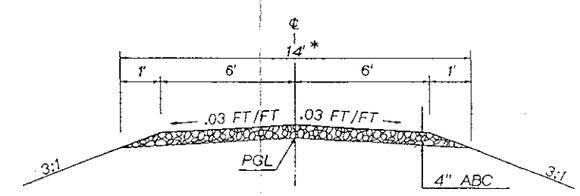

*NOTE: ROADWAY WIDTH TAPERS FROM 14' TO 20' FROM STA 4+00 TO STA 4+40

TYPICAL SECTION
ROAD D

N.T.S.

NOTE:

GRADE LOT SURROUNDING HOUSE TO DRAIN TOWARD DETENTION BASIN. AREA BETWEEN ROAD A AND DAM ℄ SHALL BE MINIMUM EL OF 2163.5.

Two working days before you dig, CALL FOR THE BLUE STAKES 263-1100 Blue Stake Center CALL COLLECT

NO.	REVISION	BY	DATE
3			
2			
1			

FLOOD CONTROL DISTRICT OF MARICOPA COUNTY
ENGINEERING DIVISION

PLAN & PROFILE
ACCESS ROAD A

	BY	DATE
DESIGNED	MR KIES	6/08/95
DRAWN	MR KIES	6/08/95
CHECKED	TJ WOLF	6/08/95

CERTIFICATE OF AUTHORITY 20961 STEVEN D. WALKER EXPIRES 6/30/96 ARIZONA, U.S.A.

CH2M HILL

CASANDRO WASH DAM

SHEET 16 OF 34

TRACS NO.

BLDGN 11/18/92

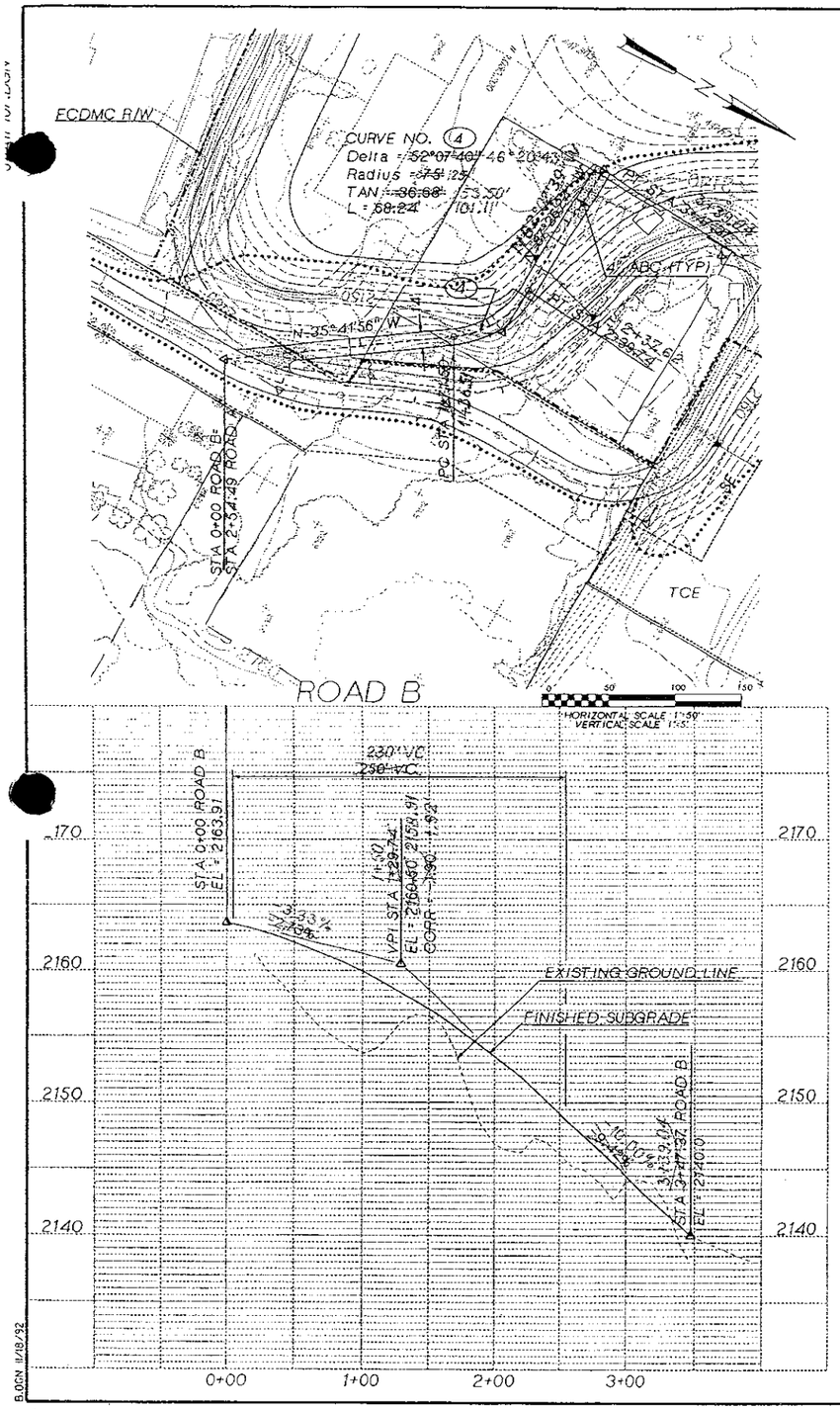

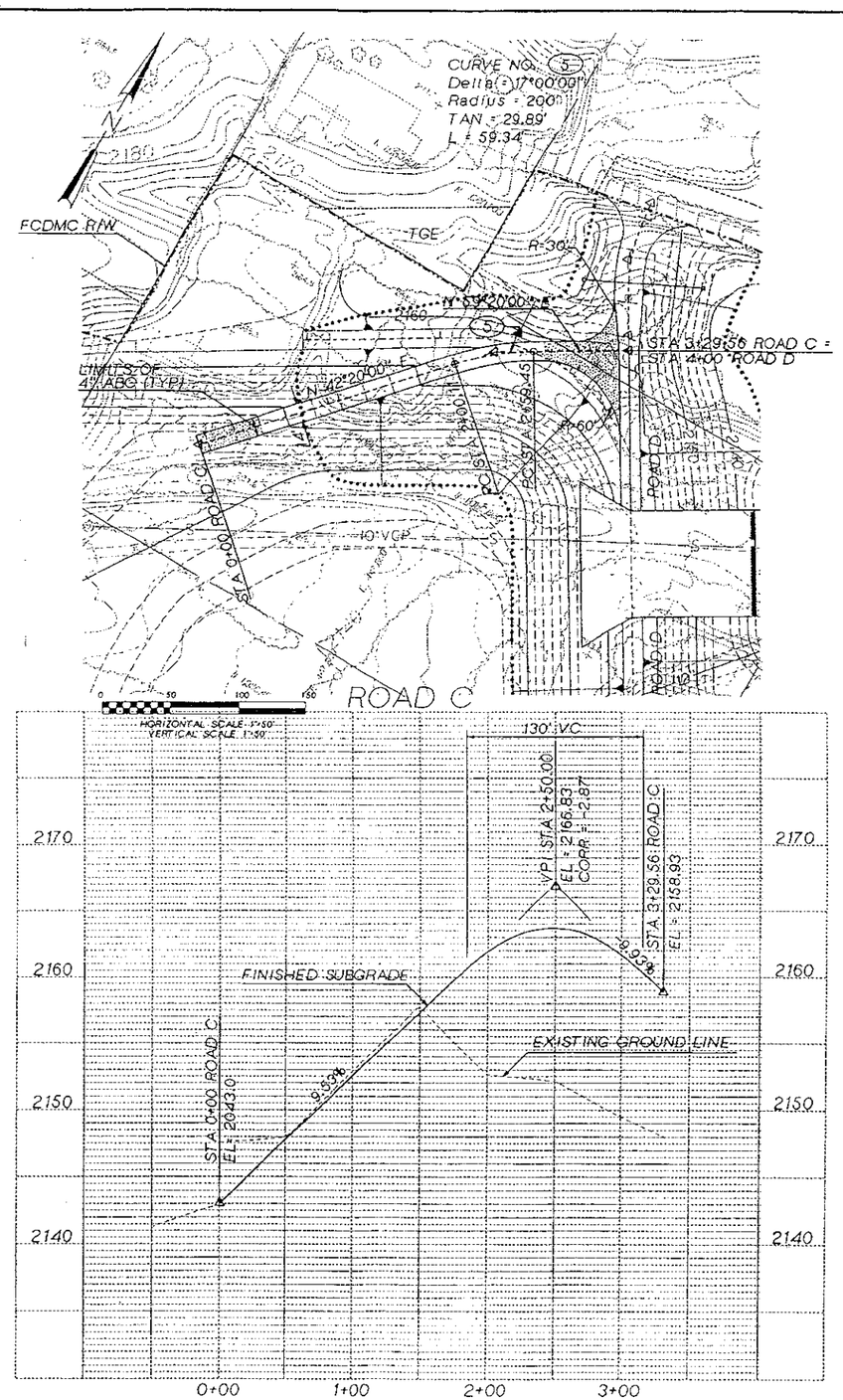

Two working days before you dig
CALL FOR THE BLUE STAKES
263-1100
Blue Stake Center
CALL COLLECT

NO.	REVISION	BY	DATE
3			
2			
1			

FLOOD CONTROL DISTRICT OF MARICOPA COUNTY
ENGINEERING DIVISION

PLAN & PROFILE ROADS B AND C

	BY	DATE
DESIGNED	MR KIES	6/08/95
DRAWN	MR KIES	6/08/95
CHECKED	TJ WOLF	6/08/95

CERTIFICATE NO. 20961 STEVEN A. WALKER REGISTERED PROFESSIONAL ENGINEER (CIVIL) ARIZONA U.S.A.

CH2M HILL

CASANDRO WASH DAM

SHEET 17 OF 34

TRACS NO.

B.DGN 1/18/32

5441P106.DGN

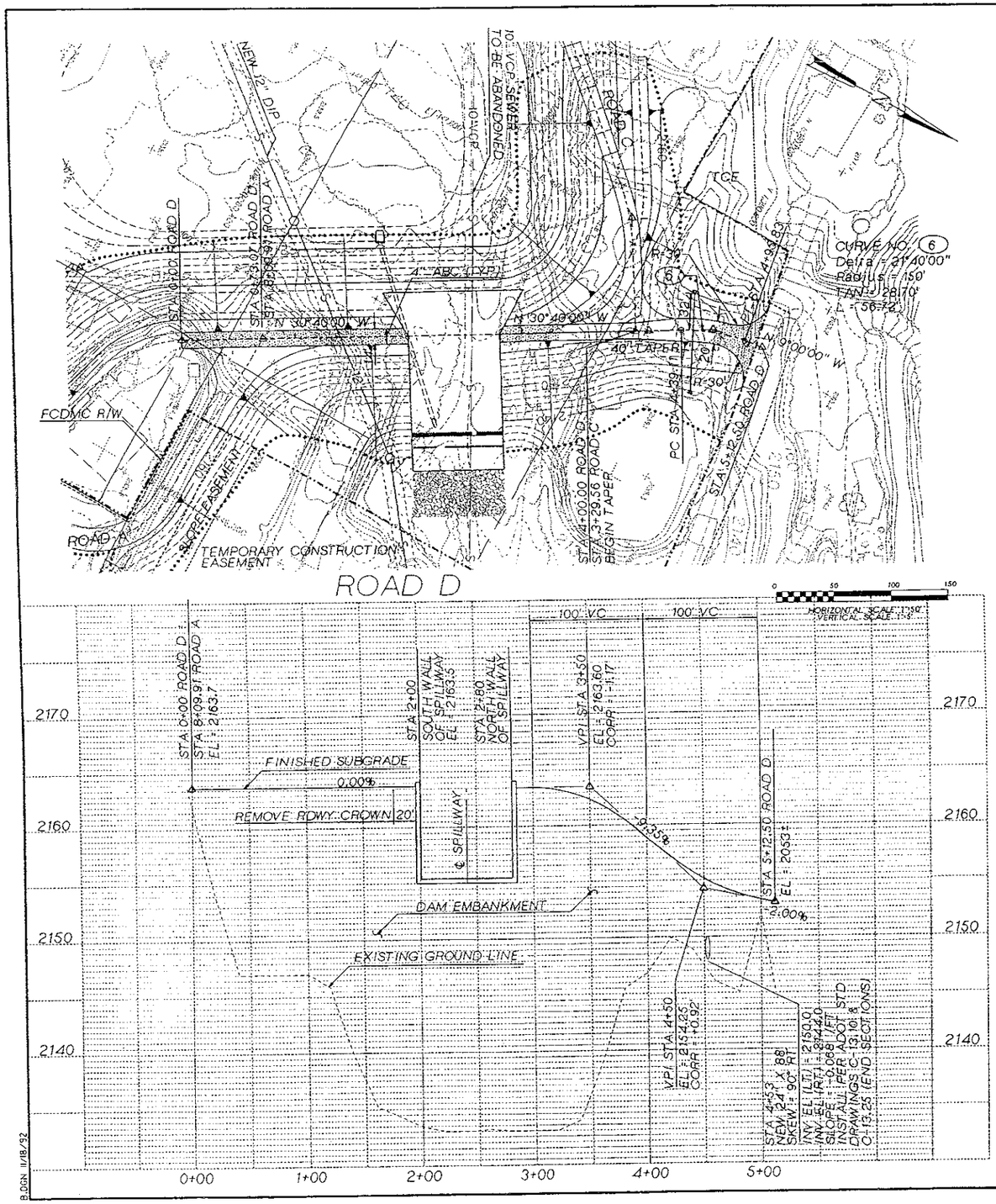

B.DGN 11/18/92

AS-BUILT DRAWING

Two working days before you dig, CALL FOR THE BLUE STAKES
263-1100
Blue Stake Center
CALL COLLECT

NO.	REVISION	BY	DATE
3			
2			
1			

FLOOD CONTROL DISTRICT
OF MARICOPA COUNTY
ENGINEERING DIVISION

PLAN & PROFILE ROAD D

	BY	DATE
DESIGNED	MR KIES	6/08/95
DRAWN	MR KIES	6/08/95
CHECKED	TJ WOLF	6/08/95

CH2M HILL

CASANDRO WASH DAM

SHEET 18 OF 34

TRACS NO.

5441FEND.DGN

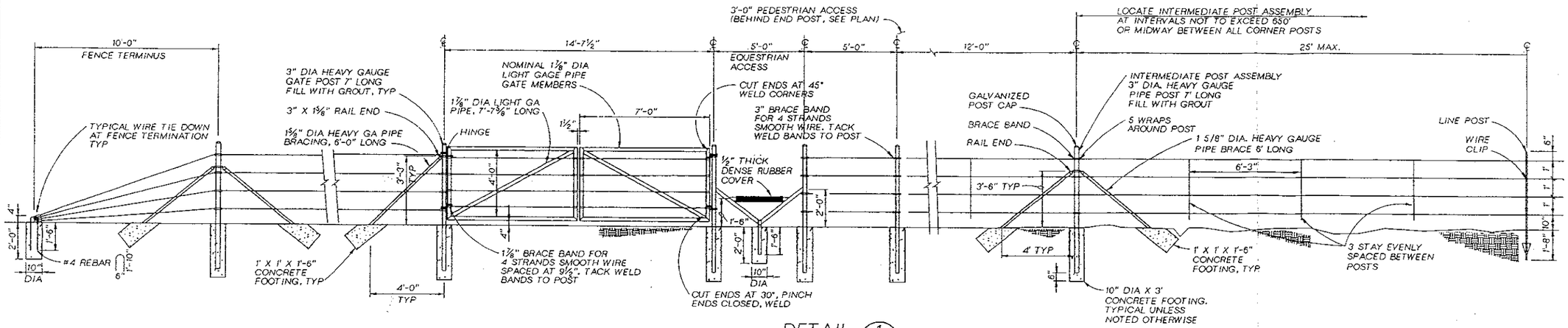

DETAIL 1
NTS

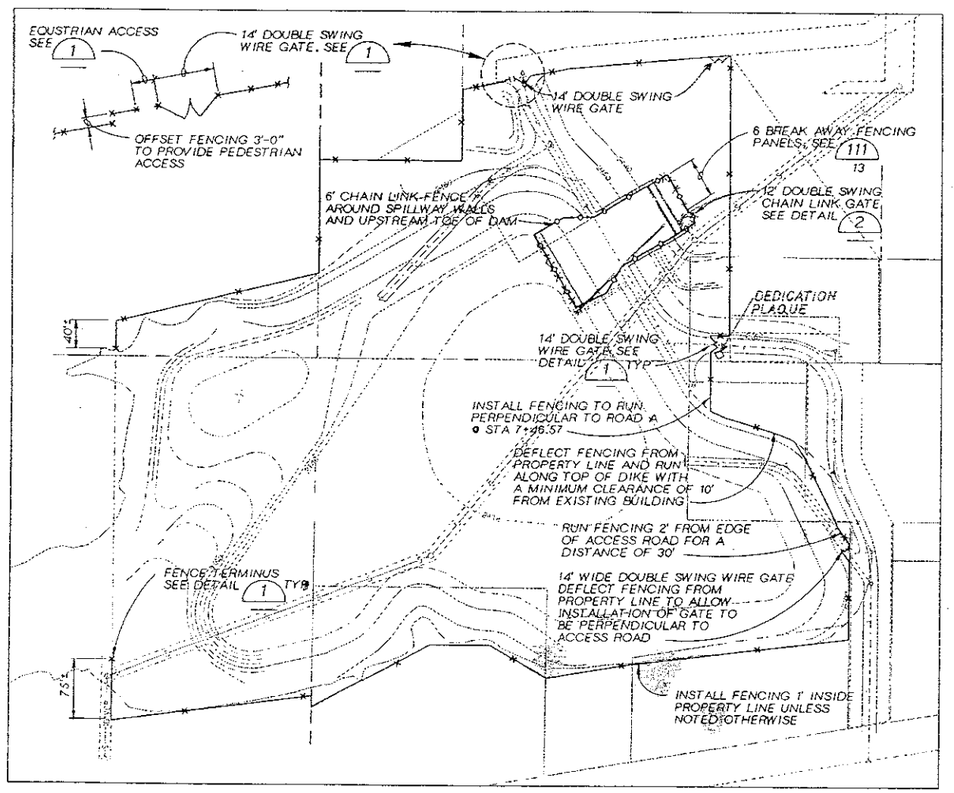

FENCING PLAN
NTS

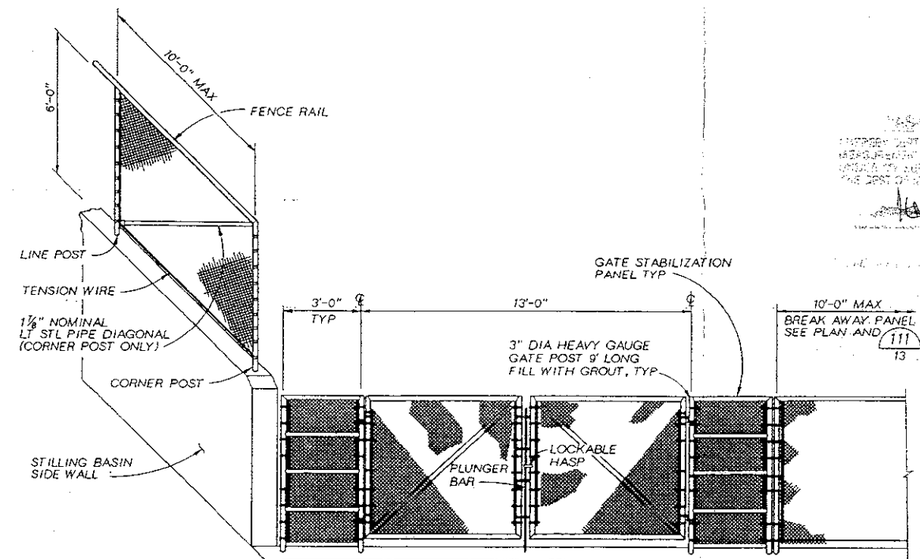

NOTES:

1. MOUNT FENCING ON CONCRETE SPILLWAY AND STILLING BASIN WALLS. SEE SHEET 13 FOR MOUNTING DETAILS.
2. BREAK AWAY PANELS AND POSTS SHALL BE INDEPENDENT FROM PERMANENT CHAIN LINK FENCING AND GATES.
3. FOR CHAIN LINK FENCE IN EMBANKMENT USE POST DETAIL 1 WITH CONCRETE EMBEDMENT FOR ALL POSTS.

DETAIL 2
NTS

Two working days before you dig, CALL FOR THE BLUE STAKES
263-1100
Blue Stake Center CALL COLLECT

NO.	REVISION	BY	DATE
3			
2			
1			

FLOOD CONTROL DISTRICT OF MARICOPA COUNTY
ENGINEERING DIVISION

FENCE PLAN

	BY	DATE
DESIGNED	RE FREIER	6/08/95
DRAWN	RE FREIER	6/08/95
CHECKED	TJ WOLF	6/08/95

CH2M HILL

CASANDRO WASH DAM

SHEET 19 OF 34

TRACS NO.

5441P117.DGN

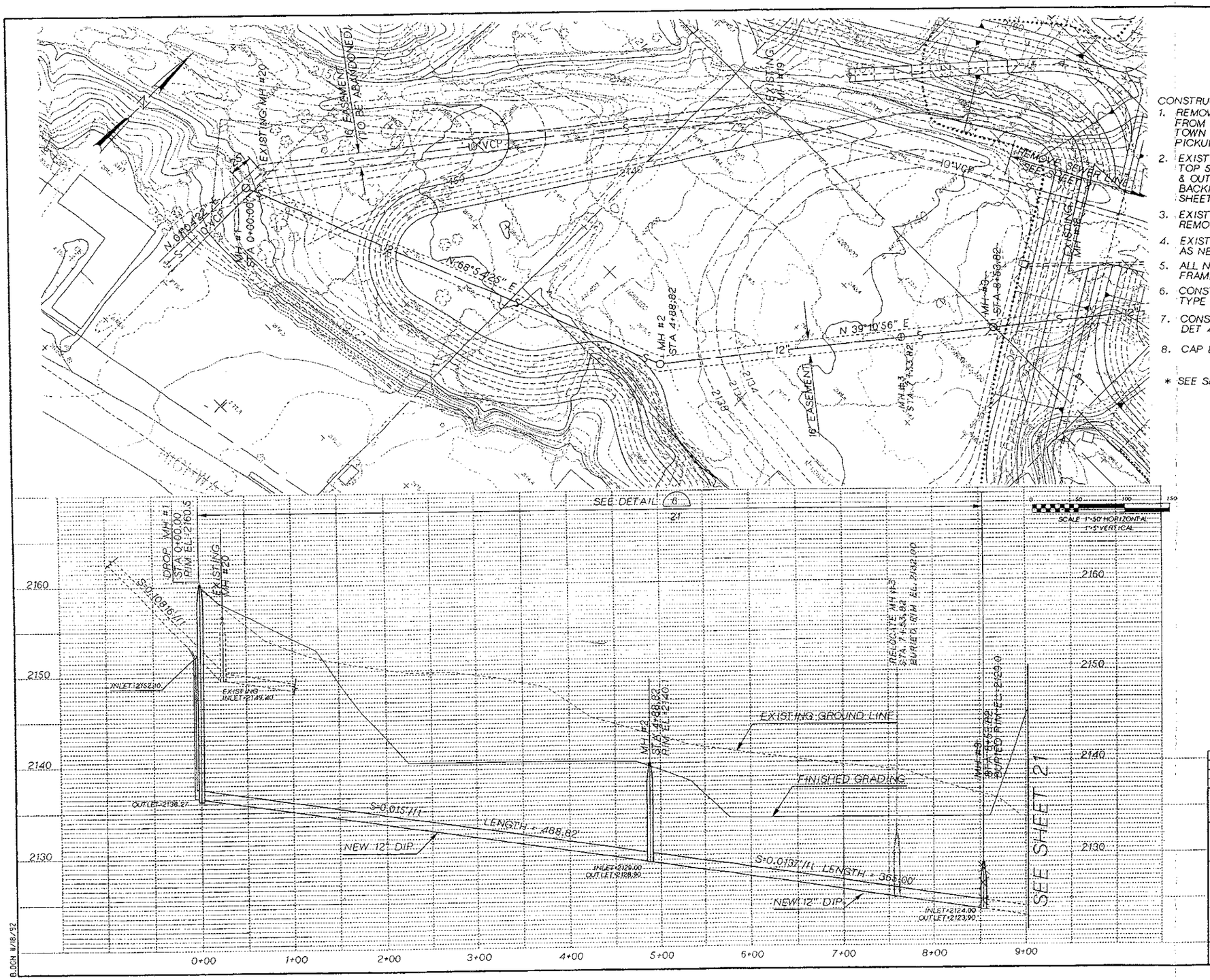

CONSTRUCTION NOTES:

1. REMOVE & SALVAGE MANHOLE RIMS & COVERS FROM EXISTING MH NOS. 17, 18, 19, & 20. CONTACT TOWN OF WICKENBURG PUBLIC WORKS DEPT. FOR PICKUP.
2. EXISTING MH NOS. 17, 19, & 20 SHALL HAVE THE TOP 5' (MIN.) OF THE SHAFT REMOVED, ALL INLETS & OUTLETS PLUGGED WITH CONCRETE, & BE BACKFILLED TO FINISHED GRADE. SEE DET 11 SHEET 15, FOR ADDITIONAL INFORMATION.
3. EXISTING MH NO. 18 SHALL BE COMPLETELY REMOVED.
4. EXISTING MH NO. 16 SHALL BE RECONSTRUCTED AS NECESSARY.
5. ALL NEW MANHOLES SHALL HAVE 30" WATER TIGHT FRAMES & COVERS PER MAG STD DET ~~428~~ 523.
6. CONSTRUCT MH NO. 1 PER MAG STD DET 426, TYPE 'B'.
7. CONSTRUCT MH NOS. 2, 3, & 4 PER MAG STD DET 420.
8. CAP ENDS OF ALL ABANDONED VCP. SEE DETAIL 9.

* SEE SHEET 21 FOR SAN SEWER DETAILS 6, 7, 8 & 9

Two working days before you dig, CALL FOR THE BLUE STAKES 263-1100 Blue Stake Center CALL COLLECT

NO.	REVISION	BY	DATE
3			
2			
1			

FLOOD CONTROL DISTRICT OF MARICOPA COUNTY
ENGINEERING DIVISION

PLAN & PROFILE
SEWER RELOCATION

	BY	DATE
DESIGNED	MD COEN	6/08/95
DRAWN	MD COEN	6/08/95
CHECKED	TJ WOLF	6/08/95

CH2M HILL

CASANDRO WASH DAM

SHEET 20 OF 34

TRACS NO.

B.DGN 11/18/92

5441P16.DGN

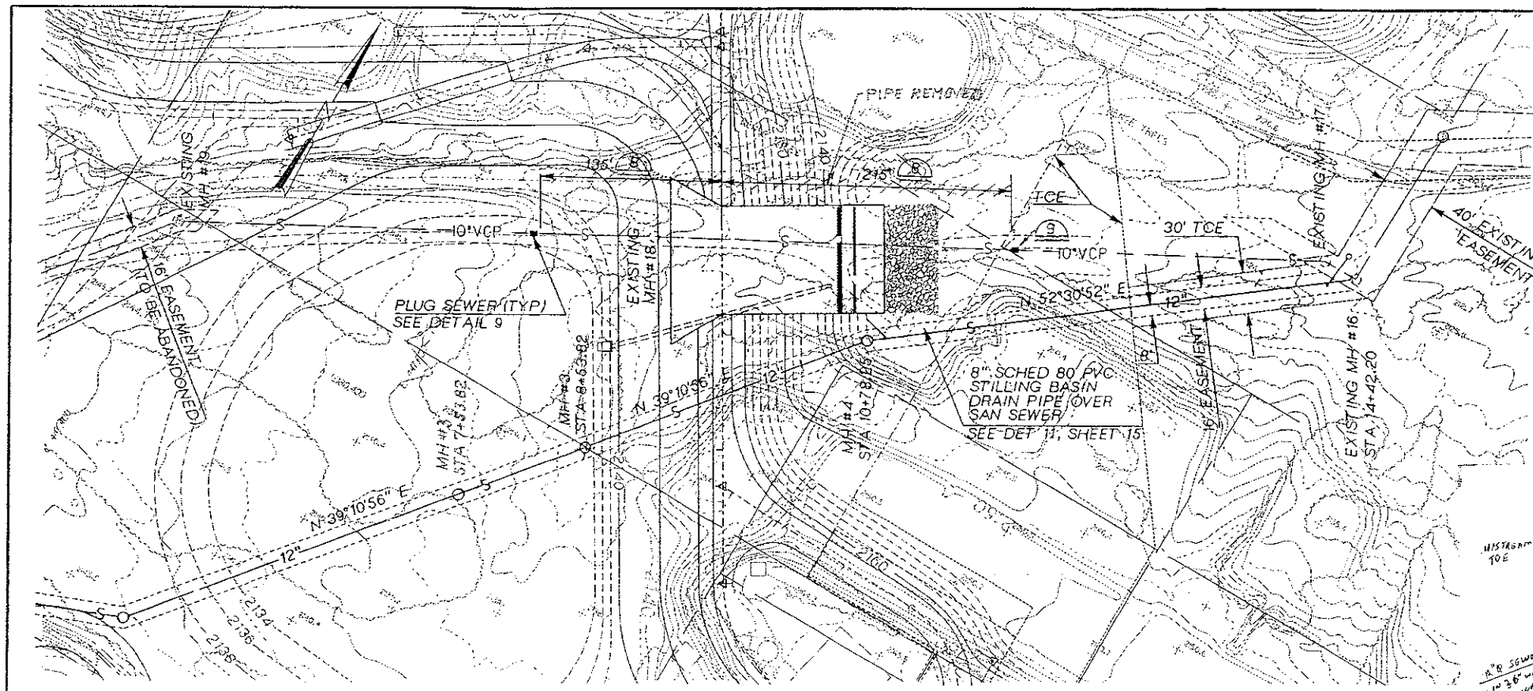

*SEE SHEET 20 FOR CONSTRUCTION NOTES

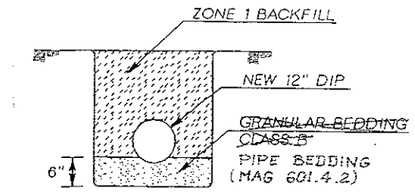

DETAIL 6

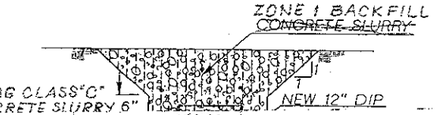

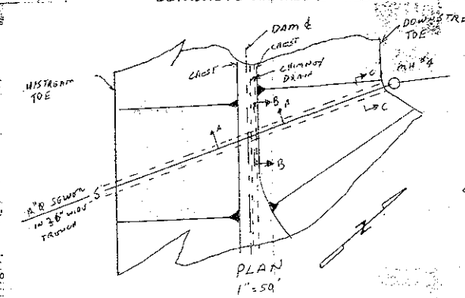

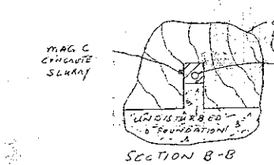

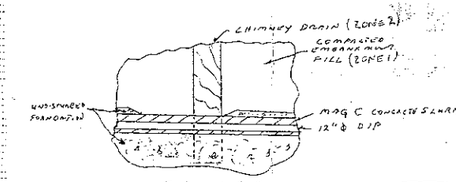

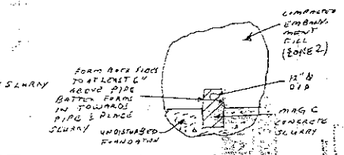

RICKER, ATKINSON, McGEE & ASSOC. TEMPE, ARIZ.

SHEET 21A OF 34 PLAN & DETAILS FOR SEWER LINE THROUGH DAM - SUPPLEMENTS

BY: KLM 3-28-96

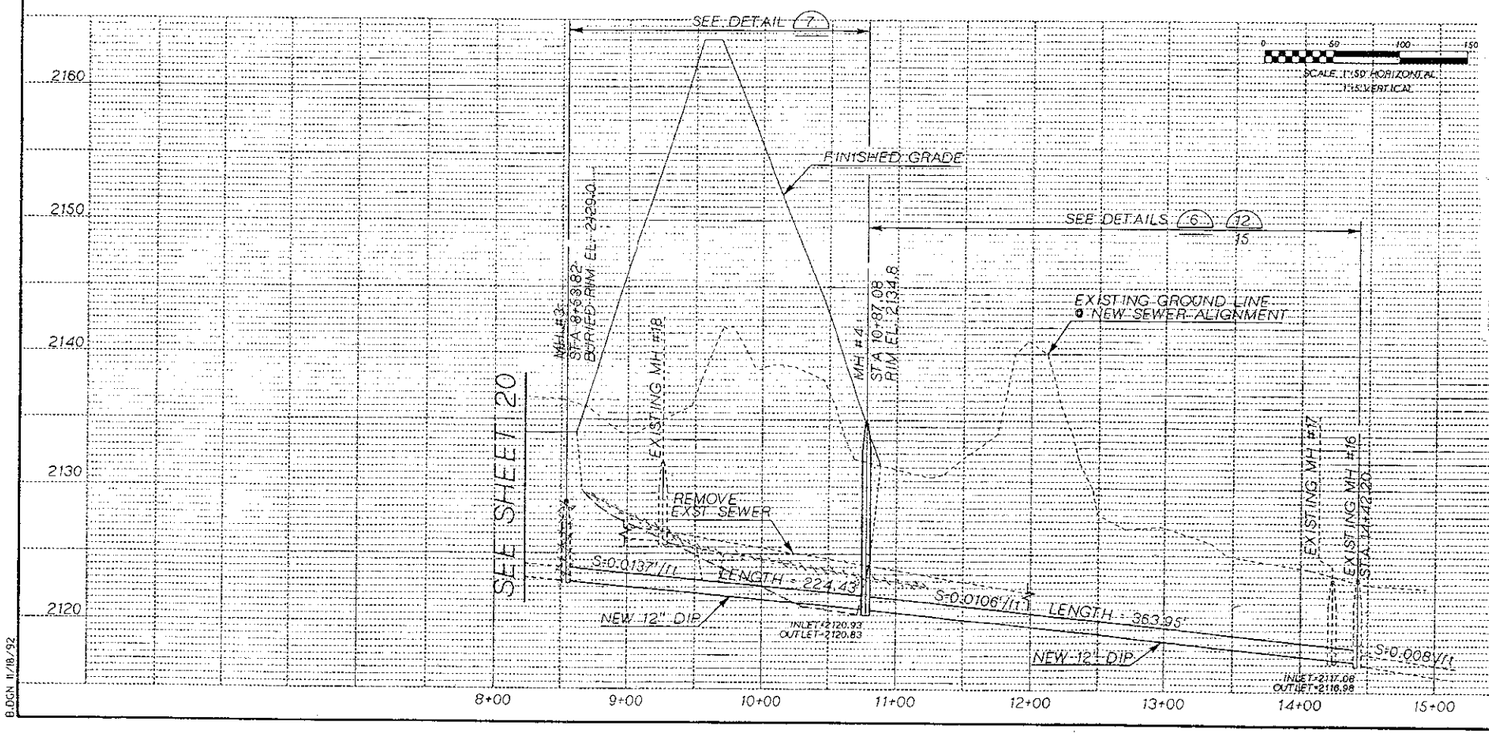

B.DGN 11/18/92

Two working days before you dig, CALL FOR THE BLUE STAKES 263-1100 Blue Stake Center CALL COLLECT

NO.	REVISION	BY	DATE
3			
2			
1			

FLOOD CONTROL DISTRICT OF MARICOPA COUNTY
ENGINEERING DIVISION

SEWER RELOCATION/ STILLING BASIN DRAIN PIPE

	BY	DATE
DESIGNED	MD COEN	6/08/95
DRAWN	MD COEN	6/08/95
CHECKED	TJ WOLF	6/08/95

CH2M HILL

CASANDRO WASH DAM

SHEET 21 OF 34

TRACS NO.

5441P116.DGN

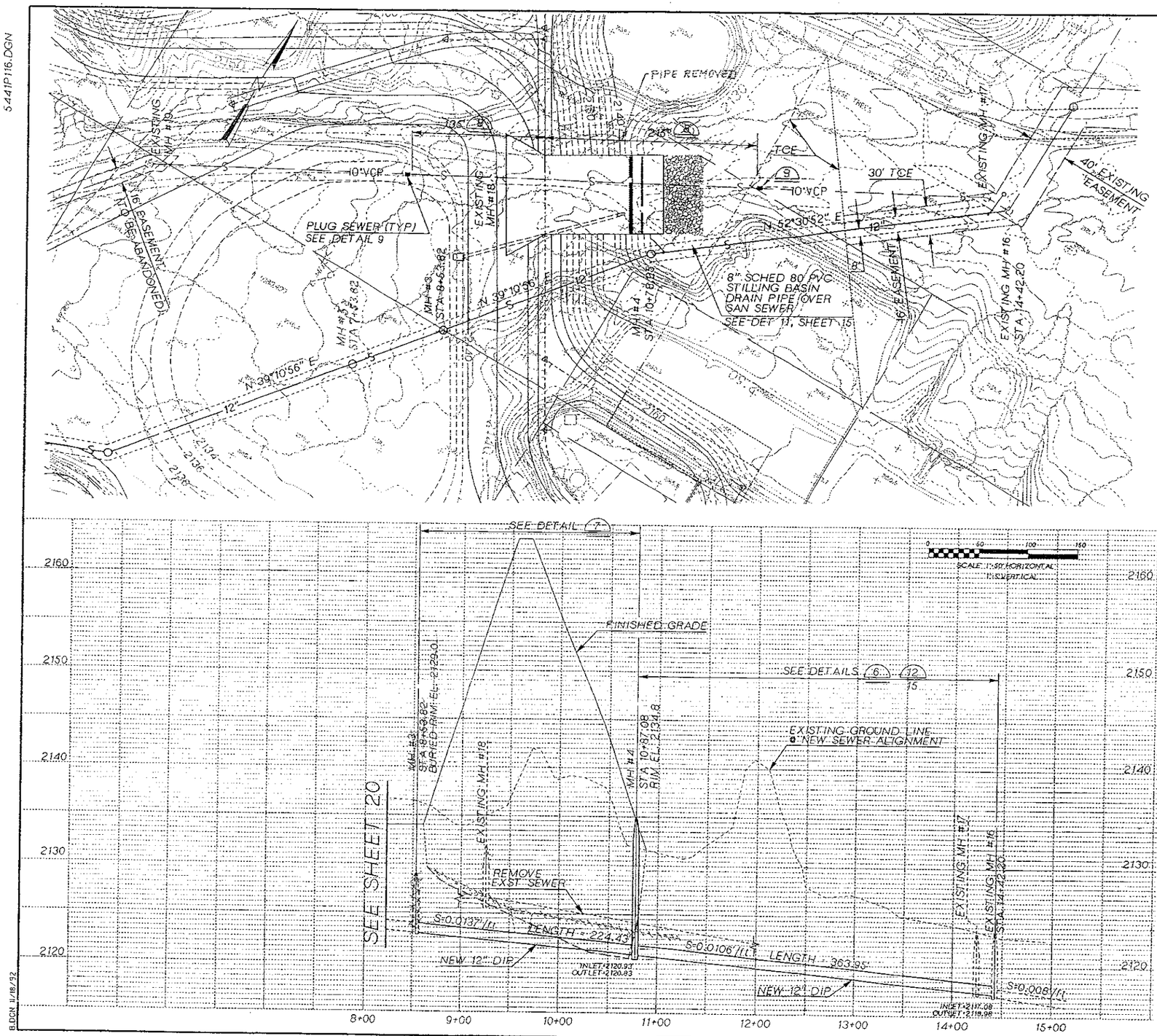

*SEE SHEET 20 FOR CONSTRUCTION NOTES

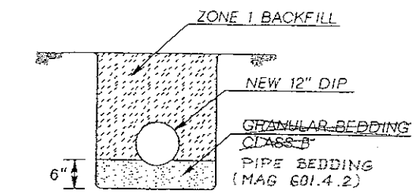

DETAIL 6

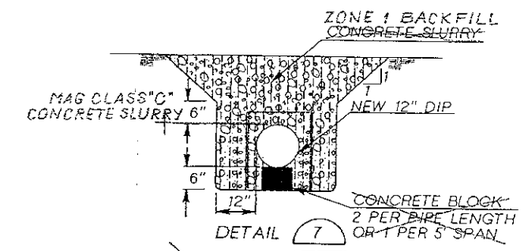

DETAIL 7

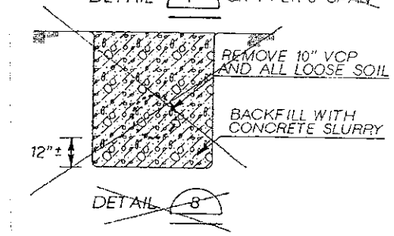

DETAIL 8

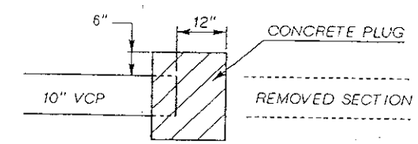

DETAIL 9

NO.	REVISION	BY	DATE
3			
2			
1			

FLOOD CONTROL DISTRICT OF MARICOPA COUNTY
ENGINEERING DIVISION

SEWER RELOCATION/ STILLING BASIN DRAIN PIPE

	BY	DATE
DESIGNED	MD COEN	6/08/95
DRAWN	MD COEN	6/08/95
CHECKED	TJ WOLF	6/08/95

CH2M HILL

CASANDRO WASH DAM

SHEET 21 OF 34

TRACS NO.

Two working days before you dig, CALL FOR THE BLUE STAKES 263-1100 Blue Stake Center CALL COLLECT

8.DGN 11/18/92

5441P118.DGN

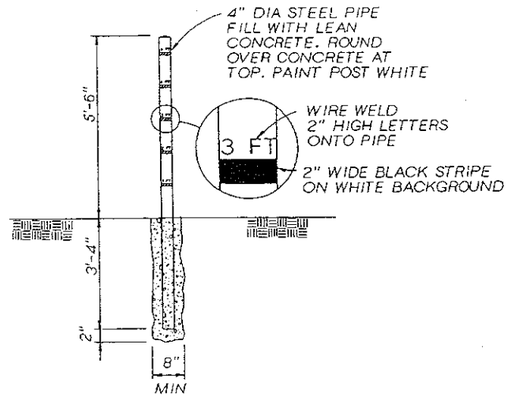

DETAIL 4/4

SEDIMENTATION MARKER

NTS

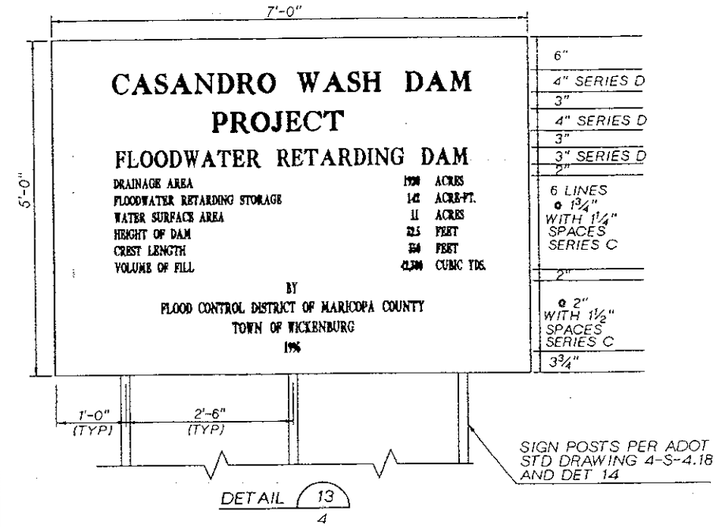

DETAIL 13/4

LETTERING LAYOUT

NTS

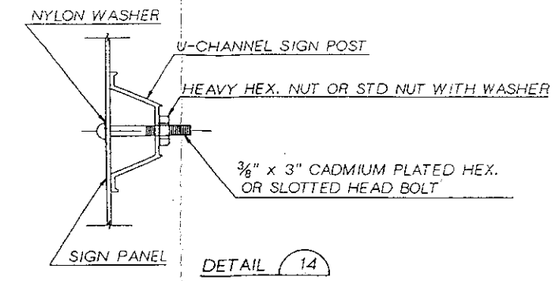

DETAIL 14

PANEL TO POST ASSEMBLY

NTS

NOTES:
1. SIGN PANEL SHALL BE FLAT SHEET ALUMINUM WITH DIRECT APPLIED OR SILK SCREENED CHARACTERS, CONFORMING TO SECTION 608 OF THE ADOT STD SPECIFICATIONS.
2. SIGN PANEL SHALL HAVE A BROWN STANDARD REFLECTIVITY BACKGROUND WITH WHITE STANDARD REFLECTIVITY LETTERING.
3. LETTER DESIGN OF UPPER AND LOWER CASE LETTERS SHALL BE THE SERIES SPECIFIED OF THE STANDARD ALPHABETS FOR HIGHWAY SIGNS.

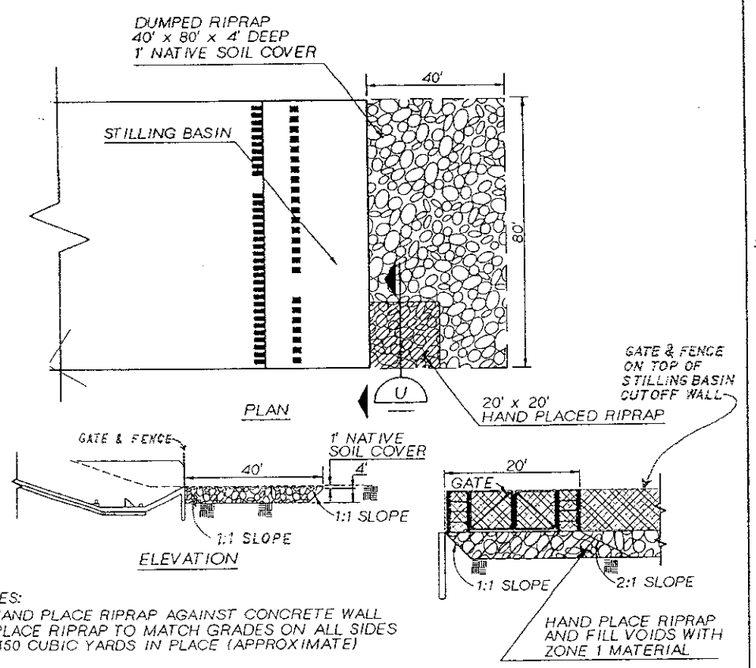

NOTES:
1. HAND PLACE RIPRAP AGAINST CONCRETE WALL
2. PLACE RIPRAP TO MATCH GRADES ON ALL SIDES
3. 450 CUBIC YARDS IN PLACE (APPROXIMATE)

DETAIL 10/4 SECTION U

DUMPED RIPRAP

NTS

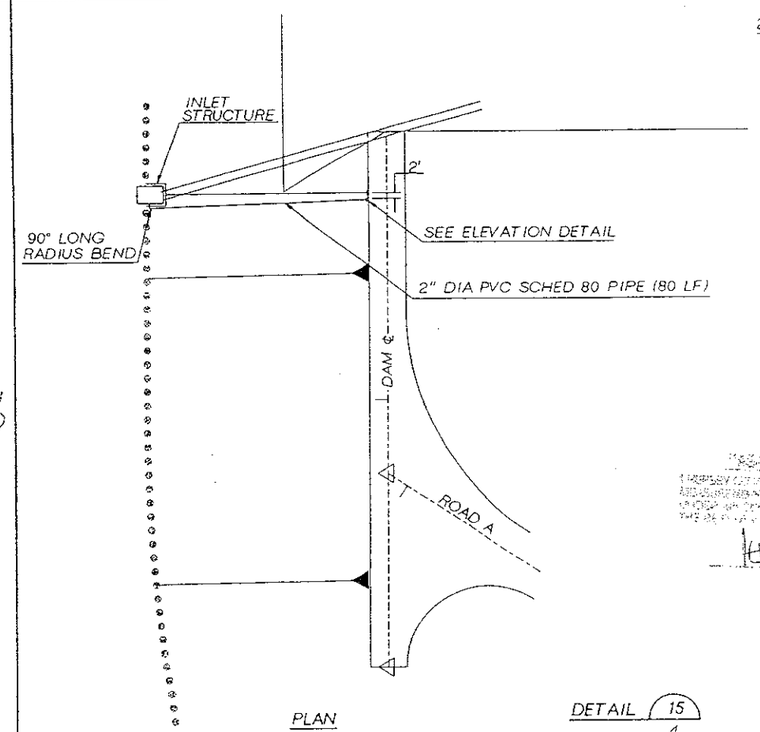

DETAIL 15/4

INSTRUMENTATION CONDUIT

NTS

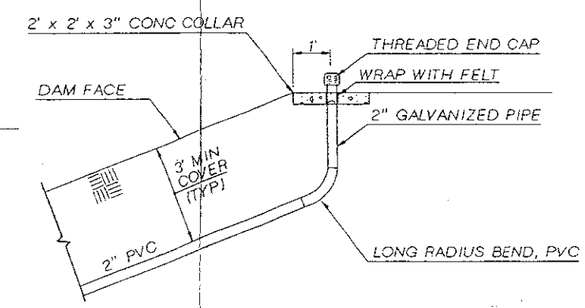

NOTE: PROVIDE COUPLINGS AND ADAPTERS AS NECESSARY

ELEVATION DETAIL

NTS

ISSUED FOR BID

Two working days before you dig, CALL FOR THE BLUE STAKES 263-1100 Blue Stake Center CALL COLLECT

NO.	REVISION	BY	DATE
3			
2			
1			

FLOOD CONTROL DISTRICT OF MARICOPA COUNTY
ENGINEERING DIVISION

MISCELLANEOUS DETAILS

	BY	DATE
DESIGNED	TJ WOLF	6/08/95
DRAWN	RE FREIER	6/08/95
CHECKED	JE LIVINGSTON	6/08/95

CH2M HILL

CASANDRO WASH DAM

SHEET 22 OF 34

TRACS NO.

5441LS.DGN

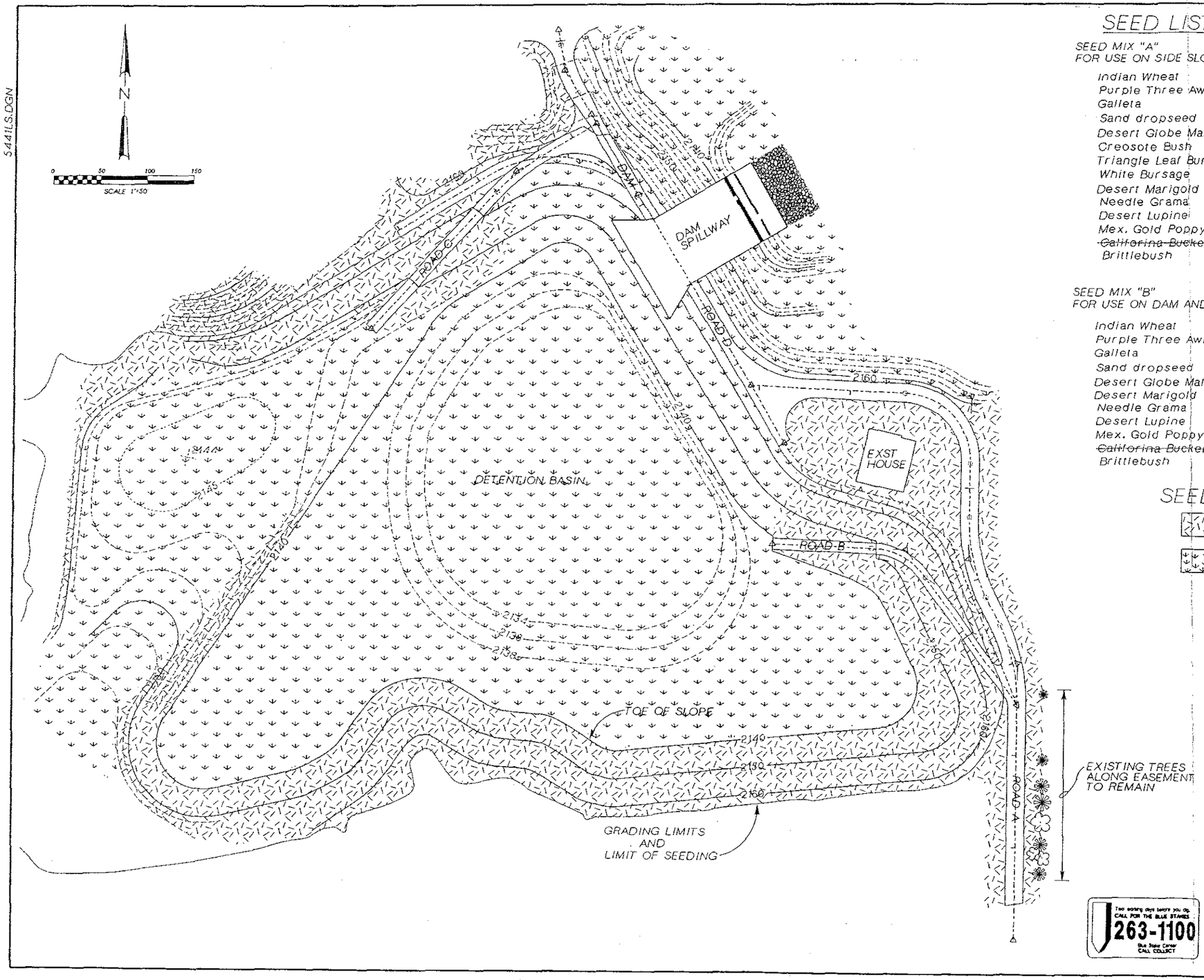

SEED LIST:

SEED MIX "A"
FOR USE ON SIDE SLOPES

		PLS lbs./Ac.
Indian Wheat	Plantago insularis	3.0
Purple Three Awn	Aristida purpurea	3.0
Galleta	Hilaria jamesi	1.0
Sand dropseed	Sporobolus cryptandeus	1.0
Desert Globe Mallow	Sphaeralcea ambigua	1.0
Creosote Bush	Larrea tridentata	0.5
Triangle Leaf Bursage	Ambrosia deltoidea	2.0
White Bursage	Ambrosia dumosa	1.0
Desert Marigold	Baileya multiradiata	~~1.0~~ 2.0
Needle Grama	Bouteloua aristiodoides	1.0
Desert Lupine	Lupinus arizonicus	1.0
Mex. Gold Poppy	Eschscholtzia mexicana	1.0
~~California Buckwheat~~	~~Eriogonum fasciculatum~~	~~1.0~~
Brittlebush	Encelia farinosa	3.0

SEED MIX "B"
FOR USE ON DAM AND BASIN

		PLS lbs./Ac.
Indian Wheat	Plantago insularis	3.0
Purple Three Awn	Aristida purpurea	3.0
Galleta	Hilaria jamesi	1.0
Sand dropseed	Sporobolus cryptandeus	1.0
Desert Globe Mallow	Sphaeralcea ambigua	1.0
Desert Marigold	Baileya multiradiata	~~1.0~~ 2.0
Needle Grama	Bouteloua aristiodoides	1.0
Desert Lupine	Lupinus arizonicus	1.0
Mex. Gold Poppy	Eschscholtzia mexicana	1.0
~~California Buckwheat~~	~~Eriogonum fasciculatum~~	~~1.0~~
Brittlebush	Encelia farinosa	3.0

SEED MIX KEY:

SEED MIX "A"

SEED MIX "B"

NO.	REVISION	BY	DATE
3			
2			
1			

FLOOD CONTROL DISTRICT
OF MARICOPA COUNTY
ENGINEERING DIVISION

LANDSCAPE PLAN

	BY	DATE
DESIGNED	B. WINFREY	6/08/95
DRAWN	JK KELLEY	6/08/95
CHECKED	TJ WOLF	6/08/95

CH2M HILL

CASANDRO WASH DAM

SHEET 23 OF 34

TRACS NO.

Two working days before you dig, CALL FOR THE BLUE STAKES 263-1100 Blue Stake Center CALL COLLECT

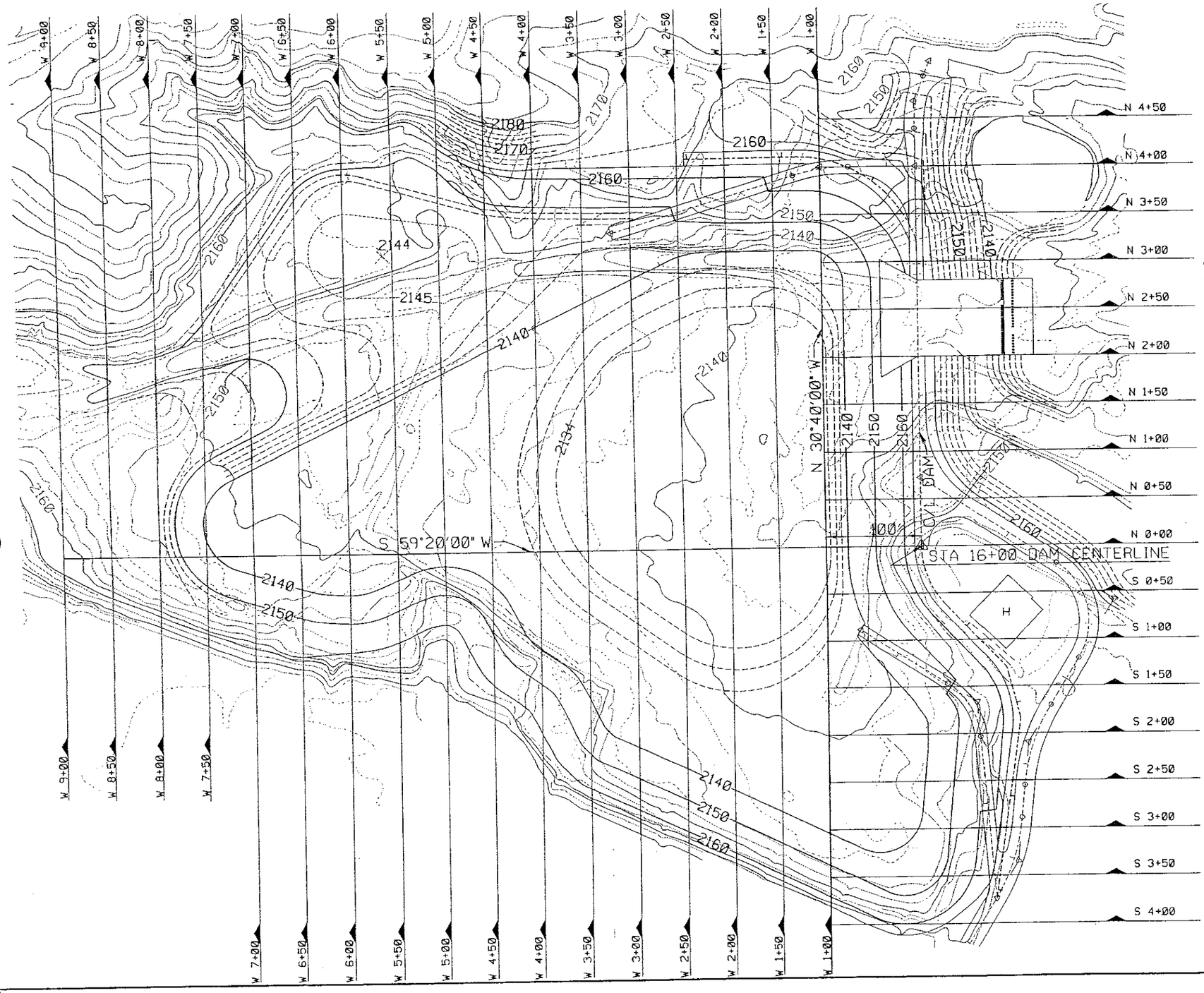

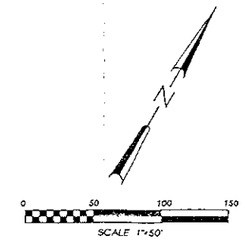

NOTES:
1. SEE SHEET 3 FOR SURVEY CONTROL DATA

LEGEND

N/S 0+50	.....DAM CROSS-SECTION
W 2+50	.....DETENTION BASIN CROSS-SECTION
—2140—	.....NEW CONTOUR
—2140—	.....EXISTING CONTOUR
H	.....EXISTING HOUSE

NO.	REVISION	BY	DATE
3			
2			
1			

FLOOD CONTROL DISTRICT
OF MARICOPA COUNTY
ENGINEERING DIVISION

CROSS-SECTION
INDEX SHEET

	BY	DATE
DESIGNED	TJ WOLF	6/08/95
DRAWN	MD COEN	6/08/95
CHECKED	JE LIVINGSTON	6/08/95

CH2M HILL

CASANDRO WASH

SHEET OF 24 34

TRACS NO.

02-01-95 SKW35441-5441DAM1.DGN

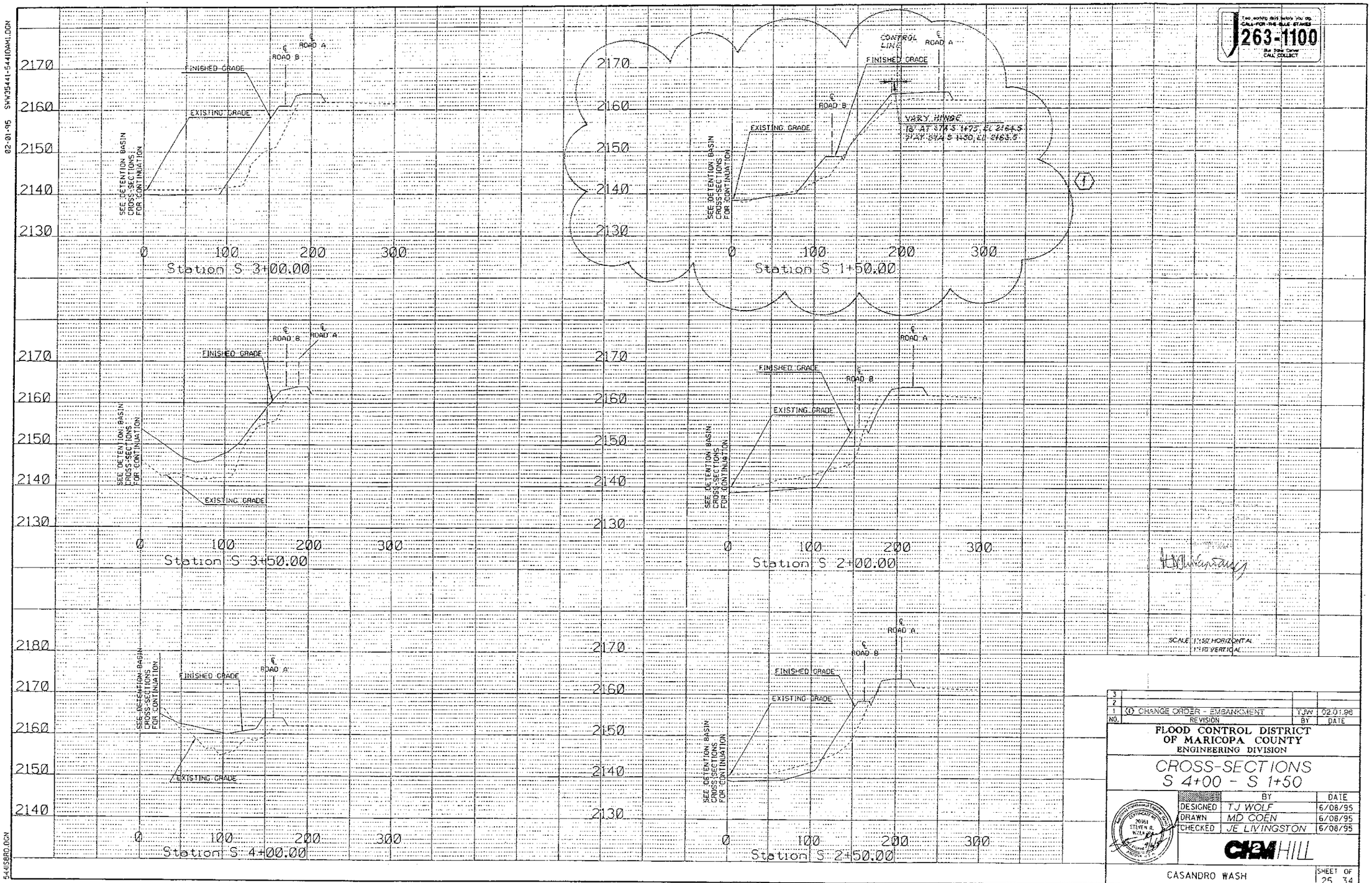

Two working days before you dig
CALL FOR THE BLUE STAKES
263-1100
Blue Stake Center
CALL COLLECT

SCALE 1"=50' HORIZONTAL
1"=10' VERTICAL

NO.	REVISION	BY	DATE
3			
2			
1	(1) CHANGE ORDER - EMBANKMENT	TJW	02.01.96

FLOOD CONTROL DISTRICT
OF MARICOPA COUNTY
ENGINEERING DIVISION

CROSS-SECTIONS
S 4+00 - S 1+50

	BY	DATE
DESIGNED	TJ WOLF	6/08/95
DRAWN	MD COEN	6/08/95
CHECKED	JE LIVINGSTON	6/08/95

REGISTERED PROFESSIONAL ENGINEER (CIVIL) CERTIFICATE NO. 20961 STEVEN R. WOLF ARIZONA U.S.A.

CH2M HILL

CASANDRO WASH

SHEET OF
25 34

TRACS NO.

5441SBRO.DGN

10-06-94 SW#35441-5441DRM2.DGN

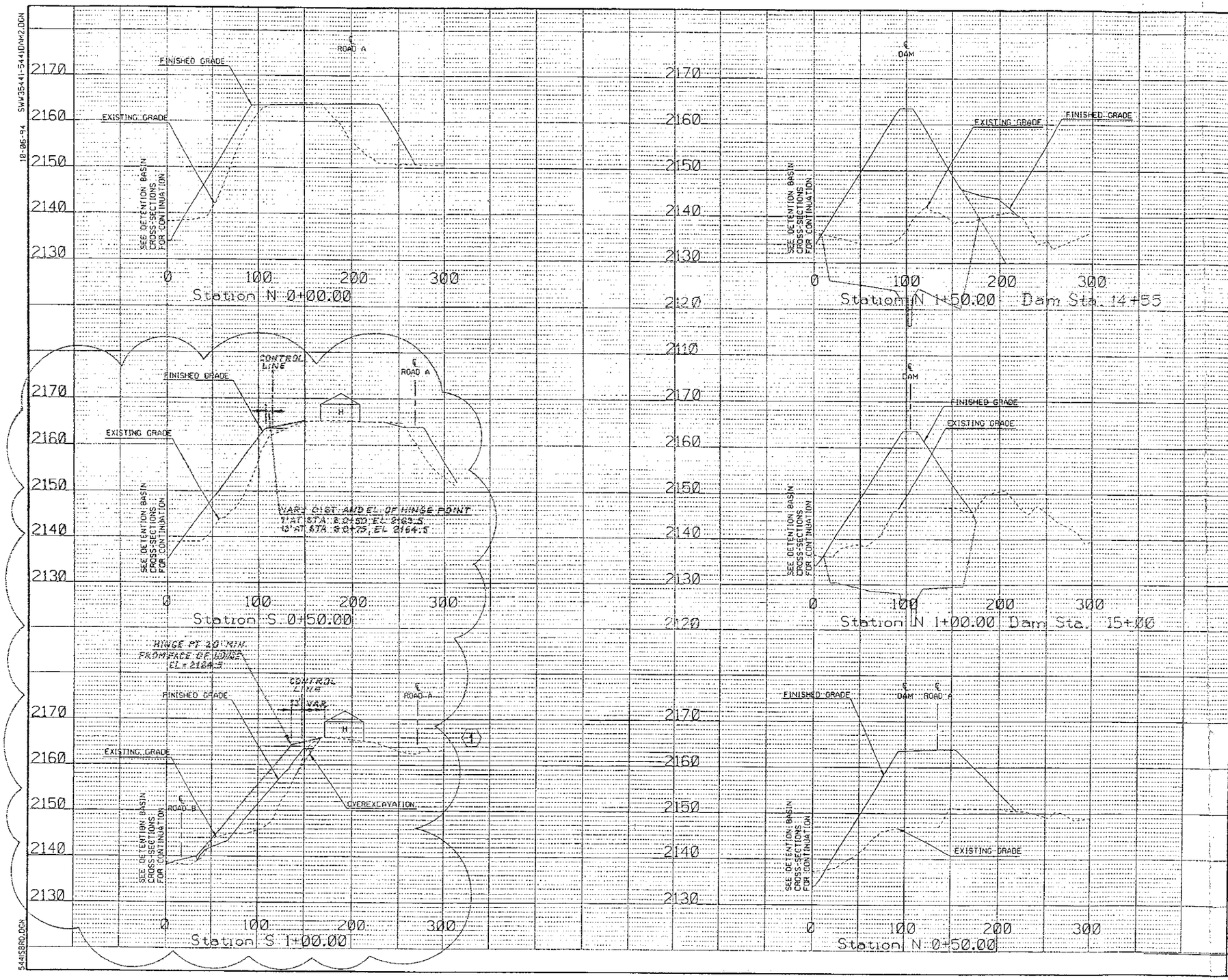

Two working days before you dig, CALL FOR THE BLUE STAKES
263-1100
Blue Stake Center
CALL COLLECT

NO.	REVISION	BY	DATE
3			
2			
1	1 CHANGE ORDER - EMBANKMENT	TJW	02.01.96

FLOOD CONTROL DISTRICT OF MARICOPA COUNTY
ENGINEERING DIVISION

CROSS-SECTIONS
S 1+00 - N 1+50

	BY	DATE
DESIGNED	TJ WOLF	6/08/95
DRAWN	MD COEN	6/08/95
CHECKED	JE LIVINGSTON	6/08/95

CH2M HILL

CASANDRO WASH

SHEET 26 OF 34

TRACS NO.

5441SBRD.DGN

SWW35441-5441DAM3.DGN

10-06-94

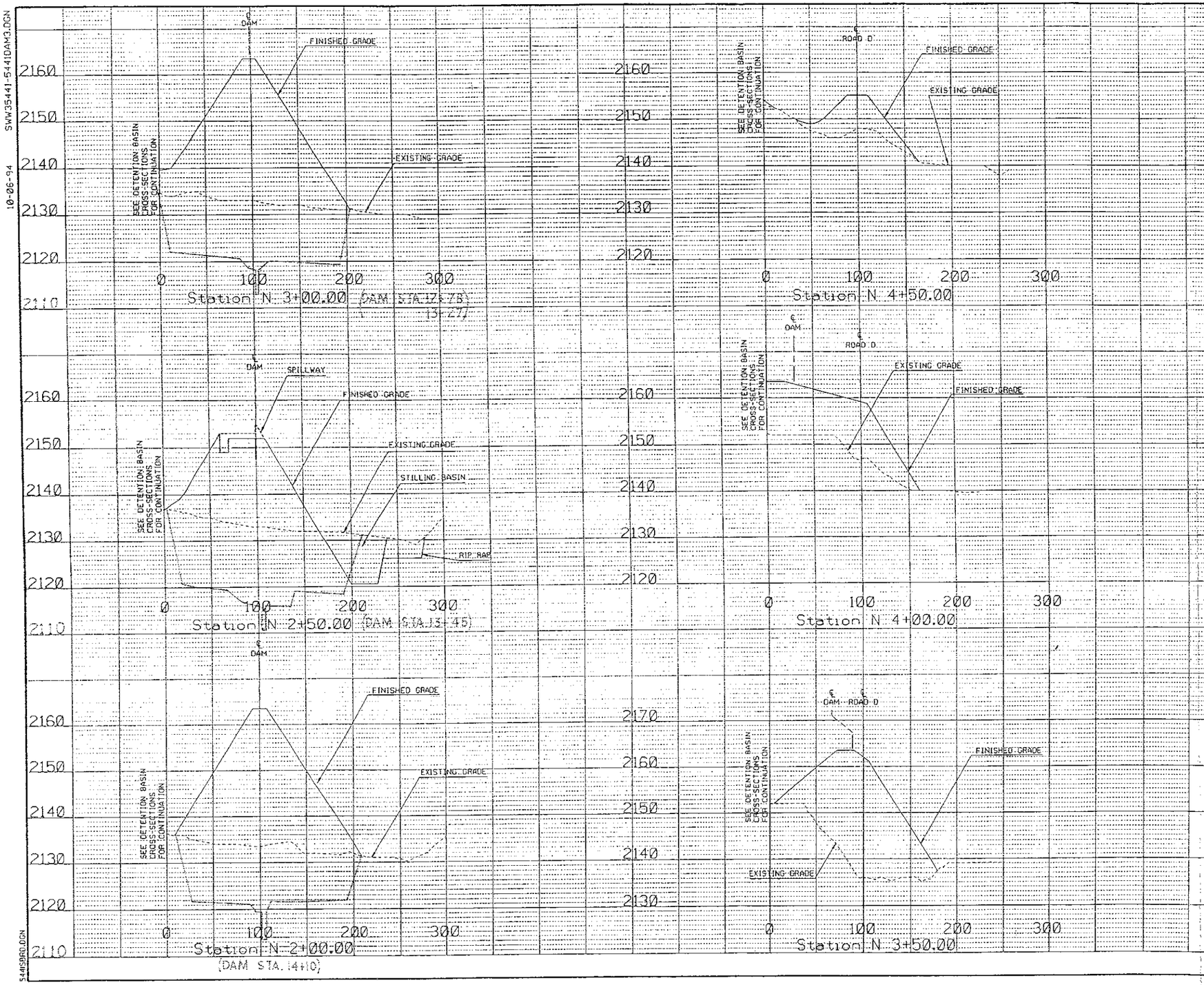

Two working days before you dig
CALL FOR THE BLUE STAKES
263-1100
For Area Codes
CALL COLLECT

SCALE: 1:50' HORIZONTAL
1:10' VERTICAL

NO.	REVISION	BY	DATE
3			
2			
1			

FLOOD CONTROL DISTRICT
OF MARICOPA COUNTY
ENGINEERING DIVISION

CROSS-SECTIONS
N 2+00 - N 4+50

	BY	DATE
DESIGNED	TJ WOLF	6/08/95
DRAWN	MD COEN	6/08/95
CHECKED	JE LIVINGSTON	6/08/95

CERTIFICATE OF SURVEY
20961
STEVEN R. BAKER
ARIZONA, U.S.A.

CH2M HILL

CASANDRO WASH

SHEET 27 OF 34

TRACS NO.

5441SPRD.DGN

10-6-94 SW#35441-5441RES1.DGN

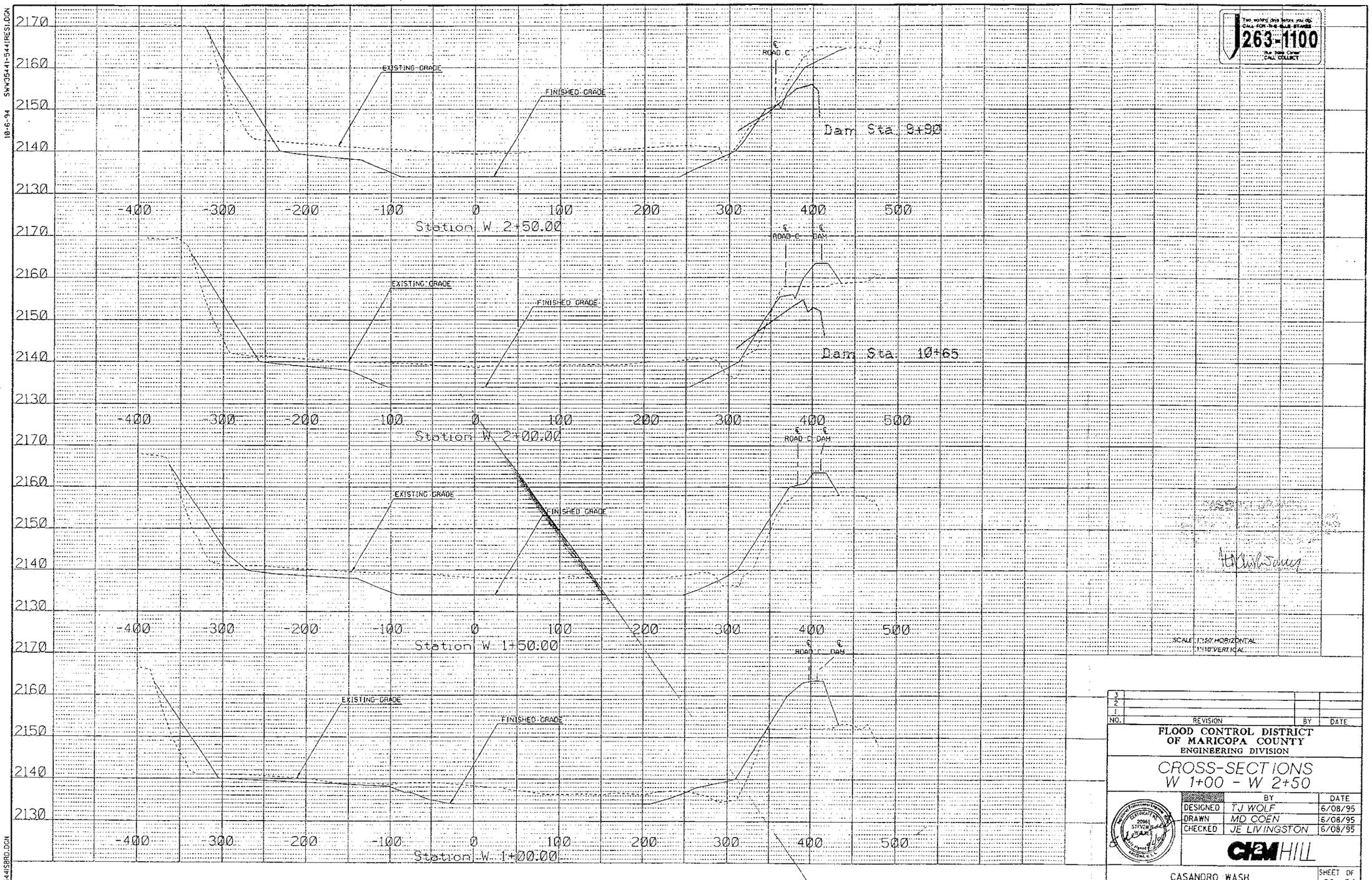

Two working days before you dig
CALL FOR THE BLUE STAKES
263-1100
Blue Stake Center
CALL COLLECT

SCALE: 1"=50' HORIZONTAL
1"=10' VERTICAL

NO.	REVISION	BY	DATE
3			
2			
1			

FLOOD CONTROL DISTRICT OF MARICOPA COUNTY
ENGINEERING DIVISION

CROSS-SECTIONS
W 1+00 - W 2+50

	BY	DATE
DESIGNED	TJ WOLF	6/08/95
DRAWN	MD COEN	6/08/95
CHECKED	JE LIVINGSTON	6/08/95

CERTIFICATE NO. 20961 STEVEN S. MARKS ARIZONA U.S.A.

CH2M HILL

CASANDRO WASH

SHEET 28 OF 34

TRACS NO.

5441SBRD.DGN

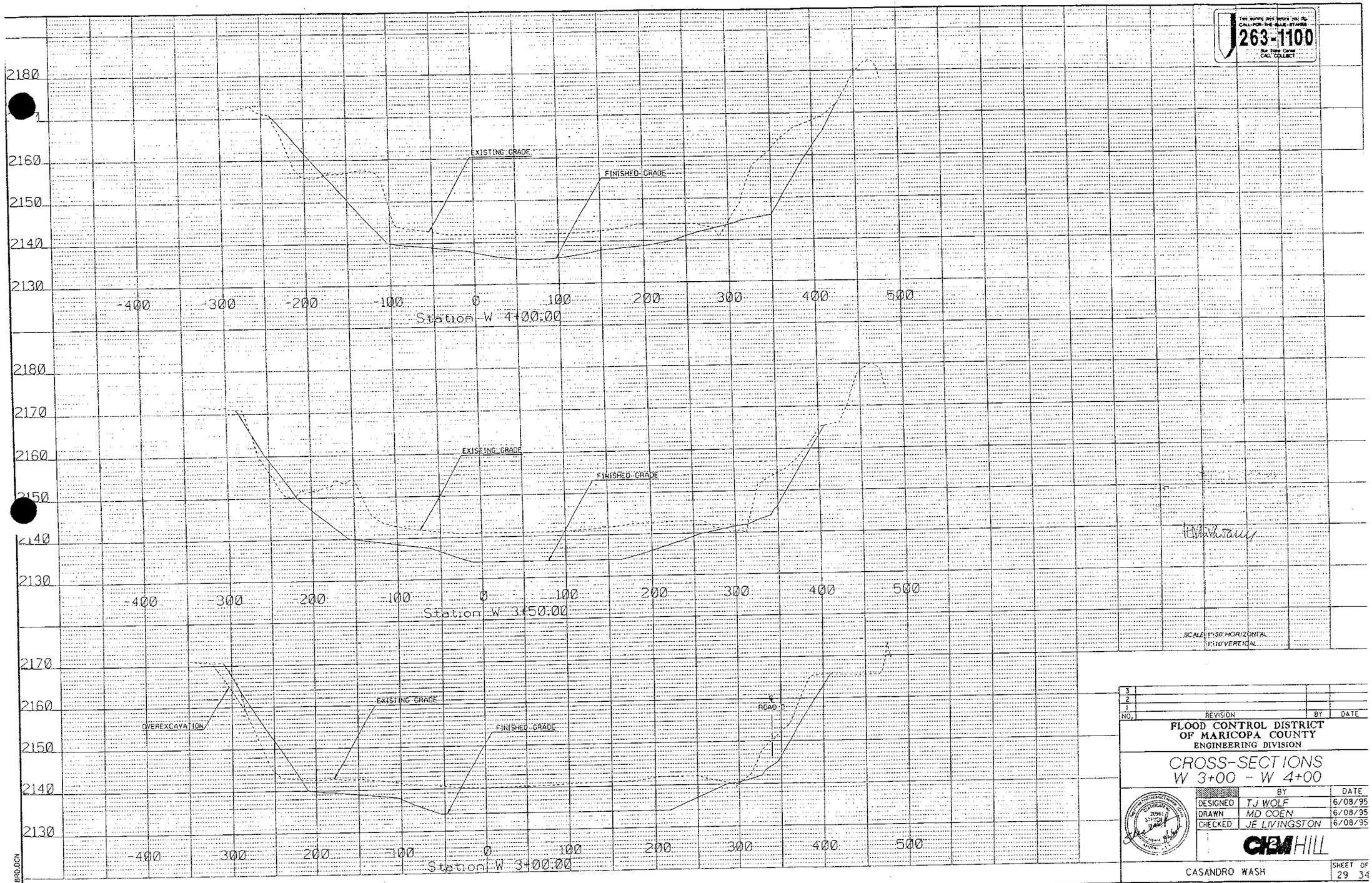

Two working days before you dig
CALL FOR THE BLUE STAKES
263-1100
(for Tucson Center call collect)

NO.	REVISION	BY	DATE
3			
2			
1			

FLOOD CONTROL DISTRICT OF MARICOPA COUNTY
ENGINEERING DIVISION

CROSS-SECTIONS W 3+00 - W 4+00

	BY	DATE
DESIGNED	TJ WOLF	6/08/95
DRAWN	MD COEN	6/08/95
CHECKED	JE LIVINGSTON	6/08/95

CH2M HILL

CASANDRO WASH

SHEET 29 OF 34

TRACS NO.

5445BRD.DGN

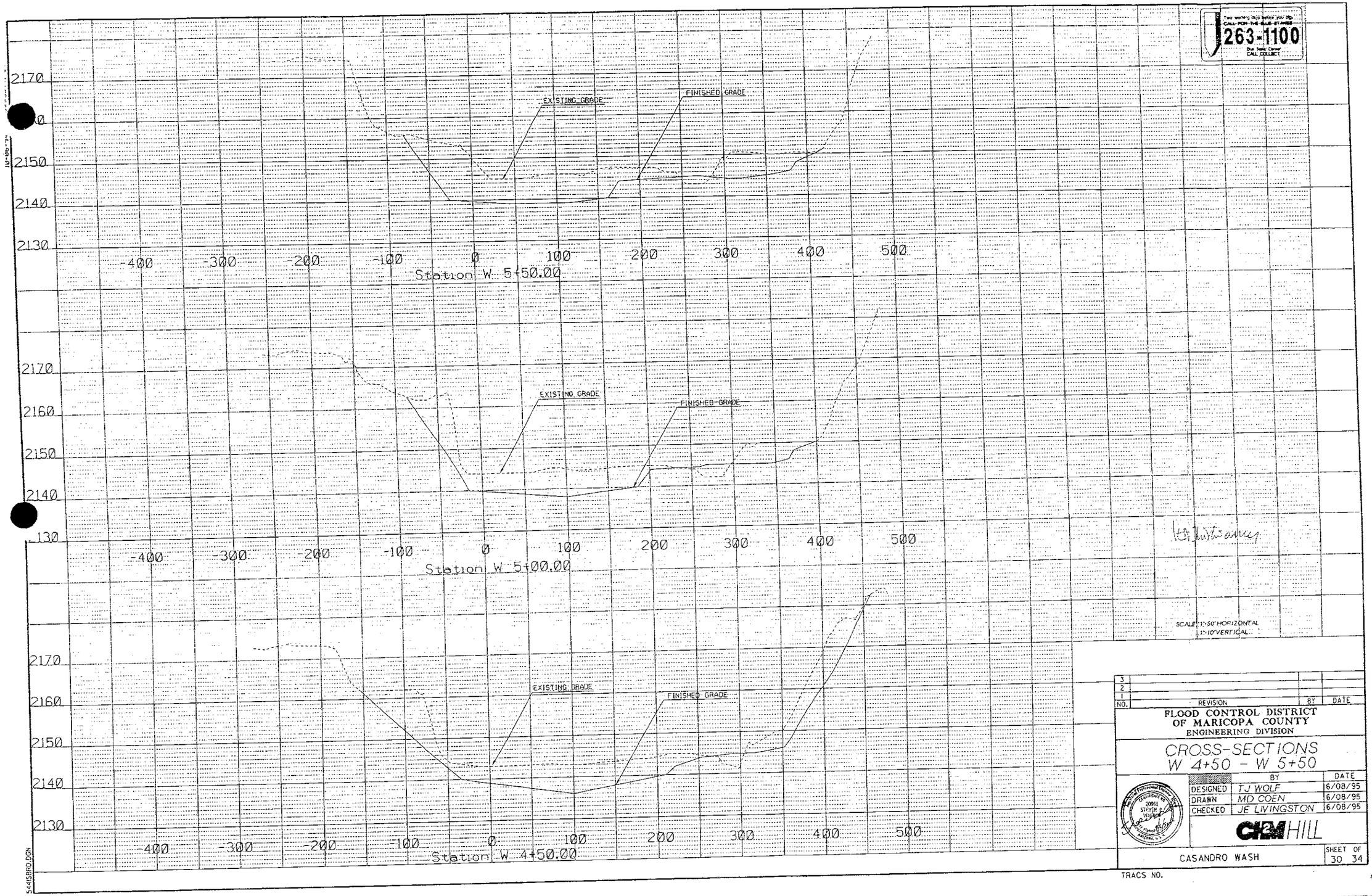

Two working days before you dig
CALL FOR THE BLUE STAKES
263-1100
Blue Stake Center
CALL COLLECT

SCALE 1"=50' HORIZONTAL
1"=10' VERTICAL

NO.	REVISION	BY	DATE
3			
2			
1			

FLOOD CONTROL DISTRICT
OF MARICOPA COUNTY
ENGINEERING DIVISION

CROSS-SECTIONS
W 4+50 - W 5+50

	BY	DATE
DESIGNED	TJ WOLF	6/08/95
DRAWN	MD COEN	6/08/95
CHECKED	JE LIVINGSTON	6/08/95

CH2M HILL

CASANDRO WASH

SHEET 30 OF 34

TRACS NO.

5441SBRO.DGN

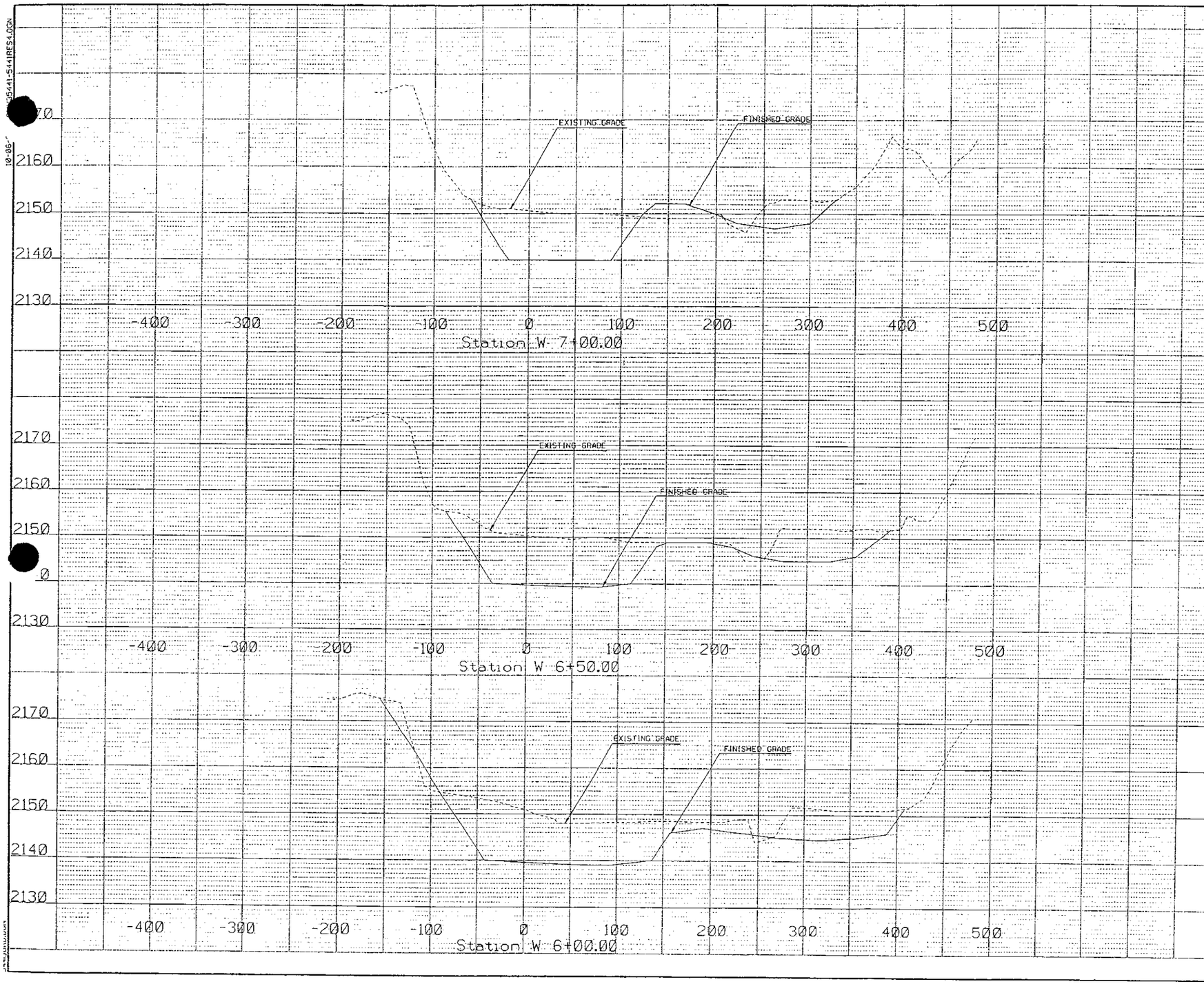

Two working days before you dig, CALL FOR THE BLUE STAKES
263-1100
Blue Stake Center
CALL COLLECT

SCALE 1"=50' HORIZONTAL
1"=10' VERTICAL

NO.	REVISION	BY	DATE
3			
2			
1			

FLOOD CONTROL DISTRICT
OF MARICOPA COUNTY
ENGINEERING DIVISION

CROSS-SECTIONS
W 6+00 - W 7+00

	BY	DATE
DESIGNED	TJ WOLF	6/08/95
DRAWN	MD COEN	6/08/95
CHECKED	JE LIVINGSTON	6/08/95

CH2M HILL

CASANDRO WASH

SHEET 31 OF 34

TRACS NO.

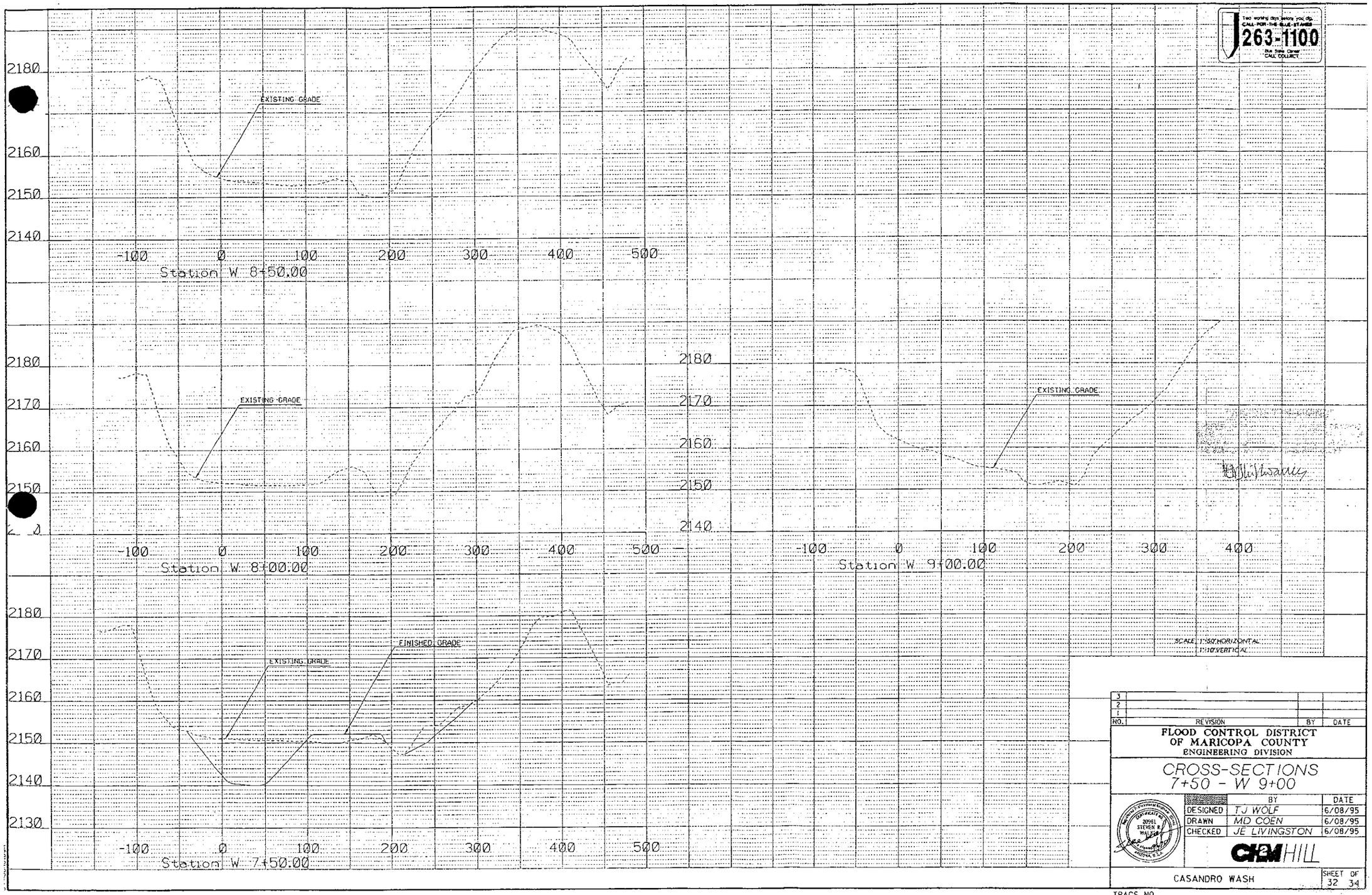

Two working days before you dig
CALL FOR THE BLUE STAKES
263-1100
Blue Stake Center
CALL COLLECT

NO.	REVISION	BY	DATE
3			
2			
1			

FLOOD CONTROL DISTRICT
OF MARICOPA COUNTY
ENGINEERING DIVISION

CROSS-SECTIONS
7+50 - W 9+00

	BY	DATE
DESIGNED	TJ WOLF	6/08/95
DRAWN	MD COEN	6/08/95
CHECKED	JE LIVINGSTON	6/08/95

CH2M HILL

CASANDRO WASH

SHEET 32 OF 34

TRACS NO.

S441P202.DGN

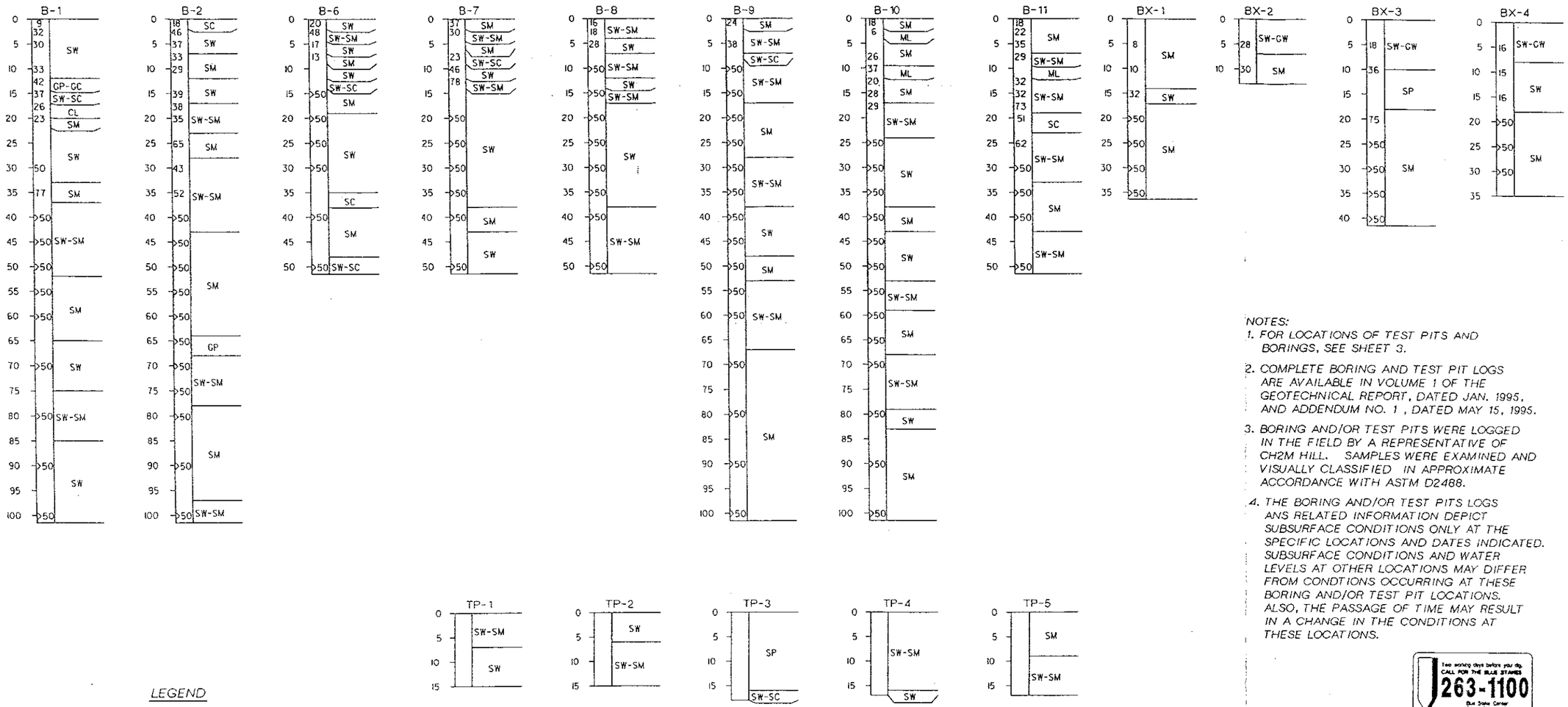

NOTES:

1. FOR LOCATIONS OF TEST PITS AND BORINGS, SEE SHEET 3.
2. COMPLETE BORING AND TEST PIT LOGS ARE AVAILABLE IN VOLUME 1 OF THE GEOTECHNICAL REPORT, DATED JAN. 1995, AND ADDENDUM NO. 1 , DATED MAY 15, 1995.
3. BORING AND/OR TEST PITS WERE LOGGED IN THE FIELD BY A REPRESENTATIVE OF CH2M HILL. SAMPLES WERE EXAMINED AND VISUALLY CLASSIFIED IN APPROXIMATE ACCORDANCE WITH ASTM D2488.
4. THE BORING AND/OR TEST PITS LOGS ANS RELATED INFORMATION DEPICT SUBSURFACE CONDITIONS ONLY AT THE SPECIFIC LOCATIONS AND DATES INDICATED. SUBSURFACE CONDITIONS AND WATER LEVELS AT OTHER LOCATIONS MAY DIFFER FROM CONDTIONS OCCURRING AT THESE BORING AND/OR TEST PIT LOCATIONS. ALSO, THE PASSAGE OF TIME MAY RESULT IN A CHANGE IN THE CONDITIONS AT THESE LOCATIONS.

LEGEND

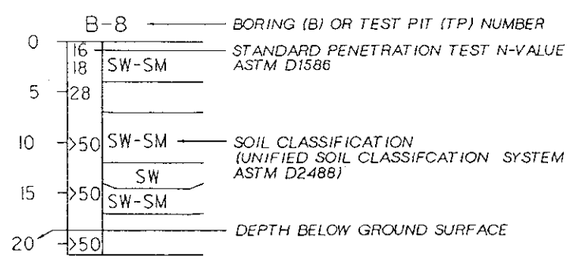

"AS-BUILT DRAWING"
I HEREBY CERTIFY THAT THE "AS-BUILT DRAWING" MEASUREMENTS AS SHOWN HEREON HAVE BEEN UNDER MY SUPERVISION AND ARE CORRECT TO THE BEST OF MY KNOWLEDGE AND BELIEF

Two working days before you dig, CALL FOR THE BLUE STAKES
263-1100
Out State Center CALL COLLECT

NO.	REVISION	BY	DATE
3			
2			
1			

FLOOD CONTROL DISTRICT OF MARICOPA COUNTY
ENGINEERING DIVISION

SOIL LOGS
DAM AREA

	BY	DATE
DESIGNED	DJ ALLARD	6/08/95
DRAWN	MD COEN	6/08/95
CHECKED	TJ WOLF	6/08/95

CH2M HILL

CASANDRO WASH DAM

SHEET 33 OF 34

TRACS NO.

5441P201.DGN

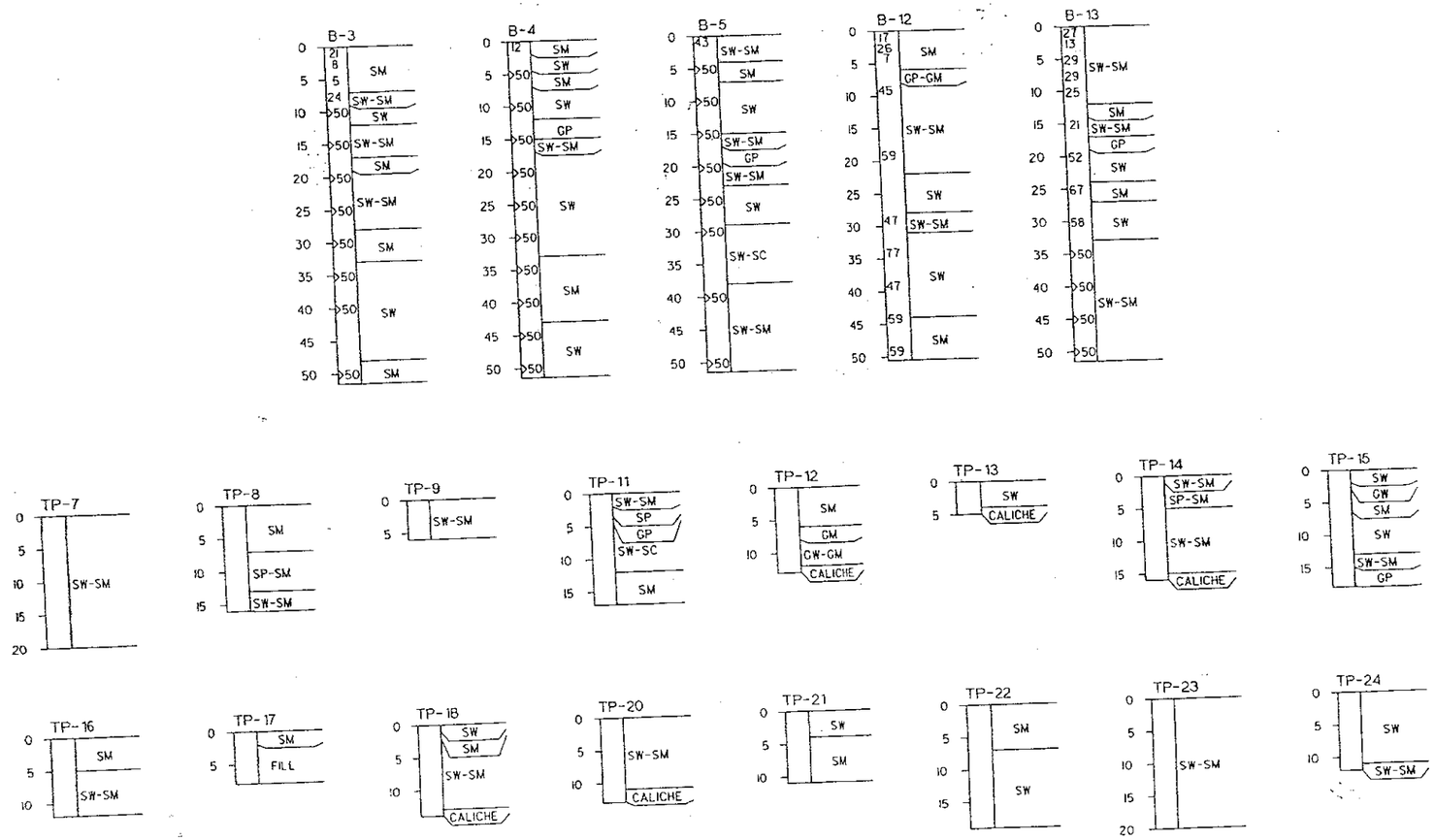

NOTES:

1. FOR LOCATIONS OF TEST PITS AND BORINGS, SEE SHEET 3.
2. COMPLETE BORING AND TEST PIT LOGS ARE AVAILABLE IN VOLUME 1 OF THE GEOTECHNICAL REPORT, DATED JAN. 1995, AND ADDENDUM NO. 1, DATED MAY 15, 1995.
3. BORING AND/OR TEST PITS WERE LOGGED IN THE FIELD BY A REPRESENTATIVE OF CH2M HILL. SAMPLES WERE EXAMINED AND VISUALLY CLASSIFIED IN APPROXIMATE ACCORDANCE WITH ASTM D2488.
4. THE BORING AND/OR TEST PITS LOGS ANS RELATED INFORMATION DEPICT SUBSURFACE CONDITIONS ONLY AT THE SPECIFIC LOCATIONS AND DATES INDICATED. SUBSURFACE CONDITIONS AND WATER LEVELS AT OTHER LOCATIONS MAY DIFFER FROM CONDTIONS OCCURRING AT THESE BORING AND/OR TEST PIT LOCATIONS. ALSO, THE PASSAGE OF TIME MAY RESULT IN A CHANGE IN THE CONDITIONS AT THESE LOCATIONS.

LEGEND

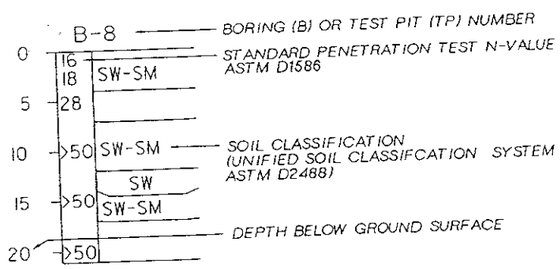

AS-BUILT DRAWING

Two working days before you dig CALL FOR THE BLUE STAKES 263-1100 Blue Stake Center CALL COLLECT

NO.	REVISION	BY	DATE
3			
2			
1			

FLOOD CONTROL DISTRICT OF MARICOPA COUNTY
ENGINEERING DIVISION

SOIL LOGS
DETENTION BASIN AREA

	BY	DATE
DESIGNED	DJ ALLARD	6/08/95
DRAWN	MD COEN	6/08/95
CHECKED	TJ WOLF	6/08/95

CH2M HILL

CASANDRO WASH DAM

SHEET 34 OF 34

TRACS NO.

Table 1 below, compares the 2003 crest settlement monument elevations, 1997 crest settlement monument elevations, and the Adjusted Design crest elevations . The settlement monuments are physically located offset from the dam centerline on the downstream edge of the dam crest. The Design crest elevations are referenced to NGVD 1929 and must be adjusted for comparison with 1997 and 2003 survey data elevation, which is referenced to a different vertical datum: NAVD 1988. Details of the adjustment calculations are outlined on Page 6 of 7, entitled **"Reference Marks"**.

Figure 1-1 illustrates the comparison of crest settlement monument elevations between the Adjusted Design crest elevations, the year-1997 survey data, and the year-2003 survey data listed in **Table 1.**

Figure 1-2 displays the relative change in crest settlement monument elevations obtained by subtracting the 1997 crest monument data from the 2003 crest monument data. 1997 elevation data is the earliest survey data available and is referenced as the baseline elevation.

Figure 3-1 on page 6 shows the location of the crest settlement monuments.

Crest Monument Survey Data					
Marker	Station	Design El. (NGVD29)	Adj. Design (NAVD88)	1997 (NAVD88)	2003 (NAVD88)
CAS11	10+58.66	2163.5	2165.73	2165.74	2165.492
CAS12	12+33.66	2163.5	2165.73	2165.88	2165.583
CAS17	13+17.00	2163.5	2165.73	2166.11	2165.828
CAS16	14+04.66	2163.5	2165.73	2165.97	2165.71
#F	15+23.60	2163.5	2165.73	2165.87	-
#G	16+21.02	2163.5	2165.73	2166.23	-

(Fig. 1-1 Plot Data)

2003 - 1997
-0.248
-0.297
-0.282
-0.26
-
-

(Fig. 1-2 Plot Data)

Notes:
1) Datum shift for BM 823 utilized to obtain the Adjusted Design crest elevations.
2) 1997 Survey data collected in August 1997.
3) 2003 survey data collected in-house in September 2003. No data was collected for the settlement monuments labeled #F and #G.
4) Marker names #Fand #G are referenced from the 1997 Subsidence Survey by Gilbertson Associates, Inc.

Table 1
Crest Settlement Monument Elevations

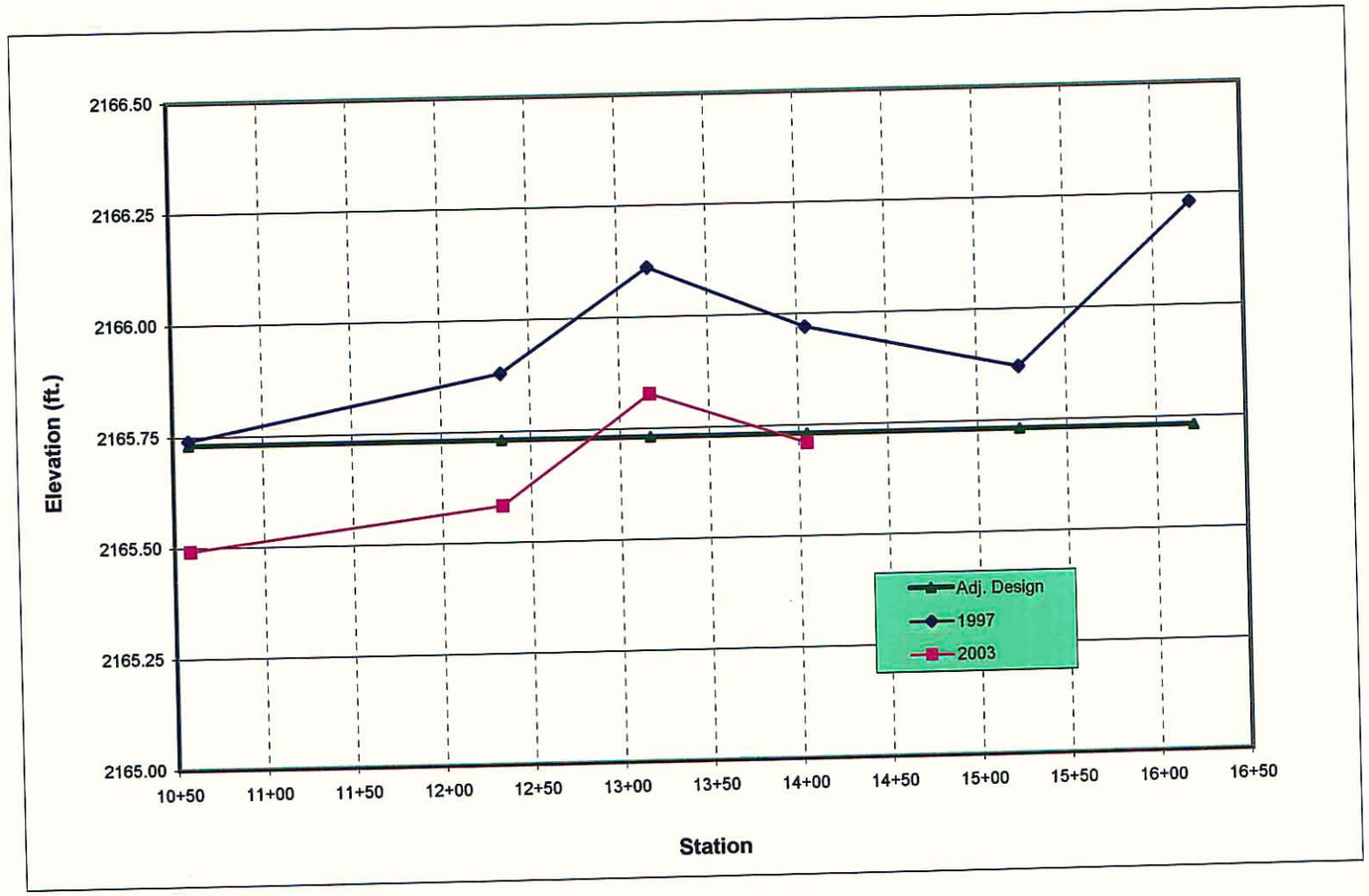

Figure 1-1

Elevation of Crest Settlement Monument Chart

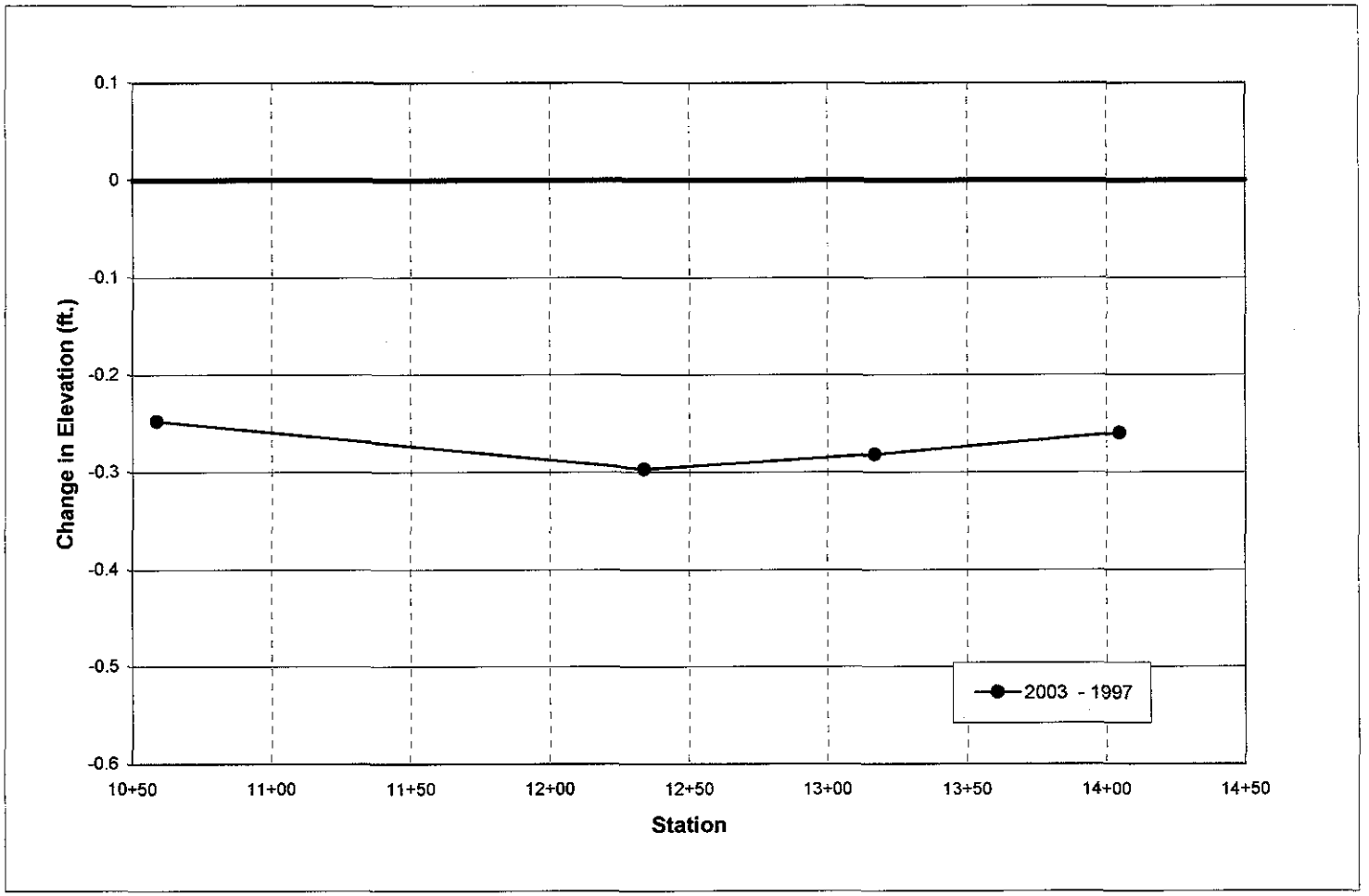

Figure 1-2

Relative Change in Dam Crest Elevation Chart, 1997 Survey Data Baseline Elevation Reference

Table 2 below, summarizes toe settlement monument elevations in the 2003 survey. The 1997 survey did not measure toe settlement monument elevations. Subsequent survey data on toe monuments should be utilized for elevation comparison and to illustrate the relative change in toe settlement monument elevations with 2003 elevations as the baseline.

Figure 3-1 on page 6 shows the location of the toe settlement monuments.

Toe Monument Survey Data		
Marker	**Station**	**2003**
CAS13	12+68.00	2135.138
CAS14	12+98.33	2134.151
CAS15	14+26.59	2134.699

Notes: 1) 1997 survey did not measure toe monument elevations.

Table 2

Toe Settlement Monument Elevations

Based on the Datum Shift, the elevation at the Benchmark equals the NGVD 1929 elevation plus the datum shift shown in **Table 3**. The "Adjusted Design" column of the **Table 1** reflects this calculation.

Marker	Description	1995 (NGVD29)	1997 (NAVD88)	2003 (NAVD88)	Datum Shift
BM 823	BC Flush	2128.33	2130.56	-	2.23
CAS10	GDACS Control Point			2182.15	

Notes: 1) BM 823 set at the intersection of Mariposa Dr. and La Paloma Dr.
2) BM 823 was not surveyed in 2003, therefore the 1997 survey datum shift of plus **2.23 ft.** was used.

Table 3
Reference Mark Summary

Emergency Action Plan for Sunset FRS, Sunnycove FRS and Casandro Dam in the Town of Wickenburg, Arizona

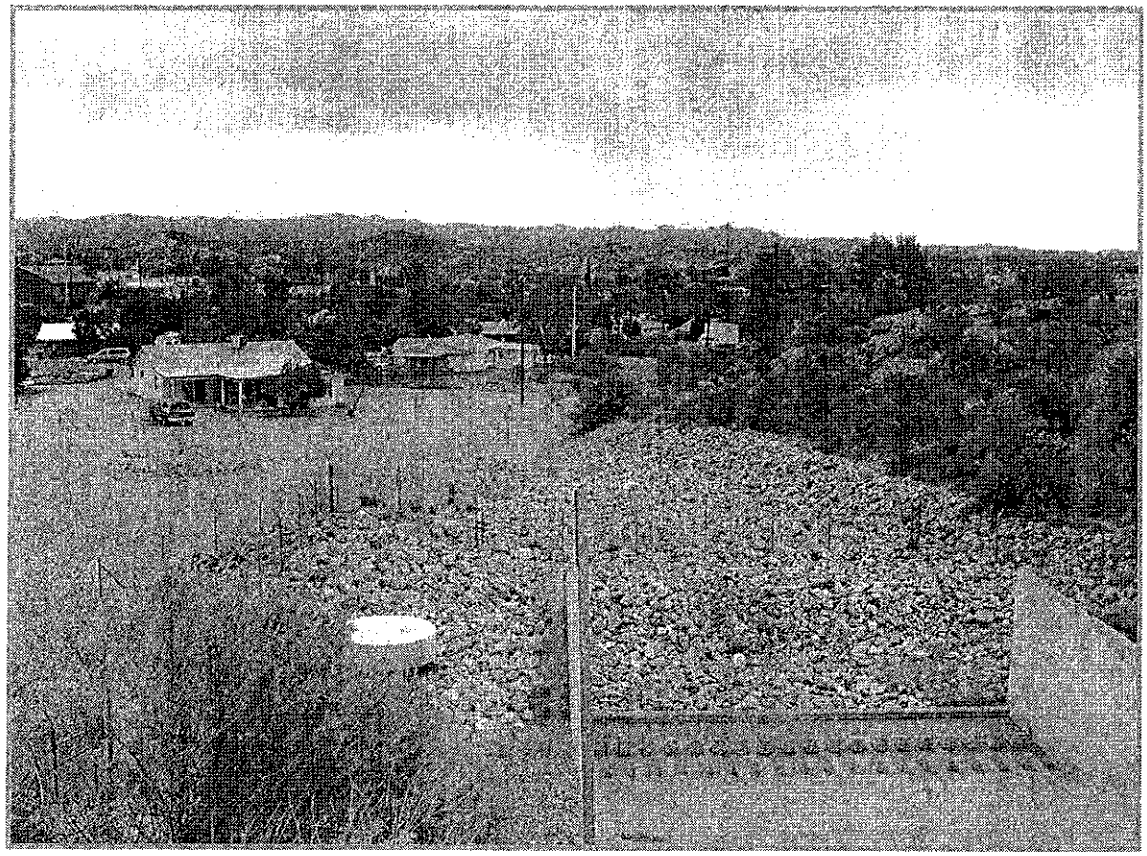

Final - November 19, 2003

Table of Contents

Wickenburg Flood Retarding Structures Emergency Action Plan

Location 2
Description 2
Purpose of Plan 4
Inundation Areas 4
1. Sunset and Sunnycove Spillway 4
2. Casandro Spillway 4
3. Sunset and Sunnycove Dam Failure 4
4. Casandro Dam Failure 5
Specific Tasks 5
1. Flood Control District of Maricopa County 6
2. Maricopa County Department of Emergency Management 6
3. Town of Wickenburg 6

List of Figures & Tables
Figure 1 – Structures Location Map 3
Figure 2 – Wickenburg Dams EAP Flow Chart 7
Table 1 – Detailed Evacuation Instructions 8

Appendix A – Contact Numbers 11

Appendix B – Inundation Area Maps 12
Casandro Dam Emergency Spillway Inundation 13
Casandro Dam Failure Inundation 14
Sunset & Sunnycove Emergency Spillway Inundation 15
Sunset & Sunnycove Failure Inundation 16

Appendix C – List of Critical Facilities 17

Wickenburg Flood Retarding Structures Emergency Action Plan

Location

The Wickenburg Structures (Sunset FRS, Sunnycove FRS and Casandro Dam) are located within the town boundaries of Wickenburg, approximately 60 miles northwest of Phoenix, Arizona. Figure 1 shows the locations of the three structures.

Description

Sunset FRS is an earthen dam nearly adjacent to highway US 60, south of the Jones Ford Dealership. Construction was completed in September, 1976 by the (then) Soil Conservation Service. It collects and stores water from Sunset Wash, draining 0.60 square miles of commercial, residential and sonoran desert land. The emergency spillway is a 40 foot-wide concrete broad-crested weir through the embankment near the center of the dam. Sunset FRS is classified as a small, high-hazard dam by the Arizona Department of Water Resources (ADWR) because of its spillway capacity (86 acre-feet) and the number of occupied structures in the path of downstream floodwaters.

Sunnycove FRS is an earthen dam located about 1 mile south of US 60 via Kellis Road. Construction was completed in September, 1976 by the (then) Soil Conservation Service. It collects and stores water from Sunnycove Wash, draining 1.35 square miles of primarily sonoran desert land with a few residences on ridge tops. The emergency spillway is a 100 foot-wide earthen channel located on the north side of the dam. Sunnycove FRS is classified as a small, high-hazard dam by ADWR because of its spillway capacity (216 acre-feet) and the number of occupied structures in the path of downstream floodwaters.

Casandro Dam is an earthen dam located about ¼ mile north of US 60 via Mariposa Road. Construction was completed in March, 1996 by the Flood Control District of Maricopa County. It collects and stores water from Casandro Wash, draining 3.0 square miles of primarily sonoran desert land with a widely-spaced residential development. The emergency spillway is an 80 foot-wide concrete broad-crested weir through the embankment near the center of the dam. Casandro Dam is classified as a small, high-hazard dam by ADWR because of its spillway capacity (143 acre-feet) and the number of occupied structures in the path of downstream floodwaters.

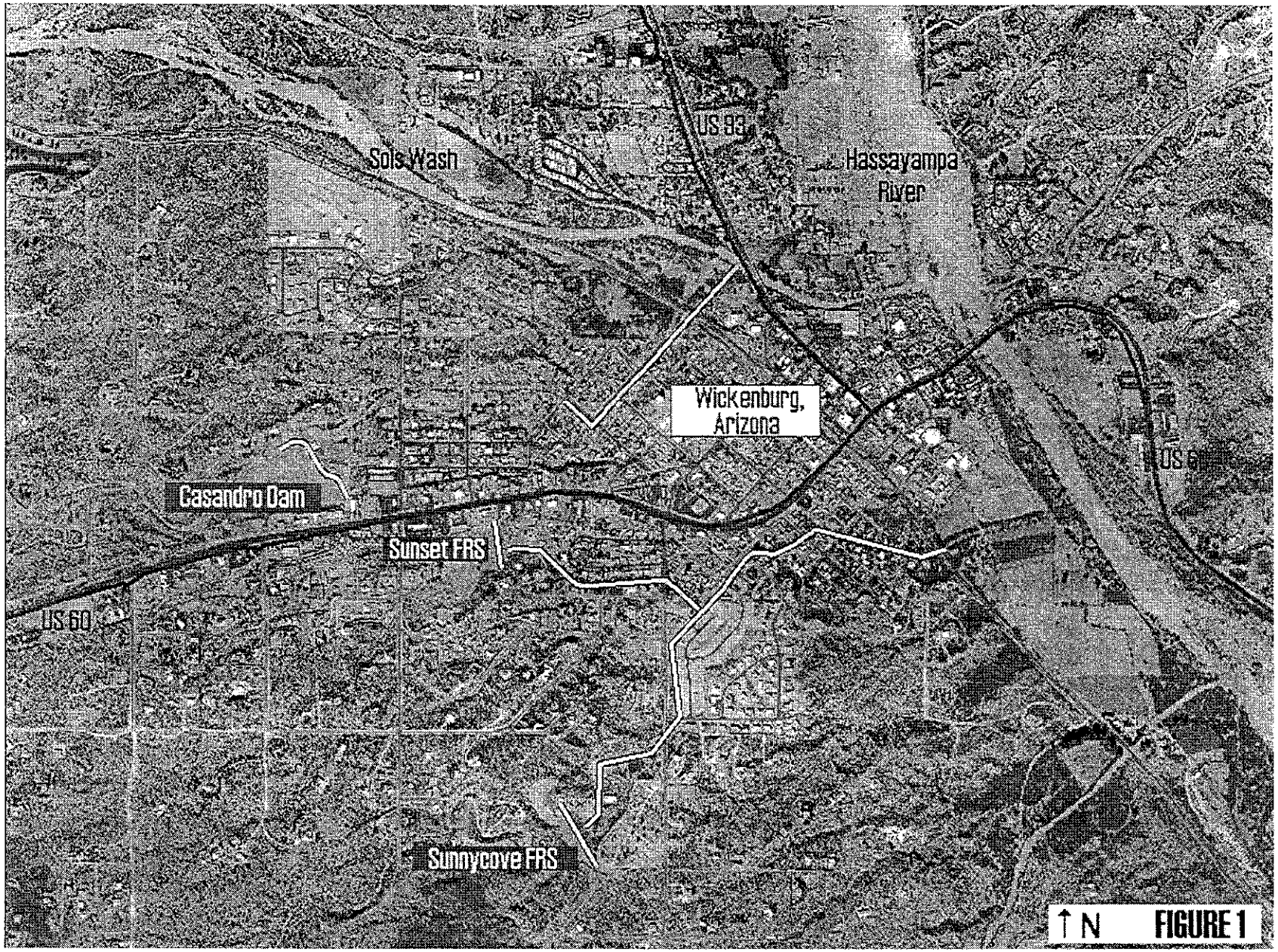
US 93
Sols Wash
Hassayampa River
Wickenburg, Arizona
US 60
Casandro Dam
Sunset FRS
US 60
Sunnycove FRS
N

FIGURE 1

Purpose of Plan

The purpose of this Emergency Action Plan (EAP) is to coordinate the prediction, detection and emergency response to a spillway or dam-failure flood downstream of Sunset FRS, Sunnycove FRS or Casandro Dam. The EAP presents rainfall, static water-level and drawdown detection criteria which could lead to a spillway flow or dam-failure event. Also presented are the lines of communication and agency actions necessary to evacuate downstream residents and others before floodwaters arrive.

Inundation Areas

See Exhibits B-1 through B-4 in **Appendix B** for maps of inundation areas.

1. **Sunset FRS and Sunnycove FRS Emergency Spillway Inundation.** During major storms, the reservoir pools can fill quickly and stormwater may discharge through the emergency spillways in a very short time. Outflow from Sunset FRS will travel in an easterly direction parallel to US 60, crossing Oxbow Drives North and South, Kellis Road, America St., Grant, Lincoln and Apache Streets, then Center and Jackson Streets. A small area along US 60 will be inundated in the area of Apache and Madison Streets. It will then flow northeast over Mesquite, Adams, Henderson and Park Streets, and fan-out to the east over Jefferson St., Fisher St., Sylvan Rd., Sylvan Dr. and Cool Water Drive. Finally it will cross the BNSF railroad tracks, Tegner and Kerkes Streets, and then enter the Hassayampa River channel. Outflow from Sunnycove FRS will travel in a northeasterly direction across Kellis Road, Desert Canyon Road and Lost Canyon Road. Near Center and Jackson Streets, the inundation joins the area described for Sunset FRS. Inundation mapping exists for spillway flows of 33, 67 and 100 percent for both dams, but the area inundated does not change significantly. The potential inundated area is shown in **Exhibit B-1**.

2. **Casandro Dam Emergency Spillway Inundation.** During major storms, the reservoir pool can fill quickly and stormwater may discharge through the emergency spillway in a very short time. Outflow from Casandro Dam will travel in an easterly direction across Mariposa Drive and Cucaracha Streets, parallel to La Paloma Drive. It turns southeast near Via Corte and Lincoln Street, flows to Jackson Street, then turns northeast along Mohave Street, crossing Madison, Jefferson and Washington Streets. The entire grounds of *My Father's Retirement Ranch* will be inundated. Flows will pond behind the BNSF railroad grade, eventually draining through the old Casandro Wash bridge to Sols Wash. Inundation mapping exists for spillway flows of 33, 67 and 100 percent for the dam, but the area inundated does not change significantly. The potential inundated area is shown in **Exhibit B-2.**

3. **Sunset FRS and Sunnycove FRS Dam-Failure Inundation.** Outflow from a failure of Sunset FRS will travel in an easterly direction parallel to US 60, crossing Oxbow Drives North and South, Kellis Road, America St., Grant, Lincoln and Apache Streets, then Center and Jackson Streets. Flow will then flow northeast over Mesquite, Adams, Henderson and Park Streets, and fan-out to the east over Jefferson St., Fisher St., Sylvan Rd., Sylvan Dr. and Cool Water Drive. Finally it will cross the BNSF railroad tracks, Tegner and Kerkes Streets, flow through the campus of *Hassayampa Upper Elementary School*, and then enter the Hassayampa River channel. Outflow from a failure of Sunnycove FRS will travel in a northeasterly direction across Kellis Road, Desert Canyon Road and Lost Canyon Road. Near Center and

Jackson Streets, the inundation joins the area described for Sunset FRS. An area along and across US 60, which includes the *Wickenburg Dialysis Center*, will be inundated from Yavapai Street to Washington Street between the highway and Apache Street. Flows will have enough momentum to cross the Hassayampa channel and inundate areas up to US 60 in the vicinity of Sullivan Street. The potential inundated area is shown in **Exhibit B-3**.

4. **Casandro Dam - Failure Inundation.** Outflow from a failure of Casandro Dam will travel in an easterly direction across Mariposa Drive and Cucaracha Streets, parallel to La Paloma Drive. It turns southeast near Via Corte and Lincoln Street, flows to Jackson Street, then turns northeast along Mohave Street, crossing Madison, Jefferson and Washington Streets. The entire grounds of *My Father's Retirement Ranch* will be inundated. Flows will pond behind the BNSF railroad grade, eventually draining through the old Casandro Wash bridge to Sols Wash. The potential inundated area is shown in **Exhibit B-4.**

Specific Tasks for Emergency Spillway Releases or Dam-Failure Floods at all Wickenburg Dams

Flood Control District of Maricopa County

a. The On-call Hydrologist (OCH) will monitor pertinent ALERT rainfall, runoff and impoundment data. An ALERT alarm will sound at 10% of spillway capacity. Perform tasks according to the Wickenburg EAP Flow Chart (Figure 2, page 7).

b. At 25% spillway capacity, the OCH will dispatch FCD O&M Team # 1 to observe the water levels and structural integrity of the dam(s) being monitored. Travel time to the dams from notification of the Team to arrival at the dam is approximately 2 hours. During this time, the Wickenburg Police Department (WPD) or Maricopa County Sheriff's Office (MCSO) will dispatch an observer to monitor conditions.

c. At 50% spillway capacity, or at the direction of an in-place observer, the OCH will notify the Maricopa County Department of Emergency Management (MCDEM).

d. At 90% spillway capacity, or at the direction of an in-place observer, the OCH will inform WPD dispatch and MCDEM that evacuations may be necessary.

e. When impounded water reaches the **spillway** elevation, **or** if an in-place observer reports an impending **failure, or** if ALERT data denote a falling water-level indicative of a **failure**, the OCH will notify WPD dispatch **immediately** and give clear instructions to evacuate the downstream area of the specific structure. MCDEM can then be notified to provide assistance.

f. When storm conditions have subsided and the impoundments no longer pose a threat to downstream lives or property, the OCH will issue an ALL CLEAR message to WPD and MCDEM, then contact O&M Team # 1 and instruct them to return.

Maricopa County Department of Emergency Management

a. Monitor the situation and coordinate support. Perform tasks according to the Wickenburg EAP Flow Chart (Figure 2, page 7).

b. Upon receiving notification of a 50% impoundment from FCD, activate the Emergency Operations Center. Notify MCSO, the Central Arizona Chapter of the American Red Cross and the BNSF railroad - advise them of the situation.

c. Upon receiving notification of a 90% impoundment from FCD, inform MCSO that their assistance may be needed in assisting WPD with evacuations. Inform Red Cross to begin preliminary shelter operations.

d. Upon receiving notification from FCD that evacuations have begun due to a **spillway flow** or **dam failure**, notify
   - MCSO to assist WPD with evacuations and security
   - BNSF railroad to stop all trains from passing through the Wickenburg area
   - Red Cross to establish a shelter(s) for evacuees at the Wickenburg Community Center, MacLennan School, and/or Vulture Mine School
   - Arizona Department of Water Resources and Division of Emergency Management to provide assistance in their areas of expertise

e. When storm conditions have subsided and the impoundment(s) no longer pose a threat to downstream lives or property, FCD will issue an ALL CLEAR message. Contact BNSF and tell them to inspect the track before resuming rail service.

Town of Wickenburg, Police Dispatch

The Town of Wickenburg will assume overall direction and control of emergency response operations within its jurisdiction, to include warning, evacuation and security of the affected area. The Town Manager will direct the effort, with assistance from the Chiefs of Police and Fire. The point of contact between FCD and the Town will be the WPD dispatcher.

a. Monitor the situation and coordinate support. Perform tasks according to the Wickenburg EAP Flow Chart (Figure 2, page 7).

b. Upon receiving notification of a 25% impoundment from FCD, send an officer from the Wickenburg PD or MCSO to monitor the dam(s) until an FCD crew arrives.

c. Upon receiving notification of a 90% impoundment from FCD, prepare to evacuate areas downstream of the structure(s) being monitored.

d. Upon receiving notification from FCD of an impending or in-progress **emergency spillway release** or **dam failure, immediately evacuate** areas downstream of the structure(s) being monitored.

e. When storm conditions have subsided and the impoundment(s) no longer pose a threat to downstream lives or property, FCD will issue an ALL CLEAR message. Post-flood actions can then begin.

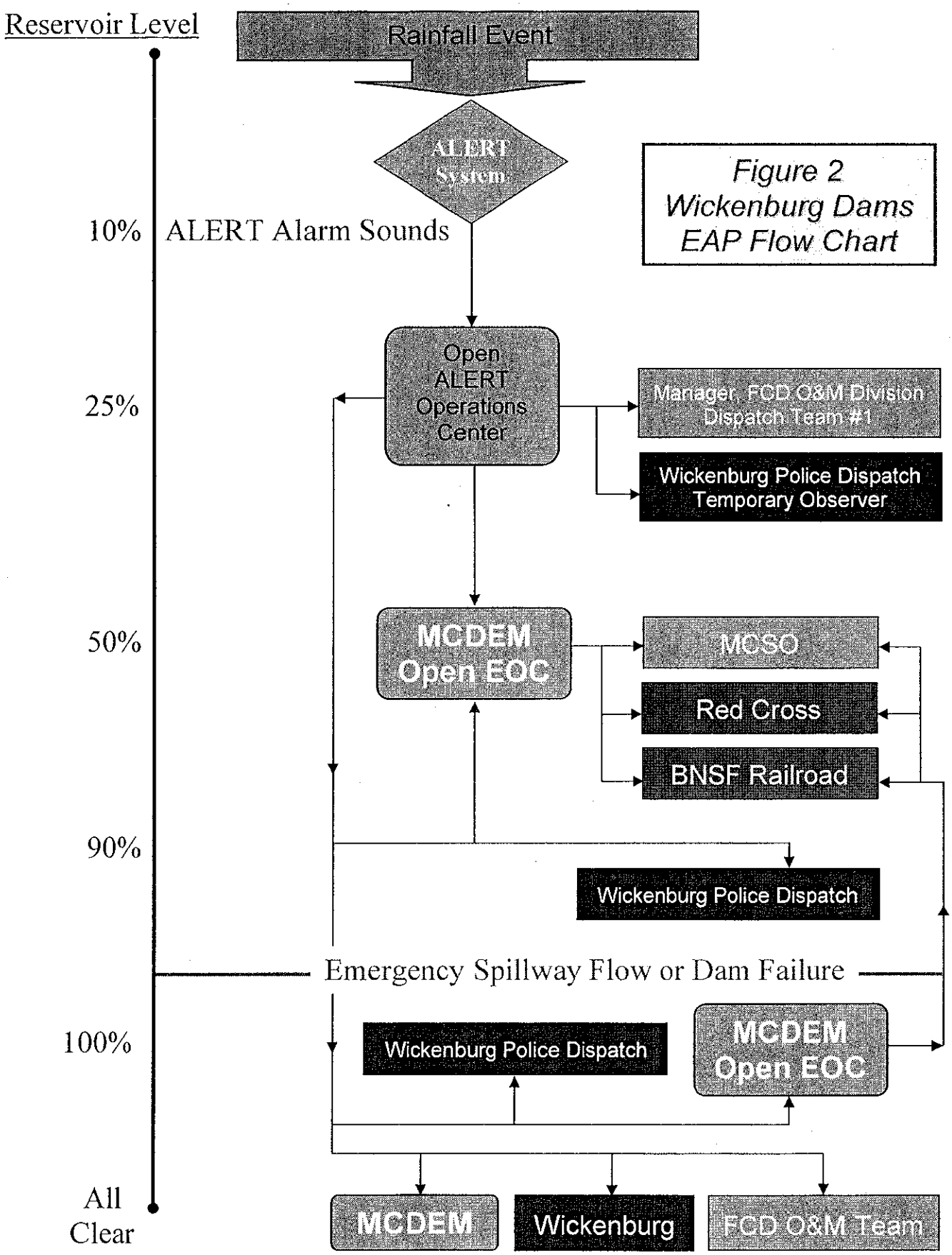

Figure 2
Wickenburg Dams
EAP Flow Chart

TABLE 1

Detailed Evacuation Instructions
(In Order of Impact by Flood Waters, Critical Facilities in Bold)

Structure / Event	Street / Drive	From	To
Casandro Dam Use the same evacuation instructions for both emergency spillway flow and dam failure	House on El Tecalote Dr.	West of Mariposa Rd.	
	House on north side of La Paloma Dr.	Mariposa Dr.	Cucuracha Dr.
	Cucuracha St.	La Paloma Dr.	El Tecalote Dr.
	Via Corte Dr.	West of Avispa St.	
	Navajo St.	Avispa St.	Adams St.
	Lincoln St.	Avispa St.	Mohave St.
	Jackson St.	Navajo St.	Santa Cruz St.
	Mohave St.	Lincoln St.	Jefferson St.
	Madison St.	Hermosa Dr. alignment	2 houses SE of Mohave St.
	Adams St.	Hermosa Dr. alignment	3 houses SE of Mohave St.
	Jefferson St.	**All of "My Father's Retirement Ranch"**	**West of Mohave St.**
Sunset FRS Emergency Spillway Flow	All of America St. and Whipple Ct.	Below the Dam	
	All of Oxbow Dr. North and South	West of Kellis Rd.	
	Kellis Rd.	America St.	Oxbow Dr. North
	Apache St.	Kellis Rd.	US 60
	Grant St.	Apache St.	Center St.
	Lincoln St.	Apache St.	Center St.
	Jackson St.	US 60	Center St.
	Center St.	America St.	Madison St.
	Madison St.	US 60	Fisher St.
	Mesquite St.	US 60	Center St.
	Adams St.	US 60	Park St.
	Structure at Adams St.	and Henderson St.	
	Park St.	Madison St.	Jefferson St.
	Jefferson St.	Park St.	Howard Ct.
	Sylvan Rd.	Park St.	Sylvan Dr.
	All of Sylvan Drive and	Cool Water Drive	
	Howard Ct.	Jefferson St.	Fisher St.
	Houses along Sunset Wash	Railroad	Tegner St.
Sunset FRS Dam Failure	All of America St. and Whipple Ct.	Below the Dam	
	All of Oxbow Dr. North and South	West of Kellis Rd.	
	America St.	Sunset FRS	Kellis Rd.
	Palo Verde Rd.	Sunny Cove Heights	America St.
	Kellis Rd.	America St.	Oxbow Dr. North
	Center St.	Kellis Rd.	Madison St.
	Apache St.	Kellis Rd.	US 60
	Grant St.	Apache St.	Center St.
	Lincoln St.	Apache St.	Center St.
	Jackson St.	US 60	Center St.
	Center St.	America St.	Madison St.

Structure / Event	Street / Drive	From	To
	Madison St.	US 60	Fisher St.
Sunset FRS	Mesquite St.	US 60	Fisher St.
Dam Failure, continued	Adams St.	US 60	Park St.
	Henderson St.	Adams St.	Jefferson St.
	Park St.	Madison St.	Jefferson St.
	Jefferson St.	US 60	Howard Ct.
	Sylvan Rd.	Park St.	Sylvan Dr.
	All of Sylvan Drive and	Cool Water Drive	
	Howard Ct.	Jefferson St.	Railroad
	Washington St.	US 60	Southeast end
	Houses on dirt road south of Howard Ct.		
	Houses along Sunset Wash	Railroad	Tegner St.
	Coconino St.	Frontier St.	Valentine St.
	Cochise St.	Frontier St.	Tegner St.
	Frontier St.	US 60	Southeast end
	Tegner St. (school)	**US 60**	**Southeast end**
	Valentine St.	US 60	Coconino St.
	Kerkes St.	US 60	Southeast end
Sunnycove FRS			
Emergency Spillway Flow	Close Kellis Road from US 60 to Cottonwood Ln.		
	Desert Canyon Rd.	Cottonwood Ln.	Cul-de-sac N of Center St.
	Lost Canyon Rd.	Kellis Rd.	Desert Canyon Rd.
	Grant St.	Apache St.	Center St.
	Lincoln St.	Apache St.	Center St.
	Close US 60 from Adams St. to Yavapai St.	Route Traffic along Adams and Yavapai Streets	
	Apache St.	Kellis Rd.	US 60
	Jackson St.	US 60	Center St.
	Center St.	America St.	Madison St.
	Madison St.	US 60	Fisher St.
	Mesquite St.	Center St.	Center St.
	Adams St.	US 60	Park St.
	Structure at Adams St.	and Henderson St.	
	Park St.	Madison St.	Jefferson St.
	Jefferson St.	Park St.	Howard Ct.
	Sylvan Rd.	Park St.	Sylvan Dr.
	All of Sylvan Drive		
	All of Cool Water Drive		
	Howard Ct.	Jefferson St.	Fisher St.
	Houses along Sunset Wash	Railroad	Tegner St.
Sunnycove FRS	Close Kellis Road from US 60 to Cottonwood Ln.		
Dam Failure	Desert Canyon Rd.	Cottonwood Ln.	Cul-de-sac N of Center St.
	Lost Canyon Rd.	Kellis Rd.	Desert Canyon Rd.
	Grant St.	Kellis Rd.	Center St.
	Lincoln St.	US 60	Desert Canyon Rd.
	Close US 60 from Washington St. to Savage St	Route traffic along Savage Washington and Yavapai St	
	Apache St.	Kellis Rd.	Washington St.
	Jackson St.	US 60	Monte Cristo Dr.
	Center St.	Kellis Rd.	Washington St.
	Madison St.	Yavapai St.	Fisher St.
	Mesquite St.	Center St.	Fisher St.
	Adams St.	Apache St.	Park St.
	Park St.	Jefferson St.	Park St.
	Jefferson St.	Apache St.	Howard Ct.

Structure / Event	Street / Drive	From	To
Sunnycove FRS	Sylvan Rd.	Park St.	Sylvan Dr.
Dam Failure, continued	All of Sylvan Drive		
	All of Cool Water Dr.		
	Howard Ct.	Jefferson St.	Fisher St.
	Houses along Sunset Wash	Railroad	Tegner St.
	Washington St.	US 60	East end
	Frontier St.	US 60	East end
	Tegner St.	**US 60**	**East end**
	Coconino St.	Frontier St.	Valentine St.
	Cochise St.	Frontier St.	Tegner St.
	Valentine St.	US 60	Coconino St.
	Kerkes St.	US 60	East end
	Sullivan St.	US 60	East end

Appendix A – Contact Numbers

Flood Control District of Maricopa County

ALERT Room 602-506-8701
Or 602-272-0132
Hydrologist on Call (cellular) ..... 602-390-[redacted]
Steve Waters, Home ..... 480-345-[redacted]
Or Pager ..... 602-450-[redacted]
Jim Perfrement, Home ..... 602-971-[redacted]
Or Pager ..... 602-450-[redacted]

Maricopa County Department of Emergency Management

Main Number 602-273-1411

Town of Wickenburg

Police Dispatch 602-506-1563
Or 928-684-5411
Emergency Manager, Scott Bowman, Cellular ..... 928-671-[redacted]
Pager ..... 928-684-[redacted]
Town Manager, Shane Dille ..... 928-684-5451 ext. 213
Fire Marshall / Director, Bucky Walters, Home ..... 928-684-[redacted]
Fire Chief, Ed Temerowski ..... 928-684-[redacted]
Police Chief, Tony Melendez ..... 928-684-[redacted]

Maricopa County Sheriff's Office

Wickenburg Area Dispatch 1-800-352-4553

Burlington Northern & Santa Fe Railroad

Service Desk 708-995-2911
Trainmaster 602-382-5801

ADWR Dam Safety Division

Office 602-417-2442

American Red Cross

Office 602-336-6660

Appendix B – Maps of Inundation Areas

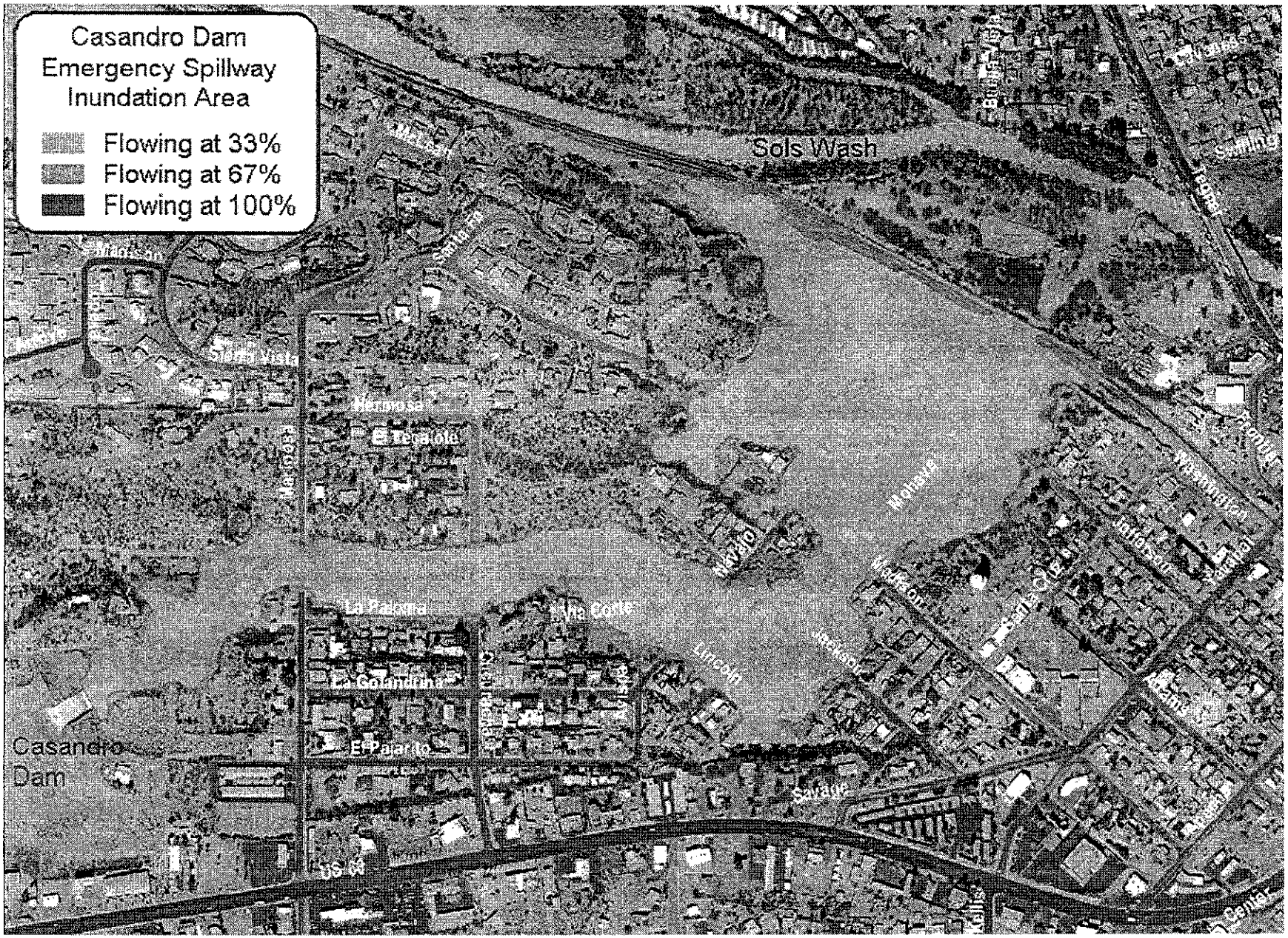
Casandro Dam
Emergency Spillway
Inundation Area
Flowing at 33%
Flowing at 67%
Flowing at 100%
Sols Wash
Casandro
Dam
Madison
Sierra Vista
Merrosa
El Tepiote
La Paloma
La Golondrina
El Pajarito
Nine Corte
Lincoln
Jackson
Savage
Mohave
Walker
Santa Cruz
Jefferson
Adams
Washington
Franklin
Jones
Smiling
Bonita
Mesa
Cedar
Santa Fe
Mallory
Hopi
Cypress
Bryant
Dellas
US 60

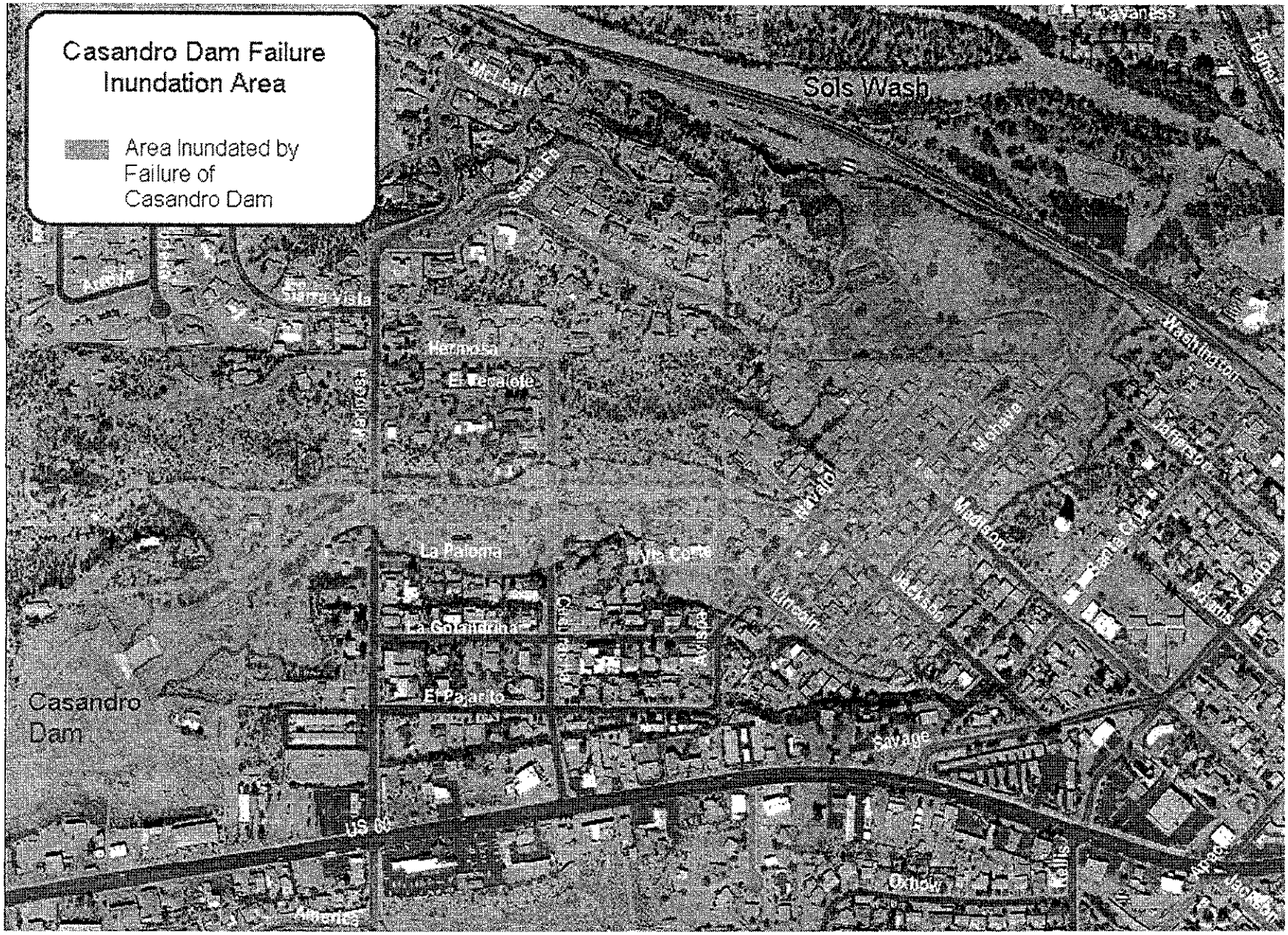
Casandro Dam Failure
Inundation Area
Area Inundated by
Failure of
Casandro Dam
Sols Wash
Cavaness
Regina
Mel Ave
Santa Fe
Sierra Vista
Hermosa
El Recalde
Washington
Mohawa
Madison
Harvard
Lincoln
Jefferson
Santa Cruz
Edwards
Richards
La Paloma
Via Corta
La Golondrina
Cruz Blanca
Avilés
El Pajarito
Casandro
Dam
Savage
US 60
Oxnow
Ellis
Jackson
Jefferson
Avenida
Alvarado

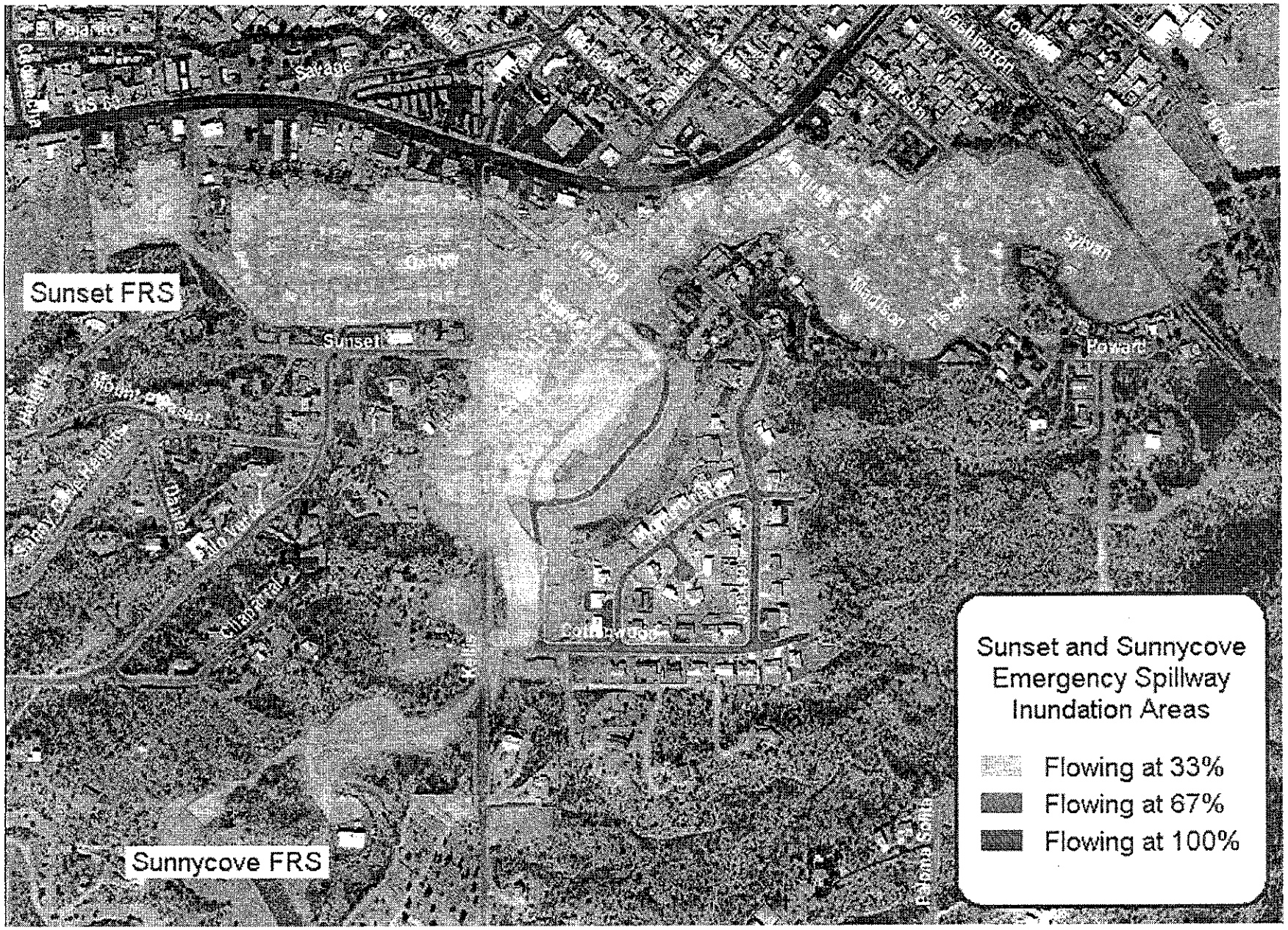
Sunset and Sunnycove
Emergency Spillway
Inundation Areas
Flowing at 33%
Flowing at 67%
Flowing at 100%
Sunset FRS
Sunnycove FRS
Sunset
Savage
Washington
Madison
Sylvan
Howard
Silo Tower
Silo Parade
Palomar South

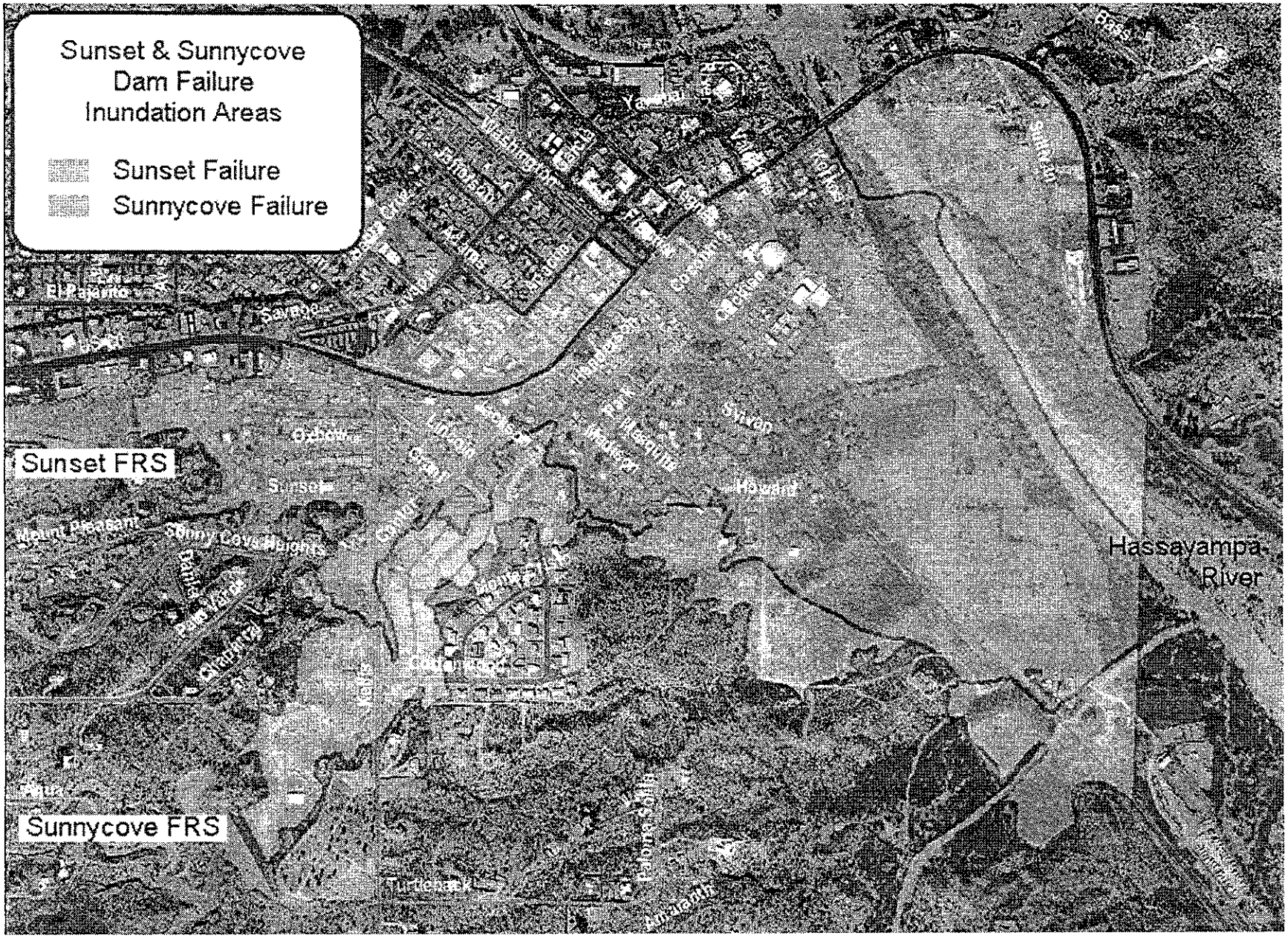
Sunset & Sunnycove
Dam Failure
Inundation Areas
Sunset Failure
Sunnycove Failure
Sunset FRS
Sunnycove FRS
Hassayampa
River
El Pajarito
Savage
Osborne
Sunset
Mount Pleasant
Sunny Cove Heights
Park View
Oleander
Pima
Turtleback
Silver
Hayden
Rockwell
Cortez
Grant
Lincoln
Washington
Kiltie
Sunset Rd

Appendix C

List of Critical Facilities by Structure Inundation Area

Structure	Facility	Location	Phone Number
Casandro	My Father's Retirement Ranch	400 N. Jefferson St.	928-684-5925
Casandro, Sunset Sunnycove	BNSF Railroad	Washington St. Alignment	602-382-5801
Sunnycove	Dell Webb Medical Care and Dialysis Center	466 W. Wickenburg Way (US 60)	623-334-3174
Sunnycove	Wickenburg Public Works Equipment Yard	Coney Orosco Rd. west of Kellis Rd.	928-684-2761
Sunset & Sunnycove	Hassayampa Upper Elementary School	251 S. Tegner St.	928-684-6750
Sunset & Sunnycove	Gate House Juvenile Recovery Center	145 W. Wickenburg Way (US 60)	928-668-1470

Figure 3-1
Survey Monument Lo

Settlement Monuments - Crest

Table 1 below, compares the 2003 crest settlement monument elevations, 1997 crest settlement monument elevations, and the Adjusted Design crest elevations . The settlement monuments are physically located offset from the dam centerline on the downstream edge of the dam crest. The Design crest elevations are referenced to NGVD 1929 and must be adjusted for comparison with 1997 and 2003 survey data elevation, which is referenced to a different vertical datum: NAVD 1988. Details of the adjustment calculations are outlined on Page 6 of 7, entitled **"Reference Marks"**.

Figure 1-1 illustrates the comparison of crest settlement monument elevations between the Adjusted Design crest elevations, the year-1997 survey data, and the year-2003 survey data listed in **Table 1**

Figure 1-2 displays the relative change in crest settlement monument elevations obtained by subtracting the 1997 crest monument data from the 2003 crest monument data. 1997 elevation data is the earliest survey data available and is referenced as the baseline elevation.

Figure 3-1 on page 6 shows the location of the crest settlement monuments.

Crest Monument Survey Data					
Marker	Station	Design El. (NGVD29)	Adj. Design (NAVD88)	1997 (NAVD88)	2003 (NAVD88)
CAS11	10+58.66	2163.5	2165.73	2165.74	2165.492
CAS12	12+33.66	2163.5	2165.73	2165.88	2165.583
CAS17	13+17.00	2163.5	2165.73	2166.11	2165.828
CAS16	14+04.66	2163.5	2165.73	2165.97	2165.71
#F	15+23.60	2163.5	2165.73	2165.87	-
#G	16+21.02	2163.5	2165.73	2166.23	-

(Fig. 1-1 Plot Data)

2003 - 1997
-0.248
-0.297
-0.282
-0.26
-
-

(Fig. 1-2 Plot Data)

Notes:
1) Datum shift for BM 823 utilized to obtain the Adjusted Design crest elevations.
2) 1997 Survey data collected in August 1997.
3) 2003 survey data collected in-house in September 2003. No data was collected for the settlement monuments labeled #F and #G.
4) Marker names #Fand #G are referenced from the 1997 Subsidence Survey by Gilbertson Associates, Inc.

Table 1
Crest Settlement Monument Elevations

Settlement Monuments - Crest

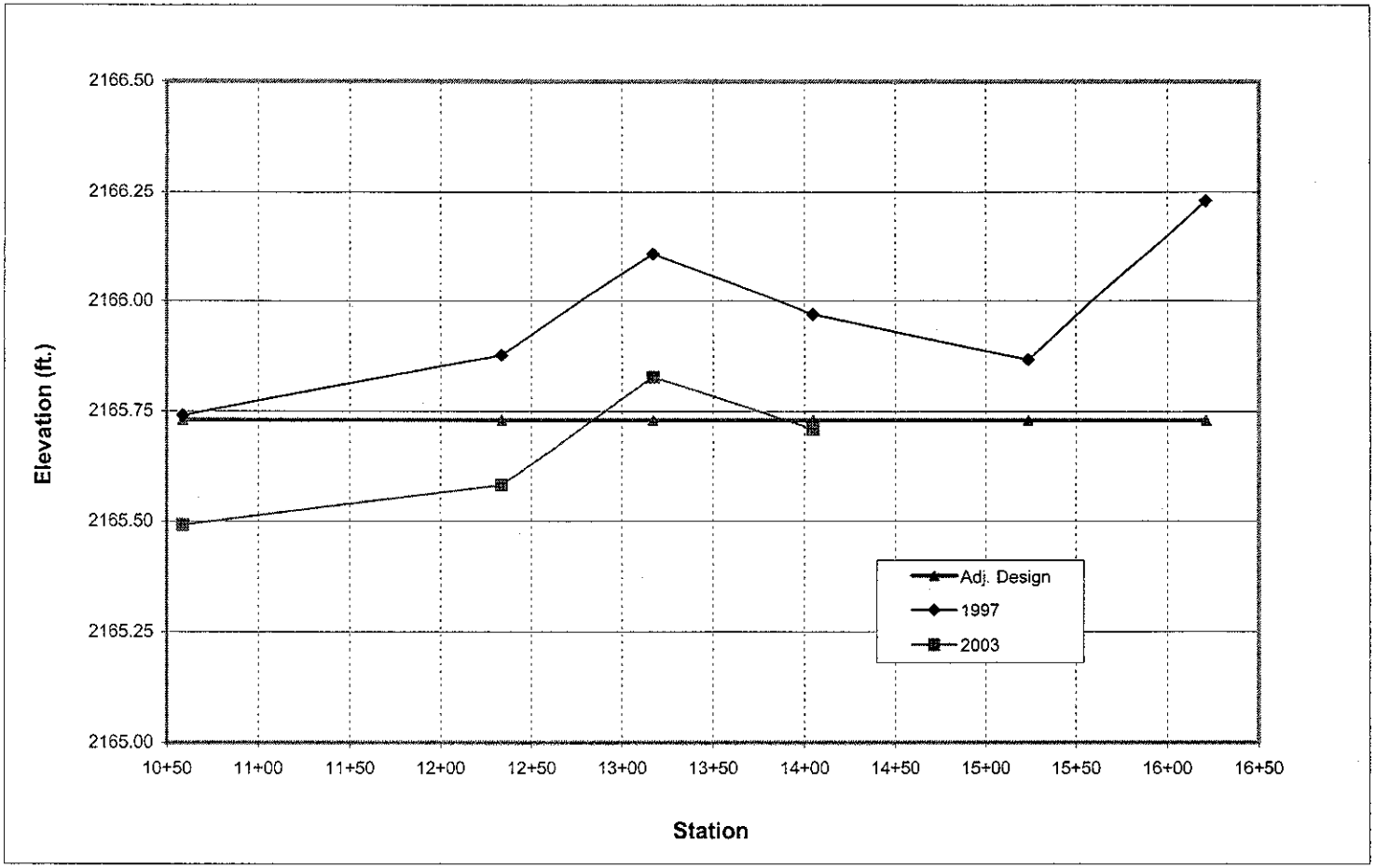

Figure 1-1
Elevation of Crest Settlement Monument Chart

Settlement Monuments - Crest

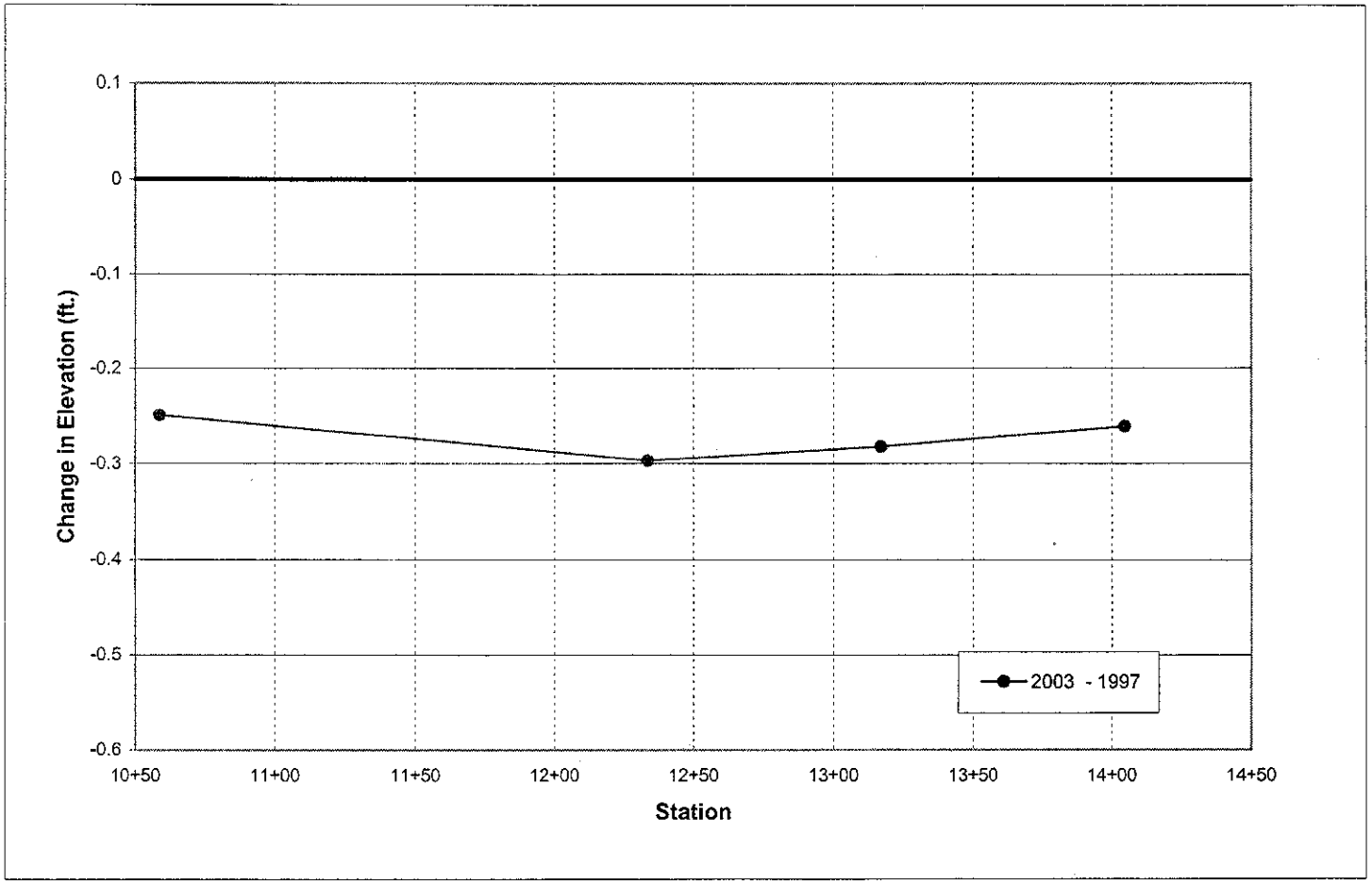

Figure 1-2

Relative Change in Dam Crest Elevation Chart, 1997 Survey Data Baseline Elevation Reference

Settlement Monuments - Toe

Table 2 below, summarizes toe settlement monument elevations in the 2003 survey. The 1997 survey did not measure toe settlement monument elevations. Subsequent survey data on toe monuments should be utilized for elevation comparison and to illustrate the relative change in toe settlement monument elevations with 2003 elevations as the baseline.

Figure 3-1 on page 6 shows the location of the toe settlement monuments.

Toe Monument Survey Data		
Marker	**Station**	**2003**
CAS13	12+68.00	2135.138
CAS14	12+98.33	2134.151
CAS15	14+26.59	2134.699

Notes: 1) 1997 survey did not measure toe monument elevations.

Table 2
Toe Settlement Monument Elevations

Reference Marks

Based on the Datum Shift, the elevation at the Benchmark equals the NGVD 1929 elevation plus the datum shift shown in **Table 3.** The "Adjusted Design" column of the **Table 1** reflects this calculatior

Marker	Description	1995 (NGVD29)	1997 (NAVD88)	2003 (NAVD88)	Datum Shift
BM 823	BC Flush	2128.33	2130.56	-	2.23
CAS10	GDACS Control Point			2182.15	

Notes: 1) BM 823 set at the intersection of Mariposa Dr. and La Paloma Dr.
2) BM 823 was not surveyed in 2003, therefore the 1997 survey datum shift of plus **2.23 ft.** was used.

Table 3
Reference Mark Summary

Casandro Wash Dam - Floodplain View

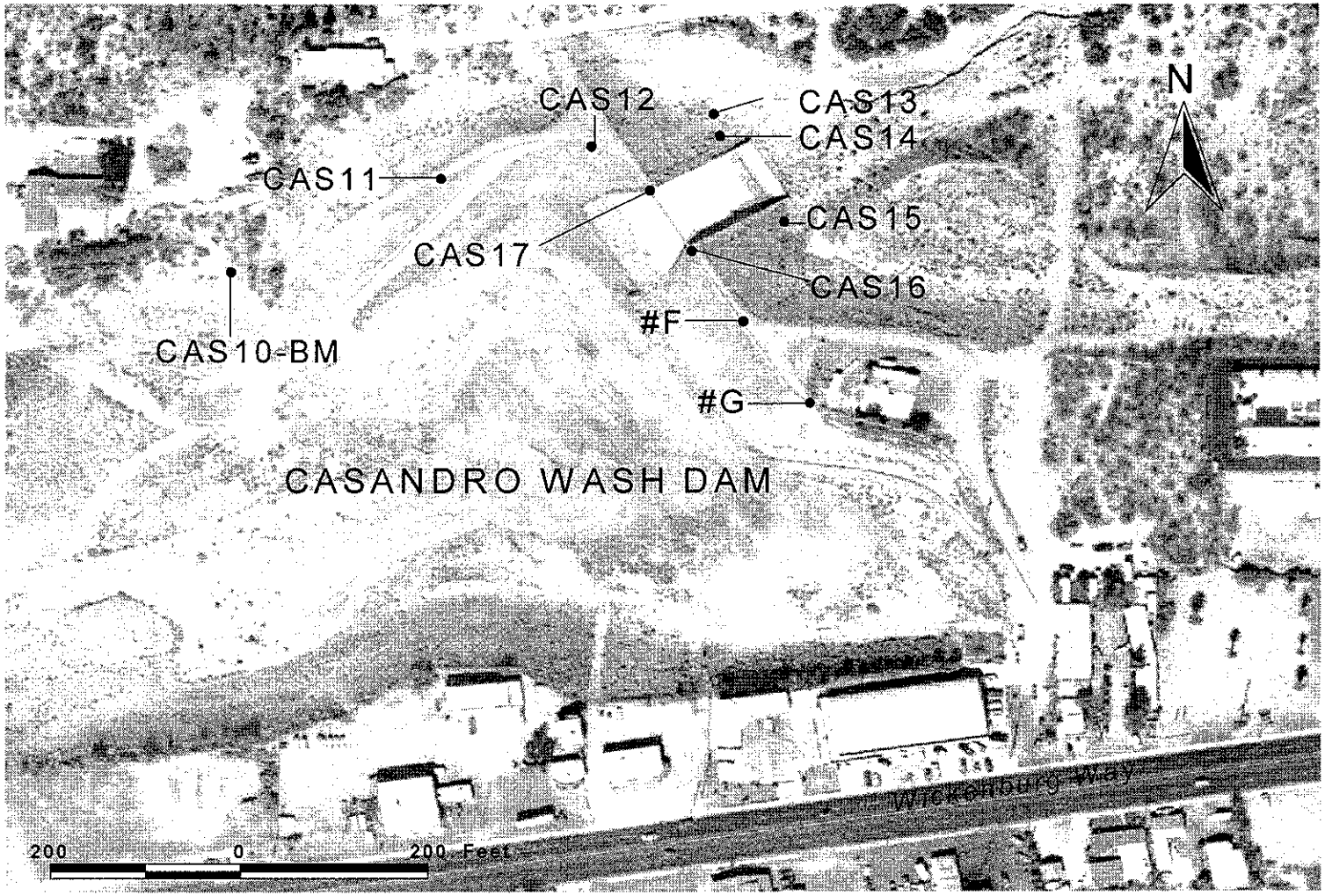

Figure 3-1
Survey Monument Locations

Kimley-Horn and Associates, Inc.

PRELIMINARY FAILURE MODES IDENTIFICATION REPORT
CASANDRO WASH DAM
FLOOD CONTROL DISTRICT OF MARICOPA COUNTY, ARIZONA
FEBRUARY 24, 2004

1.0 Introduction

Kimley-Horn and Associates, Inc. (KHA) has prepared this report to document discussions related to the Preliminary Failure Modes Identification workshop for Casandro Wash Dam conducted on February 24, 2004. The overall objective of the workshop was to develop a comprehensive list of potential failure modes for the structure and appurtenances. The workshop was conducted at the offices of the Flood Control District of Maricopa County. The following individuals participated in the workshop:

Tom Renckly, P.E.	Flood Control District
Mike Greenslade, P.E.	Flood Control District
Andrew Dziobek	Natural Resources Conservation Service
Bob Eichinger, P.E., CFM	Kimley-Horn and Associates, Inc.
Kelli Blanchard, EIT	Kimley-Horn and Associates, Inc.
Debora Miller, Ph.D, P.E.	Gannett Fleming, Inc.
Ken Euge, R.G.	Geological Consultants, Inc.

2.0 Facility Descriptions

Casandro Wash Dam is a homogeneous earth filled dam with a crest length of 350 ft, a crest width of 14 ft, upstream slope of 3:1, downstream slope of 3:1, a dam height of 32.5 feet, and a reservoir capacity of 145 ac-ft. The dam has a central chimney drain with four finger drains that outlet at the downstream toe. It has an ungated principal outlet and an emergency spillway that begins to operate at a depth of 21 feet. The detention basin behind the dam has a storage capacity of 150 ac-ft and a surface area of 11 acres when filled to the elevation of the emergency spillway. The contributing drainage is approximately 3 square miles. The dam is operated and maintained by the Flood Control District of Maricopa County.

3.0 Summary of Inspection Reports

Inspection reports from 2003, 2002, and 1997 were located and reviewed. The majority of these inspections noted minor spalling on the right side of the ogee crest of the emergency spillway control structure. It was also noted that headcutting was occurring downstream of the emergency spillway outlet channel.

4.0 Preliminary Failure Modes

1. **Embankment Overtopping**: The embankment crest and downstream slope are protected against minor erosion. Overtopping of the embankment could lead to

erosion and formation of a breach. In assessing the probability of occurrence of this failure mode, the following items need to be reviewed:

a. Review and document the freeboard available when routing the Inflow Design Flood (IDF) through the emergency spillway. The IDF for the dam is currently the ½ PMF. Check full PMF and multiple storm events.
b. Assess the impact of regional subsidence on the dam crest elevation. Locate the most recent crest survey data. Initial discussion indicates that subsidence should not be a local problem.
c. Review and document the antecedent reservoir conditions for each of the spillway routings.
d. Concern on routing the PMP, need to look at multiple storm events and increase in urbanization in the watershed.
e. Perform a preliminary assessment to evaluate if dynamic routing of the inflow hydrograph would impact the freeboard. Apply conservative assumptions as needed. Compare "dynamic routing" approach versus "kinematic routing" or "modified-Puls" approach.
f. Review and document the most current estimate of reservoir stage capacity.
g. Review the available estimates of the Probable Maximum Precipitation (PMP). Identify the differences between each of the estimates. In particular, what factors causes a duration (6-hour or 72-hour) to become more critical?
h. Overtopping PMP used 11.5 inches.
i. Review of routing indicates discharge in emergency spillway for 100-year event for design conditions.

2. **Downstream Impacts**: This pertains not only to downstream impacts due to failure of one of more components of the dam, but impacts that would result from normal operations at the facility. The following are important issues that require review before the formal FMEA.
   a. Obtain updated EAP from the District.
   b. Does downstream culvert and roads need improvements/maintenance?
   c. What are the current construction activities in this area?
   d. Qualitatively assess downstream effects due to discharge from the emergency spillway. Qualitatively assess whether or not there would be an emergency spillway discharge during the 100-year event.
   e. Review and document the capacity of the outlet channel in light of the anticipated spillway discharges.
   f. Evaluate to the extent practical, the magnitude or frequency of storms that would result in spillway discharge.

3. **Erosion at the Emergency Spillway**: The emergency spillway is a concrete-lined chute. The following items require review:

a. Could discharge in spillway cause back eddy behind the energy dissipater walls? Rip-rap only extends downstream and does not wrap around side walls.
b. No emergency access on left side of dam during flooding.
c. Breach over spillway unlikely due to concrete lining, drain pipes, chimney, and Zone II soils.

4. **Failure of Principal Outlet**: The principal outlet (PO) for the dam is a reinforced concrete pipe 36 inches in diameter. The following items require review:
   a. Qualitatively assess potential for piping around PO.
   b. Qualitatively assess potential for seepage piping.
   c. Filter around 36 in pipe needs to be reviewed.
   d. Pipe loads, elongation and cracks may occur if pipe constructed in fill.
   e. Review available information to qualitatively assess the structural adequacy of the principal outlet.
   f. Inspect the intake tower of the principal outlet to assess and document is the walls have deflected due to instabilities.
   g. Review available geotechnical information to assess is the principal outlet is underlain by collapsible soils.
   h. Visually inspect the intake tower for cracking.

5. **Piping Involving Foundation and Abutments**: Relates to potential piping erosion of soil materials from the embankment fill into the foundation and/or developing through the foundation under the embankment. The following items need to be reviewed to assess this failure mechanism.
   a. ***Geotechnical/Geometric Profile***. Review the geotechnical profile along the embankment and the construction details of the cutoff trench(s), if any.
      i. Look for sharp transitions in foundation material types, foundation stripping/excavation (e.g. to remove zones of soft or collapsible materials), dramatic changes in bedrock depth, etc. – conditions that could lead to *differential settlement* and transverse cracking
      ii. Check abutment material; foundation was poor and required more excavation.
   b. ***Buried Gravel Channels***. Review the surficial geology/soil at the site to assess whether permeable gravel channels are present.
      i. Consider potential pathways for *preferential seepage* and erosion under the dam embankment.
      ii. Check *filter compatibility between embankment fill and foundation soils* (potential for downward piping into any openwork gravels/alluvial deposits?)
   c. ***Cutoff Trenches***. Review the design and construction details of cutoff trenches to assess the potential for a defects/design flaws in the cutoff that could lead to seepage and erosion.
      i. Cutoff trenches of limited width (top of core trench not as wide as base of core zone) - potential for differential settlements that result

in cracking of core material or cracking at interface between core zone and adjacent shell zones

ii. Cutoff trenches of limited depth/or no core trench - potential for concentrated seepage along base of dam/core trench

d. ***Erosivity of Foundation Soils***. For dams with or without core trenches – consider erosivity of foundation soils and potential for concentrated exit gradients at unprotected toe(s) of dam(s) (under seepage during impoundment events).

e. Potential for ***earth fissures*** extending under dam(s)? Scenario not likely in this region of Maricopa County.

f. ***Downstream runoff erosion***. Review and assess if discharge from natural drainages adversely impacts the downstream face, toe, or groins of the embankment.

6. **Erosion and Piping through the Embankment**: This failure mode relates to the concentrated leakage piping along a transverse crack, or along a penetration through the dam (outlet pipes and/or utility conduits). The following are items that will be reviewed and assessed in preparation for to the FMEA:

a. ***Transverse Cracking***. Information related to identifying potential for transverse crack formation through embankment fill. Although transverse cracking has not been reported at any of the three FCD Wickenburg structures, case histories on other District dams warrant the evaluation of potential failure modes related to embankment piping for all District dams.

i. Potential for *desiccation shrinkage cracking* of clayey fill materials (review soil PI's and fines content, depth of non-clayey cover protecting clayey materials, etc).

ii. Potential for *differential settlement-induced cracking* (transitions at cutoff trenches, collapsible soils in foundation, variability of foundation in longitudinal direction, etc.)

iii. Discuss inability to view/inspect for transverse cracking due to rock mulch slope protection.

iv. Shrinkage cracking look at material characteristics

b. ***Internal Filters***. Review and assess to the extent practical the level of protection against concentrated leak piping provided by internal filters. This review should also evaluate the potential for a defect through the central filter.

i. Check for gradation data on filter/drain and core material zones. (*Filter compatibility*/filter match criteria between adjacent material zones.)

ii. Review *internal stability* of central chimney/filter drain materials

iii. Was a filter criteria assessment performed?

c. ***Penetrations through Dam***. Review drawings and information to evaluate vulnerability to piping along penetrations through dam (outlet conduits/utilities).

i. Consider outlet pipe construction methods (seepage collars, cradles, pipe bedding, etc). For example, if seepage collars were

installed around principal spillway, we know that poor compaction around seepage collars has lead to piping erosion in numerous case histories.

ii. Initial drain material had a problem with permeability, ran into crushed material causing holes to stay open.
    1. How much of the dam was constructed with this material?
    2. Can this material support cracking?

iii. Material was imported form phoenix
    1. How much of the dam was constructed with this material?
    2. Can this material support cracking?
    3. Use pit run

iv. Were filter diaphragms installed, or does internal zoning around pipe meet requirements for filter diaphragms?

v. Review utility plans. Sewer Line was removed, was it treated? What are downstream effects?

d. ***Internal zoning geometry***. Review construction details for internal zoning. Look for core/shell zones that do not extend to dam crest – if only extend to emergency spillway crest elevation – possibility of seepage "overtopping" core zone leading to erosion/loss of dam crest. (Sunset FRS) top limit (elevation vs. potential phreatic surface) for filter (Zone II) material
    i. Internal zoning, compatibility between different zones

e. Review the characteristics of case history of FCD embankment cracking (width, spacing, depth).

f. ***Partially penetrating central filters***. Review the central filter configuration in light of maximum crack depths to evaluate the potential for piping under a partially-penetrating center filter.

g. Evaluate if ***animal burrows*** can serve as seepage conduits across the entire width of the embankment.

7. **Slope Stability**: This failure mode covers both the upstream and downstream slopes of the embankment. The following items require review prior to the FMEA:
    a. General static and seismic stability of the upstream and downstream slopes of the dam.
    b. Rapid drawdown instability.
    c. Review the configuration of the central filter and assess to the extent practical, if a full head of water within the central filter could destabilize the downstream face of the dam.
    d. Erosional stability of dam crest under wave action.
    e. Was there a re-evaluation of stability based on change in drain material?

8. **Failure Mechanisms Associated with Presence of Collapsible Soils in Dam Foundation:** This failure mode relates to the potential for collapse on saturation of meta-stable soils in the dam foundation. Geologic mapping/boring logs/laboratory test data will be reviewed to assess to the extent practical the

presence of potentially collapsible materials. If these soils are suspected to be present we need to consider the following failure modes:

a. Potential for loss of freeboard/overtopping in zones of limited width where collapsible soils are present
b. Differential settlement leading to formation of transverse cracks in embankment fill/foundation.
c. Slope instability caused by loss of support/oversteepening of either upstream or downstream slopes.

9. **Failure Mechanisms Associated with Earth Fissures**: Previous as well as current investigations by others have identified a strong potential for earth fissures at a number of FCD structures. This potential failure mode is an unlikely scenario. The following issues need to be reviewed as part of the FMEA:
   a. Review current investigations to evaluate the potential for earth fissures in the vicinity of the dam.
   b. Review the geotechnical properties of the soils to assess the potential for "pipe" or "tunnel" formation through the embankment/foundation along an earth fissure.
   c. Cracking of the embankment due to one or more earth fissures. This could result in some of the failure mechanisms related to seepage and erosion piping through the embankment.
   d. Review geotechnical data to assess the stability of the upstream slope under rapid drawdown conditions. The failure mechanism is similar to that discussed in item 7(b) above, with the exception that seepage along a fissure through the foundation soils could result in loss of support due to erosion of the (as opposed to collapsible) soils.

10. **Other considerations**: This section addresses issues that are not directly related to a failure of the dam or its appurtenant facilities, but which nonetheless may be relevant to the FMEA:
    a. Qualitatively assess the impact of discharge from the emergency spillway on the downstream areas. Obtain spillway delineation study or FEMA study for Casandro Wash.
    b. Qualitatively assess the impact of groundwater withdrawal in the vicinity of the dam.
    c. Outlet flows, cavitations of spillways.

5.0 Closure

The aim of the workshop on February 24, 2004 was to identify and develop a comprehensive list of failure modes for Casandro Wash Dam. In addition, the participants also identified key issues that require additional review or assessment during the Individual Structures Assessment and the Field Inspections. A detailed Failure Modes and Effects Analysis (FMEA) is beyond the scope of the Februarys 24 workshop. The FMEA for the dams is schedules as a future task of this work assignment (March 1 2004 through March 6, 2004). The list of items to be reviewed as presented in Section

4.0 above is intended to provide guidance to the risk assessment team, and does not represent a comprehensive list of documents and information items that need to be reviewed in advance of the formal FMEA.

FIELD INSPECTION REPORT for CASANDRO WASH DAM

MARICOPA COUNTY, ARIZONA

Purpose

The purpose of the field examination is to provide a systematic visual field technical investigation in which the structural stability and operational adequacy of the dam project features are analyzed and evaluated to determine if deficiencies exist at the dam and associated project features. The examination was conducted by walking the length of the structure and visually examining the crest, upstream and downstream slopes, upstream and downstream toes, and appurtenant structures. Comments are recorded on an inspection log and photographs taken of pertinent observations. Cracks, holes, and burrows were probed with hand-held 3-foot stainless steel metal rod/probes to examine depth, extent, and resistance to probing. No other intrusive/internal examination method was used during this examination.

The field examination of the structure is accomplished to provide a basis for timely initiation of corrective measures to be taken where necessary. This examination was conducted on February 25, 2004 by the following technical examination team:

Technical Examination Team

Robert Eichinger, P.E., CFM	Project Manager, Kimley-Horn and Associates
Debbie Miller, Ph.D., P.E.	Senior Geotechnical Engineer, Gannett Fleming
Ken Euge, P.G.	Principal Geologist, Geological Consultants
Enamul Hoque, P.E.	Principal, Hoque & Associates, Inc.
Kelli Blanchard, EIT	Civil Analyst, Kimley-Horn and Associates
Mike Meng	Structures Technician, Flood Control District of Maricopa County

Operational Summary

Inspection Frequency: Casandro Wash Dam is inspected on an annual basis by the Flood Control District (FCD). In addition to the annual inspections, the District conducts quarterly operation and maintenance inspections, flood related event inspections, and as-needed site inspections. The Arizona Department of Water Resources and the Natural Resources Conservation Service are invited to participate in annual inspections of Casandro Wash Dam.

Maximum Water Surface Elevations: The District maintains a log of maximum water surface elevations for Casandro Wash Dam. The maximum recorded impoundment for Sunnycove reservoir is 65 acre-feet with a stage of 11.30 feet (gage height) at the dam (September 1997).

Emergency Spillway Discharges. Based on District records, there has been no recorded emergency spillway flows at Casandro Wash Dam. The spillway is a reinforced concrete chute spillway with an elliptical spillway crest. The spillway terminates into a St. Anthony Falls energy dissipater. A rip-rap blanket is located downstream of the energy dissipater to minimize channel erosion. The District has entered into an intergovernmental agreement with the Town of Wickenburg to require a floodplain district downstream of the emergency spillway.

Distress Observations Corrected or Operation and Maintenance Conducted Since Last Inspection: In 2003, the District has placed gravel mulch on the embankment slopes to help control slope erosion and rilling.

Past Distress Observations Not Yet Corrected: None

Flood Control District Operation and Maintenance Responsibilities: The District is responsible for total operation and maintenance of Casandro Wash Dam and associated appurtenances.

Field Examination Results Summary

Embankment: The crest of the dam is gravel plated. All crest settlement monuments were found. Station markers were located. The crest is clear of vegetation. The access gates and fences are operational. No longitudinal cracks or transverse cracks were observed on the crest of the dam.

Abutments: The left and right abutment contacts appear in satisfactory operational condition. No slides, sign of instability or erosion of the abutment surfaces were observed. Abutment groins were clear of vegetation.

Upstream Slope: There are several small animal burrows on the slope face. There was no evidence of seepage, undermining, settlement or sloughing. There is gravel rock mulch protection on the slope. There is gravel rock mulch protection on the slope.

Downstream Slope: Animal burrows are evident on this slope face primarily on the lower one-third of the slope. These burrows appear to be attributable to rodents. The slope has a low density of small shrubs and grasses. There was no evidence of seepage, undermining, settlement or sloughing. There is gravel rock mulch protection on the slope.

Principal Spillway: The approach channel was clear of debris and obstructions. The reservoir pool is clear of vegetation and debris.

The exterior of the inlet structure was clean. The concrete for the inlet structure showed no signs of structural distress. The trash rack was clear of debris and obstructions. The interior of the principal spillway conduit was inspected visually. The spillway conduit appeared clear of debris and obstructions. The District has videotaped the interior of the conduit. A review of the video indicates that the conduit is clear of debris and obstructions. The conduit was clean and there were no apparent signs of seepage.

The discharge outlet structure of the principal spillway was clear of debris. The joints of the outlet structure were straight and appeared tight. There were no signs of seepage.

Emergency Spillway: The emergency spillway is located on the embankment. The emergency spillway is a reinforced concrete chute spillway that terminates into an energy dissipator. The spillway is clear of any obstructions.

Instrumentation: Casandro Wash Dam has six crest settlement monuments. The crest monuments are located just off the downstream crest of the structure. The crest monuments appeared to be undamaged. The structure also has three downstream toe monuments. An FCD benchmark monument is located on the hilltop at the upstream end of the left abutment. All monuments were found and in good condition. The inspection team recommends a minimum of two additional crest monuments be installed. The locations for the two monuments are proposed to be located near the right abutment and mid-way between the right abutment and the residential home.

A staff gauge located on the upstream slope at the principal spillway is used to indicate the level of water impounded in the reservoir. A pressure transducer is located at the inlet structure of the principal spillway. The transducer works in combination with a flood warning telemetry system, which allows signals to be sent to a centralized receiver at the District indicating water levels at the reservoir.

Conclusions

The overall conclusion of the field examination is that the Casandro Wash Dam and appurtenant structures are in satisfactory operational condition.

Recommendations

The following is a list of recommended corrective actions resulting from this field examination:

a. Add two additional crest monuments as discussed above.

Next Annual Inspection

The next annual inspection by FCD is scheduled for November 2004.

FLOOD CONTROL DISTRICT OF MARICOPA COUNTY - DAM SAFETY
EMBANKMENT DAM INSPECTION CHECKLIST / REPORT

Each item of the checklist should be completed. Repair is required when obvious problems are observed. Monitoring is recommended if there is a potential for a problem to occur in the future. Investigation is necessary if the reason for the observed problem is not obvious.

Brief description should be made of any noted irregularities, needed maintenance, or problems. Abbreviations and short descriptions are recommended. Additional sheet(s) may be used for any items not listed and additional comments.

ADWR NO.: **07.65** FCD NO.: **343**	DAM NAME: **Casandro Wash Dam**		TYPE: **Earthfill with Chimney Filter/drain**	NOT APPLIC.	NO	YES	MONITOR	REPAIR	INVESTIGATE
CONTACTS:			REPORT DATE: March 24, 2004						
INSPECTED BY: KHA Team (see ISA Report)			INSPECTION DATE: **February 25, 2004**						
REVIEWED BY: Bob Eichinger			REVIEW DATE: March 24, 2004	PAGE **1 of 6**					
SPILLWAY CREST ELEVATION: **2157.2 ft.**	HAZARD CLASS: **High**		SIZE: **Small**						
INFLOW DESIGN FLOOD: **½ PMF**	SPILLWAY CREST WIDTH: **80 ft.**		ADWR DAM HEIGHT: **32.5 ft.**						
DAM CREST LENGTH: **1011 ft.**	DAM CREST WIDTH: **14 ft.**		DAM CREST ELEV.: **2165.7 ft.**						
CURRENT RESERVOIR LEVEL: **Empty**	TOTAL FREEBOARD: **8.5 ft.**		PHOTOS: **Yes (6)**						
Item	Comments								

Item	NOT APPLIC.	NO	YES	MONITOR	REPAIR	INVESTIGATE
1. CREST **Width = 14 ft., Length = 1011 ft., Dam Crest Height = 41 ft., [Ref: 1996 As-builts]; Elevation 2165.7 ft. (NAVD 88) [Ref: 1997 Survey]**						
a. Settlements, slides, depressions?		✓				
b. Misalignment?		✓				
c. Longitudinal/Transverse cracking?		✓				
d. Animal burrows?		✓				
e. Adverse Vegetation?		✓				
f. Erosion?		✓				
2. UPSTREAM SLOPE - **3 Horizontal : 1 Vertical**						
a. Erosion? **Gravel mulch placed on upstream face (2003). No rilling noted where mulch placed**		✓				
b. Inadequate ground cover? **Ground cover has improved with gravel mulch application. Rock mulch was placed much thinner at this dam than at Sunnycove and Sunset FRS.**		✓				
c. Adverse vegetation?		✓				
d. Longitudinal/Transverse cracking?		✓				
e. Inadequate riprap? **None**	✓					
f. Stone deterioration?	✓					
g. Settlements, slides, depressions, bulges?		✓				
h. Animal burrows? **Sta 16+00 several small animal burrows through thin rock mulch**			✓	✓		
3. DOWNSTREAM SLOPE - **3 Horizontal : 1 Vertical**						
a. Erosion? **Rilling left of the emergency spillway repaired when gravel mulch applied in 2003.**		✓				
b. Inadequate ground cover?		✓				
c. Adverse vegetation?		✓				
d. Longitudinal/Transverse cracking?		✓				
e. Animal burrows? **Several small animal burrows through thin rock mulch**			✓	✓		
f. Settlements, slides, depressions, bulges?		✓				
g. Soft spots or boggy areas?		✓				
h. Movement at or beyond toe?		✓				

INSPECTED BY: **KHA Team (see ISA Report)** | DATE: **February 25, 2004**

Item	Comments	N/A	NO	YES	MON	REP	INV
4. DRAINAGE-SEEPAGE CONTROL – 4 ft. wide chimney filter/drain located downstream of the dam centerline. Extends from approximate elevation 2162.2 ft. to 6 ft. below the foundation excavation. The 36-inch RCP outlet pipe projects through the chimney drain which acts as a diaphragm. The chimney drain has four finger drains (10 ft. wide at the base and 3 ft. high), 2 on each side of the spillway that daylight on the downstream slope. The invert elevation where the finger drains meet the chimney drain is approximately 2135.2 ft.						
a. Internal drains flowing? Est. Left ___gpm; Est. Right ___gpm		✓				
b. Boils at or beyond toe?		✓				
c. Seepage at or beyond toe? Estimated ___gpm		✓				
d. Does seepage contain fines?	✓					
5. ABUTMENT CONTACTS						
a. Erosion?		✓				
b. Differential movement?		✓				
c. Cracks?		✓				
d. Settlements, slides, depressions, bulges?		✓				
e. Seepage? Est. Left ___gpm; Est. Right ___gpm		✓				
f. Animal burrows?		✓				
6. PRINCIPAL SPILLWAY - APPROACH CHANNELS - None						
a. Eroding or backcutting?	✓					
b. Sloughing?	✓					
c. Restricted by vegetation?	✓					
d. Obstructed with debris?	✓					
e. Silted in?	✓					
7. PRINCIPAL SPILLWAY - INLET STRUCTURE – 8 ft. by 8 ft. reinforced concrete structure with a 16-inch square ungated opening and 24-inch gated opening (slide gate) that is maintained closed.						
a. Seepage into structure? **Unknown – reservoir empty. No indication of seepage at downstream outlet.**		?				
b. Debris or obstructions? **Trash Rack Clear**		✓				
c. If concrete, do surfaces show:						
1. Spalling or Scaling?		✓				
2. Cracking? **Minor cracking (non-structural), no repairs required.**			✓	✓		
3. Erosion?		✓				
4. Exposed reinforcement?		✓				
d. If metal, do surfaces show:						
1. Corrosion?	✓					
2. Protective coating deficient?	✓					
3. Misalignment or spilt seams?	✓					
e. Do the joints show:						
1. Displacement or offset?	✓					

INSPECTED BY: **KHA Team (see ISA Report)** | DATE: **February 25, 2004**

Item	Comments	N/A	NO	YES	MON	REP	INV
2. Loss of joint material?		✓					
3. Leakage?		✓					
f. Are the trash racks:							
1. Broken or bent?			✓				
2. Corroded or rusted?			✓				
3. Obstructed? **Clear of debris**			✓				
g. Principal Spillway Gate(s):							
1. Broken or bent?			✓				
2. Corroded or rusted?			✓				
3. Leaking? **No visual indication of leakage**			✓				
4. Not seated properly? **Visual observation indicates gate is properly seated.**			✓				
5. Not operational?			✓				
6. Not periodically maintained?			✓				
7. Date last operated?							
8. PRINCIPAL SPILLWAY – CONDUIT – **36-inch diameter concrete encased RCP (invert elevation 2137.2 ft.) that discharges onto the concrete lined emergency spillway upstream of stilling basin.**							
a. Seepage into conduit? **No visual indication of seepage into conduit.**			✓				
b. Debris present? **Looked through pipe from upstream and downstream and did not see any trash or sediment.**			✓				
c. If concrete, do surfaces show: **Video taped (inspected) the pipe in 2003. No problems noted in pipe.**							
1. Spalling or scaling?			✓				
2. Cracking?			✓				
3. Erosion?			✓				
4. Exposed reinforcement?			✓				
5. Other?			✓				
d. If Metal, do surfaces show:							
1. Corrosion?		✓					
2. Protective coating deficient?		✓					
3. Misalignment or spilt seams?		✓					
e. Do the joints show: **Video taped pipe 2003. No problems noted.**							
1. Displacement or offset?			✓				
2. Loss of joint material?			✓				
3. Leakage?			✓				
9. PRINCIPAL SPILLWAY - STILLING BASIN/POOL – **See Emergency Spillway Stilling Basin**							
a. If concrete, do surfaces show:							
1. Spalling or Scaling?		✓					
2. Cracking?		✓					

INSPECTED BY: **KHA Team (see ISA Report)** | DATE: **February 25, 2004**

Item	Comments	N/A	NO	YES	MON	REP	INV
3. Erosion?		✓					
4. Exposed reinforcement?		✓					
b. If concrete, do joints show:							
1. Displacement?		✓					
2. Loss of joint material?		✓					
3. Leakage?		✓					
c. Do the energy dissipaters show:							
1. Signs of deterioration?		✓					
2. Covered with debris?		✓					
3. Signs of inadequacy?		✓					
10. PRINCIPAL SPILLWAY – OUTLET CHANNEL - **See Emergency Spillway Channel**							
a. Eroding or backcutting?		✓					
b. Sloughing?		✓					
c. Obstructed?		✓					
d. Poorly riprapped?		✓					
e. Tailwater elevation and flow condition: **Unknown.**							
11. EMERGENCY SPILLWAY-APPROACH CHANNEL - **80 ft. concrete lined wide broad crested weir over the embankment. Concrete training walls.**							
a. Eroding or backcutting?			✓				
b. Sloughing?			✓				
c. Restricted by vegetation?			✓				
d. Obstructed with debris?			✓				
e. Silted in?			✓				
12. EMERGENCY SPILLWAY-CONTROL STRUCTURE – **2 ft. high ogee with a crest elevation of 2157.2 ft.**							
a. If concrete, do surfaces show:							
1. Spalling or scaling? **Minor spalls on right side of ogee crest– no repairs required (no change 2003, 2004)**				✓	✓		
2. Cracking? **Shrinkage and/or temperature cracks. No structural cracks noted. No repairs required. (No change 2003, 2004)**				✓	✓		
3. Erosion?			✓				
4. Exposed reinforcement?			✓				
b. If concrete, do joints show:							
1. Displacement or offset?			✓				
2. Loss of joint material?			✓				
3. Leakage?			✓				
c. If spillway is unlined:							
1. Are slopes eroding?		✓					
2. Are slopes sloughing?		✓					

INSPECTED BY: **KHA Team (see ISA Report)** | DATE: **February 25, 2004**

Item	Comments	N/A	NO	YES	MON	REP	INV
3. Is crest eroding?		✓					
d. Is weir in poor condition?			✓				
e. Where is control structure? **Ogee structure on the downstream side of the broad crested weir dam crest.**							
13. EMERGENCY SPILLWAY – CHANNEL - **Concrete lined to stilling basin.**							
a. Obstructions or restrictions?			✓				
b. If concrete, do surfaces show:							
1. Spalling or scaling?			✓				
2. Cracking? **Shrinkage and/or temperature cracks only. No structural cracks noted. No repairs required. No change 2003 and 2004.**				✓	✓		
3. Erosion?			✓				
4. Exposed reinforcement?			✓				
c. If concrete, do joints show:							
1. Displacement or offset?			✓				
2. Loss of joint material?			✓				
3. Leakage?			✓				
d. If an unlined channel, does it show:							
1. Erosion?		✓					
2. Slopes sloughing?		✓					
3. Poorly protected w/ vegetation/riprap? **Riprap lined downstream of stilling basin.**		✓					
14. EMERGENCY SPILLWAY-TERMINAL STRUCTURE - **Stilling Basin**							
a. If concrete, do surfaces show:							
1. Spalling or scaling?			✓				
2. Cracking? **Shrinkage or temperature cracks only. No structural cracks noted. No change 2003 and 2004.**				✓	✓		
3. Erosion?							
4. Exposed reinforcement?							
b. If concrete, do joints show:							
1. Displacement or offset?			✓				
2. Loss of joint material?			✓				
3. Leakage?			✓				
c. Do the energy dissipaters show:							
1. Signs of deterioration?			✓				
2. Covered with debris?			✓				
3. Signs of inadequacy?			✓				
15. EMERGENCY SPILLWAY – OUTLET CHANNEL - **Riprap lined for approximately 40 feet downstream from stilling basin. Unlined beyond.**							
a. Eroding or backcutting? **Head cutting downstream. No apparent change in 2003, 2004. Install headcut pins**				✓	✓		
b. Sloughing?			✓				
c. Obstructed or restricted?			✓				

INSPECTED BY: **KHA Team (see ISA Report)** | DATE: **February 25, 2004**

Item	Comments	N/A	NO	YES	MON	REP	INV
16. RESERVOIR							
a. High water marks?				✓			
b. Erosion/Slides into pool area?			✓				
c. Sediment accumulation?			✓				
d. Floating debris present?			✓				
e. Depressions, sinkholes or vortices?			✓				
f. Low ridges/saddles allowing overflow?			✓				
g. Structures below dam crest elevation?			✓				
17. INSTRUMENTATION							
a. List type(s) of instrumentation: **Reservoir gage, alert gauge and settlement/sedimentation markers. Recommend install three additional crest monuments between right abutment and right wall of emergency spillway**							
b. Any repair or replacement required?			✓				
c. Last monitoring report: **August 1997. Surveyed in 2003 and scheduled for 2004.**							
18. CONDITION SUMMARY / EAP / MAINTENANCE RECOMMENDATIONS / NEXT INSPECTION							
a. Any safety deficiencies? **None.**							
b. Safe storage level on License: **Emergency spillway crest (temporary only – until reservoir can be emptied).**							
c. Date of current ADWR License: **January 7, 1998**							
d. Any ADWR Actions Outstanding? **None.** Describe and list required action:			✓				
e. Recorded size: **Small** Should size be revised?			✓				
f. Recorded downstream hazard: **High** Should hazard be revised?			✓				
g. Date of last Emergency Action Plan revision: **Latest MCDEM Emergency Response Manual dated November 19, 2003** Should EAP be revised? **Blue Alert page of the on-line Wickenburg Response Plan needs to be revised to include the reference to MCDEM's Emergency Action Plans Manual (Note: Current phone numbers maintained by MCDEM). EAP updated December 2003.)**			✓				
h. Normal inspection frequency: **Annual** Should inspection frequency be revised?			✓				
i. Maintenance Recommendations: **From 2002 Inspection 1) Completed repairs to riling on both slopes with gravel mulch application (2003); 2) Survey dam (2003 completed); 3) Video tape and inspect principal spillway conduit (completed 2003); 4) Extend grouted riprap at the right downstream groin area (completed 2003); 5) Remove soil stockpiled on the downstream toe in front of the outlet for the central/filter drain (completed 2003). From 2003 Inspection: Install animal guards in drains in stilling basin. 6) Install headcut pins (see ISA report) 7) Install additional crest settlement monuments (sec 17.a).**							
j. Is Supplemental Inspection required: None							
k. Recommended date for next inspection: **November 2004.**							
l. Status of Structure Assessment Program: **Scheduled for FY 2003-2004**							

ATTACHMENTS:

- Photos (12)

Casandro Wash Dam Looking from Left Abutment
Downstream Facing Southeast. Photo Date 2/25/04

Casandro Wash Dam Upstream Slope Facing Northwest Photo
Date 2/25/04

Casandro Wash Dam Downstream Slope Facing North – Note Erosion Gully. Photo Date 2/25/04

Casandro Wash Dam Emergency Spillway Approach and Crest Upstream Slope Facing South. Photo Date 2/25/04

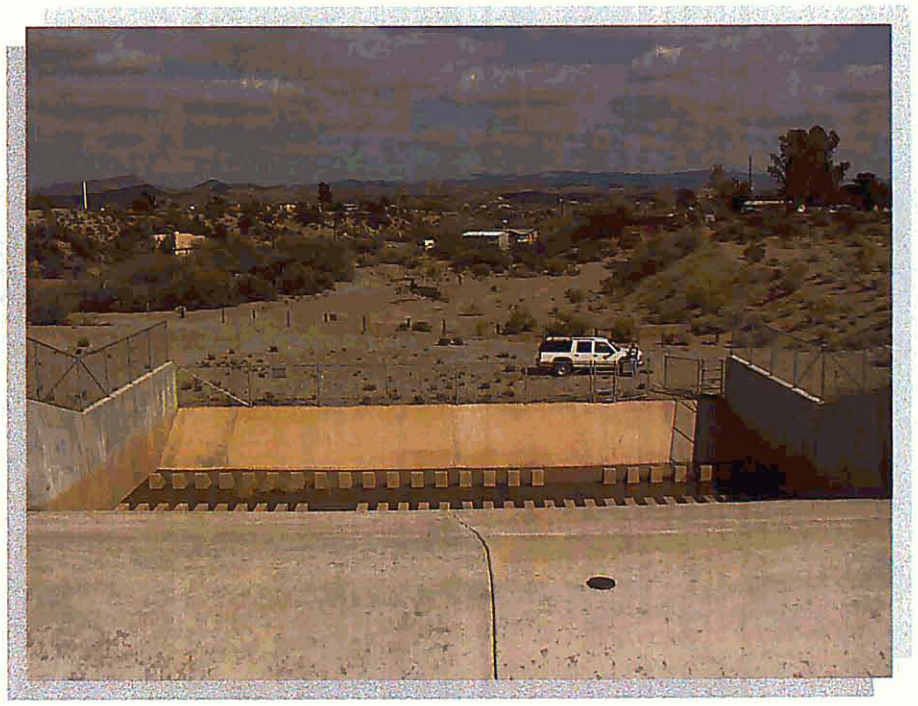

Casandro Wash Dam Emergency Spillway Chute and Energy Dissipater Downstream Slope Facing South. Photo Date 2/25/04

Casandro Wash Dam Principal Spillway Outlet Facing North.
Photo Date 2/25/04

FAILURE MODE AND EFFECTS ANALYSIS for CASANDRO WASH DAM

MARICOPA COUNTY, ARIZONA

June 29, 2004

1.0 INTRODUCTION

General Description

Casandro Wash Dam is located in the Town of Wickenburg, Arizona north of the intersection of U.S. 60 and Mariposa Avenue. The dam project consists of a homogeneous earth dam embankment with a nearly full-height central chimney drain/filter, a reinforced concrete spillway located centrally on the dam, an intake structure, the principal spillway outlet conduit, and the principal spillway outlet that discharges into the emergency spillway. The project was identified as flood control component in the Wickenburg Area Drainage Master Plan.

Casandro Wash Dam is classified as small sized, high hazard dam. The reservoir behind the dam is 11 acres with a capacity of 145 acre-feet with no sediment acculmulation. Design of Casandro Wash Dam was completed by the Flood Control District of Maricopa County. Construction of the dam and appurtenant structures was completed by CH2M Hill in June 1995.

The dam has performed satisfactorily to date. The dam has experienced only one significant impoundment since construction rising 11.3 feet above the upstream toe which is within 24 feet of spillway crest. There has been no discharge through the emergency spillway to date.

Dam Data

Dam type: Homogeneous Earthfill with a Vertical Chimney Filter/Drain with Finger Drains, Shallow Cutoff and a 6 foot deep Foundation Filter
Dam height: 32.5-ft
Dam length: 1,011-ft
Dam crest: width 14-ft; elevation 2165.7-ft (NAVD88)
Spillways:

- Principal - 36-inch RCP, inlet elevation 2135-ft, discharges into the emergency spillway chute;
- Emergency spillway - 80-ft wide reinforced concrete lined chute over the embankment, ogee crested weir with concrete training walls at crest elevation 2157.2-ft, USBR Type III energy dissipater at end of chute

Freeboard: 3-ft
Reservoir Surface: 11-ac at emergency spillway crest
Storage: 143-af with 2-af of sediment

Hazard Classification: High

Hydrology Data (elevations in NGVD29 datum)

Hydrologic studies for this dam include the:

a. 1995 Design Report by CH2M Hill
b. Wickenburg Study December 1974 The Wickenburg watershed work plan included information on Sunset Wash, Sunnycove Wash, Casandro Wash, and Sols Wash.
c. Conditional Letter of Map Revision (CLOMR), September 1996 – The study was completed due to the construction of Casandro Wash Dam having a effect on the floodplain in the town of Wickenburg.

- Probable Maximum Precipitation = 15.0 inches in a 6-hour period
- 100-year 6-hour = 3.35 inches and 100-year 24-hour = 4.2 in
- PMP/PMF HMR 49 Peak Inflow – 10,941 cfs, 1/2PMF Peak Inflow – 5,398 cfs
- 100-year Peak Inflow (1995 Design Report) = 1769 cfs
- 100-year Peak Inflow (Wickenburg Study) = 811 cfs
- 100-year Peak Inflow (Casandro Wash CLOMR, September 1996) = 1265 cfs
- 100-year Volume = 156 ac-ft; ½ PMF Volume = 203 ac-ft; PMF Volume= 406 ac-ft
- Spillway Design - 3744 cfs at 2160.69 ft (assumes low flow orifice clogged);
- Spillway Crest elevation – 2155.0 ft (NGVD29)
- Dam Crest elevation – 2163.50 ft
- Freeboard (for IDF = ½ PMF): Approximately 2.8 ft
- Reservoir Volume – 1435 ac-ft at spillway crest with 2 ac-ft sediment storage
- Flood Routing – ½ PMF initial conditions at empty pool.
- 100-year Reservoir Elevations: 100-year 6-hour: 2153.9 ft (later model run final design 2155.3 ft)
- Emergency Spillway Outflow: 100-year = 118 cfs if orifice to Principal Outlet is operating (not plugged); 151 cfs if orifice to Principal outlet is plugged
- Principal Outlet Outflow: CLOMR study: elevation 2153.97 ft intake through orifice = 30 cfs
- Casandro Wash Outfall Capacity – 339 cfs (designed for50-year storm) (total entering based on LOMR = 319 cfs; includes 20 cfs from dam) hydrology done under future land use.
- ½ PMF Outflow: 3708 w/o and 3744 with orifice at peak elevations – 2160.2 ft with and 2160.7 ft without orifice
- PMF Outflow: discharge estimated from rating graph = 6,800 cfs at 2168.2 ft.

Purpose and Scope

In general, the purpose of the Failure Mode and Effects Analysis (FMEA) exercise was to:

- Identify site-specific potential failure modes for the dam.
- Discuss qualitatively the likelihood of the occurrence of the potential failure modes.

- Determine whether or not, and how, important the potential failure mechanisms are being monitored.
- Examine the potential consequences of failure and the adverse consequences of successful operation during flood loading (e.g. – large spillway releases).
- Identify possible risk reduction actions that may be taken to reduce the likelihood of failure or to mitigate adverse consequences.
- Determine what information, investigations or analyses may be needed to resolve uncertainties relative to potential failure modes.

(Note: In this phase, the FMEA team examined the general nature of the "consequences" for the failure modes identified. Greater detail on the estimate of the magnitude of the "consequences" for each significant failure mode may need to be addressed at some future time.)

Team Members

Tom Renckly, P.E., Flood Control District of Maricopa County, Project Manager,
Michael Greenslade, P.E., Flood Control District of Maricopa County, Dam Safety Engineer
Bob Eichinger, P.E., CFM, Kimley-Horn and Associates, Inc., Project Manager
Larry Von Thun, P.E, Dam Consultant and FMEA Facilitator
Debbie Miller, P.E., PhD, Gannett Fleming, Inc. Geotechnical
Ken Euge, R.G., Geological Consultants, Geology
Kelli Blanchard, E.I.T, Kimley-Horn and Associates, Inc, Session Recorder

2.0 MAJOR FINDINGS AND UNDERSTANDINGS GAINED

The following is a summary of the major findings and understandings for Casandro Wash Dam as a result of the Failure Mode and Effects Analysis (FMEA). Casandro Wash Dam is one of three dams located in relatively close proximity of each other in Wickenburg, Arizona (the other two are Sunnycove FRS and Sunset Dam).

The major findings and understandings given below are organized as follows. First the important geotechnical, geologic, design, construction, and performance differences or unique aspects related to the potential for failure mode development of Casandro Wash Dam are given. Findings related to failure modes or adverse consequences for overtopping and spillway discharge are given next. Findings related to consequences are given next followed by action items (risk reduction and investigations). Finally, general findings those are informational and/or generally similar for the dam is provided.

Key Findings/Differences Related To Failure Mode Development – "Static Loading Failures – Seepage Erosion – Fissuring – Foundation Erosion –Etc."

1) Low Density Soils In Left And Right Abutment. Review of project data indicates the presence of low density, un-cemented soils in the left and right abutments. There

appears to be a relatively thicker horizon of such soils in the left abutment than the right abutment.

2) Long Seepage Path at Left Abutment. The left abutment extension provides a long, end around seepage path and filter protection against seepage erosion.
3) Foundation On Dense Cemented Soils. The dam is founded on competent, dense, cemented alluvial materials. Care was taken during foundation preparation to remove un-cemented recent channel deposits prior to fill placement.
4) Stability Computations. Stability calculations prepared during design appear to indicate that the slope stability of the structure is acceptable, but the "critical" failure surfaces analyzed and reported were all very shallow. There is a need to document the factors of safety of more relevant trial slip surfaces with additional stability analyses that consider more meaningful failure surfaces which actually take out a portion of the dam crest. (also see next point)
5) Material Properties In Design Different Than In Construction. Material properties of the homogeneous fill planned for in design were different than what was actually used in construction. The shear strength of the material actually used for the fill needs to be estimated and slope stability analyses need to be re-run and documented for the project record because of a documented material property change for the Zone 1 that was discovered during construction. This material property difference also has significant implications relative to the need for and performance of the filter / drain system. Ingress of the wetting front into the dam is much slower and produces much less flow to the drain than anticipated by design due to higher fines content materials actually used in Zone I than was anticipated during design. Thus, the primary defensive function of the filter/drain is that of providing filter protection against the possibility of transverse cracks through the dam.
6) Chimney Drain Extent. The Zone II Drain/Filter extends well into the foundation (6-ft below the base of fill) and to within 3.5 ft of the crest. Although the drain/filter does not reach all the way to the crest it essentially provides full protection against transverse cracking when the drop in the head of a flow surface in any transverse crack is considered and the low probability and very short time that water would exist in the upper 3.5 feet of the reservoir. Further, providing some significant cover over the filter/drain to ensure that it does not receive infiltration (and resultant cementation and the ability to sustain an open crack) is an appropriate design feature. Thus the location of the top of the filter / drain is not considered a fundamental flaw in the design of the dam with respect to the potential for failure mode development.
7) Principal Spillway Outlet Conduit. The principal spillway outlet conduit is founded on embankment fill. There was no perceived issue (based on observed performance and video inspection of the outlet) with regarded to settlement of the conduit. The FMEA team also perceived no issue with regard to the potential for piping of fill material along/around the conduit because the chimney drain provides a filter diaphragm for the conduit that defends against that potential failure mode.
8) Filter Borrow Sources. The construction reports indicate that there were two filter sources for the chimney drain/filter. The original source was obtained from local borrow (reservoir pool), and was described as angular. This source was changed to a more rounded imported borrow source from a supplier in Phoenix. The angular characteristics of the original source are less preferable for use in a filter / drain zone

because they would have a lesser propensity to collapse and fill an opening (such as a transverse crack). As it turned out switching to the more rounded material in time for it to be placed in the upper portions of the dam, which has by far the greater susceptibility to development of transverse cracking, was fortuitous. Thus, the placement of the less preferable material in the lower part of the dam results in no significant concern with regard to potential failure mode development.

9) Right Abutment Steep Slope. The right abutment contact was designed to be and was constructed on a relatively steep slope (for an embankment dam). This is evident based on a review of design and as-built drawings and plans (See Appendix A). Beyond the primary dam/abutment contact the abutment ridge continues for several hundred feet across the valley, essentially parallel with the dam axis. Thus, the reservoir is retained by this abutment in a similar manner as the main embankment. The abutment ridge "water barrier" was constructed with a small thickness of blanket of fill material. The transition area between the full embankment section at the contact to the blanket fill over the abutment just beyond the dam where the blanket fill covers a relatively narrow portion of the ridge is a location that is unprotected (by the filter/drain present in the full embankment section) and is a potentially vulnerable area for concentrated seepage and/or transverse cracking at the abutment contact or through the abutment just beyond the contact. No cracking has been noted in this area. The reservoir level has not been a high enough level for a long enough period to test the performance of this abutment contact area.

10) Filter Material Permeability. The permeability of the chimney drain/filter material may be lower than anticipated by design due to gradation and placement density of the original angular Zone II material source. The FMEA team does not consider the filter/drain permeability to be an issue at this time because the required capacity of the filter/drain is expected to be small given the limited impoundment times and low hydraulic conductivity of the Zone I fill in the upstream zone of the dam.

11) No Subsidence, Earth Fissures, or Seismic Issues. Evidence and reports do not indicate any indication of the possibility for fissures, or subsidence in this area. The possibility of the presence of earth fissuring or subsidence in the vicinity of the FRS or region around the FRS is considered to be very low due to the geologic subsurface conditions in the region (bedrock and shallow alluvium materials dominate the area). The lack of any studies concerning subsidence or experience with subsidence in this region also illustrate the very low potential for fissuring or subsidence. The FMEA team considered that there are no issues or potential failure modes associated with subsidence, earth fissures, or seismicity with this dam.

12) Sanitary Sewer Line Under Reservoir and Dam. The FMEA team identified that the sanitary sewer pipe that runs through the reservoir and continues through the foundation under the dam does not present a potential failure mode. Examination of the as-built plan as well as construction photos indicates that the pipe is founded on competent, dense native materials; is encased in concrete; and penetrates the chimney drain, which serves as a filter diaphragm around the concrete-encased pipe. The detail for the sewer pipe penetration through the chimney drain was designed and constructed as a field order and is shown on the as-built.

13) Low Probability of Transverse Cracks and Negligible Piping Or Internal Erosion Potential. This is based on:

- the as built Zone 1 material properties which do not have a high plastic clay content,
- the somewhat greater precipitation in this region than lower in the valley (where considerable cracking of the District's Dams has occurred) and
- the lack of appearance of any cracking at the dam to date,

The probability of this dam developing transverse cracks of significant length and width appears low. It is noted for, however, that this dam is relatively young and drying shrinkage cracking likelihood and significance has shown the propensity to increase with time and that not withstanding the second bullet above this dam is in an arid area. In the final analysis, however, the potential for a potential failure mode to develop due to the presence of transverse cracks or due to internal erosion is not credible due to the presence of the filter/drain in the dam.

Key Findings/Differences Related To Failure Mode Development – "Flooding – Overtopping – Spillway Discharges – Etc."

14) Hydrologic Loading . HMR-49 guidelines were used to establish the hydrologic loading for Casandro Wash Dam. Based on its hazard classification (small size – high hazard) the Inflow Design Flood for the dam was established as the ½ PMF. As a matter of routine practice the PMF was also computed (the ordinates of the PMF are needed to define the ½ PMF). The drainage basin area to the dam used in the original design is approximately 1.24 sq. mi. Subsequently basin sizes of 1.6 (LOMR), and 3.0 sq. mi. have been indicated in various reports.
15) The initial (1995) PMF and ½ PMF estimates for Casandro Wash Dam were PMF Peak Inflow – 10,941 cfs, 1/2PMF Peak Inflow – 5,398 cfs
16) Hydrologic Routing. The hydrologic routing for the IDF started with an initial water surface elevation with an empty pool.
17) Rip-Rap At Stilling Basin. The emergency spillway discharge empties into a stilling basin and then flows down an excavated channel that has been filled with riprap (for approximately 4 ft). This rip-rap, which is shown on the as-built plans, is not visible from site observation because the rip-rap material is buried below ground and is obscured by a gravel/cobble mulch cover over the rip-rap. The rip rap does not extend outside of the channel on the flanks of the spillway. Thus, this area is potentially susceptible to erosion. (see finding 26)
18) Principal Spillway Outlet. There may be a potential hydraulic issue with the principal outlet discharging into the emergency spillway when the emergency spillway is in operation. The impact of principal spillway flows with concurrent emergency spillway discharge needs to be evaluated.
19) Emergency Spillway Discharges. During the design of the dam the initial concept regarding the emergency spillway was to have no discharges during a 100-year storm. The primary intake to the outlet was sized on this basis (16 inch diameter open orifice, 1.4 sq. ft. with invert elevation of 2135). Subsequently, however, apparently the hydrology changed such that a discharge of 120 cfs occurred during a 100-yr storm event. This amount of discharge was apparently accepted and such there no redesign of the intake was necessary. The background for this change or the rationale behind acceptance of discharge was not documented. Note that the Casandro Wash

LOMR hydrology indicates no discharge from the emergency spillway during the 100-year storm.

20) No Failure Mode for Principal Outlet. The FMEA team did not identify a potential structural related failure mode for the principal outlet. The team considers it prudent that the outlet conduit be continued to be monitored for movement and be videotaped after major impoundments.
21) Dam Tested with One significant Impoundment. There was one impoundment of 11.5 ft. in 1997. This impoundment was measured from gage elevation 0.00 which was at the invert of the inlet at elevation 2134.69 ft. This places the impoundment at elevation 2145.69 feet, 9.25 feet below the spillway crest and 17.8 feet below the top of the dam.
22) Runoff based on Future Land Use Conditions. The inflow associated with the 100-yr storm (as well as for the PMF and ½ PMF) was estimated based on assuming future land use conditions in the watershed. This results in higher inflow levels than what would be estimated based on existing conditions. The hydrologic loading (peak inflow and volume and the associated routing) was not examined for a 24-hr or 72 –hr storm duration (6-hr only). It was apparently assumed based on previous estimates for other sites that these storms would be less critical with respect to peak reservoir elevation. The FMEA team considers that these assumptions should be verified by accomplishing appropriate flood estimates and routings as necessary. The reservoir levels and the time period that reservoir levels are sustained should be compared and documented for the various storm durations.

Consequence Evaluation

23) Hydrologic Routing. The hydrologic routing for the IDF started with an initial water surface elevation with an empty pool. This assumption is based on ensuring that the pool is drained after the antecedent flood. This assumption appears reasonable to make, if several risk reduction actions noted by the FMEA team are made to ensure that intake opening(s) remain functional. (e.g – utilizes the 24-inch gated opening and positively protects it against plugging).
24) LOMR Hydrology Results. The LOMR hydrology indicates no spill for the 100-yr 6-hr storm event. It is suggested the District to evaluate and accept the LOMR hydrology for the dam. Design hydrology shows spill.
25) Downstream Special Flood Plain District Written Into IGA. The Intergovernmental Agreement between the District and the Town of Wickenburg promulgated and established a special floodplain district for Casandro Wash downstream from the Casandro Wash Dam. The IGA defines the boundaries of a special floodplain district that limits the types of structures that may be constructed within the special district. The aim of establishing the district restricts residential development within the identified boundaries.
26) Minimal Warning Time for Spills. There is very little warning time for spillway releases. There is a need to evaluate and improve public awareness. Also there is a need to improve warning time (improve ALERT system as one measure). There is surface discharge at this dam from the principal outlet before releases in the

emergency spillway which helps ensure downstream residents are aware of a potential spill.

27) Erosion Potential Downstream from Wing Walls. There appears to be a potential for erosion at the downstream end of the emergency spillway behind the wing walls as discharged flows could cause eddies on the backside of the walls where there is currently no rip-rap protection. Significant erosion gullies and headcutting have developed around the manholes in the drainage immediately downstream from the spillway, highlighting the erosivity of the native materials. The FMEA team recommends extending the buried rip-rap around and behind the wing walls and repairing the downstream head cut area.

28) Only One Category I Potential Adverse Consequence And One Category II Potential Failure Mode Identified. The only Category I potential adverse consequence identified is due to normal operations of the emergency spillway. There was only one category II potential failure mode identified, this mode related to seepage erosion through the right abutment.

29) Dambreak Analysis Is Not Realistic. The dambreak analysis parameters and assumptions were:
    - Time to failure: 15 minutes
    - Breach bottom width: 40 feet
    - Inflow design flood: ½ PMF
    - Reservoir initial conditions: empty
    - Time commencement of breach: Pool reaches elevation of emergency spillway crest
    - Type of failure: Breach due to piping (no overtopping as hydrologic analysis indicates that the ½ PMF passes through dam with 3 feet of freeboard.
    - Breach Depth: Extends to bottom of reservoir
    - Concrete spillway is not removed during the breach
    - Breach side slope adjacent to spillway: 0:1 (essentially vertical)
    - Breach side slope adjacent to right contact: 4:1 (follows the natural ground slope)

The FMEA team considers that these breach parameters are not realistic. The FMEA team recommends that the dambreak analysis be reevaluated and the EAP updated with the new inundation mapping.

30) Local Control of EAP. The EAP is monitored and implement locally by the Town of Wickenburg. This control helps in shortening response time and evacuation time.

Action Items – Risk Reduction Measures or Investigations

31) Flood Event Inspections. Monitor left and right abutments during inspections at flood events. See item no. 1 above.

32) Route Full PMF. Need to route PMF under as-built or existing conditions and document (24 and 72 hour durations were not evaluated).

33) Gated Orifice Opening. Possibility of using the gated 24-in opening during rising limb of hydrograph. This would require re-evaluation and re-establishment of the operating criteria to increase level of flood protection.

34) Operability of 16 inch diameter Open Orifice. Look at means to ensure the current intake to the outlet works is not plugged with debris or sediment and thus operability of the open orifice.
35) Land Rights To Top of Dam. Check land rights for reservoir pool elevation and top of dam elevation. Future consideration may require a check of land rights up to the reservoir elevation under the PMF routing.
36) Evaluate Need for Upstream Emergency Action Plan.
37) Conduct Stage-Storage Study. Conduct a stage-storage study with and without considering increased discharges through the principal outlet (modifying operation of 24-inch orifice).
38) Verify LOMR Use of Orifice During Flood Routing. The Casandro Wash LOMR indicated no emergency spillway discharge while the design study has spill. Check LOMR study to see if discharge from principal spillway was determined.
39) LOMR Has Been Approved By FEMA. The District has adopted the findings of the LOMR study, but has not put those findings into practice (e.g. - not in the key resource documents for the Dam). The District should decide on where and how it should implement/use the LOMR results regarding the hydrology for the dam and on the implications of adopting the LOMR results.
40) Route Full PMP/PMF as To Concept Report. Verify the PMF parameters and routing reported in the concept design document report and determine what the starting water surface elevation used in pool as initial conditions.
41) Check 24 and 72-Hour PMP/PMF Storms. These storms may be more critical than the 6-hour storm.
42) Make Crest Level. Fill in existing low spot on dam crest.
43) Crest Raise Possible. Raising the dam crest is an option if routing indicates such a need for a modification.
44) Evaluate Principal Spillway Discharge/Emergency Spillway Discharge Hydraulics. Evaluate the relationship and effect of principal outlet on spillway discharge.
45) Rip-Rap At Downstream Ends of Wing Walls. Place rip-rap on downstream ends and sides of wing walls to protect end around condition and erosion by backflow eddies. Run two-dimensional flow model to assist in determination of size and extent of rip-rap.
46) Develop Measures to Minimize Plugging of the Principal Outlet Orifice. Presently the only measure is a large opening trash rack. Smaller floatable debris may by-pass the track rack.
47) Evaluate Using the 24-In Opening In The Intake On the Rising Limb Of Hydrograph. Evaluate opening this inlet on the rising limb of hydrograph within criteria and design intent. This would affect both operation and maintenance and Emergency Action Plan procedures.
48) Check US-60 Box Culvert. The US 60 box culvert has a gage and is incorporated as part of the District ALERT system. Use the information from this gage during flood events to assist in EAP response.
49) Monitor Principal Spillway Conduit. Investigate principal outlet conduit deformation or separation after impoundment.
50) Document Stability Analysis. Summarize the stability analysis in Structure Assessment Report and locate any retests.

51) Monitor Left Abutment Swale And Downstream Dam Face And Left Abutment Under High Impoundment.
52) Document Estimate Ingress Time. Document in Structures Assessment Report time to fill (e.g. 10-ft of head in 24 hours, 15 ft of head for 5 days).
53) Show Right Abutment Failure Mode In True Scale. Show right abutment in true scale in plan and section. Monitor right abutment area during high impoundment.
54) Evaluate Headcut Erosion. Address any headcut erosion downstream and ongoing maintenance.

General Findings

55) Make-Up of FMEA Team. The FMEA team included an individual (Mike Greenslade, P.E.) who provided construction inspection/observation while employed at the Arizona Department of Water Resources, Office of Dam Safety. His input was very valuable to the FMEA workshop for Casandro Wash Dam.
56) Going Through A Failure Mode And Effect Analysis During Initial Design Stages May Have Changed Several Design Elements. The FMEA, if applied during early design, may have changed the concept design of the abutments, drain, principal outlet, rip-rap and end of emergency spillway, emergency spillway, and conducted a formal hydrologic and hydraulics investigation for the full PMF.
57) Construction Phase Observations and Documentation. The construction phase documentation was good but was lacking in some areas. It is suggested that photos are taken on a daily basis. On critical issues it is suggested that more than one agency inspect. Multiple copies of documentation should be kept with multiple agencies and owners (ie ADWR and FCDMC should both have copies of all construction documents).
58) Energy Dissipator/Stilling Basin Drain Pipe. The drain pipe in the stilling basin is used as a relief valve for pressure.
59) Sanitary Sewer Line is Not Pressurized. The sanitary sewer was designed for open channel hydraulics. No taps or tie-ins are allowed into the sewer line.
60) Principal Outlet Size Is 36-in Diameter Reinforced Concrete Pipe. The size of the principal spillway conduit of 36-inches was not required for flow capacity but to meet jurisdictional requirements.

3.0 POTENTIAL FAILURE MODES

Potential failure modes identified by the FMEA team are presented below. The failure modes were placed into one of four categories as follows.

- Category I – Failure modes of greatest significance
- Category II – Failure modes of lesser significance (but not inconsequential).
- Category III – Failure modes for which insufficient information is presently available to make a judgement on the significance of the failure mode. The development of additional data and information is warranted. Additional records research may be justified.
- Category IV – Failure modes which are not physically possible or which are clearly not credible.

For each of the potential failure modes identified, a detailed failure mode description is provided and the factors that make the failure mode more likely (adverse factors) or less likely (positive factors) to occur are listed following the failure mode description. The primary rationale for the categorization of the potential failure mode (or adverse consequence) is provided. In addition, any identified potential actions for risk reduction for each potential failure are then provided.

CATEGORY I - FAILURE MODES OF GREATEST SIGNIFICANCE

1. Potential Adverse Consequences Resulting from Emergency Spillway Discharges During Major Rainfall Events (Category I).

Potential Adverse Consequence Description: The Casandro Wash Dam emergency spillway is an 80 foot wide reinforced concrete chute spillway located in the middle of the main dam embankment. Normal flood discharges from the spillway are directed into a natural, shallow, ill defined wash that is bounded by development. The flows continue in the wash and are directed toward residential development within the Town of Wickenburg. This potential "failure mode" does not "fail" the dam or emergency spillway. However, any appreciable flows from the spillway would likely cause adverse consequences downstream from the dam. Very large flows have the potential for resulting in extensive damage and loss of life. This potential adverse consequence was rated as Category I because normal "successful" operation of the emergency spillway can produce discharges that could have significant adverse consequences and the likelihood of occurrence of these adverse consequences is associated with floods of reasonably probable frequency.. The floodwaters will pass through the emergency spillway. From that point the water will flow into residential housing communities downstream from the dam.

Adverse Factors:

(1) Emergency spillway flows are directed into residential homes downstream from the dam.
(2) ½ PMF discharge is approximately 3700 cfs.
(3) Effects are significant at relatively low frequency flows (probably before 500-year flow).
(4) Downstream channel relatively constricted (no large spread out of flow) in front of downstream populated area.
(5) 72-hour or 24-hour PMF may be more critical.
(6) Land use is changing in upstream watershed.
(7) Very little warning time for discharges from emergency spillway. Advanced warning time is minimal.
(8) Very small watershed and small reservoir. Quick rainfall/runoff response and quick fill time of reservoir (approximately less than one hour of fill time).
(9) Could disrupt downstream utilities and railroad operations.

Positive Factors:

(1) Surface flows provide some advanced warning.
(2) Dam is instrumented as part of the District Alert System. Would provide minimal warning of impending inflows and discharges.
(3) Spillway discharge exit is normal operation and straight forward.
(4) Short spillway discharge duration for PMF.
(5) Likelihood of spillway flows may be low.
(6) Have downstream Emergency Action Plan. EAP implemented locally by Town of Wickenburg.
(7) Storm itself would provide warning of heavy rainfall.

Potential Actions for Risk Reduction:

(1) Increase/improve orifice outlet capacity/capability.
(2) Enhance warning/emergency preparedness associated with these discharges.

CATEGORY II – FAILURE MODES OF LESSER (BUT NOT INCONSEQUENTIAL) SIGNIFICANCE

2. Seepage Erosion through Right Abutment. (Category II – considered but not highlighted).

Failure Mode Description: Initially seepage flows into the right abutment at or near the dam/abutment as a result of a separation of the zone between the dam section and the blanket fill or as a result of cracks or openings that penetrate the blanket fill material. Seepage flows increase and flow with some appreciable velocity develops through a natural coarse zone or zones in the abutment. This flow in the coarse zone erodes silt or fine sand zones adjacent to the coarse zones and "caving" of overlying materials initiates. Flows increase and caving continues. Caving continues to the point of allowing an overtopping breach to start. Continued breaching erodes natural hillside. This mode is only feasible during the highest levels of flooding. Below elevation 1255 ft the seepage would have a longer flow path and would not be likely to develop adequate velocities to initiate erosion of adjacent materials. For this failure mode to get into realm of reality there needs to be an anomaly or unknown situation or condition within the abutment (of which there is no specific evidence) that is particularly adversely configured to allow the erosion process to develop and proceed as postulated. This mode is more likely to occur on the right abutment than on the left abutment because of the nature of the tie with the abutment and the presence of the thin blanket fill over the abutment ridge.

Adverse Factors:

(1) Presence of coarse, lenticular zones and fill materials in abutment.
(2) Steep abutment cut and contact increase possibility of differential settlement, arching in fill, and crack formation.
(3) Medium dense materials down to 20-ft to 22-ft.
(4) Fairly direct flow path.
(5) Materials are erosive.
(6) Material relationship allows adverse juxtaposition.

(7) The possibility of a crack or anomaly that could allow high seepage velocities to develop.

Positive Factors:

(1) Flow velocities near exit may be too low to move material unless a crack or anomaly occurs.
(2) Low head acting at high pool elevations where material properties and geometric configuration is more adverse
(3) Short impoundment duration time especially at higher depths and relatively longer path.
(4) Very infrequent flood event.
(5) Impoundment of record to elevation 1244.9-ft.
(6) Filter keyed into abutment protects fill/abutment contact.

CATEGORY III – FAILURE MODES FOR WHICH INSUFFICIENT INFORMATION IS PRESENTLY AVAILABLE FOR MAKING ENGINEERING JUDGMENTS

3. Potential Failure from Embankment Overtopping Due To Major Floods Approaching The PMF Level. (Category III – failure modes for which insufficient information is presently available for making engineering judgments).

Failure Mode Description: The inflow design flood for Casandro Wash Dam is the ½ PMF. The design of the dam was based on the ½ PMF using HMR-49 guidelines and the 6-hour duration storm. This failure mode was examined based on the possibility of the occurrence of major floods approaching the PMF and the uncertainty as to whether these floods can be passed by Casandro Wash Dam and Spillway under the current operating conditions. To address this uncertainty the hydrologic routing needs to be re-done to for current PMF and dam spillway conditions. The original routing for the PMF done for the concept design resulted in a water surface elevation at the dam at 2162.8 ft. (Which would indicate that the PMF could be safely passed without overtopping.) However, this routing was done for a different spillway crest type (ogee versus elliptical), and for a different spillway crest elevation (2153 ft versus 2155 ft). The design crest of dam is 2163.5 ft and as-built top of dam crest elevation is 2163.5 ft. The actual current dam crest elevation is 2163.3 ft. The PMF discharge through the emergency spillway, based on the concept design configuration, and not the as-built configuration, is approximately 6,800 cfs (from rating curve). The routing for the original design using the ½ PMF started with an empty pool and thus it was assumed that the PMF routing did as well. Whether or not an allowance for outlet flow was made is not known.

Adverse Factors:

(1) Very Small basin – much greater chance to get rainfall events that approach the PMP than in larger basins, also the small basin results in a quick rainfall/runoff relationship which reduces the chance for advance warning and does not allow much time for response.

(2) The 16-in Orifice is likely to plug with debris. The invert elevation of the orifice is 2134.69 ft. and the toe of the upstream heel is listed as 2136 ft. thus it seems likely that the inlet could become plugged with sediment or debris from even moderate storms. The small amount of flow into this inlet (30 cfs with pool at 2155 ft.) would have little influence on the routing of a major storm; however the impact would come if the plugging occurred in an antecedent storm and the pool was not drained at the onset of the major storm.

(3) Medium dense materials down to 20-ft to 22-ft. This is referring to materials in the natural ground (abutment/groins) which would also be subject to overtopping erosion

(4) Potential for future development in upstream basin area could impact runoff characteristics (see #6 below)

Positive Factors:

(1) Rock mulch placed on upstream and downstream slopes.
(2) Short duration of major storms (PMF) and short duration of high impoundment.
(3) Freeboard for PMF approximately 0.5 ft.
(4) Crest is level
(5) LOMR study may indicate lower PMF pool.
(6) No detention considered in upstream area in hydrology models.
(7) 14-ft wide crest allows for dam raise.
(8) Well-graded and well-compacted Zone I fill will be erosion resistant.

4. Potential Effect of Principal Outlet Discharges on Emergency Spillway Discharges. (Category III – failure modes for which insufficient information is presently available for making engineering judgments).

Failure Mode Description: The principal spillway was designed and constructed to discharge into the emergency spillway chute. If discharges or spills were to occur in the emergency spillway there would be simultaneous flow from the principal spillway as well. The documents for the design of the principal and emergency spillways did not analyze the effect of discharges from the principal spillway on the flow hydraulics of the emergency spillway. This condition may not result in a realistic concern as a potential failure mode of the dam or spillways but may have an adverse consequence on the operation of the emergency spillway, downstream and lateral extent of erosion protection, and required freeboard on the wing walls.

CATEGORY IV – FAILURE MODES WHICH ARE NOT PHYSICALLY POSSIBLE OR WHICH ARE NOT CLEARLY CREDIBLE

Other Considerations: These candidate potential failure modes or other issue raised were discussed by the FMEA team but a potential failure mode was not identified for evaluation (descriptions of adverse and positive factors were not developed). The primary rationale as to why this issue was not carried forward are provided.

(1) **Emergency Spillway Discharges could lead to downstream channel erosion behind the stilling basin wing walls beyond the riprap-protected zone, leading to undermining of the stilling basin walls and slab, and erosion at the downstream toe of the embankment adjacent to the stilling basin:** The channel immediately downstream from the stilling basin is protected by a rip-rap apron that is as wide as the spillway chute (80 ft), and extends downstream from the cutoff wall approximately 40 ft (as scaled from plan drawings). The downstream toe area adjacent to the riprap apron and behind the stilling basin wing walls is covered with thin rock mulch, but does not have riprap protection. The cutoff wall in the basin is 6-ft deep. Back eddy flow is possible around the ends of the training walls and the unprotected area outside and behind the walls that could result in local scour and erosion. A drain in the bottom of the stilling basin is intended to enhance rapid dissipation of uplift pressures under the slab following flow events. The team did not carry this issue forward because it was considered that if erosion of the nature described were prone to occur, it would be able to be observed under any significant spillway discharge (i.e. at levels below the major flood) and be able to repaired to withstand future larger events. (Experiencing smaller, but still significant flood events of greater frequency are the likely scenario.) In the very unlikely event that the near maximum (PMF) event were to be the first major spill, the damage would still be considered as repairable damage rather than damage that would result in dam failure.

(2) **Plugging of Principal Spillway Gated Orifice.** Plugging of the Principal Spillway Gated Orifice reduces discharge capacity during flood events and increases likelihood of flows over the emergency spillway at lower-frequency floods. The principal spillway outlet structure consists of a 36-inch diameter reinforced concrete pipe. The inlet headwall to the pipe has an 16- inch orifice plate over the front of the spillway conduit. There is also a 24-inch diameter orifice that is gated. The gate stem is operable from the crest of the dam. The gated orifice is located on the crown of the 36-inch diameter spillway pipe. The gate may be opened in the event the lower orifice plate is plugged. The two orifices are protected by a trash rack. The FMEA team considers that avoiding the plugging is an operation /maintenance issue that should definitely be addressed for the reason given above as well as to ensure that the pool is drained prior to a major storm event.

(3) **Sanitary Sewer Penetration Under Foundation of Dam.** The sanitary sewer provides a potential pathway for preferential seepage that leads to internal erosion of embankment fill and/or foundation soils surrounding the pipe, leading to development of a tunnel through the dam and uncontrolled release of water through the tunnel. A 12-in diameter ductile iron sanitary sewer pipe passes under the dam foundation at Station 14+59.21 (on dam centerline). The sewer is owned and operated by the Town of Wickenburg. The sewer was relocated as part of the design and construction of Casandro Wash Dam. A review of the as-built plan indicates that the chimney drain extends all around the sanitary sewer pipe, serving as a filter diaphragm. Upstream and downstream from the filter, the pipe is encased in concrete slurry from just upstream of the dam to the downstream sanitary manhole at the downstream toe of the dam. The pipe is founded in the

native, cemented soils except from Sta 10+30 to 10+90 (on the sewer-line), where the pipe invert was above grade. Special details were developed in the field to form the concrete pipe encasement through this reach, and to construct the fill around the pipe to ensure good compaction against the formed concrete. Several sanitary manholes are located in the pool area. These manholes have been designed as watertight manholes.

(4) **Settlement And Elongation Of The Principal Spillway.** The principal spillway conduit foundation could lead to disruption of joints in the pipe and leakage through the joints when the pipe is flowing full during flood events. The spillway conduit extends through the embankment fill and is founded in fill material. The FMEA teamed noted that differential settlement may occur and cause deformation in the spillway conduit. The potential for embankment settlement causing elongation and disruption of the pipe is mitigated by the low height of the dam, the relatively firm foundation, and very low probability for saturation of the fill. There has been no evidence to date specifically on the pipeline conduit that would indicate deformation in the pipeline. There appears no need to modify the District video inspection cycle for Casandro for once every 5 years.

(5) **Slope Stability Analysis.** The existing slope stability analyses are not representative of materials used to construct the dam. During construction the Zone I materials were found to have different characteristics than those assumed for design. The design had assumed Zone I would be a silty sand with less than 10 percent non-plastic fines. As-constructed, Zone I had 10 to 24 percent medium plasticity clayey fines. In a report by Ricker, Atkinson, and McBee (RAM) dated November 18, 1996, it was stated that the Zone I materials produced on site had a "somewhat higher shear strength and lower coefficient of permeability" and therefore the dam was expected to have higher factors of safety for slope stability (apparently the slope stability was "re-evaluated" by RAM by not "re-done") and lower volumes of seepage than was anticipated in design. From review of documentation, the FMEA team found high strength soils in the foundation and there is no evidence of slumps, slips, or slides. A review of the stability analysis performed by CH2M Hill for final design based on the silty sand Zone I materials indicates adequate factors of safety. The downstream slope inclination was controlled to a relatively flat embankment slope (3H:1V), not by stability considerations, but rather to accommodate the emergency spillway design and construction. Although slope stability is not considered to be a problem, the factors of safety should be re-calculated and documented using shear strength assumptions that more closely represent the Zone I materials actually used to construct the dam.

(6) **Seepage Erosion Along Spillway Wall.** Construction photos indicated the spillway was constructed by cutting into the compacted embankment crest. A question was raised by the FMEA team regarding the sloughing of materials on the steep cut slopes in the embankment, especially through the granular Zone II section, and the ability to re-compact the sloughed embankment and backfill materials in the narrow backfill zone behind the spillway walls through the crest. The on-site inspector (Mike Greenslade – a member of the FMEA team) did not note any problems with backfilling or maintaining the integrity of the Zone II

gradation in the backfill zone. The spillway wing walls are protected by Zone II materials. The filter material (Zone II) provides a defense against seepage erosion. Therefore no viable potential failure mode was identified.

(7) **Cracks In Embankment.** Crack(s) exists in the dam prior to flood or develops at the onset of the flood – seepage fills the crack and the flow velocity erodes/expands the crack leading to a breach (root cause - Zone II Filter Does Not Extend to Dam Crest). The chimney drain/filter provides a defense against embankment cracking up to elevation 2160 ft, which is the maximum water surface elevation for the IDF. No potential failure mode identified. This candidate mode was not carried further because: (1) even for flood waters that rise to just below the dam crest it is highly likely that the free water surface in a crack would drop to the level of the filter protection by the time it traversed to that point in the cross section (see major finding 6) and thus the filter/drain offers fundamental/direct protection against this potential failure mode; and (2) for floods that rise above the spillway crest elevation there is inadequate time for seepage erosion to expand the crack to form a breach before the reservoir is drawn down by spillway flows; and (3) there is currently no evidence of transverse cracking on this dam, and its short crest length is a mitigating factor against cracking.

(8) **Left Abutment End Around Seepage Erosion Leading to Breach.** During high impoundment events, water seeps through the left abutment, along preferential seepage paths through coarse lenses or pre-existing cracks, and internal erosion develops as the seepage emerges on the downstream groin and the erodible materials begin to pipe out. Observations of exposed native materials in the left abutment area indicated that the surficial materials are highly erodible and exhibit significant erosion gullies and holes. The geological exploration reports indicated the abutment is comprised of graded terrace deposits comprised of 30 to 40 feet of loose to medium dense sand and silty sand, with possible fill placed on top. The FMEA team found no specific evidence for a seepage erosion failure mode or a potential problem. There is a very long path for a seepage erosion failure mode to occur. Seepage ingress may be rapid at the beginning of filling the pool with a steep gradient, but the gradient flattens out fairly rapidly. The filter pushes the path to start any seepage erosion to the end of the dam. Construction activities chased down a hard zone to the foundation cutoff. The duration of impoundment is very short and not long enough for this failure mode to develop. Based on a description of the material, the short duration of flooding, the evident diligence of the construction and the inspection of the construction, the team considered this mode too remote to be credible. The action called for relative to this candidate mode is to regularly visually monitor the left abutment between the end of the dam and the end of the abutment for any seepage and for any settlement.

4.0 LIKELIHOOD AND CONSEQUENCE CATEGORIES

The likelihood of occurrence of each identified failure mode has been assigned to one of three categories according to the FMEA team professional judgment. This adopts a subjective, degree-of-belief approach to the expression of uncertainty, as opposed to relative-frequency statistics of observed occurrences. These likelihood judgments

express degrees of uncertainty but are not quantified in the probability matrix. They recognize simply that the occurrence of some failure modes is believed to be more likely than others for this particular dam. This relative measure of likelihood is contained in the categories defined in Table 1.

Table 1. Likelihood Categories.

Category	Description
High	Highest likelihood of occurrence for Casandro Wash Dam
Medium	Intermediate likelihood of occurrence for Casandro Wash Dam
Low	Lowest likelihood of occurrence for Casandro Wash Dam

In assigning likelihoods during the FMEA workshop, failure modes representative of the most likely and the least likely categories were evaluated.

Consequence categories follow along similar lines as likelihood categories in reflecting the relative severity of failure effects specific to the dam. The actual magnitude of the downstream consequences depends on such factors as economic losses, population at risk, and the effectiveness of the warning and evacuation. These were not evaluated directly for the FMEA. This relative measure of consequence is contained in the categories defined in Table 2.

Table 2. Consequence Categories

Category	Description
High	Highest inundation effects for Casandro Wash Dam
Medium	Intermediate inundation effects for Casandro Wash Dam
Low	Lowest inundation effects for Casandro Wash Dam

5.0 FAILURE MODE AND EFFECTS TABLE

Construction of the Failure Mode and Effects Table (Table 3) summarizes the failure modes identified and evaluated in the FMEA workshop by the workshop FMEA team. The columns contain the following elements from left to right:

- Failure Mode – identifies the primary failure mechanism
- Initiating Condition – condition(s) giving rise to initiation of the failure mode/sequence
- Effects – distinguishes dam breach and spillway discharge failure types
- Likelihood – likelihood category form Table 1
- Consequences – consequence category from Table 2
- Information Needs – summary of important additional information that could support or modify the failure mode assessment provided

- Existing Risk Reduction Factors – conditions or measures in place that have acted to reduce likelihood and/or consequences assigned
- Potential Risk Reduction Measures – action, studies, or features that might reduce the assigned likelihood and/or consequences
- Comments – supplemental remarks

Table 3. Summary of Failure Mode and Effects Analysis
Casandro Wash Dam
Maricopa County, Arizona

FAILURE MODE	INITIATING CONDITION	EFFECT	LIKELIHOOD	CONSEQUENCES	INFORMATION NEEDS	EXISTING RISK REDUCTION FACTORS	POTENTIAL RISK REDUCTION FACTORS	COMMENTS
1. Adverse Consequences for Normal Operations of Emergency Spillway (Category I)	Reservoir inflow equal to or greater than 100-year flood	Discharges in emergency spillway and downstream inundation	Low (PMF Event) High (200 yr Event)	High (PMF Event) Low (200 yr Event)	New flood routing; Multiple storms; 24-hr/72-hr PMP may be more critical	Dam is instrumented as part of District ALERT system Have EAP Discharge duration of PMF is short	Increase capacity of principal outlet	
2. Seepage Erosion through Right Abutment (Category II)	Reservoir inflow at Probable Maximum Flood	Downstream inundation	Low	High		Filter keyed to abutment; filter has finger drains	Monitor right abutment during flood events	
3. Overtopping (Category III)	Reservoir inflow at Probable Maximum Flood	Downstream inundation	Not determined	Not determined	New flood routing Multiple storms 24-hr/72-hr PMP	PMF is short duration Gravel mulch on both slopes	Increase capacity of principal outlet Open low level gated outlet	
4. Effect of Principal Spillway Discharges on Emergency Spillway Discharges. (Category III)	Reservoir inflow equal to or greater than 100-year flood	Hydraulic Impacts to Emergency Spillway flows	Not determined	Not determined	Hydraulic study	Concrete lined emergency spillway, training walls, and stilling basin. Rip-rap downstream		

6.0 FAILURE MODE BINNING

While the FMEA table contains the likelihood and consequence attributes of risk, it does not portray risk as such. Binning extends the FMEA to the final step of separating failure modes into rank-ordered groupings according to their respective relative risks. It is convenient to bin failure modes into a two-dimensional array as shown in Table 4, where each failure mode falls into a discrete region of risk space according to its particular likelihood and consequence attributes.

Table 4. Failure Mode Binning for Casandro Wash Dam
(Numbers refer to failure mode identification numbers in Table 3 and shaded region represents comparatively greater risk)

Consequences

Likelihood	HIGH	MEDIUM	LOW
High			1. 100-year event
Medium			
Low	1. PMF Event 2		

In the format of Table 4, risk increases to the upper left of the array and decreases to the lower right. Thus the shaded region of Table 4 contains any failure modes of generally greater risk. Note that Table 4 indicates a portion of failure mode 1 is directly within the shaded region. Failure Mode 1 (adverse consequences related to normal spillway discharge) is depicted as ranging from low likelihood, high consequences (for the PMF event) to high likelihood, medium consequences (for the 100-year event). The range for failure mode 1 spans the medium likelihood, medium consequence of the shaded risk region. The determination of failure mode 1 falling within this block of the shaded region is dependent on the storm frequency, magnitude, and downstream consequences.

7.0 SUMMARY AND CONCLUSIONS

Casandro Wash Dam was constructed pursuant to a relatively modern dam design. Construction appears to have been without any particular issues. The dam has performed normally and satisfactorily for 8 years. The structure is satisfactorily maintained and monitored.

However, it is prudent to recognize that there exist for all dams specific ways that failure could come about that warrant attention and diligent monitoring. The identification of a condition or process as a "potential failure mode" does not imply that the dam is about to fail or even necessarily that there is a dam safety deficiency at the site. Rather it identifies physically possible conditions or processes (generally with a remote but still credible chance of occurrence) that persons associated with owning, inspecting, analyzing and operating the dam should be aware. Some of the potential failure modes are highlighted (or prioritized) for attention of the dam owners and operators. They are highlighted because the specific conditions at the dam and appurtenant structures are such that these failure modes are physically possible and are considered the most realistic and most credible potential failure modes definable at the site.

One Category I potential failure modes was identified by the FMEA team. The Category I failure mode is related to adverse consequences from normal operations of the emergency spillway during major flood events. The length of time the spillway flows is of short duration (a few hours). However, there are residential structures downstream of the emergency spillway and there is no defined downstream channel. There are a considerable number of people and structures at risk in the flow path in the event of a spillway discharge.

A number of potential risk reduction actions were identified by the team related to monitoring, information collection and documentation and modification of operations. These are all identified in the section on Major Findings and Understandings.

CASANDRO WASH DAM APPENDIX - FMEA REFERENCE MATERIALS

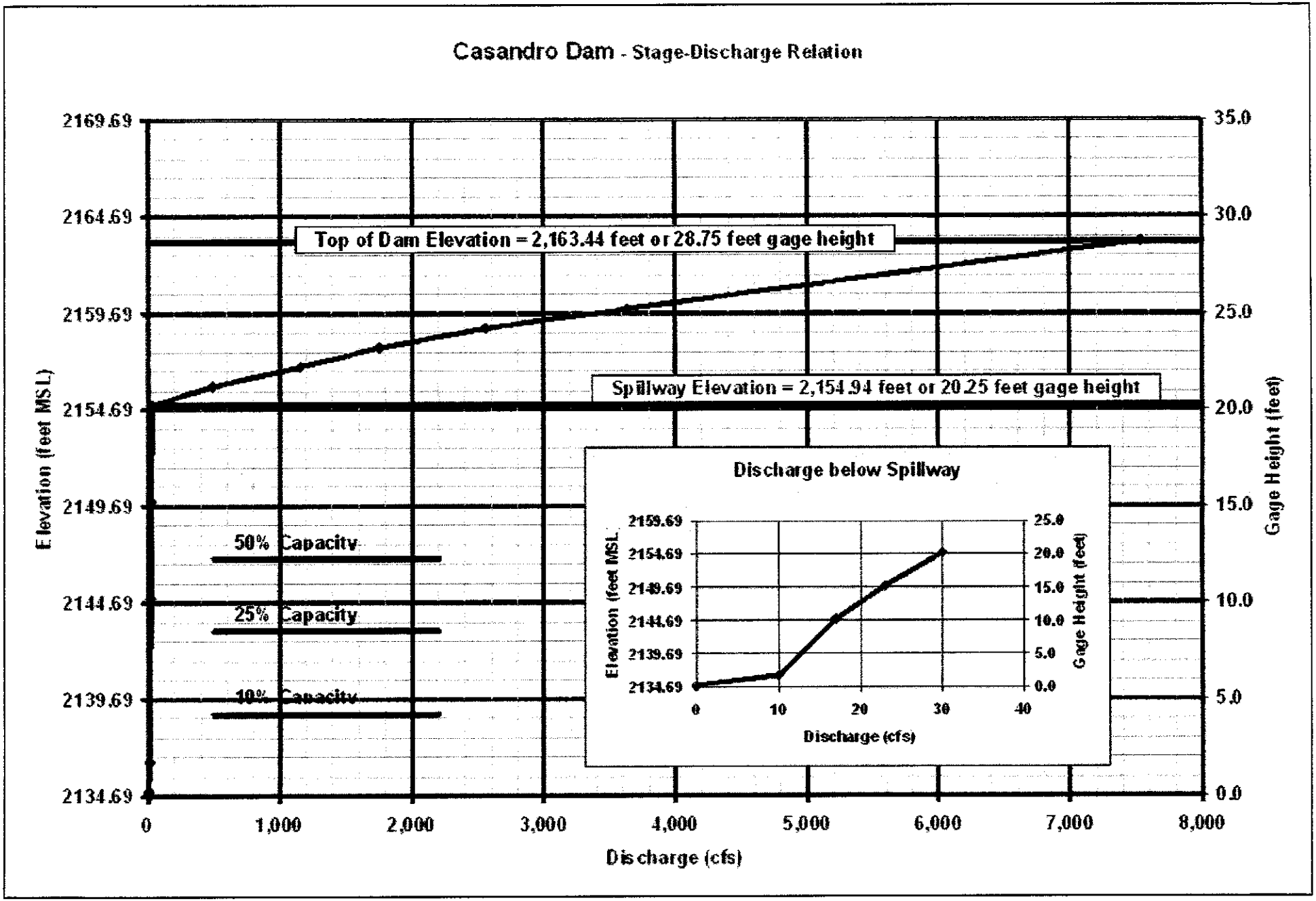
Casandro Dam - Stage-Discharge Relation
Top of Dam Elevation = 2,163.44 feet or 28.75 feet gage height
Spillway Elevation = 2,154.94 feet or 20.25 feet gage height
50% Capacity
25% Capacity
10% Capacity
Elevation (feet MSL)
Gage Height (feet)
Discharge (cfs)
2169.69
2164.69
2159.69
2154.69
2149.69
2144.69
2139.69
2134.69
35.0
30.0
25.0
20.0
15.0
10.0
5.0
0.0
0
1,000
2,000
3,000
4,000
5,000
6,000
7,000
8,000
Discharge below Spillway
Elevation (feet MSL)
Gage Height (feet)
Discharge (cfs)
2159.69
2154.69
2149.69
2144.69
2139.69
2134.69
25.0
20.0
15.0
10.0
5.0
0.0
0
10
20
30
40

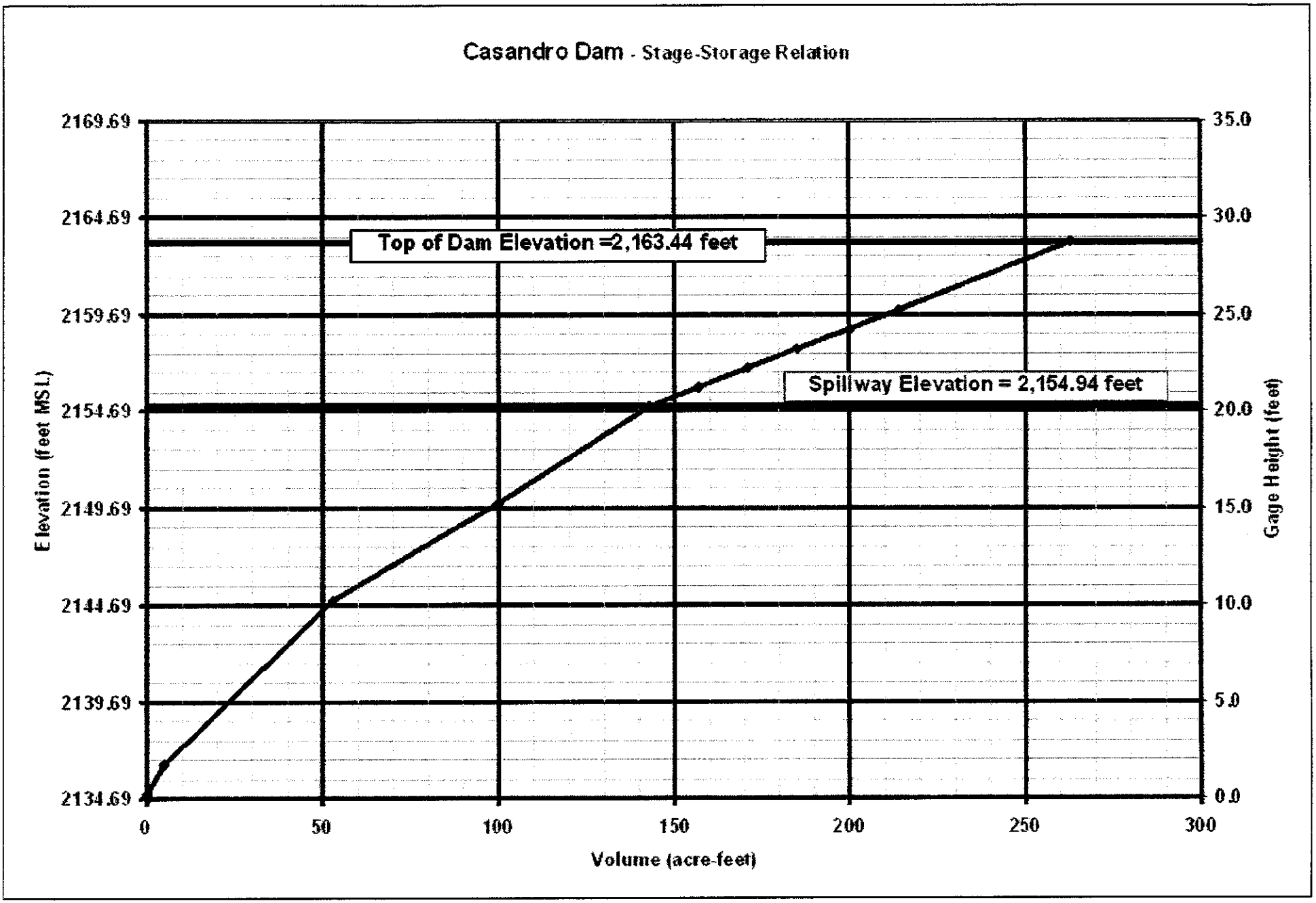
Casandro Dam - Stage-Storage Relation
Top of Dam Elevation =2,163.44 feet
Spillway Elevation = 2,154.94 feet
Elevation (feet MSL)
2169.69
2164.69
2159.69
2154.69
2149.69
2144.69
2139.69
2134.69
Gage Height (feet)
35.0
30.0
25.0
20.0
15.0
10.0
5.0
0.0
0
50
100
150
200
250
300
Volume (acre-feet)

CASANDRO DAM

FCD GAGE ID# 7132, 7133

STATION DESCRIPTION

LOCATION - Casandro Dam is located west of downtown Wickenburg, Arizona just north of US 60 behind the bowling alley. Latitude 33 57 57. Longitude 112 45 01. The gage is located in SE1/4 NW1/4 S11 T7N R5W of the Wickenburg 7.5-minute USGS quad map.

ESTABLISHMENT - The gage was installed on Aug. 14, 1996 shortly following the completion of the dam.

DRAINAGE AREA - The drainage area at the dam is 1.24 square miles.

GAGE-- The gage is a pressure transducer type instrument. As of May 13, 1998 the instrument was a Druck PT.

HISTORY-- No previous gage at this location. Datum was changed for Water Year 1998 to better match the O & M black and white staff gages on the dam. These staff gages are more closely set to 0.0 ft as the ground at the inlet rather than the inlet invert. The inlet invert was used from the original installation to the end of Water Year 1997 as the 0.0 ft gage height as no staff gages were installed when the initial installation was done. The pressure transducer was replaced on January 5, 2000. The new device calibration is 10.24 increments per foot.

REFERENCE MARKS -

RM 1 is a FCD brass cap near the top of the right bank of the emergency spillway at gage height 29.04 ft (levels of 5/19/98) stamped as elevation 2163.73 ft.

RP 1 is the SW corner of the top of the inlet headwall at a gage height of 8.02 ft (2142.71 ft) (levels of 5/19/98).

GAGE ELEVATIONS-- The PT is at 0.19 ft (2134.88 ft). The staff gages read as follows: (based on levels performed May 19, 1998)

0 - 5 ft staff --- Staff 5.0 ft = 4.93 ft gage height

5 - 10 ft staff --- Staff 10.0 ft = 10.02 ft gage height

10 - 15 ft staff --- Staff 15.0 ft = 14.93 ft gage height

15 - 20 ft staff --- Staff 20.0 ft = 19.98 ft gage height

20 - 25 ft staff --- Staff 25.0 ft = 25.04 ft gage height

The gage height 0.0 ft (2134.69 ft) is taken as the concrete pad immediately in front of (upstream of) the inlet opening. The inlet invert is at 0.25 ft (2134.94) gage height.

CHANNEL AND CONTROL-- The primary outlet for the dam is a 36-inch diameter culvert with

two inlets. The auxiliary outlet is a spillway located in the center crest of the dam. Control for flows below about 20.25 feet gage height is culvert flow. Above 20.25 feet gage height, spillway flows begin.

PRIMARY / AUXILIARY OUTLET

The primary outlet is a 36" pipe which has a 16" diameter restricted ungated opening. A secondary auxiliary orifice with a 24" square opening is not considered in the stage-discharge relationship used in the ALERT system for this station. The ungated opening is at an elevation of 0.25 ft gage height.

The auxiliary spillway begins to overflow at 20.25 ft gage height (2155.0 ft -- from design plans). The spillway is an 80 ft wide concrete structure with an elliptical crest and a spillway chute slope of 3:1. The top of the dam is at 28.75 ft gage height (2163.5 ft -- from design plans).

RATING-- Current rating is rating #2. Rating #2 was created to account for a datum discrepancy. Rating #1was computed using design information. Both the principle and emergency spillway stage-discharge ratings are based upon the design calculations provided by M. A. Lopez and the Design Plan Sheets.

The current capacity rating is rating #2. As for the discharge rating, rating #2 was created to account for datum discrepancy between original design and actual conditions. Rating #1 was from the design information. The stage-storage rating curve was also taken from the Design Sheets. The As-Built sheets show no changes to the design curves.

DISCHARGE MEASUREMENTS-- Wading measurements could probably be made not far downstream for outflows. However, these outflows are relatively small (30 cfs at about 20 ft gage height). Direct measurements of spillway flows are not recommended.

FLOODS-- Sept. 10-11, 1996 maximum impoundment 6.1 ft, 23.5 ac-ft, 16.4 % full; Sept. 26, 1997 maximum impoundment 11.55 ft, 65 ac-ft, 45.5 % full. (stages for both events given in new datum (i.e. inlet invert = 0.25 ft); August 31, 1999 maximum impoundment 6.47 feet, 24.6 ac-ft, 17% full.

REGULATION-- The dam regulates flows in Casandro Wash.

DIVERSIONS-- None.

ACCURACY-- Good.

JUSTIFICATION-- Monitor FDCMC's Casandro Dam and provide data for flood response activities at the Town of Wickenburg.

UPDATE January 6, 2000

DE Gardner

GAGE ID HISTORY

ID	Elev of Instr. in GH	Elev of Instr. in MSL	Period
7133	0.19	2,134.88	10/1/97 - present
7133	-0.08	2,134.61	8/15/96 - 10/1/97

SITE DATA

LOCATION	LOCATED IN WICKENBURG NORTH OF US 60 JUST WEST OF MARIPOSA AVENUE
DRAINAGE AREA	1.3 MI^2
JURISDICTION	WICKENBURG, ARIZONA
WATERSHED	LOWER HASSAYAMPA
SECTION/TOWNSHIP/RANGE	NW1/4 NW1/4 S11 T7N R5W
ATITUDE	N 33 58 04
LONGITUDE	W 112 44 49
USGS QUAD MAP	WICKENBURG 7.5-MINUTE
INSTALLATION DATE	AUGUST 15, 1996 (WY 1996)
LENGTH OF RECORD (AS OF 10/01/03)	7.13 YEARS
STAGE GAGE TYPE	PRESSURE TRANSDUCER
STAFF GAGE	FIVE
CREST STAGE GAGE	NONE
ZERO GAGE HEIGHT ELEVATION	2,134.69 FEET M.S.L.
STAGE GAGE ELEVATION	0.19 FEET GAGE HEIGHT
POINT OF ZERO FLOW	0.00 FEET GAGE HEIGHT
SPILLWAY CREST ELEVATION	20.25 FEET GAGE HEIGHT
OP OF DAM ELEVATION	28.75 FEET GAGE HEIGHT

RATING INFORMATION

RATING TABLE

DISCHARGE RATING NUMBER 2, APPLIED AS OF OCTOBER 1, 1997

CAPACITY RATING NUMBER 2, APPLIED AS OF OCTOBER 1, 1997

GAGE HEIGHT (FEET)	ELEVATION (FEET NGVD 29)	DISCHARGE (CFS)	VOLUME (ACRE-FEET)
0.0	2,134.69	0	0
1.0	2,135.69	0	2.3
5.0	2,139.69	14	17.6
10.0	2,144.69	17	48
15.0	2,149.69	23	97
20.0	2,154.69	30	141
20.25	2,154.94	30	143
22.0	2,156.69	936	165
24.0	2,158.69	2,332	192
26.0	2,160.69	4,283	221
28.0	2,162.69	6,496	251
28.7	2,163.39	7,463	262

WATER YEAR PEAKS

WATER YEAR	EVENT DATE	PEAK WATER LEVEL (FEET GH)	PEAK VOLUME (ACRE-FEET)
2004			
2003	2/25/03	2.58	7.5
2002	9/8/02	3.61	11.4
2001	10/27/00	7.22	28.4
2000	8/29/00	4.29	14.4
1999	8/31/99	6.47	24.6
1998	8/12/98	3.34	10.3
1997	9/26/97	11.30	65.0
1996	9/11/96	5.84	23.5

IMPOUNDMENT HISTORY

DATE OF PEAK	TIME OF PEAK	EVENT PERIOD	DURATION (HOURS)	PEAK STAGE (FEET, G.H.)	PEAK VOLUME (ACRE-FEET)	WATER YEAR
11/12/03	18:23	11/12 17:29 - 11/13 23:29	30.0	1.02	2.3	2004
2/25/03	22:22	02/25 18:08 - 02/27 13:52	43.7	2.58	7.5	2003
2/14/03	03:22	02/13 21:59 - 02/15 19:53	45.9	1.65	4.3	2003
10/26/02	15:53	10/26 13:33 - 10/30 16:38	99.1	2.29	6.5	2003
9/8/02	20:37	09/07 05:13 - 09/11 13:54	90.7	3.61	11.4	2002
7/6/01	06:09	07/06 05:13 - 07/10 23:00	114	6.10	22.8	2001
3/7/01	08:34	03/07 07:34 - 03/08 11:01	27.5	0.97	2.2	2001
10/27/00	13:50	10/27 12:41 - 10/28 18:32	29.9	7.22	28.4	2001
10/21/00	21:54	10/21 20:41 - 10/23 21:56	49.3	5.27	18.8	2001
8/29/00	14:16	08/29 10:04 - 08/30 21:55	35.9	4.29	14.4	2000
8/27/00	11:01	08/27 10:29 - 08/28 09:56	23.5	2.14	6.0	2000
8/31/99	20:25	08/31 16:33 - 09/03 07:36	63.1	6.47	24.6	1999
7/15/99	09:44	07/15 04:58 - 07/16 14:38	33.7	6.07	22.6	1999
8/12/98	19:44	08/12 19:01 - 08/14 23:22	52.4	3.34	10.3	1998
8/8/98	01:12	08/08 00:39 - 08/08 22:33	21.9	1.41	3.6	1998
9/26/97	07:18	09/25 20:05 - gage failure		11.30	65.0	1997
9/11/96	02:14	09/10 21:43 - 09/12 19:19	45.6	5.84	23.5	1996

STAFF GAGE INFORMATION

STAFF GAGE RANGE	STAFF GAGE INFORMATION
0 - 5	5.0 FEET ON STAFF = 4.93 FEET GAGE HEIGHT ACTUAL
5 - 10	10.0 FEET ON STAFF = 10.02 FEET GAGE HEIGHT ACTUAL
10 - 15	15.0 FEET ON STAFF = 14.93 FEET GAGE HEIGHT ACTUAL
15 - 20	20.0 FEET ON STAFF = 19.98 FEET GAGE HEIGHT ACTUAL
20 - 25	25.0 FEET ON STAFF = 25.04 FEET GAGE HEIGHT ACTUAL

CASANDRO DAM

SENSOR 7 1 3 3

Mar 3 2004 5:[illegible] PM

POOL STAGE (ft)

TOP @ 28.25 ft

STRUCTURE DATA

TOP OF DAM.....2163.5
OUTLET INVERT..2135.0
SPILLWAY ELEV..2155.0
MAX.DEPTH.....28.75 ft
SPILLWAY CAP...143 ac-ft
DRAINAGE AREA..1.24 sq.mi.

STRUCTURE DIMENSIONS

LENGTH.....1011 ft
TOP CREST....14 ft
DRAW DOWN....84 hrs

CURRENT CONDITIONS:

Stage (ft) ------>	0.2
Discharge (cfs) ->	0
Volume (ac-ft) -->	0.0
Percent Full (%)->	0
Drawdown (hours)->	0

25
20
15
10
5
0

Notify Emergency Management (50% full)

Notify O&M (25% full)

Alarm (10% full)

PROBLEM AREAS

Note:
100 year WSE = 2155.3 ft
e.g. 0.3 ft over spillway

BASIN RAINFALL

I.D.	15m	60m	3hr	YtD
7130	0.00	0.00	0.00	2.72
7090	0.00	0.00	0.00	2.76
5260	0.00	0.00	0.00	2.05
7080	0.00	0.00	0.00	2.80

25 0 60 Mns s#7133

25 0 24 Hrs s#7133

8 0 24 Hrs s#7093

Sensor Offset = 0.19 ft

Casandro Wash @ US60
Current Q (cfs) = 0

GEOLOGICAL CONSULTANTS INC

KENNETH M. EUGE, R.G.

Memorandum

May 4, 2004

To: Mr. Robert Eichinger, P.E.
Kimley-Horn & Associates Inc.

From: Ken Euge, R.G.
Principal Geologist

Subject: Geological Input to Structures Assessment Reports
Casandro Wash Dam, Wickenburg, Maricopa County, Arizona.
Work Order No. 1
FCDMC Contract No. 2003C015
Geological Consultants Project No. 2003-161 (CWD)

In response to your request, submitted herewith are the input sections, including geology, seismicity, and ground subsidence, for the Casandro Wash Dam structures assessment report. We have not numbered the report sections for the Structures Assessment Report. However, please edit as appropriate to conform to your report format.

Casandro Wash Dam

Geologic Setting

Casandro Wash Dam is located in hilly terrain within the northeast-central portion of the Sonoran Desert section of the Basin and Range Physiographic Province near its boundary with the Arizona Transition Zone Section. The latitude and longitude of the center part of the structure is approximately 33° 58' 04" N and 112° 44' 54" W based on NAD 27 datum. This portion of the Basin and Range is characterized by broad alluvial fans that are locally dissected and gently sloping connected valleys bounded by high, rugged northwest, north, and northeast trending mountains including the Date Creek and Weaver Mountains to the north, the Vulture Mountains to the south and the Wickenburg Mountains to the east that rise abruptly to form broad, elongated, deep, sediment-filled valleys produced by block faulting and folding during past episodes of mountain/basin bounding fault movements (Cooley, 1977). The Dam, which is astride Casandro Wash north of the U.S. Highway 60 alignment, is within the town limits of Wickenburg, Arizona off the northeastern flank of the Vulture Mountains in the southeast quarter of Section 11, Township 7 North, Range 5 West (Figure 1, Site Location Map).

2333 West Northern Avenue, Ste 1A, Phoenix, Arizona 85021 | toll free 888.774.2756 | phone 602.864.1888 | fax 602.864.1899 | www.geologicalconsultants.com

No comprehensive geological evaluation of the Casandro Wash Dam site was conducted as part of the dam site design investigation. No geologic map was found in the project documentation. However, a geotechnical investigation, consisting of soil boring and test pits, was conducted in 1994 (CH2M Hill, 1995).

A general geologic map of the dam site area was prepared by Geological Consultants Inc. (GCI) as part of the structures assessment program. A geologic map (Figure 2) was compiled from a published geologic map (Grubensky et al, 1987) that was modified with geological reconnaissance data gathered by GCI during the site visit conducted February 25, 2004. The geologic descriptions provided in this memorandum are excerpted from the geotechnical report (CH2M Hill, 1995) and supplemented with geological observations made during the site visit by GCI.

According the Geotechnical Report (CH2M Hill, 1995), it was implied that the geology of the Casandro Wash Dam was similar to the geology of the Sunset FRS and Sunnycove FRS dam sites. However, this was not confirmed at that time. Based on the observations made during the February 2004 site visit, the geology can be generally described as unconsolidated Tertiary age alluvial terrace deposits and fanglomerate exposed in the low bluffs surrounding the dam (Photo 1) and reservoir; Quaternary age stream channel deposits are found within Casandro Wash and its tributaries. Residual soils locally cover the tops of the bluffs and slope wash colluvium mantle portions of the bounding slopes.

Photo 1: View looking downstream from left abutment. Low bluffs to upper left of view include unconsolidated alluvial terrace deposits; low bluffs to extreme right of view underlain by fanglomerate capped by alluvial terrace deposits. Reservoir pool area right center of view. Emergency spillway upper center of view.

A review of the as-built reports and examination of the reservoir slopes upstream from the right abutment during the February 2004 site visit indicate the right abutment is composed of Tertiary age fanglomerate. The same unit is exposed at the Sunset FRS and Sunnycove FRS sites located about one-half mile and one mile, respectively, to the southeast from Cansandro Dam. Tertiary age fanglomerate which is generally moderately to well cemented. The fanglomerate is dark yellow brown to brown, silty poorly sorted gravelly sand and sandy gravel. The course-grained angular to subangular fragments are predominantly clasts of tuff, basalt, andesite and rhyolite with minor amounts of granitic and metamorphic rock fragments. The unit is structurally massive and it is moderately to well stratified. These deposits underlie a thin mantle of recent alluvium in the stream floodplain. The fanglomerate is not exposed in the left abutment area nor is it exposed in the reservoir slopes on the north side of the impoundment area.

Photo 2: Uconsolidated alluvial terrace deposits exposed in road cut parallel to FCDMC easement north of the east-west dam embankment section.

The geology of the left abutment includes nearly flat-lying strata composed of interbedded layers of poorly to moderately consolidated gravelly sand, sand, silty sand and silt (Photo 2). These deposits appear to be typical of the alluvial fan terrace deposits found throughout the Wickenburg area. These deposits are light brown to moderate orange brown to buff. Individual units are generally massive with the finer-grained silty sand, sandy silt and silt being moderately consolidated as well as slightly cemented to non-cemented and porous throughout. The fine-grained soils appear to have a moderate dry strength while the gravelly sand and sand range from moderately dense to loose. The centerline alignment of the

dam was modified to avoid unconsolidated, layered soil units and the apparently high permeability strata exposed in the original left abutment area.

Structurally, the strata underlying the Casandro Wash Dam are believed to nearly flat lying or tilted at a very low angle to dip toward the northeast similar to the deposits exposed in the Sunset FRS and Sunnycove FRS sites. No structural discontinuities such as faults, joints, or fractures were observed in the limited exposures of the formation this site nor are any reported in the dam investigation documentation.

Groundwater

No groundwater was encountered in any of the test holes or exploratory excavations made during the site subsurface investigation (CH2M Hill, 1995). A review of ADWR groundwater data by CH2M Hill (1995) listed groundwater in the dam site area at elevation between 2017 and 2052 ir about 111 feet to 146 feet below dam crest elevation (2163.5 feet)

Geology and Soils of the Dam and Principal Spillway

Casandro Wash Dam left and right abutments are founded on loose to dense, weakly to moderately cemented alluvial terrace deposits and fanglomerate, respectively. The relationship of the alluvial terrace deposits and fanglomerate contact was defined base on a review of the drill hole logs and Figure __ (CH2M Hill Drawing, Dam Centerline Profile STA 9+97-Sta 17+00, Sheet 5 of 34). The foundation excavation, including the 12-foot wide and 2-foot deep cutoff trench, between Station 10+00 and Station 12+30 is excavated into the unconsolidated alluvial fan terrace deposits. Beginning at Station 12+30 to and including the right abutment, the foundation excavation is in the fanglomerate. From Station 10+00 to 12+10, the chimney drain trench is excavated into the alluvial terrace deposits. The chimney drain trench is excavated into the fanglomerate from about Station 12+10 to the right abutment.

The fanglomerate materials were very hard to drill and had standard penetration test blow count values of greater than 100 blows per foot. Based on our review of boring logs, the depth to the alluvial terrace deposit and fanglomerate boundary is reasonably uniform along the dam centerline from Station 9+97 to about Station14+60. The contact boundary ranges from about 40 feet below original ground surface in the left abutment area (Boring B-1 and B-2) to about 15 feet

below original ground surface near the center of the dam alignment (Borings B-6 and B-7). In the right abutment area the contact boundary rises to about 10 to 25 feet below original ground surface with a rise in the right abutment original topography.

Young alluvial terrace deposits are found throughout the left abutment area where the younger deposits consist of stratified terrace alluvium composed of poorly graded, gravelly, fine to coarse-grained sand with silt and clay (SM, SC, SM-SC), well-graded sand with silt (Sw-Sm), poorly graded gravel with sand and clay (GP-GC), sandy silt (ML), and clay (CL) (Photo 3). Because of the poorly consolidated material exposed in the original abutment area, the dam centerline alignment curved to the west and modified in an attempt to place the foundation excavation in better material. However, the abutment of the dam was founded on the alluvial terrace deposits as no fanglomerate was exposed at foundation grades.

Photo 3: Unconsolidated alluvial terrace deposits exposed in the left abutment area. Note differential weathering characteristics of the stratified soil units.

Floodplain deposits, including stratified and lenticular alluvial deposits, are composed of clean well-graded sand (SW) and poorly graded sand with gravel (SP) to silty sand (SM) with up to 25 percent gravel (Photo 4). Lenses of poorly graded gravel (GP) and cobble size rock fragments are present locally. Because of the lenticular character of these deposits, they are not expected to be laterally extensive. These deposits extend to depths ranging from two to twelve feet below grade and unconformably overly the variably cemented alluvial terrace deposits.

The Principal Spillway crosses the dam alignment at a skewed angle to the dam centerline at about 15 degrees off the perpendicular. The principal spillway crosses at dam centerline station 14+00.75. According to Figure 4 (CH2M Hill Drawing, Outlet Pipe Plan & Profile, Sheet 7 of 34), the Principal Spillway inlet structure, and outlet pipe are founded in the embankment fill.

Photo 4: View looking upstream toward dam. Poorly sorted, coarse-grained channel deposits exposed in headward erosion cut in stream channel alluvium.

Emergency Spillway

A concrete lined emergency spillway is constructed on the Casandro Wash Dam. The centerline of the emergency spillway crosses the embankment dam centerline at about Station 13+60. The spillway control section is founded in the Zone 1 embankment fill. The section of the spillway shoot and stilling basin are also founded on Zone 1 fill. The riprap outlet area is founded on prepared floodplain deposit soils (Photo 5).

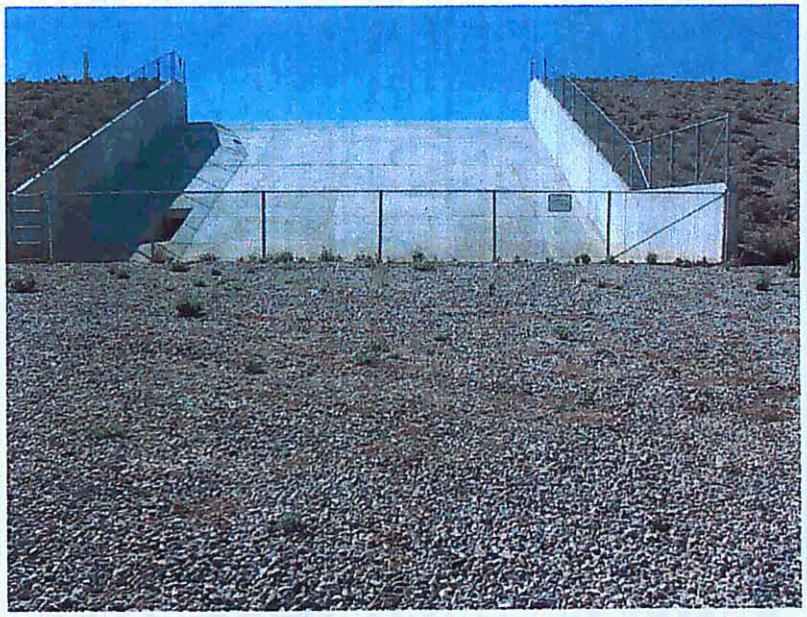

Photo 5: Emergency spillway looking upstream. Stone riprap covered with gravel.

Site Investigation

Flood Control District of Maricopa County (FCDMC) contracted with CH2M Hill to conduct a geotechnical and design investigation for the Casandro Wash Dam. The investigation was completed by CH2M Hill in 1995. The CH2M Hill initiated and completed its dam site investigation in January 1994. Although no geological characterization of the site was completed, the geotechnical investigation use several techniques including: auger drilling, and backhoe trenching. Inflow permeability tests were made along the dam centerline. Test pit and drill hole location are depicted on Figure 5 (CH2M Hill Drawing: Site Layout, Survey Control, Sheet 3 of 34). Selected explorations are also depicted along the dam centerline in Figure 3 (CH2M Hill Drawing: Dam Centerline Profile Sta 9+97-17+00, Sheet 5 of 34). A summary of the explorations is provided in the following table.

Table 1. Summary of Geotechnical Testing
Casandro Wash Dam

Structure	Exploration Techniques		
	Exploratory Borings	Test Trenches/ Pits	In-Flow Permeability Tests
Dam	11	6	6
Principal Spillway	1	-	-
Emergency Spillway	2	-	-
Borrow Site	3	18	1

The application for construction was approved by the Arizona Department of Water Resources Flood Warning and Dam Safety Division in December 1995.

Seismicity

A seismicity assessment was conducted as part of the Casandro Wash Dam design analysis (CH2M Hill, 1995b). Seventeen earthquakes, ranging from magnitude 2.5 to 4.9 were recorded

within a 150-kilometer radius of the site. No earthquake event was closer that 70 kilometers to the site. Based on the CH2M Hill review of seismic design criteria from various source including U.S. Bureau of Reclamation, SCS Technical Release No. 60, Applied Technology Council, FEMA and the Uniform Building Code, 0.1 g was selected as a "reasonably conservative" peak design acceleration.

No deterministic or probabilistic seismicity evaluation was conducted for the design of Casandro Wash Dam based on a review of the project files. However, a seismicity evaluation for all of the FCDMC dam structures was conducted in 2002. The report entitled "Seismic Exposure Evaluation, Dam Safety Program, Flood Control District of Maricopa County" describes the various seismotectonic zones, fault zones, design earthquake, and characteristic ground motion affecting FCDMC structures (AMEC, 2002).

Casandro Wash Dam is situated within the Southern Basin and Range (SBR) Source Zone as defined by AMEC (2002), which includes the Sonoran Seismic Source Zone defined by ADOT (1992). The SRB source zone appears to be tectonically quiescent, with a low level of seismicity and few neotectonic faults that would be considered active or potentially active sources of earthquakes (Bausch and Brumbaugh, 1994; ADOT, 1992). The largest historic earthquake within this zone was a magnitude 5.0 that occurred in the southern part of the source zone in 1965. Only a few minor faults occur in the SBR (AMEC, 2002; ADOT, 1992). Earthquake epicenters and Quaternary faults are shown in Figure 3 of the AMEC (2002) report.

The deterministic and probabilistic analysis of seismic hazard affecting the Casandro Wash Dam area was conducted by AMEC (2002) to establish seismic attenuation relationships and the maximum probable earthquake. The closest Quaternary age fault is the Sand Tank Fault located about 77 miles south of the site. According to AMEC (2002) the maximum credible earthquakes for this fault source ranges between M6.2 and M6.6. The background earthquake, which is estimated to have a higher maximum magnitude of M7.2, was applied to the regression relationship to derive the horizontal ground acceleration. The recommended peak ground acceleration calculated for the Casandro Wash Dam area, based on the background seismic source, is 0.10 g (10 percent of gravitational acceleration) (AMEC, 2002), which is the same design value selected by CH2M Hill.

Land Subsidence

Land subsidence is known to occur in alluvium-filled valleys of Arizona where agricultural activities and urban development have caused substantial over-drafting or removal of groundwater from thick basin aquifers. The magnitude of subsidence is directly related to the subsurface geology, the thickness and compressibility of the alluvial sediments deposited in the valleys, and the net groundwater decline. However, in the Wickenburg area, there is no documented evidence of excessive groundwater withdrawal nor land subsidence.

No unconsolidated, compressible basin fill soils are believed to be present beneath the Casandro Wash Dam. The subsurface geological conditions in the embankment dam area (Figures 3), consists of relatively hard, cemented Tertiary age fanglomerate and in the subsurface deposited on crystalline bedrock indicate the potential for land subsidence due to groundwater withdrawal does not exist at the Casandro Wash Dam site.

According to Staedicke (1995), because there is no history of extensive groundwater pumping or subsidence, the NRCS (formerly the SCS) has never surveyed the Casandro Wash Dam structure. Although land subsidence is not expected to affect the Casandro Wash Dam, we recommend the structure be surveyed periodically (say at 5-year intervals). The data should be compiled in the FCDMC structures subsidence monitoring program

Earth Fissures

No earth fissures, related to land subsidence, are documented nor reported as occurring within the Casandro Wash Dam project area. Geological conditions in the Casandro Wash Dam area preclude the development of earth fissures at this site.

Bibliography-Casandro Wash Dam

ADOT; 1992; Development of Seismic Acceleration Contour Maps for Arizona; ADOT Report No. AZ92-344; prepared by K.M. Euge and B.A. Schell, Geological Consultants, Phoenix, Arizona and I.P. Lam, Earth Mechanics Inc. Fountain Valley, CA; September 1992; 328 p.

AMEC; 2002; consultants report entitled "Seismic Exposure Evaluation, Dam Safety Program, Flood Control District of Maricopa County"; prepared for Flood Control District of Maricopa County, Phoenix, Arizona; AMEC Job No. 0-117-001122, Task 2; May 2, 2002; 22 p.

CH2M Hill; 1995; consultants report entitled "Casandro Wash Detention Dam Geotechnical Report, Volume 1, Field and Laboratory Data," prepared for Flood Control District of Maricopa County, Phoenix, Arizona; prepared by CH2M Hill, Tempe, Arizona; February 1995; 9 p. with drill hole, test pit logs, and soils laboratory test results.

CH2M Hill; 1995b; consultants report entitled "Casandro Wash Detention Dam Geotechnical Report, Volume 2, Analysis and Recommendations," prepared for Flood Control District of Maricopa County, Phoenix, Arizona; prepared by CH2M Hill, Tempe, Arizona; February 1995; 9 p. with stability analysis calculations.

Cooley, M.E.; 1973; Map Showing Distribution and Estimated Thicknesses of Alluvial Deposits in the Phoenix Area, Arizona; U.S. Geological Survey Miscellaneous Investigation Series Map I-845-C; 1 sheet; Scale 1:250,000.

Cooley, M.E.; 1977; Map Showing Selected Alluvial Structures and Geomorphic Features; U.S. Geological Survey Open-File Report 77-343; 29 p.

Grubensky, M.J., Stimac, J.A., Reynolds, S.J. and Richard, S.M.; 1987; Geologic Map of the Northeastern Vulture Mountains and Vicinity, Central Arizona; Arizona Geological Survey Open-File Report 87-10; October 1987; 7 p. with 1:24,000 scale geologic map and cross sections.

Staedicke, J.M.; 1995; Settlement Monitoring of Earthen Dams Operated by the Flood Control District of Maricopa County; prepared by Jan M. Staedicke, FCDMC; June 1, 1995;

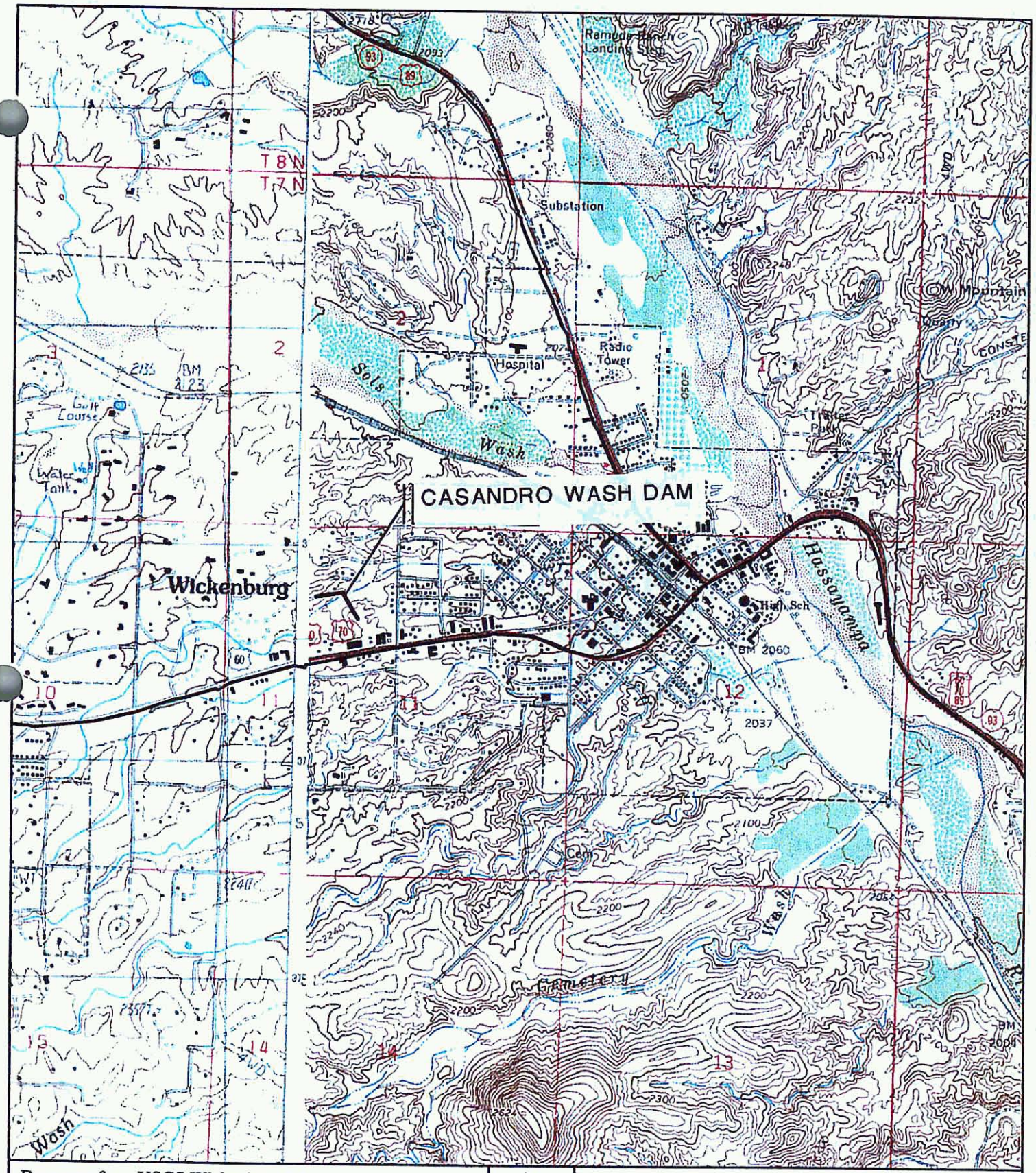

Base map from USGS Wickenburg 7.5 minute topographic quadrangle (1964, photoinspected 1978)

0 0.25 0.5 1 Miles

N

1:24,000

Structures Assessment Program

CASANDRO WASH DAM

Site Location Map

Figure 1

GEOLOGICAL CONSULTANTS INC.

2333 West Northern Ave. Suite 1A
Phoenix, AZ 85021
phone 602-864-1888
fax 602-864-1899

Base map from USGS Wickenburg 7.5 minute topographic quadrangle (1964, photoinspected 1978)

Geology modified from Grubensky, et al, 1987

EXPLANATION

Qs - Younger Alluvium
Qso - Older Alluvium
QTsu - Sedimentary Rocks Udifferentiated
QTsa - Alluvial Terrace Deposits
QTsf - Fanglomerate
Tim - Mafic Dikes and Plugs
Kgd - Granodiorite

N

1:12,000

Structures Assessment Program
CASANDRO WASH DAM
Geologic Map
Figure 2

GEOLOGICAL CONSULTANTS INC.
2333 West Northern Ave, Suite 1A
Phoenix, AZ 85021
phone 602-864-1888
fax 602-864-1899

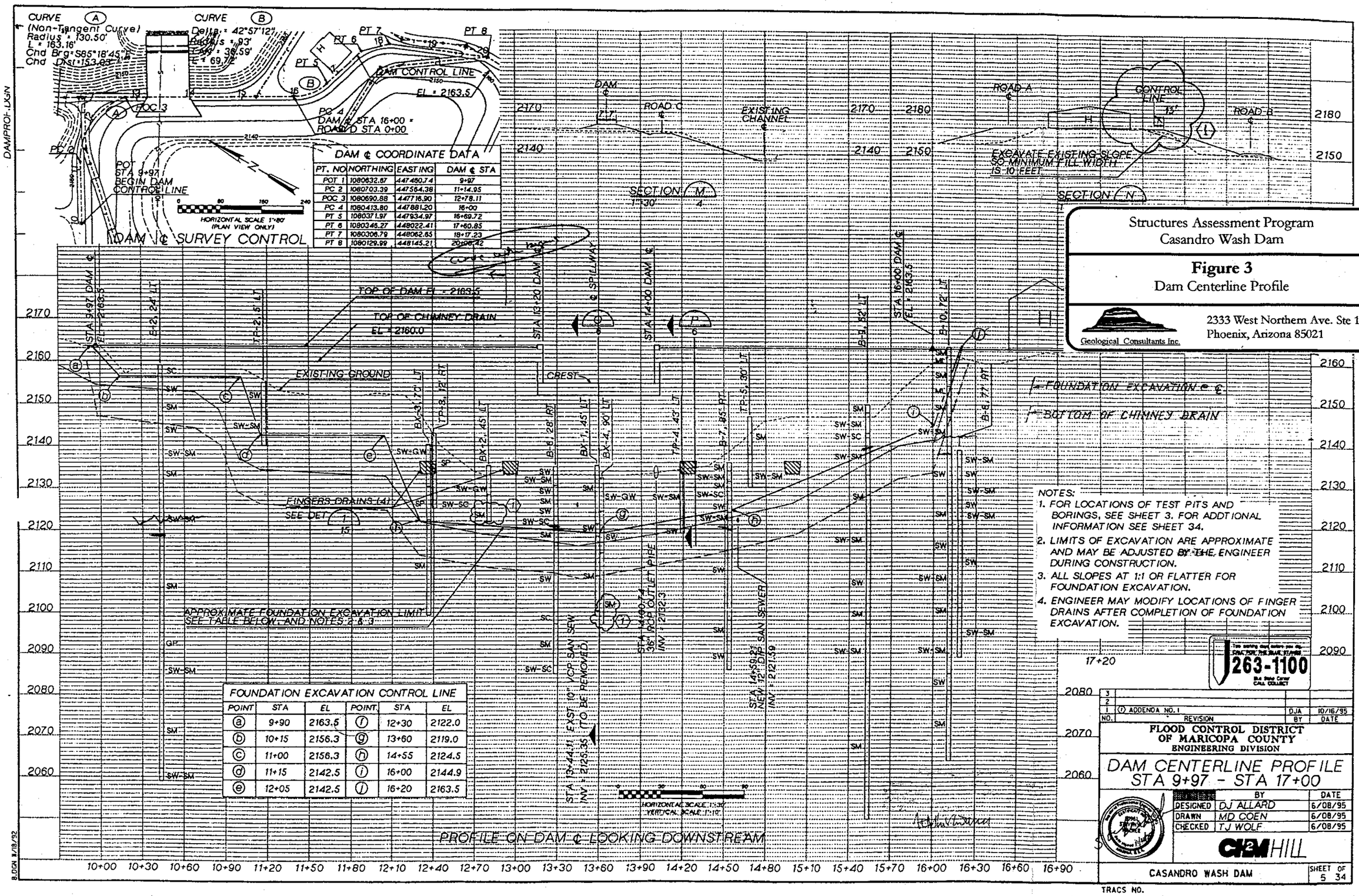

FOUNDATION EXCAVATION CONTROL LINE

POINT	STA	EL	POINT	STA	EL
a	9+90	2163.5	f	12+30	2122.0
b	10+15	2156.3	g	13+60	2119.0
c	11+00	2156.3	h	14+55	2124.5
d	11+15	2142.5	i	16+00	2144.9
e	12+05	2142.5	j	16+20	2163.5

NOTES:
1. FOR LOCATIONS OF TEST PITS AND BORINGS, SEE SHEET 3. FOR ADDTIONAL INFORMATION SEE SHEET 34.
2. LIMITS OF EXCAVATION ARE APPROXIMATE AND MAY BE ADJUSTED BY THE ENGINEER DURING CONSTRUCTION.
3. ALL SLOPES AT 1:1 OR FLATTER FOR FOUNDATION EXCAVATION.
4. ENGINEER MAY MODIFY LOCATIONS OF FINGER DRAINS AFTER COMPLETION OF FOUNDATION EXCAVATION.

Structures Assessment Program
Casandro Wash Dam

Figure 3
Dam Centerline Profile

Geological Consultants Inc.
2333 West Northern Ave. Ste 1A
Phoenix, Arizona 85021

Two working days before you dig CALL FOR THE BLUE STAKES 263-1100 Blue Stake Center CALL COLLECT

NO.	REVISION	BY	DATE
3			
2			
1	(7) ADDENDA NO. 1	DJA	10/16/95

FLOOD CONTROL DISTRICT OF MARICOPA COUNTY
ENGINEERING DIVISION

DAM CENTERLINE PROFILE
STA 9+97 - STA 17+00

	BY	DATE
DESIGNED	DJ ALLARD	6/08/95
DRAWN	MD COEN	6/08/95
CHECKED	TJ WOLF	6/08/95

CH2M HILL

CASANDRO WASH DAM

SHEET 5 OF 34

TRACS NO.

5441P119.DGN

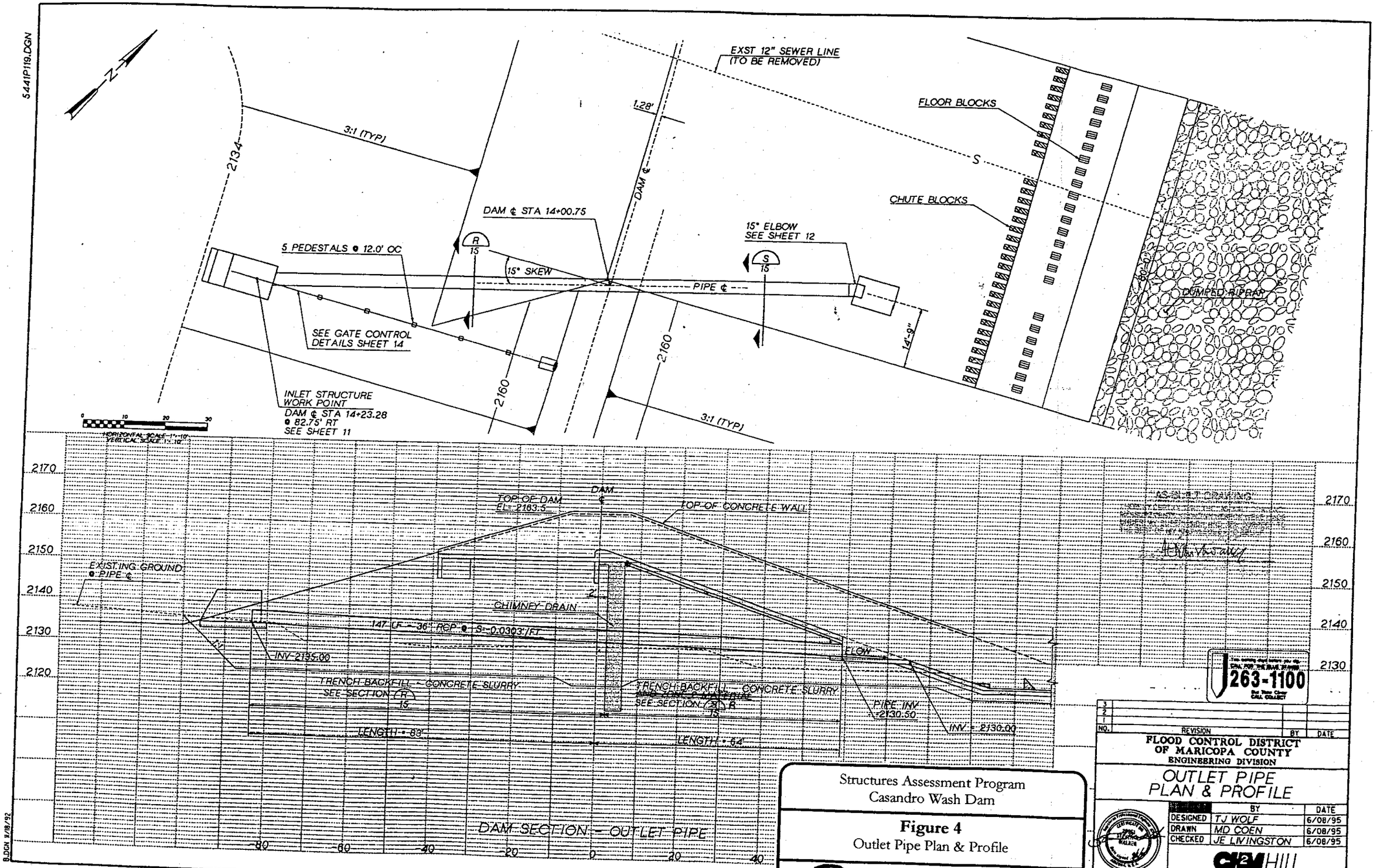

B.DGN 11/18/92

NO.	REVISION	BY	DATE
3			
2			
1			

FLOOD CONTROL DISTRICT OF MARICOPA COUNTY
ENGINEERING DIVISION

OUTLET PIPE
PLAN & PROFILE

	BY	DATE
DESIGNED	TJ WOLF	6/08/95
DRAWN	MD COEN	6/08/95
CHECKED	JE LIVINGSTON	6/08/95

CH2M HILL

CASANDRO WASH DAM

SHEET 7 OF 34

TRACS NO.

Structures Assessment Program
Casandro Wash Dam

Figure 4
Outlet Pipe Plan & Profile

Geological Consultants Inc.
2333 West Northern Ave. Ste 1A
Phoenix, Arizona 85021

5441P102.DGN

EXISTING SURVEY CONTROL				
POINT NO.	NORTHING	EASTING	ELEVATION	REMARKS
CP 102	1080548.01	447907.97	2151.00	1/2 " IRON ROD
CP 103	1080883.16	448180.20	2122.89	1/2 " IRON ROD
CP 104	1080234.65	447020.26	2178.12	1/2 " IRON ROD
CP 105	1079847.54	446746.42	2185.59	1/2 " IRON ROD
CP 807	1080009.90	448663.55	2154.84	PK NAIL W/ WASHER
BM 823	1080976.33	448670.37	2128.33	BRASS CAP (BM)

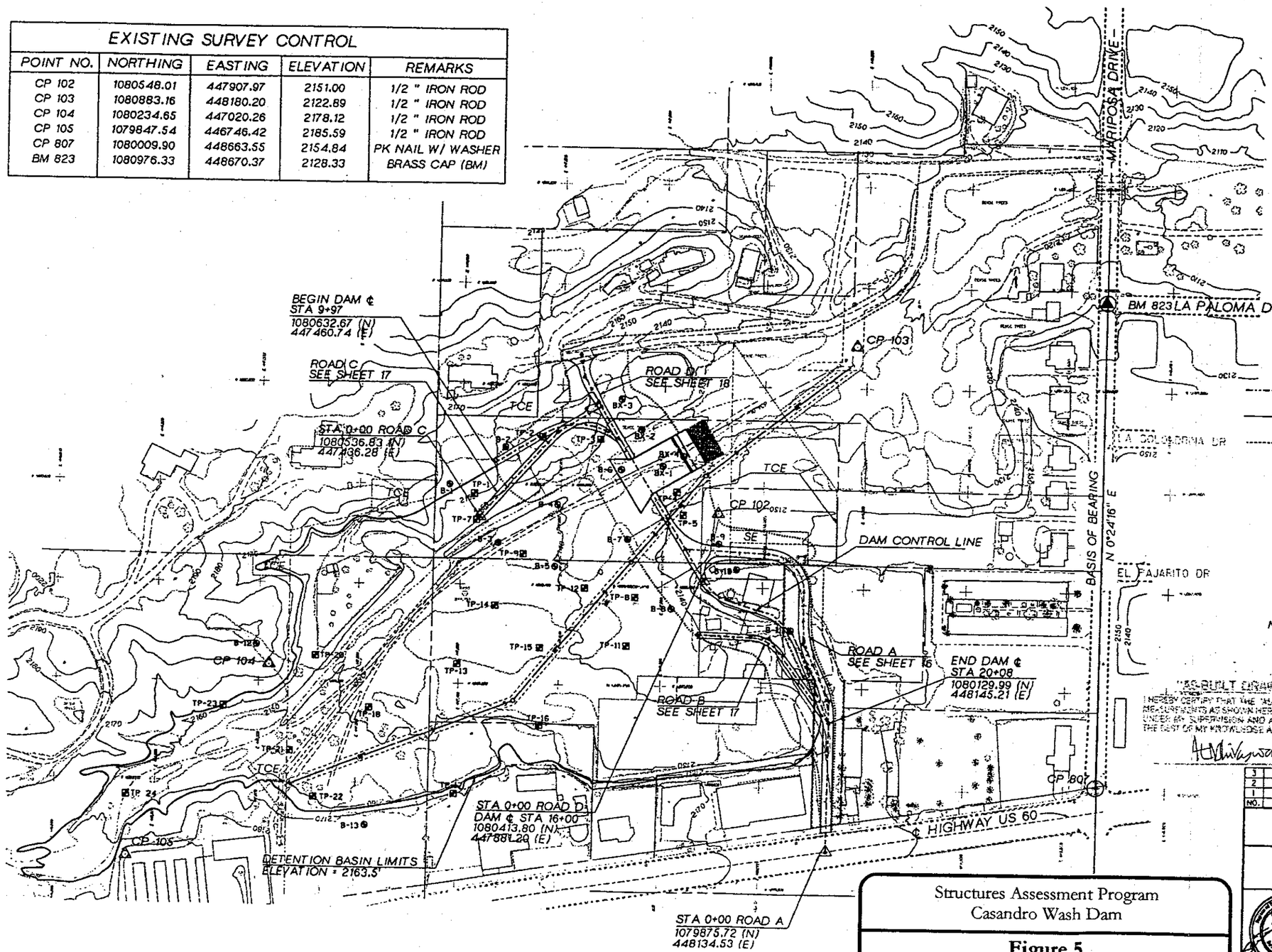

LEGEND - SHEETS 3, 4

- Existing Survey Monument
- Existing Control Point
- Project Control Point
- Project Bench Mark
  BC FLUSH AT INTERSECTION OF MARIPOSA DR. AND LA PALOMA DR.
  EL = 2183.33
- TCE
- FCDMC R/W
- PROPERTY LINE
- ACCESS ESMT LINE
- SLOPE ESMT
- SAN SEWER
- SEWER ESMT
- B-8 BORING LOCATION
- TP-15 TEST PIT LOCATION

NOTE:
FOR DAM ℄ AND ROADWAY GEOMETRICS SEE SHEETS 5,16,17, & 18.

"AS-BUILT DRAWING"
I HEREBY CERTIFY THAT THE "AS-BUILT" DRAWINGS MEASUREMENTS AS SHOWN HEREON WERE MADE UNDER MY SUPERVISION AND ARE CORRECT TO THE BEST OF MY KNOWLEDGE AND BELIEF.

The working days before you dig, CALL FOR THE BLUE STAKES
263-1100
Blue Stake Center
CALL COLLECT

NO.	REVISION	BY	DATE
3			
2			
1			

FLOOD CONTROL DISTRICT
OF MARICOPA COUNTY
ENGINEERING DIVISION

SITE LAYOUT
SURVEY CONTROL

	BY	DATE
DESIGNED	TJ WOLF	6/08/95
DRAWN	MD COEN	6/08/95
CHECKED	JE LIVINGSTON	6/08/95

CH2M HILL

CASANDRO WASH DAM

SHEET 3 OF 34

TRACS NO.

Structures Assessment Program
Casandro Wash Dam

Figure 5
Site Layout-Survey Control

Geological Consultants Inc.
2333 West Northern Ave. Ste 1A
Phoenix, Arizona 85021

GEOTECHNICAL MEMORANDUM
Casandro Wash Dam FMEA – Phase I Structures Assessment

Submitted to:
Kimley-Horn and Associates, Inc.
7878 N. 16th Street
Phoenix AZ 85020

Submitted by:

Gannett Fleming, Inc.
3001 E. Camelback Road
Phoenix, AZ 85016

Registered Professional Engineer (Civil)
CERTIFICATE NO.
35654
DEAN B.
DURKEE
Date Signed 6/30/04
ARIZONA, U.S.A.

for

Debora J. Miller, Ph.D., P.E.
Senior Project Manager

Dean B. Durkee, Ph.D., P.E.
Manager, Earth Science & Hydraulics

June 30, 2004

043394

1.0 REVIEW OF PREVIOUS GEOTECHNICAL DOCUMENTATION

A comprehensive review of existing geotechnical reports was performed. The following are the key documents that were reviewed (reference citations are listed at the end of this memorandum):

- Casandro Wash Detention Dam - Geotechnical Report (CH2M Hill, 1995a)
  - Volume 1 Field and Laboratory Data
  - Volume 2 Analysis and Recommendation
- Casandro Wash Dam – Final Design Report (Section 3 Geotechnical Investigation, Section 6 Concept Design Recommendations) (CH2M Hill, 1995b)
- Responses to ADWR review comments on Geotechnical Report and Design Report (October, 1995)
- Summary Report (of construction) by Geotechnical Engineer of Record (RAM, 1996)
- Miscellaneous correspondence, memoranda, and photos from ADWR inspectors during construction period (ADWR, 1996)
- Construction Plans and Specifications, Contract FCD 95-02, Casandro Wash Dam in the Town of Wickenberg (CH2M Hill, 1995c)

The following sections provide a discussion of findings from that review.

1.1 Foundation Conditions

CH2M Hill's Geotechnical Report (1995a) described the foundation soils in the main channel section as alluvial deposits overlying dense, carbonate-cemented sands and gravels. The surficial, uncemented soils were characterized as gravelly, well-graded sands with varying amounts of silt or clay. The upper soil layer was further described in the Geotechnical Report as dry, medium-dense to dense sands, with approximately 10 to 15 percent gravel and less than 10 percent low plasticity fines. The upper layer varied in thickness from 5 to 12 feet within the basin area, and 16 to greater than 20 feet in the dam foundation. The materials underlying the upper soil layer were characterized as more gravelly, very dense or cemented, and containing fewer fines.

The abutments were described in the Geotechnical Report (CH2M Hill, 1995a) as graded terraces, which had been leveled at the tops of the slopes to construct pads for structures. Loose fill had been dumped over the top edge of both abutment slopes to extend the leveling pads. The ends of the terraces were described as loose to medium dense silty sand and sand fill.

The Design Report (CH2M Hill, 1995b) recommended complete removal of the surficial materials to typical depths up to 12 feet within the dam footprint to found the dam on the very dense or cemented materials. It was recommended that keyway excavations extend into the abutments an estimated 15 to 30 feet into the slopes to found the embankment fill on native cemented materials. The abutment slopes were specified to be no steeper than 1H:1V.

During construction, the depth of excavation was extended in the left abutment between about Stations 9+90 and 12+05, in an area that contained deep lenses of uncemented, relatively clean, pervious materials. Excavation of these materials to "firm, acceptable" materials was conducted

under field direction. Between Stations 11+00 and 11+35 cemented materials were reached within the chimney drain trench excavation, which extends below the central keyway.

1.2 Embankment Materials

A typical cross section of Casandro Dam is shown as Figure 1. The design consists of a homogeneous embankment (Zone 1) and 4-foot wide, central vertical chimney filter/drain (Zone 2). The vertical filter/drain extends 6 feet into the foundation below the base of the fill in the keyway, and is interconnected to four finger drain outlets (Zone 2) that daylight at the downstream toe.

The Zone 1 and Zone 2 materials assumptions that were the basis for the design were derived from the original field and laboratory investigation (CH2M Hill, 1995a). The laboratory test results from the original field investigations are provided on Table 3-2 Summary Table, from Addendum 2 of the Final Design Report (CH2M Hill, 1995b). A copy of this summary table is provided as an attachment to this memo. A total of 40 samples were collected from 21 test pits and 13 soil borings in the dam foundation and upstream impoundment areas.

The following tests were performed on representative samples:

- 2 - Atterberg limits tests,
- 24 - sieve analyses,
- 2 - specific gravity tests
- 6 - standard Proctor compaction tests
- 6 - direct shear tests,
- 2 - triaxial shear tests, and
- 10 - laboratory permeability tests on compacted samples.

The attached Table 3-2 shows USCS classifications for each of 40 samples. Of the 40 samples reported, 25 of them classified as well-graded sand (SW), silty sand (SM), or dual classification (SW-SM). Based on the few number of Atterberg limits tests that were performed, we assume that most of the classifications shown are based on field observation, and are not based on laboratory testing and classification of the fines fraction. The % fines of the 24 samples tested ranged from 2.7% to 25.6% with an average value of 8.3%. Only 6 of the 24 samples tested contained more than 10% fines. Atterberg limits from two samples tested gave liquid limit values of 27% and 33% and plasticity indices of 6% and 12%.

The embankment section, including the vertical chimney drain, was designed based on the results presented in the attached Table 3-2. The Zone 1 materials were assumed to be comprised predominantly of gravelly sands with less than 10 percent silty fines. The designers included a substantial, pervious chimney drain in their design to control the anticipated high quantities of seepage through the Zone 1. The drain material (Zone 2) was specified to consist of clean granular material with a permeability of 1 foot/min (0.5 cm/sec) (CH2M Hill, 1995c). Filter compatibility for Zone 2 with Zone 1 base soil was a consideration in the drain material design, but the designers considered drainage, not filter protection, as the primary function of the chimney drain.

Table 1 summarizes test results from the construction-phase testing, which are assumed to be representative of the actual in-place constructed Zone 1 materials. Testing results on the Zone 1 materials throughout the remainder of dam construction indicated similar results as shown on Table 1 (RAM, 1996).

Table 1 Summary of Representative Laboratory Test Results From Construction Phase Stockpile Samples of Zone 1*

Stockpile	USCS	Gradation (%)			PI (%)
		Gravel (>#4)	Sand	Fines (-#200)	
NC	SC-SM	19	69	12	7
SC	SC	26	50	24	9
EC	SW-SC/ SW-SM	36	53	11	6
WC	SM	26	63	10	3

*These samples were tested by Ricker Atkinson McBee & Assoc. in January, 1996

It is evident based on review of the design assumptions, original field and laboratory investigation results, and construction records, that the materials used to construct the dam are moderately different from the materials that were the basis for design and construction specifications. Actual Zone 1 materials used in construction were silty or clayey gravelly sands with between 10 and 24 percent, low plasticity fines, as summarized on Table 1 (RAM, 1996). The designers had assumed Zone 1 materials would be predominantly sands with less than 10% silty fines, as shown on the attached design report Table 3-2. As a consequence, the results of seepage analyses used to develop specifications for the Zone 2 filter/drain material may not be representative of the conditions that are now expected in the field. This issue is discussed in more detail in the following section.

1.3 Filter/Drain Design and Construction

A vertical filter/drain system was installed in the embankment for the purpose of controlling seepage during water impoundment events. The filter/drain system was designed based on the assumption of full impoundment for sufficiently long time periods to result in full development of steady state seepage through the embankment, using permeability assumptions obtained from the original field and laboratory investigation (CH2M Hill, 1995a).

1.3.1 Seepage Analysis and Drainage Capacity Calculations

1.3.1.1 Seepage Analysis by Original Designers

Seepage analyses were performed using an analytical approach and a "simple Darcy's Law seepage model" to estimate how quickly seepage would penetrate into the dam during impoundment events (CH2M Hill, 1995b). The vertical hydraulic conductivity (k_v) of Zone 1 materials was estimated to be 5 X 10^{-4} cm/s based on laboratory permeability test results (see attachment, Table 3-2 from the Design Report Addendum 2, CH2M Hill, 1996b). The horizontal hydraulic conductivity (k_h) was assumed to be 10 times the vertical, or 5 X 10^{-3} cm/s. The Darcy seepage model assumed one dimensional horizontal flow and was used to estimate the rate of

advancement of the seepage line towards the drain. Assuming the reservoir pool remained full throughout the period of infiltration, the results indicated that water would reach the drain within 5 to 10 days.

Drain capacity requirements were then determined based on estimates of the quantity of seepage from a flow net constructed for the upstream Zone 1 section with the drain as the vertical discharge face and the high pool elevation on the upstream slope as boundary conditions. The assumptions implicit in this calculation are steady seepage and isotropic hydraulic conductivity k = 5 X 10^{-3} cm/s. Based on these assumptions, the quantity of flow into the chimney drain was computed as approximately 1 gpm/ft of drain. For a 400 ft long drain the total estimated steady-state flow was approximately 400 gpm.

1.3.1.2 Estimated Capacity of Chimney Drain by Gannett Fleming

Review of the construction specifications indicates that the hydraulic conductivity of the Zone 2 material was specified to be a minimum of 1 ft/min. Gannett Fleming estimates the total capacity of a 4-foot wide granular chimney drain constructed with Zone 2 material (k = 1 ft/min) to be about 12,000 gpm, as follows:

$$q_{per\ foot} = kiA = (1ft/\min)(1)(4ft*1ft) = 4ft^3/\min/ft = 29.9gpm/ft$$
$$Q_{total} = 29.9gpm/ft*400ft = 11{,}970gpm \approx 12{,}000gpm$$

where the gradient, i = 1 because the flow is vertical downward within the chimney section. This capacity is about 30 times the required capacity of 400 gpm, based on the flow net calculation by the designers.

1.3.1.3 Estimated Capacity of Outlet Pipes as Originally Designed

The designers intended to use outlet pipes to convey seepage flows from the chimney drain to the downstream toe of the dam. Gannett Fleming reviewed the design calculations that were the basis for the outlet pipe size requirements (computation sheet titled "Chimney Drain Capacity" dated 3/20/94 by J. Livingston in appendix to CH2M Hill, 1995a, Volume 2). The designer calculation is shown on the data sheet as follows:

"Check Flow to Drain Pipe – Vertical Flow"

$$Q = kiA$$
$$Q = 10^{-1}(ft/\min)\frac{15(ft)}{15(ft)}4(ft-drain\ width)*7.48(gal/ft^3)*400(ft-dam\ length)$$
$$= 1197\ gpm$$

It appears from the calculations above that the hydraulic conductivity of the Zone 2 material was assumed to be 0.1 ft/min, or 10 times lower than the specified hydraulic conductivity, resulting in a total calculated maximum flow from the chimney drain to the outlets of 1,197 gpm. It is

unclear why the designers used the lower hydraulic conductivity value (10^{-1} ft/min) to size the outlet pipes, rather than the more conservative estimate (1 ft/min) which would have resulted in outlets sized for the full capacity of the chimney drain of 11,970 gpm, as shown by Gannett Fleming's calculations above.

The calculation presented on the computation sheet (1,197 gpm) appears to be the basis for sizing the outlet pipes. According to subsequent calculation sheets, the discharge was to be accommodated using two, 8-inch diameter outfall pipes, with an estimated combined capacity of 1,120 gpm. Gannett Fleming estimates that if the pipes had been installed, this would have provided a factor of safety equal to 2.8, as follows

$$FOS(as\ designed\ with\ pipes) = \frac{outlet\ pipe\ capacity\ (two\ 8''\ dia.\ pipes)}{total\ flow\ from\ dam\ from\ flow\ net} = \frac{1{,}120 gpm}{400 gpm} = 2.8$$

1.3.1.4 Gannett Fleming Estimate of As-Constructed Finger Drain Capacity

Review of the construction drawings indicates that the outlet pipes were not installed in the finger drains, but instead, the finger drains were constructed of drainage rock (Zone 2 materials). Figure 2 shows details taken from the construction documents including the details for the finger drains. Four finger drains are shown, each constructed using the Zone 2 material, with cross-sections 10 ft wide by 3 ft-8 in high, and extending through the dam to discharge on the downstream toe. Without the 8-inch pipes, Gannett Fleming estimates the combined total capacity of these finger drains as follows (refer to Figure 2 for definition of parameters):

$$q = \frac{kh^2}{2L} = \frac{1\,ft/\min * (3.67 + 1\,ft)^2}{2 * 94.5\,ft} = 0.115\,ft^3/\min/ft = 0.86\,gal/\min/ft\,(of\ drain\ width)$$

$$Q = 0.86\,gal/\min/ft * 40\,ft\,(combined\ with\ of\ 4\,drains) = 34\,gal/\min$$

Where: q = capacity of finger drains per ft (width) of drain, k = hydraulic conductivity, h = head drop from top of finger drain at the location of the chimney (elevation 2136.67 ft) to the bottom of the drain at the toe of the dam (elevation 2132), L = length of finger drain from chimney section to toe of dam, as shown on Figure 2. This calculation shows that the total combined capacity of the four finger drains is 34 gpm. This capacity is substantially less than the required capacity of 400 gpm under steady seepage conditions, as estimated from the flow net.

As part of this Individual Structures Assessment, Gannett Fleming has performed preliminary seepage analyses (as described in Section 2 of this memorandum) which indicate that under normal flood scenarios, steady state seepage will not develop in Casandro Dam. Therefore, the vertical filter/drain should see very little to no discharge from the upstream Zone 1 if the reservoir is drained within 10 days following flood impoundments, as anticipated. It is important to understand however that, because of the limited capacity of the finger drains, the overall drainage capacity of the internal filter/drain system is on the order of only about 34 gpm. This is substantially less than the designer's intended drain capacity of about 1,120 gpm, but could still be adequate according to our transient seepage analysis model which is described in Section 2.

In Section 3 of this memorandum, we provide recommendations for Phase II sampling, testing, and analyses that could be performed to confirm the expected seepage quantities and required capacity of the internal drain system.

1.3.2 Filter Criteria

The original design intent for the central filter/drain was to serve as both a protective filter and as a drain, with its primary function believed by the designers (CH2M Hill) to be as a drain because of the expected high permeability of the embankment materials. In actuality, the primary benefit of the Zone 2 vertical filter/drain is as a filter to protect against piping of Zone 1 in the event that transverse cracks develop. The original filter design presented in CH2M Hill (1995a) was based on NAVFAC DM 7.1 (1992). This procedure differs from the more widely accepted standard that is outlined in Chapter 26, Part 633, of the National Engineering Handbook (NRCS, 1994), in that, among other things, the base soil gradation curves are not adjusted for gravel content. Because the base soils contained significant quantities of gravel, the critical filtering requirement (D_{15f} / D_{85b} < 5) could allow for the filter to be too coarse. In fact, in the Design Report the maximum D_{15f} for the filter initially was established too coarse, but the gradation that was actually specified and ultimately used to construct Zone 2 (summarized on Table 2) does just meet the filtering requirement, as described in the following Section 2 - Supplemental Geotechnical Analysis.

Table 2. Casandro Dam – Zone 2 Filter/Drain Material Characteristics

Description	USCS	Properties	
Chimney drain – clean, well-graded gravelly coarse sand or coarse sandy gravel from imported source	SW, GW, or GP	Sieve	% Passing
		1½-inch	100
		1-inch	75-100
		¾ - inch	60-100
		½ - inch	50-90
		¼ - inch	30-65
		No. 4	20-55
		No. 8	10-35
		No. 16	0-15
		No. 30	0-5
		No. 200	<1

The gradation band specified in the project contract documents, and summarized on Table 2, was designed in accordance with the NAVFAC guidance document for both filtering and permeability considerations. To achieve the desired k_{min} = 1 ft/min characteristic, the designers established the filter band such that it met the filter requirements, but also encompassed typical gradation curves for granular drain materials that meet the permeability requirement. The design calculations refer to Figure 6, pp. 7.1-277, on the NAVFAC DM 7.1 as the basis for their design limits (CH2M Hill, 1995a). This figure shows typical permeability estimates for specific gradations of several drain materials.

During construction the contractor had some difficulty meeting the specified k_{min} = 1 ft/min requirements for Zone 2 filter, and there was considerable discussion in the project

correspondence regarding this issue. The principal concern noted in the correspondence dealt with an apparent incompatibility between the Zone 2 gradation to meet both the filtration requirements and the specified minimum hydraulic conductivity (k_{min} = 1 ft/min). The contractor initially experienced several failed attempts to achieve the permeability requirement with materials that were processed and blended to meet the gradation specification.

Following the initial trials, the engineer of record (Ken Ricker) checked the filtering requirements for the revised Zone 1 gradations using the current methodology (NRCS, 1994), and developed a revised filter band. Ultimately, the hydraulic conductivity requirement was reduced to 0.8 ft/min, which allowed the contractor to meet the modified specification while staying within the revised gradation band.

In order to compensate for the assumed reduced hydraulic capacity, the cross-sectional areas of the finger drains were increased by 20 percent. It is assumed that the finger drain capacity as constructed is roughly equivalent to the capacity as calculated previously (approximately 34 gal/min) for the smaller finger drains with higher k.

1.4 Original Slope Stability Analyses

The designers assumed the parameters shown on Table 3 for the slope stability analyses, based on laboratory direct shear testing of 6 remolded samples (CH2M Hill, 1995a). Alternate strength assumptions for the Zone 1 fill were developed based on triaxial shear testing of samples with higher fines content (TP-15, B-1, with 25.6 percent low plasticity fines). The designers did not anticipate these samples as being representative of the Zone 1 fill. All samples were obtained from the surficial soils in the dam foundation and the upstream reservoir areas. Slope stability analysis results were reported for the expected strength and loading conditions shown on Table 4. Table 5 provides the results of slope stability analyses for various loading conditions under the alternate strength assumptions.

Table 3. Embankment Soil Properties Used in Stability Analysis

Property	Zone I	Zone I (alternate strength assumption)	Foundation
Moist unit weight (γ) (pcf)	120	120	130
Angle of internal friction (φ)	40°	21	40 °
Cohesion (c) (psf)	0	240	300

The designers evaluated the upstream slope for a rapid drawdown condition under the assumptions that a full phreatic line could develop up to the emergency spillway elevation, and that no dissipation of pore pressures would occur following instantaneous drawdown from full to a pool level corresponding to ½ the full level. This limitation on the instantaneous drawdown level achieved the required minimum factor of safety = 1.2.

Table 4. Original Slope Stability Analyses Results

Slope	Conditions	Minimum F.S.
3H:1V downstream	Static, dry slope (drain intercepts seepage)	2.7
	Static, phreatic line emerges on slope (no drains)	1.5
	Pseudo static	1.9
3H:1V upstream	Static, steady seepage at PMF pool level	2.7
	Static, steady seepage at partial pool level	2.3
	Pseudo static, steady seepage at PMF pool level	1.5
	Rapid drawdown from PMF pool level	1.2

Table 5. Original Slope Stability Analyses Results – Alternate Strength Assumption

Slope	Conditions	Minimum F.S.
3H:1V downstream	Static, dry slope (drain intercepts seepage)	1.9
	Pseudo static	1.4
3H:1V upstream	Static, steady seepage at PMF pool level	2.7
	Pseudo static, steady seepage at PMF pool level	1.6
	Rapid drawdown from PMF pool level	1.3

The pseudo-static analysis were done assuming a pseudo static coefficient = 0.1g. This coefficient is equal to the estimated peak ground acceleration based on a review of existing regional seismicity data and studies of known faults. The data review is summarized in the Geotechnical Report (CH2M Hill, 1995a).

Downstream slope stability was evaluated for both dry slope conditions (assuming the drain intercepts seepage) and an assumed steady seepage condition without the internal drain (phreatic line emerging on the downstream slope). Computed factors of safety were acceptable, even for the conservative seepage assumption for the 3H:1V slope. It is believed that the downstream slope inclination was controlled not by stability considerations, but rather by constructability considerations for the emergency spillway over the dam.

1.5 Embankment Settlement

Settlement of the embankment and foundation was estimated using elastic theory. Compressions of between 1 and 1.3 inches were estimated for both the foundation and embankment, resulting in a total settlement of approximately 2 to 3 inches maximum. To accommodate anticipated settlements, the designers recommended increasing the height of the dam by 6 inches.

1.6 Penetrations through the Embankment and Foundation

In the original design there were to have been 4 new pipes passing through the embankment and foundation as follows: relocated sanitary sewer pipe, low flow outlet pipe, and 2 pipes to drain the chimney drain (CH2M Hill, 1995a). Gannett Fleming could find no record that the chimney drain outfall pipes were installed. Instead, as described in Section 1.3 of this memo, four granular finger drains were used to provide drainage outlets for the chimney drain.

New Sanitary Sewer Pipe. The new sewer line is a 12-inch ductile iron pipe that replaced a 10-inch pipe which was removed from the dam foundation. The new pipe crosses the dam axis at about Station 14+59, south of the emergency spillway, at elevation 2121.6. The new sewer pipe was trenched into native foundation material, and the pipe is encased in concrete slurry from just upstream from the dam to the downstream sanitary manhole at the downstream toe of the dam, except as follows:

- The new sewer pipe crosses through the Zone 2 chimney drain trench, approximately 4.5 ft above the bottom of the trench. A special construction detail was prepared in the field, and review of the as-built plan indicates that the chimney drain material extends all around the sanitary sewer pipe, serving as a filter diaphragm.
- The pipe is founded in the native, cemented soils except from Sta 10+30 to 10+90 (stationing on the sewer-line), where the pipe invert was above grade. Special details were developed in the field to form the concrete pipe encasement through this reach, and to construct the fill around the pipe to ensure good compaction against the formed concrete.

Outlet Pipe. The primary outlet is a 36-inch diameter reinforced concrete pipe that extends through the embankment fill, emerges through the spillway chute slab, and discharges into the stilling basin. The original design recommended the pipe be installed by placing the embankment fill to an elevation approximately 2 feet above the top of the pipe, then excavating the pipe trench into the compacted fill. In the original design, the outlet pipe trench was to be backfilled with concrete slurry up to the top of the trench between the upstream face of the dam to 4 feet downstream from the chimney drain, then backfilled with chimney drain material (Zone 2) from that point to the spillway. During construction, the inspectors realized that this would result in an unintended outlet for the chimney drain at a lower elevation than the finger drains, which were the intended outlets. A field change was made which eliminated the Zone 2 backfill downstream from the chimney section, such that the pipe was installed downstream from the chimney in a similar manner as upstream. The penetration of the pipe through the chimney section provides a filter diaphragm for the pipe.

1.7 Erosion Protection below Emergency Spillway

The depth of the cutoff wall below the emergency spillway stilling basin was estimated using a procedure outlined in the District's Hydraulics Manual for estimating local scour hole geometry at outlet structures. This procedure predicted a maximum scour hole depth of 8.8 ft located 60 ft downstream from the stilling basin. In the original design report, it was assumed that no riprap protection would be provided downstream from the stilling basin (CH2M Hill, 1995a). To protect the stilling basin from undermining by scour during large flow events, the designers recommended incorporating an 8 ft deep cut-off wall below the stilling basin.

As-built drawings indicate the cutoff wall extends 11.5 ft below the ground surface, and about 5.5 ft below the stilling basin slab. This wall extends around the end and both sides of the stilling basin. Also, a 4-ft deep riprap apron was constructed downstream from the stilling basin. The riprap extends across the 80-ft width of the stilling basin and an estimated 40 feet downstream from the structure. No riprap was placed behind the stilling basin walls on either side, and this area may be vulnerable to erosion and scour during major flood events.

1.8 Under-drainage Measures for Emergency Spillway Chute and Stilling Basin Slab

The design incorporated several features to provide drainage for the emergency spillway which is constructed as a concrete weir and chute over the dam. These spillway drainage elements are described as follows:

- Zone 2 material was placed in an 8 to 12-inch layer under the chute slab, and as the lower 2 feet of backfill behind the vertical chute walls. The under-slab drainage layer was placed directly on the 3H:1V downstream slope using a wire mesh to stabilize and support the granular drain rock material and facilitate slab construction. The chute under-drain ties into the chimney drain near the top of the chute, and outlet pipes are provided through the chute walls at various locations down the sloping backfill. In addition to its intended function as a drainage layer, the Zone 2 material also is intended to serve as a protective filter to prevent fines from being sucked up through cracks in the slab if negative pressures were to develop at vertical offsets in the slab.
- A 12-inch layer of Zone 2 material was placed beneath the horizontal stilling basin slab, and ties into the sloping chute under-drain. Slotted PVC drain pipes were installed within the granular layer which discharge through the chute walls a few feet above the elevation of the top of the stilling basin slab. The design intent is for this under-drain to relieve potentially damaging hydraulic uplift pressures beneath the slab following discharge events. The designers also incorporated an 11.5 ft deep vertical cutoff wall extending around the downstream end and sides of the stilling basin to minimize the flow towards the stilling basin, and to protect against undermining as described previously.

1.9 Summary of Key Findings from the Geotechnical Data Review

Design Phase Site Investigation and Testing. The number of exploration pits and borings, number and types of samples collected, and number and types of laboratory tests that were done during the design phase were quite reasonable for a dam of this size. However, there were some deficiencies in the investigation program that are worth noting. A key issue was the evidently inaccurate characterization of the Zone 1 materials – the primary material used to construct the dam. The designers believed this material would be predominantly clean to slightly silty gravelly sand with less than 10%, non-plastic fines. This assumption was based on the results of the laboratory test program. Shear strength and hydraulic conductivity parameters that were assumed for the design analyses were based on laboratory testing of these low fines content materials.

The majority of Zone 1 materials that were encountered during the construction phase contained significantly higher amounts of low plasticity, clayey fines (>10% up to 24%). The reason for this discrepancy is not totally clear from the project records. It is clear that the engineers of record for the construction phase were aware that this discrepancy could have had significant impacts on key design analyses, especially slope stability and filter design, and check analyses were done to ensure that essential criteria would be met. These check analyses included verification of the filter compatibility for the finer Zone 1 base soils using modern filter criteria (NRCS, 1994). The ADWR also requested additional stability analyses using alternative strength assumptions based on testing of soils with higher fines content. These additional

stability analyses were completed as described in Addendum 2 to the Design Report, and the results are summarized on Table 5 in this memo.

Zone 2 Chimney Drain. The designers assumed that full and rapid development of a phreatic line would occur within the dam during extreme flood events, and used this assumption as primary justification for incorporating a high-capacity internal chimney drain in their embankment design. ***As constructed, the actual capacity of the internal drain system is severely constrained by the limited cross-sectional area and permeability of the Zone 2 finger drains.*** The evident design intent was that the drain system should have substantial hydraulic capacity, on the order of 3 times the estimated worst-case seepage estimate This estimated design capacity was based on the outlet portion of the drain system comprised of two, 8-inch pipes. However, as constructed, these outlet pipes were not installed, and instead four granular finger drains were constructed to provide the outlets for the chimney drain. Gannett Fleming could not locate any design calculations related to sizing of the finger drains. Our independent calculation (presented in Section 1.3 of this memo) indicates that the total finger drain capacity is about 34 gal/min, which is substantially less than the 1120 gal/min capacity of the outlet pipes assumed by the designers.

The project reviewers and geotechnical engineer of record during construction recognized that the critical function of Zone 2 is not as a drain, but as a filter to protect against internal erosion and piping of the Zone 1. An excessive amount of time and effort was spent during construction in trying to comply with a specification standard for permeability that was not only in conflict with the gradation specification required to achieve filtration, but was ultimately unnecessary, as indicated by supplemental seepage analysis provided in Section 2 of this memo. Transient seepage analysis show that seepage into the chimney drain is likely to be minimal, even during extreme flood events, due to the limited impoundment times anticipated for this flood retention structure.

2.0 SUPPLEMENTAL GEOTECHNICAL ANALYSIS

2.1 Supplemental Seepage and Slope Stability Analysis

In support of the Phase I Structures Assessment, Gannett Fleming conducted preliminary supplemental seepage and slope stability analysis for Casandro Dam to document the expected stability of the structure under anticipated phreatic surface conditions. The key design assumption used in the original stability analysis by CH2M Hill is suspect for the following reasons:

- **Design Assumption: Development of a steady state phreatic line** – The original design assumed that a steady state phreatic line would be likely to develop within the dam because the embankment was expected to be constructed of relatively pervious Zone 1 materials comprised predominantly of clean to slightly silty gravelly sands.

  # **Revised Assumption No. 1: Development of a high-level steady state phreatic line is not likely because** (1) the Zone 1 materials actually used to construct the dam had between 10 and 24 percent clayey fines and would therefore not be pervious, and (2) the maximum detention time for a 100-year event will be less

than 10 days, assuming the outlet does not clog. In our estimation, this is insufficient time for a high-level steady state seepage line to develop.

Gannett Fleming conducted preliminary seepage analyses using a numerical model (SEEP/W) that allows simulation of the transient wetting front advance into the upstream shell of the dam during a storm detention event, or sequence of events. The results are shown on Figure 3 for a sequence of two back-to-back 100-year floods.

The SEEP/W model correctly accounts for unsaturated and saturated hydraulic conductivities and gradients within the soil to predict the rate of infiltration during a temporary impoundment event. A standard "Silty Sand" material type was selected from the model's database to represent the Casandro Dam embankment materials. The database provides the necessary unsaturated hydraulic parameters for use in the simulation. The vertical saturated hydraulic conductivity was assumed to be 1.4 ft/day (5×10^{-4} cm/s). This was the value used by the original designers based on laboratory tests on materials containing less than 10 percent fines, as reported in the Geotechnical Report (CH2M Hill, 1975a). As previously stated, these materials are likely not representative of materials actually used to construct Zone 1, which contained higher percentages of low plasticity fines. However, this high vertical hydraulic conductivity assumption is expected to provide conservative results for the seepage estimate. The embankment was modeled as a homogeneous section, with a horizontal:vertical anisotropy (k_h/k_v) ratio of 10:1 for the hydraulic conductivity.

Figure 3 shows the simulated development of the seepage line into the embankment with time during a sequence of two consecutive 100-year events (multiple storm scenario). This impoundment scenario was modeled to estimate a conservative phreatic line for use in evaluating slope stability during drawdown. It is evident that even following multiple storm events, the wetting front will advance to a very limited extent into the dam. Also, the model results indicate rapid dissipation of the upstream pore pressures as the pool level drops.

Slope stability was analyzed using the program SLOPE/W, which imports the estimated pore pressures from the SEEP/W analysis. Stability was evaluated using the same material property assumptions that the CH2M Hill designers used (as summarized on Table 3) except that a small cohesion intercept (c = 10 psf) was assigned for the strength estimate in order to exclude non-critical, extremely shallow (infinite slope) failure surface results. Figures 4 and 5 show the estimated minimum factors of safety for the upstream slope at two times: (1) during drawdown after the 2nd flood impoundment (factor of safety = 3.0), and (2) after drawdown to the sediment pool level immediately following two consecutive impoundment events (factor of safety = 2.7). The factor of safety is slightly higher at the intermediate impoundment stage (during drawdown) because the pool provides additional buttressing against the slope. Note that the slope is predicted to be nearly completely drained (low phreatic line) immediately following the two events, based on the assumptions used in the model for impoundment times, drawdown times, and hydraulic conductivity of the materials.

Slope stability for the downstream slope was also checked, although the original analysis was considered appropriate and correct. The factor of safety = 2.7 is in agreement with the original computation. The results of the preliminary supplemental seepage and slope stability analyses are summarized on Table 6.

Table 6. Preliminary* Supplemental Slope Stability Analyses

Slope	Report Figure	Conditions	Minimum F.S.
3H:1V upstream	4	Intermediate drawdown level during sequence of two, 100-yr impoundment events	3.0
	5	Immediately following two, 100-yr impoundment events	2.7
2H:1V downstream	6	Dry slope – critical failure surface	2.7

* These results are based on preliminary analyses conducted using soil parameters from previous design reports and assumed hydraulic conductivity parameters.

2.2 Compatibility of Zone 2 Drain Fill as Filter for Zone 1

Zone 2 is shown on the as-built drawings as a 4-ft wide, vertical chimney drain positioned under the downstream side of the dam crest. This zone was designed to act as both a drain and a filter. Its most important function is to serve as a filter to protect against potential internal erosion and piping of the core materials in the event of transverse crack development. Because of its critical function as a filter, the Zone 2 gradation was checked against current filter criteria in accordance with the NRCS, National Engineering Handbook, Chapter 26 "Gradation Design of Sand and Gravel Filters" (NRCS, 1994). This check was performed by the engineer of record during construction (RAM, 1996).

Figure 7 shows what is believed to be a representative gradation curve for the finer materials used in the Zone 1 "Base Soil" (graphed with solid circle symbols). This gradation curve was developed for a field sample from the "SC Stockpile" from the construction records, and has about 24 percent fines content. The sample classifies as a low plasticity clayey gravelly sand SC according to the Unified Soil Classification system (USCS). A second base soil gradation curve was also developed (graphed with solid triangles) from a sample derived from the "NC Stockpile", and had about 12 percent fines content.

The base soil gradation curves (solid symbols) were adjusted for gravel content as shown by the curves graphed with open symbols on Figure 7. The filtering and permeability (k) criteria for the adjusted curves are shown by the solid circles and solid triangles, respectively, on the 15% passing line. The coarse side of the Zone 2 specification band just achieves the recommended filtering limit for the finest base soils. Zone 2 does meet the permeability criteria for both base soil gradations.

3.0 RECOMMENDATIONS FOR FUTURE ACTIONS

3.1 Monitoring

In recognition of the presence of potentially erosive materials, inter-layered with potentially pervious lenses within native materials in both abutments, we recommend monitoring for seepage through the abutments during impoundment events, and regular visual inspection of the thin fill blanket that covers the natural slope south of the right abutment to ensure it is being properly maintained.

3.2 Supplemental Geotechnical Analyses

3.2.1 Review of Archived Project Construction Records

It is our understanding that project construction records may be archived in boxes at ADWR. Gannett Fleming recommends that these records be retrieved and reviewed during Phase II to confirm the geotechnical characteristics of both Zone 1 and Zone 2 materials. These properties came into question between the design and construction phases of Casandro Wash Dam. If necessary following the construction record review, supplemental sampling and testing of these materials could be done. In particular, the gradation characteristics and hydraulic conductivities of these materials could be tested to support additional seepage analyses and drain sizing evaluations. Representative samples could be obtained by excavation of test pits, and gradation tests done to confirm the construction-phase findings. Hydraulic conductivity tests could be performed using flexible-wall, triaxial tests on samples compacted in accordance with the construction specifications. These tests would provide estimates of the vertical hydraulic conductivities of the Zone 1 and Zone 2 materials for use in the seepage analyses.

3.2.2 Documentation of Slope Stability and Seepage for Main Dam

Gannett Fleming does not anticipate any problems with slope stability under any reasonable loading conditions for Casandro Dam. The original stability analysis, and our preliminary (Phase I) stability analyses adequately document factors of safety for all the loading conditions that would need to be evaluated under current NRCS or ADWR criteria, with the possible exception of rapid drawdown as discussed below. Table 7 shows the definitions of various loading conditions and a comparison between the current NRCS design criteria that are outlined in TR-60 (SCS, 1985), and the current criteria as presented in the ADWR dam safety rules and regulations for jurisdictional dams.

Table 7. Slope Stability Design Criteria and Minimum Factors of Safety

Loading Condition	TR-60 (SCS, 1985)	ADWR[1]	Min. FOS Casandro Dam
Rapid Drawdown (upstream slope)	1.2	1.2	1.2[3] – 2.7[4]
Steady seepage w/o seismic forces, phreatic surface fully developed w/reservoir at principal spillway elevation (downstream slope)	1.5	1.5	2.7
Steady seepage w/ phreatic surface developed from critical partial pool elevation (upstream slope)	n/a	1.5	2.3
Steady seepage w/seismic forces, phreatic surface fully developed w/reservoir at principal spillway elevation (downstream slope)	1.1	n/a[2]	1.9

[1] From R-15-1216(B)(1)(c)(i) Table 5, effective June 12, 2000

[2] ADWR specifies pseudo static analysis for embankment dams not subject to liquefaction, and having maximum peak bedrock acceleration < 0.2 g, using a pseudo-static coefficient at least 60% of the maximum peak bedrock acceleration

[3] FOS for "instantaneous" drawdown from full pool to ½ pool elevation, with no dissipation of pore water pressures from full development of phreatic line under full pool steady state (from CH2M Hill, 1995b)

[4] Minimum FOS for drawdown following two, back-to-back reservoir fillings assuming transient pore water pressure development and dissipation as reservoir level rises and drops (supplemental geotechnical analysis as part of this Phase I Structures Assessment, presented in Section 2 of this memorandum)

Rapid Drawdown Stability (upstream slope): Preliminary analyses were conducted as part of this Phase I study that simulated a plausible scenario for development of the seepage line into the dam under temporary impoundment events, and to assess the upstream slope stability under expected drawdown rates with the outlet works functioning normally. These analyses show that it is very unlikely that a steady state phreatic line would develop in the Casandro Dam, assuming the outlet works are operational and not clogged for sustained periods of time following a flood event. ADWR criteria require that an "instantaneous" drawdown analysis be performed. The ADWR guidance and rules were developed for water retention dams, and the criteria are interpreted to mean that rapid drawdown stability should be evaluated assuming that a steady state phreatic line has developed from the normal high reservoir pool elevation. In the original analysis, rapid drawdown was evaluated assuming a fully developed phreatic line from the normal high reservoir pool elevation, followed by instantaneous drawdown to "½ the PMF elevation". It is unclear why the designers put this limitation on the instantaneous drawdown elevation. The critical upstream failure surface under this loading scenario was a shallow slip surface on the upper part of the slope. A more realistic, but still conservative rapid drawdown analysis that should adequately address the ADWR criteria would involve the following steps:

a. Establish the steady state phreatic line and pore pressure distribution using 2-D seepage analysis. Use reasonable assumptions for hydraulic conductivity and anisotropy for the embankment materials based on available information, or new testing of the Zone 1 and Zone 2 materials as described previously.
b. Model the dissipation of pore pressures with time, starting from the steady state initial condition, and assuming a worst case drawdown rate. The drawdown rate should be based on the fastest rate feasible assuming a fully operational outlet discharging at capacity. This is not an "instantaneous" drawdown assumption, but is much more realistic given the physical constraints on the rate of drawdown. Realistic hydraulic conductivities should be used for Zone 1 based on the actual materials that were used in construction, and not on the laboratory testing on samples having less than 10 percent fines. Pore pressure dissipation with time from the steady state condition can be estimated using either a transient numerical flow analysis or a suitable analytical procedure.
c. Evaluate the upstream slope stability at various stages of the drawdown by inputting the instantaneous pore pressure grids and reservoir levels from the transient seepage analysis. Report the minimum value, and compare against the design criteria (minimum factor of safety = 1.2).

Supplemental Seepage Analyses and Drain Size Evaluation: Previous seepage analyses for drain sizing in the original design report, and supplemental analyses by Gannett Fleming as part of this Phase I Structures Assessment, used Zone 1 hydraulic conductivity estimates from the

original site investigation and design report ($k_v = 5X10^{-4}$ cm/s, $k_h = 10k_v = 5X10^{-3}$ cm/s). These results are suspect because the materials tested for hydraulic conductivity in the original investigation are evidently different from the majority of Zone 1 materials actually used to construct the dam. It is likely that the Zone 1 materials may have substantially lower hydraulic conductivities due to higher amounts of low plasticity fines.

Supplemental transient seepage analyses that are documented in Section 2 of this memo indicate that the upstream zone will not become fully saturated, and that a steady state seepage condition into the chimney drain is unlikely to develop under plausible storm scenarios and normal operating conditions. However, it may be desirable or necessary to evaluate the drain capacity requirements under conditions where the outlet is plugged, and a steady state phreatic line does develop after some extended time period of impoundment. In concert with step (a) of the upstream rapid drawdown stability analysis previously described, additional supplemental analysis could be used to estimate "worst case" seepage quantities into the chimney drain using revised Zone 1 permeability assumptions. The finger drain capacity could then be checked against this revised seepage rate to evaluate whether or not the finger drains are adequate to handle the revised estimates of steady state seepage volumes. The stability analyses indicate that the downstream slope would be stable with adequate factors of safety, even if a seepage line were to develop on the downstream face (i.e., the internal drains were ineffective). The documentation of these analyses could show that even if the finger drains are overwhelmed, the likelihood of failure is low due to the relatively flat downstream slope (3H:1V), and strength of the Zone 1 materials.

3.2.3 Phase II Evaluation of Potential Seepage and Piping Issues in Left Abutment

A potential Category II failure mode that was recognized during the FMEA involves piping and erosion of materials in the right abutment, either as a result of a separation of the zone between the dam section and the blanket fill, or as a result of cracks or openings that penetrate the thin blanket fill material that was placed on the abutment slope south of the abutment. Adverse factors contributing to this failure scenario are the presence of lenticular zones of coarse native materials, and loose fill materials in the abutment. This adverse abutment condition is more of a concern on the right abutment than on the left abutment because of the nature of the steep cut and tie with the abutment and the presence of the thin blanket fill that was placed over the abutment ridge, which serves as the "dam" south of the right abutment.

Additional seepage and slope stability analysis could be performed to evaluate the candidate failure mode associated with potential seepage and piping erosion through the right abutment. The analysis is outlined as follows:

1) Develop geologic cross sections through the abutment, beyond the extent of the Zone 1/Zone 2 fill. Sections should be drawn for both the upstream and downstream abutment slopes. Use boring log and laboratory test data from the Geotechnical Report (CH2M Hill, 1995a), and the as-built construction plans to estimate the subsurface slope stratigraphy and geometry as accurately as possible. Assign material parameters (hydraulic conductivities) for the various layers in the slope using available information and judgement.
2) Highlight any zones or potential zones of high transmissivity.

3) Conduct seepage analysis to estimate the range or extent of saturation and seepage through the abutment during impoundment events.
   a) CASE 1 – Establish a "worst case" seepage line through the abutment. A conservative analysis could assume that the outlet intake is clogged, allowing a high elevation steady-state seepage line to develop through the narrow ridge at the right end of the dam. Also, it could be assumed that the Zone 1 blanketing layer is very thin, or has been damaged, allowing reservoir seepage to quickly penetrate into coarse, loose layers of fill and highly stratified, coarse deposits in the abutment. Further, it could be assumed that the slope has been "pre-saturated" by vertical infiltration from the structures on the pad at the top of the ridge. In this worst case scenario, it is likely that seepage would emerge on the downstream side of the ridge.
   b) CASE 2 – Estimate a more likely extent of saturation and pore pressure development in the abutment slope by running a seepage analysis with the Zone 1 blanketing intact, and assuming limited detention time in the reservoir following an impoundment event or events. In this case the seepage line would likely only partially penetrate the upstream slope of the ridge, and may not emerge on the downstream slope.
4) Evaluate whether the potential worst-case and likely seepage scenarios present a potential threat with regard to piping or internal erosion, and recommend remedial actions that could be taken to improve the conditions in the right abutment of the dam, such as installation of a protective filter or seepage cutoff through the ridge.

3.2.4 Evaluation of Potential Settlement and Elongation of the Principal Spillway

It is normally undesirable to found the outlet pipe on embankment fill. The concern is that the pipe could settle differentially, with more settlement occurring under the central part of the embankment, and less settlement towards the upstream and downstream toes. This "bowing" of the pipe under severe settlement conditions could lead to disruption of joints in the pipe and leakage through the joints when the pipe is flowing full during flood events. At Casandro Dam the potential for embankment settlement causing elongation and disruption of the pipe is mitigated by the low height of the dam, the relatively firm foundation, and very low probability for saturation of the fill. However, analyses could be done to estimate the maximum elongation that could occur under expected differential settlements, and compare that axial strain to the tolerances of the pipe and its joints.

REFERENCES

CH2M Hill (1995a). "Casandro Wash Dam - Geotechnical Report, Volume 1 – Field and Laboratory Data and Volume 2-Analysis and Recommendation," prepared for Flood Control District of Maricopa County by CH2M Hill, Tempe, AZ, February.

CH2M Hill (1995b). "Casandro Wash Dam – Final Design Report," prepared for Flood Control District of Maricopa County by CH2M Hill, Tempe, AZ, February.

CH2M Hill (1995c). Construction Specifications for Contract FCD 95-02, Casandro Wash Dam in the Town of Wickenburg near the Intersection of U.S. Highway 60 and Mariposa," CH2M Hill, Tempe, AZ.

RAM (1996). "Summary Report, Casandro Wash Dam," letter report from Ricker, Atkinson, McBee & Assoc. to Flood Control District of Maricopa County, Arizona, November 18.

NRCS (1994). "National Engineering Handbook," National Resources Conservation Service, United Stares Department of Agriculture.

GEO-SLOPE (2002). "User's Guide for the Computer Program Seep/W Version 5," GEO-SLOPE International Ltd., Calgary, Alberta, Canada.

ADWR (1994). "Rules and Regulations Pertaining to the Supervision of Dams," Arizona Department of Water Resources, Surface Water Management Division, Dam Safety Section.

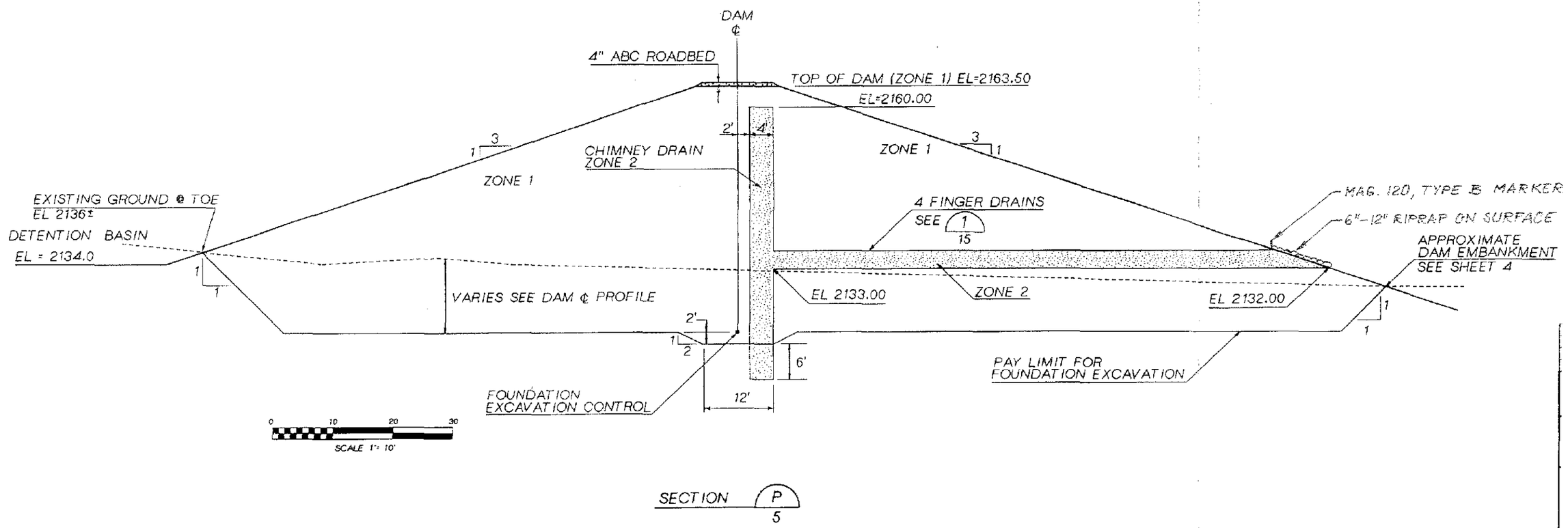

SECTION P/5

DAM SECTION AT OUTSIDE SPILLWAY

Gannett Fleming	TYPICAL CROSS SECTION CASANDRO WASH DAM FLOOD CONTROL DISTRICT OF MARICOPA COUNTY	FIGURE 1

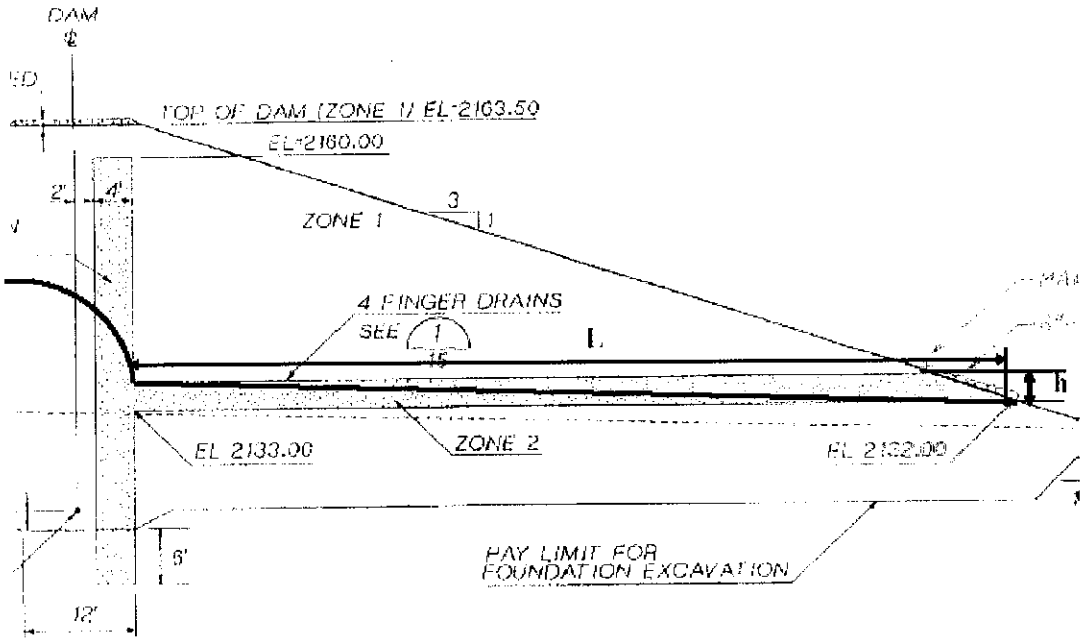

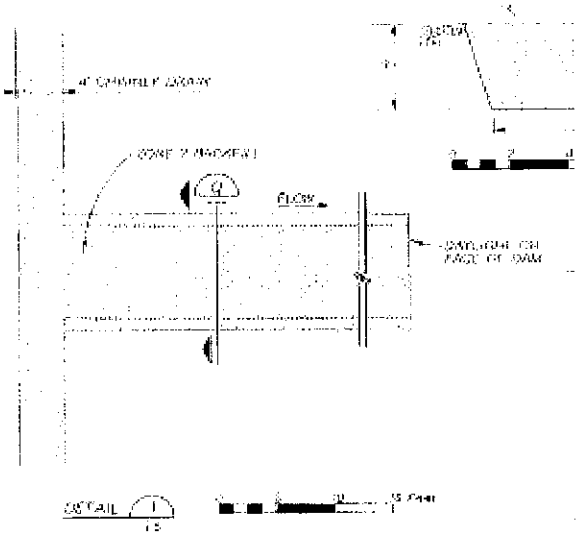

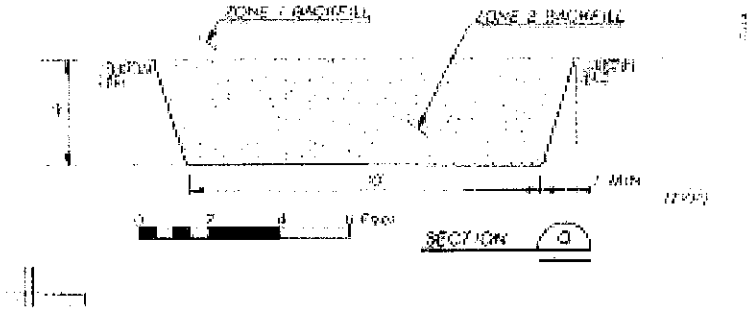

Gannett Fleming	DRAIN DETAILS CASANDRO WASH DAM FLOOD CONTROL DISTRICT OF MARICOPA COUNTY	FIGURE 2

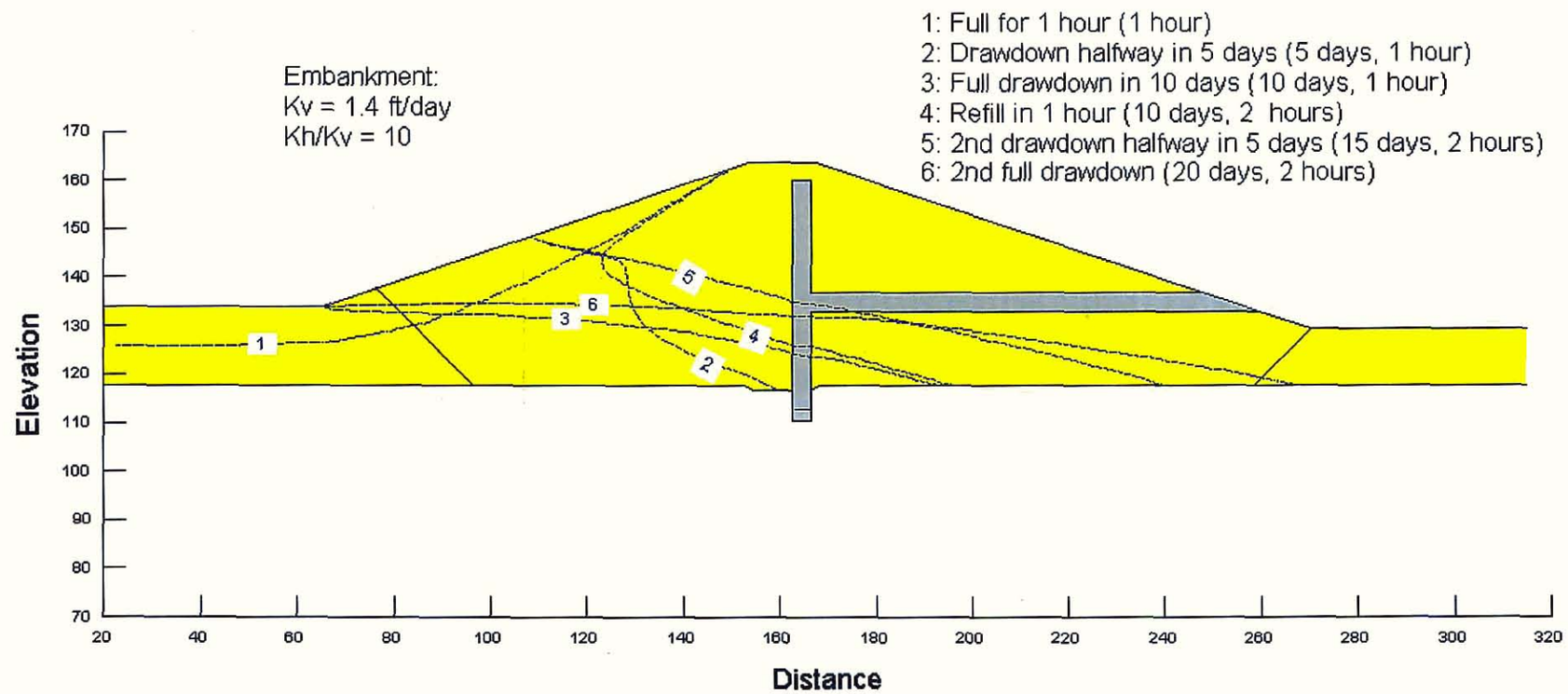

Gannett Fleming

SEEPAGE ANALYSIS
CASANDRO WASH DAM
FLOOD CONTROL DISTRICT OF MARICOPA COUNTY

FIGURE
3

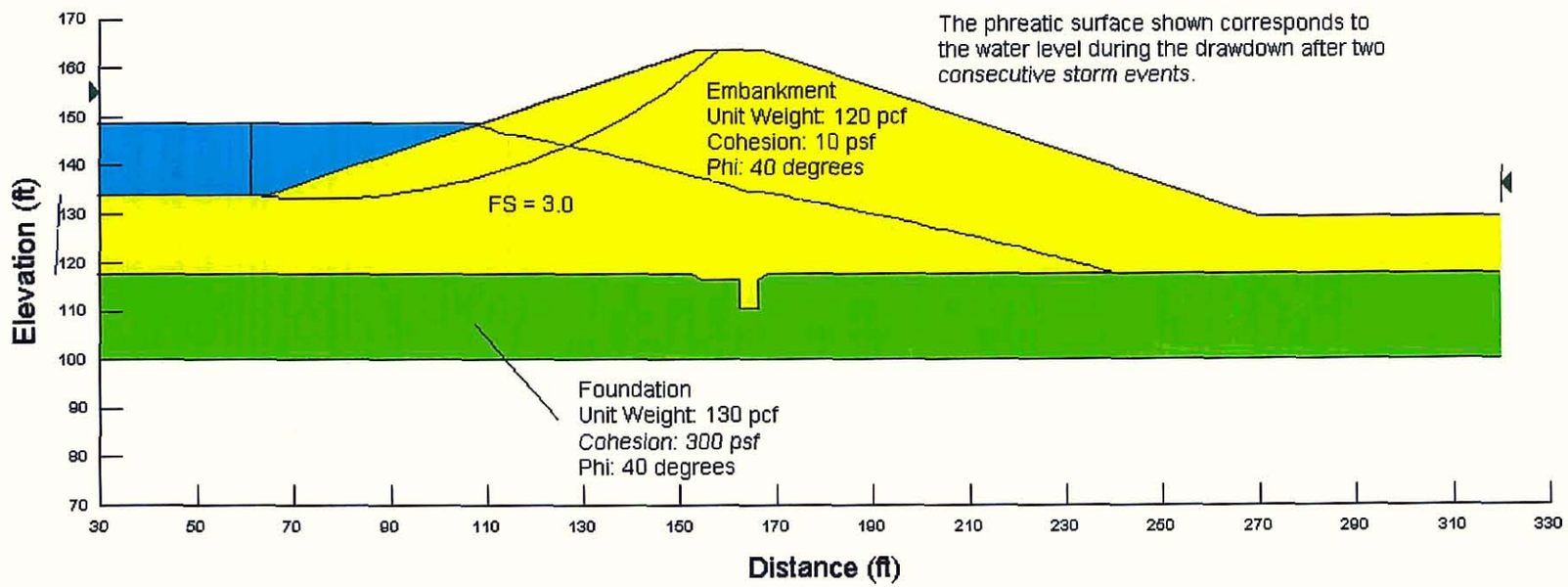

Gannett Fleming

UPSTREAM STABILITY DURING DRAWDOWN AFTER TWO CONSECUTIVE EVENTS
CASANDRO WASH DAM
FLOOD CONTROL DISTRICT OF MARICOPA COUNTY

FIGURE
4

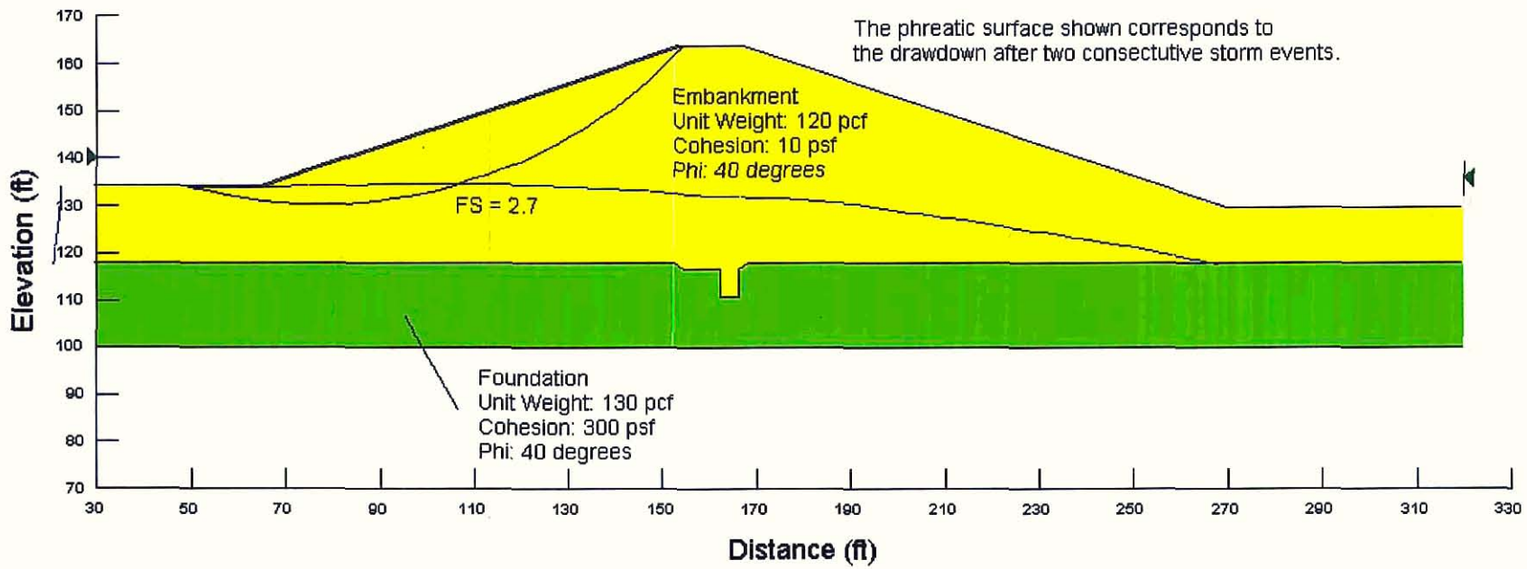

Gannett Fleming

UPSTREAM STABILITY AFTER DRAWDOWN FROM TWO CONSECUTIVE EVENTS
CASANDRO WASH DAM
FLOOD CONTROL DISTRICT OF MARICOPA COUNTY

FIGURE
5

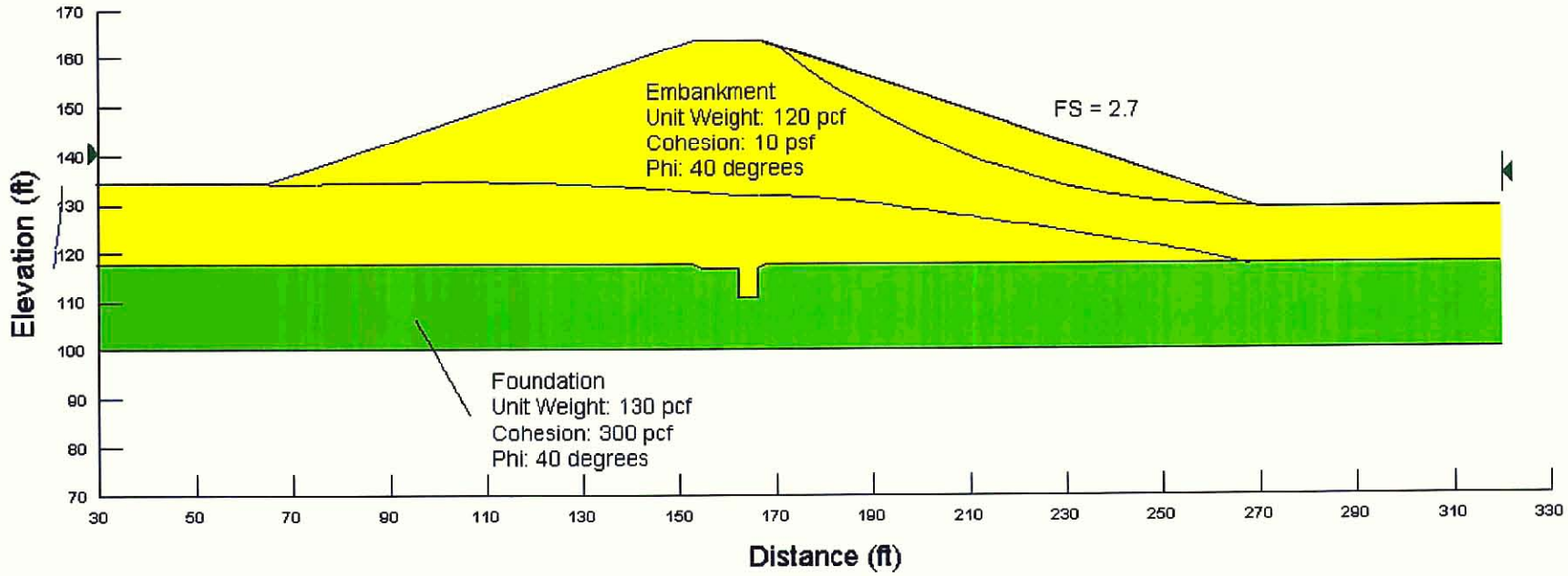

Gannett Fleming

DOWNSTREAM STABILITY
CASANDRO WASH DAM
FLOOD CONTROL DISTRICT OF MARICOPA COUNTY

FIGURE
6

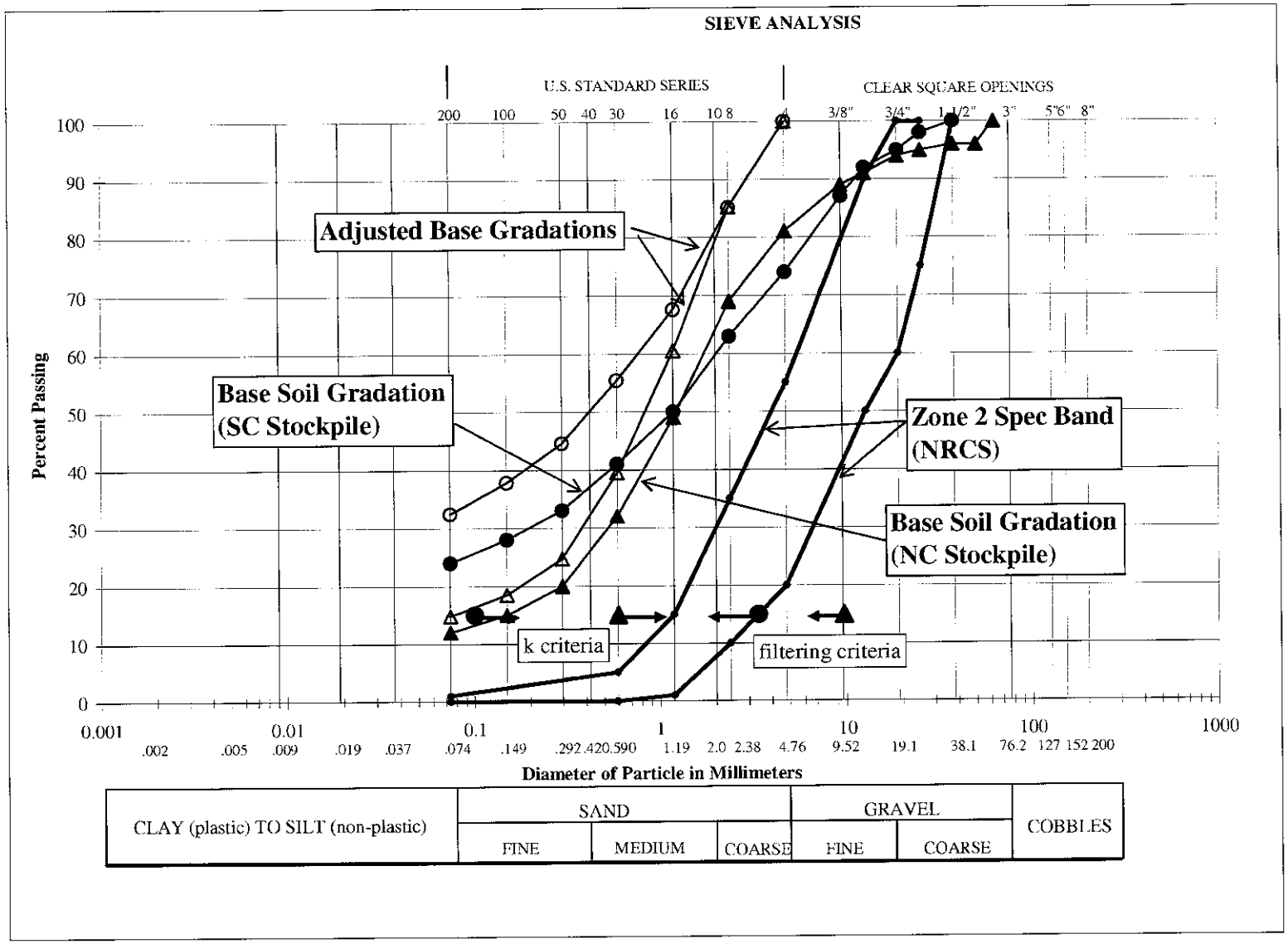

Gannett Fleming

FILTER COMPATIBILITY CHECK FOR ZONE 2
CASANDRO WASH DAM
FLOOD CONTROL DISTRICT OF MARICOPA COUNTY

FIGURE 7

Table 3-2
Summary of Laboratory Analyses
Casandro Wash Detention Basin

Test Pit/ Boring #	Depth (ft)	Sample I.D.	Classification	Field Soil Properties		Particle Size Distribution % Passing by Weight (a)		Atterberg Limits		Moisture Density Relationship		Specific Gravity	Shear Strength (b)		Triaxial Shear (c)		Permeability (f)
				Dry Density (pcf)	Moisture Content (%)	#4	#200	LL	PI	Max Dry Density (pcf)	Optimum Moisture Content (%)		C (ksf)	0 (Deg)	C (ksf)	0 (Deg)	K (cm/sec)
TP-1	5	TP-1, B-1	SW-SM		2.5	65.0	9.3										
TP-1	9	TP-1, B-2	SW									2.62					1.1E-03
TP-2	3	TP-2, B-1	SW		3.8								0.4	39			
TP-3	5	TP-3, B-1	SP		3.9	86.0	3.5										
TP-3	17	TP-3, B-2	SW-SC			67.0	11.7										
TP-4	3	TP-4, B-1	SW-SM		4.0												
TP-4	14	TP-4, B-2	SW-SM			52.0	6.0						0	45			
TP-5	7	TP-5, B-1	SM		5.8												
TP-5	16	TP-5, B-2	SW-SM			67.0	9.3										6.0E-04
TP-7	4	TP-7, B-1	SW-SM		3.9												7.6E-04
TP-7	15	TP-7, B-2	SW-SM			90.0	9.8										
TP-8	4	TP-8, B-1	SM		7.4										2.88	0	
TP-8	15	TP-8, B-2	SW-SM			71.0	7.6						0.5	40			1.2E-04
TP-9	2	TP-9, B-1	SW-SM		6.8	64.0	8.3										
TP-11	2	TP-11, B-1	SP		6.1	88.0	3.4										
TP-11	5	TP-11, B-2	SC		7.6	74.0	12.1			113.0	14.2						
TP-11	14	TP-11, B-3	SM										0	45			
TP-12	4	TP-12, B-1	SM		5.0					118.0	11.5		1.55	27			
TP-12	9	TP-12, B-2	GW-GM			37.0	8.3										1.1E-04
TP-13	4	TP-13, B-1	SP-SM										0	45			
TP-15	5	TP-15, B-1	SM		6.2	75.0	25.6	27.0	6.0						0.72	22.0	
TP-15	10	TP-15, B-2	SP														1.6E-03
TP-15	13	TP-15, B-3	SW-SM			51.0	6.3										4.2E-04
TP-16	2	TP-16, B-1	SM		4.3												
TP-16	8	TP-16, B-2	SW-SM		9.1	81.0	7.3										
TP-18	3	TP-18, B-1	SW-SM		6.9	51.0	5.4			114.0	12.9						8.3E-05
TP-18	9	TP-18, B-2	SW-SM			61.0	5.1										

Table 3-2
Summary of Laboratory Analyses
Casandro Wash Detention Basin

Test Pit/ Boring #	Depth (ft)	Sample I.D.	Classification	Field Soil Properties		Particle Size Distribution % Passing by Weight (a)		Atterberg Limits		Moisture Density Relationship		Specific Gravity	Shear Strength (b)		Triaxial Shear (c)		Permeability (f)
				Dry Density (pcf)	Moisture Content (%)	#4	#200	LL	PI	Max Dry Density (pcf)	Optimum Moisture Content (%)		C (ksf)	0 (Deg)	C (ksf)	0 (Deg)	K (cm/sec)
TP-20	3	TP-20, B-1	SW-SM		5.0	63.0	10.3			118.0	11.8	2.57					2.1E-06
TP-20	6	TP-20, B-2	SW-SM	124 (d)		69.0	11.8										
TP-21	3	TP-21, B-1	SW		5.2	74.0	4.3										
TP-21	5	TP-21, B-2	SM		5.7												
TP-22	3	TP-22, B-1	SM		4.8	86.0	18.7			120.0	11.0						1.1E-04
TP-23	5	TP-23, B-1	SW		4.6	66.0	2.7										
TP-24	2	TP-24, B-1	SW		7.9	85.0	5.9			109.0	14.6						
TP-24	2	TP-24, B-2	SW-SM		7.5	63.0	5.9										
B-1	17.5	B-1, SS-8	CL					33.0	12.0								
B-6	10	B-6, ST-5	SW	106.0	5.6												
B-10	4	B-10, ST-3	SM	98.0	9.9												
B-10	20	B-10, SC-9	SW-SM	92.0	9.6												
Sediment (e)	0		SW			90.0	3.0										

Notes:

(a) 100% of every sample passed 2-inch sieve

(b) Direct shear test with normal stresses of 1, 2, and 3 ksf

(c) Triaxial shear test with confining pressures of 10, 20, and 30 psi

(d) Sample was cemented. Density determined by paraffin coating method. (ASTM D1188)

(e) Surface sample collected near TP-21

(f) Permeability determined in laboratory on sample compacted to 95% of ASTM 698 at optimum moisture.