FLOOD CONTROL DISTRICT OF MARICOPA COUNTY

CONTRACT FCD 2001C035

TASK 1

WITTMANN ADMP STRUCTURE SURVEYS

SUN VALLEY PKWY

PRESENTED BY

DATABASED TERRAIN MAPPING, INC.
1075 E. Ft. Lowell Road, Suite A-1
Tucson, Arizona 95719-2159
Voice 520.292.2020
FAX 520.888.4393

DATABASED TERRAIN MAPPING, INC.

4400 East Broadway Boulevard
Suite 508
Tucson, Arizona USA 85711
520.292.2020 Tel.
520.888.4393 Fax
DATABASED TERRAIN MAPPING, INC.

October 9, 200

Mr. John Stock
Survey Manager
FLOOD CONTROL DISTRICT OF MARICOPA COUNTY
2801 West Durango
Phoenix, Arizona 8509

RE: Contract FCD 2001C035
On-Call Surveying & Mapping Services - Task 1
Wittmann ADMP Structure Surveys
SUN VALLEY PARKWAY - SURVEY REPORT
CERTIFICATION

Dear Mr. Stock:

The data contained on the CD delivered enclosed **(CD VOLUME LABEL 011010_0711)** has been collected according to the specification set forth under Contract FCD2001C035 for structure surveys along the Sun Valley Parkway in the Wittmann ADMP area. The survey data is based on Maricopa County GDACS points within the project area. Individual GDACS points are identified in the datasets and sketches included with the delivery. All data is NAD83 and NAVD 88 collected with RTK GPS methods and procedures using Ashtech2 GPS system and technology.

This survey was completed under the direct supervision of Mr. Lee Harbers, Arizona RLS # 26401

The data is intended for the exclusive use by the Flood Control District of Maricopa County. **Databased Terrain Mapping, Inc.** or Mr. Lee Harbers accept no responsibility for the use or distribution of the data beyond that specifically intended by the District.

Sincerely,

REGISTERED LAND SURVEYOR
CERTIFICATE NO.
26401
LEE
HARBERS
Date Signed 10-9-0
ARIZONA U.S.A.

DATABASED TERRAIN MAPPING, INC.
Lee Harbers, RLS, Certified Photogrammetrist
President

DTM-DATABASED TERRAIN MAPPING, INC.
4400 E. Broadway, Suite 508
Tucson, Arizona 85711
(520) 292-2020
FAX (520) 888-4393

TRANSMITTAL

TO: FCDMC

DATE: 10·9·01
DTM Job# 21092
Client Job# FCD #2001C035

Attn: JOHN STOCK

Shipped VIA:
Shipping Date:
___Pages, including this page

The following items/documents are attached:

COPIES	DATE	DESCRIPTION
		WITTMAN ADMP - STRUCTURE SURVEYS
1	10/9/01	COMPLETE REPORT FOR STRUCTURE
		SURVEYS ALONG SUN VALLEY PARKWAY
		NOTEBOOK INCLUDES FIELD SKETCHES,
		PHOTOGRAPHS, EXCEL AND ASCII FILES
		OF RTK GPS DATA COLLECTION, BRIEF
		SURVEY REPORT, AND CERTIFICATION
		THE CD INCLUDED CONTAINS ELECTRONIC FILES
		OF FIELD DATA AND PHOTOGRAPHS.

REMARKS:

COPY TO: FILE

SIGNED: LEE HARBERS

John Stock - FCDX

From: Don Rerick - FCDX
Sent: Thursday, June 06, 2002 11:02 AM
To: John Stock - FCDX
Cc: Michael Lopez - FCDX; Don Rerick - FCDX; Amir Motamedi - FCDX
Subject: RE: Sun City Channel - Survey Needs

The PCN to use is 337.01.01 Sun City Channel Investigation. This would apply to the survey and H/H work.

Based on our discussion this morning the following survey work will be accomplished in the next two to three weeks:

1. Survey the concrete lined channel obtaining grade break shots, toe and top of lining from the start of the channel at the west side of Sun City where there is a steep drop then going west to the south side of Bell Road.

2. Survey the earthen channel from the south side of Bell Road to the concrete spillway located just before the channel becomes a desert wash. Cross sections will be taken at about 300' spacing, from wall/fence on the west to the B/C on the east.

Once the survey data is received MAL will do some hydraulic calculations to determine capacity, identify the need for some drops in the steep section of channel near the Sun City limit, and then AMM can correlate the capacity flow rate to a return frequency based on the recent ADMS hydrology.

The target date to finish the survey, calcs and H/H analysis is August 1.

Thanks.

-----Original Message-----
From: John Stock - FCDX
Sent: Thursday, June 06, 2002 8:55 AM
To: Don Rerick - FCDX
Subject: RE: Sun City Channel - Survey Needs

Don:
I can cut loose for twenty to thirty minutes any time today.
John

-----Original Message-----
From: Don Rerick - FCDX
Sent: Wednesday, June 05, 2002 4:26 PM
To: John Stock - FCDX
Cc: Don Rerick - FCDX; Michael Lopez - FCDX; Amir Motamedi - FCDX
Subject: Sun City Channel - Survey Needs

John, when you have a moment possibly this week, I need to discuss with you some survey work I need done for the subject channel. This involves obtaining some cross sections and invert elevations to determine slope. Then MAL and AMM will use this data to roughly quantify the capacity of the channel and the relative frequency event the channel can convey. I expect probably 10 - 12 cross section and invert shots will be required.

Please let me know when we can discuss. MAL, I would like your participation in the discussion with John so we can agree on cross section locations.

Thanks.

Sun City Channel

PCN #

JRS, J. HOLMES

Bell Road reach

Take by break Line method

detail at Bell Road

Digital Photos

Do on Ground

Tie To GDACS

N-S reach

Hydro X-Section method

TC/BC EAST

Barrier wall west

4400 East Broadway Boulevard
Suite 508
Tucson, Arizona USA 85711
520.292.2020 Tel.
520.888.4393 Fax
DATABASED TERRAIN MAPPING, INC.

October 9, 2001

Mr. John Stock
Survey Manager
FLOOD CONTROL DISTRICT OF MARICOPA COUNTY
2801 West Durango
Phoenix, Arizona 8509

RE: Contract FCD 2001C035
On-Call Surveying & Mapping Services - Task 1
Wittmann ADMP Structure Surveys
SUN VALLEY PARKWAY - SURVEY REPORT

Dear Mr. Stock:

Databased Terrain Mapping, Inc. has completed all field work and QA/QC activities as documented in the following datasets. Field activities for data collection were completed between August 31, 2001 and September 6, 2001. All field survey and documentation was completed under the direct supervision of Mr. Lee Harbers, Arizona RLS # 26401.

The procedures for the field survey activities involved:

1. Review of project alignment and limits as provided by FCD
2. Research and reconnaissance to locate available GDACS control point near the project that met the requirements for valid RTK GPS data collection.
3. Development of a plan that successfully completed all reporting tasks, including structure location/elevation, documentation of each structure by field observation (sketch) and digital photography.

All data for the structure surveys have been collected in NAD83 Arizona State Plane Coordinate System (Central Zone) and NAVD88 vertical datum with English (International Foot) units of measure. Each data collection session involved locating a valid GDACS point to be occupied by the RTK GPS Base Station. Other GDACS points in the vicinity were then visited and occupied with the rover unit to validate orientation of the system.

All field data has been reviewed and cross-referenced to the sketches and photographs submitted with this report. The following notes are critical to a thorough understanding of this report and offered as support thereof:

1. All data collection files are submitted in both hardcopy and electronic form (***.ASC files.) These ASCII files are named according to the GDACS point initially used for a particular "Session" ***OR*** a random point set in the vicinity of the alignment from the GDACS points. They may cover more than one day of data collection. Format is "Data Collection Point number, North, East, Elevation, Description." In the description column, the Station values are followed by the letters "N", "S", or "C", and, in some cases "BC". The "N" identifies the North side of the structure. The "S" identifies the South (upstream) side of the structure, and the ***"C" denotes the highest terrain elevation (potential dam) for each structure. This elevation is taken at the visual high point of the terrain along the approximate centerline profile of the structure.***
2. The individual structures have been identified by their Station location from existing construction plans. In some cases, when plans werenot furnished, the structure "station" was calculated from the stationing of other known structures.
3. Included at the front of the report (and electronically) is a file - SVP.xls. This spreadsheet format is a collation of the data points collected on each structure. Table format is "North, East, Elevation, Description"
4. Each structure was surveyed at each end and sketched to provide interpretive data *AND identify the physical point(s) that were "shot" during the RTK process.* ***These sketches should be examined for that purpose.*** *In some cases, the point of occupation was the bottom of the structure instead of the top. Other aspects/features of the structure were measured by taping and critical dimensions noted on the sketeches.* When RTK "shots" were taken for each structure, the low-flow point (ground elevation or "structure "floor" elevation was calculated from on-site measurements and noted on the sketch. These elevations take into account any sediment fill in the structure. The "convention" for the sketches is "North(Downstream)" and South(Upstream)" side - looking downstream & upstream respectively.
5. The ends of each structure were photographed with a 35mm digital camera and images stored as .jpg files. The 8x10

images have been plotted and accompany the sketches within this report. The naming convention for the images follows the "upstream" and "downstream" rule - **+**N *or* **+**S, *the "N" referring to the North (downstream) side - looking upstream and conversely for the South (upstream) side.*

6. Whenever an existing bench mark was found on these structures, the monument was measured. The measured value is shown in the data tables/files. The "stamped-found" elevation, when available/readable, has been recorded on the sketches related to that structure.
7. In addition to the structure data collection, the files identify random GDACS check points during the sessions.

Sincerely,

DATABASED TERRAIN MAPPING, INC.
Lee Harbers, RLS, Certified Photogrammetrist
President

REGISTERED LAND SURVEYOR
CERTIFICATE NO
26401
LEE
HARBERS
Date Signed 10-9-01
ARIZONA U.S.A.

attachments

Sun Valley Parkway - Structures

Descriptions (stationings) are cross-referenced to Roadway As-builts
Refer to sketches for point locations

Point Descriptions:

The "N" and "S" extensions on the stationing refer to the North and South ends end of the structure. When found, the "BC" extension identifies a found Brass Cap. The "C" extension identifies the "high terrain/*dam*" elevation along the approximate centerline profile of the structure.

This table shows only the structure survey points. Refer to the associated ASCII tables for control point and other found monument data.

NORTH	EAST	ELEVATION	DESCRIPTION
968510.9001	488645.1249	1675.345706	1015+39S (West end of Project)
968582.3297	488599.477	1677.623253	1015+39C (West end of Project)
968656.0745	488553.4872	1673.31777	1015+39N (West end of Project)
968503.6411	489968.6156	1675.969352	4+54S
968571.6705	489961.9676	1677.57393	4+54C
968636.773	489928.0932	1675.443395	4+54N
968636.7883	489923.0892	1675.441889	4+54N BM
968497.8945	491169.5059	1673.683562	16+19S
968497.3118	491163.0766	1673.618533	16+19S
968496.9964	491156.2962	1673.535015	16+19S
968571.1303	491150.1244	1675.604117	16+19C
968633.8557	491105.7385	1673.281168	16+19N
968634.0095	491112.6118	1673.198908	16+19N
968634.1899	491119.6034	1673.127576	16+19N
968495.0706	492121.2909	1672.682764	26+06S
968568.9185	492120.179	1674.650568	26+06C
968628.2125	492124.126	1671.621586	26+06N BM
968495.1364	492472.1166	1670.12268	30+34S
968495.4008	492462.4688	1670.123143	30+34S
968566.7327	492531.2803	1671.812507	30+34C
968627.7807	492640.9101	1667.44259	30+34N
968627.4574	492651.921	1667.426164	30+34N
968492.5328	492800.9115	1667.512777	33+07S
968565.1898	492854.0752	1669.532327	33+07C
968629.7106	492853.2311	1663.825748	33+07N
968489.0607	493222.0825	1664.291879	36+92S
968489.1144	493201	1664.324011	36+92S
968489.3125	493160.839	1664.361327	36+92S
968563.3579	493211.0092	1667.05093	36+92C
968622.6072	493206.4893	1663.662411	36+92N
968622.4875	493229.445	1663.621049	36+92N
968622.2633	493263.4427	1663.594692	36+92N
968487.4305	493406.542	1663.359831	38+84S
968562.1422	493407.3101	1665.556795	38+84C
968622.5457	493398.1412	1662.552368	38+84N

968486.0079	493995.6019	1657.17384	45+39S
968558.5058	494061.5197	1658.149975	45+39C
968616.662	494120.5689	1655.835601	45+39N
968483.7348	494258.0331	1652.278147	47+60S
968557.4912	494291.039	1655.457795	47+60C
968625.6256	494298.4675	1649.467345	47+60N
968480.6291	494700.7527	1647.810218	51+76S
968555.3361	494704.1711	1650.781836	51+76C
968619.8458	494687.1896	1645.837544	51+76N
968474.6379	496015.8509	1643.232446	64+99S
968474.685	495991.3569	1643.202467	64+99S
968474.8303	495960.9559	1643.292454	64+99S
968548.3962	496017.1775	1644.821708	64+99C
968607.2546	496013.6736	1642.526407	64+99N
968607.4686	496050.1305	1641.795973	64+99N
968607.0778	496075.08	1642.783372	64+99N
968472.8459	496296.8267	1641.540451	67+33S
968473.0287	496273.5991	1641.517529	67+33S
968473.2227	496239.8897	1641.554895	67+33S
968547.1072	496250.2568	1643.742266	67+33C
968606.0006	496261.3226	1641.017537	67+33N
968605.9267	496238.9148	1641.10161	67+33N
968606.2091	496201.1407	1641.102664	67+33N
968470.0645	496914.1531	1636.872005	74+15S
968469.8703	496896.7374	1636.888896	74+15S
968470.005	496876.1641	1636.905487	74+15S
968543.4153	496943.5701	1638.364304	74+15C
968602.058	496949.582	1635.930623	74+15N BC
968601.8858	496968.2972	1635.885015	74+15N
968601.8459	496983.3721	1635.880339	74+15N
968466.3941	497425.4258	1632.78491	79+05S
968540.542	497441.1513	1634.845456	79+05C
968600.1126	497454.8625	1632.279225	79+05N
968464.7325	497920.0316	1629.151546	84+67S
968464.5721	497940.034	1629.049922	84+67S
968464.4012	497961.7441	1629.053796	84+67S
968538.255	497981.2027	1631.123796	84+67C
968596.79	498001.6433	1628.435674	84+67N BC
968596.4817	498027.4266	1628.45461	84+67N
968596.66	498051.2521	1628.512772	84+67N
968457.4649	499425.1584	1620.374301	99+10S
968531.0073	499455.1653	1621.749181	99+10C
968589.7935	499427.9097	1619.919132	99+10N
968589.8058	499422.2342	1619.971352	99+10N BC

968455.1896	499757.6256	1619.063454	102+17S
968455.2529	499736.8845	1619.031703	102+17S
968455.3383	499711.7173	1619.004153	102+17S
968455.5151	499685.6574	1618.982055	102+17S
968529.6457	499735.7187	1621.076533	102+17C
968589.0539	499707.4585	1618.51551	102+17N BC
968588.776	499730.4661	1618.481242	102+17N
968588.7207	499754.243	1618.490247	102+17N
968588.5723	499779.7006	1618.527418	102+17N
968453.1758	500210.9809	1616.510283	106+83S BC
968453.4644	500183.616	1616.550846	106+83S
968453.595	500158.8109	1616.534935	106+83S
968453.7004	500126.428	1616.554877	106+83S
968527.3938	500204.532	1618.701443	106+83C
968585.9412	500191.0696	1615.902771	106+83N
968585.956	500217.0292	1615.89178	106+83N
968585.6781	500243.1356	1615.879352	106+83N
968585.7264	500272.9048	1615.920103	106+83N
968451.2519	500635.0767	1613.098749	110+99S
968451.3781	500610.1131	1613.002272	110+99S
968451.4715	500576.8208	1613.046576	110+99S
968525.3748	500621.8978	1615.352863	110+99C
968584.7293	500591.7278	1612.479982	110+99N BC
968584.4204	500621.8337	1612.34035	110+99N
968584.2425	500655.2637	1612.401226	110+99N
968448.9359	500931.1286	1609.753022	114+09S
968523.9717	500926.0353	1612.581622	114+09C
968588.1482	500919.6346	1605.790108	114+09N
968447.6133	501093.6064	1609.695951	116+05S
968523.1114	501125.4147	1611.238096	116+05C
968581.3855	501151.5823	1608.902641	116+05N
968581.6948	501145.516	1608.87644	116+05N BC
968444.2327	501942.1982	1604.078027	124+23S
968519.2274	501946.3324	1606.022948	124+23C
968577.9608	501937.3528	1603.686325	124+23N
968443.1055	502275.2544	1600.602761	127+67S
968517.5758	502269.5613	1603.762765	127+67C
968576.8846	502291.8603	1600.076746	127+67N
968439.4783	503115.9397	1596.005626	136+16S
968513.1133	503136.8943	1597.376276	136+16C
968572.2619	503145.5349	1595.486618	136+16N
968433.67	504157.2006	1585.141999	146+50S
968433.5921	504145.999	1585.15042	146+50S
968433.6096	504134.0855	1585.182516	146+50S
968508.0374	504160.5649	1587.3989	146+50C
968567.525	504174.6726	1584.561206	146+50N BC
968567.3785	504185.8768	1584.534373	146+50N
968567.2375	504200.4966	1584.521723	146+50N

968432.8258	504901.9617	1577.470409	154+43S
968432.8886	504912.3373	1577.45435	154+43S
968504.0515	504962.6584	1578.76725	154+43C
968560.6547	504999.6336	1576.430158	154+43N
968560.5451	505005.5924	1576.387074	154+43N
968560.5216	505012.0633	1576.329289	154+43N
968560.3143	505020.1534	1576.316776	154+43N
968413.536	509313.3773	1535.108301	197+75S
968413.2274	509290.5779	1535.056683	197+75S
968413.2476	509264.7507	1535.03281	197+75S
968413.1021	509238.5152	1535.049051	197+75S
968487.0703	509293.8055	1539.191583	197+75C
968546.211	509268.2218	1534.667397	197+75N
968546.2028	509287.8773	1534.557573	197+75N
968546.0364	509322.5587	1534.550465	197+75N
968546.0736	509341.7637	1534.528161	197+75N
968412.4	510274.4452	1529.151632	207+57S
968412.2373	510245.6702	1529.119647	207+57S
968412.0634	510217.4306	1529.141205	207+57S
968411.9941	510188.7354	1529.154402	207+57S
968485.7633	510283.2477	1531.295444	207+57C
968544.8062	510271.1174	1528.804776	207+57N
968544.5064	510300.8787	1528.739078	207+57N
968544.6824	510330.6824	1528.725412	207+57N
968544.7029	510359.4743	1528.676661	207+57N
968411.5127	510610.3927	1526.754299	210+68S
968485.5256	510597.3425	1528.791506	210+68C
968545.0779	510558.4165	1525.767384	210+68N
968407.7162	513140.7782	1501.389902	238+40S BC
968407.9583	513125.919	1501.388904	238+40S
968408.5345	513105.3243	1501.438539	238+40S
968480.8872	513213.8482	1503.516066	238+40C
968539.4293	513268.9545	1500.789973	238+40N
968539.6644	513290.5011	1500.573633	238+40N
968539.0679	513311.5823	1500.679133	238+40N
968258.399	514953.242	1492.2554	254+82S
968261.9471	514932.0942	1492.239486	254+82S
968266.2407	514903.2541	1492.248857	254+82S
968311.9196	514994.3175	1494.023471	254+82C
968381.9676	515024.8334	1491.672203	254+82N BC
968378.3227	515047.0305	1491.648833	254+82N
968373.9583	515074.3174	1491.707507	254+82N
968158.6662	515518.0498	1488.119758	260+98S
968154.1199	515540.6672	1488.097404	260+98S
968148.9971	515565.3336	1488.012497	260+98S
968142.7737	515595.2008	1487.993077	260+98S
968217.7784	515596.4407	1490.274293	260+98C
968278.4145	515594.4661	1487.382299	260+98N
968273.1556	515619.5383	1487.345702	260+98N
968266.5677	515651.0206	1486.143752	260+98N
968262.0493	515673.141	1486.199007	260+98N

968060.0983	515964.6988	1485.321949	264+99S
968132.3852	515979.9411	1487.24454	264+99C
968187.034	516006.3913	1483.924607	264+99N
967661.9143	517309.0889	1478.067368	279+17S
967665.469	517299.3828	1478.052541	279+17S
967668.7964	517289.9998	1478.097075	279+17S
967727.1205	517343.9822	1480.380002	279+17C
967781.0349	517371.2327	1477.456415	279+17N BC
967775.6504	517385.366	1477.442835	279+17N
967769.0323	517403.6359	1477.4887	279+17N
967533.0863	517651.0024	1476.753899	282+90S
967591.2038	517707.0875	1478.563899	282+90C
967641.8658	517736.4093	1476.584034	282+90N
966600.8203	519558.0744	1465.870601	304+13S
966612.4509	519538.5933	1465.871302	304+13S
966623.745	519519.7556	1465.907591	304+13S
966660.8619	519604.9211	1468.000852	304+13C
966708.5187	519638.333	1465.301907	304+13N
966696.8763	519657.4052	1465.277738	304+13N
966685.3377	519676.7707	1465.250986	304+13N
966397.0646	519889.2591	1466.951126	307+76S
966470.5472	519913.1887	1469.162115	307+76C
966529.297	519929.5866	1464.754597	307+76N
966274.0788	520075.3071	1465.35338	310+12S
966332.7456	520125.4078	1469.968372	310+12C
966399.0785	520132.5663	1466.361414	310+12N
966149.4726	520263.0396	1468.528044	310+12N
966219.5657	520292.9963	1470.662534	310+12C
966283.4477	520303.8575	1467.328498	310+12N
965907.301	520602.8895	1470.197346	316+36S
965988.7067	520619.1381	1471.996563	316+36C
966051.8496	520631.3542	1469.783162	316+36N
966049.3112	520634.9359	1469.79872	316+36N BC
965784.6113	520765.5773	1468.195776	318+96S
965845.0027	520811.4567	1472.840684	318+96C
965882.2643	520883.7841	1463.282771	318+96N
965653.4707	520922.7982	1465.388358	320+52S
965797.2163	520983.36	1465.078333	320+52N
965743.7013	520942.5386	1473.450298	320+52C
965507.6844	521111.7423	1468.100799	322+99S
965579.1845	521148.2708	1474.493525	322+99C
965649.4766	521174.4623	1465.813174	322+99N
965393.7994	521258.2548	1472.094083	324+95S
965450.5987	521303.4258	1474.911157	324+95C
965511.6079	521331.5038	1468.463169	324+95N
965227.8291	521416.6638	1466.460067	327+30S
965304.2129	521474.2798	1475.765288	327+30C
965365.9276	521527.2289	1463.464448	327+30N
965118.0276	521551.1019	1468.83067	329+91S
965188.444	521605.1765	1476.335152	329+91C
965262.1768	521633.2479	1466.498381	329+91N

964613.0365	522113.0388	1476.006571	336+58S
964671.3785	522157.2261	1478.877636	336+58C
964722.7859	522192.1114	1473.817894	336+58N
964253.9116	522488.2978	1477.724868	341+76S
964306.1802	522541.2492	1480.466303	341+76C
964363.8024	522566.6968	1475.785898	341+76N
964370.5712	522559.6911	1475.806049	341+76N BC
963903.3503	522856.209	1475.902702	347+26S BC
963914.8591	522844.1696	1475.892022	347+26S
963929.1804	522829.1694	1475.93249	347+26S
963958.1999	522906.9848	1478.297196	347+26C
963957.9564	522994.6235	1475.158649	347+26N
963945.7262	523007.3764	1474.846276	347+26N
963931.9448	523021.7142	1475.234408	347+26N
963775.6995	522994.9257	1474.275884	349+18S
963812.6041	523060.2005	1476.224487	349+18C
963823.3192	523141.7979	1471.993675	349+18N
963520.9127	523254.902	1469.820072	352+92S
963541.0792	523345.7701	1472.251088	352+92C
963560.5959	523418.4549	1467.50171	352+92N
963209.4498	523565.5663	1458.70674	357+26S
963263.256	523637.8745	1468.210819	357+26C
963277.0459	523745.1804	1456.491018	357+26N
963263.188	523632.0585	1468.044995	357+00+-
962418.9043	524413.4235	1451.844143	369+00S
962426.8197	524517.4711	1455.212449	369+00C
962424.0725	524613.4912	1449.71881	369+00N
962229.4173	524601.2609	1450.117398	371+00S
962313.5245	524636.3855	1454.69416	371+00C
962389.6421	524666.3009	1446.989908	371+00N
962109.09	524744.2053	1449.021442	373+00S
962158.7124	524799.3331	1454.027213	373+00C
962197.7438	524849.8256	1447.897923	373+00N
961979.9817	524881.1984	1450.586523	375+00S
962032.2517	524932.1423	1453.451969	375+00C
962074.7277	524977.9608	1448.015148	375+00N
961737.9118	525111.1769	1445.900509	378+50S
961764.0148	525214.6302	1451.129682	378+50C
961753.1448	525330.1792	1442.149164	378+50N
961735.4136	525352.0058	1441.545408	380+00N
961700.1187	525282.7119	1450.62354	380+00C
961635.7732	525222.5557	1446.568213	380+00S
961364.7138	525538.4875	1443.19688	384+00S
961426.2879	525603.9195	1447.873603	384+00C
961459.2307	525674.4421	1439.431108	384+00N
960336.5537	534262.3947	1347.16376	467+25N
960247.9222	534267.08	1365.638466	467+25C
960146.3802	534237.3759	1347.544265	467+25S

```
 1,  5000.000000,  5000.000000,   100.000000,START
 2,968533.053440,497459.782022,  1633.860984,61028-1 9/05/01
 3,968533.170832,497459.765305,  1633.915644,61028-1
 4,968572.098983,489518.360998,  1675.846094,60526-1 1/425-30
 5,968656.074451,488553.487167,  1673.317770,1015+39N
 6,968582.329718,488599.476994,  1677.623253,1015+39C
 7,968510.900072,488645.124866,  1675.345706,1015+39S
 8,968503.641072,489968.615566,  1675.969352,4+54S
 9,968571.670452,489961.967569,  1677.573930,4+54C
10,968636.773016,489928.093238,  1675.443395,4+54N
11,968636.788289,489923.089242,  1675.441889,4+54N BM
12,968497.894522,491169.505901,  1673.683562,16+19S
13,968497.311796,491163.076637,  1673.618533,16+19S
14,968496.996446,491156.296182,  1673.535015,16+19S
15,968571.130259,491150.124382,  1675.604117,16+19C
16,968633.855739,491105.738496,  1673.281168,16+19N
17,968634.009531,491112.611787,  1673.198908,16+19N
18,968634.189876,491119.603418,  1673.127576,16+19N
19,968495.070620,492121.290862,  1672.682764,26+06S
20,968568.918542,492120.179016,  1674.650568,26+06C
21,968628.212526,492124.125994,  1671.621586,26+06N BM
22,968495.136441,492472.116554,  1670.122680,30+34S
23,968495.400811,492462.468787,  1670.123143,30+34S
24,968566.732664,492531.280340,  1671.812507,30+34C
25,968627.780664,492640.910064,  1667.442590,30+34N
26,968627.457385,492651.921014,  1667.426164,30+34N
27,968492.532804,492800.911518,  1667.512777,33+07S
28,968565.189759,492854.075166,  1669.532327,33+07C
29,968629.710638,492853.231108,  1663.825748,33+07N
30,968489.060718,493222.082509,  1664.291879,36+92S
31,968489.114356,493201.000025,  1664.324011,36+92S
32,968489.312506,493160.839039,  1664.361327,36+92S
33,968563.357854,493211.009212,  1667.050930,36+92C
34,968622.607181,493206.489259,  1663.662411,36+92N
35,968622.487513,493229.444958,  1663.621049,36+92N
36,968622.263309,493263.442659,  1663.594692,36+92N
37,968487.430460,493406.541970,  1663.359831,38+84S
38,968562.142202,493407.310132,  1665.556795,38+84C
39,968622.545748,493398.141231,  1662.552368,38+84N
40,968486.007938,493995.601922,  1657.173840,45+39S
41,968558.505816,494061.519745,  1658.149975,45+39C
42,968616.661977,494120.568882,  1655.835601,45+39N
43,968483.734789,494258.033134,  1652.278147,47+60S
44,968557.491189,494291.038987,  1655.457795,47+60C
45,968625.625632,494298.467535,  1649.467345,47+60N
46,968480.629070,494700.752724,  1647.810218,51+76S
47,968555.336069,494704.171132,  1650.781836,51+76C
48,968619.845783,494687.189563,  1645.837544,51+76N
```

```
49,968572.327691,489518.495900,  1675.872752,60526-1 09/04/01
50,968474.637891,496015.850897,  1643.232446,64+99S
51,968474.684958,495991.356874,  1643.202467,64+99S
52,968474.830279,495960.955873,  1643.292454,64+99S
53,968548.396240,496017.177492,  1644.821708,64+99C
54,968607.254613,496013.673604,  1642.526407,64+99N
55,968607.468615,496050.130517,  1641.795973,64+99N
56,968607.077843,496075.080027,  1642.783372,64+99N
57,968472.845870,496296.826743,  1641.540451,67+33S
58,968473.028721,496273.599145,  1641.517529,67+33S
59,968473.222662,496239.889717,  1641.554895,67+33S
60,968547.107224,496250.256768,  1643.742266,67+33C
61,968606.000577,496261.322610,  1641.017537,67+33N
62,968605.926743,496238.914815,  1641.101610,67+33N
63,968606.209094,496201.140716,  1641.102664,67+33N
64,968470.064539,496914.153105,  1636.872005,74+15S
65,968469.870345,496896.737366,  1636.888896,74+15S
66,968470.004982,496876.164132,  1636.905487,74+15S
67,968543.415298,496943.570094,  1638.364304,74+15C
68,968602.058014,496949.581966,  1635.930623,74+15N BC
69,968601.885773,496968.297160,  1635.885015,74+15N
70,968601.845949,496983.372122,  1635.880339,74+15N
71,968466.394105,497425.425810,  1632.784910,79+05S
72,968540.542040,497441.151311,  1634.845456,79+05C
73,968600.112615,497454.862482,  1632.279225,79+05N
74,968464.732488,497920.031642,  1629.151546,84+67S
75,968464.572067,497940.034006,  1629.049922,84+67S
76,968464.401247,497961.744062,  1629.053796,84+67S
77,968538.254954,497981.202703,  1631.123796,84+67C
78,968596.789974,498001.643344,  1628.435674,84+67N BC
79,968596.481729,498027.426585,  1628.454610,84+67N
80,968596.660019,498051.252141,  1628.512772,84+67N
81,968457.464884,499425.158414,  1620.374301,99+10S
82,968531.007283,499455.165317,  1621.749181,99+10C
83,968589.793499,499427.909683,  1619.919132,99+10N
84,968589.805848,499422.234195,  1619.971352,99+10N BC
85,968455.189604,499757.625649,  1619.063454,102+17S
86,968455.252909,499736.884506,  1619.031703,102+17S
87,968455.338258,499711.717333,  1619.004153,102+17S
88,968455.515117,499685.657447,  1618.982055,102+17S
89,968529.645700,499735.718708,  1621.076533,102+17C
90,968589.053881,499707.458527,  1618.515510,102+17N BC
91,968588.776049,499730.466094,  1618.481242,102+17N
92,968588.720733,499754.242970,  1618.490247,102+17N
93,968588.572296,499779.700621,  1618.527418,102+17N
94,968453.175785,500210.980899,  1616.510283,106+83S BC
95,968453.464366,500183.616032,  1616.550846,106+83S
96,968453.594999,500158.810892,  1616.534935,106+83S
```

```
 97,968453.700444,500126.428028,  1616.554877,106+83S
 98,968527.393832,500204.531963,  1618.701443,106+83C
 99,968585.941177,500191.069556,  1615.902771,106+83N
100,968585.956013,500217.029227,  1615.891780,106+83N
101,968585.678072,500243.135584,  1615.879352,106+83N
102,968585.726425,500272.904809,  1615.920103,106+83N
103,968451.251874,500635.076679,  1613.098749,110+99S
104,968451.378139,500610.113134,  1613.002272,110+99S
105,968451.471452,500576.820819,  1613.046576,110+99S
106,968525.374800,500621.897818,  1615.352863,110+99C
107,968584.729277,500591.727773,  1612.479982,110+99N BC
108,968584.420432,500621.833698,  1612.340350,110+99N
109,968584.242479,500655.263705,  1612.401226,110+99N
110,968448.935899,500931.128560,  1609.753022,114+09S
111,968523.971683,500926.035306,  1612.581622,114+09C
112,968588.148184,500919.634642,  1605.790108,114+09N
113,968447.613313,501093.606401,  1609.695951,116+05S
114,968523.111432,501125.414653,  1611.238096,116+05C
115,968581.385529,501151.582349,  1608.902641,116+05N
116,968581.694783,501145.515953,  1608.876440,116+05N BC
117,968444.232749,501942.198222,  1604.078027,124+23S
118,968519.227380,501946.332443,  1606.022948,124+23C
119,968577.960810,501937.352832,  1603.686325,124+23N
120,968443.105484,502275.254413,  1600.602761,127+67S
121,968517.575801,502269.561343,  1603.762765,127+67C
122,968576.884567,502291.860280,  1600.076746,127+67N
123,968439.478276,503115.939741,  1596.005626,136+16S
124,968513.113332,503136.894261,  1597.376276,136+16C
125,968572.261902,503145.534916,  1595.486618,136+16N
126,968433.670033,504157.200611,  1585.141999,146+50S
127,968433.592084,504145.998966,  1585.150420,146+50S
128,968433.609610,504134.085487,  1585.182516,146+50S
129,968508.037393,504160.564911,  1587.398900,146+50C
130,968567.524969,504174.672607,  1584.561206,146+50N BC
131,968567.378480,504185.876817,  1584.534373,146+50N
132,968567.237458,504200.496636,  1584.521723,146+50N
133,968432.825768,504901.961711,  1577.470409,154+43S
134,968432.888641,504912.337313,  1577.454350,154+43S
135,968504.051540,504962.658365,  1578.767250,154+43C
136,968560.654710,504999.633585,  1576.430158,154+43N
137,968560.545145,505005.592373,  1576.387074,154+43N
138,968560.521622,505012.063304,  1576.329289,154+43N
139,968560.314309,505020.153384,  1576.316776,154+43N
140,968413.535974,509313.377259,  1535.108301,197+75S
141,968413.227407,509290.577910,  1535.056683,197+75S
142,962691.882689,523556.786275,  1594.766506,FRI4
143,968413.247597,509264.750664,  1535.032810,197+75S
144,968413.102063,509238.515155,  1535.049051,197+75S
```

```
145,968487.070317,509293.805491,  1539.191583,197+75C
146,968546.210970,509268.221799,  1534.667397,197+75N
147,968546.202818,509287.877333,  1534.557573,197+75N
148,968546.036384,509322.558677,  1534.550465,197+75N
149,968546.073588,509341.763656,  1534.528161,197+75N
150,968412.400014,510274.445242,  1529.151632,207+57S
151,968412.237298,510245.670158,  1529.119647,207+57S
152,968412.063448,510217.430632,  1529.141205,207+57S
153,968411.994140,510188.735396,  1529.154402,207+57S
154,968485.763303,510283.247666,  1531.295444,207+57C
155,968544.806244,510271.117425,  1528.804776,207+57N
156,968544.506353,510300.878651,  1528.739078,207+57N
157,968544.682426,510330.682413,  1528.725412,207+57N
158,968544.702875,510359.474321,  1528.676661,207+57N
159,968411.512737,510610.392727,  1526.754299,210+68S
160,968485.525616,510597.342510,  1528.791506,210+68C
161,968545.077937,510558.416545,  1525.767384,210+68N
162,968407.716179,513140.778180,  1501.389902,238+40S BC
163,968407.958345,513125.919036,  1501.388904,238+40S
164,968408.534475,513105.324311,  1501.438539,238+40S
165,968480.887155,513213.848189,  1503.516066,238+40C
166,968539.429320,513268.954522,  1500.789973,238+40N
167,968539.664388,513290.501095,  1500.573633,238+40N
168,968539.067921,513311.582257,  1500.679133,238+40N
169,968258.398999,514953.241987,  1492.255400,254+82S
170,968261.947122,514932.094214,  1492.239486,254+82S
171,968266.240652,514903.254106,  1492.248857,254+82S
172,968311.919557,514994.317455,  1494.023471,254+82C
173,968381.967576,515024.833393,  1491.672203,254+82N BC
174,968378.322661,515047.030480,  1491.648833,254+82N
175,968373.958271,515074.317396,  1491.707507,254+82N
176,968158.666167,515518.049812,  1488.119758,260+98S
177,968154.119913,515540.667153,  1488.097404,260+98S
178,968148.997140,515565.333586,  1488.012497,260+98S
179,968142.773666,515595.200781,  1487.993077,260+98S
180,968217.778441,515596.440662,  1490.274293,260+98C
181,968278.414455,515594.466113,  1487.382299,260+98N
182,968273.155590,515619.538253,  1487.345702,260+98N
183,968266.567700,515651.020604,  1486.143752,260+98N
184,968262.049258,515673.141043,  1486.199007,260+98N
185,968060.098328,515964.698812,  1485.321949,264+99S
186,968132.385249,515979.941052,  1487.244540,264+99C
187,968187.034049,516006.391324,  1483.924607,264+99N
188,967661.914318,517309.088895,  1478.067368,279+17S
189,967665.469027,517299.382791,  1478.052541,279+17S
190,967668.796405,517289.999788,  1478.097075,279+17S
191,967727.120495,517343.982173,  1480.380002,279+17C
192,967781.034862,517371.232712,  1477.456415,279+17N BC
```

```
193,967775.650378,517385.365954,  1477.442835,279+17N
194,967769.032347,517403.635942,  1477.488700,279+17N
195,967533.086338,517651.002426,  1476.753899,282+90S
196,967591.203803,517707.087474,  1478.563899,282+90C
197,967641.865838,517736.409335,  1476.584034,282+90N
198,966600.820326,519558.074391,  1465.870601,304+13S
199,966612.450885,519538.593284,  1465.871302,304+13S
200,966623.745015,519519.755550,  1465.907591,304+13S
201,966660.861864,519604.921123,  1468.000852,304+13C
202,966708.518714,519638.332964,  1465.301907,304+13N
203,966696.876348,519657.405202,  1465.277738,304+13N
204,966685.337689,519676.770727,  1465.250986,304+13N
205,966397.064576,519889.259107,  1466.951126,307+76S
206,966470.547182,519913.188710,  1469.162115,307+76C
207,966529.297002,519929.586555,  1464.754597,307+76N
208,966274.078782,520075.307051,  1465.353380,310+12S
209,966332.745636,520125.407803,  1469.968372,310+12C
210,966399.078527,520132.566273,  1466.361414,310+12N
211,966149.472621,520263.039610,  1468.528044,310+12N
212,966219.565661,520292.996347,  1470.662534,310+12C
213,966283.447701,520303.857471,  1467.328498,310+12N
214,965907.300999,520602.889478,  1470.197346,316+36S
215,965988.706701,520619.138050,  1471.996563,316+36C
216,966051.849623,520631.354187,  1469.783162,316+36N
217,966049.311244,520634.935914,  1469.798720,316+36N BC
218,965784.611283,520765.577333,  1468.195776,318+96S
219,965845.002705,520811.456713,  1472.840684,318+96C
220,965882.264326,520883.784122,  1463.282771,318+96N
221,965653.470721,520922.798170,  1465.388358,320+52S
222,965797.216310,520983.359970,  1465.078333,320+52N
223,965743.701291,520942.538643,  1473.450298,320+52C
224,965507.684391,521111.742319,  1468.100799,322+99S
225,965579.184461,521148.270809,  1474.493525,322+99C
226,965649.476632,521174.462264,  1465.813174,322+99N
227,968532.960326,497459.658616,  1633.839727,61028-1 9/06/01
228,965393.799366,521258.254750,  1472.094083,324+95S
229,965450.598749,521303.425800,  1474.911157,324+95C
230,965511.607949,521331.503819,  1468.463169,324+95N
231,965227.829092,521416.663833,  1466.460067,327+30S
232,965304.212871,521474.279800,  1475.765288,327+30C
233,965365.927596,521527.228874,  1463.464448,327+30N
234,965118.027565,521551.101914,  1468.830670,329+91S
235,965188.443962,521605.176514,  1476.335152,329+91C
236,965262.176776,521633.247947,  1466.498381,329+91N
237,964613.036495,522113.038811,  1476.006571,336+58S
238,964671.378500,522157.226051,  1478.877636,336+58C
239,964722.785930,522192.111431,  1473.817894,336+58N
240,964253.911581,522488.297772,  1477.724868,341+76S
```

```
241,964306.180152,522541.249235,  1480.466303,341+76C
242,964363.802415,522566.696809,  1475.785898,341+76N
243,964370.571247,522559.691086,  1475.806049,341+76N BC
244,963903.350323,522856.209034,  1475.902702,347+26S BC
245,963914.859084,522844.169637,  1475.892022,347+26S
246,963929.180404,522829.169408,  1475.932490,347+26S
247,963958.199934,522906.984808,  1478.297196,347+26C
248,963957.956372,522994.623520,  1475.158649,347+26N
249,963945.726219,523007.376398,  1474.846276,347+26N
250,963931.944789,523021.714222,  1475.234408,347+26N
251,963775.699484,522994.925650,  1474.275884,349+18S
252,963812.604139,523060.200475,  1476.224487,349+18C
253,963823.319164,523141.797858,  1471.993675,349+18N
254,963520.912688,523254.901974,  1469.820072,352+92S
255,963541.079234,523345.770076,  1472.251088,352+92C
256,963560.595935,523418.454912,  1467.501710,352+92N
257,963209.449770,523565.566334,  1458.706740,357+26S
258,963263.255993,523637.874485,  1468.210819,357+26C
259,963277.045898,523745.180374,  1456.491018,357+26N
260,963263.187977,523632.058491,  1468.044995,357+00+-
261,962418.904324,524413.423531,  1451.844143,369+00S
262,962426.819726,524517.471094,  1455.212449,369+00C
263,962424.072508,524613.491217,  1449.718810,369+00N
264,962229.417277,524601.260915,  1450.117398,371+00S
265,962313.524465,524636.385466,  1454.694160,371+00C
266,962389.642110,524666.300874,  1446.989908,371+00N
267,962109.089999,524744.205251,  1449.021442,373+00S
268,962158.712417,524799.333112,  1454.027213,373+00C
269,962197.743770,524849.825552,  1447.897923,373+00N
270,961979.981653,524881.198356,  1450.586523,375+00S
271,962032.251730,524932.142261,  1453.451969,375+00C
272,962074.727688,524977.960773,  1448.015148,375+00N
273,961737.911827,525111.176937,  1445.900509,378+50S
274,961764.014768,525214.630242,  1451.129682,378+50C
275,961753.144825,525330.179230,  1442.149164,378+50N
276,961735.413580,525352.005767,  1441.545408,380+00N
277,961700.118661,525282.711899,  1450.623540,380+00C
278,961635.773209,525222.555737,  1446.568213,380+00S
279,961364.713799,525538.487453,  1443.196880,384+00S
280,961426.287929,525603.919536,  1447.873603,384+00C
281,961459.230717,525674.442131,  1439.431108,384+00N
282,960336.553744,534262.394705,  1347.163760,467+25N
283,960247.922179,534267.080031,  1365.638466,467+25C
284,960146.380176,534237.375896,  1347.544265,467+25S
342,962691.865573,523556.787954,  1594.728000,Base point
```

FCDMC Contract 2000C035 Stucture Surveys
Wittmann/Tilby ADMP
WORKSHEET
DTM, INC. Project #21092

☒ Sun Valley Parkway
☐ US 60 RR
☐ Highway 74

Type of Structure: CMP (38x57) Date: 8.31.01
File Name: 4GG2 Description Name: 1015+39 (WEST)
Party Chief: RDS GDAC Control Pt # 4GG2

1015+39N NORTH FACE ~~(UPSTREAM)~~ DOWNSTREAM
☒ Photo Taken

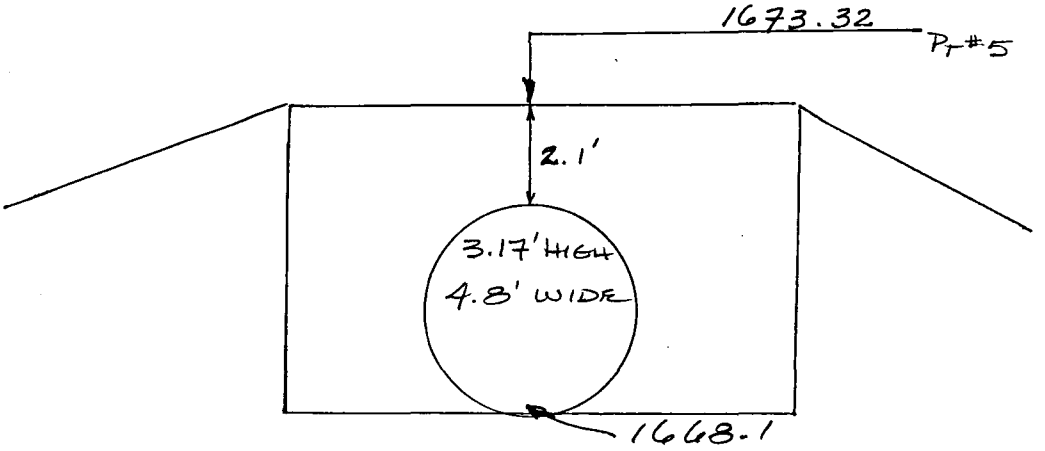

General Condition of Structure GOOD

1015+39S SOUTH FACE (~~DOWNSTREAM~~) UPSTREAM
☒ Photo Taken

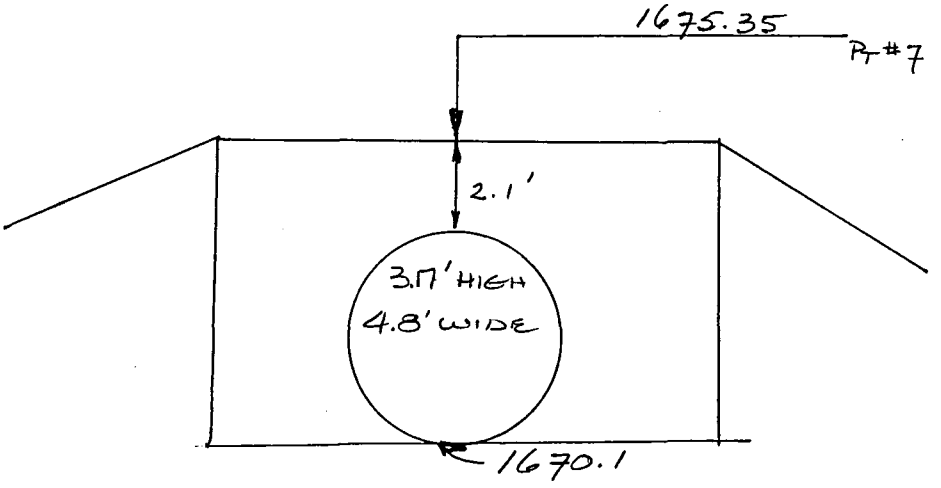

General Condition of Structure GOOD

↑ - INDICATES LOCATION OF RTK POINT

1015+39
57x38
CMP
S S

1015+39
57x38
CMP
N S

FCDMC Contract 2000C035 Stucture Surveys
Wittmann/Tilby ADMP
WORKSHEET
DTM, INC. Project #21092

☒ Sun Valley Parkway
☐ US 60 RR
☐ Highway 74

Type of Structure: 3x10 Box Date: 8.31.01
File Name: 4662 Description Name: 4+54
Party Chief: RDS GDAC Control Pt # 4662

4+54N NORTH FACE (~~UPSTREAM~~)
☒ Photo Taken

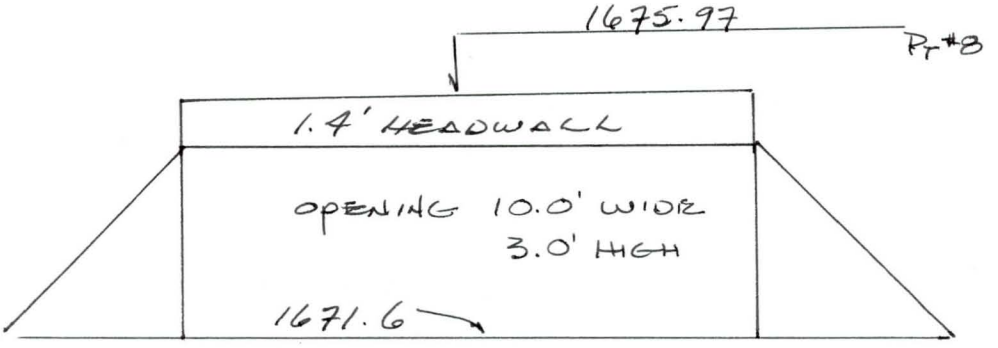

General Condition of Structure GOOD

4+54S SOUTH FACE (~~DOWNSTREAM~~)
☒ Photo Taken

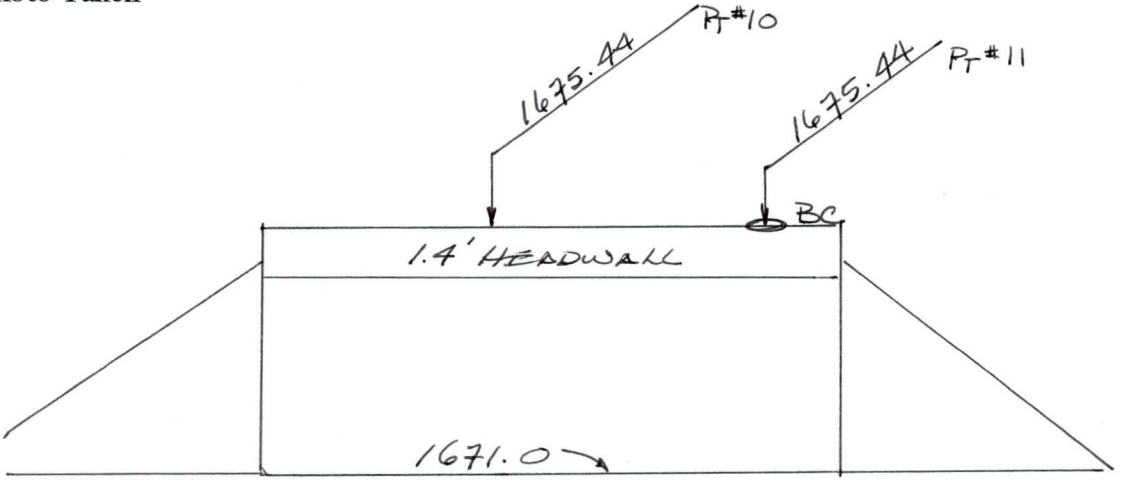

General Condition of Structure GOOD
BRASS CAP STAMPED "1674.88"

↑ - INDICATES LOCATION OF RTK POINT

4+54
3x10 Box
N S

4+54
3x10Box
S S

FCDMC Contract 2000C035 Stucture Surveys
Wittmann/Tilby ADMP
WORKSHEET
DTM, INC. Project #21092

☒ Sun Valley Parkway
☐ US 60 RR
☐ Highway 74

Type of Structure: 3 - 49x33 cmp Date: 8.31.01
File Name: 4GG2 Description Name: 16+19
Party Chief: XDS GDAC Control Pt # 4GG2

16+19N NORTH FACE (~~UPSTREAM~~) DOWNSTREAM
☒ Photo Taken

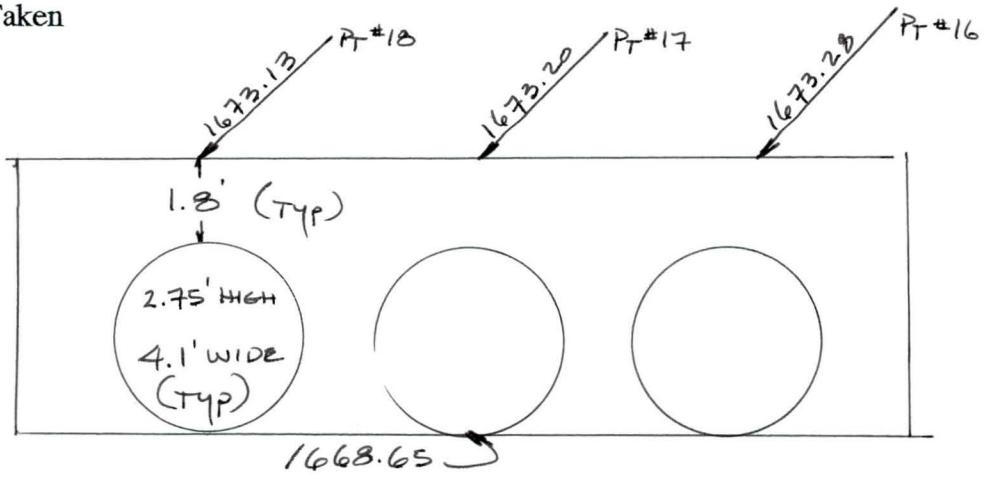

General Condition of Structure GOOD

16+19S SOUTH FACE (~~DOWNSTREAM~~) UPSTREAM
☒ Photo Taken

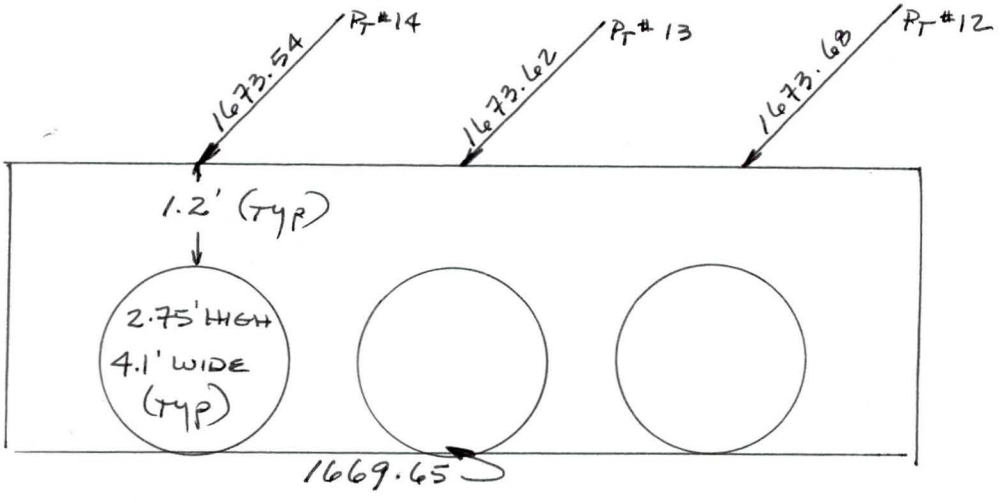

General Condition of Structure GOOD

↑ - INDICATES LOCATION OF RTK POINT

16+19
349"x33'
CMP
IN S

16x19
349x33
CMP
NS

16+19
349"x33'
CMP
S S

FCDMC Contract 2000C035 Stucture Surveys
Wittmann/Tilby ADMP
WORKSHEET
DTM, INC. Project #21092

☒ Sun Valley Parkway
☐ US 60 RR
☐ Highway 74

Type of Structure: 10 x 3 BOX Date: 8·31·01
File Name: 4GG2 Description Name: 26+06
Party Chief: RDS GDAC Control Pt # 4GG2

26+06N
☒ Photo Taken

NORTH FACE (~~UPSTREAM~~)
DOWNSTREAM

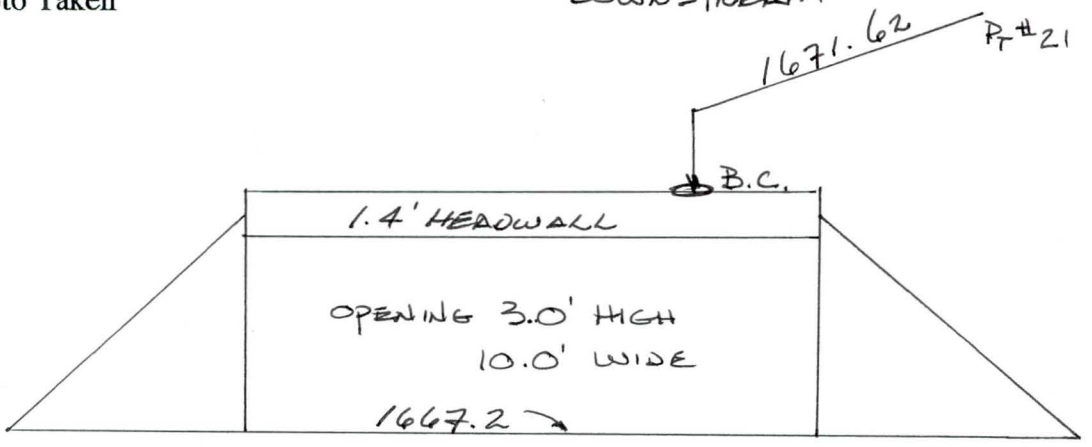

General Condition of Structure GOOD
BRASS CAP STAMPED 1671.04

26+06S
☒ Photo Taken

SOUTH FACE (~~DOWNSTREAM~~)
UPSTREAM

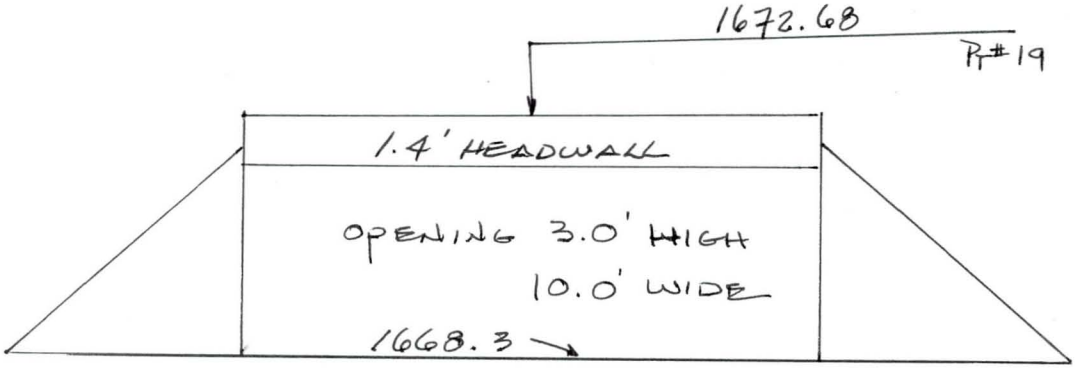

General Condition of Structure GOOD

↑ - INDICATES LOCATION OF RTK POINT

26+06
10x3 BOX
N S

26+06
10x3 BOX
S S

FCDMC Contract 2000C035 Stucture Surveys
Wittmann/Tilby ADMP
WORKSHEET
DTM, INC. Project #21092

☒ Sun Valley Parkway
☐ US 60 RR
☐ Highway 74

Type of Structure: 2- 49 x 33 CMP Date: 8.31.01
File Name: 4GG2 Description Name: 30+34
Party Chief: RDS GDAC Control Pt # 4GG2

30+34N NORTH FACE ~~(UPSTREAM)~~ DOWNSTREAM
☒ Photo Taken

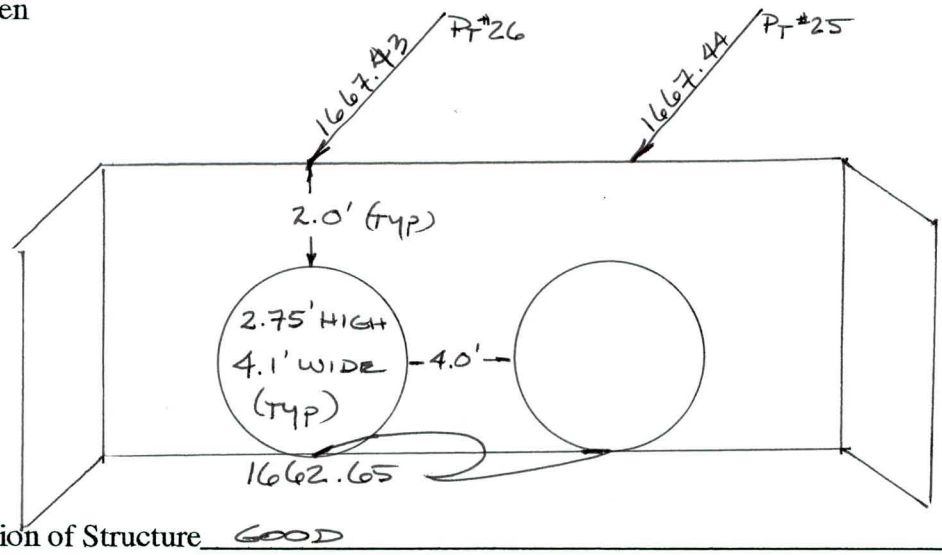

General Condition of Structure GOOD

30+34S SOUTH FACE ~~(DOWNSTREAM)~~ UPSTREAM
☒ Photo Taken

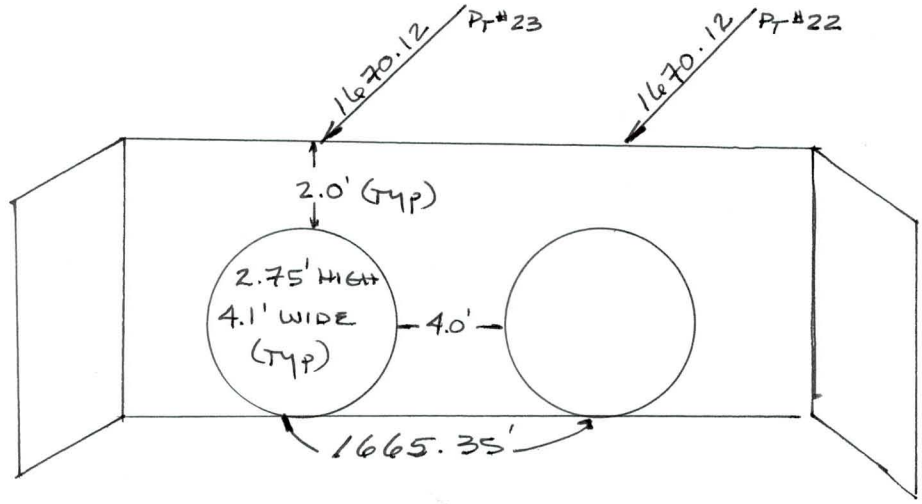

General Condition of Structure GOOD

↑ - INDICATES LOCATION OF RTK POINT

30+34
2-49"x33"
CMP
N S

30+34
2-49'x33'
CMP
SS

FCDMC Contract 2000C035 Stucture Surveys
Wittmann/Tilby ADMP
WORKSHEET
DTM, INC. Project #21092

☒ Sun Valley Parkway
☐ US 60 RR
☐ Highway 74

Type of Structure: 20X28 CMP Date: 8·31·01
File Name: 4GG2 Description Name: 33+07
Party Chief: RDS GDAC Control Pt # 4GG2

33+07N
☒ Photo Taken

NORTH FACE (~~UPSTREAM~~)
DOWNSTREAM

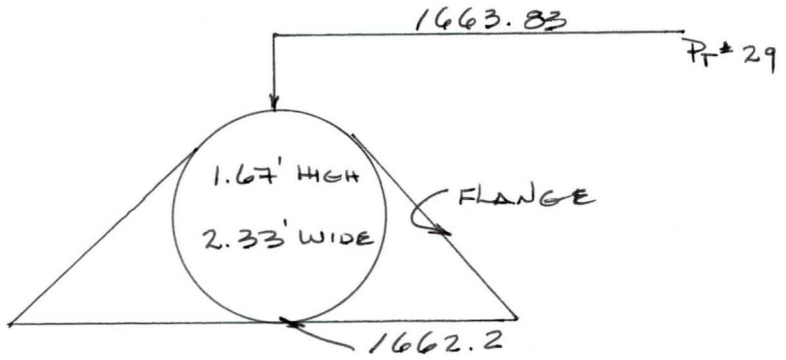

General Condition of Structure GOOD

33+07S
☒ Photo Taken

SOUTH FACE (~~DOWNSTREAM~~)
upSTREAM

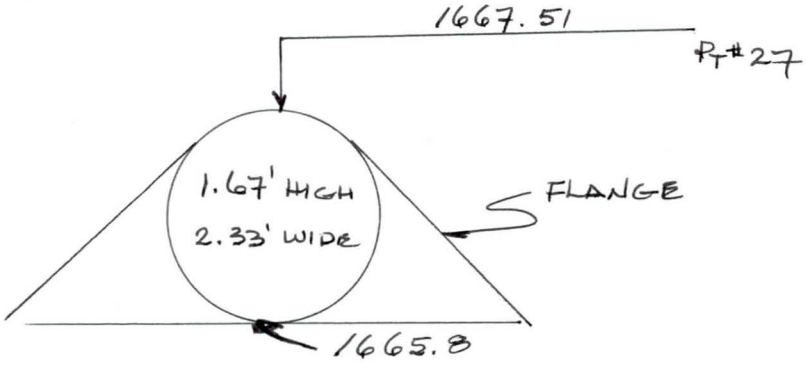

General Condition of Structure GOOD

↑ - INDICATES LOCATION OF RTK POINT

33+07
20x28
CMP
N/S

33+07
20x28
CMP
SS

FCDMC Contract 2000C035 Stucture Surveys
Wittmann/Tilby ADMP
WORKSHEET
DTM, INC. Project #21092

☒ Sun Valley Parkway
☐ US 60 RR
☐ Highway 74

Type of Structure: 6 – 4x10 Box Date: 8.31.01
File Name: 4GG2 Description Name: 36+92
Party Chief: RDS GDAC Control Pt # 4GG2

36+92N NORTH FACE (~~UPSTREAM~~) DOWNSTREAM
☒ Photo Taken

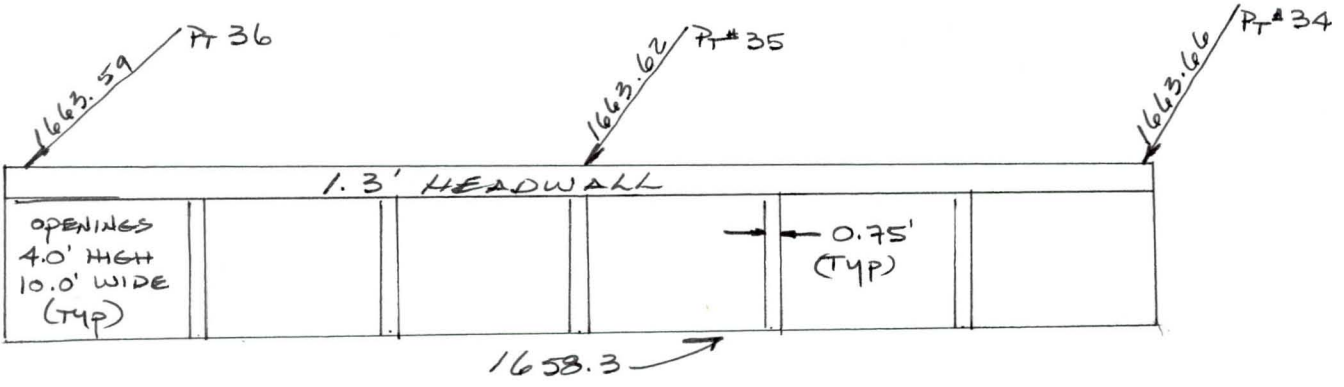

General Condition of Structure GOOD

36+92S SOUTH FACE (~~DOWNSTREAM~~)
UPSTREAM
☒ Photo Taken

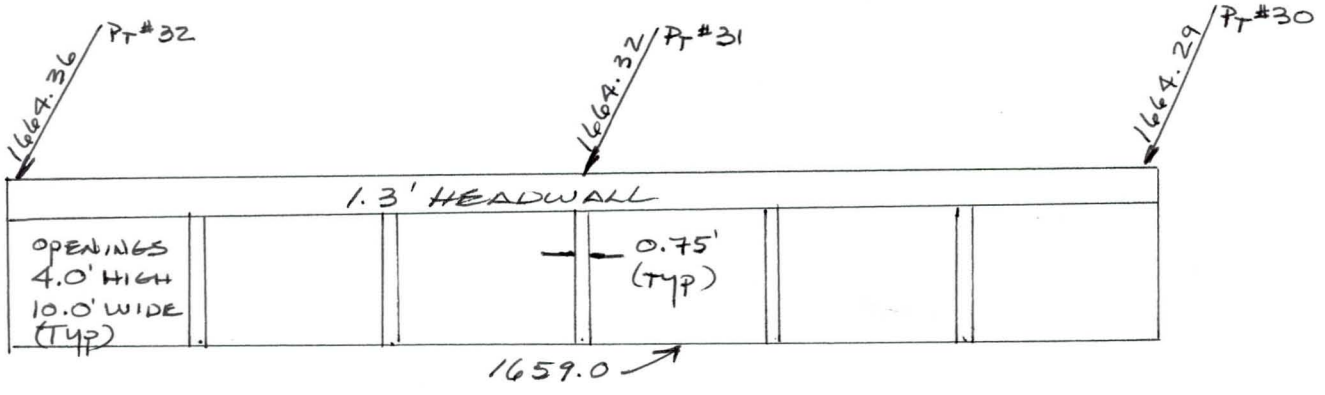

General Condition of Structure GOOD

↑ - INDICATES LOCATION OF RTK POINT

36+92
6-10x4
BOX
N S

FCDMC Contract 2000C035 Stucture Surveys
Wittmann/Tilby ADMP
WORKSHEET
DTM, INC. Project #21092

☒ Sun Valley Parkway
☐ US 60 RR
☐ Highway 74

Type of Structure: 2 - 10 x 3 BOX Date: 8·31·01
File Name: 4662 Description Name: 38 + 84
Party Chief: XDS GDAC Control Pt # 4662

38 + 84 N
☒ Photo Taken

NORTH FACE (~~UPSTREAM~~) DOWNSTREAM

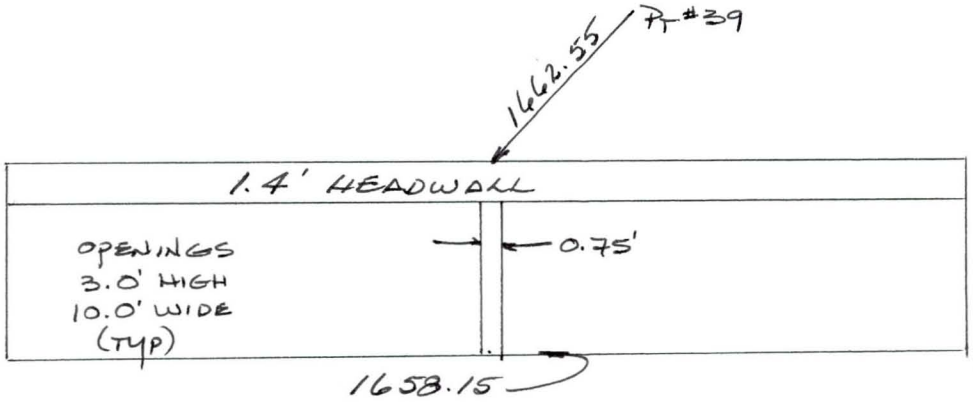

General Condition of Structure GOOD

38 + 84 S
☒ Photo Taken

SOUTH FACE (~~DOWNSTREAM~~) UPSTREAM

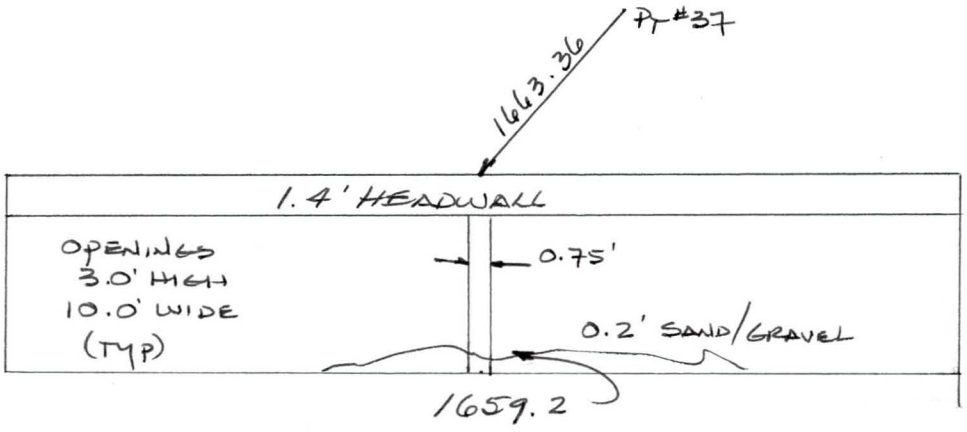

General Condition of Structure GOOD

↑ - INDICATES LOCATION OF RTK POINT

38-84
10X3BOX
N S

3884
10X3BOX
S S

FCDMC Contract 2000C035 Stucture Surveys
Wittmann/Tilby ADMP
WORKSHEET
DTM, INC. Project #21092

☒ Sun Valley Parkway
☐ US 60 RR
☐ Highway 74

Type of Structure: 10x8 BOX Date: 8.31.01
File Name: 4GG2 Description Name: 45+39
Party Chief: RDS GDAC Control Pt # 4GG2

45+39 N NORTH FACE (~~UPSTREAM~~) DOWNSTREAM
☒ Photo Taken

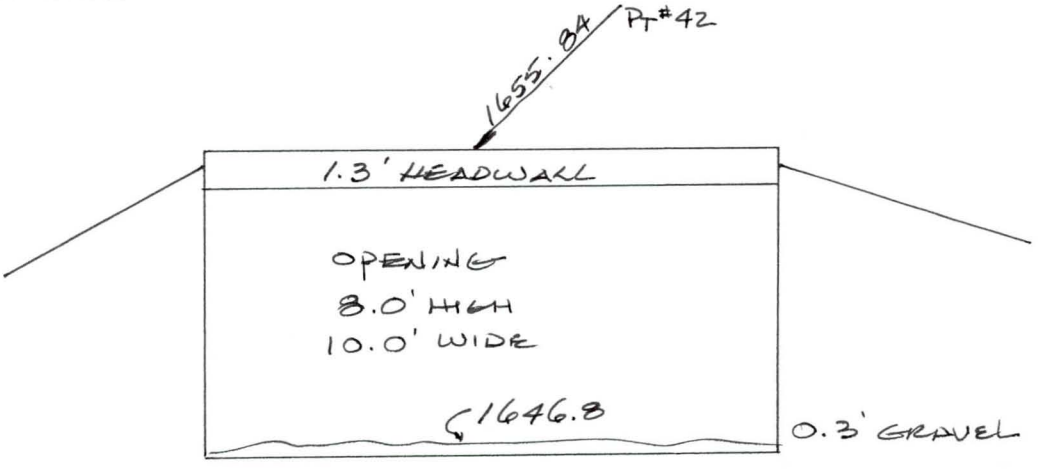

General Condition of Structure GOOD

45+39 S SOUTH FACE (~~DOWNSTREAM~~) upstream
☒ Photo Taken

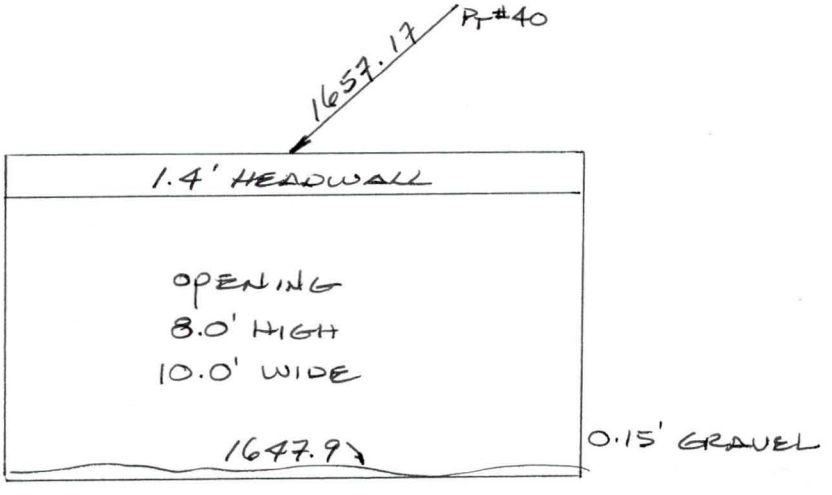

General Condition of Structure GOOD

↑ - INDICATES LOCATION OF RTK POINT

45+39
10x8BOX
N S

45+39
10x8BOX
SS

FCDMC Contract 2000C035 Stucture Surveys
Wittmann/Tilby ADMP
WORKSHEET
DTM, INC. Project #21092

☒ Sun Valley Parkway
☐ US 60 RR
☐ Highway 74

Type of Structure: 35 x 24 Cmp Date: 8.31.01
File Name: 4GG2 Description Name: 47+60
Party Chief: XDS GDAC Control Pt # 4GG2

47+60N NORTH FACE (~~UPSTREAM~~) DOWNSTREAM
☒ Photo Taken

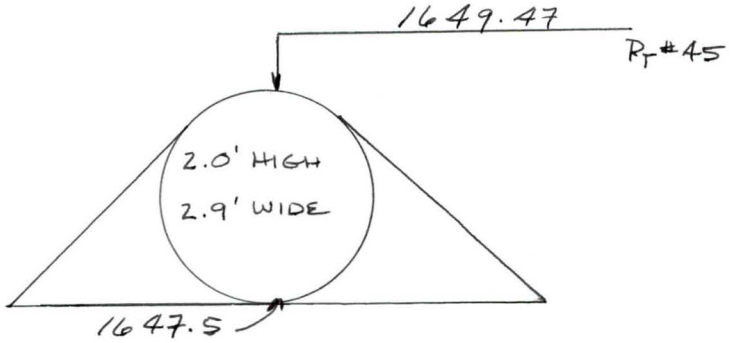

General Condition of Structure GOOD

47+60S SOUTH FACE (~~DOWNSTREAM~~) UPSTREAM
☒ Photo Taken

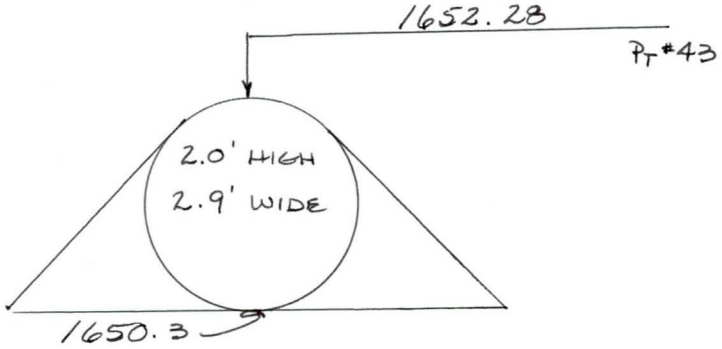

General Condition of Structure GOOD

↑ - INDICATES LOCATION OF RTK POINT

47+60
35x24
CMP

4460
35x24
CMP
S/S

FCDMC Contract 2000C035 Stucture Surveys
Wittmann/Tilby ADMP
WORKSHEET
DTM, INC. Project #21092

☒ Sun Valley Parkway
☐ US 60 RR
☐ Highway 74

Type of Structure: 35 x 24 Cmp Date: 8·31·01
File Name: 4GG2 Description Name: 51+76
Party Chief: RDS GDAC Control Pt # 4GG2

51+76N NORTH FACE (~~UPSTREAM~~) DOWNSTREAM
☒ Photo Taken

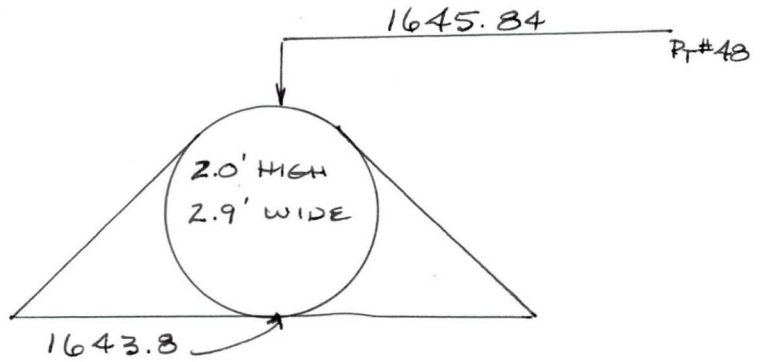

General Condition of Structure

51+76S SOUTH FACE (~~DOWNSTREAM~~) UPSTREAM
☒ Photo Taken

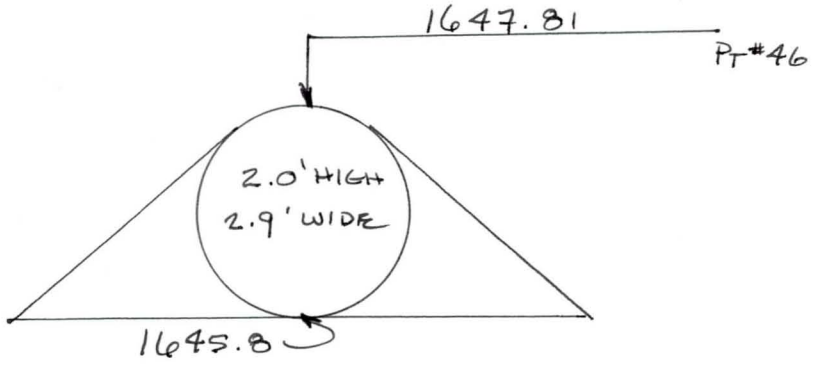

General Condition of Structure

1 - INDICATES LOCATION OF RTK POINT

51+16
35x24
CMP
N

51+76
35x24
CMP
SS

FCDMC Contract 2000C035 Stucture Surveys
Wittmann/Tilby ADMP
WORKSHEET
DTM, INC. Project #21092

☒ Sun Valley Parkway
☐ US 60 RR
☐ Highway 74

Type of Structure: 5 – 12x4 BOX Date: 8.31.01
File Name: 4GG2 Description Name: 64+99
Party Chief: RDS GDAC Control Pt # 4GG2

64+99N 64+99AN 64+99BN
☒ Photo Taken

NORTH FACE ~~(UPSTREAM)~~ DOWNSTREAM

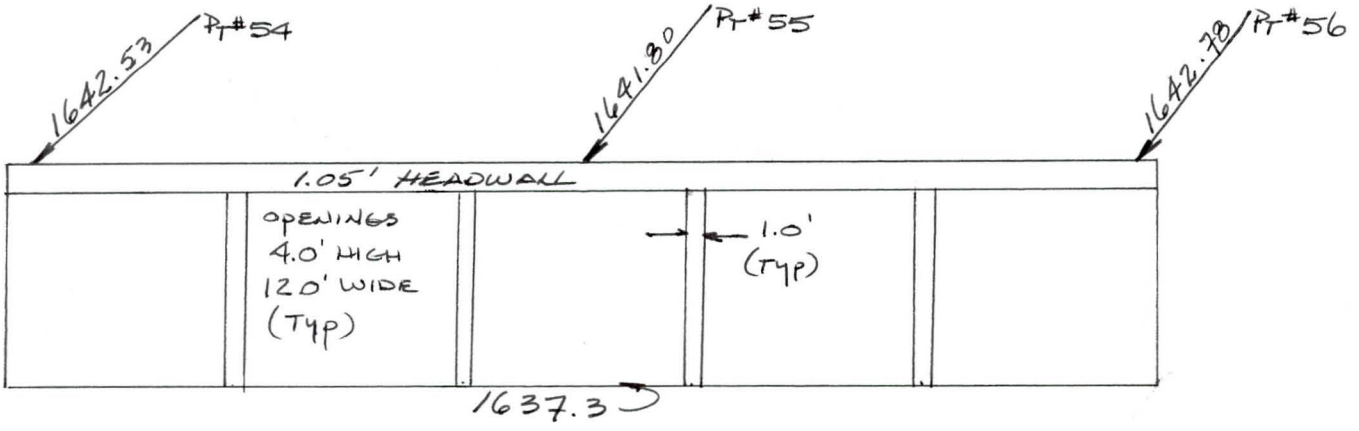

General Condition of Structure GOOD

64+99S 64+99AS
☒ Photo Taken

SOUTH FACE (~~DOWNSTREAM~~) UPSTREAM

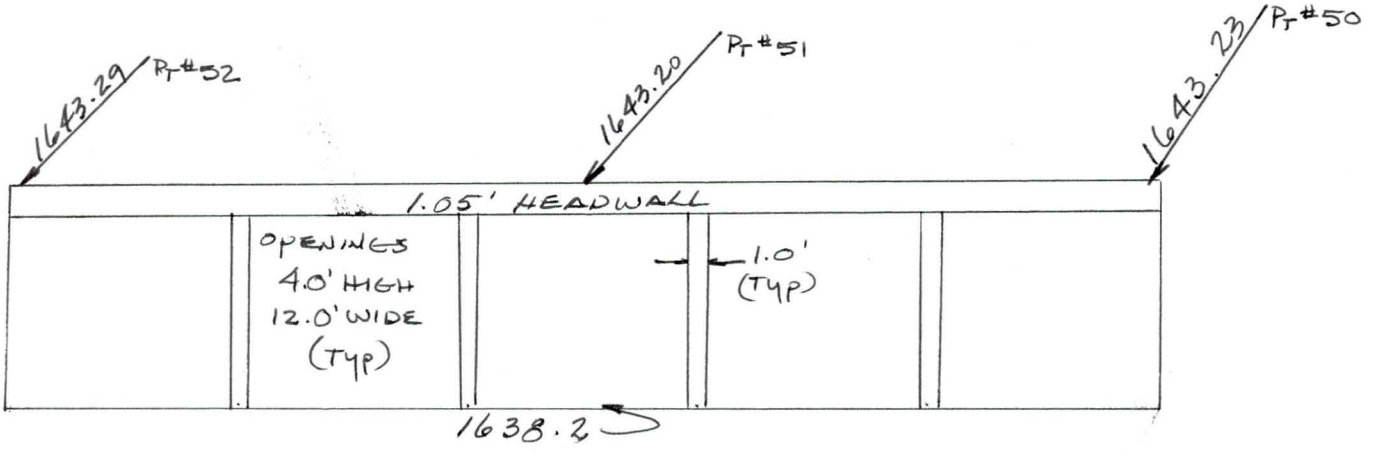

General Condition of Structure GOOD

↑ - INDICATES LOCATION OF RTK POINT

64.99
5.12.4
BOX
N S

64-99
5-12x4
BOX
N S

64+99
512x4
BOX
N S

64-99
5-12x4
80x
SS

FCDMC Contract 2000C035 Stucture Surveys
Wittmann/Tilby ADMP
WORKSHEET
DTM, INC. Project #21092

☒ Sun Valley Parkway
☐ US 60 RR
☐ Highway 74

Type of Structure: 5 – 12x3 BOX Date: 9.4.01
File Name: 4662 Description Name: 67 + 33
Party Chief: XDS GDAC Control Pt # 4662 (#2)

67+33N, AN, BN NORTH FACE (~~UPSTREAM~~) DOWNSTREAM
☒ Photo Taken

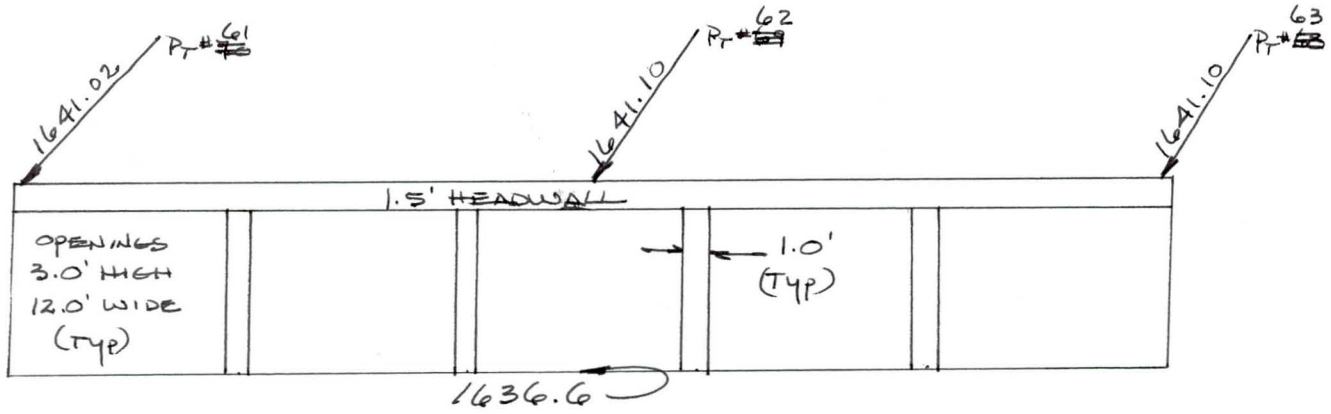

General Condition of Structure GOOD

67+33S SOUTH FACE (~~DOWNSTREAM~~) UPSTREAM
☒ Photo Taken

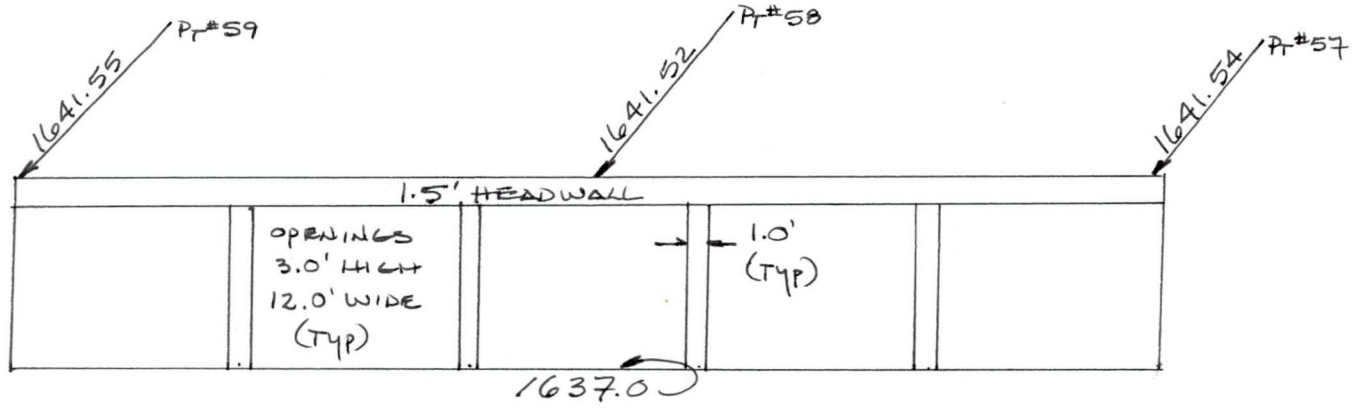

General Condition of Structure GOOD

↑ - INDICATES LOCATION OF RTK POINT

67x33
5-12x3
BOX
NS

67+33
5-12x3
BOX
N S

67+33
5-12x3
BOX
NS

67-33
5-12-3
BOX
SS

FCDMC Contract 2000C035 Stucture Surveys
Wittmann/Tilby ADMP
WORKSHEET
DTM, INC. Project #21092

☒ Sun Valley Parkway
☐ US 60 RR
☐ Highway 74

Type of Structure: 4 – 10 x 4 BOX Date: 9.4.01
File Name: 4GG2 Description Name: 74 + 15
Party Chief: RDS GDAC Control Pt # 4GG2 (#2)

74+15N
☒ ~~Photo Taken~~

NORTH FACE (~~UPSTREAM~~) DOWNSTREAM

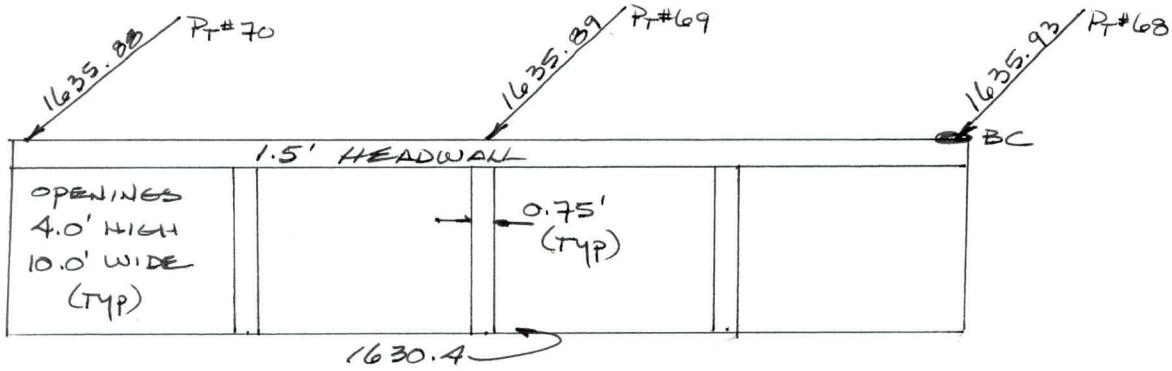

General Condition of Structure GOOD
NO ELEV ON BC

74+15S
☒ Photo Taken

SOUTH FACE (~~DOWNSTREAM~~) UPSTREAM

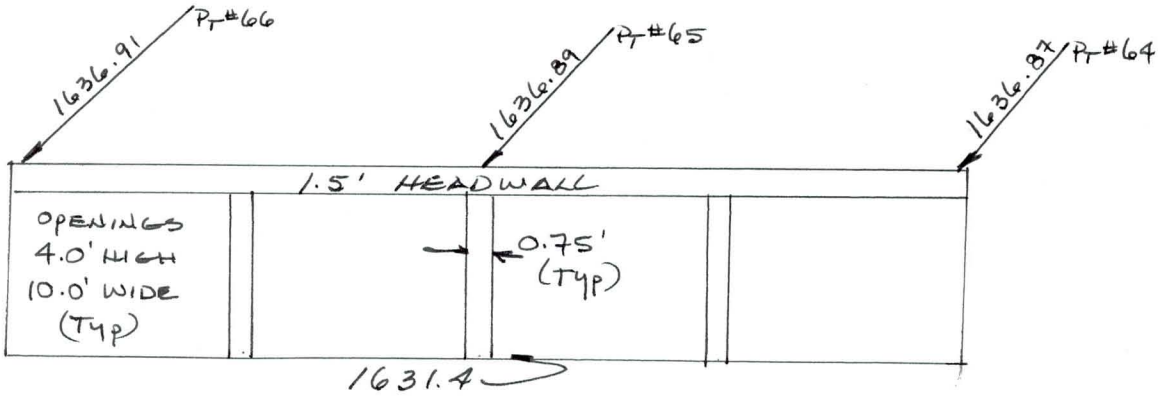

General Condition of Structure GOOD

↑ - INDICATES LOCATION OF RTK POINT

74+15
4-10x4
BOX
N S

74+15
4-10x4
BOX
SS

FCDMC Contract 2000C035 Stucture Surveys
Wittmann/Tilby ADMP
WORKSHEET
DTM, INC. Project #21092

☒ Sun Valley Parkway
☐ US 60 RR
☐ Highway 74

Type of Structure: 10 x 3 BOX Date: 9.4.01
File Name: 4GG2 Description Name: 79+05
Party Chief: RDS GDAC Control Pt # 4GG2 (#2)

79+05N NORTH FACE ~~(UPSTREAM)~~ DOWNSTREAM
☒ Photo Taken

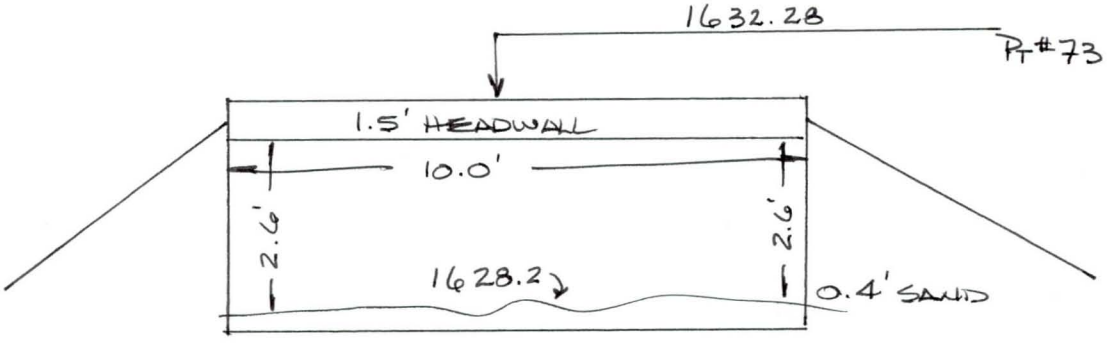

General Condition of Structure GOOD

79+05S SOUTH FACE (~~DOWNSTREAM~~) UPSTREAM
☒ Photo Taken

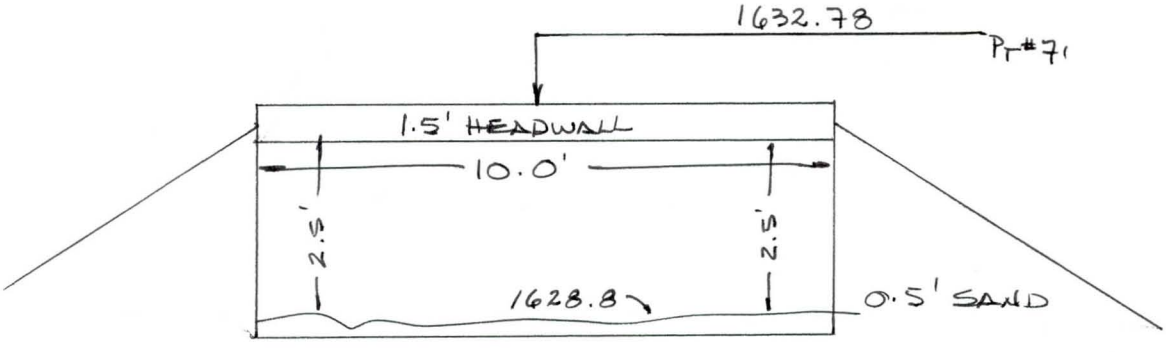

General Condition of Structure GOOD

↑ - INDICATES LOCATION OF RTK POINT

79+05
10x3
BOX
N S

79+05
10x3
BOX
SS
21

FCDMC Contract 2000C035 Stucture Surveys
Wittmann/Tilby ADMP
WORKSHEET
DTM, INC. Project #21092

☒ Sun Valley Parkway
☐ US 60 RR
☐ Highway 74

Type of Structure: 4 - 10X ~~3~~ BOX Date: 9.4.01
File Name: 4GG2 Description Name: 84+67
Party Chief: RDS GDAC Control Pt # 4GG2 (#2)

84+67 N NORTH FACE (~~UPSTREAM~~) DOWNSTREAM
☒ Photo Taken

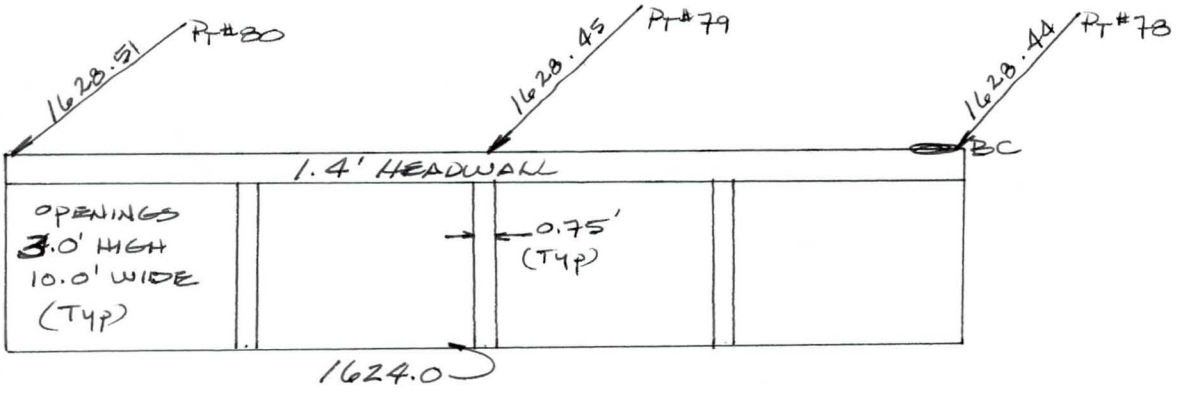

General Condition of Structure GOOD
BRASS CAP "AS-BUILT" ELEVATION 1627.9

84+67S SOUTH FACE (~~DOWNSTREAM~~) UPSTREAM
☒ Photo Taken

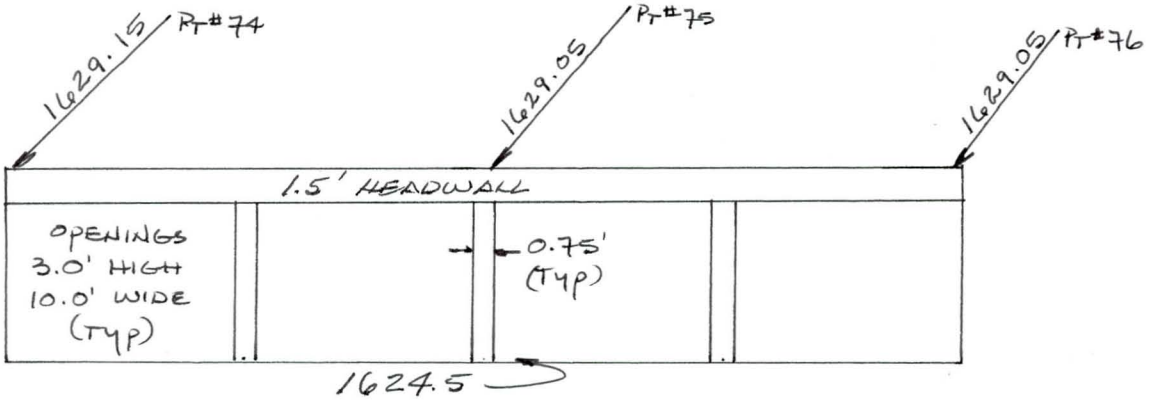

General Condition of Structure GOOD

↑ - INDICATES LOCATION OF RTK POINT

84+67
4103
BOX
NS

84+67
4-10x3
BOX
SS

FCDMC Contract 2000C035 Stucture Surveys
Wittmann/Tilby ADMP
WORKSHEET
DTM, INC. Project #21092

☒ Sun Valley Parkway
☐ US 60 RR
☐ Highway 74

Type of Structure: 10 x 3 BOX Date: 9.4.01
File Name: 4GG2 Description Name: 99+10
Party Chief: RDS GDAC Control Pt # 4GG2 (#2)

99+10N NORTH FACE (~~UPSTREAM~~) DOWNSTREAM
☒ Photo Taken

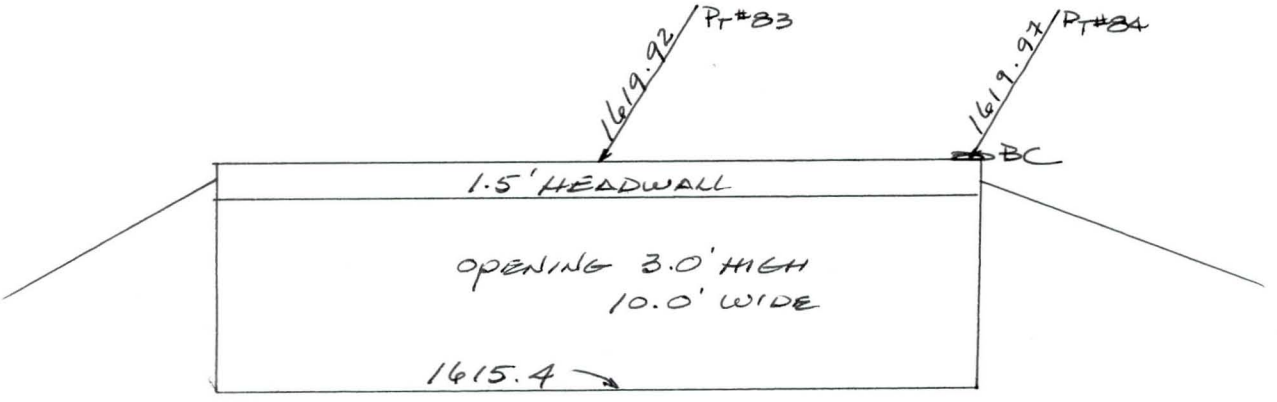

General Condition of Structure GOOD
BRASS CAP STAMPED "1619.38"

99+10S SOUTH FACE (~~DOWNSTREAM~~) UPSTREAM
☒ Photo Taken

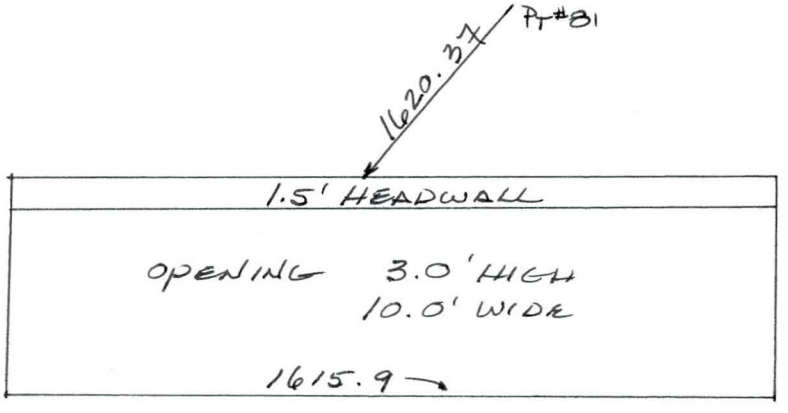

General Condition of Structure GOOD

↑ - INDICATES LOCATION OF RTK POINT

99+10
10X3BOX
N+S

99+10
10X3 BOX
S S
23

FCDMC Contract 2000C035 Stucture Surveys
Wittmann/Tilby ADMP
WORKSHEET
DTM, INC. Project #21092

☒ Sun Valley Parkway
☐ US 60 RR
☐ Highway 74

Type of Structure: 6 – 12 x 4 BOX Date: 9.4.01
File Name: 4GG2 Description Name: 102 +17
Party Chief: RDS GDAC Control Pt # 4GG2 (#2)

102+17N NORTH FACE ~~(UPSTREAM)~~ DOWNSTREAM
☒ Photo Taken

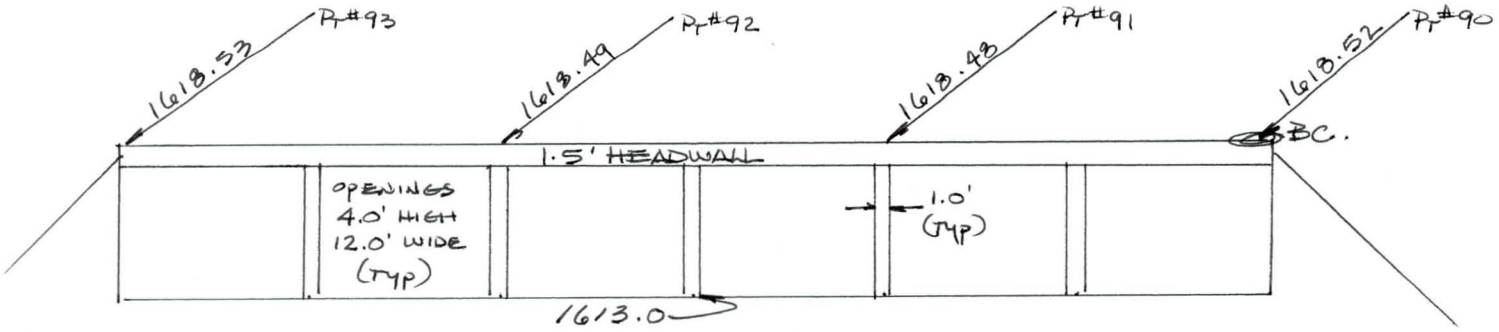

General Condition of Structure GOOD
BRASS CAP STAMPED "1617.88"

102+17S SOUTH FACE (~~DOWNSTREAM~~)
☒ Photo Taken UPSTREAM

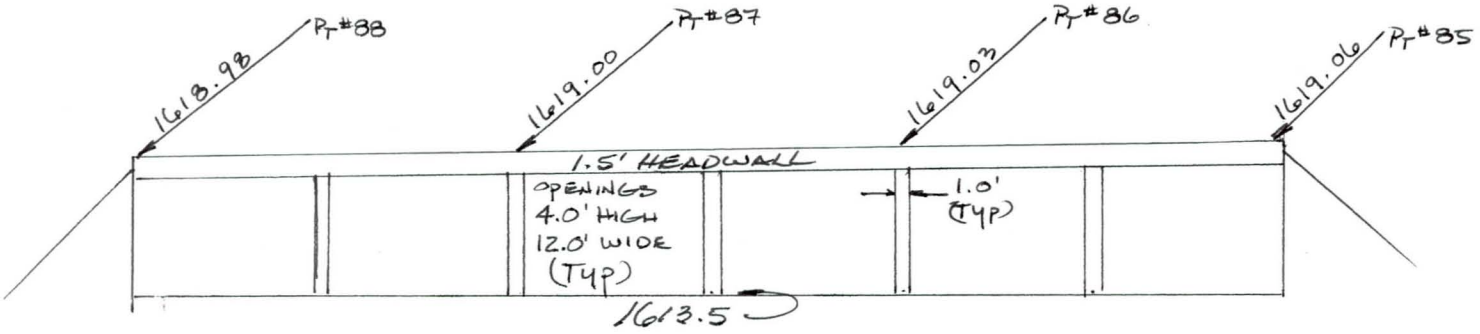

General Condition of Structure GOOD

↑ - INDICATES LOCATION OF RTK POINT

10x4
6x4
BOX
NS

102+17
6-12x4
BOX
SS

FCDMC Contract 2000C035 Stucture Surveys
Wittmann/Tilby ADMP
WORKSHEET
DTM, INC. Project #21092

☒ Sun Valley Parkway
☐ US 60 RR
☐ Highway 74

Type of Structure: 6 – 12x4 Box Date: 9.4.01
File Name: 4GG2 Description Name: 106+83
Party Chief: RDS GDAC Control Pt # 4GG2 (#2)

106+83N NORTH FACE (~~UPSTREAM~~) DOWNSTREAM
☒ Photo Taken

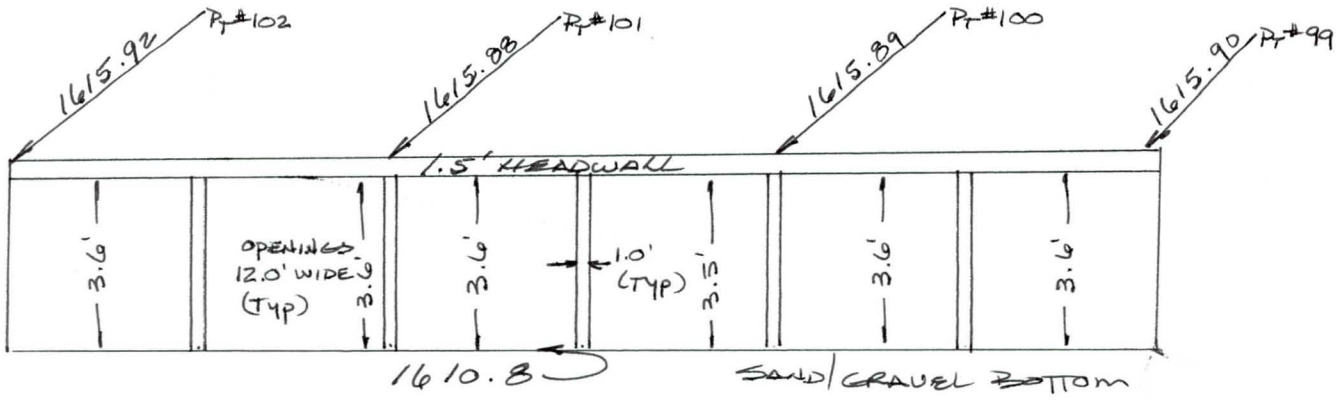

General Condition of Structure GOOD

106+83S SOUTH FACE (~~DOWNSTREAM~~) UPSTREAM
☒ Photo Taken

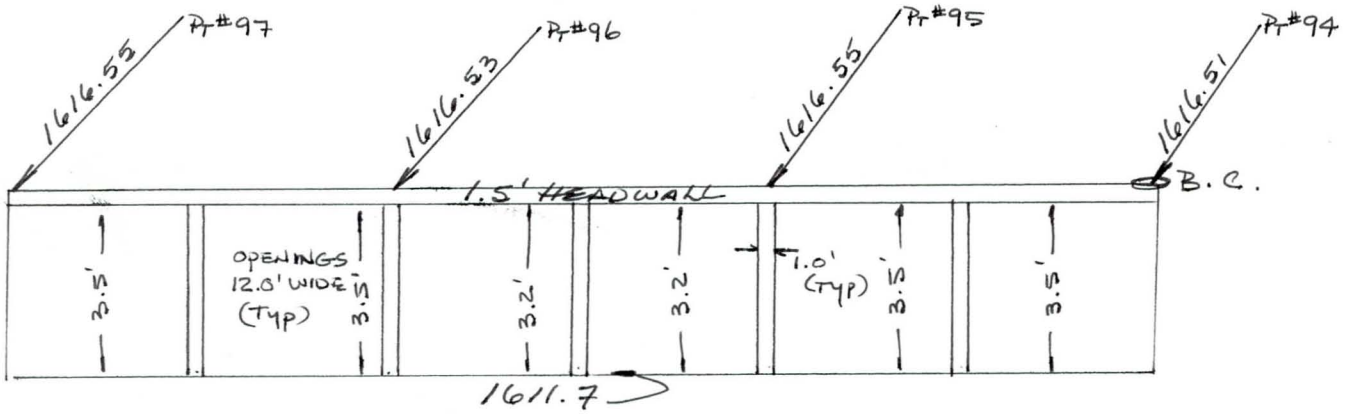

General Condition of Structure GOOD
BRASS CAP STAMPED "1616.00"

↑ - INDICATES LOCATION OF RTK POINT

101+83
6-12x4
BOX
NS

106+83
6-12x4
BOX
SS

FCDMC Contract 2000C035 Stucture Surveys
Wittmann/Tilby ADMP
WORKSHEET
DTM, INC. Project #21092

☒ Sun Valley Parkway
☐ US 60 RR
☐ Highway 74

Type of Structure: 5 - 12 x 4 BOX Date: 9.4.01
File Name: 4GG2 Description Name: 110+99
Party Chief: RDS GDAC Control Pt # 4GG2 (#2)

110+99N, AN NORTH FACE (~~UPSTREAM~~) DOWNSTREAM
☒ Photo Taken

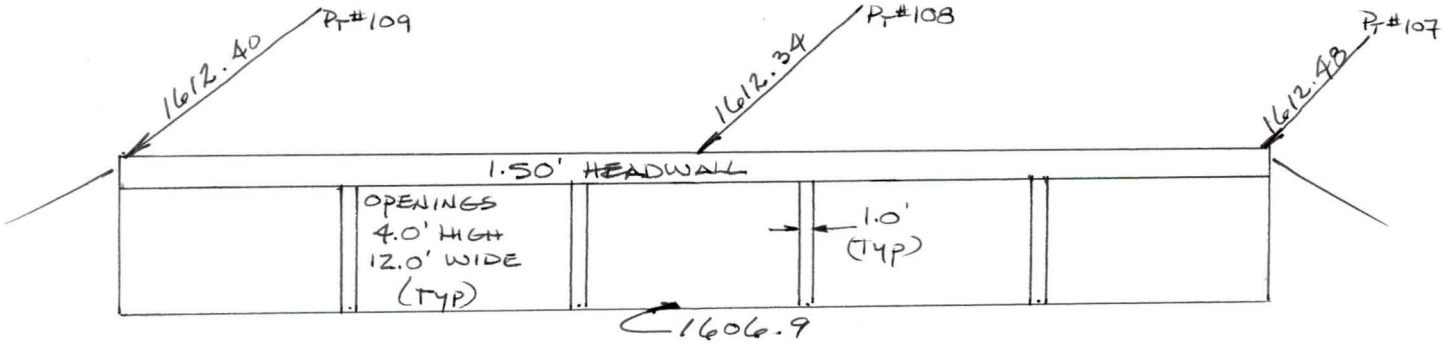

General Condition of Structure GOOD

110+99S SOUTH FACE (~~DOWNSTREAM~~) UPSTREAM
☒ Photo Taken

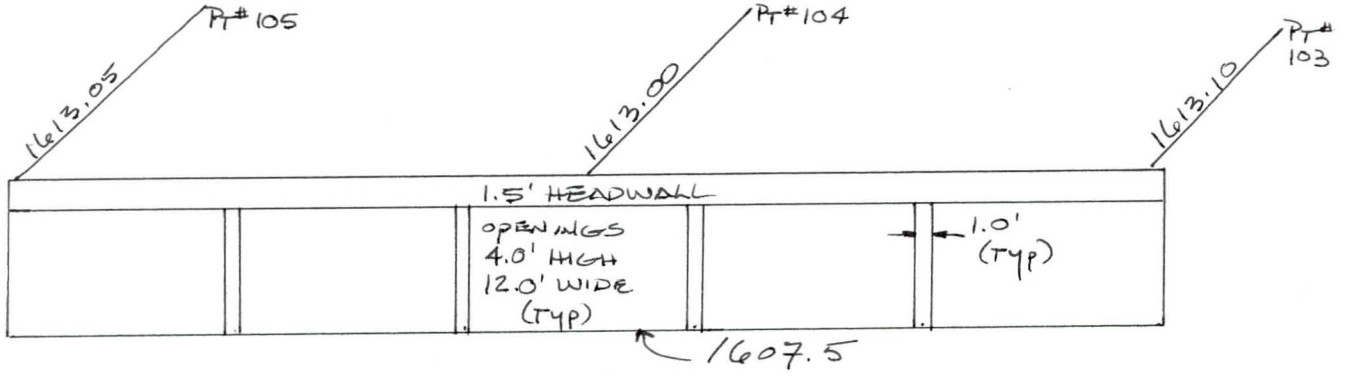

General Condition of Structure GOOD

↑ - INDICATES LOCATION OF RTK POINT

110+99
5-12x4
BOX
N S

110·99
5/2·4
BOX
N S

110+99
512x4
BOX
SS

FCDMC Contract 2000C035 Stucture Surveys
Wittmann/Tilby ADMP
WORKSHEET
DTM, INC. Project #21092

☒ Sun Valley Parkway
☐ US 60 RR
☐ Highway 74

Type of Structure: 24x36 cmp Date: 9.4.01
File Name: 4GG2 Description Name: 114+09
Party Chief: RDS GDAC Control Pt # 4GG2 (#2)

114+09N NORTH FACE (~~UPSTREAM~~) DOWNSTREAM
☒ Photo Taken

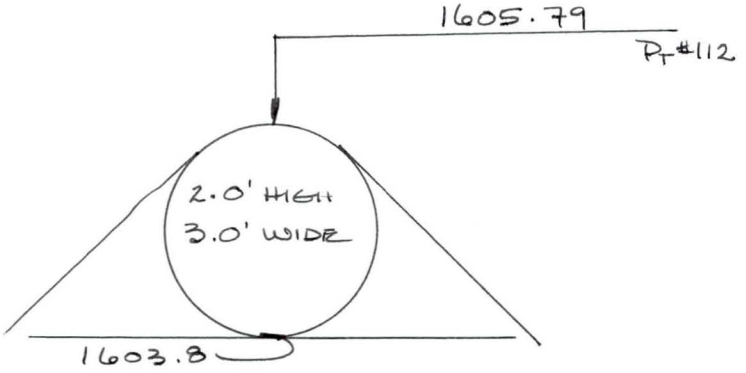

General Condition of Structure GOOD

114+09S SOUTH FACE (~~DOWNSTREAM~~) UPSTREAM
☒ Photo Taken

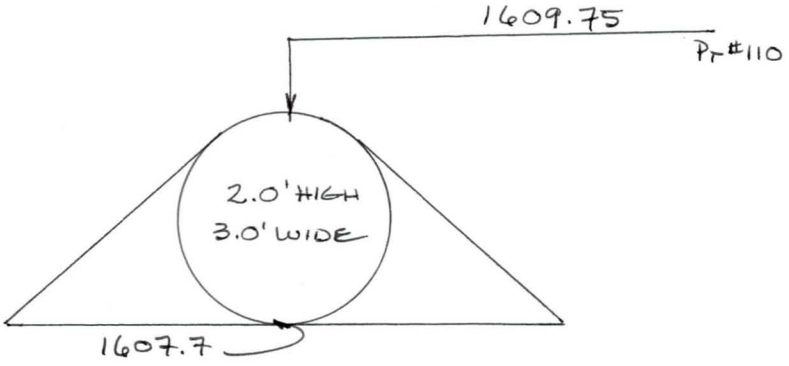

General Condition of Structure GOOD

↑ - INDICATES LOCATION OF RTK POINT

114+09
36x24
CMP
N S

114+09
36x24
CMP
SS

FCDMC Contract 2000C035 Stucture Surveys
Wittmann/Tilby ADMP
WORKSHEET
DTM, INC. Project #21092

☒ Sun Valley Parkway
☐ US 60 RR
☐ Highway 74

Type of Structure: 10 x 8 BOX Date: 9.4.01
File Name: 4662 Description Name: 116+05
Party Chief: RDS GDAC Control Pt # 4662 (#2)

116+05N NORTH FACE (~~UPSTREAM~~) DOWNSTREAM
☒ Photo Taken

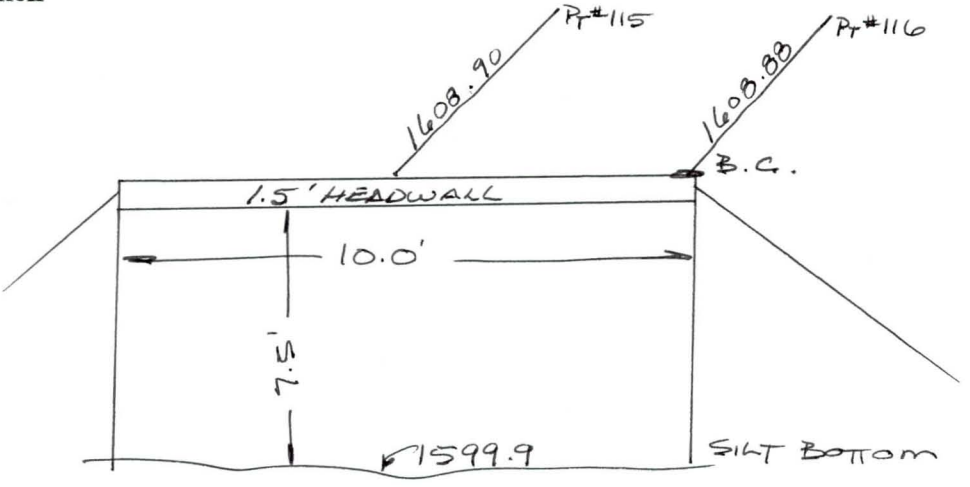

General Condition of Structure GOOD

116+05S SOUTH FACE (~~DOWNSTREAM~~) UPSTREAM
☒ Photo Taken

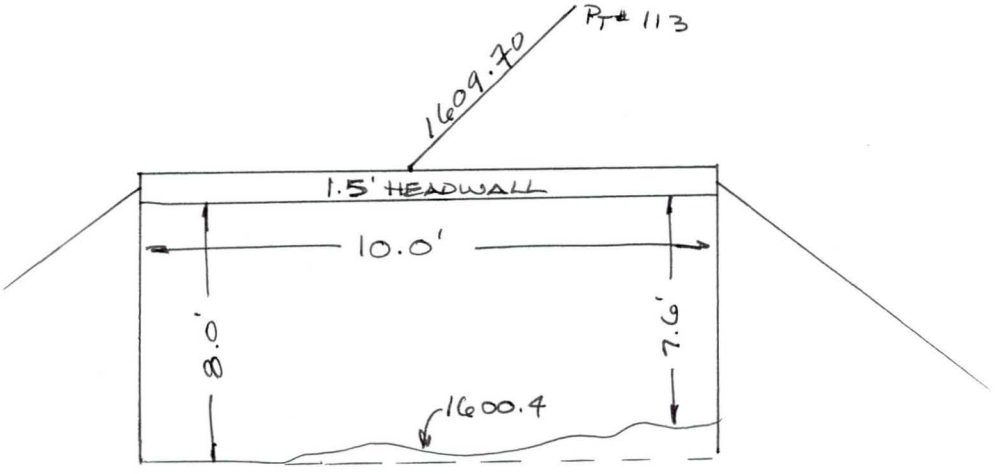

General Condition of Structure GOOD

↑ - INDICATES LOCATION OF RTK POINT

116+05
10*8Box
N5

116-05
10×8Box
SS

FCDMC Contract 2000C035 Stucture Surveys
Wittmann/Tilby ADMP
WORKSHEET
DTM, INC. Project #21092

☒ Sun Valley Parkway
☐ US 60 RR
☐ Highway 74

Type of Structure: 42x29 cmp Date: 9.4.01
File Name: 4GG2 Description Name: 124+23
Party Chief: RDS GDAC Control Pt # 4GG2 (#2)

124+23N NORTH FACE ~~(UPSTREAM)~~ DOWNSTREAM
☒ Photo Taken

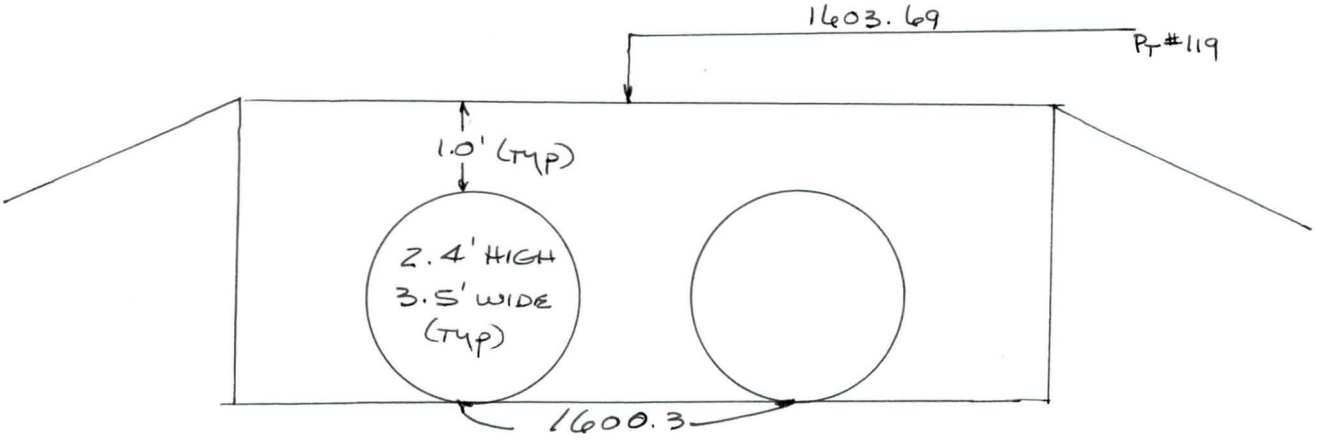

General Condition of Structure GOOD

124+23S SOUTH FACE ~~(DOWNSTREAM)~~ UPSTREAM
☒ Photo Taken

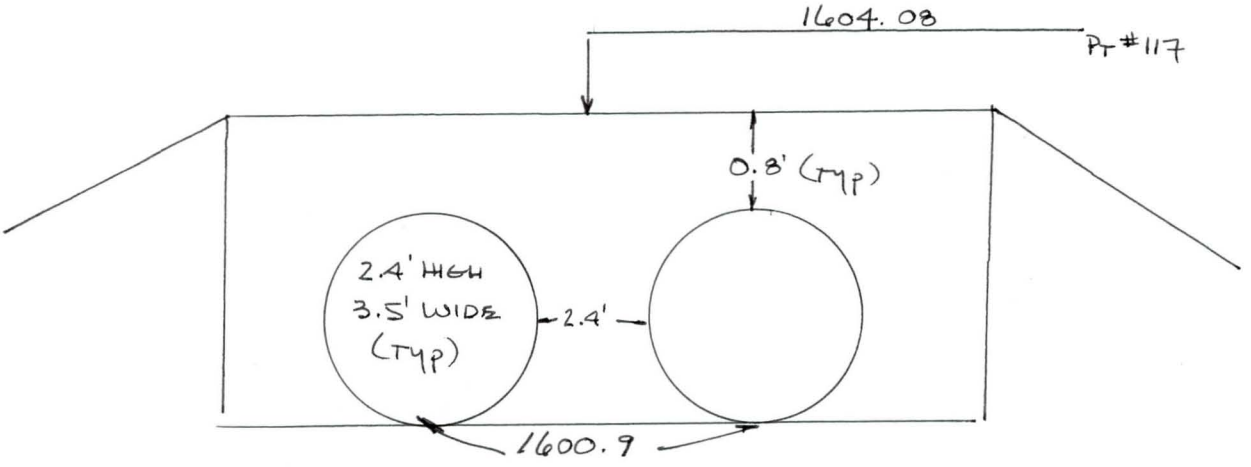

General Condition of Structure GOOD

↑ - INDICATES LOCATION OF RTK POINT

124+23
42x29
CMP
SS

124+23
42x29
CMP
N S

FCDMC Contract 2000C035 Stucture Surveys
Wittmann/Tilby ADMP
WORKSHEET
DTM, INC. Project #21092

☒ Sun Valley Parkway
☐ US 60 RR
☐ Highway 74

Type of Structure: 24x36 cmp Date: 9·4·01
File Name: 4GG2 Description Name: 127+67
Party Chief: RDS GDAC Control Pt # 4GG2 (#2)

127+67N NORTH FACE ~~(UPSTREAM)~~ DOWNSTREAM
☒ Photo Taken

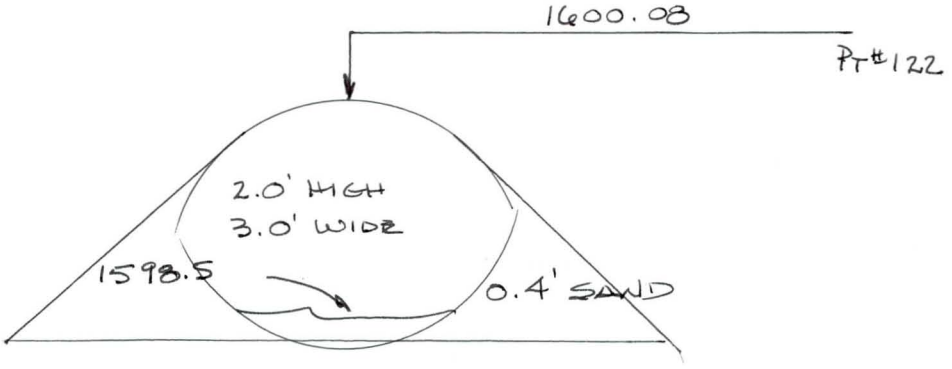

General Condition of Structure GOOD

127+67S SOUTH FACE (~~DOWNSTREAM~~)
☒ Photo Taken UPSTREAM

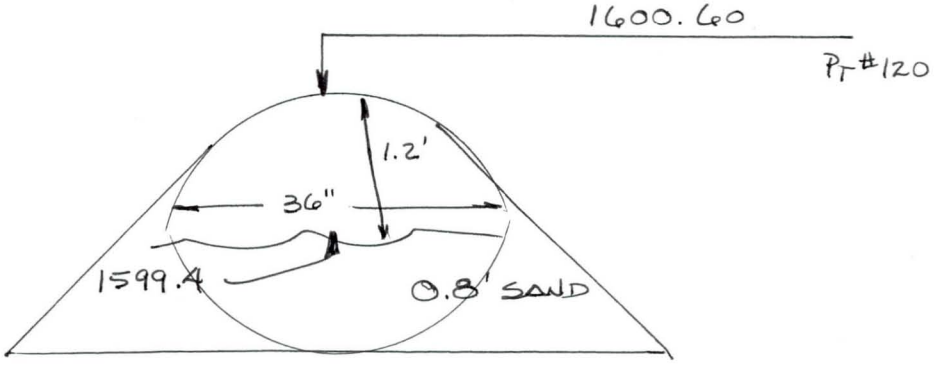

General Condition of Structure 50% PLUGGED

1 - INDICATES LOCATION OF RTK POINT

127+67
35x24
CMP
NS

127+67
35x24
CMP
SS

FCDMC Contract 2000C035 Stucture Surveys
Wittmann/Tilby ADMP
WORKSHEET
DTM, INC. Project #21092

☒ Sun Valley Parkway
☐ US 60 RR
☐ Highway 74

Type of Structure: 30x42 CMP Date: 9.4.01
File Name: 4GG2 Description Name: 136+16
Party Chief: RDS GDAC Control Pt # 4GG2 (#2)

136+16N NORTH FACE (~~UPSTREAM~~) DOWNSTREAM
☒ Photo Taken

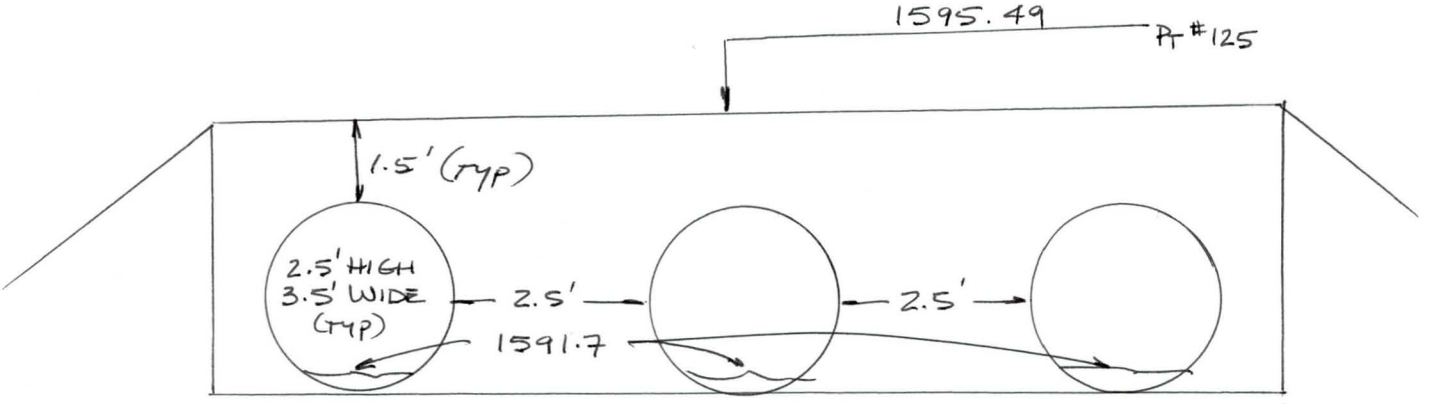

General Condition of Structure GOOD 0.2' SAND | SILT IN BOTTOM OF EACH TUBE

136+16S SOUTH FACE (~~DOWNSTREAM~~) UPSTREAM
☒ Photo Taken

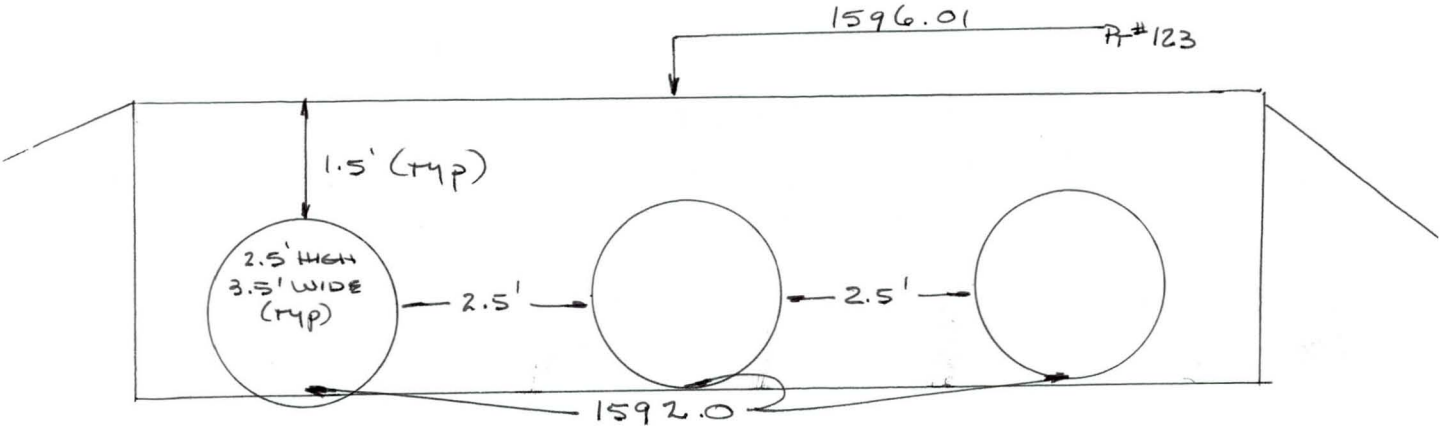

General Condition of Structure GOOD

↑ - INDICATES LOCATION OF RTK POINT

136+16
42+29
CMP
NS

136+16
42+29
CMP
SS

FCDMC Contract 2000C035 Stucture Surveys
Wittmann/Tilby ADMP
WORKSHEET
DTM, INC. Project #21092

☒ Sun Valley Parkway
☐ US 60 RR
☐ Highway 74

Type of Structure: 6 - 12x5 BOX Date: 9.4.01
File Name: 4GG2 Description Name: 197 + 75
Party Chief: RDS GDAC Control Pt # 4GG2 (#2)

197+75N, AN NORTH FACE (~~UPSTREAM~~) DOWNSTREAM
☒ Photo Taken

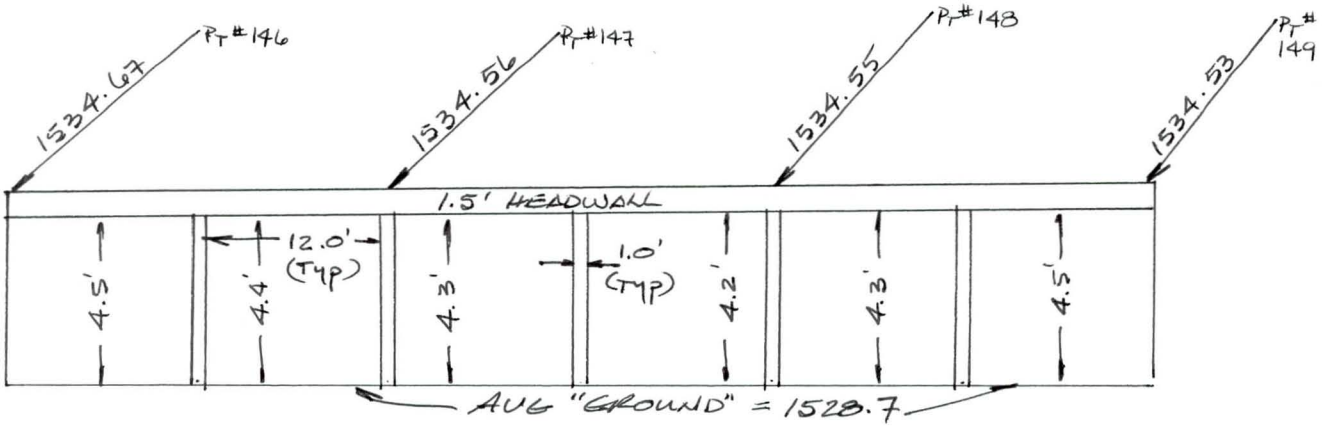

General Condition of Structure GOOD

197+75S SOUTH FACE (~~DOWNSTREAM~~) UPSTREAM
☒ Photo Taken

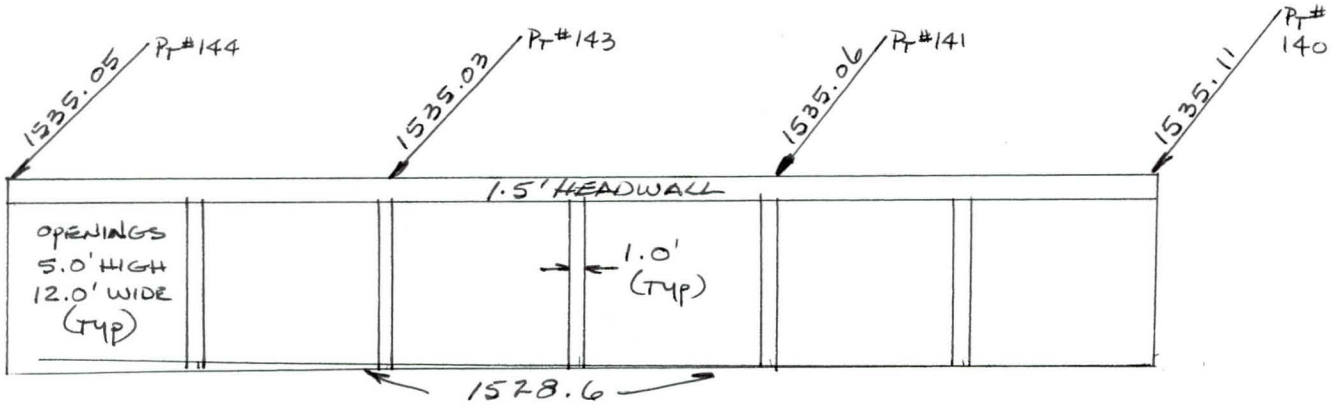

General Condition of Structure GOOD

↑ - INDICATES LOCATION OF RTK POINT

197+75
6-12x5
BOX
NS

197+75
6-12x5
BOX
SS

197+75
6-12x5
BOX
NS

FCDMC Contract 2000C035 Stucture Surveys
Wittmann/Tilby ADMP
WORKSHEET
DTM, INC. Project #21092

☒ Sun Valley Parkway
☐ US 60 RR
☐ Highway 74

Type of Structure: 4 — 10×3 BOX Date: 9.5.01
File Name: 4GG2 Description Name: 238 + 40
Party Chief: RDS GDAC Control Pt # 4GG2 (#2)

238+40N NORTH FACE (UPSTREAM)
☒ Photo Taken

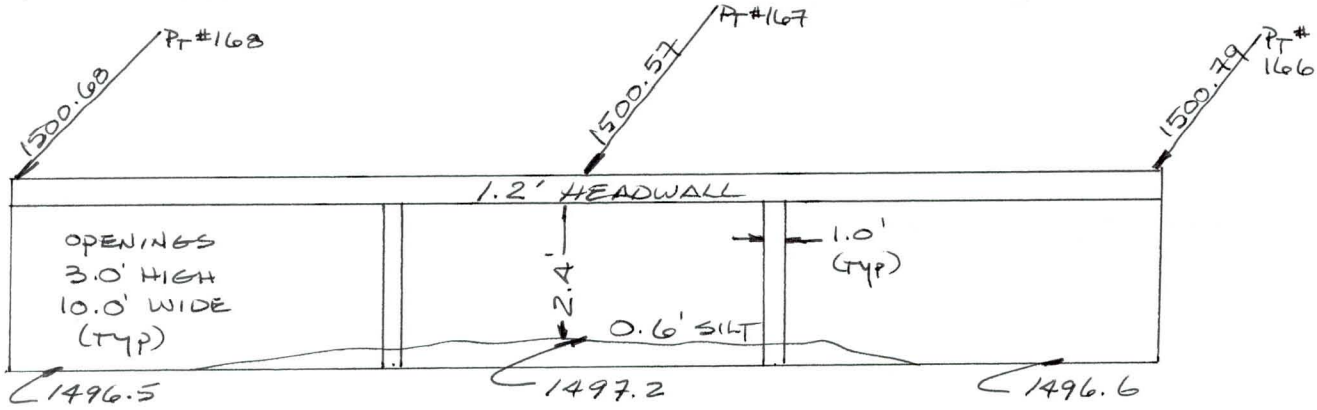

General Condition of Structure GOOD

238+40S SOUTH FACE (DOWNSTREAM)
☒ Photo Taken

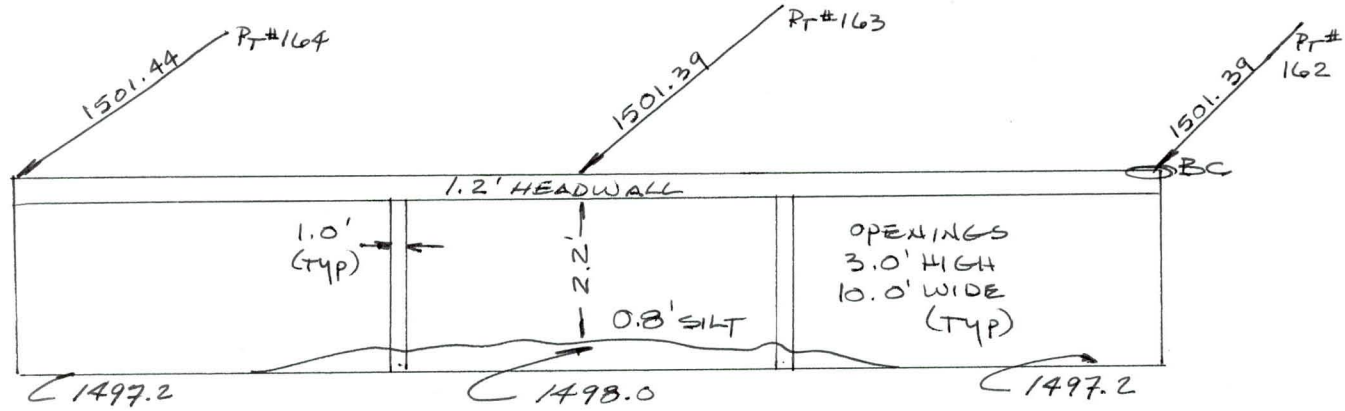

General Condition of Structure GOOD

↑ - INDICATES LOCATION OF RTK POINT

238+40
3-10X4
BOX
NS

238+40
3-10x4
Box
SS

FCDMC Contract 2000C035 Stucture Surveys
Wittmann/Tilby ADMP
WORKSHEET
DTM, INC. Project #21092

☒ Sun Valley Parkway
☐ US 60 RR
☐ Highway 74

Type of Structure: 4 - 10'x4' BOX Date: 9.5.01
File Name: 4GG2 Description Name: 254+82
Party Chief: RDS GDAC Control Pt # 4GG2 (2)

254+82N NORTH FACE (~~UPSTREAM~~) DOWNSTREAM
☒ Photo Taken

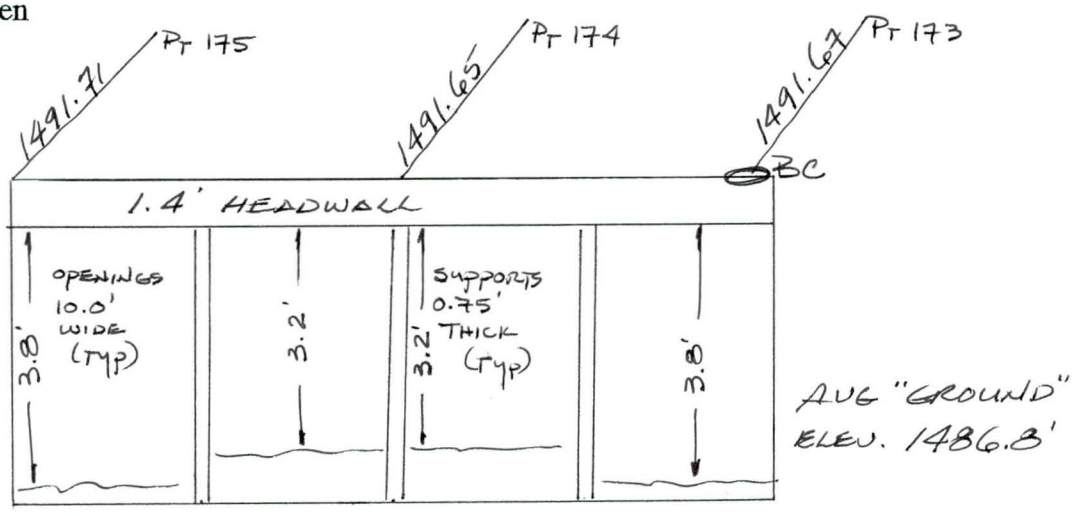

General Condition of Structure GOOD
BRASS CAP STAMPED "1491.30"

254+82S SOUTH FACE (~~DOWNSTREAM~~) UPSTREAM
☒ Photo Taken

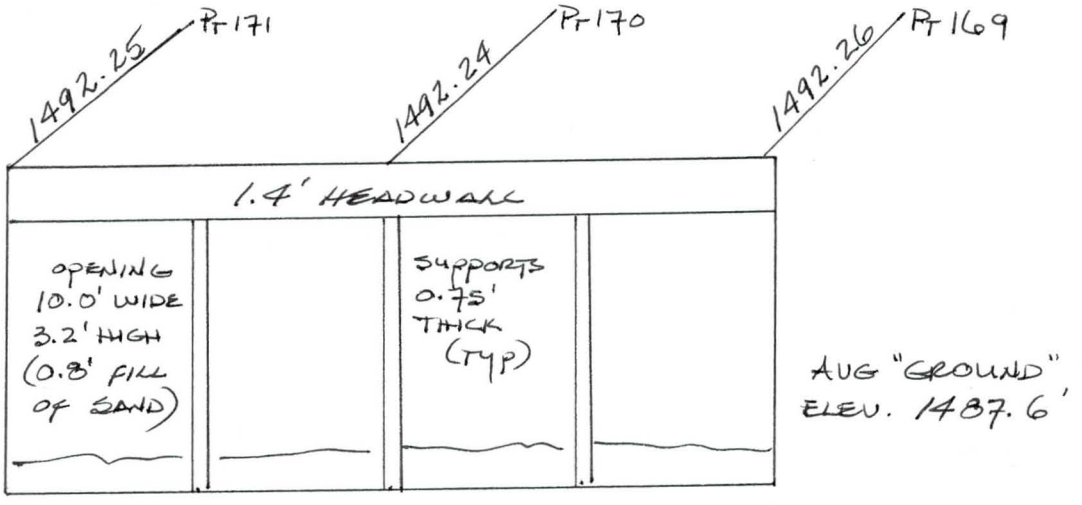

General Condition of Structure GOOD

↑ - INDICATES LOCATION OF RTK POINT

4-10x4
BOX
25482
N S

4-10x4
BOX
254.82
S S

FCDMC Contract 2000C035 Stucture Surveys
Wittmann/Tilby ADMP
WORKSHEET
DTM, INC. Project #21092

☒ Sun Valley Parkway
☐ US 60 RR
☐ Highway 74

Type of Structure: 6- 12 x 6 BOX Date: 9.5.01
File Name: 4GG2 Description Name: 260+98
Party Chief: RDS GDAC Control Pt # 4GG2 (#2)

260+98N NORTH FACE (~~UPSTREAM~~) DOWNSTREAM
☒ Photo Taken

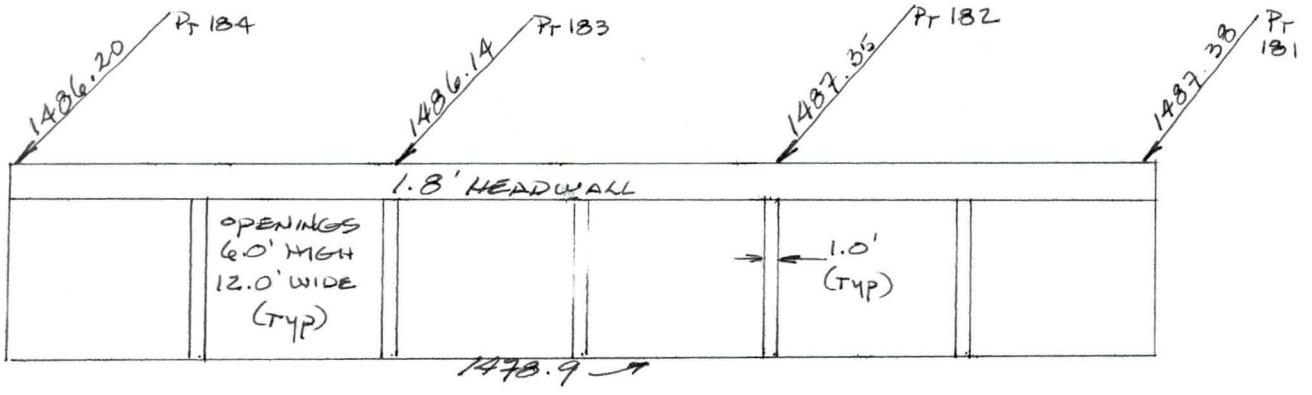

General Condition of Structure GOOD

260+98S SOUTH FACE (~~DOWNSTREAM~~) UPSTREAM
☒ Photo Taken

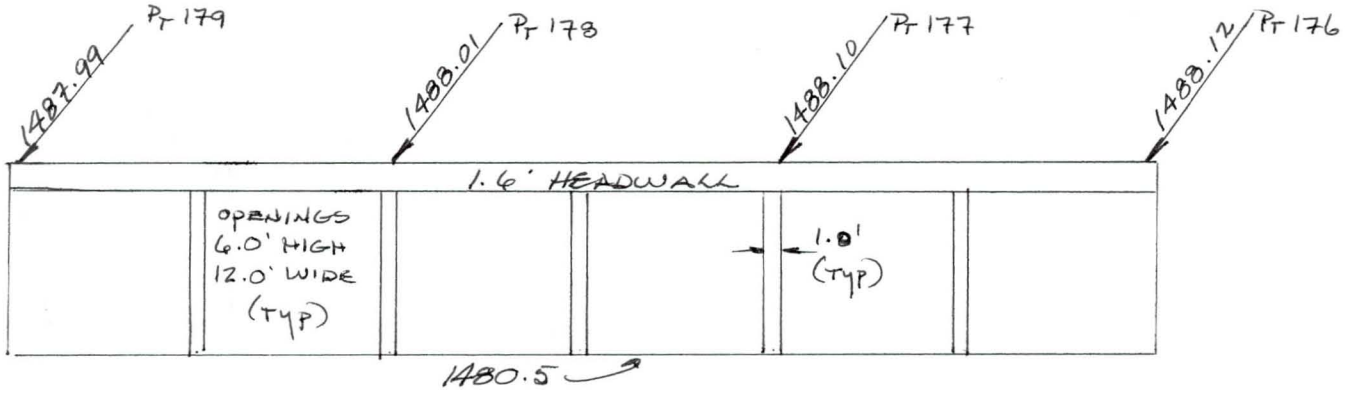

General Condition of Structure GOOD

↑ - INDICATES LOCATION OF RTK POINT

26098
6x26
BOX
N 5

260+98
6-12x6
BOX
SS

FCDMC Contract 2000C035 Stucture Surveys
Wittmann/Tilby ADMP
WORKSHEET
DTM, INC. Project #21092

☒ Sun Valley Parkway
☐ US 60 RR
☐ Highway 74

Type of Structure: 30×42 CMP Date: 9.5.01
File Name: 4662 Description Name: 264 + 99
Party Chief: RDS GDAC Control Pt # 4662 (#2)

264+99 N NORTH FACE (~~UPSTREAM~~) DOWNSTREAM
☒ Photo Taken

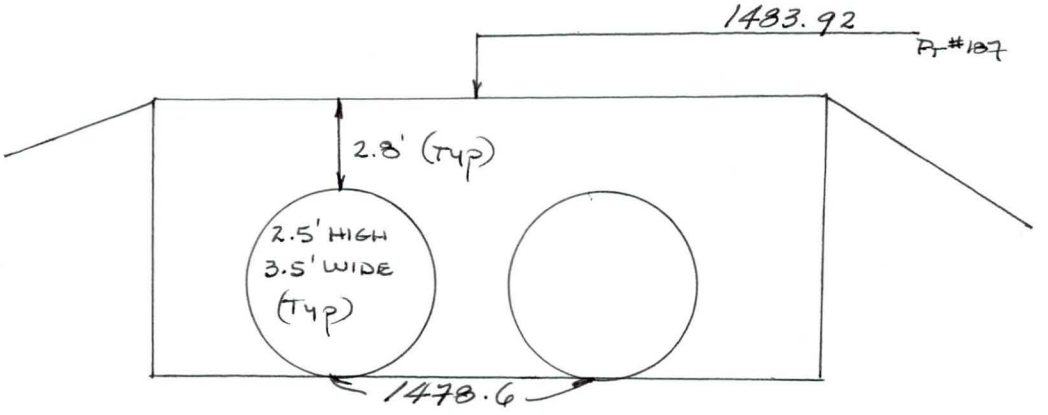

General Condition of Structure GOOD

264+99S SOUTH FACE (~~DOWNSTREAM~~) UPSTREAM
☒ Photo Taken

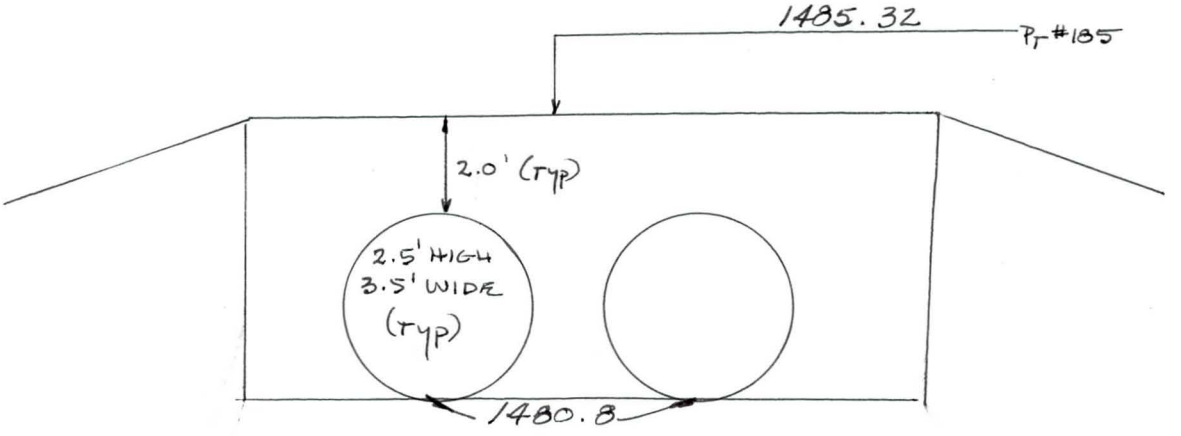

General Condition of Structure GOOD

↑ - INDICATES LOCATION OF RTK POINT

26499
42429
CMP
N S

264+99
42x29
CMP
SS

FCDMC Contract 2000C035 Stucture Surveys
Wittmann/Tilby ADMP
WORKSHEET
DTM, INC. Project #21092

☒ Sun Valley Parkway
☐ US 60 RR
☐ Highway 74

Type of Structure: 4-8x3 Box Date: 9.5.01
File Name: 4GG2 Description Name: 279+17
Party Chief: RDS GDAC Control Pt # 4GG2 (#2)

279+17N NORTH FACE (~~UPSTREAM~~) DOWNSTREAM
☒ Photo Taken

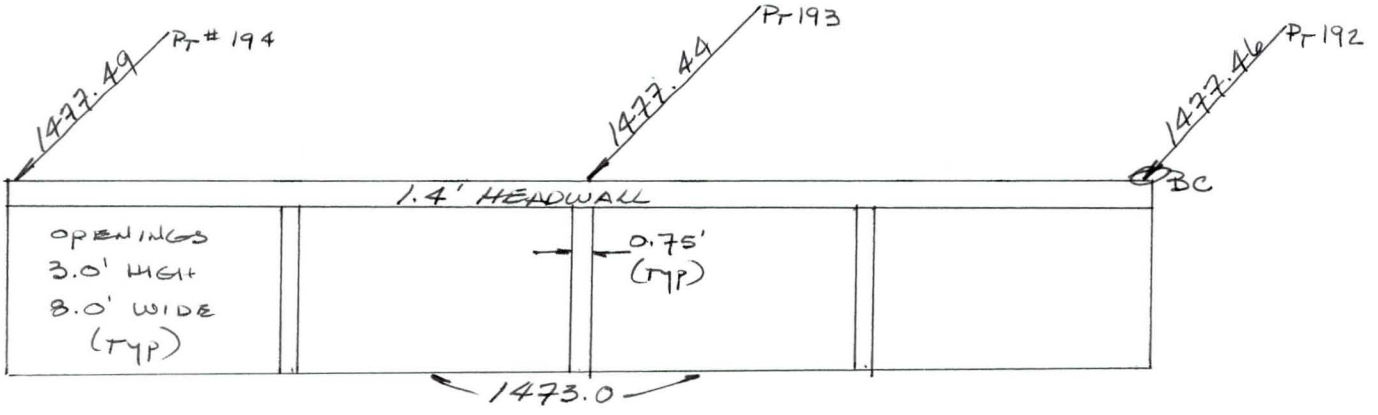

General Condition of Structure GOOD
BRASS CAP STAMPED "1477.17"

279+17S SOUTH FACE (~~DOWNSTREAM~~) UPSTREAM
☒ Photo Taken

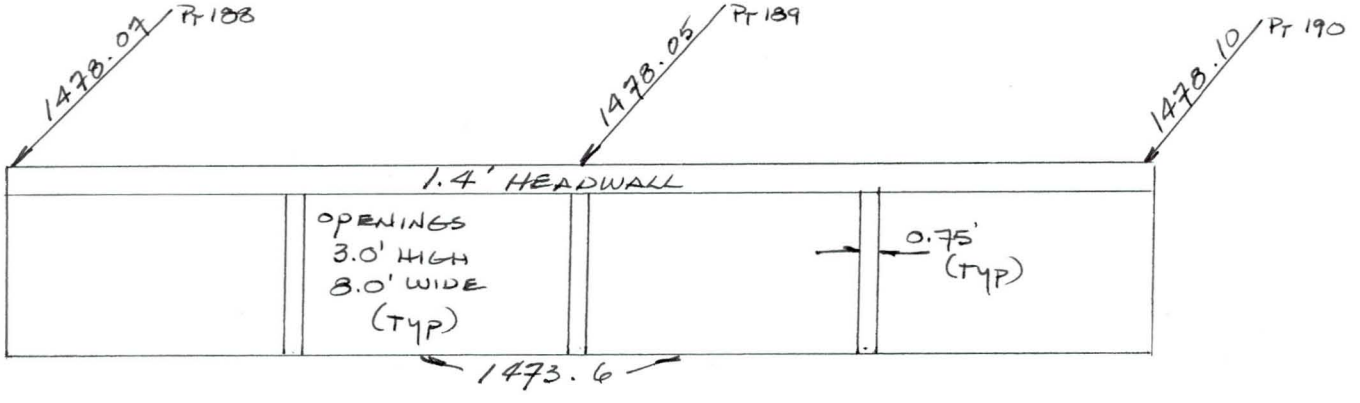

General Condition of Structure GOOD

↑ - INDICATES LOCATION OF RTK POINT

27947
4.8x3
BOX
SS

FCDMC Contract 2000C035 Stucture Surveys
Wittmann/Tilby ADMP
WORKSHEET
DTM, INC. Project #21092

☒ Sun Valley Parkway
☐ US 60 RR
☐ Highway 74

Type of Structure: 20 x 28 CMP Date: 9.5.01
File Name: 4GG2 Description Name: 282+90
Party Chief: RDS GDAC Control Pt # 4GG2 (#2)

282+90N NORTH FACE (~~UPSTREAM~~) DOWNSTREAM
☒ Photo Taken

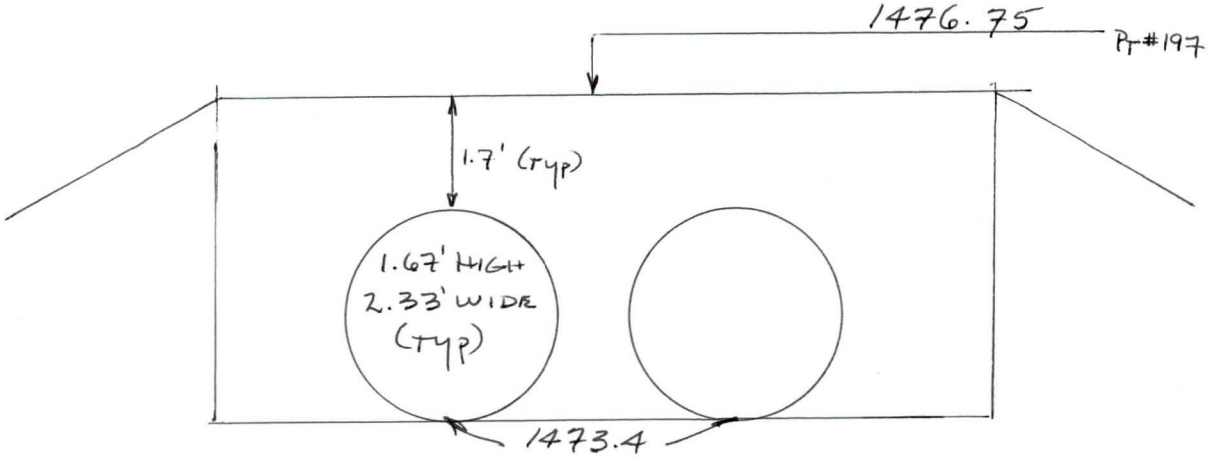

General Condition of Structure GOOD

282+90S SOUTH FACE (~~DOWNSTREAM~~) UPSTREAM
☒ Photo Taken

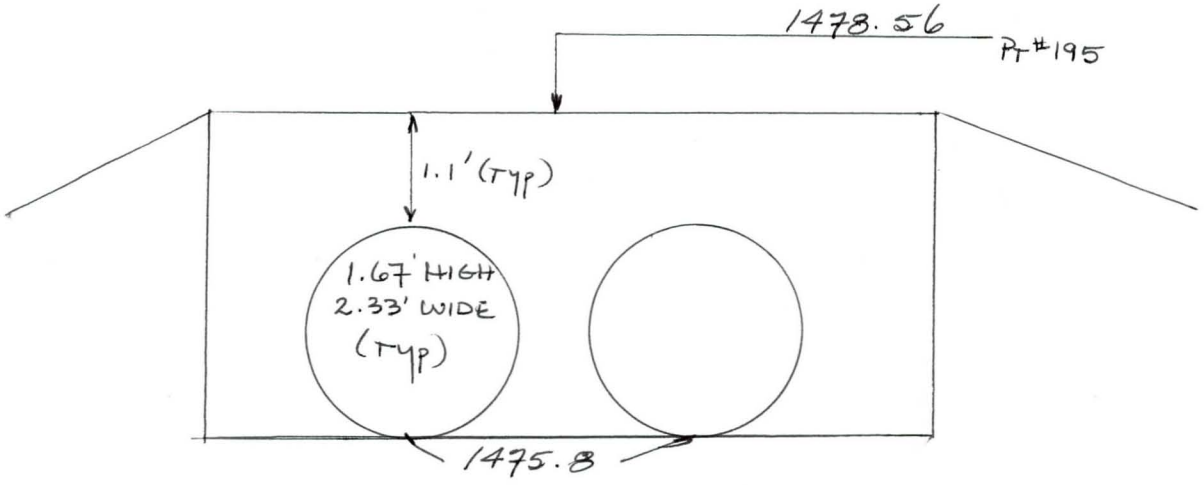

General Condition of Structure GOOD

↑ - INDICATES LOCATION OF RTK POINT

28L90
28x20
CMP
NS

28290
28320
MP
SS

FCDMC Contract 2000C035 Stucture Surveys
Wittmann/Tilby ADMP
WORKSHEET
DTM, INC. Project #21092

☒ Sun Valley Parkway
☐ US 60 RR
☐ Highway 74

Type of Structure: 4 - 10x4 Box Date: 9.5.01
File Name: 4GG2 Description Name: 304+13
Party Chief: RDS GDAC Control Pt # 4GG2 (#2)

304+13 N NORTH FACE (~~UPSTREAM~~) DOWNSTREAM
☒ Photo Taken

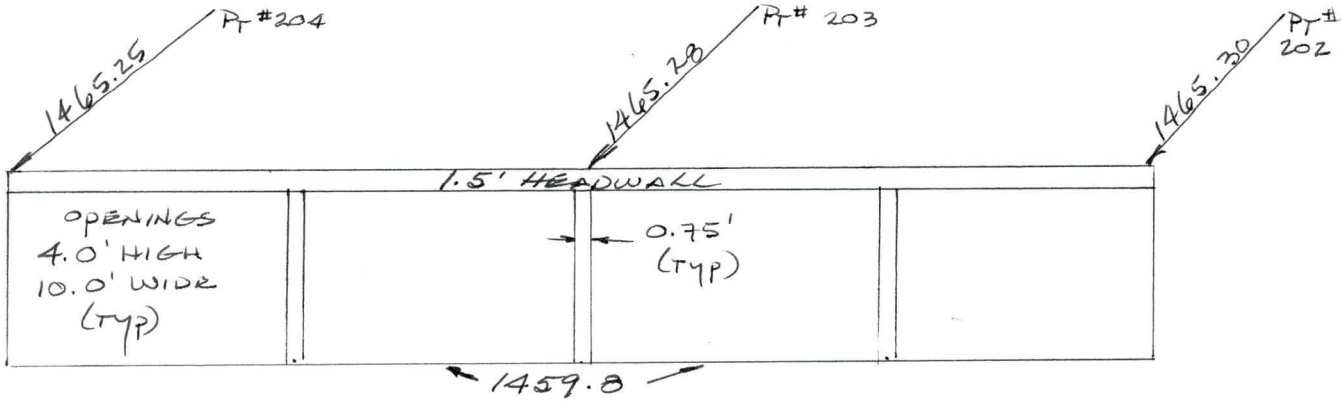

General Condition of Structure

304+13S, AS SOUTH FACE (~~DOWNSTREAM~~) UPSTREAM
☒ Photo Taken

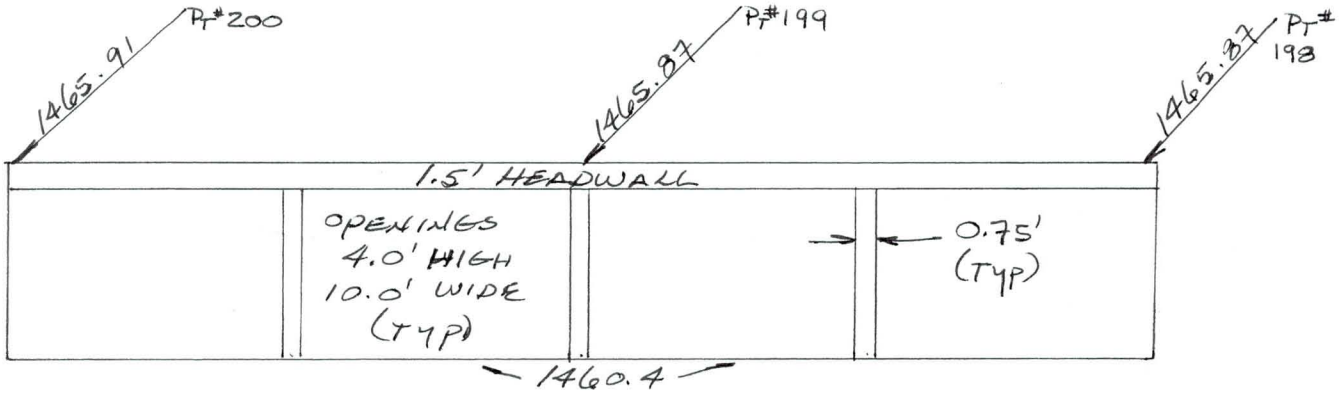

General Condition of Structure

↑ - INDICATES LOCATION OF RTK POINT

30+43
4-10x4
BOX
NS

30+13
4-10x4
BOX
SS

304+13
4-10x4
BOX
SS

30+76
28+20
CMP
SS

307+76
28+20
CMP
N S

FCDMC Contract 2000C035 Stucture Surveys
Wittmann/Tilby ADMP
WORKSHEET
DTM, INC. Project #21092

☒ Sun Valley Parkway
☐ US 60 RR
☐ Highway 74

Type of Structure: 20x28 CMP Date: 9.5.01
File Name: 4GG2 Description Name: 310 +12
Party Chief: XDS GDAC Control Pt # 4GG2 (#2)

310+12N NORTH FACE (~~UPSTREAM~~) DOWNSTREAM
☒ Photo Taken

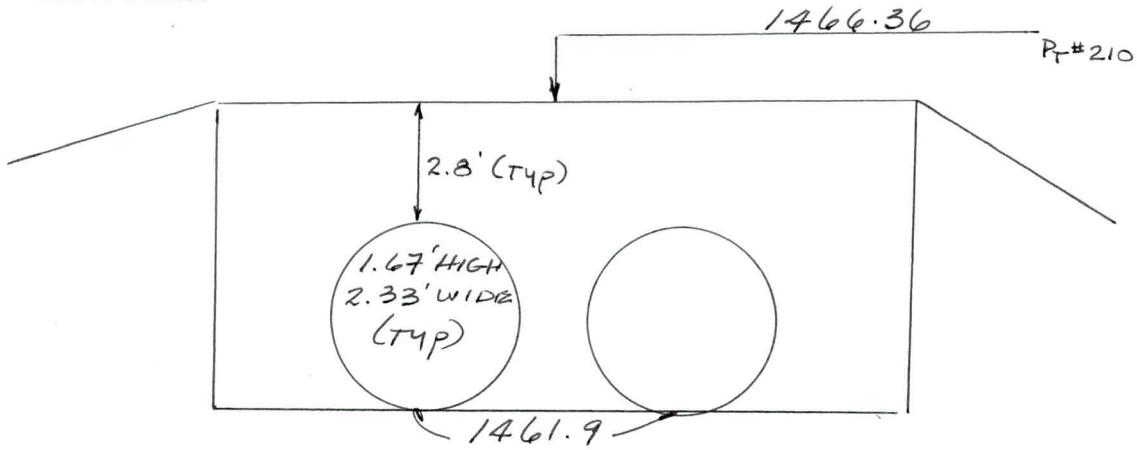

General Condition of Structure GOOD

310+12S SOUTH FACE (~~DOWNSTREAM~~) UPSTREAM
☒ Photo Taken

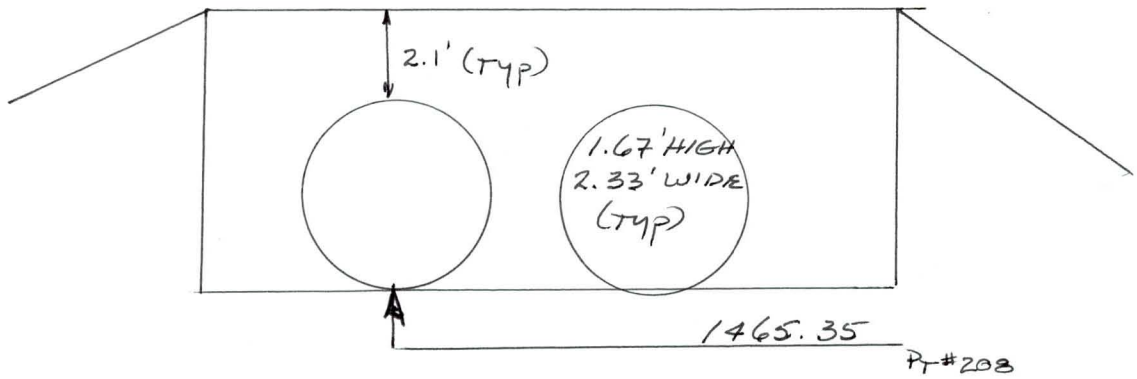

General Condition of Structure GOOD

↑ - INDICATES LOCATION OF RTK POINT

310+12
28x20
CMP
NS

310+12
28x20
CMP
SS

FCDMC Contract 2000C035 Stucture Surveys
Wittmann/Tilby ADMP
WORKSHEET
DTM, INC. Project #21092

☒ Sun Valley Parkway
☐ US 60 RR
☐ Highway 74

Type of Structure: 20x28 Cmp Date: 9.5.01
File Name: 4GG2 Description Name: 312 +27
Party Chief: RDS GDAC Control Pt # 4GG2 (#2)

312+27N NORTH FACE (~~UPSTREAM~~) DOWNSTREAM
☒ Photo Taken

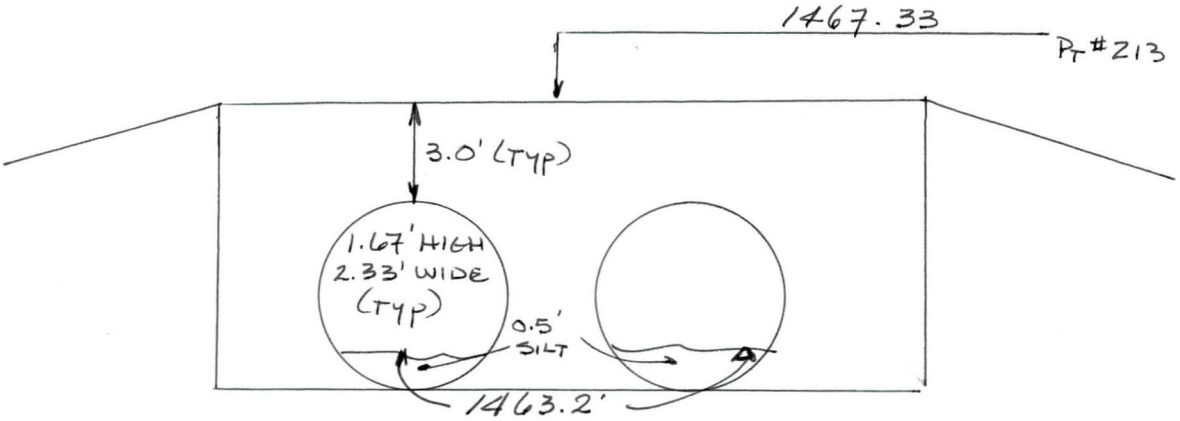

General Condition of Structure GOOD

312+27S SOUTH FACE (~~DOWNSTREAM~~) UPSTREAM
☒ Photo Taken

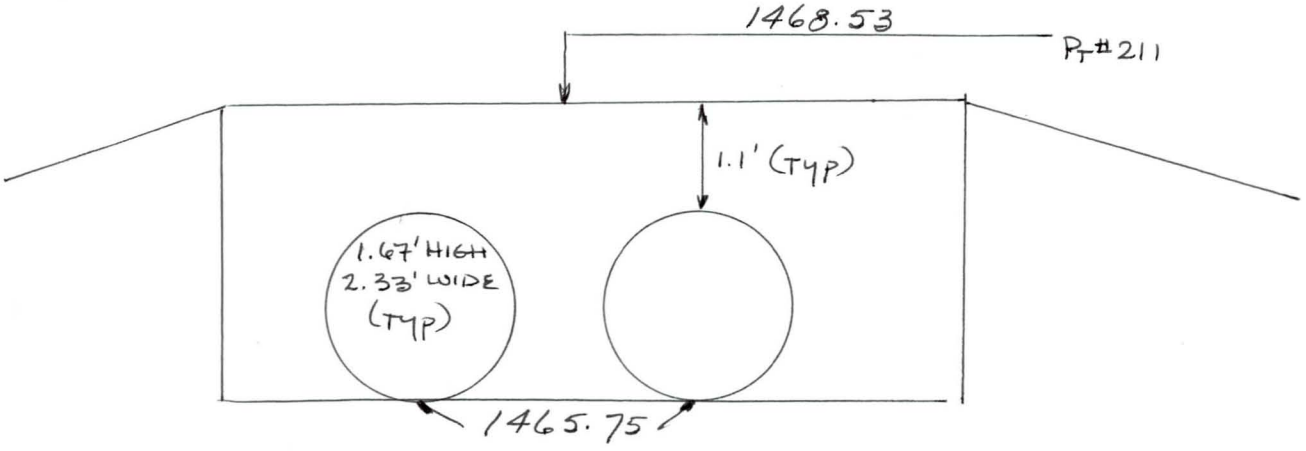

General Condition of Structure

↑ - INDICATES LOCATION OF RTK POINT

312-27
28x20
CMP
N S

312+27
28x20
CMP
SS

FCDMC Contract 2000C035 Stucture Surveys
Wittmann/Tilby ADMP
WORKSHEET
DTM, INC. Project #21092

☒ Sun Valley Parkway
☐ US 60 RR
☐ Highway 74

Type of Structure: Cmp Date: 9·18·01
File Name: 4GG2 Description Name: 315+02
Party Chief: RDS GDAC Control Pt # 4GG2 (2)

NORTH FACE (~~UPSTREAM~~) DOWNSTREAM

☐ NO Photo Taken

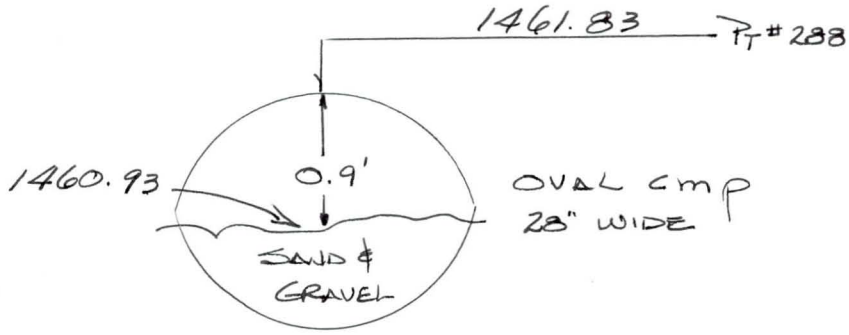

General Condition of Structure PARTIALLY FILLED WITH SAND & GRAVEL

SOUTH FACE (~~DOWNSTREAM~~) UPSTREAM

☐ NO Photo Taken

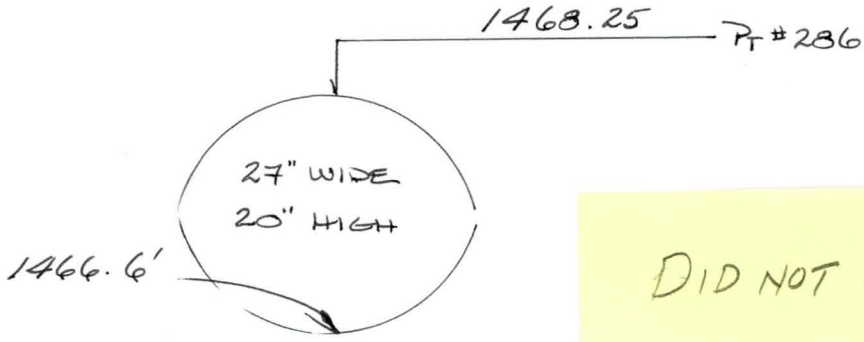

DID NOT Locate

General Condition of Structure GOOD

↑ - INDICATES LOCATION OF RTK POINT

FCDMC Contract 2000C035 Stucture Surveys
Wittmann/Tilby ADMP
WORKSHEET
DTM, INC. Project #21092

☒ Sun Valley Parkway
☐ US 60 RR
☐ Highway 74

Type of Structure: 10 x 8 Box Date: 9.5.01
File Name: 4GG2 Description Name: 316 + 36
Party Chief: RDS GDAC Control Pt # 4GG2 (#2)

316+36N NORTH FACE (~~UPSTREAM~~) DOWNSTREAM
☒ Photo Taken

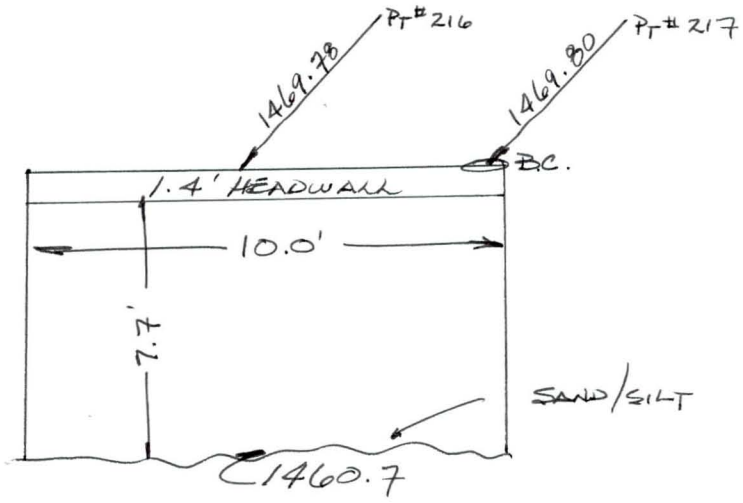

General Condition of Structure GOOD
BRASS CAP STAMPED "1469.55"

316+36S SOUTH FACE (~~DOWNSTREAM~~) upSTREAM
☒ Photo Taken

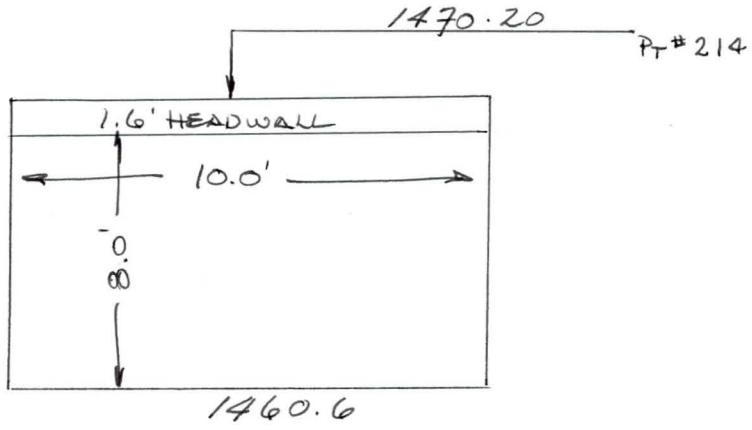

General Condition of Structure GOOD

↑ - INDICATES LOCATION OF RTK POINT

316+36
10+8
BOX
NS

316+36
10x8
BOX
SS

FCDMC Contract 2000C035 Stucture Surveys
Wittmann/Tilby ADMP
WORKSHEET
DTM, INC. Project #21092

☒ Sun Valley Parkway
☐ US 60 RR
☐ Highway 74

Type of Structure: 20 x 28 cmp Date: 9.5.01
File Name: 4GG2 Description Name: 318 +96
Party Chief: RDS GDAC Control Pt # 4GG2 (#2)

318+96N NORTH FACE ~~(UPSTREAM)~~ DOWNSTREAM
☒ Photo Taken

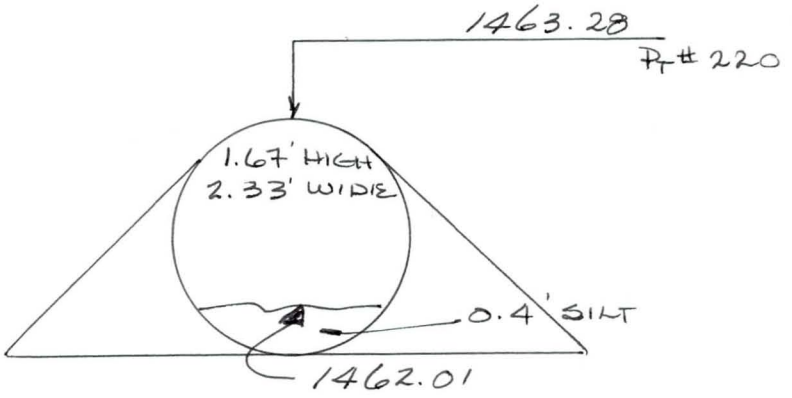

General Condition of Structure

318+96S SOUTH FACE (~~DOWNSTREAM~~) UPSTREAM
☒ Photo Taken

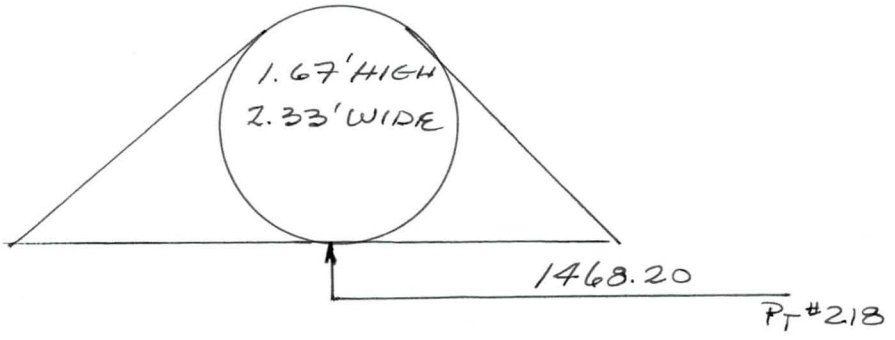

General Condition of Structure GOOD

↑ - INDICATES LOCATION OF RTK POINT

318-96
28x20
CMP
N-S

318+96
28+20
CMP
SS

FCDMC Contract 2000C035 Stucture Surveys
Wittmann/Tilby ADMP
WORKSHEET
DTM, INC. Project #21092

☒ Sun Valley Parkway
☐ US 60 RR
☐ Highway 74

Type of Structure: 30x42 cmp Date: 9.5.01
File Name: 4GG2 Description Name: 320+52
Party Chief: RDS GDAC Control Pt # 4GG2 (#2)

320+52N NORTH FACE (~~UPSTREAM~~) DOWNSTREAM
☒ Photo Taken

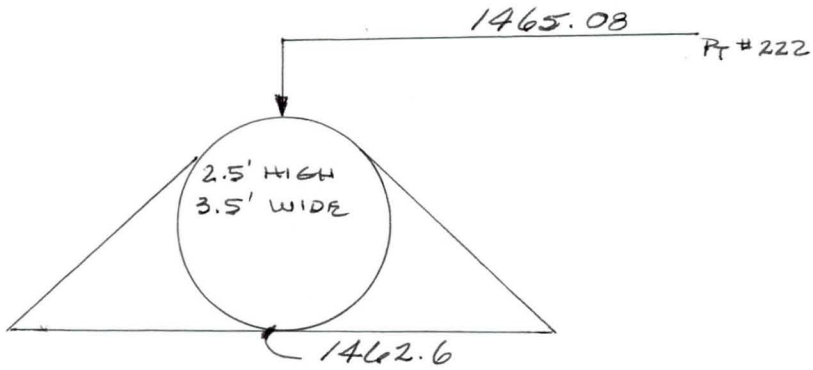

General Condition of Structure GOOD

320+52S SOUTH FACE (~~DOWNSTREAM~~) UPSTREAM
☒ Photo Taken

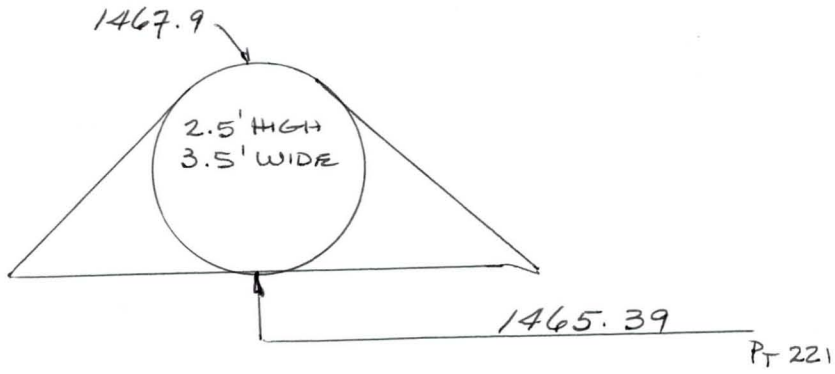

General Condition of Structure GOOD

↑ - INDICATES LOCATION OF RTK POINT

320+52
42"x29
CMP
NS

320+52
42"x29
CMP
SS

FCDMC Contract 2000C035 Stucture Surveys
Wittmann/Tilby ADMP
WORKSHEET
DTM, INC. Project #21092

☒ Sun Valley Parkway
☐ US 60 RR
☐ Highway 74

Type of Structure: 30 x 42 CMP Date: 9.5.01
File Name: 4GG2 Description Name: 322+99
Party Chief: RDS GDAC Control Pt # 4GG2 (#2)

322+99N NORTH FACE ~~(UPSTREAM)~~ DOWNSTREAM
☒ Photo Taken

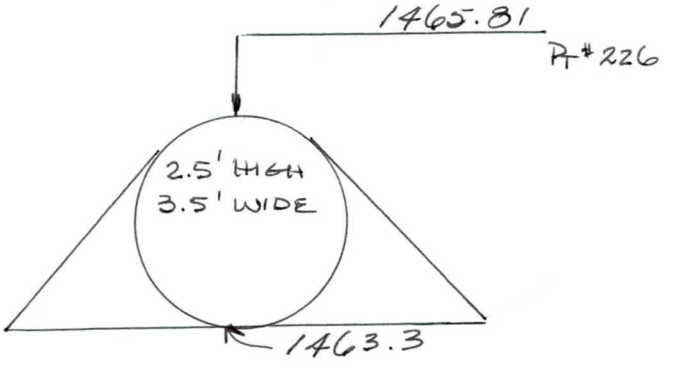

General Condition of Structure GOOD

322+99S SOUTH FACE ~~(DOWNSTREAM)~~ UPSTREAM
☒ Photo Taken

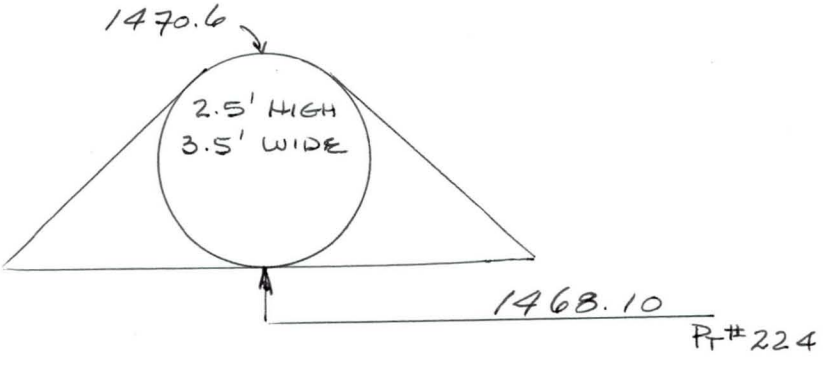

General Condition of Structure GOOD

↑ - INDICATES LOCATION OF RTK POINT

322+99
12x29
CMP
N S

322+99
42x29
CMP
SS

FCDMC Contract 2000C035 Stucture Surveys
Wittmann/Tilby ADMP
WORKSHEET
DTM, INC. Project #21092

☒ Sun Valley Parkway
☐ US 60 RR
☐ Highway 74

Type of Structure: 20 x 28 Cmp Date: 9.5.01
File Name: 4GG2 Description Name: 324+95
Party Chief: RDS GDAC Control Pt # 4GG2 (#2)

324+95N NORTH FACE (~~UPSTREAM~~) DOWNSTREAM
☒ Photo Taken

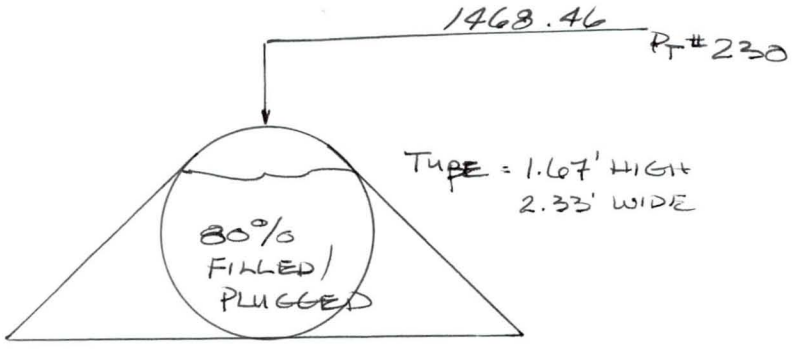

General Condition of Structure POOR CONDITION

324+95S SOUTH FACE (~~DOWNSTREAM~~) upstream
☒ Photo Taken

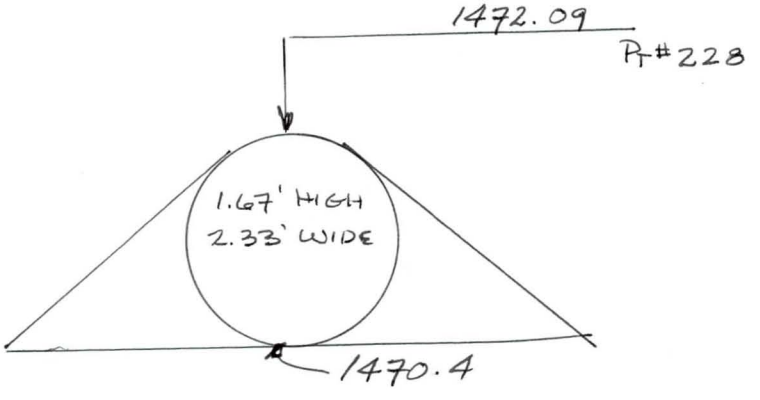

General Condition of Structure GOOD – CLEAN

↑ - INDICATES LOCATION OF RTK POINT

324+95
28+20
CMP
N S

324+95
28x20
CMP
S S

FCDMC Contract 2000C035 Stucture Surveys
Wittmann/Tilby ADMP
WORKSHEET
DTM, INC. Project #21092

☒ Sun Valley Parkway
☐ US 60 RR
☐ Highway 74

Type of Structure: 30x42 cmp Date: 9.6.01
File Name: 4GG2 Description Name: 327+30
Party Chief: RDS GDAC Control Pt # FRIA4

327+30N NORTH FACE (~~UPSTREAM~~) DOWNSTREAM
☒ Photo Taken

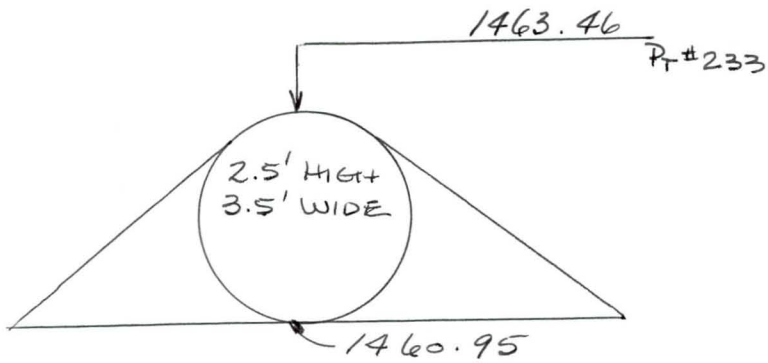

General Condition of Structure GOOD

327+30S SOUTH FACE (~~DOWNSTREAM~~) UPSTREAM
☒ Photo Taken

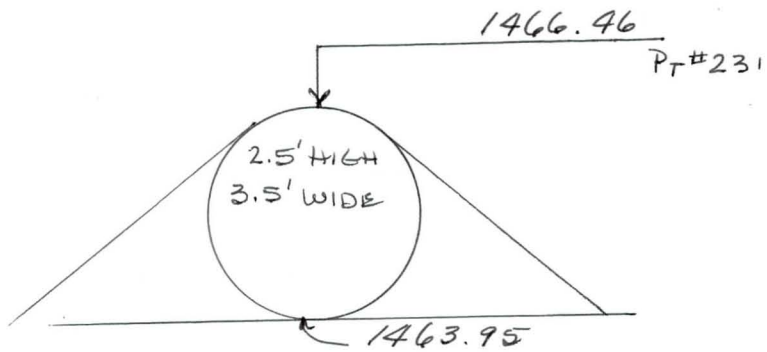

General Condition of Structure GOOD

↑ - INDICATES LOCATION OF RTK POINT

327+30
42+29
CMP
N S

327+30
42+29
CMP
SS

FCDMC Contract 2000C035 Stucture Surveys
Wittmann/Tilby ADMP
WORKSHEET
DTM, INC. Project #21092

☒ Sun Valley Parkway
☐ US 60 RR
☐ Highway 74

Type of Structure: 30x42 CMP Date: 9.6.01
File Name: 4GG2 Description Name: 328 + 91
Party Chief: RDS GDAC Control Pt # FR14

328 + 91 N NORTH FACE (~~UPSTREAM~~) DOWNSTREAM
☒ Photo Taken

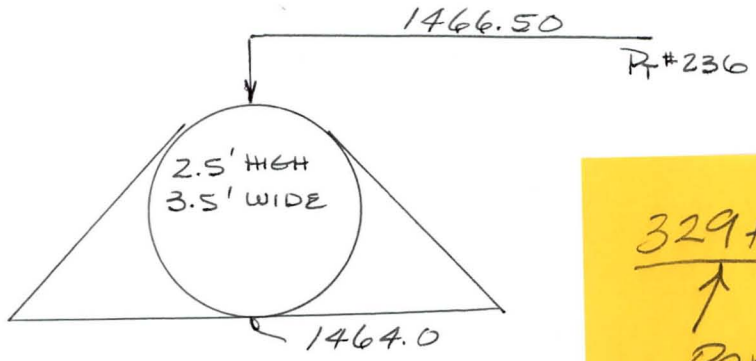

329+91
Per Elec. File

General Condition of Structure GOOD

328+91S SOUTH FACE (~~DOWNSTREAM~~) UPSTREAM
☒ Photo Taken

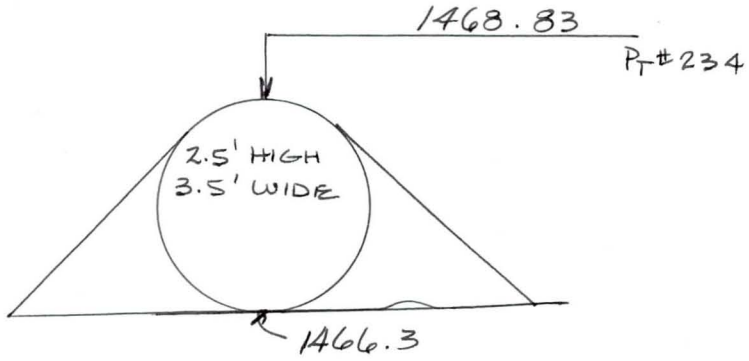

General Condition of Structure GOOD

↑ - INDICATES LOCATION OF RTK POINT

328+91
42"x29"
CMP
INS

328+91
42"x29'
CMP
SS

FCDMC Contract 2000C035 Stucture Surveys
Wittmann/Tilby ADMP
WORKSHEET
DTM, INC. Project #21092

☒ Sun Valley Parkway
☐ US 60 RR
☐ Highway 74

Type of Structure: 36x48 CMP Date: 9.6.01
File Name: 4GG2 Description Name: 336+58
Party Chief: RDS GDAC Control Pt # PR14

336+58N NORTH FACE (~~UPSTREAM~~) DOWNSTREAM
☒ Photo Taken

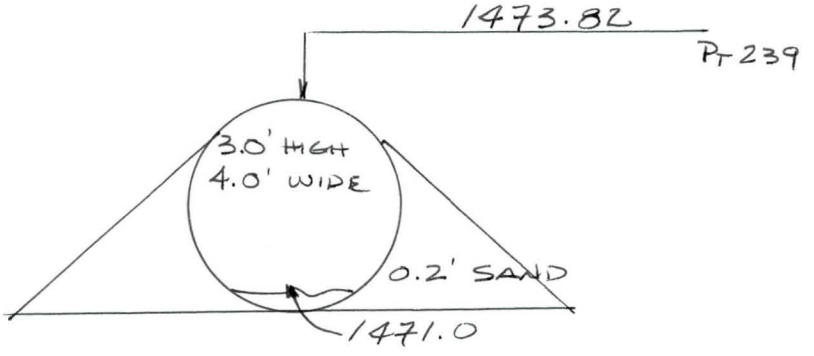

General Condition of Structure GOOD

336+58S SOUTH FACE (~~DOWNSTREAM~~) UPSTREAM
☒ Photo Taken

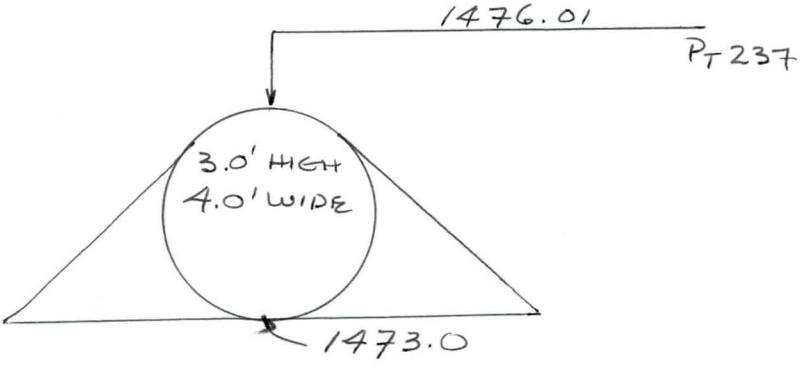

General Condition of Structure GOOD

↑ - INDICATES LOCATION OF RTK POINT

336+58
49x33
CMP
N S

336+58
49x33
CMP
SS

FCDMC Contract 2000C035 Stucture Surveys
Wittmann/Tilby ADMP
WORKSHEET
DTM, INC. Project #21092

☒ Sun Valley Parkway
☐ US 60 RR
☐ Highway 74

Type of Structure: 2 – 10x8 BOX Date: 9·6·01
File Name: 4GG2 Description Name: 341+76
Party Chief: RDS GDAC Control Pt # FR14

341+76N NORTH FACE ~~(UPSTREAM)~~ DOWNSTREAM
☒ Photo Taken

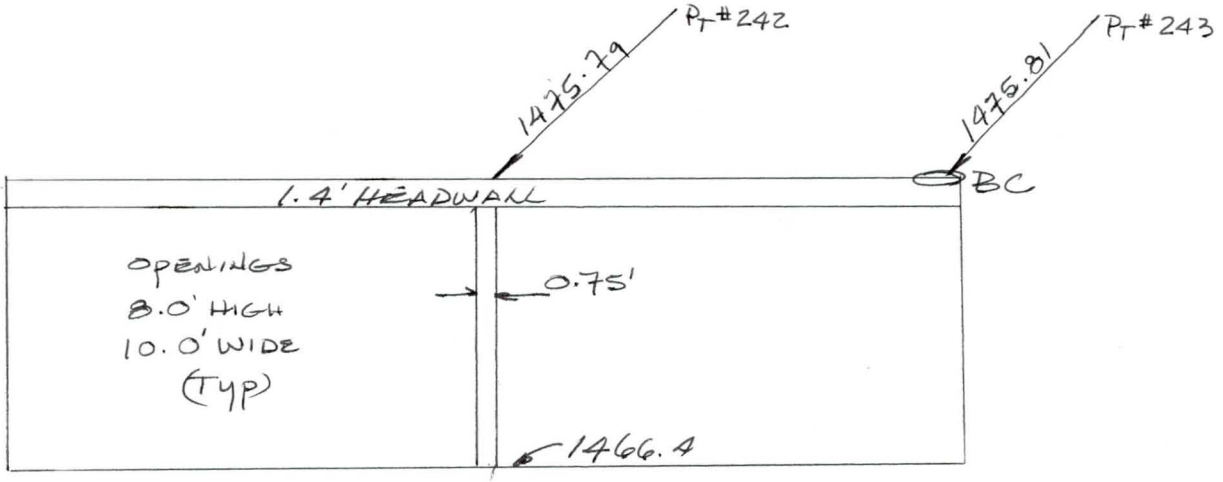

General Condition of Structure GOOD
BRASS CAP STAMPED "1475.63"

341+76S SOUTH FACE (~~DOWNSTREAM~~) UPSTREAM
☒ Photo Taken

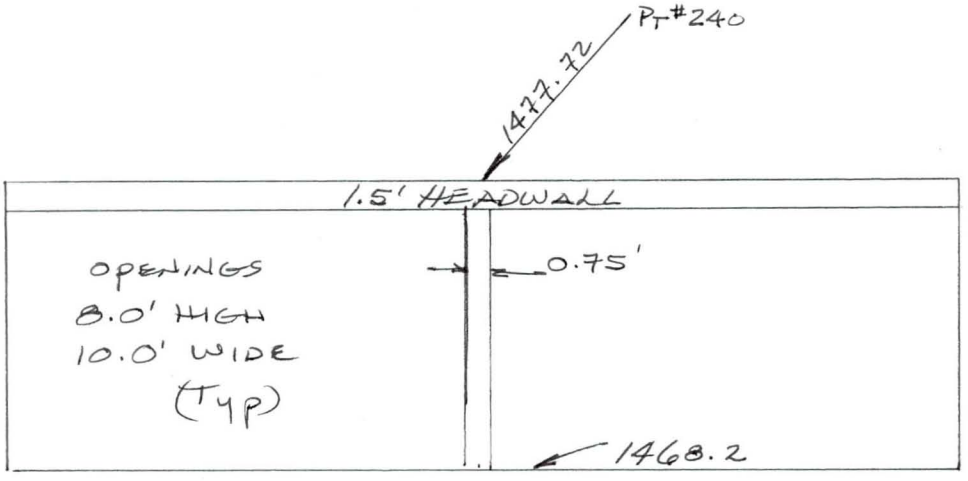

General Condition of Structure GOOD

↑ - INDICATES LOCATION OF RTK POINT

341.76
2-10.8
BOX
N S

341+76
2-10x8
BOX
SS

FCDMC Contract 2000C035 Stucture Surveys
Wittmann/Tilby ADMP
WORKSHEET
DTM, INC. Project #21092

☒ Sun Valley Parkway
☐ US 60 RR
☐ Highway 74

Type of Structure: 3-10x3 BOX Date: 9.6.01
File Name: 4GG2 Description Name: 347+26
Party Chief: RDS GDAC Control Pt # FR14

347+26N NORTH FACE (~~UPSTREAM~~) DOWNSTREAM
☒ Photo Taken

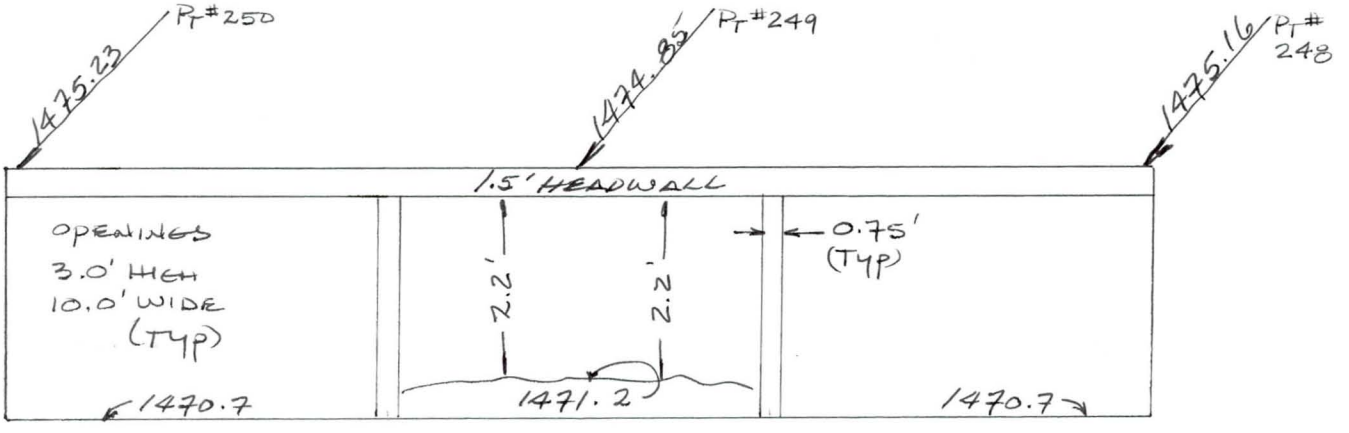

General Condition of Structure GOOD - SOME SEDIMENT FILL IN CENTER SECTION

347+26S SOUTH FACE (~~DOWNSTREAM~~) UPSTREAM
☒ Photo Taken

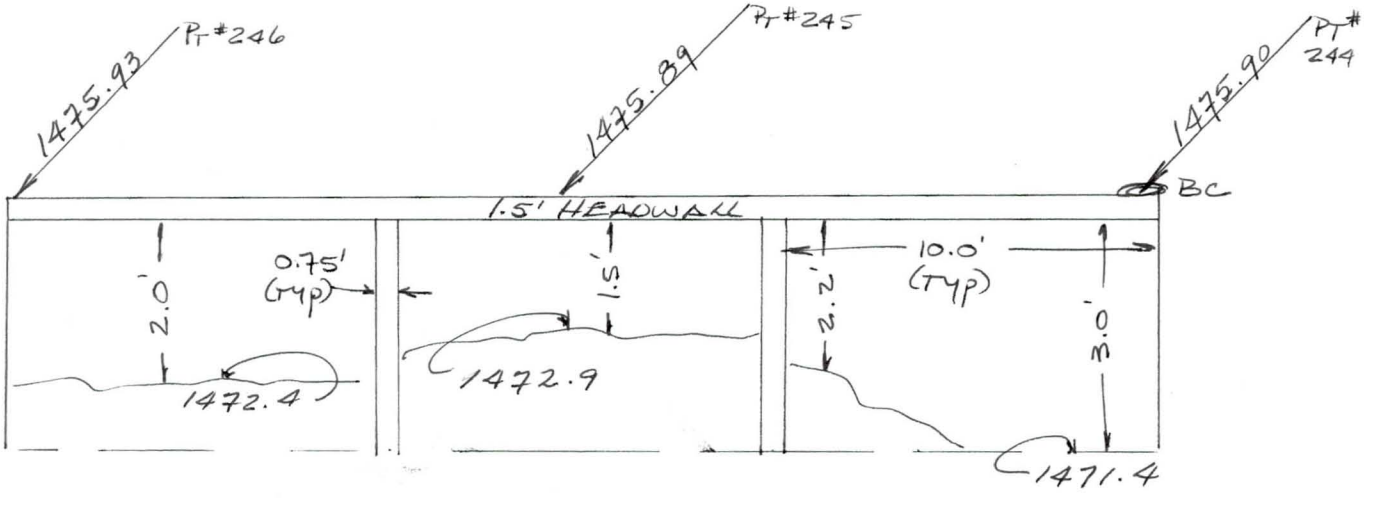

General Condition of Structure SIGNIFICANT FILLING WITH SAND/GRAVEL
BRASS CAP "STAMPED" "1475.72"

↑ - INDICATES LOCATION OF RTK POINT

34726
3-10x3
BOX
N S

34+26
3-10x3
BOX
S S

FCDMC Contract 2000C035 Stucture Surveys
Wittmann/Tilby ADMP
WORKSHEET
DTM, INC. Project #21092

☒ Sun Valley Parkway
☐ US 60 RR
☐ Highway 74

Type of Structure: 30×42 cmp Date: 9.6.01
File Name: 4662 Description Name: 349+18
Party Chief: RDS GDAC Control Pt # FR14

349+18N NORTH FACE (~~UPSTREAM~~) DOWNSTREAM
☒ Photo Taken

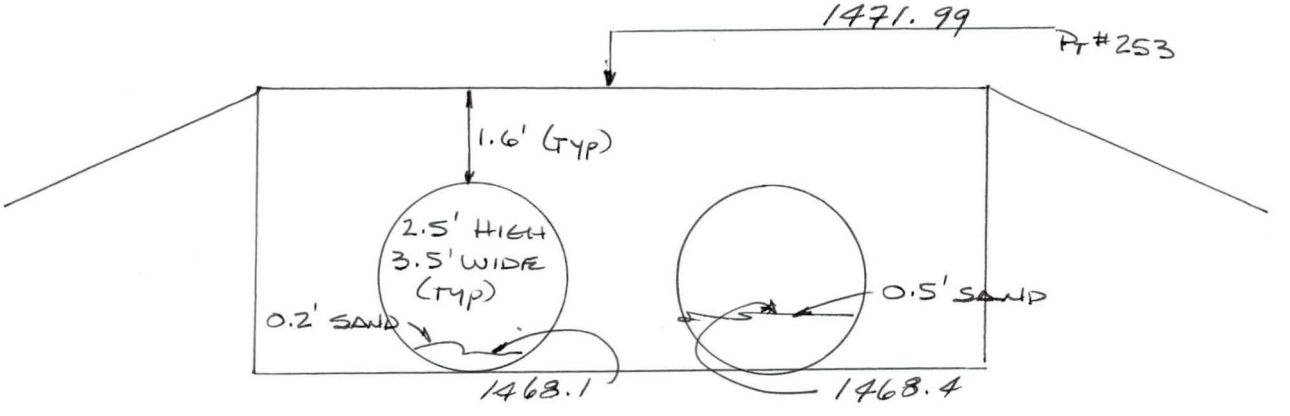

General Condition of Structure GOOD

349+18S SOUTH FACE (~~DOWNSTREAM~~) UPSTREAM
☒ Photo Taken

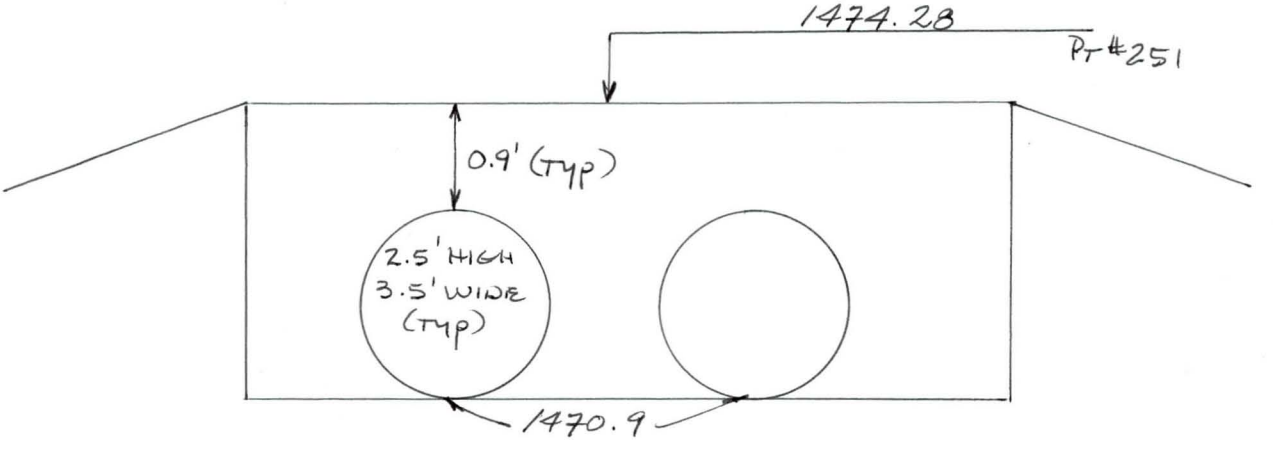

General Condition of Structure GOOD

↑ - INDICATES LOCATION OF RTK POINT

34+18
42x29
CMP
NS

34+18
42x29
CMP
SS

FCDMC Contract 2000C035 Stucture Surveys
Wittmann/Tilby ADMP
WORKSHEET
DTM, INC. Project #21092

☒ Sun Valley Parkway
☐ US 60 RR
☐ Highway 74

Type of Structure: 36x48 CMP Date: 9.6.01
File Name: 4662 Description Name: 352+92
Party Chief: RDS GDAC Control Pt # FR14

352+92N NORTH FACE (~~UPSTREAM~~) DOWNSTREAM
☒ Photo Taken

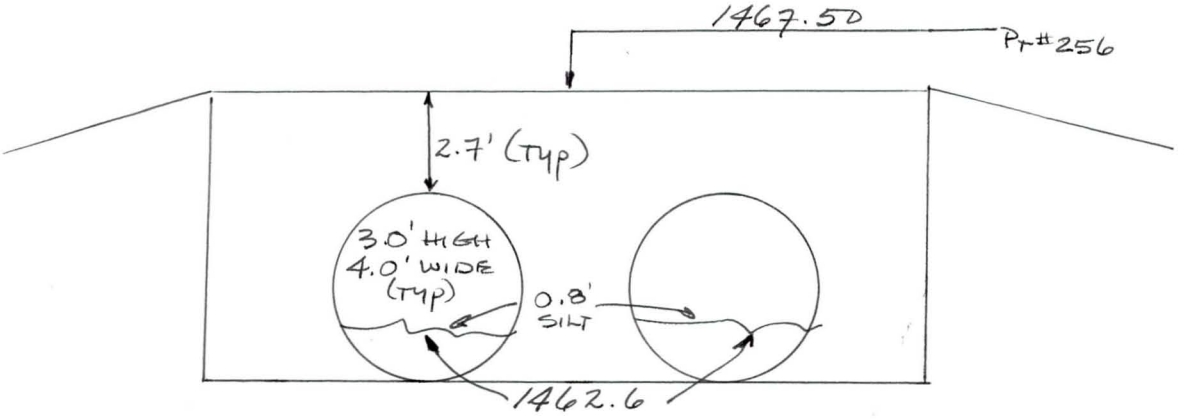

General Condition of Structure GOOD — BUT APPROX 35% FILLED WITH SEDIMENT

352+92S SOUTH FACE (~~DOWNSTREAM~~) UPSTREAM
☒ Photo Taken

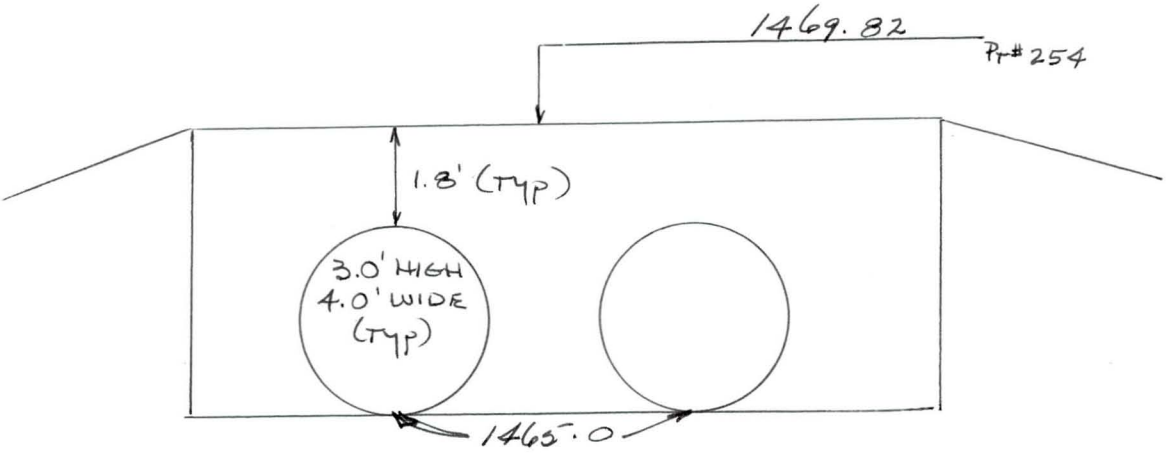

General Condition of Structure GOOD

↑ - INDICATES LOCATION OF RTK POINT

35+92
49x33
CMP
N S

35292
49x33
CMP
SS

FCDMC Contract 2000C035 Stucture Surveys
Wittmann/Tilby ADMP
WORKSHEET
DTM, INC. Project #21092

☒ Sun Valley Parkway
☐ US 60 RR
☐ Highway 74

Type of Structure: 48 CMP Date: 9.6.01
File Name: 4662 Description Name: 357+26
Party Chief: RDS GDAC Control Pt # FR14

357+26N
☒ Photo Taken

NORTH FACE (~~UPSTREAM~~) DOWNSTREAM

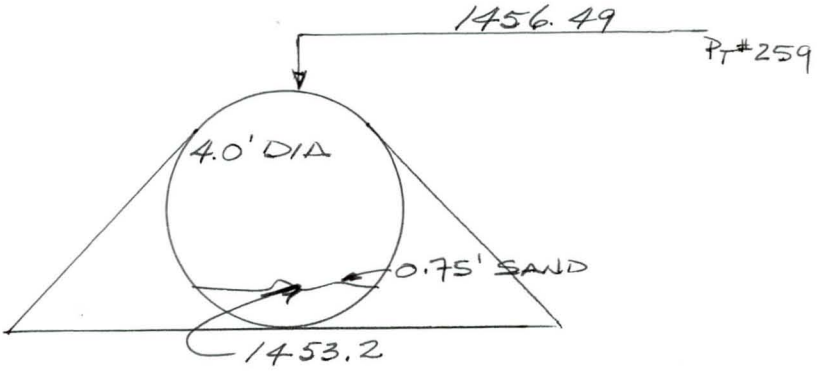

General Condition of Structure GOOD

357+26S
☒ Photo Taken

SOUTH FACE (~~DOWNSTREAM~~) UPSTREAM

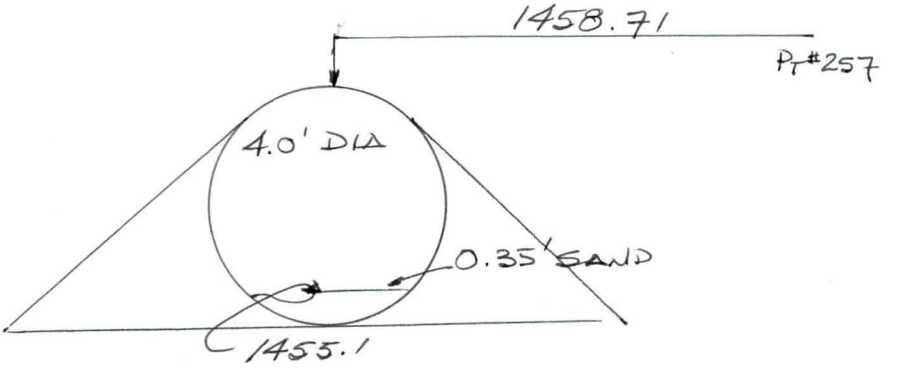

General Condition of Structure GOOD

↑ - INDICATES LOCATION OF RTK POINT

35+26
48" CMP
N-S

35+26
48"CMP
S S

FCDMC Contract 2000C035 Stucture Surveys
Wittmann/Tilby ADMP
WORKSHEET
DTM, INC. Project #21092

☒ Sun Valley Parkway
☐ US 60 RR
☐ Highway 74

Type of Structure: 72" CMP Date: 9·6·01
File Name: 4662 Description Name: 369+00
Party Chief: RDS GDAC Control Pt # FR14

369+00N NORTH FACE (~~UPSTREAM~~) DOWNSTREAM
☒ Photo Taken

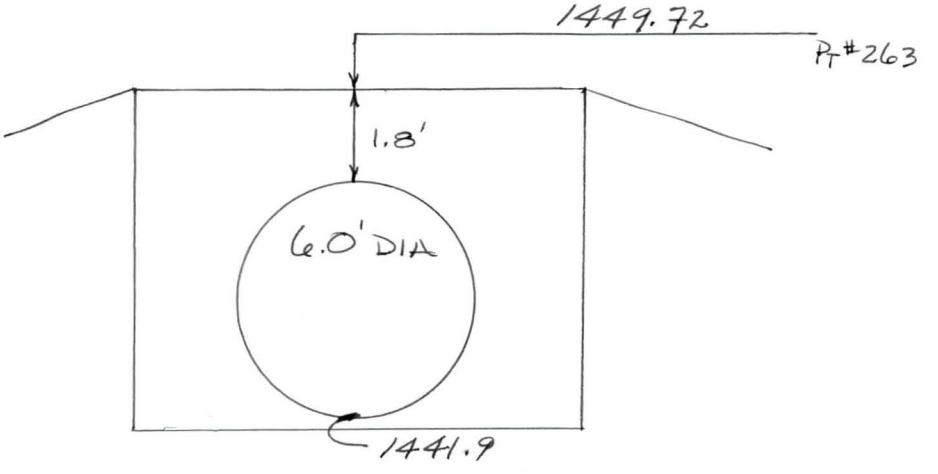

General Condition of Structure

369+00S SOUTH FACE (~~DOWNSTREAM~~) UPSTREAM
☒ Photo Taken

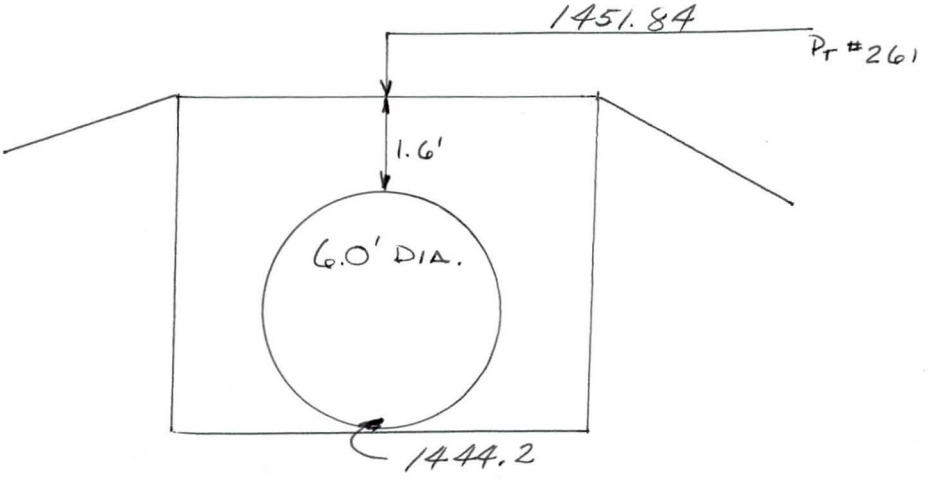

General Condition of Structure

↑ - INDICATES LOCATION OF RTK POINT

369-
72CMP
N/S

369~
72"CMP
SS

FCDMC Contract 2000C035 Stucture Surveys
Wittmann/Tilby ADMP
WORKSHEET
DTM, INC. Project #21092

☒ Sun Valley Parkway
☐ US 60 RR
☐ Highway 74

Type of Structure: 60" CMP Date: 9·6·01
File Name: 4GG2 Description Name: 371+00
Party Chief: RDS GDAC Control Pt # FR14

371+00N NORTH FACE (~~UPSTREAM~~) DOWNSTREAM
☒ Photo Taken

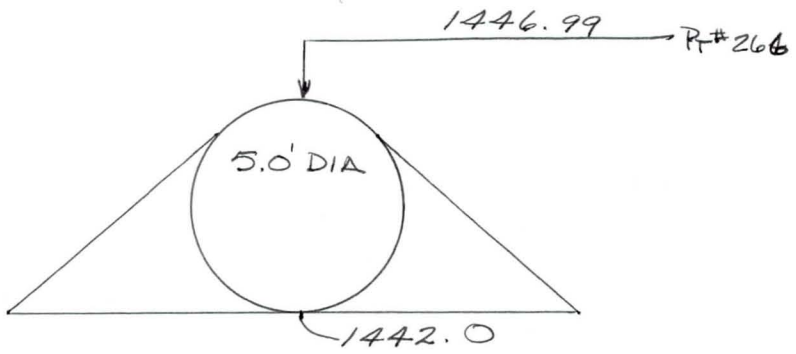

General Condition of Structure GOOD

371+00S SOUTH FACE (~~DOWNSTREAM~~) UPSTREAM
☒ Photo Taken

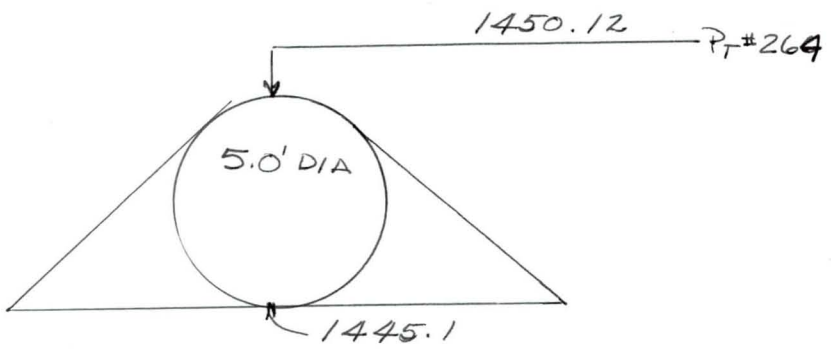

General Condition of Structure GOOD

↑ - INDICATES LOCATION OF RTK POINT

37+-
60"CMP
N + S

37+-
60"CMP
S+S

FCDMC Contract 2000C035 Stucture Surveys
Wittmann/Tilby ADMP
WORKSHEET
DTM, INC. Project #21092

☒ Sun Valley Parkway
☐ US 60 RR
☐ Highway 74

Type of Structure: 20 x 28 CMP Date: 9·6·01
File Name: 4GG2 Description Name: 373+00
Party Chief: RDS GDAC Control Pt # FR14

373+00N NORTH FACE (~~UPSTREAM~~) DOWNSTREAM
☒ Photo Taken

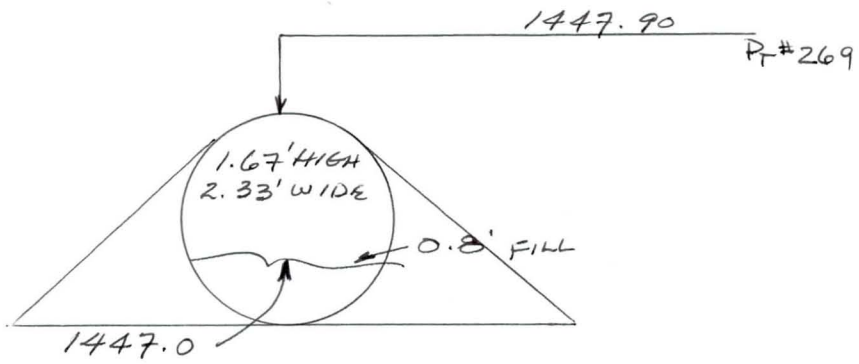

General Condition of Structure 50% FILLED WITH SEDIMENT

373+00S SOUTH FACE (~~DOWNSTREAM~~) UPSTREAM
☒ Photo Taken

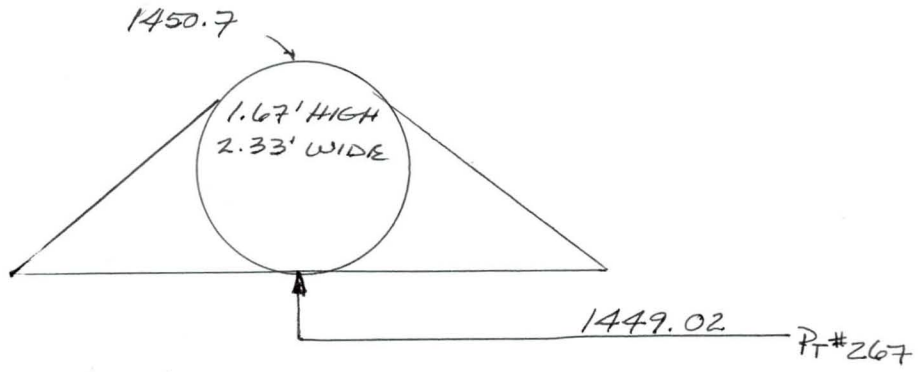

General Condition of Structure GOOD

↑ - INDICATES LOCATION OF RTK POINT

28x20
CM
NS

373-
28x20
CMP
SS

FCDMC Contract 2000C035 Stucture Surveys
Wittmann/Tilby ADMP
WORKSHEET
DTM, INC. Project #21092

☒ Sun Valley Parkway
☐ US 60 RR
☐ Highway 74

Type of Structure: 20 x 28 cmp Date: 9·6·01
File Name: 4GG2 Description Name: 375+00
Party Chief: RDS GDAC Control Pt # FR14

375+00N NORTH FACE (~~UPSTREAM~~) DOWNSTREAM
☒ Photo Taken

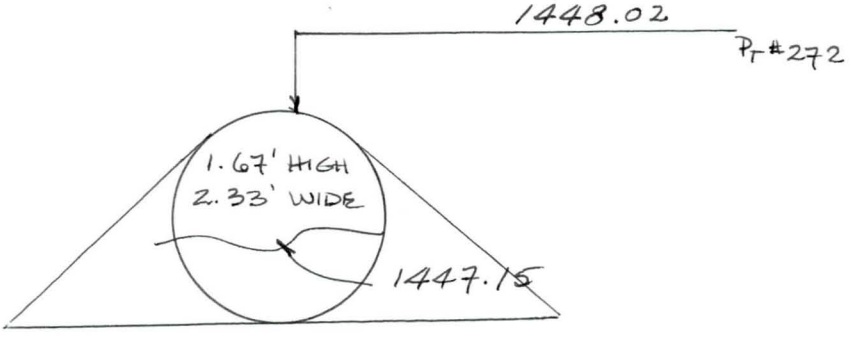

General Condition of Structure 50% FILLED WITH SEDIMENT

375+00S SOUTH FACE (~~DOWNSTREAM~~) UPSTREAM
☒ Photo Taken

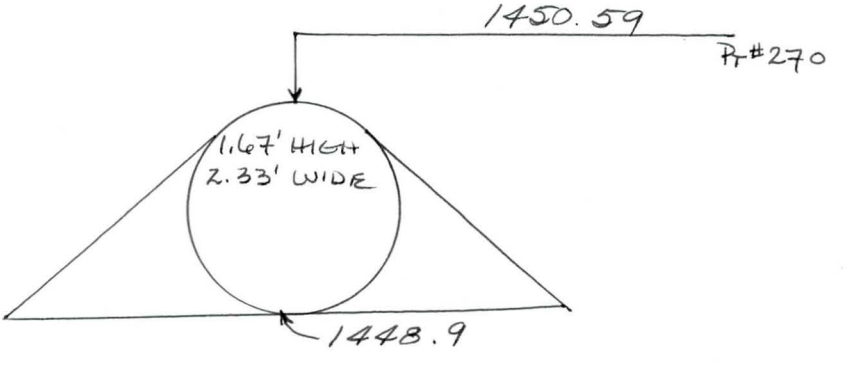

General Condition of Structure GOOD

↑ - INDICATES LOCATION OF RTK POINT

375
28x20
CMP
NS

375-
28x20
CMP
SS

FCDMC Contract 2000C035 Stucture Surveys
Wittmann/Tilby ADMP
WORKSHEET
DTM, INC. Project #21092

☒ Sun Valley Parkway
☐ US 60 RR
☐ Highway 74

Type of Structure: 36" cmp Date: 9.6.01
File Name: 4GG2 Description Name: 378+50
Party Chief: RDS GDAC Control Pt # FR14

378+50N NORTH FACE (~~UPSTREAM~~) DOWNSTREAM
☒ Photo Taken

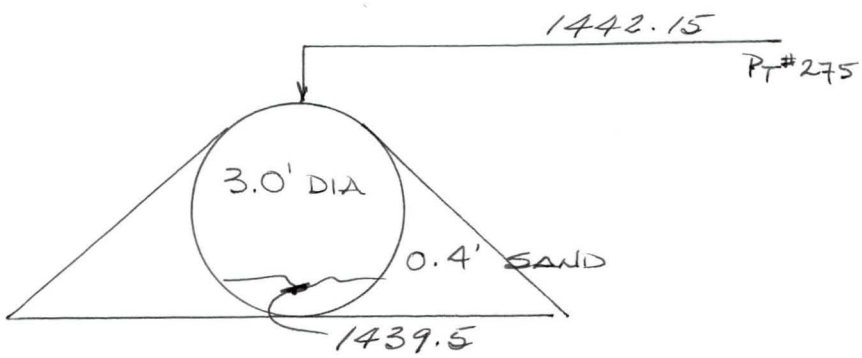

General Condition of Structure GOOD

378+50S SOUTH FACE (~~DOWNSTREAM~~) UPSTREAM
☒ Photo Taken

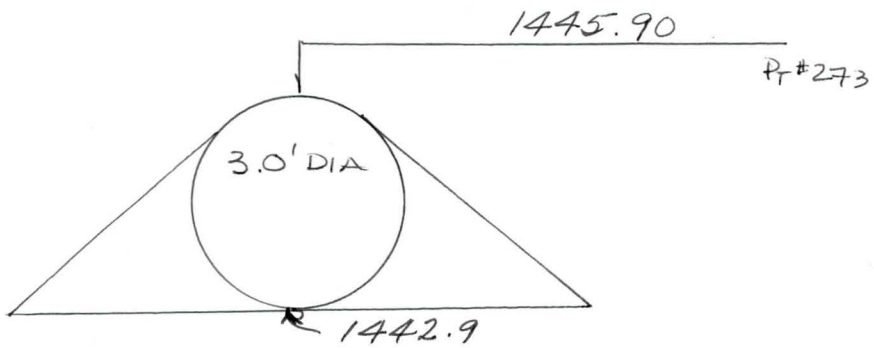

General Condition of Structure GOOD

↑ - INDICATES LOCATION OF RTK POINT

378+50
36"CMP
N+S

378+50
36"CMP
S+S

FCDMC Contract 2000C035 Stucture Surveys
Wittmann/Tilby ADMP
WORKSHEET
DTM, INC. Project #21092

☒ Sun Valley Parkway
☐ US 60 RR
☐ Highway 74

Type of Structure: 20 x 28 CMP Date: 9-6-01
File Name: 4662 Description Name: 380+00
Party Chief: RDS GDAC Control Pt # FR14

380+00N NORTH FACE (~~UPSTREAM~~) DOWNSTREAM
☒ Photo Taken

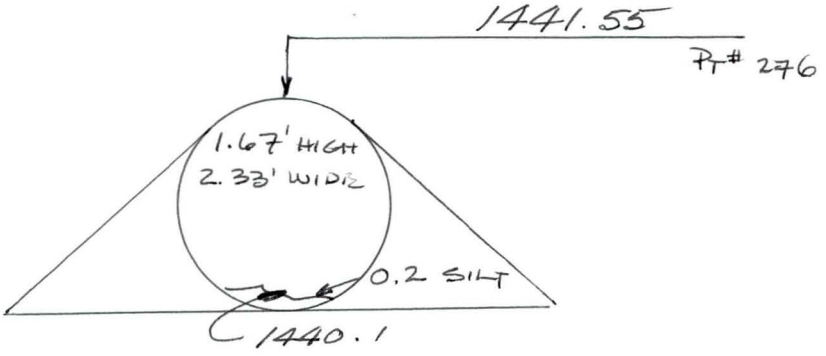

General Condition of Structure GOOD

380+00S SOUTH FACE (~~DOWNSTREAM~~) UPSTREAM
☒ Photo Taken

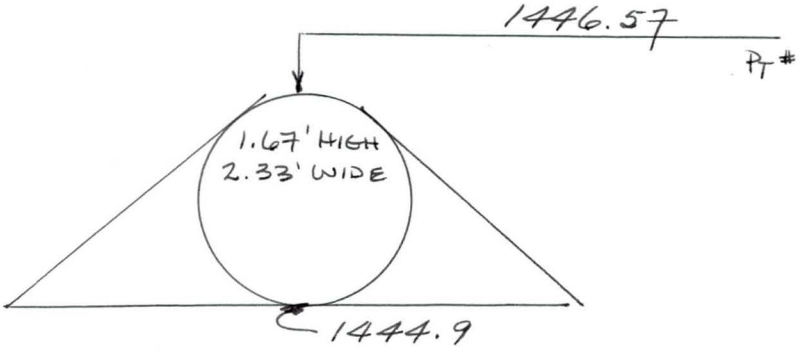

General Condition of Structure GOOD

↑ - INDICATES LOCATION OF RTK POINT

380~
28x20
CMP
N S

380~
28x20
CMP
S S

FCDMC Contract 2000C035 Stucture Surveys
Wittmann/Tilby ADMP
WORKSHEET
DTM, INC. Project #21092

☒ Sun Valley Parkway
☐ US 60 RR
☐ Highway 74

Type of Structure: 30x42 cmp Date: 9.6.01
File Name: 4GG2 Description Name: 384+00
Party Chief: RDS GDAC Control Pt # FR14

384+00N NORTH FACE (UPSTREAM)
☒ Photo Taken

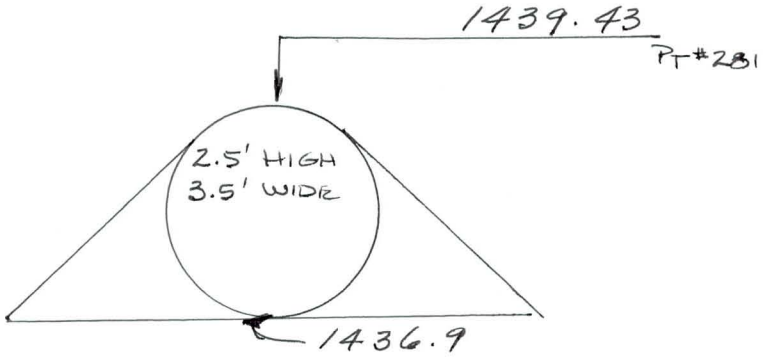

General Condition of Structure GOOD

384+00S SOUTH FACE (DOWNSTREAM)
☒ Photo Taken

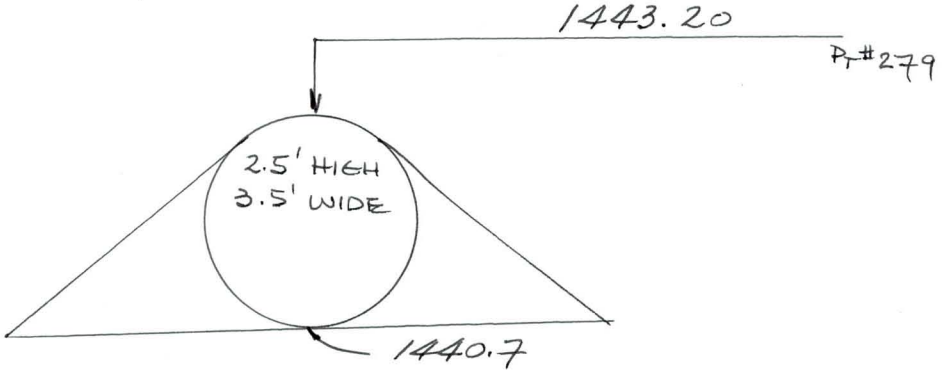

General Condition of Structure GOOD

1 - INDICATES LOCATION OF RTK POINT

384-
42x29
CMP
N S

584-
42x29
CMP
SS

FCDMC Contract 2000C035 Stucture Surveys
Wittmann/Tilby ADMP
WORKSHEET
DTM, INC. Project #21092

☒ Sun Valley Parkway
☐ US 60 RR
☐ Highway 74

Type of Structure: 2 - 10x8 BOX Date: 9·6·01
File Name: 4GG2 Description Name: 467+75
Party Chief: RDS GDAC Control Pt # FR14

467+75N NORTH FACE (~~UPSTREAM~~) DOWNSTREAM
☒ Photo Taken

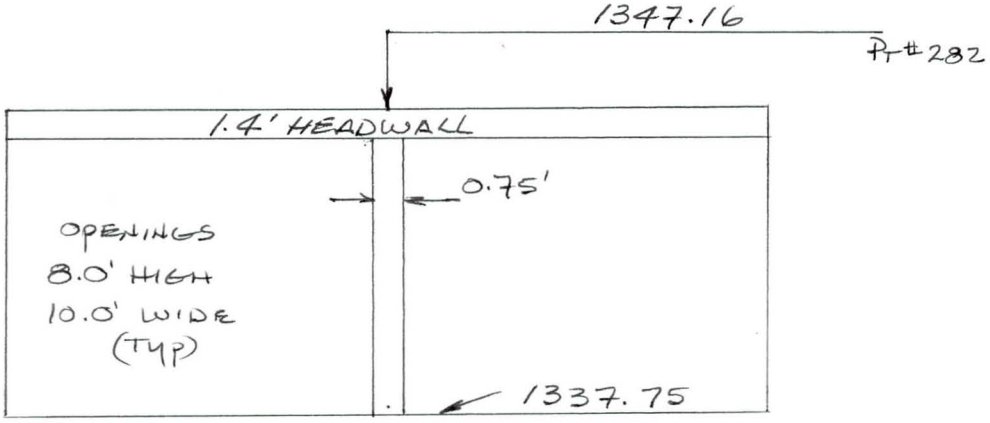

General Condition of Structure GOOD

467+75S SOUTH FACE (~~DOWNSTREAM~~) UPSTREAM
☒ Photo Taken

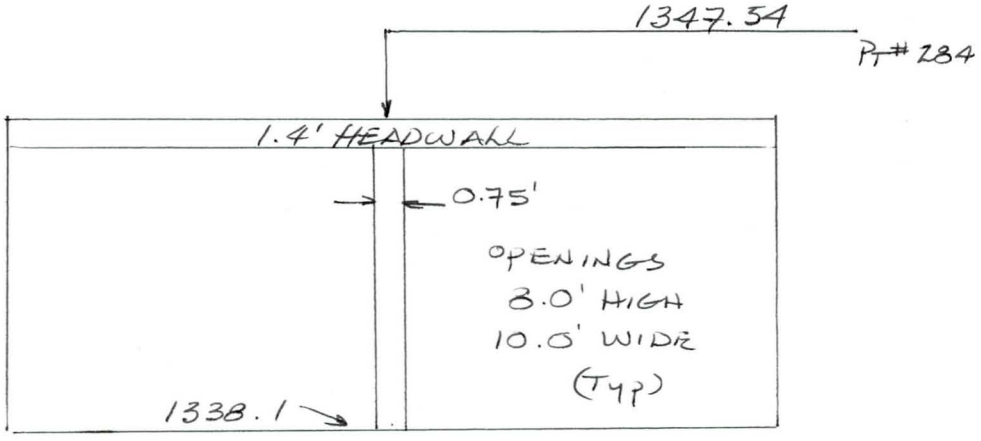

General Condition of Structure GOOD

↑ - INDICATES LOCATION OF RTK POINT

467+75
10x8
2-8x10
BOX
N S

467+75
10x8
2-8x10
BOX
S S