SKUNK CREEK CHANNEL IMPROVEMENTS

Property of
Flood Control District of MC Library
Please Return to
2801 W. Durango
Phoenix, AZ 85009

R·A·M

Geotechnical Engineering Services
Skunk Creek Channel Improvements
FCD Contract No. 95-38
Grade Control Structure Analysis
R.A.M. Project No. G01319

RICKER • ATKINSON • McBEE & ASSOCIATES, INC.

Geotechnical Engineering • Construction Materials Testing

A400.924

Geotechnical Engineering Services
Skunk Creek Channel Improvements
FCD Contract No. 95-38
Grade Control Structure Analysis
R.A.M. Project No. G01319

For:
Simons, Li & Associates, Inc.
4600 South Mill Avenue, Suite 200
Tempe, Arizona 85282

♦♦♦

By:
Ricker, Atkinson, McBee & Associates, Inc.
2105 South Hardy Drive, Suite 13
Tempe, Arizona 85282

R·A·M

RICKER • ATKINSON • McBEE & ASSOCIATES, INC.

Geotechnical Engineering • Construction Materials Testing

Simons, Li & Associates, Inc.
4600 South Mill Ave., Suite 200
Tempe, AZ 85282

October 21, 1997

Attention: Bart S. Bergendahl, P.E.

Project: Geotechnical Engineering Services
Skunk Creek Channel Improvements
FCD Contract No. 95-38
Grade Control Structure Analysis

R.A.M. Project No. G01319
Supplement No. 1

Pursuant to your letter of October 3, 1997, enclosed is the analysis package requested regarding the proposed grade control structures for the Skunk Creek project. The factors of safety against piping, overturning, uplift, and sliding were calculated and are as follows:

- Piping: Fs = 9.3
- Overturning: Fs = 2.4
- Uplift: Fs = 2.1
- Sliding:
  - Low Water Case Fs = 1.8 Without gabions: Fs = 1.4
  - High Water Case Fs = 1.7 Without gabions: Fs = 1.3

Based on the foregoing, it is our opinion that the planned configuration for the control structures meets or exceeds the typical minimum factor of safety of 1.5.

If you have any questions, please call at the number listed above.

Respectfully submitted,

RICKER, ATKINSON, MCBEE & ASSOCIATES, INC.

Registered Professional Engineer (Civil)
CERTIFICATE NO.
10971
KENNETH L.
RICKER
Date Signed 10-21-97
ARIZONA, U.S.A.

By: Michele St. Germaine, E.I.T. and Kenneth L. Ricker, P.E.

Distribution: Addressee (5)

2105 South Hardy Drive, Suite 13, Tempe, AZ 85282 • Telephone (602) 921-8100 • Facsimile (602) 921-4081

DROP STRUCTURE DIMENSIONS

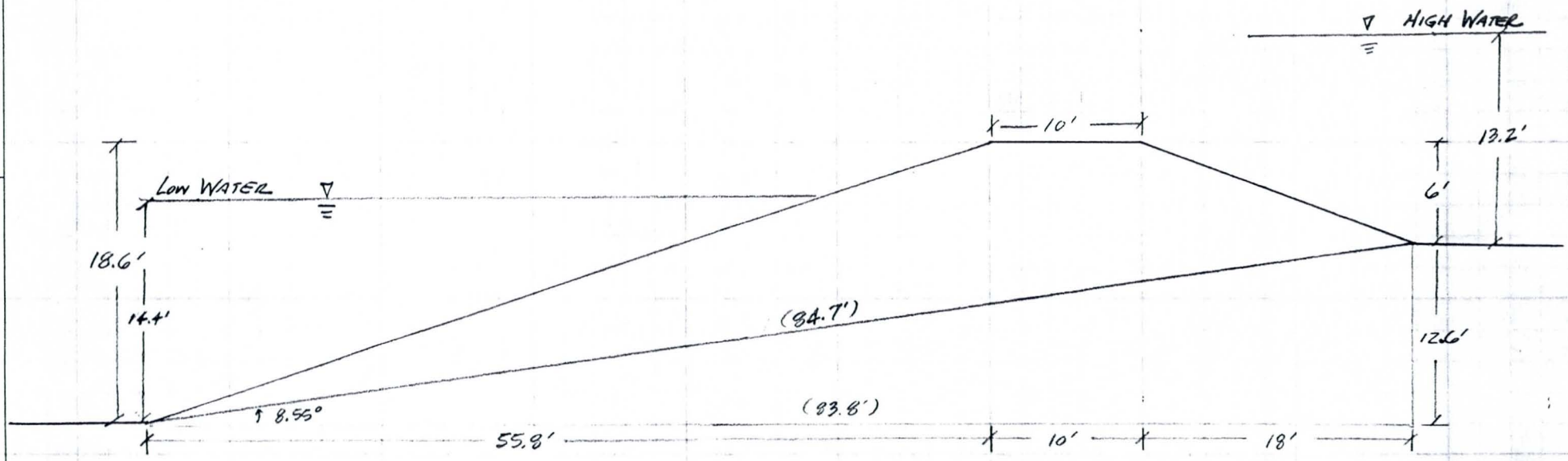

ASSUME: $\gamma_{sat} = 138$ pcf
$c = 0$
$\phi = 42$

By: M St Germain
DATE: Oct 13, 1997

REVIEWED BY: KLR
DATE: 10-21-97

RICKER, ATKINSON, MCBEE & ASSOCIATES

FLOW NET:

- $q = \Delta H \frac{n_f}{n_d} k$

$\Delta H_{max} = 11.4$ ft
Use $k = 0.02$ ft/min
$n_f = 3$ $n_d = 12$

$\rightarrow q = (11.4 \text{ ft})(0.02 \text{ ft/min})\left(\frac{3}{12}\right) = \boxed{0.057 \text{ ft}^2/\text{min}}$

- Loss of head/drop $= \frac{\Delta H}{n_d} = \frac{11.4 \text{ ft}}{12} = \boxed{0.95 \text{ ft/drop}}$

- Gradient

$i = \frac{\Delta H}{L} = \frac{11.4 \text{ ft}}{84.7 \text{ ft}} = \boxed{0.13}$

$i_{cr} = \frac{\gamma_b}{\gamma_w} = \frac{\gamma_{sat} - \gamma_w}{\gamma_w} = \frac{138 \text{ pcf} - 62.4 \text{ pcf}}{62.4 \text{ pcf}} = 1.211$

$F_s = \frac{i_{cr}}{i} = \frac{1.211}{0.13} = 9.3 > 2 \Longrightarrow \boxed{\text{NO PIPING}}$

By: M. St. Germain
DATE: 13 OCT 97

REVIEWED BY: KJM
DATE: 10-21-97

RICKER, ATKINSON, McBEE & ASSOCIATES

SKUNK CREEK G01319

FLOW NET

$N_f = 3$
$N_d = 12$
$\Delta H_{max} = 11.4$ FT

$\rightarrow \Delta H/drop = 11.4'/12 = 0.95'$

SCALE: 1" = 10'

By: M. St. Germain
DATE: 13 OCT 97

REVIEWED BY: KLM
DATE: 10-21-97

Force Diagram for Overturning

SKUNK CREEK G01319

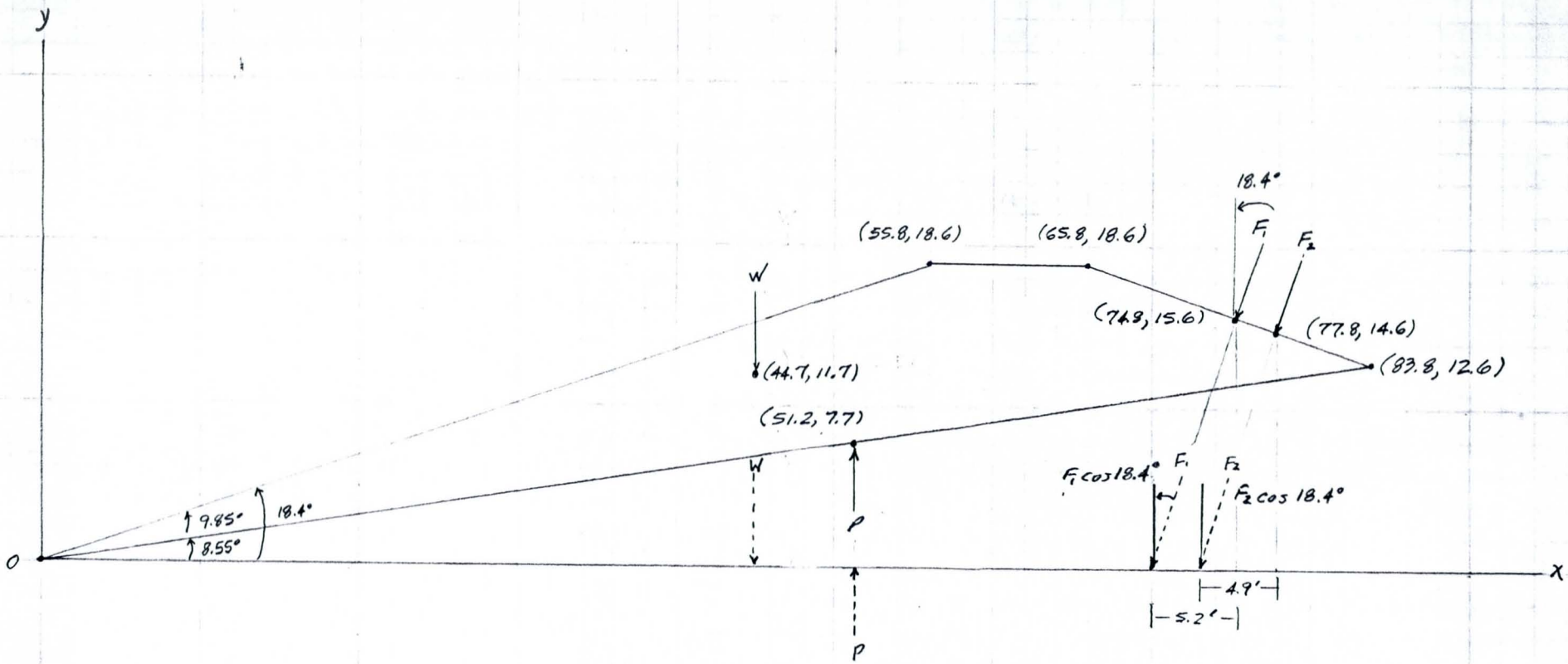

$$\circlearrowleft + \Sigma M_o = 44.7'(W) + F_1(\cos 18.4°)(74.8' - 5.2') + F_2(\cos 18.4°)(77.8' - 4.9') - 51.2'(P)$$

$$= (44.7')(63.1 \text{ kips/ft}) + (66.0')(8.54 \text{ kips/ft}) + (69.2')(3.56 \text{ kips/ft}) - (51.2')(29.8 \text{ kips/ft})$$

$$= 2820.6 \text{ kips-ft/ft} + 563.6 \text{ kips-ft/ft} + 246.4 \text{ kips-ft/ft} - 1525.8 \text{ kips-ft/ft}$$

$$\Sigma M_o = 2104.8 \text{ kips-ft/ft}$$

$$\rightarrow F_s \text{ against overturning} = \frac{\Sigma + M_o}{\Sigma - M_o} = \frac{3630.6}{1525.8} = \boxed{2.4}$$

By: M St. Germaine
DATE: 15 Oct 97

REVIEWED BY: KW
DATE: 10-29-97

RICKER, ATKINSON, MCBEE & ASSOCIATES

FORCES

- Centroid of Drop Structure

Part	A (ft²)	$\bar{x}$ (ft)	$\bar{y}$ (ft)	$\bar{x}A$ (ft³)	$\bar{y}A$ (ft³)
1	78.3	71.8	13.7	5621.9	1072.7
2	87.0	60.8	14.3	3648.0	858.0
3	7.5	59.1	9.4	443.3	70.5
4	284.6	37.7	11.8	10729.4	3358.3
TOTALS	457.4 ft²			20450 ft³	5360 ft³

$$\bar{X} = \frac{\Sigma A\bar{x}}{\Sigma A} = \frac{20450\ ft^3}{457.4\ ft^2} = 44.7\ ft$$

$$\bar{y} = \frac{\Sigma A\bar{y}}{\Sigma A} = \frac{5360\ ft^3}{457.4\ ft^2} = 11.7\ ft$$

- Weight = $A\gamma_{sat}$ = (457.4 ft²)(138 pcf) = 63.1 kips/ft = W

- Hydrostatic Pressure

P_1 = 7.2 ft(γ_w) = 7.2 ft(62.4 pcf) = 449.3 psf
P_2 = 13.2 ft(γ_w) = 13.2 ft(62.4 pcf) = 823.7 psf

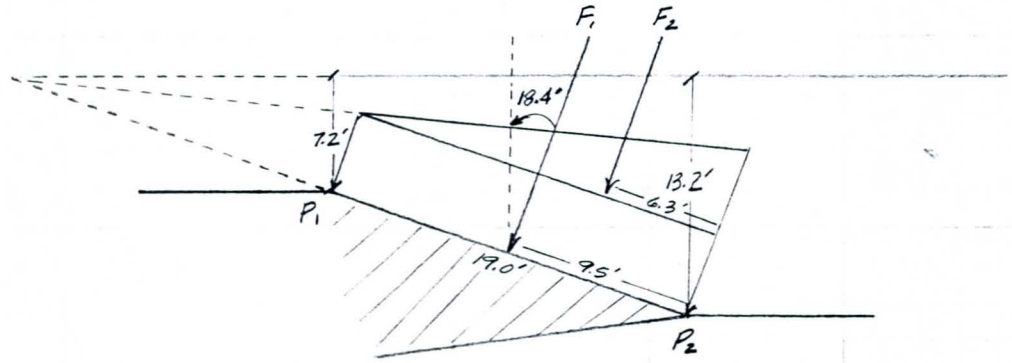

F_1 = (449.3 psf)(19.0') = 8.54 kips/ft

F_2 = ½(823.7 psf − 449.3 psf)(19.0 ft) = 3.56 kips/ft

By: N. St. Germaine
DATE: 15 Oct 97

REVIEWED BY: KJR
DATE: 10-21-97

CENTROID

SKUNK CREEK G01319

AREA = 457.4 ft^2

$W_t = (457.4\ ft^2)\ \gamma_{sat} = (457.4)(138) = 63.1$ kips/ft

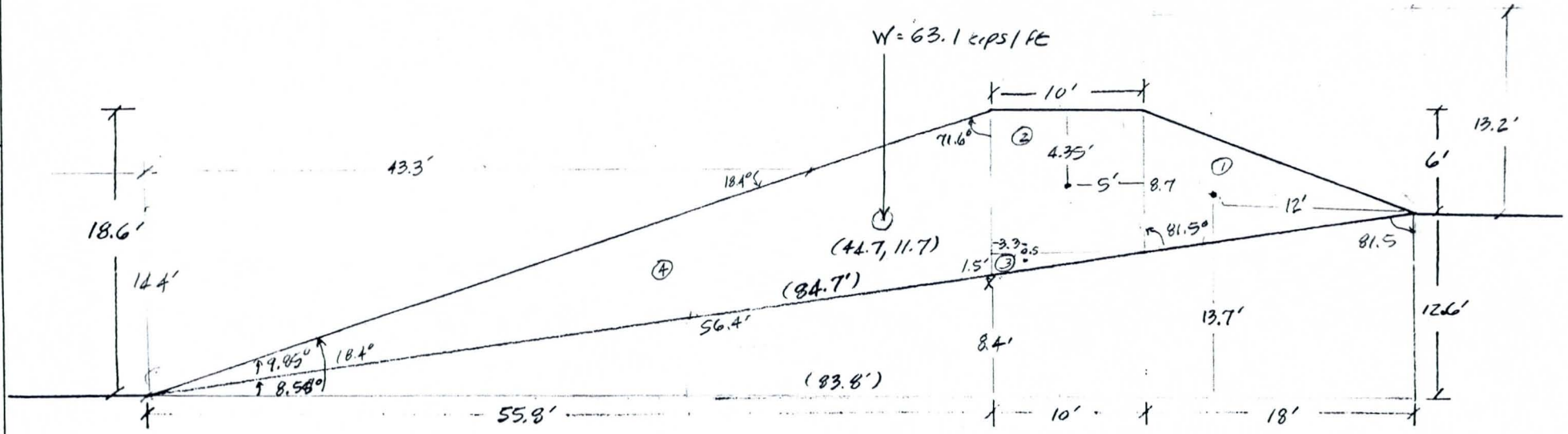

Area ① = ½(8.7)(18') = 78.3 ft^2

Area ② = (10')(8.7') = 87.0 ft^2

Area ③ = ½(1.5')(10') = 7.5 ft^2

Area ④ = ½(10.2')(55.8') = 284.6 ft^2

A_{TOTAL} = 457.4 ft^2

By: M. St. Germain

DATE: 14 OCT 97

REVIEWED BY: KW

DATE: 10-21-97

RICKER, ATKINSON, MCBEE & ASSOCIATES

- UPLIFT FORCE

Loss of head / potential drop = 0.95 ft. / drop

Pressure Diagram

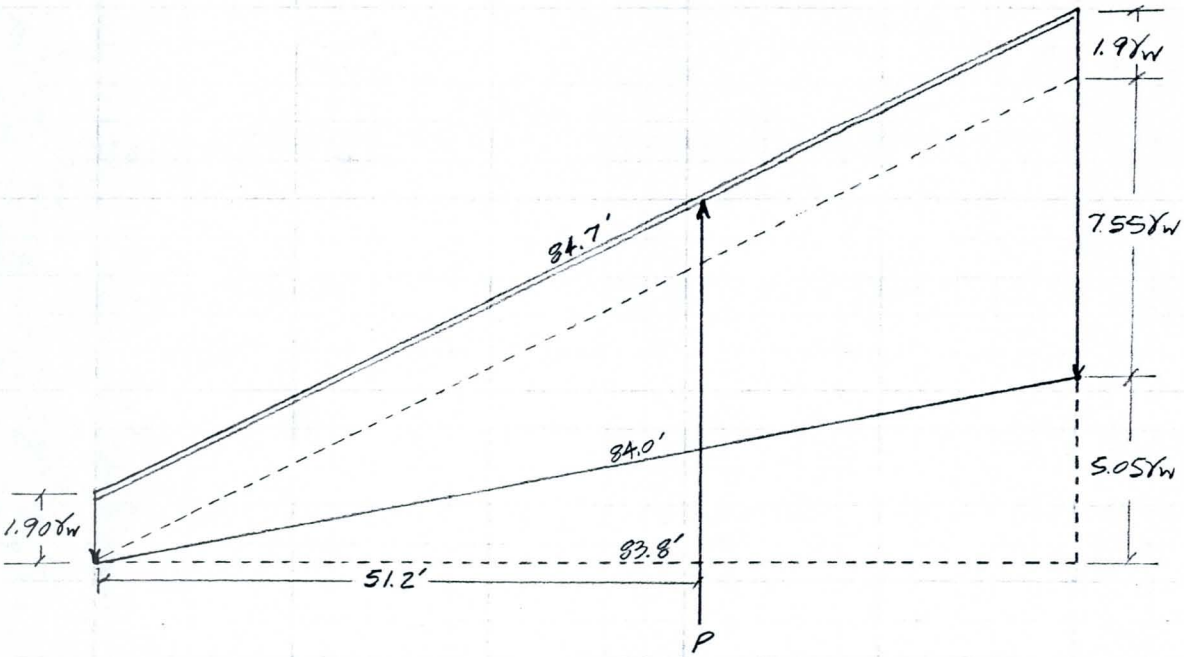

$P = (1.90\,ft)(62.4\,pcf)(84.7\,ft) + (1/2)(12.6\,ft - 5.05\,ft)(62.4\,pcf)(83.8\,ft)$

$= 10.04\ kips/ft + 19.74\ kips/ft$

$= \boxed{29.8\ kips/ft}$

$F_s = \dfrac{\text{Weight}}{\text{Uplift}} = \dfrac{63.1\ kips/ft}{29.8\ kips/ft} = \boxed{2.1}$

By: M. St. Germaine
DATE: 14 OCT 97

REVIEWED BY: RBR
DATE: 10-21-97

RICKER, ATKINSON, MCBEE & ASSOCIATES

GEOSYSTEM SLOPE STABILITY PROGRAM
SB-SLOPE

PROJECT DATA: G1319
Project: Skunk Creek Drop Structures
Location: Phoenix AZ
Filename: SKUNKD-G Description: Skunk Creek - Downstream With Gabions

ANALYSIS DATA:

Point No.	Coordinates X	Coordinates Y	Line No.	Left Point	Right Point	Soil No.	Phreatic Line
1	0.0	0.0	1	1	2	2	N
2	20.0	0.0	2	2	3	1	N
3	63.3	14.4	3	3	4	1	N
4	75.8	18.6	4	4	5	1	N
5	85.8	18.6	5	5	6	1	N
6	103.8	12.6	6	6	7	2	Y
7	115.0	12.6	7	2	8	2	N
8	28.7	1.3	8	8	9	2	N
9	63.3	12.8	9	9	10	2	Y
10	75.8	17.1	10	10	11	2	Y
11	85.8	17.1	11	11	12	2	Y
12	100.5	12.1	12	12	6	2	Y
13	0.0	14.4	13	8	12	2	N

Soil No.	Density pcf	Cohesion psf	Phi Deg
1	150.0	0	30.0
2	138.0	0	42.0

Free water surface, left point = 13
right point = 3

LOW WATER ANALYSIS SETUP

By: M. St. Germaine
DATE: 16 OCT 97

REVIEWED BY: [illegible]
DATE: 10-21-97

RICKER ATKINSON McBEE & ASSOCIATES

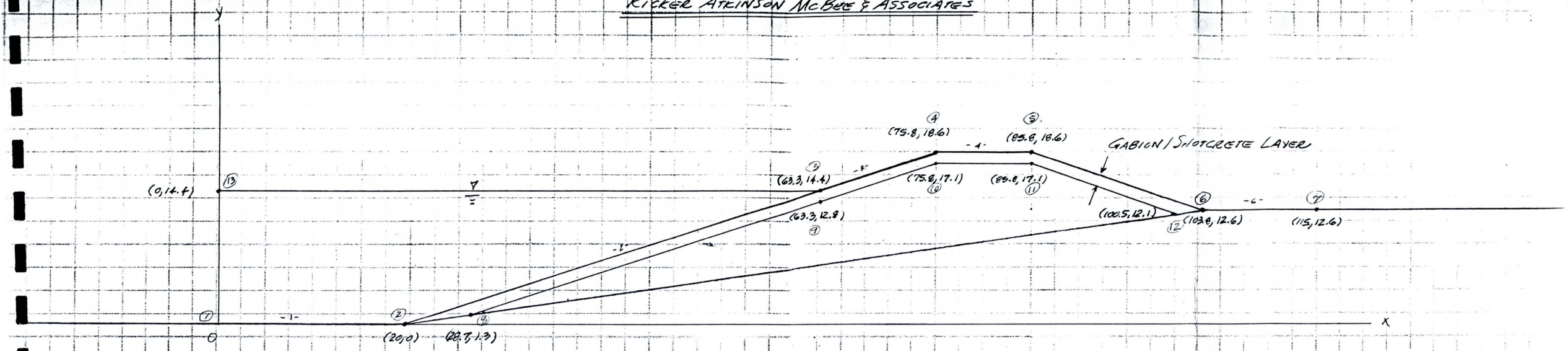

LOW WATER MODEL FOR SB-SLOPE PROGRAM

By: N. St. Germaine
DATE: 16 Oct 97

REVIEWED BY: [illegible]
DATE: 10-21-97

RICKER, ATKINSON, MCBEE & ASSOCIATES

SKUNK CREEK G1319

BISHOP'S METHOD SLICE DIAGNOSTICS - FILE SKUNKD-G at 2:01 pm on 10/16/1997
Center coordinates: X=55.00, Y=53.00, Radius: 40.20
Number of slices selected = 15, number of slices used = 17
Adjustment of negative effective normal forces is in effect
Factor of safety = 1.763

No.	Left Side of Slice: X	Y Top	Y Bottom	Slice Angle	Vertical Force	Water Force	Normal Force	Resisting Term	Driving Term
1	59.13	13.01	13.01	6.64	97	86	10	6	-15
2	60.17	13.36	13.13	8.14	107	78	30	17	-3
3	61.21	13.71	13.28	9.65	113	67	46	26	8
4	62.26	14.05	13.46	11.16	115	54	61	33	19
5	63.30	14.40	13.67	12.68	124	0	124	68	27
6	64.34	14.75	13.90	14.20	139	0	139	77	34
7	65.38	15.10	14.16	15.74	151	0	151	83	41
8	66.43	15.45	14.46	17.29	157	0	157	86	47
9	67.47	15.80	14.78	18.85	159	0	159	87	51
10	68.51	16.15	15.14	20.43	155	0	155	85	54
11	69.55	16.50	15.53	22.02	147	0	147	81	55
12	70.59	16.85	15.95	23.63	133	0	133	73	53
13	71.63	17.20	16.40	25.26	114	0	114	63	48
14	72.68	17.55	16.89	26.92	89	0	89	49	40
15	73.72	17.90	17.42	28.59	58	0	58	32	28
16	74.76	18.25	17.99	30.30	20	0	20	11	10
17	75.80	18.60	18.60	31.16	0	0	0	0	0

failure surface enters at x = 59.1278 y = 13.0125
failure surface exits at x = 75.8010 y = 18.6000
OVERALL MINIMUM: x = 55.0, y = 53.0, r = 40.2, FS = 1.763

LOW WATER SLICE DIAGNOSTICS

By: M. St. Germaine
DATE: 16 Oct 97

REVIEWED By: [illegible]
DATE: 10-21-97

LOW WATER FAILURE SURFACE

SB-SLOPE

Simplified Bishop Slope Stability Analysis

PROJECT: Skunk Creek Drop Structures G01319

LOCATION: Phoenix AZ

FILE: SKUNKD-G

COMPLETE SLOPE CROSS SECTION SHOWN

CIRCLE	X	Y	RADIUS	FS
1	55.0	53.0	40.2	1.76

SOIL*	DENSITY	COHESION	PHI
1	150.0	0.0	30.0
2	138.0	0.0	42.0

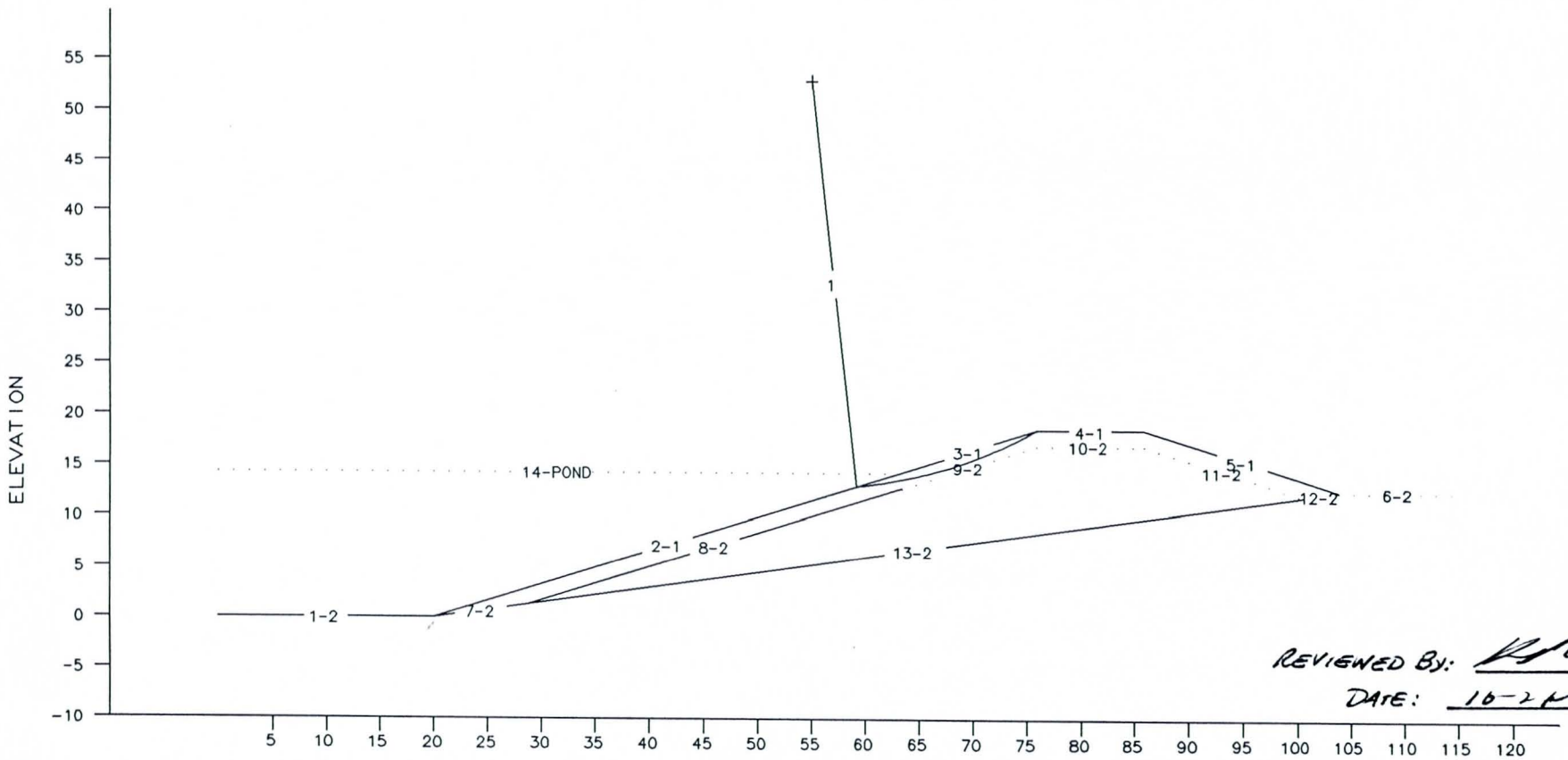

REVIEWED BY: [illegible]

DATE: 16-2-97

By: M. St. Germaine

DATE: 16 OCT 97

* Number after hyphen('-') is Soil Type

RICKER, ATKINSON, MCBEE & ASSOC., INC.

RICKER, ATKINSON, MCBEE & ASSOCIATES

GEOSYSTEM SLOPE STABILITY PROGRAM
SB-SLOPE

PROJECT DATA: G01319
Project: Skunk Creek Drop Structures
Location: Phoenix, AZ
Filename: SKUNKU-G Description: Skunk Creek - Upstream With Gabions

ANALYSIS DATA:

Point No.	Coordinates X	Coordinates Y	Line No.	Left Point	Right Point	Soil No.	Phreatic Line
1	0.0	0.0	1	1	2	2	Y
2	20.0	0.0	2	2	3	1	N
3	75.8	18.6	3	3	4	1	N
4	85.8	18.6	4	4	5	1	N
5	90.8	16.9	5	5	6	1	N
6	103.8	12.6	6	6	7	2	N
7	115.0	12.6	7	2	8	2	Y
8	28.7	1.3	8	8	9	2	Y
9	75.8	17.1	9	9	10	2	Y
10	85.8	17.1	10	10	11	2	Y
11	90.8	15.3	11	11	12	2	N
12	100.5	12.1	12	12	6	2	N
13	90.8	25.8	13	8	12	2	N
14	115.0	25.8					

Soil No.	Density pcf	Cohesion psf	Phi Deg
1	150.0	0	30.0
2	138.0	0	42.0

Free water surface, left point = 13
right point = 14

HIGH WATER ANALYSIS SETUP

By: M. St. Germaine
DATE: 16 Oct 97

REVIEWED BY: [illegible]
DATE: 10-21-97

RICKER ATKINSON MCBEE & ASSOCIATES

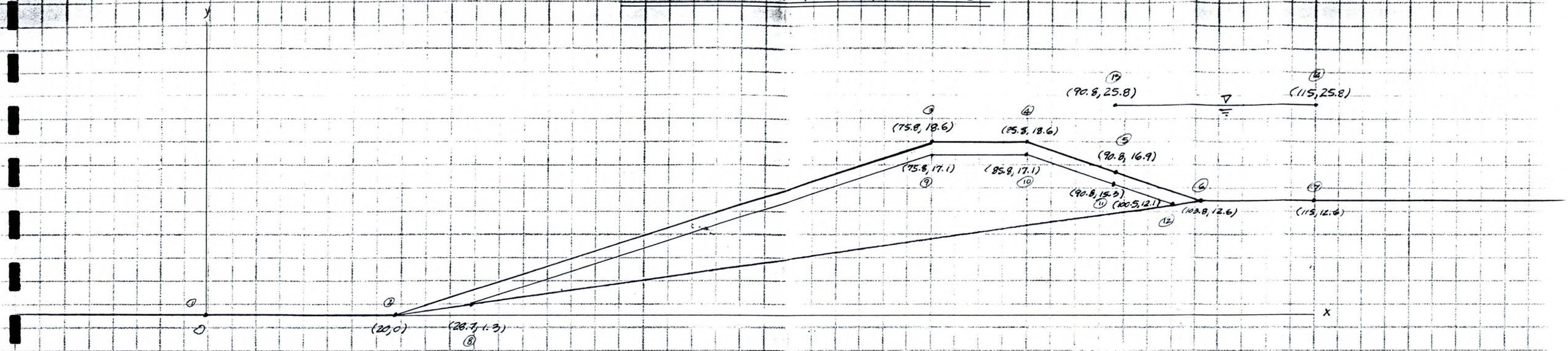

HIGH WATER MODEL FOR SB-SLOPE PROGRAM

By: M. St. Germaine
DATE: 16 Oct 97

REVIEWED BY: [illegible]
DATE: 10-21-97

SKUNK CREEK G1319

BISHOP'S METHOD SLICE DIAGNOSTICS - FILE SKUNKU-G at 2:16 pm on 10/16/1997
Center coordinates: X=0.00, Y=160.00, Radius: 159.10
Number of slices selected = 20, number of slices used = 20
Adjustment of negative effective normal forces is in effect
Factor of safety = 1.741

No.	Left Side of Slice: X	Y Top	Y Bottom	Slice Angle	Vertical Force	Water Force	Normal Force	Resisting Term	Driving Term
1	33.22	4.41	4.41	12.36	24	0	24	13	5
2	34.90	4.97	4.77	12.98	70	0	70	38	16
3	36.58	5.53	5.16	13.60	111	0	111	61	26
4	38.25	6.08	5.57	14.22	147	0	147	81	36
5	39.93	6.64	5.99	14.85	178	0	178	98	46
6	41.61	7.20	6.44	15.47	205	0	205	112	55
7	43.29	7.76	6.90	16.10	226	0	226	124	63
8	44.97	8.32	7.39	16.73	242	0	242	133	70
9	46.64	8.88	7.89	17.36	254	0	254	139	76
10	48.32	9.44	8.42	18.00	260	0	260	142	80
11	50.00	10.00	8.96	18.64	261	0	261	143	83
12	51.68	10.56	9.53	19.27	256	0	256	141	85
13	53.36	11.12	10.11	19.92	247	0	247	135	84
14	55.03	11.68	10.72	20.56	232	0	232	127	81
15	56.71	12.24	11.35	21.21	212	0	212	116	77
16	58.39	12.80	12.00	21.86	186	0	186	102	69
17	60.07	13.36	12.67	22.51	154	0	154	85	59
18	61.75	13.92	13.37	23.16	117	0	117	64	46
19	63.42	14.47	14.09	23.82	74	0	74	41	30
20	65.10	15.03	14.83	24.49	26	0	26	14	11

failure surface enters at x = 33.2212 y = 4.4071
failure surface exits at x = 66.7788 y = 15.5929
OVERALL MINIMUM: x = 0.0, y = 160.0, r = 159.1, FS = 1.741

HIGH WATER SLICE DIAGNOSTICS

By: N. St. Germaine
DATE: 16 OCT 97

REVIEWED BY: KH
DATE: 10-14-97

HIGH WATER FAILURE SURFACE

SB-SLOPE

Simplified Bishop Slope Stability Analysis

PROJECT: Skunk Creek Drop Structures G01319

LOCATION: Phoenix, AZ

FILE: SKUNKU-G COMPLETE SLOPE CROSS SECTION

CIRCLE	X	Y	RADIUS	FS
1	0.0	160.0	159.1	1.74

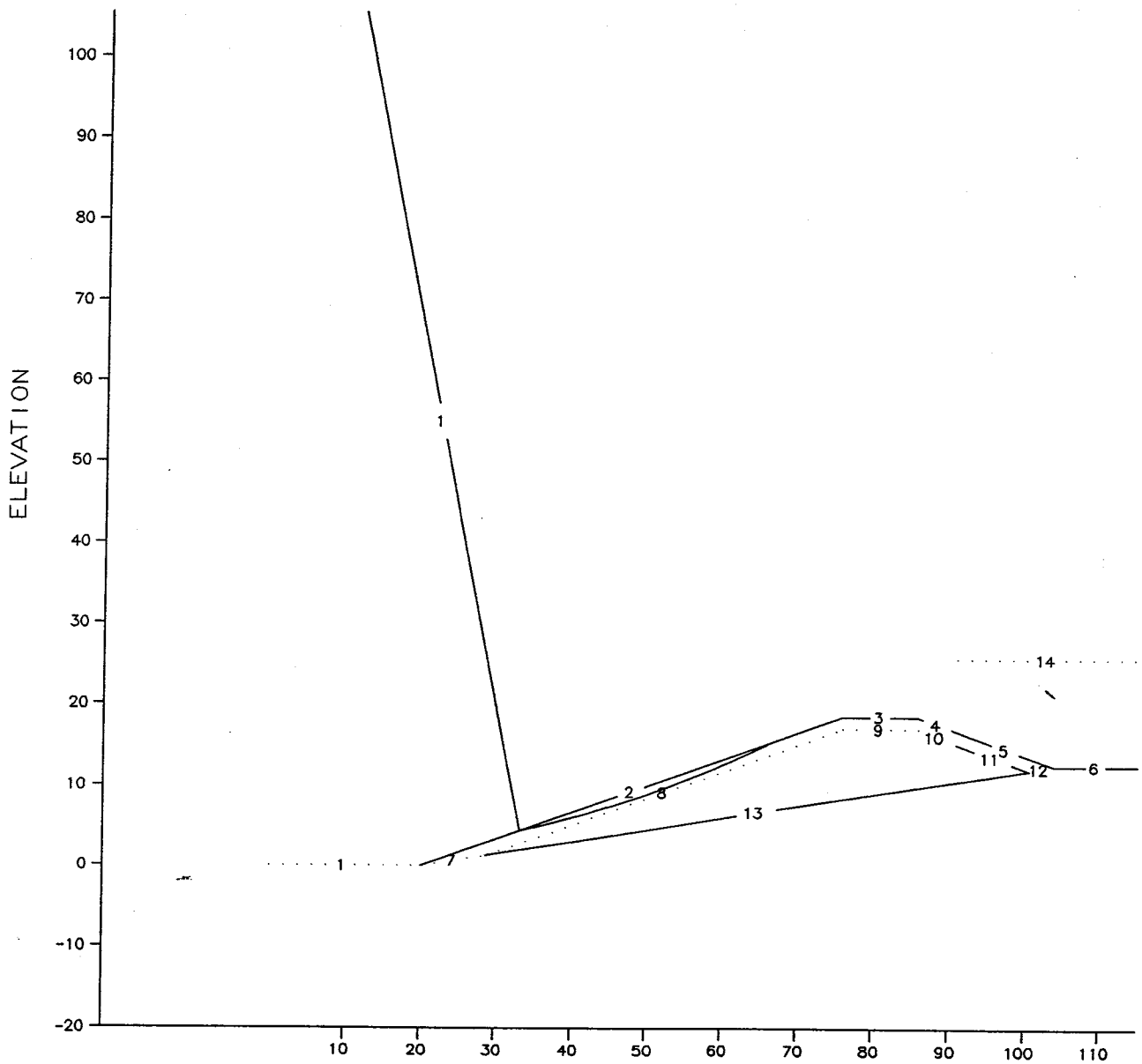

By: M. St. Germaine HORIZONTAL DISTANCE Reviewed By: KLR

Date: 16 Oct 97 RICKER, ATKINSON, MCBEE & ASSOC., INC. Date: 10-21-97

BISHOP'S METHOD SLICE DIAGNOSTICS - FILE SKUNKUP at 11:30 am on 10/16/1997
Center coordinates: X=-11.00, Y=206.60, Radius: 206.80
Number of slices selected = 15, number of slices used = 15
Adjustment of negative effective normal forces is in effect
Factor of safety = 1.352

No.	Left Side of Slice: X	Y Top	Y Bottom	Slice Angle	Vertical Force	Water Force	Normal Force	Resisting Term	Driving Term
1	34.82	4.94	4.94	13.17	45	20	25	20	10
2	37.39	5.80	5.54	13.90	130	59	71	57	31
3	39.96	6.65	6.18	14.63	202	91	110	88	51
4	42.52	7.51	6.85	15.37	261	118	143	113	69
5	45.09	8.36	7.55	16.11	308	139	169	133	85
6	47.66	9.22	8.29	16.85	342	155	187	147	99
7	50.23	10.08	9.07	17.60	363	164	199	155	110
8	52.80	10.93	9.89	18.34	371	168	203	158	117
9	55.36	11.79	10.74	19.09	366	166	201	155	120
10	57.93	12.64	11.63	19.85	348	157	191	147	118
11	60.50	13.50	12.55	20.61	316	143	173	133	111
12	63.07	14.36	13.52	21.37	270	122	148	114	98
13	65.64	15.21	14.52	22.14	210	95	115	88	79
14	68.20	16.07	15.57	22.91	136	62	75	57	53
15	70.77	16.92	16.65	23.68	48	22	26	20	19

failure surface enters at x = 34.8197 y = 4.9399
failure surface exits at x = 73.3403 y = 17.7801
OVERALL MINIMUM: x = -11.0, y = 206.6, r = 206.8, FS = 1.352

HIGH WATER SLICE DIAGNOSTICS
(WITHOUT GABIONS/SHOTCRETE)

By: M. St. Germaine
DATE: 16 Oct 97

REVIEWED BY: [illegible]
DATE: 10-21-97

BISHOP'S METHOD SLICE DIAGNOSTICS - FILE SKUNKDN at 9:20 am on 10/16/1997
Center coordinates: X=62.70, Y=37.00, Radius: 22.60
Number of slices selected = 15, number of slices used = 16
Adjustment of negative effective normal forces is in effect
Factor of safety = 1.396

No.	Left Side of Slice: X	Y Top	Y Bottom	Slice Angle	Vertical Force	Water Force	Normal Force	Resisting Term	Driving Term
1	63.33	14.41	14.41	2.64	14	6	8	7	1
2	64.16	14.69	14.45	4.76	40	18	22	19	3
3	64.99	14.97	14.52	6.87	62	28	34	29	7
4	65.82	15.25	14.62	9.00	81	37	44	37	13
5	66.65	15.53	14.75	11.15	96	43	53	43	19
6	67.48	15.81	14.91	13.30	107	49	59	47	25
7	68.32	16.09	15.11	15.48	115	52	63	50	31
8	69.15	16.36	15.34	17.68	119	54	65	51	36
9	69.98	16.64	15.60	19.91	118	53	65	50	40
10	70.81	16.92	15.91	22.17	113	51	62	48	43
11	71.64	17.20	16.24	24.47	104	47	57	44	43
12	72.47	17.48	16.62	26.80	91	41	50	38	41
13	73.31	17.76	17.04	29.19	72	33	39	30	35
14	74.14	18.04	17.51	31.64	48	22	26	20	25
15	74.97	18.32	18.02	34.15	18	8	10	8	10
16	75.80	18.60	18.58	35.46	0	0	0	0	0

failure surface enters at x = 63.3258 y = 14.4087
failure surface exits at x = 75.8225 y = 18.6000
OVERALL MINIMUM: x = 62.7, y = 37.0, r = 22.6, FS = 1.396

LOW WATER SLICE DIAGNOSTICS
(WITHOUT GABION/SHOTCRETE)

By: N. St. Germaine
DATE: 16 OCT 97

REVIEWED By: [illegible]
DATE: 08-21-97

RICKER ATKINSON, McBEE & ASSOCIATES, INC.
Skunk Creek, R.A.M. Project No. G01319

Factor of Safety Calculations for Failure Surfaces (Using Bishop's Simplified Method of Slices)

Gamma = 138 pcf
C = 0
phi = 42 tan(phi)= 0.900
u = 0

Ma = cos(a) * [1 + (tan(a)*tan(phi)/Fs)]
Fs = SUM[W * tan(phi)/Ma)]/ SUM[(W*sin(a))]

Low Water

Slice	b (ft)	H (ft)	W (kips)	a (deg)	sin(a)	W*sin(a)	cos(a)	tan(a)	Ma	(W*tan(phi)/Ma
1	3.34	0.40	1.84	10.5	0.18	0.336	0.983	0.185	1.041	1.594
2	3.34	0.80	3.69	12.0	0.21	0.767	0.978	0.213	1.044	3.179
3	3.34	1.00	4.61	17.5	0.30	1.386	0.954	0.315	1.049	3.955
4	3.34	0.80	3.69	22.5	0.38	1.411	0.924	0.414	1.046	3.175
5	3.34	0.40	1.84	28.5	0.48	0.880	0.879	0.543	1.031	1.611
					SUMS	4.78				13.51

Fs = **2.83**

High Water

Slice	b (ft)	H (ft)	W (kips)	a (deg)	sin(a)	W*sin(a)	cos(a)	tan(a)	Ma	(W*tan(phi)/Ma
1	6.72	0.75	6.96	8.5	0.15	1.028	0.989	0.149	1.036	6.045
2	6.72	1.40	12.98	14.5	0.25	3.251	0.968	0.259	1.048	11.157
3	6.72	1.50	13.91	17.5	0.30	4.183	0.954	0.315	1.049	11.935
4	6.72	1.40	12.98	20.5	0.35	4.547	0.937	0.374	1.048	11.154
5	6.72	0.75	6.96	28.0	0.47	3.265	0.883	0.532	1.032	6.066
					SUMS	16.27				46.36

Fs = **2.85**

By: M. St. Germaine
Date: October 20, 1997

Reviewed by: [illegible]
Date: 10-21-97

SKUNK CREEK G01319

LOW WATER - FAILURE SURFACE DIMENSIONS

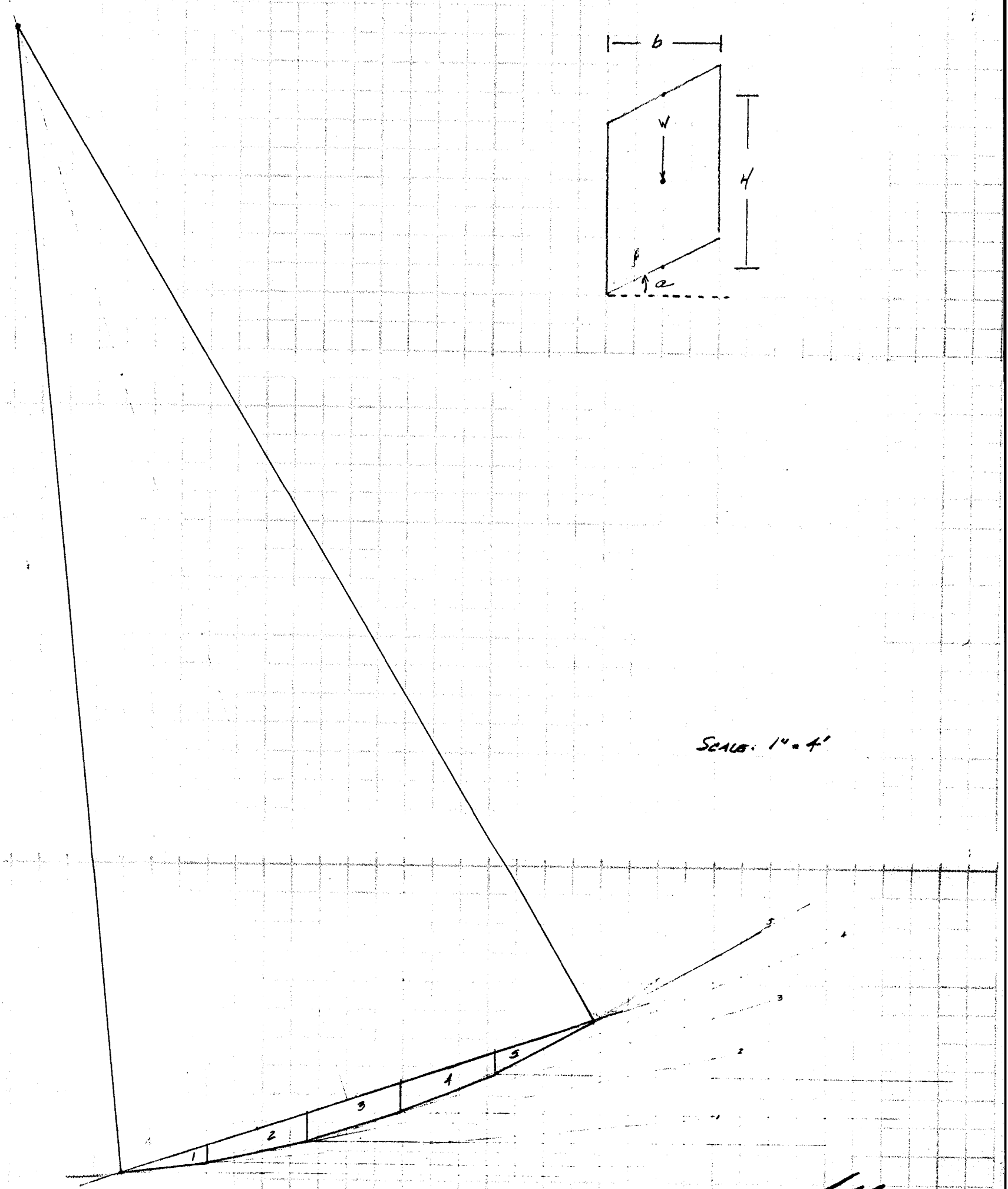

SCALE: 1" = 4'

By: M. St. Germaine
DATE: 18 OCT 97

REVIEWED BY: [signature]
DATE: 10-21-97

RICKER, ATKINSON, MCBEE & ASSOCIATES

SKUNK CREEK G01319

HIGH WATER - FAILURE SURFACE DIMENSIONS

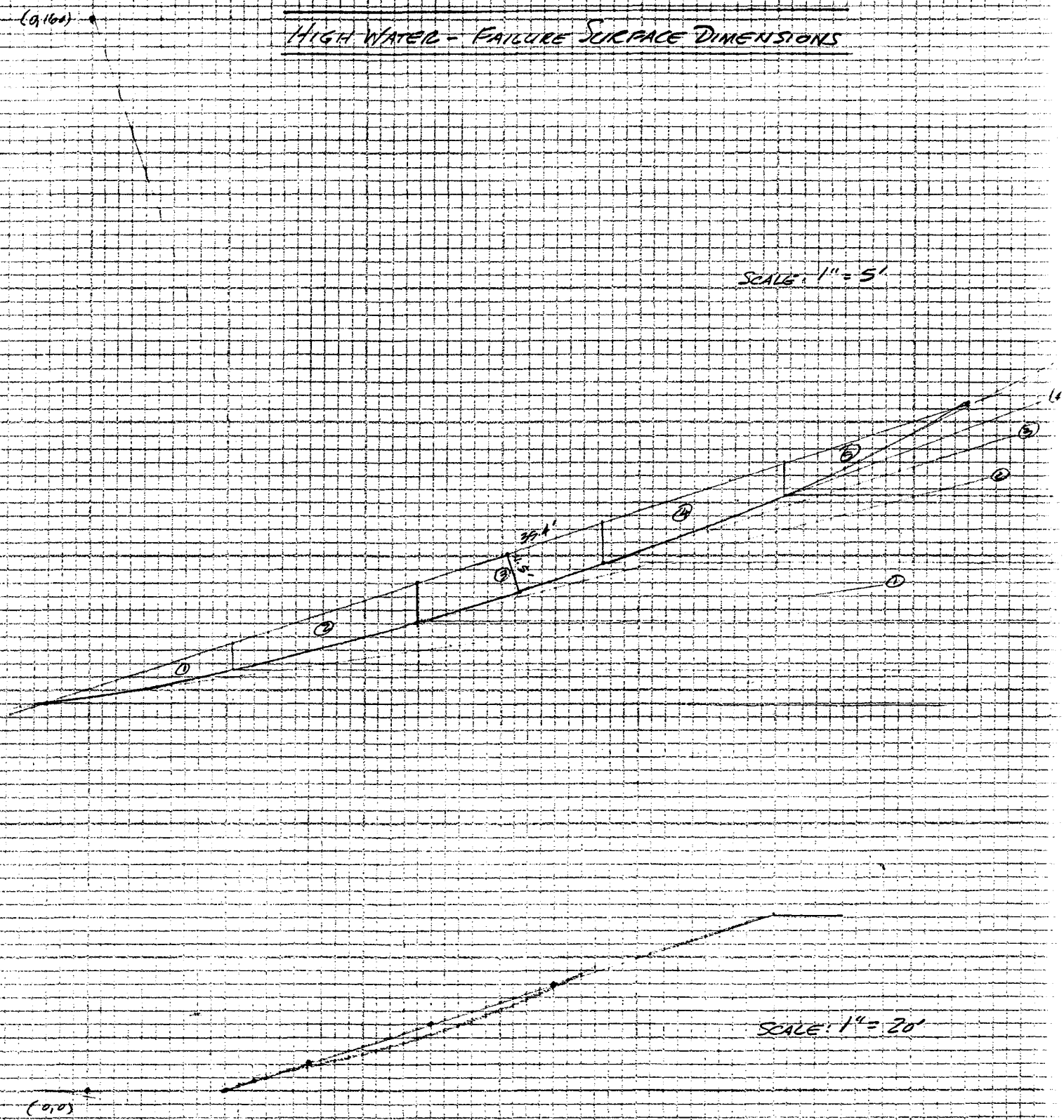

BY: M. St. Germaine

DATE: 20 OCT 97

REVIEWED BY: KRI

DATE: 10-21-97